FOREWORD

This wiring diagram incorporates the wiring schematics of the Mazda CX-5 and available optional equipment. Actual vehicle wiring may vary slightly depending on optional equipment or local specifications, or both.

For proper repair and maintenance, a thorough familiarization with this manual is important, and it should always be kept in a handy place for quick and easy reference.

All the contents of this manual, including drawings and specifications, are the latest available at the time of printing.
As modifications affecting repair or maintenance occur, relevant information supplementary to this volume will be made available at Mazda dealers. This manual should be kept up-to-date.

Ford Motor Company reserves the right to alter the specifications and contents of this manual without obligation or advance notice.

All rights reserved. No part of this book may be reproduced or used in any form or by any means, electronic or mechanical-including photocopying and recording and the use of any kind of information storage and retrieval system-without permission in writing.

WARNING

Servicing a vehicle can be dangerous. If you have not received service-related training, the risks of injury, property damage, and failure of servicing increase. The recommended servicing procedures for the vehicle in this workshop manual were developed with Mazda-trained technicians in mind. This manual may be useful to non-Mazda trained technicians, but a technician with our service-related training and experience will be at less risk when performing service operations. However, all users of this manual are accepted at least to know general safety procedures.

This manual contains “Warnings” and “Cautions” applicable to risks not normally encountered in a general technician’s experience. They should be followed to reduce the risk of injury and the risk that improper service or repair may damage the vehicle or render it unsafe. It is also important to understand that the “Warnings” and “Cautions” are not exhaustive. It is impossible to warn of all the hazardous consequences that might result from failure to follow the procedures.

The procedures recommended and described in this manual are effective methods of performing service and repair. Some require tools specifically designed for a specific purpose. Persons using procedures and tools which are not recommended by Mazda Motor Corporation must satisfy themselves thoroughly that neither personal safety nor safety of the vehicle will be jeopardized.

The contents of this manual, including drawings and specifications, are the latest available at the time of printing, and Mazda Motor Corporation reserves the right to change the vehicle designs and alter the contents of this manual without notice and without incurring obligation.

Parts should be replaced with genuine Mazda replacement parts or with parts which match the quality of genuine Mazda replacement parts. Persons using replacement parts of lesser quality than that of genuine Mazda replacement parts must satisfy themselves thoroughly that neither personal safety nor safety of the vehicle will be jeopardized. Mazda Motor Corporation is not responsible for any problems which may arise from the use of this manual. The cause of such problems includes but is not limited to insufficient service related training, use of improper tools, use of replacement parts of lesser quality than that of genuine Mazda replacement parts, or not being aware of any revision of this manual.

©2012 FMCSA
Ford Motor Company
of Southern Africa

MAZDA CX-5

Workshop Repair Manual

APPLICATION:
This manual is applicable to vehicles beginning with the Vehicle Identification Numbers (VIN) shown on the following page.

CONTENTS

Title	Section
GENERAL INFORMATION	00
ENGINE	01
SUSPENSION	02
DRIVELINE/AXLE	03
BRAKES	04
TRANSMISSION/ TRANSAXLE	05
STEERING	06
HEATER, VENTILATION & AIR CONDITIONING (HVAC)	07
RESTRAINTS	08
BODY & ACCESSORIES	09
MULTIPLEX TEM COMMUNICATION SYSTEM	10
I-STOP	11
PERSONALIZATION FEATURES	12

© 2012 Ford Motor Company of Southern Africa

GENERAL INFORMATION

00
SECTION

GENERAL INFORMATION . . . 00-00

00-00 GENERAL INFORMATION

VEHICLE IDENTIFICATION NUMBER (VIN) CODE 00-00–2
European (L.H.D. U.K.) China specs. 00-00–2
Australian, General (R.H.D.) specs. 00-00–2
General (L.H.D.) specs. 00-00–3
VEHICLE IDENTIFICATION NUMBER (VIN) 00-00–4
European (L.H.D. U.K.) specs. 00-00–4
Australian, General (R.H.D.) specs. . . . 00-00–4
General (L.H.D.) specs. 00-00–4
HOW TO USE THIS MANUAL 00-00–5
Range of Topics 00-00–5
Advisory Messages 00-00–5
Symbols 00-00–5
Service Procedure 00-00–6
Troubleshooting Procedure 00-00–8
Procedures for Use 00-00–9
SERVICE CAUTIONS 00-00–13
Injury/damage Prevention Precautions 00-00–13
Protection of the Vehicle 00-00–13
Preparation of Tools and Measuring Equipment 00-00–14
Special Service Tools 00-00–14
Malfunction Diagnosis System 00-00–14
Oil Leakage Inspection 00-00–15
Negative Battery Cable Disconnection/Connection 00-00–16
Switch The Power Supply Using The Push Button Start And Start The Engine 00-00–17
Removal of Parts 00-00–18
Control Unit Configuration (Initial Setting) Procedure Using M-MDS 00-00–18
Disassembly 00-00–18
Inspection During Removal, Disassembly 00-00–19
Arrangement of Parts 00-00–19
Cleaning of Parts 00-00–19
Reassembly 00-00–19
Adjustment 00-00–20
Rubber Parts and Tubing 00-00–20
Hose Clamps 00-00–20
Torque Formulas 00-00–21
Vise 00-00–21
Dynamometer 00-00–21
SST 00-00–22
INSTALLATION OF RADIO SYSTEM . . . 00-00–23
ELECTRICAL SYSTEM 00-00–24
Electrical Parts 00-00–24
Wiring Harness 00-00–24
Connectors 00-00–24
Terminals 00-00–26
Sensors, Switches, and Relays 00-00–27
Wiring Harness 00-00–27
Fuse 00-00–27
Viewing orientation for Connectors 00-00–28
Electrical Troubleshooting Tools 00-00–29
Precautions Before Welding 00-00–30
JACKING POSITIONS, VEHICLE LIFT (2 SUPPORTS) AND SAFETY STAND (RIGID RACK) POSITIONS 00-00–31
Jacking Positions 00-00–31
Vehicle Lift Positions 00-00–32
TOWING 00-00–32
Towing Hooks 00-00–33
TIEDOWN HOOK 00-00–35
IDENTIFICATION NUMBER LOCATIONS 00-00–36
Vehicle Identification Number (VIN) . . . 00-00–36
Engine Identification Type/Number 00-00–36
UNITS 00-00–37
Conversion From SI Units 00-00–37
Number Of Digits For Converted Values 00-00–37
Converted Value Rounding Off And Rounding Up/down 00-00–37
NEW STANDARDS 00-00–38
ABBREVIATIONS 00-00–40
PRE-DELIVERY INSPECTION 00-00–41
Pre-Delivery Inspection Table 00-00–41
SCHEDULED MAINTENANCE 00-00–43
Scheduled Maintenance Table for Europe (L.H.D., U.K.) 00-00–43
Scheduled Maintenance Table for Australia 00-00–45
Scheduled Maintenance Table for General 00-00–47
Scheduled Maintenance Table for Russia/Belarus/Azerbaijan 00-00–49
Scheduled Maintenance Service (Specific Work Required) 00-00–51

GENERAL INFORMATION

VEHICLE IDENTIFICATION NUMBER (VIN) CODE

id000000100200

Australian, General (R.H.D.) specs.

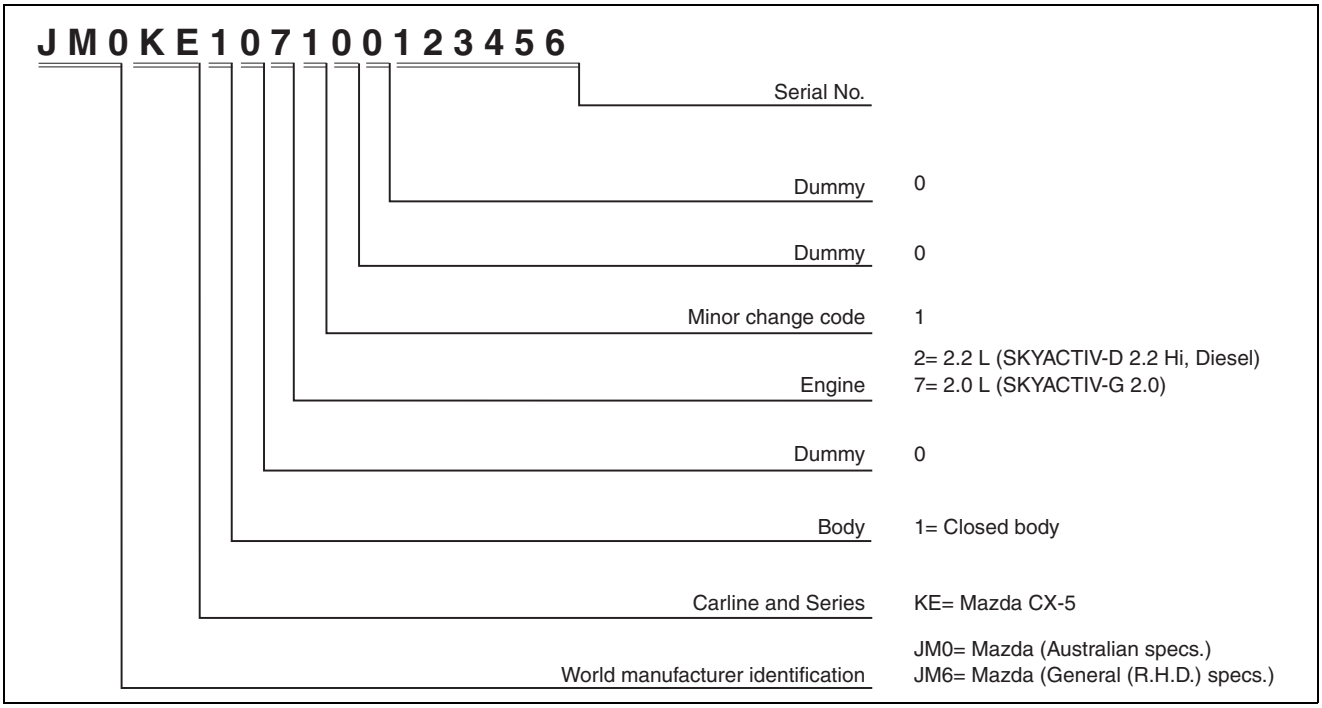

ac5wzw0000464

GENERAL INFORMATION

VEHICLE IDENTIFICATION NUMBER (VIN)

id000000100300

Australian, General (R.H.D.) specs.

JM0 KE102100 100001—
JM0 KE107100 100001—
JM6 KE1071*0# 100001—

ac5wzw0000458

General (L.H.D.) specs.
Except for Algeria

JMZ KEC978*# 100001—
JMZ KEK978*# 100001—
JM8 KE2W7**# 100001—
JM8 KE4W7**# 100001—

ac5wzw0000458

Algeria only

ⓜ KE1071 ⓜ 100001 ⓜ —

ⓜ: This mark is used only for Algerian model, in order to identify the manufacturer.

ac5wzw0000458

GENERAL INFORMATION

HOW TO USE THIS MANUAL

id000000800100

00

Range of Topics

- This manual contains procedures for performing all required service operations. The procedures are divided into the following five basic operations:
  — Removal/Installation
  — Disassembly/Assembly
  — Replacement
  — Inspection
  — Adjustment
- Simple operations which can be performed easily just by looking at the vehicle (i.e., removal/installation of parts, jacking, vehicle lifting, cleaning of parts, and visual inspection) have been omitted.

Advisory Messages

- You will find several **Warnings, Cautions, Notes, Specifications** and **Upper and Lower Limits** in this manual.
  Warning
  — A Warning indicates a situation in which serious injury or death could result if the warning is ignored.
  Caution
  — A Caution indicates a situation in which damage to the vehicle or parts could result if the caution is ignored.
  Note
  — A Note provides added information that will help you to complete a particular procedure.
  Specification
  — The values indicate the allowable range when performing inspections or adjustments.
  Upper and lower limits
  — The values indicate the upper and lower limits that must not be exceeded when performing inspections or adjustments.

Symbols

- There are nine symbols indicating oil, grease, fluids, sealant, and the use of **SST** or equivalent. These symbols show application points or use of these materials during service.

Symbol	Meaning	Kind
	Apply oil	New appropriate engine oil or gear oil
	Apply brake fluid	New appropriate brake fluid
	Apply automatic transmission/ transaxle fluid	New appropriate automatic transmission/ transaxle fluid
	Apply continuously variable transaxle fluid	New appropriate continuously variable transaxle fluid

Symbol	Meaning	Kind
	Apply grease	Appropriate grease
	Apply sealant	Appropriate sealant
	Apply petroleum jelly	Appropriate petroleum jelly
R	Replace part	O-ring, gasket, etc.
SST	Use SST or equivalent	Appropriate tools

GENERAL INFORMATION

Service Procedure
Inspection, adjustment

- Inspection and adjustment procedures are divided into steps. Important points regarding the location and contents of the procedures are explained in detail and shown in the illustrations.

SHOWS PROCEDURE ORDER FOR SERVICE

COOLING SYSTEM CAP INSPECTION [MZR-CD 2.2]

1. Attach the cooling system cap to the **SST** and a radiator cap tester.
2. Hold the cooling system cap downward and apply pressure gradually. Verify that the pressure is held stable for **10 s**.
   - If the pressure is not held stable, replace the cooling system cap.

SHOWS SPECIFICATION

Cooling system cap valve opening pressure
93.2—122.6 kPa {0.951—1.250 kgf/cm^2, 13.6—17.7 psi}

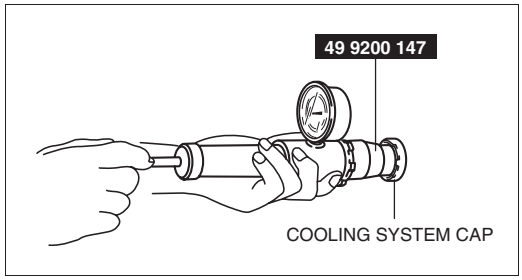

am5ezw0000364

GENERAL INFORMATION

00

Repair procedure

1. Most repair operations begin with an overview illustration. It identifies the components, shows how the parts fit together, and describes visual part inspection. However, only removal/installation procedures that need to be performed methodically have written instructions.
2. Expendable parts, tightening torques, and symbols for oil, grease, and sealant are shown in the overview illustration. In addition, symbols indicating parts requiring the use of special service tools or equivalent are also shown.
3. Procedure steps are numbered and the part that is the main point of that procedure is shown in the illustration with the corresponding number. Occasionally, there are important points or additional information concerning a procedure. Refer to this information when servicing the related part.

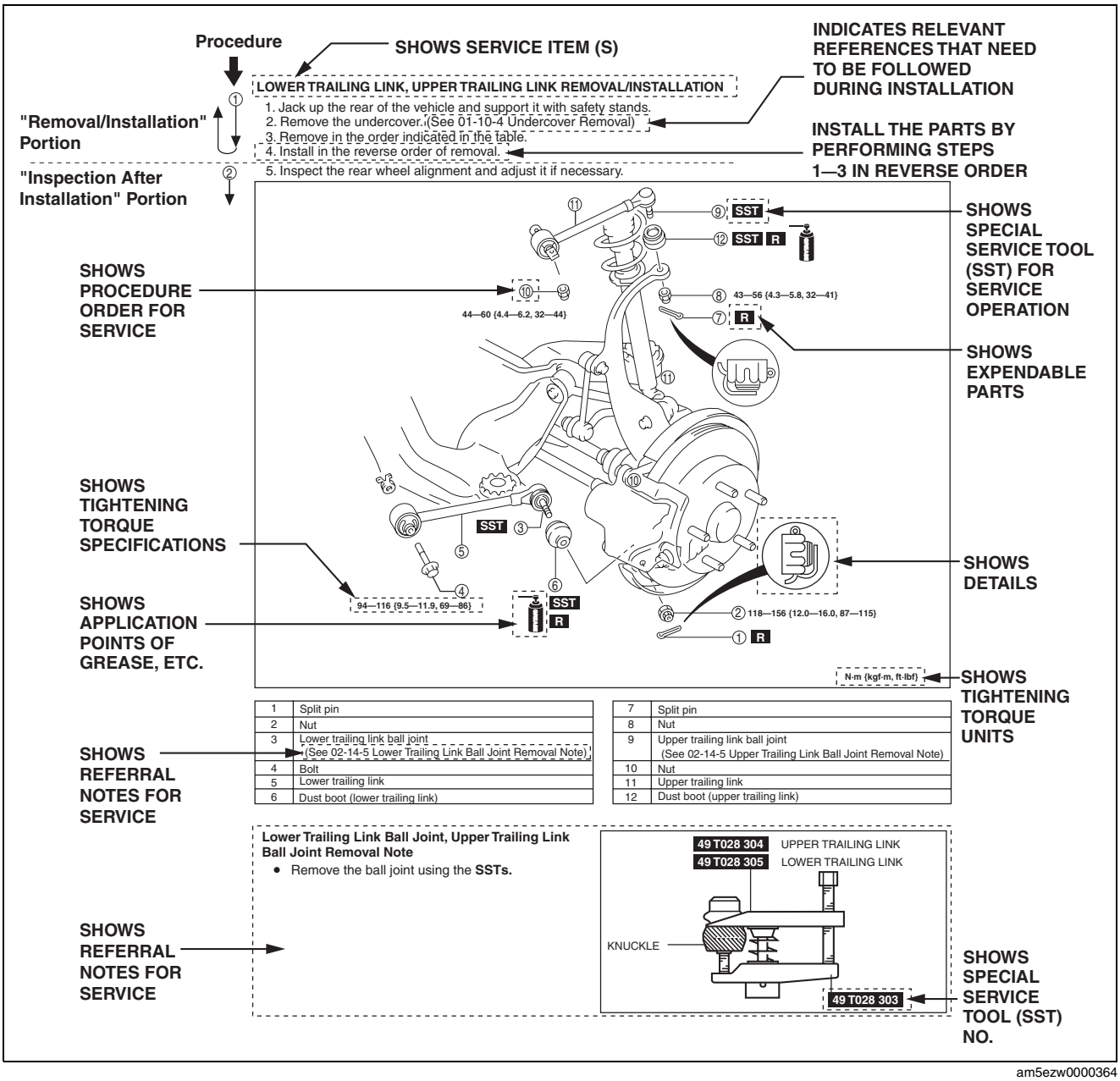

am5ezw0000364

GENERAL INFORMATION

Troubleshooting Procedure
Basic flow of troubleshooting

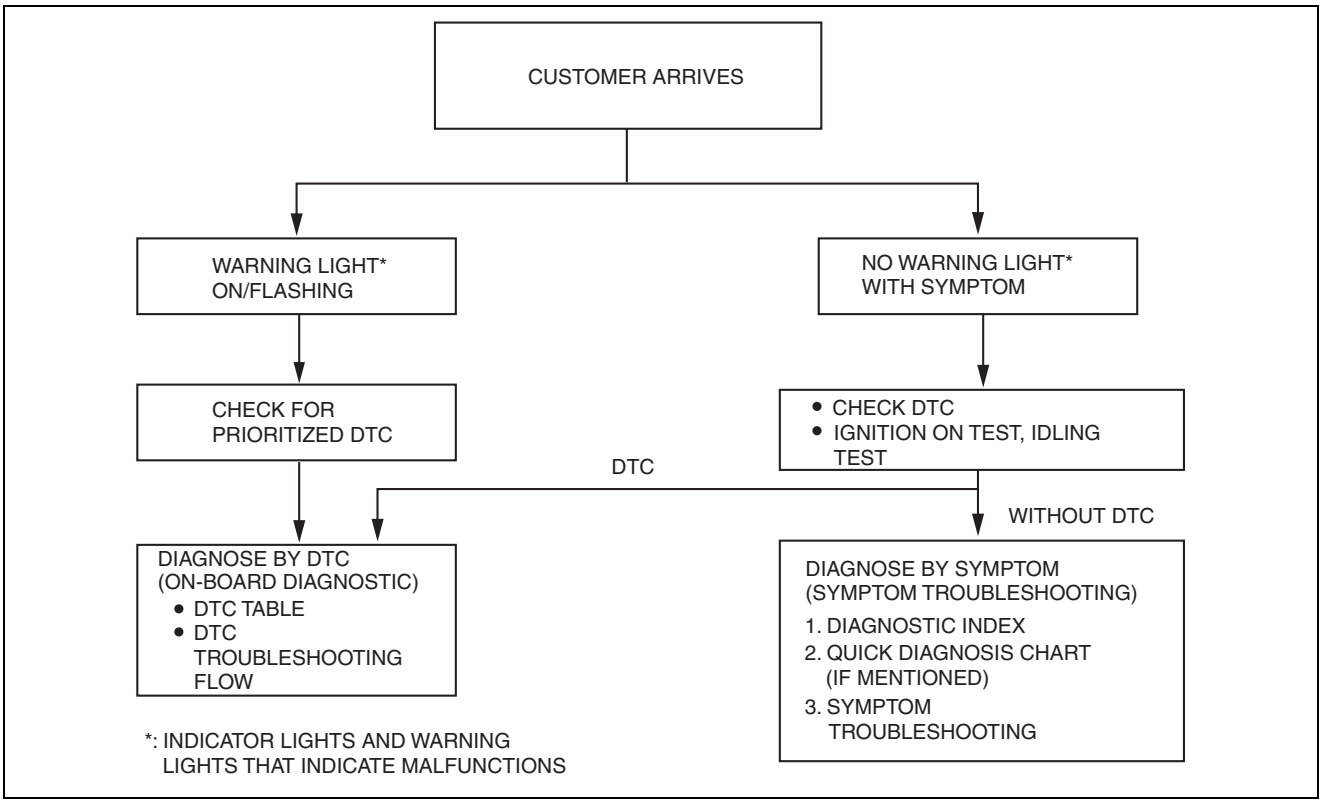

am5ezw0000364

DTC troubleshooting flow (on-board diagnostic)

- Diagnostic trouble codes (DTCs) are important hints for repairing malfunctions that are difficult to simulate. Perform the specific DTC diagnostic inspection to quickly and accurately diagnose the malfunction.
- The on-board diagnostic function is used during inspection. When a DTC is shown specifying the cause of a malfunction, continue the diagnostic inspection according to the items indicated by the on-board diagnostic function.

Diagnostic index

- The diagnostic index lists the symptoms of specific malfunctions. Select the symptoms related or most closely relating to the malfunction.

Quick diagnosis chart (If mentioned)

- The quick diagnosis chart lists diagnosis and inspection procedures to be performed specifically relating to the cause of the malfunction.

Symptom troubleshooting

- Symptom troubleshooting quickly determines the location of the malfunction according to symptom type.

GENERAL INFORMATION

00

Procedures for Use

Using the basic inspection (section 05)

- Perform the basic inspection procedure before symptom troubleshooting.
- Perform each step in the order shown.
- The reference column lists the location of the detailed procedure for each basic inspection.
- Although inspections and adjustments are performed according to the reference column procedures, if the cause of the malfunction is discovered during basic inspection, continue the procedures as indicated in the action column.

SHOWS INSPECTION ORDER

SHOWS ITEM NAMES FOR DETAILED PROCEDURES

SHOW POINTS REQUIRING ATTENTION BASED ON INSPECTION RESULTS

BASIC INSPECTION

STEP	INSPECTION		ACTION
1	Perform the mechanical system test. (See 05-13-3 MECHANICAL SYSTEM TEST.) Is mechanical system normal?	Yes	Go to the next step.
		No	Repair or replace any malfunctioning parts according to the inspection result.
2	Turn the ignition switch to the ON position. When the selector lever is moved, does the selector illumination indicate synchronized position to the lever location? Also, when other ranges are selected from N or P during idling, does the vehicle move within 1—2 s?	Yes	Go to next step.
		No	Inspect the selector lever and TR switch. Repair or replace malfunctioning parts. (See 05-14-5 SELECTOR LEVER INSPECTION.) (See 05-13-10 TRANSMISSION RANGE (TR) SWITCH INSPECTION.) If the selector lever and TR switch are normal, go to the next step.
3	Inspect the ATF color condition. (See 05-13-8 AUTOMATIC TRANSMISSION FLUID (ATF) INSPECTION.) Are ATF color and odor normal?	Yes	Go to the next step.
		No	Repair or replace any malfunctioning parts according to the inspection result. Flush ATX and cooler line as necessary.
4	Perform the line pressure test. (See 05-13-3 Line Pressure Test.) Is the line pressure normal?	Yes	Go to the next step.
		No	Repair or replace any malfunctioning parts according to the inspection result.
5	Perform the stall test. (See 05-13-4 Stall Speed Test.) Is the stall speed normal?	Yes	Go to the next step.
		No	Repair or replace any malfunctioning parts according to the inspection result.
	Inspect the voltage at the following TCM terminals. (See 05-13-29 TCM INSPECTION.) • Terminal 2J (TFT sensor) • Terminals 1D, 2B, 2C, 2E (TR switch) • Terminal 2G (turbine sensor) • Terminal 2D (down switch) • Terminal 2I (up switch) • Terminal 1E (M range switch) • Terminal 1W (steering shift switch) Is the voltage normal?	Yes	Go to the next step.
		No	Repair or replace any malfunctioning parts according to the inspection result.

REFERENCE COLUMN

am5ezw0000364

GENERAL INFORMATION

Using the DTC troubleshooting flow

- DTC troubleshooting flow shows diagnostic procedures, inspection methods, and proper action to take for each DTC.

DTC C0020:01/C0020:1C/C0020:71 [ABS]

DTC	C0020:01, C0020:1C, C0020:71	Pump motor, motor relay
DETECTION CONDITION	・C0020:01 — ABS motor relay signal does not correspond to ABS HU/CM ON signal. ・C0020:1C — ABS motor monitor signal does not correspond to ABS HU/CM OFF signal. — ABS motor monitor signal does not correspond to ABS HU/CM ON signal. ・C0020:71 — ABS HU/CM motor monitor ON signal is not input within specified time limit or more when motor signal is switched from ON to OFF by ABS HU/CM.	
FAIL-SAFE FUNCTION	・Illuminates the ABS warning light and TCS/DSC indicator light. ・Inhibits the ABS, TCS, DSC and brake assist controls.	
POSSIBLE CAUSE	・ABS 40A fuse malfunction ・Open or short circuit in ABS HU/CM internal motor relay, or stuck motor relay ・Open or short circuit in ABS HU/CM internal pump motor, or frozen pump motor ・Open circuit or short to ground in the wiring harness between the battery and ABS HU/CM terminal Y ・Open circuit in the wiring harness between ABS HU/CM terminal B and body ground ・Poor connection at connectors (female terminal)	

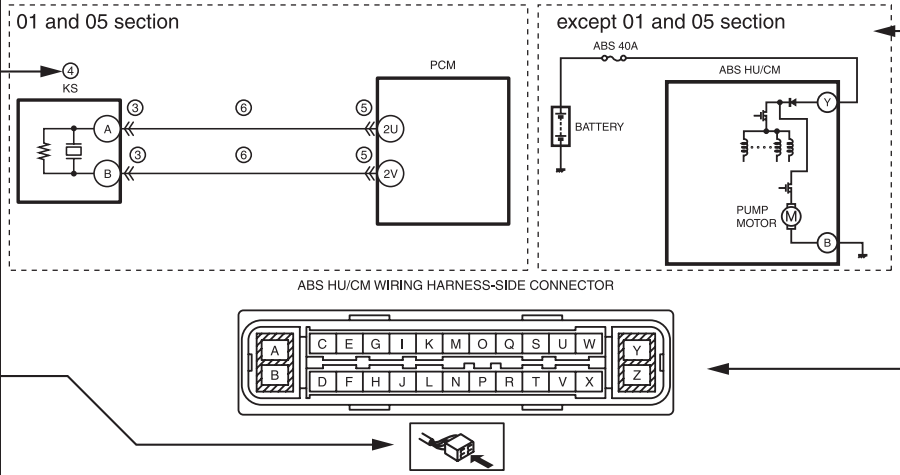

Diagnostic procedure

STEP	INSPECTION		ACTION
1	**INSPECT ABS FUSE CONDITION** ・Is the ABS fuse (ABS 40A) normal?	Yes	Go to the next step.
		No	Replace the fuse, then go to Step 6.
2	**VERIFY PUMP MOTOR OPERATION** ・Switch the ignition to off. ・Connect the M-MDS to the DLC-2. ・Switch the ignition to ON. ・Access PMP_MTR active command modes using the M-MDS. ・Does the pump motor operate?	Yes	Go to the next step.
		No	Replace the ABS HU/CM, then go to Step 6. (See ABS HU/CM REMOVAL/INSTALLATION.)
3	**INSPECT MOTOR RELAY POWER SUPPLY FOR OPEN CIRCUIT** ・Switch the ignition to off. ・Disconnect the ABS HU/CM connector. ・Inspect for continuity between ABS HU/CM terminal Y and the positive battery terminal. ・Is there continuity?	Yes	Go to the next step.
		No	Repair or replace the wiring harness, then go to Step 6.
4	**INSPECT MOTOR RELAY POWER SUPPLY FOR SHORT CIRCUIT** ・Inspect for continuity between ABS HU/CM terminal Y and body ground. ・Is there continuity?	Yes	Repair or replace the wiring harness, then go to Step 6.
		No	Go to the next step.
5	**INSPECT PUMP MOTOR GROUND FOR OPEN CIRCUIT** ・Inspect for continuity between ABS HU/CM terminal B and body ground. ・Is there continuity?	Yes	Go to the next step.
		No	Repair or replace the wiring harness, then go to the next step.
6	**VERIFY THAT THE SAME DTC IS NOT PRESENT** ・Reconnect all disconnected connectors. ・Clear the DTCs from the memory. (See ON-BOARD DIAGNOSIS [ABS].) ・Start the engine and drive the vehicle at **10 km/h {6.2 mph} or more**. ・Are the same DTCs present?	Yes	Repeat the inspection from Step 1. If the malfunction recurs, replace the ABS CM, then go to the next step. (See ABS HU/CM REMOVAL/INSTALLATION.)
		No	Go to the next step.
7	**VERIFY THAT NO OTHER DTCS ARE PRESENT** ・Are any other DTCs output?	Yes	Go to the applicable DTC inspection. (See ON-BOARD DIAGNOSIS [ABS].)
		No	DTC troubleshooting completed.

am5ezw0000535

DETECTION CONDITION describes the condition under which the DTC is detected.

TROUBLE CONDITION

FAIL-SAFE FUNCTION Indicates control status at time of DTC detection

POSSIBLE CAUSE describes possible point(s) of malfunction

Indicates the circuit to be inspected

Indicates the inspection step No. to be performed

Indicates the direction in which to visually inspect the connector

Indicates the connector related to the inspection

STEP shows the order of troubleshooting

INSPECTION describes the method to quickly determine the malfunctioning part(s).

ACTION describes the appropriate action to be taken according to the result (Yes/No) of the INSPECTION.

Reference item(s) to perform ACTION.

GENERAL INFORMATION

Using the diagnostic index

- Malfunction symptoms are listed in the diagnostic index under symptom troubleshooting.
- The exact malfunction symptoms can be selected by following the index.
- Correctly verify the malfunction symptom according to “DESCRIPTION”.

No.	TROUBLESHOOTING ITEM		DESCRIPTION	Page
1	Melting of main or other fuses		—	(See 01-03-6 MELT NO.1 MAIN OR OTHER FUSE)
2	MIL comes on		MIL is illuminated incorrectly.	(See 01-03-7 NO.2 MIL COMES ON)
3	Will not crank		Starter does not work.	(See 01-03-8 NO. 3 WILL NOT CRANK)
4	Hard start/long crank/erratic start/erratic crank		Starter cranks engine at normal speed but engine requires excessive cranking time before starting.	(See 01-03-9 NO. 4 HARD START/ LONG CRANK/ERRATIC CRANK)
5	Engine stalls.	After start/at idle	Engine stops unexpectedly at idle and/or after start.	(See 01-03-11 NO. 5 ENGINE-STALLS AFTER START/AT IDLE)
6	Cranks normally but will not start		Starter cranks engine at normal speed but engine will not run.	(See 01-03-15 NO.6 CRANKS NORMALLY BUT WILL NOT START)
7	Slow return to idle		Engine takes more time than normal to return to idle speed.	(See 01-03-19 NO. 7 SLOW RERUN TO IDLE)
8	Engine runs rough/rotling		Engine speed fluctuates between specified idle speed and lower speed and engine shakes excessively.	(See 01-03-20 NO. 8 ENGINE RUNS ROUGH/ROLLING IDLE)
9	Fast idle/runs on		Engine speed continues at fast idle after warm-up. Engine runs after ignition key is turned to OFF.	(See 01-03-23 NO. 9 FAST IDLE/RUNS ON)

am5ezw0000365

GENERAL INFORMATION

Using the quick diagnosis chart

- The related malfunction cause can be understood.
- The relation between the malfunction symptom and cause is indicated.
- The relation between the malfunction symptom and cause can be detected quickly, and if multiple malfunction symptoms occur, the area which is the common cause among the multiple malfunctions can be specified.
- The effective inspection procedure for the malfunction cause specified from the malfunction symptoms can be selected using the inspection procedure chart.

MALFUNCTION CAUSE SPECIFIED BY MALFUNCTION SYMPTOM

SYMPTOM QUICK DIAGNOSTIC CHART

② SPECIFY MALFUNCTIONING PART CORRESPONDING TO MALFUNCTION SYMPTOM

① SELECT MALFUNCTION SYMPTOM

Troubleshooting item \ Possible factor			Starter motor malfunction (Mechanical or electrical)	Starter circuit including ignition switch open	Improper engine oil level	Low or dead battery	Charging system malfunction	Improper engine compression	Improper valve timing	Hydrolocked engine	Improper engine oil viscosity	Improper dipstick	Base engine malfunction	Drive plate or flywheel seized	Improper tension or damaged drive belts	Improper engine coolant level	Water and anti-freeze mixture improperly	Cooling system malfunction (Radiator, hoses, overflow system, thermostat, etc.)	Cooling fan system malfunction	Engine or transsexual mounts improperly installed	Cooling fan or condenser fan seat improperly	Accelerator cable free play mis-adjustment	Fuel quality
1	Melts of main or other fuse																						
2	MIL comes on																						
3	Will not crank		x	x		x	x			x				x									
4	Hard to start/long crank/erratic start/erratic crank																						x
5	Engine stalls	After start/at idle						x	x	x													x
6	Cranks normally but will not start							x	x	x													x
7	Slow return to idle																		x				
8	Engine runs rough/rolling idle							x	x														x
9	Fast idle/runs on																					x	
10	Low idle/stalls during deceleration																						
11	Engine stalls/quits	Acceleration/cruise						x	x														x
	Engine runs rough	Acceleration/cruise						x	x														x
	Misses	Acceleration/cruise						x	x														x
	Buck/jerk	Acceleration/cruise/ deceleration						x	x														x
	Hesitation/stumble	Acceleration						x	x														x
	Surges	Acceleration/cruise						x	x														x
12	Lack/loss of power	Acceleration/cruise						x	x														x
13	Knocking/pinging	Acceleration/cruise						x										x					
14	Poor fuel economy							x	x							x		x	x				x
15	Emissions compliance							x	x				x					x					
16	High oil consumption/leakage										x	x	x										
17	Cooling system concerns	Overheating													x	x	x	x	x				
18	Cooling system concerns	Runs cold																x	x				
19	Exhaust smoke												x					x					
20	Fuel odor (in engine compartment)																						
21	Engine noise				x								x		x								
22	Vibration concerns (engine)														x					x	x		
23	A/C does not work sufficiently																						
24	A/C always on/ A/C compressor runs continuously																						
25	A/C does not cut off under wide open throttle conditions																						
26	Exhaust sulphur smell																						x
27	Fuel refill concerns																						
28	Fuel filling shut off issues																						
29	Intermittent concerns					x																	
30	Constant voltage																						
31	Spark plug condition							x			x		x				x						x
32	Automatic transsexual	Upshift/downshift/ engagement	(See 05-01 AUTOMATIC TRANSAXLE SYMPTOM TROUBLESHOOTING)																				

am5ezw0000668

GENERAL INFORMATION

Using the symptom troubleshooting

- Determine the malfunctioning part quickly and accurately based on each malfunction symptom.
- After repair, verify that the malfunction symptom is eliminated.
- There are the troubleshooting procedures and actions for each malfunctioning part.
- Structured as procedures for verifying malfunction symptom quickly and accurately.

TROUBLE SYMPTOM

DESCRIPTION describes what kind of TROUBLE SYMPTOM

NO.2 VEHICLE MOVES IN N POSITION

2	Vehicle moves in N position
DESCRIPTION	• Vehicle creeps in N position. • Vehicle creeps if brake pedal is not depressed in N position.
POSSIBLE CAUSE	• If the vehicle moves in N position, basically, the malfunction is in the ATX. Since a malfunction in the sensor circuit or output circuit is the cause of the malfunction in the ATX, inspect the sensors, output circuit, and the related wiring harnesses. 1. Clutch burnt (Forward clutch) • Control valve body malfunction 2. Selector lever position disparity (Although the selector indicator shows N position, the hydraulic circuit shows D range or R position) **Note** • Before following the troubleshooting steps, make sure that the Automatic Transaxle On-Board Diagnostic and Automatic Transaxle Basic Inspection are conducted.

POSSIBLE CAUSE describes possible point of malfunction

STEP shows the order of troubleshooting.

Reference item(s) to perform ACTION.

INSPECTION describes the method to quickly determine the malfunctioning part(s).

Reference item(s) for additional information to perform INSPECTION.

ACTION describes the appropriate action to be taken according to the result (Yes/No) of the INSPECTION.

How to perform ACTION is described in the relative material shown.

Diagnostic procedure

STEP	INSPECTION		ACTION
1	Does the vehicle creep when the selector lever is moved slightly in N position?	Yes	Go to the next step.
		No	Adjust the selector cable. (See SELECTOR CABLE ADJUSTMENT.)
2	Disconnect the TCM connector. Is the resistance between the ground terminal at the TCM connector and the body ground **less than 5.0 ohms**?	Yes	Go to the next step.
		No	Repair open ground circuit. Reconnect the TCM connector.
3	Inspect the value at the following TCM PID using the M-MDS. (See PID/DATA MONITOR INSPECTION [FS5A-EL].) • LPS Is the LPS PID value normal?	Yes	Overhaul the control valve body and repair or replace any malfunctioning parts. (See ATX workshop manual [FS5A-EL].) If any problem remains, overhaul the transaxle and repair or replace any malfunctioning parts. (See ATX workshop manual [FS5A-EL].)
		No	Repair or replace any malfunctioning parts
4	• Verify the test results. — If normal, return to the diagnostic index to service any additional symptoms. — If the malfunction remains, inspect the related Service Information and perform repair or diagnosis. • If the vehicle is repaired, troubleshooting is completed. • If the vehicle is not repaired or additional diagnostic information is not available, replace the TCM.		

am5ezw0000669

SERVICE CAUTIONS

id000000800200

Injury/damage Prevention Precautions

- Depending on the vehicle, the cooling fan may operate suddenly even when the ignition is switched OFF (LOCK). Therefore, keep hands and tools away from the cooling fan even if the cooling fan is not operating to prevent injury to personnel or damage to the cooling fan. Always disconnect the negative battery cable when servicing the cooling fan or parts near the cooling fan.

Protection of the Vehicle

- Always be sure to cover fenders, seats and floor areas before starting work.

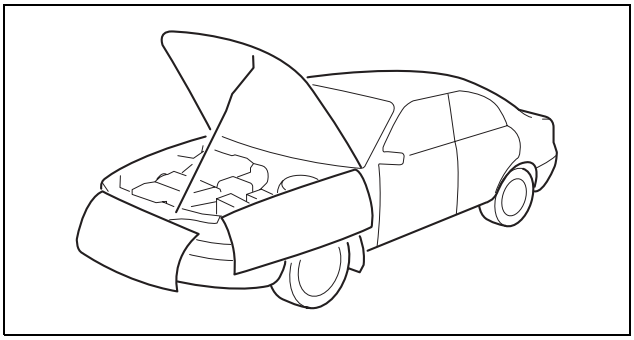

am6zzw0000415

GENERAL INFORMATION

Preparation of Tools and Measuring Equipment

- Be sure that all necessary tools and measuring equipment are available before starting any work.

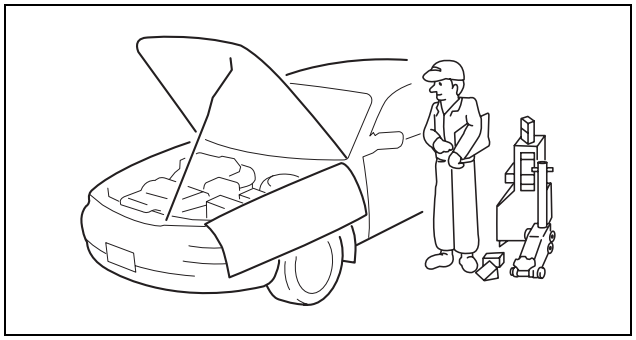

am6zzw0000415

Special Service Tools

- Use special service tools or the equivalent when they are required.

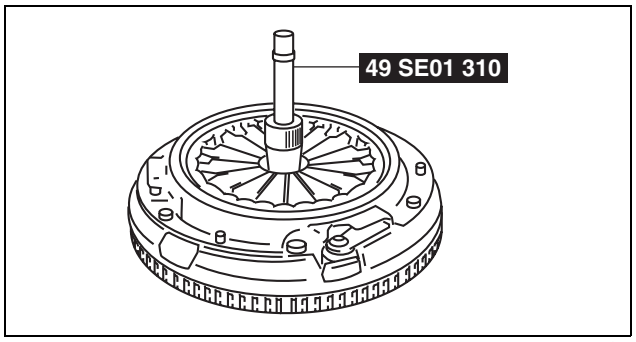

am3uuw0000193

Malfunction Diagnosis System

- Use the Mazda Modular Diagnostic System (M-MDS) for malfunction diagnosis.

Connection to malfunction diagnosis system

- With the ignition switched off, connect the malfunction diagnosis system to the DLC-2 connector shown in the figure.

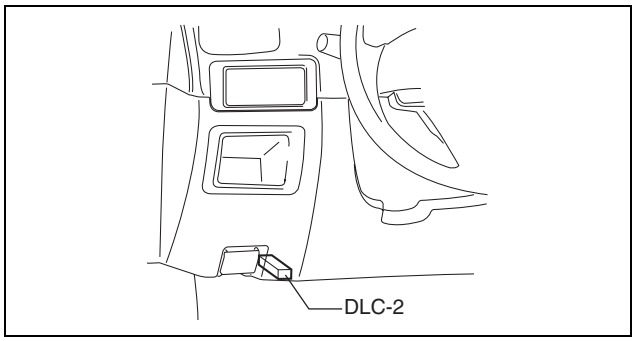

ac5wzw0000287

GENERAL INFORMATION

Oil Leakage Inspection

- Use either of the following procedures to identify the type of oil that is leaking:

Using UV light (black light)

1. Remove any oil on the engine or transmission/transaxle.

   Note
   - Referring to the fluorescent dye instruction manual, mix the specified amount of dye into the engine oil or transmission/transaxle oil.

2. Pour the fluorescent dye into the engine oil or transmission/transaxle oil.
3. Allow the engine to run for **30 min**.
4. Inspect for dye leakage by irradiating with UV light (black light), and identify the type of oil that is leaking.
5. If no dye leakage is found, allow the engine to run for another **30 min**. or drive the vehicle then reinspect.
6. Find where the oil is leaking from, then make necessary repairs.

   Note
   - To determine whether it is necessary to replace the oil after adding the fluorescent dye, refer to the fluorescent dye instruction manual.

Not using UV light (black light)

1. Gather sample of the leaking oil using an absorbent white tissue.
2. Then gather some sample of engine and transmission/transaxle oil onto a white cloth or piece of paper.
   - MT vehicles: Transmission/transaxle oil
   - AT vehicles: ATF
   - CVT vehicles: CVT fluid
3. Compare the appearance and smell, and identify the type of oil that is leaking.
4. Remove any oil on the engine or transmission/transaxle.
5. Allow the engine to run for **30 min**.
6. Check the area where the oil is leaking, then make necessary repairs.

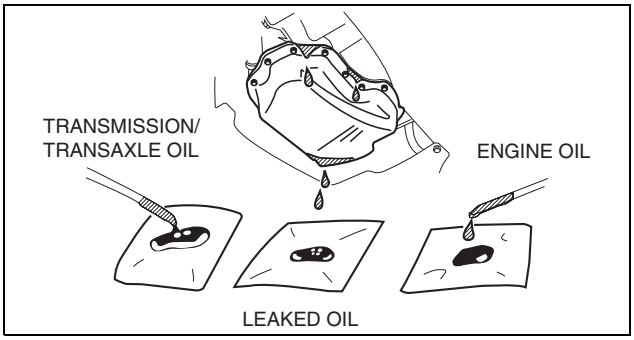

am5ezw0000540

GENERAL INFORMATION

Negative Battery Cable Disconnection/Connection
Warning

- Before removing the SRS air bag system-related parts, always disconnect the negative battery cable and wait for 1 min. or more to allow the back-up power supply to deplete its stored power. (See 08-10-3 AIR BAG SYSTEM SERVICE WARNINGS.)

Required procedure after negative battery cable disconnection/connection

System name	Conditions after disconnecting the negative battery cable	Required procedure		Reference
		Before disconnecting negative battery cable	After connecting negative battery cable	
Power window system	Reset to initial setting and auto-function is disabled.	—	Perform the power window system initial setting.	(See 09-12-66 POWER WINDOW SYSTEM INITIALIZATION PROCEDURE.)
Sunroof system	Reset to initial setting and function is disabled.	—	Perform the sunroof system initial setting.	(See 09-15-18 SUNROOF SYSTEM INITIALIZATION PROCEDURE.)
Clock and audio	Clock display and audio system memory are reset.	Verify the setting content.	Set the verified content before disconnecting negative battery cable.	—
i-stop system	Specified information in the PCM cleared and the i-stop does not operate normaly.	Verify PID “BATT_SOC” value and record. *1	Perform battery condition initial setting (i-stop setting). *2	(See 01-17A-14 BATTERY CONDITION INITIALIZATION SETTING (i-stop SETTING) [SKYACTIV-G 2.0].) (See 01-17B-11 BATTERY CONDITION INITIALIZATION SETTING (i-stop SETTING) [SKYACTIV-D 2.2].)
Tire pressure monitoring system (TPMS)	The tire pressure monitoring system detection accuracy decreases.	—	Perform the tire pressure monitoring system initialization.	(See 02-12-4 TIRE PRESSURE MONITORING SYSTEM INITIALIZATION PROCEDURE.)

*1 : For vehicles with i-stop, if the negative battery cable is disconnected and re-connected, battery condition initial setting (i-stop setting) must be performed.
*2 : Because the “BATT_SOC” value before disconnecting the negative battery cable is required for the battery condition initial setting (i-stop setting), record the “BATT_SOC” value before disconnecting the negative battery cable.

GENERAL INFORMATION

Switch The Power Supply Using The Push Button Start And Start The Engine

- The power supply switch using the push button start is performed by depressing the clutch pedal (MTX), depressing the brake pedal (ATX), and then pressing the push button start.

MTX

PUSH BUTTON START PRESSED WITHOUT DEPRESSING THE CLUTCH PEDAL

POWER SUPPLY	ENGINE STATE	SHIFT POSITION
		ALL
OFF	–	
ACC	–	
ON	ENGINE OFF	
	ENGINE ON	

ATX

PUSH BUTTON START PRESSED WITHOUT DEPRESSING THE BRAKE PEDAL

POWER SUPPLY	ENGINE STATE	SHIFT POSITION		
		P	N	OTHER THAN P, N
OFF	–			
ACC	–			
ON	ENGINE OFF			
	ENGINE ON			

ac5wzw0000250

- For engine starting using the push button start, depress the clutch pedal (MTX), depress the brake pedal (ATX), and then press the push button start.

MTX

PUSH BUTTON START PRESSED WITH THE CLUTCH PEDAL DEPRESSED

POWER SUPPLY	ENGINE STATE	SHIFT POSITION
		ALL
OFF	–	
ACC	–	
ON	ENGINE OFF	
	ENGINE ON	

ATX

PUSH BUTTON START PRESSED WITH THE BRAKE PEDAL DEPRESSED

POWER SUPPLY	ENGINE STATE	SHIFT POSITION		
		P	N	OTHER THAN P, N
OFF	–			
ACC	–			
ON	ENGINE OFF			
	ENGINE ON			

amxzzw0000006

GENERAL INFORMATION

Removal of Parts

- While correcting a problem, also try to determine its cause. Begin work only after first learning which parts and sub-components must be removed and disassembled for replacement or repair. After removing the part, plug all holes and ports to prevent foreign material from entering.

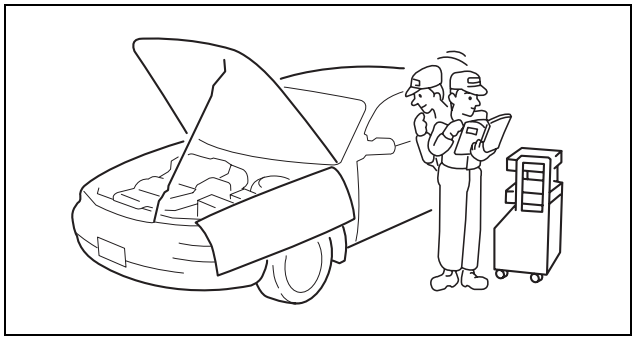

am5ezw0000540

Control Unit Configuration (Initial Setting) Procedure Using M-MDS

- If the control unit is replaced, it is necessary to write the vehicle specification data to a new control unit using the M-MDS. This procedure is called configuration (initial setting).
- There are the following two methods of the configuration procedure for the control unit:
  - — Configuration by reading/writing data of vehicle information: Reads the vehicle information from the control unit prior to replacement, and writes the vehicle information to a new control unit.
  - — Configuration by As-Built data: Obtains the vehicle specification data when the vehicle is shipped from the factory, and writes the data to a new control unit.

Caution

- **Normally perform the configuration using reading/writing function of vehicle information.**
- **The configuration using As-Built data is used if the vehicle information cannot be read due to a damaged control unit which is to be replaced, or if a DTC such as a configuration malfunction is detected.**
- **If a control unit having a personalization function is configured using As-Built data, the settings customized by the customer are initialized (to factory settings). In this case, verify the setting values made by the customer and change the customized setting values using the "Programmable Parameters" from the M-MDS menu.**
- **If the module programming menu of the M-MDS (Programmable Module Installation, As-Built, Programmable Parameters) is performed, perform the procedure while the battery monitor icon of the M-MDS is green or gray.**

Note

- For reading the vehicle information, the procedure is automatically performed during the procedure for the M-MDS vehicle identification and network test, and the vehicle specification information is temporarily stored in the M-MDS during vehicle identification.

Disassembly

- If the disassembly procedure is complex, requiring many parts to be disassembled, all parts should be marked in a place that will not affect their performance or external appearance, and identified so that reassembly can be performed easily and efficiently.

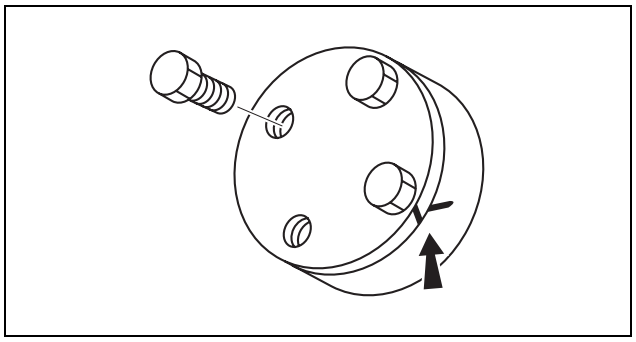

am6zzw0000559

GENERAL INFORMATION

Inspection During Removal, Disassembly

- When removed, each part should be carefully inspected for malfunction, deformation, damage and other problems.

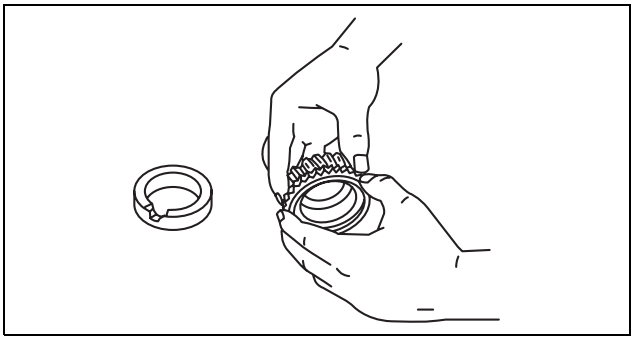
am6zzw0000559

Arrangement of Parts

- All disassembled parts should be carefully arranged for reassembly.
- Be sure to separate or otherwise identify the parts to be replaced from those that will be reused.

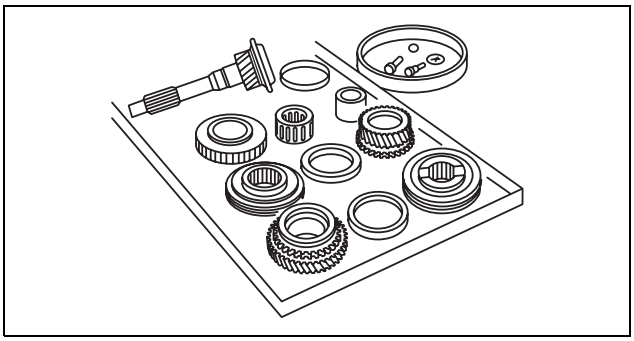
am6zzw0000559

Cleaning of Parts

- All parts to be reused should be carefully and thoroughly cleaned in the appropriate method.

Warning

- **Using compressed air can cause dirt and other particles to fly out causing injury to the eyes. Wear protective eye wear whenever using compressed air.**

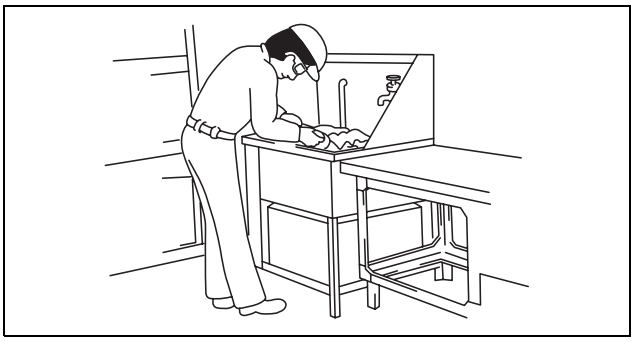
am6zzw0000559

Reassembly

- Standard values, such as torques and certain adjustments, must be strictly observed in the reassembly of all parts.
- If removed, these parts should be replaced with new ones:

Oil seals	Cotter pins
Gaskets	Locknuts (Nylon nuts)
O-rings	Spring pins
Lock washers	—

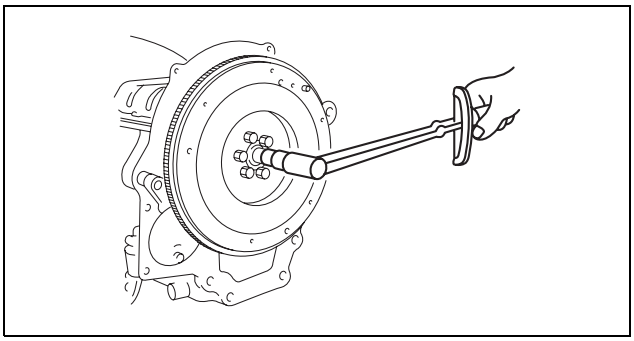
am6zzw0000559

GENERAL INFORMATION

- Depending on location:
  - — Sealant and gaskets, or both, should be applied to specified locations. When sealant is applied, parts should be installed before sealant hardens to prevent leakage.
  - — Oil should be applied to the moving components of parts.
  - — Specified oil or grease should be applied at the prescribed locations (such as oil seals) before reassembly.

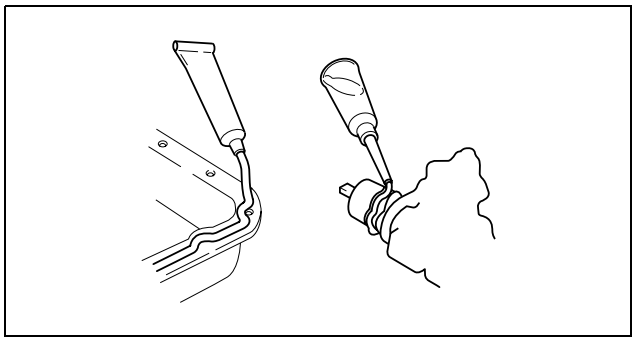
amxzzw0000006

Adjustment

- Use suitable gauges and testers when making adjustments.

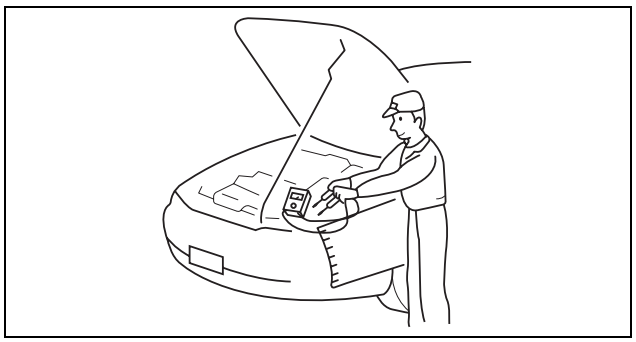
am5ezw0000540

Rubber Parts and Tubing

- Prevent gasoline or oil from getting on rubber parts or tubing.

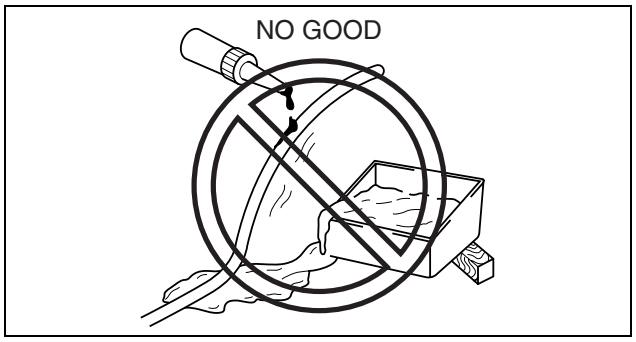

am6zzw0000266

Hose Clamps

- When reinstalling, position the hose clamp in the original location on the hose and squeeze the clamp lightly with large pliers to ensure a good fit.

Note

- Follow the description in each section because the clamps which are used with the fuel-related system differ from the one indicated above.

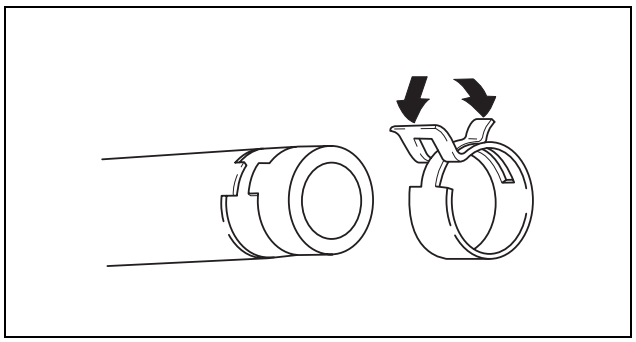
am6zzw0000416

GENERAL INFORMATION

Torque Formulas

- When using a torque wrench-**SST** or equivalent combination, the specified torque must be recalculated due to the extra length that the **SST** or equivalent adds to the torque wrench. Recalculate the torque by using the following formulas. Choose the formula that applies to you.

Torque Unit	Formula
N·m	N·m × [L/(L+A)]
kgf·m	kgf·m × [L/(L+A)]
kgf·cm	kgf·cm × [L/(L+A)]
ft·lbf	ft·lbf × [L/(L+A)]
in·lbf	in·lbf × [L/(L+A)]

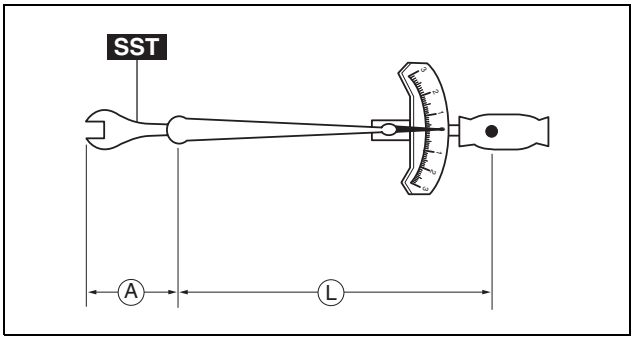

am3uuw0000193

A : The length of the **SST** past the torque wrench drive.
L : The length of the torque wrench.

Vise

- When using a vise, put protective plates in the jaws of the vise to prevent damage to parts.

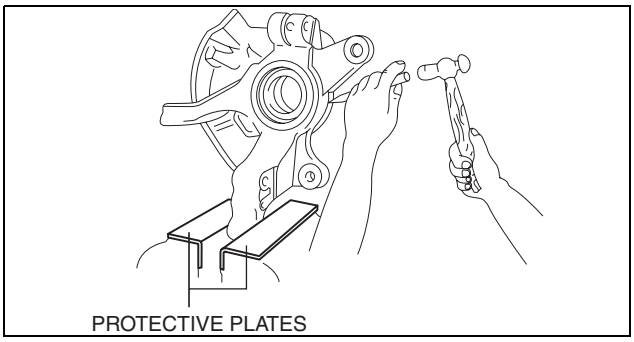

am3uuw0000194

Dynamometer

- When inspecting and servicing the power train on the dynamometer or speedometer tester, pay attention to the following:
  - — Place a fan, preferably a vehicle-speed proportional type, in front of the vehicle.
  - — Make sure the vehicle is in a facility with an exhaust gas ventilation system.
  - — Keep the rear bumper cool by placing a cooling fan near the exhaust pipe so that the rear bumper does not get deformed by the heat from the exhaust.
  - — Keep the area around the vehicle uncluttered so that heat does not build up.
  - — Watch the water temperature gauge and do not overheat the engine.
  - — Avoid added load to the engine and maintain normal driving conditions as much as possible.

Note

- When only the front or rear wheels are rotated on a chassis dynamometer or equivalent, the DSC HU/CM determines that there is a malfunction in the DSC and illuminates the following lights:
  - — with DSC
    - ABS warning light
    - Brake system warning light
    - TCS/DSC indicator light
- If the above lights are illuminated, dismount the vehicle from the chassis dynamometer and switch the ignition OFF (LOCK). Then, switch the ignition ON, run the vehicle at **10 km/h or more** and verify that the warning lights go out. In this case, a DTC will be stored in the memory. Clear the DTC from the memory by following the memory clearing procedure [DSC] in the on-board diagnostic system. (See 04-02A-7 ON-BOARD DIAGNOSIS [DYNAMIC STABILITY CONTROL (DSC)].)

GENERAL INFORMATION

SST

- Some global **SST** or equivalent are used as **SSTs** necessary for vehicle repair. Note that these **SSTs** are marked with global **SST** numbers.
- Note that a global **SST** number is written together with a corresponding Mazda **SST** number as shown below.

Example (SST List)

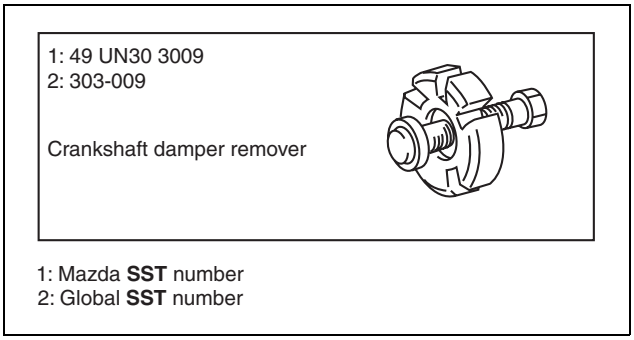

am5ezw0000675

Example (In text)

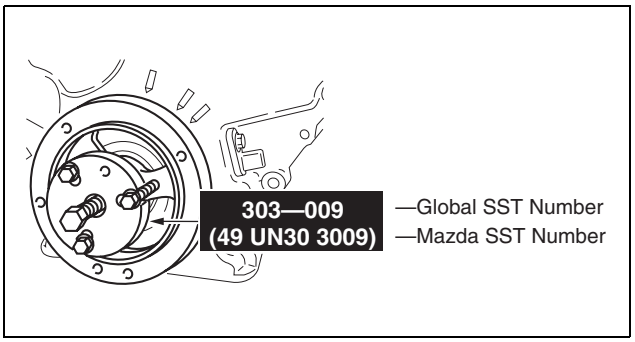

am6zzw0000559

GENERAL INFORMATION

INSTALLATION OF RADIO SYSTEM

id000000800300

The control modules and control unit have been designed with sufficient attention to radio wave disturbances from the outside. However, observe the following precautions when installing the radio set to the vehicle to prevent adverse effects on the control modules and control unit.

- Install the radio set and its antenna as far away as possible from the control modules and control unit.
- The antenna feeder and power cable generate radio waves, therefore, keep them **100 mm {3.94 in}** or more from the control modules, control unit, and wiring harness. If the antenna feeder and power cable cross over the wiring harness, place them perpendicular to the wiring harness.
- Do not install a high output radio set.
- Do not use the control modules and control unit power source for the radio set. In addition, do not use the cigar lighter and accessory socket power source.
- Do not attach the antenna feeder or wiring harness of the radio set to the wiring harness, fuel pipe, or brake tube of the vehicle.
- Do not install any radio set-related devices in the area where the air bag module deploys to prevent a secondary accident if the air bag were to deploy.

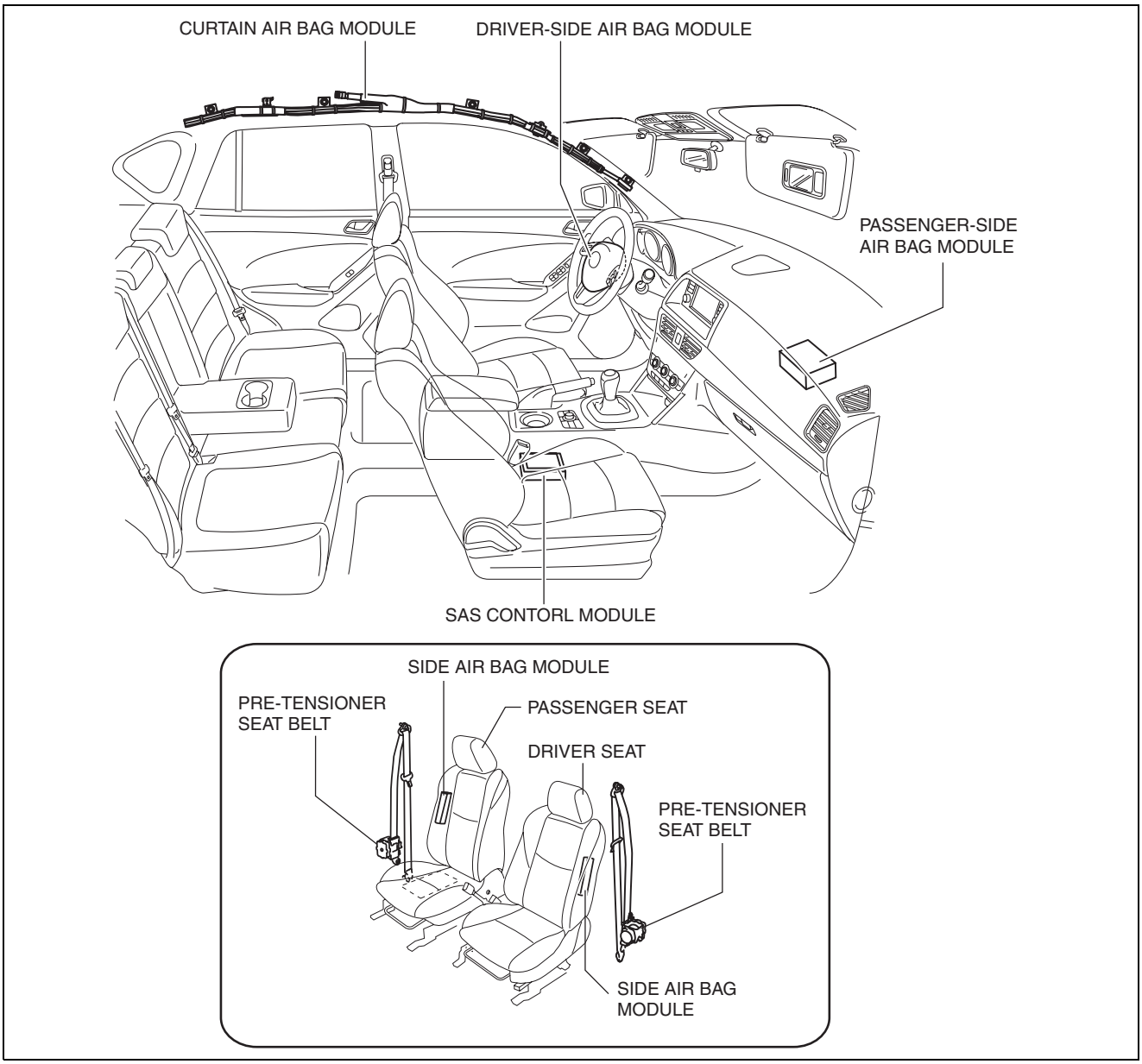

ac5wzw0000088

- After installing the radio set, perform a test transmission with the engine idling to verify that it does not affect engine control.

GENERAL INFORMATION

ELECTRICAL SYSTEM

id000000800400

Electrical Parts

Battery cable

- Before disconnecting connectors or removing electrical parts, disconnect the negative battery cable.

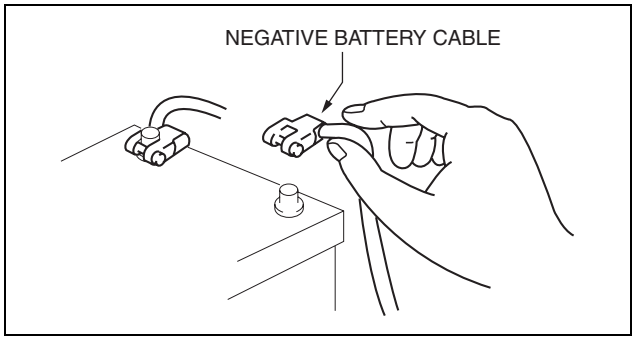

am6xuw0000003

Wiring Harness

- To remove the wiring harness from the clip in the engine room, pry up the hook of the clip using a flathead screwdriver.

Caution

- **Do not remove the wiring harness protective tape. Otherwise, the wires could rub against the body, which could result in water penetration and electrical shorting.**

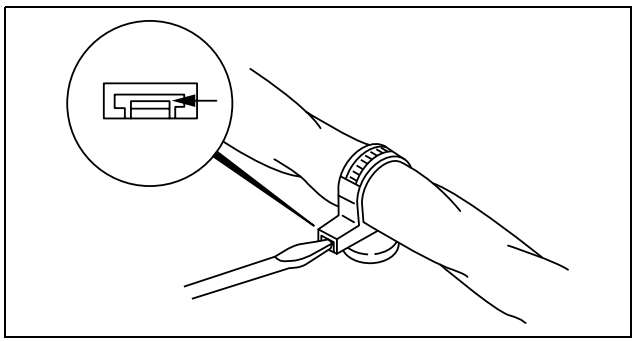

acxuuw00000452

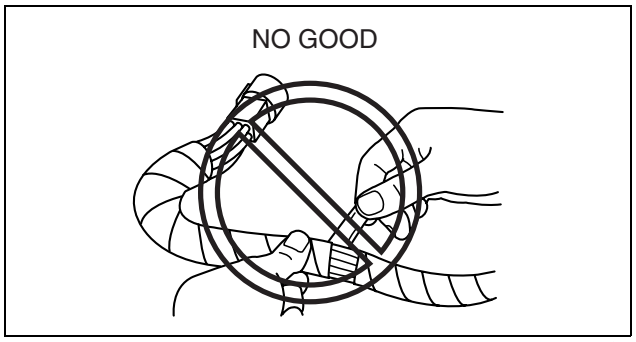

acxuuw00000453

Connectors

Disconnecting connectors

- When disconnecting a connector, grasp the connectors, not the wires.

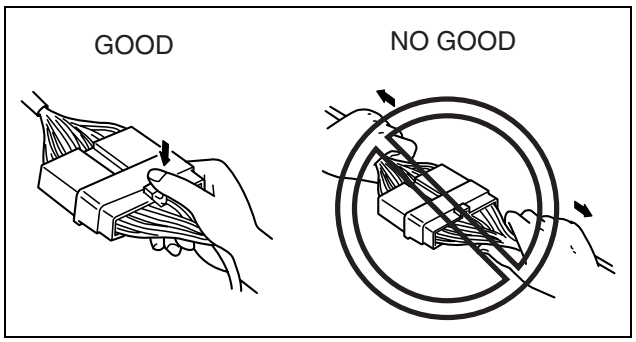

acxuuw00000454

- Connectors can be disconnected by pressing or pulling the lock lever as shown.

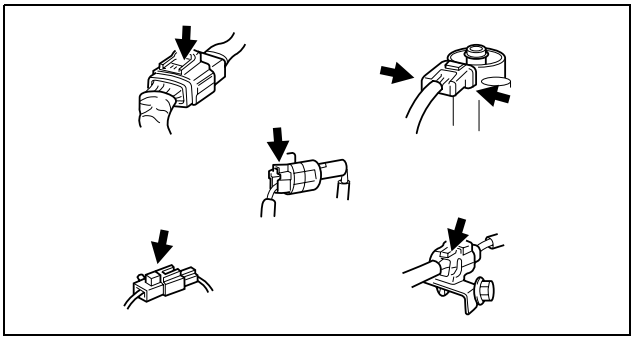

acxuuw00000455

Locking connector

- When locking connectors, listen for a click indicating they are securely locked.

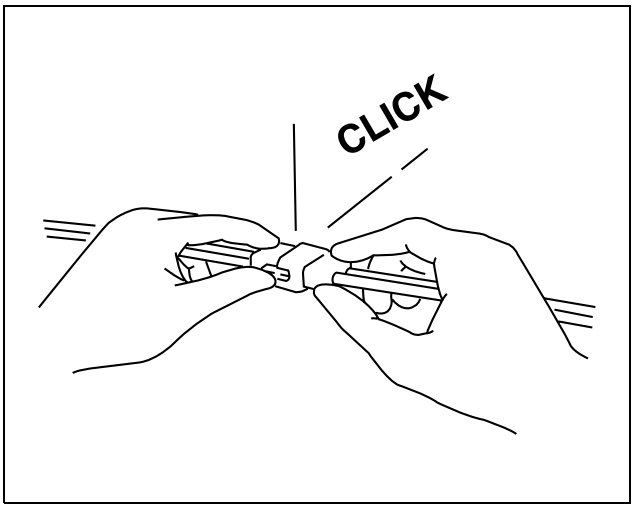

acxuuw00000456

Inspection

Caution

- **To prevent damage to the terminal, wrap a thin wire around the tester probe before inserting into terminal.**

- When a tester is used to inspect for continuity or measuring voltage, insert the tester probe from the wiring harness side.

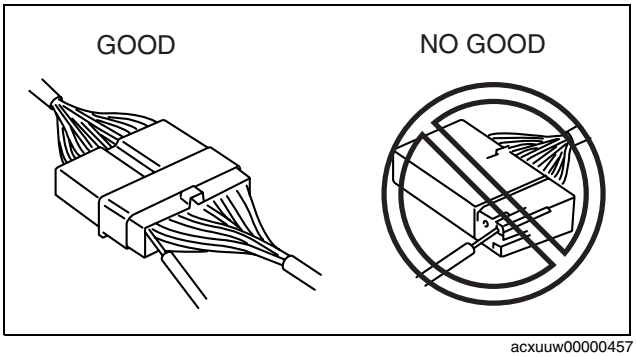

acxuuw00000457

GENERAL INFORMATION

- Inspect the terminals of waterproof connectors from the connector side since they cannot be accessed from the wiring harness side.

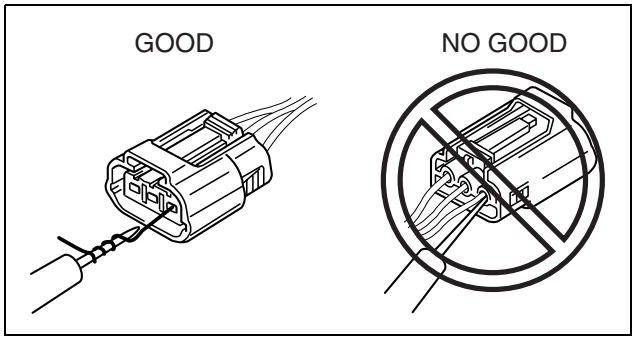

acxuuw00000458

Terminals
Inspection

- Pull lightly on individual wires to verify that they are secured in the terminal.

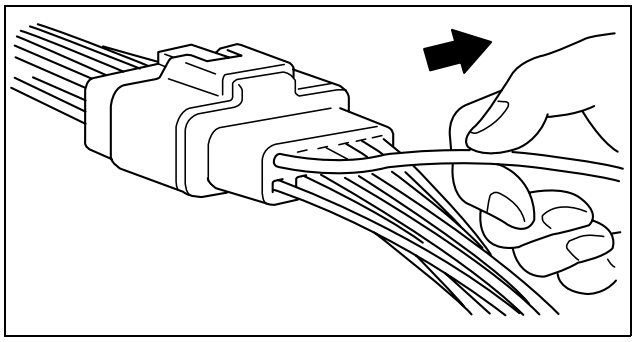
acxuuw00000459

Replacement

- Use the appropriate tools to remove a terminal as shown. When installing a terminal, be sure to insert it until it locks securely.
- Insert a thin piece of metal from the terminal side of the connector and with the terminal locking tab pressed down, pull the terminal out from the connector.

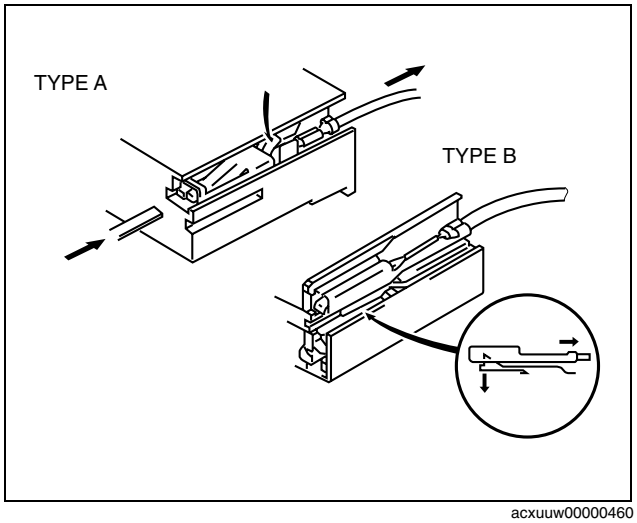

acxuuw00000460

GENERAL INFORMATION

Sensors, Switches, and Relays

- Handle sensors, switches, and relays carefully. Do not drop them or strike them against other objects.

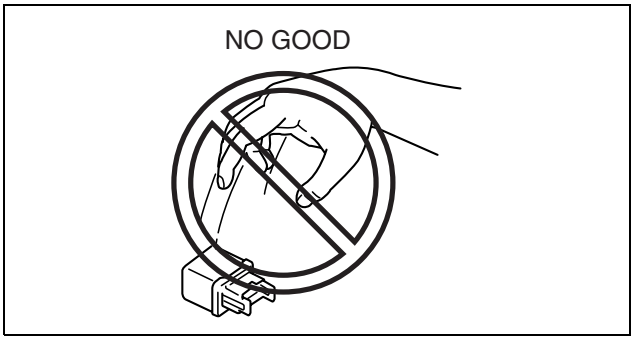

acxuuw00000461

Wiring Harness
Wiring color codes

- Two-color wires are indicated by a two-color code symbol.
- The first letter indicates the base color of the wire and the second is the color of the stripe.

CODE	COLOR	CODE	COLOR
B	Black	O	Orange
BR	Brown	P	Pink
G	Green	R	Red
GY	Gray	V	Violet
L	Blue	W	White
LB	Light Blue	Y	Yellow
LG	Light Green	–	–

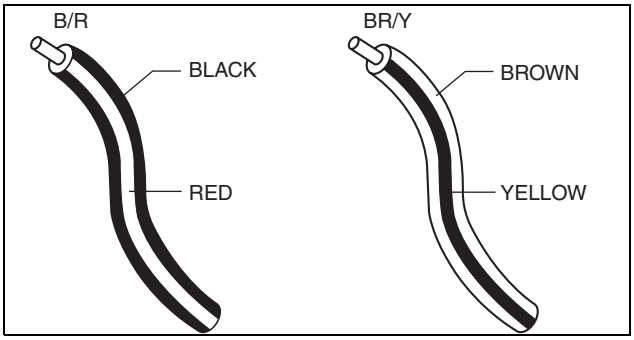

am6zzw0000567

Fuse
Replacement

- When replacing a fuse, be sure to replace it with one of the same capacity. If a fuse malfunctions again, the circuit probably has a short and the wiring should be inspected.
- Be sure the negative battery terminal is disconnected before replacing a main fuse.

Without i-stop

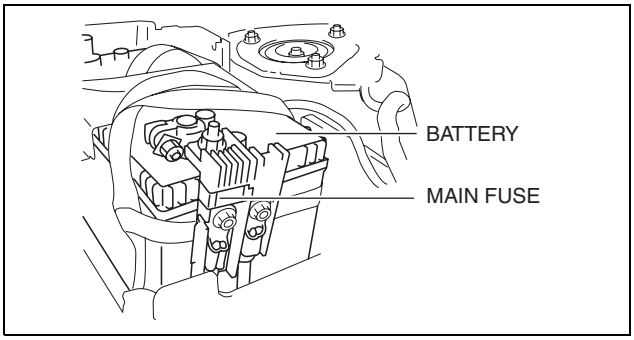

am5ezw0000541

With i-stop

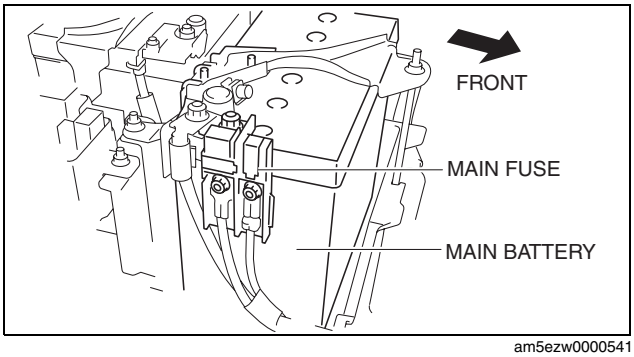

am5ezw0000541

GENERAL INFORMATION

- When replacing a pullout fuse, use the fuse puller.

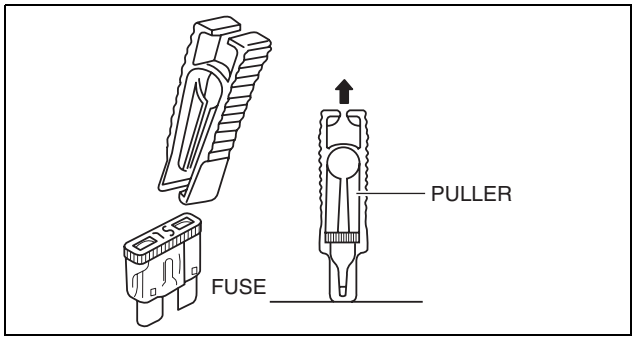

am6xuw0000004

Viewing orientation for Connectors

- The viewing orientation for connectors is indicated with a symbol.
- The figures showing the viewing orientation are the same as those used in Wiring Diagrams.
- The viewing orientations are shown in the following three ways.

Part-side connector

The viewing orientation for part-side connectors is from the terminal side.

* : Part names are shown only when there are multiple connector drawings.

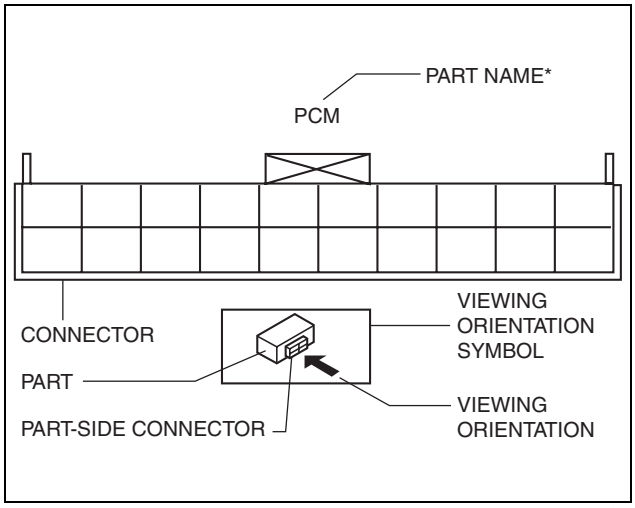

am6xuw0000160

Vehicle harness-side connector

The viewing orientation for vehicle wiring harness-side connectors is from the wiring harness side.

* : Part names are shown only when there are multiple connector drawings.

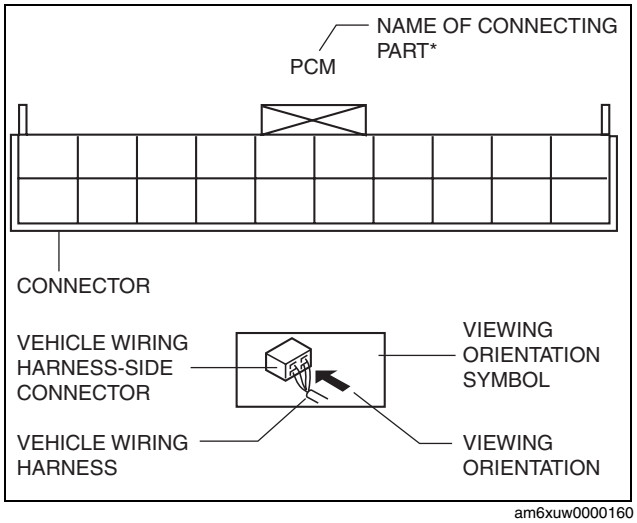

am6xuw0000160

GENERAL INFORMATION

Other

When it is necessary to show the terminal side of the vehicle wiring harness-side connectors, such as the following connectors, the viewing orientation is from the terminal side.

- Main fuse block and the main fuse block relays
- Data link connector
- Check connector
- Relay box

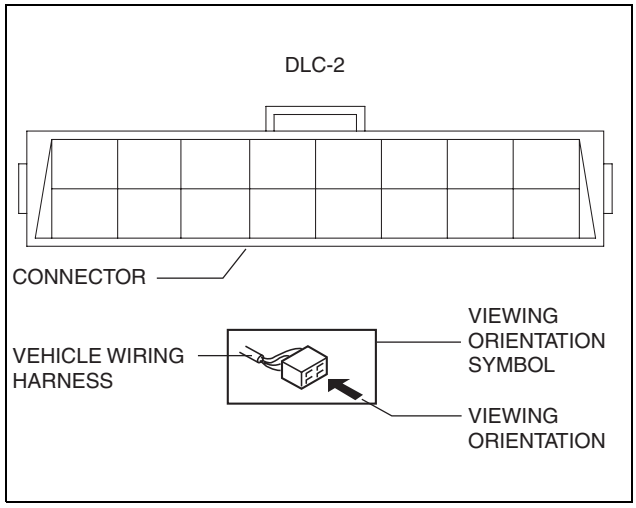

am3uuw0000684

Electrical Troubleshooting Tools

Jumper wire

Caution

- **Do not connect a jumper wire from the power source line to a body ground. This may cause burning or other damage to wiring harnesses or electronic components.**

- A jumper wire is used to create a temporary circuit. Connect the jumper wire between the terminals of a circuit to bypass a switch.

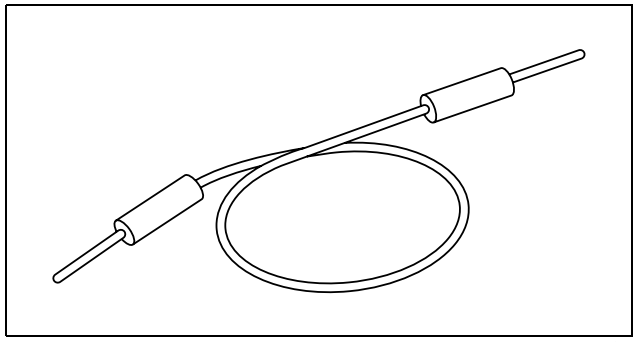

acxuuw00000468

Voltmeter

- The direct current voltmeter is used to measure circuit voltage. A voltmeter with a range of **15 V or more** is used by connecting the positive (+) probe (red lead wire) to the point where voltage will be measured and the negative (-) probe (black lead wire) to a body ground.

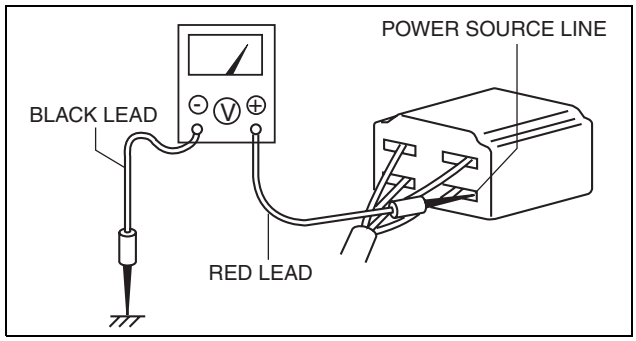

am6zzw0000567

GENERAL INFORMATION

Ohmmeter

Caution
- **Do not connect the ohmmeter to any circuit where voltage is applied. This will damage the ohmmeter.**

- The ohmmeter is used to measure the resistance between two points in a circuit and to inspect for continuity and short circuits.

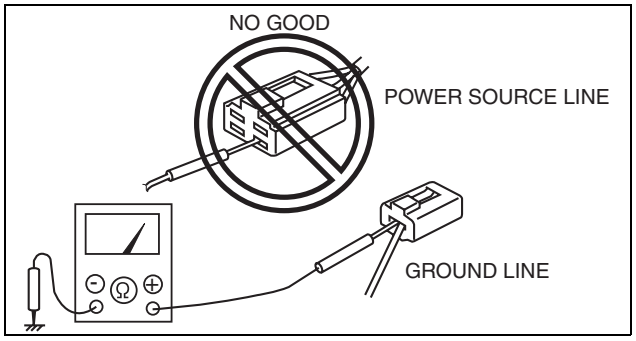

am6zzw0000739

Precautions Before Welding

A vehicle has various electrical parts. To protect the parts from excessive current generated when welding, be sure to perform the following procedure.

1. Switch the ignition OFF (LOCK).
2. Disconnect the battery cables.

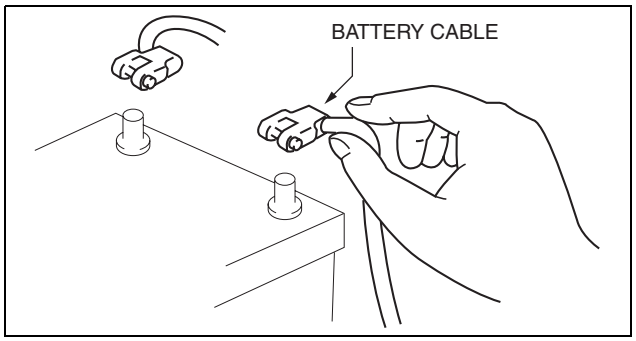

am6xuw0000005

3. Securely connect the welding machine ground near the welding area.
4. Cover the peripheral parts of the welding area to protect them from weld spatter.

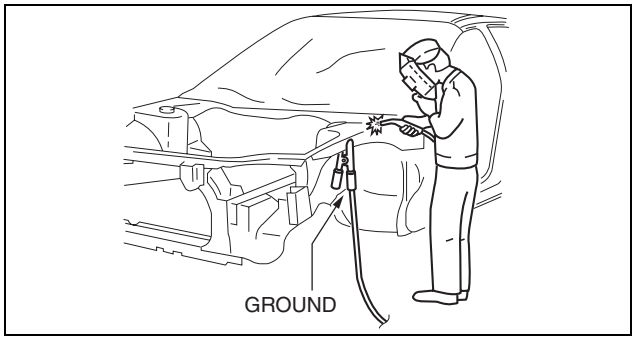

am6xuw0000160

GENERAL INFORMATION

JACKING POSITIONS, VEHICLE LIFT (2 SUPPORTS) AND SAFETY STAND (RIGID RACK) POSITIONS

id000000800500

00

Jacking Positions

Warning

- **Improperly jacking a vehicle is dangerous. The vehicle can slip off the jack and cause serious injury. Use only the correct front and rear jacking points and block the wheels.**

Caution

- **Use safety stands to support the vehicle after it has been lifted.**

Note

- To prevent obstruction between the jack body and front bumper when the jack body is inserted, use a low-floor type jack.

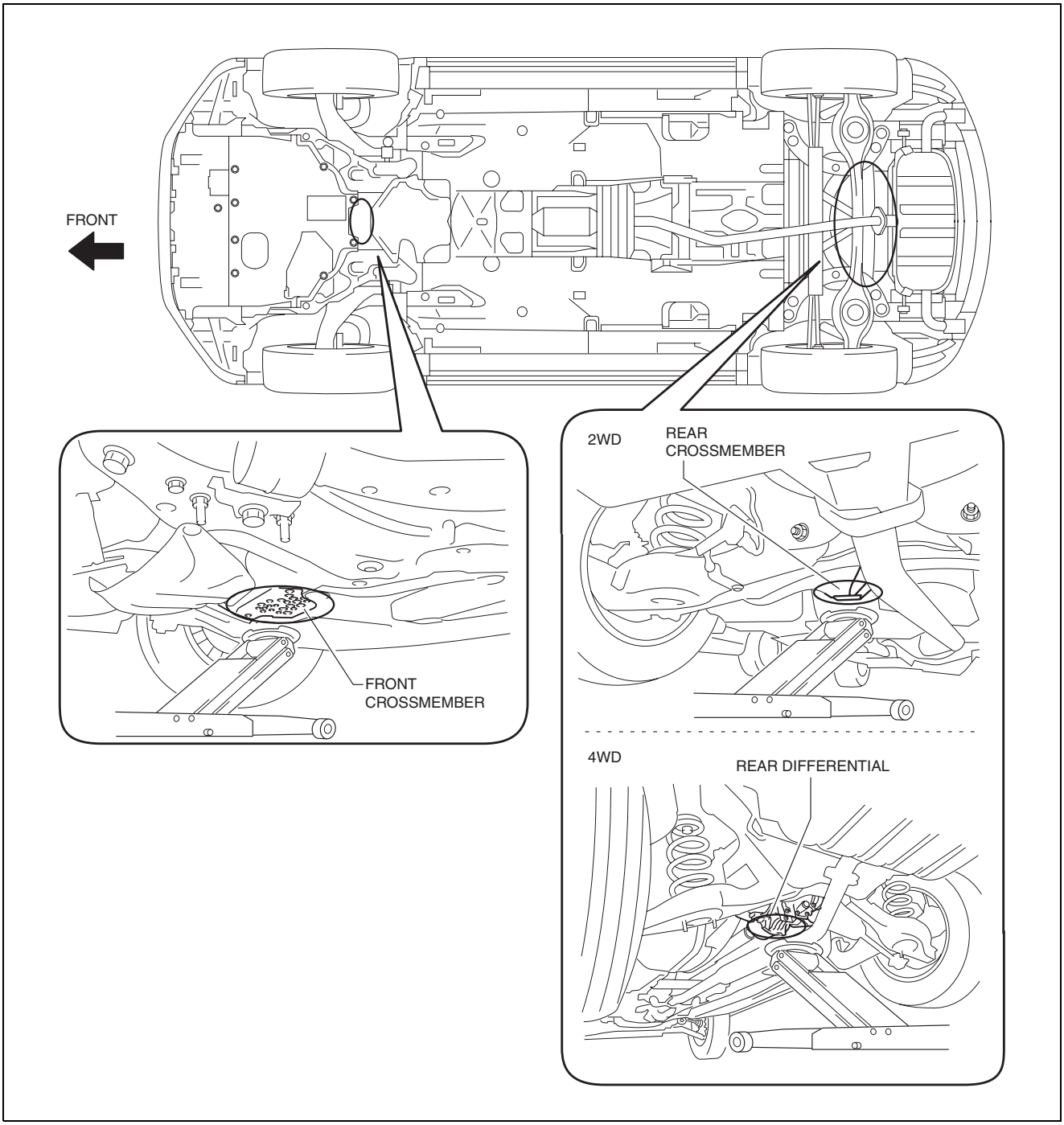

ac5wzw0000015

GENERAL INFORMATION

Vehicle Lift Positions

Warning

- **Lifting a vehicle is dangerous. The vehicle can slip off the lift and cause serious injury and/or vehicle damage. Make sure that the vehicle is on the lift horizontally by adjusting the height of support at the end of the arm of the lift.**

Front and rear

- Both sides of the vehicle, on side sills.

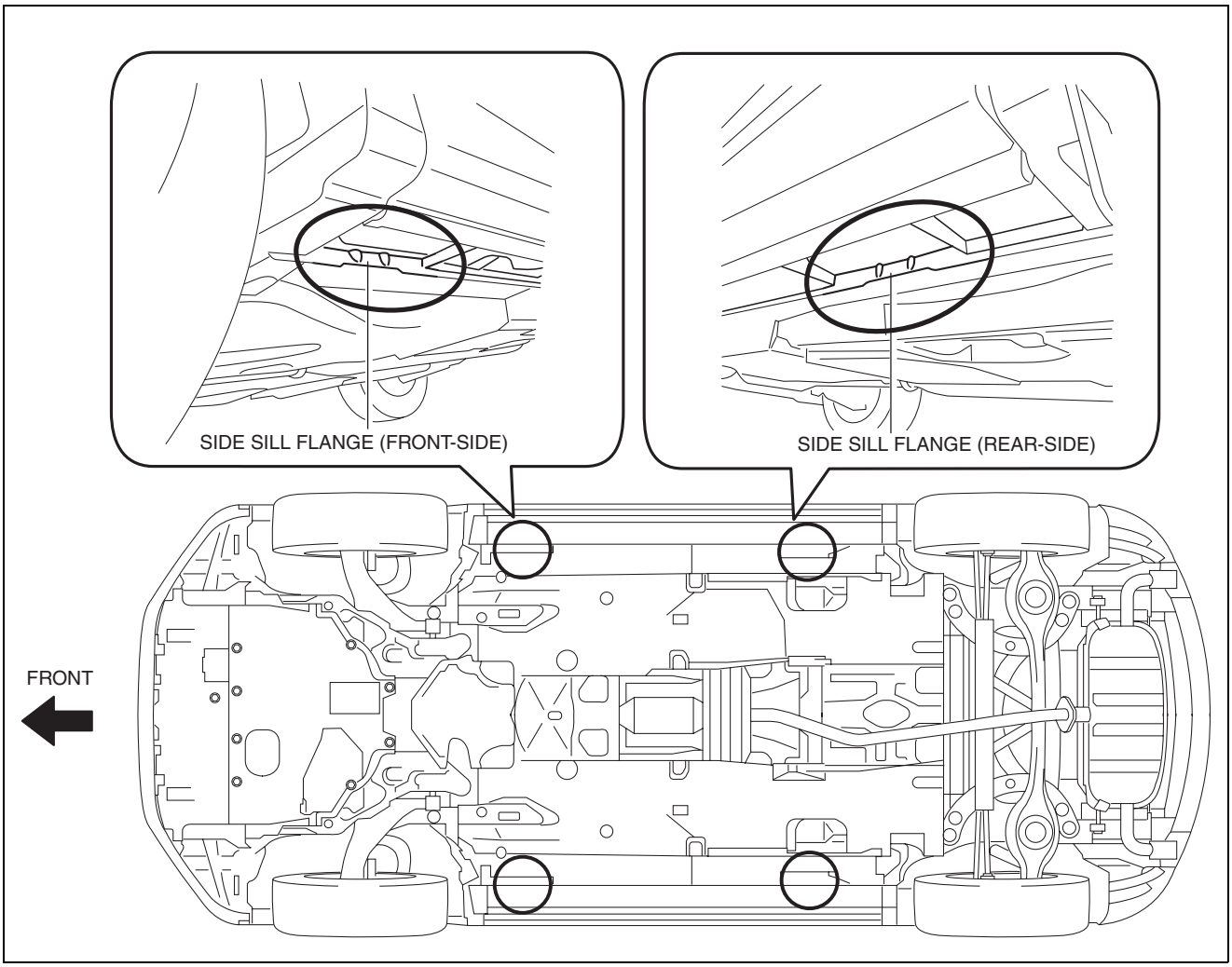

ac5wzw0000015

TOWING

id000000800600

- Proper lifting and towing are necessary to prevent damage to the vehicle. Government and local laws must be followed.
- A towed vehicle usually should have its drive wheels (front wheels) off the ground. If excessive damage or other conditions prevent this, use wheel dollies.
- When towing with the rear wheels on the ground, release the parking brake.

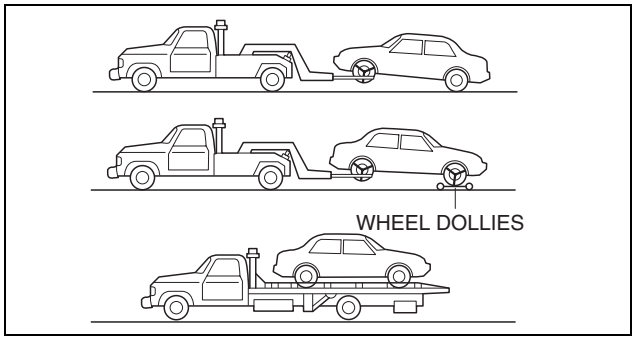

am3zzw0000873

Caution

- **Do not tow the vehicle pointed backward with driving wheels on the ground. This may cause internal damage to the transaxle.**

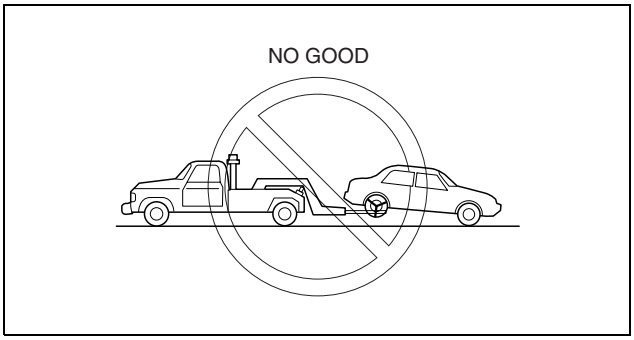

am6zzw0000300

- **Do not tow with sling-type equipment. This could damage your vehicle. Use wheel-lift or flatbed equipment.**

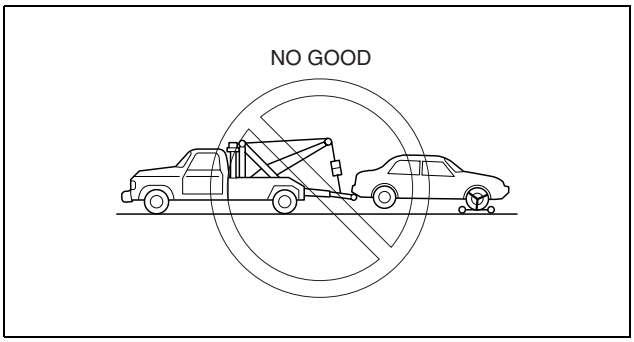

am6zzw0000378

- If towing service is not available in an emergency, the vehicle may be towed with all four wheels on the ground using the towing hook at the front of the vehicle.
  Only tow the vehicle on paved surfaces for short distance at low speeds.

Caution

- **Follow these instruction when towing the vehicle with all wheels on the ground.**
  1. **Shift to neutral (MTX), or the N position (ATX).**
  2. **Switch the ignition to ACC to prevent the steering from looking up.**
  3. **Release the parking break.**
- **Remember that power assist for the brakes and steering will not be available when the engine is not running.**

Towing Hooks

Caution

- **The towing eyelet or hook should be used in an emergency (to get the vehicle out of a ditch or a snow bank, for example).**
- **When using the towing eyelets or hooks, always pull the cable or chain in a straight direction with respect to the eyelet or hook. Apply no sideways force.**
- **For Australian specs. Do not use the tiedown hook under the rear for towing. It is designed ONLY for tying down the vehicle when it is being transported. Using it for towing will damage the bumper.**

Note

- When towing with chain or cable, wrap the chain or cable with a soft cloth near the bumper to prevent damage to the bumper.

Front

1. Pull the cover outward and insert a wheel brace wrapped in a soft cloth into the lower gap.

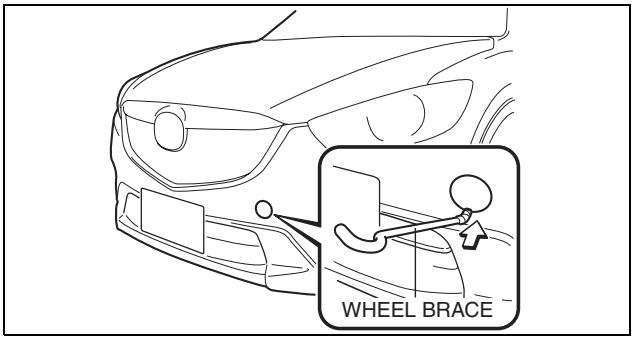

ac5wzw0000089

GENERAL INFORMATION

2. Wrap a screwdriver or similar tool with a soft cloth to prevent damage to the painted bumper and open the cap located on the front bumper.

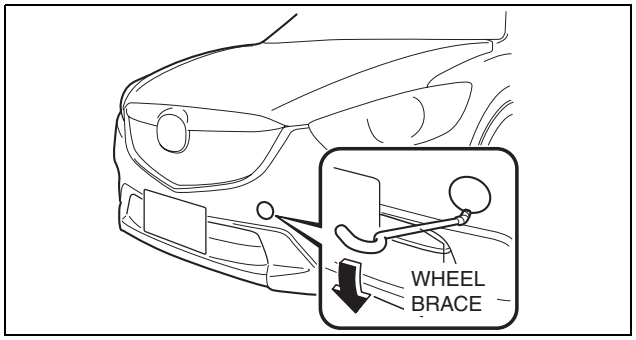

ac5wzw0000089

3. Securely install the towing eyelet (long type) using the wheel brace.

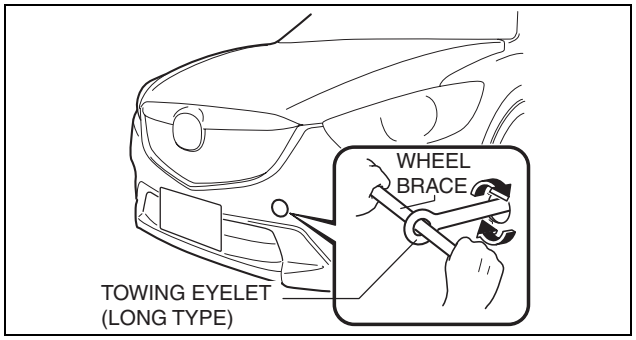

ac5wzw0000090

4. Hook the towing rope to the towing eyelet (long type).

Caution
- **If the towing eyelet is not securely tightened, it may loosen or disengage from the bumper when towing the vehicle. Make sure that the towing eyelet (long type) is securely tightened to the bumper.**

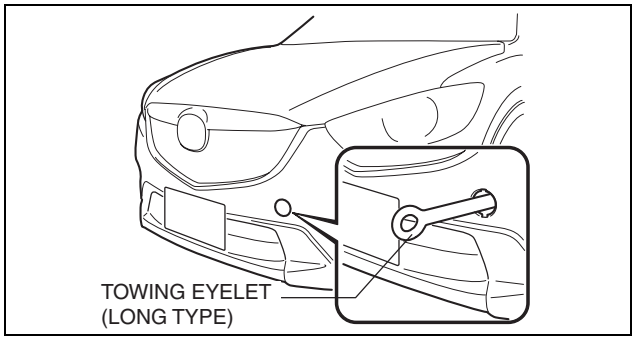

ac5wzw0000090

Rear
With towing cover

1. Wrap a wheel brace with a soft cloth to prevent damage to the bumper and open the cap located on the rear bumper.

Caution
- **The cap cannot be completely removed. Do not use excessive force as it may damage the cap or scratch the painted bumper surface.**

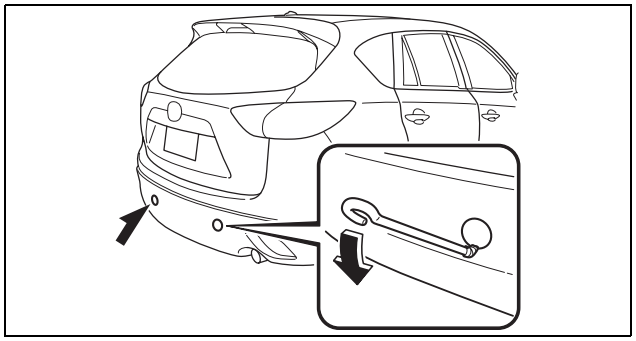
ac5wzw0000090

2. Securely install the towing eyelet (short type) using the wheel brace.

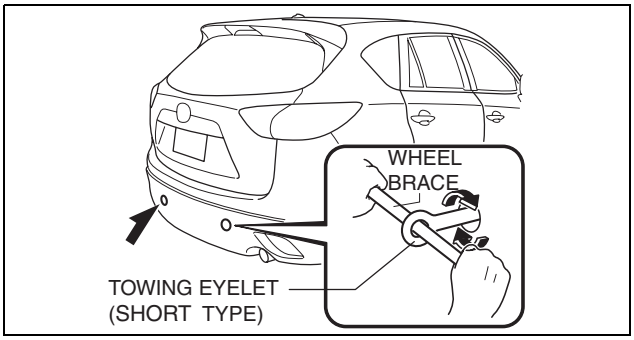

ac5wzw0000090

3. Hook the towing rope to the towing eyelet (short type).

Caution

- **If the towing eyelet is not securely tightened, it may loosen or disengage from the bumper when towing the vehicle. Make sure that the towing eyelet (short type) is securely tightened to the bumper.**

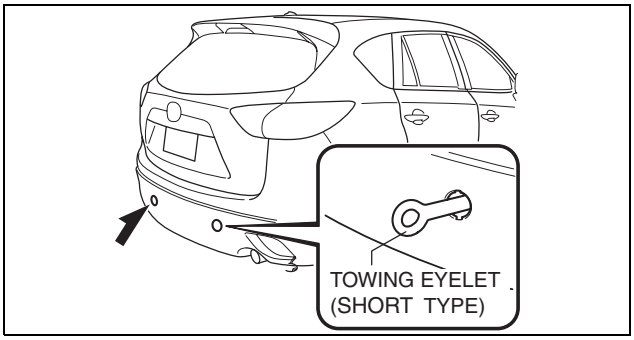

ac5wzw0000090

TIEDOWN HOOK

id000000800700

Caution

- **Do not use tie down hook for towing the vehicle. Use it only for securing the vehicle.**

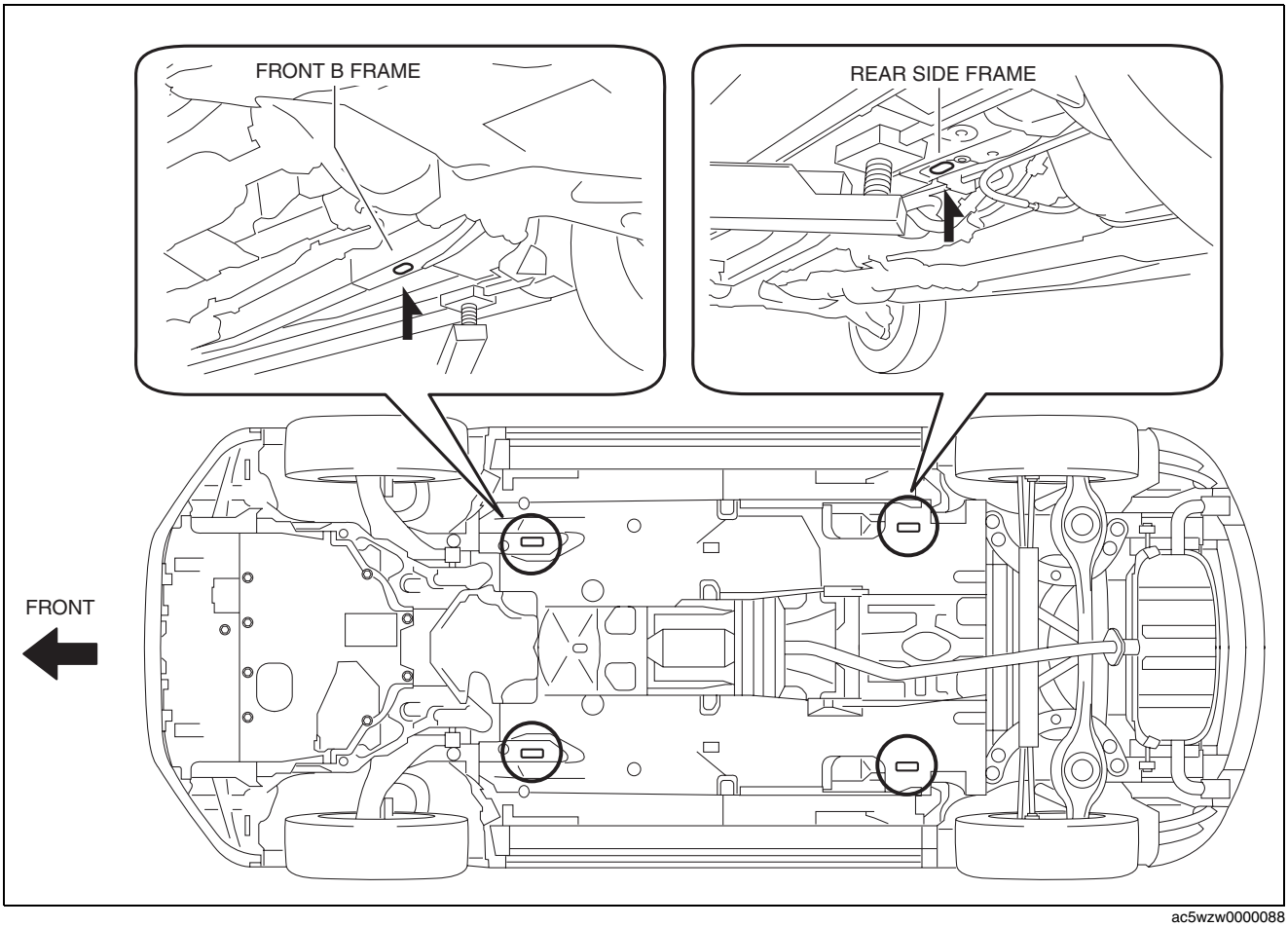

ac5wzw0000088

GENERAL INFORMATION

IDENTIFICATION NUMBER LOCATIONS

id000000800800

Vehicle Identification Number (VIN)

- The VIN marking position is located on the floor on the front passenger-side.

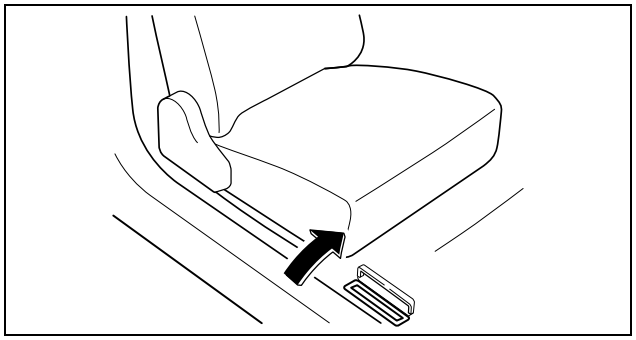

ac5wzw0000118

- If the VIN plate is adhered to the dashboard, it is located in the position shown in the figure.

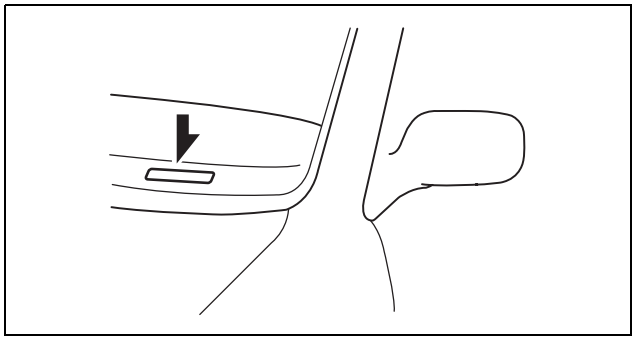

am6zzw0000387

Engine Identification Type/Number

SKYACTIV-G 2.0

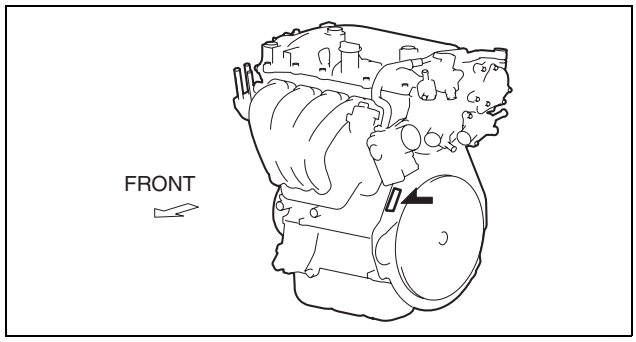

ac5wzw0000118

SKYACTIV-D 2.2

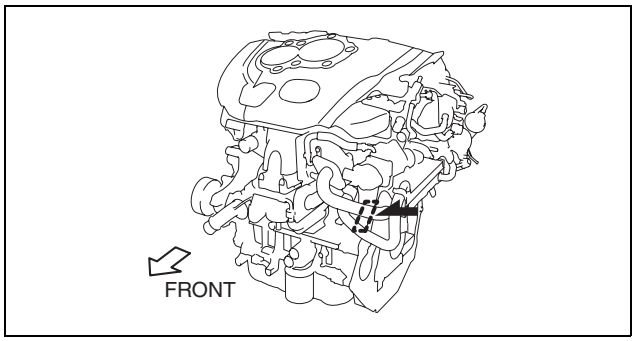

ac5wzw0000129

GENERAL INFORMATION

UNITS

id000000801600

Electric current	A (ampere)
Electric power	W (watt)
Electric resistance	ohm
Electric voltage	V (volt)
Length	mm (millimeter)
	in (inch)
Negative pressure	kPa (kilo pascal)
	mmHg (millimeters of mercury)
	inHg (inches of mercury)
Positive pressure	kPa (kilo pascal)
	kgf/cm^2 (kilogram force per square centimeter)
	psi (pounds per square inch)
Number of revolutions	rpm (revolutions per minute)

Torque	N·m (Newton meter)
	kgf·m (kilogram force meter)
	kgf·cm (kilogram force centimeter)
	ft·lbf (foot pound force)
	in·lbf (inch pound force)
Volume	L (liter)
	US qt (U.S. quart)
	Imp qt (Imperial quart)
	ml (milliliter)
	cc (cubic centimeter)
	cu in (cubic inch)
	fl oz (fluid ounce)
Weight	g (gram)
	oz (ounce)

Conversion From SI Units

- All numerical values in this manual are based on SI units. Numbers shown in conventional units are converted from these values.

Number Of Digits For Converted Values

- The number digits for converted values is the same as the number of significant figures*1 of the SI unit.
- For the torque value, the number of significant figures is, in principle, is 2 digits, in consideration of market practicalities. However, if the number of decimal places at the upper and lower limits of the converted value differs, the one with least number of decimal places is used. In addition, if the integer part is 3 digits or more, the integer part becomes the significant number of figures.

*1 : The number of significant figures is the number of digits from the left-most non-zero digit to the right-most digit including 0. (Example: 0.12 is 2 digits, 41.0 is 3 digits)

Converted Value Rounding Off And Rounding Up/down

- If there is no tolerance in the SI unit value, after conversion, rounding off is to within the number of significant digits.
- If there is tolerance in the SI unit value and the figure after conversion indicates the upper limit, the number of digits is rounded down to within the number of significant figures. If it indicates the lower limit, they are rounded up to within the number of significant figures.
- Even if the SI unit value is the same, the converted value may differ based on whether that value is the upper or lower limit.

GENERAL INFORMATION

NEW STANDARDS

id000000801400

- Following is a comparison of the previous standard and the new standard.

New Standard		Previous Standard		Remark
Abbreviation	Name	Abbreviation	Name	
AP	Accelerator Pedal	—	Accelerator Pedal	
APP	Accelerator Pedal Position	—	Accelerator Pedal Position	
ACL	Air Cleaner	—	Air Cleaner	
A/C	Air Conditioning	—	Air Conditioning	
A/F sensor	Air Fuel Ratio Sensor	—	—	
BARO	Barometric Pressure	—	Atmospheric Pressure	
B+	Battery Positive Voltage	V_B	Battery Voltage	
—	Brake Switch	—	Stoplight Switch	
—	Calibration Resistor	—	Corrected Resistance	#6
CMP sensor	Camshaft Position Sensor	—	Crank Angle Sensor	
LOAD	Calculated Load Voltage	—	—	
CAC	Charge Air Cooler	—	Intercooler	
CLS	Closed Loop System	—	Feedback System	
CTP	Closed Throttle Position	—	Fully Closed	
CPP	Clutch Pedal Position	—	Clutch Position	
CIS	Continuous Fuel Injection System	EGI	Electronic Gasoline Injection System	
CS sensor	Control Sleeve Sensor	CSP sensor	Control Sleeve Position Sensor	#6
CKP sensor	Crankshaft Position Sensor	—	Crank Angle Sensor 2	
DLC	Data Link Connector	—	Diagnosis Connector	
DTM	Diagnostic Test Mode	—	Test Mode	#1
DTC	Diagnostic Trouble Code(s)	—	Service Code(s)	
DI	Distributor Ignition	—	Spark Ignition	
DLI	Distributorless Ignition	—	Direct Ignition	
EI	Electronic Ignition	—	Electronic Spark Ignition	#2
ECT	Engine Coolant Temperature	—	Water Thermo	
EM	Engine Modification	—	Engine Modification	
—	Engine Speed Input Signal	—	Engine RPM Signal	
EVAP	Evaporative Emission	—	Evaporative Emission	
EGR	Exhaust Gas Recirculation	—	Exhaust Gas Recirculation	
FC	Fan Control	—	Fan Control	
FF	Flexible Fuel	—	Flexible Fuel	
4GR	Fourth Gear	—	Overdrive	
—	Fuel Pump Relay	—	Circuit Opening Relay	#3
FSO solenoid	Fuel Shut Off Solenoid	FCV	Fuel Cut Valve	#6
GEN	Generator	—	Alternator	
GND	Ground	—	Ground/Earth	
HO2S	Heated Oxygen Sensor	—	Oxygen Sensor	With heater
IAC	Idle Air Control	—	Idle Speed Control	
—	IDM Relay	—	Spill Valve Relay	#6
—	Incorrect Gear Ratio	—	—	
—	Injection Pump	FIP	Fuel Injection Pump	#6
—	Input/Turbine Speed Sensor	—	Pulse Generator	
IAT	Intake Air Temperature	—	Intake Air Thermo	
KS	Knock Sensor	—	Knock Sensor	
MIL	Malfunction Indicator Lamp	—	Malfunction Indicator Light	
MAP	Manifold Absolute Pressure	—	Intake Air Pressure	
MAF	Mass Air Flow	—	Mass Air Flow	
MAF sensor	Mass Air Flow Sensor	—	Airflow Sensor	
MFI	Multiport Fuel Injection	—	Multiport Fuel Injection	
OBD	On-Board Diagnostic	—	Diagnosis/Self Diagnosis	

New Standard		Previous Standard		Remark
Abbreviation	Name	Abbreviation	Name	
OL	Open Loop	—	Open Loop	
—	Output Speed Sensor	—	Vehicle Speed Sensor 1	
OC	Oxidation Catalytic Converter	—	Catalytic Converter	
O2S	Oxygen Sensor	—	Oxygen Sensor	
PNP	Park/Neutral Position	—	Park/Neutral Range	
PID	Parameter Identification	—	Parameter Identification	
—	PCM Control Relay	—	Main Relay	#6
PSP	Power Steering Pressure	—	Power Steering Pressure	
PCM	Powertrain Control Module	ECU	Engine Control Unit	#4
—	Pressure Control Solenoid	—	Line Pressure Solenoid Valve	
PAIR	Pulsed Secondary Air Injection	—	Secondary Air Injection System	Pulsed injection
—	Pump Speed Sensor	—	NE Sensor	#6
RAM	Random Access Memory	—	—	
AIR	Secondary Air Injection	—	Secondary Air Injection System	Injection with air pump
SAPV	Secondary Air Pulse Valve	—	Reed Valve	
SFI	Sequential Multipoint Fuel Injection	—	Sequential Fuel Injection	
—	Shift Solenoid A	—	1–2 Shift Solenoid Valve	
		—	Shift A Solenoid Valve	
—	Shift Solenoid B	—	2–3 Shift Solenoid Valve	
		—	Shift B Solenoid Valve	
—	Shift Solenoid C	—	3–4 Shift Solenoid Valve	
3GR	Third Gear	—	3rd Gear	
TWC	Three Way Catalytic Converter	—	Catalytic Converter	
TB	Throttle Body	—	Throttle Body	
TP	Throttle Position	—	—	
TP sensor	Throttle Position Sensor	—	Throttle Sensor	
TCV	Timer Control Valve	TCV	Timing Control Valve	#6
TCC	Torque Converter Clutch	—	Lockup Position	
TCM	Transmission (Transaxle) Control Module	—	EC-AT Control Unit	
—	Transmission (Transaxle) Fluid Temperature Sensor	—	ATF Thermosensor	
TR	Transmission (Transaxle) Range	—	Inhibitor Position	
TC	Turbocharger	—	Turbocharger	
VSS	Vehicle Speed Sensor	—	Vehicle Speed Sensor	
VR	Voltage Regulator	—	IC Regulator	
VAF sensor	Volume Air Flow Sensor	—	Air Flow Sensor	
WUTWC	Warm Up Three Way Catalytic Converter	—	Catalytic Converter	#5
WOT	Wide Open Throttle	—	Fully Open	

#1: Diagnostic trouble codes depend on the diagnostic test mode
#2: Controlled by the PCM
#3: In some models, there is a fuel pump relay that controls pump speed. That relay is now called the fuel pump relay (speed).
#4: Device that controls engine and powertrain
#5: Directly connected to exhaust manifold
#6: Part name of diesel engine

GENERAL INFORMATION

ABBREVIATIONS

id000000801000

AAS	Active Adaptive Shift
ABS	Antilock Brake System
ABDC	After Bottom Dead Center
ACC	Accessories
ALC	Auto Level Control
ALR	Automatic Locking Retractor
ATDC	After Top Dead Center
ATF	Automatic Transaxle Fluid
ATX	Automatic Transaxle
BBDC	Before Bottom Dead Center
BDC	Bottom Dead Center
BTDC	Before Top Dead Center
CAN	Controller Area Network
CCM	Comprehensive Component Monitor
CKP	Crankshaft Position
CM	Control Module
CMDTC	Continuous Memory Diagnostic Trouble Code
CMP	Camshaft Position
CPU	Central Processing Unit
DC	Drive Cycle
DEF	Defroster
DSC	Dynamic Stability Control
EBD	Electronic Brakeforce Distribution
EEPROM	Electrically Erasable Programmable Read-Only Memory
ELR	Emergency Locking Retractor
EPS	Electric Power Steering
ESS	Emergency Stop signal System
EX	Exhaust
FBCM	Front Body Control Module
FSC	Forward Sensing Camera
GPS	Global Positioning System
HBC	High Beam Control
HF/TEL	Hands-Free Telephone
HI	High
HS	High Speed
HU	Hydraulic Unit
IDS	Integrated Diagnostic Software
IG	Ignition
IN	Intake
INT	Intermittent
KOEO	Key On Engine Off
KOER	Key Off Engine Running
LCD	Liquid Crystal Display
LDWS	Lane Departure Warning System
LED	Light Emitting Diode
LF	Left Front
LH	Left Hand
L.H.D.	Left Hand Drive
LO	Low
LR	Left Rear
M	Motor
MAX	Maximum
MIN	Minimum
MS	Middle speed
MTX	Manual Transaxle
NVH	Noise, Vibration, Harshness
OCV	Oil Control Valve
ODDTC	On-demand Diagnostic Trouble Code
PAD	Passenger Air Bag Deactivation
PCV	Positive Crankcase Ventilation
PDS	Portable Diagnostic Software
PID	Parameter Identification
POWER MOS FET	Power Metal Oxide Semiconductor Field Effect Transistor
PSD	Power Sliding Door
P/W CM	Power Window Control Module
PTC	Positive Temperature Coefficient
RBCM	Rear Body Control Module
RDS	Radio Data System
REC	Recirculate
RES	Rear Entertainment System
RF	Right Front
RH	Right Hand
R.H.D.	Right Hand Drive
RR	Right Rear
SAS	Sophisticated Air Bag Sensor
SST	Special Service Tool
SW	Switch
TCS	Traction Control System
TDC	Top Dead Center
TFT	Transaxle Fluid Temperature
TNS	Tail Number Side Lights
TPMS	Tire Pressure Monitoring System
VBC	Variable Boost Control
VENT	Ventilation
W/M	Workshop Manual
1GR	First Gear
2GR	Second Gear
2WD	2-Wheel Drive
3GR	Third Gear
4GR	Fourth Gear
4WD	4-Wheel Drive
5GR	Fifth Gear
6GR	Sixth Gear

GENERAL INFORMATION

PRE-DELIVERY INSPECTION

id000000801100

Pre-Delivery Inspection Table
Exterior
INSPECT and **ADJUST**, if necessary, the following items to specification:
oGlass, exterior bright metal and paint for damage
oWheel lug nuts
oAll weatherstrips for damage or detachment
oAdjust tire pressures to specification
- Adjust the tire pressures when the tire are cool.
- Specified pressure is indicated on the door label.

Tire pressure record				
Left front	Right front	Left rear	Right rear	Spare

oAfter adjusting the tire pressures, switch the ignition ON (engine off or on) and long-press the tire pressure monitoring system set switch unit the tire pressure warning light flashes two times and the buzzer sounds one time (with tire pressure monitoring system switch).

Indicated that long-pressing of the tire pressure monitoring system set switch was implemented
Yes or No

oHeadlight cleaner and fluid level (if equipped)
oOperation of bonnet release and lock
oOperation of trunk lid and fuel-filler lid opener
oDoor operation and alignment including side door and back door
oHeadlight aiming
INSTALL the following parts:
oFlap (front)
oWheel caps or rings (if equipped)

Under bonnet—engine off
INSPECT and **ADJUST**, if necessary, the following items to specification:
oFuel, engine coolant, and hydraulic lines, fittings, connections, and components for leaks
oEngine oil level
oBrake and clutch fluid level
oWindshield washer reservoir fluid level
oRadiator coolant level and specific gravity
oTightness of water hose clamps
oTightness of battery terminals, electrolyte level and specific gravity

Interior
INSTALL the following items:
oFuse for accessories
oEquipment for push button start system (if equipped)
- After install the accessories fuse, assemble the key (transmitter and auxiliary key)

INSPECT the operations of the following items:
oSeat controls (slide and recline) and headrests
oFolding rear seat
oDoor locks, including childproof door locks
oSeat belts and warning system
oIgnition switch and steering lock
oTransmission/Transaxle range switch
oWarning buzzers
oIgnition key reminder alarm
oAir bag system using warning light
oCruise control system (if equipped)
oPower door lock
oShift-lock system (if equipped)
oStarter interlock
oAll lights including warning, and indicator lights
oHorn, wipers, and washers
oWiper blades performance
Clean wiper blades and windshield, if necessary
oAntenna

GENERAL INFORMATION

oAudio system
oCigarette lighter and clock
oPower windows (if equipped)
oHeater, defroster, and air conditioner at various mode selections (if equipped)
INSPECT the following items:
oPresence of spare fuse
oUpholstery and interior finish
INSPECT and **ADJUST**, if necessary, the following items:
oOperation and fit of windows
oPedal height and free play of brake and clutch pedals
oParking brake

Under bonnet—engine running at operating temperature
INSPECT the following items:
oAutomatic transmission/Transaxle fluid level
oOperation of idle-up system for electrical load, air conditioner or power steering (if equipped)
oOperation of throttle position sensor (When inspecting for wiring harness and connector poor connection)

On hoist
INSPECT the following items:
oManual transmission/Transaxle oil level
oUnderside fuel, coolant and hydraulic lines, fittings, connections, and components for leaks
oTires for cuts or bruises
oSteering linkage, suspension, exhaust system, and all underside hardware for looseness or damage
oDifferential oil level

Road test
INSPECT the following items:
oBrake operation
oClutch operation
oSteering control
oOperation of gauges
oSqueaks, rattles, and unusual noises
oEngine general performance
oEmergency locking retractors and automatic locking retractors
oCruise control system (if equipped)
oOperation of meters and gauges, squeaks, rattles, and abnormal noises

After road test
INSPECT for necessary owner information materials, tools, and spare tire in vehicle
The following items must be completed just before delivery to your customer.
oLoad test battery and charge if necessary (Load test result: Volts)
oAdjust tire pressures to specification
- Adjust the tire pressures when the tire are cool.
- Specified pressure is indicated on the door label.

Tire pressure record				
Left front	Right front	Left rear	Right rear	Spare

oAfter adjusting the tire pressures, switch the ignition ON (engine off or on) and long-press the tire pressure monitoring system set switch unit the tire pressure warning light flashes two times and the buzzer sounds one time (with tire pressure monitoring system switch).

Indicated that long-pressing of the tire pressure monitoring system set switch was implemented
Yes or No

oClean outside of vehicle
oRemove seat and cabin carpet protective covers
oVacuum inside of vehicle

GENERAL INFORMATION

SCHEDULED MAINTENANCE

id000000801200

Scheduled Maintenance Table for Europe (L.H.D., U.K.)

Maintenance Interval		Number of months or kilometers (miles), whichever comes first								
	Months	12	24	36	48	60	72	84	96	108
	×1000 km	20	40	60	80	100	120	140	160	180
	×1000 miles	12.5	25	37.5	50	62.5	75	87.5	100	112.5
Drive belts[*1]				I			I			I
Spark plugs[*2]		Replace every 120,000 km (75,000 miles)								
Air cleaner element[*3]				R			R			R
Evaporative system (if installed)				I			I			I
Engine oil[*4]		R	R	R	R	R	R	R	R	R
Engine oil filter[*4]		R	R	R	R	R	R	R	R	R
Cooling system			I		I		I		I	
Engine coolant	FL22 type[*5]	Replace at first 200,000 km (125,000 miles) or 10 years; after that, every 100,000km (62,500 miles) or 5 years.								
	Others	Replace every 2 years.								
Fuel lines and hoses			I		I		I		I	
Battery electrolyte level and specific gravity		I	I	I	I	I	I	I	I	I
Brake lines, hoses and connections		I	I	I	I	I	I	I	I	I
Brake fluid[*6]			R		R		R		R	
Parking brake		I	I	I	I	I	I	I	I	I
Disc brakes		I	I	I	I	I	I	I	I	I
Steering operation and linkages			I		I		I		I	
Manual transaxle oil		Replace every 180,000 km (112,500 miles)								
Rear differential oil		*7*8								
Transfer oil		*8								
Front and rear suspension, ball joints and wheel bearing axial play			I		I		I		I	
Driveshaft dust boots			I		I		I		I	
Exhaust system and heat shields		Inspect every 80,000 km (50,000 miles) or 5 years								
Bolts and nuts on chassis and body			T		T		T		T	
Body condition (for rust, corrosion and perforation)		Inspect annually								
Cabin air filter (if installed)			R		R		R		R	
Tires (including spare tire)(with inflation pressure adjustment)[*9]		I	I	I	I	I	I	I	I	I
Flat tire repair kit (if installed)[*10]		Inspect annually								

Chart symbols:
I: Inspect: Inspect and clean, repair, adjust, fill up, or replace if necessary.
R: Replace
T: Tighten

GENERAL INFORMATION

Remarks
Emission control and related systems

- The ignition and fuel systems are highly important to the emission control system and to efficient engine operation.
  All inspections and adjustments must be made by an expert repairer, we recommend an Authorized Mazda Repairer.
- After the prescribed period, continue to follow the described maintenance at the recommended intervals.
- Refer below for a description of items marked* in the maintenance chart.

*1: Also inspect the air conditioner drive belts, if installed.
If the vehicle is operated primarily under any of the following conditions, inspect the drive belts at every 20,000 km (12,500 miles) or 12 months.
a. Driving in dusty conditions
b. Extended periods of idling or low speed operation
c. Driving for long period in cold temperatures or driving regularly at short distance only
d. Driving in extremely hot conditions
e. Driving in mountainous conditions continually

*2: In the countries below, inspect the spark plugs at every 10,000 km (6,250 miles) or 12 months before replacing them at the said interval.
Albania, Bosnia and Herzegovina, Bulgaria, Croatia, Latvia, Macedonia, Moldova, Montenegro, Romania, Serbia, Ukraine

*3: If the vehicle is operated in very dusty or sandy areas, clean and if necessary, replace the air cleaner element more often than the recommended intervals.

*4: If the vehicle is operated primarily under any of the following conditions, replace the engine oil and oil filter at every 10,000 km (6,250 miles) or shorter.
a. Driving in dusty conditions
b. Extended periods of idling or low speed operation
c. Driving for long period in cold temperatures or driving regularly at short distance only
d. Driving in extremely hot conditions
e. Driving in mountainous conditions continually

*5: Use FL22 type coolant in vehicles with the inscription "FL22" on the radiator cap itself or the surrounding area. Use FL22 when replacing the coolant.

*6: If the brakes are used extensively (for example, continuous hard driving or mountain driving) or if the vehicle is operated in extremely humid climates, replace the brake fluid annually.

*7: If the vehicle is operated primarily under any of the following conditions, replace the rear differential oil at every 45,000 km (27,000 miles).
a. Towing a trailer or using a car-top carrier
b. Driving in dusty, sandy or wet condition
c. Extended periods of idling or low speed operation
d. Repeated short trips of less than 16 km (10 miles)

*8: If this component has been submerged in water, the oil should be replaced.

*9: Tire rotation is recommended every 10,000 km (6,250 miles).

*10: Check the tire repair fluid expiration date every year when performing the periodic maintenance. Replace the tire repair fluid bottle with new one before the expiration date.

GENERAL INFORMATION

00

Scheduled Maintenance Table for Australia

Maintenance Interval		Number of months or kilometers, whichever comes first															
	Months	6	12	18	24	30	36	42	48	54	60	66	72	78	84	90	96
	×1000 km	10	20	30	40	50	60	70	80	90	100	110	120	130	140	150	160
GASOLINE ENGINE																	
Fuel filter		Replace every 150,000 km															
Spark plugs		Replace every 120,000 km															
Air cleaner element*1				C			R			C			R			C	
Evaporative system (if installed)		I		I		I		I		I		I		I		I	
DIESEL ENGINE																	
Fuel filter					R				R				R				R
Fuel injection system*2			I						I						I		
Air cleaner element*1			C		C		R		C		C		R		C		C
GASOLINE AND DIESEL ENGINE																	
Drive belts*3		I	I	I	I	I	I	I	I	I	I	I	I	I	I	I	I
Engine oil*4*5		R	R	R	R	R	R	R	R	R	R	R	R	R	R	R	R
Engine oil filter*4		R	R	R	R	R	R	R	R	R	R	R	R	R	R	R	R
Cooling system			I		I		I		I		I		I		I		I
Engine coolant	FL22 type*6	Replace at first 200,000 km or 10 years; after that, every 100,000 km or 5 years															
	Others	Replace every 2 years															
Fuel lines and hoses		I		I		I		I		I		I		I		I	
Battery electrolyte level and specific gravity		I		I		I		I		I		I		I		I	
Brake lines, hoses and connections		I		I		I		I		I		I		I		I	
Brake fluid*7		I	I	I	R	I	I	I	R	I	I	I	R	I	I	I	R
Parking brake		I	I	I	I	I	I	I	I	I	I	I	I	I	I	I	I
Power brake unit (Brake booster) and hoses		I		I		I		I		I		I		I		I	
Disc brakes		I	I	I	I	I	I	I	I	I	I	I	I	I	I	I	I
Steering operation and linkages			I		I		I		I		I		I		I		I
Manual transaxle oil											R						
Rear differential oil		*8*9															
Transfer oil		*9															
Front and rear suspension, ball joints and wheel bearing axial play		I		I		I		I		I		I		I		I	
Driveshaft dust boots					I				I				I				I
Exhaust system and heat shields		Inspect every 80,000 km															
Bolts and nuts on chassis and body			T		T		T		T		T		T		T		T
All electrical system*10		I		I		I		I		I		I		I		I	
Cabin air filter (if installed)					R				R				R				R
Tires (including spare tire) (with inflation pressure adjustment)		I	I	I	I	I	I	I	I	I	I	I	I	I	I	I	I
Tire rotation*11		Rotate every 10,000 km or 6 months															
Road test		I	I	I	I	I	I	I	I	I	I	I	I	I	I	I	I
M-MDS check of Vehicle Management and Safety Systems			I		I		I		I		I		I		I		I

Chart symbols:
I: Inspect: Inspect and clean, repair, adjust, fill up, or replace if necessary.
R: Replace
C: Clean
D: Drain
T: Tighten

Note
- Please ask Mazda dealer to check Mazda computer network to ensure there are no outstanding campaign or recall actions on the vehicle.

GENERAL INFORMATION

Remarks
Emission control and related systems

- The ignition and fuel systems are highly important to the emission control system and to efficient engine operation.
  All inspections and adjustments must be made by an expert repairer, we recommend an Authorized Mazda Repairer.
- After the prescribed period, continue to follow the described maintenance at the recommended intervals.
- Refer below for a description of items marked* in the maintenance chart.
  *1: If the vehicle is operated in very dusty or sandy areas, clean and if necessary, replace the air cleaner element more often than the recommended intervals.
  *2: Implement the fuel injection amount correction.
  *3: Also inspect the air conditioner drive belts, if installed.
  If the vehicle is operated primarily under any of the following conditions, inspect the drive belts more often than the recommended intervals.
  a. Driving in dusty conditions
  b. Extended periods of idling or low speed operation
  c. Driving for long period in cold temperatures or driving regularly at short distance only
  d. Driving in extremely hot conditions
  e. Driving in mountainous conditions continually
  *4: If the vehicle is operated primarily under any of the following conditions, replace the engine oil and oil filter more often than the recommended intervals.
  a. Driving in dusty conditions
  b. Extended periods of idling or low speed operation
  c. Driving for long period in cold temperatures or driving regularly at short distance only
  d. Driving in extremely hot conditions
  e. Driving in mountainous conditions continually
  *5: Reset the engine oil data after replacing the engine oil.
  *6: Use FL22 type coolant in vehicles with the inscription "FL22" on the radiator cap itself or the surrounding area. Use FL22 when replacing the coolant.
  *7: If the brakes are used extensively (for example, continuous hard driving or mountain driving) or if the vehicle is operated in extremely humid climates, replace the brake fluid annually.
  *8: If the vehicle is operated primarily under any of the following conditions, replace the rear differential oil at every 40,000 km.
  a. Towing a trailer or using a car-top carrier
  b. Driving in dusty, sandy or wet condition
  c. Extended periods of idling or low speed operation
  d. Repeated short trips of less than 16 km
  *9: If this component has been submerged in water, the oil should be replaced.
  *10: This is a full function check of electrical systems such as lights, wiper and washer systems (including wiper blades), and power windows.
  *11: If the vehicle is operated primarily under any of the following conditions, rotate the tires more often than the recommended intervals.
  a. Driving on bumpy roads, gravel roads, snowy roads or dirt roads
  b. Driving uphill and downhill frequently
  c. Repeated short-distance driving
  d. On roads having many roundabouts

GENERAL INFORMATION

00

Scheduled Maintenance Table for General

Maintenance Interval		Number of months or kilometers (miles), whichever comes first															
	Months	6	12	18	24	30	36	42	48	54	60	66	72	78	84	90	96
	×1000 km	10	20	30	40	50	60	70	80	90	100	110	120	130	140	150	160
	×1000 miles	6.25	12.5	18.75	25	31.25	37.5	43.75	50	56.25	62.5	68.75	75	81.25	87.5	93.75	100
Drive belts[*1]		I	I	I	I	I	I	I	I	I	I	I	I	I	I	I	I
Fuel filter		Replace every 60,000 km (37,500 miles)															
Spark plugs		Replace every 120,000 km (75,000 miles)															
Evaporative system (if installed)			I		I		I		I		I		I		I		I
Engine oil[*2]		R	R	R	R	R	R	R	R	R	R	R	R	R	R	R	R
Engine oil filter[*2]		R	R	R	R	R	R	R	R	R	R	R	R	R	R	R	R
Cooling system			I		I		I		I		I		I		I		I
Engine coolant	FL22 type[*3]	Replace at first 200,000 km (125,000 miles) or 10 years; after that, every 100,000km(62,500 miles) or 5 years.															
	Others	Replace every 2 years.															
Air cleaner element[*4]			C		C		R		C		C		R		C		C
Fuel lines and hoses			I		I		I		I		I		I		I		I
Battery electrolyte level and specific gravity[*5]			I		I		I		I		I		I		I		I
Brake lines, hoses and connections			I		I		I		I		I		I		I		I
Brake fluid[*6]		I	I	I	R	I	I	I	R	I	I	I	R	I	I	I	R
Parking brake		I	I	I	I	I	I	I	I	I	I	I	I	I	I	I	I
Power brake unit (Brake booster) and hoses			I		I		I		I		I		I		I		I
Disc brakes		I	I	I	I	I	I	I	I	I	I	I	I	I	I	I	I
Steering operation and linkages			I		I		I		I		I		I		I		I
Manual transaxle oil											R						
Rear differential oil		*7*8															
Transfer oil		*8															
Front and rear suspension, ball joints and wheel bearing axial play			I		I		I		I		I		I		I		I
Driveshaft dust boots					I				I				I				I
Exhaust system and heat shields		Inspect every 80,000 km (50,000 miles)															
Bolts and nuts on chassis and body			T		T		T		T		T		T		T		T
Body condition (for rust, corrosion and perforation)		Inspect annually															
Cabin air filter (if installed)			R		R		R		R		R		R		R		R
Tires (including spare tire) (with inflation pressure adjustment)		I	I	I	I	I	I	I	I	I	I	I	I	I	I	I	I
Tire rotation		Rotate every 10,000 km (6,250 miles)															
Flat tire repair kit (if installed)[*9]		Inspect annually															

Chart symbols:
I: Inspect: Inspect and clean, repair, adjust, fill up, or replace if necessary.
R: Replace
C: Clean
T: Tighten

GENERAL INFORMATION

Remarks
Emission control and related systems

- The ignition and fuel systems are highly important to the emission control system and to efficient engine operation.
  All inspections and adjustments must be made by an expert repairer, we recommend an Authorized Mazda Repairer.
- After the prescribed period, continue to follow the described maintenance at the recommended intervals.
- Refer below for a description of items marked* in the maintenance chart.

*1: Also inspect the air conditioner drive belts, if installed.
If the vehicle is operated primarily under any of the following conditions, inspect the drive belts more often than the recommended intervals.
a. Driving in dusty conditions
b. Extended periods of idling or low speed operation
c. Driving for long period in cold temperatures or driving regularly at short distance only
d. Driving in extremely hot conditions
e. Driving in mountainous conditions continually

*2: If the vehicle is operated primarily under any of the following conditions, replace the engine oil and oil filter more often than the recommended intervals.
a. Driving in dusty conditions
b. Extended periods of idling or low speed operation
c. Driving for long period in cold temperatures or driving regularly at short distance only
d. Driving in extremely hot conditions
e. Driving in mountainous conditions continually

*3: Use FL22 type coolant in vehicles with the inscription "FL22" on the radiator cap itself or the surrounding area. Use FL22 when replacing the coolant.

*4: If the vehicle is operated in very dusty or sandy areas, clean and if necessary, replace the air filter more often than the recommended intervals.

*5: If the vehicle is operated in extremely heat and extremely cold areas, inspect the battery electrolyte level and specific gravity at every 10,000 km (6,250 miles) or 6 months.

*6: If the brakes are used extensively (for example, continuous hard driving or mountain driving) or if the vehicle is operated in extremely humid climates, replace the brake fluid annually.

*7: If the vehicle is operated primarily under any of the following conditions, replace the rear differential oil at every 45,000 km (27,000 miles).
a. Towing a trailer or using a car-top carrier
b. Driving in dusty, sandy or wet condition
c. Extended periods of idling or low speed operation
d. Repeated short trips of less than 16 km (10 miles)

*8: If this component has been submerged in water, the oil should be replaced.

*9: Check the tire repair fluid expiration date every year when performing the periodic maintenance. Replace the tire repair fluid bottle with new one before the expiration date.

GENERAL INFORMATION

00

Scheduled Maintenance Table for Russia/Belarus/Azerbaijan

Maintenance Interval		Number of months or kilometers, whichever comes first											
	Months	12	24	36	48	60	72	84	96	108	120	132	144
	×1000 km	15	30	45	60	75	90	105	120	135	150	165	180
Drive belts*1		I	I	I	I	I	I	I	I	I	I	I	I
Engine oil	Russia/ Belarus*2	R	R	R	R	R	R	R	R	R	R	R	R
	Azerbaijan*3	Replace every 5,000 km or 6 months											
Engine oil filter	Russia/ Belarus*2	R	R	R	R	R	R	R	R	R	R	R	R
	Azerbaijan*4	Replace every 10,000 km or 12 months											
Cooling system			I		I		I		I		I		I
Engine coolant	FL22 type*5	Replace at first 200,000 km or 10 years; after that, every 100,000km or 5 years.											
	Others	Replace every 2 years.											
Air cleaner element*6	Russia/Belarus	C	C	R	C	C	R	C	C	R	C	C	R
	Azerbaijan	C	R	C	R	C	R	C	R	C	R	C	R
Fuel filter	Russia/Belarus	Replace every 120,000km											
	Azerbaijan	Replace every 60,000km											
Fuel lines and hoses			I		I		I		I		I		I
Spark plugs		I	I	I	I	I	I	I	R	I	I	I	I
Evaporative system (if installed)					I				I				I
Battery electrolyte level and specific gravity		I	I	I	I	I	I	I	I	I	I	I	I
Brake lines, hoses and connections		I	I	I	I	I	I	I	I	I	I	I	I
Brake fluid*7			R		R		R		R		R		R
Parking brake		I	I	I	I	I	I	I	I	I	I	I	I
Disc brakes		I	I	I	I	I	I	I	I	I	I	I	I
Steering operation and linkages		I	I	I	I	I	I	I	I	I	I	I	I
Manual transaxle oil						R					R		
Rear differential oil		*8*9											
Transfer oil		*9											
Front and rear suspension, ball joints and wheel bearing axial play		I	I	I	I	I	I	I	I	I	I	I	I
Driveshaft dust boots		I	I	I	I	I	I	I	I	I	I	I	I
Exhaust system and heat shields		I	I	I	I	I	I	I	I	I	I	I	I
Bolts and nuts on chassis and body		T	T	T	T	T	T	T	T	T	T	T	T
Hinges and catches		L	L	L	L	L	L	L	L	L	L	L	L
All electrical system		I	I	I	I	I	I	I	I	I	I	I	I
Body condition (for rust, corrosion and perforation)		Inspect annually											
Cabin air filter (if installed)			R		R		R		R		R		R
Tires (including spare tire)(with inflation pressure adjustment)*10		I	I	I	I	I	I	I	I	I	I	I	I
Flat tire repair kit (if installed)*11		Inspect annually											

Chart symbols:
I: Inspect: Inspect and clean, repair, adjust, fill up, or replace if necessary.
R: Replace
C: Clean
T: Tighten
L: Lubricate

GENERAL INFORMATION

Remarks
Emission control and related systems

- The ignition and fuel systems are highly important to the emission control system and to efficient engine operation.
  All inspections and adjustments must be made by an expert repairer, we recommend an Authorized Mazda Repairer.
- After the prescribed period, continue to follow the described maintenance at the recommended intervals.
- Refer below for a description of items marked* in the maintenance chart.

*1: Also inspect the air conditioner drive belts, if installed.
If the vehicle is operated primarily under any of the following conditions, inspect the drive belts at every 7,500 km or 6 months.
a. Driving in dusty conditions
b. Extended periods of idling or low speed operation
c. Driving for long period in cold temperatures or driving regularly at short distance only
d. Driving in extremely hot conditions
e. Driving in mountainous conditions continually

*2: If the vehicle is operated primarily under any of the following conditions, replace the engine oil and oil filter at every 7,500 km or 6 months.
a. Driving in dusty conditions
b. Extended periods of idling or low speed operation
c. Driving for long period in cold temperatures or driving regularly at short distance only
d. Driving in extremely hot conditions
e. Driving in mountainous conditions continually

*3: If the vehicle is operated primarily under any of the following conditions, replace the engine oil at every 2,500 km or 3 months.
a. Driving in dusty conditions
b. Extended periods of idling or low speed operation
c. Driving for long period in cold temperatures or driving regularly at short distance only
d. Driving in extremely hot conditions
e. Driving in mountainous conditions continually

*4: If the vehicle is operated primarily under any of the following conditions, replace the engine oil filter at every 5,000 km or 6 months.
a. Driving in dusty conditions
b. Extended periods of idling or low speed operation
c. Driving for long period in cold temperatures or driving regularly at short distance only
d. Driving in extremely hot conditions
e. Driving in mountainous conditions continually

*5: Use FL22 type coolant in vehicles with the inscription "FL22" on the radiator cap itself or the surrounding area. Use FL22 when replacing the coolant.

*6: If the vehicle is operated in very dusty or sandy areas, clean the air filter at every 7,500 km or 6 months.

*7: If the brakes are used extensively (for example, continuous hard driving or mountain driving) or if the vehicle is operated in extremely humid climates, replace the brake fluid annually.

*8: If the vehicle is operated primarily under any of the following conditions, replace the rear differential oil at every 45,000 km (27,000 miles).
a. Towing a trailer or using a car-top carrier
b. Driving in dusty, sandy or wet condition
c. Extended periods of idling or low speed operation
d. Repeated short trips of less than 16 km (10 miles)

*9: If this component has been submerged in water, the oil should be replaced.

*10: Tire rotation is recommended every 10,000 km (6,250 miles).

*11: Check the tire repair fluid expiration date every year when performing the periodic maintenance. Replace the tire repair fluid bottle with new one before the expiration date.

GENERAL INFORMATION

Scheduled Maintenance Service (Specific Work Required)

- The specific work required for each maintenance item is listed in the following table. (Please refer to the section applicable to the model serviced.)

Maintenance Item	Specific Work Required
ENGINE	
Engine valve clearance	Inspect engine valve clearance.
Engine timing belt	Replace engine timing belt.
Engine timing belt auto tensioner	Replace engine timing belt auto tensioner.
Drive belts	Inspect for wear, cracks, fraying and tension.
Engine oil	Replace engine oil and inspect for leakage.
Engine oil filter	Replace engine oil filter and inspect for leakage.
COOLING SYSTEM	
Cooling system (Including coolant level adjustment)	Check engine coolant level and quality, and inspect for leakage.
Radiator cap	Inspect radiator cap.
Engine coolant	Replace engine coolant.
FUEL SYSTEM	
Idle speed	Check engine idle rpm.
Idle mixture	Inspect the CO and HC concentrations (see W/M).
Choke system	Check system operation.
Air cleaner element	Inspect dirt, oil and damage. Clean air cleaner element (by blowing air). Replace air cleaner element.
Fuel filter	Replace fuel filter.
Fuel injection pump inlet filter	Clean fuel injection pump inlet filter.
Fuel lines and hoses Fuel lines, hoses and connections	Inspect for cracks, leakage and loose connection.
Fuel injection system	Update to injection amount correction with WDS (see W/M). Update to injection amount correction with M-MDS (see W/M).
Fuel system (Drain water)	Drain water in fuel system.
Urea solution (AdBlue) for SCR system	Top up or drain and fill up with urea solution (AdBlue).
Diesel particulate filter	Replace diesel particulate filter.
Fuel additive for diesel particulate filter	Fill up fuel additive.
IGNITION SYSTEM	
Initial ignition timing	Check initial ignition timing.
Spark plugs	Inspect for wear, damage, carbon, plug gap and high-tension lead condition. Replace spark plugs.
Ignition cables condition/security	Inspect for damage, condition and connection.
EMISSION CONTROL SYSTEM	
Evaporative system Evaporative emission control system	Check system operation (see W/M), vapor lines, vacuum fitting hoses and connection.
Crankcase emission control system	Check system operation (see W/M), PCV valve, blow-by lines, vacuum fitting hoses and connection.
E.G.R system	Check system operation (see W/M), vacuum fitting hoses and connection. MZR-CD (RF turbo) engine: Update to MAF correction for E.G.R control with WDS (see W/M). MZR-CD (RF turbo) engine: Update to MAF correction for E.G.R control with M-MDS (see W/M).
Air intake system	Update to MAF correction (see W/M).
Throttle positioner system	Check the diaphragm and system operation, vacuum fitting hoses and connection.
Dash pot	Check system operation.
ELECTRICAL SYSTEM	
Battery electrolyte level and specific gravity	Check battery electrolyte level and specific gravity.
Battery condition	Check battery for corroded or loose connections and cracks.
Battery	Check battery for leakage and corrosion.
All electrical system Lighting system and windshield wipers and washer	Check function of lighting system, windshield wiper (including wiper blade condition), washer and power windows.

GENERAL INFORMATION

Maintenance Item	Specific Work Required
Head light alignment	Check head light alignment.
CHASSIS AND BODY	
Brake and clutch pedals Brake pedals	Check pedal height and free play.
Brake fluid	Check brake fluid level and for leakage. Replace brake fluid.
Clutch fluid	Check Clutch fluid level and for leakage.
Brake lines, hoses and connections	Inspect for cracks, damage, chafing, corrosion, scars, swelling and fluid leakage.
Parking brake	Check parking lever stroke.
Power brake unit and hoses Power brake unit (Brake booster) and hoses	Check vacuum lines, connections, and check valve for improper attachment, air tightness, cracks chafing and deterioration.
Disc brakes	Inspect caliper for correct operation and fluid leakage, brake pads for wear. Check disc plate condition and thickness. Test for judder and noise.
Drum brakes	Inspect brake drum for wear and scratches: brake lining for wear, peeling and cracks; wheel cylinder for fluid leakage. Test for judder and noise.
Manual steering gear oil	Check manual gear oil level.
Power steering fluid, lines, hoses and connections Power steering fluid and lines	Check power steering fluid level and lines for improper attachment, leakage, cracks, damage, loose connections, chafing and deterioration.
Steering operation and gear housing Steering linkages tie rod ends and arms Steering operation and linkages	Check that the steering wheel has the specified play. Be sure to check for changes, such as excessive play, hard steering or strange noises. Check gear housing and boots for looseness, damage and grease/gear oil leakage. Check ball joint, dust cover and other components for looseness, wear, damage and grease leakage.
Front and rear suspension and ball joints Front suspension ball joints Front and rear suspension, ball joints and wheel bearing axial play	Inspect for grease leakage, crack, damage and looseness. Inspect for grease leakage, crack, damage, looseness and wheel bearing play/noise.
Wheel bearing axial play	Inspect for wheel bearing play/noise.
Manual transmission/transaxle oil	Check manual transmission/transaxle oil level and for leakage. Check manual transaxle for leakage (type "B76M-R" only) Replace manual transmission/transaxle oil.
Automatic transmission/transaxle fluid level	Check automatic transmission/transaxle fluid level.
Automatic transmission/transaxle fluid	Replace automatic transmission/transaxle fluid.
Front and rear differential oil Front differential oil Front axle oil Rear differential oil Rear axle oil	Check front and rear differential oil level and inspect for leakage. Replace front and rear differential oil.
Transfer oil	Check transfer oil level inspect for leakage. Replace transfer oil
Front and rear wheel bearing grease Front wheel bearing grease	Remove wheel bearing and replace wheel bearing grease.
Wheel bearing axial play Wheel bearing axial play (rear) and lateral play (front)	Inspect wheel bearing play and noise.
Propeller shaft joints Front propeller shaft joints Rear propeller shaft joints	Lubricate propeller shaft joints.
Driveshaft dust boots	Inspect for grease leakage, crack, damage and looseness.
Wheel nuts	Tighten wheel nuts.
Bolts and nuts on chassis and body Bolts and nuts on seats	Tighten bolts and nuts fastening suspension components, members and seat frames.
Body condition (for rust, corrosion and perforation)	Inspect body surface for paint damage, rust, corrosion and perforation.
Exhaust system and heat shields Exhaust pipe connections	Inspect for damage, corrosion, looseness of connections and gas leakage.
Tire rotation	Rotate tires.
Tires (Including spare tire) (with inflation pressure adjustment)	Check air pressure and inspect tires for tread wear, damage, cracks; and wheels for damage and corrosion.

GENERAL INFORMATION

Maintenance Item	Specific Work Required
Flat tire repair kit	Check tire repair fluid expiration date.
Hinges and catches	Lubricate hinges and catches of doors, trunk lid and hood.
Underside of vehicle	Inspect underside of vehicle (floor pans, frames, fuel lines, around exhaust system etc.) for damage and corrosion.
Road test	Check brake operation/clutch operation/steering control/operation of meters and gauges/squeaks, rattles, or unusual noises/engine general performance/ emergency locking retractors.
Diagnostic trouble code by WDS Diagnostic trouble code by M-MDS	Check diagnostic trouble code with WDS (see W/M). Check diagnostic trouble code with M-MDS (see W/M).
M-MDS check of Vehicle Management and Safety Systems	Check the items below with M-MDS (see W/M). 1. Retrieve All CMDTCs 2. PCM function test (except Tribute and diesel engine models) 3. PCM Input/Output Data Monitor (except Tribute and diesel engine models) 4. Adviser Comment (except Tribute and diesel engine models)
AIR CONDITIONER SYSTEM	
Cabin air filter	Replace cabin air filter.

ENGINE

01
SECTION

ON-BOARD DIAGNOSTIC
[SKYACTIV-G 2.0] 01-02
SYMPTOM
TROUBLESHOOTING
[SKYACTIV-G 2.0] 01-03
MECHANICAL
[SKYACTIV-G 2.0] 01-10A
MECHANICAL
[SKYACTIV-D 2.2] 01-10B
LUBRICATION
[SKYACTIV-G 2.0] 01-11A
LUBRICATION
[SKYACTIV-D 2.2] 01-11B
COOLING SYSTEM
[SKYACTIV-G 2.0] 01-12A
COOLING SYSTEM
[SKYACTIV-D 2.2] 01-12B
INTAKE-AIR SYSTEM
[SKYACTIV-G 2.0] 01-13A
INTAKE-AIR SYSTEM
[SKYACTIV-D 2.2] 01-13B
FUEL SYSTEM
[SKYACTIV-G 2.0] 01-14A
FUEL SYSTEM
[SKYACTIV-D 2.2] 01-14B
EXHAUST SYSTEM
[SKYACTIV-G 2.0] 01-15A
EXHAUST SYSTEM
[SKYACTIV-D 2.2] 01-15B
EMISSION SYSTEM
[SKYACTIV-G 2.0] 01-16A
EMISSION SYSTEM
[SKYACTIV-D 2.2]. 01-16B
CHARGING SYSTEM
[SKYACTIV-G 2.0] 01-17A
CHARGING SYSTEM
[SKYACTIV-D 2.2]. 01-17B
IGNITION SYSTEM
[SKYACTIV-G 2.0] 01-18
STARTING SYSTEM
[SKYACTIV-G 2.0] 01-19A
STARTING SYSTEM
[SKYACTIV-D 2.2]. 01-19B
CRUISE CONTROL SYSTEM
[SKYACTIV-G 2.0] 01-20A
CRUISE CONTROL SYSTEM
[SKYACTIV-D 2.2]. 01-20B
CONTROL SYSTEM
[SKYACTIV-G 2.0] 01-40
TECHNICAL DATA
[SKYACTIV-G 2.0] 01-50A
TECHNICAL DATA
[SKYACTIV-D 2.2]. 01-50B
SERVICE TOOLS
[SKYACTIV-G 2.0] 01-60A
SERVICE TOOLS
[SKYACTIV-D 2.2]. 01-60B

01-02 ON-BOARD DIAGNOSTIC [SKYACTIV-G 2.0]

FOREWORD [SKYACTIV-G 2.0] 01-02–4
Troubleshooting Procedure 01-02–4
Repair order form 01-02–5
Action for Non-repeatable Malfunction 01-02–7
OBD PENDING TROUBLE CODE [SKYACTIV-G 2.0] 01-02–7
OBD FREEZE FRAME DATA [SKYACTIV-G 2.0] 01-02–7
OBD ON-BOARD SYSTEM READINESS TEST [SKYACTIV-G 2.0] 01-02–7
OBD READ/CLEAR DIAGNOSTIC TEST RESULTS [SKYACTIV-G 2.0] 01-02–7
OBD PARAMETER IDENTIFICATION (PID) ACCESS [SKYACTIV-G 2.0] 01-02–7
ON-BOARD DIAGNOSTIC TEST [SKYACTIV-G 2.0] 01-02–8
DTC Reading Procedure 01-02–8
Pending Trouble Code Access Procedure 01-02–8
Freeze Frame PID Data Access Procedure 01-02–8
On-Board System Readiness Tests Access Procedure 01-02–11
PID/DATA Monitor and Record Procedure 01-02–11
Diagnostic Monitoring Test Results Access Procedure 01-02–11
Active Command Modes Procedure . . . 01-02–11
AFTER REPAIR PROCEDURE [SKYACTIV-G 2.0] 01-02–12
KOEO/KOER SELF TEST [SKYACTIV-G 2.0] 01-02–12
KOEO Self Test 01-02–12
KOER Self Test 01-02–12
OBD DRIVE MODE [SKYACTIV-G 2.0] 01-02–13
Mode 03 (Variable Valve Timing, A/F Sensor Heater, HO2S Heater, A/F Sensor, HO2S and TWC Repair Verification Drive Mode) 01-02–13
DTC TABLE [SKYACTIV-G 2.0] 01-02–14
DTC P0010:00 [SKYACTIV-G 2.0] 01-02–28
DTC P0011:00 [SKYACTIV-G 2.0] 01-02–33
DTC P0012:00 [SKYACTIV-G 2.0] 01-02–35
DTC P0014:00 [SKYACTIV-G 2.0] 01-02–37
DTC P0015:00 [SKYACTIV-G 2.0] 01-02–39
DTC P0031:00 [SKYACTIV-G 2.0] 01-02–41
DTC P0032:00 [SKYACTIV-G 2.0] 01-02–44
DTC P0037:00 [SKYACTIV-G 2.0] 01-02–46
DTC P0038:00 [SKYACTIV-G 2.0] 01-02–48
DTC P0069:00 [SKYACTIV-G 2.0] 01-02–50
DTC P0072:00 [SKYACTIV-G 2.0] 01-02–52
DTC P0073:00 [SKYACTIV-G 2.0] 01-02–54
DTC P0089:00 [SKYACTIV-G 2.0] 01-02–56
DTC P0091:00 [SKYACTIV-G 2.0] 01-02–59
DTC P0092:00 [SKYACTIV-G 2.0] 01-02–62
DTC P0097:00 [SKYACTIV-G 2.0] 01-02–64
DTC P0098:00 [SKYACTIV-G 2.0] 01-02–66
DTC P0101:00 [SKYACTIV-G 2.0] 01-02–68
DTC P0102:00 [SKYACTIV-G 2.0] 01-02–71
DTC P0103:00 [SKYACTIV-G 2.0] 01-02–74
DTC P0107:00 [SKYACTIV-G 2.0] 01-02–76
DTC P0108:00 [SKYACTIV-G 2.0] 01-02–79
DTC P0112:00 [SKYACTIV-G 2.0] 01-02–82
DTC P0113:00 [SKYACTIV-G 2.0] 01-02–84
DTC P0116:00 [SKYACTIV-G 2.0] 01-02–86
DTC P0117:00 [SKYACTIV-G 2.0] 01-02–88
DTC P0118:00 [SKYACTIV-G 2.0] 01-02–91
DTC P0122:00 [SKYACTIV-G 2.0] 01-02–94
DTC P0123:00 [SKYACTIV-G 2.0] 01-02–97
DTC P0130:00 [SKYACTIV-G 2.0] 01-02–99
DTC P0131:00 [SKYACTIV-G 2.0] 01-02–101
DTC P0132:00 [SKYACTIV-G 2.0] 01-02–104
DTC P0133:00 [SKYACTIV-G 2.0] 01-02–107
DTC P0134:00 [SKYACTIV-G 2.0] 01-02–111
DTC P0137:00 [SKYACTIV-G 2.0] 01-02–115
DTC P0138:00 [SKYACTIV-G 2.0] 01-02–118
DTC P013A:00 [SKYACTIV-G 2.0] 01-02–120
DTC P013B:00 [SKYACTIV-G 2.0] 01-02–124
DTC P0140:00 [SKYACTIV-G 2.0] 01-02–128
DTC P0171:00 [SKYACTIV-G 2.0] 01-02–132
DTC P0172:00 [SKYACTIV-G 2.0] 01-02–138
DTC P0191:00 [SKYACTIV-G 2.0] 01-02–143
DTC P0192:00 [SKYACTIV-G 2.0] 01-02–146
DTC P0193:00 [SKYACTIV-G 2.0] 01-02–149
DTC P0201:00 [SKYACTIV-G 2.0] 01-02–152
DTC P0202:00 [SKYACTIV-G 2.0] 01-02–155
DTC P0203:00 [SKYACTIV-G 2.0] 01-02–158
DTC P0204:00 [SKYACTIV-G 2.0] 01-02–161
DTC P0222:00 [SKYACTIV-G 2.0] 01-02–164
DTC P0223:00 [SKYACTIV-G 2.0] 01-02–167
DTC P025B:00 [SKYACTIV-G 2.0] 01-02–169
DTC P025C:00 [SKYACTIV-G 2.0] 01-02–171
DTC P025D:00 [SKYACTIV-G 2.0] 01-02–173
DTC P0300:00 [SKYACTIV-G 2.0] 01-02–175
DTC P0301:00, P0302:00, P0303:00, P0304:00 [SKYACTIV-G 2.0] 01-02–182
DTC P0327:00 [SKYACTIV-G 2.0] 01-02–186
DTC P0328:00 [SKYACTIV-G 2.0 01-02–188
DTC P0335:00 [SKYACTIV-G 2.0] 01-02–191
DTC P0340:00 [SKYACTIV-G 2.0] 01-02–193
DTC P0365:00 [SKYACTIV-G 2.0] 01-02–196
DTC P0421:00 [SKYACTIV-G 2.0] 01-02–200
DTC P0443:00 [SKYACTIV-G 2.0] 01-02–202
DTC P0461:00 [SKYACTIV-G 2.0] 01-02–205
DTC P0462:00 [SKYACTIV-G 2.0] 01-02–207
DTC P0463:00 [SKYACTIV-G 2.0] 01-02–208
DTC P0480:00 [SKYACTIV-G 2.0] 01-02–209
DTC P0482:00 [SKYACTIV-G 2.0] 01-02–211
DTC P0500:00 [SKYACTIV-G 2.0] 01-02–214
DTC P0506:00 [SKYACTIV-G 2.0] 01-02–216
DTC P0507:00 [SKYACTIV-G 2.0 01-02–218
DTC P0520:00 [SKYACTIV-G 2.0] 01-02–220
DTC P0524:00 [SKYACTIV-G 2.0] 01-02–222
DTC P0532:00 [SKYACTIV-G 2.0] 01-02–224
DTC P0533:00 [SKYACTIV-G 2.0] 01-02–226
DTC P0555:00 [SKYACTIV-G 2.0] 01-02–229
DTC P0571:00 [SKYACTIV-G 2.0] 01-02–232
DTC P057F:00 [SKYACTIV-G 2.0] 01-02–235
DTC P058A:00 [SKYACTIV-G 2.0] 01-02–236
DTC P0600:00 [SKYACTIV-G 2.0] 01-02–238
DTC P0601:00 [SKYACTIV-G 2.0] 01-02–239
DTC P0602:00 [SKYACTIV-G 2.0 01-02–240
DTC P0604:00 [SKYACTIV-G 2.0 01-02–242
DTC P0606:00 [SKYACTIV-G 2.0] 01-02–243

ON-BOARD DIAGNOSTIC [SKYACTIV-G 2.0]

DTC P0607:00 [SKYACTIV-G 2.0] 01-02–244
DTC P0610:00 [SKYACTIV-G 2.0] 01-02–245
DTC P0615:00 [SKYACTIV-G 2.0] 01-02–246
DTC P061B:00 [SKYACTIV-G 2.0 01-02–247
DTC P061D:00 [SKYACTIV-G 2.0] 01-02–248
DTC P061F:00 [SKYACTIV-G 2.0] 01-02–250
DTC P0628:00 [SKYACTIV-G 2.0. 01-02–252
DTC P0629:00 [SKYACTIV-G 2.0] 01-02–254
DTC P0638:00 [SKYACTIV-G 2.0. 01-02–256
DTC P064D:00 [SKYACTIV-G 2.0] 01-02–259
DTC P0685:00 [SKYACTIV-G 2.0] 01-02–260
DTC P06B8:00 [SKYACTIV-G 2.0] 01-02–263
DTC P06DA:00 [SKYACTIV-G 2.0]. 01-02–265
DTC P0703:00 [SKYACTIV-G 2.0] 01-02–268
DTC P0704:00 [SKYACTIV-G 2.0] 01-02–271
DTC P07BE:00 [SKYACTIV-G 2.0]. 01-02–273
DTC P0850:00 [SKYACTIV-G 2.0] 01-02–275
DTC P0A0F:00 [SKYACTIV-G 2.0]. 01-02–277
DTC P0A8D:00 [SKYACTIV-G 2.0] 01-02–280
DTC P0A94:00 [SKYACTIV-G 2.0]. 01-02–283
DTC P111A:00 [SKYACTIV-G 2.0]. 01-02–286
DTC P117A:00 [SKYACTIV-G 2.0]. 01-02–288
DTC P1260:00 [SKYACTIV-G 2.0] 01-02–289
DTC P1380:00 [SKYACTIV-G 2.0] 01-02–290
DTC P151B:00 [SKYACTIV-G 2.0]. 01-02–293
DTC P176E:00 [SKYACTIV-G 2.0 01-02–295
DTC P2096:00 [SKYACTIV-G 2.0] 01-02–300
DTC P2090:00 [SKYACTIV-G 2.0. 01-02–305
DTC P2091:00 [SKYACTIV-G 2.0] 01-02–307
DTC P2097:00 [SKYACTIV-G 2.0] 01-02–309
DTC P2101:00 [SKYACTIV-G 2.0] 01-02–313
DTC P2107:00 [SKYACTIV-G 2.0] 01-02–317
DTC P2109:00 [SKYACTIV-G 2.0] 01-02–319
DTC P2110:00 [SKYACTIV-G 2.0. 01-02–321
DTC P2112:00 [SKYACTIV-G 2.0] 01-02–323
DTC P2119:00 [SKYACTIV-G 2.0. 01-02–325
DTC P2122:00 [SKYACTIV-G 2.0] 01-02–327
DTC P2123:00 [SKYACTIV-G 2.0] 01-02–329
DTC P2127:00 [SKYACTIV-G 2.0] 01-02–331
DTC P2128:00 [SKYACTIV-G 2.0. 01-02–333
DTC P2135:00 [SKYACTIV-G 2.0] 01-02–335
DTC P2138:00 [SKYACTIV-G 2.0] 01-02–336
DTC P2199:00 [SKYACTIV-G 2.0] 01-02–338
DTC P2228:00 [SKYACTIV-G 2.0] 01-02–339
DTC P2229:00 [SKYACTIV-G 2.0] 01-02–340
DTC P2237:00 [SKYACTIV-G 2.0] 01-02–341
DTC P2243:00 [SKYACTIV-G 2.0] 01-02–344
DTC P2251:00 [SKYACTIV-G 2.0] 01-02–347
DTC P2299:00 [SKYACTIV-G 2.0] 01-02–350
DTC P2302:00 [SKYACTIV-G 2.0] 01-02–352
DTC P2305:00 [SKYACTIV-G 2.0] 01-02–355
DTC P2308:00 [SKYACTIV-G 2.0 01-02–358
DTC P2311:00 [SKYACTIV-G 2.0] 01-02–361
DTC P2502:00 [SKYACTIV-G 2.0] 01-02–364
DTC P2503:00 [SKYACTIV-G 2.0] 01-02–366
DTC P2504:00 [SKYACTIV-G 2.0 01-02–368
DTC P2507:00 [SKYACTIV-G 2.0] 01-02–370
DTC P2610:00 [SKYACTIV-G 2.0] 01-02–372
TC U0073:00, U0101:00, U0121:00, U0131:00,
U0140:00, U0151:00, U0155:00, }
U0214:00, U0235:00
[SKYACTIV-G 2.0 01-02–373
Diagnostic Procedure 01-02–375
DTC U0074:00 [SKYACTIV-G 2.0. 01-02–376
DTC U0298:00 [SKYACTIV-G 2.0. 01-02–378
DTC U0302:00 [SKYACTIV-G 2.0] 01-02–382
DTC U0315:00 [SKYACTIV-G 2.0] 01-02–384
DTC U0320:00 [SKYACTIV-G 2.0] 01-02–386
DTC U0323:00 [SKYACTIV-G 2.0] 01-02–388
TC U0336:00 [SKYACTIV-G 2.0] 01-02–390
DTC U0338:00 [SKYACTIV-G 2.0. 01-02–392
DTC U0433:00 [SKYACTIV-G 2.0] 01-02–394
DTC U1007:00 [SKYACTIV-G 2.0. 01-02–396
DTC U2300:00 [SKYACTIV-G 2.0] 01-02–400
DTC U3000:41 [SKYACTIV-G 2.0] 01-02–402

ON-BOARD DIAGNOSTIC [SKYACTIV-G 2.0]

FOREWORD [SKYACTIV-G 2.0]

id0102h1800300

- If there is any vehicle malfunction complaint lodged by a customer, perform malfunction diagnosis according to the troubleshooting procedure.

Troubleshooting Procedure

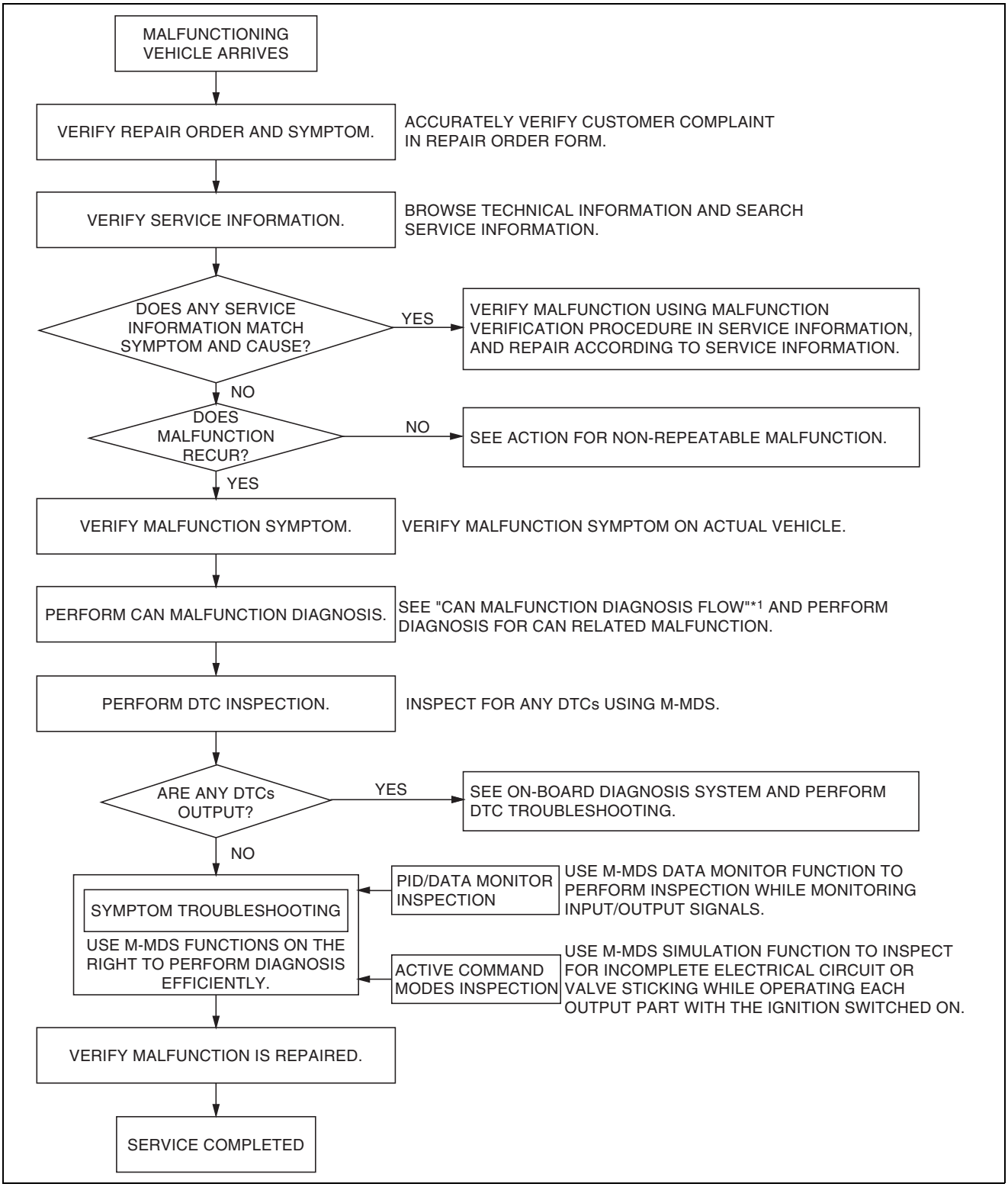

am3zzw0001266

*1 : 10-02A-3 CONTROLLER AREA NETWORK (CAN) MALFUNCTION DIAGNOSIS FLOW [SKYACTIV-G 2.0 (L.H.D.)]/10-02B-3 CONTROLLER AREA NETWORK (CAN) MALFUNCTION DIAGNOSIS FLOW [SKYACTIV-G 2.0 (R.H.D.)]

Repair order form and malfunction symptom check sheet

	Repair order	Check with customer	Diagnosis	Repair	Explanation to customer
Date/time					
In-charge					

Customer statement (When? What? What time(s)? Where it occurs. Warning light illumination? Can anyone replicate problem?)

Vehicle body number:	Registration date:	Date of malfunction occurrence:	Odometer reading km {mph}
Engine (SOHC/DOHC/RE/DE) (Cab /EGI/ Turbo/ Miller cycle/ LPG/Direct injection)		Transmission (MT/HAT/EC-AT/CVT)	

Environmental conditions				Occurrence frequency	Driving conditions									
Weather	Ambient temp.	Drive scenario	Grade		Fuel	Warm-up condition	Driving operation	Driving posture	Load	Accelerator opening angle	Shift position	Eng RPM	Vehicle speed	Pattern of use
Sunny Cloudy Rain Snow High wind Wind gusts N/A Other	-10˚C {14˚F} or less -10— 0˚C {14—32˚F} 0—10˚C {32—50˚F} 10—15˚C {50—59˚F} 15—20˚C {59—58˚F} 20—25˚C {68—77˚F} 25—30˚C {77—86˚F} 30—35˚C {86—95˚F} 35—4{0˚C {95—104˚F} 40—45˚C {104—113˚F} 45˚C {113˚F} or more N/A Other	Depart/arrive Traffic jam (city) Standard city street Suburbs Highway Uneven road Dry road surface Wet road surface Snow bound road Icy road Other	Flat Upgrade Down grade N/A Other	Once/day 2-3 times/day 4-5 times/day Many times/day Once/week 2-3 times/week 4-5 times/week Once/month 2-3 times/month 4-5 times/month Other	Regular High Oct. Diesel LPG Other Fuel gauge F E	Cold Half-warmed Fully warmed N/A Other Water temp. gauge H C	When starting After starting Re-starting (min. after stopped) Idling Racing Accel. from stop Normal driving Deceleration Braking Soft braking Clutch disengage Sudden accel. Light accel. Shifting (km/h {mph} → km/h {mph}) Other	Vehicle stopped Straight-on driving Reversing Right turn Left turn Other	Headlights on Exterior lights on A/C on AUTO ˚C{˚F} Blower: 1 step Blower: 2 steps Blower: 3 steps Blower: 4 steps Power steering lock to lock Rear defrost on Wipers on Audio on Other	0/8 1/8 2/8 3/8 4/8 5/8 6/8 7/8 8/8	MT: 1 2 3 4 5 6 N R AT: P R N D S L Hold M (km/h {mph})	Idle Less than 1,000 Less than 1,500 Less than 2,000 Less than 2,500 Less than 3,000 Less than 4,000 Less than 4,500 Less than 5,000 Less than 5,500 Less than 6,000 Less than 6,500 7,000 or more	5 km/h {3 mph} 10 km/h {6.2 mph} 20 km/h {12 mph} 30 km/h {19 mph} 40 km/h {25 mph} 50 km/h {31 mph} 60 km/h {37 mph} 70 km/h {43 mph} 80 km/h {50 mph} 90 km/h {56 mph} 100 km/h {62.1 mph} 110 km/h {68.4 mph} 120 km/h {74.6 mph} 130 km/h {80.8 mph} 140 km/h {87 mph} 150 km/h {93.2 mph} 160 km/h {99.4 mph}	Work_____% Minor use_____% Trips_____% Other_____% Between ENG. start→Stop: Distance, time Approx km Approx Hrs. No. of occupants: Load condition kg Other

DTC, measured data (fuel pressure, intake manifold vacuum, throttle sensor electromotive force, air flow electromotive force, other), maintenance, repair, accident history, installation of commercial devices

ac5wzw0000384

ON-BOARD DIAGNOSTIC [SKYACTIV-G 2.0]

Dealer name:	Vehicle body number:	Odometer reading:
Vehicle-in date:	Estimated repair completion date:	Person in-charge:
Subject (Content):		
Audio memory		

	1	2	3	4	5	6	Fuel level
FM1							E F
FM2							
AM							

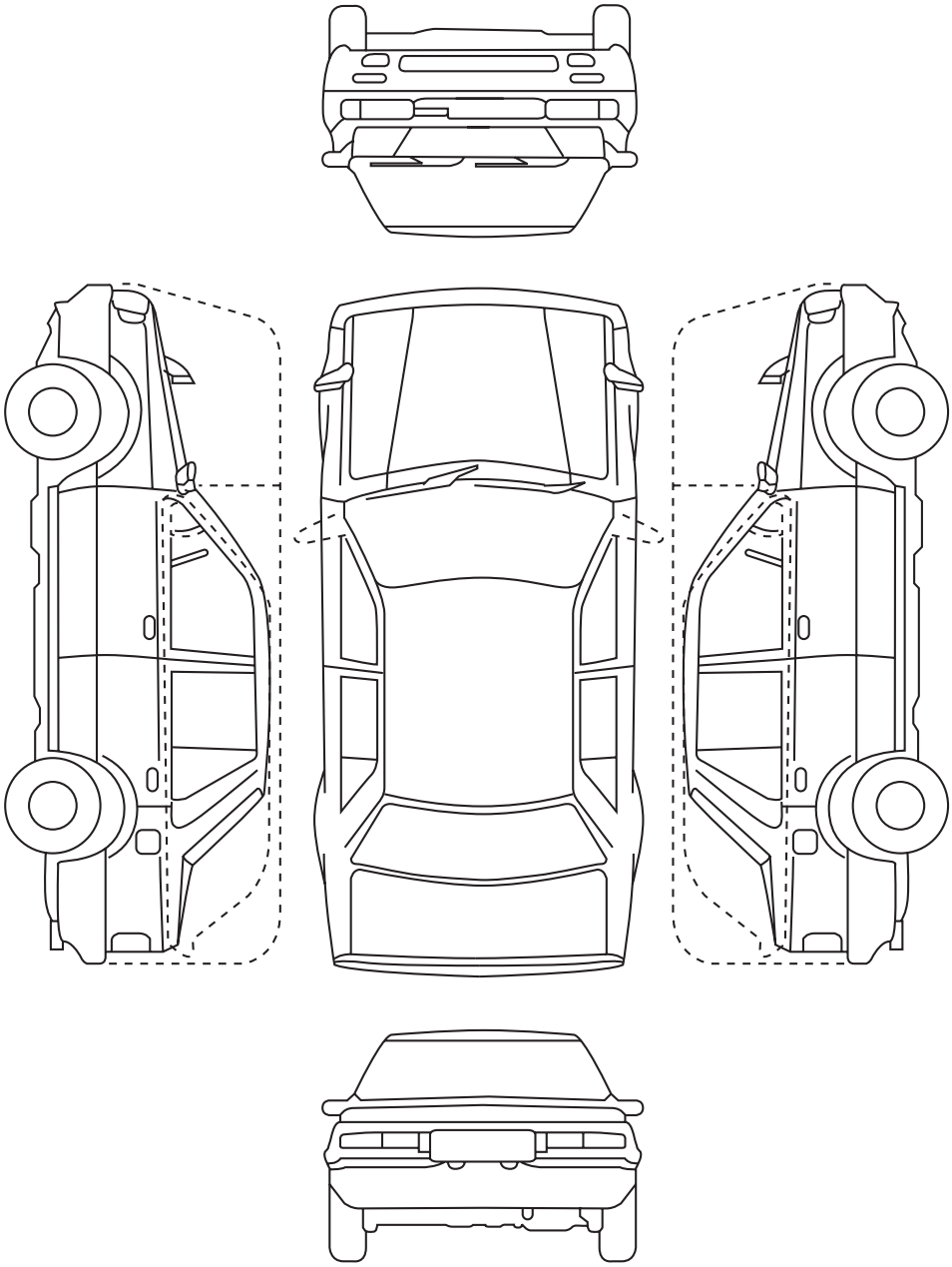

ac5wzw0000384

ON-BOARD DIAGNOSTIC [SKYACTIV-G 2.0]

Action for Non-repeatable Malfunction

- If the malfunction does not recur, verify the malfunction cause by performing the following actions:
  - — Based on the repair order form, attempt to drive the vehicle or perform tests to replicate the malfunction, record the data (such as PCM circuit voltage) at that time, and detect the malfunction cause.
  - — Shake the wiring harness or connector of the electrical component which is suspected to be the cause of the malfunction, and inspect for malfunction or occurrence of any DTCs.

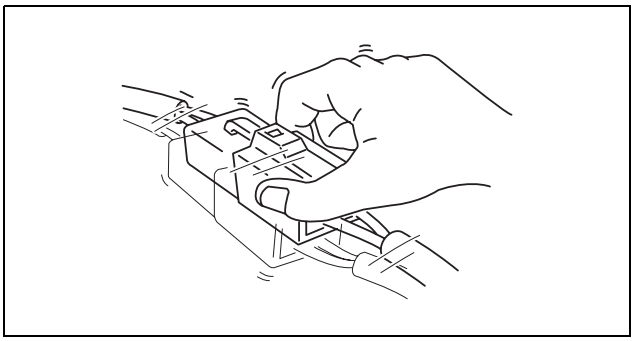

aaxjjw00007274

  - — Inspect the female terminals on the connector of the electric component which is suspected to be the cause of the malfunction for poor connection.

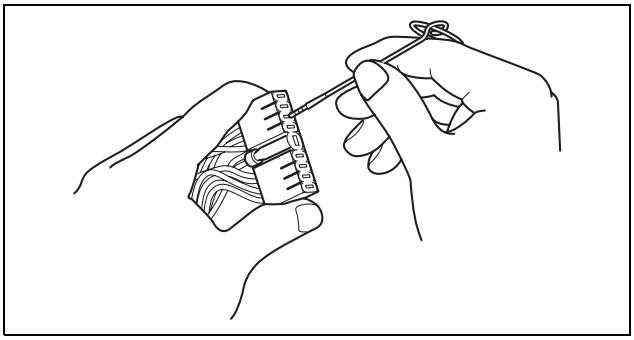

am3uuw0000750

OBD PENDING TROUBLE CODE [SKYACTIV-G 2.0]

id0102h1816200

- These appear when a problem is detected in a monitored system. The code for a failed system is stored in the PCM memory in the first drive cycle. This code is called the pending code. If the PCM determines that the system returned to normal or the problem was mistakenly detected, it deletes the pending code. If the problem is found in a second drive cycle too, the PCM determines that the system has failed, and the DTC is stored.

OBD FREEZE FRAME DATA [SKYACTIV-G 2.0]

id0102h1815900

- This is technical data which indicates the engine condition at the time of the first malfunction. This data will remain in the memory even if another emission-related DTC is stored, with the exception of the Misfire or Fuel System DTCs. Once FREEZE FRAME DATA for the Misfire or Fuel System DTC is stored, it will overwrite any previous data and the FREEZE FRAME DATA will not be overwritten again.

OBD ON-BOARD SYSTEM READINESS TEST [SKYACTIV-G 2.0]

id0102h1816000

- This shows the OBD systems operating status. If any monitor function is incomplete, the M-MDS will identify which monitor function has not been completed. The Misfire, Fuel System and CCM are continuous monitoring-type functions. The A/F sensor, HO2S, A/F sensor heater, HO2S heater and catalyst will be monitored under drive cycles. The OBD diagnostic system is initialized by performing the DTC cancellation procedure or disconnecting the negative battery cable.

OBD READ/CLEAR DIAGNOSTIC TEST RESULTS [SKYACTIV-G 2.0]

id0102h1816300

- This retrieves all stored DTCs in the PCM and clears the DTC, FREEZE FRAME DATA, On-Board Readiness Test Results and Pending Trouble Codes.

OBD PARAMETER IDENTIFICATION (PID) ACCESS [SKYACTIV-G 2.0]

id0102h1816100

- The PID mode allows access the certain data values, analog and digital inputs and outputs, calculated values and system status information. Since the PID values for output devices are the PCM internal data values, inspect each device to identify which output devices are malfunctioning.

ON-BOARD DIAGNOSTIC [SKYACTIV-G 2.0]

ON-BOARD DIAGNOSTIC TEST [SKYACTIV-G 2.0]

id0102h1801000

DTC Reading Procedure

1. Connect the M-MDS to the DLC-2.
2. After the vehicle is identified, select the following items from the initialization screen of the M-MDS.
   (1) Select “Self Test”.
   (2) Select “Modules”.
   (3) Select “PCM”.
3. Then, select the “Retrieve CMDTCs” and perform procedures according to directions on the M-MDS screen.
4. Verify the DTC according to the directions on the M-MDS screen.
   - If any DTCs are displayed, perform troubleshooting according to the corresponding DTC inspection.
5. After completion of repairs, clear all DTCs stored in the PCM, while referring to “AFTER REPAIR PROCEDURE”.

Pending Trouble Code Access Procedure

1. Connect the M-MDS to the DLC-2.
2. After the vehicle is identified, select the following items from the initialization screen of the M-MDS.
   (1) Select “Self Test”.
   (2) Select “Modules”.
   (3) Select “PCM”.
3. Then, select the “Retrieve CMDTCs” and perform procedures according to directions on the M-MDS screen.
4. Retrieve the pending trouble codes according to the directions on the M-MDS screen.

Freeze Frame PID Data Access Procedure

1. Connect the M-MDS to the DLC-2.
2. After the vehicle is identified, select the following items from the initialization screen of the M-MDS.
   (1) Select “Self Test”.
   (2) Select “Modules”.
   (3) Select “PCM”.
3. Then, select the “Retrieve CMDTCs” and perform procedures according to directions on the M-MDS screen.
4. Retrieve the freeze frame PID data according to the directions on the M-MDS screen.

Note

- Freeze frame data/snapshot data appears at the top of the help screen when the displayed DTC is selected.

Freeze frame data

- The freeze frame data consists of data for vehicle and engine control system operation conditions when malfunctions in the engine control system are detected and stored in the PCM.
- Freeze frame data is stored at the instant the check engine light illuminates, and only a part of the DTC data is stored.
- For the freeze frame data, if there are several malfunctions in the engine control system, the data for the malfunction which occurred initially is stored. Thereafter, if a misfire or fuel injection control malfunction occurs, data from the misfire or fuel injection control malfunction is written over the initially stored data. However, if the initially stored freeze frame data is a misfire or fuel injection control malfunction, it is not overwritten.

Snapshot data

- The snapshot data stores the currently detected DTC data.
- The recording timing for the freeze frame data/snapshot data differs depending on the number of DTC drive cycles.
  — For a DTC with a drive cycle number 1, only the malfunction determination data is recorded.
  — For a DTC with a drive cycle number 2, both the malfunction determination and undetermined data is recorded.

ON-BOARD DIAGNOSTIC [SKYACTIV-G 2.0]

Freeze frame data table

Note

- Refer to PID monitor table for confirm the engine control system operation status while the PCM does not store the DTC. (See 01-40-17 PCM INSPECTION [SKYACTIV-G 2.0].)
- Freeze frame data items are not displayed, according to detected DTC.

Freeze frame data item	Unit	Description	Corresponding PID data monitor item
FUELSYS1	OL/CL/OL-Drive/OL-Fault/ CL-Fault	Fuel system status	FUELSYS
LOAD	%	Calculated engine load	—
ECT	°C, °F	Engine coolant temperature	ECT
SFT1	%	Short term fuel trim	SHRTFT1
LFT1	%	Long term fuel trim	LONGFT1
MAP	KPa {MPa}, mBar {Bar}, psi, in H20	Manifold absolute pressure	MAP
RPM	RPM	Engine speed	RPM
VS	KPH, MPH	Vehicle speed	VSS
SPARKADV	°	Ignition timing	SPARKADV
IAT	°C, °F	Intake air temperature	IAT
MAF	g/sec	Mass airflow	MAF
TP	%	Throttle valve position No.1	TP1
RUNTM	hh:mm:ss	Time from engine start	—
FRP	KPa {MPa}, mBar {Bar}, psi, in H20	Fuel pressure	FUEL_PRES
EVAPPCT	%	Purge solenoid valve controlled value	EVAPCP
FLI	%	Fuel level in fuel tank	FLI
WARMUPS	—	Number of warm-up cycle after DTC cleared	—
CLRDIST	km, ft {mi}	Mileage after DTC cleared	—
BARO	KPa {MPa}, mBar {Bar}, psi, in H20	Barometric pressure	BARO
CATTEMP11	°C, °F	Estimated catalytic converter temperature	CATT11_DSD
VPWR	V	Module supply voltage	VPWR
ALV	%	Engine load	LOAD
EQ_RAT	—	Target equivalence ratio (lambda)	EQ_RAT11_DSD
TP_REL	%	Relative throttle position	TP REL
AAT	°C, °F	Ambient air temperature	AAT
TP_B	%	Throttle valve position No.2	TP2
APP_D	%	Accelerator pedal position No.1	APP1
APP_E	%	Accelerator pedal position No.2	APP2
TAC_PCT	%	Target throttle valve position	ETC_DSD
STSO2FT1	%	Short term fuel trim (HO2S)	—
LGSO2FT1	%	Long term fuel trim (HO2S)	—
IAT11	°C, °F	Intake air temperature No.1	IAT
IAT12	°C, °F	Intake air temperature No.2	IAT2

ON-BOARD DIAGNOSTIC [SKYACTIV-G 2.0]

Snapshot data table

Note

- Refer to PID monitor table for confirm the engine control system operation status while the PCM does not store the DTC. (See 01-40-17 PCM INSPECTION [SKYACTIV-G 2.0].)
- Snapshot data items are not displayed, according to detected DTC.

Snapshot data item	Unit	Definition	Corresponding PID data monitor item
FUELSYS	OL/CL/OL-Drive/OL-Fault/ CL-Fault	Fuel system status	FUELSYS
LOAD_C	%	Calculated engine load	—
ECT	°C, °F	Engine coolant temperature	ECT
SHRTFT1	%	Short term fuel trim	SHRTFT1
LONGFT1	%	Long term fuel trim	LONGFT1
MAP	KPa {MPa}, mBar {Bar}, psi, in H20	Manifold absolute pressure	MAP
RPM	RPM	Engine speed	RPM
VSS	KPH, MPH	Vehicle speed	VSS
SPARKADV	°	Ignition timing	SPARKADV
IAT	°C, °F	Intake air temperature No.1	IAT
MAF	g/sec	Mass airflow	MAF
TP1	%	Throttle valve position No.1	TP1
EG_RUN_TIME	—	Time from engine start	—
FUEL_PRES	KPa {MPa}, mBar {Bar}, psi, in H20	Fuel pressure	FUEL_PRES
SEGRP_DSD	%	Target EGR valve position	SEGRP DSD
EVAPCP	%	Purge solenoid valve controlled value	EVAPCP
FLI	%	Fuel level in fuel tank	FLI
CLR_CNT	—	Number of warm-up cycle after DTC cleared	—
CLR_DIST	km, ft {mi}	Mileage after DTC cleared	—
FTP	KPa {MPa}, mBar {Bar}, psi, in H20	Fuel tank pressure	FTP
BARO	KPa {MPa}, mBar {Bar}, psi, in H20	Barometric pressure	BARO
CATT11_DSD	°C, °F	Estimated catalytic converter temperature	CATT11_DSD
VPWR	V	Module supply voltage	VPWR
LOAD	%	Engine load	LOAD
EQ_RAT11_DSD	—	Target equivalence ratio (lambda)	EQ_RAT11_DSD
TP REL	%	Relative throttle position	TP REL
AAT	°C, °F	Ambient air temperature	AAT
TP2	%	Throttle valve position No.2	TP2
APP1	%	Accelerator pedal position No.1	APP1
APP2	%	Accelerator pedal position No.2	APP2
ETC_DSD	%	Target throttle valve position	ETC_DSD
SHRTFT12	%	Short term fuel trim (HO2S)	—
LONGFT12	%	Long term fuel trim (HO2S)	—
ECT2_SUP	—	Engine coolant temperature No.2 support	—
ECT2	°C, °F	Engine coolant temperature No.2	ECT2_V
IAT12	°C, °F	Intake air temperature No.2	IAT2
ALTT_V	V	Generator output voltage	—
BATT_RES	ohm	Battery inferred internal resistance	—
ALT_CUR_DSD	A	Generator current desired	—
TOTAL_DIST	km, ft {mi}	Total distance	—

ON-BOARD DIAGNOSTIC [SKYACTIV-G 2.0]

On-Board System Readiness Tests Access Procedure

1. Connect the M-MDS to the DLC-2.
2. After the vehicle is identified, select the following items from the initialization screen of the M-MDS.
   (1) Select “Powertrain”.
   (2) Select “OBD Test Modes”.
   (3) Select “Mode 1 Powertrain Data”.
   (4) Select “PCM”.
3. Then, select the “***SUP” and “**EVAL” PIDs in the PID selection screen.
4. Monitor those PIDs and check it system monitor is completed.

Note

- If the on-board system readiness tests are not completed the PCM stores DTC P1000.

PID/DATA Monitor and Record Procedure

Note

- The PID data screen function is used for monitoring the calculated value of input/output signals in the module. Therefore, if the monitored value of the output parts is not within specification, it is necessary to inspect the monitored value of input parts corresponding to the applicable output part control. In addition, because the system does not display an output part malfunction as an abnormality in the monitored value, it is necessary to inspect the output parts individually.
- When detecting DTCs, PIDs related to a malfunctioning system may not display even if the module is normal. Therefore, if a PID is not displayed, it is necessary to verify the DTC, perform malfunction diagnosis of the DTC that was detected, and do repairs.

1. Connect the M-MDS to the DLC-2.
2. After the vehicle is identified, select the following items from the initialization screen of the M-MDS.
   (1) Select “DataLogger”.
   (2) Select “Modules”.
   (3) Select “PCM”.
3. Select the applicable PID from the PID table.
4. Verify the PID data according to the detections on the screen.

Diagnostic Monitoring Test Results Access Procedure

1. Connect the M-MDS to the DLC-2.
2. After the vehicle is identified, select the following items from the initialization screen of the M-MDS.
   (1) Select “Powertrain”.
   (2) Select “OBD Test Modes”.
   (3) Select “Mode 6 On-Board Test Results”.
3. Verify the diagnostic monitoring test result according to the directions on the M-MDS screen.

Active Command Modes Procedure

1. Connect the M-MDS to the DLC-2.
2. After the vehicle is identified, select the following items from the initialization screen of the M-MDS.
   (1) Select “DataLogger”.
   (2) Select “Modules”.
   (3) Select “PCM”.
3. Select the simulation items from the PID table.
4. Using the active command modes function, inspect the operations for each parts.
   - If the operation of output parts cannot be verified after the active command mode inspection is performed, this could indicate the possibility of an open or short circuit, sticking, or operation malfunction in the output parts.

ON-BOARD DIAGNOSTIC [SKYACTIV-G 2.0]

AFTER REPAIR PROCEDURE [SKYACTIV-G 2.0]

id0102h1801100

1. Switch the ignition to off.
2. Connect the M-MDS to the DLC-2.
3. Switch the ignition ON (engine off).
4. Verify the DTC according to the directions on the M-MDS screen.
   - Press the clear button on the DTC screen to clear the DTC.
5. Switch the ignition off (LOCK) and continue it for **30 s or more**.

Caution
- **Always switch the ignition off (LOCK) after clearing the DTC.**
- **If the engine is accidentally started, disconnect the negative battery cable and reconnect it. (See 01-17A-11 NEGATIVE BATTERY CABLE DISCONNECTION/CONNECTION [SKYACTIV-G 2.0].) (See 01-17A-13 NEGATIVE BATTERY CABLE DISCONNECTION/CONNECTION [SKYACTIV-G 2.0 (WITHOUT i-stop)].)**

6. Switch the ignition ON (engine on).
7. Verify all accessory loads are off.
8. Start the engine and maintain the engine speed at **2,800—3,200 rpm** until the cooling fan starts running (for A/F sensor and HO2S activation).
9. When the cooling fan starts running, idle the engine.
10. Maintain the idle status for **30 s or more** after the cooling fan has stopped (for fuel learning).
11. Perform the DTC inspection again and verify that no DTCs are stored. (See 01-02-8 ON-BOARD DIAGNOSTIC TEST [SKYACTIV-G 2.0].)
12. Switch the ignition to off.
13. Disconnect the M-MDS to the DLC-2.

KOEO/KOER SELF TEST [SKYACTIV-G 2.0]

id0102h1801200

KOEO Self Test

1. Connect the M-MDS to the DLC-2.
2. After the vehicle is identified, select the following items from the initialization screen of the M-MDS.
   (1) Select “Self Test”.
   (2) Select “Modules”.
   (3) Select “PCM”.
3. Then, select the “KOEO On Demand Self Test” and perform procedures according to directions on the M-MDS screen.
4. Verify the DTC according to the directions on the M-MDS screen.
   - If any DTCs are displayed, perform troubleshooting according to the corresponding DTC inspection.
5. After completion of repairs, clear all DTCs stored in the PCM, while referring to “AFTER REPAIR PROCEDURE”.

KOER Self Test

Note
- If a KOER self test is performed with the engine coolant temperature at **less than 60 °C {140 °F}**, a DTC for the variable valve timing may be detected even if the variable valve timing is normal.
- For vehicles with the variable valve timing control, execute a KOER self test after the variable valve timing learning is finished.
  — A KOER self test cannot be executed if the variable timing valve learning in not finished.
  — The variable valve timing learning is cleared if the PCM backup power supply is interrupted (including battery removal), or after reprogramming.
  — To perform variable valve timing learning, the engine speed needs to be increased momentarily to **approx. 2,000 rpm**.

1. Connect the M-MDS to the DLC-2.
2. Start engine and run it at idle.
3. After the vehicle is identified, access the ECT PID using the M-MDS.
4. Verify the ECT PID value is **above 60 °C {140 °F}**.
5. Select the following items from the initialization screen of the M-MDS.
   (1) Select “Self Test”.
   (2) Select “Modules”.
   (3) Select “PCM”.
6. Then, select the “KOER On Demand Self Test” and perform procedures according to directions on the M-MDS screen.

ON-BOARD DIAGNOSTIC [SKYACTIV-G 2.0]

7. Verify the DTC according to the directions on the M-MDS screen.
   - If any DTCs are displayed, perform troubleshooting according to the corresponding DTC inspection.
8. After completion of repairs, clear all DTCs stored in the PCM, while referring to “AFTER REPAIR PROCEDURE”.

OBD DRIVE MODE [SKYACTIV-G 2.0]

id0102h1815800

- Using the OBD Drive Mode, the monitoring item requested by OBD regulations can be easily diagnosed.
- Performing the Drive Mode inspects the OBD system for proper operation and must be performed to ensure that no additional DTCs are present.
- During the Drive Mode, the following systems are inspected:
  — Mode 03 (Variable Valve Timing, A/F Sensor Heater, HO2S Heater, A/F Sensor, HO2S and TWC Repair Verification Drive Mode)

Caution

- **While performing the Drive Mode, always operate the vehicle in a safe and lawful manner.**
- **When the M-MDS is used to observe monitor system status while driving, be sure to have another technician with you, or record the data in the M-MDS using the PID/DATA MONITOR AND RECORD function and inspect later.**

Note

- Vehicle speed and engine speed detected by the PCM may differ from that indicated by the speedometer and tachometer. Use the M-MDS to monitor vehicle speed.
- If the OBD system inspection is not completed during the Drive Mode, the following causes are considered:
  — The OBD system detects the malfunction.
  — The Drive Mode procedure is not completed correctly.
- Disconnecting the battery will reset the memory. Do not disconnect the battery during and after Drive Mode.
- The M-MDS can be used at anytime through the course of the Drive Mode to monitor the completion status. Monitoring can be done by viewing the ON BOARD SYSTEM READINESS menu.

Mode 03 (Variable Valve Timing, A/F Sensor Heater, HO2S Heater, A/F Sensor, HO2S and TWC Repair Verification Drive Mode)

1. Start the engine and warm it up completely.
2. Verify all accessory loads (A/C, headlights, blower fan, rear window defroster) are off.
3. Drive the vehicle as shown in the graph. The driving conditions before driving at constant speed are not specified.

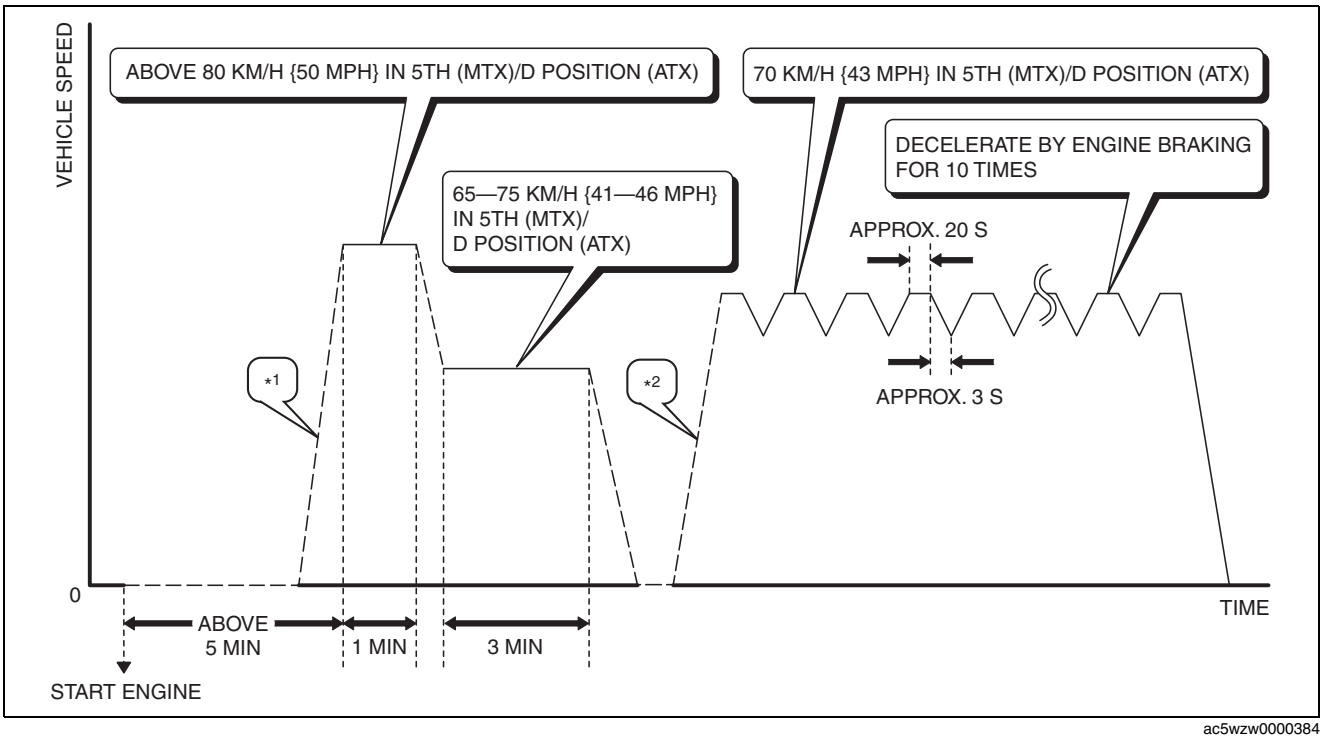

ac5wzw0000384

ON-BOARD DIAGNOSTIC [SKYACTIV-G 2.0]

*1 : MTX: accelerate in 5th. (accelerate to **89 km/h {55 mph}** within **20 s**.)/ATX: accelerate in D position. (accelerate to **89 km/h {55 mph}** within **20 s**.)
*2 : MTX: accelerate in 5th. (accelerate to **45 km/h {28 mph}** within **15 s**.)/ATX: accelerate in D position. (accelerate to **45 km/h {28 mph}** within **15 s**.)

4. Stop the vehicle and access the ON BOARD SYSTEM READINESS to inspect the Drive Mode completion status.
   - If completed, RFC changes from No to Yes.
   - If not completed, switch the ignition to off, then repeat from Step 3.
5. Verify no DTCs are available.

DTC TABLE [SKYACTIV-G 2.0]

id0102h1801500

×: Applicable
—: Not applicable

DTC No.	Check Engine Light	Charging System Warning Light	Master Warning Light	i-stop Warning Light (Amber)	Condition	Fail-safe function	Drive Cycle	Monitor item	Self test type*1	Memory function	Page
P0010:00	ON	OFF	OFF	OFF	Electric variable valve timing control circuit range/performance problem	×	1	CCM	C, R	×	(See 01-02-28 DTC P0010:00 [SKYACTIV-G 2.0].)
P0011:00	ON	OFF	OFF	OFF	Intake CMP timing over-advanced	×	1	CCM	C	×	(See 01-02-33 DTC P0011:00 [SKYACTIV-G 2.0].)
P0012:00	ON	OFF	OFF	OFF	Intake CMP timing over-retarded	×	1	CCM	C	×	(See 01-02-35 DTC P0012:00 [SKYACTIV-G 2.0].)
P0014:00	ON	OFF	OFF	OFF	Exhaust CMP timing over-advanced	×	2	CCM	C	×	(See 01-02-37 DTC P0014:00 [SKYACTIV-G 2.0].)
P0015:00	ON	OFF	OFF	OFF	Exhaust CMP timing over-retarded	×	2	CCM	C	×	(See 01-02-39 DTC P0015:00 [SKYACTIV-G 2.0].)
P0031:00	ON	OFF	OFF	OFF	A/F sensor heater control circuit low input	×	2	A/F sensor heater, HO2S heater	C, R	×	(See 01-02-41 DTC P0031:00 [SKYACTIV-G 2.0].)
P0032:00	ON	OFF	OFF	OFF	A/F sensor heater control circuit high input	×	2	A/F sensor heater, HO2S heater	C, R	×	(See 01-02-44 DTC P0032:00 [SKYACTIV-G 2.0].)
P0037:00	ON	OFF	OFF	OFF	HO2S heater control circuit low input	×	2	A/F sensor heater, HO2S heater	C, R	×	(See 01-02-46 DTC P0037:00 [SKYACTIV-G 2.0].)
P0038:00	ON	OFF	OFF	OFF	HO2S heater control circuit high input	×	2	A/F sensor heater, HO2S heater	C, R	×	(See 01-02-48 DTC P0038:00 [SKYACTIV-G 2.0].)
P0069:00	ON	OFF	OFF	OFF	Manifold absolute pressure/atmospheric pressure correlation problem	—	2	CCM	C	×	(See 01-02-50 DTC P0069:00 [SKYACTIV-G 2.0].)
P0072:00*7	OFF	OFF	OFF	OFF	Ambient temperature sensor circuit low input	—	1	Other	C, O, R	×	(See 01-02-52 DTC P0072:00 [SKYACTIV-G 2.0].)

ON-BOARD DIAGNOSTIC [SKYACTIV-G 2.0]

DTC No.	Check Engine Light	Charging System Warning Light	Master Warning Light	i-stop Warning Light (Amber)	Condition	Fail-safe function	Drive Cycle	Monitor item	Self test type*1	Memory function	Page
P0073:00*7	OFF	OFF	OFF	OFF	Ambient temperature sensor circuit high input	—	1	Other	C, O, R	×	(See 01-02-54 DTC P0073:00 [SKYACTIV-G 2.0].)
P0089:00	ON	OFF	OFF	OFF	Spill valve control solenoid valve control circuit range/ performance problem	×	1	CCM	C, R	×	(See 01-02-56 DTC P0089:00 [SKYACTIV-G 2.0].)
P0091:00	ON	OFF	OFF	OFF	Fuel pressure regulator control circuit low input	×	1	CCM	C, O, R	×	(See 01-02-59 DTC P0091:00 [SKYACTIV-G 2.0].)
P0092:00	ON	OFF	OFF	OFF	Fuel pressure regulator control circuit high input	×	1	CCM	C, O, R	×	(See 01-02-62 DTC P0092:00 [SKYACTIV-G 2.0].)
P0097:00	ON	OFF	OFF	OFF	IAT sensor No.2 circuit low input	—	1	CCM	C, O, R	×	(See 01-02-64 DTC P0097:00 [SKYACTIV-G 2.0].)
P0098:00	ON	OFF	OFF	OFF	IAT sensor No.2 circuit high input	—	1	CCM	C, O, R	×	(See 01-02-66 DTC P0098:00 [SKYACTIV-G 2.0].)
P0101:00	ON	OFF	OFF	OFF	MAF sensor circuit range/ performance problem	—	2	CCM	C	×	(See 01-02-68 DTC P0101:00 [SKYACTIV-G 2.0].)
P0102:00	ON	OFF	OFF	OFF	MAF sensor circuit low input	×	1	CCM	C, O, R	×	(See 01-02-71 DTC P0102:00 [SKYACTIV-G 2.0].)
P0103:00	ON	OFF	OFF	OFF	MAF sensor circuit high input	×	1	CCM	C, O, R	×	(See 01-02-74 DTC P0103:00 [SKYACTIV-G 2.0].)
P0107:00	ON	OFF	OFF	OFF	MAP sensor circuit low input	×	1	CCM	C, O, R	×	(See 01-02-76 DTC P0107:00 [SKYACTIV-G 2.0].)
P0108:00	ON	OFF	OFF	OFF	MAP sensor circuit high input	×	1	CCM	C, O, R	×	(See 01-02-79 DTC P0108:00 [SKYACTIV-G 2.0].)
P0112:00	ON	ON	OFF	OFF	IAT sensor No.1 circuit low input	×	1	CCM	C, O, R	×	(See 01-02-82 DTC P0112:00 [SKYACTIV-G 2.0].)
P0113:00	ON	ON	OFF	OFF	IAT sensor No.1 circuit high input	×	1	CCM	C, O, R	×	(See 01-02-84 DTC P0113:00 [SKYACTIV-G 2.0].)
P0116:00	ON	OFF	OFF	OFF	ECT sensor circuit range/ performance problem	—	1	Engine cooling system	C	×	(See 01-02-86 DTC P0116:00 [SKYACTIV-G 2.0].)
P0117:00	ON	OFF	OFF	OFF	ECT sensor circuit low input	×	1	Engine cooling system	C, O, R	×	(See 01-02-88 DTC P0117:00 [SKYACTIV-G 2.0].)

ON-BOARD DIAGNOSTIC [SKYACTIV-G 2.0]

DTC No.	Check Engine Light	Charging System Warning Light	Master Warning Light	i-stop Warning Light (Amber)	Condition	Fail-safe function	Drive Cycle	Monitor item	Self test type* 1	Memory function	Page
P0118:00	ON	OFF	OFF	OFF	ECT sensor circuit high input	×	1	Engine cooling system	C, O, R	×	(See 01-02-91 DTC P0118:00 [SKYACTIV-G 2.0].)
P0122:00	ON	OFF	OFF	OFF	TP sensor No.1 circuit low input	×	1	CCM	C, O, R	×	(See 01-02-94 DTC P0122:00 [SKYACTIV-G 2.0].)
P0123:00	ON	OFF	OFF	OFF	TP sensor No.1 circuit high input	×	1	CCM	C, O, R	×	(See 01-02-97 DTC P0123:00 [SKYACTIV-G 2.0].)
P0130:00	ON	OFF	OFF	OFF	A/F sensor circuit problem	×	2	A/F sensor, HO2S	C, R	×	(See 01-02-99 DTC P0130:00 [SKYACTIV-G 2.0].)
P0131:00	ON	OFF	OFF	OFF	A/F sensor circuit low input	×	2	A/F sensor, HO2S	C, R	×	(See 01-02-101 DTC P0131:00 [SKYACTIV-G 2.0].)
P0132:00	ON	OFF	OFF	OFF	A/F sensor circuit high input	×	2	A/F sensor, HO2S	C, R	×	(See 01-02-104 DTC P0132:00 [SKYACTIV-G 2.0].)
P0133:00	ON	OFF	OFF	OFF	A/F sensor circuit slow response	—	2	A/F sensor, HO2S	C	×	(See 01-02-107 DTC P0133:00 [SKYACTIV-G 2.0].)
P0134:00	ON	OFF	OFF	OFF	A/F sensor circuit no activity detected	×	2	A/F sensor, HO2S	C	×	(See 01-02-111 DTC P0134:00 [SKYACTIV-G 2.0].)
P0137:00	ON	OFF	OFF	OFF	HO2S circuit low input	—	2	A/F sensor, HO2S	C	×	(See 01-02-115 DTC P0137:00 [SKYACTIV-G 2.0].)
P0138:00	ON	OFF	OFF	OFF	HO2S circuit high input	—	2	A/F sensor, HO2S	C, O, R	×	(See 01-02-118 DTC P0138:00 [SKYACTIV-G 2.0].)
P013A:00	ON	OFF	OFF	OFF	HO2S circuit slow response	—	2	A/F sensor, HO2S	C	×	(See 01-02-120 DTC P013A:00 [SKYACTIV-G 2.0].)
P013B:00	ON	OFF	OFF	OFF	HO2S circuit slow response	—	2	A/F sensor, HO2S	C	×	(See 01-02-124 DTC P013B:00 [SKYACTIV-G 2.0].)
P0140:00	ON	OFF	OFF	OFF	HO2S circuit no activity detected	—	2	A/F sensor, HO2S	C	×	(See 01-02-128 DTC P0140:00 [SKYACTIV-G 2.0].)

ON-BOARD DIAGNOSTIC [SKYACTIV-G 2.0]

DTC No.	Check Engine Light	Charging System Warning Light	Master Warning Light	i-stop Warning Light (Amber)	Condition	Fail-safe function	Drive Cycle	Monitor item	Self test type*1	Memory function	Page
P0171:00	ON	OFF	OFF	OFF	Fuel trim system too lean	—	2	Fuel system	C	×	(See 01-02-132 DTC P0171:00 [SKYACTIV-G 2.0].)
P0172:00	ON	OFF	OFF	OFF	Fuel trim system too rich	—	2	Fuel system	C	×	(See 01-02-138 DTC P0172:00 [SKYACTIV-G 2.0].)
P0191:00	ON	OFF	OFF	OFF	Fuel pressure sensor circuit range/performance problem	×	1	CCM	C	×	(See 01-02-143 DTC P0191:00 [SKYACTIV-G 2.0].)
P0192:00	ON	OFF	OFF	OFF	Fuel pressure sensor circuit low input	×	1	CCM	C, O, R	×	(See 01-02-146 DTC P0192:00 [SKYACTIV-G 2.0].)
P0193:00	ON	OFF	OFF	OFF	Fuel pressure sensor circuit high input	×	1	CCM	C, O, R	×	(See 01-02-149 DTC P0193:00 [SKYACTIV-G 2.0].)
P0201:00	ON	OFF	OFF	OFF	Fuel injector circuit/open cylinder No.1	—	1	CCM	C, O, R	×	(See 01-02-152 DTC P0201:00 [SKYACTIV-G 2.0].)
P0202:00	ON	OFF	OFF	OFF	Fuel injector circuit/open cylinder No.2	—	1	CCM	C, O, R	×	(See 01-02-155 DTC P0202:00 [SKYACTIV-G 2.0].)
P0203:00	ON	OFF	OFF	OFF	Fuel injector circuit/open cylinder No.3	—	1	CCM	C, O, R	×	(See 01-02-158 DTC P0203:00 [SKYACTIV-G 2.0].)
P0204:00	ON	OFF	OFF	OFF	Fuel injector circuit/open cylinder No.4	—	1	CCM	C, O, R	×	(See 01-02-161 DTC P0204:00 [SKYACTIV-G 2.0].)
P0222:00	ON	OFF	OFF	OFF	TP sensor No.2 circuit low input	×	1	CCM	C, O, R	×	(See 01-02-164 DTC P0222:00 [SKYACTIV-G 2.0].)
P0223:00	ON	OFF	OFF	OFF	TP sensor No.2 circuit high input	×	1	CCM	C, O, R	×	(See 01-02-167 DTC P0223:00 [SKYACTIV-G 2.0].)
P025B:00	ON	OFF	OFF	OFF	Fuel pump control module circuit range/performance problem	×	1	CCM	C, O, R	×	(See 01-02-169 DTC P025B:00 [SKYACTIV-G 2.0].)

ON-BOARD DIAGNOSTIC [SKYACTIV-G 2.0]

DTC No.	Check Engine Light	Charging System Warning Light	Master Warning Light	i-stop Warning Light (Amber)	Condition	Fail-safe function	Drive Cycle	Monitor item	Self test type* 1	Memory function	Page
P025C:00	ON	OFF	OFF	OFF	Fuel pump control module result of on-board diagnostic test low input	—	1	CCM	C, O, R	×	(See 01-02-171 DTC P025C:00 [SKYACTIV-G 2.0].)
P025D:00	ON	OFF	OFF	OFF	Fuel pump control module result of on-board diagnostic test high input	—	1	CCM	C, O, R	×	(See 01-02-173 DTC P025D:00 [SKYACTIV-G 2.0].)
P0300:00	Flash /ON	OFF	OFF	OFF	Random misfire detected	×	2	Misfire	C	×	(See 01-02-175 DTC P0300:00 [SKYACTIV-G 2.0].)
P0301:00	Flash /ON	OFF	OFF	OFF	Cylinder No.1 misfire detected	×	2	Misfire	C	×	(See 01-02-182 DTC P0301:00, P0302:00, P0303:00, P0304:00 [SKYACTIV-G 2.0].)
P0302:00	Flash /ON	OFF	OFF	OFF	Cylinder No.2 misfire detected	×	2	Misfire	C	×	
P0303:00	Flash /ON	OFF	OFF	OFF	Cylinder No.3 misfire detected	×	2	Misfire	C	×	
P0304:00	Flash /ON	OFF	OFF	OFF	Cylinder No.4 misfire detected	×	2	Misfire	C	×	
P0327:00	ON	OFF	OFF	OFF	KS circuit low input	×	1	CCM	C, O, R	×	(See 01-02-186 DTC P0327:00 [SKYACTIV-G 2.0].)
P0328:00	ON	OFF	OFF	OFF	KS circuit high input	×	1	CCM	C, O, R	×	(See 01-02-188 DTC P0328:00 [SKYACTIV-G 2.0].)
P0335:00	ON	OFF	OFF	OFF	CKP sensor circuit problem	×	1	CCM	C, R	×	(See 01-02-191 DTC P0335:00 [SKYACTIV-G 2.0].)
P0340:00	ON	OFF	OFF	OFF	Intake CMP sensor circuit problem	×	1	CCM	C, R	×	(See 01-02-193 DTC P0340:00 [SKYACTIV-G 2.0].)
P0365:00	ON	OFF	OFF	OFF	Exhaust CMP sensor circuit problem	×	1	CCM	C, R	×	(See 01-02-196 DTC P0365:00 [SKYACTIV-G 2.0].)
P0421:00	ON	OFF	OFF	OFF	Warm up catalyst system efficiency below threshold	—	2	Catalyst	C	×	(See 01-02-200 DTC P0421:00 [SKYACTIV-G 2.0].)
P0443:00	ON	OFF	OFF	OFF	Purge solenoid valve circuit problem	—	2	CCM	C, R	×	(See 01-02-202 DTC P0443:00 [SKYACTIV-G 2.0].)

ON-BOARD DIAGNOSTIC [SKYACTIV-G 2.0]

DTC No.	Check Engine Light	Charging System Warning Light	Master Warning Light	i-stop Warning Light (Amber)	Condition	Fail-safe function	Drive Cycle	Monitor item	Self test type*1	Memory function	Page
P0461:00	ON	OFF	OFF	OFF	Fuel gauge sender unit circuit range/performance problem	—	2	CCM	C	×	(See 01-02-205 DTC P0461:00 [SKYACTIV-G 2.0].)
P0462:00	ON	OFF	OFF	OFF	Fuel gauge sender unit circuit low input	—	2	CCM	C, O, R	×	(See 01-02-207 DTC P0462:00 [SKYACTIV-G 2.0].)
P0463:00	ON	OFF	OFF	OFF	Fuel gauge sender unit circuit high input	—	2	CCM	C, O, R	×	(See 01-02-208 DTC P0463:00 [SKYACTIV-G 2.0].)
P0480:00	OFF	OFF	OFF	OFF	Cooling fan relay No.1 control circuit malfunction	—	1	Other	C, O, R	×	(See 01-02-209 DTC P0480:00 [SKYACTIV-G 2.0].)
P0482:00	OFF	OFF	OFF	OFF	Cooling fan relay No.2 and No.3 control circuit malfunction	—	1	Other	C, O, R	×	(See 01-02-211 DTC P0482:00 [SKYACTIV-G 2.0].)
P0500:00	ON	OFF	OFF	OFF	VSS circuit problem	×	2	CCM	C	×	(See 01-02-214 DTC P0500:00 [SKYACTIV-G 2.0].)
P0506:00	ON	OFF	OFF	OFF	IAC system RPM lower than expected	—	2	CCM	C	×	(See 01-02-216 DTC P0506:00 [SKYACTIV-G 2.0].)
P0507:00	ON	OFF	OFF	OFF	IAC system RPM higher than expected	—	2	CCM	C	×	(See 01-02-218 DTC P0507:00 [SKYACTIV-G 2.0].)
P0520:00	OFF	OFF	OFF	OFF	Oil pressure switch circuit problem	—	1	Other	C, O	×	(See 01-02-220 DTC P0520:00 [SKYACTIV-G 2.0].)
P0524:00	OFF	OFF	OFF	OFF	Engine oil pressure too low	—	1	Other	C	×	(See 01-02-222 DTC P0524:00 [SKYACTIV-G 2.0].)
P0532:00*7	OFF	OFF	OFF	OFF	Refrigerant pressure sensor circuit low input	—	1	Other	C, O, R	×	(See 01-02-224 DTC P0532:00 [SKYACTIV-G 2.0].)
P0533:00*7	OFF	OFF	OFF	OFF	Refrigerant pressure sensor circuit high input	—	1	Other	C, O, R	×	(See 01-02-226 DTC P0533:00 [SKYACTIV-G 2.0].)

ON-BOARD DIAGNOSTIC [SKYACTIV-G 2.0]

DTC No.	Check Engine Light	Charging System Warning Light	Master Warning Light	i-stop Warning Light (Amber)	Condition	Fail-safe function	Drive Cycle	Monitor item	Self test type*1	Memory function	Page
P0555:00*6	OFF	OFF	OFF	Flash	Power brake unit vacuum sensor circuit problem	×	1	Other	C, O, R	×	(See 01-02-229 DTC P0555:00 [SKYACTIV-G 2.0].)
P0571:00	ON	OFF	ON	OFF	Brake switch circuit problem	—	1	Other	C	×	(See 01-02-232 DTC P0571:00 [SKYACTIV-G 2.0].)
P057F:00*6	OFF	OFF	ON	Flash	Power supply malfunction	×	1	Other	C, O, R	×	(See 01-02-235 DTC P057F:00 [SKYACTIV-G 2.0].)
P058A:00*6	OFF	ON	ON	Flash	Current sensor problem	×	2	Other	C, O, R	×	(See 01-02-236 DTC P058A:00 [SKYACTIV-G 2.0].)
P0600:00	ON	OFF	OFF	OFF	Serial communication link	—	1	CCM	C, O, R	×	(See 01-02-238 DTC P0600:00 [SKYACTIV-G 2.0].)
P0601:00	ON	OFF	OFF	OFF	PCM memory check sum error	×	1	CCM	C, O, R	×	(See 01-02-239 DTC P0601:00 [SKYACTIV-G 2.0].)
P0602:00	ON	OFF	OFF	OFF	PCM programming error	—	1	CCM	C, O, R	×	(See 01-02-240 DTC P0602:00 [SKYACTIV-G 2.0].)
P0604:00	ON	OFF	OFF	OFF	PCM RAM error	×	1	CCM	C, O, R	×	(See 01-02-242 DTC P0604:00 [SKYACTIV-G 2.0].)
P0606:00	ON	OFF	OFF	OFF	PCM processor error	×	1	CCM	C, O, R	×	(See 01-02-243 DTC P0606:00 [SKYACTIV-G 2.0].)
P0607:00	ON	OFF	OFF	OFF	Control module performance problem	—	1	CCM	C, O, R	×	(See 01-02-244 DTC P0607:00 [SKYACTIV-G 2.0].)
P0610:00	ON	OFF	OFF	OFF	PCM vehicle configuration error	—	1	CCM	C, O, R	×	(See 01-02-245 DTC P0610:00 [SKYACTIV-G 2.0].)
P0615:00*6	OFF	OFF	OFF	Flash	Starter relay circuit problem	×	1	Other	C, O, R	×	(See 01-02-246 DTC P0615:00 [SKYACTIV-G 2.0].)

ON-BOARD DIAGNOSTIC [SKYACTIV-G 2.0]

DTC No.	Check Engine Light	Charging System Warning Light	Master Warning Light	i-stop Warning Light (Amber)	Condition	Fail-safe function	Drive Cycle	Monitor item	Self test type*1	Memory function	Page
P061B:00	ON	OFF	OFF	OFF	Internal control module torque calculation performance problem	×	1	CCM	C, O, R	×	(See 01-02-247 DTC P061B:00 [SKYACTIV-G 2.0].)
P061D:00	ON	OFF	OFF	OFF	Internal control module engine air mass performance problem	×	1	CCM	C, O, R	×	(See 01-02-248 DTC P061D:00 [SKYACTIV-G 2.0].)
P061F:00	OFF	OFF	OFF	OFF	Internal control module throttle valve actuator controller performance problem	—	1	Other	C, O, R	×	(See 01-02-250 DTC P061F:00 [SKYACTIV-G 2.0].)
P0628:00	ON	OFF	OFF	OFF	Fuel pump control module circuit low input	—	1	CCM	C, O, R	×	(See 01-02-252 DTC P0628:00 [SKYACTIV-G 2.0].)
P0629:00	ON	OFF	OFF	OFF	Fuel pump control module circuit high input	×	1	CCM	C, O, R	×	(See 01-02-254 DTC P0629:00 [SKYACTIV-G 2.0].)
P0638:00	ON	OFF	OFF	OFF	Throttle valve actuator control range/performance problem	×	1	CCM	C, O, R	×	(See 01-02-256 DTC P0638:00 [SKYACTIV-G 2.0].)
P064D:00	ON	OFF	OFF	OFF	Internal control module A/F sensor processor performance problem	×	1	CCM	C, R	×	(See 01-02-259 DTC P064D:00 [SKYACTIV-G 2.0].)
P0685:00	ON	OFF	OFF	OFF	Main relay control circuit open	—	2	CCM	C	×	(See 01-02-260 DTC P0685:00 [SKYACTIV-G 2.0].)
P06B8:00	ON	OFF	OFF	OFF	Internal control module non-volatile RAM error	—	1	Other	C, O, R	×	(See 01-02-263 DTC P06B8:00 [SKYACTIV-G 2.0].)
P06DA:00	OFF	OFF	ON	OFF	Engine oil solenoid valve circuit problem	—	1	Other	C, R	×	(See 01-02-265 DTC P06DA:00 [SKYACTIV-G 2.0].)
P0703:00	ON	OFF	ON	OFF	Brake switch input circuit problem	—	2	CCM	C	×	(See 01-02-268 DTC P0703:00 [SKYACTIV-G 2.0].)
P0704:00*3	ON	OFF	OFF	OFF	CPP switch input circuit problem	—	2	CCM	C	×	(See 01-02-271 DTC P0704:00 [SKYACTIV-G 2.0].)

ON-BOARD DIAGNOSTIC [SKYACTIV-G 2.0]

DTC No.	Check Engine Light	Charging System Warning Light	Master Warning Light	i-stop Warning Light (Amber)	Condition	Fail-safe function	Drive Cycle	Monitor item	Self test type*1	Memory function	Page
P07BE:00*8	OFF	OFF	OFF	OFF	Transmission indeterminate failure (failed to neutral)	—	1	Other	C, O, R	×	(See 01-02-273 DTC P07BE:00 [SKYACTIV-G 2.0].)
P0850:00*3	ON	OFF	OFF	OFF	Neutral switch No.1 input circuit problem	—	2	CCM	C	×	(See 01-02-275 DTC P0850:00 [SKYACTIV-G 2.0].)
P0A0F:00*6	OFF	OFF	OFF	Flash	Engine failed to restart	×	1	Other	C, O, R	×	(See 01-02-277 DTC P0A0F:00 [SKYACTIV-G 2.0].)
P0A8D:00*6	OFF	OFF	ON	Flash	Power supply system circuit low input	×	1	Other	C, R	×	(See 01-02-280 DTC P0A8D:00 [SKYACTIV-G 2.0].)
P0A94:00*6	OFF	OFF	OFF	Flash	DC-DC converter control circuit signal error	×	1	Other	C, R*5	×	(See 01-02-283 DTC P0A94:00 [SKYACTIV-G 2.0].)
P111A:00	OFF	OFF	OFF	OFF	Engine coolant temperature is high	×	1	Other	C	×	(See 01-02-286 DTC P111A:00 [SKYACTIV-G 2.0].)
P117A:00	OFF	OFF	OFF	OFF	Engine oil temperature is high	×	1	Other	C	×	(See 01-02-288 DTC P117A:00 [SKYACTIV-G 2.0].)
P1260:00	OFF	OFF	OFF	OFF	Immobilizer system problem	—	—	Other	C, O	—	(See 01-02-289 DTC P1260:00 [SKYACTIV-G 2.0].)
P1380:00	OFF	OFF	OFF	OFF	Electric variable valve timing control circuit problem	×	1	CCM	C, R	×	(See 01-02-290 DTC P1380:00 [SKYACTIV-G 2.0].)
P151B:00*2	OFF	OFF	OFF	OFF	IAC system problem	—	—	Other	R	×	(See 01-02-293 DTC P151B:00 [SKYACTIV-G 2.0].)
P176E:00*8	OFF	OFF	OFF	OFF	Clutch stroke sensor/ Starter interlock switch correlation problem	—	1	Other	C, O, R	×	(See 01-02-295 DTC P176E:00 [SKYACTIV-G 2.0].)
P2090:00	ON	OFF	OFF	OFF	OCV circuit low input	×	1	CCM	C, R	×	(See 01-02-305 DTC P2090:00 [SKYACTIV-G 2.0].)

ON-BOARD DIAGNOSTIC [SKYACTIV-G 2.0]

DTC No.	Check Engine Light	Charging System Warning Light	Master Warning Light	i-stop Warning Light (Amber)	Condition	Fail-safe function	Drive Cycle	Monitor item	Self test type*1	Memory function	Page
P2091:00	ON	OFF	OFF	OFF	OCV circuit high input	×	1	CCM	C, R	×	(See 01-02-307 DTC P2091:00 [SKYACTIV-G 2.0].)
P2096:00	ON	OFF	OFF	OFF	Target A/F feedback system too lean	—	2	Fuel system	C	×	(See 01-02-300 DTC P2096:00 [SKYACTIV-G 2.0].)
P2097:00	ON	OFF	OFF	OFF	Target A/F feedback system too rich	—	2	Fuel system	C	×	(See 01-02-309 DTC P2097:00 [SKYACTIV-G 2.0].)
P2101:00	ON	OFF	OFF	OFF	Throttle valve actuator control motor circuit range/ performance problem	×	1	CCM	C, O	×	(See 01-02-313 DTC P2101:00 [SKYACTIV-G 2.0].)
P2107:00	ON	OFF	OFF	OFF	Throttle valve actuator control module processor error	×	1	CCM	C, O, R	×	(See 01-02-317 DTC P2107:00 [SKYACTIV-G 2.0].)
P2109:00	ON	OFF	OFF	OFF	TP sensor minimum stop range/performance problem	×	1	CCM	C, O, R	×	(See 01-02-319 DTC P2109:00 [SKYACTIV-G 2.0].)
P2110:00	ON	OFF	OFF	OFF	Throttle valve actuator control system-forced limited RPM	×	1	CCM	C, R	×	(See 01-02-321 DTC P2110:00 [SKYACTIV-G 2.0].)
P2112:00	ON	OFF	OFF	OFF	Throttle valve actuator motor current range/ performance problem	×	1	CCM	C, R	×	(See 01-02-323 DTC P2112:00 [SKYACTIV-G 2.0].)
P2119:00	ON	OFF	OFF	OFF	Throttle valve actuator control throttle body range/ performance problem	×	1	CCM	C, O, R	×	(See 01-02-325 DTC P2119:00 [SKYACTIV-G 2.0].)
P2122:00	ON	OFF	OFF	OFF	APP sensor No.1 circuit low input	×	1	CCM	C, O, R	×	(See 01-02-327 DTC P2122:00 [SKYACTIV-G 2.0].)
P2123:00	ON	OFF	OFF	OFF	APP sensor No.1 circuit high input	×	1	CCM	C, O, R	×	(See 01-02-329 DTC P2123:00 [SKYACTIV-G 2.0].)
P2127:00	ON	OFF	OFF	OFF	APP sensor No.2 circuit low input	×	1	CCM	C, O, R	×	(See 01-02-331 DTC P2127:00 [SKYACTIV-G 2.0].)

ON-BOARD DIAGNOSTIC [SKYACTIV-G 2.0]

DTC No.	Check Engine Light	Charging System Warning Light	Master Warning Light	i-stop Warning Light (Amber)	Condition	Fail-safe function	Drive Cycle	Monitor item	Self test type* 1	Memory function	Page
P2128:00	ON	OFF	OFF	OFF	APP sensor No.2 circuit high input	×	1	CCM	C, O, R	×	(See 01-02-333 DTC P2128:00 [SKYACTIV-G 2.0].)
P2135:00	ON	OFF	OFF	OFF	TP sensor No.1/No.2 voltage correlation problem	×	1	CCM	C, O, R	×	(See 01-02-335 DTC P2135:00 [SKYACTIV-G 2.0].)
P2138:00	ON	OFF	OFF	OFF	APP sensor No.1/No.2 voltage correlation problem	×	1	CCM	C, O, R	×	(See 01-02-336 DTC P2138:00 [SKYACTIV-G 2.0].)
P2199:00	ON	OFF	OFF	OFF	IAT sensor No.2 circuit range/performance problem	—	2	CCM	C	×	(See 01-02-338 DTC P2199:00 [SKYACTIV-G 2.0].)
P2228:00	ON	OFF	OFF	OFF	BARO sensor circuit low input	×	1	CCM	C, O, R	×	(See 01-02-339 DTC P2228:00 [SKYACTIV-G 2.0].)
P2229:00	ON	OFF	OFF	OFF	BARO sensor circuit high input	×	1	CCM	C, O, R	×	(See 01-02-340 DTC P2229:00 [SKYACTIV-G 2.0].)
P2237:00	ON	OFF	OFF	OFF	A/F sensor positive current control circuit open	×	2	A/F sensor, HO2S	C, R	×	(See 01-02-341 DTC P2237:00 [SKYACTIV-G 2.0].)
P2243:00	ON	OFF	OFF	OFF	A/F sensor reference voltage circuit open	×	2	A/F sensor, HO2S	C, R	×	(See 01-02-344 DTC P2243:00 [SKYACTIV-G 2.0].)
P2251:00	ON	OFF	OFF	OFF	A/F sensor negative current control circuit open	×	2	A/F sensor, HO2S	C, R	×	(See 01-02-347 DTC P2251:00 [SKYACTIV-G 2.0].)
P2299:00	OFF	OFF	OFF	OFF	Accelerator pedal: spring back malfunction	×	1	Other	C, R	×	(See 01-02-350 DTC P2299:00 [SKYACTIV-G 2.0].)
P2302:00	OFF	OFF	OFF	OFF	Ion sensor No.1 circuit problem	—	1	Other	C, R	×	(See 01-02-352 DTC P2302:00 [SKYACTIV-G 2.0].)
P2305:00	OFF	OFF	OFF	OFF	Ion sensor No.2 circuit problem	—	1	Other	C, R	×	(See 01-02-355 DTC P2305:00 [SKYACTIV-G 2.0].)

ON-BOARD DIAGNOSTIC [SKYACTIV-G 2.0]

DTC No.	Check Engine Light	Charging System Warning Light	Master Warning Light	i-stop Warning Light (Amber)	Condition	Fail-safe function	Drive Cycle	Monitor item	Self test type*1	Memory function	Page
P2308:00	OFF	OFF	OFF	OFF	Ion sensor No.3 circuit problem	—	1	Other	C, R	×	(See 01-02-358 DTC P2308:00 [SKYACTIV-G 2.0].)
P2311:00	OFF	OFF	OFF	OFF	Ion sensor No.4 circuit problem	—	1	Other	C, R	×	(See 01-02-361 DTC P2311:00 [SKYACTIV-G 2.0].)
P2502:00	OFF	ON	OFF	Flash	Charging system voltage problem	×	1	Other	C, R	×	(See 01-02-364 DTC P2502:00 [SKYACTIV-G 2.0].)
P2503:00	OFF	ON	OFF	Flash	Charging system voltage low input	×	1	Other	C, R	×	(See 01-02-366 DTC P2503:00 [SKYACTIV-G 2.0].)
P2504:00	OFF	ON	OFF	Flash	Charging system voltage high input	×	1	Other	C, R	×	(See 01-02-368 DTC P2504:00 [SKYACTIV-G 2.0].)
P2507:00	ON	OFF	OFF	OFF	PCM battery voltage low input	—	1	CCM	C, O, R	×	(See 01-02-370 DTC P2507:00 [SKYACTIV-G 2.0].)
P2610:00	ON	OFF	OFF	OFF	Instrument cluster internal engine off timer performance problem	—	2	CCM	C, R	×	(See 01-02-372 DTC P2610:00 [SKYACTIV-G 2.0].)
U0073:00	OFF	OFF	OFF	OFF	CAN system communication error (HS CAN)	—	1	Other	C, O, R	×	(See 01-02-373 DTC U0073:00, U0101:00, U0121:00, U0131:00, U0140:00, U0151:00, U0155:00, U0214:00, U0235:00 [SKYACTIV-G 2.0].)
U0074:00*4	OFF	OFF	OFF	OFF	CAN system communication error (local CAN between PCM and TCM)	—	1	Other	C, O, R	×	(See 01-02-376 DTC U0074:00 [SKYACTIV-G 2.0].)

ON-BOARD DIAGNOSTIC [SKYACTIV-G 2.0]

DTC No.	Check Engine Light	Charging System Warning Light	Master Warning Light	i-stop Warning Light (Amber)	Condition	Fail-safe function	Drive Cycle	Monitor item	Self test type*1	Memory function	Page
U0101:00*4	ON	OFF	OFF	Flash	CAN communication: communication error to TCM	×	1	Other	C, O, R	×	(See 01-02-373 DTC U0073:00, U0101:00, U0121:00, U0131:00, U0140:00, U0151:00, U0155:00, U0214:00, U0235:00 [SKYACTIV-G 2.0].)
U0121:00	ON	OFF	OFF	Flash	CAN communication: communication error to DSC HU/CM	×	1	Other	C, O, R	×	
U0131:00	OFF	OFF	OFF	Flash	CAN communication: communication error to EPS control module	—	1	Other	C, O, R	×	
U0140:00	OFF	OFF	OFF	Flash	CAN communication: communication error to front body control module (FBCM)	—	1	Other	C, O, R	×	
U0151:00	OFF	OFF	OFF	Flash	CAN communication: communication error to SAS control module	—	1	Other	C, O, R	×	
U0155:00	ON	OFF	OFF	Flash	CAN communication: communication error to instrument cluster	—	1	Other	C, O, R	×	
U0214:00	OFF	OFF	OFF	Flash	CAN communication: communication error to start stop unit	×	1	Other	C, O, R	×	
U0235:00	OFF	OFF	OFF	Flash	CAN communication: communication error to laser sensor	×	1	Other	C, O, R	×	
U0298:00*6	OFF	OFF	OFF	Flash	CAN/LIN communication system: DC-DC converter information communication error with front body control module (FBCM)	×	1	Other	C, O, R	×	(See 01-02-378 DTC U0298:00 [SKYACTIV-G 2.0].)
U0302:00*4	ON	OFF	OFF	OFF	TCM processor error	—	1	Other	C, O, R	×	(See 01-02-382 DTC U0302:00 [SKYACTIV-G 2.0].)
U0315:00	OFF	OFF	OFF	OFF	DSC HU/CM error	—	1	Other	C, O, R	×	(See 01-02-384 DTC U0315:00 [SKYACTIV-G 2.0].)
U0320:00	OFF	OFF	OFF	OFF	EPS control module error	—	1	Other	C, O, R	×	(See 01-02-386 DTC U0320:00 [SKYACTIV-G 2.0].)
U0323:00	OFF	OFF	OFF	OFF	Instrument cluster error	—	1	Other	C, O, R	×	(See 01-02-388 DTC U0323:00 [SKYACTIV-G 2.0].)
U0336:00	OFF	OFF	OFF	OFF	SAS control module error	—	1	Other	C, O, R	×	(See 01-02-390 DTC U0336:00 [SKYACTIV-G 2.0].)
U0338:00	OFF	OFF	OFF	OFF	Start stop unit error	—	1	Other	C, O, R	×	(See 01-02-392 DTC U0338:00 [SKYACTIV-G 2.0].)

ON-BOARD DIAGNOSTIC [SKYACTIV-G 2.0]

DTC No.	Check Engine Light	Charging System Warning Light	Master Warning Light	i-stop Warning Light (Amber)	Condition	Fail-safe function	Drive Cycle	Monitor item	Self test type*1	Memory function	Page
U0433:00	OFF	OFF	OFF	OFF	Abnormal message from rear body control module (RBCM)	—	1	Other	C, O, R	×	(See 01-02-394 DTC U0433:00 [SKYACTIV-G 2.0].)
U1007:00*6	OFF	ON	OFF	Flash	CAN/LIN communication system: current sensor information communication error with front body control module (FBCM)	×	1	Other	C, O, R	×	(See 01-02-396 DTC U1007:00 [SKYACTIV-G 2.0].)
U2300:00	OFF	OFF	ON	OFF	Global central configuration error	×	1	Other	C, R	×	(See 01-02-400 DTC U2300:00 [SKYACTIV-G 2.0].)
U3000:41	OFF	OFF	OFF	OFF	PCM processor error	—	—	Other	C, O	—	(See 01-02-402 DTC U3000:41 [SKYACTIV-G 2.0].)

*1 : C: CMDTC self test, O: KOEO self test, R: KOER self test
*2 : KOER self test only
*3 : MTX
*4 : ATX
*5 : Perform the self test after i-stop operates
*6 : Vehicles with i-stop system
*7 : Vehicles with air conditioner
*8 : Vehicles with i-stop system (MTX)

ON-BOARD DIAGNOSTIC [SKYACTIV-G 2.0]

DTC P0010:00 [SKYACTIV-G 2.0]

id0102h1310700

DTC P0010:00	Electric variable valve timing control circuit range/performance problem
DETECTION CONDITION	• A malfunction is detected in the results of the on-board diagnostic test received from electric variable valve timing driver. • The motor speed signal received from the electric variable valve timing driver is in error. **Diagnostic support note** • This is a continuous monitor (CCM). • The check engine light illuminates if the PCM detects the above malfunction condition during the first drive cycle. • FREEZE FRAME DATA (Mode 2)/Snapshot data is available. • The DTC is stored in the PCM memory.
FAIL-SAFE FUNCTION	• Stops activation of the electric variable valve timing driver.
POSSIBLE CAUSE	• Electric variable valve timing motor/driver connectors or terminals malfunction • Electric variable valve timing relay malfunction • Short to ground or open circuit in electric variable valve timing relay power supply circuit — Short to ground in wiring harness between MAIN 200 A fuse and electric variable valve timing relay terminal D — MAIN 200 A fuse and/or EVVT 20 A fuse malfunction — Open circuit in wiring harness between battery positive terminal and electric variable valve timing relay terminal D • Short to ground in wiring harness between the following terminals: — Electric variable valve timing relay terminal C—Electric variable valve timing motor/driver terminal 1E — Electric variable valve timing relay terminal C—Electric variable valve timing motor/driver terminal 2B • Short to power supply in wiring harness between the following terminals: — Electric variable valve timing relay terminal C—Electric variable valve timing motor/driver terminal 1E — Electric variable valve timing relay terminal C—Electric variable valve timing motor/driver terminal 2B • Open circuit in wiring harness between the following terminals: — Electric variable valve timing relay terminal C—Electric variable valve timing motor/driver terminal 1E — Electric variable valve timing relay terminal C—Electric variable valve timing motor/driver terminal 2B • Open circuit in wiring harness between electric variable valve timing motor/driver terminal 2A and body ground • Short to ground in wiring harness between the following terminals: — Electric variable valve timing motor/driver terminal 1D—PCM terminal 1AZ — Electric variable valve timing motor/driver terminal 1C—PCM terminal 1O — Electric variable valve timing motor/driver terminal 1B—PCM terminal 1J — Electric variable valve timing motor/driver terminal 1A—PCM terminal 1AE • PCM connector or terminals malfunction • Short to power supply in wiring harness between the following terminals: — Electric variable valve timing motor/driver terminal 1D—PCM terminal 1AZ — Electric variable valve timing motor/driver terminal 1C—PCM terminal 1O — Electric variable valve timing motor/driver terminal 1B—PCM terminal 1J — Electric variable valve timing motor/driver terminal 1A—PCM terminal 1AE • Electric variable valve timing motor/driver circuits are shorted to each other • Open circuit in wiring harness between the following terminals: — Electric variable valve timing motor/driver terminal 1D—PCM terminal 1AZ — Electric variable valve timing motor/driver terminal 1C—PCM terminal 1O — Electric variable valve timing motor/driver terminal 1B—PCM terminal 1J — Electric variable valve timing motor/driver terminal 1A—PCM terminal 1AE • Electric variable valve timing driver malfunction • Electric variable valve timing motor malfunction • PCM malfunction

ON-BOARD DIAGNOSTIC [SKYACTIV-G 2.0]

DTC P0010:00	Electric variable valve timing control circuit range/performance problem

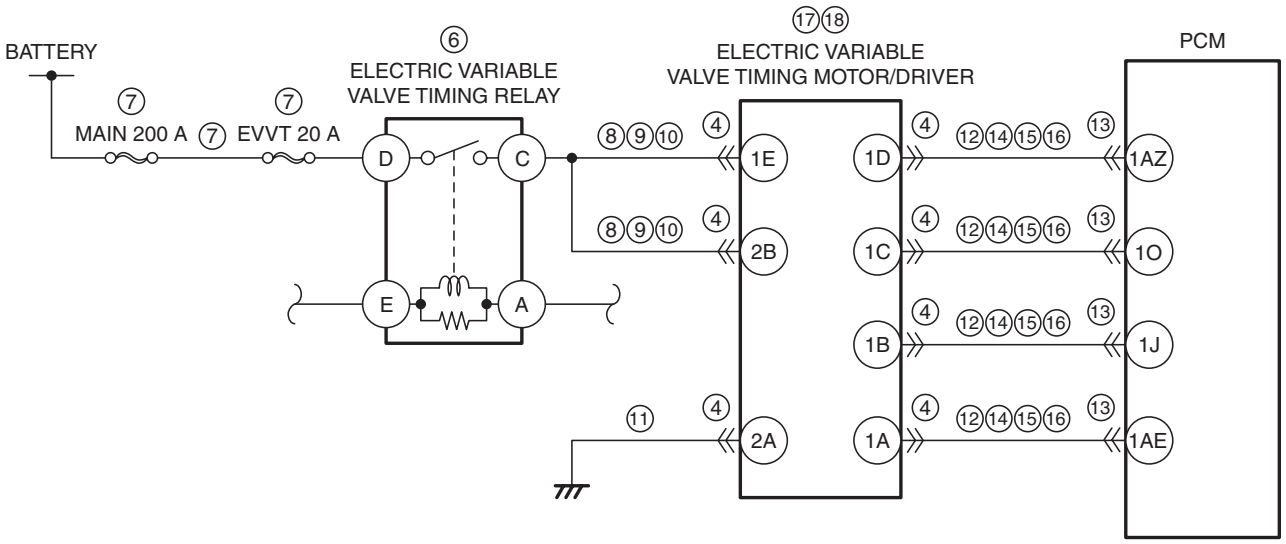

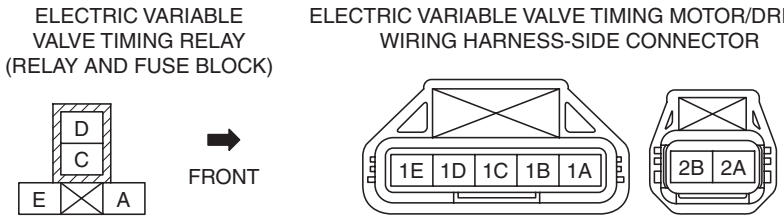

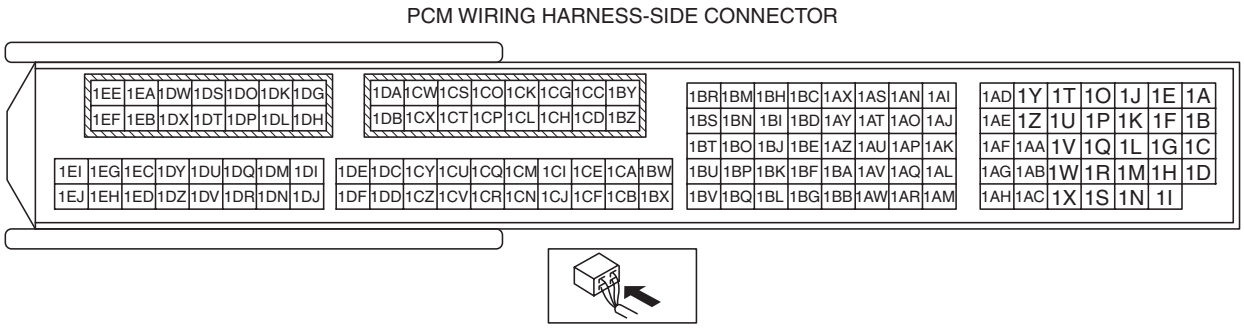

Diagnostic Procedure

STEP	INSPECTION		ACTION
1	**VERIFY FREEZE FRAME DATA (MODE 2)/ SNAPSHOT DATA HAS BEEN RECORDED** • Has the FREEZE FRAME DATA (Mode 2)/ snapshot data been recorded?	Yes	Go to the next step.
		No	Record the FREEZE FRAME DATA (Mode 2)/snapshot data on the repair order, then go to the next step.
2	**VERIFY RELATED SERVICE INFORMATION AVAILABILITY** • Verify related Service Information availability. • Is any related Service Information available?	Yes	Perform repair or diagnosis according to the available Service Information. • If the vehicle is not repaired, go to the next step.
		No	Go to the next step.
3	**VERIFY RELATED PENDING CODE AND/OR DTC** • Switch the ignition to off, then to ON (engine off). • Perform the Pending Trouble Code Access Procedure and DTC Reading Procedure. (See 01-02-8 ON-BOARD DIAGNOSTIC TEST [SKYACTIV-G 2.0].) • Is the PENDING CODE/DTC P1380:00 also present?	Yes	Go to the applicable PENDING CODE or DTC inspection. (See 01-02-290 DTC P1380:00 [SKYACTIV-G 2.0].)
		No	Go to the next step.

ON-BOARD DIAGNOSTIC [SKYACTIV-G 2.0]

STEP	INSPECTION		ACTION
4	**INSPECT ELECTRIC VARIABLE VALVE TIMING MOTOR/DRIVER CONNECTOR CONDITION** • Switch the ignition to off. • Disconnect the electric variable valve timing motor/driver connector. • Inspect for poor connection (such as damaged/ pulled-out pins, corrosion). • Is there any malfunction?	Yes	Repair or replace the connector and/or terminals, then go to Step 19.
		No	Go to the next step.
5	**DETERMINE IF MALFUNCTION CAUSE IS ELECTRIC VARIABLE VALVE TIMING MOTOR/ DRIVER POWER SUPPLY CIRCUIT OR OTHER** • Verify that the electric variable valve timing motor/driver connector is disconnected. • Start the engine. • Measure the voltage at the following terminals (wiring harness-side): — Electric variable valve timing motor/driver terminal 1E — Electric variable valve timing motor/driver terminal 2B • Is the voltage **B+**?	Yes	Go to Step 11.
		No	Go to the next step.
6	**INSPECT ELECTRIC VARIABLE VALVE TIMING RELAY** • Switch the ignition to off. • Remove the electric variable valve timing relay. • Inspect the electric variable valve timing relay. (See 09-21-29 RELAY INSPECTION.) • Is there any malfunction?	Yes	Replace the electric variable valve timing relay, then go to Step 19.
		No	Go to the next step.
7	**INSPECT ELECTRIC VARIABLE VALVE TIMING RELAY POWER SUPPLY CIRCUIT FOR SHORT TO GROUND OR OPEN CIRCUIT** • Electric variable valve timing relay is removed. • Verify that the electric variable valve timing motor/driver connector is disconnected. • Measure the voltage at the electric variable valve timing relay terminal D (wiring harness-side). • Is the voltage **B+**?	Yes	Go to the next step.
		No	Inspect the MAIN 200 A fuse and EVVT 20 A fuse. • If the fuse is blown: — Repair or replace the wiring harness for a possible short to ground. — Replace the malfunctioning fuse. • If the fuse is deteriorated: — Replace the malfunctioning fuse. • If all fuses are normal: — Repair or replace the wiring harness for a possible open circuit. Go to Step 19.
8	**INSPECT ELECTRIC VARIABLE VALVE TIMING RELAY CONTROL CIRCUIT FOR SHORT TO GROUND** • Electric variable valve timing relay is removed. • Verify that the electric variable valve timing motor/driver connector is disconnected. • Inspect for continuity between electric variable valve timing relay terminal C (wiring harness-side) and body ground. • Is there continuity?	Yes	Repair or replace the wiring harness for a possible short to ground, then go to Step 19.
		No	Go to the next step.
9	**INSPECT ELECTRIC VARIABLE VALVE TIMING RELAY CONTROL CIRCUIT FOR SHORT TO POWER SUPPLY** • Electric variable valve timing relay is removed. • Verify that the electric variable valve timing motor/driver connector is disconnected. • Switch the ignition ON (engine off or on). • Measure the voltage at the electric variable valve timing relay terminal C (wiring harness-side). • Is the voltage **0 V**?	Yes	Go to the next step.
		No	Repair or replace the wiring harness for a possible short to power supply, then go to Step 19.

ON-BOARD DIAGNOSTIC [SKYACTIV-G 2.0]

STEP	INSPECTION		ACTION
10	**INSPECT ELECTRIC VARIABLE VALVE TIMING RELAY CONTROL CIRCUIT FOR OPEN CIRCUIT** • Electric variable valve timing relay is removed. • Verify that the electric variable valve timing motor/driver connector is disconnected. • Switch the ignition to off. • Inspect for continuity between the following terminals (wiring harness-side): — Electric variable valve timing relay terminal C—Electric variable valve timing motor/driver terminal 1E — Electric variable valve timing relay terminal C—Electric variable valve timing motor/driver terminal 2B • Is there continuity?	Yes	Go to Step 19.
		No	Repair or replace the wiring harness for a possible open circuit, then go to Step 19.
11	**INSPECT ELECTRIC VARIABLE VALVE TIMING MOTOR/DRIVER GROUND CIRCUIT FOR OPEN CIRCUIT** • Verify that the electric variable valve timing motor/driver connector is disconnected. • Switch the ignition to off. • Inspect for continuity between electric variable valve timing motor/driver terminal 2A (wiring harness-side) and body ground. • Is there continuity?	Yes	Go to the next step.
		No	Repair or replace the wiring harness for a possible open circuit, then go to Step 19.
12	**INSPECT ELECTRIC VARIABLE VALVE TIMING MOTOR/DRIVER CIRCUIT FOR SHORT TO GROUND** • Verify that the electric variable valve timing motor/driver connector is disconnected. • Inspect for continuity between the following terminals (wiring harness-side) and body ground: — Electric variable valve timing motor/driver terminal 1D — Electric variable valve timing motor/driver terminal 1C — Electric variable valve timing motor/driver terminal 1B — Electric variable valve timing motor/driver terminal 1A • Is there continuity?	Yes	If the short to ground circuit could be detected in the wiring harness: • Repair or replace the wiring harness for a possible short to ground. If the short to ground circuit could not be detected in the wiring harness: • Replace the PCM (short to ground in the PCM internal circuit). (See 01-40-10 PCM REMOVAL/INSTALLATION [SKYACTIV-G 2.0].) Go to Step 19.
		No	Go to the next step.
13	**INSPECT PCM CONNECTOR CONDITION** • Disconnect the PCM connector. • Inspect for poor connection (such as damaged/pulled-out pins, corrosion). • Is there any malfunction?	Yes	Repair or replace the connector and/or terminals, then go to Step 19.
		No	Go to the next step.
14	**INSPECT ELECTRIC VARIABLE VALVE TIMING MOTOR/DRIVER CIRCUIT FOR SHORT TO POWER SUPPLY** • Verify that the electric variable valve timing motor/driver and PCM connectors are disconnected. • Switch the ignition ON (engine off or on). • Measure the voltage at the following terminals (wiring harness-side): — Electric variable valve timing motor/driver terminal 1D — Electric variable valve timing motor/driver terminal 1C — Electric variable valve timing motor/driver terminal 1B — Electric variable valve timing motor/driver terminal 1A • Is the voltage **0 V**?	Yes	Go to the next step.
		No	Repair or replace the wiring harness for a possible short to power supply, then go to Step 19.

ON-BOARD DIAGNOSTIC [SKYACTIV-G 2.0]

STEP	INSPECTION		ACTION
15	**INSPECT ELECTRIC VARIABLE VALVE TIMING MOTOR/DRIVER CIRCUITS FOR SHORT TO EACH OTHER** • Verify that the electric variable valve timing motor/driver and PCM connectors are disconnected. • Switch the ignition to off. • Inspect for continuity electric variable valve timing motor/driver terminals 1D, 1C, 1B and 1A (wiring harness-side). • Is there continuity?	Yes	Repair or replace the wiring harness for a possible short to each other, then go to Step 19.
		No	Go to the next step.
16	**INSPECT ELECTRIC VARIABLE VALVE TIMING MOTOR/DRIVER CIRCUIT FOR OPEN CIRCUIT** • Verify that the electric variable valve timing motor/driver and PCM connectors are disconnected. • Inspect for continuity between the following terminals (wiring harness-side): — Electric variable valve timing motor/driver terminal 1D—PCM terminal 1AZ — Electric variable valve timing motor/driver terminal 1C—PCM terminal 1O — Electric variable valve timing motor/driver terminal 1B—PCM terminal 1J — Electric variable valve timing motor/driver terminal 1A—PCM terminal 1AE • Is there continuity?	Yes	Go to the next step.
		No	Repair or replace the wiring harness for a possible open circuit, then go to Step 19.
17	**INSPECT ELECTRIC VARIABLE VALVE TIMING DRIVER** • Inspect the electric variable valve timing driver. (See 01-10A-15 ELECTRIC VARIABLE VALVE TIMING MOTOR/DRIVER INSPECTION [SKYACTIV-G 2.0].) • Is there any malfunction?	Yes	Replace the electric variable valve timing motor/driver, then go to Step 19. (See 01-10A-16 ELECTRIC VARIABLE VALVE TIMING MOTOR/DRIVER REMOVAL/INSTALLATION [SKYACTIV-G 2.0].)
		No	Go to the next step.
18	**INSPECT ELECTRIC VARIABLE VALVE TIMING MOTOR** • Inspect the electric variable valve timing motor. (See 01-10A-15 ELECTRIC VARIABLE VALVE TIMING MOTOR/DRIVER INSPECTION [SKYACTIV-G 2.0].) • Is there any malfunction?	Yes	Replace the electric variable valve timing motor/driver, then go to the next step. (See 01-10A-16 ELECTRIC VARIABLE VALVE TIMING MOTOR/DRIVER REMOVAL/INSTALLATION [SKYACTIV-G 2.0].)
		No	Go to the next step.
19	**VERIFY DTC TROUBLESHOOTING COMPLETED** • Make sure to reconnect all disconnected connectors. • Clear the DTC from the PCM memory using the M-MDS. (See 01-02-12 AFTER REPAIR PROCEDURE [SKYACTIV-G 2.0].) • Perform the KOER self test. (See 01-02-12 KOEO/KOER SELF TEST [SKYACTIV-G 2.0].) • Is the same DTC present?	Yes	Repeat the inspection from Step 1. • If the malfunction recurs, replace the PCM. (See 01-40-10 PCM REMOVAL/INSTALLATION [SKYACTIV-G 2.0].) Go to the next step.
		No	Go to the next step.
20	**VERIFY AFTER REPAIR PROCEDURE** • Perform the “AFTER REPAIR PROCEDURE”. (See 01-02-12 AFTER REPAIR PROCEDURE [SKYACTIV-G 2.0].) • Are any DTCs present?	Yes	Go to the applicable DTC inspection. (See 01-02-14 DTC TABLE [SKYACTIV-G 2.0].)
		No	DTC troubleshooting completed.

ON-BOARD DIAGNOSTIC [SKYACTIV-G 2.0]

DTC P0011:00 [SKYACTIV-G 2.0]

id0102h1700100

DTC P0011:00	**Intake CMP timing over-advanced**
DETECTION CONDITION	• The actual intake valve timing advance is the specification or more compared to the target intake valve timing for a continuous specified time with the following condition met. **MONITORING CONDITIONS** — Engine speed: **below 5,000 rpm** — ECT: **above 60 °C {140 °F}** **Diagnostic support note** • This is a continuous monitor (CCM). • The check engine light illuminates if the PCM detects the above malfunction condition during the first drive cycle. • FREEZE FRAME DATA (Mode 2)/Snapshot data is available. • The DTC is stored in the PCM memory.
FAIL-SAFE FUNCTION	• Stops activation of the electric variable valve timing driver.
POSSIBLE CAUSE	• Electric variable valve timing driver malfunction — Electric variable valve timing actuator is stuck in advanced position • Electric variable valve timing motor malfunction • Electric variable valve timing actuator malfunction • PCM malfunction
SYSTEM WIRING DIAGRAM	—

Diagnostic Procedure

STEP	INSPECTION		ACTION
1	**VERIFY FREEZE FRAME DATA (MODE 2)/ SNAPSHOT DATA HAS BEEN RECORDED** • Has the FREEZE FRAME DATA (Mode 2)/ snapshot data been recorded?	Yes	Go to the next step.
		No	Record the FREEZE FRAME DATA (Mode 2)/snapshot data on the repair order, then go to the next step.
2	**VERIFY RELATED SERVICE INFORMATION AVAILABILITY** • Verify related Service Information availability. • Is any related Service Information available?	Yes	Perform repair or diagnosis according to the available Service Information. • If the vehicle is not repaired, go to the next step.
		No	Go to the next step.
3	**VERIFY RELATED PENDING CODE AND/OR DTC** • Switch the ignition to off, then to ON (engine off). • Perform the Pending Trouble Code Access Procedure and DTC Reading Procedure. (See 01-02-8 ON-BOARD DIAGNOSTIC TEST [SKYACTIV-G 2.0].) • Is the PENDING CODE/DTC P0010:00 or P1380:00 also present?	Yes	Go to the applicable PENDING CODE or DTC inspection. (See 01-02-28 DTC P0010:00 [SKYACTIV-G 2.0].) (See 01-02-290 DTC P1380:00 [SKYACTIV-G 2.0].)
		No	Go to the next step.
4	**INSPECT ELECTRIC VARIABLE VALVE TIMING DRIVER** • Inspect the electric variable valve timing driver. (See 01-10A-15 ELECTRIC VARIABLE VALVE TIMING MOTOR/DRIVER INSPECTION [SKYACTIV-G 2.0].) • Is there any malfunction?	Yes	Replace the electric variable valve timing motor/driver, then go to Step 7. (See 01-10A-16 ELECTRIC VARIABLE VALVE TIMING MOTOR/DRIVER REMOVAL/INSTALLATION [SKYACTIV-G 2.0].)
		No	Go to the next step.
5	**INSPECT ELECTRIC VARIABLE VALVE TIMING MOTOR** • Inspect the electric variable valve timing motor. (See 01-10A-15 ELECTRIC VARIABLE VALVE TIMING MOTOR/DRIVER INSPECTION [SKYACTIV-G 2.0].) • Is there any malfunction?	Yes	Replace the electric variable valve timing motor/driver, then go to Step 7. (See 01-10A-16 ELECTRIC VARIABLE VALVE TIMING MOTOR/DRIVER REMOVAL/INSTALLATION [SKYACTIV-G 2.0].)
		No	Go to the next step.

ON-BOARD DIAGNOSTIC [SKYACTIV-G 2.0]

STEP	INSPECTION		ACTION
6	**INSPECT ELECTRIC VARIABLE VALVE TIMING ACTUATOR** • Inspect the electric variable valve timing actuator. (See 01-10A-22 ELECTRIC VARIABLE VALVE TIMING ACTUATOR INSPECTION [SKYACTIV-G 2.0].) • Is there any malfunction?	Yes	Replace the electric variable valve timing actuator, then go to the next step. (See 01-10A-23 ELECTRIC VARIABLE VALVE TIMING ACTUATOR, HYDRAULIC VARIABLE VALVE TIMING ACTUATOR REMOVAL/INSTALLATION [SKYACTIV-G 2.0].)
		No	Go to the next step.
7	**VERIFY DTC TROUBLESHOOTING COMPLETED** • Make sure to reconnect all disconnected connectors. • Clear the DTC from the PCM memory using the M-MDS. (See 01-02-12 AFTER REPAIR PROCEDURE [SKYACTIV-G 2.0].) • Perform the Drive Mode 03 (Variable Valve Timing, A/F Sensor Heater, HO2S Heater, A/F Sensor, HO2S and TWC Repair Verification Drive Mode). (See 01-02-13 OBD DRIVE MODE [SKYACTIV-G 2.0].) • Is the PENDING CODE for this DTC present?	Yes	Repeat the inspection from Step 1. • If the malfunction recurs, replace the PCM. (See 01-40-10 PCM REMOVAL/INSTALLATION [SKYACTIV-G 2.0].) Go to the next step.
		No	Go to the next step.
8	**VERIFY AFTER REPAIR PROCEDURE** • Perform the “AFTER REPAIR PROCEDURE”. (See 01-02-12 AFTER REPAIR PROCEDURE [SKYACTIV-G 2.0].) • Are any DTCs present?	Yes	Go to the applicable DTC inspection. (See 01-02-14 DTC TABLE [SKYACTIV-G 2.0].)
		No	DTC troubleshooting completed.

ON-BOARD DIAGNOSTIC [SKYACTIV-G 2.0]

DTC P0012:00 [SKYACTIV-G 2.0]

id0102h1700200

DTC P0012:00	**Intake CMP timing over-retarded**
DETECTION CONDITION	• The actual intake valve timing retard is the specification or more compared to the target intake valve timing for a continuous specified time with the following condition met. **MONITORING CONDITIONS** — Engine speed: **below 5,000 rpm** — ECT: **above 60 °C {140 °F}** **Diagnostic support note** • This is a continuous monitor (CCM). • The check engine light illuminates if the PCM detects the above malfunction condition during the first drive cycle. • FREEZE FRAME DATA (Mode 2)/Snapshot data is available. • The DTC is stored in the PCM memory.
FAIL-SAFE FUNCTION	• Stops activation of the electric variable timing driver.
POSSIBLE CAUSE	• Electric variable valve timing driver malfunction — Electric variable valve timing actuator is stuck in retarded position • Electric variable valve timing motor malfunction • Electric variable valve timing actuator malfunction • Loose timing chain or improper intake valve timing due to timing chain slippage • PCM malfunction
SYSTEM WIRING DIAGRAM	—

Diagnostic Procedure

STEP	INSPECTION		ACTION
1	**VERIFY FREEZE FRAME DATA (MODE 2)/ SNAPSHOT DATA HAS BEEN RECORDED** • Has the FREEZE FRAME DATA (Mode 2)/ snapshot data been recorded?	Yes	Go to the next step.
		No	Record the FREEZE FRAME DATA (Mode 2)/snapshot data on the repair order, then go to the next step.
2	**VERIFY RELATED SERVICE INFORMATION AVAILABILITY** • Verify related Service Information availability. • Is any related Service Information available?	Yes	Perform repair or diagnosis according to the available Service Information. • If the vehicle is not repaired, go to the next step.
		No	Go to the next step.
3	**VERIFY RELATED PENDING CODE AND/OR DTC** • Switch the ignition to off, then to ON (engine off). • Perform the Pending Trouble Code Access Procedure and DTC Reading Procedure. (See 01-02-8 ON-BOARD DIAGNOSTIC TEST [SKYACTIV-G 2.0].) • Is the PENDING CODE/DTC P0010:00 or P1380:00 also present?	Yes	Go to the applicable PENDING CODE or DTC inspection. (See 01-02-28 DTC P0010:00 [SKYACTIV-G 2.0].) (See 01-02-290 DTC P1380:00 [SKYACTIV-G 2.0].)
		No	Go to the next step.
4	**INSPECT ELECTRIC VARIABLE VALVE TIMING DRIVER** • Inspect the electric variable valve timing driver. (See 01-10A-15 ELECTRIC VARIABLE VALVE TIMING MOTOR/DRIVER INSPECTION [SKYACTIV-G 2.0].) • Is there any malfunction?	Yes	Replace the electric variable valve timing motor/driver, then go to Step 8. (See 01-10A-16 ELECTRIC VARIABLE VALVE TIMING MOTOR/DRIVER REMOVAL/INSTALLATION [SKYACTIV-G 2.0].)
		No	Go to the next step.
5	**INSPECT ELECTRIC VARIABLE VALVE TIMING MOTOR** • Inspect the electric variable valve timing motor. (See 01-10A-15 ELECTRIC VARIABLE VALVE TIMING MOTOR/DRIVER INSPECTION [SKYACTIV-G 2.0].) • Is there any malfunction?	Yes	Replace the electric variable valve timing motor/driver, then go to Step 8. (See 01-10A-16 ELECTRIC VARIABLE VALVE TIMING MOTOR/DRIVER REMOVAL/INSTALLATION [SKYACTIV-G 2.0].)
		No	Go to the next step.

ON-BOARD DIAGNOSTIC [SKYACTIV-G 2.0]

STEP	INSPECTION		ACTION
6	**INSPECT ELECTRIC VARIABLE VALVE TIMING ACTUATOR** • Inspect the electric variable valve timing actuator. (See 01-10A-22 ELECTRIC VARIABLE VALVE TIMING ACTUATOR INSPECTION [SKYACTIV-G 2.0].) • Is there any malfunction?	Yes	Replace the electric variable valve timing actuator, then go to Step 8. (See 01-10A-23 ELECTRIC VARIABLE VALVE TIMING ACTUATOR, HYDRAULIC VARIABLE VALVE TIMING ACTUATOR REMOVAL/INSTALLATION [SKYACTIV-G 2.0].)
		No	Go to the next step.
7	**VERIFY TIMING CHAIN INSTALLATION** • Stop the engine. • Remove the timing chain cover. (See 01-10A-39 TIMING CHAIN REMOVAL/ INSTALLATION [SKYACTIV-G 2.0].) • Is the intake camshaft timing mark at the correct point?	Yes	Go to the next step.
		No	Reinstall the timing chain, then go to the next step. (See 01-10A-39 TIMING CHAIN REMOVAL/ INSTALLATION [SKYACTIV-G 2.0].)
8	**VERIFY DTC TROUBLESHOOTING COMPLETED** • Make sure to reconnect all disconnected connectors. • Clear the DTC from the PCM memory using the M-MDS. (See 01-02-12 AFTER REPAIR PROCEDURE [SKYACTIV-G 2.0].) • Perform the Drive Mode 03 (Variable Valve Timing, A/F Sensor Heater, HO2S Heater, A/F Sensor, HO2S and TWC Repair Verification Drive Mode). (See 01-02-13 OBD DRIVE MODE [SKYACTIV-G 2.0].) • Is the PENDING CODE for this DTC present?	Yes	Repeat the inspection from Step 1. • If the malfunction recurs, replace the PCM. (See 01-40-10 PCM REMOVAL/INSTALLATION [SKYACTIV-G 2.0].) Go to the next step.
		No	Go to the next step.
9	**VERIFY AFTER REPAIR PROCEDURE** • Perform the “AFTER REPAIR PROCEDURE”. (See 01-02-12 AFTER REPAIR PROCEDURE [SKYACTIV-G 2.0].) • Are any DTCs present?	Yes	Go to the applicable DTC inspection. (See 01-02-14 DTC TABLE [SKYACTIV-G 2.0].)
		No	DTC troubleshooting completed.

ON-BOARD DIAGNOSTIC [SKYACTIV-G 2.0]

DTC P0014:00 [SKYACTIV-G 2.0]

id0102h1008000

DTC P0014:00	**Exhaust CMP timing over-advanced**
DETECTION CONDITION	• The actual exhaust valve timing is over-advanced by specification from the target exhaust valve timing for specified period when the oil control valve (OCV) is controlled in the feedback mode. **MONITORING CONDITIONS** — ECT: **above 60 °C {140 °F}** **Diagnostic support note** • This is a continuous monitor (CCM). • The check engine light illuminates if the PCM detects the above malfunction condition in two consecutive drive cycles or in one drive cycle while the DTC for the same malfunction has been stored in the PCM. • PENDING CODE is available if the PCM detects the above malfunction condition during first drive cycle. • FREEZE FRAME DATA (Mode 2)/Snapshot data is available. • The DTC is stored in the PCM memory.
FAIL-SAFE FUNCTION	• Performs the exhaust variable valve timing control with a maximum cam retard request.
POSSIBLE CAUSE	• Low engine oil pressure • Loose timing chain or improper exhaust valve timing due to timing chain slippage • OCV malfunction — Spool valve in OCV is stuck in advanced position • Engine oil runners are clogged or have leakage: — Between oil pressure switch and OCV — Between OCV and hydraulic variable valve timing actuator — In hydraulic variable valve timing actuator • PCM malfunction
SYSTEM WIRING DIAGRAM	—

Diagnostic Procedure

STEP	INSPECTION		ACTION
1	**VERIFY FREEZE FRAME DATA (MODE 2)/ SNAPSHOT DATA HAS BEEN RECORDED** • Has the FREEZE FRAME DATA (Mode 2)/ snapshot data been recorded?	Yes	Go to the next step.
		No	Record the FREEZE FRAME DATA (Mode 2)/snapshot data on the repair order, then go to the next step.
2	**VERIFY RELATED SERVICE INFORMATION AVAILABILITY** • Verify related Service Information availability. • Is any related Service Information available?	Yes	Perform repair or diagnosis according to the available Service Information. • If the vehicle is not repaired, go to the next step.
		No	Go to the next step.
3	**VERIFY RELATED PENDING CODE AND/OR DTC** • Switch the ignition to off, then to ON (engine off). • Perform the Pending Trouble Code Access Procedure and DTC Reading Procedure. (See 01-02-8 ON-BOARD DIAGNOSTIC TEST [SKYACTIV-G 2.0].) • Is the PENDING CODE/DTC P2090:00 or P2091:00 also present?	Yes	Go to the applicable PENDING CODE or DTC inspection. (See 01-02-305 DTC P2090:00 [SKYACTIV-G 2.0].) (See 01-02-307 DTC P2091:00 [SKYACTIV-G 2.0].)
		No	Go to the next step.
4	**VERIFY ENGINE OIL PRESSURE** • Start the engine. • Does the engine oil pressure warning light illuminate?	Yes	Inspect the engine oil pressure. (See 01-11A-7 OIL PRESSURE INSPECTION [SKYACTIV-G 2.0].) Repair or replace the malfunctioning part according to the inspection results, then go to Step 8.
		No	Go to the next step.
5	**VERIFY TIMING CHAIN INSTALLATION** • Stop the engine. • Remove the timing chain cover. (See 01-10A-39 TIMING CHAIN REMOVAL/ INSTALLATION [SKYACTIV-G 2.0].) • Is the exhaust camshaft timing mark at the correct point?	Yes	Go to the next step.
		No	Reinstall the timing chain, then go to Step 8. (See 01-10A-39 TIMING CHAIN REMOVAL/ INSTALLATION [SKYACTIV-G 2.0].)

ON-BOARD DIAGNOSTIC [SKYACTIV-G 2.0]

STEP	INSPECTION		ACTION
6	**INSPECT OCV** • Inspect the OCV. (See 01-10A-37 OIL CONTROL VALVE (OCV) INSPECTION [SKYACTIV-G 2.0].) • Is there any malfunction?	Yes	Replace the OCV, then go to Step 8. (See 01-10A-38 OIL CONTROL VALVE (OCV) REMOVAL/INSTALLATION [SKYACTIV-G 2.0].)
		No	Go to the next step.
7	**INSPECT ENGINE OIL RUNNER** • Inspect the engine oil runners for clogging or leakage: — Between oil pressure switch and OCV — Between OCV and hydraulic variable valve timing actuator — In hydraulic variable valve timing actuator • Is there any clogging or leakage?	Yes	Repair or replace the suspected runner, then go to the next step.
		No	Hydraulic variable valve timing mechanism is normal. **Note** • This DTC is detected as an intermittent concern. • The intermittent concern might be removed using the cleaning mode of the hydraulic variable valve timing control function. Go to the next step.
8	**VERIFY DTC TROUBLESHOOTING COMPLETED** • Make sure to reconnect all disconnected connectors. • Clear the DTC from the PCM memory using the M-MDS. (See 01-02-12 AFTER REPAIR PROCEDURE [SKYACTIV-G 2.0].) • Perform the Drive Mode 03 (Variable Valve Timing, A/F Sensor Heater, HO2S Heater, A/F Sensor, HO2S and TWC Repair Verification Drive Mode). (See 01-02-13 OBD DRIVE MODE [SKYACTIV-G 2.0].) • Is the PENDING CODE for this DTC present?	Yes	Repeat the inspection from Step 1. • If the malfunction recurs, replace the PCM. (See 01-40-10 PCM REMOVAL/INSTALLATION [SKYACTIV-G 2.0].) Go to the next step.
		No	Go to the next step.
9	**VERIFY AFTER REPAIR PROCEDURE** • Perform the “AFTER REPAIR PROCEDURE”. (See 01-02-12 AFTER REPAIR PROCEDURE [SKYACTIV-G 2.0].) • Are any DTCs present?	Yes	Go to the applicable DTC inspection. (See 01-02-14 DTC TABLE [SKYACTIV-G 2.0].)
		No	DTC troubleshooting completed.

ON-BOARD DIAGNOSTIC [SKYACTIV-G 2.0]

DTC P0015:00 [SKYACTIV-G 2.0]

id0102h1008100

DTC P0015:00	**Exhaust CMP timing over-retarded**
DETECTION CONDITION	• The actual exhaust valve timing is over-retarded by specification from the target exhaust valve timing for specified period when the oil control valve (OCV) system control is within the maximum cam retard mode. **MONITORING CONDITIONS** — ECT: **above 60 °C {140 °F}** **Diagnostic support note** • This is a continuous monitor (CCM). • The check engine light illuminates if the PCM detects the above malfunction condition in two consecutive drive cycles or in one drive cycle while the DTC for the same malfunction has been stored in the PCM. • PENDING CODE is available if the PCM detects the above malfunction condition during first drive cycle. • FREEZE FRAME DATA (Mode 2)/Snapshot data is available. • The DTC is stored in the PCM memory.
FAIL-SAFE FUNCTION	• Performs the exhaust variable valve timing control with a maximum cam retard request.
POSSIBLE CAUSE	• OCV malfunction — Spool valve in OCV is stuck in retard position • Hydraulic variable valve timing mechanism malfunction — Hydraulic variable valve timing mechanism not installed correctly — Loose timing chain or improper exhaust valve timing due to timing chain slippage • Stopper pin mechanism malfunction • Hydraulic variable valve timing actuator is stuck in retard position • PCM malfunction
SYSTEM WIRING DIAGRAM	—

Diagnostic Procedure

STEP	INSPECTION		ACTION
1	**VERIFY FREEZE FRAME DATA (MODE 2)/ SNAPSHOT DATA HAS BEEN RECORDED** • Has the FREEZE FRAME DATA (Mode 2)/ snapshot data been recorded?	Yes	Go to the next step.
		No	Record the FREEZE FRAME DATA (Mode 2)/snapshot data on the repair order, then go to the next step.
2	**VERIFY RELATED SERVICE INFORMATION AVAILABILITY** • Verify related Service Information availability. • Is any related Service Information available?	Yes	Perform repair or diagnosis according to the available Service Information. • If the vehicle is not repaired, go to the next step.
		No	Go to the next step.
3	**INSPECT OCV** • Inspect the OCV. (See 01-10A-37 OIL CONTROL VALVE (OCV) INSPECTION [SKYACTIV-G 2.0].) • Is there any malfunction?	Yes	Replace the OCV, then go to Step 7. (See 01-10A-38 OIL CONTROL VALVE (OCV) REMOVAL/ INSTALLATION [SKYACTIV-G 2.0].)
		No	Go to the next step.
4	**VERIFY VALVE TIMING MECHANISM INSTALLATION** • Verify the valve timing mechanism installation for the following parts: — Timing chain — Exhaust camshaft sprocket lock bolt — Crankshaft pulley lock bolt • Is there any malfunction?	Yes	Reinstall the parts correctly, then go to Step 7. (See 01-10A-39 TIMING CHAIN REMOVAL/ INSTALLATION [SKYACTIV-G 2.0].) (See 01-10A-23 ELECTRIC VARIABLE VALVE TIMING ACTUATOR, HYDRAULIC VARIABLE VALVE TIMING ACTUATOR REMOVAL/INSTALLATION [SKYACTIV-G 2.0].)
		No	Go to the next step.
5	**INSPECT STOPPER PIN MECHANISM** • Remove the timing chain. (See 01-10A-39 TIMING CHAIN REMOVAL/ INSTALLATION [SKYACTIV-G 2.0].) • Inspect the stopper pin mechanism. (See 01-10A-21 HYDRAULIC VARIABLE VALVE TIMING ACTUATOR INSPECTION [SKYACTIV-G 2.0].) • Is there any malfunction?	Yes	Replace the hydraulic variable valve timing actuator, then go to Step 7. (See 01-10A-23 ELECTRIC VARIABLE VALVE TIMING ACTUATOR, HYDRAULIC VARIABLE VALVE TIMING ACTUATOR REMOVAL/INSTALLATION [SKYACTIV-G 2.0].)
		No	Go to the next step.

ON-BOARD DIAGNOSTIC [SKYACTIV-G 2.0]

STEP	INSPECTION		ACTION
6	**INSPECT ROTOR POSITION** • Remove the hydraulic variable valve timing actuator. (See 01-10A-23 ELECTRIC VARIABLE VALVE TIMING ACTUATOR, HYDRAULIC VARIABLE VALVE TIMING ACTUATOR REMOVAL/ INSTALLATION [SKYACTIV-G 2.0].) • Is the rotor at the maximum valve timing advanced position?	Yes	Hydraulic variable valve timing mechanism is normal. **Note** • This DTC is detected as an intermittent concern. • The intermittent concern might be removed using the cleaning mode of the hydraulic variable valve timing control function. Go to the next step.
		No	Replace the hydraulic variable valve timing actuator, then go to the next step. (See 01-10A-23 ELECTRIC VARIABLE VALVE TIMING ACTUATOR, HYDRAULIC VARIABLE VALVE TIMING ACTUATOR REMOVAL/INSTALLATION [SKYACTIV-G 2.0].)
7	**VERIFY DTC TROUBLESHOOTING COMPLETED** • Make sure to reconnect all disconnected connectors. • Clear the DTC from the PCM memory using the M-MDS. (See 01-02-12 AFTER REPAIR PROCEDURE [SKYACTIV-G 2.0].) • Perform the Drive Mode 03 (Variable Valve Timing, A/F Sensor Heater, HO2S Heater, A/F Sensor, HO2S and TWC Repair Verification Drive Mode). (See 01-02-13 OBD DRIVE MODE [SKYACTIV-G 2.0].) • Is the PENDING CODE for this DTC present?	Yes	Repeat the inspection from Step 1. • If the malfunction recurs, replace the PCM. (See 01-40-10 PCM REMOVAL/INSTALLATION [SKYACTIV-G 2.0].) Go to the next step.
		No	Go to the next step.
8	**VERIFY AFTER REPAIR PROCEDURE** • Perform the “AFTER REPAIR PROCEDURE”. (See 01-02-12 AFTER REPAIR PROCEDURE [SKYACTIV-G 2.0].) • Are any DTCs present?	Yes	Go to the applicable DTC inspection. (See 01-02-14 DTC TABLE [SKYACTIV-G 2.0].)
		No	DTC troubleshooting completed.

ON-BOARD DIAGNOSTIC [SKYACTIV-G 2.0]

DTC P0031:00 [SKYACTIV-G 2.0]

id0102h1700400

DTC P0031:00	**A/F sensor heater control circuit low input**
DETECTION CONDITION	• The PCM monitors the A/F sensor heater output voltage. If the PCM turns the A/F sensor heater off but the A/F sensor heater circuit remains low voltage, the PCM determines that the A/F sensor heater circuit has a malfunction. **Diagnostic support note** • This is a continuous monitor (A/F sensor heater, HO2S heater). • The check engine light illuminates if the PCM detects the above malfunction condition in two consecutive drive cycles or in one drive cycle while the DTC for the same malfunction has been stored in the PCM. • PENDING CODE is available if the PCM detects the above malfunction condition during first drive cycle. • FREEZE FRAME DATA (Mode 2)/Snapshot data is available. • The DTC is stored in the PCM memory.
FAIL-SAFE FUNCTION	• Stops the fuel feedback control.
POSSIBLE CAUSE	• A/F sensor connector or terminals malfunction • A/F sensor heater malfunction • Short to ground or open circuit in A/F sensor heater power supply circuit: — Short to ground in wiring harness between ENGINE1 15 A fuse and A/F sensor terminal A — ENGINE1 15 A fuse malfunction — Open circuit in wiring harness between main relay terminal C and A/F sensor terminal A • Short to ground in wiring harness between A/F sensor terminal E and PCM terminal 1BY • PCM connector or terminals malfunction • Open circuit in wiring harness between A/F sensor terminal E and PCM terminal 1BY • PCM malfunction

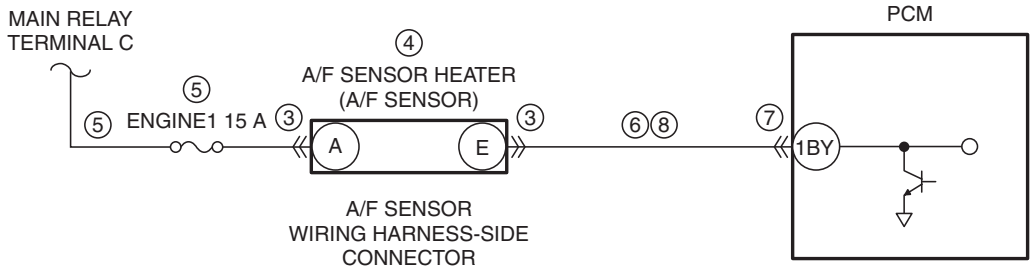

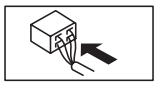

PCM WIRING HARNESS-SIDE CONNECTOR

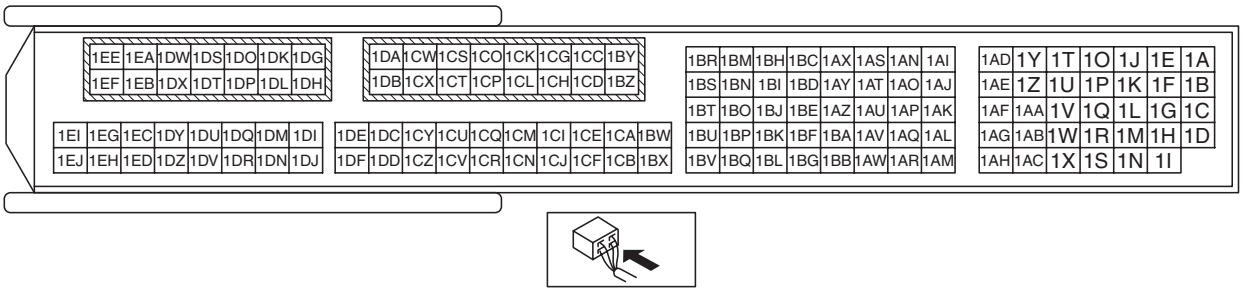

ON-BOARD DIAGNOSTIC [SKYACTIV-G 2.0]

Diagnostic Procedure

STEP	INSPECTION		ACTION
1	**VERIFY FREEZE FRAME DATA (MODE 2)/ SNAPSHOT DATA AND DIAGNOSTIC MONITORING TEST RESULTS HAVE BEEN RECORDED** • Have the FREEZE FRAME DATA (Mode 2)/ snapshot data and DIAGNOSTIC MONITORING TEST RESULTS (A/F sensor heater, HO2S heater related) been recorded?	Yes	Go to the next step.
		No	Record the FREEZE FRAME DATA (Mode 2)/snapshot data and DIAGNOSTIC MONITORING TEST RESULTS on the repair order, then go to the next step.
2	**VERIFY RELATED SERVICE INFORMATION AVAILABILITY** • Verify related Service Information availability. • Is any related Service Information available?	Yes	Perform repair or diagnosis according to the available Service Information. • If the vehicle is not repaired, go to the next step.
		No	Go to the next step.
3	**INSPECT A/F SENSOR CONNECTOR CONDITION** • Switch the ignition to off. • Disconnect the A/F sensor connector. • Inspect for poor connection (such as damaged/ pulled-out pins, corrosion). • Is there any malfunction?	Yes	Repair or replace the connector and/or terminals, then go to Step 9.
		No	Go to the next step.
4	**INSPECT A/F SENSOR HEATER** • Inspect the A/F sensor heater. (See 01-40-55 AIR FUEL RATIO (A/F) SENSOR INSPECTION [SKYACTIV-G 2.0].) • Is there any malfunction?	Yes	Replace the A/F sensor, then go to Step 9. (See 01-40-52 AIR FUEL RATIO (A/F) SENSOR REMOVAL/INSTALLATION [SKYACTIV-G 2.0].)
		No	Go to the next step.
5	**INSPECT A/F SENSOR HEATER POWER SUPPLY CIRCUIT FOR SHORT TO GROUND OR OPEN CIRCUIT** • Verify that the A/F sensor connector is disconnected. • Switch the ignition ON (engine off or on). • Measure the voltage at the A/F sensor terminal A (wiring harness-side). • Is the voltage **B+**?	Yes	Go to the next step.
		No	Inspect the ENGINE1 15 A fuse. • If the fuse is blown: — Repair or replace the wiring harness for a possible short to ground. — Replace the fuse. • If the fuse is deteriorated: — Replace the fuse. • If the fuse is normal: — Repair or replace the wiring harness for a possible open circuit. Go to Step 9.
6	**INSPECT A/F SENSOR HEATER CONTROL CIRCUIT FOR SHORT TO GROUND** • Verify that the A/F sensor connector is disconnected. • Switch the ignition to off. • Inspect for continuity between A/F sensor terminal E (wiring harness-side) and body ground. • Is there continuity?	Yes	If the short to ground circuit could be detected in the wiring harness: • Repair or replace the wiring harness for a possible short to ground. If the short to ground circuit could not be detected in the wiring harness: • Replace the PCM (short to ground in the PCM internal circuit). (See 01-40-10 PCM REMOVAL/INSTALLATION [SKYACTIV-G 2.0].) Go to Step 9.
		No	Go to the next step.
7	**INSPECT PCM CONNECTOR CONDITION** • Disconnect the PCM connector. • Inspect for poor connection (such as damaged/ pulled-out pins, corrosion). • Is there any malfunction?	Yes	Repair or replace the connector and/or terminals, then go to Step 9.
		No	Go to the next step.
8	**INSPECT A/F SENSOR HEATER CONTROL CIRCUIT FOR OPEN CIRCUIT** • Verify that the A/F sensor and PCM connectors are disconnected. • Inspect for continuity between A/F sensor terminal E (wiring harness-side) and PCM terminal 1BY (wiring harness-side). • Is there continuity?	Yes	Go to the next step.
		No	Repair or replace the wiring harness for a possible open circuit, then go to the next step.

ON-BOARD DIAGNOSTIC [SKYACTIV-G 2.0]

STEP	INSPECTION		ACTION
9	**VERIFY DTC TROUBLESHOOTING COMPLETED** • Make sure to reconnect all disconnected connectors. • Clear the DTC from the PCM memory using the M-MDS. (See 01-02-12 AFTER REPAIR PROCEDURE [SKYACTIV-G 2.0].) • Perform the KOER self test. (See 01-02-12 KOEO/KOER SELF TEST [SKYACTIV-G 2.0].) • Is the PENDING CODE for this DTC present?	Yes	Repeat the inspection from Step 1. • If the malfunction recurs, replace the PCM. (See 01-40-10 PCM REMOVAL/INSTALLATION [SKYACTIV-G 2.0].) Go to the next step.
		No	Go to the next step.
10	**VERIFY AFTER REPAIR PROCEDURE** • Perform the “AFTER REPAIR PROCEDURE”. (See 01-02-12 AFTER REPAIR PROCEDURE [SKYACTIV-G 2.0].) • Are any DTCs present?	Yes	Go to the applicable DTC inspection. (See 01-02-14 DTC TABLE [SKYACTIV-G 2.0].)
		No	DTC troubleshooting completed.

ON-BOARD DIAGNOSTIC [SKYACTIV-G 2.0]

DTC P0032:00 [SKYACTIV-G 2.0]

id0102h1700500

DTC P0032:00	**A/F sensor heater control circuit high input**
DETECTION CONDITION	• The PCM monitors the A/F sensor heater output voltage. If the PCM turns the A/F sensor heater on but the A/F sensor heater circuit remains high voltage, the PCM determines that the A/F sensor heater circuit has a malfunction. **Diagnostic support note** • This is a continuous monitor (A/F sensor heater, HO2S heater). • The check engine light illuminates if the PCM detects the above malfunction condition in two consecutive drive cycles or in one drive cycle while the DTC for the same malfunction has been stored in the PCM. • PENDING CODE is available if the PCM detects the above malfunction condition during first drive cycle. • FREEZE FRAME DATA (Mode 2)/Snapshot data is available. • The DTC is stored in the PCM memory.
FAIL-SAFE FUNCTION	• Stops the fuel feedback control.
POSSIBLE CAUSE	• A/F sensor connector or terminals malfunction • A/F sensor heater malfunction • PCM connector or terminals malfunction • Short to power supply in wiring harness between A/F sensor terminal E and PCM terminal 1BY • PCM malfunction

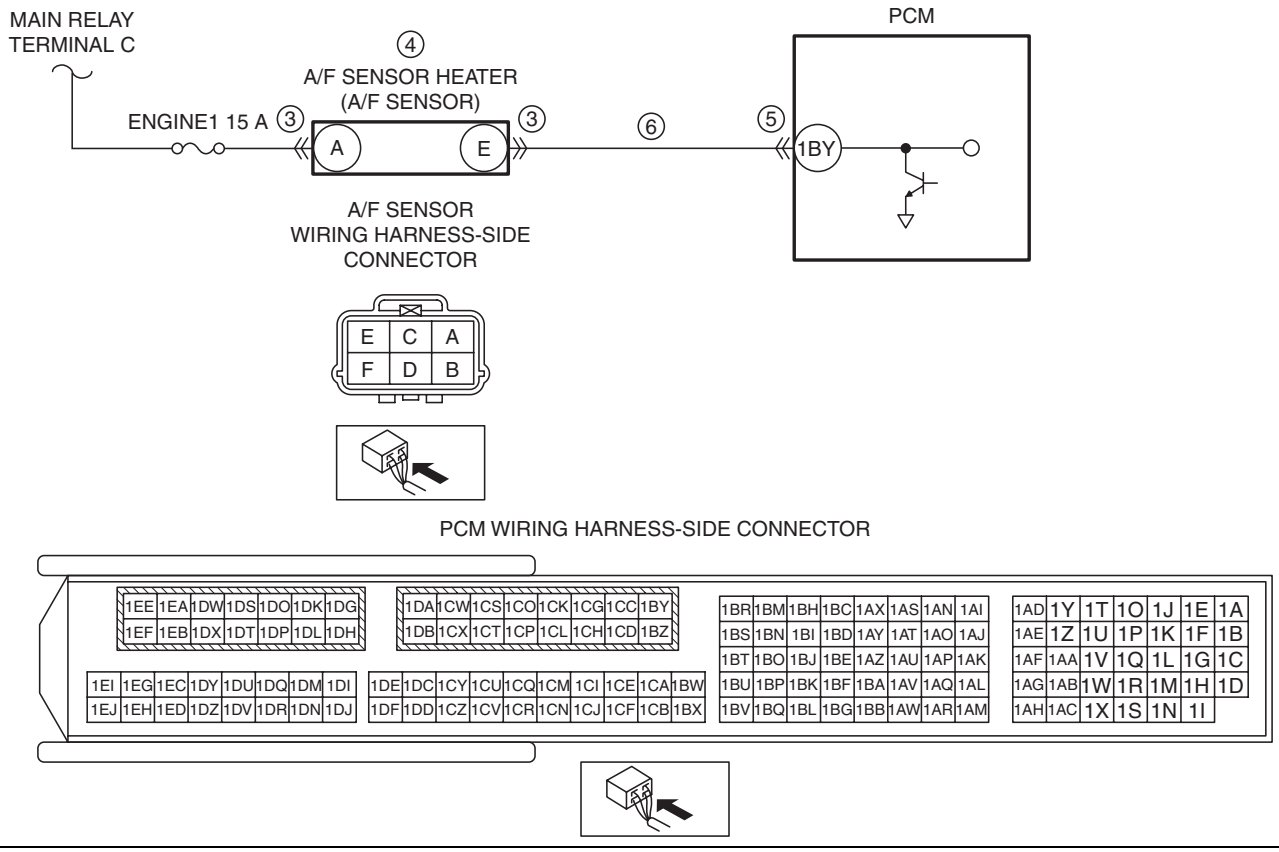

Diagnostic Procedure

STEP	INSPECTION		ACTION
1	**VERIFY FREEZE FRAME DATA (MODE 2)/ SNAPSHOT DATA AND DIAGNOSTIC MONITORING TEST RESULTS HAVE BEEN RECORDED** • Have the FREEZE FRAME DATA (Mode 2)/ snapshot data and DIAGNOSTIC MONITORING TEST RESULTS (A/F sensor heater, HO2S heater related) been recorded?	Yes	Go to the next step.
		No	Record the FREEZE FRAME DATA (Mode 2)/snapshot data and DIAGNOSTIC MONITORING TEST RESULTS on the repair order, then go to the next step.
2	**VERIFY RELATED SERVICE INFORMATION AVAILABILITY** • Verify related Service Information availability. • Is any related Service Information available?	Yes	Perform repair or diagnosis according to the available Service Information. • If the vehicle is not repaired, go to the next step.
		No	Go to the next step.

ON-BOARD DIAGNOSTIC [SKYACTIV-G 2.0]

STEP	INSPECTION		ACTION
3	**INSPECT A/F SENSOR CONNECTOR CONDITION** • Switch the ignition to off. • Disconnect the A/F sensor connector. • Inspect for poor connection (such as damaged/ pulled-out pins, corrosion). • Is there any malfunction?	Yes	Repair or replace the connector and/or terminals, then go to Step 7.
		No	Go to the next step.
4	**INSPECT A/F SENSOR HEATER** • Inspect the A/F sensor heater. (See 01-40-55 AIR FUEL RATIO (A/F) SENSOR INSPECTION [SKYACTIV-G 2.0].) • Is there any malfunction?	Yes	Replace the A/F sensor, then go to Step 7. (See 01-40-52 AIR FUEL RATIO (A/F) SENSOR REMOVAL/INSTALLATION [SKYACTIV-G 2.0].)
		No	Go to the next step.
5	**INSPECT PCM CONNECTOR CONDITION** • Disconnect the PCM connector. • Inspect for poor connection (such as damaged/ pulled-out pins, corrosion). • Is there any malfunction?	Yes	Repair or replace the connector and/or terminals, then go to Step 7.
		No	Go to the next step.
6	**INSPECT A/F SENSOR HEATER CONTROL CIRCUIT FOR SHORT TO POWER SUPPLY** • Verify that the A/F sensor and PCM connectors are disconnected. • Switch the ignition ON (engine off or on). • Measure the voltage at the A/F sensor terminal E (wiring harness-side). • Is the voltage **0 V**?	Yes	Go to the next step.
		No	Repair or replace the wiring harness for a possible short to power supply, then go to the next step.
7	**VERIFY DTC TROUBLESHOOTING COMPLETED** • Make sure to reconnect all disconnected connectors. • Clear the DTC from the PCM memory using the M-MDS. (See 01-02-12 AFTER REPAIR PROCEDURE [SKYACTIV-G 2.0].) • Perform the KOER self test. (See 01-02-12 KOEO/KOER SELF TEST [SKYACTIV-G 2.0].) • Is the PENDING CODE for this DTC present?	Yes	Repeat the inspection from Step 1. • If the malfunction recurs, replace the PCM. (See 01-40-10 PCM REMOVAL/INSTALLATION [SKYACTIV-G 2.0].) Go to the next step.
		No	Go to the next step.
8	**VERIFY AFTER REPAIR PROCEDURE** • Perform the “AFTER REPAIR PROCEDURE”. (See 01-02-12 AFTER REPAIR PROCEDURE [SKYACTIV-G 2.0].) • Are any DTCs present?	Yes	Go to the applicable DTC inspection. (See 01-02-14 DTC TABLE [SKYACTIV-G 2.0].)
		No	DTC troubleshooting completed.

ON-BOARD DIAGNOSTIC [SKYACTIV-G 2.0]

DTC P0037:00 [SKYACTIV-G 2.0]

id0102h1700600

DTC P0037:00	**HO2S heater control circuit low input**
DETECTION CONDITION	• The PCM monitors the HO2S heater output voltage. If the PCM turns the HO2S heater off but the HO2S heater circuit remains low voltage, the PCM determines that the HO2S heater circuit has a malfunction. **Diagnostic support note** • This is a continuous monitor (A/F sensor heater, HO2S heater). • The check engine light illuminates if the PCM detects the above malfunction condition in two consecutive drive cycles or in one drive cycle while the DTC for the same malfunction has been stored in the PCM. • PENDING CODE is available if the PCM detects the above malfunction condition during first drive cycle. • FREEZE FRAME DATA (Mode 2)/Snapshot data is available. • The DTC is stored in the PCM memory.
FAIL-SAFE FUNCTION	• Stops the fuel feedback control of the HO2S.
POSSIBLE CAUSE	• HO2S connector or terminals malfunction • HO2S heater malfunction • Short to ground or open circuit in HO2S heater power supply circuit — Short to ground in wiring harness between ENGINE1 15 A fuse and HO2S terminal C — ENGINE1 15 A fuse malfunction — Open circuit in wiring harness between main relay terminal C and HO2S terminal C • Short to ground in wiring harness between HO2S terminal D and PCM terminal 2C • PCM connector or terminals malfunction • Open circuit in wiring harness between HO2S terminal D and PCM terminal 2C • PCM malfunction

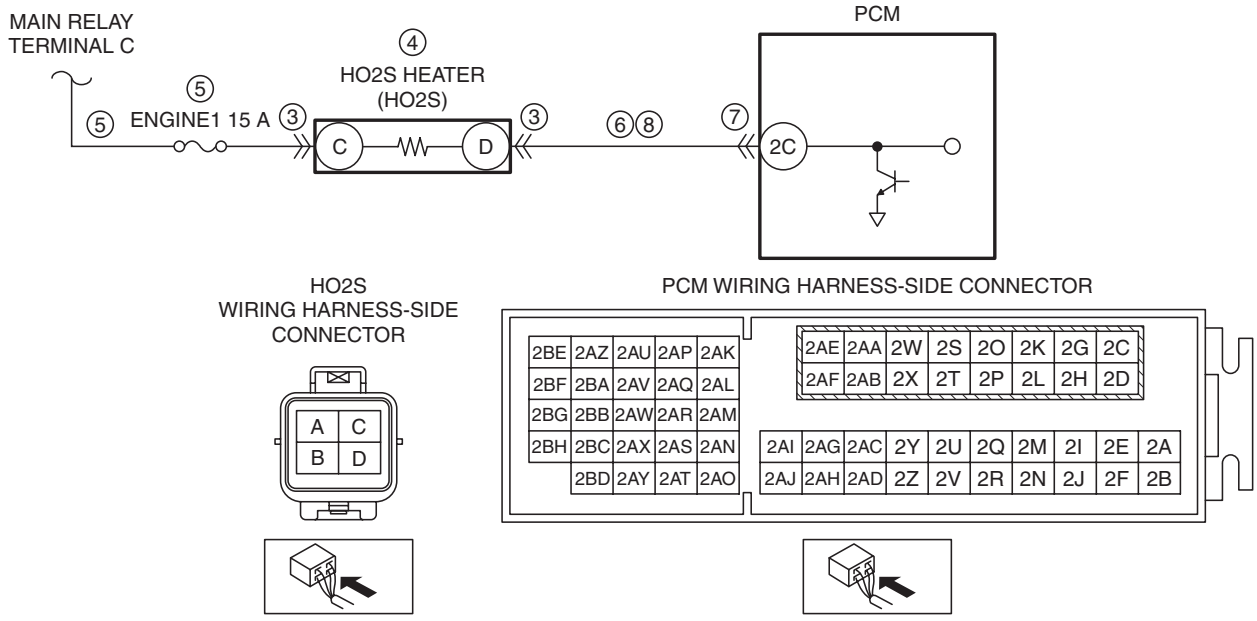

Diagnostic Procedure

STEP	INSPECTION		ACTION
1	**VERIFY FREEZE FRAME DATA (MODE 2)/ SNAPSHOT DATA AND DIAGNOSTIC MONITORING TEST RESULTS HAVE BEEN RECORDED** • Have the FREEZE FRAME DATA (Mode 2)/ snapshot data and DIAGNOSTIC MONITORING TEST RESULTS (A/F sensor heater, HO2S heater related) been recorded?	Yes	Go to the next step.
		No	Record the FREEZE FRAME DATA (Mode 2)/snapshot data and DIAGNOSTIC MONITORING TEST RESULTS on the repair order, then go to the next step.
2	**VERIFY RELATED SERVICE INFORMATION AVAILABILITY** • Verify related Service Information availability. • Is any related Service Information available?	Yes	Perform repair or diagnosis according to the available Service Information. • If the vehicle is not repaired, go to the next step.
		No	Go to the next step.

ON-BOARD DIAGNOSTIC [SKYACTIV-G 2.0]

STEP	INSPECTION		ACTION
3	**INSPECT HO2S CONNECTOR CONDITION** • Switch the ignition to off. • Disconnect the HO2S connector. • Inspect for poor connection (such as damaged/ pulled-out pins, corrosion). • Is there any malfunction?	Yes	Repair or replace the connector and/or terminals, then go to Step 9.
		No	Go to the next step.
4	**INSPECT HO2S HEATER** • Inspect the HO2S heater. (See 01-40-58 HEATED OXYGEN SENSOR (HO2S) INSPECTION [SKYACTIV-G 2.0].) • Is there any malfunction?	Yes	Replace the HO2S, then go to Step 9. (See 01-40-56 HEATED OXYGEN SENSOR (HO2S) REMOVAL/INSTALLATION [SKYACTIV-G 2.0].)
		No	Go to the next step.
5	**INSPECT HO2S HEATER POWER SUPPLY CIRCUIT FOR SHORT TO GROUND OR OPEN CIRCUIT** • Verify that the HO2S connector is disconnected. • Switch the ignition ON (engine off or on). • Measure the voltage at the HO2S terminal C (wiring harness-side). • Is the voltage **B+**?	Yes	Go to the next step.
		No	Inspect the ENGINE1 15 A fuse. • If the fuse is blown: — Repair or replace the wiring harness for a possible short to ground. — Replace the fuse. • If the fuse is deteriorated: — Replace the fuse. • If the fuse is normal: — Repair or replace the wiring harness for a possible open circuit. Go to Step 9.
6	**INSPECT HO2S HEATER CONTROL CIRCUIT FOR SHORT TO GROUND** • Verify that the HO2S connector is disconnected. • Switch the ignition to off. • Inspect for continuity between HO2S terminal D (wiring harness-side) and body ground. • Is there continuity?	Yes	If the short to ground circuit could be detected in the wiring harness: • Repair or replace the wiring harness for a possible short to ground. If the short to ground circuit could not be detected in the wiring harness: • Replace the PCM (short to ground in the PCM internal circuit). (See 01-40-10 PCM REMOVAL/INSTALLATION [SKYACTIV-G 2.0].) Go to Step 9.
		No	Go to the next step.
7	**INSPECT PCM CONNECTOR CONDITION** • Disconnect the PCM connector. • Inspect for poor connection (such as damaged/ pulled-out pins, corrosion). • Is there any malfunction?	Yes	Repair or replace the connector and/or terminals, then go to Step 9.
		No	Go to the next step.
8	**INSPECT HO2S HEATER CONTROL CIRCUIT FOR OPEN CIRCUIT** • Verify that the HO2S and PCM connectors are disconnected. • Inspect for continuity between HO2S terminal D (wiring harness-side) and PCM terminal 2C (wiring harness-side). • Is there continuity?	Yes	Go to the next step.
		No	Repair or replace the wiring harness for a possible open circuit, then go to the next step.
9	**VERIFY DTC TROUBLESHOOTING COMPLETED** • Make sure to reconnect all disconnected connectors. • Clear the DTC from the PCM memory using the M-MDS. (See 01-02-12 AFTER REPAIR PROCEDURE [SKYACTIV-G 2.0].) • Perform the KOER self test. (See 01-02-12 KOEO/KOER SELF TEST [SKYACTIV-G 2.0].) • Is the PENDING CODE for this DTC present?	Yes	Repeat the inspection from Step 1. • If the malfunction recurs, replace the PCM. (See 01-40-10 PCM REMOVAL/INSTALLATION [SKYACTIV-G 2.0].) Go to the next step.
		No	Go to the next step.
10	**VERIFY AFTER REPAIR PROCEDURE** • Perform the “AFTER REPAIR PROCEDURE”. (See 01-02-12 AFTER REPAIR PROCEDURE [SKYACTIV-G 2.0].) • Are any DTCs present?	Yes	Go to the applicable DTC inspection. (See 01-02-14 DTC TABLE [SKYACTIV-G 2.0].)
		No	DTC troubleshooting completed.

ON-BOARD DIAGNOSTIC [SKYACTIV-G 2.0]

DTC P0038:00 [SKYACTIV-G 2.0]

id0102h1700700

DTC P0038:00	**HO2S heater control circuit high input**
DETECTION CONDITION	• The PCM monitors the HO2S heater output voltage. If the PCM turns the HO2S heater on but the HO2S heater circuit remains high voltage, the PCM determines that the HO2S heater circuit has a malfunction. **Diagnostic support note** • This is a continuous monitor (A/F sensor heater, HO2S heater). • The check engine light illuminates if the PCM detects the above malfunction condition in two consecutive drive cycles or in one drive cycle while the DTC for the same malfunction has been stored in the PCM. • PENDING CODE is available if the PCM detects the above malfunction condition during first drive cycle. • FREEZE FRAME DATA (Mode 2)/Snapshot data is available. • The DTC is stored in the PCM memory.
FAIL-SAFE FUNCTION	• Stops the fuel feedback control of the HO2S.
POSSIBLE CAUSE	• HO2S connector or terminals malfunction • HO2S heater malfunction • PCM connector or terminals malfunction • Short to power supply in wiring harness between HO2S terminal D and PCM terminal 2C • PCM malfunction

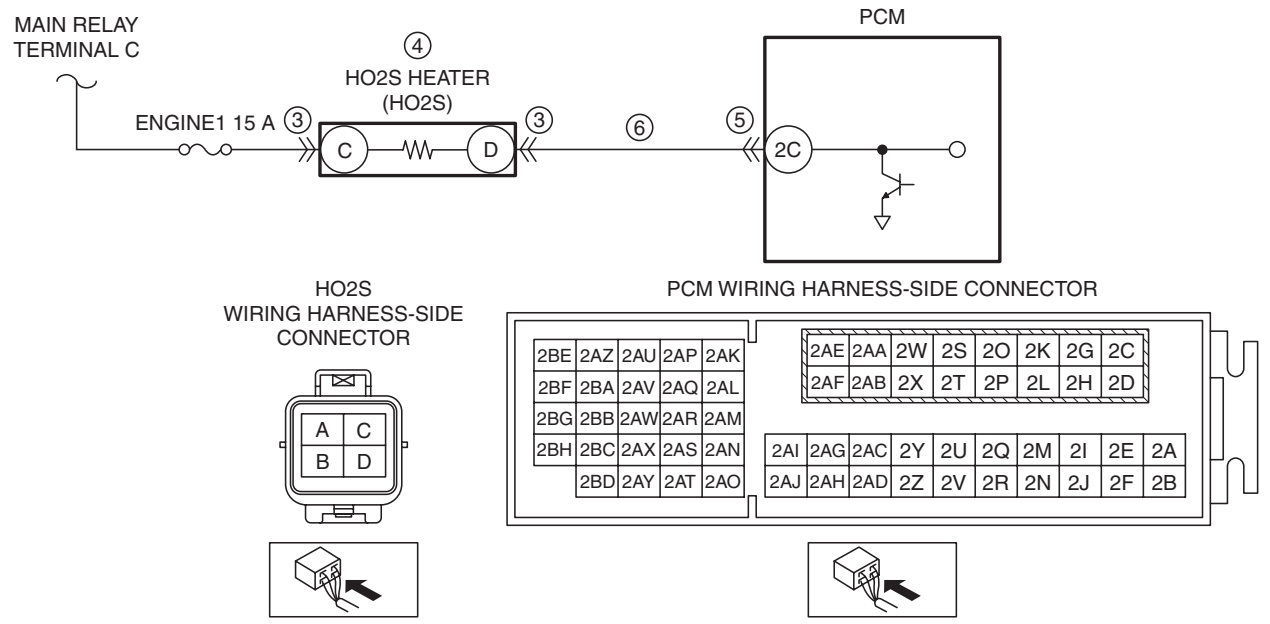

Diagnostic Procedure

STEP	INSPECTION		ACTION
1	**VERIFY FREEZE FRAME DATA (MODE 2)/ SNAPSHOT DATA AND DIAGNOSTIC MONITORING TEST RESULTS HAVE BEEN RECORDED** • Have the FREEZE FRAME DATA (Mode 2)/ snapshot data and DIAGNOSTIC MONITORING TEST RESULTS (A/F sensor heater, HO2S heater related) been recorded?	Yes	Go to the next step.
		No	Record the FREEZE FRAME DATA (Mode 2)/snapshot data and DIAGNOSTIC MONITORING TEST RESULTS on the repair order, then go to the next step.
2	**VERIFY RELATED SERVICE INFORMATION AVAILABILITY** • Verify related Service Information availability. • Is any related Service Information available?	Yes	Perform repair or diagnosis according to the available Service Information. • If the vehicle is not repaired, go to the next step.
		No	Go to the next step.
3	**INSPECT HO2S CONNECTOR CONDITION** • Switch the ignition to off. • Disconnect the HO2S connector. • Inspect for poor connection (such as damaged/ pulled-out pins, corrosion). • Is there any malfunction?	Yes	Repair or replace the connector and/or terminals, then go to Step 7.
		No	Go to the next step.

ON-BOARD DIAGNOSTIC [SKYACTIV-G 2.0]

STEP	INSPECTION		ACTION
4	**INSPECT HO2S HEATER** • Inspect the HO2S heater. (See 01-40-58 HEATED OXYGEN SENSOR (HO2S) INSPECTION [SKYACTIV-G 2.0].) • Is there any malfunction?	Yes	Replace the HO2S, then go to Step 7. (See 01-40-56 HEATED OXYGEN SENSOR (HO2S) REMOVAL/INSTALLATION [SKYACTIV-G 2.0].)
		No	Go to the next step.
5	**INSPECT PCM CONNECTOR CONDITION** • Disconnect the PCM connector. • Inspect for poor connection (such as damaged/pulled-out pins, corrosion). • Is there any malfunction?	Yes	Repair or replace the connector and/or terminals, then go to Step 7.
		No	Go to the next step.
6	**INSPECT HO2S HEATER CONTROL CIRCUIT FOR SHORT TO POWER SUPPLY** • Verify that the HO2S and PCM connectors are disconnected. • Switch the ignition ON (engine off or on). • Measure the voltage at the HO2S terminal D (wiring harness-side). • Is the voltage **0 V**?	Yes	Go to the next step.
		No	Repair or replace the wiring harness for a possible short to power supply, then go to the next step.
7	**VERIFY DTC TROUBLESHOOTING COMPLETED** • Make sure to reconnect all disconnected connectors. • Clear the DTC from the PCM memory using the M-MDS. (See 01-02-12 AFTER REPAIR PROCEDURE [SKYACTIV-G 2.0].) • Perform the KOER self test. (See 01-02-12 KOEO/KOER SELF TEST [SKYACTIV-G 2.0].) • Is the PENDING CODE for this DTC present?	Yes	Repeat the inspection from Step 1. • If the malfunction recurs, replace the PCM. (See 01-40-10 PCM REMOVAL/INSTALLATION [SKYACTIV-G 2.0].) Go to the next step.
		No	Go to the next step.
8	**VERIFY AFTER REPAIR PROCEDURE** • Perform the “AFTER REPAIR PROCEDURE”. (See 01-02-12 AFTER REPAIR PROCEDURE [SKYACTIV-G 2.0].) • Are any DTCs present?	Yes	Go to the applicable DTC inspection. (See 01-02-14 DTC TABLE [SKYACTIV-G 2.0].)
		No	DTC troubleshooting completed.

ON-BOARD DIAGNOSTIC [SKYACTIV-G 2.0]

DTC P0069:00 [SKYACTIV-G 2.0]

id0102h1300000

DTC P0069:00	**Manifold absolute pressure/atmospheric pressure correlation problem**
DETECTION CONDITION	• The PCM monitors difference between intake manifold vacuum and atmospheric pressure. If the difference is **below −12 kPa {−0.12 kgf/cm^2, −1.7 psi}** or **above 12 kPa {0.12 kgf/cm^2, 1.7 psi}** when the following conditions are met, the PCM determines that there is a MAP sensor performance problem. **MONITORING CONDITIONS** — **12—15 s** from when ignition is switched to off. **Diagnostic support note** • This is a continuous monitor (CCM). • The check engine light illuminates if the PCM detects the above malfunction condition in two consecutive drive cycles or in one drive cycle while the DTC for the same malfunction has been stored in the PCM. • PENDING CODE is available if the PCM detects the above malfunction condition during first drive cycle. • FREEZE FRAME DATA (Mode 2)/Snapshot data is available. • The DTC is stored in the PCM memory.
FAIL-SAFE FUNCTION	—
POSSIBLE CAUSE	• MAP sensor malfunction • BARO sensor (built-into PCM) malfunction • PCM malfunction
SYSTEM WIRING DIAGRAM	—

Diagnostic Procedure

STEP	INSPECTION		ACTION
1	**IDENTIFY TRIGGER DTC FOR FREEZE FRAME DATA (MODE 2)** • Perform the Freeze Frame PID Data Access Procedure. (See 01-02-8 ON-BOARD DIAGNOSTIC TEST [SKYACTIV-G 2.0].) • Is the DTC P0069:00 on FREEZE FRAME DATA (Mode 2)?	Yes	Go to the next step.
		No	Go to the troubleshooting procedure for DTC on FREEZE FRAME DATA (Mode 2). (See 01-02-14 DTC TABLE [SKYACTIV-G 2.0].)
2	**VERIFY FREEZE FRAME DATA (MODE 2)/ SNAPSHOT DATA HAS BEEN RECORDED** • Has the FREEZE FRAME DATA (Mode 2)/ snapshot data been recorded?	Yes	Go to the next step.
		No	Record the FREEZE FRAME DATA (Mode 2)/snapshot data on the repair order, then go to the next step.
3	**VERIFY RELATED SERVICE INFORMATION AVAILABILITY** • Verify related Service Information availability. • Is any related Service Information available?	Yes	Perform repair or diagnosis according to the available Service Information. • If the vehicle is not repaired, go to the next step.
		No	Go to the next step.
4	**VERIFY RELATED PENDING CODE AND/OR DTC** • Switch the ignition to off, then to ON (engine off). • Perform the Pending Trouble Code Access Procedure and DTC Reading Procedure. (See 01-02-8 ON-BOARD DIAGNOSTIC TEST [SKYACTIV-G 2.0].) • Is the PENDING CODE/DTC P0107:00, P0108:00, P2228:00 or P2229:00 also present?	Yes	Go to the applicable PENDING CODE or DTC inspection. (See 01-02-76 DTC P0107:00 [SKYACTIV-G 2.0].) (See 01-02-79 DTC P0108:00 [SKYACTIV-G 2.0].) (See 01-02-339 DTC P2228:00 [SKYACTIV-G 2.0].) (See 01-02-340 DTC P2229:00 [SKYACTIV-G 2.0].)
		No	Go to the next step.
5	**INSPECT MAP SENSOR** • Inspect the MAP sensor. (See 01-40-49 MANIFOLD ABSOLUTE PRESSURE (MAP) SENSOR INSPECTION [SKYACTIV-G 2.0].) • Is there any malfunction?	Yes	Replace the MAP sensor/IAT sensor No.2, then go to Step 7. (See 01-40-48 MANIFOLD ABSOLUTE PRESSURE (MAP) SENSOR/INTAKE AIR TEMPERATURE (IAT) SENSOR NO.2 REMOVAL/INSTALLATION [SKYACTIV-G 2.0].)
		No	Go to the next step.

ON-BOARD DIAGNOSTIC [SKYACTIV-G 2.0]

STEP	INSPECTION		ACTION
6	**INSPECT BARO SENSOR** • Inspect the BARO sensor. (See 01-40-49 BAROMETRIC PRESSURE (BARO) SENSOR INSPECTION [SKYACTIV-G 2.0].) • Is there any malfunction?	Yes	Replace the PCM, then go to the next step. (See 01-40-10 PCM REMOVAL/INSTALLATION [SKYACTIV-G 2.0].)
		No	Go to the next step.
7	**VERIFY DTC TROUBLESHOOTING COMPLETED** • Make sure to reconnect all disconnected connectors. • Clear the DTC from the PCM memory using the M-MDS. (See 01-02-12 AFTER REPAIR PROCEDURE [SKYACTIV-G 2.0].) • Start the engine and warm it up completely. • Perform the Pending Trouble Code Access Procedure. (See 01-02-8 ON-BOARD DIAGNOSTIC TEST [SKYACTIV-G 2.0].) • Is the PENDING CODE for this DTC present?	Yes	Repeat the inspection from Step 1. • If the malfunction recurs, replace the PCM. (See 01-40-10 PCM REMOVAL/INSTALLATION [SKYACTIV-G 2.0].) Go to the next step.
		No	Go to the next step.
8	**VERIFY AFTER REPAIR PROCEDURE** • Perform the “AFTER REPAIR PROCEDURE”. (See 01-02-12 AFTER REPAIR PROCEDURE [SKYACTIV-G 2.0].) • Are any DTCs present?	Yes	Go to the applicable DTC inspection. (See 01-02-14 DTC TABLE [SKYACTIV-G 2.0].)
		No	DTC troubleshooting completed.

ON-BOARD DIAGNOSTIC [SKYACTIV-G 2.0]

DTC P0072:00 [SKYACTIV-G 2.0]

id0102h1145900

DTC P0072:00	Ambient temperature sensor circuit low input
DETECTION CONDITION	• The PCM monitors the input signal from the ambient temperature sensor. If the voltage from the ambient temperature sensor is **below 0.2 V** for **5 s**, the PCM determines that the ambient temperature sensor circuit has a malfunction. **Diagnostic support note** • This is a continuous monitor (other). • The check engine light does not illuminate. • FREEZE FRAME DATA (Mode 2)/Snapshot data is not available. • The DTC is stored in the PCM memory.
FAIL-SAFE FUNCTION	—
POSSIBLE CAUSE	• Ambient temperature sensor connector or terminals malfunction • Ambient temperature sensor malfunction • Short to ground in wiring harness between ambient temperature sensor terminal A and PCM terminal 2I • PCM connector or terminals malfunction • Ambient temperature sensor signal circuit and ground circuit are shorted to each other • PCM malfunction

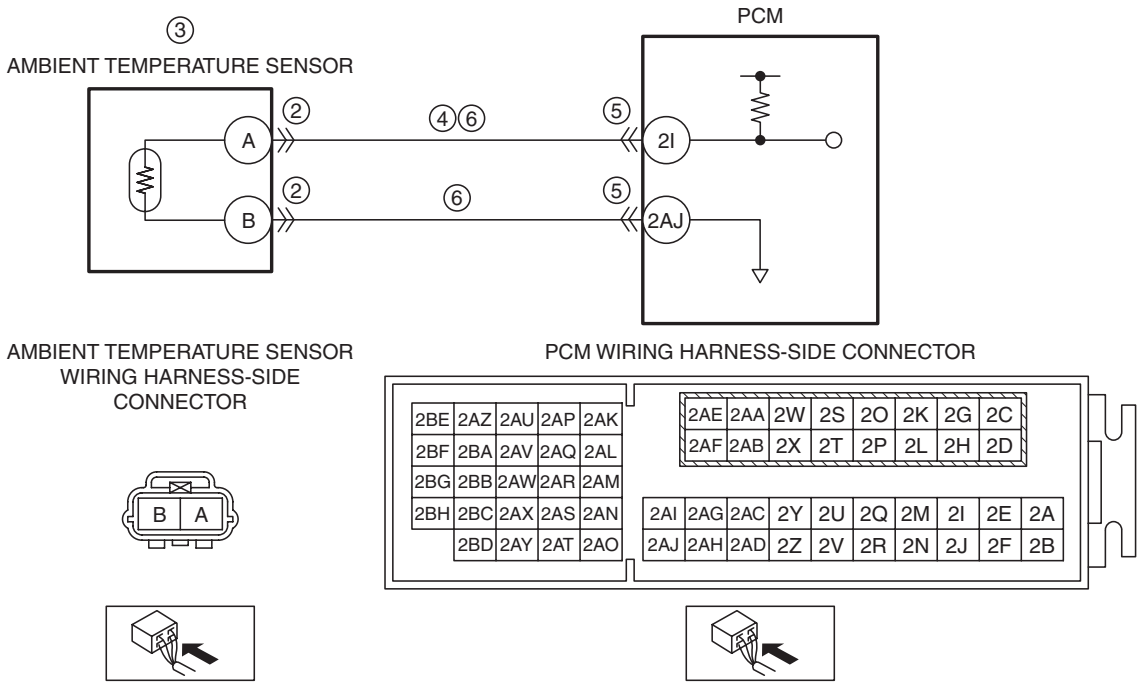

Diagnostic Procedure

STEP	INSPECTION		ACTION
1	**VERIFY RELATED SERVICE INFORMATION AVAILABILITY** • Verify related Service Information availability. • Is any related Service Information available?	Yes	Perform repair or diagnosis according to the available Service Information. • If the vehicle is not repaired, go to the next step.
		No	Go to the next step.
2	**INSPECT AMBIENT TEMPERATURE SENSOR CONNECTOR CONDITION** • Switch the ignition to off. • Disconnect the ambient temperature sensor connector. • Inspect for poor connection (such as damaged/ pulled-out pins, corrosion). • Is there any malfunction?	Yes	Repair or replace the connector and/or terminals, then go to Step 7.
		No	Go to the next step.

ON-BOARD DIAGNOSTIC [SKYACTIV-G 2.0]

STEP	INSPECTION		ACTION
3	**INSPECT AMBIENT TEMPERATURE SENSOR** • Inspect the ambient temperature sensor. (See 07-40B-11 AMBIENT TEMPERATURE SENSOR INSPECTION [MANUAL AIR CONDITIONER].) (See 07-40A-23 AMBIENT TEMPERATURE SENSOR INSPECTION [FULL-AUTO AIR CONDITIONER].) • Is there any malfunction?	Yes	Replace the ambient temperature sensor, then go to Step 7. (See 07-40B-11 AMBIENT TEMPERATURE SENSOR REMOVAL/INSTALLATION [MANUAL AIR CONDITIONER].) (See 07-40A-22 AMBIENT TEMPERATURE SENSOR REMOVAL/INSTALLATION [FULL-AUTO AIR CONDITIONER].)
		No	Go to the next step.
4	**INSPECT AMBIENT TEMPERATURE SENSOR SIGNAL CIRCUIT FOR SHORT TO GROUND** • Verify that the ambient temperature sensor connector is disconnected. • Inspect for continuity between ambient temperature sensor terminal A (wiring harness-side) and body ground. • Is there continuity?	Yes	If the short to ground circuit could be detected in the wiring harness: • Repair or replace the wiring harness for a possible short to ground. If the short to ground circuit could not be detected in the wiring harness: • Replace the PCM (short to ground in the PCM internal circuit). (See 01-40-10 PCM REMOVAL/INSTALLATION [SKYACTIV-G 2.0].) Go to Step 7.
		No	Go to the next step.
5	**INSPECT PCM CONNECTOR CONDITION** • Disconnect the PCM connector. • Inspect for poor connection (such as damaged/pulled-out pins, corrosion). • Is there any malfunction?	Yes	Repair or replace the connector and/or terminals, then go to Step 7.
		No	Go to the next step.
6	**INSPECT AMBIENT TEMPERATURE SENSOR SIGNAL CIRCUIT AND GROUND CIRCUIT FOR SHORT TO EACH OTHER** • Verify that the ambient temperature sensor and PCM connectors are disconnected. • Inspect for continuity between ambient temperature sensor terminals A and B (wiring harness-side). • Is there continuity?	Yes	Repair or replace the wiring harness for a possible short to each other, then go to the next step.
		No	Go to the next step.
7	**VERIFY DTC TROUBLESHOOTING COMPLETED** • Make sure to reconnect all disconnected connectors. • Clear the DTC from the PCM memory using the M-MDS. (See 01-02-12 AFTER REPAIR PROCEDURE [SKYACTIV-G 2.0].) • Start the engine and warm it up completely. • Perform the KOEO or KOER self test. (See 01-02-12 KOEO/KOER SELF TEST [SKYACTIV-G 2.0].) • Is the same DTC present?	Yes	Repeat the inspection from Step 1. • If the malfunction recurs, replace the PCM. (See 01-40-10 PCM REMOVAL/INSTALLATION [SKYACTIV-G 2.0].) Go to the next step.
		No	Go to the next step.
8	**VERIFY AFTER REPAIR PROCEDURE** • Perform the “AFTER REPAIR PROCEDURE”. (See 01-02-12 AFTER REPAIR PROCEDURE [SKYACTIV-G 2.0].) • Are any DTCs present?	Yes	Go to the applicable DTC inspection. (See 01-02-14 DTC TABLE [SKYACTIV-G 2.0].)
		No	DTC troubleshooting completed.

ON-BOARD DIAGNOSTIC [SKYACTIV-G 2.0]

DTC P0073:00 [SKYACTIV-G 2.0]

id0102h1146000

DTC P0073:00	Ambient temperature sensor circuit high input
DETECTION CONDITION	• The PCM monitors the input signal from the ambient temperature sensor. If the voltage from the ambient temperature sensor is **above 4.8 V** for **5 s**, the PCM determines that the ambient temperature sensor circuit has a malfunction. **Diagnostic support note** • This is a continuous monitor (other). • The check engine light does not illuminate. • FREEZE FRAME DATA (Mode 2)/Snapshot data is not available. • The DTC is stored in the PCM memory.
FAIL-SAFE FUNCTION	—
POSSIBLE CAUSE	• Ambient temperature sensor connector or terminals malfunction • PCM connector or terminals malfunction • Ambient temperature sensor malfunction • Short to power supply in wiring harness between ambient temperature sensor terminal A and PCM terminal 2I • Open circuit in wiring harness between the following terminals: — Ambient temperature sensor terminal A—PCM terminal 2I — Ambient temperature sensor terminal B—PCM terminal 2AJ • PCM malfunction

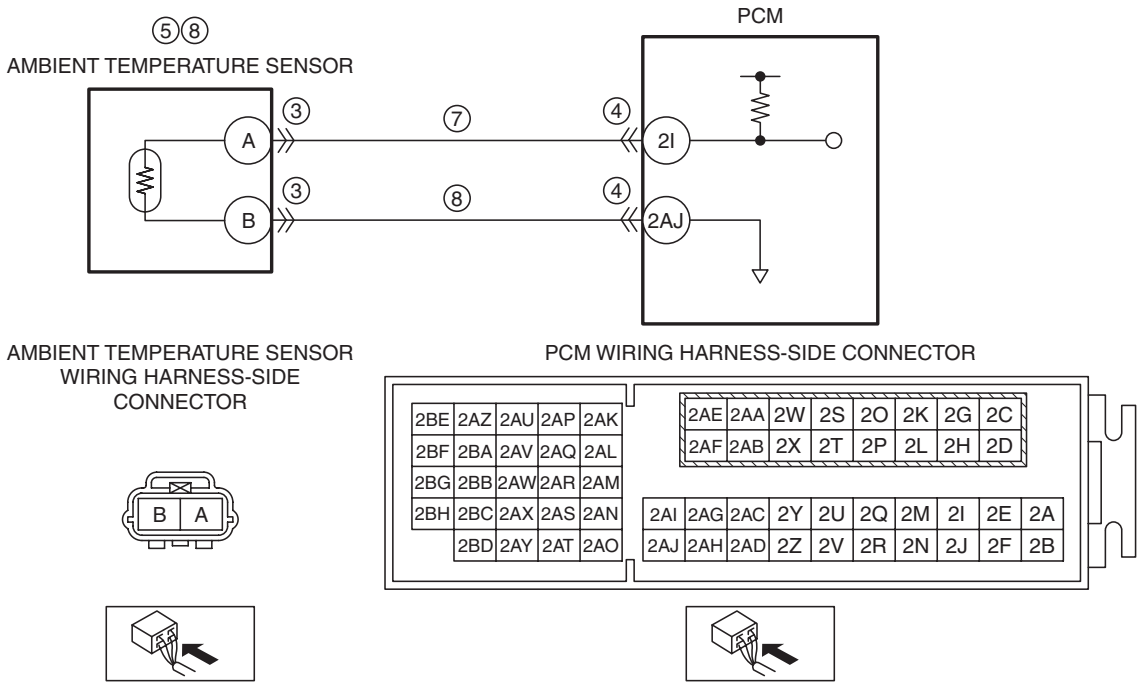

Diagnostic Procedure

STEP	INSPECTION		ACTION
1	**VERIFY RELATED SERVICE INFORMATION AVAILABILITY** • Verify related Service Information availability. • Is any related Service Information available?	Yes	Perform repair or diagnosis according to the available Service Information. • If the vehicle is not repaired, go to the next step.
		No	Go to the next step.
2	**CLASSIFY AMBIENT TEMPERATURE SENSOR MALFUNCTION OR WIRING HARNESS MALFUNCTION** • Access the AAT PID using the M-MDS. (See 01-02-8 ON-BOARD DIAGNOSTIC TEST [SKYACTIV-G 2.0].) • Verify the AAT PID value. • Is the AAT PID value **5 V** or **B+**?	Yes	Go to Step 6.
		No	Go to the next step.

ON-BOARD DIAGNOSTIC [SKYACTIV-G 2.0]

STEP	INSPECTION		ACTION
3	**INSPECT AMBIENT TEMPERATURE SENSOR CONNECTOR CONDITION** • Switch the ignition to off. • Disconnect the ambient temperature sensor connector. • Inspect for poor connection (such as damaged/ pulled-out pins, corrosion). • Is there any malfunction?	Yes	Repair or replace the connector and/or terminals, then go to Step 9.
		No	Go to the next step.
4	**INSPECT PCM CONNECTOR CONDITION** • Disconnect the PCM connector. • Inspect for poor connection (such as damaged/ pulled-out pins, corrosion). • Is there any malfunction?	Yes	Repair or replace the connector and/or terminals, then go to Step 9.
		No	Go to the next step.
5	**INSPECT AMBIENT TEMPERATURE SENSOR** • Inspect the ambient temperature sensor. (See 07-40B-11 AMBIENT TEMPERATURE SENSOR INSPECTION [MANUAL AIR CONDITIONER].) (See 07-40A-23 AMBIENT TEMPERATURE SENSOR INSPECTION [FULL-AUTO AIR CONDITIONER].) • Is there any malfunction?	Yes	Replace the ambient temperature sensor, then go to Step 9. (See 07-40B-11 AMBIENT TEMPERATURE SENSOR REMOVAL/INSTALLATION [MANUAL AIR CONDITIONER].) (See 07-40A-22 AMBIENT TEMPERATURE SENSOR REMOVAL/INSTALLATION [FULL-AUTO AIR CONDITIONER].)
		No	Go to Step 9.
6	**CLASSIFY AMBIENT TEMPERATURE SENSOR SIGNAL CIRCUIT MALFUNCTION OR AMBIENT TEMPERATURE SENSOR GROUND CIRCUIT MALFUNCTION** • Switch the ignition to off. • Disconnect the ambient temperature sensor connector. • Access the AAT PID using the M-MDS. (See 01-02-8 ON-BOARD DIAGNOSTIC TEST [SKYACTIV-G 2.0].) • Verify the AAT PID value. • Is the AAT PID value **5 V** or **B+**?	Yes	Go to the next step.
		No	Go to Step 8.
7	**INSPECT AMBIENT TEMPERATURE SENSOR SIGNAL CIRCUIT FOR OPEN CIRCUIT** • Verify that the ambient temperature sensor connector is disconnected. • Switch the ignition to off. • Disconnect the PCM connector. • Inspect for continuity between ambient temperature sensor terminal A (wiring harness-side) and PCM terminal 2I (wiring harness-side). • Is there continuity?	Yes	Repair or replace the wiring harness for a possible short to power supply, then go to Step 9.
		No	Repair or replace the wiring harness for a possible open circuit, then go to Step 9.
8	**INSPECT AMBIENT TEMPERATURE SENSOR GROUND CIRCUIT FOR OPEN CIRCUIT** • Verify that the ambient temperature sensor connector is disconnected. • Switch the ignition to off. • Disconnect the PCM connector. • Inspect for continuity between ambient temperature sensor terminal B (wiring harness-side) and PCM terminal 2AJ (wiring harness-side). • Is there continuity?	Yes	Replace the ambient temperature sensor, then go to the next step. (See 07-40B-11 AMBIENT TEMPERATURE SENSOR REMOVAL/INSTALLATION [MANUAL AIR CONDITIONER].) (See 07-40A-22 AMBIENT TEMPERATURE SENSOR REMOVAL/INSTALLATION [FULL-AUTO AIR CONDITIONER].)
		No	Repair or replace the wiring harness for a possible open circuit, then go to the next step.

ON-BOARD DIAGNOSTIC [SKYACTIV-G 2.0]

STEP	INSPECTION		ACTION
9	**VERIFY DTC TROUBLESHOOTING COMPLETED** • Make sure to reconnect all disconnected connectors. • Clear the DTC from the PCM memory using the M-MDS. (See 01-02-12 AFTER REPAIR PROCEDURE [SKYACTIV-G 2.0].) • Start the engine and warm it up completely. • Perform the KOEO or KOER self test. (See 01-02-12 KOEO/KOER SELF TEST [SKYACTIV-G 2.0].) • Is the same DTC present?	Yes	Repeat the inspection from Step 1. • If the malfunction recurs, replace the PCM. (See 01-40-10 PCM REMOVAL/INSTALLATION [SKYACTIV-G 2.0].) Go to the next step.
		No	Go to the next step.
10	**VERIFY AFTER REPAIR PROCEDURE** • Perform the “AFTER REPAIR PROCEDURE”. (See 01-02-12 AFTER REPAIR PROCEDURE [SKYACTIV-G 2.0].) • Are any DTCs present?	Yes	Go to the applicable DTC inspection. (See 01-02-14 DTC TABLE [SKYACTIV-G 2.0].)
		No	DTC troubleshooting completed.

DTC P0089:00 [SKYACTIV-G 2.0]

id0102h1008900

DTC P0089:00	Spill valve control solenoid valve control circuit range/performance problem
DETECTION CONDITION	• The average fuel pressure on the high pressure side, measured by the fuel pressure sensor while the camshaft is rotating at the specified speed, exceeds the specified value. **Diagnostic support note** • This is a continuous monitor (CCM). • The check engine light illuminates if the PCM detects the above malfunction condition during the first drive cycle. • FREEZE FRAME DATA (Mode 2)/Snapshot data is available. • The DTC is stored in the PCM memory.
FAIL-SAFE FUNCTION	• Stops the high pressure fuel pump control. • Limits the intake air amount. • Restricts the upper limit of the engine speed.
POSSIBLE CAUSE	• High pressure fuel pump connector or terminals malfunction • PCM connector or terminals malfunction • Fuel pressure sensor malfunction • High pressure fuel pump malfunction — Spill valve control solenoid valve (built-into high pressure fuel pump) malfunction • High pressure fuel pipe clogging or damage • Fuel distributor malfunction • Fuel injector malfunction • PCM malfunction

Diagnostic Procedure

STEP	INSPECTION		ACTION
1	**VERIFY FREEZE FRAME DATA (MODE 2)/ SNAPSHOT DATA HAS BEEN RECORDED** • Has the FREEZE FRAME DATA (Mode 2)/ snapshot data been recorded?	Yes	Go to the next step.
		No	Record the FREEZE FRAME DATA (Mode 2)/snapshot data on the repair order, then go to the next step.
2	**VERIFY RELATED SERVICE INFORMATION AVAILABILITY** • Verify related Service Information availability. • Is any related Service Information available?	Yes	Perform repair or diagnosis according to the available Service Information. • If the vehicle is not repaired, go to the next step.
		No	Go to the next step.

ON-BOARD DIAGNOSTIC [SKYACTIV-G 2.0]

STEP	INSPECTION		ACTION
3	**INSPECT HIGH PRESSURE FUEL PUMP CONNECTOR CONDITION** • Switch the ignition to off. • Disconnect the high pressure fuel pump connector. • Inspect for poor connection (such as damaged/ pulled-out pins, corrosion). • Is there any malfunction?	Yes	Replace the following parts because the part for the high pressure fuel is damaged. • High pressure fuel pump (See 01-14A-44 HIGH PRESSURE FUEL PUMP REMOVAL/INSTALLATION [SKYACTIV-G 2.0].) • High pressure fuel pipe • Fuel injector No.1 (See 01-14A-51 FUEL INJECTOR REMOVAL/ INSTALLATION [SKYACTIV-G 2.0].) • Fuel injector No.2 • Fuel injector No.3 • Fuel injector No.4 • Fuel distributor Go to Step 9.
		No	Go to the next step.
4	**INSPECT PCM CONNECTOR CONDITION** • Disconnect the PCM connector. • Inspect for poor connection (such as damaged/ pulled-out pins, corrosion). • Is there any malfunction?	Yes	Replace the following parts because the part for the high pressure fuel is damaged. • PCM connector and/or terminals • High pressure fuel pump (See 01-14A-44 HIGH PRESSURE FUEL PUMP REMOVAL/INSTALLATION [SKYACTIV-G 2.0].) • High pressure fuel pipe • Fuel injector No.1 (See 01-14A-51 FUEL INJECTOR REMOVAL/ INSTALLATION [SKYACTIV-G 2.0].) • Fuel injector No.2 • Fuel injector No.3 • Fuel injector No.4 • Fuel distributor Go to Step 9.
		No	Go to the next step.
5	**INSPECT FUEL PRESSURE SENSOR** • Reconnect all disconnected connectors. • Inspect the fuel pressure sensor. (See 01-40-52 FUEL PRESSURE SENSOR INSPECTION [SKYACTIV-G 2.0].) • Is there any malfunction?	Yes	Replace the fuel distributor, then go to Step 9. (See 01-14A-51 FUEL INJECTOR REMOVAL/ INSTALLATION [SKYACTIV-G 2.0].)
		No	Go to the next step.
6	**INSPECT HIGH PRESSURE FUEL PUMP** • Inspect the high pressure fuel pump. (See 01-14A-49 HIGH PRESSURE FUEL PUMP INSPECTION [SKYACTIV-G 2.0].) • Is there any malfunction?	Yes	Replace the following parts because the part for the high pressure fuel is damaged. • High pressure fuel pump (See 01-14A-44 HIGH PRESSURE FUEL PUMP REMOVAL/INSTALLATION [SKYACTIV-G 2.0].) • High pressure fuel pipe • Fuel injector No.1 (See 01-14A-51 FUEL INJECTOR REMOVAL/ INSTALLATION [SKYACTIV-G 2.0].) • Fuel injector No.2 • Fuel injector No.3 • Fuel injector No.4 • Fuel distributor Go to Step 9.
		No	Go to the next step.
7	**INSPECT HIGH PRESSURE FUEL PIPE** • Inspect the high pressure fuel pipe. (See 01-14A-44 HIGH PRESSURE FUEL PUMP REMOVAL/INSTALLATION [SKYACTIV-G 2.0].) • Is there clogging or damage in the high pressure fuel pipe?	Yes	Replace the following parts because the part for the high pressure fuel is damaged. • High pressure fuel pump (See 01-14A-44 HIGH PRESSURE FUEL PUMP REMOVAL/INSTALLATION [SKYACTIV-G 2.0].) • High pressure fuel pipe • Fuel injector No.1 (See 01-14A-51 FUEL INJECTOR REMOVAL/ INSTALLATION [SKYACTIV-G 2.0].) • Fuel injector No.2 • Fuel injector No.3 • Fuel injector No.4 • Fuel distributor Go to Step 9.
		No	Go to the next step.

ON-BOARD DIAGNOSTIC [SKYACTIV-G 2.0]

STEP	INSPECTION		ACTION
8	**INSPECT FUEL INJECTOR** • Inspect the fuel injector. (See 01-14A-62 FUEL INJECTOR INSPECTION [SKYACTIV-G 2.0].) • Is there any malfunction?	Yes	Replace the following parts because the part for the high pressure fuel is damaged. • High pressure fuel pump (See 01-14A-44 HIGH PRESSURE FUEL PUMP REMOVAL/INSTALLATION [SKYACTIV-G 2.0].) • High pressure fuel pipe • Fuel injector No.1 (See 01-14A-51 FUEL INJECTOR REMOVAL/INSTALLATION [SKYACTIV-G 2.0].) • Fuel injector No.2 • Fuel injector No.3 • Fuel injector No.4 • Fuel distributor Go to the next step.
		No	Replace the fuel distributor, then go to the next step. (See 01-14A-51 FUEL INJECTOR REMOVAL/INSTALLATION [SKYACTIV-G 2.0].)
9	**VERIFY DTC TROUBLESHOOTING COMPLETED** • Make sure to reconnect all disconnected connectors. • Clear the DTC from the PCM memory using the M-MDS. (See 01-02-12 AFTER REPAIR PROCEDURE [SKYACTIV-G 2.0].) • Perform the KOER self test. (See 01-02-12 KOEO/KOER SELF TEST [SKYACTIV-G 2.0].) • Is the same DTC present?	Yes	Repeat the inspection from Step 1. • If the malfunction recurs, replace the PCM. (See 01-40-10 PCM REMOVAL/INSTALLATION [SKYACTIV-G 2.0].) Go to the next step.
		No	Go to the next step.
10	**VERIFY AFTER REPAIR PROCEDURE** • Perform the “AFTER REPAIR PROCEDURE”. (See 01-02-12 AFTER REPAIR PROCEDURE [SKYACTIV-G 2.0].) • Are any DTCs present?	Yes	Go to the applicable DTC inspection. (See 01-02-14 DTC TABLE [SKYACTIV-G 2.0].)
		No	DTC troubleshooting completed.

ON-BOARD DIAGNOSTIC [SKYACTIV-G 2.0]

DTC P0091:00 [SKYACTIV-G 2.0]

id0102h1009100

DTC P0091:00	Fuel pressure regulator control circuit low input
DETECTION CONDITION	• When the PCM turns the spill valve control solenoid valve off but the spill valve control solenoid valve control circuit voltage is low for **5 s**, the PCM determines that the spill valve control solenoid valve control circuit has a malfunction. **MONITORING CONDITIONS** — The following conditions are met: • Engine speed: **5,700 rpm or less** • Battery voltage: **10.5 V or more** **Diagnostic support note** • This is a continuous monitor (CCM). • The check engine light illuminates if the PCM detects the above malfunction condition during the first drive cycle. • FREEZE FRAME DATA (Mode 2)/Snapshot data is available. • The DTC is stored in the PCM memory.
FAIL-SAFE FUNCTION	• Stops the high pressure fuel pump control. • Limits the intake air amount.
POSSIBLE CAUSE	• High pressure fuel pump connector or terminals malfunction • Short to ground in wiring harness between high pressure fuel pump terminal B and PCM terminal 1EF • PCM connector or terminals malfunction • Open circuit in wiring harness between the following terminals: — High pressure fuel pump terminal A—PCM terminal 1EE — High pressure fuel pump terminal B—PCM terminal 1EF • Spill valve control solenoid valve (built-into high pressure fuel pump) malfunction • PCM malfunction

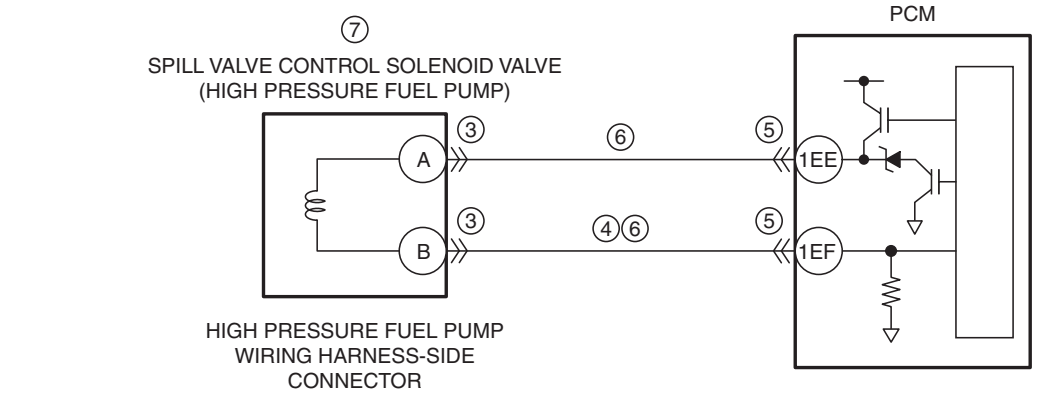

PCM WIRING HARNESS-SIDE CONNECTOR

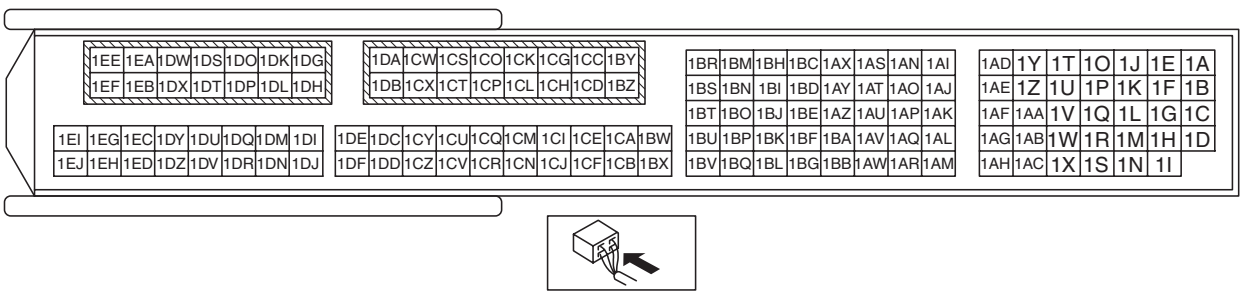

ON-BOARD DIAGNOSTIC [SKYACTIV-G 2.0]

Diagnostic Procedure

STEP	INSPECTION		ACTION
1	**VERIFY FREEZE FRAME DATA (MODE 2)/ SNAPSHOT DATA HAS BEEN RECORDED** • Has the FREEZE FRAME DATA (Mode 2)/ snapshot data been recorded?	Yes	Go to the next step.
		No	Record the FREEZE FRAME DATA (Mode 2)/snapshot data on the repair order, then go to the next step.
2	**VERIFY RELATED SERVICE INFORMATION AVAILABILITY** • Verify related Service Information availability. • Is any related Service Information available?	Yes	Perform repair or diagnosis according to the available Service Information. • If the vehicle is not repaired, go to the next step.
		No	Go to the next step.
3	**INSPECT HIGH PRESSURE FUEL PUMP CONNECTOR CONDITION** • Switch the ignition to off. • Disconnect the high pressure fuel pump connector. • Inspect for poor connection (such as damaged/ pulled-out pins, corrosion). • Is there any malfunction?	Yes	Repair or replace the connector and/or terminals, then go to Step 8.
		No	Go to the next step.
4	**INSPECT SPILL VALVE CONTROL SOLENOID VALVE CONTROL CIRCUIT FOR SHORT TO GROUND** • Verify that the high pressure fuel pump connector is disconnected. • Inspect for continuity between high pressure fuel pump terminal B (wiring harness-side) and body ground. • Is there continuity?	Yes	If the short to ground circuit could be detected in the wiring harness: • Repair or replace the wiring harness for a possible short to ground. If the short to ground circuit could not be detected in the wiring harness: • Replace the PCM (short to ground in the PCM internal circuit). (See 01-40-10 PCM REMOVAL/INSTALLATION [SKYACTIV-G 2.0].) Go to Step 8.
		No	Go to the next step.
5	**INSPECT PCM CONNECTOR CONDITION** • Disconnect the PCM connector. • Inspect for poor connection (such as damaged/ pulled-out pins, corrosion). • Is there any malfunction?	Yes	Repair or replace the connector and/or terminals, then go to Step 8.
		No	Go to the next step.
6	**INSPECT SPILL VALVE CONTROL SOLENOID VALVE CIRCUIT FOR OPEN CIRCUIT** • Verify that the high pressure fuel pump and PCM connectors are disconnected. • Inspect for continuity between the following terminals (wiring harness-side): — High pressure fuel pump terminal A—PCM terminal 1EE — High pressure fuel pump terminal B—PCM terminal 1EF • Is there continuity?	Yes	Go to the next step.
		No	Repair or replace the wiring harness for a possible open circuit, then go to Step 8.
7	**INSPECT SPILL VALVE CONTROL SOLENOID VALVE** • Reconnect all disconnected connectors. • Inspect the spill valve control solenoid valve. (See 01-14A-49 HIGH PRESSURE FUEL PUMP INSPECTION [SKYACTIV-G 2.0].) • Is there any malfunction?	Yes	Replace the high pressure fuel pump, then go to the next step. (See 01-14A-44 HIGH PRESSURE FUEL PUMP REMOVAL/INSTALLATION [SKYACTIV-G 2.0].)
		No	Go to the next step.

ON-BOARD DIAGNOSTIC [SKYACTIV-G 2.0]

STEP	INSPECTION		ACTION
8	**VERIFY DTC TROUBLESHOOTING COMPLETED** • Make sure to reconnect all disconnected connectors. • Clear the DTC from the PCM memory using the M-MDS. (See 01-02-12 AFTER REPAIR PROCEDURE [SKYACTIV-G 2.0].) • Start the engine. • Perform the KOEO or KOER self test. (See 01-02-12 KOEO/KOER SELF TEST [SKYACTIV-G 2.0].) • Is the same DTC present?	Yes	Repeat the inspection from Step 1. • If the malfunction recurs, replace the PCM. (See 01-40-10 PCM REMOVAL/INSTALLATION [SKYACTIV-G 2.0].) Go to the next step.
		No	Go to the next step.
9	**VERIFY AFTER REPAIR PROCEDURE** • Perform the “AFTER REPAIR PROCEDURE”. (See 01-02-12 AFTER REPAIR PROCEDURE [SKYACTIV-G 2.0].) • Are any DTCs present?	Yes	Go to the applicable DTC inspection. (See 01-02-14 DTC TABLE [SKYACTIV-G 2.0].)
		No	DTC troubleshooting completed.

ON-BOARD DIAGNOSTIC [SKYACTIV-G 2.0]

DTC P0092:00 [SKYACTIV-G 2.0]

id0102h1009200

DTC P0092:00	Fuel pressure regulator control circuit high input
DETECTION CONDITION	• When the PCM turns the spill valve control solenoid valve on but the spill valve control solenoid valve circuit voltage is high for **5 s**, the PCM determines that the spill valve control solenoid valve control circuit has a malfunction. **MONITORING CONDITIONS** — The following conditions are met: • Engine speed: **5,700 rpm or less** • Battery voltage: **10.5 V or more** **Diagnostic support note** • This is a continuous monitor (CCM). • The check engine light illuminates if the PCM detects the above malfunction condition during the first drive cycle. • FREEZE FRAME DATA (Mode 2)/Snapshot data is available. • The DTC is stored in the PCM memory.
FAIL-SAFE FUNCTION	• Stops the high pressure fuel pump control. • Limits the intake air amount.
POSSIBLE CAUSE	• High pressure fuel pump connector or terminals malfunction • PCM connector or terminals malfunction • Short to power supply in wiring harness between the following terminals: — High pressure fuel pump terminal A—PCM terminal 1EE — High pressure fuel pump terminal B—PCM terminal 1EF • Spill valve control solenoid valve (built-into high pressure fuel pump) malfunction • PCM malfunction

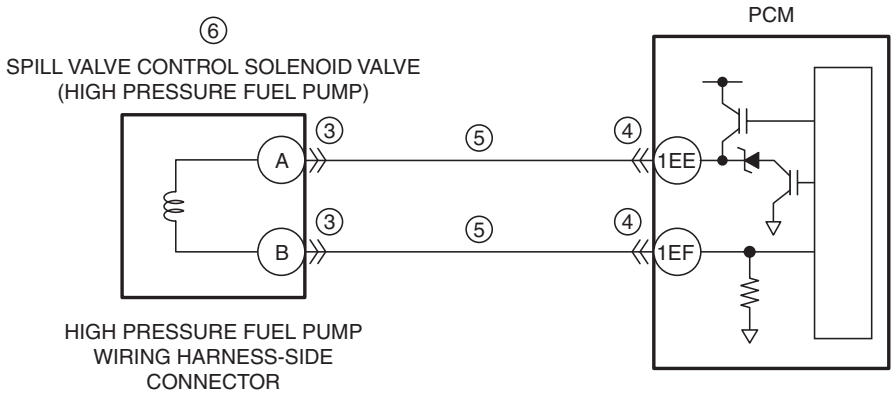

PCM WIRING HARNESS-SIDE CONNECTOR

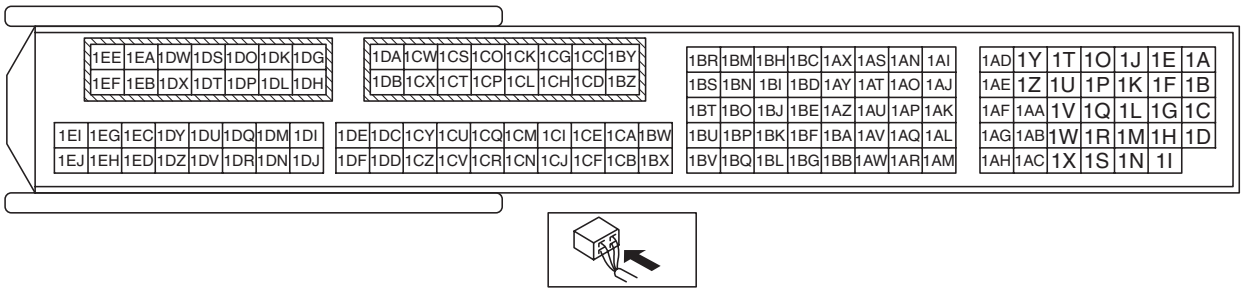

ON-BOARD DIAGNOSTIC [SKYACTIV-G 2.0]

Diagnostic Procedure

STEP	INSPECTION		ACTION
1	**VERIFY FREEZE FRAME DATA (MODE 2)/ SNAPSHOT DATA HAS BEEN RECORDED** • Has the FREEZE FRAME DATA (Mode 2)/ snapshot data been recorded?	Yes	Go to the next step.
		No	Record the FREEZE FRAME DATA (Mode 2)/snapshot data on the repair order, then go to the next step.
2	**VERIFY RELATED SERVICE INFORMATION AVAILABILITY** • Verify related Service Information availability. • Is any related Service Information available?	Yes	Perform repair or diagnosis according to the available Service Information. • If the vehicle is not repaired, go to the next step.
		No	Go to the next step.
3	**INSPECT HIGH PRESSURE FUEL PUMP CONNECTOR CONDITION** • Switch the ignition to off. • Disconnect the high pressure fuel pump connector. • Inspect for poor connection (such as damaged/ pulled-out pins, corrosion). • Is there any malfunction?	Yes	Repair or replace the connector and/or terminals, then go to Step 7.
		No	Go to the next step.
4	**INSPECT PCM CONNECTOR CONDITION** • Disconnect the PCM connector. • Inspect for poor connection (such as damaged/ pulled-out pins, corrosion). • Is there any malfunction?	Yes	Repair or replace the connector and/or terminals, then go to Step 7.
		No	Go to the next step.
5	**INSPECT SPILL VALVE CONTROL SOLENOID VALVE CIRCUIT FOR SHORT TO POWER SUPPLY** • Verify that the high pressure fuel pump and PCM connectors are disconnected. • Switch the ignition ON (engine off or on). • Measure the voltage at the following terminals (wiring harness-side): — High pressure fuel pump terminal A — High pressure fuel pump terminal B • Is the voltage **0 V**?	Yes	Go to the next step.
		No	Repair or replace the wiring harness for a possible short to power supply, then go to Step 7.
6	**INSPECT SPILL VALVE CONTROL SOLENOID VALVE** • Switch the ignition to off. • Reconnect all disconnected connectors. • Inspect the spill valve control solenoid valve. (See 01-14A-49 HIGH PRESSURE FUEL PUMP INSPECTION [SKYACTIV-G 2.0].) • Is there any malfunction?	Yes	Replace the high pressure fuel pump, then go to the next step. (See 01-14A-44 HIGH PRESSURE FUEL PUMP REMOVAL/INSTALLATION [SKYACTIV-G 2.0].)
		No	Go to the next step.
7	**VERIFY DTC TROUBLESHOOTING COMPLETED** • Make sure to reconnect all disconnected connectors. • Clear the DTC from the PCM memory using the M-MDS. (See 01-02-12 AFTER REPAIR PROCEDURE [SKYACTIV-G 2.0].) • Start the engine. • Perform the KOEO or KOER self test. (See 01-02-12 KOEO/KOER SELF TEST [SKYACTIV-G 2.0].) • Is the same DTC present?	Yes	Repeat the inspection from Step 1. • If the malfunction recurs, replace the PCM. (See 01-40-10 PCM REMOVAL/INSTALLATION [SKYACTIV-G 2.0].) Go to the next step.
		No	Go to the next step.
8	**VERIFY AFTER REPAIR PROCEDURE** • Perform the “AFTER REPAIR PROCEDURE”. (See 01-02-12 AFTER REPAIR PROCEDURE [SKYACTIV-G 2.0].) • Are any DTCs present?	Yes	Go to the applicable DTC inspection. (See 01-02-14 DTC TABLE [SKYACTIV-G 2.0].)
		No	DTC troubleshooting completed.

ON-BOARD DIAGNOSTIC [SKYACTIV-G 2.0]

DTC P0097:00 [SKYACTIV-G 2.0]

id0102h1146400

DTC P0097:00	IAT sensor No.2 circuit low input
DETECTION CONDITION	• If the PCM detects that the IAT sensor No.2 voltage at the PCM terminal 1CE is **0.33 V or less** for **5 s**, the PCM determines that the IAT sensor No.2 circuit voltage is low. **Diagnostic support note** • This is a continuous monitor (CCM). • The check engine light illuminates if the PCM detects the above malfunction condition during the first drive cycle. • FREEZE FRAME DATA (Mode 2)/Snapshot data is available. • The DTC is stored in the PCM memory.
FAIL-SAFE FUNCTION	—
POSSIBLE CAUSE	• MAP sensor/IAT sensor No.2 connector or terminals malfunction • IAT sensor No.2 malfunction • Short to ground in wiring harness between MAP sensor/IAT sensor No.2 terminal B and PCM terminal 1CE • PCM connector or terminals malfunction • IAT sensor No.2 signal circuit and ground circuit are shorted to each other • PCM malfunction

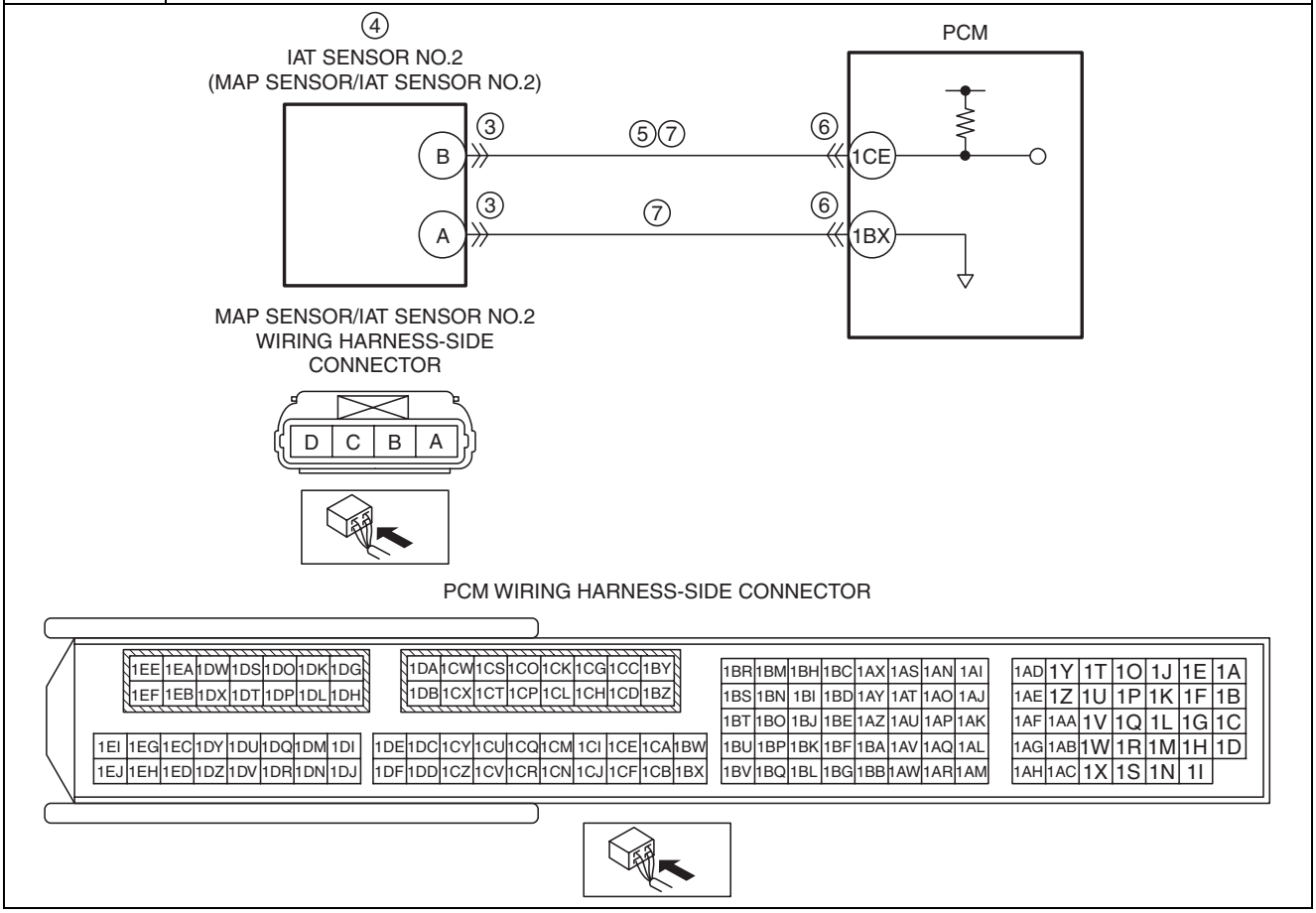

Diagnostic Procedure

STEP	INSPECTION		ACTION
1	**VERIFY FREEZE FRAME DATA (MODE 2)/ SNAPSHOT DATA HAS BEEN RECORDED** • Has the FREEZE FRAME DATA (Mode 2)/ snapshot data been recorded?	Yes	Go to the next step.
		No	Record the FREEZE FRAME DATA (Mode 2)/snapshot data on the repair order, then go to the next step.
2	**VERIFY RELATED SERVICE INFORMATION AVAILABILITY** • Verify related Service Information availability. • Is any related Service Information available?	Yes	Perform repair or diagnosis according to the available Service Information. • If the vehicle is not repaired, go to the next step.
		No	Go to the next step.

ON-BOARD DIAGNOSTIC [SKYACTIV-G 2.0]

STEP	INSPECTION		ACTION
3	**INSPECT MAP SENSOR/IAT SENSOR NO.2 CONNECTOR CONDITION** • Switch the ignition to off. • Disconnect the MAP sensor/IAT sensor No.2 connector. • Inspect for poor connection (such as damaged/ pulled-out pins, corrosion). • Is there any malfunction?	Yes	Repair or replace the connector and/or terminals, then go to Step 8.
		No	Go to the next step.
4	**INSPECT IAT SENSOR NO.2** • Inspect the IAT sensor No.2. (See 01-40-46 INTAKE AIR TEMPERATURE (IAT) SENSOR INSPECTION [SKYACTIV-G 2.0].) • Is there any malfunction?	Yes	Replace the MAP sensor/IAT sensor No.2, then go to Step 8. (See 01-40-48 MANIFOLD ABSOLUTE PRESSURE (MAP) SENSOR/INTAKE AIR TEMPERATURE (IAT) SENSOR NO.2 REMOVAL/INSTALLATION [SKYACTIV-G 2.0].)
		No	Go to the next step.
5	**INSPECT IAT SENSOR NO.2 SIGNAL CIRCUIT FOR SHORT TO GROUND** • Verify that the MAP sensor/IAT sensor No.2 connector is disconnected. • Inspect for continuity between MAP sensor/IAT sensor No.2 terminal B (wiring harness-side) and body ground. • Is there continuity?	Yes	If the short to ground circuit could be detected in the wiring harness: • Repair or replace the wiring harness for a possible short to ground. If the short to ground circuit could not be detected in the wiring harness: • Replace the PCM (short to ground in the PCM internal circuit). (See 01-40-10 PCM REMOVAL/INSTALLATION [SKYACTIV-G 2.0].) Go to Step 8.
		No	Go to the next step.
6	**INSPECT PCM CONNECTOR CONDITION** • Disconnect the PCM connector. • Inspect for poor connection (such as damaged/ pulled-out pins, corrosion). • Is there any malfunction?	Yes	Repair or replace the connector and/or terminals, then go to Step 8.
		No	Go to the next step.
7	**INSPECT IAT SENSOR NO.2 SIGNAL CIRCUIT AND GROUND CIRCUIT FOR SHORT TO EACH OTHER** • Verify that the MAP sensor/IAT sensor No.2 and PCM connectors are disconnected. • Inspect for continuity between MAP sensor/IAT sensor No.2 terminals B and A (wiring harness-side). • Is there continuity?	Yes	Repair or replace the wiring harness for a possible short to each other, then go to the next step.
		No	Go to the next step.
8	**VERIFY DTC TROUBLESHOOTING COMPLETED** • Make sure to reconnect all disconnected connectors. • Clear the DTC from the PCM memory using the M-MDS. (See 01-02-12 AFTER REPAIR PROCEDURE [SKYACTIV-G 2.0].) • Perform the KOEO or KOER self test. (See 01-02-12 KOEO/KOER SELF TEST [SKYACTIV-G 2.0].) • Is the same DTC present?	Yes	Repeat the inspection from Step 1. • If the malfunction recurs, replace the PCM. (See 01-40-10 PCM REMOVAL/INSTALLATION [SKYACTIV-G 2.0].) Go to the next step.
		No	Go to the next step.
9	**VERIFY AFTER REPAIR PROCEDURE** • Perform the “AFTER REPAIR PROCEDURE”. (See 01-02-12 AFTER REPAIR PROCEDURE [SKYACTIV-G 2.0].) • Are any DTCs present?	Yes	Go to the applicable DTC inspection. (See 01-02-14 DTC TABLE [SKYACTIV-G 2.0].)
		No	DTC troubleshooting completed.

ON-BOARD DIAGNOSTIC [SKYACTIV-G 2.0]

DTC P0098:00 [SKYACTIV-G 2.0]

id0102h1146500

DTC P0098:00	**IAT sensor No.2 circuit high input**
DETECTION CONDITION	• If the PCM detects that the IAT sensor No.2 voltage at the PCM terminal 1CE is **4.96 V or more** for **5 s**, the PCM determines that the IAT sensor No.2 circuit voltage is high. **Diagnostic support note** • This is a continuous monitor (CCM). • The check engine light illuminates if the PCM detects the above malfunction condition during the first drive cycle. • FREEZE FRAME DATA (Mode 2)/Snapshot data is available. • The DTC is stored in the PCM memory.
FAIL-SAFE FUNCTION	—
POSSIBLE CAUSE	• MAP sensor/IAT sensor No.2 connector or terminals malfunction • PCM connector or terminals malfunction • IAT sensor No.2 malfunction • Short to power supply in wiring harness between MAP sensor/IAT sensor No.2 terminal B and PCM terminal 1CE • Open circuit in wiring harness between the following terminals: — MAP sensor/IAT sensor No.2 terminal B—PCM terminal 1CE — MAP sensor/IAT sensor No.2 terminal A—PCM terminal 1BX • PCM malfunction

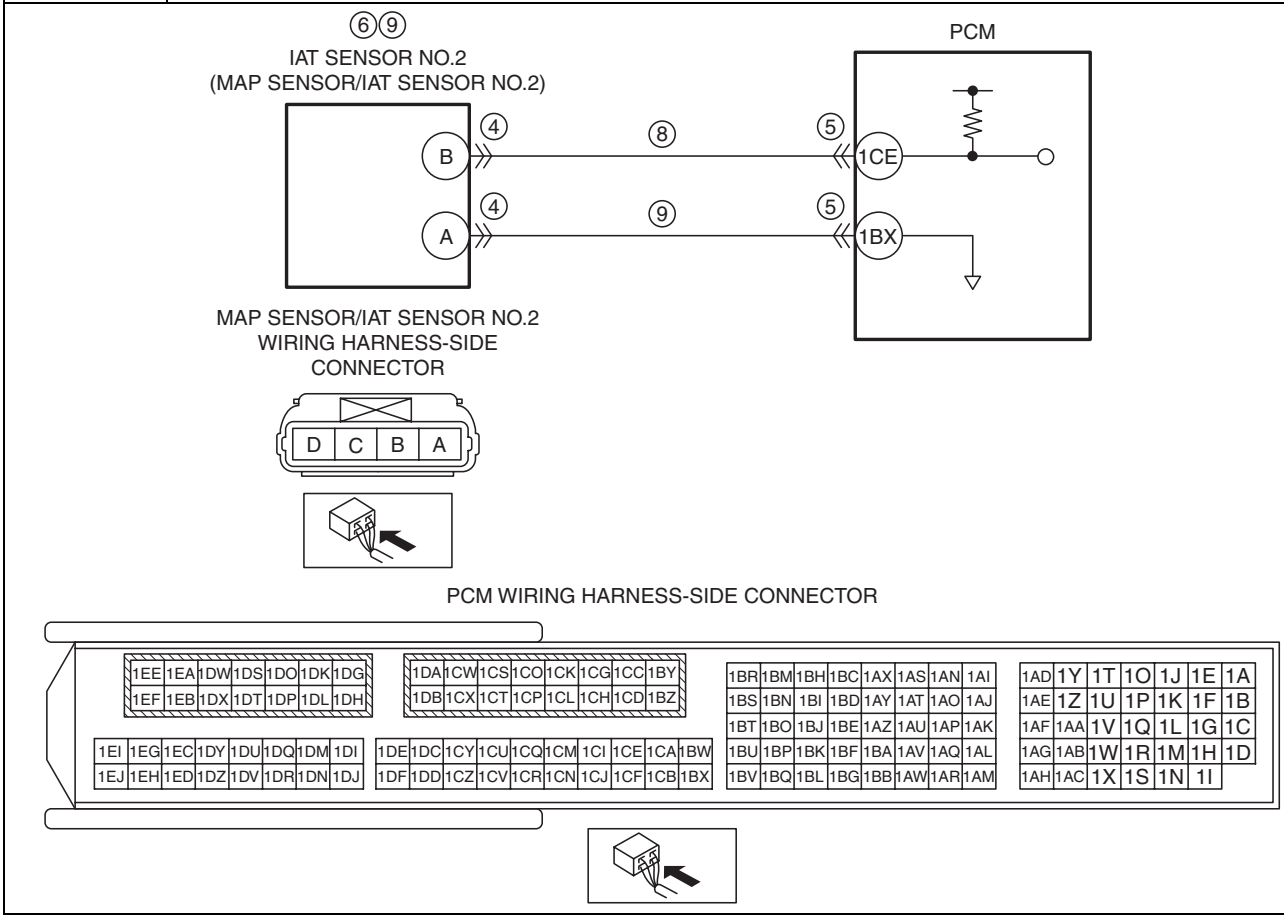

Diagnostic Procedure

STEP	INSPECTION		ACTION
1	**VERIFY FREEZE FRAME DATA (MODE 2)/ SNAPSHOT DATA HAS BEEN RECORDED** • Has the FREEZE FRAME DATA (Mode 2)/ snapshot data been recorded?	Yes	Go to the next step.
		No	Record the FREEZE FRAME DATA (Mode 2)/snapshot data on the repair order, then go to the next step.
2	**VERIFY RELATED SERVICE INFORMATION AVAILABILITY** • Verify related Service Information availability. • Is any related Service Information available?	Yes	Perform repair or diagnosis according to the available Service Information. • If the vehicle is not repaired, go to the next step.
		No	Go to the next step.

ON-BOARD DIAGNOSTIC [SKYACTIV-G 2.0]

STEP	INSPECTION		ACTION
3	**CLASSIFY IAT SENSOR NO.2 MALFUNCTION OR WIRING HARNESS MALFUNCTION** • Access the IAT2 PID using the M-MDS. (See 01-02-8 ON-BOARD DIAGNOSTIC TEST [SKYACTIV-G 2.0].) • Verify the IAT2 PID value. • Is the IAT2 PID value **5 V** or **B+**?	Yes	Go to Step 7.
		No	Go to the next step.
4	**INSPECT MAP SENSOR/IAT SENSOR NO.2 CONNECTOR CONDITION** • Switch the ignition to off. • Disconnect the MAP sensor/IAT sensor No.2 connector. • Inspect for poor connection (such as damaged/ pulled-out pins, corrosion). • Is there any malfunction?	Yes	Repair or replace the connector and/or terminals, then go to Step 10.
		No	Go to the next step.
5	**INSPECT PCM CONNECTOR CONDITION** • Disconnect the PCM connector. • Inspect for poor connection (such as damaged/ pulled-out pins, corrosion). • Is there any malfunction?	Yes	Repair or replace the connector and/or terminals, then go to Step 10.
		No	Go to the next step.
6	**INSPECT IAT SENSOR NO.2** • Inspect the IAT sensor No.2. (See 01-40-46 INTAKE AIR TEMPERATURE (IAT) SENSOR INSPECTION [SKYACTIV-G 2.0].) • Is there any malfunction?	Yes	Replace the MAP sensor/IAT sensor No.2, then go to Step 10. (See 01-40-48 MANIFOLD ABSOLUTE PRESSURE (MAP) SENSOR/INTAKE AIR TEMPERATURE (IAT) SENSOR NO.2 REMOVAL/INSTALLATION [SKYACTIV-G 2.0].)
		No	Go to Step 10.
7	**CLASSIFY IAT SENSOR NO.2 SIGNAL CIRCUIT MALFUNCTION OR IAT SENSOR NO.2 GROUND CIRCUIT MALFUNCTION** • Switch the ignition to off. • Disconnect the MAP sensor/IAT sensor No.2 connector. • Access the IAT2 PID using the M-MDS. (See 01-02-8 ON-BOARD DIAGNOSTIC TEST [SKYACTIV-G 2.0].) • Verify the IAT2 PID value. • Is the IAT2 PID value **5 V** or **B+**?	Yes	Go to the next step.
		No	Go to Step 9.
8	**INSPECT IAT SENSOR NO.2 SIGNAL CIRCUIT FOR OPEN CIRCUIT** • Verify that the MAP sensor/IAT sensor No.2 connector is disconnected. • Switch the ignition to off. • Disconnect the PCM connector. • Inspect for continuity between MAP sensor/IAT sensor No.2 terminal B (wiring harness-side) and PCM terminal 1CE (wiring harness-side). • Is there continuity?	Yes	Repair or replace the wiring harness for a possible short to power supply, then go to Step 10.
		No	Repair or replace the wiring harness for a possible open circuit, then go to Step 10.
9	**INSPECT IAT SENSOR NO.2 GROUND CIRCUIT FOR OPEN CIRCUIT** • Verify that the MAP sensor/IAT sensor No.2 connector is disconnected. • Switch the ignition to off. • Disconnect the PCM connector. • Inspect for continuity between MAP sensor/IAT sensor No.2 terminal A (wiring harness-side) and PCM terminal 1BX (wiring harness-side). • Is there continuity?	Yes	Replace the MAP sensor/IAT sensor No.2, then go to the next step. (See 01-40-48 MANIFOLD ABSOLUTE PRESSURE (MAP) SENSOR/INTAKE AIR TEMPERATURE (IAT) SENSOR NO.2 REMOVAL/INSTALLATION [SKYACTIV-G 2.0].)
		No	Repair or replace the wiring harness for a possible open circuit, then go to the next step.

ON-BOARD DIAGNOSTIC [SKYACTIV-G 2.0]

STEP	INSPECTION		ACTION
10	**VERIFY DTC TROUBLESHOOTING COMPLETED** • Make sure to reconnect all disconnected connectors. • Clear the DTC from the PCM memory using the M-MDS. (See 01-02-12 AFTER REPAIR PROCEDURE [SKYACTIV-G 2.0].) • Perform the KOEO or KOER self test. (See 01-02-12 KOEO/KOER SELF TEST [SKYACTIV-G 2.0].) • Is the same DTC present?	Yes	Repeat the inspection from Step 1. • If the malfunction recurs, replace the PCM. (See 01-40-10 PCM REMOVAL/INSTALLATION [SKYACTIV-G 2.0].) Go to the next step.
		No	Go to the next step.
11	**VERIFY AFTER REPAIR PROCEDURE** • Perform the “AFTER REPAIR PROCEDURE”. (See 01-02-12 AFTER REPAIR PROCEDURE [SKYACTIV-G 2.0].) • Are any DTCs present?	Yes	Go to the applicable DTC inspection. (See 01-02-14 DTC TABLE [SKYACTIV-G 2.0].)
		No	DTC troubleshooting completed.

DTC P0101:00 [SKYACTIV-G 2.0]

id0102h1700800

DTC P0101:00	MAF sensor circuit range/performance problem
DETECTION CONDITION	• When the conditions are as follows, the PCM compares the intake airflow amount with the estimated intake airflow amount (calculated from the barometric pressure, MAP sensor and throttle opening angle). **MONITORING CONDITIONS** — Engine speed: **above 500 rpm** — Intake manifold absolute pressure divided by barometric pressure: **below 0.93** — Throttle position (before **0.02 s**): **below 10 %** — Amount of fluctuation in intake camshaft position for **0.04 s**: **below 10 °CA** — Battery voltage: **above 8 V** • The difference between the intake air amount measured by the MAF sensor and the estimated intake air amount estimated by the MAP sensor is outside of the specified value. **Diagnostic support note** • This is a continuous monitor (CCM). • The check engine light illuminates if the PCM detects the above malfunction condition in two consecutive drive cycles or in one drive cycle while the DTC for the same malfunction has been stored in the PCM. • PENDING CODE is available if the PCM detects the above malfunction condition during first drive cycle. • FREEZE FRAME DATA (Mode 2)/Snapshot data is available. • The DTC is stored in the PCM memory.
FAIL-SAFE FUNCTION	—
POSSIBLE CAUSE	• MAP sensor/IAT sensor No.2 connector or terminals malfunction • MAF sensor/IAT sensor No.1 connector or terminals malfunction • PCM connector or terminals malfunction • MAP sensor malfunction • MAF sensor malfunction • Air leakage from intake-air system • Purge solenoid valve malfunction • PCV valve malfunction • PCM malfunction
SYSTEM WIRING DIAGRAM	—

Diagnostic Procedure

STEP	INSPECTION		ACTION
1	**VERIFY FREEZE FRAME DATA (MODE 2)/ SNAPSHOT DATA HAS BEEN RECORDED** • Has the FREEZE FRAME DATA (Mode 2)/ snapshot data been recorded?	Yes	Go to the next step.
		No	Record the FREEZE FRAME DATA (Mode 2)/snapshot data on the repair order, then go to the next step.
2	**VERIFY RELATED SERVICE INFORMATION AVAILABILITY** • Verify related Service Information availability. • Is any related Service Information available?	Yes	Perform repair or diagnosis according to the available Service Information. • If the vehicle is not repaired, go to the next step.
		No	Go to the next step.

ON-BOARD DIAGNOSTIC [SKYACTIV-G 2.0]

STEP	INSPECTION		ACTION
3	**VERIFY CURRENT INPUT SIGNAL STATUS IS CONCERN INTERMITTENT OR CONSTANT** • Clear the DTC from the PCM memory using the M-MDS. (See 01-02-12 AFTER REPAIR PROCEDURE [SKYACTIV-G 2.0].) • Start the engine. • Access the following PIDs using the M-MDS: (See 01-02-8 ON-BOARD DIAGNOSTIC TEST [SKYACTIV-G 2.0].) — ECT — TP REL — RPM • Warm up the engine until the ECT PID is **above 70 °C {158 °F}**. • Perform the following: 1. Depress the accelerator pedal to increase the engine speed to **approx. 5,000 rpm**. 2. Release the accelerator pedal to decrease the engine speed to idle speed. 3. Repeat Step 1 and Step 2 operations above **3 times** in succession. • Perform the Pending Trouble Code Access Procedure. (See 01-02-8 ON-BOARD DIAGNOSTIC TEST [SKYACTIV-G 2.0].) • Is the PENDING CODE for this DTC present?	Yes	Go to the next step.
		No	Intermittent concern exists. • Perform the “INTERMITTENT CONCERN TROUBLESHOOTING” procedure. (See 01-03-116 INTERMITTENT CONCERN TROUBLESHOOTING [SKYACTIV-G 2.0].)
4	**INSPECT MAP SENSOR/IAT SENSOR NO.2 CONNECTOR CONDITION** • Switch the ignition to off. • Disconnect the MAP sensor/IAT sensor No.2 connector. • Inspect for poor connection (such as damaged/pulled-out pins, corrosion). • Is there any malfunction?	Yes	Repair or replace the connector and/or terminals, then go to Step 12.
		No	Go to the next step.
5	**INSPECT MAF SENSOR/IAT SENSOR NO.1 CONNECTOR CONDITION** • Disconnect the MAF sensor/IAT sensor No.1 connector. • Inspect for poor connection (such as damaged/pulled-out pins, corrosion). • Is there any malfunction?	Yes	Repair or replace the connector and/or terminals, then go to Step 12.
		No	Go to the next step.
6	**INSPECT PCM CONNECTOR CONDITION** • Disconnect the PCM connector. • Inspect for poor connection (such as damaged/pulled-out pins, corrosion). • Is there any malfunction?	Yes	Repair or replace the connector and/or terminals, then go to Step 12.
		No	Go to the next step.
7	**INSPECT MAP SENSOR** • Reconnect all disconnected connectors. • Inspect the MAP sensor. (See 01-40-49 MANIFOLD ABSOLUTE PRESSURE (MAP) SENSOR INSPECTION [SKYACTIV-G 2.0].) • Is there any malfunction?	Yes	Replace the MAP sensor/IAT sensor No.2, then go to Step 12. (See 01-40-48 MANIFOLD ABSOLUTE PRESSURE (MAP) SENSOR/INTAKE AIR TEMPERATURE (IAT) SENSOR NO.2 REMOVAL/INSTALLATION [SKYACTIV-G 2.0].)
		No	Go to the next step.
8	**INSPECT MAF SENSOR** • Inspect the MAF sensor. (See 01-40-45 MASS AIR FLOW (MAF) SENSOR INSPECTION [SKYACTIV-G 2.0].) • Is there any malfunction?	Yes	Replace the MAF sensor/IAT sensor No.1, then go to Step 12. (See 01-13A-6 INTAKE-AIR SYSTEM REMOVAL/INSTALLATION [SKYACTIV-G 2.0].)
		No	Go to the next step.
9	**INSPECT INTAKE-AIR SYSTEM FOR AIR LEAKAGE** • Inspect for leakage in intake-air system. • Is there any leakage?	Yes	Repair or replace the malfunctioning part according to the inspection results, then go to Step 12.
		No	Go to the next step.

ON-BOARD DIAGNOSTIC [SKYACTIV-G 2.0]

STEP	INSPECTION		ACTION
10	**INSPECT PURGE SOLENOID VALVE** • Inspect the purge solenoid valve. (See 01-16A-12 PURGE SOLENOID VALVE INSPECTION [SKYACTIV-G 2.0].) • Is there any malfunction?	Yes	Replace the purge solenoid valve, then go to Step 12. (See 01-16A-10 PURGE SOLENOID VALVE REMOVAL/INSTALLATION [SKYACTIV-G 2.0].)
		No	Go to the next step.
11	**INSPECT PCV VALVE OPERATION** • Inspect the PCV valve operation. (See 01-16A-15 POSITIVE CRANKCASE VENTILATION (PCV) VALVE INSPECTION [SKYACTIV-G 2.0].) • Is there any malfunction?	Yes	Replace the PCV valve, then go to the next step. (See 01-16A-13 POSITIVE CRANKCASE VENTILATION (PCV) VALVE REMOVAL/INSTALLATION [SKYACTIV-G 2.0].)
		No	Go to the next step.
12	**VERIFY DTC TROUBLESHOOTING COMPLETED** • Make sure to reconnect all disconnected connectors. • Clear the DTC from the PCM memory using the M-MDS. (See 01-02-12 AFTER REPAIR PROCEDURE [SKYACTIV-G 2.0].) • Start the engine. • Access the following PIDs using the M-MDS: (See 01-02-8 ON-BOARD DIAGNOSTIC TEST [SKYACTIV-G 2.0].) — ECT — TP REL — RPM • Warm up the engine until the ECT PID is **above 70 °C {158 °F}**. • Perform the following: 1. Depress the accelerator pedal to increase the engine speed to **approx. 5,000 rpm**. 2. Release the accelerator pedal to decrease the engine speed to idle speed. 3. Repeat Step 1 and Step 2 operations above **3 times** in succession. • Perform the Pending Trouble Code Access Procedure. (See 01-02-8 ON-BOARD DIAGNOSTIC TEST [SKYACTIV-G 2.0].) • Is the PENDING CODE for this DTC present?	Yes	Repeat the inspection from Step 1. • If the malfunction recurs, replace the PCM. (See 01-40-10 PCM REMOVAL/INSTALLATION [SKYACTIV-G 2.0].) Go to the next step.
		No	Go to the next step.
13	**VERIFY AFTER REPAIR PROCEDURE** • Perform the “AFTER REPAIR PROCEDURE”. (See 01-02-12 AFTER REPAIR PROCEDURE [SKYACTIV-G 2.0].) • Are any DTCs present?	Yes	Go to the applicable DTC inspection. (See 01-02-14 DTC TABLE [SKYACTIV-G 2.0].)
		No	DTC troubleshooting completed.

ON-BOARD DIAGNOSTIC [SKYACTIV-G 2.0]

DTC P0102:00 [SKYACTIV-G 2.0]

id0102h1700900

DTC P0102:00	**MAF sensor circuit low input**
DETECTION CONDITION	• The PCM monitors input voltage from the MAF sensor when the engine is running. If the input voltage at the PCM terminal 2BC is **below 0.2 V** for **5 s**, the PCM determines that the MAF sensor circuit has a malfunction. **Diagnostic support note** • This is a continuous monitor (CCM). • The check engine light illuminates if the PCM detects the above malfunction condition during the first drive cycle. • FREEZE FRAME DATA (Mode 2)/Snapshot data is available. • The DTC is stored in the PCM memory.
FAIL-SAFE FUNCTION	• Restricts the upper limit of the engine speed. • Inhibits the evaporative purge control.
POSSIBLE CAUSE	• MAF sensor/IAT sensor No.1 connector or terminals malfunction • Short to ground or open circuit in MAF sensor power supply circuit — Short to ground in wiring harness between ENGINE1 15 A fuse and MAF sensor/IAT sensor No.1 terminal E — ENGINE1 15 A fuse malfunction — Open circuit in wiring harness between main relay terminal C and MAF sensor/IAT sensor No.1 terminal E • Short to ground in wiring harness between the following terminals: — MAF sensor/IAT sensor No.1 terminal D—PCM terminal 2BB — MAF sensor/IAT sensor No.1 terminal C—PCM terminal 2BC • PCM connector or terminals malfunction • MAF sensor signal circuit and ground circuit are shorted to each other • Open circuit in wiring harness between the following terminals: — MAF sensor/IAT sensor No.1 terminal D—PCM terminal 2BB — MAF sensor/IAT sensor No.1 terminal C—PCM terminal 2BC • MAF sensor malfunction • PCM malfunction

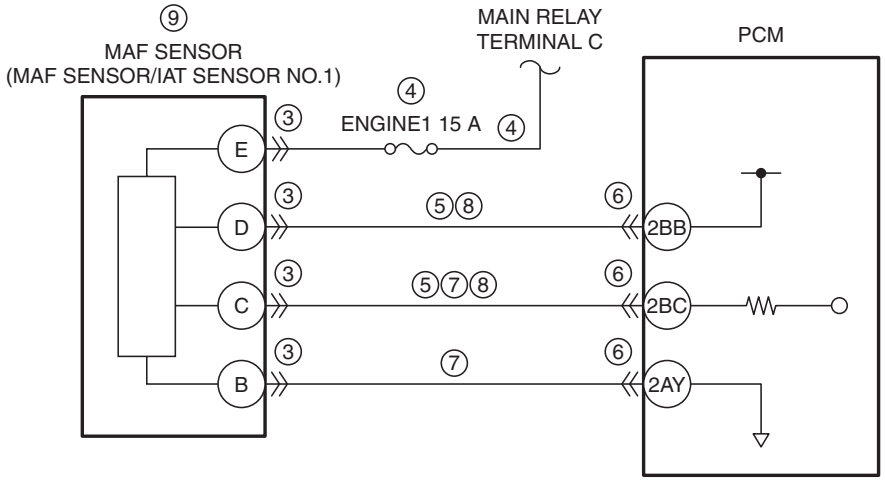

MAF SENSOR/IAT SENSOR NO.1 WIRING HARNESS-SIDE CONNECTOR

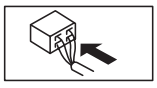

PCM WIRING HARNESS-SIDE CONNECTOR

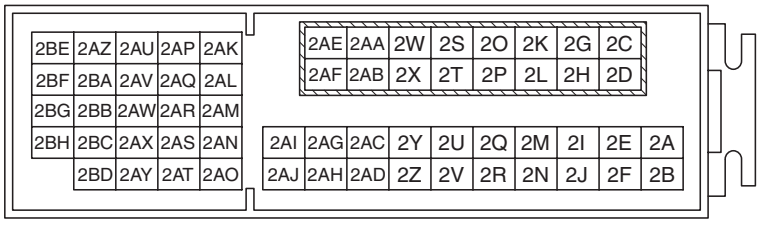

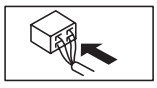

ON-BOARD DIAGNOSTIC [SKYACTIV-G 2.0]

Diagnostic Procedure

STEP	INSPECTION		ACTION
1	**VERIFY FREEZE FRAME DATA (MODE 2)/ SNAPSHOT DATA HAS BEEN RECORDED** • Has the FREEZE FRAME DATA (Mode 2)/ snapshot data been recorded?	Yes	Go to the next step.
		No	Record the FREEZE FRAME DATA (Mode 2)/snapshot data on the repair order, then go to the next step.
2	**VERIFY RELATED SERVICE INFORMATION AVAILABILITY** • Verify related Service Information availability. • Is any related Service Information available?	Yes	Perform repair or diagnosis according to the available Service Information. • If the vehicle is not repaired, go to the next step.
		No	Go to the next step.
3	**INSPECT MAF SENSOR/IAT SENSOR NO.1 CONNECTOR CONDITION** • Switch the ignition to off. • Disconnect the MAF sensor/IAT sensor No.1 connector. • Inspect for poor connection (such as damaged/ pulled-out pins, corrosion). • Is there any malfunction?	Yes	Repair or replace the connector and/or terminals, then go to Step 10.
		No	Go to the next step.
4	**INSPECT MAF SENSOR POWER SUPPLY CIRCUIT FOR SHORT TO GROUND OR OPEN CIRCUIT** • Verify that the MAF sensor/IAT sensor No.1 connector is disconnected. • Switch the ignition ON (engine off or on). • Measure the voltage at the MAF sensor/IAT sensor No.1 terminal E (wiring harness-side). • Is the voltage **B+**?	Yes	Go to the next step.
		No	Inspect the ENGINE1 15 A fuse. • If the fuse is blown: — Repair or replace the wiring harness for a possible short to ground. — Replace the fuse. • If the fuse is deteriorated: — Replace the fuse. • If the fuse is normal: — Repair or replace the wiring harness for a possible open circuit. Go to Step 10.
5	**INSPECT MAF SENSOR CIRCUIT FOR SHORT TO GROUND** • Verify that the MAF sensor/IAT sensor No.1 connector is disconnected. • Switch the ignition to off. • Inspect for continuity between the following terminals (wiring harness-side) and body ground: — MAF sensor/IAT sensor No.1 terminal D — MAF sensor/IAT sensor No.1 terminal C • Is there continuity?	Yes	If the short to ground circuit could be detected in the wiring harness: • Repair or replace the wiring harness for a possible short to ground. If the short to ground circuit could not be detected in the wiring harness: • Replace the PCM (short to ground in the PCM internal circuit). (See 01-40-10 PCM REMOVAL/INSTALLATION [SKYACTIV-G 2.0].) Go to Step 10.
		No	Go to the next step.
6	**INSPECT PCM CONNECTOR CONDITION** • Disconnect the PCM connector. • Inspect for poor connection (such as damaged/ pulled-out pins, corrosion). • Is there any malfunction?	Yes	Repair or replace the connector and/or terminals, then go to Step 10.
		No	Go to the next step.
7	**INSPECT MAF SENSOR SIGNAL CIRCUIT AND GROUND CIRCUIT FOR SHORT TO EACH OTHER** • Verify that the MAF sensor/IAT sensor No.1 and PCM connectors are disconnected. • Inspect for continuity between MAF sensor/IAT sensor No.1 terminals C and B (wiring harness-side). • Is there continuity?	Yes	Repair or replace the wiring harness for a possible short to each other, then go to Step 10.
		No	Go to the next step.
8	**INSPECT MAF SENSOR CIRCUIT FOR OPEN CIRCUIT** • Verify that the MAF sensor/IAT sensor No.1 and PCM connectors are disconnected. • Inspect for continuity between the following terminals (wiring harness-side): — MAF sensor/IAT sensor No.1 terminal D— PCM terminal 2BB — MAF sensor/IAT sensor No.1 terminal C— PCM terminal 2BC • Is there continuity?	Yes	Go to the next step.
		No	Repair or the replace the wiring harness for a possible open circuit, then go to Step 10.

ON-BOARD DIAGNOSTIC [SKYACTIV-G 2.0]

STEP	INSPECTION		ACTION
9	**INSPECT MAF SENSOR** • Inspect the MAF sensor. (See 01-40-45 MASS AIR FLOW (MAF) SENSOR INSPECTION [SKYACTIV-G 2.0].) • Is there any malfunction?	Yes	Replace the MAF sensor/IAT sensor No.1, then go to the next step. (See 01-13A-6 INTAKE-AIR SYSTEM REMOVAL/ INSTALLATION [SKYACTIV-G 2.0].)
		No	Go to the next step.
10	**VERIFY DTC TROUBLESHOOTING COMPLETED** • Make sure to reconnect all disconnected connectors. • Clear the DTC from the PCM memory using the M-MDS. (See 01-02-12 AFTER REPAIR PROCEDURE [SKYACTIV-G 2.0].) • Start the engine and warm it up completely. • Perform the KOEO or KOER self test. (See 01-02-12 KOEO/KOER SELF TEST [SKYACTIV-G 2.0].) • Is the same DTC present?	Yes	Repeat the inspection from Step 1. • If the malfunction recurs, replace the PCM. (See 01-40-10 PCM REMOVAL/INSTALLATION [SKYACTIV-G 2.0].) Go to the next step.
		No	Go to the next step.
11	**VERIFY AFTER REPAIR PROCEDURE** • Perform the “AFTER REPAIR PROCEDURE”. (See 01-02-12 AFTER REPAIR PROCEDURE [SKYACTIV-G 2.0].) • Are any DTCs present?	Yes	Go to the applicable DTC inspection. (See 01-02-14 DTC TABLE [SKYACTIV-G 2.0].)
		No	DTC troubleshooting completed.

ON-BOARD DIAGNOSTIC [SKYACTIV-G 2.0]

DTC P0103:00 [SKYACTIV-G 2.0]

id0102h1701000

DTC P0103:00	MAF sensor circuit high input
DETECTION CONDITION	• The PCM monitors the input voltage from the MAF sensor when the engine is running. If the input voltage at the PCM terminal 2BC is **above 4.94 V** for **5 s**, the PCM determines that the MAF sensor circuit has a malfunction. **Diagnostic support note** • This is a continuous monitor (CCM). • The check engine light illuminates if the PCM detects the above malfunction condition during the first drive cycle. • FREEZE FRAME DATA (Mode 2)/Snapshot data is available. • The DTC is stored in the PCM memory.
FAIL-SAFE FUNCTION	• Restricts the upper limit of the engine speed. • Inhibits the evaporative purge control.
POSSIBLE CAUSE	• MAF sensor/IAT sensor No.1 connector or terminals malfunction • PCM connector or terminals malfunction • MAF sensor malfunction • Short to power supply in wiring harness between MAF sensor/IAT sensor No.1 terminal C and PCM terminal 2BC • Open circuit in wiring harness between MAF sensor/IAT sensor No.1 terminal B and PCM terminal 2AY • PCM malfunction

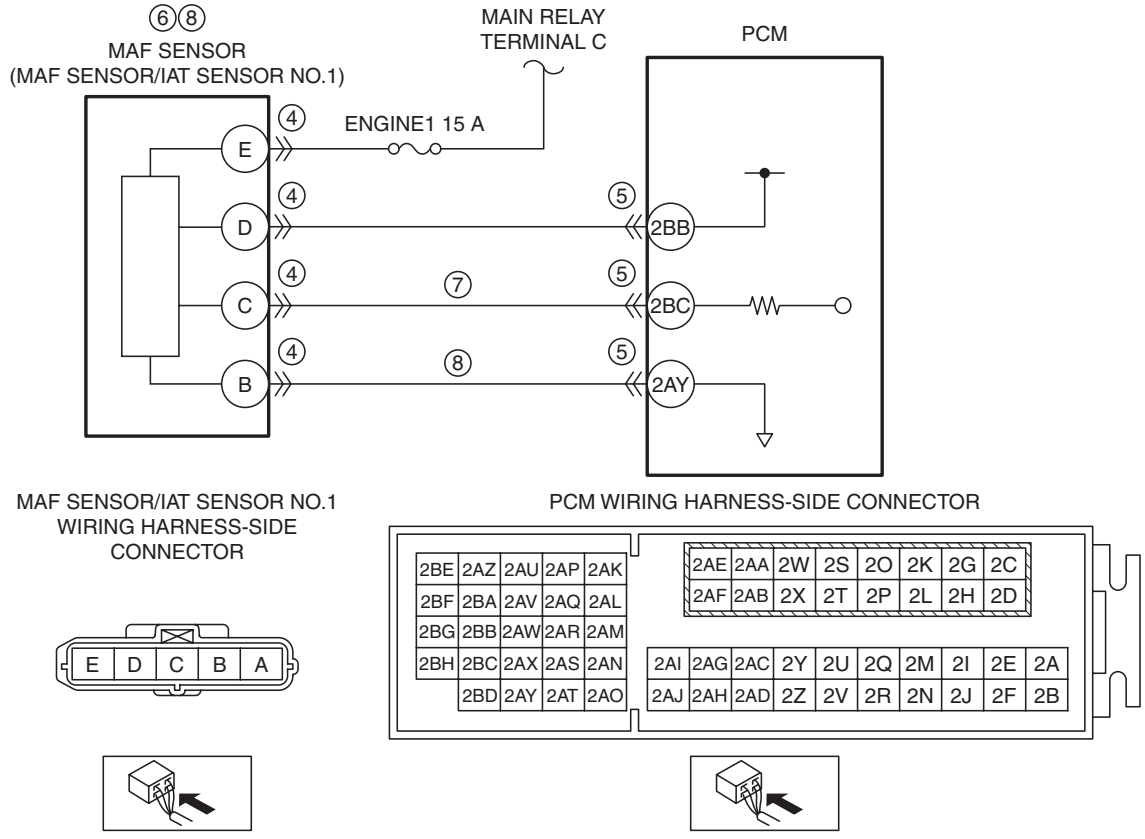

Diagnostic Procedure

STEP	INSPECTION		ACTION
1	**VERIFY FREEZE FRAME DATA (MODE 2)/ SNAPSHOT DATA HAS BEEN RECORDED** • Has the FREEZE FRAME DATA (Mode 2)/ snapshot data been recorded?	Yes	Go to the next step.
		No	Record the FREEZE FRAME DATA (Mode 2)/snapshot data on the repair order, then go to the next step.
2	**VERIFY RELATED SERVICE INFORMATION AVAILABILITY** • Verify related Service Information availability. • Is any related Service Information available?	Yes	Perform repair or diagnosis according to the available Service Information. • If the vehicle is not repaired, go to the next step.
		No	Go to the next step.

ON-BOARD DIAGNOSTIC [SKYACTIV-G 2.0]

STEP	INSPECTION		ACTION
3	**CLASSIFY MAF SENSOR MALFUNCTION OR WIRING HARNESS MALFUNCTION** • Access the MAF PID using the M-MDS. (See 01-02-8 ON-BOARD DIAGNOSTIC TEST [SKYACTIV-G 2.0].) • Verify the MAF PID value. • Is the MAF PID value **5 V** or **B+**?	Yes	Go to Step 7.
		No	Go to the next step.
4	**INSPECT MAF SENSOR/IAT SENSOR NO.1 CONNECTOR CONDITION** • Switch the ignition to off. • Disconnect the MAF sensor/IAT sensor No.1 connector. • Inspect for poor connection (such as damaged/ pulled-out pins, corrosion). • Is there any malfunction?	Yes	Repair or replace the connector and/or terminals, then go to Step 9.
		No	Go to the next step.
5	**INSPECT PCM CONNECTOR CONDITION** • Disconnect the PCM connector. • Inspect for poor connection (such as damaged/ pulled-out pins, corrosion). • Is there any malfunction?	Yes	Repair or replace the connector and/or terminals, then go to Step 9.
		No	Go to the next step.
6	**INSPECT MAF SENSOR** • Inspect the MAF sensor. (See 01-40-45 MASS AIR FLOW (MAF) SENSOR INSPECTION [SKYACTIV-G 2.0].) • Is there any malfunction?	Yes	Replace the MAF sensor/IAT sensor No.1, then go to Step 9. (See 01-13A-6 INTAKE-AIR SYSTEM REMOVAL/ INSTALLATION [SKYACTIV-G 2.0].)
		No	Go to Step 9.
7	**INSPECT MAF SENSOR SIGNAL CIRCUIT FOR SHORT TO POWER SUPPLY** • Switch the ignition to off. • Disconnect the MAF sensor/IAT sensor No.1 connector. • Access the MAF PID using the M-MDS. (See 01-02-8 ON-BOARD DIAGNOSTIC TEST [SKYACTIV-G 2.0].) • Verify the MAF PID value. • Is the MAF PID value **5 V** or **B+**?	Yes	Repair or replace the wiring harness for a possible short to power supply, then go to Step 9.
		No	Go to the next step.
8	**INSPECT MAF SENSOR GROUND CIRCUIT FOR OPEN CIRCUIT** • Verify that the MAF sensor/IAT sensor No.1 connector is disconnected. • Switch the ignition to off. • Disconnect the PCM connector. • Inspect for continuity between MAF sensor/IAT sensor No.1 terminal B (wiring harness-side) and PCM terminal 2AY (wiring harness-side). • Is there continuity?	Yes	Replace the MAF sensor/IAT sensor No.1, then go to the next step. (See 01-13A-6 INTAKE-AIR SYSTEM REMOVAL/ INSTALLATION [SKYACTIV-G 2.0].)
		No	Repair or replace the wiring harness for a possible open circuit, then go to the next step.
9	**VERIFY DTC TROUBLESHOOTING COMPLETED** • Make sure to reconnect all disconnected connectors. • Clear the DTC from the PCM memory using the M-MDS. (See 01-02-12 AFTER REPAIR PROCEDURE [SKYACTIV-G 2.0].) • Start the engine and warm it up completely. • Perform the KOEO or KOER self test. (See 01-02-12 KOEO/KOER SELF TEST [SKYACTIV-G 2.0].) • Is the same DTC present?	Yes	Repeat the inspection from Step 1. • If the malfunction recurs, replace the PCM. (See 01-40-10 PCM REMOVAL/INSTALLATION [SKYACTIV-G 2.0].) Go to the next step.
		No	Go to the next step.
10	**VERIFY AFTER REPAIR PROCEDURE** • Perform the “AFTER REPAIR PROCEDURE”. (See 01-02-12 AFTER REPAIR PROCEDURE [SKYACTIV-G 2.0].) • Are any DTCs present?	Yes	Go to the applicable DTC inspection. (See 01-02-14 DTC TABLE [SKYACTIV-G 2.0].)
		No	DTC troubleshooting completed.

ON-BOARD DIAGNOSTIC [SKYACTIV-G 2.0]

DTC P0107:00 [SKYACTIV-G 2.0]

id0102h1701100

DTC P0107:00	MAP sensor circuit low input
DETECTION CONDITION	• The PCM monitors the input voltage from the MAP sensor. If the input voltage at the PCM terminal 1BW is **below 0.08 V** for **5 s**, the PCM determines that the MAP sensor circuit has a malfunction. **Diagnostic support note** • This is a continuous monitor (CCM). • The check engine light illuminates if the PCM detects the above malfunction condition during the first drive cycle. • FREEZE FRAME DATA (Mode 2)/Snapshot data is available. • The DTC is stored in the PCM memory.
FAIL-SAFE FUNCTION	• Estimates MAP using MAF sensor and engine speed. • Restricts the upper limit of the engine speed. • Inhibits the evaporative purge control.
POSSIBLE CAUSE	• MAP sensor/IAT sensor No.2 connector or terminals malfunction • Short to ground in wiring harness between the following terminals: — MAP sensor/IAT sensor No.2 terminal C—PCM terminal 1BO — MAP sensor/IAT sensor No.2 terminal D—PCM terminal 1BW • PCM connector or terminals malfunction • MAP sensor signal circuit and ground circuit are shorted to each other • Open circuit in wiring harness between MAP sensor/IAT sensor No.2 terminal C and PCM terminal 1BO • MAP sensor malfunction • PCM malfunction

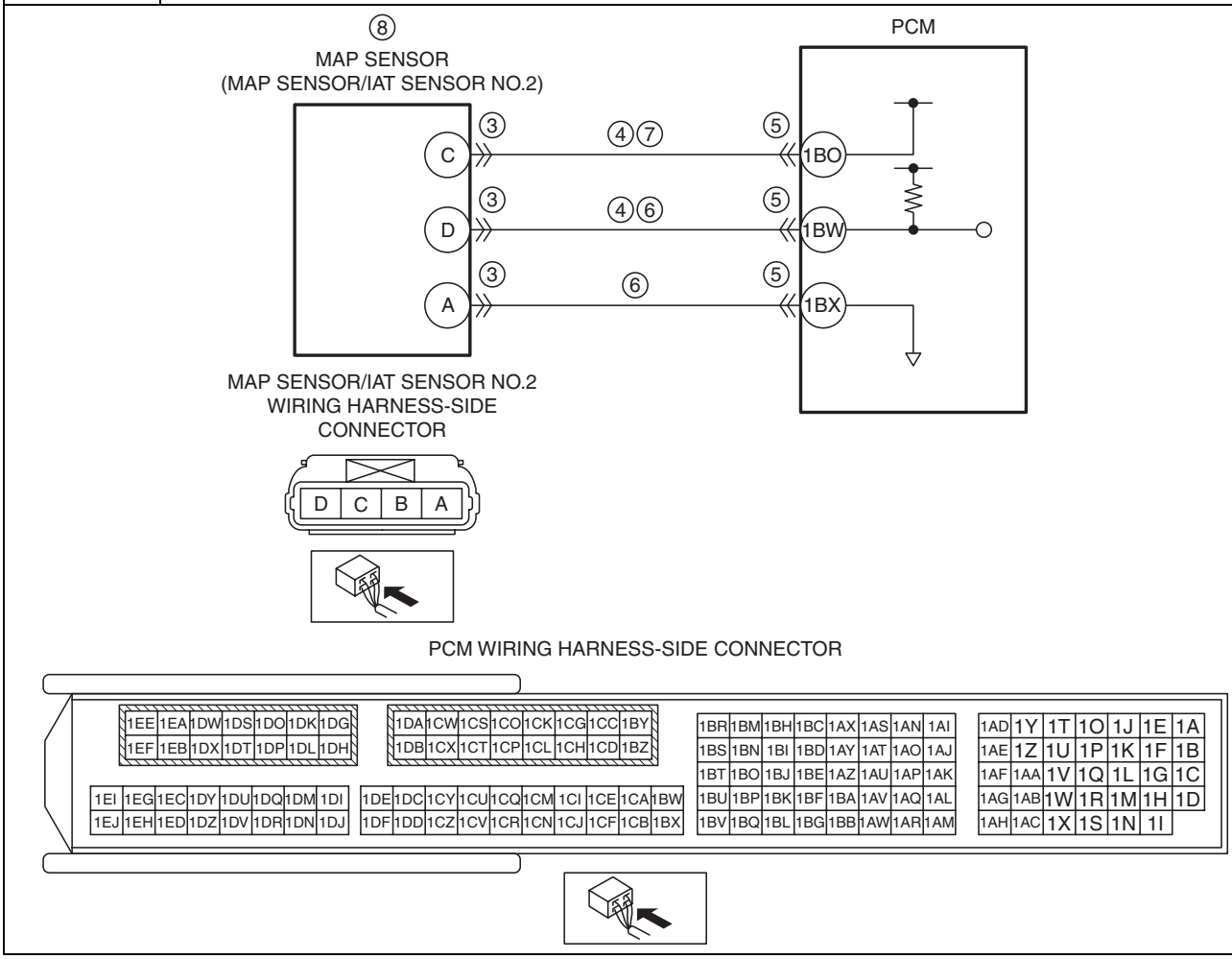

ON-BOARD DIAGNOSTIC [SKYACTIV-G 2.0]

Diagnostic Procedure

STEP	INSPECTION		ACTION
1	**VERIFY FREEZE FRAME DATA (MODE 2)/ SNAPSHOT DATA HAS BEEN RECORDED** • Has the FREEZE FRAME DATA (Mode 2)/ snapshot data been recorded?	Yes	Go to the next step.
		No	Record the FREEZE FRAME DATA (Mode 2)/snapshot data on the repair order, then go to the next step.
2	**VERIFY RELATED SERVICE INFORMATION AVAILABILITY** • Verify related Service Information availability. • Is any related Service Information available?	Yes	Perform repair or diagnosis according to the available Service Information. • If the vehicle is not repaired, go to the next step.
		No	Go to the next step.
3	**INSPECT MAP SENSOR/IAT SENSOR NO.2 CONNECTOR CONDITION** • Switch the ignition to off. • Disconnect the MAP sensor/IAT sensor No.2 connector. • Inspect for poor connection (such as damaged/ pulled-out pins, corrosion). • Is there any malfunction?	Yes	Repair or replace the connector and/or terminals, then go to Step 9.
		No	Go to the next step.
4	**INSPECT MAP SENSOR CIRCUIT FOR SHORT TO GROUND** • Verify that the MAP sensor/IAT sensor No.2 connector is disconnected. • Inspect for continuity between the following terminals (wiring harness-side) and body ground: — MAP sensor/IAT sensor No.2 terminal C — MAP sensor/IAT sensor No.2 terminal D • Is there continuity?	Yes	If the short to ground circuit could be detected in the wiring harness: • Repair or replace the wiring harness for a possible short to ground. If the short to ground circuit could not be detected in the wiring harness: • Replace the PCM (short to ground in the PCM internal circuit). (See 01-40-10 PCM REMOVAL/INSTALLATION [SKYACTIV-G 2.0].) Go to Step 9.
		No	Go to the next step.
5	**INSPECT PCM CONNECTOR CONDITION** • Disconnect the PCM connector. • Inspect for poor connection (such as damaged/ pulled-out pins, corrosion). • Is there any malfunction?	Yes	Repair or replace the connector and/or terminals, then go to Step 9.
		No	Go to the next step.
6	**INSPECT MAP SENSOR SIGNAL CIRCUIT AND GROUND CIRCUIT FOR SHORT TO EACH OTHER** • Verify that the MAP sensor/IAT sensor No.2 and PCM connectors are disconnected. • Inspect for continuity between MAP sensor/IAT sensor No.2 terminals D and A (wiring harness-side). • Is there continuity?	Yes	Repair or replace the wiring harness for a possible short to each other, then go to Step 9.
		No	Go to the next step.
7	**INSPECT MAP SENSOR POWER SUPPLY CIRCUIT FOR OPEN CIRCUIT** • Verify that the MAP sensor/IAT sensor No.2 and PCM connectors are disconnected. • Inspect for continuity between MAP sensor/IAT sensor No.2 terminal C (wiring harness-side) and PCM terminal 1BO (wiring harness-side). • Is there continuity?	Yes	Go to the next step.
		No	Repair or replace the wiring harness for a possible open circuit, then go to Step 9.
8	**INSPECT MAP SENSOR** • Reconnect all disconnected connectors. • Inspect the MAP sensor. (See 01-40-49 MANIFOLD ABSOLUTE PRESSURE (MAP) SENSOR INSPECTION [SKYACTIV-G 2.0].) • Is there any malfunction?	Yes	Replace the MAP sensor/IAT sensor No.2, then go to the next step. (See 01-40-48 MANIFOLD ABSOLUTE PRESSURE (MAP) SENSOR/INTAKE AIR TEMPERATURE (IAT) SENSOR NO.2 REMOVAL/INSTALLATION [SKYACTIV-G 2.0].)
		No	Go to the next step.

ON-BOARD DIAGNOSTIC [SKYACTIV-G 2.0]

STEP	INSPECTION		ACTION
9	**VERIFY DTC TROUBLESHOOTING COMPLETED** • Make sure to reconnect all disconnected connectors. • Clear the DTC from the PCM memory using the M-MDS. (See 01-02-12 AFTER REPAIR PROCEDURE [SKYACTIV-G 2.0].) • Start the engine and warm it up completely. • Perform the KOEO or KOER self test. (See 01-02-12 KOEO/KOER SELF TEST [SKYACTIV-G 2.0].) • Is the same DTC present?	Yes	Repeat the inspection from Step 1. • If the malfunction recurs, replace the PCM. (See 01-40-10 PCM REMOVAL/INSTALLATION [SKYACTIV-G 2.0].) Go to the next step.
		No	Go to the next step.
10	**VERIFY AFTER REPAIR PROCEDURE** • Perform the “AFTER REPAIR PROCEDURE”. (See 01-02-12 AFTER REPAIR PROCEDURE [SKYACTIV-G 2.0].) • Are any DTCs present?	Yes	Go to the applicable DTC inspection. (See 01-02-14 DTC TABLE [SKYACTIV-G 2.0].)
		No	DTC troubleshooting completed.

ON-BOARD DIAGNOSTIC [SKYACTIV-G 2.0]

DTC P0108:00 [SKYACTIV-G 2.0]

id0102h1701200

DTC P0108:00	MAP sensor circuit high input
DETECTION CONDITION	• The PCM monitors the input voltage from the MAP sensor. If the input voltage at the PCM terminal 1BW is **above 4.89 V** for **5 s**, the PCM determines that the MAP sensor circuit has a malfunction. **Diagnostic support note** • This is a continuous monitor (CCM). • The check engine light illuminates if the PCM detects the above malfunction condition during the first drive cycle. • FREEZE FRAME DATA (Mode 2)/Snapshot data is available. • The DTC is stored in the PCM memory.
FAIL-SAFE FUNCTION	• Estimates MAP using MAF sensor and engine speed. • Restricts the upper limit of the engine speed. • Inhibits the evaporative purge control.
POSSIBLE CAUSE	• MAP sensor/IAT sensor No.2 connector or terminals malfunction • PCM connector or terminals malfunction • MAP sensor malfunction • Short to power supply in wiring harness between MAP sensor/IAT sensor No.2 terminal D and PCM terminal 1BW • Open circuit in wiring harness between the following terminals: — MAP sensor/IAT sensor No.2 terminal D—PCM terminal 1BW — MAP sensor/IAT sensor No.2 terminal A—PCM terminal 1BX • PCM malfunction

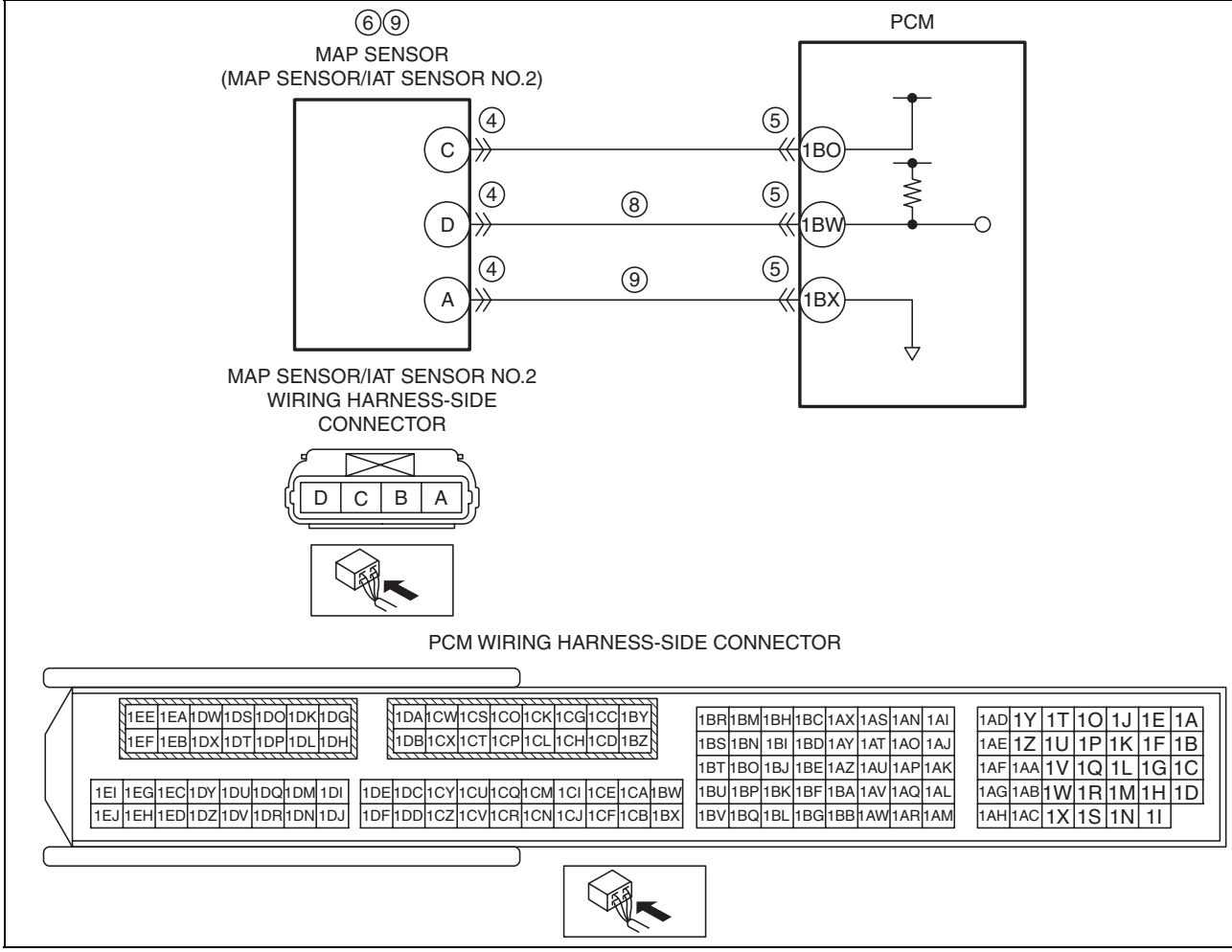

ON-BOARD DIAGNOSTIC [SKYACTIV-G 2.0]

Diagnostic Procedure

STEP	INSPECTION		ACTION
1	**VERIFY FREEZE FRAME DATA (MODE 2)/ SNAPSHOT DATA HAS BEEN RECORDED** • Has the FREEZE FRAME DATA (Mode 2)/ snapshot data been recorded?	Yes	Go to the next step.
		No	Record the FREEZE FRAME DATA (Mode 2)/snapshot data on the repair order, then go to the next step.
2	**VERIFY RELATED SERVICE INFORMATION AVAILABILITY** • Verify related Service Information availability. • Is any related Service Information available?	Yes	Perform repair or diagnosis according to the available Service Information. • If the vehicle is not repaired, go to the next step.
		No	Go to the next step.
3	**CLASSIFY MAP SENSOR MALFUNCTION OR WIRING HARNESS MALFUNCTION** • Access the MAP PID using the M-MDS. (See 01-02-8 ON-BOARD DIAGNOSTIC TEST [SKYACTIV-G 2.0].) • Verify the MAP PID value. • Is the MAP PID value **5 V** or **B+**?	Yes	Go to Step 7.
		No	Go to the next step.
4	**INSPECT MAP SENSOR/IAT SENSOR NO.2 CONNECTOR CONDITION** • Switch the ignition to off. • Disconnect the MAP sensor/IAT sensor No.2 connector. • Inspect for poor connection (such as damaged/ pulled-out pins, corrosion). • Is there any malfunction?	Yes	Repair or replace the connector and/or terminals, then go to Step 10.
		No	Go to the next step.
5	**INSPECT PCM CONNECTOR CONDITION** • Disconnect the PCM connector. • Inspect for poor connection (such as damaged/ pulled-out pins, corrosion). • Is there any malfunction?	Yes	Repair or replace the connector and/or terminals, then go to Step 10.
		No	Go to the next step.
6	**INSPECT MAP SENSOR** • Reconnect all disconnected connectors. • Inspect the MAP sensor. (See 01-40-49 MANIFOLD ABSOLUTE PRESSURE (MAP) SENSOR INSPECTION [SKYACTIV-G 2.0].) • Is there any malfunction?	Yes	Replace the MAP sensor/IAT sensor No.2, then go to Step 10. (See 01-40-48 MANIFOLD ABSOLUTE PRESSURE (MAP) SENSOR/INTAKE AIR TEMPERATURE (IAT) SENSOR NO.2 REMOVAL/INSTALLATION [SKYACTIV-G 2.0].)
		No	Go to Step 10.
7	**CLASSIFY MAP SENSOR SIGNAL CIRCUIT MALFUNCTION OR MAP SENSOR GROUND CIRCUIT MALFUNCTION** • Switch the ignition to off. • Disconnect the MAP sensor/IAT sensor No.2 connector. • Access the MAP PID using the M-MDS. (See 01-02-8 ON-BOARD DIAGNOSTIC TEST [SKYACTIV-G 2.0].) • Verify the MAP PID value. • Is the MAP PID value **5 V** or **B+**?	Yes	Go to the next step.
		No	Go to Step 9.
8	**INSPECT MAP SENSOR SIGNAL CIRCUIT FOR OPEN CIRCUIT** • Verify that the MAP sensor/IAT sensor No.2 connector is disconnected. • Switch the ignition to off. • Disconnect the PCM connector. • Inspect for continuity between MAP sensor/IAT sensor No.2 terminal D (wiring harness-side) and PCM terminal 1BW (wiring harness-side). • Is there continuity?	Yes	Repair or replace the wiring harness for a possible short to power supply, then go to Step 10.
		No	Repair or replace the wiring harness for a possible open circuit, then go to Step 10.

ON-BOARD DIAGNOSTIC [SKYACTIV-G 2.0]

STEP	INSPECTION		ACTION
9	**INSPECT MAP SENSOR GROUND CIRCUIT FOR OPEN CIRCUIT** • Verify that the MAP sensor/IAT sensor No.2 connector is disconnected. • Switch the ignition to off. • Disconnect the PCM connector. • Inspect for continuity between MAP sensor/IAT sensor No.2 terminal A (wiring harness-side) and PCM terminal 1BX (wiring harness-side). • Is there continuity?	Yes	Replace the MAP sensor/IAT sensor No.2, then go to the next step. (See 01-40-48 MANIFOLD ABSOLUTE PRESSURE (MAP) SENSOR/INTAKE AIR TEMPERATURE (IAT) SENSOR NO.2 REMOVAL/INSTALLATION [SKYACTIV-G 2.0].)
		No	Repair or replace the wiring harness for a possible open circuit, then go to the next step.
10	**VERIFY DTC TROUBLESHOOTING COMPLETED** • Make sure to reconnect all disconnected connectors. • Clear the DTC from the PCM memory using the M-MDS. (See 01-02-12 AFTER REPAIR PROCEDURE [SKYACTIV-G 2.0].) • Start the engine and warm it up completely. • Perform the KOEO or KOER self test. (See 01-02-12 KOEO/KOER SELF TEST [SKYACTIV-G 2.0].) • Is the same DTC present?	Yes	Repeat the inspection from Step 1. • If the malfunction recurs, replace the PCM. (See 01-40-10 PCM REMOVAL/INSTALLATION [SKYACTIV-G 2.0].) Go to the next step.
		No	Go to the next step.
11	**VERIFY AFTER REPAIR PROCEDURE** • Perform the “AFTER REPAIR PROCEDURE”. (See 01-02-12 AFTER REPAIR PROCEDURE [SKYACTIV-G 2.0].) • Are any DTCs present?	Yes	Go to the applicable DTC inspection. (See 01-02-14 DTC TABLE [SKYACTIV-G 2.0].)
		No	DTC troubleshooting completed.

ON-BOARD DIAGNOSTIC [SKYACTIV-G 2.0]

DTC P0112:00 [SKYACTIV-G 2.0]

id0102h1701400

DTC P0112:00	**IAT sensor No.1 circuit low input**
DETECTION CONDITION	• The PCM monitors the IAT sensor No.1 signal. If the PCM detects that the IAT sensor No.1 voltage at the PCM terminal 2U is **below 0.19 V** for **5 s**, the PCM determines that the IAT sensor No.1 circuit has a malfunction. **Diagnostic support note** • This is a continuous monitor (CCM). • The check engine light illuminates if the PCM detects the above malfunction condition during the first drive cycle. • FREEZE FRAME DATA (Mode 2)/Snapshot data is available. • The DTC is stored in the PCM memory.
FAIL-SAFE FUNCTION	• Illuminates the charging system warning light. • Fixes the intake air temperature (for engine control) at **20 °C {68 °F}**. • Inhibits the fuel cut control during shift change.
POSSIBLE CAUSE	• MAF sensor/IAT sensor No.1 connector or terminals malfunction • IAT sensor No.1 malfunction • Short to ground in wiring harness between MAF sensor/IAT sensor No.1 terminal A and PCM terminal 2U • PCM connector or terminals malfunction • IAT sensor No.1 signal circuit and ground circuit are shorted to each other • PCM malfunction

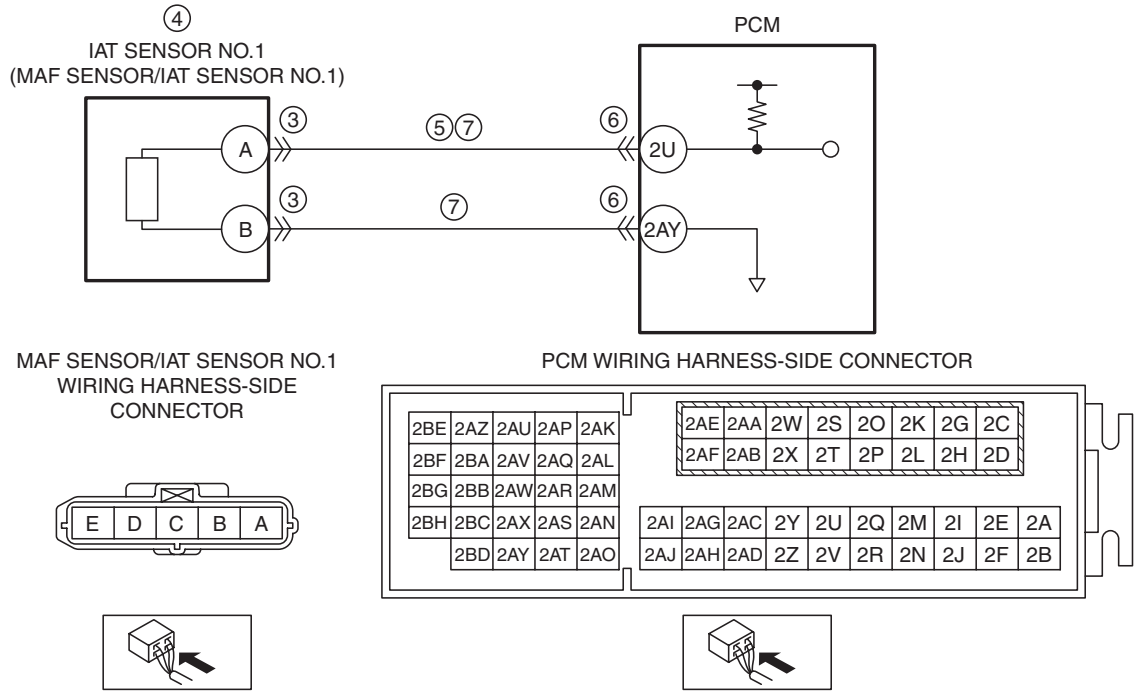

Diagnostic Procedure

STEP	INSPECTION		ACTION
1	**VERIFY FREEZE FRAME DATA (MODE 2)/ SNAPSHOT DATA HAS BEEN RECORDED** • Has the FREEZE FRAME DATA (Mode 2)/ snapshot data been recorded?	Yes	Go to the next step.
		No	Record the FREEZE FRAME DATA (Mode 2)/snapshot data on the repair order, then go to the next step.
2	**VERIFY RELATED SERVICE INFORMATION AVAILABILITY** • Verify related Service Information availability. • Is any related Service Information available?	Yes	Perform repair or diagnosis according to the available Service Information. • If the vehicle is not repaired, go to the next step.
		No	Go to the next step.
3	**INSPECT MAF SENSOR/IAT SENSOR NO.1 CONNECTOR CONDITION** • Switch the ignition to off. • Disconnect the MAF sensor/IAT sensor No.1 connector. • Inspect for poor connection (such as damaged/ pulled-out pins, corrosion). • Is there any malfunction?	Yes	Repair or replace the connector and/or terminals, then go to Step 8.
		No	Go to the next step.

ON-BOARD DIAGNOSTIC [SKYACTIV-G 2.0]

STEP	INSPECTION		ACTION
4	**INSPECT IAT SENSOR NO.1** • Inspect the IAT sensor No.1. (See 01-40-46 INTAKE AIR TEMPERATURE (IAT) SENSOR INSPECTION [SKYACTIV-G 2.0].) • Is there any malfunction?	Yes	Replace the MAF sensor/IAT sensor No.1, then go to Step 8. (See 01-13A-6 INTAKE-AIR SYSTEM REMOVAL/INSTALLATION [SKYACTIV-G 2.0].)
		No	Go to the next step.
5	**INSPECT IAT SENSOR NO.1 SIGNAL CIRCUIT FOR SHORT TO GROUND** • Verify that the MAF sensor/IAT sensor No.1 connector is disconnected. • Inspect for continuity between MAF sensor/IAT sensor No.1 terminal A (wiring harness-side) and body ground. • Is there continuity?	Yes	If the short to ground circuit could be detected in the wiring harness: • Repair or replace the wiring harness for a possible short to ground. If the short to ground circuit could not be detected in the wiring harness: • Replace the PCM (short to ground in the PCM internal circuit). (See 01-40-10 PCM REMOVAL/INSTALLATION [SKYACTIV-G 2.0].) Go to Step 8.
		No	Go to the next step.
6	**INSPECT PCM CONNECTOR CONDITION** • Disconnect the PCM connector. • Inspect for poor connection (such as damaged/pulled-out pins, corrosion). • Is there any malfunction?	Yes	Repair or replace the connector and/or terminals, then go to Step 8.
		No	Go to the next step.
7	**INSPECT IAT SENSOR NO.1 SIGNAL CIRCUIT AND GROUND CIRCUIT FOR SHORT TO EACH OTHER** • Verify that the MAF sensor/IAT sensor No.1 and PCM connectors are disconnected. • Inspect for continuity between MAF sensor/IAT sensor No.1 terminals A and B (wiring harness-side). • Is there continuity?	Yes	Repair or replace the wiring harness for a possible short to each other, then go to the next step.
		No	Go to the next step.
8	**VERIFY DTC TROUBLESHOOTING COMPLETED** • Make sure to reconnect all disconnected connectors. • Clear the DTC from the PCM memory using the M-MDS. (See 01-02-12 AFTER REPAIR PROCEDURE [SKYACTIV-G 2.0].) • Start the engine and warm it up completely. • Perform the KOEO or KOER self test. (See 01-02-12 KOEO/KOER SELF TEST [SKYACTIV-G 2.0].) • Is the same DTC present?	Yes	Repeat the inspection from Step 1. • If the malfunction recurs, replace the PCM. (See 01-40-10 PCM REMOVAL/INSTALLATION [SKYACTIV-G 2.0].) Go to the next step.
		No	Go to the next step.
9	**VERIFY AFTER REPAIR PROCEDURE** • Perform the “AFTER REPAIR PROCEDURE”. (See 01-02-12 AFTER REPAIR PROCEDURE [SKYACTIV-G 2.0].) • Are any DTCs present?	Yes	Go to the applicable DTC inspection. (See 01-02-14 DTC TABLE [SKYACTIV-G 2.0].)
		No	DTC troubleshooting completed.

ON-BOARD DIAGNOSTIC [SKYACTIV-G 2.0]

DTC P0113:00 [SKYACTIV-G 2.0]

id0102h1701500

DTC P0113:00	**IAT sensor No.1 circuit high input**
DETECTION CONDITION	• The PCM monitors the IAT sensor No.1 signal. If the PCM detects that the IAT sensor No.1 voltage at the PCM terminal 2U is **above 4.62 V** for **5 s**, the PCM determines that the IAT sensor No.1 circuit has a malfunction. **Diagnostic support note** • This is a continuous monitor (CCM). • The check engine light illuminates if the PCM detects the above malfunction condition during the first drive cycle. • FREEZE FRAME DATA (Mode 2)/Snapshot data is available. • The DTC is stored in the PCM memory.
FAIL-SAFE FUNCTION	• Illuminates the charging system warning light. • Fixes the intake air temperature (for engine control) at **20 °C {68 °F}**. • Inhibits the fuel cut control during shift change.
POSSIBLE CAUSE	• MAF sensor/IAT sensor No.1 connector or terminals malfunction • PCM connector or terminals malfunction • IAT sensor No.1 malfunction • Short to power supply in wiring harness between MAF sensor/IAT sensor No.1 terminal A and PCM terminal 2U • Open circuit in wiring harness between the following terminals: — MAF sensor/IAT sensor No.1 terminal A—PCM terminal 2U — MAF sensor/IAT sensor No.1 terminal B—PCM terminal 2AY • PCM malfunction

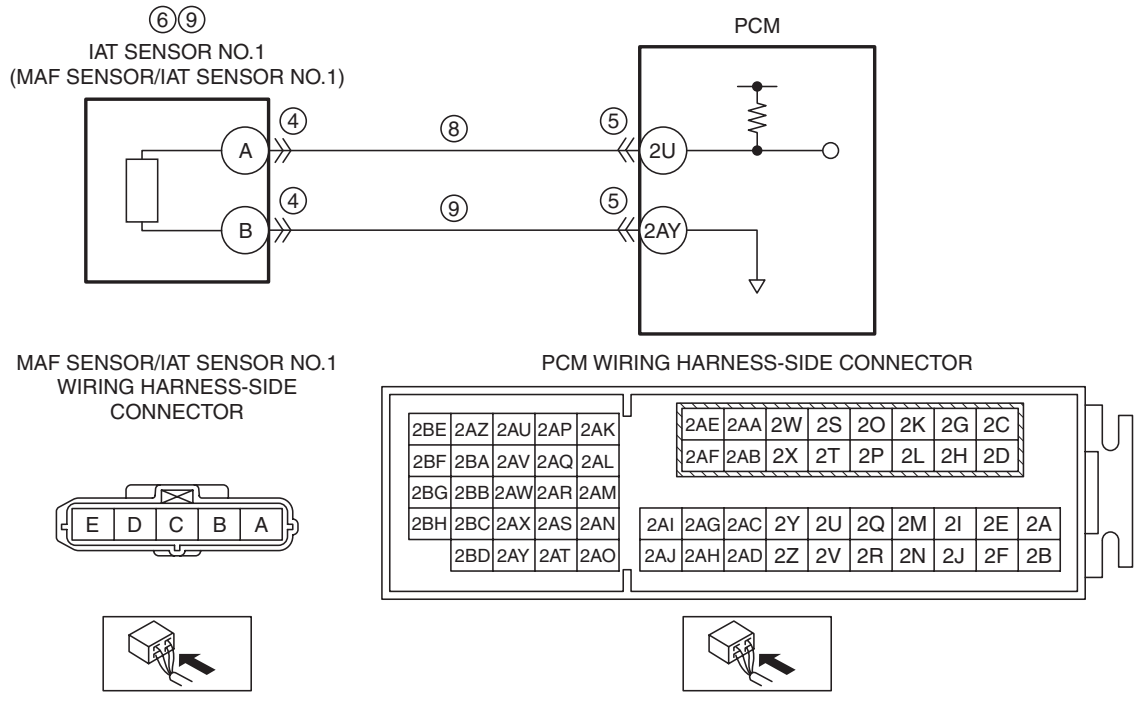

Diagnostic Procedure

STEP	INSPECTION		ACTION
1	**VERIFY FREEZE FRAME DATA (MODE 2)/ SNAPSHOT DATA HAS BEEN RECORDED** • Has the FREEZE FRAME DATA (Mode 2)/ snapshot data been recorded?	Yes	Go to the next step.
		No	Record the FREEZE FRAME DATA (Mode 2)/snapshot data on the repair order, then go to the next step.
2	**VERIFY RELATED SERVICE INFORMATION AVAILABILITY** • Verify related Service Information availability. • Is any related Service Information available?	Yes	Perform repair or diagnosis according to the available Service Information. • If the vehicle is not repaired, go to the next step.
		No	Go to the next step.

ON-BOARD DIAGNOSTIC [SKYACTIV-G 2.0]

STEP	INSPECTION		ACTION
3	**CLASSIFY IAT SENSOR NO.1 MALFUNCTION OR WIRING HARNESS MALFUNCTION** • Access the IAT PID using the M-MDS. (See 01-02-8 ON-BOARD DIAGNOSTIC TEST [SKYACTIV-G 2.0].) • Verify the IAT PID value. • Is the IAT PID value **5 V** or **B+**?	Yes	Go to Step 7.
		No	Go to the next step.
4	**INSPECT MAF SENSOR/IAT SENSOR NO.1 CONNECTOR CONDITION** • Switch the ignition to off. • Disconnect the MAF sensor/IAT sensor No.1 connector. • Inspect for poor connection (such as damaged/ pulled-out pins, corrosion). • Is there any malfunction?	Yes	Repair or replace the connector and/or terminals, then go to Step 10.
		No	Go to the next step.
5	**INSPECT PCM CONNECTOR CONDITION** • Disconnect the PCM connector. • Inspect for poor connection (such as damaged/ pulled-out pins, corrosion). • Is there any malfunction?	Yes	Repair or replace the connector and/or terminals, then go to Step 10.
		No	Go to the next step.
6	**INSPECT IAT SENSOR NO.1** • Inspect the IAT sensor No.1. (See 01-40-46 INTAKE AIR TEMPERATURE (IAT) SENSOR INSPECTION [SKYACTIV-G 2.0].) • Is there any malfunction?	Yes	Replace the MAF sensor/IAT sensor No.1, then go to Step 10. (See 01-13A-6 INTAKE-AIR SYSTEM REMOVAL/ INSTALLATION [SKYACTIV-G 2.0].)
		No	Go to Step 10.
7	**CLASSIFY IAT SENSOR NO.1 SIGNAL CIRCUIT MALFUNCTION OR IAT SENSOR NO.1 GROUND CIRCUIT MALFUNCTION** • Switch the ignition to off. • Disconnect the MAF sensor/IAT sensor No.1 connector. • Access the IAT PID using the M-MDS. (See 01-02-8 ON-BOARD DIAGNOSTIC TEST [SKYACTIV-G 2.0].) • Verify the IAT PID value. • Is the IAT PID value **5 V** or **B+**?	Yes	Go to the next step.
		No	Go to Step 9.
8	**INSPECT IAT SENSOR NO.1 SIGNAL CIRCUIT FOR OPEN CIRCUIT** • Verify that the MAF sensor/IAT sensor No.1 connector is disconnected. • Switch the ignition to off. • Disconnect the PCM connector. • Inspect for continuity between MAF sensor/IAT sensor No.1 terminal A (wiring harness-side) and PCM terminal 2U (wiring harness-side). • Is there continuity?	Yes	Repair or replace the wiring harness for a possible short to power supply, then go to Step 10.
		No	Repair or replace the wiring harness for a possible open circuit, then go to Step 10.
9	**INSPECT IAT SENSOR NO.1 GROUND CIRCUIT FOR OPEN CIRCUIT** • Verify that the MAF sensor/IAT sensor No.1 connector is disconnected. • Switch the ignition to off. • Disconnect the PCM connector. • Inspect for continuity between MAF sensor/IAT sensor No.1 terminal B (wiring harness-side) and PCM terminal 2AY (wiring harness-side). • Is there continuity?	Yes	Replace the MAF sensor/IAT sensor No.1, then go to the next step. (See 01-13A-6 INTAKE-AIR SYSTEM REMOVAL/ INSTALLATION [SKYACTIV-G 2.0].)
		No	Repair or replace the wiring harness for a possible open circuit, then go to the next step.

ON-BOARD DIAGNOSTIC [SKYACTIV-G 2.0]

STEP	INSPECTION		ACTION
10	**VERIFY DTC TROUBLESHOOTING COMPLETED** • Make sure to reconnect all disconnected connectors. • Clear the DTC from the PCM memory using the M-MDS. (See 01-02-12 AFTER REPAIR PROCEDURE [SKYACTIV-G 2.0].) • Start the engine and warm it up completely. • Perform the KOEO or KOER self test. (See 01-02-12 KOEO/KOER SELF TEST [SKYACTIV-G 2.0].) • Is the same DTC present?	Yes	Repeat the inspection from Step 1. • If the malfunction recurs, replace the PCM. (See 01-40-10 PCM REMOVAL/INSTALLATION [SKYACTIV-G 2.0].) Go to the next step.
		No	Go to the next step.
11	**VERIFY AFTER REPAIR PROCEDURE** • Perform the “AFTER REPAIR PROCEDURE”. (See 01-02-12 AFTER REPAIR PROCEDURE [SKYACTIV-G 2.0].) • Are any DTCs present?	Yes	Go to the applicable DTC inspection. (See 01-02-14 DTC TABLE [SKYACTIV-G 2.0].)
		No	DTC troubleshooting completed.

DTC P0116:00 [SKYACTIV-G 2.0]

id0102h1146800

DTC P0116:00	ECT sensor circuit range/performance problem
DETECTION CONDITION	• The PCM monitors the maximum value and minimum value of engine coolant temperature when the engine is started and **5 min** have been passed after leaving the vehicle **6 h or more**. If difference between maximum and minimum values of engine coolant temperature is **below 6 °C {43 °F}** the PCM determines that there is an ECT sensor circuit range/performance problem. **Diagnostic support note** • This is a continuous monitor (engine cooling system). • The check engine light illuminates if the PCM detects the above malfunction condition during the first drive cycle. • FREEZE FRAME DATA (Mode 2)/Snapshot data is available. • The DTC is stored in the PCM memory.
FAIL-SAFE FUNCTION	—
POSSIBLE CAUSE	• ECT sensor connector or terminals malfunction • PCM connector or terminals malfunction • ECT sensor malfunction • Thermostat malfunction • PCM malfunction
SYSTEM WIRING DIAGRAM	—

Diagnostic Procedure

STEP	INSPECTION		ACTION
1	**IDENTIFY TRIGGER DTC FOR FREEZE FRAME DATA (MODE 2)** • Perform the Freeze Frame PID Data Access Procedure. (See 01-02-8 ON-BOARD DIAGNOSTIC TEST [SKYACTIV-G 2.0].) • Is the DTC P0116:00 on FREEZE FRAME DATA (Mode 2)?	Yes	Go to the next step.
		No	Go to the troubleshooting procedure for DTC on FREEZE FRAME DATA (Mode 2). (See 01-02-14 DTC TABLE [SKYACTIV-G 2.0].)
2	**VERIFY FREEZE FRAME DATA (MODE 2)/ SNAPSHOT DATA AND DIAGNOSTIC MONITORING TEST RESULTS HAVE BEEN RECORDED** • Have the FREEZE FRAME DATA (Mode 2)/ snapshot data and DIAGNOSTIC MONITORING TEST RESULTS (engine cooling system related) been recorded?	Yes	Go to the next step.
		No	Record the FREEZE FRAME DATA (Mode 2)/snapshot data and DIAGNOSTIC MONITORING TEST RESULTS on the repair order, then go to the next step.

ON-BOARD DIAGNOSTIC [SKYACTIV-G 2.0]

STEP	INSPECTION		ACTION
3	**VERIFY RELATED SERVICE INFORMATION AVAILABILITY** • Verify related Service Information availability. • Is any related Service Information available?	Yes	Perform repair or diagnosis according to the available Service Information. • If the vehicle is not repaired, go to the next step.
		No	Go to the next step.
4	**INSPECT ECT SENSOR CONNECTOR CONDITION** • Switch the ignition to off. • Disconnect the ECT sensor connector. • Inspect for poor connection (such as damaged/ pulled-out pins, corrosion). • Is there any malfunction?	Yes	Repair or replace the connector and/or terminals, then go to Step 9.
		No	Go to the next step.
5	**INSPECT PCM CONNECTOR CONDITION** • Disconnect the PCM connector. • Inspect for poor connection (such as damaged/ pulled-out pins, corrosion). • Is there any malfunction?	Yes	Repair or replace the connector and/or terminals, then go to Step 9.
		No	Go to the next step.
6	**INSPECT ECT SENSOR** • Inspect the ECT sensor. (See 01-40-43 ENGINE COOLANT TEMPERATURE (ECT) SENSOR INSPECTION [SKYACTIV-G 2.0].) • Is there any malfunction?	Yes	Replace the ECT sensor, then go to Step 9. (See 01-40-41 ENGINE COOLANT TEMPERATURE (ECT) SENSOR REMOVAL/INSTALLATION [SKYACTIV-G 2.0].)
		No	Go to the next step.
7	**COMPARE ECT PID VALUE** • Prepare a new ECT sensor. • Connect the ECT sensor connector to the new one without installing to the engine. • Switch the ignition ON (engine off) and record the ECT PID value. (See 01-02-8 ON-BOARD DIAGNOSTIC TEST [SKYACTIV-G 2.0].) • Switch the ignition to off. • Replace the malfunction ECT sensor with new one. • Start the engine and wait for **5 min**. • Record the ECT PID value. • Is the difference between each ECT PID values **more than 6 °C {43 °F}**?	Yes	Go to the next step.
		No	Go to Step 9.
8	**INSPECT THERMOSTAT** • Switch the ignition to off. • Inspect the thermostat. (See 01-12A-13 THERMOSTAT INSPECTION [SKYACTIV-G 2.0].) • Is there any malfunction?	Yes	Replace the thermostat, then go to the next step. (See 01-12A-12 THERMOSTAT REMOVAL/INSTALLATION [SKYACTIV-G 2.0].)
		No	Go to the next step.
9	**VERIFY DTC TROUBLESHOOTING COMPLETED** • Make sure to reconnect all disconnected connectors. • Clear the DTC from the PCM memory using the M-MDS. (See 01-02-12 AFTER REPAIR PROCEDURE [SKYACTIV-G 2.0].) • Switch the ignition to off. • Start the engine and warm it up completely. • Perform the DTC Reading Procedure. (See 01-02-8 ON-BOARD DIAGNOSTIC TEST [SKYACTIV-G 2.0].) • Is the same DTC present?	Yes	Repeat the inspection from Step 1. • If the malfunction recurs, replace the PCM. (See 01-40-10 PCM REMOVAL/INSTALLATION [SKYACTIV-G 2.0].) Go to the next step.
		No	Go to the next step.
10	**VERIFY AFTER REPAIR PROCEDURE** • Perform the “AFTER REPAIR PROCEDURE”. (See 01-02-12 AFTER REPAIR PROCEDURE [SKYACTIV-G 2.0].) • Are any DTCs present?	Yes	Go to the applicable DTC inspection. (See 01-02-14 DTC TABLE [SKYACTIV-G 2.0].)
		No	DTC troubleshooting completed.

ON-BOARD DIAGNOSTIC [SKYACTIV-G 2.0]

DTC P0117:00 [SKYACTIV-G 2.0]

id0102h1701600

DTC P0117:00	ECT sensor circuit low input
DETECTION CONDITION	• The PCM monitors the ECT sensor signal. If the PCM detects that the ECT sensor voltage at the PCM terminal 1AK is **below 0.2 V** for **5 s**, the PCM determines that the ECT sensor circuit has a malfunction. **Diagnostic support note** • This is a continuous monitor (engine cooling system). • The check engine light illuminates if the PCM detects the above malfunction condition during the first drive cycle. • FREEZE FRAME DATA (Mode 2)/Snapshot data is available. • The DTC is stored in the PCM memory.
FAIL-SAFE FUNCTION	• Fixes the water temperature for the engine control at **40 °C {104 °F}**, and for the idle air control at **80 °C {176 °F}**. • Operates the cooling fan (high speed rotation). • Inhibits the fuel cut control during shift change.
POSSIBLE CAUSE	• Engine overheating (cooling system malfunction) • ECT sensor connector or terminals malfunction • ECT sensor malfunction • Short to ground in wiring harness between ECT sensor terminal A and PCM terminal 1AK • PCM connector or terminals malfunction • ECT sensor signal circuit and ground circuit are shorted to each other • PCM malfunction

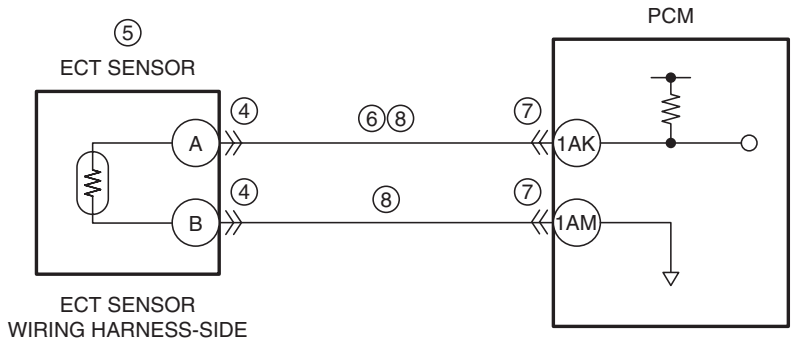

ECT SENSOR WIRING HARNESS-SIDE CONNECTOR

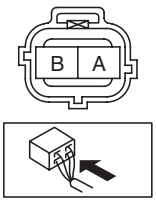

PCM WIRING HARNESS-SIDE CONNECTOR

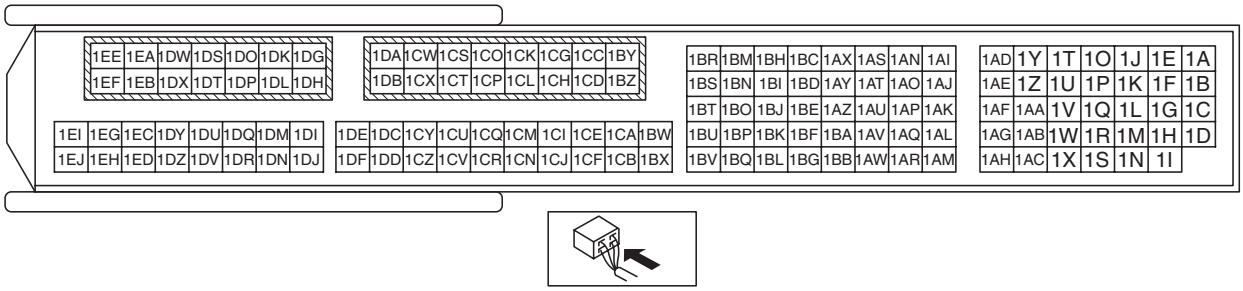

ON-BOARD DIAGNOSTIC [SKYACTIV-G 2.0]

Diagnostic Procedure

STEP	INSPECTION		ACTION
1	**VERIFY FREEZE FRAME DATA (MODE 2)/ SNAPSHOT DATA AND DIAGNOSTIC MONITORING TEST RESULTS HAVE BEEN RECORDED** • Have the FREEZE FRAME DATA (Mode 2)/ snapshot data and DIAGNOSTIC MONITORING TEST RESULTS (engine cooling system related) been recorded?	Yes	Go to the next step.
		No	Record the FREEZE FRAME DATA (Mode 2)/snapshot data and DIAGNOSTIC MONITORING TEST RESULTS on the repair order, then go to the next step.
2	**VERIFY RELATED SERVICE INFORMATION AVAILABILITY** • Verify related Service Information availability. • Is any related Service Information available?	Yes	Perform repair or diagnosis according to the available Service Information. • If the vehicle is not repaired, go to the next step.
		No	Go to the next step.
3	**VERIFY ENGINE CONDITION** • Verify the engine condition. • Is the engine overheating?	Yes	Perform the symptom troubleshooting “NO.17 COOLING SYSTEM CONCERNS-OVERHEATING”. (See 01-03-88 NO.17 COOLING SYSTEM CONCERNS-OVERHEATING [SKYACTIV-G 2.0].)
		No	Go to the next step.
4	**INSPECT ECT SENSOR CONNECTOR CONDITION** • Switch the ignition to off. • Disconnect the ECT sensor connector. • Inspect for poor connection (such as damaged/ pulled-out pins, corrosion). • Is there any malfunction?	Yes	Repair or replace the connector and/or terminals, then go to Step 9.
		No	Go to the next step.
5	**CLASSIFY ECT SENSOR MALFUNCTION OR WIRING HARNESS MALFUNCTION** • Reconnect all disconnected connectors. • Access the ECT PID using the M-MDS. (See 01-02-8 ON-BOARD DIAGNOSTIC TEST [SKYACTIV-G 2.0].) • Verify the ECT PID value when disconnecting the ECT sensor connector. • Does the ECT PID value change?	Yes	Replace the ECT sensor, then go to Step 9. (See 01-40-41 ENGINE COOLANT TEMPERATURE (ECT) SENSOR REMOVAL/INSTALLATION [SKYACTIV-G 2.0].)
		No	Go to the next step.
6	**INSPECT ECT SENSOR SIGNAL CIRCUIT FOR SHORT TO GROUND** • Verify that the ECT sensor connector is disconnected. • Switch the ignition to off. • Inspect for continuity between ECT sensor terminal A (wiring harness-side) and body ground. • Is there continuity?	Yes	If the short to ground circuit could be detected in the wiring harness: • Repair or replace the wiring harness for a possible short to ground. If the short to ground circuit could not be detected in the wiring harness: • Replace the PCM (short to ground in the PCM internal circuit). (See 01-40-10 PCM REMOVAL/INSTALLATION [SKYACTIV-G 2.0].) Go to Step 9.
		No	Go to the next step.
7	**INSPECT PCM CONNECTOR CONDITION** • Disconnect the PCM connector. • Inspect for poor connection (such as damaged/ pulled-out pins, corrosion). • Is there any malfunction?	Yes	Repair or replace the connector and/or terminals, then go to Step 9.
		No	Go to the next step.
8	**INSPECT ECT SENSOR SIGNAL CIRCUIT AND GROUND CIRCUIT FOR SHORT TO EACH OTHER** • Verify that the ECT sensor and PCM connectors are disconnected. • Inspect for continuity between ECT sensor terminals A and B (wiring harness-side). • Is there continuity?	Yes	Repair or replace the wiring harness for a possible short to each other, then go to the next step.
		No	Go to the next step.

ON-BOARD DIAGNOSTIC [SKYACTIV-G 2.0]

STEP	INSPECTION		ACTION
9	**VERIFY DTC TROUBLESHOOTING COMPLETED** • Make sure to reconnect all disconnected connectors. • Clear the DTC from the PCM memory using the M-MDS. (See 01-02-12 AFTER REPAIR PROCEDURE [SKYACTIV-G 2.0].) • Perform the KOEO or KOER self test. (See 01-02-12 KOEO/KOER SELF TEST [SKYACTIV-G 2.0].) • Is the same DTC present?	Yes	Repeat the inspection from Step 1. • If the malfunction recurs, replace the PCM. (See 01-40-10 PCM REMOVAL/INSTALLATION [SKYACTIV-G 2.0].) Go to the next step.
		No	Go to the next step.
10	**VERIFY AFTER REPAIR PROCEDURE** • Perform the “AFTER REPAIR PROCEDURE”. (See 01-02-12 AFTER REPAIR PROCEDURE [SKYACTIV-G 2.0].) • Are any DTCs present?	Yes	Go to the applicable DTC inspection. (See 01-02-14 DTC TABLE [SKYACTIV-G 2.0].)
		No	DTC troubleshooting completed.

ON-BOARD DIAGNOSTIC [SKYACTIV-G 2.0]

DTC P0118:00 [SKYACTIV-G 2.0]

id0102h1701700

DTC P0118:00	ECT sensor circuit high input
DETECTION CONDITION	• The PCM monitors the ECT sensor signal. If the PCM detects that the ECT sensor voltage at the PCM terminal 1AK is **above 4.6 V** for **5 s**, the PCM determines that the ECT sensor circuit has a malfunction. **Diagnostic support note** • This is a continuous monitor (engine cooling system). • The check engine light illuminates if the PCM detects the above malfunction condition during the first drive cycle. • FREEZE FRAME DATA (Mode 2)/Snapshot data is available. • The DTC is stored in the PCM memory.
FAIL-SAFE FUNCTION	• Fixes the water temperature for the engine control at **40 °C {104 °F}**, and for the idle air control at **80 °C {176 °F}**. • Operates the cooling fan (high speed rotation). • Inhibits the fuel cut control during shift change.
POSSIBLE CAUSE	• ECT sensor connector or terminals malfunction • ECT sensor malfunction • PCM connector or terminals malfunction • Short to power supply in wiring harness between ECT sensor terminal A and PCM terminal 1AK • Open circuit in wiring harness between the following terminals: — ECT sensor terminal A—PCM terminal 1AK — ECT sensor terminal B—PCM terminal 1AM • PCM malfunction

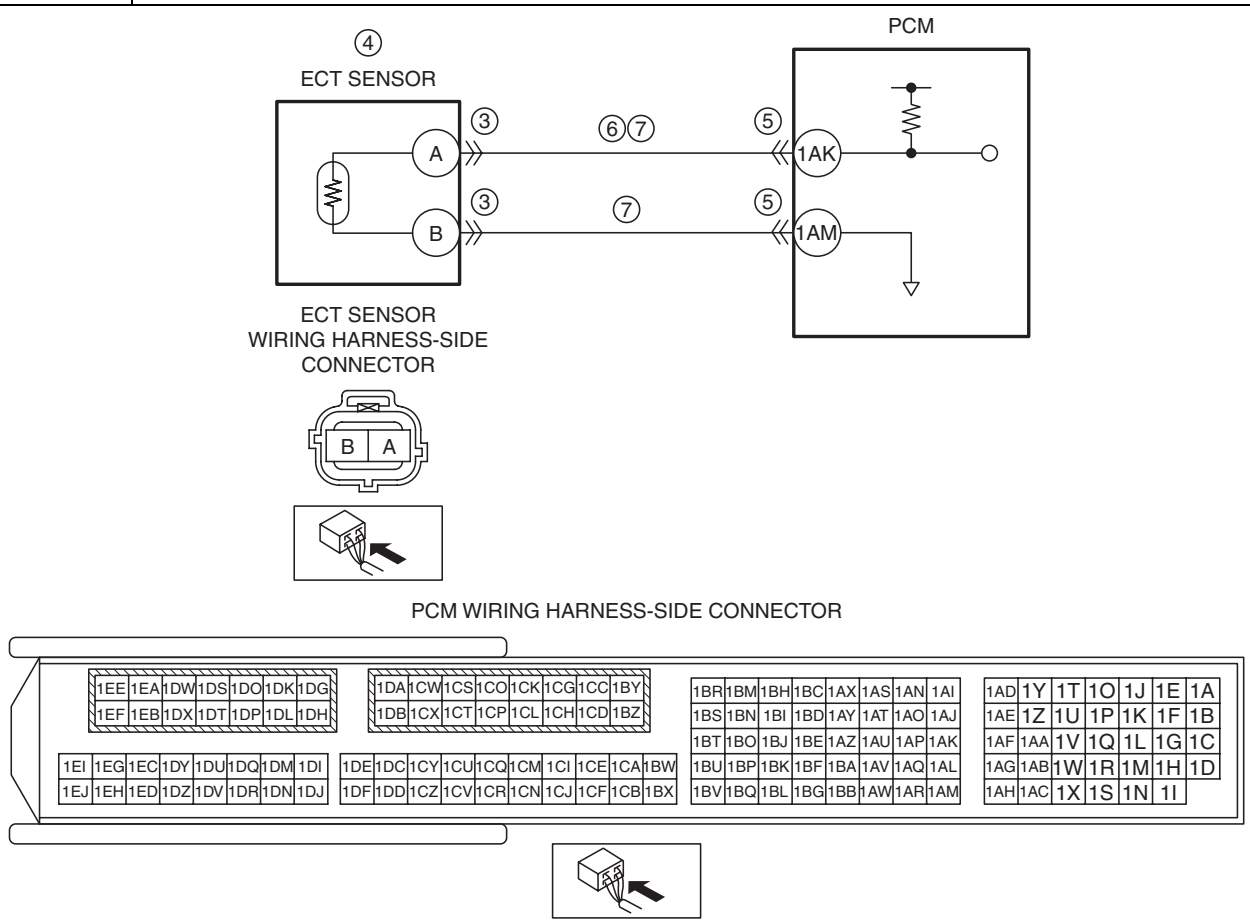

ON-BOARD DIAGNOSTIC [SKYACTIV-G 2.0]

Diagnostic Procedure

STEP	INSPECTION		ACTION
1	**VERIFY FREEZE FRAME DATA (MODE 2)/ SNAPSHOT DATA AND DIAGNOSTIC MONITORING TEST RESULTS HAVE BEEN RECORDED** • Have the FREEZE FRAME DATA (Mode 2)/ snapshot data and DIAGNOSTIC MONITORING TEST RESULTS (engine cooling system related) been recorded?	Yes	Go to the next step.
		No	Record the FREEZE FRAME DATA (Mode 2)/snapshot data and DIAGNOSTIC MONITORING TEST RESULTS on the repair order, then go to the next step.
2	**VERIFY RELATED SERVICE INFORMATION AVAILABILITY** • Verify related Service Information availability. • Is any related Service Information available?	Yes	Perform repair or diagnosis according to the available Service Information. • If the vehicle is not repaired, go to the next step.
		No	Go to the next step.
3	**INSPECT ECT SENSOR CONNECTOR CONDITION** • Switch the ignition to off. • Disconnect the ECT sensor connector. • Inspect for poor connection (such as damaged/ pulled-out pins, corrosion). • Is there any malfunction?	Yes	Repair or replace the connector and/or terminals, then go to Step 8.
		No	Go to the next step.
4	**CLASSIFY ECT SENSOR MALFUNCTION OR WIRING HARNESS MALFUNCTION** • Verify that the ECT sensor connector is disconnected. • Access the ECT PID using the M-MDS. (See 01-02-8 ON-BOARD DIAGNOSTIC TEST [SKYACTIV-G 2.0].) • Connect a jumper wire between ECT sensor terminals A and B (wiring harness-side). • Verify the ECT PID value. • Is the voltage **4.6 V or below**?	Yes	Replace the ECT sensor, then go to Step 8. (See 01-40-41 ENGINE COOLANT TEMPERATURE (ECT) SENSOR REMOVAL/INSTALLATION [SKYACTIV-G 2.0].)
		No	Go to the next step.
5	**INSPECT PCM CONNECTOR CONDITION** • Switch the ignition to off. • Disconnect the PCM connector. • Inspect for poor connection (such as damaged/ pulled-out pins, corrosion). • Is there any malfunction?	Yes	Repair or replace the connector and/or terminals, then go to Step 8.
		No	Go to the next step.
6	**INSPECT ECT SENSOR SIGNAL CIRCUIT FOR SHORT TO POWER SUPPLY** • Verify that the ECT sensor and PCM connectors are disconnected. • Switch the ignition ON (engine off or on). • Measure the voltage at the ECT sensor terminal A (wiring harness-side). • Is the voltage **0 V**?	Yes	Go to the next step.
		No	Repair or replace the wiring harness for a possible short to power supply, then go to Step 8.
7	**INSPECT ECT SENSOR CIRCUIT FOR OPEN CIRCUIT** • Verify that the ECT sensor and PCM connectors are disconnected. • Switch the ignition to off. • Inspect for continuity between the following terminals (wiring harness-side): — ECT sensor terminal A—PCM terminal 1AK — ECT sensor terminal B—PCM terminal 1AM • Is there continuity?	Yes	Go to the next step.
		No	Repair or replace the wiring harness for a possible open circuit, then go to the next step.

ON-BOARD DIAGNOSTIC [SKYACTIV-G 2.0]

STEP	INSPECTION		ACTION
8	**VERIFY DTC TROUBLESHOOTING COMPLETED** • Make sure to reconnect all disconnected connectors. • Clear the DTC from the PCM memory using the M-MDS. (See 01-02-12 AFTER REPAIR PROCEDURE [SKYACTIV-G 2.0].) • Perform the KOEO or KOER self test. (See 01-02-12 KOEO/KOER SELF TEST [SKYACTIV-G 2.0].) • Is the same DTC present?	Yes	Repeat the inspection from Step 1. • If the malfunction recurs, replace the PCM. (See 01-40-10 PCM REMOVAL/INSTALLATION [SKYACTIV-G 2.0].) Go to the next step.
		No	Go to the next step.
9	**VERIFY AFTER REPAIR PROCEDURE** • Perform the “AFTER REPAIR PROCEDURE”. (See 01-02-12 AFTER REPAIR PROCEDURE [SKYACTIV-G 2.0].) • Are any DTCs present?	Yes	Go to the applicable DTC inspection. (See 01-02-14 DTC TABLE [SKYACTIV-G 2.0].)
		No	DTC troubleshooting completed.

ON-BOARD DIAGNOSTIC [SKYACTIV-G 2.0]

DTC P0122:00 [SKYACTIV-G 2.0]

id0102h1701800

DTC P0122:00	TP sensor No.1 circuit low input
DETECTION CONDITION	• If the PCM detects that the TP sensor No.1 voltage at the PCM terminal 1BP is **below 0.1 V** while the engine is running, the PCM determines that the TP sensor No.1 circuit has a malfunction. **Diagnostic support note** • This is a continuous monitor (CCM). • The check engine light illuminates if the PCM detects the above malfunction condition during the first drive cycle. • FREEZE FRAME DATA (Mode 2)/Snapshot data is available. • The DTC is stored in the PCM memory.
FAIL-SAFE FUNCTION	• Restricts the upper limit of the engine speed.
POSSIBLE CAUSE	• Throttle body connector or terminals malfunction • Short to ground in wiring harness between the following terminals: — Throttle body terminal B—PCM terminal 1BS — Throttle body terminal A—PCM terminal 1BP • PCM connector or terminals malfunction • TP sensor No.1 signal circuit and ground circuit are shorted to each other • Open circuit in wiring harness between throttle body terminal B and PCM terminal 1BS • TP sensor No.1 malfunction • PCM malfunction

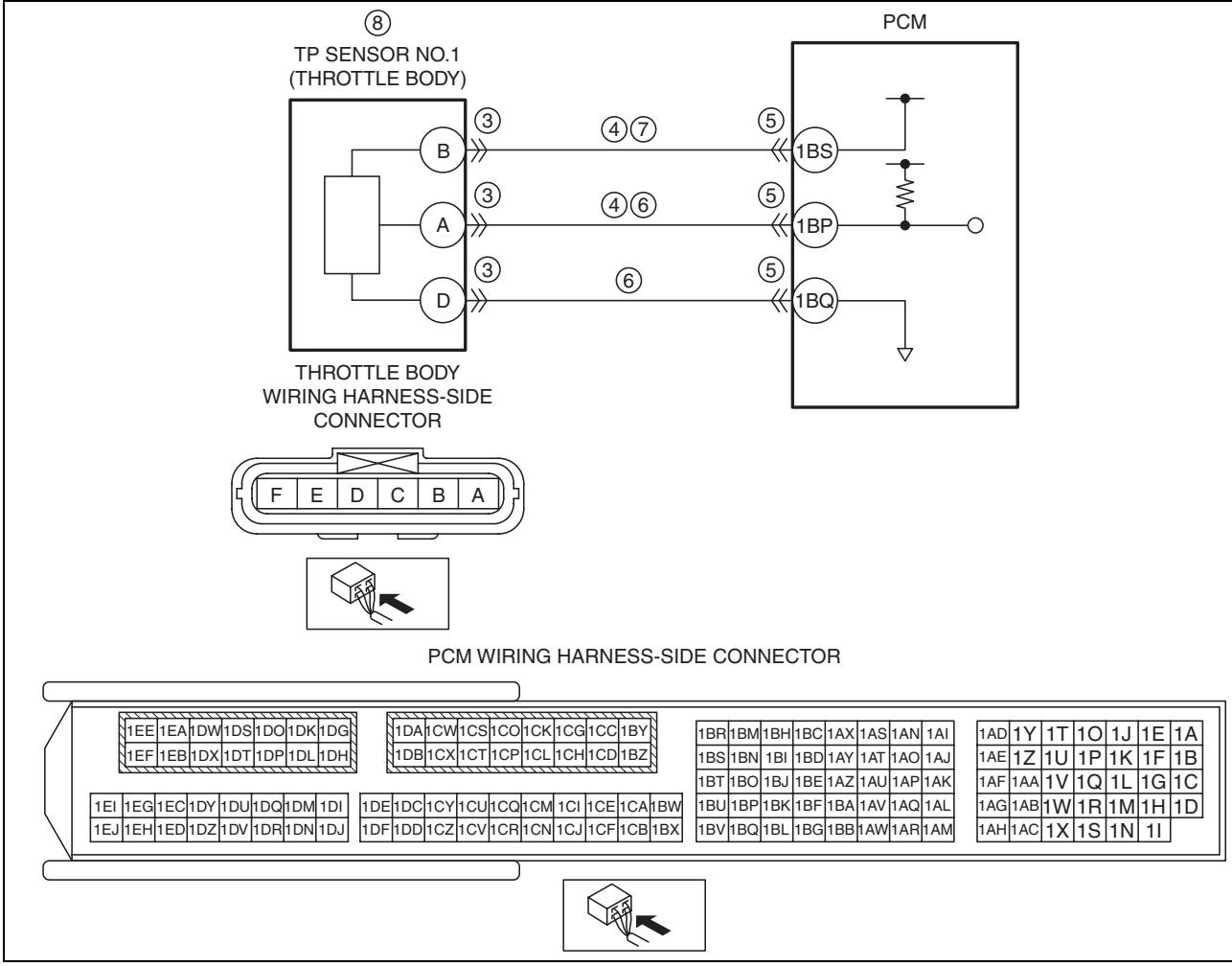

ON-BOARD DIAGNOSTIC [SKYACTIV-G 2.0]

Diagnostic Procedure

STEP	INSPECTION		ACTION
1	**VERIFY FREEZE FRAME DATA (MODE 2)/ SNAPSHOT DATA HAS BEEN RECORDED** • Has the FREEZE FRAME DATA (Mode 2)/ snapshot data been recorded?	Yes	Go to the next step.
		No	Record the FREEZE FRAME DATA (Mode 2)/snapshot data on the repair order, then go to the next step.
2	**VERIFY RELATED SERVICE INFORMATION AVAILABILITY** • Verify related Service Information availability. • Is any related Service Information available?	Yes	Perform repair or diagnosis according to the available Service Information. • If the vehicle is not repaired, go to the next step.
		No	Go to the next step.
3	**INSPECT THROTTLE BODY CONNECTOR CONDITION** • Switch the ignition to off. • Disconnect the throttle body connector. • Inspect for poor connection (such as damaged/ pulled-out pins, corrosion). • Is there any malfunction?	Yes	Repair or replace the connector and/or terminals, then go to Step 9.
		No	Go to the next step.
4	**INSPECT TP SENSOR NO.1 CIRCUIT FOR SHORT TO GROUND** • Verify that the throttle body connector is disconnected. • Inspect for continuity between the following terminals (wiring harness-side) and body ground: — Throttle body terminal B — Throttle body terminal A • Is there continuity?	Yes	If the short to ground circuit could be detected in the wiring harness: • Repair or replace the wiring harness for a possible short to ground. If the short to ground circuit could not be detected in the wiring harness: • Replace the PCM (short to ground in the PCM internal circuit). (See 01-40-10 PCM REMOVAL/INSTALLATION [SKYACTIV-G 2.0].) Go to Step 9.
		No	Go to the next step.
5	**INSPECT PCM CONNECTOR CONDITION** • Disconnect the PCM connector. • Inspect for poor connection (such as damaged/ pulled-out pins, corrosion). • Is there any malfunction?	Yes	Repair or replace the connector and/or terminals, then go to Step 9.
		No	Go to the next step.
6	**INSPECT TP SENSOR NO.1 SIGNAL CIRCUIT AND GROUND CIRCUIT FOR SHORT TO EACH OTHER** • Verify that the throttle body and PCM connectors are disconnected. • Inspect for continuity between throttle body terminals A and D (wiring harness-side). • Is there continuity?	Yes	Repair or replace the wiring harness for a possible short to each other, then go to Step 9.
		No	Go to the next step.
7	**INSPECT TP SENSOR NO.1 POWER SUPPLY CIRCUIT FOR OPEN CIRCUIT** • Verify that the throttle body and PCM connectors are disconnected. • Inspect for continuity between throttle body terminal B (wiring harness-side) and PCM terminal 1BS (wiring harness-side). • Is there continuity?	Yes	Go to the next step.
		No	Repair or replace the wiring harness for a possible open circuit, then go to Step 9.
8	**INSPECT TP SENSOR NO.1** • Reconnect all disconnected connectors. • Inspect the TP sensor No.1. (See 01-40-50 THROTTLE POSITION (TP) SENSOR INSPECTION [SKYACTIV-G 2.0].) • Is there any malfunction?	Yes	Replace the throttle body, then go to the next step. (See 01-13A-6 INTAKE-AIR SYSTEM REMOVAL/ INSTALLATION [SKYACTIV-G 2.0].)
		No	Go to the next step.

ON-BOARD DIAGNOSTIC [SKYACTIV-G 2.0]

STEP	INSPECTION		ACTION
9	**VERIFY DTC TROUBLESHOOTING COMPLETED** • Make sure to reconnect all disconnected connectors. • Clear the DTC from the PCM memory using the M-MDS. (See 01-02-12 AFTER REPAIR PROCEDURE [SKYACTIV-G 2.0].) • Start the engine and warm it up completely. • Perform the KOEO or KOER self test. (See 01-02-12 KOEO/KOER SELF TEST [SKYACTIV-G 2.0].) • Is the same DTC present?	Yes	Repeat the inspection from Step 1. • If the malfunction recurs, replace the PCM. (See 01-40-10 PCM REMOVAL/INSTALLATION [SKYACTIV-G 2.0].) Go to the next step.
		No	Go to the next step.
10	**VERIFY AFTER REPAIR PROCEDURE** • Perform the “AFTER REPAIR PROCEDURE”. (See 01-02-12 AFTER REPAIR PROCEDURE [SKYACTIV-G 2.0].) • Are any DTCs present?	Yes	Go to the applicable DTC inspection. (See 01-02-14 DTC TABLE [SKYACTIV-G 2.0].)
		No	DTC troubleshooting completed.

ON-BOARD DIAGNOSTIC [SKYACTIV-G 2.0]

DTC P0123:00 [SKYACTIV-G 2.0]

id0102h1701900

DTC P0123:00	**TP sensor No.1 circuit high input**
DETECTION CONDITION	• If the PCM detects that the TP sensor No.1 voltage at the PCM terminal 1BP is **above 4.9 V** after the ignition is switched to ON, the PCM determines that the TP sensor No.1 circuit has a malfunction. **Diagnostic support note** • This is a continuous monitor (CCM). • The check engine light illuminates if the PCM detects the above malfunction condition during the first drive cycle. • FREEZE FRAME DATA (Mode 2)/Snapshot data is available. • The DTC is stored in the PCM memory.
FAIL-SAFE FUNCTION	• Restricts the upper limit of the engine speed.
POSSIBLE CAUSE	• Throttle body connector or terminals malfunction • PCM connector or terminals malfunction • TP sensor No.1 malfunction • Short to power supply in wiring harness between throttle body terminal A and PCM terminal 1BP • Open circuit in wiring harness between the following terminals: — Throttle body terminal A—PCM terminal 1BP — Throttle body terminal D—PCM terminal 1BQ • PCM malfunction

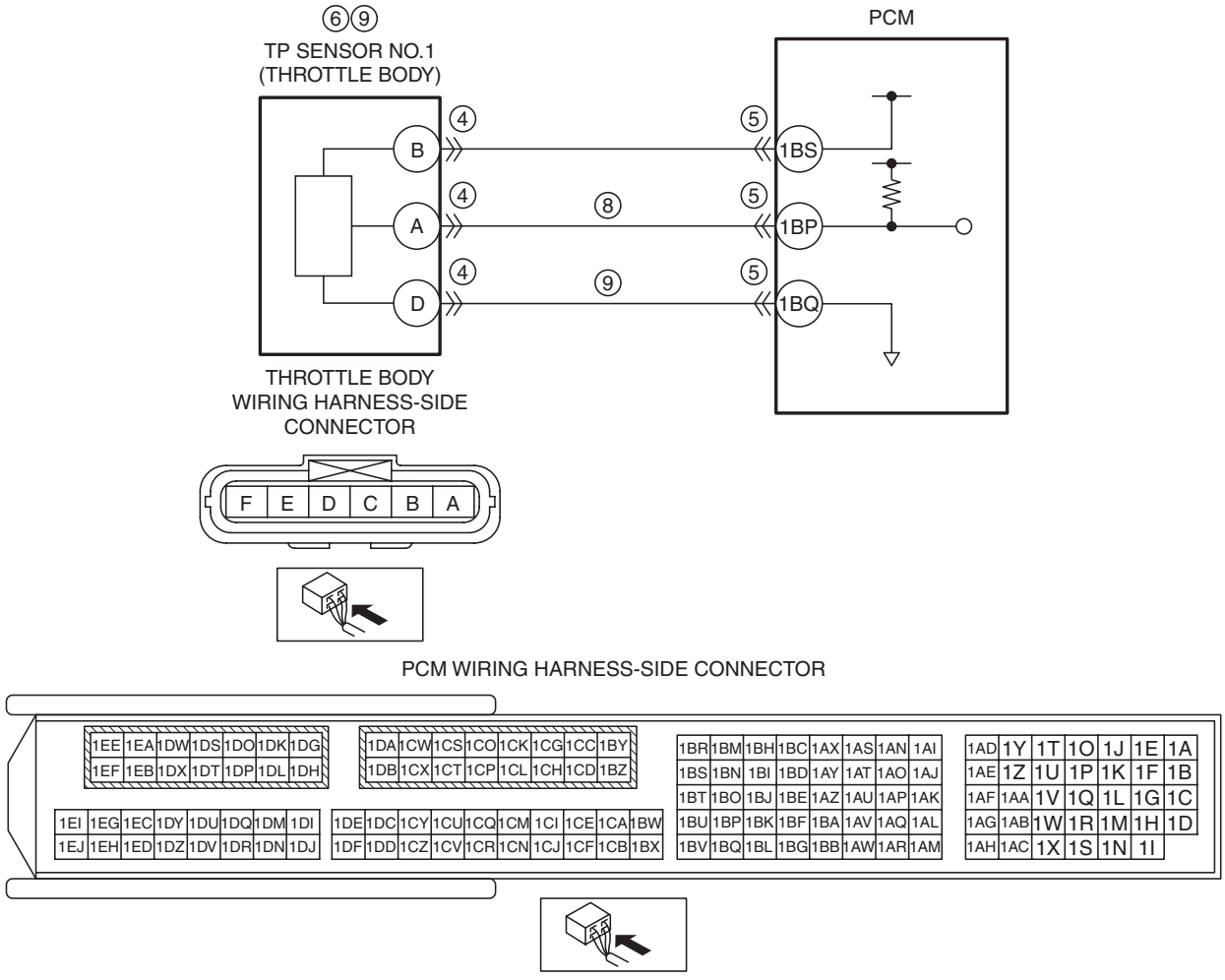

ON-BOARD DIAGNOSTIC [SKYACTIV-G 2.0]

Diagnostic Procedure

STEP	INSPECTION		ACTION
1	**VERIFY FREEZE FRAME DATA (MODE 2)/ SNAPSHOT DATA HAS BEEN RECORDED** • Has the FREEZE FRAME DATA (Mode 2)/ snapshot data been recorded?	Yes	Go to the next step.
		No	Record the FREEZE FRAME DATA (Mode 2)/snapshot data on the repair order, then go to the next step.
2	**VERIFY RELATED SERVICE INFORMATION AVAILABILITY** • Verify related Service Information availability. • Is any related Service Information available?	Yes	Perform repair or diagnosis according to the available Service Information. • If the vehicle is not repaired, go to the next step.
		No	Go to the next step.
3	**CLASSIFY TP SENSOR NO.1 MALFUNCTION OR WIRING HARNESS MALFUNCTION** • Access the TP1 PID using the M-MDS. (See 01-02-8 ON-BOARD DIAGNOSTIC TEST [SKYACTIV-G 2.0].) • Verify the TP1 PID value. • Is the TP1 PID value **5 V** or **B+**?	Yes	Go to Step 7.
		No	Go to the next step.
4	**INSPECT THROTTLE BODY CONNECTOR CONDITION** • Switch the ignition to off. • Disconnect the throttle body connector. • Inspect for poor connection (such as damaged/ pulled-out pins, corrosion). • Is there any malfunction?	Yes	Repair or replace the connector and/or terminals, then go to Step 10.
		No	Go to the next step.
5	**INSPECT PCM CONNECTOR CONDITION** • Disconnect the PCM connector. • Inspect for poor connection (such as damaged/ pulled-out pins, corrosion). • Is there any malfunction?	Yes	Repair or replace the connector and/or terminals, then go to Step 10.
		No	Go to the next step.
6	**INSPECT TP SENSOR NO.1** • Reconnect all disconnected connectors. • Inspect the TP sensor No.1. (See 01-40-50 THROTTLE POSITION (TP) SENSOR INSPECTION [SKYACTIV-G 2.0].) • Is there any malfunction?	Yes	Replace the throttle body, then go to Step 10. (See 01-13A-6 INTAKE-AIR SYSTEM REMOVAL/ INSTALLATION [SKYACTIV-G 2.0].)
		No	Go to Step 10.
7	**CLASSIFY TP SENSOR NO.1 SIGNAL CIRCUIT MALFUNCTION OR TP SENSOR NO.1 GROUND CIRCUIT MALFUNCTION** • Switch the ignition to off. • Disconnect the throttle body connector. • Access the TP1 PID using the M-MDS. (See 01-02-8 ON-BOARD DIAGNOSTIC TEST [SKYACTIV-G 2.0].) • Verify the TP1 PID value. • Is the TP1 PID value **5 V** or **B+**?	Yes	Go to the next step.
		No	Go to Step 9.
8	**INSPECT TP SENSOR NO.1 SIGNAL CIRCUIT FOR OPEN CIRCUIT** • Verify that the throttle body connector is disconnected. • Switch the ignition to off. • Disconnect the PCM connector. • Inspect for continuity between throttle body terminal A (wiring harness-side) and PCM terminal 1BP (wiring harness-side). • Is there continuity?	Yes	Repair or replace the wiring harness for a possible short to power supply, then go to Step 10.
		No	Repair or replace the wiring harness for a possible open circuit, then go to Step 10.
9	**INSPECT TP SENSOR NO.1 GROUND CIRCUIT FOR OPEN CIRCUIT** • Verify that the throttle body connector is disconnected. • Switch the ignition to off. • Disconnect the PCM connector. • Inspect for continuity between throttle body terminal D (wiring harness-side) and PCM terminal 1BQ (wiring harness-side). • Is there continuity?	Yes	Replace the throttle body, then go to the next step. (See 01-13A-6 INTAKE-AIR SYSTEM REMOVAL/ INSTALLATION [SKYACTIV-G 2.0].)
		No	Repair or replace the wiring harness for a possible open circuit, then go to the next step.

ON-BOARD DIAGNOSTIC [SKYACTIV-G 2.0]

STEP	INSPECTION		ACTION
10	**VERIFY DTC TROUBLESHOOTING COMPLETED** • Make sure to reconnect all disconnected connectors. • Clear the DTC from the PCM memory using the M-MDS. (See 01-02-12 AFTER REPAIR PROCEDURE [SKYACTIV-G 2.0].) • Start the engine and warm it up completely. • Perform the KOEO or KOER self test. (See 01-02-12 KOEO/KOER SELF TEST [SKYACTIV-G 2.0].) • Is the same DTC present?	Yes	Repeat the inspection from Step 1. • If the malfunction recurs, replace the PCM. (See 01-40-10 PCM REMOVAL/INSTALLATION [SKYACTIV-G 2.0].) Go to the next step.
		No	Go to the next step.
11	**VERIFY AFTER REPAIR PROCEDURE** • Perform the “AFTER REPAIR PROCEDURE”. (See 01-02-12 AFTER REPAIR PROCEDURE [SKYACTIV-G 2.0].) • Are any DTCs present?	Yes	Go to the applicable DTC inspection. (See 01-02-14 DTC TABLE [SKYACTIV-G 2.0].)
		No	DTC troubleshooting completed.

DTC P0130:00 [SKYACTIV-G 2.0]

id0102h1702100

DTC P0130:00	A/F sensor circuit problem
DETECTION CONDITION	• The PCM monitors the voltage between PCM terminal 1AG and 1AB while the A/F sensor active. If the voltage is **above 2.3 V** or **below** –**2.1 V**, the PCM determines that there is a A/F sensor circuit problem. **MONITORING CONDITIONS** — Battery voltage: **11—18 V** **Diagnostic support note** • This is an intermittent monitor (A/F sensor, HO2S). • The check engine light illuminates if the PCM detects the above malfunction condition in two consecutive drive cycles or in one drive cycle while the DTC for the same malfunction has been stored in the PCM. • PENDING CODE is available if the PCM detects the above malfunction condition during first drive cycle. • FREEZE FRAME DATA (Mode 2)/Snapshot data is available. • The DTC is stored in the PCM memory.
FAIL-SAFE FUNCTION	• Fixes the duty value of the A/F sensor heater. • Stops the fuel feedback control.
POSSIBLE CAUSE	• A/F sensor connector or terminals malfunction • PCM connector or terminals malfunction • A/F sensor malfunction • PCM malfunction
SYSTEM WIRING DIAGRAM	—

Diagnostic Procedure

STEP	INSPECTION		ACTION
1	**VERIFY FREEZE FRAME DATA (MODE 2)/ SNAPSHOT DATA AND DIAGNOSTIC MONITORING TEST RESULTS HAVE BEEN RECORDED** • Have the FREEZE FRAME DATA (Mode 2)/ snapshot data and DIAGNOSTIC MONITORING TEST RESULTS (A/F sensor, HO2S related) been recorded?	Yes	Go to the next step.
		No	Record the FREEZE FRAME DATA (Mode 2)/snapshot data and DIAGNOSTIC MONITORING TEST RESULTS on the repair order, then go to the next step.
2	**VERIFY RELATED SERVICE INFORMATION AVAILABILITY** • Verify related Service Information availability. • Is any related Service Information available?	Yes	Perform repair or diagnosis according to the available Service Information. • If the vehicle is not repaired, go to the next step.
		No	Go to the next step.

ON-BOARD DIAGNOSTIC [SKYACTIV-G 2.0]

STEP	INSPECTION		ACTION
3	**INSPECT A/F SENSOR CONNECTOR CONDITION** • Switch the ignition to off. • Disconnect the A/F sensor connector. • Inspect for poor connection (such as damaged/pulled-out pins, corrosion). • Is there any malfunction?	Yes	Repair or replace the connector and/or terminals, then go to Step 6.
		No	Go to the next step.
4	**INSPECT PCM CONNECTOR CONDITION** • Disconnect the PCM connector. • Inspect for poor connection (such as damaged/pulled-out pins, corrosion). • Is there any malfunction?	Yes	Repair or replace the connector and/or terminals, then go to Step 6.
		No	Go to the next step.
5	**INSPECT A/F SENSOR** • Reconnect all disconnected connectors. • Inspect the A/F sensor. (See 01-40-55 AIR FUEL RATIO (A/F) SENSOR INSPECTION [SKYACTIV-G 2.0].) • Is there any malfunction?	Yes	Replace the A/F sensor, then go to the next step. (See 01-40-52 AIR FUEL RATIO (A/F) SENSOR REMOVAL/INSTALLATION [SKYACTIV-G 2.0].)
		No	Go to the next step.
6	**VERIFY DTC TROUBLESHOOTING COMPLETED** • Make sure to reconnect all disconnected connectors. • Clear the DTC from the PCM memory using the M-MDS. (See 01-02-12 AFTER REPAIR PROCEDURE [SKYACTIV-G 2.0].) • Perform the Drive Mode 03 (Variable Valve Timing, A/F Sensor Heater, HO2S Heater, A/F Sensor, HO2S and TWC Repair Verification Drive Mode). (See 01-02-13 OBD DRIVE MODE [SKYACTIV-G 2.0].) • Is the PENDING CODE for this DTC present?	Yes	Repeat the inspection from Step 1. • If the malfunction recurs, replace the PCM. (See 01-40-10 PCM REMOVAL/INSTALLATION [SKYACTIV-G 2.0].) Go to the next step.
		No	Go to the next step.
7	**VERIFY AFTER REPAIR PROCEDURE** • Perform the “AFTER REPAIR PROCEDURE”. (See 01-02-12 AFTER REPAIR PROCEDURE [SKYACTIV-G 2.0].) • Are any DTCs present?	Yes	Go to the applicable DTC inspection. (See 01-02-14 DTC TABLE [SKYACTIV-G 2.0].)
		No	DTC troubleshooting completed.

ON-BOARD DIAGNOSTIC [SKYACTIV-G 2.0]

DTC P0131:00 [SKYACTIV-G 2.0]

id0102h1702200

DTC P0131:00	A/F sensor circuit low input
DETECTION CONDITION	• The PCM monitors the input voltage from the A/F sensor when the engine is running. If the following PCM terminal voltage is below specified, the PCM determines that the A/F sensor circuit voltage is low. — PCM terminal 1W: **1.2 V** — PCM terminal 1AB: **1.2 V** — PCM terminal 1AG: **2 V** **MONITORING CONDITIONS** — Battery voltage: **11—18 V** **Diagnostic support note** • This is a continuous monitor (A/F sensor, HO2S). • The check engine light illuminates if the PCM detects the above malfunction condition in two consecutive drive cycles or in one drive cycle while the DTC for the same malfunction has been stored in the PCM. • PENDING CODE is available if the PCM detects the above malfunction condition during first drive cycle. • FREEZE FRAME DATA (Mode 2)/Snapshot data is available. • The DTC is stored in the PCM memory.
FAIL-SAFE FUNCTION	• Fixes the duty value of the A/F sensor heater. • Stops the fuel feedback control.
POSSIBLE CAUSE	• A/F sensor connector or terminals malfunction • Short to ground in wiring harness between the following terminals: — A/F sensor terminal F—PCM terminal 1W — A/F sensor terminal D—PCM terminal 1AB — A/F sensor terminal B—PCM terminal 1AG • PCM connector or terminals malfunction • A/F sensor malfunction • PCM malfunction

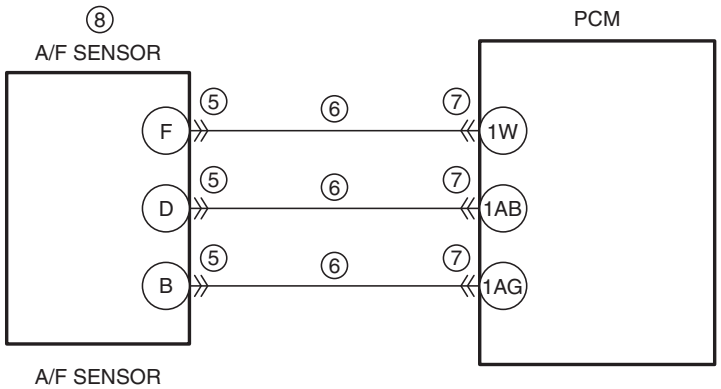

A/F SENSOR WIRING HARNESS-SIDE CONNECTOR

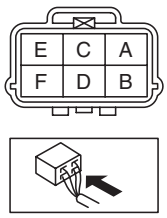

PCM WIRING HARNESS-SIDE CONNECTOR

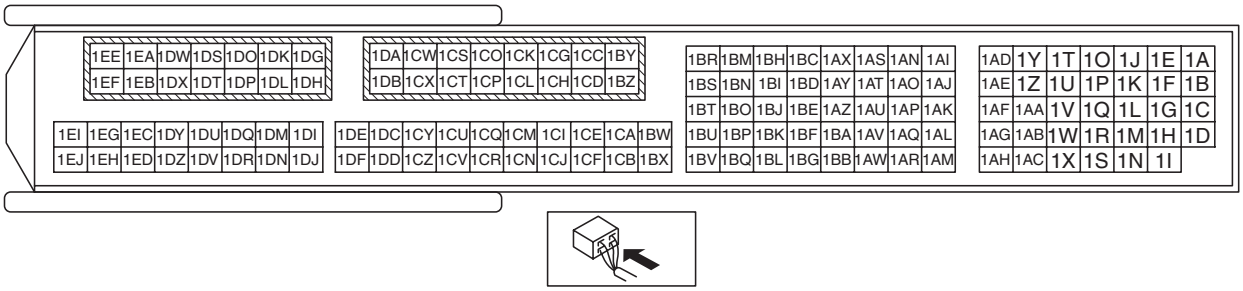

ON-BOARD DIAGNOSTIC [SKYACTIV-G 2.0]

Diagnostic Procedure

STEP	INSPECTION		ACTION
1	**IDENTIFY TRIGGER DTC FOR FREEZE FRAME DATA (MODE 2)** • Perform the Freeze Frame PID Data Access Procedure. (See 01-02-8 ON-BOARD DIAGNOSTIC TEST [SKYACTIV-G 2.0].) • Is the DTC P0131:00 on FREEZE FRAME DATA (Mode 2)?	Yes	Go to the next step.
		No	Go to the troubleshooting procedure for DTC on FREEZE FRAME DATA (Mode 2). (See 01-02-14 DTC TABLE [SKYACTIV-G 2.0].)
2	**VERIFY FREEZE FRAME DATA (MODE 2)/ SNAPSHOT DATA AND DIAGNOSTIC MONITORING TEST RESULTS HAVE BEEN RECORDED** • Have the FREEZE FRAME DATA (Mode 2)/ snapshot data and DIAGNOSTIC MONITORING TEST RESULTS (A/F sensor, HO2S related) been recorded?	Yes	Go to the next step.
		No	Record the FREEZE FRAME DATA (Mode 2)/snapshot data and DIAGNOSTIC MONITORING TEST RESULTS on the repair order, then go to the next step.
3	**VERIFY RELATED SERVICE INFORMATION AVAILABILITY** • Verify related Service Information availability. • Is any related Service Information available?	Yes	Perform repair or diagnosis according to the available Service Information. • If the vehicle is not repaired, go to the next step.
		No	Go to the next step.
4	**VERIFY RELATED PENDING CODE AND/OR DTC** • Switch the ignition to off, then to ON (engine off). • Perform the Pending Trouble Code Access Procedure and DTC Reading Procedure. (See 01-02-8 ON-BOARD DIAGNOSTIC TEST [SKYACTIV-G 2.0].) • Are any other PENDING CODEs and/or DTCs present?	Yes	Go to the applicable PENDING CODE or DTC inspection. (See 01-02-14 DTC TABLE [SKYACTIV-G 2.0].)
		No	Go to the next step.
5	**INSPECT A/F SENSOR CONNECTOR CONDITION** • Switch the ignition to off. • Disconnect the A/F sensor connector. • Inspect for poor connection (such as damaged/ pulled-out pins, corrosion). • Is there any malfunction?	Yes	Repair or replace the connector and/or terminals, then go to Step 9.
		No	Go to the next step.
6	**INSPECT A/F SENSOR CIRCUIT FOR SHORT TO GROUND** • Verify that the A/F sensor connector is disconnected. • Inspect for continuity between the following terminals (wiring harness-side) and body ground: — A/F sensor terminal F — A/F sensor terminal D — A/F sensor terminal B • Is there continuity?	Yes	If the short to ground circuit could be detected in the wiring harness: • Repair or replace the wiring harness for a possible short to ground. If the short to ground circuit could not be detected in the wiring harness: • Replace the PCM (short to ground in the PCM internal circuit). (See 01-40-10 PCM REMOVAL/INSTALLATION [SKYACTIV-G 2.0].) Go to Step 9.
		No	Go to the next step.
7	**INSPECT PCM CONNECTOR CONDITION** • Disconnect the PCM connector. • Inspect for poor connection (such as damaged/ pulled-out pins, corrosion). • Is there any malfunction?	Yes	Repair or replace the connector and/or terminals, then go to Step 9.
		No	Go to the next step.
8	**INSPECT A/F SENSOR** • Reconnect all disconnected connectors. • Inspect the A/F sensor. (See 01-40-55 AIR FUEL RATIO (A/F) SENSOR INSPECTION [SKYACTIV-G 2.0].) • Is there any malfunction?	Yes	Replace the A/F sensor, then go to the next step. (See 01-40-52 AIR FUEL RATIO (A/F) SENSOR REMOVAL/INSTALLATION [SKYACTIV-G 2.0].)
		No	Intermittent concern exists. • Perform the “INTERMITTENT CONCERN TROUBLESHOOTING” procedure. (See 01-03-116 INTERMITTENT CONCERN TROUBLESHOOTING [SKYACTIV-G 2.0].)

ON-BOARD DIAGNOSTIC [SKYACTIV-G 2.0]

STEP	INSPECTION		ACTION
9	**VERIFY DTC TROUBLESHOOTING COMPLETED** • Make sure to reconnect all disconnected connectors. • Clear the DTC from the PCM memory using the M-MDS. (See 01-02-12 AFTER REPAIR PROCEDURE [SKYACTIV-G 2.0].) • Perform the KOER self test. (See 01-02-12 KOEO/KOER SELF TEST [SKYACTIV-G 2.0].) • Is the PENDING CODE for this DTC present?	Yes	Repeat the inspection from Step 1. • If the malfunction recurs, replace the PCM. (See 01-40-10 PCM REMOVAL/INSTALLATION [SKYACTIV-G 2.0].) Go to the next step.
		No	Go to the next step.
10	**VERIFY AFTER REPAIR PROCEDURE** • Perform the “AFTER REPAIR PROCEDURE”. (See 01-02-12 AFTER REPAIR PROCEDURE [SKYACTIV-G 2.0].) • Are any DTCs present?	Yes	Go to the applicable DTC inspection. (See 01-02-14 DTC TABLE [SKYACTIV-G 2.0].)
		No	DTC troubleshooting completed.

ON-BOARD DIAGNOSTIC [SKYACTIV-G 2.0]

DTC P0132:00 [SKYACTIV-G 2.0]

id0102h1702300

DTC P0132:00	A/F sensor circuit high input
DETECTION CONDITION	• The PCM monitors the input voltage from the A/F sensor when the engine is running. If the following PCM terminal voltage is above specified, the PCM determines that the A/F sensor circuit voltage is high. — PCM terminal 1W: battery voltage–**1.2 V** — PCM terminal 1AB: **6.2 V** — PCM terminal 1AG: battery voltage–**1.2 V** **MONITORING CONDITIONS** — Battery voltage: **11—18 V** **Diagnostic support note** • This is a continuous monitor (A/F sensor, HO2S). • The check engine light illuminates if the PCM detects the above malfunction condition in two consecutive drive cycles or in one drive cycle while the DTC for the same malfunction has been stored in the PCM. • PENDING CODE is available if the PCM detects the above malfunction condition during first drive cycle. • FREEZE FRAME DATA (Mode 2)/Snapshot data is available. • The DTC is stored in the PCM memory.
FAIL-SAFE FUNCTION	• Fixes the duty value of the A/F sensor heater. • Stops the fuel feedback control.
POSSIBLE CAUSE	• A/F sensor connector or terminals malfunction • PCM connector or terminals malfunction • Short to power supply in wiring harness between the following terminals: — A/F sensor terminal F—PCM terminal 1W — A/F sensor terminal D—PCM terminal 1AB — A/F sensor terminal B—PCM terminal 1AG • A/F sensor malfunction • PCM malfunction

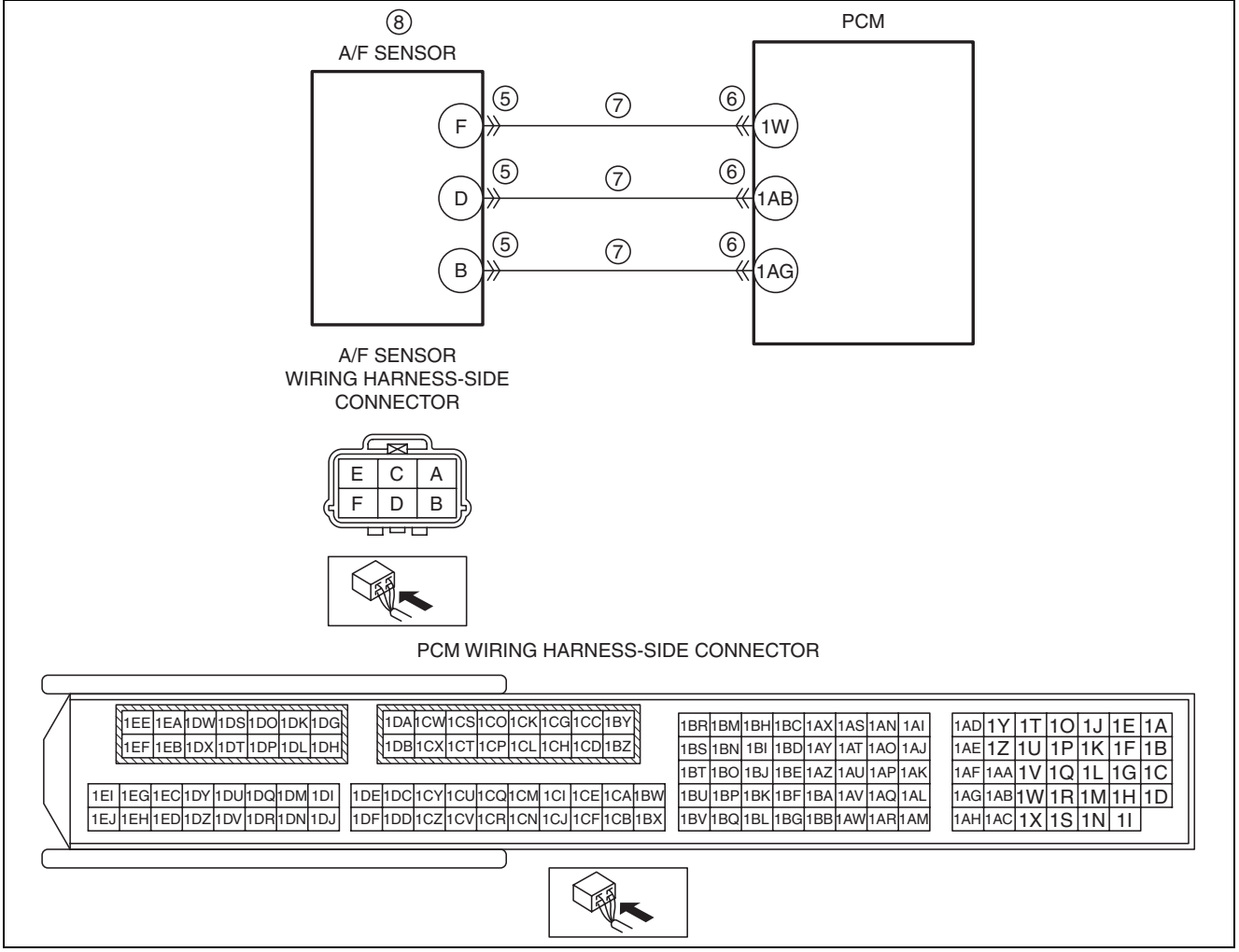

ON-BOARD DIAGNOSTIC [SKYACTIV-G 2.0]

Diagnostic Procedure

STEP	INSPECTION		ACTION
1	**IDENTIFY TRIGGER DTC FOR FREEZE FRAME DATA (MODE 2)** • Perform the Freeze Frame PID Data Access Procedure. (See 01-02-8 ON-BOARD DIAGNOSTIC TEST [SKYACTIV-G 2.0].) • Is the DTC P0132:00 on FREEZE FRAME DATA (Mode 2)?	Yes	Go to the next step.
		No	Go to the troubleshooting procedure for DTC on FREEZE FRAME DATA (Mode 2). (See 01-02-14 DTC TABLE [SKYACTIV-G 2.0].)
2	**VERIFY FREEZE FRAME DATA (MODE 2)/ SNAPSHOT DATA AND DIAGNOSTIC MONITORING TEST RESULTS HAVE BEEN RECORDED** • Have the FREEZE FRAME DATA (Mode 2)/ snapshot data and DIAGNOSTIC MONITORING TEST RESULTS (A/F sensor, HO2S related) been recorded?	Yes	Go to the next step.
		No	Record the FREEZE FRAME DATA (Mode 2)/snapshot data and DIAGNOSTIC MONITORING TEST RESULTS on the repair order, then go to the next step.
3	**VERIFY RELATED SERVICE INFORMATION AVAILABILITY** • Verify related Service Information availability. • Is any related Service Information available?	Yes	Perform repair or diagnosis according to the available Service Information. • If the vehicle is not repaired, go to the next step.
		No	Go to the next step.
4	**VERIFY RELATED PENDING CODE AND/OR DTC** • Switch the ignition to off, then to ON (engine off). • Perform the Pending Trouble Code Access Procedure and DTC Reading Procedure. (See 01-02-8 ON-BOARD DIAGNOSTIC TEST [SKYACTIV-G 2.0].) • Are any other PENDING CODEs and/or DTCs present?	Yes	Go to the applicable PENDING CODE or DTC inspection. (See 01-02-14 DTC TABLE [SKYACTIV-G 2.0].)
		No	Go to the next step.
5	**INSPECT A/F SENSOR CONNECTOR CONDITION** • Switch the ignition to off. • Disconnect the A/F sensor connector. • Inspect for poor connection (such as damaged/ pulled-out pins, corrosion). • Is there any malfunction?	Yes	Repair or replace the connector and/or terminals, then go to Step 9.
		No	Go to the next step.
6	**INSPECT PCM CONNECTOR CONDITION** • Disconnect the PCM connector. • Inspect for poor connection (such as damaged/ pulled-out pins, corrosion). • Is there any malfunction?	Yes	Repair or replace the connector and/or terminals, then go to Step 9.
		No	Go to the next step.
7	**INSPECT A/F SENSOR CIRCUIT FOR SHORT TO POWER SUPPLY** • Verify that the A/F sensor and PCM connectors are disconnected. • Switch the ignition ON (engine off or on). • Measure the voltage at the following terminals (wiring harness-side): — A/F sensor terminal F — A/F sensor terminal D — A/F sensor terminal B • Is the voltage **0 V**?	Yes	Go to the next step.
		No	Repair or replace the wiring harness for a possible short to power supply, then go to Step 9.
8	**INSPECT A/F SENSOR** • Switch the ignition to off. • Reconnect all disconnected connectors. • Inspect the A/F sensor. (See 01-40-55 AIR FUEL RATIO (A/F) SENSOR INSPECTION [SKYACTIV-G 2.0].) • Is there any malfunction?	Yes	Replace the A/F sensor, then go to the next step. (See 01-40-52 AIR FUEL RATIO (A/F) SENSOR REMOVAL/INSTALLATION [SKYACTIV-G 2.0].)
		No	Intermittent concern exists. • Perform the “INTERMITTENT CONCERN TROUBLESHOOTING” procedure. (See 01-03-116 INTERMITTENT CONCERN TROUBLESHOOTING [SKYACTIV-G 2.0].)

ON-BOARD DIAGNOSTIC [SKYACTIV-G 2.0]

STEP	INSPECTION		ACTION
9	**VERIFY DTC TROUBLESHOOTING COMPLETED** • Make sure to reconnect all disconnected connectors. • Clear the DTC from the PCM memory using the M-MDS. (See 01-02-12 AFTER REPAIR PROCEDURE [SKYACTIV-G 2.0].) • Perform the KOER self test. (See 01-02-12 KOEO/KOER SELF TEST [SKYACTIV-G 2.0].) • Is the PENDING CODE for this DTC present?	Yes	Repeat the inspection from Step 1. • If the malfunction recurs, replace the PCM. (See 01-40-10 PCM REMOVAL/INSTALLATION [SKYACTIV-G 2.0].) Go to the next step.
		No	Go to the next step.
10	**VERIFY AFTER REPAIR PROCEDURE** • Perform the “AFTER REPAIR PROCEDURE”. (See 01-02-12 AFTER REPAIR PROCEDURE [SKYACTIV-G 2.0].) • Are any DTCs present?	Yes	Go to the applicable DTC inspection. (See 01-02-14 DTC TABLE [SKYACTIV-G 2.0].)
		No	DTC troubleshooting completed.

ON-BOARD DIAGNOSTIC [SKYACTIV-G 2.0]

DTC P0133:00 [SKYACTIV-G 2.0]

id0102h1702400

DTC P0133:00	A/F sensor circuit slow response
DETECTION CONDITION	• The PCM monitors the peak differential value of the oxygen sensor signal after the A/F fluctuation being provided when the following conditions are met. If the peak differential value is lower than the threshold value, the PCM determines that the A/F sensor circuit is slow. **MONITORING CONDITIONS** — Drive Mode 03 (Variable Valve Timing, A/F Sensor Heater, HO2S Heater, A/F Sensor, HO2S and TWC Repair Verification Drive Mode) — Following conditions are met: • A/F sensor heater monitor is completed. • Fuel system loop status is closed loop fuel control. — ECT sensor and A/F sensor heater are normal. — Engine speed: **1,100—3,500 rpm** — Charging efficiency: **16—63 %** (at engine speed: **2,500 rpm**) — Intake airflow amount: **5—40 g/s {0.7—5.2 lb/min.}** — ECT: **above 50 °C {122 °F}** **Diagnostic support note** • This is an intermittent monitor (A/F sensor, HO2S). • The check engine light illuminates if the PCM detects the above malfunction condition in two consecutive drive cycles or in one drive cycle while the DTC for the same malfunction has been stored in the PCM. • PENDING CODE is available if the PCM detects the above malfunction condition during first drive cycle. • FREEZE FRAME DATA (Mode 2)/Snapshot data is available. • The DTC is stored in the PCM memory.
FAIL-SAFE FUNCTION	—
POSSIBLE CAUSE	• Erratic signal from A/F sensor — A/F sensor loose — Exhaust system leakage • Purge solenoid valve malfunction — Improper connection of evaporative hose (purge solenoid valve side) • High-pressure side fuel delivery system malfunction — Fuel pressure sensor malfunction — Spill valve control solenoid valve control circuit malfunction (damage to driver in PCM caused by short circuit to ground system) — Spill valve control solenoid valve (built-into high pressure fuel pump) malfunction — Relief valve (built-into high pressure fuel pump) malfunction — High pressure fuel pump malfunction • Low-pressure side fuel delivery system malfunction — Fuel leakage in fuel line — Low pressure side fuel line restriction (between fuel pump unit and high pressure fuel pump) — Fuel filter clogged — Pressure regulator (built-into fuel pump unit) malfunction — Fuel pump unit malfunction • Engine malfunction — Insufficient engine compression — Engine coolant leakage to combustion chamber • A/F sensor malfunction — A/F sensor deterioration • PCM malfunction
SYSTEM WIRING DIAGRAM	—

ON-BOARD DIAGNOSTIC [SKYACTIV-G 2.0]

Diagnostic Procedure

STEP	INSPECTION		ACTION
1	**IDENTIFY TRIGGER DTC FOR FREEZE FRAME DATA (MODE 2)** • Perform the Freeze Frame PID Data Access Procedure. (See 01-02-8 ON-BOARD DIAGNOSTIC TEST [SKYACTIV-G 2.0].) • Is the DTC P0133:00 on FREEZE FRAME DATA (Mode 2)?	Yes	Go to the next step.
		No	Go to the troubleshooting procedure for DTC on FREEZE FRAME DATA (Mode 2). (See 01-02-14 DTC TABLE [SKYACTIV-G 2.0].)
2	**VERIFY FREEZE FRAME DATA (MODE 2)/ SNAPSHOT DATA AND DIAGNOSTIC MONITORING TEST RESULTS HAVE BEEN RECORDED** • Have the FREEZE FRAME DATA (Mode 2)/ snapshot data and DIAGNOSTIC MONITORING TEST RESULTS (A/F sensor, HO2S related) been recorded?	Yes	Go to the next step.
		No	Record the FREEZE FRAME DATA (Mode 2)/snapshot data and DIAGNOSTIC MONITORING TEST RESULTS on the repair order, then go to the next step.
3	**VERIFY RELATED SERVICE INFORMATION AVAILABILITY** • Verify related Service Information availability. • Is any related Service Information available?	Yes	Perform repair or diagnosis according to the available Service Information. • If the vehicle is not repaired, go to the next step.
		No	Go to the next step.
4	**VERIFY RELATED PENDING CODE AND/OR DTC** • Switch the ignition to off, then to ON (engine off). • Perform the Pending Trouble Code Access Procedure and DTC Reading Procedure. (See 01-02-8 ON-BOARD DIAGNOSTIC TEST [SKYACTIV-G 2.0].) • Is the PENDING CODE/DTC P0443:00 also present?	Yes	Go to the applicable PENDING CODE or DTC inspection. (See 01-02-202 DTC P0443:00 [SKYACTIV-G 2.0].)
		No	Go to the next step.
5	**INSPECT CURRENT SIGNAL STATUS OF A/F SENSOR** • Inspect the A/F sensor. (See 01-40-55 AIR FUEL RATIO (A/F) SENSOR INSPECTION [SKYACTIV-G 2.0].) • Is there any malfunction?	Yes	Go to the next step.
		No	Go to Step 8.
6	**INSPECT INSTALLATION OF A/F SENSOR** • Inspect installation of A/F sensor. • Is the A/F sensor installed securely?	Yes	Go to the next step.
		No	Retighten the A/F sensor, then go to Step 18. (See 01-40-52 AIR FUEL RATIO (A/F) SENSOR REMOVAL/INSTALLATION [SKYACTIV-G 2.0].)
7	**INSPECT EXHAUST SYSTEM FOR LEAKAGE** • Visually inspect for exhaust leakage between exhaust manifold and A/F sensor. • Is there any leakage?	Yes	Repair or replace the malfunctioning part according to the inspection results, then go to Step 18.
		No	Go to the next step.
8	**INSPECT PURGE SOLENOID VALVE AND EVAPORATIVE HOSE** • Inspect the purge solenoid valve and evaporative hose connection. (See 01-16A-12 PURGE SOLENOID VALVE INSPECTION [SKYACTIV-G 2.0].) (See 01-13A-4 INTAKE-AIR SYSTEM VACUUM HOSE ROUTING DIAGRAM [SKYACTIV-G 2.0].) • Is there any malfunction?	Yes	Repair or replace the malfunctioning part according to the inspection results, then go to Step 18. (See 01-16A-10 PURGE SOLENOID VALVE REMOVAL/ INSTALLATION [SKYACTIV-G 2.0].)
		No	Go to the next step.
9	**INSPECT FOR FUEL LINE LEAKAGE** • Visually inspect for leakage from fuel line between fuel distributor and fuel pump. • Is there any leakage?	Yes	Repair or replace the malfunctioning part according to the inspection results, then go to Step 18.
		No	Go to the next step.

ON-BOARD DIAGNOSTIC [SKYACTIV-G 2.0]

STEP	INSPECTION		ACTION
10	**INSPECT FUEL PRESSURE (HIGH-SIDE)** • Start the engine and warm it up completely. • Access the FUEL_PRES PID using the M-MDS at idle. (See 01-02-8 ON-BOARD DIAGNOSTIC TEST [SKYACTIV-G 2.0].) • Is the FUEL_PRES PID value **approx. 3 MPa {31 kgf/cm^2, 435 psi}**?	Yes	Go to Step 14.
		No	Lower than **3 MPa {31 kgf/cm2, 435 psi}**: • Inspect the following: — Fuel leakage at the fuel line and fuel injector — Fuel pump • Perform the Fuel Pump (Low-pressure Side) Operation Inspection. (See 01-03-118 ENGINE CONTROL SYSTEM OPERATION INSPECTION [SKYACTIV-G 2.0].) — Fuel pressure sensor (See 01-40-52 FUEL PRESSURE SENSOR INSPECTION [SKYACTIV-G 2.0].) — High pressure fuel pump (See 01-14A-49 HIGH PRESSURE FUEL PUMP INSPECTION [SKYACTIV-G 2.0].) • If there is any malfunction: — Repair or replace the malfunctioning part according to the inspection results, then go to Step 18. • If there is no malfunction: — Go to Step 13. Higher than **3 MPa {31 kgf/cm2, 435 psi}**: • Go to the next step.
11	**IDENTIFY CAUSE BY FUEL PRESSURE SENSOR OR HIGH PRESSURE FUEL PUMP** • Is the vehicle acceleration performance normal?	Yes	Go to the next step.
		No	Go to Step 13.
12	**INSPECT FUEL PRESSURE SENSOR** • Inspect the fuel pressure sensor. (See 01-40-52 FUEL PRESSURE SENSOR INSPECTION [SKYACTIV-G 2.0].) • Is there any malfunction?	Yes	Replace the fuel distributor, then go to Step 18. (See 01-14A-51 FUEL INJECTOR REMOVAL/INSTALLATION [SKYACTIV-G 2.0].)
		No	Go to Step 14.
13	**INSPECT SPILL VALVE CONTROL SOLENOID VALVE CONTROL CIRCUIT FOR SHORT TO GROUND** • Switch the ignition to off. • Disconnect the high pressure fuel pump and PCM connectors. • Inspect for continuity between high pressure fuel pump terminal A (wiring harness-side) and body ground. • Is there continuity?	Yes	Repair or replace the wiring harness for a possible short to ground, then go to Step 18.
		No	Replace the high pressure fuel pump, then go to Step 18. (See 01-14A-44 HIGH PRESSURE FUEL PUMP REMOVAL/INSTALLATION [SKYACTIV-G 2.0].)
14	**INSPECT FUEL PRESSURE (LOW-SIDE)** • Connect the fuel pressure gauge between fuel pump and high pressure fuel pump. • Measure the low side fuel pressure. (See 01-14A-8 FUEL LINE PRESSURE INSPECTION [SKYACTIV-G 2.0].) • Is the low side fuel pressure within specification? **Specification:** • **405—485 kPa {4.13—4.94 kgf/cm^2, 58.8—70.3 psi}**	Yes	Go to the next step.
		No	Inspect the following: • Fuel line restriction • Fuel filter clogged — If there is any malfunction: • Repair or replace the malfunctioning part according to the inspection results. — If there is no malfunction: • Replace the fuel pump unit. (See 01-14A-38 FUEL PUMP UNIT REMOVAL/INSTALLATION [SKYACTIV-G 2.0].) Go to Step 18.

ON-BOARD DIAGNOSTIC [SKYACTIV-G 2.0]

STEP	INSPECTION		ACTION
15	**INSPECT ENGINE COMPRESSION** • Inspect the engine compression. (See 01-10A-14 COMPRESSION INSPECTION [SKYACTIV-G 2.0].) • Are compression pressures within specification? **Specification:** • Compression [European (L.H.D. U.K.) specs.] — Standard: **978 kPa {9.97 kgf/cm^2, 142 psi} (300 rpm)** — Minimum: **783 kPa {7.98 kgf/cm^2, 114 psi} (300 rpm)** — Maximum difference between cylinders: **166 kPa {1.69 kgf/cm^2, 24.1 psi}** • Compression [Except European (L.H.D. U.K.) specs.] — Standard: **885 kPa {9.02 kgf/cm^2, 128 psi} (300 rpm)** — Minimum: **708 kPa {7.22 kgf/cm^2, 103 psi} (300 rpm)** — Maximum difference between cylinders: **150 kPa {1.53 kgf/cm^2, 21.8 psi}** **Note** • Because the SKYACTIV-G 2.0 retards the intake valve closing timing, compression pressure is low.	Yes	Go to the next step.
		No	Repair or replace the malfunctioning part according to the inspection results, then go to Step 18.
16	**INSPECT SEALING OF ENGINE COOLANT PASSAGE** • Perform the “ENGINE COOLANT LEAKAGE INSPECTION”. (See 01-12A-7 ENGINE COOLANT LEAKAGE INSPECTION [SKYACTIV-G 2.0].) • Does the radiator cap tester needle drop even though there is no engine coolant leakage from the radiator or the hoses?	Yes	Engine coolant leakage from the engine (between the combustion chamber and the engine coolant passage) may have occurred. • Verify the conditions of the gasket and the cylinder head. — If there is any malfunction: • Repair or replace the malfunctioning part according to the inspection results, then go to Step 18.
		No	Go to the next step.
17	**INSPECT A/F SENSOR** • Switch the ignition to off. • Reconnect all disconnected connectors. • Inspect the A/F sensor. (See 01-40-55 AIR FUEL RATIO (A/F) SENSOR INSPECTION [SKYACTIV-G 2.0].) • Is there any malfunction?	Yes	Inspect the related wiring harness. • If there is any malfunction: — Repair or replace the suspected wiring harness, then go to the next step. • If there is no malfunction: — Replace the A/F sensor, then go to the next step. (See 01-40-52 AIR FUEL RATIO (A/F) SENSOR REMOVAL/INSTALLATION [SKYACTIV-G 2.0].)
		No	Go to the next step.
18	**VERIFY DTC TROUBLESHOOTING COMPLETED** • Make sure to reconnect all disconnected connectors. • Clear the DTC from the PCM memory using the M-MDS. (See 01-02-12 AFTER REPAIR PROCEDURE [SKYACTIV-G 2.0].) • Drive the vehicle under the monitoring conditions. • Perform the Drive Mode 03 (Variable Valve Timing, A/F Sensor Heater, HO2S Heater, A/F Sensor, HO2S and TWC Repair Verification Drive Mode). (See 01-02-13 OBD DRIVE MODE [SKYACTIV-G 2.0].) • Is the PENDING CODE for this DTC present?	Yes	Repeat the inspection from Step 1. • If the malfunction recurs, replace the PCM. (See 01-40-10 PCM REMOVAL/INSTALLATION [SKYACTIV-G 2.0].) Go to the next step.
		No	Go to the next step.

ON-BOARD DIAGNOSTIC [SKYACTIV-G 2.0]

STEP	INSPECTION		ACTION
19	**VERIFY AFTER REPAIR PROCEDURE** • Perform the “AFTER REPAIR PROCEDURE”. (See 01-02-12 AFTER REPAIR PROCEDURE [SKYACTIV-G 2.0].) • Are any DTCs present?	Yes	Go to the applicable DTC inspection. (See 01-02-14 DTC TABLE [SKYACTIV-G 2.0].)
		No	DTC troubleshooting completed.

DTC P0134:00 [SKYACTIV-G 2.0]

id0102h1702500

DTC P0134:00	**A/F sensor circuit no activity detected**
DETECTION CONDITION	• The PCM monitors the element impedance of the A/F sensor when the following conditions are met. Under the following monitoring conditions, if the element impedance is more than specified value, the PCM determines that the A/F sensor is not activated. **MONITORING CONDITIONS** — Drive Mode 03 (Variable Valve Timing, A/F Sensor Heater, HO2S Heater, A/F Sensor, HO2S and TWC Repair Verification Drive Mode) — The following conditions are met: • A/F sensor heater is turned on for **above 35 s**. • Battery voltage: **11—18 V** **Diagnostic support note** • This is an intermittent monitor (A/F sensor, HO2S). • The check engine light illuminates if the PCM detects the above malfunction condition in two consecutive drive cycles or in one drive cycle while the DTC for the same malfunction has been stored in the PCM. • PENDING CODE is available if the PCM detects the above malfunction condition during first drive cycle. • FREEZE FRAME DATA (Mode 2)/Snapshot data is available. • The DTC is stored in the PCM memory.
FAIL-SAFE FUNCTION	• Fixes the duty value of the A/F sensor heater. • Stops the fuel feedback control.
POSSIBLE CAUSE	• Erratic signal from A/F sensor — A/F sensor loose — Exhaust system leakage — A/F sensor connector or terminals malfunction • A/F sensor heater malfunction • Short to ground in wiring harness between the following terminals: — A/F sensor terminal F—PCM terminal 1W — A/F sensor terminal D—PCM terminal 1AB — A/F sensor terminal B—PCM terminal 1AG — A/F sensor terminal E—PCM terminal 1BY • PCM connector or terminals malfunction • Open circuit in wiring harness between the following terminals: — A/F sensor terminal F—PCM terminal 1W — A/F sensor terminal D—PCM terminal 1AB — A/F sensor terminal B—PCM terminal 1AG — A/F sensor terminal E—PCM terminal 1BY • A/F sensor malfunction — A/F sensor deterioration • Engine malfunction — Insufficient engine compression — Engine coolant leakage to combustion chamber • PCM malfunction

ON-BOARD DIAGNOSTIC [SKYACTIV-G 2.0]

DTC P0134:00	A/F sensor circuit no activity detected

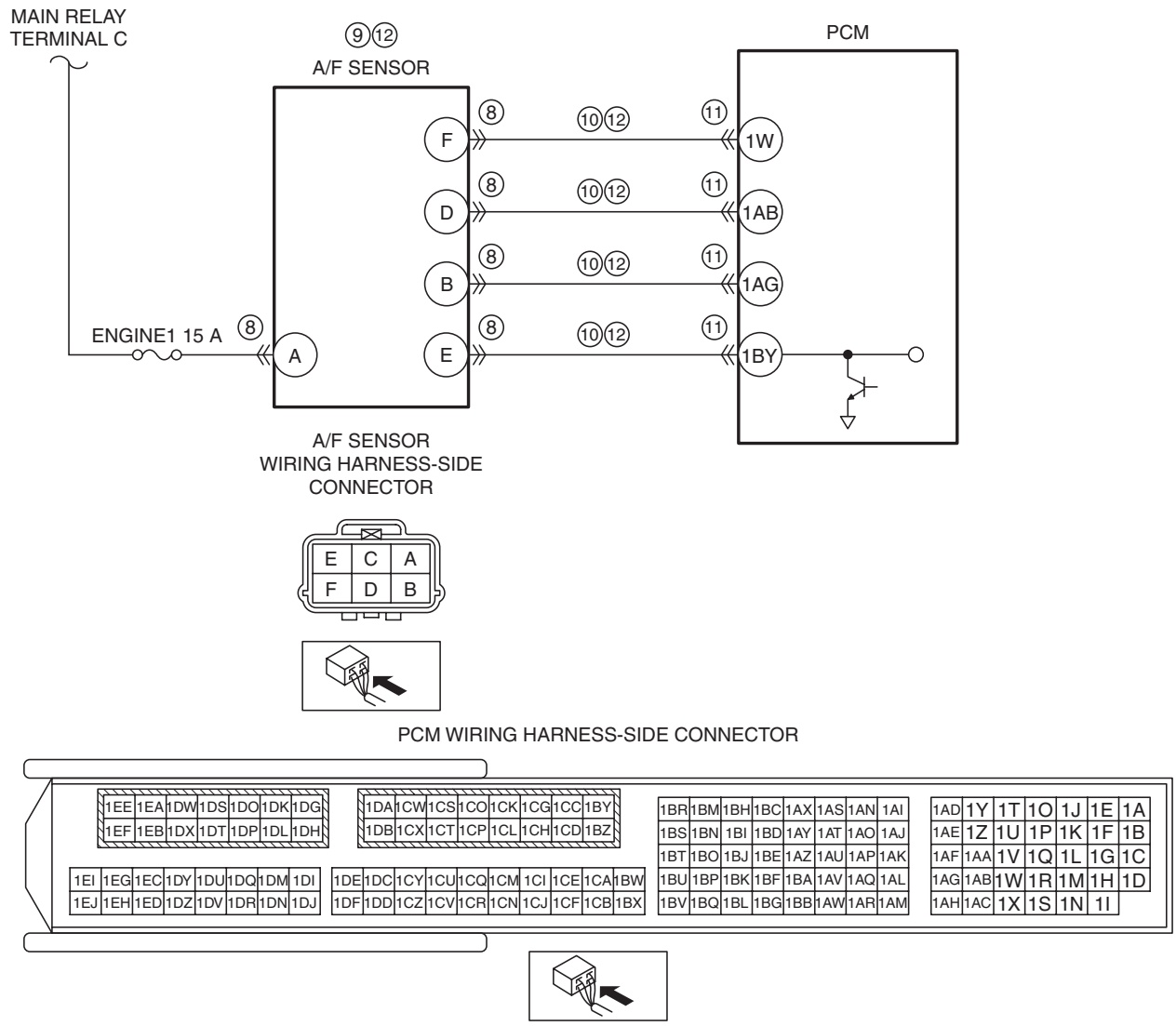

Diagnostic Procedure

STEP	INSPECTION		ACTION
1	**IDENTIFY TRIGGER DTC FOR FREEZE FRAME DATA (MODE 2)** • Perform the Freeze Frame PID Data Access Procedure. (See 01-02-8 ON-BOARD DIAGNOSTIC TEST [SKYACTIV-G 2.0].) • Is the DTC P0134:00 on FREEZE FRAME DATA (Mode 2)?	Yes	Go to the next step.
		No	Go to the troubleshooting procedure for DTC on FREEZE FRAME DATA (Mode 2). (See 01-02-14 DTC TABLE [SKYACTIV-G 2.0].)
2	**VERIFY FREEZE FRAME DATA (MODE 2)/ SNAPSHOT DATA AND DIAGNOSTIC MONITORING TEST RESULTS HAVE BEEN RECORDED** • Have the FREEZE FRAME DATA (Mode 2)/ snapshot data and DIAGNOSTIC MONITORING TEST RESULTS (A/F sensor, HO2S related) been recorded?	Yes	Go to the next step.
		No	Record the FREEZE FRAME DATA (Mode 2)/snapshot data and DIAGNOSTIC MONITORING TEST RESULTS on the repair order, then go to the next step.
3	**VERIFY RELATED SERVICE INFORMATION AVAILABILITY** • Verify related Service Information availability. • Is any related Service Information available?	Yes	Perform repair or diagnosis according to the available Service Information. • If the vehicle is not repaired, go to the next step.
		No	Go to the next step.

ON-BOARD DIAGNOSTIC [SKYACTIV-G 2.0]

STEP	INSPECTION		ACTION
4	**VERIFY RELATED PENDING CODE AND/OR DTC** **Note** • If the fuel monitor, DTC P0132:00 is retrieved, ignore it until DTC P0134:00 is fixed. • Switch the ignition to off, then to ON (engine off). • Perform the Pending Trouble Code Access Procedure and DTC Reading Procedure. (See 01-02-8 ON-BOARD DIAGNOSTIC TEST [SKYACTIV-G 2.0].) • Is the PENDING CODE/DTC P2237:00, P2243:00 or P2251:00 also present?	Yes	Go to the applicable PENDING CODE or DTC inspection. (See 01-02-341 DTC P2237:00 [SKYACTIV-G 2.0].) (See 01-02-344 DTC P2243:00 [SKYACTIV-G 2.0].) (See 01-02-347 DTC P2251:00 [SKYACTIV-G 2.0].)
		No	Go to the next step.
5	**INSPECT CURRENT SIGNAL STATUS OF A/F SENSOR** • Inspect the A/F sensor. (See 01-40-55 AIR FUEL RATIO (A/F) SENSOR INSPECTION [SKYACTIV-G 2.0].) • Is there any malfunction?	Yes	Go to the next step.
		No	Go to Step 13.
6	**INSPECT INSTALLATION OF A/F SENSOR** • Inspect installation of A/F sensor. • Is the A/F sensor installed securely?	Yes	Go to the next step.
		No	Retighten the A/F sensor, then go to Step 15. (See 01-40-52 AIR FUEL RATIO (A/F) SENSOR REMOVAL/INSTALLATION [SKYACTIV-G 2.0].)
7	**INSPECT EXHAUST SYSTEM FOR LEAKAGE** • Visually inspect for exhaust leakage between exhaust manifold and A/F sensor. • Is there any leakage?	Yes	Repair or replace the malfunctioning part according to the inspection results, then go to Step 15.
		No	Go to the next step.
8	**INSPECT A/F SENSOR CONNECTOR CONDITION** • Switch the ignition to off. • Disconnect the A/F sensor connector. • Inspect for poor connection (such as damaged/ pulled-out pins, corrosion). • Is there any malfunction?	Yes	Repair or replace the connector and/or terminals, then go to Step 15.
		No	Go to the next step.
9	**INSPECT A/F SENSOR HEATER** • Inspect the A/F sensor heater. (See 01-40-55 AIR FUEL RATIO (A/F) SENSOR INSPECTION [SKYACTIV-G 2.0].) • Is there any malfunction?	Yes	Replace the A/F sensor, then go to Step 15. (See 01-40-52 AIR FUEL RATIO (A/F) SENSOR REMOVAL/INSTALLATION [SKYACTIV-G 2.0].)
		No	Go to the next step.
10	**INSPECT A/F SENSOR CIRCUIT FOR SHORT TO GROUND** • Verify that the A/F sensor connector is disconnected. • Inspect for continuity between the following terminals (wiring harness-side) and body ground: — A/F sensor terminal F — A/F sensor terminal D — A/F sensor terminal B — A/F sensor terminal E • Is there continuity?	Yes	If the short to ground circuit could be detected in the wiring harness: • Repair or replace the wiring harness for a possible short to ground. If the short to ground circuit could not be detected in the wiring harness: • Replace the PCM (short to ground in the PCM internal circuit). (See 01-40-10 PCM REMOVAL/INSTALLATION [SKYACTIV-G 2.0].) Go to Step 15.
		No	Go to the next step.
11	**INSPECT PCM CONNECTOR CONDITION** • Disconnect the PCM connector. • Inspect for poor connection (such as damaged/ pulled-out pins, corrosion). • Is there any malfunction?	Yes	Repair or replace the connector and/or terminals, then go to Step 15.
		No	Go to the next step.

ON-BOARD DIAGNOSTIC [SKYACTIV-G 2.0]

STEP	INSPECTION		ACTION
12	**INSPECT A/F SENSOR CIRCUIT FOR OPEN CIRCUIT** • Verify that the A/F sensor and PCM connectors are disconnected. • Inspect for continuity between the following terminals (wiring harness-side): — A/F sensor terminal F—PCM terminal 1W — A/F sensor terminal D—PCM terminal 1AB — A/F sensor terminal B—PCM terminal 1AG — A/F sensor terminal E—PCM terminal 1BY • Is there continuity?	Yes	Replace the A/F sensor, then go to Step 15. (See 01-40-52 AIR FUEL RATIO (A/F) SENSOR REMOVAL/INSTALLATION [SKYACTIV-G 2.0].)
		No	Repair or replace the wiring harness for a possible open circuit, then go to Step 15.
13	**INSPECT ENGINE COMPRESSION** • Inspect the engine compression. (See 01-10A-14 COMPRESSION INSPECTION [SKYACTIV-G 2.0].) • Are compression pressures within specification? **Specification:** • Compression [European (L.H.D. U.K.) specs.] — Standard: **978 kPa {9.97 kgf/cm^2, 142 psi} (300 rpm)** — Minimum: **783 kPa {7.98 kgf/cm^2, 114 psi} (300 rpm)** — Maximum difference between cylinders: **166 kPa {1.69 kgf/cm^2, 24.1 psi}** • Compression [Except European (L.H.D. U.K.) specs.] — Standard: **885 kPa {9.02 kgf/cm^2, 128 psi} (300 rpm)** — Minimum: **708 kPa {7.22 kgf/cm^2, 103 psi} (300 rpm)** — Maximum difference between cylinders: **150 kPa {1.53 kgf/cm^2, 21.8 psi}** **Note** • Because the SKYACTIV-G 2.0 retards the intake valve closing timing, compression pressure is low.	Yes	Go to the next step.
		No	Repair or replace the malfunctioning part according to the inspection results, then go to Step 15.
14	**INSPECT SEALING OF ENGINE COOLANT PASSAGE** • Perform the “ENGINE COOLANT LEAKAGE INSPECTION”. (See 01-12A-7 ENGINE COOLANT LEAKAGE INSPECTION [SKYACTIV-G 2.0].) • Does the radiator cap tester needle drop even though there is no engine coolant leakage from the radiator or the hoses?	Yes	Engine coolant leakage from the engine (between the combustion chamber and the engine coolant passage) may have occurred. • Verify the conditions of the gasket and the cylinder head. — If there is any malfunction: • Repair or replace the malfunctioning part according to the inspection results, then go to the next step.
		No	Go to the next step.
15	**VERIFY DTC TROUBLESHOOTING COMPLETED** • Make sure to reconnect all disconnected connectors. • Clear the DTC from the PCM memory using the M-MDS. (See 01-02-12 AFTER REPAIR PROCEDURE [SKYACTIV-G 2.0].) • Perform the Drive Mode 03 (Variable Valve Timing, A/F Sensor Heater, HO2S Heater, A/F Sensor, HO2S and TWC Repair Verification Drive Mode). (See 01-02-13 OBD DRIVE MODE [SKYACTIV-G 2.0].) • Is the PENDING CODE for this DTC present?	Yes	Repeat the inspection from Step 1. • If the malfunction recurs, replace the PCM. (See 01-40-10 PCM REMOVAL/INSTALLATION [SKYACTIV-G 2.0].) Go to the next step.
		No	Go to the next step.

ON-BOARD DIAGNOSTIC [SKYACTIV-G 2.0]

STEP	INSPECTION		ACTION
16	**VERIFY AFTER REPAIR PROCEDURE** • Perform the “AFTER REPAIR PROCEDURE”. (See 01-02-12 AFTER REPAIR PROCEDURE [SKYACTIV-G 2.0].) • Are any DTCs present?	Yes	Go to the applicable DTC inspection. (See 01-02-14 DTC TABLE [SKYACTIV-G 2.0].)
		No	DTC troubleshooting completed.

01

DTC P0137:00 [SKYACTIV-G 2.0]

id0102h1300300

DTC P0137:00	HO2S circuit low input
DETECTION CONDITION	• The PCM monitors input voltage from HO2S. If the input voltage from the HO2S is **below** –**1.15 V** or HO2S bias voltage is **below 1.3 V** for **5 s** or the voltage from the HO2S is **below** –**0.15 V** for **25 s** while the HO2S is active, the PCM determines that the HO2S circuit input is low. **Diagnostic support note** • This is a continuous monitor (A/F sensor, HO2S). • The check engine light illuminates if the PCM detects the above malfunction condition in two consecutive drive cycles or in one drive cycle while the DTC for the same malfunction has been stored in the PCM. • PENDING CODE is available if the PCM detects the above malfunction condition during first drive cycle. • FREEZE FRAME DATA (Mode 2)/Snapshot data is available. • The DTC is stored in the PCM memory.
FAIL-SAFE FUNCTION	—
POSSIBLE CAUSE	• HO2S connector or terminals malfunction • Short to ground in wiring harness between HO2S terminal A and PCM terminal 2AI • PCM connector or terminals malfunction • Open circuit in wiring between the following terminals: — HO2S terminal A—PCM terminal 2AI — HO2S terminal B—PCM terminal 2AG • HO2S malfunction • PCM malfunction

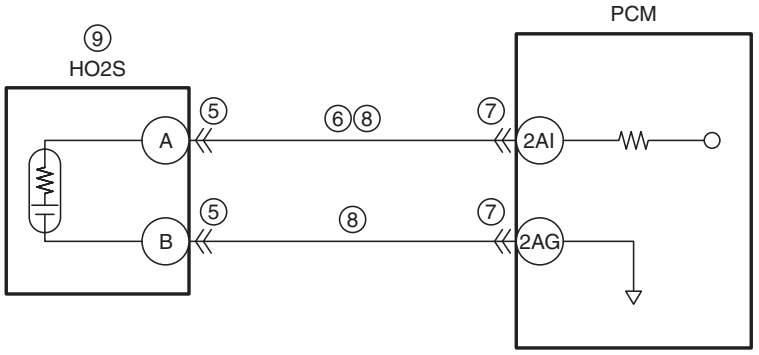

HO2S WIRING HARNESS-SIDE CONNECTOR

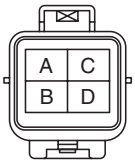

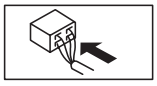

PCM WIRING HARNESS-SIDE CONNECTOR

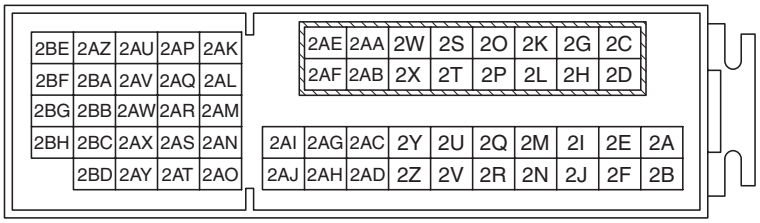

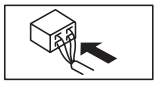

ON-BOARD DIAGNOSTIC [SKYACTIV-G 2.0]

Diagnostic Procedure

STEP	INSPECTION		ACTION
1	**IDENTIFY TRIGGER DTC FOR FREEZE FRAME DATA (MODE 2)** • Perform the Freeze Frame PID Data Access Procedure. (See 01-02-8 ON-BOARD DIAGNOSTIC TEST [SKYACTIV-G 2.0].) • Is the DTC P0137:00 on FREEZE FRAME DATA (Mode 2)?	Yes	Go to the next step.
		No	Go to the troubleshooting procedure for DTC on FREEZE FRAME DATA (Mode 2). (See 01-02-14 DTC TABLE [SKYACTIV-G 2.0].)
2	**VERIFY FREEZE FRAME DATA (MODE 2)/ SNAPSHOT DATA AND DIAGNOSTIC MONITORING TEST RESULTS HAVE BEEN RECORDED** • Have the FREEZE FRAME DATA (Mode 2)/ snapshot data and DIAGNOSTIC MONITORING TEST RESULTS (A/F sensor, HO2S related) been recorded?	Yes	Go to the next step.
		No	Record the FREEZE FRAME DATA (Mode 2)/snapshot data and DIAGNOSTIC MONITORING TEST RESULTS on the repair order, then go to the next step.
3	**VERIFY RELATED SERVICE INFORMATION AVAILABILITY** • Verify related Service Information availability. • Is any related Service Information available?	Yes	Perform repair or diagnosis according to the available Service Information. • If the vehicle is not repaired, go to the next step.
		No	Go to the next step.
4	**VERIFY RELATED PENDING CODE AND/OR DTC** • Switch the ignition to off, then to ON (engine off). • Perform the Pending Trouble Code Access Procedure and DTC Reading Procedure. (See 01-02-8 ON-BOARD DIAGNOSTIC TEST [SKYACTIV-G 2.0].) • Are any other PENDING CODEs and/or DTCs present?	Yes	Go to the applicable PENDING CODE or DTC inspection. (See 01-02-14 DTC TABLE [SKYACTIV-G 2.0].)
		No	Go to the next step.
5	**INSPECT HO2S CONNECTOR CONDITION** • Switch the ignition to off. • Disconnect the HO2S connector. • Inspect for poor connection (such as damaged/ pulled-out pins, corrosion). • Is there any malfunction?	Yes	Repair or replace the connector and/or terminals, then go to Step 10.
		No	Go to the next step.
6	**INSPECT HO2S SIGNAL CIRCUIT FOR SHORT TO GROUND** • Verify that the HO2S connector is disconnected. • Inspect for continuity between HO2S terminal A (wiring harness-side) and body ground. • Is there continuity?	Yes	If the short to ground circuit could be detected in the wiring harness: • Repair or replace the wiring harness for a possible short to ground. If the short to ground circuit could not be detected in the wiring harness: • Replace the PCM (short to ground in the PCM internal circuit). (See 01-40-10 PCM REMOVAL/INSTALLATION [SKYACTIV-G 2.0].) Go to Step 10.
		No	Go to the next step.
7	**INSPECT PCM CONNECTOR CONDITION** • Disconnect the PCM connector. • Inspect for poor connection (such as damaged/ pulled-out pins, corrosion). • Is there any malfunction?	Yes	Repair or replace the connector and/or terminals, then go to Step 10.
		No	Go to the next step.
8	**INSPECT HO2S CIRCUIT FOR OPEN CIRCUIT** • Verify that the HO2S and PCM connectors are disconnected. • Inspect for continuity between the following terminals (wiring harness-side): — HO2S terminal A—PCM terminal 2AI — HO2S terminal B—PCM terminal 2AG • Is there continuity?	Yes	Go to the next step.
		No	Repair or replace the wiring harness for a possible open circuit, then go to Step 10.

ON-BOARD DIAGNOSTIC [SKYACTIV-G 2.0]

STEP	INSPECTION		ACTION
9	**INSPECT HO2S** • Reconnect all disconnected connectors. • Inspect the HO2S. (See 01-40-58 HEATED OXYGEN SENSOR (HO2S) INSPECTION [SKYACTIV-G 2.0].) • Is there any malfunction?	Yes	Replace the HO2S, then go to the next step. (See 01-40-56 HEATED OXYGEN SENSOR (HO2S) REMOVAL/INSTALLATION [SKYACTIV-G 2.0].)
		No	Intermittent concern exists. • Perform the “INTERMITTENT CONCERN TROUBLESHOOTING” procedure. (See 01-03-116 INTERMITTENT CONCERN TROUBLESHOOTING [SKYACTIV-G 2.0].)
10	**VERIFY DTC TROUBLESHOOTING COMPLETED** • Make sure to reconnect all disconnected connectors. • Clear the DTC from the PCM memory using the M-MDS. (See 01-02-12 AFTER REPAIR PROCEDURE [SKYACTIV-G 2.0].) • Perform the Pending Trouble Code Access Procedure. (See 01-02-8 ON-BOARD DIAGNOSTIC TEST [SKYACTIV-G 2.0].) • Is the PENDING CODE for this DTC present?	Yes	Repeat the inspection from Step 1. • If the malfunction recurs, replace the PCM. (See 01-40-10 PCM REMOVAL/INSTALLATION [SKYACTIV-G 2.0].) Go to the next step.
		No	Go to the next step.
11	**VERIFY AFTER REPAIR PROCEDURE** • Perform the “AFTER REPAIR PROCEDURE”. (See 01-02-12 AFTER REPAIR PROCEDURE [SKYACTIV-G 2.0].) • Are any DTCs present?	Yes	Go to the applicable DTC inspection. (See 01-02-14 DTC TABLE [SKYACTIV-G 2.0].)
		No	DTC troubleshooting completed.

ON-BOARD DIAGNOSTIC [SKYACTIV-G 2.0]

DTC P0138:00 [SKYACTIV-G 2.0]

id0102h1702600

DTC P0138:00	**HO2S circuit high input**
DETECTION CONDITION	• The PCM monitors input voltage from HO2S. If the input voltage from the HO2S is **above 1.2 V** or HO2S bias voltage is **above 1.8 V** for **5 s**, the PCM determines that the HO2S circuit input is high. **Diagnostic support note** • This is a continuous monitor (A/F sensor, HO2S). • The check engine light illuminates if the PCM detects the above malfunction condition in two consecutive drive cycles or in one drive cycle while the DTC for the same malfunction has been stored in the PCM. • PENDING CODE is available if the PCM detects the above malfunction condition during first drive cycle. • FREEZE FRAME DATA (Mode 2)/Snapshot data is available. • The DTC is stored in the PCM memory.
FAIL-SAFE FUNCTION	—
POSSIBLE CAUSE	• HO2S connector or terminals malfunction • PCM connector or terminals malfunction • Short to power supply in wiring harness between the following terminals: — HO2S terminal A—PCM terminal 2AI — HO2S terminal B—PCM terminal 2AG • HO2S malfunction • PCM malfunction

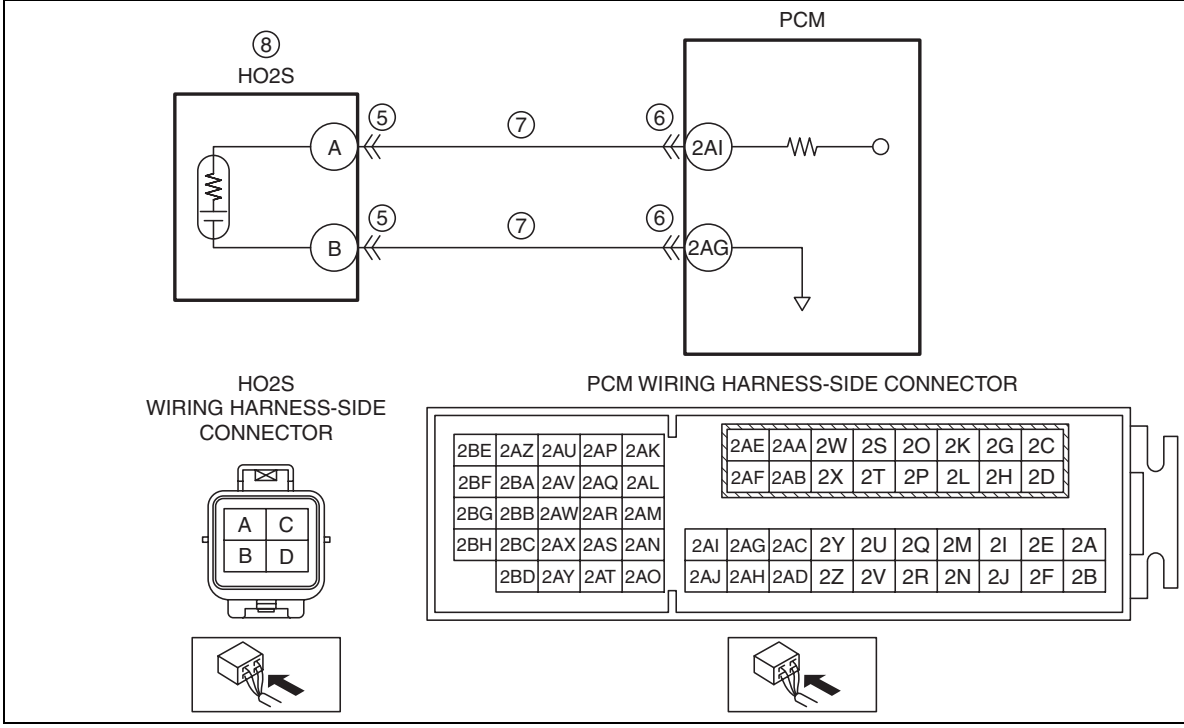

Diagnostic Procedure

STEP	INSPECTION		ACTION
1	**IDENTIFY TRIGGER DTC FOR FREEZE FRAME DATA (MODE 2)** • Perform the Freeze Frame PID Data Access Procedure. (See 01-02-8 ON-BOARD DIAGNOSTIC TEST [SKYACTIV-G 2.0].) • Is the DTC P0138:00 on FREEZE FRAME DATA (Mode 2)?	Yes	Go to the next step.
		No	Go to the troubleshooting procedure for DTC on FREEZE FRAME DATA (Mode 2). (See 01-02-14 DTC TABLE [SKYACTIV-G 2.0].)
2	**VERIFY FREEZE FRAME DATA (MODE 2)/ SNAPSHOT DATA AND DIAGNOSTIC MONITORING TEST RESULTS HAVE BEEN RECORDED** • Have the FREEZE FRAME DATA (Mode 2)/ snapshot data and DIAGNOSTIC MONITORING TEST RESULTS (A/F sensor, HO2S related) been recorded?	Yes	Go to the next step.
		No	Record the FREEZE FRAME DATA (Mode 2)/snapshot data and DIAGNOSTIC MONITORING TEST RESULTS on the repair order, then go to the next step.

ON-BOARD DIAGNOSTIC [SKYACTIV-G 2.0]

STEP	INSPECTION		ACTION
3	**VERIFY RELATED SERVICE INFORMATION AVAILABILITY** • Verify related Service Information availability. • Is any related Service Information available?	Yes	Perform repair or diagnosis according to the available Service Information. • If the vehicle is not repaired, go to the next step.
		No	Go to the next step.
4	**VERIFY RELATED PENDING CODE AND/OR DTC** • Switch the ignition to off, then to ON (engine off). • Perform the Pending Trouble Code Access Procedure and DTC Reading Procedure. (See 01-02-8 ON-BOARD DIAGNOSTIC TEST [SKYACTIV-G 2.0].) • Are any other PENDING CODEs and/or DTCs present?	Yes	Go to the applicable PENDING CODE or DTC inspection. (See 01-02-14 DTC TABLE [SKYACTIV-G 2.0].)
		No	Go to the next step.
5	**INSPECT HO2S CONNECTOR CONDITION** • Switch the ignition to off. • Disconnect the HO2S connector. • Inspect for poor connection (such as damaged/ pulled-out pins, corrosion). • Is there any malfunction?	Yes	Repair or replace the connector and/or terminals, then go to Step 9.
		No	Go to the next step.
6	**INSPECT PCM CONNECTOR CONDITION** • Disconnect the PCM connector. • Inspect for poor connection (such as damaged/ pulled-out pins, corrosion). • Is there any malfunction?	Yes	Repair or replace the connector and/or terminals, then go to Step 9.
		No	Go to the next step.
7	**INSPECT HO2S CIRCUIT FOR SHORT TO POWER SUPPLY** • Verify that the HO2S and PCM connectors are disconnected. • Switch the ignition ON (engine off or on). • Measure the voltage at the following terminals (wiring harness-side): — HO2S terminal A — HO2S terminal B • Is the voltage **0 V**?	Yes	Go to the next step.
		No	Repair or replace the wiring harness for a possible short to power supply, then go to Step 9.
8	**INSPECT HO2S** • Switch the ignition to off. • Reconnect all disconnected connectors. • Inspect the HO2S. (See 01-40-58 HEATED OXYGEN SENSOR (HO2S) INSPECTION [SKYACTIV-G 2.0].) • Is there any malfunction?	Yes	Replace the HO2S, then go to the next step. (See 01-40-56 HEATED OXYGEN SENSOR (HO2S) REMOVAL/INSTALLATION [SKYACTIV-G 2.0].)
		No	Go to the next step.
9	**VERIFY DTC TROUBLESHOOTING COMPLETED** • Make sure to reconnect all disconnected connectors. • Clear the DTC from the PCM memory using the M-MDS. (See 01-02-12 AFTER REPAIR PROCEDURE [SKYACTIV-G 2.0].) • Perform the KOEO or KOER self test. (See 01-02-12 KOEO/KOER SELF TEST [SKYACTIV-G 2.0].) • Is the PENDING CODE for this DTC present?	Yes	Repeat the inspection from Step 1. • If the malfunction recurs, replace the PCM. (See 01-40-10 PCM REMOVAL/INSTALLATION [SKYACTIV-G 2.0].) Go to the next step.
		No	Go to the next step.
10	**VERIFY AFTER REPAIR PROCEDURE** • Perform the “AFTER REPAIR PROCEDURE”. (See 01-02-12 AFTER REPAIR PROCEDURE [SKYACTIV-G 2.0].) • Are any DTCs present?	Yes	Go to the applicable DTC inspection. (See 01-02-14 DTC TABLE [SKYACTIV-G 2.0].)
		No	DTC troubleshooting completed.

ON-BOARD DIAGNOSTIC [SKYACTIV-G 2.0]

DTC P013A:00 [SKYACTIV-G 2.0]

id0102h1310200

DTC P013A:00	HO2S circuit slow response
DETECTION CONDITION	• The PCM monitors the rich (**0.55 V**) to lean (**0.3 V**) response time of the HO2S. The PCM measures the response time when the following conditions are met. The PCM determines a HO2S response deterioration malfunction when the measured response time is **more than 0.2 s** for **2 of 3 times**. **MONITORING CONDITIONS** — Drive Mode 03 (Variable Valve Timing, A/F Sensor Heater, HO2S Heater, A/F Sensor, HO2S and TWC Repair Verification Drive Mode) — Following conditions are met: • During deceleration fuel cut • Estimated temperature of the zirconia element inside the HO2S: **above 450 °C {842 °F}** • The PCM monitors for a time-out malfunction (when HO2S remains **above 0.2 V** for longer than a specified period of time during fuel cut control). The PCM measures the amount of time from when the following conditions are met until the HO2S output voltage drops **below 0.2 V**. The PCM determines a HO2S time-out malfunction when the detected time is **more than 5 s** for **2 of 3 times**. **MONITORING CONDITIONS** — Drive Mode 03 (Variable Valve Timing, A/F Sensor Heater, HO2S Heater, A/F Sensor, HO2S and TWC Repair Verification Drive Mode) — Following conditions are met: • During deceleration fuel cut • Estimated temperature of the zirconia element inside the HO2S: **above 450 °C {842 °F}** **Diagnostic support note** • This is an intermittent monitor (A/F sensor, HO2S). • The check engine light illuminates if the PCM detects the above malfunction condition in two consecutive drive cycles or in one drive cycle while the DTC for the same malfunction has been stored in the PCM. • PENDING CODE is available if the PCM detects the above malfunction condition during first drive cycle. • FREEZE FRAME DATA (Mode 2)/Snapshot data is available. • The DTC is stored in the PCM memory.
FAIL-SAFE FUNCTION	—
POSSIBLE CAUSE	• Erratic signal from HO2S — HO2S loose — Exhaust system leakage • Purge solenoid valve malfunction — Improper connection of evaporative hose (purge solenoid valve side) • High-pressure side fuel delivery system malfunction — Fuel pressure sensor malfunction — Spill valve control solenoid valve control circuit malfunction (damage to driver in PCM caused by short circuit to ground system) — Spill valve control solenoid valve (built-into high pressure fuel pump) malfunction — Relief valve (built-into high pressure fuel pump) malfunction — High pressure fuel pump malfunction • Low-pressure side fuel delivery system malfunction — Fuel leakage in fuel line — Fuel leakage on fuel line (between fuel pump unit and high pressure fuel pump) — Fuel filter clogged — Pressure regulator (built-into fuel pump unit) malfunction — Fuel pump unit malfunction • Engine malfunction — Insufficient engine compression — Engine coolant leakage • HO2S malfunction — HO2S deterioration • PCM malfunction
SYSTEM WIRING DIAGRAM	—

ON-BOARD DIAGNOSTIC [SKYACTIV-G 2.0]

Diagnostic Procedure

STEP	INSPECTION		ACTION
1	**IDENTIFY TRIGGER DTC FOR FREEZE FRAME DATA (MODE 2)** • Perform the Freeze Frame PID Data Access Procedure. (See 01-02-8 ON-BOARD DIAGNOSTIC TEST [SKYACTIV-G 2.0].) • Is the DTC P013A:00 on FREEZE FRAME DATA (Mode 2)?	Yes	Go to the next step.
		No	Go to the troubleshooting procedure for DTC on FREEZE FRAME DATA (Mode 2). (See 01-02-14 DTC TABLE [SKYACTIV-G 2.0].)
2	**VERIFY FREEZE FRAME DATA (MODE 2)/ SNAPSHOT DATA AND DIAGNOSTIC MONITORING TEST RESULTS HAVE BEEN RECORDED** • Have the FREEZE FRAME DATA (Mode 2)/ snapshot data and DIAGNOSTIC MONITORING TEST RESULTS (A/F sensor, HO2S related) been recorded?	Yes	Go to the next step.
		No	Record the FREEZE FRAME DATA (Mode 2)/snapshot data and DIAGNOSTIC MONITORING TEST RESULTS on the repair order, then go to the next step.
3	**VERIFY RELATED SERVICE INFORMATION AVAILABILITY** • Verify related Service Information availability. • Is any related Service Information available?	Yes	Perform repair or diagnosis according to the available Service Information. • If the vehicle is not repaired, go to the next step.
		No	Go to the next step.
4	**VERIFY RELATED PENDING CODE AND/OR DTC** • Switch the ignition to off, then to ON (engine off). • Perform the Pending Trouble Code Access Procedure and DTC Reading Procedure. (See 01-02-8 ON-BOARD DIAGNOSTIC TEST [SKYACTIV-G 2.0].) • Is the PENDING CODE/DTC P0443:00 also present?	Yes	Go to the applicable PENDING CODE or DTC inspection. (See 01-02-202 DTC P0443:00 [SKYACTIV-G 2.0].)
		No	Go to the next step.
5	**INSPECT CURRENT SIGNAL STATUS OF HO2S** • Inspect the HO2S. (See 01-40-58 HEATED OXYGEN SENSOR (HO2S) INSPECTION [SKYACTIV-G 2.0].) • Is there any malfunction?	Yes	Go to the next step.
		No	Go to Step 8.
6	**INSPECT INSTALLATION OF HO2S** • Inspect installation of HO2S. • Is the HO2S installed securely?	Yes	Go to the next step.
		No	Retighten the HO2S, then go to Step 18. (See 01-40-56 HEATED OXYGEN SENSOR (HO2S) REMOVAL/INSTALLATION [SKYACTIV-G 2.0].)
7	**INSPECT EXHAUST SYSTEM FOR LEAKAGE** • Visually inspect for exhaust leakage between exhaust manifold and HO2S. • Is there any leakage?	Yes	Repair or replace the malfunctioning part according to the inspection results, then go to Step 18.
		No	Go to the next step.
8	**INSPECT PURGE SOLENOID VALVE AND EVAPORATIVE HOSE** • Inspect the purge solenoid valve and evaporative hose connection. (See 01-16A-12 PURGE SOLENOID VALVE INSPECTION [SKYACTIV-G 2.0].) (See 01-13A-4 INTAKE-AIR SYSTEM VACUUM HOSE ROUTING DIAGRAM [SKYACTIV-G 2.0].) • Is there any malfunction?	Yes	Repair or replace the malfunctioning part according to the inspection results, then go to Step 18. (See 01-16A-10 PURGE SOLENOID VALVE REMOVAL/ INSTALLATION [SKYACTIV-G 2.0].)
		No	Go to the next step.
9	**INSPECT FOR FUEL LINE LEAKAGE** • Visually inspect for leakage from fuel line between fuel distributor and fuel pump. • Is there any leakage?	Yes	Repair or replace the malfunctioning part according to the inspection results, then go to Step 18.
		No	Go to the next step.

ON-BOARD DIAGNOSTIC [SKYACTIV-G 2.0]

STEP	INSPECTION		ACTION
10	**INSPECT FUEL PRESSURE (HIGH-SIDE)** • Start the engine and warm it up completely. • Access the FUEL_PRES PID using the M-MDS at idle. (See 01-02-8 ON-BOARD DIAGNOSTIC TEST [SKYACTIV-G 2.0].) • Is the FUEL_PRES PID value **approx. 3 MPa {31 kgf/cm^2, 435 psi}**?	Yes	Go to Step 14.
		No	Lower than **3 MPa {31 kgf/cm2, 435 psi}**: • Inspect the following: — Fuel leakage at the fuel line and fuel injector — Fuel pump • Perform the Fuel Pump (Low-pressure Side) Operation Inspection. (See 01-03-118 ENGINE CONTROL SYSTEM OPERATION INSPECTION [SKYACTIV-G 2.0].) — Fuel pressure sensor (See 01-40-52 FUEL PRESSURE SENSOR INSPECTION [SKYACTIV-G 2.0].) — High pressure fuel pump (See 01-14A-49 HIGH PRESSURE FUEL PUMP INSPECTION [SKYACTIV-G 2.0].) • If there is any malfunction: — Repair or replace the malfunctioning part according to the inspection results, then go to Step 18. • If there is no malfunction: — Go to Step 13. Higher than **3 MPa {31 kgf/cm2, 435 psi}**: • Go to the next step.
11	**IDENTIFY CAUSE BY FUEL PRESSURE SENSOR OR HIGH PRESSURE FUEL PUMP** • Is the vehicle acceleration performance normal?	Yes	Go to the next step.
		No	Go to Step 13.
12	**INSPECT FUEL PRESSURE SENSOR** • Inspect the fuel pressure sensor. (See 01-40-52 FUEL PRESSURE SENSOR INSPECTION [SKYACTIV-G 2.0].) • Is there any malfunction?	Yes	Replace the fuel distributor, then go to Step 18. (See 01-14A-51 FUEL INJECTOR REMOVAL/INSTALLATION [SKYACTIV-G 2.0].)
		No	Go to Step 14.
13	**INSPECT SPILL VALVE CONTROL SOLENOID VALVE CONTROL CIRCUIT FOR SHORT TO GROUND** • Switch the ignition to off. • Disconnect the high pressure fuel pump and PCM connectors. • Inspect for continuity between high pressure fuel pump terminal A (wiring harness-side) and body ground. • Is there continuity?	Yes	Repair or replace the wiring harness for a possible short to ground, then go to Step 18.
		No	Replace the high pressure fuel pump, then go to Step 18. (See 01-14A-44 HIGH PRESSURE FUEL PUMP REMOVAL/INSTALLATION [SKYACTIV-G 2.0].)
14	**INSPECT FUEL PRESSURE (LOW-SIDE)** • Connect the fuel pressure gauge between fuel pump and high pressure fuel pump. • Measure the low side fuel pressure. (See 01-14A-8 FUEL LINE PRESSURE INSPECTION [SKYACTIV-G 2.0].) • Is the low side fuel pressure within specification? **Specification:** • **405—485 kPa {4.13—4.94 kgf/cm^2, 58.8—70.3 psi}**	Yes	Go to the next step.
		No	Inspect the following: • Fuel line restriction • Fuel filter clogged — If there is any malfunction: • Repair or replace the malfunctioning part according to the inspection results. — If there is no malfunction: • Replace the fuel pump unit. (See 01-14A-38 FUEL PUMP UNIT REMOVAL/INSTALLATION [SKYACTIV-G 2.0].) Go to Step 18.

ON-BOARD DIAGNOSTIC [SKYACTIV-G 2.0]

STEP	INSPECTION		ACTION
15	**INSPECT ENGINE COMPRESSION** • Inspect the engine compression. (See 01-10A-14 COMPRESSION INSPECTION [SKYACTIV-G 2.0].) • Are compression pressures within specification? **Specification:** • Compression [European (L.H.D. U.K.) specs.] — Standard: **978 kPa {9.97 kgf/cm^2, 142 psi} (300 rpm)** — Minimum: **783 kPa {7.98 kgf/cm^2, 114 psi} (300 rpm)** — Maximum difference between cylinders: **166 kPa {1.69 kgf/cm^2, 24.1 psi}** • Compression [Except European (L.H.D. U.K.) specs.] — Standard: **885 kPa {9.02 kgf/cm^2, 128 psi} (300 rpm)** — Minimum: **708 kPa {7.22 kgf/cm^2, 103 psi} (300 rpm)** — Maximum difference between cylinders: **150 kPa {1.53 kgf/cm^2, 21.8 psi}** **Note** • Because the SKYACTIV-G 2.0 retards the intake valve closing timing, compression pressure is low.	Yes	Go to the next step.
		No	Repair or replace the malfunctioning part according to the inspection results, then go to Step 18.
16	**INSPECT SEALING OF ENGINE COOLANT PASSAGE** • Perform the “ENGINE COOLANT LEAKAGE INSPECTION”. (See 01-12A-7 ENGINE COOLANT LEAKAGE INSPECTION [SKYACTIV-G 2.0].) • Does the radiator cap tester needle drop even though there is no engine coolant leakage from the radiator or the hoses?	Yes	Engine coolant leakage from the engine (between the combustion chamber and the engine coolant passage) may have occurred. • Verify the conditions of the gasket and the cylinder head. — If there is any malfunction: • Repair or replace the malfunctioning part according to the inspection results, then go to Step 18.
		No	Go to the next step.
17	**INSPECT HO2S** • Switch the ignition to off. • Reconnect all disconnected connectors. • Inspect the HO2S. (See 01-40-58 HEATED OXYGEN SENSOR (HO2S) INSPECTION [SKYACTIV-G 2.0].) • Is there any malfunction?	Yes	Replace the HO2S, then go to the next step. (See 01-40-56 HEATED OXYGEN SENSOR (HO2S) REMOVAL/INSTALLATION [SKYACTIV-G 2.0].)
		No	Go to the next step.
18	**VERIFY DTC TROUBLESHOOTING COMPLETED** • Make sure to reconnect all disconnected connectors. • Clear the DTC from the PCM memory using the M-MDS. (See 01-02-12 AFTER REPAIR PROCEDURE [SKYACTIV-G 2.0].) • Perform the Drive Mode 03 (Variable Valve Timing, A/F Sensor Heater, HO2S Heater, A/F Sensor, HO2S and TWC Repair Verification Drive Mode). (See 01-02-13 OBD DRIVE MODE [SKYACTIV-G 2.0].) • Is the PENDING CODE for this DTC present?	Yes	Repeat the inspection from Step 1. • If the malfunction recurs, replace the PCM. (See 01-40-10 PCM REMOVAL/INSTALLATION [SKYACTIV-G 2.0].) Go to the next step.
		No	Go to the next step.
19	**VERIFY AFTER REPAIR PROCEDURE** • Perform the “AFTER REPAIR PROCEDURE”. (See 01-02-12 AFTER REPAIR PROCEDURE [SKYACTIV-G 2.0].) • Are any DTCs present?	Yes	Go to the applicable DTC inspection. (See 01-02-14 DTC TABLE [SKYACTIV-G 2.0].)
		No	DTC troubleshooting completed.

ON-BOARD DIAGNOSTIC [SKYACTIV-G 2.0]

DTC P013B:00 [SKYACTIV-G 2.0]

id0102h1411500

DTC P013B:00	HO2S circuit slow response
DETECTION CONDITION	• During recovery from deceleration fuel cut, the HO2S voltage is **0.2 V or less**, and the following condition is met: — When the elapsed time for the HO2S voltage to transition from **0.3 V** to **0.55 V** is greater than the specification 2 out of 3 times or more. **MONITORING CONDITIONS** — Drive Mode 03 (Variable Valve Timing, A/F Sensor Heater, HO2S Heater, A/F Sensor, HO2S and TWC Repair Verification Drive Mode) — Following conditions are met: • During deceleration fuel cut • Estimated temperature of the zirconia element inside the HO2S: **above 450 °C {842 °F}** • Intake airflow amount: **above 8 g/s {1 lb/min}** **Diagnostic support note** • This is an intermittent monitor (A/F sensor, HO2S). • The check engine light illuminates if the PCM detects the above malfunction condition in two consecutive drive cycles or in one drive cycle while the DTC for the same malfunction has been stored in the PCM. • PENDING CODE is available if the PCM detects the above malfunction condition during first drive cycle. • FREEZE FRAME DATA (Mode 2)/Snapshot data is available. • The DTC is stored in the PCM memory.
FAIL-SAFE FUNCTION	—
POSSIBLE CAUSE	• Erratic signal from HO2S — HO2S loose — Exhaust system leakage • Purge solenoid valve malfunction — Improper connection of evaporative hose (purge solenoid valve side) • High-pressure side fuel delivery system malfunction — Fuel pressure sensor malfunction — Spill valve control solenoid valve control circuit malfunction (damage to driver in PCM caused by short circuit to ground system) — Spill valve control solenoid valve (built-into high pressure fuel pump) malfunction — Relief valve (built-into high pressure fuel pump) malfunction — High pressure fuel pump malfunction • Low-pressure side fuel delivery system malfunction — Fuel leakage in fuel line — Fuel leakage on fuel line (between fuel pump unit and high pressure fuel pump) — Fuel filter clogged — Pressure regulator (built-into fuel pump unit) malfunction — Fuel pump unit malfunction • Engine malfunction — Insufficient engine compression — Engine coolant leakage • HO2S malfunction — HO2S deterioration • PCM malfunction
SYSTEM WIRING DIAGRAM	—

ON-BOARD DIAGNOSTIC [SKYACTIV-G 2.0]

Diagnostic Procedure

STEP	INSPECTION		ACTION
1	**IDENTIFY TRIGGER DTC FOR FREEZE FRAME DATA (MODE 2)** • Perform the Freeze Frame PID Data Access Procedure. (See 01-02-8 ON-BOARD DIAGNOSTIC TEST [SKYACTIV-G 2.0].) • Is the DTC P013B:00 on FREEZE FRAME DATA (Mode 2)?	Yes	Go to the next step.
		No	Go to the troubleshooting procedure for DTC on FREEZE FRAME DATA (Mode 2). (See 01-02-14 DTC TABLE [SKYACTIV-G 2.0].)
2	**VERIFY FREEZE FRAME DATA (MODE 2)/ SNAPSHOT DATA AND DIAGNOSTIC MONITORING TEST RESULTS HAVE BEEN RECORDED** • Have the FREEZE FRAME DATA (Mode 2)/ snapshot data and DIAGNOSTIC MONITORING TEST RESULTS (A/F sensor, HO2S related) been recorded?	Yes	Go to the next step.
		No	Record the FREEZE FRAME DATA (Mode 2)/snapshot data and DIAGNOSTIC MONITORING TEST RESULTS on the repair order, then go to the next step.
3	**VERIFY RELATED SERVICE INFORMATION AVAILABILITY** • Verify related Service Information availability. • Is any related Service Information available?	Yes	Perform repair or diagnosis according to the available Service Information. • If the vehicle is not repaired, go to the next step.
		No	Go to the next step.
4	**VERIFY RELATED PENDING CODE AND/OR DTC** • Switch the ignition to off, then to ON (engine off). • Perform the Pending Trouble Code Access Procedure and DTC Reading Procedure. (See 01-02-8 ON-BOARD DIAGNOSTIC TEST [SKYACTIV-G 2.0].) • Is the PENDING CODE/DTC P0443:00 also present?	Yes	Go to the applicable PENDING CODE or DTC inspection. (See 01-02-202 DTC P0443:00 [SKYACTIV-G 2.0].)
		No	Go to the next step.
5	**INSPECT CURRENT SIGNAL STATUS OF HO2S** • Inspect the HO2S. (See 01-40-58 HEATED OXYGEN SENSOR (HO2S) INSPECTION [SKYACTIV-G 2.0].) • Is there any malfunction?	Yes	Go to the next step.
		No	Go to Step 8.
6	**INSPECT INSTALLATION OF HO2S** • Inspect installation of HO2S. • Is the HO2S installed securely?	Yes	Go to the next step.
		No	Retighten the HO2S, then go to Step 18. (See 01-40-56 HEATED OXYGEN SENSOR (HO2S) REMOVAL/INSTALLATION [SKYACTIV-G 2.0].)
7	**INSPECT EXHAUST SYSTEM FOR LEAKAGE** • Visually inspect for exhaust leakage between exhaust manifold and HO2S. • Is there any leakage?	Yes	Repair or replace the malfunctioning part according to the inspection results, then go to Step 18.
		No	Go to the next step.
8	**INSPECT PURGE SOLENOID VALVE AND EVAPORATIVE HOSE** • Inspect the purge solenoid valve and evaporative hose connection. (See 01-16A-12 PURGE SOLENOID VALVE INSPECTION [SKYACTIV-G 2.0].) (See 01-13A-4 INTAKE-AIR SYSTEM VACUUM HOSE ROUTING DIAGRAM [SKYACTIV-G 2.0].) • Is there any malfunction?	Yes	Repair or replace the malfunctioning part according to the inspection results, then go to Step 18. (See 01-16A-10 PURGE SOLENOID VALVE REMOVAL/ INSTALLATION [SKYACTIV-G 2.0].)
		No	Go to the next step.
9	**INSPECT FOR FUEL LINE LEAKAGE** • Visually inspect for leakage from fuel line between fuel distributor and fuel pump. • Is there any leakage?	Yes	Repair or replace the malfunctioning part according to the inspection results, then go to Step 18.
		No	Go to the next step.

ON-BOARD DIAGNOSTIC [SKYACTIV-G 2.0]

STEP	INSPECTION		ACTION
10	**INSPECT FUEL PRESSURE (HIGH-SIDE)** • Start the engine and warm it up completely. • Access the FUEL_PRES PID using the M-MDS at idle. (See 01-02-8 ON-BOARD DIAGNOSTIC TEST [SKYACTIV-G 2.0].) • Is the FUEL_PRES PID value **approx. 3 MPa {31 kgf/cm^2, 435 psi}**?	Yes	Go to Step 14.
		No	Lower than **3 MPa {31 kgf/cm2, 435 psi}**: • Inspect the following: — Fuel leakage at the fuel line and fuel injector — Fuel pump • Perform the Fuel Pump (Low-pressure Side) Operation Inspection. (See 01-03-118 ENGINE CONTROL SYSTEM OPERATION INSPECTION [SKYACTIV-G 2.0].) — Fuel pressure sensor (See 01-40-52 FUEL PRESSURE SENSOR INSPECTION [SKYACTIV-G 2.0].) — High pressure fuel pump (See 01-14A-49 HIGH PRESSURE FUEL PUMP INSPECTION [SKYACTIV-G 2.0].) • If there is any malfunction: — Repair or replace the malfunctioning part according to the inspection results, then go to Step 18. • If there is no malfunction: — Go to Step 13. Higher than **3 MPa {31 kgf/cm2, 435 psi}**: • Go to the next step.
11	**IDENTIFY CAUSE BY FUEL PRESSURE SENSOR OR HIGH PRESSURE FUEL PUMP** • Is the vehicle acceleration performance normal?	Yes	Go to the next step.
		No	Go to Step 13.
12	**INSPECT FUEL PRESSURE SENSOR** • Inspect the fuel pressure sensor. (See 01-40-52 FUEL PRESSURE SENSOR INSPECTION [SKYACTIV-G 2.0].) • Is there any malfunction?	Yes	Replace the fuel distributor, then go to Step 18. (See 01-14A-51 FUEL INJECTOR REMOVAL/INSTALLATION [SKYACTIV-G 2.0].)
		No	Go to Step 14.
13	**INSPECT SPILL VALVE CONTROL SOLENOID VALVE CONTROL CIRCUIT FOR SHORT TO GROUND** • Switch the ignition to off. • Disconnect the high pressure fuel pump and PCM connectors. • Inspect for continuity between high pressure fuel pump terminal A (wiring harness-side) and body ground. • Is there continuity?	Yes	Repair or replace the wiring harness for a possible short to ground, then go to Step 18.
		No	Replace the high pressure fuel pump, then go to Step 18. (See 01-14A-44 HIGH PRESSURE FUEL PUMP REMOVAL/INSTALLATION [SKYACTIV-G 2.0].)
14	**INSPECT FUEL PRESSURE (LOW-SIDE)** • Connect the fuel pressure gauge between fuel pump and high pressure fuel pump. • Measure the low side fuel pressure. (See 01-14A-8 FUEL LINE PRESSURE INSPECTION [SKYACTIV-G 2.0].) • Is the low side fuel pressure within specification? **Specification:** • **405—485 kPa {4.13—4.94 kgf/cm^2, 58.8—70.3 psi}**	Yes	Go to the next step.
		No	Inspect the following: • Fuel line restriction • Fuel filter clogged — If there is any malfunction: • Repair or replace the malfunctioning part according to the inspection results. — If there is no malfunction: • Replace the fuel pump unit. (See 01-14A-38 FUEL PUMP UNIT REMOVAL/INSTALLATION [SKYACTIV-G 2.0].) Go to Step 18.

ON-BOARD DIAGNOSTIC [SKYACTIV-G 2.0]

STEP	INSPECTION		ACTION
15	**INSPECT ENGINE COMPRESSION** • Inspect the engine compression. (See 01-10A-14 COMPRESSION INSPECTION [SKYACTIV-G 2.0].) • Are compression pressures within specification? **Specification:** • Compression [European (L.H.D. U.K.) specs.] — Standard: **978 kPa {9.97 kgf/cm^2, 142 psi} (300 rpm)** — Minimum: **783 kPa {7.98 kgf/cm^2, 114 psi} (300 rpm)** — Maximum difference between cylinders: **166 kPa {1.69 kgf/cm^2, 24.1 psi}** • Compression [Except European (L.H.D. U.K.) specs.] — Standard: **885 kPa {9.02 kgf/cm^2, 128 psi} (300 rpm)** — Minimum: **708 kPa {7.22 kgf/cm^2, 103 psi} (300 rpm)** — Maximum difference between cylinders: **150 kPa {1.53 kgf/cm^2, 21.8 psi}** **Note** • Because the SKYACTIV-G 2.0 retards the intake valve closing timing, compression pressure is low.	Yes	Go to the next step.
		No	Repair or replace the malfunctioning part according to the inspection results, then go to Step 18.
16	**INSPECT SEALING OF ENGINE COOLANT PASSAGE** • Perform the “ENGINE COOLANT LEAKAGE INSPECTION”. (See 01-12A-7 ENGINE COOLANT LEAKAGE INSPECTION [SKYACTIV-G 2.0].) • Does the radiator cap tester needle drop even though there is no engine coolant leakage from the radiator or the hoses?	Yes	Engine coolant leakage from the engine (between the combustion chamber and the engine coolant passage) may have occurred. • Verify the conditions of the gasket and the cylinder head. — If there is any malfunction: • Repair or replace the malfunctioning part according to the inspection results, then go to Step 18.
		No	Go to the next step.
17	**INSPECT HO2S** • Switch the ignition to off. • Reconnect all disconnected connectors. • Inspect the HO2S. (See 01-40-58 HEATED OXYGEN SENSOR (HO2S) INSPECTION [SKYACTIV-G 2.0].) • Is there any malfunction?	Yes	Replace the HO2S, then go to the next step. (See 01-40-56 HEATED OXYGEN SENSOR (HO2S) REMOVAL/INSTALLATION [SKYACTIV-G 2.0].)
		No	Go to the next step.
18	**VERIFY DTC TROUBLESHOOTING COMPLETED** • Make sure to reconnect all disconnected connectors. • Clear the DTC from the PCM memory using the M-MDS. (See 01-02-12 AFTER REPAIR PROCEDURE [SKYACTIV-G 2.0].) • Perform the Drive Mode 03 (Variable Valve Timing, A/F Sensor Heater, HO2S Heater, A/F Sensor, HO2S and TWC Repair Verification Drive Mode). (See 01-02-13 OBD DRIVE MODE [SKYACTIV-G 2.0].) • Is the PENDING CODE for this DTC present?	Yes	Repeat the inspection from Step 1. • If the malfunction recurs, replace the PCM. (See 01-40-10 PCM REMOVAL/INSTALLATION [SKYACTIV-G 2.0].) Go to the next step.
		No	Go to the next step.
19	**VERIFY AFTER REPAIR PROCEDURE** • Perform the “AFTER REPAIR PROCEDURE”. (See 01-02-12 AFTER REPAIR PROCEDURE [SKYACTIV-G 2.0].) • Are any DTCs present?	Yes	Go to the applicable DTC inspection. (See 01-02-14 DTC TABLE [SKYACTIV-G 2.0].)
		No	DTC troubleshooting completed.

ON-BOARD DIAGNOSTIC [SKYACTIV-G 2.0]

DTC P0140:00 [SKYACTIV-G 2.0]

id0102h1702700

DTC P0140:00	**HO2S circuit no activity detected**
DETECTION CONDITION	• The PCM monitors the input voltage from the HO2S when the following conditions are met. Under the following monitoring conditions, if the input voltage from the HO2S does not **exceed 0.75 V** even though the short term fuel trim is controlled up to **10 %** for specified period, the PCM determines that the HO2S circuit is not activated. **MONITORING CONDITIONS** — Drive Mode 03 (Variable Valve Timing, A/F Sensor Heater, HO2S Heater, A/F Sensor, HO2S and TWC Repair Verification Drive Mode) — Estimated temperature of the zirconia element inside the HO2S **above 450 °C {842 °F}** **Diagnostic support note** • This is an intermittent monitor (A/F sensor, HO2S). • The check engine light illuminates if the PCM detects the above malfunction condition in two consecutive drive cycles or in one drive cycle while the DTC for the same malfunction has been stored in the PCM. • PENDING CODE is available if the PCM detects the above malfunction condition during first drive cycle. • FREEZE FRAME DATA (Mode 2)/Snapshot data is available. • The DTC is stored in the PCM memory.
FAIL-SAFE FUNCTION	—
POSSIBLE CAUSE	• Erratic signal from HO2S — HO2S loose — Exhaust system leakage — HO2S connector or terminals malfunction • HO2S heater malfunction • Short to ground in wiring harness between HO2S terminal A and PCM terminal 2AI • PCM connector or terminals malfunction • Open circuit in wiring harness between HO2S terminal A and PCM terminal 2AI • HO2S malfunction — HO2S deterioration • Engine malfunction — Insufficient engine compression — Engine coolant leakage to combustion chamber • PCM malfunction

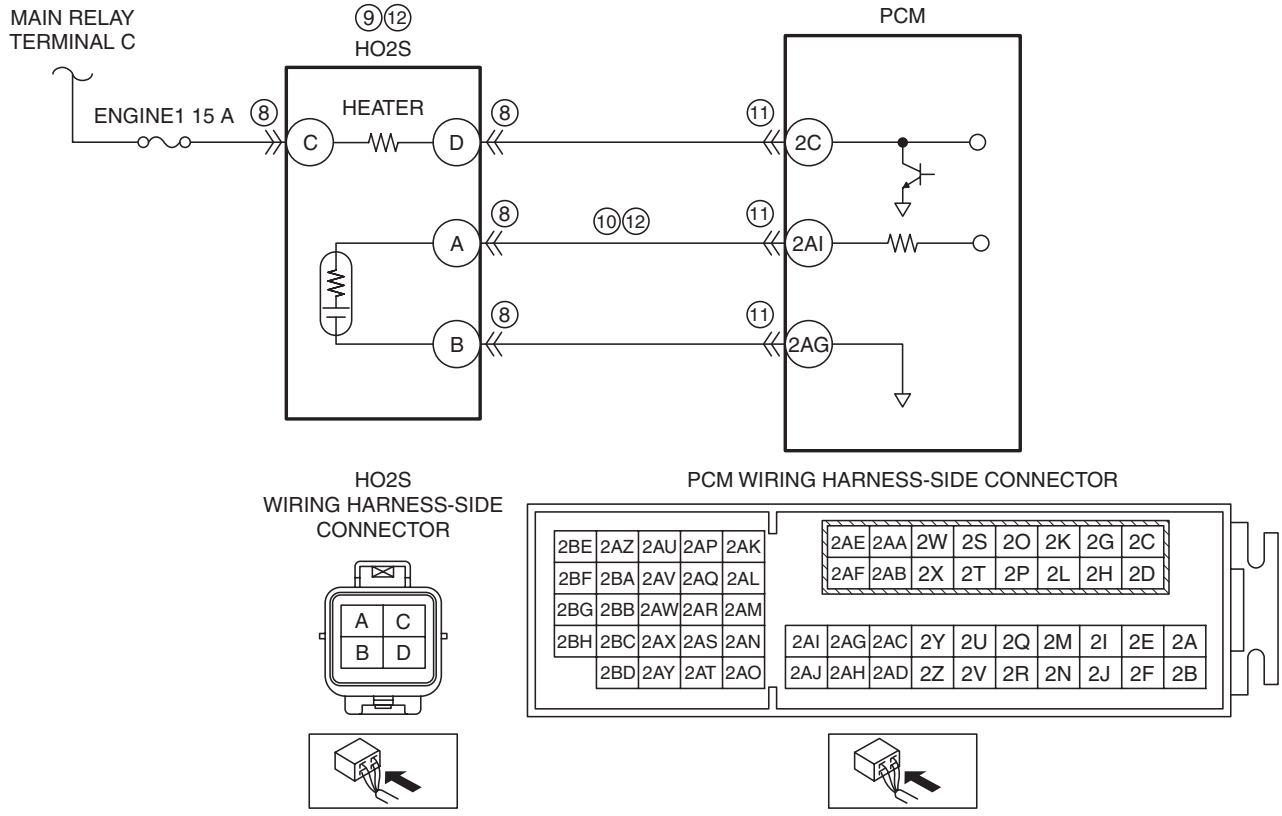

ON-BOARD DIAGNOSTIC [SKYACTIV-G 2.0]

Diagnostic Procedure

STEP	INSPECTION		ACTION
1	**IDENTIFY TRIGGER DTC FOR FREEZE FRAME DATA (MODE 2)** • Perform the Freeze Frame PID Data Access Procedure. (See 01-02-8 ON-BOARD DIAGNOSTIC TEST [SKYACTIV-G 2.0].) • Is the DTC P0140:00 on FREEZE FRAME DATA (Mode 2)?	Yes	Go to the next step.
		No	Go to the troubleshooting procedure for DTC on FREEZE FRAME DATA (Mode 2). (See 01-02-14 DTC TABLE [SKYACTIV-G 2.0].)
2	**VERIFY FREEZE FRAME DATA (MODE 2)/ SNAPSHOT DATA AND DIAGNOSTIC MONITORING TEST RESULTS HAVE BEEN RECORDED** • Have the FREEZE FRAME DATA (Mode 2)/ snapshot data and DIAGNOSTIC MONITORING TEST RESULTS (A/F sensor, HO2S related) been recorded?	Yes	Go to the next step.
		No	Record the FREEZE FRAME DATA (Mode 2)/snapshot data and DIAGNOSTIC MONITORING TEST RESULTS on the repair order, then go to the next step.
3	**VERIFY RELATED SERVICE INFORMATION AVAILABILITY** • Verify related Service Information availability. • Is any related Service Information available?	Yes	Perform repair or diagnosis according to the available Service Information. • If the vehicle is not repaired, go to the next step.
		No	Go to the next step.
4	**VERIFY RELATED PENDING CODE AND/OR DTC** **Note** • If the fuel monitor, DTC P0132:00 is retrieved, ignore it until DTC P0140:00 is fixed. • Switch the ignition to off, then to ON (engine off). • Perform the Pending Trouble Code Access Procedure and DTC Reading Procedure. (See 01-02-8 ON-BOARD DIAGNOSTIC TEST [SKYACTIV-G 2.0].) • Are any other PENDING CODEs and/or DTCs present?	Yes	Go to the applicable PENDING CODE or DTC inspection. (See 01-02-14 DTC TABLE [SKYACTIV-G 2.0].)
		No	Go to the next step.
5	**INSPECT CURRENT SIGNAL STATUS OF HO2S** • Inspect the HO2S. (See 01-40-58 HEATED OXYGEN SENSOR (HO2S) INSPECTION [SKYACTIV-G 2.0].) • Is there any malfunction?	Yes	Go to the next step.
		No	Go to Step 13.
6	**INSPECT INSTALLATION OF HO2S** • Inspect installation of HO2S. • Is the HO2S installed securely?	Yes	Go to the next step.
		No	Retighten the HO2S, then go to Step 15. (See 01-40-56 HEATED OXYGEN SENSOR (HO2S) REMOVAL/INSTALLATION [SKYACTIV-G 2.0].)
7	**INSPECT EXHAUST SYSTEM FOR LEAKAGE** • Visually inspect for exhaust leakage between exhaust manifold and HO2S. • Is there any leakage?	Yes	Repair or replace the malfunctioning part according to the inspection results, then go to Step 15.
		No	Go to the next step.
8	**INSPECT HO2S CONNECTOR CONDITION** • Switch the ignition to off. • Disconnect the HO2S connector. • Inspect for poor connection (such as damaged/ pulled-out pins, corrosion). • Is there any malfunction?	Yes	Repair or replace the connector and/or terminals, then go to Step 15.
		No	Go to the next step.
9	**INSPECT HO2S HEATER** • Inspect the HO2S heater. (See 01-40-58 HEATED OXYGEN SENSOR (HO2S) INSPECTION [SKYACTIV-G 2.0].) • Is there any malfunction?	Yes	Replace the HO2S, then go to Step 15. (See 01-40-56 HEATED OXYGEN SENSOR (HO2S) REMOVAL/INSTALLATION [SKYACTIV-G 2.0].)
		No	Go to the next step.

ON-BOARD DIAGNOSTIC [SKYACTIV-G 2.0]

STEP	INSPECTION		ACTION
10	**INSPECT HO2S SIGNAL CIRCUIT FOR SHORT TO GROUND** • Verify that the HO2S connector is disconnected. • Inspect for continuity between HO2S terminal A (wiring harness-side) and body ground. • Is there continuity?	Yes	If the short to ground circuit could be detected in the wiring harness: • Repair or replace the wiring harness for a possible short to ground. If the short to ground circuit could not be detected in the wiring harness: • Replace the PCM (short to ground in the PCM internal circuit). (See 01-40-10 PCM REMOVAL/INSTALLATION [SKYACTIV-G 2.0].) Go to Step 15.
		No	Go to the next step.
11	**INSPECT PCM CONNECTOR CONDITION** • Disconnect the PCM connector. • Inspect for poor connection (such as damaged/ pulled-out pins, corrosion). • Is there any malfunction?	Yes	Repair or replace the connector and/or terminals, then go to Step 15.
		No	Go to the next step.
12	**INSPECT HO2S SIGNAL CIRCUIT FOR OPEN CIRCUIT** • Verify that the HO2S and PCM connectors are disconnected. • Inspect for continuity between HO2S terminal A (wiring harness-side) and PCM terminal 2AI (wiring harness-side). • Is there continuity?	Yes	Replace the HO2S, then go to Step 15. (See 01-40-56 HEATED OXYGEN SENSOR (HO2S) REMOVAL/INSTALLATION [SKYACTIV-G 2.0].)
		No	Repair or replace the wiring harness for a possible open circuit, then go to Step 15.
13	**INSPECT ENGINE COMPRESSION** • Inspect the engine compression. (See 01-10A-14 COMPRESSION INSPECTION [SKYACTIV-G 2.0].) • Are compression pressures within specification? **Specification:** • Compression [European (L.H.D. U.K.) specs.] — Standard: **978 kPa {9.97 kgf/cm^2, 142 psi} (300 rpm)** — Minimum: **783 kPa {7.98 kgf/cm^2, 114 psi} (300 rpm)** — Maximum difference between cylinders: **166 kPa {1.69 kgf/cm^2, 24.1 psi}** • Compression [Except European (L.H.D. U.K.) specs.] — Standard: **885 kPa {9.02 kgf/cm^2, 128 psi} (300 rpm)** — Minimum: **708 kPa {7.22 kgf/cm^2, 103 psi} (300 rpm)** — Maximum difference between cylinders: **150 kPa {1.53 kgf/cm^2, 21.8 psi}** **Note** • Because the SKYACTIV-G 2.0 retards the intake valve closing timing, compression pressure is low.	Yes	Go to the next step.
		No	Repair or replace the malfunctioning part according to the inspection results, then go to Step 15.
14	**INSPECT SEALING OF ENGINE COOLANT PASSAGE** • Perform the “ENGINE COOLANT LEAKAGE INSPECTION”. (See 01-12A-7 ENGINE COOLANT LEAKAGE INSPECTION [SKYACTIV-G 2.0].) • Does the radiator cap tester needle drop even though there is no engine coolant leakage from the radiator or the hoses?	Yes	Engine coolant leakage from the engine (between the combustion chamber and the engine coolant passage) may have occurred. • Verify the conditions of the gasket and the cylinder head. — If there is any malfunction: • Repair or replace the malfunctioning part according to the inspection results, then go to the next step.
		No	Go to the next step.

ON-BOARD DIAGNOSTIC [SKYACTIV-G 2.0]

STEP	INSPECTION		ACTION
15	**VERIFY DTC TROUBLESHOOTING COMPLETED** • Make sure to reconnect all disconnected connectors. • Clear the DTC from the PCM memory using the M-MDS. (See 01-02-12 AFTER REPAIR PROCEDURE [SKYACTIV-G 2.0].) • Perform the Drive Mode 03 (Variable Valve Timing, A/F Sensor Heater, HO2S Heater, A/F Sensor, HO2S and TWC Repair Verification Drive Mode). (See 01-02-13 OBD DRIVE MODE [SKYACTIV-G 2.0].) • Is the PENDING CODE for this DTC present?	Yes	Repeat the inspection from Step 1. • If the malfunction recurs, replace the PCM. (See 01-40-10 PCM REMOVAL/INSTALLATION [SKYACTIV-G 2.0].) Go to the next step.
		No	Go to the next step.
16	**VERIFY AFTER REPAIR PROCEDURE** • Perform the “AFTER REPAIR PROCEDURE”. (See 01-02-12 AFTER REPAIR PROCEDURE [SKYACTIV-G 2.0].) • Are any DTCs present?	Yes	Go to the applicable DTC inspection. (See 01-02-14 DTC TABLE [SKYACTIV-G 2.0].)
		No	DTC troubleshooting completed.

ON-BOARD DIAGNOSTIC [SKYACTIV-G 2.0]

DTC P0171:00 [SKYACTIV-G 2.0]

id0102h1934200

DTC P0171:00	Fuel trim system too lean
DETECTION CONDITION	• When any of the following conditions is met: — During idling or driving, the correction amount of the fuel feedback correction plus the fuel learning correction is a volume increase correction exceeding the specified value. — During idling or driving, the amount of the fuel feedback increase correction reaches the upper limit. **Diagnostic support note** • This is a continuous monitor (fuel system). • The check engine light illuminates if the PCM detects the above malfunction condition in two consecutive drive cycles or in one drive cycle while the DTC for the same malfunction has been stored in the PCM. • PENDING CODE is available if the PCM detects the above malfunction condition during first drive cycle. • FREEZE FRAME DATA (Mode 2)/Snapshot data is available. • The DTC is stored in the PCM memory.
FAIL-SAFE FUNCTION	—
POSSIBLE CAUSE	• Erratic signal to PCM — APP sensor signal malfunction — ECT sensor signal malfunction — MAF sensor signal malfunction — TP sensor signal malfunction — Related connector or terminals malfunction — Related wiring harness malfunction • Air suction in intake air system • MAF sensor malfunction • A/F sensor heater malfunction • A/F sensor malfunction — A/F sensor loose — Exhaust system leakage — A/F sensor deterioration • Improper operation of purge control system — Purge solenoid valve malfunction — Purge solenoid hoses improper connection • Improper operation of electric variable valve timing control system — Electric variable valve timing driver malfunction — Electric variable valve timing motor malfunction — Electric variable valve timing actuator malfunction • Improper operation of hydraulic variable valve timing control system • Improper operation of fuel injector • High-pressure side fuel delivery system malfunction — Fuel pressure sensor malfunction — Spill valve control solenoid valve control circuit malfunction (damage to driver in PCM caused by short circuit to ground system) — Spill valve control solenoid valve (built-into high pressure fuel pump) malfunction — Relief valve (built-into high pressure fuel pump) malfunction — High pressure fuel pump malfunction • Low-pressure side fuel delivery system malfunction — Low pressure side fuel line restriction (between fuel pump unit and high pressure fuel pump) — Fuel filter clogged — Pressure regulator (built-into fuel pump unit) malfunction — Fuel pump unit malfunction • Ignition system malfunction — Spark plug malfunction — Ignition coil malfunction — Ignition coil related wiring harness malfunction • Insufficient engine compression • Misfire • PCM malfunction
SYSTEM WIRING DIAGRAM	—

ON-BOARD DIAGNOSTIC [SKYACTIV-G 2.0]

Diagnostic Procedure

STEP	INSPECTION		ACTION
1	**IDENTIFY TRIGGER DTC FOR FREEZE FRAME DATA (MODE 2)** • Perform the Freeze Frame PID Data Access Procedure. (See 01-02-8 ON-BOARD DIAGNOSTIC TEST [SKYACTIV-G 2.0].) • Is the DTC P0171:00 on FREEZE FRAME DATA (Mode 2)?	Yes	Go to the next step.
		No	Go to the troubleshooting procedure for DTC on FREEZE FRAME DATA (Mode 2). (See 01-02-14 DTC TABLE [SKYACTIV-G 2.0].)
2	**VERIFY FREEZE FRAME DATA (MODE 2)/ SNAPSHOT DATA AND DIAGNOSTIC MONITORING TEST RESULTS HAVE BEEN RECORDED** • Have the FREEZE FRAME DATA (Mode 2)/ snapshot data and DIAGNOSTIC MONITORING TEST RESULTS (fuel system related) been recorded?	Yes	Go to the next step.
		No	Record the FREEZE FRAME DATA (Mode 2)/snapshot data and DIAGNOSTIC MONITORING TEST RESULTS on the repair order, then go to the next step.
3	**VERIFY RELATED SERVICE INFORMATION AVAILABILITY** • Verify related Service Information availability. • Is any related Service Information available?	Yes	Perform repair or diagnosis according to the available Service Information. • If the vehicle is not repaired, go to the next step.
		No	Go to the next step.
4	**VERIFY RELATED PENDING CODE AND/OR DTC** • Switch the ignition to off, then to ON (engine off). • Perform the Pending Trouble Code Access Procedure and DTC Reading Procedure. (See 01-02-8 ON-BOARD DIAGNOSTIC TEST [SKYACTIV-G 2.0].) • Are any other PENDING CODEs and/or DTCs present?	Yes	If misfire DTC is present: • Go to Step 7. If other DTC is present: • Go to the applicable DTC inspection. (See 01-02-14 DTC TABLE [SKYACTIV-G 2.0].)
		No	If drive ability concern is present: • Go to Step 7. If drive ability concern is not present: • Go to the next step.
5	**VERIFY CURRENT INPUT SIGNAL STATUS** • Access the following PIDs using the M-MDS: (See 01-02-8 ON-BOARD DIAGNOSTIC TEST [SKYACTIV-G 2.0].) — APP1 — APP2 — ECT — MAF — TP REL • Is there any signal that is far out of specification when the ignition is switched to ON and the engine runs? (See 01-40-17 PCM INSPECTION [SKYACTIV-G 2.0].)	Yes	Inspect the suspected sensor and related wiring harness. Repair or replace the malfunctioning part according to the inspection results, then go to Step 26.
		No	Go to the next step.
6	**VERIFY CURRENT INPUT SIGNAL STATUS UNDER FREEZE FRAME DATA (MODE 2) CONDITION** **Caution** • **While performing this step, always operate the vehicle in a safe and lawful manner.** • **When the M-MDS is used to observe monitor system status while driving, be sure to have another technician with you, or record the data in the M-MDS using the PID/DATA MONITOR AND RECORD capturing function and inspect later.** • Access the same PIDs as in Step 5 while simulating under the FREEZE FRAME DATA (Mode 2) conditions. (See 01-02-8 ON-BOARD DIAGNOSTIC TEST [SKYACTIV-G 2.0].) • Is there any signal which causes drastic changes?	Yes	Inspect the suspected sensor and related wiring harness. Repair or replace the malfunctioning part according to the inspection results, then go to Step 26.
		No	Go to the next step.

ON-BOARD DIAGNOSTIC [SKYACTIV-G 2.0]

STEP	INSPECTION		ACTION
7	**VERIFY CURRENT INPUT SIGNAL STATUS OF MAF SENSOR** • Start the engine. • Access the MAF PID using the M-MDS. (See 01-02-8 ON-BOARD DIAGNOSTIC TEST [SKYACTIV-G 2.0].) • Verify that the MAF PID value changes quickly while increasing (racing) the engine rpm. • Is the MAF PID value normal? (See 01-40-17 PCM INSPECTION [SKYACTIV-G 2.0].)	Yes	Go to Step 9.
		No	Go to the next step.
8	**INSPECT INTAKE AIR SYSTEM FOR EXCESSIVE AIR SUCTION** • Visually inspect for loose, cracked or damaged hoses on intake air system. **Note** • Engine speed may change when rust penetrating agent is sprayed on the air suction area. • Is there any malfunction?	Yes	Repair or replace the malfunctioning part according to the inspection results, then go to Step 26.
		No	Replace the MAF sensor/IAT sensor No.1, then go to Step 26. (See 01-13A-6 INTAKE-AIR SYSTEM REMOVAL/INSTALLATION [SKYACTIV-G 2.0].)
9	**INSPECT A/F SENSOR HEATER** • Inspect the A/F sensor heater. (See 01-40-55 AIR FUEL RATIO (A/F) SENSOR INSPECTION [SKYACTIV-G 2.0].) • Is there any malfunction?	Yes	Replace the A/F sensor, then go to Step 26. (See 01-40-52 AIR FUEL RATIO (A/F) SENSOR REMOVAL/INSTALLATION [SKYACTIV-G 2.0].)
		No	Go to the next step.
10	**VERIFY CURRENT INPUT SIGNAL STATUS OF A/F SENSOR** • Reconnect all disconnected connectors. • Inspect the A/F sensor. (See 01-40-55 AIR FUEL RATIO (A/F) SENSOR INSPECTION [SKYACTIV-G 2.0].) • Is there any malfunction?	Yes	Go to the next step.
		No	Go to Step 13.
11	**INSPECT INSTALLATION OF A/F SENSOR** • Inspect installation of A/F sensor. • Is the A/F sensor installed securely?	Yes	Go to the next step.
		No	Retighten the A/F sensor, then go to Step 26. (See 01-40-52 AIR FUEL RATIO (A/F) SENSOR REMOVAL/INSTALLATION [SKYACTIV-G 2.0].)
12	**INSPECT EXHAUST SYSTEM FOR LEAKAGE** • Visually inspect for exhaust leakage between exhaust manifold and A/F sensor. • Is there any leakage?	Yes	Repair or replace the malfunctioning part according to the inspection results, then go to Step 26.
		No	Replace the A/F sensor, then go to Step 26. (See 01-40-52 AIR FUEL RATIO (A/F) SENSOR REMOVAL/INSTALLATION [SKYACTIV-G 2.0].)
13	**INSPECT PURGE CONTROL SYSTEM OPERATION** • Perform the Purge Control System Inspection. (See 01-03-118 ENGINE CONTROL SYSTEM OPERATION INSPECTION [SKYACTIV-G 2.0].) • Is there any malfunction?	Yes	Repair or replace the malfunctioning part according to the inspection results, then go to Step 26.
		No	Go to the next step.
14	**INSPECT ELECTRIC VARIABLE VALVE TIMING DRIVER** • Inspect the electric variable valve timing driver. (See 01-10A-15 ELECTRIC VARIABLE VALVE TIMING MOTOR/DRIVER INSPECTION [SKYACTIV-G 2.0].) • Is there any malfunction?	Yes	Replace the electric variable valve timing motor/driver, then go to Step 26. (See 01-10A-16 ELECTRIC VARIABLE VALVE TIMING MOTOR/DRIVER REMOVAL/INSTALLATION [SKYACTIV-G 2.0].)
		No	Go to the next step.
15	**INSPECT ELECTRIC VARIABLE VALVE TIMING MOTOR** • Inspect the electric variable valve timing motor. (See 01-10A-15 ELECTRIC VARIABLE VALVE TIMING MOTOR/DRIVER INSPECTION [SKYACTIV-G 2.0].) • Is there any malfunction?	Yes	Replace the electric variable valve timing motor/driver, then go to Step 26. (See 01-10A-16 ELECTRIC VARIABLE VALVE TIMING MOTOR/DRIVER REMOVAL/INSTALLATION [SKYACTIV-G 2.0].)
		No	Go to the next step.

ON-BOARD DIAGNOSTIC [SKYACTIV-G 2.0]

STEP	INSPECTION		ACTION
16	**INSPECT ELECTRIC VARIABLE VALVE TIMING ACTUATOR** • Inspect the electric variable valve timing actuator. (See 01-10A-22 ELECTRIC VARIABLE VALVE TIMING ACTUATOR INSPECTION [SKYACTIV-G 2.0].) • Is there any malfunction?	Yes	Replace the electric variable valve timing actuator, then go to Step 26. (See 01-10A-23 ELECTRIC VARIABLE VALVE TIMING ACTUATOR, HYDRAULIC VARIABLE VALVE TIMING ACTUATOR REMOVAL/INSTALLATION [SKYACTIV-G 2.0].)
		No	Go to the next step.
17	**INSPECT HYDRAULIC VARIABLE VALVE TIMING CONTROL SYSTEM OPERATION** • Perform the Hydraulic Variable Valve Timing Control System Operation Inspection. (See 01-03-118 ENGINE CONTROL SYSTEM OPERATION INSPECTION [SKYACTIV-G 2.0].) • Is there any malfunction?	Yes	Repair or replace the malfunctioning part according to the inspection results, then go to Step 26.
		No	Go to the next step.
18	**INSPECT FUEL INJECTOR OPERATION** • Perform the Fuel Injector Operation Inspection. (See 01-03-118 ENGINE CONTROL SYSTEM OPERATION INSPECTION [SKYACTIV-G 2.0].) • Is there any malfunction?	Yes	Repair or replace the malfunctioning part according to the inspection results, then go to Step 26.
		No	Go to the next step.
19	**INSPECT FUEL PRESSURE (HIGH-SIDE)** • Start the engine and warm it up completely. • Access the FUEL_PRES PID using the M-MDS at idle. (See 01-02-8 ON-BOARD DIAGNOSTIC TEST [SKYACTIV-G 2.0].) • Is the FUEL_PRES PID value **approx. 3 MPa {31 kgf/cm^2, 435 psi}**?	Yes	Go to Step 23.
		No	Lower than **3 MPa {31 kgf/cm2, 435 psi}**: • Inspect the following: — Fuel leakage at the fuel line and fuel injector — Fuel pump • Perform the Fuel Pump (Low-pressure Side) Operation Inspection. (See 01-03-118 ENGINE CONTROL SYSTEM OPERATION INSPECTION [SKYACTIV-G 2.0].) — Fuel pressure sensor (See 01-40-52 FUEL PRESSURE SENSOR INSPECTION [SKYACTIV-G 2.0].) — High pressure fuel pump (See 01-14A-49 HIGH PRESSURE FUEL PUMP INSPECTION [SKYACTIV-G 2.0].) • If there is any malfunction: — Repair or replace the malfunctioning part according to the inspection results, then go to Step 26. • If there is no malfunction: — Go to Step 22. Higher than **3 MPa {31 kgf/cm2, 435 psi}**: • Go to the next step.
20	**IDENTIFY CAUSE BY FUEL PRESSURE SENSOR OR HIGH PRESSURE FUEL PUMP** • Is the vehicle acceleration performance normal?	Yes	Go to the next step.
		No	Go to Step 22.
21	**INSPECT FUEL PRESSURE SENSOR** • Inspect the fuel pressure sensor. (See 01-40-52 FUEL PRESSURE SENSOR INSPECTION [SKYACTIV-G 2.0].) • Is there any malfunction?	Yes	Replace the fuel distributor, then go to Step 26. (See 01-14A-51 FUEL INJECTOR REMOVAL/INSTALLATION [SKYACTIV-G 2.0].)
		No	Go to Step 23.
22	**INSPECT SPILL VALVE CONTROL SOLENOID VALVE CONTROL CIRCUIT FOR SHORT TO GROUND** • Switch the ignition to off. • Disconnect the high pressure fuel pump and PCM connectors. • Inspect for continuity between high pressure fuel pump terminal A (wiring harness-side) and body ground. • Is there continuity?	Yes	Repair or replace the wiring harness for a possible short to ground, then go to Step 26.
		No	Replace the high pressure fuel pump, then go to Step 26. (See 01-14A-44 HIGH PRESSURE FUEL PUMP REMOVAL/INSTALLATION [SKYACTIV-G 2.0].)

ON-BOARD DIAGNOSTIC [SKYACTIV-G 2.0]

STEP	INSPECTION		ACTION
23	**INSPECT FUEL PRESSURE (LOW-SIDE)** • Connect the fuel pressure gauge between fuel pump and high pressure fuel pump. • Measure the low side fuel pressure. (See 01-14A-8 FUEL LINE PRESSURE INSPECTION [SKYACTIV-G 2.0].) • Is the low side fuel pressure within specification? **Specification:** • **405—485 kPa {4.13—4.94 kgf/cm^2, 58.8—70.3 psi}**	Yes	Go to the next step.
		No	Inspect the following: • Fuel line restriction • Fuel filter clogged — If there is any malfunction: • Repair or replace the malfunctioning part according to the inspection results. — If there is no malfunction: • Replace the fuel pump unit. (See 01-14A-38 FUEL PUMP UNIT REMOVAL/INSTALLATION [SKYACTIV-G 2.0].) Go to Step 26.
24	**INSPECT IGNITION SYSTEM OPERATION** • Perform the Spark Test. (See 01-03-118 ENGINE CONTROL SYSTEM OPERATION INSPECTION [SKYACTIV-G 2.0].) • Is a strong blue spark visible at each cylinder?	Yes	Go to the next step.
		No	Repair or replace the malfunctioning part according to the inspection results, then go to Step 26.
25	**INSPECT ENGINE COMPRESSION** • Inspect the engine compression. (See 01-10A-14 COMPRESSION INSPECTION [SKYACTIV-G 2.0].) • Are compression pressures within specification? **Specification:** • Compression [European (L.H.D. U.K.) specs.] — Standard: **978 kPa {9.97 kgf/cm^2, 142 psi} (300 rpm)** — Minimum: **783 kPa {7.98 kgf/cm^2, 114 psi} (300 rpm)** — Maximum difference between cylinders: **166 kPa {1.69 kgf/cm^2, 24.1 psi}** • Compression [Except European (L.H.D. U.K.) specs.] — Standard: **885 kPa {9.02 kgf/cm^2, 128 psi} (300 rpm)** — Minimum: **708 kPa {7.22 kgf/cm^2, 103 psi} (300 rpm)** — Maximum difference between cylinders: **150 kPa {1.53 kgf/cm^2, 21.8 psi}** **Note** • Because the SKYACTIV-G 2.0 retards the intake valve closing timing, compression pressure is low.	Yes	Go to the next step.
		No	Repair or replace the malfunctioning part according to the inspection results, then go to the next step.

ON-BOARD DIAGNOSTIC [SKYACTIV-G 2.0]

STEP	INSPECTION		ACTION
26	**VERIFY DTC TROUBLESHOOTING COMPLETED** • Make sure to reconnect all disconnected connectors. • Clear the DTC from the PCM memory using the M-MDS. (See 01-02-12 AFTER REPAIR PROCEDURE [SKYACTIV-G 2.0].) • Perform the Drive Mode 03 (Variable Valve Timing, A/F Sensor Heater, HO2S Heater, A/F Sensor, HO2S and TWC Repair Verification Drive Mode). (See 01-02-13 OBD DRIVE MODE [SKYACTIV-G 2.0].) • Stop the vehicle and access the ON BOARD READINESS TEST to inspect the Drive Mode completion status. • Verify the FUEL_EVAL PID changes to yes. — If not, perform the Drive Mode 03 (Variable Valve Timing, A/F Sensor Heater, HO2S Heater, A/F Sensor, HO2S and TWC Repair Verification Drive Mode). (See 01-02-13 OBD DRIVE MODE [SKYACTIV-G 2.0].) • Perform the Pending Trouble Code Access Procedure. (See 01-02-8 ON-BOARD DIAGNOSTIC TEST [SKYACTIV-G 2.0].) • Is the PENDING CODE for this DTC present?	Yes	Repeat the inspection from Step 1. • If the malfunction recurs, replace the PCM. (See 01-40-10 PCM REMOVAL/INSTALLATION [SKYACTIV-G 2.0].) Go to the next step.
		No	Go to the next step.
27	**VERIFY AFTER REPAIR PROCEDURE** • Perform the “AFTER REPAIR PROCEDURE”. (See 01-02-12 AFTER REPAIR PROCEDURE [SKYACTIV-G 2.0].) • Are any DTCs present?	Yes	Go to the applicable DTC inspection. (See 01-02-14 DTC TABLE [SKYACTIV-G 2.0].)
		No	DTC troubleshooting completed.

ON-BOARD DIAGNOSTIC [SKYACTIV-G 2.0]

DTC P0172:00 [SKYACTIV-G 2.0]

id0102h1934300

DTC P0172:00	Fuel trim system too rich
DETECTION CONDITION	• When any of the following conditions is met: — During idling or driving, the correction amount of the fuel feedback correction plus the fuel learning correction is a volume decrease correction exceeding the specified value. — During idling or driving, the amount of the fuel feedback decrease correction reaches the upper limit. **Diagnostic support note** • This is a continuous monitor (fuel system). • The check engine light illuminates if the PCM detects the above malfunction condition in two consecutive drive cycles or in one drive cycle while the DTC for the same malfunction has been stored in the PCM. • PENDING CODE is available if the PCM detects the above malfunction condition during first drive cycle. • FREEZE FRAME DATA (Mode 2)/Snapshot data is available. • The DTC is stored in the PCM memory.
FAIL-SAFE FUNCTION	—
POSSIBLE CAUSE	• Erratic signal to PCM — APP sensor signal malfunction — ECT sensor signal malfunction — MAF sensor signal malfunction — TP sensor signal malfunction — Related connector or terminals malfunction — Related wiring harness malfunction • MAF sensor malfunction • A/F sensor heater malfunction • A/F sensor malfunction — A/F sensor loose — Exhaust system leakage — A/F sensor deterioration • Improper operation of purge control system — Purge solenoid valve malfunction (stuck open) — Purge solenoid hoses improper connection — Air cleaner element restricted • Improper operation of electric variable valve timing control system — Electric variable valve timing driver malfunction — Electric variable valve timing motor malfunction — Electric variable valve timing actuator malfunction • Improper operation of hydraulic variable valve timing control system • Improper operation of fuel injector • High-pressure side fuel delivery system malfunction — Fuel pressure sensor malfunction — Spill valve control solenoid valve control circuit malfunction (damage to driver in PCM caused by short circuit to ground system) — Spill valve control solenoid valve (built-into high pressure fuel pump) malfunction — Relief valve (built-into high pressure fuel pump) malfunction — High pressure fuel pump malfunction • Low-pressure side fuel delivery system malfunction — Low pressure side fuel line restriction (between fuel pump unit and high pressure fuel pump) — Fuel filter clogged — Pressure regulator (built-into fuel pump unit) malfunction — Fuel pump unit malfunction • Ignition system malfunction — Spark plug malfunction — Ignition coil malfunction — Ignition coil related wiring harness malfunction • PCV valve malfunction • Misfire • PCM malfunction
SYSTEM WIRING DIAGRAM	—

ON-BOARD DIAGNOSTIC [SKYACTIV-G 2.0]

Diagnostic Procedure

STEP	INSPECTION		ACTION
1	**IDENTIFY TRIGGER DTC FOR FREEZE FRAME DATA (MODE 2)** • Perform the Freeze Frame PID Data Access Procedure. (See 01-02-8 ON-BOARD DIAGNOSTIC TEST [SKYACTIV-G 2.0].) • Is the DTC P0172:00 on FREEZE FRAME DATA (Mode 2)?	Yes	Go to the next step.
		No	Go to the troubleshooting procedure for DTC on FREEZE FRAME DATA (Mode 2). (See 01-02-14 DTC TABLE [SKYACTIV-G 2.0].)
2	**VERIFY FREEZE FRAME DATA (MODE 2)/ SNAPSHOT DATA AND DIAGNOSTIC MONITORING TEST RESULTS HAVE BEEN RECORDED** • Have the FREEZE FRAME DATA (Mode 2)/ snapshot data and DIAGNOSTIC MONITORING TEST RESULTS (fuel system related) been recorded?	Yes	Go to the next step.
		No	Record the FREEZE FRAME DATA (Mode 2)/snapshot data and DIAGNOSTIC MONITORING TEST RESULTS on the repair order, then go to the next step.
3	**VERIFY RELATED SERVICE INFORMATION AVAILABILITY** • Verify related Service Information availability. • Is any related Service Information available?	Yes	Perform repair or diagnosis according to the available Service Information. • If the vehicle is not repaired, go to the next step.
		No	Go to the next step.
4	**VERIFY RELATED PENDING CODE AND/OR DTC** • Switch the ignition to off, then to ON (engine off). • Perform the Pending Trouble Code Access Procedure and DTC Reading Procedure. (See 01-02-8 ON-BOARD DIAGNOSTIC TEST [SKYACTIV-G 2.0].) • Are any other PENDING CODEs and/or DTCs present?	Yes	If misfire DTC is present: • Go to Step 7. If other DTC is present: • Go to the applicable DTC inspection. (See 01-02-14 DTC TABLE [SKYACTIV-G 2.0].)
		No	If drive ability concern is present: • Go to Step 7. If drive ability concern is not present: • Go to the next step.
5	**VERIFY CURRENT INPUT SIGNAL STATUS** • Access the following PIDs using the M-MDS: (See 01-02-8 ON-BOARD DIAGNOSTIC TEST [SKYACTIV-G 2.0].) — APP1 — APP2 — ECT — MAF — TP REL • Is there any signal that is far out of specification when the ignition is switched to ON and the engine runs? (See 01-40-17 PCM INSPECTION [SKYACTIV-G 2.0].)	Yes	Inspect the suspected sensor and related wiring harness. Repair or replace the malfunctioning part according to the inspection results, then go to Step 27.
		No	Go to the next step.
6	**VERIFY CURRENT INPUT SIGNAL STATUS UNDER FREEZE FRAME DATA (MODE 2) CONDITION** **Caution** • **While performing this step, always operate the vehicle in a safe and lawful manner.** • **When the M-MDS is used to observe monitor system status while driving, be sure to have another technician with you, or record the data in the M-MDS using the PID/DATA MONITOR AND RECORD capturing function and inspect later.** • Access the same PIDs as in Step 5 while simulating under the FREEZE FRAME DATA (Mode 2) conditions. (See 01-02-8 ON-BOARD DIAGNOSTIC TEST [SKYACTIV-G 2.0].) • Is there any signal which causes drastic changes?	Yes	Inspect the suspected sensor and related wiring harness. Repair or replace the malfunctioning part according to the inspection results, then go to Step 27.
		No	Go to the next step.

ON-BOARD DIAGNOSTIC [SKYACTIV-G 2.0]

STEP	INSPECTION		ACTION
7	**VERIFY CURRENT INPUT SIGNAL STATUS OF MAF SENSOR** • Start the engine. • Access the MAF PID using the M-MDS. (See 01-02-8 ON-BOARD DIAGNOSTIC TEST [SKYACTIV-G 2.0].) • Verify that the MAF PID value changes quickly while increasing (racing) the engine rpm. • Is the MAF PID value normal? (See 01-40-17 PCM INSPECTION [SKYACTIV-G 2.0].)	Yes	Go to the next step.
		No	Replace the MAF sensor/IAT sensor No.1, then go to Step 27. (See 01-13A-6 INTAKE-AIR SYSTEM REMOVAL/INSTALLATION [SKYACTIV-G 2.0].)
8	**INSPECT A/F SENSOR HEATER** • Inspect the A/F sensor heater. (See 01-40-55 AIR FUEL RATIO (A/F) SENSOR INSPECTION [SKYACTIV-G 2.0].) • Is there any malfunction?	Yes	Replace the A/F sensor, then go to Step 27. (See 01-40-52 AIR FUEL RATIO (A/F) SENSOR REMOVAL/INSTALLATION [SKYACTIV-G 2.0].)
		No	Go to the next step.
9	**VERIFY CURRENT INPUT SIGNAL STATUS OF A/F SENSOR** • Reconnect all disconnected connectors. • Inspect the A/F sensor. (See 01-40-55 AIR FUEL RATIO (A/F) SENSOR INSPECTION [SKYACTIV-G 2.0].) • Is there any malfunction?	Yes	Go to the next step.
		No	Go to Step 12.
10	**INSPECT INSTALLATION OF A/F SENSOR** • Inspect installation of A/F sensor. • Is the A/F sensor installed securely?	Yes	Go to the next step.
		No	Retighten the A/F sensor, then go to Step 27. (See 01-40-52 AIR FUEL RATIO (A/F) SENSOR REMOVAL/INSTALLATION [SKYACTIV-G 2.0].)
11	**INSPECT EXHAUST SYSTEM FOR LEAKAGE** • Visually inspect for exhaust leakage between exhaust manifold and A/F sensor. • Is there any leakage?	Yes	Repair or replace the malfunctioning part according to the inspection results, then go to Step 27.
		No	Replace the A/F sensor, then go to Step 27. (See 01-40-52 AIR FUEL RATIO (A/F) SENSOR REMOVAL/INSTALLATION [SKYACTIV-G 2.0].)
12	**INSPECT LONG TERM FUEL TRIM** • Switch the ignition to off. • Disconnect the evaporative hose (purge solenoid valve side) from intake manifold and plug opening end of hose and intake manifold. • Access the LONGFT1 PID using the M-MDS. (See 01-02-8 ON-BOARD DIAGNOSTIC TEST [SKYACTIV-G 2.0].) • Does it shift to positive value?	Yes	Go to the next step.
		No	Go to Step 14.
13	**INSPECT PURGE CONTROL SYSTEM OPERATION** • Perform the Purge Control System Inspection. (See 01-03-118 ENGINE CONTROL SYSTEM OPERATION INSPECTION [SKYACTIV-G 2.0].) • Is there any malfunction?	Yes	Repair or replace the malfunctioning part according to the inspection results, then go to Step 27.
		No	Go to the next step.
14	**INSPECT AIR CLEANER ELEMENT** • Remove the air cleaner element with the engine is running. (See 01-13A-12 AIR CLEANER ELEMENT REMOVAL/INSTALLATION [SKYACTIV-G 2.0].) • Does the engine speed increase?	Yes	Inspect the air cleaner element. (See 01-13A-12 AIR CLEANER ELEMENT INSPECTION [SKYACTIV-G 2.0].) • If there is any malfunction: — Clean or replace the air cleaner element, then go to Step 27. (See 01-13A-12 AIR CLEANER ELEMENT REMOVAL/INSTALLATION [SKYACTIV-G 2.0].) • If there is no malfunction: — Go to the next step.
		No	Go to the next step.
15	**INSPECT ELECTRIC VARIABLE VALVE TIMING DRIVER** • Inspect the electric variable valve timing driver. (See 01-10A-15 ELECTRIC VARIABLE VALVE TIMING MOTOR/DRIVER INSPECTION [SKYACTIV-G 2.0].) • Is there any malfunction?	Yes	Replace the electric variable valve timing motor/driver, then go to Step 27. (See 01-10A-16 ELECTRIC VARIABLE VALVE TIMING MOTOR/DRIVER REMOVAL/INSTALLATION [SKYACTIV-G 2.0].)
		No	Go to the next step.

ON-BOARD DIAGNOSTIC [SKYACTIV-G 2.0]

STEP	INSPECTION		ACTION
16	**INSPECT ELECTRIC VARIABLE VALVE TIMING MOTOR** • Inspect the electric variable valve timing motor. (See 01-10A-15 ELECTRIC VARIABLE VALVE TIMING MOTOR/DRIVER INSPECTION [SKYACTIV-G 2.0].) • Is there any malfunction?	Yes	Replace the electric variable valve timing motor/driver, then go to Step 27. (See 01-10A-16 ELECTRIC VARIABLE VALVE TIMING MOTOR/DRIVER REMOVAL/INSTALLATION [SKYACTIV-G 2.0].)
		No	Go to the next step.
17	**INSPECT ELECTRIC VARIABLE VALVE TIMING ACTUATOR** • Inspect the electric variable valve timing actuator. (See 01-10A-22 ELECTRIC VARIABLE VALVE TIMING ACTUATOR INSPECTION [SKYACTIV-G 2.0].) • Is there any malfunction?	Yes	Replace the electric variable valve timing actuator, then go to Step 27. (See 01-10A-23 ELECTRIC VARIABLE VALVE TIMING ACTUATOR, HYDRAULIC VARIABLE VALVE TIMING ACTUATOR REMOVAL/INSTALLATION [SKYACTIV-G 2.0].)
		No	Go to the next step.
18	**INSPECT HYDRAULIC VARIABLE VALVE TIMING CONTROL SYSTEM OPERATION** • Perform the Hydraulic Variable Valve Timing Control System Operation Inspection. (See 01-03-118 ENGINE CONTROL SYSTEM OPERATION INSPECTION [SKYACTIV-G 2.0].) • Is there any malfunction?	Yes	Repair or replace the malfunctioning part according to the inspection results, then go to Step 27.
		No	Go to the next step.
19	**INSPECT FUEL INJECTOR OPERATION** • Perform the Fuel Injector Operation Inspection. (See 01-03-118 ENGINE CONTROL SYSTEM OPERATION INSPECTION [SKYACTIV-G 2.0].) • Is there any malfunction?	Yes	Repair or replace the malfunctioning part according to the inspection results, then go to Step 27.
		No	Go to the next step.
20	**INSPECT FUEL PRESSURE (HIGH-SIDE)** • Start the engine and warm it up completely. • Access the FUEL_PRES PID using the M-MDS at idle. (See 01-02-8 ON-BOARD DIAGNOSTIC TEST [SKYACTIV-G 2.0].) • Is the FUEL_PRES PID value **approx. 3 MPa {31 kgf/cm^2, 435 psi}**?	Yes	Go to Step 24.
		No	Lower than **3 MPa {31 kgf/cm2, 435 psi}**: • Inspect the following: — Fuel leakage at the fuel line and fuel injector — Fuel pump • Perform the Fuel Pump (Low-pressure Side) Operation Inspection. (See 01-03-118 ENGINE CONTROL SYSTEM OPERATION INSPECTION [SKYACTIV-G 2.0].) — Fuel pressure sensor (See 01-40-52 FUEL PRESSURE SENSOR INSPECTION [SKYACTIV-G 2.0].) — High pressure fuel pump (See 01-14A-49 HIGH PRESSURE FUEL PUMP INSPECTION [SKYACTIV-G 2.0].) • If there is any malfunction: — Repair or replace the malfunctioning part according to the inspection results, then go to Step 27. • If there is no malfunction: — Go to Step 23. Higher than **3 MPa {31 kgf/cm2, 435 psi}**: • Go to the next step.
21	**IDENTIFY CAUSE BY FUEL PRESSURE SENSOR OR HIGH PRESSURE FUEL PUMP** • Is the vehicle acceleration performance normal?	Yes	Go to the next step.
		No	Go to Step 23.
22	**INSPECT FUEL PRESSURE SENSOR** • Inspect the fuel pressure sensor. (See 01-40-52 FUEL PRESSURE SENSOR INSPECTION [SKYACTIV-G 2.0].) • Is there any malfunction?	Yes	Replace the fuel distributor, then go to Step 27. (See 01-14A-51 FUEL INJECTOR REMOVAL/INSTALLATION [SKYACTIV-G 2.0].)
		No	Go to Step 24.

ON-BOARD DIAGNOSTIC [SKYACTIV-G 2.0]

STEP	INSPECTION		ACTION
23	**INSPECT SPILL VALVE CONTROL SOLENOID VALVE CONTROL CIRCUIT FOR SHORT TO GROUND** • Switch the ignition to off. • Disconnect the high pressure fuel pump and PCM connectors. • Inspect for continuity between high pressure fuel pump terminal A (wiring harness-side) and body ground. • Is there continuity?	Yes	Repair or replace the wiring harness for a possible short to ground, then go to Step 27.
		No	Replace the high pressure fuel pump, then go to Step 27. (See 01-14A-44 HIGH PRESSURE FUEL PUMP REMOVAL/INSTALLATION [SKYACTIV-G 2.0].)
24	**INSPECT FUEL PRESSURE (LOW-SIDE)** • Connect the fuel pressure gauge between fuel pump and high pressure fuel pump. • Measure the low side fuel pressure. (See 01-14A-8 FUEL LINE PRESSURE INSPECTION [SKYACTIV-G 2.0].) • Is the low side fuel pressure within specification? **Specification:** • **405—485 kPa {4.13—4.94 kgf/cm^2, 58.8—70.3 psi}**	Yes	Go to the next step.
		No	Inspect the following: • Fuel line restriction • Fuel filter clogged — If there is any malfunction: • Repair or replace the malfunctioning part according to the inspection results. — If there is no malfunction: • Replace the fuel pump unit. (See 01-14A-38 FUEL PUMP UNIT REMOVAL/INSTALLATION [SKYACTIV-G 2.0].) Go to Step 27.
25	**INSPECT IGNITION SYSTEM OPERATION** • Perform the Spark Test. (See 01-03-118 ENGINE CONTROL SYSTEM OPERATION INSPECTION [SKYACTIV-G 2.0].) • Is a strong blue spark visible at each cylinder?	Yes	Go to the next step.
		No	Repair or replace the malfunctioning part according to the inspection results, then go to Step 27.
26	**INSPECT PCV VALVE OPERATION** • Inspect the PCV valve operation. (See 01-16A-15 POSITIVE CRANKCASE VENTILATION (PCV) VALVE INSPECTION [SKYACTIV-G 2.0].) • Is there any malfunction?	Yes	Replace the PCV valve, then go to the next step. (See 01-16A-13 POSITIVE CRANKCASE VENTILATION (PCV) VALVE REMOVAL/INSTALLATION [SKYACTIV-G 2.0].)
		No	Go to the next step.
27	**VERIFY DTC TROUBLESHOOTING COMPLETED** • Make sure to reconnect all disconnected connectors. • Clear the DTC from the PCM memory using the M-MDS. (See 01-02-12 AFTER REPAIR PROCEDURE [SKYACTIV-G 2.0].) • Perform the Drive Mode 03 (Variable Valve Timing, A/F Sensor Heater, HO2S Heater, A/F Sensor, HO2S and TWC Repair Verification Drive Mode). (See 01-02-13 OBD DRIVE MODE [SKYACTIV-G 2.0].) • Stop the vehicle and access the ON BOARD READINESS TEST to inspect the Drive Mode completion status. • Verify the FUEL_EVAL PID changes to yes. — If not, perform the Drive Mode 03 (Variable Valve Timing, A/F Sensor Heater, HO2S Heater, A/F Sensor, HO2S and TWC Repair Verification Drive Mode). (See 01-02-13 OBD DRIVE MODE [SKYACTIV-G 2.0].) • Perform the Pending Trouble Code Access Procedure. (See 01-02-8 ON-BOARD DIAGNOSTIC TEST [SKYACTIV-G 2.0].) • Is the PENDING CODE for this DTC present?	Yes	Repeat the inspection from Step 1. • If the malfunction recurs, replace the PCM. (See 01-40-10 PCM REMOVAL/INSTALLATION [SKYACTIV-G 2.0].) Go to the next step.
		No	Go to the next step.
28	**VERIFY AFTER REPAIR PROCEDURE** • Perform the “AFTER REPAIR PROCEDURE”. (See 01-02-12 AFTER REPAIR PROCEDURE [SKYACTIV-G 2.0].) • Are any DTCs present?	Yes	Go to the applicable DTC inspection. (See 01-02-14 DTC TABLE [SKYACTIV-G 2.0].)
		No	DTC troubleshooting completed.

ON-BOARD DIAGNOSTIC [SKYACTIV-G 2.0]

DTC P0191:00 [SKYACTIV-G 2.0]

id0102h1147600

DTC P0191:00	Fuel pressure sensor circuit range/performance problem
DETECTION CONDITION	• The difference between the actual and target fuel pressure is equal to or more than the specification, even though the fuel pressure feedback amount is maintained low or high. **Diagnostic support note** • This is a continuous monitor (CCM). • The check engine light illuminates if the PCM detects the above malfunction condition during the first drive cycle. • FREEZE FRAME DATA (Mode 2)/Snapshot data is available. • The DTC is stored in the PCM memory.
FAIL-SAFE FUNCTION	• Stops the high pressure fuel pump control. • Limits the intake air amount.
POSSIBLE CAUSE	• Fuel pressure sensor connector or terminals malfunction • Short to ground in wiring harness between the following terminals: — Fuel pressure sensor terminal C—PCM terminal 1BJ — Fuel pressure sensor terminal B—PCM terminal 1CA • PCM connector or terminals malfunction • Short to power supply in wiring harness between fuel pressure sensor terminal B and PCM terminal 1CA • Fuel pressure sensor circuits are shorted to each other • Open circuit in wiring harness between the following terminals: — Fuel pressure sensor terminal C—PCM terminal 1BJ — Fuel pressure sensor terminal B—PCM terminal 1CA — Fuel pressure sensor terminal A—PCM terminal 1CB • Fuel pressure sensor malfunction • High pressure fuel pump malfunction • PCM malfunction

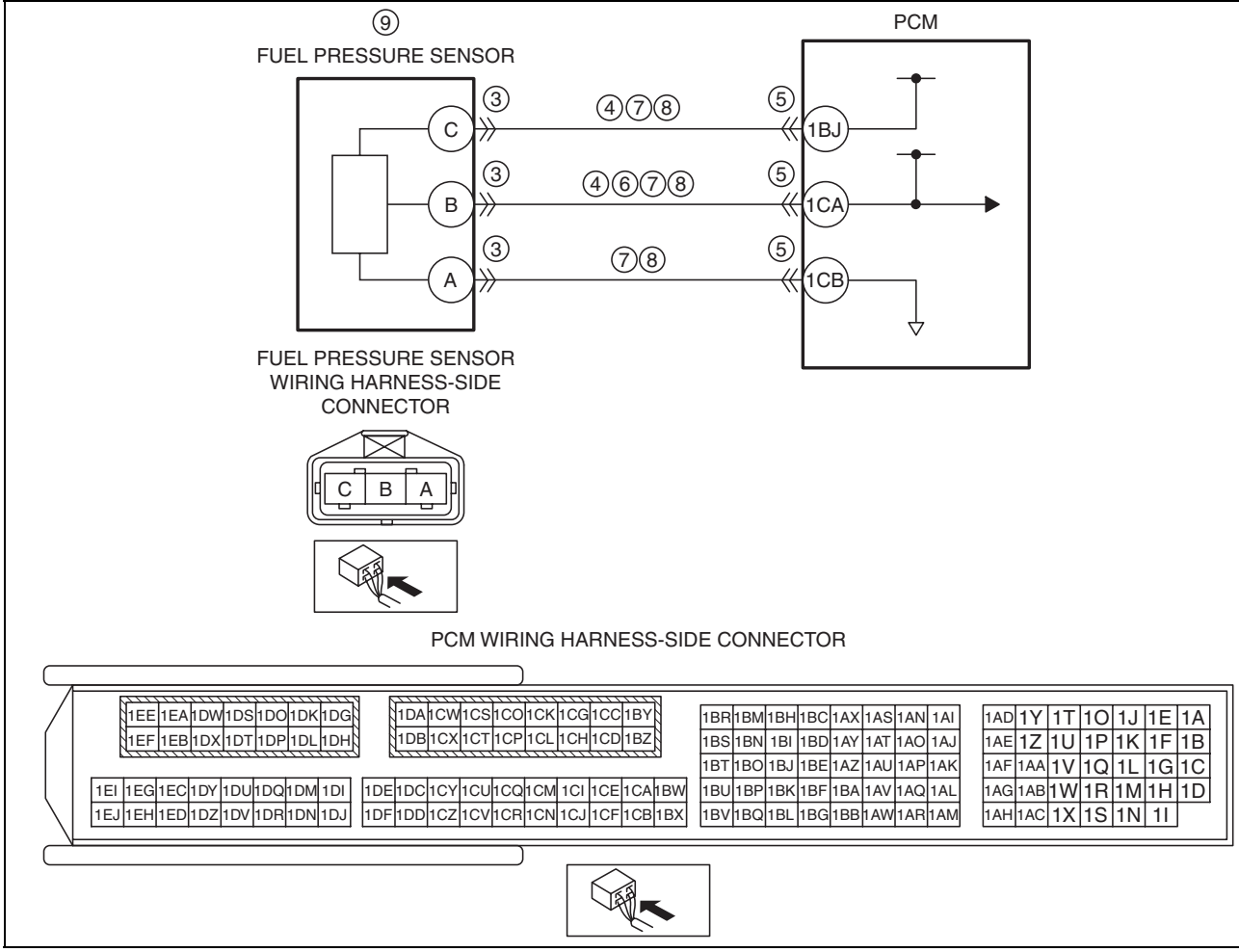

ON-BOARD DIAGNOSTIC [SKYACTIV-G 2.0]

Diagnostic Procedure

STEP	INSPECTION		ACTION
1	**VERIFY FREEZE FRAME DATA (MODE 2)/ SNAPSHOT DATA HAS BEEN RECORDED** • Has the FREEZE FRAME DATA (Mode 2)/ snapshot data been recorded?	Yes	Go to the next step.
		No	Record the FREEZE FRAME DATA (Mode 2)/snapshot data on the repair order, then go to the next step.
2	**VERIFY RELATED SERVICE INFORMATION AVAILABILITY** • Verify related Service Information availability. • Is any related Service Information available?	Yes	Perform repair or diagnosis according to the available Service Information. • If the vehicle is not repaired, go to the next step.
		No	Go to the next step.
3	**INSPECT FUEL PRESSURE SENSOR CONNECTOR CONDITION** • Switch the ignition to off. • Disconnect the fuel pressure sensor connector. • Inspect for poor connection (such as damaged/ pulled-out pins, corrosion). • Is there any malfunction?	Yes	Repair or replace the connector and/or terminals, then go to Step 11.
		No	Go to the next step.
4	**INSPECT FUEL PRESSURE SENSOR CIRCUIT FOR SHORT TO GROUND** • Verify that the fuel pressure sensor connector is disconnected. • Inspect for continuity between the following terminals (wiring harness-side) and body ground: — Fuel pressure sensor terminal C — Fuel pressure sensor terminal B • Is there continuity?	Yes	If the short to ground circuit could be detected in the wiring harness: • Repair or replace the wiring harness for a possible short to ground. If the short to ground circuit could not be detected in the wiring harness: • Replace the PCM (short to ground in the PCM internal circuit). (See 01-40-10 PCM REMOVAL/INSTALLATION [SKYACTIV-G 2.0].) Go to Step 11.
		No	Go to the next step.
5	**INSPECT PCM CONNECTOR CONDITION** • Disconnect the PCM connector. • Inspect for poor connection (such as damaged/ pulled-out pins, corrosion). • Is there any malfunction?	Yes	Repair or replace the connector and/or terminals, then go to Step 11.
		No	Go to the next step.
6	**INSPECT FUEL PRESSURE SENSOR SIGNAL CIRCUIT FOR SHORT TO POWER SUPPLY** • Verify that the fuel pressure sensor and PCM connectors are disconnected. • Switch the ignition ON (engine off or on). • Measure the voltage at the fuel pressure sensor terminal B (wiring harness-side). • Is the voltage **0 V**?	Yes	Go to the next step.
		No	Repair or replace the wiring harness for a possible short to power supply, then go to Step 11.
7	**INSPECT FUEL PRESSURE SENSOR CIRCUITS FOR SHORT TO EACH OTHER** • Verify that the fuel pressure sensor and PCM connectors are disconnected. • Switch the ignition to off. • Inspect for continuity between fuel pressure sensor terminals C, B and A (wiring harness-side). • Is there continuity?	Yes	Repair or replace the wiring harness for a possible short to each other, then go to Step 11.
		No	Go to the next step.
8	**INSPECT FUEL PRESSURE SENSOR CIRCUIT FOR OPEN CIRCUIT** • Verify that the fuel pressure sensor and PCM connectors are disconnected. • Inspect for continuity between the following terminals (wiring harness-side): — Fuel pressure sensor terminal C—PCM terminal 1BJ — Fuel pressure sensor terminal B—PCM terminal 1CA — Fuel pressure sensor terminal A—PCM terminal 1CB • Is there continuity?	Yes	Go to the next step.
		No	Repair or replace the wiring harness for a possible open circuit, then go to Step 11.

ON-BOARD DIAGNOSTIC [SKYACTIV-G 2.0]

STEP	INSPECTION		ACTION
9	**INSPECT FUEL PRESSURE SENSOR** • Reconnect all disconnected connectors. • Inspect the fuel pressure sensor. (See 01-40-52 FUEL PRESSURE SENSOR INSPECTION [SKYACTIV-G 2.0].) • Is there any malfunction?	Yes	Replace the fuel distributor, then go to Step 11. (See 01-14A-51 FUEL INJECTOR REMOVAL/ INSTALLATION [SKYACTIV-G 2.0].)
		No	Go to the next step.
10	**INSPECT HIGH PRESSURE FUEL PUMP** • Inspect the high pressure fuel pump. (See 01-14A-49 HIGH PRESSURE FUEL PUMP INSPECTION [SKYACTIV-G 2.0].) • Is there any malfunction?	Yes	Replace the high pressure fuel pump, then go to the next step. (See 01-14A-44 HIGH PRESSURE FUEL PUMP REMOVAL/INSTALLATION [SKYACTIV-G 2.0].)
		No	Go to the next step.
11	**VERIFY DTC TROUBLESHOOTING COMPLETED** • Make sure to reconnect all disconnected connectors. • Clear the DTC from the PCM memory using the M-MDS. (See 01-02-12 AFTER REPAIR PROCEDURE [SKYACTIV-G 2.0].) • Start the engine and warm it up completely. • Increase and keep the engine speed at **3,000 rpm** for **1 min**. • Perform the DTC Reading Procedure. (See 01-02-8 ON-BOARD DIAGNOSTIC TEST [SKYACTIV-G 2.0].) • Is the same DTC present?	Yes	Repeat the inspection from Step 1. • If the malfunction recurs, replace the PCM. (See 01-40-10 PCM REMOVAL/INSTALLATION [SKYACTIV-G 2.0].) Go to the next step.
		No	Go to the next step.
12	**VERIFY AFTER REPAIR PROCEDURE** • Perform the “AFTER REPAIR PROCEDURE”. (See 01-02-12 AFTER REPAIR PROCEDURE [SKYACTIV-G 2.0].) • Are any DTCs present?	Yes	Go to the applicable DTC inspection. (See 01-02-14 DTC TABLE [SKYACTIV-G 2.0].)
		No	DTC troubleshooting completed.

ON-BOARD DIAGNOSTIC [SKYACTIV-G 2.0]

DTC P0192:00 [SKYACTIV-G 2.0]

id0102h1147700

DTC P0192:00	Fuel pressure sensor circuit low input
DETECTION CONDITION	• If the input voltage at the PCM terminal 1CA is **less than 0.156 V** for **5 s**, the PCM determines that the fuel pressure sensor circuit is low. **Diagnostic support note** • This is a continuous monitor (CCM). • The check engine light illuminates if the PCM detects the above malfunction condition during the first drive cycle. • FREEZE FRAME DATA (Mode 2)/Snapshot data is available. • The DTC is stored in the PCM memory.
FAIL-SAFE FUNCTION	• Stops the high pressure fuel pump control. • Limits the intake air amount.
POSSIBLE CAUSE	• Fuel pressure sensor connector or terminals malfunction • Short to ground in wiring harness between the following terminals: — Fuel pressure sensor terminal C—PCM terminal 1BJ — Fuel pressure sensor terminal B—PCM terminal 1CA • PCM connector or terminals malfunction • Fuel pressure sensor signal circuit and ground circuit are shorted to each other • Open circuit in wiring harness between fuel pressure sensor terminal C and PCM terminal 1BJ • Fuel pressure sensor malfunction • PCM malfunction

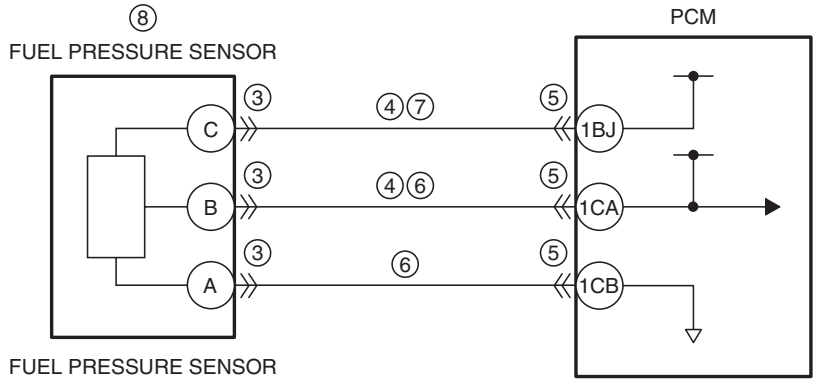

FUEL PRESSURE SENSOR WIRING HARNESS-SIDE CONNECTOR

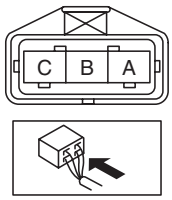

PCM WIRING HARNESS-SIDE CONNECTOR

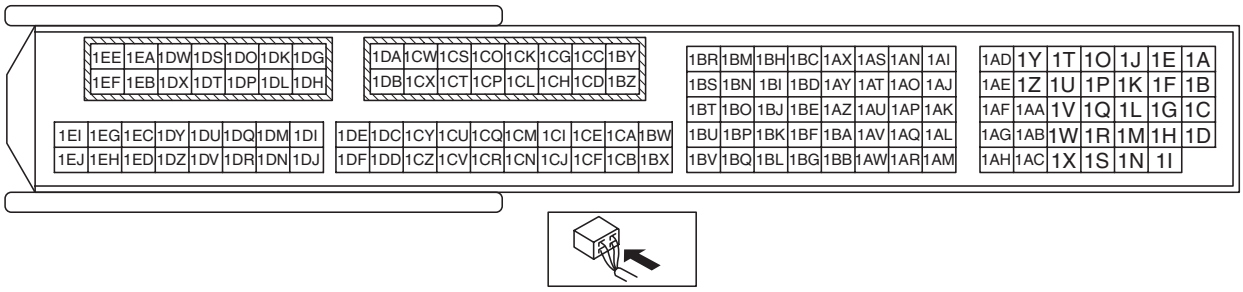

ON-BOARD DIAGNOSTIC [SKYACTIV-G 2.0]

Diagnostic Procedure

STEP	INSPECTION		ACTION
1	**VERIFY FREEZE FRAME DATA (MODE 2)/ SNAPSHOT DATA HAS BEEN RECORDED** • Has the FREEZE FRAME DATA (Mode 2)/ snapshot data been recorded?	Yes	Go to the next step.
		No	Record the FREEZE FRAME DATA (Mode 2)/snapshot data on the repair order, then go to the next step.
2	**VERIFY RELATED SERVICE INFORMATION AVAILABILITY** • Verify related Service Information availability. • Is any related Service Information available?	Yes	Perform repair or diagnosis according to the available Service Information. • If the vehicle is not repaired, go to the next step.
		No	Go to the next step.
3	**INSPECT FUEL PRESSURE SENSOR CONNECTOR CONDITION** • Switch the ignition to off. • Disconnect the fuel pressure sensor connector. • Inspect for poor connection (such as damaged/ pulled-out pins, corrosion). • Is there any malfunction?	Yes	Repair or replace the connector and/or terminals, then go to Step 9.
		No	Go to the next step.
4	**INSPECT FUEL PRESSURE SENSOR CIRCUIT FOR SHORT TO GROUND** • Verify that the fuel pressure sensor connector is disconnected. • Inspect for continuity between the following terminals (wiring harness-side) and body ground: — Fuel pressure sensor terminal C — Fuel pressure sensor terminal B • Is there continuity?	Yes	If the short to ground circuit could be detected in the wiring harness: • Repair or replace the wiring harness for a possible short to ground. If the short to ground circuit could not be detected in the wiring harness: • Replace the PCM (short to ground in the PCM internal circuit). (See 01-40-10 PCM REMOVAL/INSTALLATION [SKYACTIV-G 2.0].) Go to Step 9.
		No	Go to the next step.
5	**INSPECT PCM CONNECTOR CONDITION** • Disconnect the PCM connector. • Inspect for poor connection (such as damaged/ pulled-out pins, corrosion). • Is there any malfunction?	Yes	Repair or replace the connector and/or terminals, then go to Step 9.
		No	Go to the next step.
6	**INSPECT FUEL PRESSURE SENSOR SIGNAL CIRCUIT AND GROUND CIRCUIT FOR SHORT TO EACH OTHER** • Verify that the fuel pressure sensor and PCM connectors are disconnected. • Inspect for continuity between fuel pressure sensor terminals B and A (wiring harness-side). • Is there continuity?	Yes	Repair or replace the wiring harness for a possible short to each other, then go to Step 9.
		No	Go to the next step.
7	**INSPECT FUEL PRESSURE SENSOR POWER SUPPLY CIRCUIT FOR OPEN CIRCUIT** • Verify that the fuel pressure sensor and PCM connectors are disconnected. • Inspect for continuity between fuel pressure sensor terminal C (wiring harness-side) and PCM terminal 1BJ (wiring harness-side). • Is there continuity?	Yes	Go to the next step.
		No	Repair or replace the wiring harness for a possible open circuit, then go to Step 9.
8	**INSPECT FUEL PRESSURE SENSOR** • Reconnect all disconnected connectors. • Inspect the fuel pressure sensor. (See 01-40-52 FUEL PRESSURE SENSOR INSPECTION [SKYACTIV-G 2.0].) • Is there any malfunction**?**	Yes	Replace the fuel distributor, then go to the next step. (See 01-14A-51 FUEL INJECTOR REMOVAL/ INSTALLATION [SKYACTIV-G 2.0].)
		No	Go to the next step.

ON-BOARD DIAGNOSTIC [SKYACTIV-G 2.0]

STEP	INSPECTION		ACTION
9	**VERIFY DTC TROUBLESHOOTING COMPLETED** • Make sure to reconnect all disconnected connectors. • Clear the DTC from the PCM memory using the M-MDS. (See 01-02-12 AFTER REPAIR PROCEDURE [SKYACTIV-G 2.0].) • Start the engine. • Perform the KOEO or KOER self test. (See 01-02-12 KOEO/KOER SELF TEST [SKYACTIV-G 2.0].) • Is the same DTC present?	Yes	Repeat the inspection from Step 1. • If the malfunction recurs, replace the PCM. (See 01-40-10 PCM REMOVAL/INSTALLATION [SKYACTIV-G 2.0].) Go to the next step.
		No	Go to the next step.
10	**VERIFY AFTER REPAIR PROCEDURE** • Perform the “AFTER REPAIR PROCEDURE”. (See 01-02-12 AFTER REPAIR PROCEDURE [SKYACTIV-G 2.0].) • Are any DTCs present?	Yes	Go to the applicable DTC inspection. (See 01-02-14 DTC TABLE [SKYACTIV-G 2.0].)
		No	DTC troubleshooting completed.

ON-BOARD DIAGNOSTIC [SKYACTIV-G 2.0]

DTC P0193:00 [SKYACTIV-G 2.0]

id0102h1147800

DTC P0193:00	Fuel pressure sensor circuit high input
DETECTION CONDITION	• If the input voltage at the PCM terminal 1CA is **more than 4.86 V** for **5 s**, the PCM determines that the fuel pressure sensor circuit is high. **Diagnostic support note** • This is a continuous monitor (CCM). • The check engine light illuminates if the PCM detects the above malfunction condition during the first drive cycle. • FREEZE FRAME DATA (Mode 2)/Snapshot data is available. • The DTC is stored in the PCM memory.
FAIL-SAFE FUNCTION	• Stops the high pressure fuel pump control. • Limits the intake air amount.
POSSIBLE CAUSE	• Fuel pressure sensor connector or terminals malfunction • PCM connector or terminals malfunction • Fuel pressure sensor malfunction • Short to power supply in wiring harness between fuel pressure sensor terminal B and PCM terminal 1CA • Open circuit in wiring harness between the following terminals: — Fuel pressure sensor terminal B—PCM terminal 1CA — Fuel pressure sensor terminal A—PCM terminal 1CB • PCM malfunction

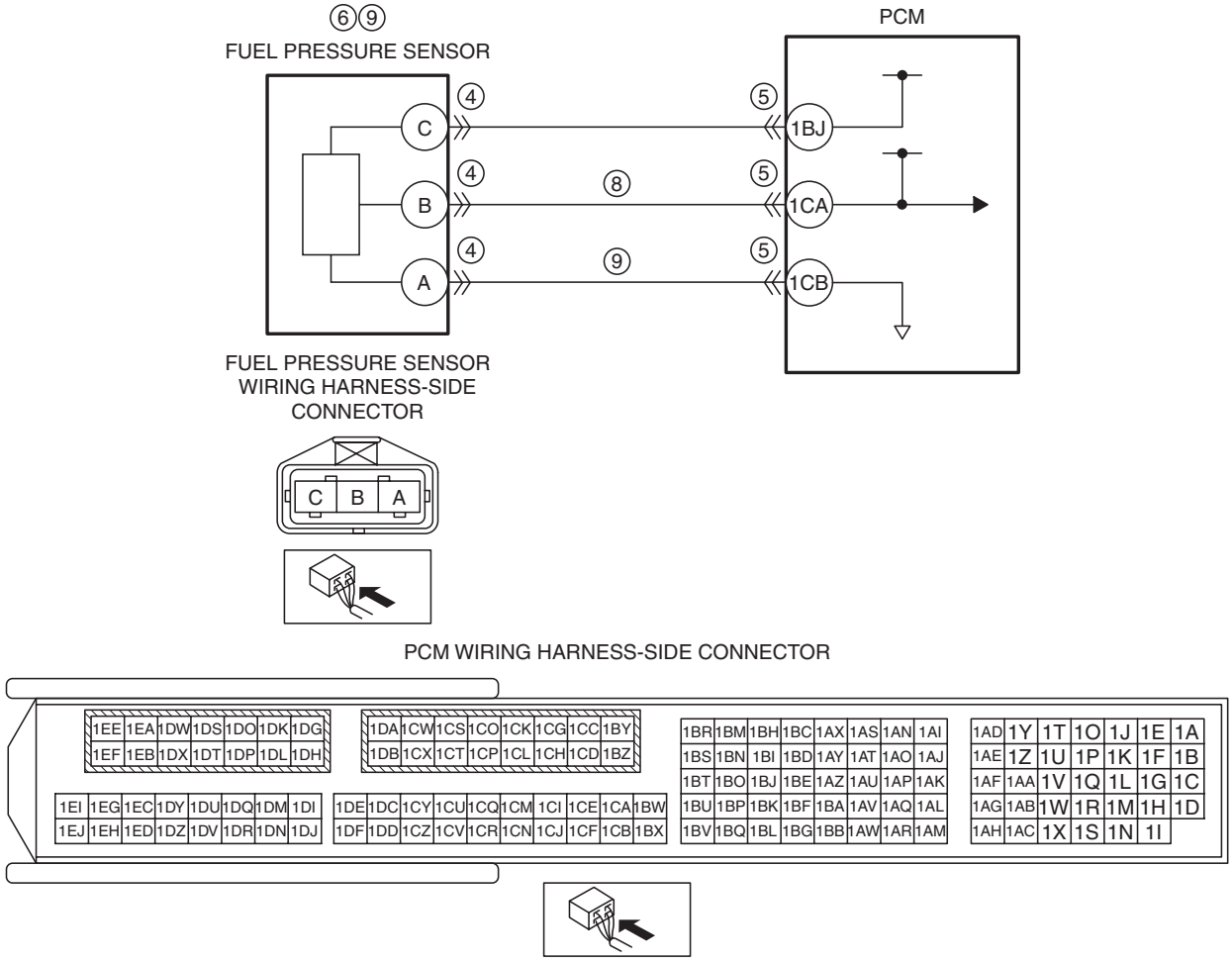

ON-BOARD DIAGNOSTIC [SKYACTIV-G 2.0]

Diagnostic Procedure

STEP	INSPECTION		ACTION
1	**VERIFY FREEZE FRAME DATA (MODE 2)/ SNAPSHOT DATA HAS BEEN RECORDED** • Has the FREEZE FRAME DATA (Mode 2)/ snapshot data been recorded?	Yes	Go to the next step.
		No	Record the FREEZE FRAME DATA (Mode 2)/snapshot data on the repair order, then go to the next step.
2	**VERIFY RELATED SERVICE INFORMATION AVAILABILITY** • Verify related Service Information availability. • Is any related Service Information available?	Yes	Perform repair or diagnosis according to the available Service Information. • If the vehicle is not repaired, go to the next step.
		No	Go to the next step.
3	**CLASSIFY FUEL PRESSURE SENSOR MALFUNCTION OR WIRING HARNESS MALFUNCTION** • Access the FUEL_PRES PID using the M-MDS. (See 01-02-8 ON-BOARD DIAGNOSTIC TEST [SKYACTIV-G 2.0].) • Verify the FUEL_PRES PID value. • Is the FUEL_PRES PID value **5 V** or **B+**?	Yes	Go to Step 7.
		No	Go to the next step.
4	**INSPECT FUEL PRESSURE SENSOR CONNECTOR CONDITION** • Switch the ignition to off. • Disconnect the fuel pressure sensor connector. • Inspect for poor connection (such as damaged/ pulled-out pins, corrosion). • Is there any malfunction?	Yes	Repair or replace the connector and/or terminals, then go to Step 10.
		No	Go to the next step.
5	**INSPECT PCM CONNECTOR CONDITION** • Disconnect the PCM connector. • Inspect for poor connection (such as damaged/ pulled-out pins, corrosion). • Is there any malfunction?	Yes	Repair or replace the connector and/or terminals, then go to Step 10.
		No	Go to the next step.
6	**INSPECT FUEL PRESSURE SENSOR** • Reconnect all disconnected connectors. • Inspect the fuel pressure sensor. (See 01-40-52 FUEL PRESSURE SENSOR INSPECTION [SKYACTIV-G 2.0].) • Is there any malfunction**?**	Yes	Replace the fuel distributor, then go to Step 10. (See 01-14A-51 FUEL INJECTOR REMOVAL/ INSTALLATION [SKYACTIV-G 2.0].)
		No	Go to Step 10.
7	**CLASSIFY FUEL PRESSURE SENSOR SIGNAL CIRCUIT MALFUNCTION OR FUEL PRESSURE SENSOR GROUND CIRCUIT MALFUNCTION** • Switch the ignition to off. • Disconnect the fuel pressure sensor connector. • Access the FUEL_PRES PID using the M-MDS. (See 01-02-8 ON-BOARD DIAGNOSTIC TEST [SKYACTIV-G 2.0].) • Verify the FUEL_PRES PID value. • Is the FUEL_PRES PID value **5 V** or **B+**?	Yes	Go to the next step.
		No	Go to Step 9.
8	**INSPECT FUEL PRESSURE SENSOR SIGNAL CIRCUIT FOR OPEN CIRCUIT** • Verify that the fuel pressure sensor connector is disconnected. • Switch the ignition to off. • Disconnect the PCM connector. • Inspect for continuity between fuel pressure sensor terminal B (wiring harness-side) and PCM terminal 1CA (wiring harness-side). • Is there continuity?	Yes	Repair or replace the wiring harness for a possible short to power supply, then go to Step 10.
		No	Repair or replace the wiring harness for a possible open circuit, then go to Step 10.

ON-BOARD DIAGNOSTIC [SKYACTIV-G 2.0]

STEP	INSPECTION		ACTION
9	**INSPECT FUEL PRESSURE SENSOR GROUND CIRCUIT FOR OPEN CIRCUIT** • Verify that the fuel pressure sensor connector is disconnected. • Switch the ignition to off. • Disconnect the PCM connector. • Inspect for continuity between fuel pressure sensor terminal A (wiring harness-side) and PCM terminal 1CB (wiring harness-side). • Is there continuity?	Yes	Replace the fuel distributor, then go to the next step. (See 01-14A-51 FUEL INJECTOR REMOVAL/ INSTALLATION [SKYACTIV-G 2.0].)
		No	Repair or replace the wiring harness for a possible open circuit, then go to the next step.
10	**VERIFY DTC TROUBLESHOOTING COMPLETED** • Make sure to reconnect all disconnected connectors. • Clear the DTC from the PCM memory using the M-MDS. (See 01-02-12 AFTER REPAIR PROCEDURE [SKYACTIV-G 2.0].) • Start the engine. • Perform the KOEO or KOER self test. (See 01-02-12 KOEO/KOER SELF TEST [SKYACTIV-G 2.0].) • Is the same DTC present?	Yes	Repeat the inspection from Step 1. • If the malfunction recurs, replace the PCM. (See 01-40-10 PCM REMOVAL/INSTALLATION [SKYACTIV-G 2.0].) Go to the next step.
		No	Go to the next step.
11	**VERIFY AFTER REPAIR PROCEDURE** • Perform the “AFTER REPAIR PROCEDURE”. (See 01-02-12 AFTER REPAIR PROCEDURE [SKYACTIV-G 2.0].) • Are any DTCs present?	Yes	Go to the applicable DTC inspection. (See 01-02-14 DTC TABLE [SKYACTIV-G 2.0].)
		No	DTC troubleshooting completed.

ON-BOARD DIAGNOSTIC [SKYACTIV-G 2.0]

DTC P0201:00 [SKYACTIV-G 2.0]

id0102h1147900

DTC P0201:00	**Fuel injector circuit/open cylinder No.1**
DETECTION CONDITION	• If the fuel injection verification signal is not input at **25 times** continuously even though the PCM drives the fuel injector No.1, the PCM determines that there is an open circuit in the fuel injector No.1 control circuit. **MONITORING CONDITIONS** — The following conditions are met: • Battery voltage: **10.5 V or more** • Fuel injection control: except during fuel cut **Diagnostic support note** • This is a continuous monitor (CCM). • The check engine light illuminates if the PCM detects the above malfunction condition during the first drive cycle. • FREEZE FRAME DATA (Mode 2)/Snapshot data is available. • The DTC is stored in the PCM memory.
FAIL-SAFE FUNCTION	—
POSSIBLE CAUSE	• Fuel injector No.1 connector or terminals malfunction • Fuel injector No.1 malfunction • Short to ground in wiring harness between the following terminals: — Fuel injector No.1 terminal B—PCM terminal 1DP — Fuel injector No.1 terminal A—PCM terminal 1DO • PCM connector or terminals malfunction • Short to power supply in wiring harness between fuel injector No.1 terminal A and PCM terminal 1DO • Open circuit in wiring harness between the following terminals: — Fuel injector No.1 terminal B—PCM terminal 1DP — Fuel injector No.1 terminal A—PCM terminal 1DO • PCM malfunction

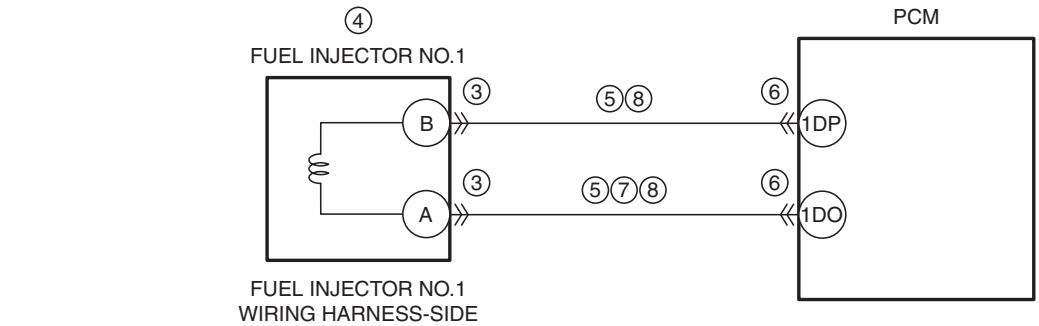

FUEL INJECTOR NO.1 WIRING HARNESS-SIDE CONNECTOR

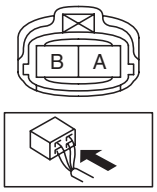

PCM WIRING HARNESS-SIDE CONNECTOR

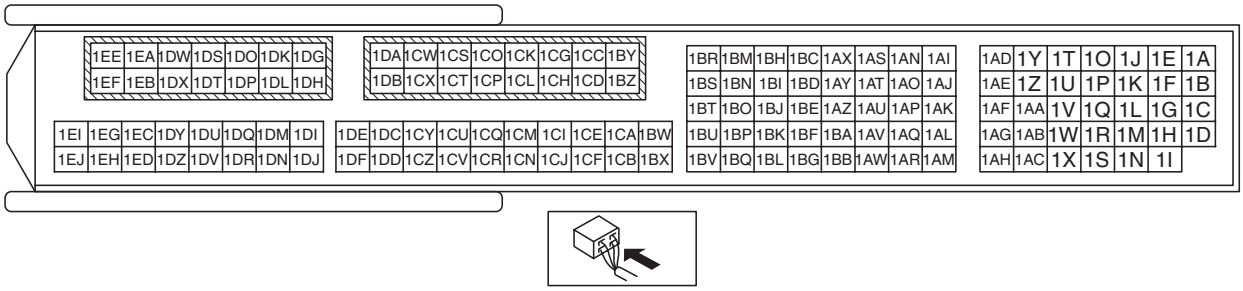

ON-BOARD DIAGNOSTIC [SKYACTIV-G 2.0]

Diagnostic Procedure

STEP	INSPECTION		ACTION
1	**VERIFY FREEZE FRAME DATA (MODE 2)/ SNAPSHOT DATA HAS BEEN RECORDED** • Has the FREEZE FRAME DATA (Mode 2)/ snapshot data been recorded?	Yes	Go to the next step.
		No	Record the FREEZE FRAME DATA (Mode 2)/snapshot data on the repair order, then go to the next step.
2	**VERIFY RELATED SERVICE INFORMATION AVAILABILITY** • Verify related Service Information availability. • Is any related Service Information available?	Yes	Perform repair or diagnosis according to the available Service Information. • If the vehicle is not repaired, go to the next step.
		No	Go to the next step.
3	**INSPECT FUEL INJECTOR NO.1 CONNECTOR CONDITION** • Switch the ignition to off. • Disconnect the fuel injector No.1 connector. • Inspect for poor connection (such as damaged/ pulled-out pins, corrosion). • Is there any malfunction?	Yes	Repair or replace the connector and/or terminals, then go to Step 9.
		No	Go to the next step.
4	**INSPECT FUEL INJECTOR NO.1** • Inspect the fuel injector No.1. (See 01-14A-62 FUEL INJECTOR INSPECTION [SKYACTIV-G 2.0].) • Is there any malfunction?	Yes	Replace the fuel injector No.1, then go to Step 9. (See 01-14A-51 FUEL INJECTOR REMOVAL/ INSTALLATION [SKYACTIV-G 2.0].)
		No	Go to the next step.
5	**INSPECT FUEL INJECTOR NO.1 CIRCUIT FOR SHORT TO GROUND** • Verify that the fuel injector No.1 connector is disconnected. • Inspect for continuity between the following terminals (wiring harness-side) and body ground: — Fuel injector No.1 terminal B — Fuel injector No.1 terminal A • Is there continuity?	Yes	If the short to ground circuit could be detected in the wiring harness: • Repair or replace the wiring harness for a possible short to ground. If the short to ground circuit could not be detected in the wiring harness: • Replace the PCM (short to ground in the PCM internal circuit). (See 01-40-10 PCM REMOVAL/INSTALLATION [SKYACTIV-G 2.0].) Go to Step 9.
		No	Go to the next step.
6	**INSPECT PCM CONNECTOR CONDITION** • Disconnect the PCM connector. • Inspect for poor connection (such as damaged/ pulled-out pins, corrosion). • Is there any malfunction?	Yes	Repair or replace the connector and/or terminals, then go to Step 9.
		No	Go to the next step.
7	**INSPECT FUEL INJECTOR NO.1 CIRCUIT FOR SHORT TO POWER SUPPLY** • Verify that the fuel injector No.1 and PCM connectors are disconnected. • Switch the ignition ON (engine off or on). • Measure the voltage at the fuel injector No.1 terminal A (wiring harness-side). • Is the voltage **0 V**?	Yes	Go to the next step.
		No	Repair or replace the wiring harness for a possible short to power supply, then go to Step 9.
8	**INSPECT FUEL INJECTOR NO.1 CIRCUIT FOR OPEN CIRCUIT** • Verify that the fuel injector No.1 and PCM connectors are disconnected. • Inspect for continuity between the following terminals (wiring harness-side): — Fuel injector No.1 terminal B—PCM terminal 1DP — Fuel injector No.1 terminal A—PCM terminal 1DO • Is there continuity?	Yes	Go to the next step.
		No	Repair or replace the wiring harness for a possible open circuit, then go to the next step.

ON-BOARD DIAGNOSTIC [SKYACTIV-G 2.0]

STEP	INSPECTION		ACTION
9	**VERIFY DTC TROUBLESHOOTING COMPLETED** • Make sure to reconnect all disconnected connectors. • Clear the DTC from the PCM memory using the M-MDS. (See 01-02-12 AFTER REPAIR PROCEDURE [SKYACTIV-G 2.0].) • Start the engine. • Perform the KOEO or KOER self test. (See 01-02-12 KOEO/KOER SELF TEST [SKYACTIV-G 2.0].) • Is the same DTC present?	Yes	Repeat the inspection from Step 1. • If the malfunction recurs, replace the PCM. (See 01-40-10 PCM REMOVAL/INSTALLATION [SKYACTIV-G 2.0].) Go to the next step.
		No	Go to the next step.
10	**VERIFY AFTER REPAIR PROCEDURE** • Perform the “AFTER REPAIR PROCEDURE”. (See 01-02-12 AFTER REPAIR PROCEDURE [SKYACTIV-G 2.0].) • Are any DTCs present?	Yes	Go to the applicable DTC inspection. (See 01-02-14 DTC TABLE [SKYACTIV-G 2.0].)
		No	DTC troubleshooting completed.

ON-BOARD DIAGNOSTIC [SKYACTIV-G 2.0]

DTC P0202:00 [SKYACTIV-G 2.0]

id0102h1148000

DTC P0202:00	**Fuel injector circuit/open cylinder No.2**
DETECTION CONDITION	• If the fuel injection verification signal is not input at **25 times** continuously even though the PCM drives the fuel injector No.2, the PCM determines that there is an open circuit in the fuel injector No.2 control circuit. **MONITORING CONDITIONS** — The following conditions are met: • Battery voltage: **10.5 V or more** • Fuel injection control: except during fuel cut **Diagnostic support note** • This is a continuous monitor (CCM). • The check engine light illuminates if the PCM detects the above malfunction condition during the first drive cycle. • FREEZE FRAME DATA (Mode 2)/Snapshot data is available. • The DTC is stored in the PCM memory.
FAIL-SAFE FUNCTION	—
POSSIBLE CAUSE	• Fuel injector No.2 connector or terminals malfunction • Fuel injector No.2 malfunction • Short to ground in wiring harness between the following terminals: — Fuel injector No.2 terminal B—PCM terminal 1DX — Fuel injector No.2 terminal A—PCM terminal 1DW • PCM connector or terminals malfunction • Short to power supply in wiring harness between fuel injector No.2 terminal A and PCM terminal 1DW • Open circuit in wiring harness between the following terminals: — Fuel injector No.2 terminal B—PCM terminal 1DX — Fuel injector No.2 terminal A—PCM terminal 1DW • PCM malfunction

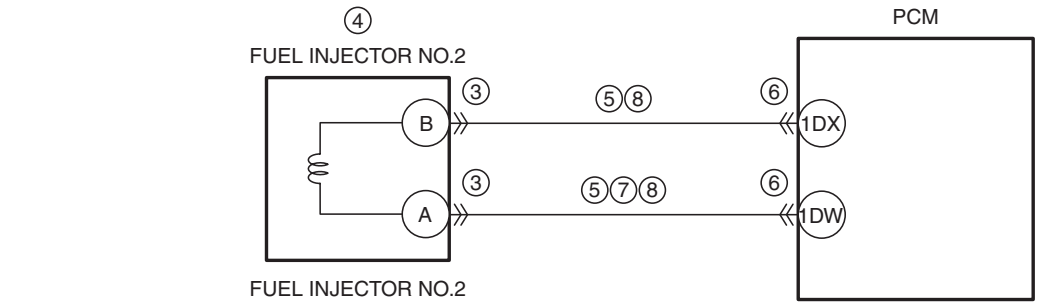

FUEL INJECTOR NO.2 WIRING HARNESS-SIDE CONNECTOR

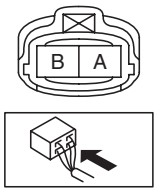

PCM WIRING HARNESS-SIDE CONNECTOR

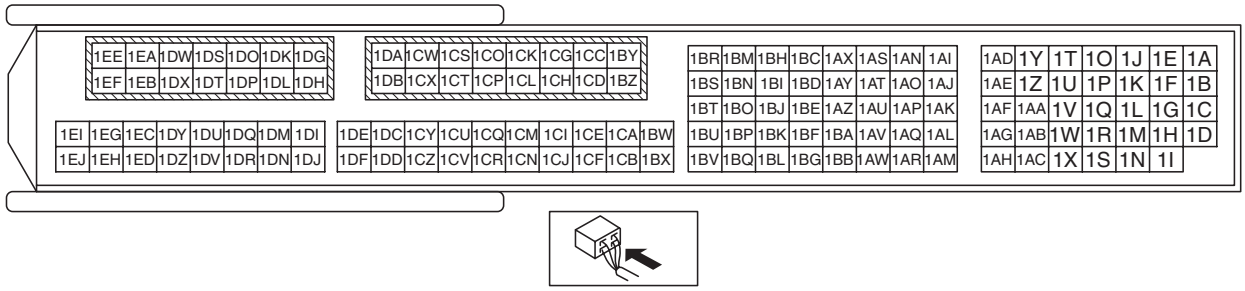

ON-BOARD DIAGNOSTIC [SKYACTIV-G 2.0]

Diagnostic Procedure

STEP	INSPECTION		ACTION
1	**VERIFY FREEZE FRAME DATA (MODE 2)/ SNAPSHOT DATA HAS BEEN RECORDED** • Has the FREEZE FRAME DATA (Mode 2)/ snapshot data been recorded?	Yes	Go to the next step.
		No	Record the FREEZE FRAME DATA (Mode 2)/snapshot data on the repair order, then go to the next step.
2	**VERIFY RELATED SERVICE INFORMATION AVAILABILITY** • Verify related Service Information availability. • Is any related Service Information available?	Yes	Perform repair or diagnosis according to the available Service Information. • If the vehicle is not repaired, go to the next step.
		No	Go to the next step.
3	**INSPECT FUEL INJECTOR NO.2 CONNECTOR CONDITION** • Switch the ignition to off. • Disconnect the fuel injector No.2 connector. • Inspect for poor connection (such as damaged/ pulled-out pins, corrosion). • Is there any malfunction?	Yes	Repair or replace the connector and/or terminals, then go to Step 9.
		No	Go to the next step.
4	**INSPECT FUEL INJECTOR NO.2** • Inspect the fuel injector No.2. (See 01-14A-62 FUEL INJECTOR INSPECTION [SKYACTIV-G 2.0].) • Is there any malfunction?	Yes	Replace the fuel injector No.2, then go to Step 9. (See 01-14A-51 FUEL INJECTOR REMOVAL/ INSTALLATION [SKYACTIV-G 2.0].)
		No	Go to the next step.
5	**INSPECT FUEL INJECTOR NO.2 CIRCUIT FOR SHORT TO GROUND** • Verify that the fuel injector No.2 connector is disconnected. • Inspect for continuity between the following terminals (wiring harness-side) and body ground: — Fuel injector No.2 terminal B — Fuel injector No.2 terminal A • Is there continuity?	Yes	If the short to ground circuit could be detected in the wiring harness: • Repair or replace the wiring harness for a possible short to ground. If the short to ground circuit could not be detected in the wiring harness: • Replace the PCM (short to ground in the PCM internal circuit). (See 01-40-10 PCM REMOVAL/INSTALLATION [SKYACTIV-G 2.0].) Go to Step 9.
		No	Go to the next step.
6	**INSPECT PCM CONNECTOR CONDITION** • Disconnect the PCM connector. • Inspect for poor connection (such as damaged/ pulled-out pins, corrosion). • Is there any malfunction?	Yes	Repair or replace the connector and/or terminals, then go to Step 9.
		No	Go to the next step.
7	**INSPECT FUEL INJECTOR NO.2 CIRCUIT FOR SHORT TO POWER SUPPLY** • Verify that the fuel injector No.2 and PCM connectors are disconnected. • Switch the ignition ON (engine off or on). • Measure the voltage at the fuel injector No.2 terminal A (wiring harness-side). • Is the voltage **0 V**?	Yes	Go to the next step.
		No	Repair or replace the wiring harness for a possible short to power supply, then go to Step 9.
8	**INSPECT FUEL INJECTOR NO.2 CIRCUIT FOR OPEN CIRCUIT** • Verify that the fuel injector No.2 and PCM connectors are disconnected. • Inspect for continuity between the following terminals (wiring harness-side): — Fuel injector No.2 terminal B—PCM terminal 1DX — Fuel injector No.2 terminal A—PCM terminal 1DW • Is there continuity?	Yes	Go to the next step.
		No	Repair or replace the wiring harness for a possible open circuit, then go to the next step.

ON-BOARD DIAGNOSTIC [SKYACTIV-G 2.0]

STEP	INSPECTION		ACTION
9	**VERIFY DTC TROUBLESHOOTING COMPLETED** • Make sure to reconnect all disconnected connectors. • Clear the DTC from the PCM memory using the M-MDS. (See 01-02-12 AFTER REPAIR PROCEDURE [SKYACTIV-G 2.0].) • Start the engine. • Perform the KOEO or KOER self test. (See 01-02-12 KOEO/KOER SELF TEST [SKYACTIV-G 2.0].) • Is the same DTC present?	Yes	Repeat the inspection from Step 1. • If the malfunction recurs, replace the PCM. (See 01-40-10 PCM REMOVAL/INSTALLATION [SKYACTIV-G 2.0].) Go to the next step.
		No	Go to the next step.
10	**VERIFY AFTER REPAIR PROCEDURE** • Perform the “AFTER REPAIR PROCEDURE”. (See 01-02-12 AFTER REPAIR PROCEDURE [SKYACTIV-G 2.0].) • Are any DTCs present?	Yes	Go to the applicable DTC inspection. (See 01-02-14 DTC TABLE [SKYACTIV-G 2.0].)
		No	DTC troubleshooting completed.

ON-BOARD DIAGNOSTIC [SKYACTIV-G 2.0]

DTC P0203:00 [SKYACTIV-G 2.0]

id0102h1148100

DTC P0203:00	**Fuel injector circuit/open cylinder No.3**
DETECTION CONDITION	• If the fuel injection verification signal is not input at **25 times** continuously even though the PCM drives the fuel injector No.3, the PCM determines that there is an open circuit in the fuel injector No.3 control circuit. **MONITORING CONDITIONS** — The following conditions are met: • Battery voltage: **10.5 V or more** • Fuel injection control: except during fuel cut **Diagnostic support note** • This is a continuous monitor (CCM). • The check engine light illuminates if the PCM detects the above malfunction condition during the first drive cycle. • FREEZE FRAME DATA (Mode 2)/Snapshot data is available. • The DTC is stored in the PCM memory.
FAIL-SAFE FUNCTION	—
POSSIBLE CAUSE	• Fuel injector No.3 connector or terminals malfunction • Fuel injector No.3 malfunction • Short to ground in wiring harness between the following terminals: — Fuel injector No.3 terminal B—PCM terminal 1EB — Fuel injector No.3 terminal A—PCM terminal 1EA • PCM connector or terminals malfunction • Short to power supply in wiring harness between fuel injector No.3 terminal A and PCM terminal 1EA • Open circuit in wiring harness between the following terminals: — Fuel injector No.3 terminal B—PCM terminal 1EB — Fuel injector No.3 terminal A—PCM terminal 1EA • PCM malfunction

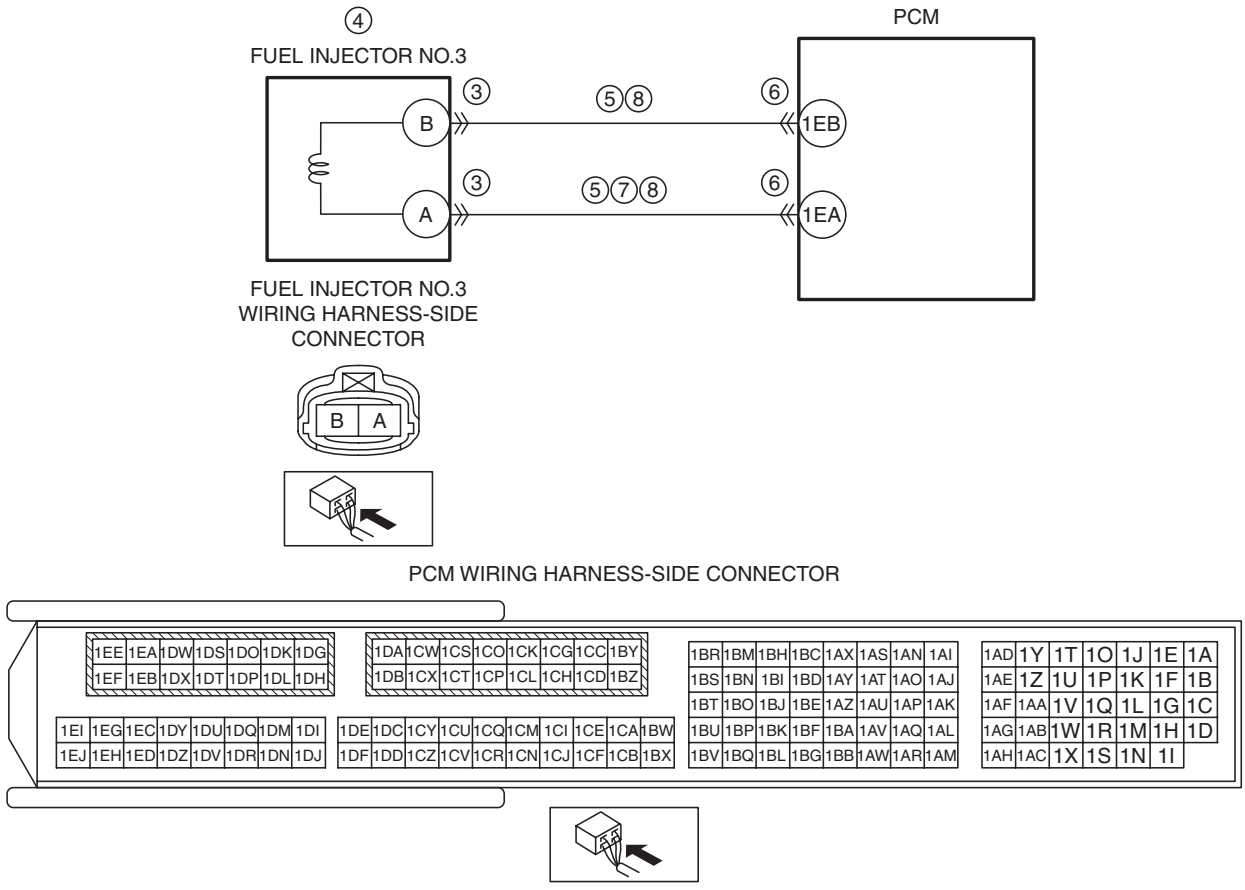

ON-BOARD DIAGNOSTIC [SKYACTIV-G 2.0]

Diagnostic Procedure

STEP	INSPECTION		ACTION
1	**VERIFY FREEZE FRAME DATA (MODE 2)/ SNAPSHOT DATA HAS BEEN RECORDED** • Has the FREEZE FRAME DATA (Mode 2)/ snapshot data been recorded?	Yes	Go to the next step.
		No	Record the FREEZE FRAME DATA (Mode 2)/snapshot data on the repair order, then go to the next step.
2	**VERIFY RELATED SERVICE INFORMATION AVAILABILITY** • Verify related Service Information availability. • Is any related Service Information available?	Yes	Perform repair or diagnosis according to the available Service Information. • If the vehicle is not repaired, go to the next step.
		No	Go to the next step.
3	**INSPECT FUEL INJECTOR NO.3 CONNECTOR CONDITION** • Switch the ignition to off. • Disconnect the fuel injector No.3 connector. • Inspect for poor connection (such as damaged/ pulled-out pins, corrosion). • Is there any malfunction?	Yes	Repair or replace the connector and/or terminals, then go to Step 9.
		No	Go to the next step.
4	**INSPECT FUEL INJECTOR NO.3** • Inspect the fuel injector No.3. (See 01-14A-62 FUEL INJECTOR INSPECTION [SKYACTIV-G 2.0].) • Is there any malfunction?	Yes	Replace the fuel injector No.3, then go to Step 9. (See 01-14A-51 FUEL INJECTOR REMOVAL/ INSTALLATION [SKYACTIV-G 2.0].)
		No	Go to the next step.
5	**INSPECT FUEL INJECTOR NO.3 CIRCUIT FOR SHORT TO GROUND** • Verify that the fuel injector No.3 connector is disconnected. • Inspect for continuity between the following terminals (wiring harness-side) and body ground: — Fuel injector No.3 terminal B — Fuel injector No.3 terminal A • Is there continuity?	Yes	If the short to ground circuit could be detected in the wiring harness: • Repair or replace the wiring harness for a possible short to ground. If the short to ground circuit could not be detected in the wiring harness: • Replace the PCM (short to ground in the PCM internal circuit). (See 01-40-10 PCM REMOVAL/INSTALLATION [SKYACTIV-G 2.0].) Go to Step 9.
		No	Go to the next step.
6	**INSPECT PCM CONNECTOR CONDITION** • Disconnect the PCM connector. • Inspect for poor connection (such as damaged/ pulled-out pins, corrosion). • Is there any malfunction?	Yes	Repair or replace the connector and/or terminals, then go to Step 9.
		No	Go to the next step.
7	**INSPECT FUEL INJECTOR NO.3 CIRCUIT FOR SHORT TO POWER SUPPLY** • Verify that the fuel injector No.3 and PCM connectors are disconnected. • Switch the ignition ON (engine off or on). • Measure the voltage at the fuel injector No.3 terminal A (wiring harness-side). • Is the voltage **0 V**?	Yes	Go to the next step.
		No	Repair or replace the wiring harness for a possible short to power supply, then go to Step 9.
8	**INSPECT FUEL INJECTOR NO.3 CIRCUIT FOR OPEN CIRCUIT** • Verify that the fuel injector No.3 and PCM connectors are disconnected. • Inspect for continuity between the following terminals (wiring harness-side): — Fuel injector No.3 terminal B—PCM terminal 1EB — Fuel injector No.3 terminal A—PCM terminal 1EA • Is there continuity?	Yes	Go to the next step.
		No	Repair or replace the wiring harness for a possible open circuit, then go to the next step.

ON-BOARD DIAGNOSTIC [SKYACTIV-G 2.0]

STEP	INSPECTION		ACTION
9	**VERIFY DTC TROUBLESHOOTING COMPLETED** • Make sure to reconnect all disconnected connectors. • Clear the DTC from the PCM memory using the M-MDS. (See 01-02-12 AFTER REPAIR PROCEDURE [SKYACTIV-G 2.0].) • Start the engine. • Perform the KOEO or KOER self test. (See 01-02-12 KOEO/KOER SELF TEST [SKYACTIV-G 2.0].) • Is the same DTC present?	Yes	Repeat the inspection from Step 1. • If the malfunction recurs, replace the PCM. (See 01-40-10 PCM REMOVAL/INSTALLATION [SKYACTIV-G 2.0].) Go to the next step.
		No	Go to the next step.
10	**VERIFY AFTER REPAIR PROCEDURE** • Perform the “AFTER REPAIR PROCEDURE”. (See 01-02-12 AFTER REPAIR PROCEDURE [SKYACTIV-G 2.0].) • Are any DTCs present?	Yes	Go to the applicable DTC inspection. (See 01-02-14 DTC TABLE [SKYACTIV-G 2.0].)
		No	DTC troubleshooting completed.

ON-BOARD DIAGNOSTIC [SKYACTIV-G 2.0]

DTC P0204:00 [SKYACTIV-G 2.0]

id0102h1148200

DTC P0204:00	**Fuel injector circuit/open cylinder No.4**
DETECTION CONDITION	• If the fuel injection verification signal is not input at **25 times** continuously even though the PCM drives the fuel injector No.4, the PCM determines that there is an open circuit in the fuel injector No.4 control circuit. **MONITORING CONDITIONS** — The following conditions are met: • Battery voltage: **10.5 V or more** • Fuel injection control: except during fuel cut **Diagnostic support note** • This is a continuous monitor (CCM). • The check engine light illuminates if the PCM detects the above malfunction condition during the first drive cycle. • FREEZE FRAME DATA (Mode 2)/Snapshot data is available. • The DTC is stored in the PCM memory.
FAIL-SAFE FUNCTION	—
POSSIBLE CAUSE	• Fuel injector No.4 connector or terminals malfunction • Fuel injector No.4 malfunction • Short to ground in wiring harness between the following terminals: — Fuel injector No.4 terminal B—PCM terminal 1DT — Fuel injector No.4 terminal A—PCM terminal 1DS • PCM connector or terminals malfunction • Short to power supply in wiring harness between fuel injector No.4 terminal A and PCM terminal 1DS • Open circuit in wiring harness between the following terminals: — Fuel injector No.4 terminal B—PCM terminal 1DT — Fuel injector No.4 terminal A—PCM terminal 1DS • PCM malfunction

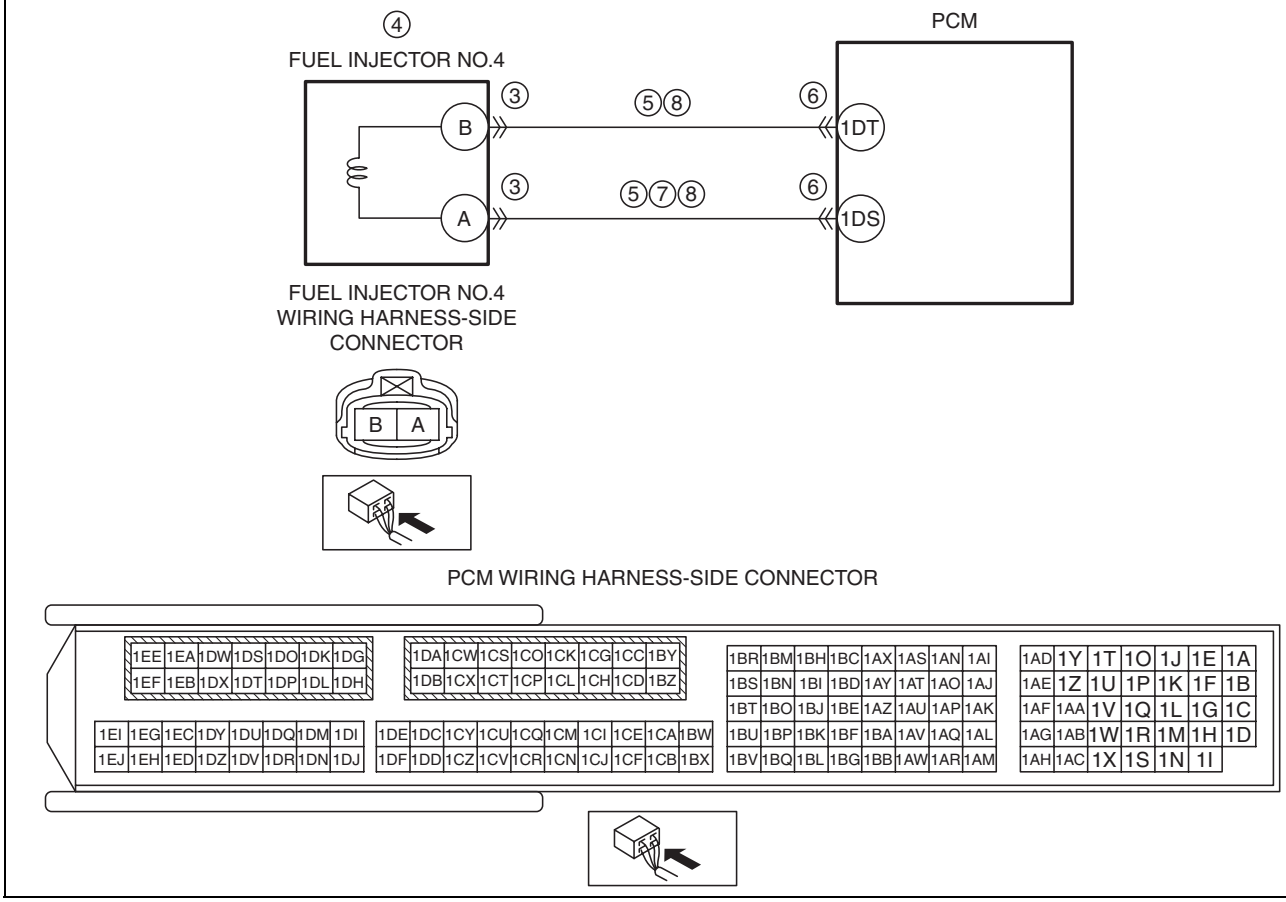

ON-BOARD DIAGNOSTIC [SKYACTIV-G 2.0]

Diagnostic Procedure

STEP	INSPECTION		ACTION
1	**VERIFY FREEZE FRAME DATA (MODE 2)/ SNAPSHOT DATA HAS BEEN RECORDED** • Has the FREEZE FRAME DATA (Mode 2)/ snapshot data been recorded?	Yes	Go to the next step.
		No	Record the FREEZE FRAME DATA (Mode 2)/snapshot data on the repair order, then go to the next step.
2	**VERIFY RELATED SERVICE INFORMATION AVAILABILITY** • Verify related Service Information availability. • Is any related Service Information available?	Yes	Perform repair or diagnosis according to the available Service Information. • If the vehicle is not repaired, go to the next step.
		No	Go to the next step.
3	**INSPECT FUEL INJECTOR NO.4 CONNECTOR CONDITION** • Switch the ignition to off. • Disconnect the fuel injector No.4 connector. • Inspect for poor connection (such as damaged/ pulled-out pins, corrosion). • Is there any malfunction?	Yes	Repair or replace the connector and/or terminals, then go to Step 9.
		No	Go to the next step.
4	**INSPECT FUEL INJECTOR NO.4** • Inspect the fuel injector No.4. (See 01-14A-62 FUEL INJECTOR INSPECTION [SKYACTIV-G 2.0].) • Is there any malfunction?	Yes	Replace the fuel injector No.4, then go to Step 9. (See 01-14A-51 FUEL INJECTOR REMOVAL/ INSTALLATION [SKYACTIV-G 2.0].)
		No	Go to the next step.
5	**INSPECT FUEL INJECTOR NO.4 CIRCUIT FOR SHORT TO GROUND** • Verify that the fuel injector No.4 connector is disconnected. • Inspect for continuity between the following terminals (wiring harness-side) and body ground: — Fuel injector No.4 terminal B — Fuel injector No.4 terminal A • Is there continuity?	Yes	If the short to ground circuit could be detected in the wiring harness: • Repair or replace the wiring harness for a possible short to ground. If the short to ground circuit could not be detected in the wiring harness: • Replace the PCM (short to ground in the PCM internal circuit). (See 01-40-10 PCM REMOVAL/INSTALLATION [SKYACTIV-G 2.0].) Go to Step 9.
		No	Go to the next step.
6	**INSPECT PCM CONNECTOR CONDITION** • Disconnect the PCM connector. • Inspect for poor connection (such as damaged/ pulled-out pins, corrosion). • Is there any malfunction?	Yes	Repair or replace the connector and/or terminals, then go to Step 9.
		No	Go to the next step.
7	**INSPECT FUEL INJECTOR NO.4 CIRCUIT FOR SHORT TO POWER SUPPLY** • Verify that the fuel injector No.4 and PCM connectors are disconnected. • Switch the ignition ON (engine off or on). • Measure the voltage at the fuel injector No.4 terminal A (wiring harness-side). • Is the voltage **0 V**?	Yes	Go to the next step.
		No	Repair or replace the wiring harness for a possible short to power supply, then go to Step 9.
8	**INSPECT FUEL INJECTOR NO.4 CIRCUIT FOR OPEN CIRCUIT** • Verify that the fuel injector No.4 and PCM connectors are disconnected. • Inspect for continuity between the following terminals (wiring harness-side): — Fuel injector No.4 terminal B—PCM terminal 1DT — Fuel injector No.4 terminal A—PCM terminal 1DS • Is there continuity?	Yes	Go to the next step.
		No	Repair or replace the wiring harness for a possible open circuit, then go to the next step.

ON-BOARD DIAGNOSTIC [SKYACTIV-G 2.0]

STEP	INSPECTION		ACTION
9	**VERIFY DTC TROUBLESHOOTING COMPLETED** • Make sure to reconnect all disconnected connectors. • Clear the DTC from the PCM memory using the M-MDS. (See 01-02-12 AFTER REPAIR PROCEDURE [SKYACTIV-G 2.0].) • Start the engine. • Perform the KOEO or KOER self test. (See 01-02-12 KOEO/KOER SELF TEST [SKYACTIV-G 2.0].) • Is the same DTC present?	Yes	Repeat the inspection from Step 1. • If the malfunction recurs, replace the PCM. (See 01-40-10 PCM REMOVAL/INSTALLATION [SKYACTIV-G 2.0].) Go to the next step.
		No	Go to the next step.
10	**VERIFY AFTER REPAIR PROCEDURE** • Perform the “AFTER REPAIR PROCEDURE”. (See 01-02-12 AFTER REPAIR PROCEDURE [SKYACTIV-G 2.0].) • Are any DTCs present?	Yes	Go to the applicable DTC inspection. (See 01-02-14 DTC TABLE [SKYACTIV-G 2.0].)
		No	DTC troubleshooting completed.

ON-BOARD DIAGNOSTIC [SKYACTIV-G 2.0]

DTC P0222:00 [SKYACTIV-G 2.0]

id0102h1702800

DTC P0222:00	TP sensor No.2 circuit low input
DETECTION CONDITION	• If the PCM detects that the TP sensor No.2 voltage at the PCM terminal 1BU is **below 0.1 V**, the PCM determines that the TP sensor No.2 circuit has a malfunction. **Diagnostic support note** • This is a continuous monitor (CCM). • The check engine light illuminates if the PCM detects the above malfunction condition during the first drive cycle. • FREEZE FRAME DATA (Mode 2)/Snapshot data is available. • The DTC is stored in the PCM memory.
FAIL-SAFE FUNCTION	• Restricts the upper limit of the engine speed.
POSSIBLE CAUSE	• Throttle body connector or terminals malfunction • Short to ground in wiring harness between the following terminals: — Throttle body terminal B—PCM terminal 1BS — Throttle body terminal C—PCM terminal 1BU • PCM connector or terminals malfunction • TP sensor No.2 signal circuit and ground circuit are shorted to each other • Open circuit in wiring harness between the following terminals: — Throttle body terminal B—PCM terminal 1BS — Throttle body terminal C—PCM terminal 1BU • TP sensor No.2 malfunction • PCM malfunction

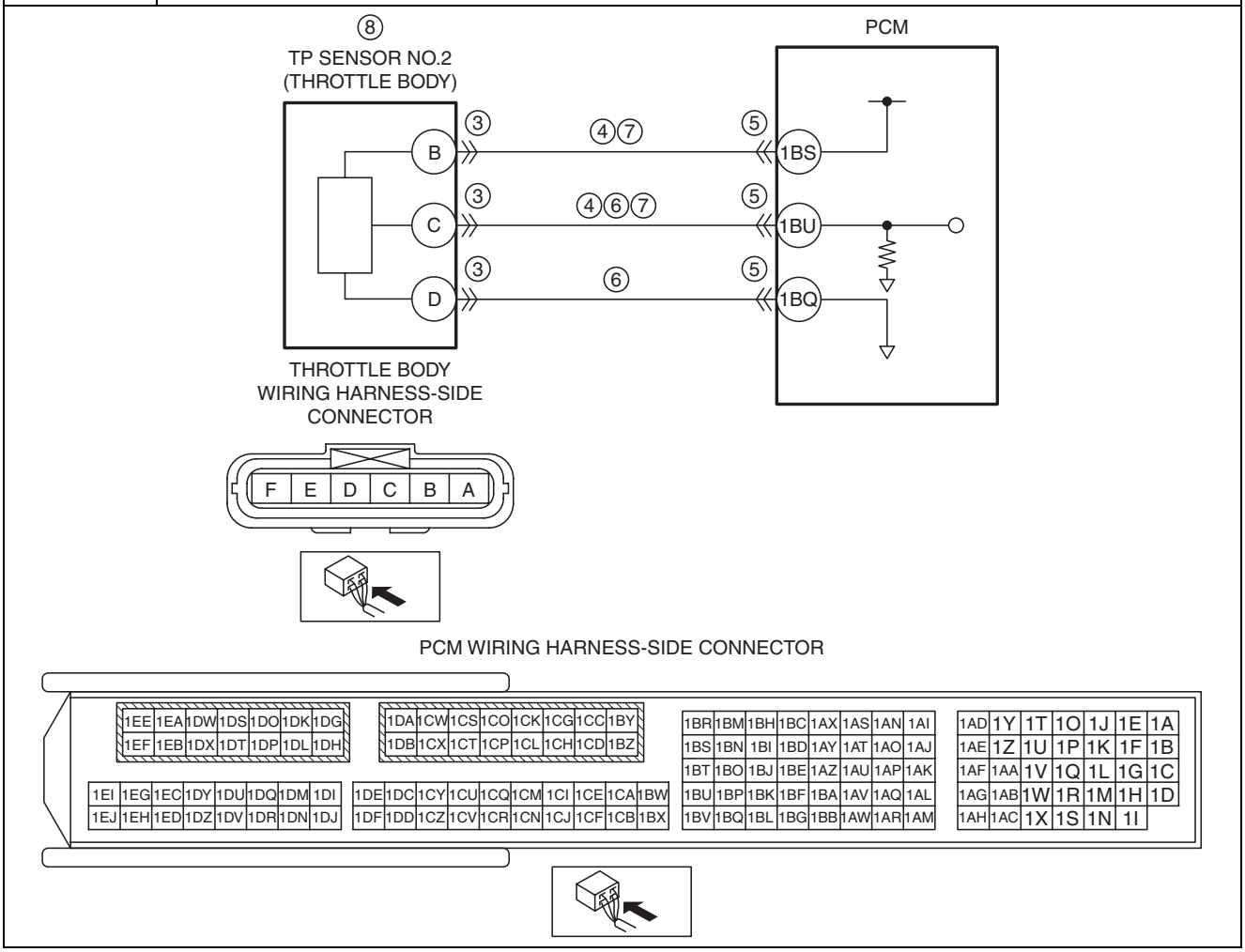

ON-BOARD DIAGNOSTIC [SKYACTIV-G 2.0]

Diagnostic Procedure

STEP	INSPECTION		ACTION
1	**VERIFY FREEZE FRAME DATA (MODE 2)/ SNAPSHOT DATA HAS BEEN RECORDED** • Has the FREEZE FRAME DATA (Mode 2)/ snapshot data been recorded?	Yes	Go to the next step.
		No	Record the FREEZE FRAME DATA (Mode 2)/snapshot data on the repair order, then go to the next step.
2	**VERIFY RELATED SERVICE INFORMATION AVAILABILITY** • Verify related Service Information availability. • Is any related Service Information available?	Yes	Perform repair or diagnosis according to the available Service Information. • If the vehicle is not repaired, go to the next step.
		No	Go to the next step.
3	**INSPECT THROTTLE BODY CONNECTOR CONDITION** • Switch the ignition to off. • Disconnect the throttle body connector. • Inspect for poor connection (such as damaged/ pulled-out pins, corrosion). • Is there any malfunction?	Yes	Repair or replace the connector and/or terminals, then go to Step 9.
		No	Go to the next step.
4	**INSPECT TP SENSOR NO.2 CIRCUIT FOR SHORT TO GROUND** • Verify that the throttle body connector is disconnected. • Inspect for continuity between the following terminals (wiring harness-side) and body ground: — Throttle body terminal B — Throttle body terminal C • Is there continuity?	Yes	If the short to ground circuit could be detected in the wiring harness: • Repair or replace the wiring harness for a possible short to ground. If the short to ground circuit could not be detected in the wiring harness: • Replace the PCM (short to ground in the PCM internal circuit). (See 01-40-10 PCM REMOVAL/INSTALLATION [SKYACTIV-G 2.0].) Go to Step 9.
		No	Go to the next step.
5	**INSPECT PCM CONNECTOR CONDITION** • Disconnect the PCM connector. • Inspect for poor connection (such as damaged/ pulled-out pins, corrosion). • Is there any malfunction?	Yes	Repair or replace the connector and/or terminals, then go to Step 9.
		No	Go to the next step.
6	**INSPECT TP SENSOR NO.2 SIGNAL CIRCUIT AND GROUND CIRCUIT FOR SHORT TO EACH OTHER** • Verify that the throttle body and PCM connectors are disconnected. • Inspect for continuity between throttle body terminals C and D (wiring harness-side). • Is there continuity?	Yes	Repair or replace the wiring harness for a possible short to each other, then go to Step 9.
		No	Go to the next step.
7	**INSPECT TP SENSOR NO.2 CIRCUIT FOR OPEN CIRCUIT** • Verify that the throttle body and PCM connectors are disconnected. • Inspect for continuity between the following terminals (wiring harness-side): — Throttle body terminal B—PCM terminal 1BS — Throttle body terminal C—PCM terminal 1BU • Is there continuity?	Yes	Go to the next step.
		No	Repair or replace the wiring harness for a possible open circuit, then go to Step 9.
8	**INSPECT TP SENSOR NO.2** • Reconnect all disconnected connectors. • Inspect the TP sensor No.2. (See 01-40-50 THROTTLE POSITION (TP) SENSOR INSPECTION [SKYACTIV-G 2.0].) • Is there any malfunction?	Yes	Replace the throttle body, then go to the next step. (See 01-13A-6 INTAKE-AIR SYSTEM REMOVAL/ INSTALLATION [SKYACTIV-G 2.0].)
		No	Go to the next step.

ON-BOARD DIAGNOSTIC [SKYACTIV-G 2.0]

STEP	INSPECTION		ACTION
9	**VERIFY DTC TROUBLESHOOTING COMPLETED** • Make sure to reconnect all disconnected connectors. • Clear the DTC from the PCM memory using the M-MDS. (See 01-02-12 AFTER REPAIR PROCEDURE [SKYACTIV-G 2.0].) • Start the engine and warm it up completely. • Perform the KOEO or KOER self test. (See 01-02-12 KOEO/KOER SELF TEST [SKYACTIV-G 2.0].) • Is the same DTC present?	Yes	Repeat the inspection from Step 1. • If the malfunction recurs, replace the PCM. (See 01-40-10 PCM REMOVAL/INSTALLATION [SKYACTIV-G 2.0].) Go to the next step.
		No	Go to the next step.
10	**VERIFY AFTER REPAIR PROCEDURE** • Perform the “AFTER REPAIR PROCEDURE”. (See 01-02-12 AFTER REPAIR PROCEDURE [SKYACTIV-G 2.0].) • Are any DTCs present?	Yes	Go to the applicable DTC inspection. (See 01-02-14 DTC TABLE [SKYACTIV-G 2.0].)
		No	DTC troubleshooting completed.

ON-BOARD DIAGNOSTIC [SKYACTIV-G 2.0]

DTC P0223:00 [SKYACTIV-G 2.0]

id0102h1702900

DTC P0223:00	**TP sensor No.2 circuit high input**
DETECTION CONDITION	• If the PCM detects that the TP sensor No.2 voltage at the PCM terminal 1BU is **above 4.9 V**, the PCM determines that the TP sensor No.2 circuit has a malfunction. **Diagnostic support note** • This is a continuous monitor (CCM). • The check engine light illuminates if the PCM detects the above malfunction condition during the first drive cycle. • FREEZE FRAME DATA (Mode 2)/Snapshot data is available. • The DTC is stored in the PCM memory.
FAIL-SAFE FUNCTION	• Restricts the upper limit of the engine speed.
POSSIBLE CAUSE	• Throttle body connector or terminals malfunction • PCM connector or terminals malfunction • TP sensor No.2 malfunction • Short to power supply in wiring harness between throttle body terminal C and PCM terminal 1BU • Open circuit in wiring harness between throttle body terminal D and PCM terminal 1BQ • PCM malfunction

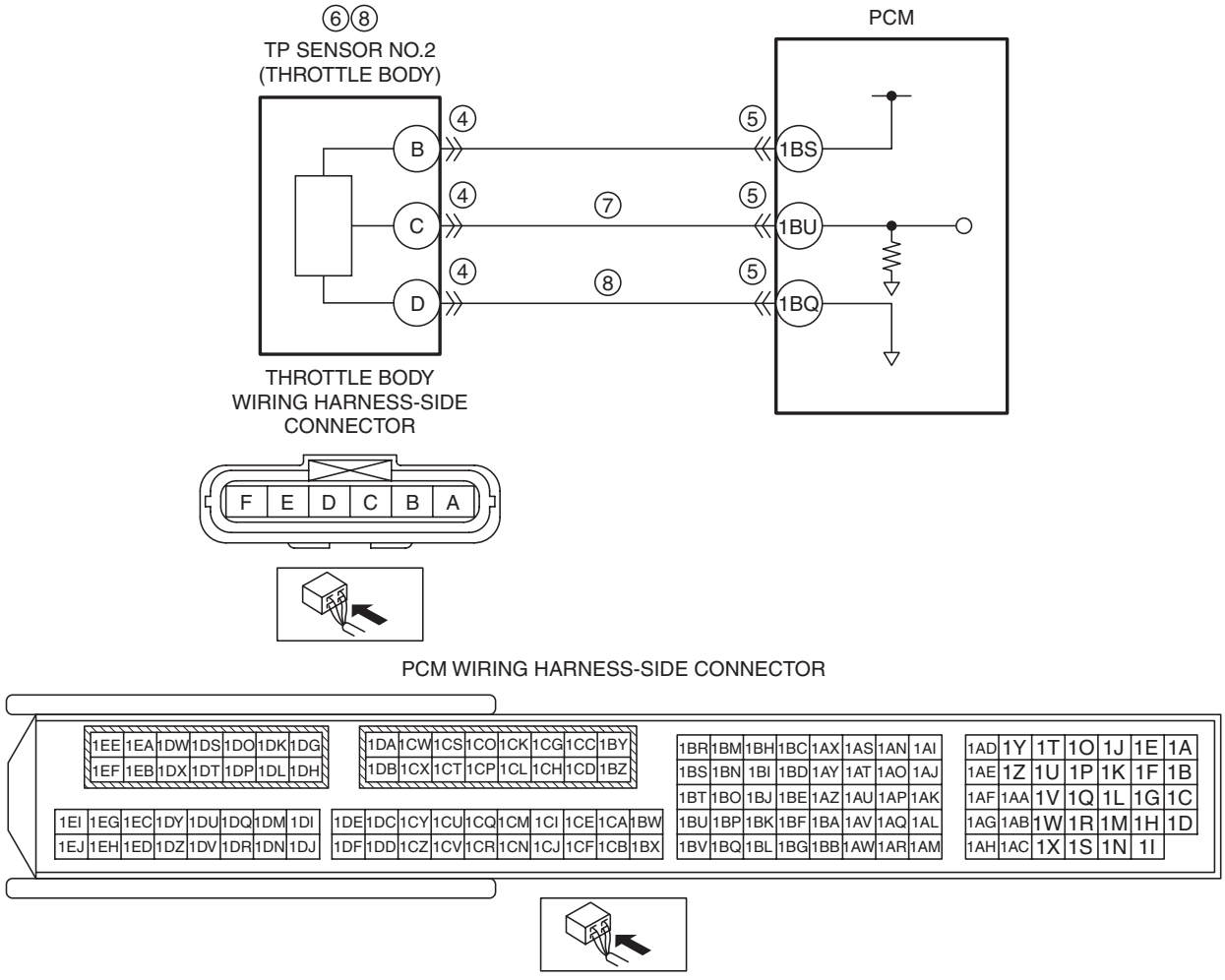

ON-BOARD DIAGNOSTIC [SKYACTIV-G 2.0]

Diagnostic Procedure

STEP	INSPECTION		ACTION
1	**VERIFY FREEZE FRAME DATA (MODE 2)/ SNAPSHOT DATA HAS BEEN RECORDED** • Has the FREEZE FRAME DATA (Mode 2)/ snapshot data been recorded?	Yes	Go to the next step.
		No	Record the FREEZE FRAME DATA (Mode 2)/snapshot data on the repair order, then go to the next step.
2	**VERIFY RELATED SERVICE INFORMATION AVAILABILITY** • Verify related Service Information availability. • Is any related Service Information available?	Yes	Perform repair or diagnosis according to the available Service Information. • If the vehicle is not repaired, go to the next step.
		No	Go to the next step.
3	**CLASSIFY TP SENSOR NO.2 MALFUNCTION OR WIRING HARNESS MALFUNCTION** • Access the TP2 PID using the M-MDS. (See 01-02-8 ON-BOARD DIAGNOSTIC TEST [SKYACTIV-G 2.0].) • Verify the TP2 PID value. • Is the TP2 PID value **5 V** or **B+**?	Yes	Go to Step 7.
		No	Go to the next step.
4	**INSPECT THROTTLE BODY CONNECTOR CONDITION** • Switch the ignition to off. • Disconnect the throttle body connector. • Inspect for poor connection (such as damaged/ pulled-out pins, corrosion). • Is there any malfunction?	Yes	Repair or replace the connector and/or terminals, then go to Step 9.
		No	Go to the next step.
5	**INSPECT PCM CONNECTOR CONDITION** • Disconnect the PCM connector. • Inspect for poor connection (such as damaged/ pulled-out pins, corrosion). • Is there any malfunction?	Yes	Repair or replace the connector and/or terminals, then go to Step 9.
		No	Go to the next step.
6	**INSPECT TP SENSOR NO.2** • Reconnect all disconnected connectors. • Inspect the TP sensor No.2. (See 01-40-50 THROTTLE POSITION (TP) SENSOR INSPECTION [SKYACTIV-G 2.0].) • Is there any malfunction?	Yes	Replace the throttle body, then go to Step 9. (See 01-13A-6 INTAKE-AIR SYSTEM REMOVAL/ INSTALLATION [SKYACTIV-G 2.0].)
		No	Go to Step 9.
7	**INSPECT TP SENSOR NO.2 SIGNAL CIRCUIT FOR SHORT TO POWER SUPPLY** • Switch the ignition to off. • Disconnect the throttle body connector. • Access the TP2 PID using the M-MDS. (See 01-02-8 ON-BOARD DIAGNOSTIC TEST [SKYACTIV-G 2.0].) • Verify the TP2 PID value. • Is the TP2 PID value **5 V** or **B+**?	Yes	Repair or replace the wiring harness for a possible short to power supply, then go to Step 9.
		No	Go to the next step.
8	**INSPECT TP SENSOR NO.2 GROUND CIRCUIT FOR OPEN CIRCUIT** • Verify that the throttle body connector is disconnected. • Switch the ignition to off. • Disconnect the PCM connector. • Inspect for continuity between throttle body terminal D (wiring harness-side) and PCM terminal 1BQ (wiring harness-side). • Is there continuity?	Yes	Replace the throttle body, then go to the next step. (See 01-13A-6 INTAKE-AIR SYSTEM REMOVAL/ INSTALLATION [SKYACTIV-G 2.0].)
		No	Repair or replace the wiring harness for a possible open circuit, then go to the next step.
9	**VERIFY DTC TROUBLESHOOTING COMPLETED** • Make sure to reconnect all disconnected connectors. • Clear the DTC from the PCM memory using the M-MDS. (See 01-02-12 AFTER REPAIR PROCEDURE [SKYACTIV-G 2.0].) • Start the engine and warm it up completely. • Perform the KOEO or KOER self test. (See 01-02-12 KOEO/KOER SELF TEST [SKYACTIV-G 2.0].) • Is the same DTC present?	Yes	Repeat the inspection from Step 1. • If the malfunction recurs, replace the PCM. (See 01-40-10 PCM REMOVAL/INSTALLATION [SKYACTIV-G 2.0].) Go to the next step.
		No	Go to the next step.

ON-BOARD DIAGNOSTIC [SKYACTIV-G 2.0]

STEP	INSPECTION		ACTION
10	**VERIFY AFTER REPAIR PROCEDURE** • Perform the “AFTER REPAIR PROCEDURE”. (See 01-02-12 AFTER REPAIR PROCEDURE [SKYACTIV-G 2.0].) • Are any DTCs present?	Yes	Go to the applicable DTC inspection. (See 01-02-14 DTC TABLE [SKYACTIV-G 2.0].)
		No	DTC troubleshooting completed.

01

DTC P025B:00 [SKYACTIV-G 2.0]

id0102h1312600

DTC P025B:00	Fuel pump control module circuit range/performance problem
DETECTION CONDITION	• When any of the following conditions is met: — Engine overheating is detected. — Output duty ratio signal received from PCM is in error. — Output signal from fuel pump control module is erratic (noise overlap). **Diagnostic support note** • This is a continuous monitor (CCM). • The check engine light illuminates if the PCM detects the above malfunction condition during the first drive cycle. • FREEZE FRAME DATA (Mode 2)/Snapshot data is available. • The DTC is stored in the PCM memory.
FAIL-SAFE FUNCTION	• Stops the fuel pump control (overheat detected).
POSSIBLE CAUSE	• Fuel pump control module connector or terminals malfunction • Short to ground in wiring harness between fuel pump control module terminal 1B and PCM terminal 2AE • PCM connector or terminals malfunction • Short to power supply in wiring harness between fuel pump control module terminal 1B and PCM terminal 2AE • Open circuit in wiring harness between fuel pump control module terminal 1B and PCM terminal 2AE • Fuel pump control module malfunction • PCM malfunction

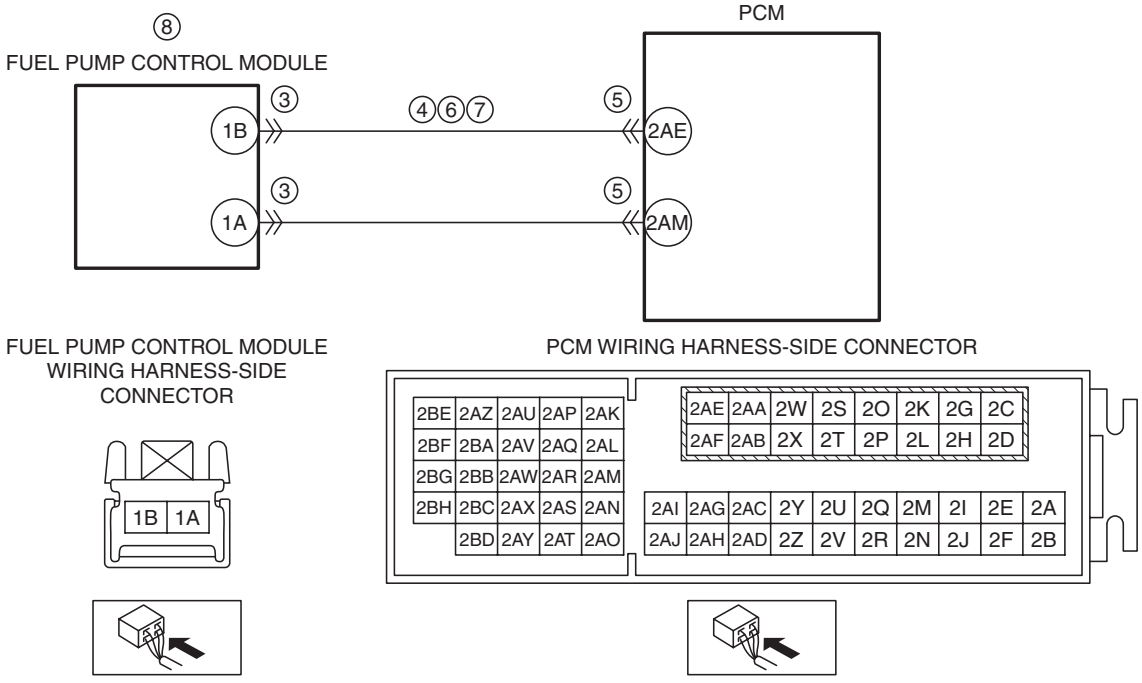

ON-BOARD DIAGNOSTIC [SKYACTIV-G 2.0]

Diagnostic Procedure

STEP	INSPECTION		ACTION
1	**VERIFY FREEZE FRAME DATA (MODE 2)/ SNAPSHOT DATA HAS BEEN RECORDED** • Has the FREEZE FRAME DATA (Mode 2)/ snapshot data been recorded?	Yes	Go to the next step.
		No	Record the FREEZE FRAME DATA (Mode 2)/snapshot data on the repair order, then go to the next step.
2	**VERIFY RELATED SERVICE INFORMATION AVAILABILITY** • Verify related Service Information availability. • Is any related Service Information available?	Yes	Perform repair or diagnosis according to the available Service Information. • If the vehicle is not repaired, go to the next step.
		No	Go to the next step.
3	**INSPECT FUEL PUMP CONTROL MODULE CONNECTOR CONDITION** • Switch the ignition to off. • Disconnect the fuel pump control module connector. • Inspect for poor connection (such as damaged/ pulled-out pins, corrosion). • Is there any malfunction?	Yes	Repair or replace the connector and/or terminals, then go to Step 9.
		No	Go to the next step.
4	**INSPECT FUEL PUMP CONTROL MODULE SIGNAL CIRCUIT FOR SHORT TO GROUND** • Verify that the fuel pump control module connector is disconnected. • Inspect for continuity between fuel pump control module terminal 1B (wiring harness-side) and body ground. • Is there continuity?	Yes	If the short to ground circuit could be detected in the wiring harness: • Repair or replace the wiring harness for a possible short to ground. If the short to ground circuit could not be detected in the wiring harness: • Replace the PCM (short to ground in the PCM internal circuit). (See 01-40-10 PCM REMOVAL/INSTALLATION [SKYACTIV-G 2.0].) Go to Step 9.
		No	Go to the next step.
5	**INSPECT PCM CONNECTOR CONDITION** • Disconnect the PCM connector. • Inspect for poor connection (such as damaged/ pulled-out pins, corrosion). • Is there any malfunction?	Yes	Repair or replace the connector and/or terminals, then go to Step 9.
		No	Go to the next step.
6	**INSPECT FUEL PUMP CONTROL MODULE SIGNAL CIRCUIT FOR SHORT TO POWER SUPPLY** • Verify that the fuel pump control module and PCM connectors are disconnected. • Switch the ignition ON (engine off or on). • Measure the voltage at the fuel pump control module terminal 1B (wiring harness-side). • Is the voltage **0 V**?	Yes	Go to the next step.
		No	Repair or replace the wiring harness for a possible short to power supply, then go to Step 9.
7	**INSPECT FUEL PUMP CONTROL MODULE SIGNAL CIRCUIT FOR OPEN CIRCUIT** • Verify that the fuel pump control module and PCM connectors are disconnected. • Switch the ignition to off. • Inspect for continuity between fuel pump control module terminal 1B (wiring harness-side) and PCM terminal 2AE (wiring harness-side). • Is there continuity?	Yes	Go to the next step.
		No	Repair or replace the wiring harness for a possible open circuit, then go to Step 9.
8	**INSPECT FUEL PUMP CONTROL MODULE** • Reconnect all disconnected connectors. • Inspect the fuel pump control module. (See 01-14A-64 FUEL PUMP CONTROL MODULE INSPECTION [SKYACTIV-G 2.0].) • Is there any malfunction?	Yes	Replace the fuel pump control module, then go to the next step. (See 01-14A-63 FUEL PUMP CONTROL MODULE REMOVAL/INSTALLATION [SKYACTIV-G 2.0].)
		No	Go to the next step.

ON-BOARD DIAGNOSTIC [SKYACTIV-G 2.0]

STEP	INSPECTION		ACTION
9	**VERIFY DTC TROUBLESHOOTING COMPLETED** • Make sure to reconnect all disconnected connectors. • Clear the DTC from the PCM memory using the M-MDS. (See 01-02-12 AFTER REPAIR PROCEDURE [SKYACTIV-G 2.0].) • Perform the KOEO or KOER self test. (See 01-02-12 KOEO/KOER SELF TEST [SKYACTIV-G 2.0].) • Is the same DTC present?	Yes	Repeat the inspection from Step 1. • If the malfunction recurs, replace the PCM. (See 01-40-10 PCM REMOVAL/INSTALLATION [SKYACTIV-G 2.0].) Go to the next step.
		No	Go to the next step.
10	**VERIFY AFTER REPAIR PROCEDURE** • Perform the “AFTER REPAIR PROCEDURE”. (See 01-02-12 AFTER REPAIR PROCEDURE [SKYACTIV-G 2.0].) • Are any DTCs present?	Yes	Go to the applicable DTC inspection. (See 01-02-14 DTC TABLE [SKYACTIV-G 2.0].)
		No	DTC troubleshooting completed.

DTC P025C:00 [SKYACTIV-G 2.0]

id0102h1008400

DTC P025C:00	**Fuel pump control module result of on-board diagnostic test low input**
DETECTION CONDITION	• Result of on-board test cannot be received from fuel pump control module (voltage is too low). **Diagnostic support note** • This is a continuous monitor (CCM). • The check engine light illuminates if the PCM detects the above malfunction condition during the first drive cycle. • FREEZE FRAME DATA (Mode 2)/Snapshot data is available. • The DTC is stored in the PCM memory.
FAIL-SAFE FUNCTION	—
POSSIBLE CAUSE	• Fuel pump control module connector or terminals malfunction • Short to ground in wiring harness between fuel pump control module terminal 1A and PCM terminal 2AM • PCM connector or terminals malfunction • Open circuit in wiring harness between fuel pump control module terminal 1A and PCM terminal 2AM • Fuel pump control module malfunction • PCM malfunction

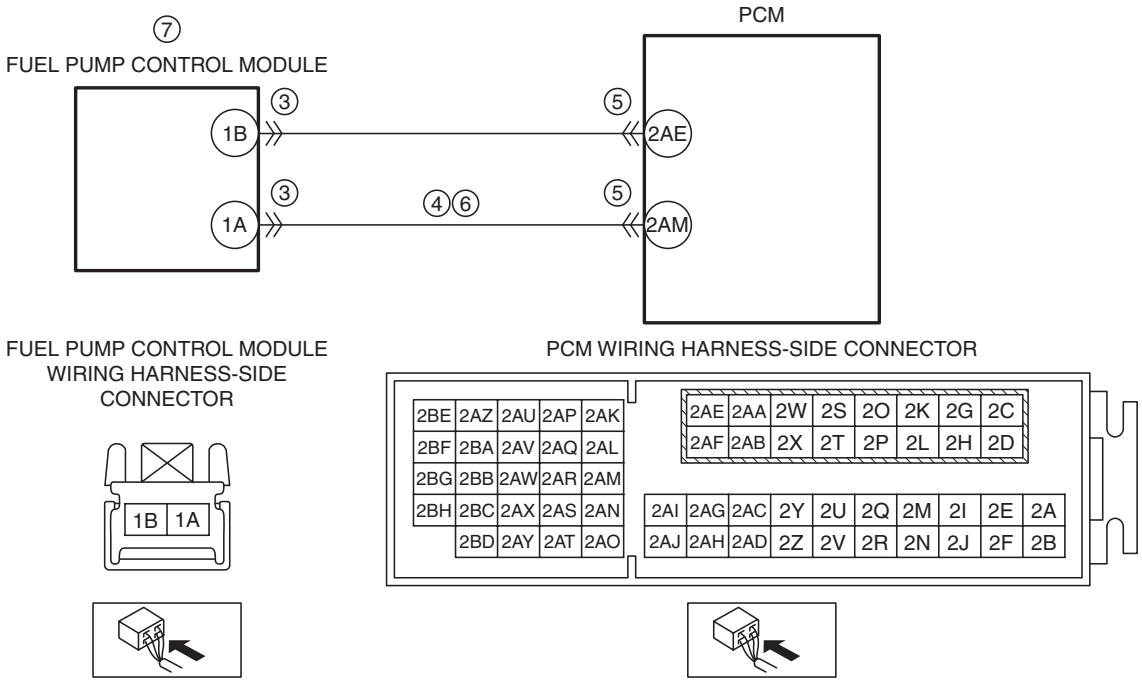

ON-BOARD DIAGNOSTIC [SKYACTIV-G 2.0]

Diagnostic Procedure

STEP	INSPECTION		ACTION
1	**VERIFY FREEZE FRAME DATA (MODE 2)/ SNAPSHOT DATA HAS BEEN RECORDED** • Has the FREEZE FRAME DATA (Mode 2)/ snapshot data been recorded?	Yes	Go to the next step.
		No	Record the FREEZE FRAME DATA (Mode 2)/snapshot data on the repair order, then go to the next step.
2	**VERIFY RELATED SERVICE INFORMATION AVAILABILITY** • Verify related Service Information availability. • Is any related Service Information available?	Yes	Perform repair or diagnosis according to the available Service Information. • If the vehicle is not repaired, go to the next step.
		No	Go to the next step.
3	**INSPECT FUEL PUMP CONTROL MODULE CONNECTOR CONDITION** • Switch the ignition to off. • Disconnect the fuel pump control module connector. • Inspect for poor connection (such as damaged/ pulled-out pins, corrosion). • Is there any malfunction?	Yes	Repair or replace the connector and/or terminals, then go to Step 8.
		No	Go to the next step.
4	**INSPECT FUEL PUMP CONTROL MODULE SIGNAL CIRCUIT FOR SHORT TO GROUND** • Verify that the fuel pump control module connector is disconnected. • Inspect for continuity between fuel pump control module terminal 1A (wiring harness-side) and body ground. • Is there continuity?	Yes	If the short to ground circuit could be detected in the wiring harness: • Repair or replace the wiring harness for a possible short to ground. If the short to ground circuit could not be detected in the wiring harness: • Replace the PCM (short to ground in the PCM internal circuit). (See 01-40-10 PCM REMOVAL/INSTALLATION [SKYACTIV-G 2.0].) Go to Step 8.
		No	Go to the next step.
5	**INSPECT PCM CONNECTOR CONDITION** • Disconnect the PCM connector. • Inspect for poor connection (such as damaged/ pulled-out pins, corrosion). • Is there any malfunction?	Yes	Repair or replace the connector and/or terminals, then go to Step 8.
		No	Go to the next step.
6	**INSPECT FUEL PUMP CONTROL MODULE SIGNAL CIRCUIT FOR OPEN CIRCUIT** • Verify that the fuel pump control module and PCM connectors are disconnected. • Inspect for continuity between fuel pump control module terminal 1A (wiring harness-side) and PCM terminal 2AM (wiring harness-side). • Is there continuity?	Yes	Go to the next step.
		No	Repair or replace the wiring harness for a possible open circuit, then go to Step 8.
7	**INSPECT FUEL PUMP CONTROL MODULE** • Reconnect all disconnected connectors. • Inspect the fuel pump control module. (See 01-14A-64 FUEL PUMP CONTROL MODULE INSPECTION [SKYACTIV-G 2.0].) • Is there any malfunction?	Yes	Replace the fuel pump control module, then go to the next step. (See 01-14A-63 FUEL PUMP CONTROL MODULE REMOVAL/INSTALLATION [SKYACTIV-G 2.0].)
		No	Go to the next step.
8	**VERIFY DTC TROUBLESHOOTING COMPLETED** • Make sure to reconnect all disconnected connectors. • Clear the DTC from the PCM memory using the M-MDS. (See 01-02-12 AFTER REPAIR PROCEDURE [SKYACTIV-G 2.0].) • Perform the KOEO or KOER self test. (See 01-02-12 KOEO/KOER SELF TEST [SKYACTIV-G 2.0].) • Is the same DTC present?	Yes	Repeat the inspection from Step 1. • If the malfunction recurs, replace the PCM. (See 01-40-10 PCM REMOVAL/INSTALLATION [SKYACTIV-G 2.0].) Go to the next step.
		No	Go to the next step.
9	**VERIFY AFTER REPAIR PROCEDURE** • Perform the “AFTER REPAIR PROCEDURE”. (See 01-02-12 AFTER REPAIR PROCEDURE [SKYACTIV-G 2.0].) • Are any DTCs present?	Yes	Go to the applicable DTC inspection. (See 01-02-14 DTC TABLE [SKYACTIV-G 2.0].)
		No	DTC troubleshooting completed.

ON-BOARD DIAGNOSTIC [SKYACTIV-G 2.0]

DTC P025D:00 [SKYACTIV-G 2.0]

id0102h1008500

DTC P025D:00	**Fuel pump control module result of on-board diagnostic test high input**
DETECTION CONDITION	• Result of on-board test cannot be received from fuel pump control module (voltage is too high). **Diagnostic support note** • This is a continuous monitor (CCM). • The check engine light illuminates if the PCM detects the above malfunction condition during the first drive cycle. • FREEZE FRAME DATA (Mode 2)/Snapshot data is available. • The DTC is stored in the PCM memory.
FAIL-SAFE FUNCTION	—
POSSIBLE CAUSE	• Fuel pump control module connector or terminals malfunction • PCM connector or terminals malfunction • Short to power supply in wiring harness between fuel pump control module terminal 1A and PCM terminal 2AM • Open circuit in wiring harness between fuel pump control module terminal 1A and PCM terminal 2AM • Fuel pump control module malfunction • PCM malfunction

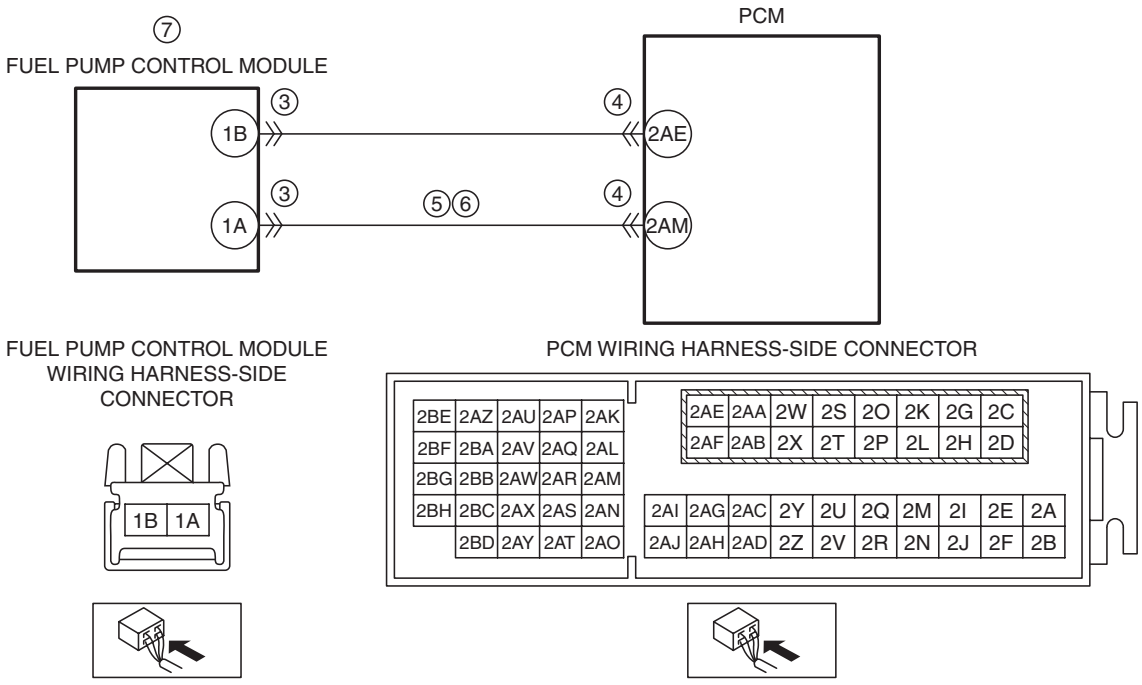

Diagnostic Procedure

STEP	INSPECTION		ACTION
1	**VERIFY FREEZE FRAME DATA (MODE 2)/ SNAPSHOT DATA HAS BEEN RECORDED** • Has the FREEZE FRAME DATA (Mode 2)/ snapshot data been recorded?	Yes	Go to the next step.
		No	Record the FREEZE FRAME DATA (Mode 2)/snapshot data on the repair order, then go to the next step.
2	**VERIFY RELATED SERVICE INFORMATION AVAILABILITY** • Verify related Service Information availability. • Is any related Service Information available?	Yes	Perform repair or diagnosis according to the available Service Information. • If the vehicle is not repaired, go to the next step.
		No	Go to the next step.
3	**INSPECT FUEL PUMP CONTROL MODULE CONNECTOR CONDITION** • Switch the ignition to off. • Disconnect the fuel pump control module connector. • Inspect for poor connection (such as damaged/ pulled-out pins, corrosion). • Is there any malfunction?	Yes	Repair or replace the connector and/or terminals, then go to Step 8.
		No	Go to the next step.

ON-BOARD DIAGNOSTIC [SKYACTIV-G 2.0]

STEP	INSPECTION		ACTION
4	**INSPECT PCM CONNECTOR CONDITION** • Disconnect the PCM connector. • Inspect for poor connection (such as damaged/pulled-out pins, corrosion). • Is there any malfunction?	Yes	Repair or replace the connector and/or terminals, then go to Step 8.
		No	Go to the next step.
5	**INSPECT FUEL PUMP CONTROL MODULE SIGNAL CIRCUIT FOR SHORT TO POWER SUPPLY** • Verify that the fuel pump control module and PCM connectors are disconnected. • Switch the ignition ON (engine off or on). • Measure the voltage at the fuel pump control module terminal 1A (wiring harness-side). • Is the voltage **0 V**?	Yes	Go to the next step.
		No	Repair or replace the wiring harness for a possible short to power supply, then go to Step 8.
6	**INSPECT FUEL PUMP CONTROL MODULE SIGNAL CIRCUIT FOR OPEN CIRCUIT** • Verify that the fuel pump control module and PCM connectors are disconnected. • Switch the ignition to off. • Inspect for continuity between fuel pump control module terminal 1A (wiring harness-side) and PCM terminal 2AM (wiring harness-side). • Is there continuity?	Yes	Go to the next step.
		No	Repair or replace the wiring harness for a possible open circuit, then go to Step 8.
7	**INSPECT FUEL PUMP CONTROL MODULE** • Reconnect all disconnected connectors. • Inspect the fuel pump control module. (See 01-14A-64 FUEL PUMP CONTROL MODULE INSPECTION [SKYACTIV-G 2.0].) • Is there any malfunction?	Yes	Replace the fuel pump control module, then go to the next step. (See 01-14A-63 FUEL PUMP CONTROL MODULE REMOVAL/INSTALLATION [SKYACTIV-G 2.0].)
		No	Go to the next step.
8	**VERIFY DTC TROUBLESHOOTING COMPLETED** • Make sure to reconnect all disconnected connectors. • Clear the DTC from the PCM memory using the M-MDS. (See 01-02-12 AFTER REPAIR PROCEDURE [SKYACTIV-G 2.0].) • Perform the KOEO or KOER self test. (See 01-02-12 KOEO/KOER SELF TEST [SKYACTIV-G 2.0].) • Is the same DTC present?	Yes	Repeat the inspection from Step 1. • If the malfunction recurs, replace the PCM. (See 01-40-10 PCM REMOVAL/INSTALLATION [SKYACTIV-G 2.0].) Go to the next step.
		No	Go to the next step.
9	**VERIFY AFTER REPAIR PROCEDURE** • Perform the “AFTER REPAIR PROCEDURE”. (See 01-02-12 AFTER REPAIR PROCEDURE [SKYACTIV-G 2.0].) • Are any DTCs present?	Yes	Go to the applicable DTC inspection. (See 01-02-14 DTC TABLE [SKYACTIV-G 2.0].)
		No	DTC troubleshooting completed.

ON-BOARD DIAGNOSTIC [SKYACTIV-G 2.0]

DTC P0300:00 [SKYACTIV-G 2.0]

id0102h1703200

DTC P0300:00	Random misfire detected
DETECTION CONDITION	• The PCM monitors the CKP sensor input signal interval time. The PCM calculates the change of interval time for each cylinder. If the change of interval time exceeds the preprogrammed criteria, the PCM detects a misfire in the corresponding cylinder. While the engine is running, the PCM counts the number of misfires that occurred at **200 crankshaft revolutions** or **1000 crankshaft revolutions** and calculates the misfire ratio for each crankshaft revolution. If the ratio exceeds the preprogrammed criteria, the PCM determines that a misfire, which can damage the catalytic converter or affect emission performance, has occurred. **Diagnostic support note** • This is a continuous monitor (misfire). • The check engine light illuminates if the PCM detects the above malfunction condition in two consecutive drive cycles or in one drive cycle while the DTC for the same malfunction has been stored in the PCM. • The check engine light flashes if the PCM detects the misfire which can damage the catalytic converter during first drive cycle. • PENDING CODE is available if the PCM detects the above malfunction condition during first drive cycle. • FREEZE FRAME DATA (Mode 2)/Snapshot data is available. • The DTC is stored in the PCM memory.
FAIL-SAFE FUNCTION	• Limits the intake air amount.
POSSIBLE CAUSE	• Erratic signal to PCM — APP sensor signal malfunction — ECT sensor signal malfunction — IAT sensor No.1 signal malfunction — MAF sensor signal malfunction — CKP sensor signal malfunction — TP sensor signal malfunction — VSS signal malfunction — Related connector or terminals malfunction — Related wiring harness malfunction • Excessive air suction in intake air system (between MAF sensor and intake manifold) • MAF sensor malfunction • Improper operation of electric variable valve timing control system — Electric variable valve timing driver malfunction — Electric variable valve timing motor malfunction — Electric variable valve timing actuator malfunction • Improper operation of hydraulic variable valve timing control system • Improper operation of purge solenoid valve • Exhaust CMP sensor malfunction • CKP sensor loose • High-pressure side fuel delivery system malfunction — Fuel pressure sensor malfunction — Spill valve control solenoid valve control circuit malfunction (damage to driver in PCM caused by short circuit to ground system) — Spill valve control solenoid valve (built-into high pressure fuel pump) malfunction — Relief valve (built-into high pressure fuel pump) malfunction — High pressure fuel pump malfunction • Low-pressure side fuel delivery system malfunction — Fuel leakage in fuel line — Restricted fuel line — Restricted fuel filter — Fuel pressure regulator (built-into fuel pump unit) malfunction — Fuel pump unit malfunction — Fuel runout • Ignition system malfunction — Spark plug is wet or covered with carbon — Spark plug malfunction — Ignition coil malfunction — Ignition coil related wiring harness malfunction • Engine malfunction — Insufficient engine compression — Engine coolant leakage to combustion chamber • PCV valve malfunction • Poor quality fuel • PCM malfunction
SYSTEM WIRING DIAGRAM	—

ON-BOARD DIAGNOSTIC [SKYACTIV-G 2.0]

Diagnostic Procedure

STEP	INSPECTION		ACTION
1	**VERIFY FREEZE FRAME DATA (MODE 2)/ SNAPSHOT DATA AND DIAGNOSTIC MONITORING TEST RESULTS HAVE BEEN RECORDED** • Have the FREEZE FRAME DATA (Mode 2)/ snapshot data and DIAGNOSTIC MONITORING TEST RESULTS (misfire related) been recorded?	Yes	Go to the next step.
		No	Record the FREEZE FRAME DATA (Mode 2)/snapshot data and DIAGNOSTIC MONITORING TEST RESULTS on the repair order, then go to the next step.
2	**VERIFY RELATED SERVICE INFORMATION AVAILABILITY** • Verify related Service Information availability. • Is any related Service Information available?	Yes	Perform repair or diagnosis according to the available Service Information. • If the vehicle is not repaired, go to the next step.
		No	Go to the next step.
3	**VERIFY RELATED PENDING CODE AND/OR DTC** • Switch the ignition to off, then to ON (engine off). • Perform the Pending Trouble Code Access Procedure and DTC Reading Procedure. (See 01-02-8 ON-BOARD DIAGNOSTIC TEST [SKYACTIV-G 2.0].) • Are any other PENDING CODEs and/or DTCs present?	Yes	Go to the applicable PENDING CODE or DTC inspection. (See 01-02-14 DTC TABLE [SKYACTIV-G 2.0].)
		No	Go to the next step.
4	**VERIFY CURRENT INPUT SIGNAL STATUS (KEY TO ON/IDLE)** • Access the following PIDs using the M-MDS: (See 01-02-8 ON-BOARD DIAGNOSTIC TEST [SKYACTIV-G 2.0].) — APP1 — APP2 — ECT — IAT — MAF — RPM — TP REL — VSS • Is there any signal that is far out of specification when the ignition is switched to ON and the engine idles? (See 01-40-17 PCM INSPECTION [SKYACTIV-G 2.0].)	Yes	Inspect the suspected sensor and related wiring harness. Repair or replace the malfunctioning part according to the inspection results, then go to Step 30.
		No	Go to the next step.
5	**VERIFY CURRENT INPUT SIGNAL STATUS UNDER FREEZE FRAME DATA (MODE 2) CONDITION** **Caution** • **While performing this step, always operate the vehicle in a safe and lawful manner.** • **When the M-MDS is used to observe monitor system status while driving, be sure to have another technician with you, or record the data in the M-MDS using the PID/DATA MONITOR AND RECORD capturing function and inspect later.** • Access the same PIDs as in Step 4 while the simulating under the FREEZE FRAME DATA (Mode 2) conditions. (See 01-02-8 ON-BOARD DIAGNOSTIC TEST [SKYACTIV-G 2.0].) • Is there any signal which causes drastic changes?	Yes	Inspect the suspected sensor and related wiring harness. Repair or replace the malfunctioning part according to the inspection results, then go to Step 30.
		No	Go to the next step.

ON-BOARD DIAGNOSTIC [SKYACTIV-G 2.0]

STEP	INSPECTION		ACTION
6	**VERIFY CURRENT INPUT SIGNAL STATUS OF MAF SENSOR** • Start the engine. • Access the MAF PID using the M-MDS. (See 01-02-8 ON-BOARD DIAGNOSTIC TEST [SKYACTIV-G 2.0].) • Verify that the MAF PID value changes quickly while increasing (racing) the engine rpm. • Is the MAF PID response normal? (See 01-40-17 PCM INSPECTION [SKYACTIV-G 2.0].)	Yes	Go to Step 8.
		No	Go to the next step.
7	**INSPECT INTAKE AIR SYSTEM FOR AIR SUCTION** • Inspect for air leakage between the following: — MAF sensor and throttle body — Throttle body and intake manifold **Note** • Engine speed may change when rust penetrating agent is sprayed on the air suction area. • Is there any malfunction?	Yes	Repair or replace the malfunctioning part according to the inspection results, then go to Step 30.
		No	Replace the MAF sensor/IAT sensor No.1, then go to Step 30. (See 01-13A-6 INTAKE-AIR SYSTEM REMOVAL/INSTALLATION [SKYACTIV-G 2.0].)
8	**INSPECT ELECTRIC VARIABLE VALVE TIMING DRIVER** • Inspect the electric variable valve timing driver. (See 01-10A-15 ELECTRIC VARIABLE VALVE TIMING MOTOR/DRIVER INSPECTION [SKYACTIV-G 2.0].) • Is there any malfunction?	Yes	Replace the electric variable valve timing motor/driver, then go to Step 30. (See 01-10A-16 ELECTRIC VARIABLE VALVE TIMING MOTOR/DRIVER REMOVAL/INSTALLATION [SKYACTIV-G 2.0].)
		No	Go to the next step.
9	**INSPECT ELECTRIC VARIABLE VALVE TIMING MOTOR** • Inspect the electric variable valve timing motor. (See 01-10A-15 ELECTRIC VARIABLE VALVE TIMING MOTOR/DRIVER INSPECTION [SKYACTIV-G 2.0].) • Is there any malfunction?	Yes	Replace the electric variable valve timing motor/driver, then go to Step 30. (See 01-10A-16 ELECTRIC VARIABLE VALVE TIMING MOTOR/DRIVER REMOVAL/INSTALLATION [SKYACTIV-G 2.0].)
		No	Go to the next step.
10	**INSPECT ELECTRIC VARIABLE VALVE TIMING ACTUATOR** • Inspect the electric variable valve timing actuator. (See 01-10A-22 ELECTRIC VARIABLE VALVE TIMING ACTUATOR INSPECTION [SKYACTIV-G 2.0].) • Is there any malfunction?	Yes	Replace the electric variable valve timing actuator, then go to Step 30. (See 01-10A-23 ELECTRIC VARIABLE VALVE TIMING ACTUATOR, HYDRAULIC VARIABLE VALVE TIMING ACTUATOR REMOVAL/INSTALLATION [SKYACTIV-G 2.0].)
		No	Go to the next step.
11	**INSPECT HYDRAULIC VARIABLE VALVE TIMING CONTROL SYSTEM OPERATION** • Perform the Hydraulic Variable Valve Timing Control System Operation Inspection. (See 01-03-118 ENGINE CONTROL SYSTEM OPERATION INSPECTION [SKYACTIV-G 2.0].) • Is there any malfunction?	Yes	Repair or replace the malfunctioning part according to the inspection results, then go to Step 30.
		No	Go to the next step.

ON-BOARD DIAGNOSTIC [SKYACTIV-G 2.0]

STEP	INSPECTION		ACTION
12	**INSPECT PURGE SOLENOID VALVE OPERATION** • Switch the ignition to off. • Connect the vacuum pump to the purge solenoid valve and apply vacuum to the solenoid. • Verify that the solenoid holds vacuum. • Switch the ignition ON (engine off). • Access the EVAPCP PID of simulation item using the M-MDS. (See 01-02-8 ON-BOARD DIAGNOSTIC TEST [SKYACTIV-G 2.0].) • Set the purge solenoid value to **100 %** for the EVAPCP PID. • Apply vacuum while turning the solenoid from OFF to ON and simulating the EVAPCP PID with a **100 %** duty value. • Verify that the purge solenoid value releases vacuum while the solenoid is turned on. • Is the purge solenoid valve operation normal?	Yes	Go to the next step.
		No	Replace the purge solenoid valve, then go to Step 30. (See 01-16A-10 PURGE SOLENOID VALVE REMOVAL/INSTALLATION [SKYACTIV-G 2.0].)
13	**INSPECT EXHAUST CMP SENSOR** • Inspect the exhaust CMP sensor. (See 01-40-62 CAMSHAFT POSITION (CMP) SENSOR INSPECTION [SKYACTIV-G 2.0].) • Is there any malfunction?	Yes	Inspect the installation condition for damage to the timing chain and gears. • If there is any malfunction: — Repair or replace the malfunctioning part according to the inspection results. • If there is no malfunction: — Replace the exhaust CMP sensor. (See 01-40-61 CAMSHAFT POSITION (CMP) SENSOR REMOVAL/INSTALLATION [SKYACTIV-G 2.0].) Go to Step 30.
		No	Go to the next step.
14	**INSPECT INSTALLATION OF CKP SENSOR** • Inspect installation of CKP sensor. • Is the CKP sensor installed securely?	Yes	Go to the next step.
		No	Retighten the CKP sensor, then go to Step 30. (See 01-40-59 CRANKSHAFT POSITION (CKP) SENSOR REMOVAL/INSTALLATION [SKYACTIV-G 2.0].)
15	**INSPECT FUEL LINE PRESSURE (LOW-SIDE)** • Inspect the fuel line pressure. (See 01-14A-8 FUEL LINE PRESSURE INSPECTION [SKYACTIV-G 2.0].) • Is there any malfunction?	Yes	If the fuel line pressure is too low: • Go to the next step. If the fuel line pressure is too high: • Replace the fuel pump unit, then go to Step 30. (See 01-14A-38 FUEL PUMP UNIT REMOVAL/INSTALLATION [SKYACTIV-G 2.0].)
		No	Go to Step 18.
16	**INSPECT FOR FUEL LINE LEAKAGE** • Visually inspect for leakage from fuel line between fuel distributor and fuel pump. • Is there any leakage?	Yes	Repair or replace the malfunctioning part according to the inspection results, then go to Step 30.
		No	Go to the next step.
17	**INSPECT FUEL FILTER** • Visually inspect for foreign materials or stain inside fuel filter (low-pressure side). • Is there any foreign materials or stain?	Yes	Clean the fuel tank and filter (low-pressure side), then go to Step 30.
		No	Replace the fuel pump unit, then go to Step 30. (See 01-14A-38 FUEL PUMP UNIT REMOVAL/INSTALLATION [SKYACTIV-G 2.0].)

ON-BOARD DIAGNOSTIC [SKYACTIV-G 2.0]

STEP	INSPECTION		ACTION
18	**INSPECT FUEL PRESSURE (HIGH-SIDE)** • Start the engine and warm it up completely. • Access the FUEL_PRES PID using the M-MDS at idle. (See 01-02-8 ON-BOARD DIAGNOSTIC TEST [SKYACTIV-G 2.0].) • Is the FUEL_PRES PID value **approx. 3 MPa {31 kgf/cm^2, 435 psi}**?	Yes	Go to Step 22.
		No	Lower than **3 MPa {31 kgf/cm2, 435 psi}**: • Inspect the following: — Fuel leakage at the fuel line and fuel injector — Fuel pump • Perform the Fuel Pump (Low-pressure Side) Operation Inspection. (See 01-03-118 ENGINE CONTROL SYSTEM OPERATION INSPECTION [SKYACTIV-G 2.0].) — Fuel pressure sensor (See 01-40-52 FUEL PRESSURE SENSOR INSPECTION [SKYACTIV-G 2.0].) — High pressure fuel pump (See 01-14A-49 HIGH PRESSURE FUEL PUMP INSPECTION [SKYACTIV-G 2.0].) • If there is any malfunction: — Repair or replace the malfunctioning part according to the inspection results, then go to Step 30. • If there is no malfunction: — Go to Step 21. Higher than **3 MPa {31 kgf/cm2, 435 psi}**: • Go to the next step.
19	**IDENTIFY CAUSE BY FUEL PRESSURE SENSOR OR HIGH PRESSURE FUEL PUMP** • Is the vehicle acceleration performance normal?	Yes	Go to the next step.
		No	Go to Step 21.
20	**INSPECT FUEL PRESSURE SENSOR** • Inspect the fuel pressure sensor. (See 01-40-52 FUEL PRESSURE SENSOR INSPECTION [SKYACTIV-G 2.0].) • Is there any malfunction?	Yes	Replace the fuel distributor, then go to Step 30. (See 01-14A-51 FUEL INJECTOR REMOVAL/INSTALLATION [SKYACTIV-G 2.0].)
		No	Go to Step 22.
21	**INSPECT SPILL VALVE CONTROL SOLENOID VALVE CONTROL CIRCUIT FOR SHORT TO GROUND** • Switch the ignition to off. • Disconnect the high pressure fuel pump and PCM connectors. • Inspect for continuity between high pressure fuel pump terminal A (wiring harness-side) and body ground. • Is there continuity?	Yes	Repair or replace the wiring harness for a possible short to ground, then go to Step 30.
		No	Replace the high pressure fuel pump, then go to Step 30. (See 01-14A-44 HIGH PRESSURE FUEL PUMP REMOVAL/INSTALLATION [SKYACTIV-G 2.0].)
22	**INSPECT FUEL PRESSURE (LOW-SIDE)** • Connect the fuel pressure gauge between fuel pump and high pressure fuel pump. • Measure the low side fuel pressure. (See 01-14A-8 FUEL LINE PRESSURE INSPECTION [SKYACTIV-G 2.0].) • Is the low side fuel pressure within specification? **Specification:** • **405—485 kPa {4.13—4.94 kgf/cm^2, 58.8—70.3 psi}**	Yes	Go to the next step.
		No	Inspect the following: • Fuel line restriction • Fuel filter clogged — If there is any malfunction: • Repair or replace the malfunctioning part according to the inspection results. — If there is no malfunction: • Replace the fuel pump unit. (See 01-14A-38 FUEL PUMP UNIT REMOVAL/INSTALLATION [SKYACTIV-G 2.0].) Go to Step 30.
23	**INSPECT IGNITION SYSTEM OPERATION** • Perform the Spark Test. (See 01-03-118 ENGINE CONTROL SYSTEM OPERATION INSPECTION [SKYACTIV-G 2.0].) • Is a strong blue spark visible at each cylinder?	Yes	Go to Step 26.
		No	Go to the next step.
24	**INSPECT SPARK PULG** • Inspect the spark plugs for all cylinders. (See 01-18-3 SPARK PLUG INSPECTION [SKYACTIV-G 2.0].) • Is there any malfunction?	Yes	Replace the suspected spark plug, then go to Step 30. (See 01-18-3 SPARK PLUG REMOVAL/INSTALLATION [SKYACTIV-G 2.0].)
		No	Go to the next step.

ON-BOARD DIAGNOSTIC [SKYACTIV-G 2.0]

STEP	INSPECTION		ACTION
25	**INSPECT IGNITION COIL** • Inspect the ignition coils for all cylinders. (See 01-18-2 IGNITION COIL INSPECTION [SKYACTIV-G 2.0].) • Is there any malfunction?	Yes	Replace the suspected ignition coil, then go to Step 30. (See 01-18-2 IGNITION COIL/ION SENSOR REMOVAL/ INSTALLATION [SKYACTIV-G 2.0].)
		No	Inspect the ignition coil related wiring harness condition (intermittent open or short) for all cylinders. Repair or replace the suspected wiring harness, then go to Step 30.
26	**VERIFY DTC TROUBLESHOOTING COMPLETED** **Note** • Because the malfunction may have been resolved by removing the carbon adhered to the spark plug during the spark inspection for the spark plug, verify that the repairs have been completed. • Make sure to reconnect all disconnected connectors. • Clear the DTC from the PCM memory using the M-MDS. (See 01-02-12 AFTER REPAIR PROCEDURE [SKYACTIV-G 2.0].) • Perform the Pending Trouble Code Access Procedure. (See 01-02-8 ON-BOARD DIAGNOSTIC TEST [SKYACTIV-G 2.0].) • Is the PENDING CODE for this DTC present?	Yes	Go to the next step.
		No	Go to Step 31.
27	**INSPECT ENGINE COMPRESSION** • Inspect the engine compression. (See 01-10A-14 COMPRESSION INSPECTION [SKYACTIV-G 2.0].) • Are compression pressures within specification? **Specification:** • Compression [European (L.H.D. U.K.) specs.] — Standard: **978 kPa {9.97 kgf/cm^2, 142 psi} (300 rpm)** — Minimum: **783 kPa {7.98 kgf/cm^2, 114 psi} (300 rpm)** — Maximum difference between cylinders: **166 kPa {1.69 kgf/cm^2, 24.1 psi}** • Compression [Except European (L.H.D. U.K.) specs.] — Standard: **885 kPa {9.02 kgf/cm^2, 128 psi} (300 rpm)** — Minimum: **708 kPa {7.22 kgf/cm^2, 103 psi} (300 rpm)** — Maximum difference between cylinders: **150 kPa {1.53 kgf/cm^2, 21.8 psi}** **Note** • Because the SKYACTIV-G 2.0 retards the intake valve closing timing, compression pressure is low.	Yes	Go to the next step.
		No	Repair or replace the malfunctioning part according to the inspection results, then go to Step 30.
28	**INSPECT SEALING OF ENGINE COOLANT PASSAGE** • Perform the “ENGINE COOLANT LEAKAGE INSPECTION”. (See 01-12A-7 ENGINE COOLANT LEAKAGE INSPECTION [SKYACTIV-G 2.0].) • Does the radiator cap tester needle drop even though there is no engine coolant leakage from the radiator or the hoses?	Yes	Engine coolant leakage from the engine (between the combustion chamber and the engine coolant passage) may have occurred. • Verify the conditions of the gasket and the cylinder head. — If there is any malfunction: • Repair or replace the malfunctioning part according to the inspection results, then go to Step 30.
		No	Go to the next step.

ON-BOARD DIAGNOSTIC [SKYACTIV-G 2.0]

STEP	INSPECTION		ACTION
29	**INSPECT PCV VALVE OPERATION** • Switch the ignition to off. • Remove the PCV valve. (See 01-16A-13 POSITIVE CRANKCASE VENTILATION (PCV) VALVE REMOVAL/ INSTALLATION [SKYACTIV-G 2.0].) • Inspect the PCV valve. (See 01-16A-15 POSITIVE CRANKCASE VENTILATION (PCV) VALVE INSPECTION [SKYACTIV-G 2.0].) • Is there any malfunction?	Yes	Replace the PCV valve, then go to the next step. (See 01-16A-13 POSITIVE CRANKCASE VENTILATION (PCV) VALVE REMOVAL/INSTALLATION [SKYACTIV-G 2.0].)
		No	Poor quality fuel is used. • Replace the fuel, then go to the next step.
30	**VERIFY DTC TROUBLESHOOTING COMPLETED** • Make sure to reconnect all disconnected connectors. • Clear the DTC from the PCM memory using the M-MDS. (See 01-02-12 AFTER REPAIR PROCEDURE [SKYACTIV-G 2.0].) • Perform the Pending Trouble Code Access Procedure. (See 01-02-8 ON-BOARD DIAGNOSTIC TEST [SKYACTIV-G 2.0].) • Is the PENDING CODE for this DTC present?	Yes	Repeat the inspection from Step 1. • If the malfunction recurs, replace the PCM. (See 01-40-10 PCM REMOVAL/INSTALLATION [SKYACTIV-G 2.0].) Go to the next step.
		No	Go to the next step.
31	**VERIFY AFTER REPAIR PROCEDURE** • Perform the “AFTER REPAIR PROCEDURE”. (See 01-02-12 AFTER REPAIR PROCEDURE [SKYACTIV-G 2.0].) • Are any DTCs present?	Yes	Go to the applicable DTC inspection. (See 01-02-14 DTC TABLE [SKYACTIV-G 2.0].)
		No	DTC troubleshooting completed.

ON-BOARD DIAGNOSTIC [SKYACTIV-G 2.0]

DTC P0301:00, P0302:00, P0303:00, P0304:00 [SKYACTIV-G 2.0]

id0102h1703300

DTC P0301:00	**Cylinder No.1 misfire detected**
DTC P0302:00	**Cylinder No.2 misfire detected**
DTC P0303:00	**Cylinder No.3 misfire detected**
DTC P0304:00	**Cylinder No.4 misfire detected**
DETECTION CONDITION	• The PCM monitors the CKP sensor input signal interval time. The PCM calculates the change of interval time for each cylinder. If the change of interval time exceeds the preprogrammed criteria, the PCM detects a misfire in the corresponding cylinder. While the engine is running, the PCM counts the number of misfires that occurred at **200 crankshaft revolutions** or **1000 crankshaft revolutions** and calculates the misfire ratio for each crankshaft revolution. If the ratio exceeds the preprogrammed criteria, the PCM determines that a misfire, which can damage the catalytic converter or affect emission performance, has occurred. **Diagnostic support note** • This is a continuous monitor (misfire). • The check engine light illuminates if the PCM detects the above malfunction condition in two consecutive drive cycles or in one drive cycle while the DTC for the same malfunction has been stored in the PCM. • The check engine light flashes if the PCM detects the misfire which can damage the catalytic converter during first drive cycle. • PENDING CODE is available if the PCM detects the above malfunction condition during first drive cycle. • FREEZE FRAME DATA (Mode 2)/Snapshot data is available. • The DTC is stored in the PCM memory.
FAIL-SAFE FUNCTION	• Stops the fuel injection to the misfiring cylinder. • Limits the intake air amount.
POSSIBLE CAUSE	• Erratic signal to PCM — APP sensor signal malfunction — ECT sensor signal malfunction — IAT sensor No.1 signal malfunction — MAF sensor signal malfunction — CKP sensor signal malfunction — TP sensor signal malfunction — VSS signal malfunction — Related connector or terminals malfunction — Related wiring harness malfunction • Excessive air suction in intake air system (between dynamic chamber and cylinder head) • Fuel injector malfunction • Ignition system malfunction — Spark plug is wet or covered with carbon — Spark plug malfunction — Ignition coil malfunction — Ignition coil related wiring harness malfunction • Engine malfunction — Insufficient engine compression — Engine coolant leakage to combustion chamber • PCM malfunction
SYSTEM WIRING DIAGRAM	—

Diagnostic Procedure

STEP	INSPECTION		ACTION
1	**VERIFY FREEZE FRAME DATA (MODE 2)/ SNAPSHOT DATA AND DIAGNOSTIC MONITORING TEST RESULTS HAVE BEEN RECORDED** • Have the FREEZE FRAME DATA (Mode 2)/ snapshot data and DIAGNOSTIC MONITORING TEST RESULTS (misfire related) been recorded?	Yes	Go to the next step.
		No	Record the FREEZE FRAME DATA (Mode 2)/snapshot data and DIAGNOSTIC MONITORING TEST RESULTS on the repair order, then go to the next step.
2	**VERIFY RELATED SERVICE INFORMATION AVAILABILITY** • Verify related Service Information availability. • Is any related Service Information available?	Yes	Perform repair or diagnosis according to the available Service Information. • If the vehicle is not repaired, go to the next step.
		No	Go to the next step.

ON-BOARD DIAGNOSTIC [SKYACTIV-G 2.0]

STEP	INSPECTION		ACTION
3	**VERIFY RELATED PENDING CODE AND/OR DTC** • Switch the ignition to off, then to ON (engine off). • Perform the Pending Trouble Code Access Procedure and DTC Reading Procedure. (See 01-02-8 ON-BOARD DIAGNOSTIC TEST [SKYACTIV-G 2.0].) • Are any other PENDING CODEs and/or DTCs present?	Yes	Go to the applicable PENDING CODE or DTC inspection. (See 01-02-14 DTC TABLE [SKYACTIV-G 2.0].)
		No	Go to the next step.
4	**VERIFY CURRENT INPUT SIGNAL STATUS (KEY TO ON/IDLE)** • Access the following PIDs using the M-MDS: (See 01-02-8 ON-BOARD DIAGNOSTIC TEST [SKYACTIV-G 2.0].) — APP1 — APP2 — ECT — IAT — MAF — RPM — TP REL — VSS • Is there any signal that is far out of specification when the ignition is switched to ON and the engine idles? (See 01-40-17 PCM INSPECTION [SKYACTIV-G 2.0].)	Yes	Inspect the suspected sensor and related wiring harness. Repair or replace the malfunctioning part according to the inspection results, then go to Step 14.
		No	Go to the next step.
5	**VERIFY CURRENT INPUT SIGNAL STATUS UNDER FREEZE FRAME DATA (MODE 2) CONDITION** **Caution** • **While performing this step, always operate the vehicle in a safe and lawful manner.** • **When the M-MDS is used to observe monitor system status while driving, be sure to have another technician with you, or record the data in the M-MDS using the PID/DATA MONITOR AND RECORD capturing function and inspect later.** • Access the same PIDs as in Step 4 while simulating under the FREEZE FRAME DATA (Mode 2) conditions. (See 01-02-8 ON-BOARD DIAGNOSTIC TEST [SKYACTIV-G 2.0].) • Is there any signal which causes drastic changes?	Yes	Inspect the suspected sensor and related wiring harness. Repair or replace the malfunctioning part according to the inspection results, then go to Step 14.
		No	Go to the next step.
6	**INSPECT INTAKE AIR SYSTEM FOR AIR SUCTION** • Inspect for air leakage at the following: — Around connection of dynamic chamber and intake manifold — Around connection of intake manifold and cylinder head **Note** • Engine speed may change when rust penetrating agent is sprayed on the air suction area. • Is there any malfunction?	Yes	Repair or replace the malfunctioning part according to the inspection results, then go to Step 14.
		No	Go to the next step.

ON-BOARD DIAGNOSTIC [SKYACTIV-G 2.0]

STEP	INSPECTION		ACTION
7	**INSPECT FUEL INJECTOR OPERATION** • Perform the Fuel Injector Operation Inspection. (See 01-03-118 ENGINE CONTROL SYSTEM OPERATION INSPECTION [SKYACTIV-G 2.0].) • Is there any malfunction?	Yes	Repair or replace the malfunctioning part according to the inspection results, then go to Step 14.
		No	Go to the next step.
8	**INSPECT IGNITION SYSTEM OPERATION** • Perform the Spark Test. (See 01-03-118 ENGINE CONTROL SYSTEM OPERATION INSPECTION [SKYACTIV-G 2.0].) • Is a strong blue spark visible at each cylinder?	Yes	Go to Step 11.
		No	Go to the next step.
9	**INSPECT SPARK PLUG CONDITION** • Remove the spark plug for suspected cylinder. (See 01-18-3 SPARK PLUG REMOVAL/INSTALLATION [SKYACTIV-G 2.0].) • Inspect the spark plug for suspected cylinder. (See 01-18-3 SPARK PLUG INSPECTION [SKYACTIV-G 2.0].) • Is there any malfunction?	Yes	Replace the suspected spark plug, then go to Step 14. (See 01-18-3 SPARK PLUG REMOVAL/INSTALLATION [SKYACTIV-G 2.0].)
		No	Go to the next step.
10	**INSPECT IGNITION COIL** • Inspect the ignition coil for suspected cylinder. (See 01-18-2 IGNITION COIL INSPECTION [SKYACTIV-G 2.0].) • Is there any malfunction?	Yes	Replace the suspected ignition coil, then go to Step 14. (See 01-18-2 IGNITION COIL/ION SENSOR REMOVAL/INSTALLATION [SKYACTIV-G 2.0].)
		No	Inspect the ignition coil related wiring harness condition (intermittent open or short) for all cylinders. Repair or replace the suspected wiring harness, then go to Step 14.
11	**VERIFY DTC TROUBLESHOOTING COMPLETED** **Note** • Because the malfunction may have been resolved by removing the carbon adhered to the spark plug during the spark inspection for the spark plug, verify that the repairs have been completed. • Make sure to reconnect all disconnected connectors. • Clear the DTC from the PCM memory using the M-MDS. (See 01-02-12 AFTER REPAIR PROCEDURE [SKYACTIV-G 2.0].) • Perform the Pending Trouble Code Access Procedure. (See 01-02-8 ON-BOARD DIAGNOSTIC TEST [SKYACTIV-G 2.0].) • Is the PENDING CODE for this DTC present?	Yes	Go to the next step.
		No	Go to Step 15.

ON-BOARD DIAGNOSTIC [SKYACTIV-G 2.0]

STEP	INSPECTION		ACTION
12	**INSPECT ENGINE COMPRESSION** • Inspect the engine compression. (See 01-10A-14 COMPRESSION INSPECTION [SKYACTIV-G 2.0].) • Are compression pressures within specification? **Specification:** • Compression [European (L.H.D. U.K.) specs.] — Standard: **978 kPa {9.97 kgf/cm^2, 142 psi} (300 rpm)** — Minimum: **783 kPa {7.98 kgf/cm^2, 114 psi} (300 rpm)** — Maximum difference between cylinders: **166 kPa {1.69 kgf/cm^2, 24.1 psi}** • Compression [Except European (L.H.D. U.K.) specs.] — Standard: **885 kPa {9.02 kgf/cm^2, 128 psi} (300 rpm)** — Minimum: **708 kPa {7.22 kgf/cm^2, 103 psi} (300 rpm)** — Maximum difference between cylinders: **150 kPa {1.53 kgf/cm^2, 21.8 psi}** **Note** • Because the SKYACTIV-G 2.0 retards the intake valve closing timing, compression pressure is low.	Yes	Go to the next step.
		No	Repair or replace the malfunctioning part according to the inspection results, then go to Step 14.
13	**INSPECT SEALING OF ENGINE COOLANT PASSAGE** • Perform the “ENGINE COOLANT LEAKAGE INSPECTION”. (See 01-12A-7 ENGINE COOLANT LEAKAGE INSPECTION [SKYACTIV-G 2.0].) • Does the radiator cap tester needle drop even though there is no engine coolant leakage from the radiator or the hoses?	Yes	Engine coolant leakage from the engine (between the combustion chamber and the engine coolant passage) may have occurred. • Verify the conditions of the gasket and the cylinder head. — If there is any malfunction: • Repair or replace the malfunctioning part according to the inspection results, then go to the next step.
		No	Go to the next step.
14	**VERIFY DTC TROUBLESHOOTING COMPLETED** • Make sure to reconnect all disconnected connectors. • Clear the DTC from the PCM memory using the M-MDS. (See 01-02-12 AFTER REPAIR PROCEDURE [SKYACTIV-G 2.0].) • Perform the Pending Trouble Code Access Procedure. (See 01-02-8 ON-BOARD DIAGNOSTIC TEST [SKYACTIV-G 2.0].) • Is the PENDING CODE for this DTC present?	Yes	Repeat the inspection from Step 1. • If the malfunction recurs, replace the PCM. (See 01-40-10 PCM REMOVAL/INSTALLATION [SKYACTIV-G 2.0].) Go to the next step.
		No	Go to the next step.
15	**VERIFY AFTER REPAIR PROCEDURE** • Perform the “AFTER REPAIR PROCEDURE”. (See 01-02-12 AFTER REPAIR PROCEDURE [SKYACTIV-G 2.0].) • Are any DTCs present?	Yes	Go to the applicable DTC inspection. (See 01-02-14 DTC TABLE [SKYACTIV-G 2.0].)
		No	DTC troubleshooting completed.

ON-BOARD DIAGNOSTIC [SKYACTIV-G 2.0]

DTC P0327:00 [SKYACTIV-G 2.0]

id0102h1703000

DTC P0327:00	KS circuit low input
DETECTION CONDITION	• The PCM monitors input signal from the KS when the engine is running. If the input voltage is **below 1.1 V** for **5 s**, the PCM determines that the KS circuit has a malfunction. **Diagnostic support note** • This is a continuous monitor (CCM). • The check engine light illuminates if the PCM detects the above malfunction condition during the first drive cycle. • FREEZE FRAME DATA (Mode 2)/Snapshot data is available. • The DTC is stored in the PCM memory.
FAIL-SAFE FUNCTION	• Sets the knocking spark retard correction value of the ignition control to the fixed value.
POSSIBLE CAUSE	• KS connector or terminals malfunction • KS malfunction • Short to ground in wiring harness between the following terminals: — KS terminal A—PCM terminal 1H — KS terminal B—PCM terminal 1D • PCM connector or terminals malfunction • KS circuits are shorted to each other • Open circuit in wiring harness between the following terminals: — KS terminal A—PCM terminal 1H — KS terminal B—PCM terminal 1D • PCM malfunction

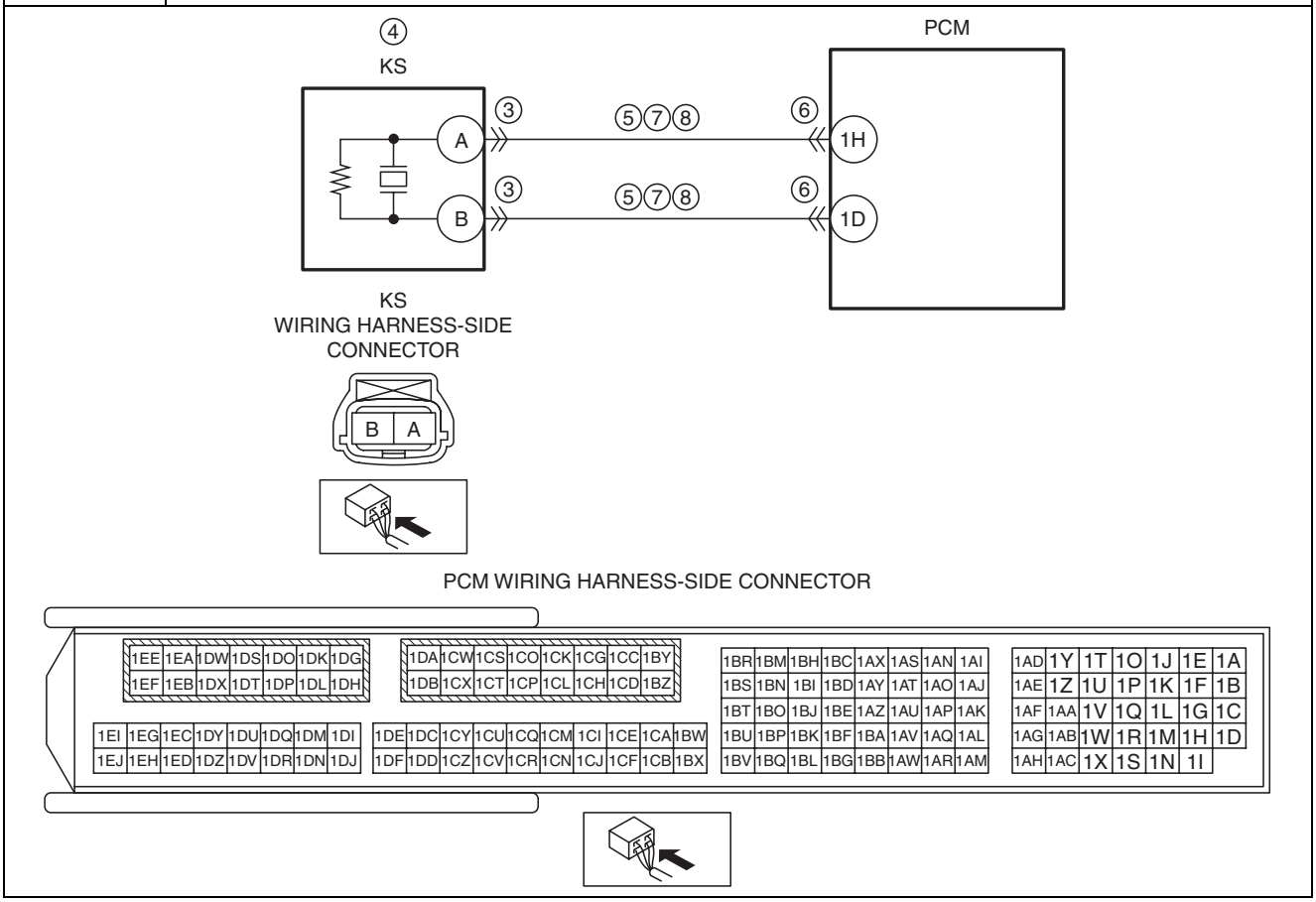

ON-BOARD DIAGNOSTIC [SKYACTIV-G 2.0]

Diagnostic Procedure

STEP	INSPECTION		ACTION
1	**VERIFY FREEZE FRAME DATA (MODE 2)/ SNAPSHOT DATA HAS BEEN RECORDED** • Has the FREEZE FRAME DATA (Mode 2)/ snapshot data been recorded?	Yes	Go to the next step.
		No	Record the FREEZE FRAME DATA (Mode 2)/snapshot data on the repair order, then go to the next step.
2	**VERIFY RELATED SERVICE INFORMATION AVAILABILITY** • Verify related Service Information availability. • Is any related Service Information available?	Yes	Perform repair or diagnosis according to the available Service Information. • If the vehicle is not repaired, go to the next step.
		No	Go to the next step.
3	**INSPECT KS CONNECTOR CONDITION** • Switch the ignition to off. • Disconnect the KS connector. • Inspect for poor connection (such as damaged/ pulled-out pins, corrosion). • Is there any malfunction?	Yes	Repair or replace the connector and/or terminals, then go to Step 9.
		No	Go to the next step.
4	**INSPECT KS** • Inspect the KS. (See 01-40-65 KNOCK SENSOR (KS) INSPECTION [SKYACTIV-G 2.0].) • Is there any malfunction?	Yes	Replace the KS, then go to Step 9. (See 01-40-64 KNOCK SENSOR (KS) REMOVAL/ INSTALLATION [SKYACTIV-G 2.0].)
		No	Go to the next step.
5	**INSPECT KS CIRCUIT FOR SHORT TO GROUND** • Verify that the KS connector is disconnected. • Inspect for continuity between the following terminals (wiring harness-side) and body ground: — KS terminal A — KS terminal B • Is there continuity?	Yes	If the short to ground circuit could be detected in the wiring harness: • Repair or replace the wiring harness for a possible short to ground. If the short to ground circuit could not be detected in the wiring harness: • Replace the PCM (short to ground in the PCM internal circuit). (See 01-40-10 PCM REMOVAL/INSTALLATION [SKYACTIV-G 2.0].) Go to Step 9.
		No	Go to the next step.
6	**INSPECT PCM CONNECTOR CONDITION** • Disconnect the PCM connector. • Inspect for poor connection (such as damaged/ pulled-out pins, corrosion). • Is there any malfunction?	Yes	Repair or replace the connector and/or terminals, then go to Step 9.
		No	Go to the next step.
7	**INSPECT KS CIRCUITS FOR SHORT TO EACH OTHER** • Verify that the KS and PCM connectors are disconnected. • Inspect for continuity between KS terminals A and B (wiring harness-side). • Is there continuity?	Yes	Repair or replace the wiring harness for a possible short to each other, then go to Step 9.
		No	Go to the next step.
8	**INSPECT KS CIRCUIT FOR OPEN CIRCUIT** • Verify that the KS and PCM connectors are disconnected. • Inspect for continuity between the following terminals (wiring harness-side): — KS terminal A—PCM terminal 1H — KS terminal B—PCM terminal 1D • Is there continuity?	Yes	Go to the next step.
		No	Repair or replace the wiring harness for a possible open circuit, then go to the next step.
9	**VERIFY DTC TROUBLESHOOTING COMPLETED** • Make sure to reconnect all disconnected connectors. • Clear the DTC from the PCM memory using the M-MDS. (See 01-02-12 AFTER REPAIR PROCEDURE [SKYACTIV-G 2.0].) • Start the engine. • Perform the KOEO or KOER self test. (See 01-02-12 KOEO/KOER SELF TEST [SKYACTIV-G 2.0].) • Is the same DTC present?	Yes	Repeat the inspection from Step 1. • If the malfunction recurs, replace the PCM. (See 01-40-10 PCM REMOVAL/INSTALLATION [SKYACTIV-G 2.0].) Go to the next step.
		No	Go to the next step.

ON-BOARD DIAGNOSTIC [SKYACTIV-G 2.0]

STEP	INSPECTION		ACTION
10	**VERIFY AFTER REPAIR PROCEDURE** • Perform the “AFTER REPAIR PROCEDURE”. (See 01-02-12 AFTER REPAIR PROCEDURE [SKYACTIV-G 2.0].) • Are any DTCs present?	Yes	Go to the applicable DTC inspection. (See 01-02-14 DTC TABLE [SKYACTIV-G 2.0].)
		No	DTC troubleshooting completed.

DTC P0328:00 [SKYACTIV-G 2.0]

id0102h1703100

DTC P0328:00	KS circuit high input
DETECTION CONDITION	• The PCM monitors the input signal from the KS when the engine is running. If the input voltage is **above 2.4 V** for **5 s**, the PCM determines that the KS circuit has a malfunction. **Diagnostic support note** • This is a continuous monitor (CCM). • The check engine light illuminates if the PCM detects the above malfunction condition during the first drive cycle. • FREEZE FRAME DATA (Mode 2)/Snapshot data is available. • The DTC is stored in the PCM memory.
FAIL-SAFE FUNCTION	• Sets the knocking spark retard correction value of the ignition control to the fixed value.
POSSIBLE CAUSE	• KS connector or terminals malfunction • KS malfunction • PCM connector or terminals malfunction • Short to power supply in wiring harness between the following terminals: — KS terminal A—PCM terminal 1H — KS terminal B—PCM terminal 1D • KS circuits are shorted to each other • Open circuit in wiring harness between the following terminals: — KS terminal A—PCM terminal 1H — KS terminal B—PCM terminal 1D • PCM malfunction

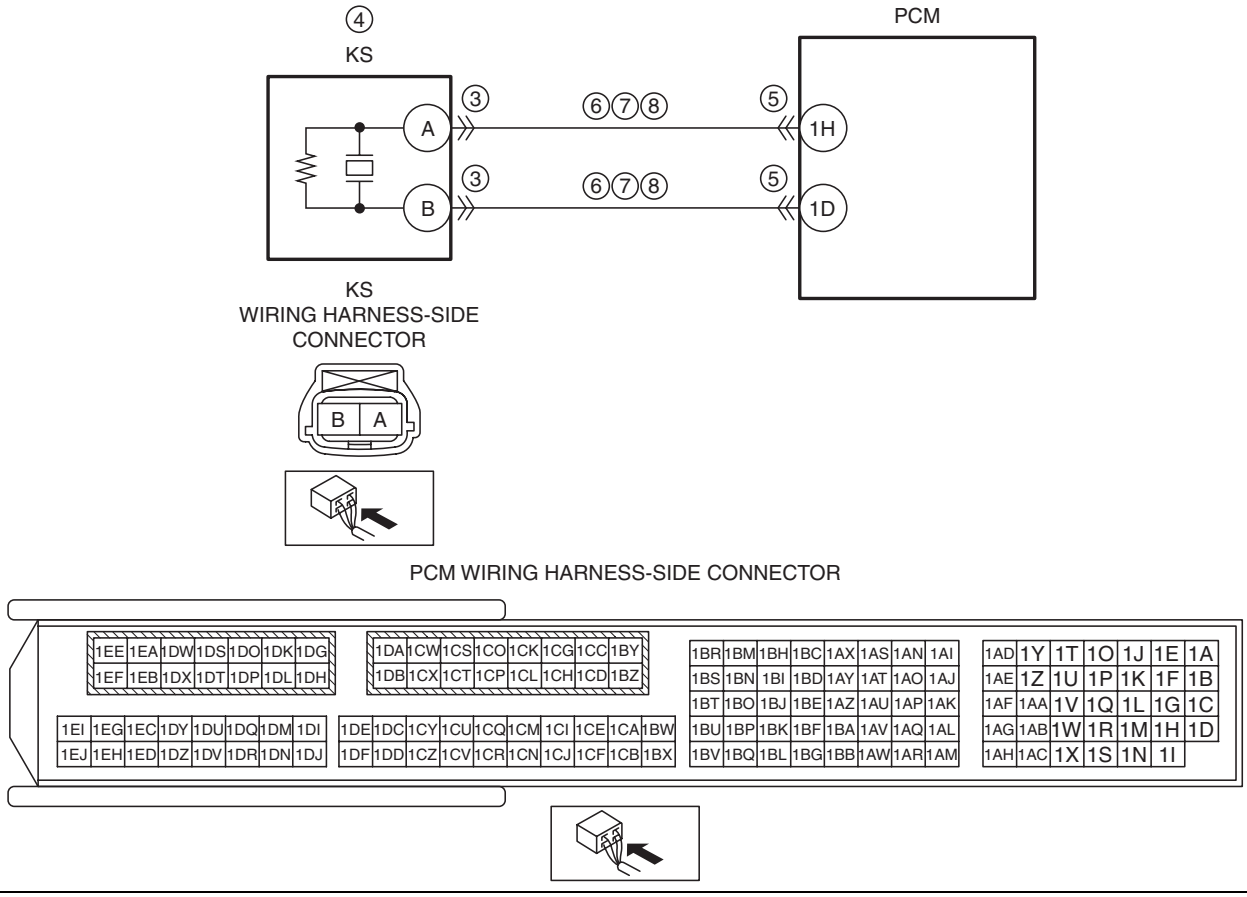

ON-BOARD DIAGNOSTIC [SKYACTIV-G 2.0]

Diagnostic Procedure

STEP	INSPECTION		ACTION
1	**VERIFY FREEZE FRAME DATA (MODE 2)/ SNAPSHOT DATA HAS BEEN RECORDED** • Has the FREEZE FRAME DATA (Mode 2)/ snapshot data been recorded?	Yes	Go to the next step.
		No	Record the FREEZE FRAME DATA (Mode 2)/snapshot data on the repair order, then go to the next step.
2	**VERIFY RELATED SERVICE INFORMATION AVAILABILITY** • Verify related Service Information availability. • Is any related Service Information available?	Yes	Perform repair or diagnosis according to the available Service Information. • If the vehicle is not repaired, go to the next step.
		No	Go to the next step.
3	**INSPECT KS CONNECTOR CONDITION** • Switch the ignition to off. • Disconnect the KS connector. • Inspect for poor connection (such as damaged/ pulled-out pins, corrosion). • Is there any malfunction?	Yes	Repair or replace the connector and/or terminals, then go to Step 9.
		No	Go to the next step.
4	**INSPECT KS** • Inspect the KS. (See 01-40-65 KNOCK SENSOR (KS) INSPECTION [SKYACTIV-G 2.0].) • Is there any malfunction?	Yes	Replace the KS, then go to Step 9. (See 01-40-64 KNOCK SENSOR (KS) REMOVAL/ INSTALLATION [SKYACTIV-G 2.0].)
		No	Go to the next step.
5	**INSPECT PCM CONNECTOR CONDITION** • Disconnect the PCM connector. • Inspect for poor connection (such as damaged/ pulled-out pins, corrosion). • Is there any malfunction?	Yes	Repair or replace the connector and/or terminals, then go to Step 9.
		No	Go to the next step.
6	**INSPECT KS CIRCUIT FOR SHORT TO POWER SUPPLY** • Verify that the KS and PCM connectors are disconnected. • Switch the ignition ON (engine off or on). • Measure the voltage at the following terminals (wiring harness-side): — KS terminal A — KS terminal B • Is the voltage **0 V**?	Yes	Go to the next step.
		No	Repair or replace the wiring harness for a possible short to power supply, then go to Step 9.
7	**INSPECT KS CIRCUITS FOR SHORT TO EACH OTHER** • Verify that the KS and PCM connectors are disconnected. • Switch the ignition to off. • Inspect for continuity between KS terminals A and B (wiring harness-side). • Is there continuity?	Yes	Repair or replace the wiring harness for a possible short to each other, then go to Step 9.
		No	Go to the next step.
8	**INSPECT KS CIRCUIT FOR OPEN CIRCUIT** • Verify that the KS and PCM connectors are disconnected. • Inspect for continuity between the following terminals (wiring harness-side): — KS terminal A—PCM terminal 1H — KS terminal B—PCM terminal 1D • Is there continuity?	Yes	Go to the next step.
		No	Repair or replace the wiring harness for a possible open circuit, then go to the next step.

ON-BOARD DIAGNOSTIC [SKYACTIV-G 2.0]

STEP	INSPECTION		ACTION
9	**VERIFY DTC TROUBLESHOOTING COMPLETED** • Make sure to reconnect all disconnected connectors. • Clear the DTC from the PCM memory using the M-MDS. (See 01-02-12 AFTER REPAIR PROCEDURE [SKYACTIV-G 2.0].) • Start the engine. • Perform the KOEO or KOER self test. (See 01-02-12 KOEO/KOER SELF TEST [SKYACTIV-G 2.0].) • Is the same DTC present?	Yes	Repeat the inspection from Step 1. • If the malfunction recurs, replace the PCM. (See 01-40-10 PCM REMOVAL/INSTALLATION [SKYACTIV-G 2.0].) Go to the next step.
		No	Go to the next step.
10	**VERIFY AFTER REPAIR PROCEDURE** • Perform the “AFTER REPAIR PROCEDURE”. (See 01-02-12 AFTER REPAIR PROCEDURE [SKYACTIV-G 2.0].) • Are any DTCs present?	Yes	Go to the applicable DTC inspection. (See 01-02-14 DTC TABLE [SKYACTIV-G 2.0].)
		No	DTC troubleshooting completed.

ON-BOARD DIAGNOSTIC [SKYACTIV-G 2.0]

DTC P0335:00 [SKYACTIV-G 2.0]

id0102h1703600

DTC P0335:00	CKP sensor circuit problem
DETECTION CONDITION	• There is no CKP sensor signal input while the exhaust camshaft rotates **5 times**. • CKP sensor input signal pattern, received while crankshaft rotates **10 times**, is incorrect. **Diagnostic support note** • This is a continuous monitor (CCM). • The check engine light illuminates if the PCM detects the above malfunction condition during the first drive cycle. • FREEZE FRAME DATA (Mode 2)/Snapshot data is available. • The DTC is stored in the PCM memory.
FAIL-SAFE FUNCTION	• Stops the fuel injection. • Stops the ignition.
POSSIBLE CAUSE	• CKP sensor connector or terminals malfunction • Short to ground in wiring harness between the following terminals: — CKP sensor terminal A—PCM terminal 1BN — CKP sensor terminal C—PCM terminal 1AD • PCM connector or terminals malfunction • Short to power supply in wiring harness between CKP sensor terminal C and PCM terminal 1AD • CKP sensor circuits are shorted to each other • Open circuit in wiring harness between the following terminals: — CKP sensor terminal A—PCM terminal 1BN — CKP sensor terminal C—PCM terminal 1AD — CKP sensor terminal B—PCM terminal 1AH • CKP sensor malfunction — CKP sensor is dirty — CKP sensor pulse wheel malfunction • PCM malfunction

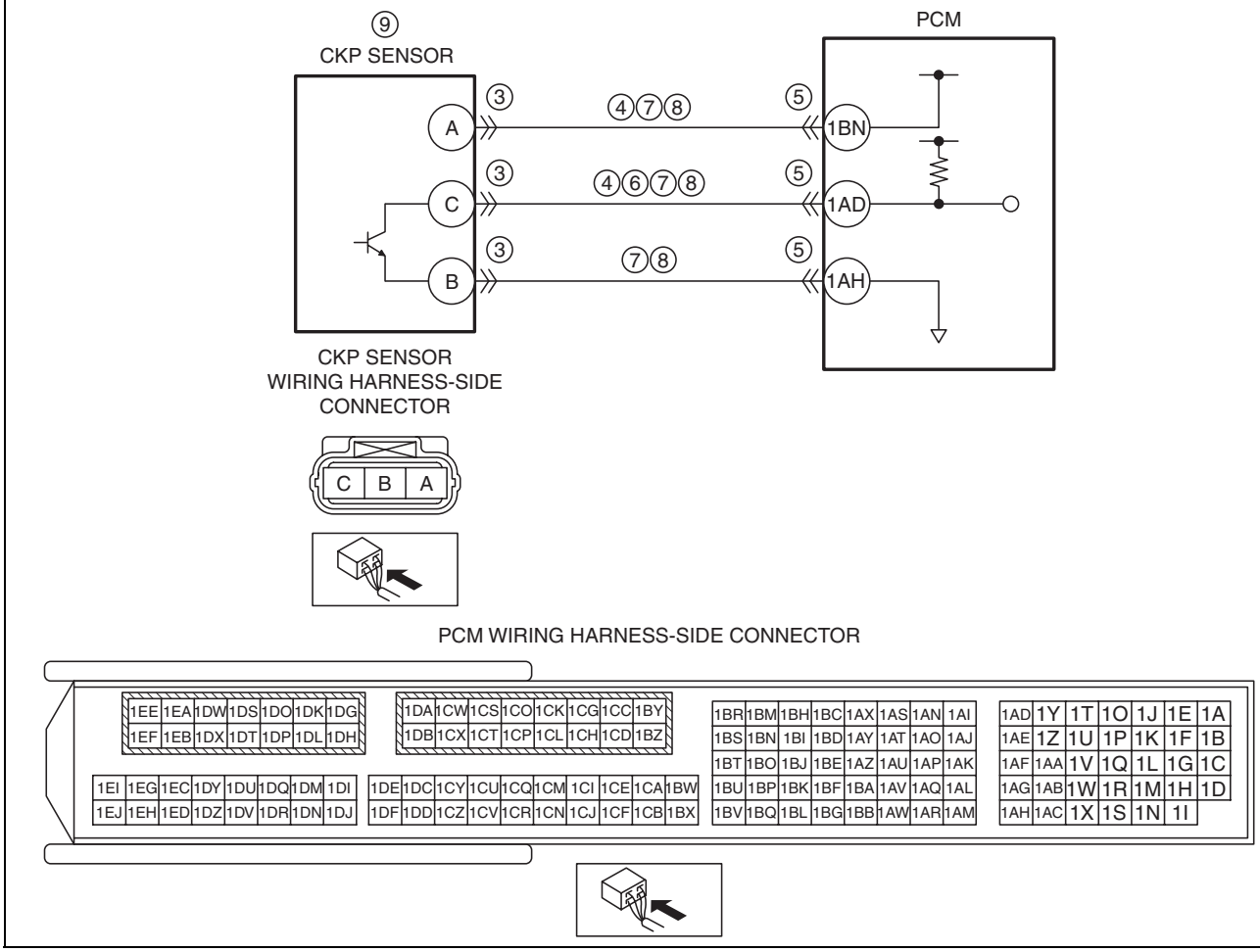

ON-BOARD DIAGNOSTIC [SKYACTIV-G 2.0]

Diagnostic Procedure

STEP	INSPECTION		ACTION
1	**VERIFY FREEZE FRAME DATA (MODE 2)/ SNAPSHOT DATA HAS BEEN RECORDED** • Has the FREEZE FRAME DATA (Mode 2)/ snapshot data been recorded?	Yes	Go to the next step.
		No	Record the FREEZE FRAME DATA (Mode 2)/snapshot data on the repair order, then go to the next step.
2	**VERIFY RELATED SERVICE INFORMATION AVAILABILITY** • Verify related Service Information availability. • Is any related Service Information available?	Yes	Perform repair or diagnosis according to the available Service Information. • If the vehicle is not repaired, go to the next step.
		No	Go to the next step.
3	**INSPECT CKP SENSOR CONNECTOR CONDITION** • Switch the ignition to off. • Disconnect the CKP sensor connector. • Inspect for poor connection (such as damaged/ pulled-out pins, corrosion). • Is there any malfunction?	Yes	Repair or replace the connector and/or terminals, then go to Step 10.
		No	Go to the next step.
4	**INSPECT CKP SENSOR CIRCUIT FOR SHORT TO GROUND** • Verify that the CKP sensor connector is disconnected. • Inspect for continuity between the following terminals (wiring harness-side) and body ground: — CKP sensor terminal A — CKP sensor terminal C • Is there continuity?	Yes	If the short to ground circuit could be detected in the wiring harness: • Repair or replace the wiring harness for a possible short to ground. If the short to ground circuit could not be detected in the wiring harness: • Replace the PCM (short to ground in the PCM internal circuit). (See 01-40-10 PCM REMOVAL/INSTALLATION [SKYACTIV-G 2.0].) Go to Step 10.
		No	Go to the next step.
5	**INSPECT PCM CONNECTOR CONDITION** • Disconnect the PCM connector. • Inspect for poor connection (such as damaged/ pulled-out pins, corrosion). • Is there any malfunction?	Yes	Repair or replace the connector and/or terminals, then go to Step 10.
		No	Go to the next step.
6	**INSPECT CKP SENSOR SIGNAL CIRCUIT FOR SHORT TO POWER SUPPLY** • Verify that the CKP sensor and PCM connectors are disconnected. • Switch the ignition ON (engine off or on). • Measure the voltage at the CKP sensor terminal C (wiring harness-side). • Is the voltage **0 V**?	Yes	Go to the next step.
		No	Repair or replace the wiring harness for a possible short to power supply, then go to Step 10.
7	**INSPECT CKP SENSOR CIRCUITS FOR SHORT TO EACH OTHER** • Verify that the CKP sensor and PCM connectors are disconnected. • Switch the ignition to off. • Inspect for continuity between CKP sensor terminals A, C and B (wiring harness-side). • Is there continuity?	Yes	Repair or replace the wiring harness for a possible short to each other, then go to Step 10.
		No	Go to the next step.
8	**INSPECT CKP SENSOR CIRCUIT FOR OPEN CIRCUIT** • Verify that the CKP sensor and PCM connectors are disconnected. • Inspect for continuity between the following terminals (wiring harness-side): — CKP sensor terminal A—PCM terminal 1BN — CKP sensor terminal C—PCM terminal 1AD — CKP sensor terminal B—PCM terminal 1AH • Is there continuity?	Yes	Go to the next step.
		No	Repair or replace the wiring harness for a possible open circuit, then go to Step 10.
9	**INSPECT CKP SENSOR** • Inspect the CKP sensor. (See 01-40-60 CRANKSHAFT POSITION (CKP) SENSOR INSPECTION [SKYACTIV-G 2.0].) • Is there any malfunction?	Yes	Replace the CKP sensor, then go to the next step. (See 01-40-59 CRANKSHAFT POSITION (CKP) SENSOR REMOVAL/INSTALLATION [SKYACTIV-G 2.0].)
		No	Go to the next step.

ON-BOARD DIAGNOSTIC [SKYACTIV-G 2.0]

STEP	INSPECTION		ACTION
10	**VERIFY DTC TROUBLESHOOTING COMPLETED** • Make sure to reconnect all disconnected connectors. • Clear the DTC from the PCM memory using the M-MDS. (See 01-02-12 AFTER REPAIR PROCEDURE [SKYACTIV-G 2.0].) • Start the engine. • Perform the KOER self test. (See 01-02-12 KOEO/KOER SELF TEST [SKYACTIV-G 2.0].) • Is the same DTC present?	Yes	Repeat the inspection from Step 1. • If the malfunction recurs, replace the PCM. (See 01-40-10 PCM REMOVAL/INSTALLATION [SKYACTIV-G 2.0].) Go to the next step.
		No	Go to the next step.
11	**VERIFY AFTER REPAIR PROCEDURE** • Perform the “AFTER REPAIR PROCEDURE”. (See 01-02-12 AFTER REPAIR PROCEDURE [SKYACTIV-G 2.0].) • Are any DTCs present?	Yes	Go to the applicable DTC inspection. (See 01-02-14 DTC TABLE [SKYACTIV-G 2.0].)
		No	DTC troubleshooting completed.

DTC P0340:00 [SKYACTIV-G 2.0]

id0102h1703700

DTC P0340:00	**Intake CMP sensor circuit problem**
DETECTION CONDITION	• Intake CMP sensor input signal pattern, received while crankshaft rotates **24 times**, is incorrect. **Diagnostic support note** • This is a continuous monitor (CCM). • The check engine light illuminates if the PCM detects the above malfunction condition during the first drive cycle. • FREEZE FRAME DATA (Mode 2)/Snapshot data is available. • The DTC is stored in the PCM memory.
FAIL-SAFE FUNCTION	• Set the electric variable valve timing control to the maximum cam retard mode.
POSSIBLE CAUSE	• Intake CMP sensor connector or terminals malfunction • Short to ground or open circuit in intake CMP sensor power supply circuit — Short to ground in wiring harness between ENGINE1 15 A fuse and intake CMP sensor terminal C — ENGINE1 15 A fuse malfunction — Open circuit in wiring harness between main relay terminal C and intake CMP sensor terminal C • Short to ground in wiring harness between intake CMP sensor terminal A and PCM terminal 1Y • PCM connector or terminals malfunction • Short to power supply in wiring harness between intake CMP sensor terminal A and PCM terminal 1Y • Intake CMP sensor signal circuit and ground circuit are shorted to each other • Open circuit in wiring harness between the following terminals: — Intake CMP sensor terminal A—PCM terminal 1Y — Intake CMP sensor terminal B—PCM terminal 1AC • Intake CMP sensor malfunction — Intake CMP sensor is dirty — Intake CMP sensor pulse wheel malfunction — Damage to the detection area of the intake CMP sensor • CKP sensor connector or terminals malfunction • Electric variable valve timing mechanism not installed correctly — Loose timing chain or improper valve timing — Loose intake camshaft sprocket lock bolt — Loose crankshaft pulley lock bolt • PCM malfunction

ON-BOARD DIAGNOSTIC [SKYACTIV-G 2.0]

DTC P0340:00	Intake CMP sensor circuit problem

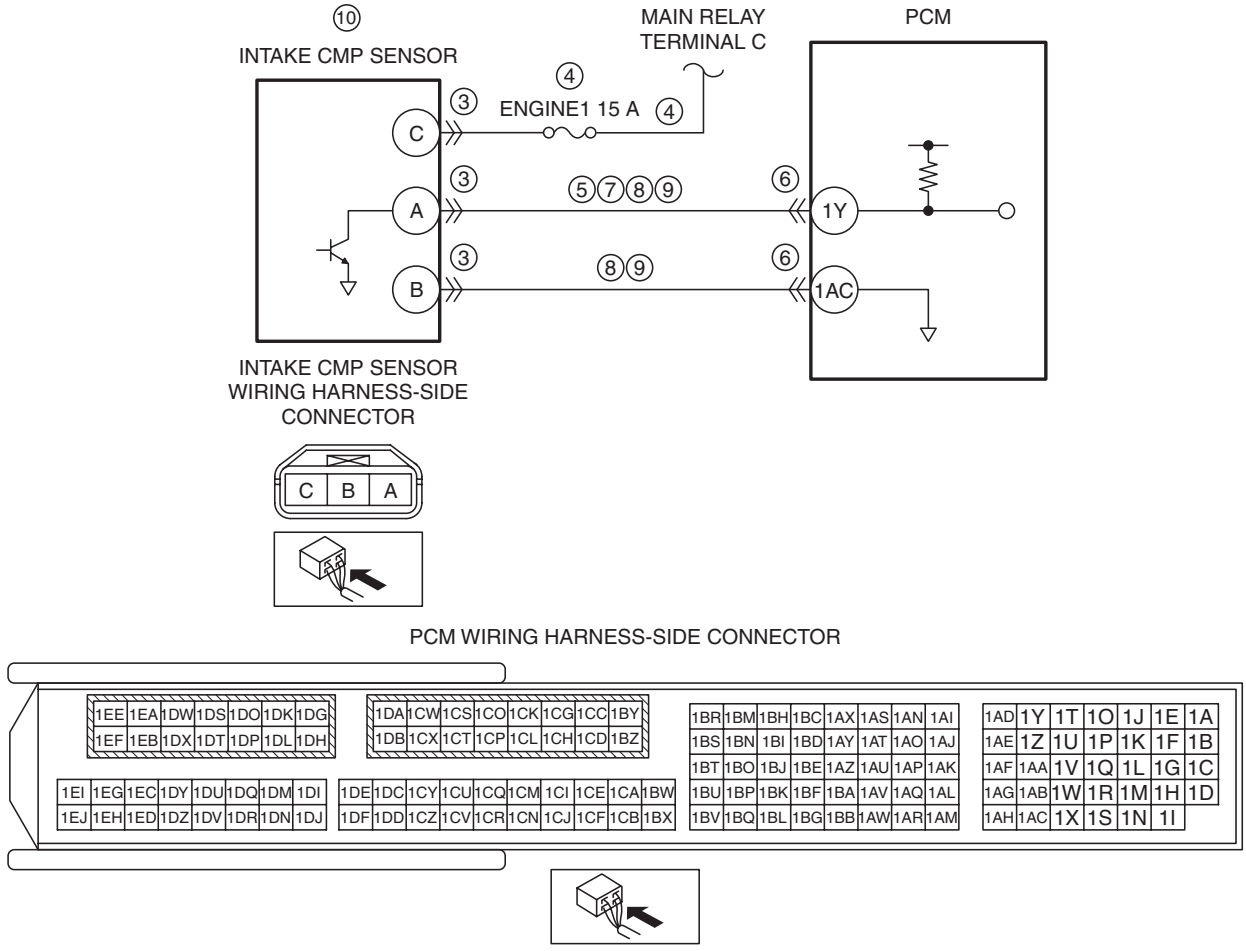

Diagnostic Procedure

STEP	INSPECTION		ACTION
1	**VERIFY FREEZE FRAME DATA (MODE 2)/ SNAPSHOT DATA HAS BEEN RECORDED** • Has the FREEZE FRAME DATA (Mode 2)/ snapshot data been recorded?	Yes	Go to the next step.
		No	Record the FREEZE FRAME DATA (Mode 2)/snapshot data on the repair order, then go to the next step.
2	**VERIFY RELATED SERVICE INFORMATION AVAILABILITY** • Verify related Service Information availability. • Is any related Service Information available?	Yes	Perform repair or diagnosis according to the available Service Information. • If the vehicle is not repaired, go to the next step.
		No	Go to the next step.
3	**INSPECT INTAKE CMP SENSOR CONNECTOR CONDITION** • Switch the ignition to off. • Disconnect the intake CMP sensor connector. • Inspect for poor connection (such as damaged/ pulled-out pins, corrosion). • Is there any malfunction?	Yes	Repair or replace the connector and/or terminals, then go to Step 13.
		No	Go to the next step.
4	**INSPECT INTAKE CMP SENSOR POWER SUPPLY CIRCUIT FOR SHORT TO GROUND OR OPEN CIRCUIT** • Verify that the intake CMP sensor connector is disconnected. • Switch the ignition ON (engine off or on). • Measure the voltage at the intake CMP sensor terminal C (wiring harness-side). • Is the voltage **B+**?	Yes	Go to the next step.
		No	Inspect the ENGINE1 15 A fuse. • If the fuse is blown: — Repair or replace the wiring harness for a possible short to ground. — Replace the fuse. • If the fuse is deteriorated: — Replace the fuse. • If the fuse is normal: — Repair or replace the wiring harness for a possible open circuit. Go to Step 13.

ON-BOARD DIAGNOSTIC [SKYACTIV-G 2.0]

STEP	INSPECTION		ACTION
5	**INSPECT INTAKE CMP SENSOR SIGNAL CIRCUIT FOR SHORT TO GROUND** • Verify that the intake CMP sensor connector is disconnected. • Switch the ignition to off. • Inspect for continuity between intake CMP sensor terminal A (wiring harness-side) and body ground. • Is there continuity?	Yes	If the short to ground circuit could be detected in the wiring harness: • Repair or replace the wiring harness for a possible short to ground. If the short to ground circuit could not be detected in the wiring harness: • Replace the PCM (short to ground in the PCM internal circuit). (See 01-40-10 PCM REMOVAL/INSTALLATION [SKYACTIV-G 2.0].) Go to Step 13.
		No	Go to the next step.
6	**INSPECT PCM CONNECTOR CONDITION** • Disconnect the PCM connector. • Inspect for poor connection (such as damaged/pulled-out pins, corrosion). • Is there any malfunction?	Yes	Repair or replace the connector and/or terminals, then go to Step 13.
		No	Go to the next step.
7	**INSPECT INTAKE CMP SENSOR SIGNAL CIRCUIT FOR SHORT TO POWER SUPPLY** • Verify that the intake CMP sensor and PCM connectors are disconnected. • Switch the ignition ON (engine off or on). • Measure the voltage at the intake CMP sensor terminal A (wiring harness-side). • Is the voltage **0 V**?	Yes	Go to the next step.
		No	Repair or replace the wiring harness for a possible short to power supply, then go to Step 13.
8	**INSPECT INTAKE CMP SENSOR SIGNAL CIRCUIT AND GROUND CIRCUIT FOR SHORT TO EACH OTHER** • Verify that the intake CMP sensor and PCM connectors are disconnected. • Switch the ignition to off. • Inspect for continuity between intake CMP sensor terminals A and B (wiring harness-side). • Is there continuity?	Yes	Repair or replace the wiring harness for a possible short to each other, then go to Step 13.
		No	Go to the next step.
9	**INSPECT INTAKE CMP SENSOR CIRCUIT FOR OPEN CIRCUIT** • Verify that the intake CMP sensor and PCM connectors are disconnected. • Inspect for continuity between the following terminals (wiring harness-side): — Intake CMP sensor terminal A—PCM terminal 1Y — Intake CMP sensor terminal B—PCM terminal 1AC • Is there continuity?	Yes	Go to the next step.
		No	Repair or replace the wiring harness for a possible open circuit, then go to Step 13.
10	**INSPECT INTAKE CMP SENSOR** • Inspect the intake CMP sensor. (See 01-40-62 CAMSHAFT POSITION (CMP) SENSOR INSPECTION [SKYACTIV-G 2.0].) • Is there any malfunction?	Yes	Replace the intake CMP sensor, then go to Step 13. (See 01-40-61 CAMSHAFT POSITION (CMP) SENSOR REMOVAL/INSTALLATION [SKYACTIV-G 2.0].)
		No	Go to the next step.
11	**INSPECT CKP SENSOR CONNECTOR CONDITION** • Switch the ignition to off. • Disconnect the CKP sensor connector. • Inspect for poor connection (such as damaged/pulled-out pins, corrosion). • Is there any malfunction?	Yes	Repair or replace the connector and/or terminals, then go to Step 13.
		No	Go to the next step.

ON-BOARD DIAGNOSTIC [SKYACTIV-G 2.0]

STEP	INSPECTION		ACTION
12	**VERIFY VALVE TIMING MECHANISM INSTALLATION** • Verify the valve timing mechanism installation for the following parts: — Timing chain — Intake camshaft sprocket lock bolt — Crankshaft pulley lock bolt • Is the valve timing mechanism installed correctly?	Yes	Go to the next step.
		No	Reinstall the following parts correctly, then go to the next step. • Timing chain • Intake camshaft sprocket • Crankshaft pulley
13	**VERIFY DTC TROUBLESHOOTING COMPLETED** • Make sure to reconnect all disconnected connectors. • Clear the DTC from the PCM memory using the M-MDS. (See 01-02-12 AFTER REPAIR PROCEDURE [SKYACTIV-G 2.0].) • Start the engine. • Perform the KOER self test. (See 01-02-12 KOEO/KOER SELF TEST [SKYACTIV-G 2.0].) • Is the same DTC present?	Yes	Repeat the inspection from Step 1. • If the malfunction recurs, replace the PCM. (See 01-40-10 PCM REMOVAL/INSTALLATION [SKYACTIV-G 2.0].) Go to the next step.
		No	Go to the next step.
14	**VERIFY AFTER REPAIR PROCEDURE** • Perform the “AFTER REPAIR PROCEDURE”. (See 01-02-12 AFTER REPAIR PROCEDURE [SKYACTIV-G 2.0].) • Are any DTCs present?	Yes	Go to the applicable DTC inspection. (See 01-02-14 DTC TABLE [SKYACTIV-G 2.0].)
		No	DTC troubleshooting completed.

DTC P0365:00 [SKYACTIV-G 2.0]

id0102h1008700

DTC P0365:00	Exhaust CMP sensor circuit problem
DETECTION CONDITION	• Exhaust CMP sensor input signal pattern, received while crankshaft rotates **24 times**, is incorrect. • Cylinder identification is not completed while the crankshaft rotates **13 times**. **Diagnostic support note** • This is a continuous monitor (CCM). • The check engine light illuminates if the PCM detects the above malfunction condition during the first drive cycle. • FREEZE FRAME DATA (Mode 2)/Snapshot data is available. • The DTC is stored in the PCM memory.
FAIL-SAFE FUNCTION	• Stops the fuel injection. • Stops the ignition.
POSSIBLE CAUSE	• Exhaust CMP sensor connector or terminals malfunction • Short to ground or open circuit in exhaust CMP sensor power supply circuit — Short to ground in wiring harness between ENGINE2 15 A fuse and exhaust CMP sensor terminal C — ENGINE2 15 A fuse malfunction — Open circuit in wiring harness between main relay terminal C and exhaust CMP sensor terminal C • Short to ground in wiring harness between exhaust CMP sensor terminal A and PCM terminal 1T • PCM connector or terminals malfunction • Short to power supply in wiring harness between exhaust CMP sensor terminal A and PCM terminal 1T • Exhaust CMP sensor signal circuit and ground circuit are shorted to each other • Open circuit in wiring harness between the following terminals: — Exhaust CMP sensor terminal A—PCM terminal 1T — Exhaust CMP sensor terminal B—PCM terminal 1X • Exhaust CMP sensor malfunction — Exhaust CMP sensor is dirty — Exhaust CMP sensor pulse wheel malfunction • CKP sensor connector or terminals malfunction • Hydraulic variable valve timing mechanism not installed correctly — Loose timing chain or improper valve timing — Loose exhaust camshaft sprocket lock bolt — Loose crankshaft pulley lock bolt • PCM malfunction

ON-BOARD DIAGNOSTIC [SKYACTIV-G 2.0]

DTC P0365:00	Exhaust CMP sensor circuit problem

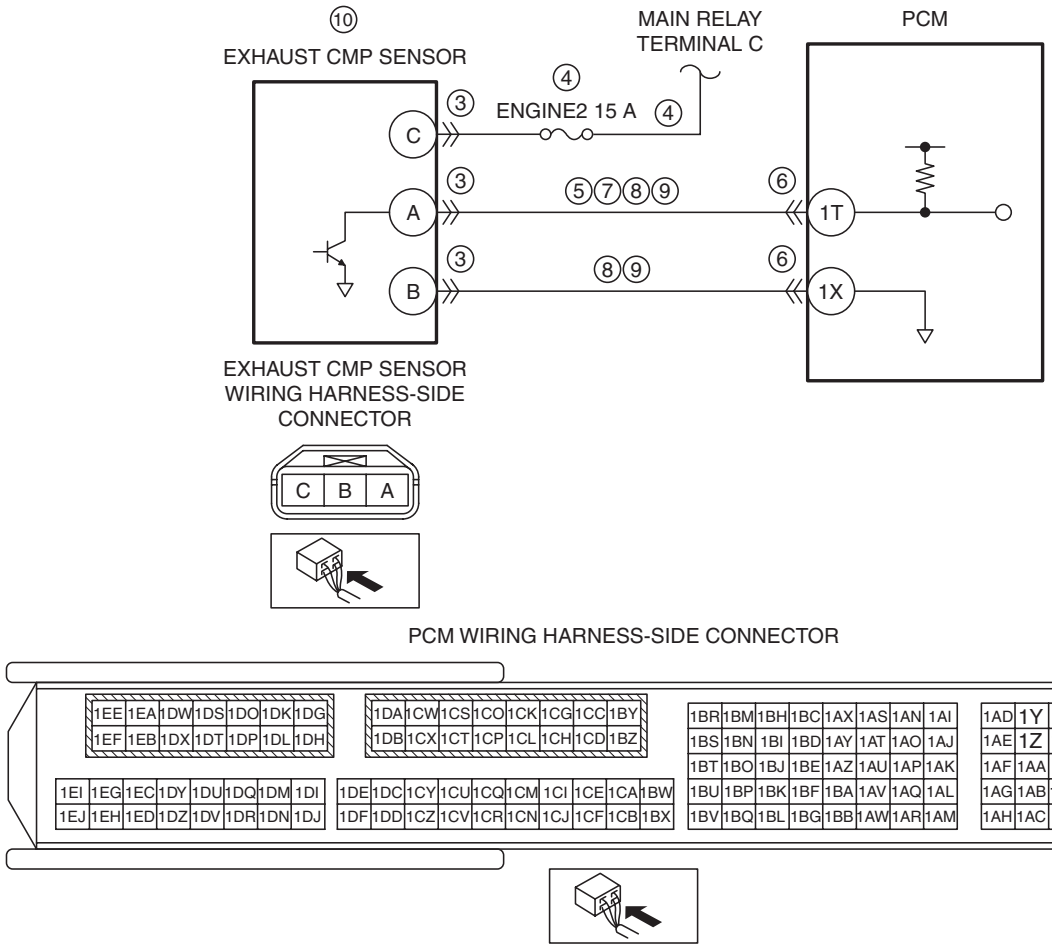

Diagnostic Procedure

STEP	INSPECTION		ACTION
1	**VERIFY FREEZE FRAME DATA (MODE 2)/ SNAPSHOT DATA HAS BEEN RECORDED** • Has the FREEZE FRAME DATA (Mode 2)/ snapshot data been recorded?	Yes	Go to the next step.
		No	Record the FREEZE FRAME DATA (Mode 2)/snapshot data on the repair order, then go to the next step.
2	**VERIFY RELATED SERVICE INFORMATION AVAILABILITY** • Verify related Service Information availability. • Is any related Service Information available?	Yes	Perform repair or diagnosis according to the available Service Information. • If the vehicle is not repaired, go to the next step.
		No	Go to the next step.
3	**INSPECT EXHAUST CMP SENSOR CONNECTOR CONDITION** • Switch the ignition to off. • Disconnect the exhaust CMP sensor connector. • Inspect for poor connection (such as damaged/ pulled-out pins, corrosion). • Is there any malfunction?	Yes	Repair or replace the connector and/or terminals, then go to Step 13.
		No	Go to the next step.

ON-BOARD DIAGNOSTIC [SKYACTIV-G 2.0]

STEP	INSPECTION		ACTION
4	**INSPECT EXHAUST CMP SENSOR POWER SUPPLY CIRCUIT FOR SHORT TO GROUND OR OPEN CIRCUIT** • Verify that the exhaust CMP sensor connector is disconnected. • Switch the ignition ON (engine off or on). • Measure the voltage at the exhaust CMP sensor terminal C (wiring harness-side). • Is the voltage **B+**?	Yes	Go to the next step.
		No	Inspect the ENGINE2 15 A fuse. • If the fuse is blown: — Repair or replace the wiring harness for a possible short to ground. — Replace the fuse. • If the fuse is deteriorated: — Replace the fuse. • If the fuse is normal: — Repair or replace the wiring harness for a possible open circuit. Go to Step 13.
5	**INSPECT EXHAUST CMP SENSOR SIGNAL CIRCUIT FOR SHORT TO GROUND** • Verify that the exhaust CMP sensor connector is disconnected. • Switch the ignition to off. • Inspect for continuity between exhaust CMP sensor terminal A (wiring harness-side) and body ground. • Is there continuity?	Yes	If the short to ground circuit could be detected in the wiring harness: • Repair or replace the wiring harness for a possible short to ground. If the short to ground circuit could not be detected in the wiring harness: • Replace the PCM (short to ground in the PCM internal circuit). (See 01-40-10 PCM REMOVAL/INSTALLATION [SKYACTIV-G 2.0].) Go to Step 13.
		No	Go to the next step.
6	**INSPECT PCM CONNECTOR CONDITION** • Disconnect the PCM connector. • Inspect for poor connection (such as damaged/pulled-out pins, corrosion). • Is there any malfunction?	Yes	Repair or replace the connector and/or terminals, then go to Step 13.
		No	Go to the next step.
7	**INSPECT EXHAUST CMP SENSOR SIGNAL CIRCUIT FOR SHORT TO POWER SUPPLY** • Verify that the exhaust CMP sensor and PCM connectors are disconnected. • Switch the ignition ON (engine off or on). • Measure the voltage at the exhaust CMP sensor terminal A (wiring harness-side). • Is the voltage **0 V**?	Yes	Go to the next step.
		No	Repair or replace the wiring harness for a possible short to power supply, then go to Step 13.
8	**INSPECT EXHAUST CMP SENSOR SIGNAL CIRCUIT AND GROUND CIRCUIT FOR SHORT TO EACH OTHER** • Verify that the exhaust CMP sensor and PCM connectors are disconnected. • Switch the ignition to off. • Inspect for continuity between exhaust CMP sensor terminals A and B (wiring harness-side). • Is there continuity?	Yes	Repair or replace the wiring harness for a possible short to each other, then go to Step 13.
		No	Go to the next step.
9	**INSPECT EXHAUST CMP SENSOR CIRCUIT FOR OPEN CIRCUIT** • Verify that the exhaust CMP sensor and PCM connectors are disconnected. • Inspect for continuity between the following terminals (wiring harness-side): — Exhaust CMP sensor terminal A—PCM terminal 1T — Exhaust CMP sensor terminal B—PCM terminal 1X • Is there continuity?	Yes	Go to the next step.
		No	Repair or replace the wiring harness for a possible open circuit, then go to Step 13.
10	**INSPECT EXHAUST CMP SENSOR** • Inspect the exhaust CMP sensor. (See 01-40-62 CAMSHAFT POSITION (CMP) SENSOR INSPECTION [SKYACTIV-G 2.0].) • Is there any malfunction?	Yes	Replace the exhaust CMP sensor, then go to Step 13. (See 01-40-61 CAMSHAFT POSITION (CMP) SENSOR REMOVAL/INSTALLATION [SKYACTIV-G 2.0].)
		No	Go to the next step.

ON-BOARD DIAGNOSTIC [SKYACTIV-G 2.0]

STEP	INSPECTION		ACTION
11	**INSPECT CKP SENSOR CONNECTOR CONDITION** • Switch the ignition to off. • Disconnect the CKP sensor connector. • Inspect for poor connection (such as damaged/ pulled-out pins, corrosion). • Is there any malfunction?	Yes	Repair or replace the connector and/or terminals, then go to Step 13.
		No	Go to the next step.
12	**VERIFY VALVE TIMING MECHANISM INSTALLATION** • Verify the valve timing mechanism installation for the following parts: — Timing chain — Exhaust camshaft sprocket lock bolt — Crankshaft pulley lock bolt • Is the valve timing mechanism installed correctly?	Yes	Go to the next step.
		No	Reinstall the following parts correctly, then go to the next step. • Timing chain • Exhaust camshaft sprocket • Crankshaft pulley
13	**VERIFY DTC TROUBLESHOOTING COMPLETED** • Make sure to reconnect all disconnected connectors. • Clear the DTC from the PCM memory using the M-MDS. (See 01-02-12 AFTER REPAIR PROCEDURE [SKYACTIV-G 2.0].) • Start the engine. • Perform the KOER self test. (See 01-02-12 KOEO/KOER SELF TEST [SKYACTIV-G 2.0].) • Is the same DTC present?	Yes	Repeat the inspection from Step 1. • If the malfunction recurs, replace the PCM. (See 01-40-10 PCM REMOVAL/INSTALLATION [SKYACTIV-G 2.0].) Go to the next step.
		No	Go to the next step.
14	**VERIFY AFTER REPAIR PROCEDURE** • Perform the “AFTER REPAIR PROCEDURE”. (See 01-02-12 AFTER REPAIR PROCEDURE [SKYACTIV-G 2.0].) • Are any DTCs present?	Yes	Go to the applicable DTC inspection. (See 01-02-14 DTC TABLE [SKYACTIV-G 2.0].)
		No	DTC troubleshooting completed.

ON-BOARD DIAGNOSTIC [SKYACTIV-G 2.0]

DTC P0421:00 [SKYACTIV-G 2.0]

id0102h1704400

DTC P0421:00	Warm up catalyst system efficiency below threshold
DETECTION CONDITION	• The PCM compares the number of the A/F sensor and HO2S inversions for a predetermined time to detect the inversion ratio. It does this by monitoring the HO2S inversion counts when the following conditions are met. If the inversion ratio is below specification, the PCM determine that the catalyst system has deteriorated. — The A/F sensor inversion counts is as prescribed when the following monitoring conditions are met: — The accumulated occurrence time of the following monitoring conditions has exceeded the prescribed time limit: **MONITORING CONDITIONS** • Calculated TWC temperature: **above 400 °C {752 °F}** • Engine speed: **1,100—3,000 rpm** • LOAD: **19—63 %** (at engine speed of **1,500 rpm**) **Diagnostic support note** • This is an intermittent monitor (catalyst). • The check engine light illuminates if the PCM detects the above malfunction condition in two consecutive drive cycles or in one drive cycle while the DTC for the same malfunction has been stored in the PCM. • PENDING CODE is available if the PCM detects the above malfunction condition during first drive cycle. • FREEZE FRAME DATA (Mode 2)/Snapshot data is available. • The DTC is stored in the PCM memory.
FAIL-SAFE FUNCTION	—
POSSIBLE CAUSE	• Exhaust system leakage • A/F sensor loose • HO2S loose • TWC deterioration or malfunction • PCM malfunction
SYSTEM WIRING DIAGRAM	—

Diagnostic Procedure

STEP	INSPECTION		ACTION
1	**VERIFY FREEZE FRAME DATA (MODE 2)/ SNAPSHOT DATA AND DIAGNOSTIC MONITORING TEST RESULTS HAVE BEEN RECORDED** • Have the FREEZE FRAME DATA (Mode 2)/ snapshot data and DIAGNOSTIC MONITORING TEST RESULTS (catalyst related) been recorded?	Yes	Go to the next step.
		No	Record the FREEZE FRAME DATA (Mode 2)/snapshot data and DIAGNOSTIC MONITORING TEST RESULTS on the repair order, then go to the next step.
2	**VERIFY RELATED SERVICE INFORMATION AVAILABILITY** • Verify related Service Information availability. • Is any related Service Information available?	Yes	Perform repair or diagnosis according to the available Service Information. • If the vehicle is not repaired, go to the next step.
		No	Go to the next step.
3	**VERIFY RELATED PENDING CODE AND/OR DTC** • Switch the ignition to off, then to ON (engine off). • Perform the Pending Trouble Code Access Procedure and DTC Reading Procedure. (See 01-02-8 ON-BOARD DIAGNOSTIC TEST [SKYACTIV-G 2.0].) • Are any other PENDING CODEs and/or DTCs present?	Yes	Go to the applicable PENDING CODE or DTC inspection. (See 01-02-14 DTC TABLE [SKYACTIV-G 2.0].)
		No	Go to the next step.
4	**INSPECT EXHAUST SYSTEM FOR LEAKAGE** • Visually inspect for exhaust leakage in the exhaust system. • Is there any leakage?	Yes	Repair or replace the malfunctioning part according to the inspection results, then go to Step 7.
		No	Go to the next step.
5	**INSPECT INSTALLATION OF A/F SENSOR AND HO2S** • Inspect installation of A/F sensor and HO2S. • Are the A/F sensor and HO2S installed securely?	Yes	Go to the next step.
		No	Retighten the A/F sensor and/or HO2S, then go to Step 7. (See 01-40-52 AIR FUEL RATIO (A/F) SENSOR REMOVAL/INSTALLATION [SKYACTIV-G 2.0].) (See 01-40-56 HEATED OXYGEN SENSOR (HO2S) REMOVAL/INSTALLATION [SKYACTIV-G 2.0].)

ON-BOARD DIAGNOSTIC [SKYACTIV-G 2.0]

STEP	INSPECTION		ACTION
6	**VERIFY WHETHER MALFUNCTION IS IN TWC OR ELSEWHERE** • Perform the Idle Mixture Inspection. (See 01-10A-4 ENGINE TUNE-UP [SKYACTIV-G 2.0].) • Is there any malfunction?	Yes	Perform the symptom troubleshooting “NO.15 EMISSION COMPLIANCE”. (See 01-03-84 NO.15 EMISSION COMPLIANCE [SKYACTIV-G 2.0].) • If there is any malfunction: — Repair or replace the malfunctioning part according to the inspection results. • If there is no malfunction: — Replace the TWC. (See 01-15A-2 EXHAUST SYSTEM REMOVAL/INSTALLATION [SKYACTIV-G 2.0].) Go to the next step.
		No	Go to the next step.
7	**VERIFY DTC TROUBLESHOOTING COMPLETED** • Make sure to reconnect all disconnected connectors. • Clear the DTC from the PCM memory using the M-MDS. (See 01-02-12 AFTER REPAIR PROCEDURE [SKYACTIV-G 2.0].) • Perform the Drive Mode 03 (Variable Valve Timing, A/F Sensor Heater, HO2S Heater, A/F Sensor, HO2S and TWC Repair Verification Drive Mode). (See 01-02-13 OBD DRIVE MODE [SKYACTIV-G 2.0].) • Is the PENDING CODE for this DTC present?	Yes	Repeat the inspection from Step 1. • If the malfunction recurs, replace the PCM. (See 01-40-10 PCM REMOVAL/INSTALLATION [SKYACTIV-G 2.0].) Go to the next step.
		No	Go to the next step.
8	**VERIFY AFTER REPAIR PROCEDURE** • Perform the “AFTER REPAIR PROCEDURE”. (See 01-02-12 AFTER REPAIR PROCEDURE [SKYACTIV-G 2.0].) • Are any DTCs present?	Yes	Go to the applicable DTC inspection. (See 01-02-14 DTC TABLE [SKYACTIV-G 2.0].)
		No	DTC troubleshooting completed.

ON-BOARD DIAGNOSTIC [SKYACTIV-G 2.0]

DTC P0443:00 [SKYACTIV-G 2.0]

id0102h1704500

DTC P0443:00	Purge solenoid valve circuit problem
DETECTION CONDITION	• The PCM monitors the purge solenoid valve control signal voltage and current. If the following conditions are met, the PCM determines that there is the purge solenoid valve control circuit problem. — The PCM turns the purge solenoid valve off, but the voltage of the purge solenoid valve control signal remains low. — The PCM turns the purge solenoid valve on, but the current of the purge solenoid valve control signal remains high. **Diagnostic support note** • This is a continuous monitor (CCM). • The check engine light illuminates if the PCM detects the above malfunction condition in two consecutive drive cycles or in one drive cycle while the DTC for the same malfunction has been stored in the PCM. • PENDING CODE is available if the PCM detects the above malfunction condition during first drive cycle. • FREEZE FRAME DATA (Mode 2)/Snapshot data is available. • The DTC is stored in the PCM memory.
FAIL-SAFE FUNCTION	—
POSSIBLE CAUSE	• Purge solenoid valve connector or terminals malfunction • Short to ground or open circuit in purge solenoid valve power supply circuit — Short to ground in wiring harness between ENGINE2 15 A fuse and purge solenoid valve terminal B — ENGINE2 15 A fuse malfunction — Open circuit in wiring harness between main relay terminal C and purge solenoid valve terminal B • Short to ground in wiring harness between purge solenoid valve terminal A and PCM terminal 1AI • PCM connector or terminals malfunction • Short to power supply in wiring harness between purge solenoid valve terminal A and PCM terminal 1AI • Open circuit in wiring harness between purge solenoid valve terminal A and PCM terminal 1AI • Purge solenoid valve malfunction • PCM malfunction

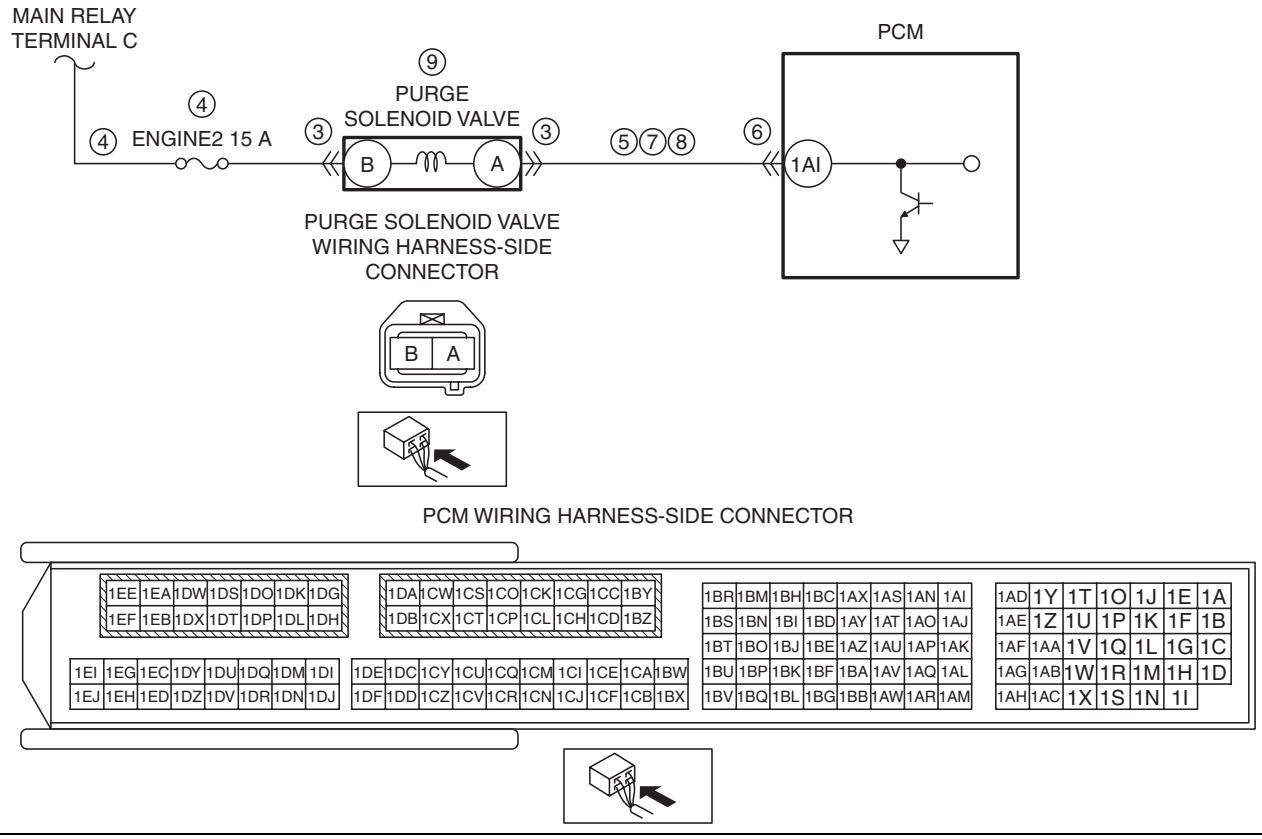

ON-BOARD DIAGNOSTIC [SKYACTIV-G 2.0]

Diagnostic Procedure

STEP	INSPECTION		ACTION
1	**VERIFY FREEZE FRAME DATA (MODE 2)/ SNAPSHOT DATA HAS BEEN RECORDED** • Has the FREEZE FRAME DATA (Mode 2)/ snapshot data been recorded?	Yes	Go to the next step.
		No	Record the FREEZE FRAME DATA (Mode 2)/snapshot data on the repair order, then go to the next step.
2	**VERIFY RELATED SERVICE INFORMATION AVAILABILITY** • Verify related Service Information availability. • Is any related Service Information available?	Yes	Perform repair or diagnosis according to the available Service Information. • If the vehicle is not repaired, go to the next step.
		No	Go to the next step.
3	**INSPECT PURGE SOLENOID VALVE CONNECTOR CONDITION** • Switch the ignition to off. • Disconnect the purge solenoid valve connector. • Inspect for poor connection (such as damaged/ pulled-out pins, corrosion). • Is there any malfunction?	Yes	Repair or replace the connector and/or terminals, then go to Step 10.
		No	Go to the next step.
4	**INSPECT PURGE SOLENOID VALVE POWER SUPPLY CIRCUIT FOR SHORT TO GROUND OR OPEN CIRCUIT** • Verify that the purge solenoid valve connector is disconnected. • Switch the ignition ON (engine off or on). • Measure the voltage at the purge solenoid valve terminal B (wiring harness-side). • Is the voltage **B+**?	Yes	Go to the next step.
		No	Inspect the ENGINE2 15 A fuse. • If the fuse is blown: — Repair or replace the wiring harness for a possible short to ground. — Replace the fuse. • If the fuse is deteriorated: — Replace the fuse. • If the fuse is normal: — Repair or replace the wiring harness for a possible open circuit. Go to Step 10.
5	**INSPECT PURGE SOLENOID VALVE CONTROL CIRCUIT FOR SHORT TO GROUND** • Verify that the purge solenoid valve connector is disconnected. • Switch the ignition to off. • Inspect for continuity between purge solenoid valve terminal A (wiring harness-side) and body ground. • Is there continuity?	Yes	If the short to ground circuit could be detected in the wiring harness: • Repair or replace the wiring harness for a possible short to ground. If the short to ground circuit could not be detected in the wiring harness: • Replace the PCM (short to ground in the PCM internal circuit). (See 01-40-10 PCM REMOVAL/INSTALLATION [SKYACTIV-G 2.0].) Go to Step 10.
		No	Go to the next step.
6	**INSPECT PCM CONNECTOR CONDITION** • Disconnect the PCM connector. • Inspect for poor connection (such as damaged/ pulled-out pins, corrosion). • Is there any malfunction?	Yes	Repair or replace the connector and/or terminals, then go to Step 10.
		No	Go to the next step.
7	**INSPECT PURGE SOLENOID VALVE CONTROL CIRCUIT FOR SHORT TO POWER SUPPLY** • Verify that the purge solenoid valve and PCM connectors are disconnected. • Switch the ignition ON (engine off or on). • Measure the voltage at the purge solenoid valve terminal A (wiring harness-side). • Is the voltage **0 V**?	Yes	Go to the next step.
		No	Repair or replace the wiring harness for a possible short to power supply, then go to Step 10.
8	**INSPECT PURGE SOLENOID VALVE CONTROL CIRCUIT FOR OPEN CIRCUIT** • Verify that the purge solenoid valve and PCM connectors are disconnected. • Inspect for continuity between purge solenoid valve terminal A (wiring harness-side) and PCM terminal 1AI (wiring harness-side). • Is there continuity?	Yes	Go to the next step.
		No	Repair or replace the wiring harness for a possible open circuit, then go to Step 10.
9	**INSPECT PURGE SOLENOID VALVE** • Inspect the purge solenoid valve. (See 01-16A-12 PURGE SOLENOID VALVE INSPECTION [SKYACTIV-G 2.0].) • Is there any malfunction?	Yes	Replace the purge solenoid valve, then go to the next step. (See 01-16A-10 PURGE SOLENOID VALVE REMOVAL/ INSTALLATION [SKYACTIV-G 2.0].)
		No	Go to the next step.

ON-BOARD DIAGNOSTIC [SKYACTIV-G 2.0]

STEP	INSPECTION		ACTION
10	**VERIFY DTC TROUBLESHOOTING COMPLETED** • Make sure to reconnect all disconnected connectors. • Clear the DTC from the PCM memory using the M-MDS. (See 01-02-12 AFTER REPAIR PROCEDURE [SKYACTIV-G 2.0].) • Start the engine. • Perform the KOER self test. (See 01-02-12 KOEO/KOER SELF TEST [SKYACTIV-G 2.0].) • Is the PENDING CODE for this DTC present?	Yes	Repeat the inspection from Step 1. • If the malfunction recurs, replace the PCM. (See 01-40-10 PCM REMOVAL/INSTALLATION [SKYACTIV-G 2.0].) Go to the next step.
		No	Go to the next step.
11	**VERIFY AFTER REPAIR PROCEDURE** • Perform the “AFTER REPAIR PROCEDURE”. (See 01-02-12 AFTER REPAIR PROCEDURE [SKYACTIV-G 2.0].) • Are any DTCs present?	Yes	Go to the applicable DTC inspection. (See 01-02-14 DTC TABLE [SKYACTIV-G 2.0].)
		No	DTC troubleshooting completed.

ON-BOARD DIAGNOSTIC [SKYACTIV-G 2.0]

DTC P0461:00 [SKYACTIV-G 2.0]

id0102h1301500

DTC P0461:00	**Fuel gauge sender unit circuit range/performance problem**
DETECTION CONDITION	• The PCM monitors the fuel tank level difference before and after the PCM-calculated fuel consumption has reached **more than 25 L {26 US qt, 22 Imp qt}**. If the difference is **less than 5 %**, the PCM determines that there is a fuel gauge sender unit circuit range/performance problem. **Diagnostic support note** • This is a continuous monitor (CCM). • The check engine light illuminates if the PCM detects the above malfunction condition in two consecutive drive cycles or in one drive cycle while the DTC for the same malfunction has been stored in the PCM. • PENDING CODE is available if the PCM detects the above malfunction condition during first drive cycle. • FREEZE FRAME DATA (Mode 2)/Snapshot data is available. • The DTC is stored in the PCM memory.
FAIL-SAFE FUNCTION	—
POSSIBLE CAUSE	• Fuel gauge sender unit malfunction • Instrument cluster malfunction • PCM malfunction
SYSTEM WIRING DIAGRAM	—

Diagnostic Procedure

STEP	INSPECTION		ACTION
1	**VERIFY FREEZE FRAME DATA (MODE 2)/ SNAPSHOT DATA HAS BEEN RECORDED** • Has the FREEZE FRAME DATA (Mode 2)/ snapshot data been recorded?	Yes	Go to the next step.
		No	Record the FREEZE FRAME DATA (Mode 2)/snapshot data on the repair order, then go to the next step.
2	**VERIFY RELATED SERVICE INFORMATION AVAILABILITY** • Verify related Service Information availability. • Is any related Service Information available?	Yes	Perform repair or diagnosis according to the available Service Information. • If the vehicle is not repaired, go to the next step.
		No	Go to the next step.
3	**INSPECT FUEL GAUGE SENDER UNIT** • Switch the ignition to off. • Inspect the fuel gauge sender unit. (See 09-22-34 FUEL GAUGE SENDER UNIT INSPECTION [2WD].) (See 09-22-36 FUEL GAUGE SENDER UNIT INSPECTION [4WD].) • Is there any malfunction?	Yes	Replace the fuel gauge sender unit, then go to Step 5. (See 09-22-23 FUEL GAUGE SENDER UNIT REMOVAL/ INSTALLATION [2WD].) (See 09-22-27 FUEL GAUGE SENDER UNIT REMOVAL/ INSTALLATION [4WD].)
		No	Go to the next step.
4	**INSPECT INSTRUMENT CLUSTER** • Inspect the instrument cluster. (See 09-22-11 INSTRUMENT CLUSTER INSPECTION.) • Is there any malfunction?	Yes	Replace the instrument cluster, then go to the next step. (See 09-22-6 INSTRUMENT CLUSTER REMOVAL/ INSTALLATION.)
		No	Go to the next step.

ON-BOARD DIAGNOSTIC [SKYACTIV-G 2.0]

STEP	INSPECTION		ACTION
5	**VERIFY DTC TROUBLESHOOTING COMPLETED** • Make sure to reconnect all disconnected connectors. • Clear the DTC from the PCM memory using the M-MDS. (See 01-02-12 AFTER REPAIR PROCEDURE [SKYACTIV-G 2.0].) • Start the engine and warm it up completely. **Caution** • **While performing this step, always operate the vehicle in a safe and lawful manner.** • **When the M-MDS is used to observe monitor system status while driving, be sure to have another technician with you, or record the data in the M-MDS using the PID/DATA MONITOR AND RECORD capturing function and inspect later.** • Drive the vehicle under the snapshot data condition. • Perform the Pending Trouble Code Access Procedure. (See 01-02-8 ON-BOARD DIAGNOSTIC TEST [SKYACTIV-G 2.0].) • Is the PENDING CODE for this DTC present?	Yes	Repeat the inspection from Step 1. • If the malfunction recurs, replace the PCM. (See 01-40-10 PCM REMOVAL/INSTALLATION [SKYACTIV-G 2.0].) Go to the next step.
		No	Go to the next step.
6	**VERIFY AFTER REPAIR PROCEDURE** • Perform the “AFTER REPAIR PROCEDURE”. (See 01-02-12 AFTER REPAIR PROCEDURE [SKYACTIV-G 2.0].) • Are any DTCs present?	Yes	Go to the applicable DTC inspection. (See 01-02-14 DTC TABLE [SKYACTIV-G 2.0].)
		No	DTC troubleshooting completed.

ON-BOARD DIAGNOSTIC [SKYACTIV-G 2.0]

DTC P0462:00 [SKYACTIV-G 2.0]

id0102h1301600

DTC P0462:00	**Fuel gauge sender unit circuit low input**
DETECTION CONDITION	• The PCM monitors the fuel level signal and fuel gauge sender unit output voltage from the instrument cluster. If the PCM detects a fuel level or fuel gauge sender unit output voltage that is too low, the PCM determines that the fuel gauge sender unit circuit has a malfunction. **Diagnostic support note** • This is a continuous monitor (CCM). • The check engine light illuminates if the PCM detects the above malfunction condition in two consecutive drive cycles or in one drive cycle while the DTC for the same malfunction has been stored in the PCM. • PENDING CODE is available if the PCM detects the above malfunction condition during first drive cycle. • FREEZE FRAME DATA (Mode 2)/Snapshot data is available. • The DTC is stored in the PCM memory.
FAIL-SAFE FUNCTION	—
POSSIBLE CAUSE	• Fuel gauge sender unit malfunction • Instrument cluster malfunction • PCM malfunction
SYSTEM WIRING DIAGRAM	—

Diagnostic Procedure

STEP	INSPECTION		ACTION
1	**VERIFY FREEZE FRAME DATA (MODE 2)/ SNAPSHOT DATA HAS BEEN RECORDED** • Has the FREEZE FRAME DATA (Mode 2)/ snapshot data been recorded?	Yes	Go to the next step.
		No	Record the FREEZE FRAME DATA (Mode 2)/snapshot data on the repair order, then go to the next step.
2	**VERIFY RELATED SERVICE INFORMATION AVAILABILITY** • Verify related Service Information availability. • Is any related Service Information available?	Yes	Perform repair or diagnosis according to the available Service Information. • If the vehicle is not repaired, go to the next step.
		No	Go to the next step.
3	**INSPECT FUEL GAUGE SENDER UNIT** • Switch the ignition to off. • Inspect the fuel gauge sender unit. (See 09-22-34 FUEL GAUGE SENDER UNIT INSPECTION [2WD].) (See 09-22-36 FUEL GAUGE SENDER UNIT INSPECTION [4WD].) • Is there any malfunction?	Yes	Replace the fuel gauge sender unit, then go to Step 5. (See 09-22-23 FUEL GAUGE SENDER UNIT REMOVAL/ INSTALLATION [2WD].) (See 09-22-27 FUEL GAUGE SENDER UNIT REMOVAL/ INSTALLATION [4WD].)
		No	Go to the next step.
4	**INSPECT INSTRUMENT CLUSTER** • Inspect the instrument cluster. (See 09-22-11 INSTRUMENT CLUSTER INSPECTION.) • Is there any malfunction?	Yes	Replace the instrument cluster, then go to the next step. (See 09-22-6 INSTRUMENT CLUSTER REMOVAL/ INSTALLATION.)
		No	Go to the next step.
5	**VERIFY DTC TROUBLESHOOTING COMPLETED** • Make sure to reconnect all disconnected connectors. • Clear the DTC from the PCM memory using the M-MDS. (See 01-02-12 AFTER REPAIR PROCEDURE [SKYACTIV-G 2.0].) • Perform the KOEO or KOER self test. (See 01-02-12 KOEO/KOER SELF TEST [SKYACTIV-G 2.0].) • Is the PENDING CODE for this DTC present?	Yes	Repeat the inspection from Step 1. • If the malfunction recurs, replace the PCM. (See 01-40-10 PCM REMOVAL/INSTALLATION [SKYACTIV-G 2.0].) Go to the next step.
		No	Go to the next step.
6	**VERIFY AFTER REPAIR PROCEDURE** • Perform the “AFTER REPAIR PROCEDURE”. (See 01-02-12 AFTER REPAIR PROCEDURE [SKYACTIV-G 2.0].) • Are any DTCs present?	Yes	Go to the applicable DTC inspection. (See 01-02-14 DTC TABLE [SKYACTIV-G 2.0].)
		No	DTC troubleshooting completed.

ON-BOARD DIAGNOSTIC [SKYACTIV-G 2.0]

DTC P0463:00 [SKYACTIV-G 2.0]

id0102h1301700

DTC P0463:00	**Fuel gauge sender unit circuit high input**
DETECTION CONDITION	• The PCM monitors the fuel level signal and fuel gauge sender unit output voltage from the instrument cluster. If the PCM detects a fuel level or fuel gauge sender unit output voltage that is too high, the PCM determines that the fuel gauge sender unit circuit has a malfunction. **Diagnostic support note** • This is a continuous monitor (CCM). • The check engine light illuminates if the PCM detects the above malfunction condition in two consecutive drive cycles or in one drive cycle while the DTC for the same malfunction has been stored in the PCM. • PENDING CODE is available if the PCM detects the above malfunction condition during first drive cycle. • FREEZE FRAME DATA (Mode 2)/Snapshot data is available. • The DTC is stored in the PCM memory.
FAIL-SAFE FUNCTION	—
POSSIBLE CAUSE	• Fuel gauge sender unit malfunction • Instrument cluster malfunction • PCM malfunction
SYSTEM WIRING DIAGRAM	—

Diagnostic Procedure

STEP	INSPECTION		ACTION
1	**VERIFY FREEZE FRAME DATA (MODE 2)/ SNAPSHOT DATA HAS BEEN RECORDED** • Has the FREEZE FRAME DATA (Mode 2)/ snapshot data been recorded?	Yes	Go to the next step.
		No	Record the FREEZE FRAME DATA (Mode 2)/snapshot data on the repair order, then go to the next step.
2	**VERIFY RELATED SERVICE INFORMATION AVAILABILITY** • Verify related Service Information availability. • Is any related Service Information available?	Yes	Perform repair or diagnosis according to the available Service Information. • If the vehicle is not repaired, go to the next step.
		No	Go to the next step.
3	**INSPECT FUEL GAUGE SENDER UNIT** • Switch the ignition to off. • Inspect the fuel gauge sender unit. (See 09-22-34 FUEL GAUGE SENDER UNIT INSPECTION [2WD].) (See 09-22-36 FUEL GAUGE SENDER UNIT INSPECTION [4WD].) • Is there any malfunction?	Yes	Replace the fuel gauge sender unit, then go to Step 5. (See 09-22-23 FUEL GAUGE SENDER UNIT REMOVAL/ INSTALLATION [2WD].) (See 09-22-27 FUEL GAUGE SENDER UNIT REMOVAL/ INSTALLATION [4WD].)
		No	Go to the next step.
4	**INSPECT INSTRUMENT CLUSTER** • Inspect the instrument cluster. (See 09-22-11 INSTRUMENT CLUSTER INSPECTION.) • Is there any malfunction?	Yes	Replace the instrument cluster, then go to the next step. (See 09-22-6 INSTRUMENT CLUSTER REMOVAL/ INSTALLATION.)
		No	Go to the next step.
5	**VERIFY DTC TROUBLESHOOTING COMPLETED** • Make sure to reconnect all disconnected connectors. • Clear the DTC from the PCM memory using the M-MDS. (See 01-02-12 AFTER REPAIR PROCEDURE [SKYACTIV-G 2.0].) • Perform the KOEO or KOER self test. (See 01-02-12 KOEO/KOER SELF TEST [SKYACTIV-G 2.0].) • Is the PENDING CODE for this DTC present?	Yes	Repeat the inspection from Step 1. • If the malfunction recurs, replace the PCM. (See 01-40-10 PCM REMOVAL/INSTALLATION [SKYACTIV-G 2.0].) Go to the next step.
		No	Go to the next step.
6	**VERIFY AFTER REPAIR PROCEDURE** • Perform the “AFTER REPAIR PROCEDURE”. (See 01-02-12 AFTER REPAIR PROCEDURE [SKYACTIV-G 2.0].) • Are any DTCs present?	Yes	Go to the applicable DTC inspection. (See 01-02-14 DTC TABLE [SKYACTIV-G 2.0].)
		No	DTC troubleshooting completed.

ON-BOARD DIAGNOSTIC [SKYACTIV-G 2.0]

DTC P0480:00 [SKYACTIV-G 2.0]

id0102h1704600

DTC P0480:00	**Cooling fan relay No.1 control circuit malfunction**
DETECTION CONDITION	• The PCM monitors the cooling fan relay No.1 control signal voltage and current. If the following conditions are met, the PCM determines that there is the cooling fan relay No.1 control circuit problem. — The PCM turns the cooling fan relay No.1 off, but the voltage of the cooling fan relay No.1 control signal remains low for **5 s**. — The PCM turns the cooling fan relay No.1 on, but the current of the cooling fan relay No.1 control signal remains high for **5 s**. **Diagnostic support note** • This is a continuous monitor (other). • The check engine light does not illuminate. • FREEZE FRAME DATA (Mode 2)/Snapshot data is not available. • The DTC is stored in the PCM memory.
FAIL-SAFE FUNCTION	—
POSSIBLE CAUSE	• Cooling fan relay No.1 malfunction • Short to ground or open circuit in cooling fan relay No.1 power supply circuit — Short to ground in wiring harness between ENGINE3 15 A fuse and cooling fan relay No.1 terminal A — ENGINE3 15 A fuse malfunction — Open circuit in wiring harness between main relay terminal C and cooling fan relay No.1 terminal A • Short to ground in wiring harness between cooling fan relay No.1 terminal E and PCM terminal 2AU • PCM connector or terminals malfunction • Short to power supply in wiring harness between cooling fan relay No.1 terminal E and PCM terminal 2AU • Open circuit in wiring harness between cooling fan relay No.1 terminal E and PCM terminal 2AU • PCM malfunction

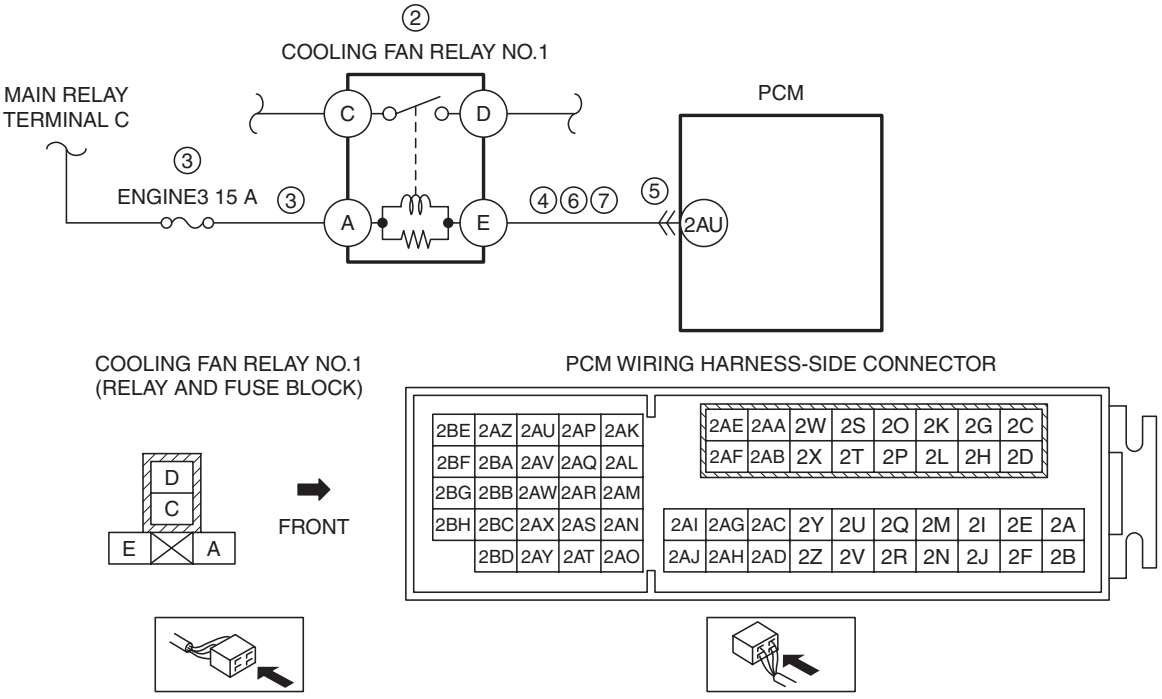

Diagnostic Procedure

STEP	INSPECTION		ACTION
1	**VERIFY RELATED SERVICE INFORMATION AVAILABILITY** • Verify related Service Information availability. • Is any related Service Information available?	Yes	Perform repair or diagnosis according to the available Service Information. • If the vehicle is not repaired, go to the next step.
		No	Go to the next step.
2	**INSPECT COOLING FAN RELAY NO.1** • Switch the ignition to off. • Remove the cooling fan relay No.1. • Inspect the cooling fan relay No.1. (See 09-21-29 RELAY INSPECTION.) • Is there any malfunction?	Yes	Replace the cooling fan relay No.1, then go to Step 8.
		No	Go to the next step.

ON-BOARD DIAGNOSTIC [SKYACTIV-G 2.0]

STEP	INSPECTION		ACTION
3	**INSPECT COOLING FAN RELAY NO.1 POWER SUPPLY CIRCUIT FOR SHORT TO GROUND OR OPEN CIRCUIT** • Cooling fan relay No.1 is removed. • Switch the ignition ON (engine off or on). • Measure the voltage at the cooling fan relay No.1 terminal A (wiring harness-side). • Is the voltage **B+**?	Yes	Go to the next step.
		No	Inspect the ENGINE3 15 A fuse. • If the fuse is blown: — Repair or replace the wiring harness for a possible short to ground. — Replace the fuse. • If the fuse is deteriorated: — Replace the fuse. • If the fuse is normal: — Repair or replace the wiring harness for a possible open circuit. Go to Step 8.
4	**INSPECT COOLING FAN RELAY NO.1 SIGNAL CIRCUIT FOR SHORT TO GROUND** • Cooling fan relay No.1 is removed. • Switch the ignition to off. • Inspect for continuity between cooling fan relay No.1 terminal E (wiring harness-side) and body ground. • Is there continuity?	Yes	If the short to ground circuit could be detected in the wiring harness: • Repair or replace the wiring harness for a possible short to ground. If the short to ground circuit could not be detected in the wiring harness: • Replace the PCM (short to ground in the PCM internal circuit). (See 01-40-10 PCM REMOVAL/INSTALLATION [SKYACTIV-G 2.0].) Go to Step 8.
		No	Go to the next step.
5	**INSPECT PCM CONNECTOR CONDITION** • Disconnect the PCM connector. • Inspect for poor connection (such as damaged/pulled-out pins, corrosion). • Is there any malfunction?	Yes	Repair or replace the connector and/or terminals, then go to Step 8.
		No	Go to the next step.
6	**INSPECT COOLING FAN RELAY NO.1 SIGNAL CIRCUIT FOR SHORT TO POWER SUPPLY** • Cooling fan relay No.1 is removed. • Verify that the PCM connector is disconnected. • Switch the ignition ON (engine off or on). • Measure the voltage at the cooling fan relay No.1 terminal E (wiring harness-side). • Is the voltage **0 V**?	Yes	Go to the next step.
		No	Repair or replace the wiring harness for a possible short to power supply, then go to Step 8.
7	**INSPECT COOLING FAN RELAY NO.1 SIGNAL CIRCUIT FOR OPEN CIRCUIT** • Cooling fan relay No.1 is removed. • Verify that the PCM connector is disconnected. • Switch the ignition to off. • Inspect for continuity between cooling fan relay No.1 terminal E (wiring harness-side) and PCM terminal 2AU (wiring harness-side). • Is there continuity?	Yes	Go to the next step.
		No	Repair or replace the wiring harness for a possible open circuit, then go to the next step.
8	**VERIFY DTC TROUBLESHOOTING COMPLETED** • Make sure to reconnect all disconnected connectors. • Clear the DTC from the PCM memory using the M-MDS. (See 01-02-12 AFTER REPAIR PROCEDURE [SKYACTIV-G 2.0].) • Perform the KOEO or KOER self test. (See 01-02-12 KOEO/KOER SELF TEST [SKYACTIV-G 2.0].) • Is the same DTC present?	Yes	Repeat the inspection from Step 1. • If the malfunction recurs, replace the PCM. (See 01-40-10 PCM REMOVAL/INSTALLATION [SKYACTIV-G 2.0].) Go to the next step.
		No	Go to the next step.
9	**VERIFY AFTER REPAIR PROCEDURE** • Perform the “AFTER REPAIR PROCEDURE”. (See 01-02-12 AFTER REPAIR PROCEDURE [SKYACTIV-G 2.0].) • Are any DTCs present?	Yes	Go to the applicable DTC inspection. (See 01-02-14 DTC TABLE [SKYACTIV-G 2.0].)
		No	DTC troubleshooting completed.

ON-BOARD DIAGNOSTIC [SKYACTIV-G 2.0]

DTC P0482:00 [SKYACTIV-G 2.0]

id0102h1850100

DTC P0482:00	Cooling fan relay No.2 and No.3 control circuit malfunction
DETECTION CONDITION	• The PCM monitors the cooling fan relay No.2 and No.3 control signal voltage and current. If the following conditions are met, the PCM determines that there is the cooling fan relay No.2 and No.3 control circuit problem. — The PCM turns the cooling fan relay No.2 and No.3 off, but the voltage of the cooling fan relay No.2 and No.3 control signal remains low for **5 s**. — The PCM turns the cooling fan relay No.2 and No.3 on, but the current of the cooling fan relay No.2 and No.3 control signal remains high for **5 s**. **Diagnostic support note** • This is a continuous monitor (other). • The check engine light does not illuminate. • FREEZE FRAME DATA (Mode 2)/Snapshot data is not available. • The DTC is stored in the PCM memory.
FAIL-SAFE FUNCTION	—
POSSIBLE CAUSE	• Cooling fan relay No.2 and/or No.3 malfunction • Short to ground or open circuit in cooling fan relay No.2 and/or No.3 power supply circuit — Short to ground in wiring harness between the following terminals: • ENGINE3 15 A fuse—Cooling fan relay No.2 terminal A • ENGINE3 15 A fuse—Cooling fan relay No.3 terminal A — ENGINE3 15 A fuse malfunction — Open circuit in wiring harness between the following terminals: • Main relay terminal C—Cooling fan relay No.2 terminal A • Main relay terminal C—Cooling fan relay No.3 terminal A • Short to ground in wiring harness between the following terminals: — Cooling fan relay No.2 terminal E—PCM terminal 2AV — Cooling fan relay No.3 terminal E—PCM terminal 2AV • PCM connector or terminals malfunction • Short to power supply in wiring harness between the following terminals: — Cooling fan relay No.2 terminal E—PCM terminal 2AV — Cooling fan relay No.3 terminal E—PCM terminal 2AV • Open circuit in wiring harness between the following terminals: — Cooling fan relay No.2 terminal E—PCM terminal 2AV — Cooling fan relay No.3 terminal E—PCM terminal 2AV • PCM malfunction

ON-BOARD DIAGNOSTIC [SKYACTIV-G 2.0]

DTC P0482:00	Cooling fan relay No.2 and No.3 control circuit malfunction

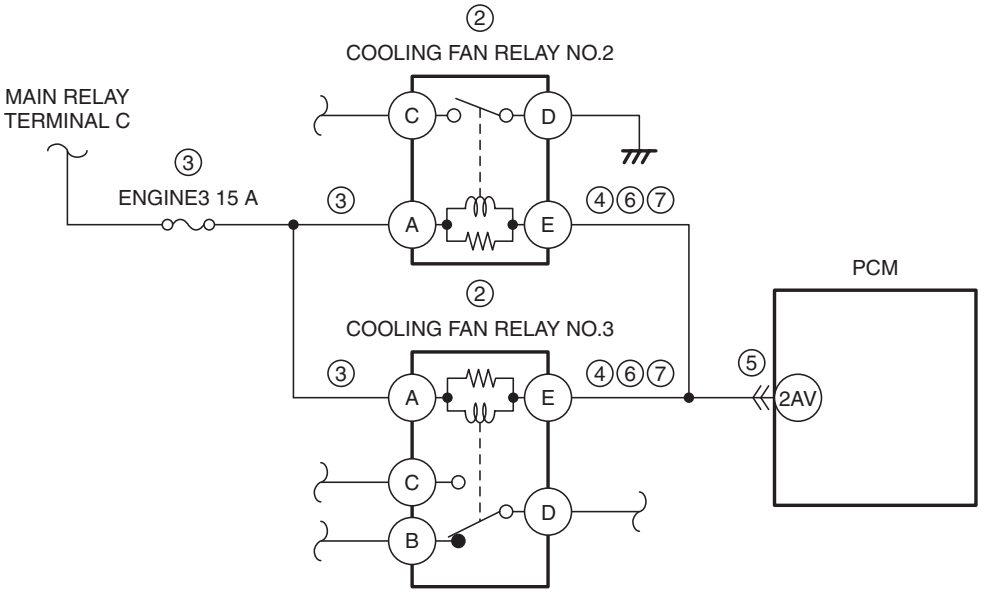

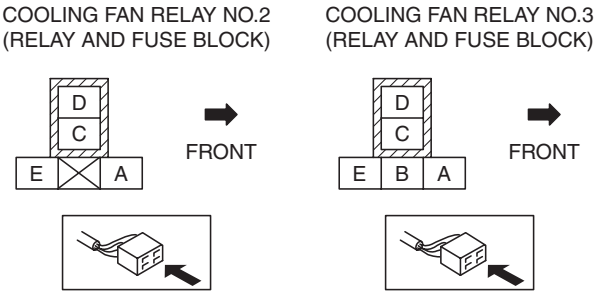

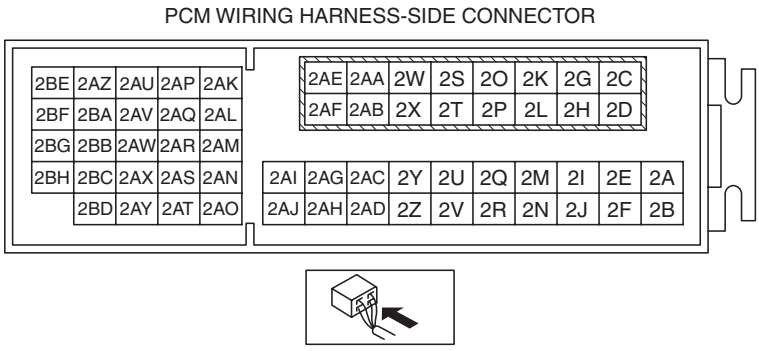

Diagnostic Procedure

STEP	INSPECTION		ACTION
1	**VERIFY RELATED SERVICE INFORMATION AVAILABILITY** • Verify related Service Information availability. • Is any related Service Information available?	Yes	Perform repair or diagnosis according to the available Service Information. • If the vehicle is not repaired, go to the next step.
		No	Go to the next step.
2	**INSPECT COOLING FAN RELAY NO.2 AND NO.3** • Switch the ignition to off. • Remove the cooling fan relay No.2 and No.3. • Inspect the cooling fan relay No.2 and No.3. (See 09-21-29 RELAY INSPECTION.) • Is there any malfunction?	Yes	Replace the cooling fan relay No.2 and/or No.3, then go to Step 8.
		No	Go to the next step.

ON-BOARD DIAGNOSTIC [SKYACTIV-G 2.0]

STEP	INSPECTION		ACTION
3	**INSPECT COOLING FAN RELAY NO.2 AND NO.3 POWER SUPPLY CIRCUIT FOR SHORT TO GROUND OR OPEN CIRCUIT** • Cooling fan relay No.2 and No.3 are removed. • Switch the ignition ON (engine off or on). • Measure the voltage at the following terminals (wiring harness-side): — Cooling fan relay No.2 terminal A — Cooling fan relay No.3 terminal A • Is the voltage **B+**?	Yes	Go to the next step.
		No	Inspect the ENGINE3 15 A fuse. • If the fuse is melted: — Repair or replace the wiring harness for a possible short to ground. — Replace the fuse. • If the fuse is deteriorated: — Replace the fuse. • If the fuse is normal: — Repair or replace the wiring harness for a possible open circuit. Go to Step 8.
4	**INSPECT COOLING FAN RELAY NO.2 AND NO.3 SIGNAL CIRCUIT FOR SHORT TO GROUND** • Cooling fan relay No.2 and No.3 are removed. • Switch the ignition to off. • Inspect for continuity between the following terminals (wiring harness-side) and body ground: — Cooling fan relay No.2 terminal E — Cooling fan relay No.3 terminal E • Is there continuity?	Yes	If the short to ground circuit could be detected in the wiring harness: • Repair or replace the wiring harness for a possible short to ground. If the short to ground circuit could not be detected in the wiring harness: • Replace the PCM (short to ground in the PCM internal circuit). (See 01-40-10 PCM REMOVAL/INSTALLATION [SKYACTIV-G 2.0].) Go to Step 8.
		No	Go to the next step.
5	**INSPECT PCM CONNECTOR CONDITION** • Disconnect the PCM connector. • Inspect for poor connection (such as damaged/pulled-out pins, corrosion). • Is there any malfunction?	Yes	Repair or replace the connector and/or terminals, then go to Step 8.
		No	Go to the next step.
6	**INSPECT COOLING FAN RELAY NO.2 AND NO.3 SIGNAL CIRCUIT FOR SHORT TO POWER SUPPLY** • Cooling fan relay No.2 and No.3 are removed. • Verify that the PCM connector is disconnected. • Switch the ignition ON (engine off or on). • Measure the voltage at the following terminals (wiring harness-side): — Cooling fan relay No.2 terminal E — Cooling fan relay No.3 terminal E • Is the voltage **0 V**?	Yes	Go to the next step.
		No	Repair or replace the wiring harness for a possible short to power supply, then go to Step 8.
7	**INSPECT COOLING FAN RELAY NO.2 AND NO.3 SIGNAL CIRCUIT FOR OPEN CIRCUIT** • Cooling fan relay No.2 and No.3 are removed. • Verify that the PCM connector is disconnected. • Switch the ignition to off. • Inspect for continuity between the following terminals (wiring harness-side): — Cooling fan relay No.2 terminal E—PCM terminal 2AV — Cooling fan relay No.3 terminal E—PCM terminal 2AV • Is there continuity?	Yes	Go to the next step.
		No	Repair or replace the wiring harness for a possible open circuit, then go to the next step.
8	**VERIFY DTC TROUBLESHOOTING COMPLETED** • Make sure to reconnect all disconnected connectors. • Clear the DTC from the PCM memory using the M-MDS. (See 01-02-12 AFTER REPAIR PROCEDURE [SKYACTIV-G 2.0].) • Perform the KOEO or KOER self test. (See 01-02-12 KOEO/KOER SELF TEST [SKYACTIV-G 2.0].) • Is the same DTC present?	Yes	Repeat the inspection from Step 1. • If the malfunction recurs, replace the PCM. (See 01-40-10 PCM REMOVAL/INSTALLATION [SKYACTIV-G 2.0].) Go to the next step.
		No	Go to the next step.

ON-BOARD DIAGNOSTIC [SKYACTIV-G 2.0]

STEP	INSPECTION		ACTION
9	**VERIFY AFTER REPAIR PROCEDURE** • Perform the “AFTER REPAIR PROCEDURE”. (See 01-02-12 AFTER REPAIR PROCEDURE [SKYACTIV-G 2.0].) • Are any DTCs present?	Yes	Go to the applicable DTC inspection. (See 01-02-14 DTC TABLE [SKYACTIV-G 2.0].)
		No	DTC troubleshooting completed.

DTC P0500:00 [SKYACTIV-G 2.0]

id0102h1704800

DTC P0500:00	VSS circuit problem
DETECTION CONDITION	• If an error in the wheel speed signal from the DSC HU/CM is detected by CAN when the following conditions are met: — Neutral switch No.1, neutral switch No.2 and CPP switch: OFF (MTX) — Shift position: except P or N position (ATX) — Absolute load: **above 40 %** — Engine speed: **above 2,000 rpm** — Brake switch: OFF **Diagnostic support note** • This is a continuous monitor (CCM). • The check engine light illuminates if the PCM detects the above malfunction condition in two consecutive drive cycles or in one drive cycle while the DTC for the same malfunction has been stored in the PCM. • PENDING CODE is available if the PCM detects the above malfunction condition during first drive cycle. • FREEZE FRAME DATA (Mode 2)/Snapshot data is available. • The DTC is stored in the PCM memory.
FAIL-SAFE FUNCTION	• Fixes the vehicle speed for the control at **0 km/h {0 mph}**.
POSSIBLE CAUSE	• DSC HU/CM DTC is stored. — DSC HU/CM connector or terminals malfunction — Front ABS wheel-speed sensor malfunction — DSC HU/CM malfunction • PCM malfunction
SYSTEM WIRING DIAGRAM	—

Diagnostic Procedure

STEP	INSPECTION		ACTION
1	**VERIFY FREEZE FRAME DATA (MODE 2)/ SNAPSHOT DATA HAS BEEN RECORDED** • Has the FREEZE FRAME DATA (Mode 2)/ snapshot data been recorded?	Yes	Go to the next step.
		No	Record the FREEZE FRAME DATA (Mode 2)/snapshot data on the repair order, then go to the next step.
2	**VERIFY RELATED SERVICE INFORMATION AVAILABILITY** • Verify related Service Information availability. • Is any related Service Information available?	Yes	Perform repair or diagnosis according to the available Service Information. • If the vehicle is not repaired, go to the next step.
		No	Go to the next step.
3	**VERIFY STORED DTC IN DSC HU/CM** • Retrieve the DSC HU/CM DTC using the M-MDS. (See 04-02A-7 ON-BOARD DIAGNOSIS [DYNAMIC STABILITY CONTROL (DSC)].) • Are any DTCs present?	Yes	Go to the applicable DTC inspection. (See 04-02A-7 ON-BOARD DIAGNOSIS [DYNAMIC STABILITY CONTROL (DSC)].)
		No	Go to the next step.

ON-BOARD DIAGNOSTIC [SKYACTIV-G 2.0]

STEP	INSPECTION		ACTION
4	**VERIFY DTC TROUBLESHOOTING COMPLETED** • Clear the DTC from the PCM memory using the M-MDS. (See 01-02-12 AFTER REPAIR PROCEDURE [SKYACTIV-G 2.0].) • Start the engine and warm it up completely. • Access the RPM and LOAD PIDs using the M-MDS. (See 01-02-8 ON-BOARD DIAGNOSTIC TEST [SKYACTIV-G 2.0].) • Drive the vehicle under the following conditions for **14 s**. — Neutral switch No.1, neutral switch No.2 and CPP switch: OFF (MTX) — Shift position: except P or N position (ATX) — Absolute load: **above 40 %** — Engine speed: **above 2,000 rpm** — Brake switch: OFF • Perform the Pending Trouble Code Access Procedure. (See 01-02-8 ON-BOARD DIAGNOSTIC TEST [SKYACTIV-G 2.0].) • Is the PENDING CODE for this DTC present?	Yes	Replace the PCM, then go to the next step. (See 01-40-10 PCM REMOVAL/INSTALLATION [SKYACTIV-G 2.0].)
		No	Go to the next step.
5	**VERIFY AFTER REPAIR PROCEDURE** • Perform the “AFTER REPAIR PROCEDURE”. (See 01-02-12 AFTER REPAIR PROCEDURE [SKYACTIV-G 2.0].) • Are any DTCs present?	Yes	Go to the applicable DTC inspection. (See 01-02-14 DTC TABLE [SKYACTIV-G 2.0].)
		No	DTC troubleshooting completed.

ON-BOARD DIAGNOSTIC [SKYACTIV-G 2.0]

DTC P0506:00 [SKYACTIV-G 2.0]

id0102h1705000

DTC P0506:00	IAC system RPM lower than expected
DETECTION CONDITION	• The actual idle speed is lower than expected by **100 rpm** for **14 s**, when the brake pedal is depressed (brake switch is on). **Note** • If the atmospheric pressure is **less than 72.3 kPa {0.737 kgf/cm^2, 10.5 psi}** or the intake air temperature is **below −10 °C {14 °F}**, the PCM cancels the diagnosis of DTC P0506:00. **Diagnostic support note** • This is a continuous monitor (CCM). • The check engine light illuminates if the PCM detects the above malfunction condition in two consecutive drive cycles or in one drive cycle while the DTC for the same malfunction has been stored in the PCM. • PENDING CODE is available if the PCM detects the above malfunction condition during first drive cycle. • FREEZE FRAME DATA (Mode 2)/Snapshot data is available. • The DTC is stored in the PCM memory.
FAIL-SAFE FUNCTION	—
POSSIBLE CAUSE	• A/C magnetic clutch malfunction • Drive-by-wire control system related sensor malfunction — TP sensor malfunction • Air mass measurement system malfunction • Purge solenoid valve malfunction • Air cleaner element restricted • Throttle body passage blockage • Engine malfunction — Insufficient engine compression (over capacity of blow-by gas) — Poor quality fuel • Generator malfunction • PCM malfunction
SYSTEM WIRING DIAGRAM	—

Diagnostic Procedure

STEP	INSPECTION		ACTION
1	**VERIFY FREEZE FRAME DATA (MODE 2)/ SNAPSHOT DATA HAS BEEN RECORDED** • Has the FREEZE FRAME DATA (Mode 2)/ snapshot data been recorded?	Yes	Go to the next step.
		No	Record the FREEZE FRAME DATA (Mode 2)/snapshot data on the repair order, then go to the next step.
2	**VERIFY RELATED SERVICE INFORMATION AVAILABILITY** • Verify related Service Information availability. • Is any related Service Information available?	Yes	Perform repair or diagnosis according to the available Service Information. • If the vehicle is not repaired, go to the next step.
		No	Go to the next step.
3	**VERIFY RELATED PENDING CODE AND/OR DTC** • Switch the ignition to off, then to ON (engine off). • Perform the Pending Trouble Code Access Procedure and DTC Reading Procedure. (See 01-02-8 ON-BOARD DIAGNOSTIC TEST [SKYACTIV-G 2.0].) • Are any other PENDING CODEs and/or DTCs present?	Yes	Go to the applicable PENDING CODE or DTC inspection. (See 01-02-14 DTC TABLE [SKYACTIV-G 2.0].)
		No	Go to the next step.
4	**INSPECT A/C MAGNETIC CLUTCH OPERATION** • Turn the fan switch off. • Is the magnetic clutch still on?	Yes	Perform the symptom troubleshooting “NO.24 A/C IS ALWAYS ON OR A/C COMPRESSOR RUNS CONTINUOUSLY”. (See 01-03-106 NO.24 A/C IS ALWAYS ON OR A/C COMPRESSOR RUNS CONTINUOUSLY [SKYACTIV-G 2.0].)
		No	Go to the next step.

ON-BOARD DIAGNOSTIC [SKYACTIV-G 2.0]

STEP	INSPECTION		ACTION
5	**INSPECT DRIVE-BY-WIRE CONTROL SYSTEM MALFUNCTION** • Inspect the TP sensor. (See 01-40-50 THROTTLE POSITION (TP) SENSOR INSPECTION [SKYACTIV-G 2.0].) • Is there any malfunction?	Yes	Replace the throttle body, then go to Step 11. (See 01-13A-6 INTAKE-AIR SYSTEM REMOVAL/ INSTALLATION [SKYACTIV-G 2.0].)
		No	Go to the next step.
6	**INSPECT PURGE SOLENOID VALVE** • Inspect the purge solenoid valve. (See 01-16A-12 PURGE SOLENOID VALVE INSPECTION [SKYACTIV-G 2.0].) • Is there any malfunction?	Yes	Replace the purge solenoid valve, then go to Step 11. (See 01-16A-10 PURGE SOLENOID VALVE REMOVAL/ INSTALLATION [SKYACTIV-G 2.0].)
		No	Go to the next step.
7	**INSPECT AIR CLEANER ELEMENT** • Remove the air cleaner element with the engine is running. • Does the engine speed increase?	Yes	Clean or replace the air cleaner element, then go to Step 11.
		No	Go to the next step.
8	**INSPECT THROTTLE BODY PASSAGE** • Visually inspect the throttle body passage. • Is the throttle body passage dirty and/or restricted?	Yes	Clean or replace the throttle body passage, then go to Step 11. (See 01-13A-6 INTAKE-AIR SYSTEM REMOVAL/ INSTALLATION [SKYACTIV-G 2.0].)
		No	Go to the next step.
9	**INSPECT ENGINE COMPRESSION** • Inspect the engine compression. (See 01-10A-14 COMPRESSION INSPECTION [SKYACTIV-G 2.0].) • Are compression pressures within specification? **Specification:** • Compression [European (L.H.D. U.K.) specs.] — Standard: **978 kPa {9.97 kgf/cm^2, 142 psi} (300 rpm)** — Minimum: **783 kPa {7.98 kgf/cm^2, 114 psi} (300 rpm)** — Maximum difference between cylinders: **166 kPa {1.69 kgf/cm^2, 24.1 psi}** • Compression [Except European (L.H.D. U.K.) specs.] — Standard: **885 kPa {9.02 kgf/cm^2, 128 psi} (300 rpm)** — Minimum: **708 kPa {7.22 kgf/cm^2, 103 psi} (300 rpm)** — Maximum difference between cylinders: **150 kPa {1.53 kgf/cm^2, 21.8 psi}** **Note** • Because the SKYACTIV-G 2.0 retards the intake valve closing timing, compression pressure is low.	Yes	Go to the next step.
		No	Overhaul the engine for repairs, then go to Step 11.
10	**INSPECT GENERATOR** • Inspect the generator. (See 01-17A-19 GENERATOR INSPECTION [SKYACTIV-G 2.0].) • Is there any malfunction?	Yes	Repair or replace the malfunctioning part according to the inspection results, then go to the next step. (See 01-17A-25 GENERATOR DISASSEMBLY/ASSEMBLY [SKYACTIV-G 2.0].) (See 01-17A-17 GENERATOR REMOVAL/INSTALLATION [SKYACTIV-G 2.0].)
		No	Go to the next step.

ON-BOARD DIAGNOSTIC [SKYACTIV-G 2.0]

STEP	INSPECTION		ACTION
11	**VERIFY DTC TROUBLESHOOTING COMPLETED** • Make sure to reconnect all disconnected connectors. • Clear the DTC from the PCM memory using the M-MDS. (See 01-02-12 AFTER REPAIR PROCEDURE [SKYACTIV-G 2.0].) • Depress the brake pedal for **14 s or more**. • Perform the Pending Trouble Code Access Procedure. (See 01-02-8 ON-BOARD DIAGNOSTIC TEST [SKYACTIV-G 2.0].) • Is the PENDING CODE for this DTC present?	Yes	Repeat the inspection from Step 1. • If the malfunction recurs, replace the PCM. (See 01-40-10 PCM REMOVAL/INSTALLATION [SKYACTIV-G 2.0].) Go to the next step.
		No	Go to the next step.
12	**VERIFY AFTER REPAIR PROCEDURE** • Perform the “AFTER REPAIR PROCEDURE”. (See 01-02-12 AFTER REPAIR PROCEDURE [SKYACTIV-G 2.0].) • Are any DTCs present?	Yes	Go to the applicable DTC inspection. (See 01-02-14 DTC TABLE [SKYACTIV-G 2.0].)
		No	DTC troubleshooting completed.

DTC P0507:00 [SKYACTIV-G 2.0]

id0102h1705100

DTC P0507:00	IAC system RPM higher than expected
DETECTION CONDITION	• The actual idle speed is higher than expected by **200 rpm** for **14 s**, when the brake pedal is depressed (brake switch is on). **Note** • If the atmospheric pressure is **less than 72.3 kPa {0.737 kgf/cm^2, 10.5 psi}** or the intake air temperature is **below −10 °C {14 °F}**, the PCM cancels the diagnosis of DTC P0507:00. **Diagnostic support note** • This is a continuous monitor (CCM). • The check engine light illuminates if the PCM detects the above malfunction condition in two consecutive drive cycles or in one drive cycle while the DTC for the same malfunction has been stored in the PCM. • PENDING CODE is available if the PCM detects the above malfunction condition during first drive cycle. • FREEZE FRAME DATA (Mode 2)/Snapshot data is available. • The DTC is stored in the PCM memory.
FAIL-SAFE FUNCTION	—
POSSIBLE CAUSE	• Vacuum hose not installed correctly • Drive-by-wire control system related sensor malfunction — TP sensor malfunction • Air mass measurement system malfunction • Throttle valve malfunction (stuck open) • PCM malfunction
SYSTEM WIRING DIAGRAM	—

Diagnostic Procedure

STEP	INSPECTION		ACTION
1	**VERIFY FREEZE FRAME DATA (MODE 2)/ SNAPSHOT DATA HAS BEEN RECORDED** • Has the FREEZE FRAME DATA (Mode 2)/ snapshot data been recorded?	Yes	Go to the next step.
		No	Record the FREEZE FRAME DATA (Mode 2)/snapshot data on the repair order, then go to the next step.
2	**VERIFY RELATED SERVICE INFORMATION AVAILABILITY** • Verify related Service Information availability. • Is any related Service Information available?	Yes	Perform repair or diagnosis according to the available Service Information. • If the vehicle is not repaired, go to the next step.
		No	Go to the next step.

ON-BOARD DIAGNOSTIC [SKYACTIV-G 2.0]

STEP	INSPECTION		ACTION
3	**VERIFY RELATED PENDING CODE AND/OR DTC** • Switch the ignition to off, then to ON (engine off). • Perform the Pending Trouble Code Access Procedure and DTC Reading Procedure. (See 01-02-8 ON-BOARD DIAGNOSTIC TEST [SKYACTIV-G 2.0].) • Are any other PENDING CODEs and/or DTCs present?	Yes	Go to the applicable PENDING CODE or DTC inspection. (See 01-02-14 DTC TABLE [SKYACTIV-G 2.0].)
		No	Go to the next step.
4	**INSPECT VACUUM HOSE CONNECTION** • Visually inspect the vacuum hoses connection. (See 01-13A-4 INTAKE-AIR SYSTEM VACUUM HOSE ROUTING DIAGRAM [SKYACTIV-G 2.0].) • Is there any malfunction?	Yes	Reconnect the vacuum hoses correctly, then go to Step 7.
		No	Go to the next step.
5	**INSPECT DRIVE-BY-WIRE CONTROL SYSTEM MALFUNCTION** • Inspect the TP sensor. (See 01-40-50 THROTTLE POSITION (TP) SENSOR INSPECTION [SKYACTIV-G 2.0].) • Is there any malfunction?	Yes	Replace the throttle body, then go to Step 7. (See 01-13A-6 INTAKE-AIR SYSTEM REMOVAL/INSTALLATION [SKYACTIV-G 2.0].)
		No	Go to the next step.
6	**INSPECT THROTTLE BODY** • Inspect the throttle body. (See 01-13A-13 THROTTLE BODY INSPECTION [SKYACTIV-G 2.0].) • Is there any malfunction?	Yes	Replace the throttle body, then go to the next step. (See 01-13A-6 INTAKE-AIR SYSTEM REMOVAL/INSTALLATION [SKYACTIV-G 2.0].)
		No	Go to the next step.
7	**VERIFY DTC TROUBLESHOOTING COMPLETED** • Make sure to reconnect all disconnected connectors. • Clear the DTC from the PCM memory using the M-MDS. (See 01-02-12 AFTER REPAIR PROCEDURE [SKYACTIV-G 2.0].) • Depress the brake pedal for **14 s or more.** • Perform the Pending Trouble Code Access Procedure. (See 01-02-8 ON-BOARD DIAGNOSTIC TEST [SKYACTIV-G 2.0].) • Is the PENDING CODE for this DTC present?	Yes	Repeat the inspection from Step 1. • If the malfunction recurs, replace the PCM. (See 01-40-10 PCM REMOVAL/INSTALLATION [SKYACTIV-G 2.0].) Go to the next step.
		No	Go to the next step.
8	**VERIFY AFTER REPAIR PROCEDURE** • Perform the “AFTER REPAIR PROCEDURE”. (See 01-02-12 AFTER REPAIR PROCEDURE [SKYACTIV-G 2.0].) • Are any DTCs present?	Yes	Go to the applicable DTC inspection. (See 01-02-14 DTC TABLE [SKYACTIV-G 2.0].)
		No	DTC troubleshooting completed.

ON-BOARD DIAGNOSTIC [SKYACTIV-G 2.0]

DTC P0520:00 [SKYACTIV-G 2.0]

id0102h1008800

DTC P0520:00	**Oil pressure switch circuit problem**
DETECTION CONDITION	• The oil pressure switch is off for a continuous **5 s** even though the engine is stopped. **Diagnostic support note** • This is a continuous monitor (other). • The check engine light does not illuminate. • FREEZE FRAME DATA (Mode 2)/Snapshot data is not available. • The DTC is stored in the PCM memory.
FAIL-SAFE FUNCTION	—
POSSIBLE CAUSE	• Oil pressure switch connector or terminals malfunction • PCM connector or terminals malfunction • Open circuit in wiring harness between oil pressure switch terminal A and PCM terminal 1P • Oil pressure switch malfunction • PCM malfunction

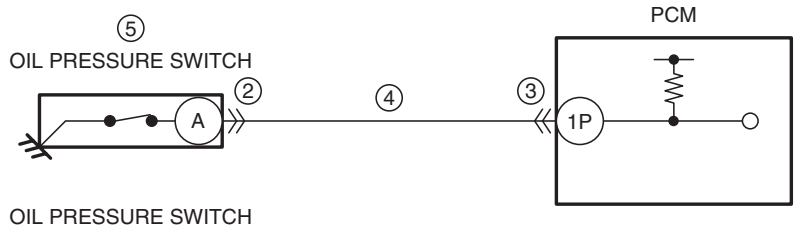

OIL PRESSURE SWITCH WIRING HARNESS-SIDE CONNECTOR

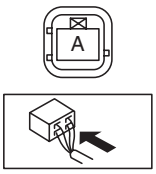

PCM WIRING HARNESS-SIDE CONNECTOR

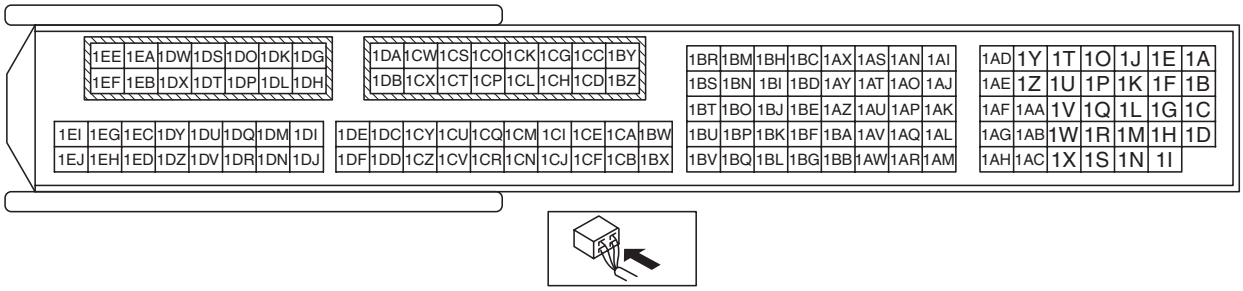

Diagnostic Procedure

STEP	INSPECTION		ACTION
1	**VERIFY RELATED SERVICE INFORMATION AVAILABILITY** • Verify related Service Information availability. • Is any related Service Information available?	Yes	Perform repair or diagnosis according to the available Service Information. • If the vehicle is not repaired, go to the next step.
		No	Go to the next step.
2	**INSPECT OIL PRESSURE SWITCH CONNECTOR CONDITION** • Switch the ignition to off. • Disconnect the oil pressure switch connector. • Inspect for poor connection (such as damaged/ pulled-out pins, corrosion). • Is there any malfunction?	Yes	Repair or replace the connector and/or terminals, then go to Step 6.
		No	Go to the next step.
3	**INSPECT PCM CONNECTOR CONDITION** • Disconnect the PCM connector. • Inspect for poor connection (such as damaged/ pulled-out pins, corrosion). • Is there any malfunction?	Yes	Repair or replace the connector and/or terminals, then go to Step 6.
		No	Go to the next step.

ON-BOARD DIAGNOSTIC [SKYACTIV-G 2.0]

STEP	INSPECTION		ACTION
4	**INSPECT OIL PRESSURE SWITCH SIGNAL CIRCUIT FOR OPEN CIRCUIT** • Verify that the oil pressure switch and PCM connectors are disconnected. • Inspect for continuity between oil pressure switch terminal A (wiring harness-side) and PCM terminal 1P (wiring harness-side). • Is there continuity?	Yes	Go to the next step.
		No	Repair or replace the wiring harness for a possible open circuit, then go to Step 6.
5	**INSPECT OIL PRESSURE SWITCH** • Inspect the oil pressure switch. (See 09-22-40 OIL PRESSURE SWITCH INSPECTION.) • Is there any malfunction?	Yes	Replace the oil pressure switch, then go to the next step. (See 01-11A-10 ENGINE OIL SOLENOID VALVE REMOVAL/INSTALLATION [SKYACTIV-G 2.0].)
		No	Go to the next step.
6	**VERIFY DTC TROUBLESHOOTING COMPLETED** • Make sure to reconnect all disconnected connectors. • Clear the DTC from the PCM memory using the M-MDS. (See 01-02-12 AFTER REPAIR PROCEDURE [SKYACTIV-G 2.0].) • Perform the KOEO self test. (See 01-02-12 KOEO/KOER SELF TEST [SKYACTIV-G 2.0].) • Is the same DTC present?	Yes	Repeat the inspection from Step 1. • If the malfunction recurs, replace the PCM. (See 01-40-10 PCM REMOVAL/INSTALLATION [SKYACTIV-G 2.0].) Go to the next step.
		No	Go to the next step.
7	**VERIFY AFTER REPAIR PROCEDURE** • Perform the “AFTER REPAIR PROCEDURE”. (See 01-02-12 AFTER REPAIR PROCEDURE [SKYACTIV-G 2.0].) • Are any DTCs present?	Yes	Go to the applicable DTC inspection. (See 01-02-14 DTC TABLE [SKYACTIV-G 2.0].)
		No	DTC troubleshooting completed.

ON-BOARD DIAGNOSTIC [SKYACTIV-G 2.0]

DTC P0524:00 [SKYACTIV-G 2.0]

id0102h1339700

DTC P0524:00	**Engine oil pressure too low**
DETECTION CONDITION	• The oil pressure switch is on for a continuous **5 s** with the following condition met: (engine oil pressure warning light illuminates when **1 s** has elapsed) — When engine coolant temperature is **30 °C {86 °F} or less** and engine speed is **above 650 rpm** — When engine coolant temperature is **68 °C {154 °F} or less** and engine speed is **above 1,500 rpm** — When engine coolant temperature is **68 °C {154 °F} or more** and engine speed is **above 2,500 rpm** **Diagnostic support note** • This is a continuous monitor (other). • The check engine light does not illuminate. • FREEZE FRAME DATA (Mode 2)/Snapshot data is not available. • The DTC is stored in the PCM memory.
FAIL-SAFE FUNCTION	—
POSSIBLE CAUSE	• Engine oil leakage • Improper engine oil level • Oil pressure switch connector or terminals malfunction • Short to ground in wiring harness between oil pressure switch terminal A and PCM terminal 1P • PCM connector or terminals malfunction • Oil pressure switch malfunction • Oil pump malfunction • PCM malfunction

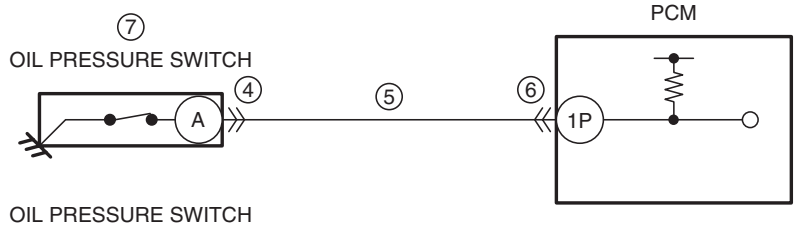

OIL PRESSURE SWITCH WIRING HARNESS-SIDE CONNECTOR

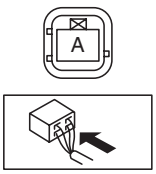

PCM WIRING HARNESS-SIDE CONNECTOR

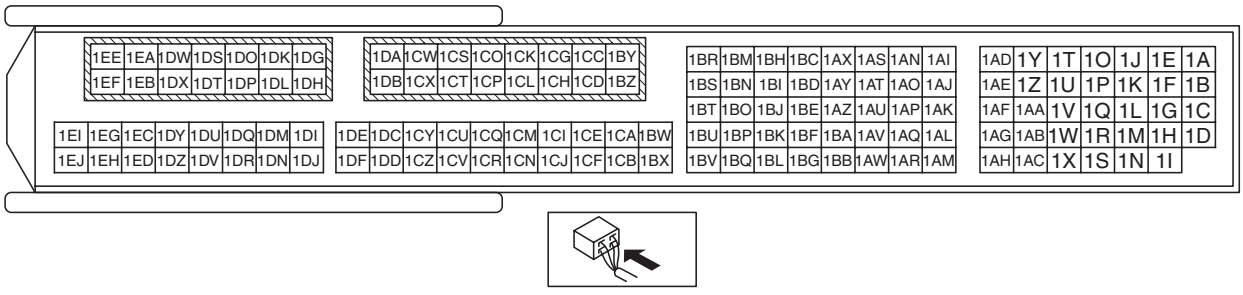

Diagnostic Procedure

STEP	INSPECTION		ACTION
1	**VERIFY RELATED SERVICE INFORMATION AVAILABILITY** • Verify related Service Information availability. • Is any related Service Information available?	Yes	Perform repair or diagnosis according to the available Service Information. • If the vehicle is not repaired, go to the next step.
		No	Go to the next step.
2	**INSPECT ENGINE OIL LEAKAGE** • Start the engine. • Verify that there is no engine oil leakage in the hydraulic circuit. • Is there any leakage?	Yes	Repair or replace the malfunctioning part according to the inspection results, then add genuine motor oil. Go to Step 8.
		No	Go to the next step.

ON-BOARD DIAGNOSTIC [SKYACTIV-G 2.0]

STEP	INSPECTION		ACTION
3	**INSPECT ENGINE OIL LEVEL** • Inspect the engine oil level. (See 01-11A-3 ENGINE OIL LEVEL INSPECTION [SKYACTIV-G 2.0].) • Is the engine oil level sufficient?	Yes	Go to the next step.
		No	Add genuine motor oil, then go to the next step. (See 01-11A-3 ENGINE OIL REPLACEMENT [SKYACTIV-G 2.0].)
4	**INSPECT OIL PRESSURE SWITCH CONNECTOR CONDITION** • Switch the ignition to off. • Disconnect the oil pressure switch connector. • Inspect for poor connection (such as damaged/pulled-out pins, corrosion). • Is there any malfunction?	Yes	Repair or replace the connector and/or terminals, then go to Step 8.
		No	Go to the next step.
5	**INSPECT OIL PRESSURE SWITCH CONTROL CIRCUIT FOR SHORT TO GROUND** • Verify that the oil pressure switch connector is disconnected. • Inspect for continuity between oil pressure switch terminal A (wiring harness-side) and body ground. • Is there continuity?	Yes	If the short to ground circuit could be detected in the wiring harness: • Repair or replace the wiring harness for a possible short to ground. If the short to ground circuit could not be detected in the wiring harness: • Replace the PCM (short to ground in the PCM internal circuit). (See 01-40-10 PCM REMOVAL/INSTALLATION [SKYACTIV-G 2.0].) Go to Step 8.
		No	Go to the next step.
6	**INSPECT PCM CONNECTOR CONDITION** • Disconnect the PCM connector. • Inspect for poor connection (such as damaged/pulled-out pins, corrosion). • Is there any malfunction?	Yes	Repair or replace the connector and/or terminals, then go to Step 8.
		No	Go to the next step.
7	**INSPECT ENGINE OIL PRESSURE** • Inspect the engine oil pressure. (See 01-11A-7 OIL PRESSURE INSPECTION [SKYACTIV-G 2.0].) • Is there any malfunction?	Yes	Replace the oil pump, then go to the next step. (See 01-11A-15 OIL PUMP REMOVAL/INSTALLATION [SKYACTIV-G 2.0].)
		No	Replace the oil pressure switch, then go to the next step. (See 01-11A-10 ENGINE OIL SOLENOID VALVE REMOVAL/INSTALLATION [SKYACTIV-G 2.0].)
8	**VERIFY DTC TROUBLESHOOTING COMPLETED** • Make sure to reconnect all disconnected connectors. • Clear the DTC from the PCM memory using the M-MDS. (See 01-02-12 AFTER REPAIR PROCEDURE [SKYACTIV-G 2.0].) • Drive the vehicle under the following conditions for **5 s**. — Engine speed: **above 2,500 rpm** • Perform the DTC Reading Procedure. (See 01-02-8 ON-BOARD DIAGNOSTIC TEST [SKYACTIV-G 2.0].) • Is the same DTC present?	Yes	Repeat the inspection from Step 1. • If the malfunction recurs, replace the PCM. (See 01-40-10 PCM REMOVAL/INSTALLATION [SKYACTIV-G 2.0].) Go to the next step.
		No	Go to the next step.
9	**VERIFY AFTER REPAIR PROCEDURE** • Perform the “AFTER REPAIR PROCEDURE”. (See 01-02-12 AFTER REPAIR PROCEDURE [SKYACTIV-G 2.0].) • Are any DTCs present?	Yes	Go to the applicable DTC inspection. (See 01-02-14 DTC TABLE [SKYACTIV-G 2.0].)
		No	DTC troubleshooting completed.

ON-BOARD DIAGNOSTIC [SKYACTIV-G 2.0]

DTC P0532:00 [SKYACTIV-G 2.0]

id0102h1850200

DTC P0532:00	Refrigerant pressure sensor circuit low input
DETECTION CONDITION	• The PCM monitors input voltage from the refrigerant pressure sensor when the ignition switch is ON. If the input voltage at the PCM terminal 2AX is **below 0.1 V** for **5 s**, the PCM determines that the refrigerant pressure sensor circuit has a malfunction. **Diagnostic support note** • This is a continuous monitor (other). • The check engine light does not illuminate. • FREEZE FRAME DATA (Mode 2)/Snapshot data is not available. • The DTC is stored in the PCM memory.
FAIL-SAFE FUNCTION	—
POSSIBLE CAUSE	• Refrigerant pressure sensor connector or terminals malfunction • Short to ground in wiring harness between the following terminals: — Refrigerant pressure sensor terminal A—PCM terminal 2BB — Refrigerant pressure sensor terminal B—PCM terminal 2AX • PCM connector or terminals malfunction • Refrigerant pressure sensor signal circuit and ground circuit are shorted to each other • Open circuit in wiring harness between refrigerant pressure sensor terminal A and PCM terminal 2BB • Refrigerant pressure sensor malfunction • PCM malfunction

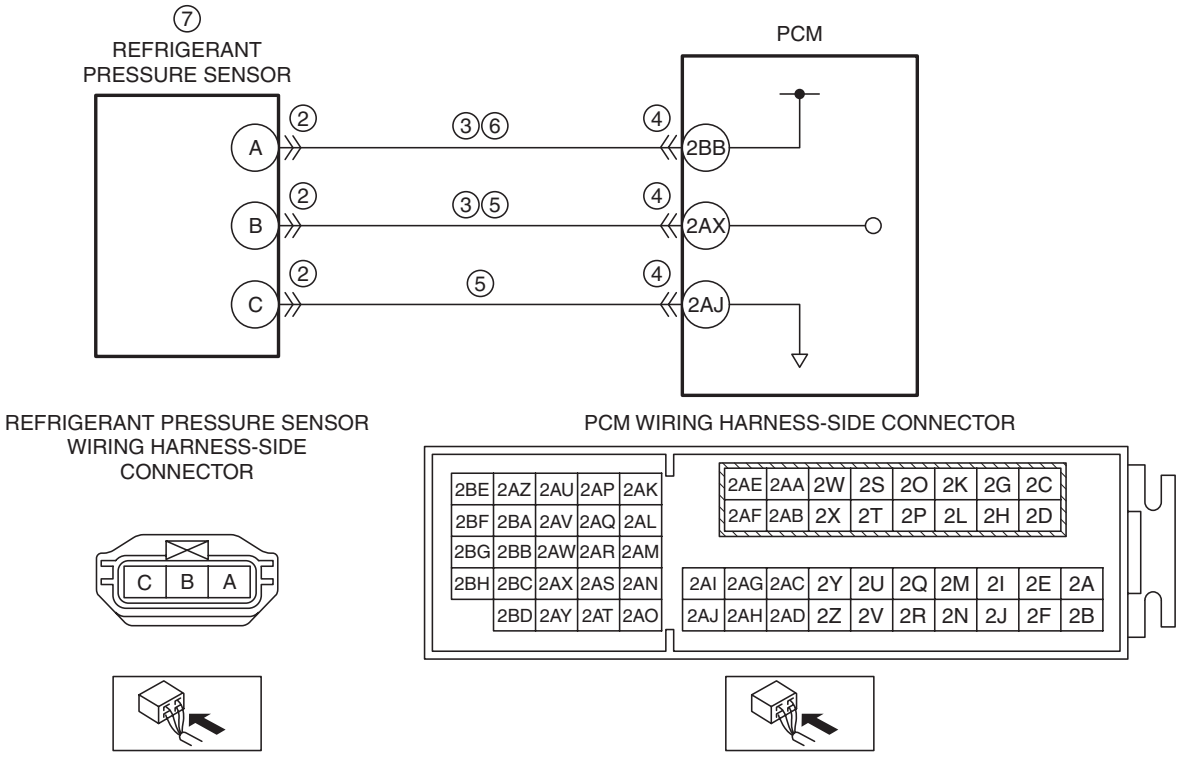

Diagnostic Procedure

STEP	INSPECTION		ACTION
1	**VERIFY RELATED SERVICE INFORMATION AVAILABILITY** • Verify related Service Information availability. • Is any related Service Information available?	Yes	Perform repair or diagnosis according to the available Service Information. • If the vehicle is not repaired, go to the next step.
		No	Go to the next step.
2	**INSPECT REFRIGERANT PRESSURE SENSOR CONNECTOR CONDITION** • Switch the ignition to off. • Disconnect the refrigerant pressure sensor connector. • Inspect for poor connection (such as damaged/ pulled-out pins, corrosion). • Is there any malfunction?	Yes	Repair or replace the connector and/or terminals, then go to Step 8.
		No	Go to the next step.

ON-BOARD DIAGNOSTIC [SKYACTIV-G 2.0]

STEP	INSPECTION		ACTION
3	**INSPECT REFRIGERANT PRESSURE SENSOR CIRCUIT FOR SHORT TO GROUND** • Verify that the refrigerant pressure sensor connector is disconnected. • Inspect for continuity between the following terminals (wiring harness-side) and body ground: — Refrigerant pressure sensor terminal A — Refrigerant pressure sensor terminal B • Is there continuity?	Yes	If the short to ground circuit could be detected in the wiring harness: • Repair or replace the wiring harness for a possible short to ground. If the short to ground circuit could not be detected in the wiring harness: • Replace the PCM (short to ground in the PCM internal circuit). (See 01-40-10 PCM REMOVAL/INSTALLATION [SKYACTIV-G 2.0].) Go to Step 8.
		No	Go to the next step.
4	**INSPECT PCM CONNECTOR CONDITION** • Disconnect the PCM connector. • Inspect for poor connection (such as damaged/pulled-out pins, corrosion). • Is there any malfunction?	Yes	Repair or replace the connector and/or terminals, then go to Step 8.
		No	Go to the next step.
5	**INSPECT REFRIGERANT PRESSURE SENSOR SIGNAL CIRCUIT AND GROUND CIRCUIT FOR SHORT TO EACH OTHER** • Verify that the refrigerant pressure sensor and PCM connectors are disconnected. • Inspect for continuity between refrigerant pressure sensor terminals B and C (wiring harness-side). • Is there continuity?	Yes	Repair or replace the wiring harness for a possible short to each other, then go to Step 8.
		No	Go to the next step.
6	**INSPECT REFRIGERANT PRESSURE SENSOR POWER SUPPLY CIRCUIT FOR OPEN CIRCUIT** • Verify that the refrigerant pressure sensor and PCM connectors are disconnected. • Inspect for continuity between refrigerant pressure sensor terminal A (wiring harness-side) and PCM terminal 2BB (wiring harness-side). • Is there continuity?	Yes	Go to the next step.
		No	Repair or replace the wiring harness for a possible open circuit, then go to Step 8.
7	**INSPECT REFRIGERANT PRESSURE SENSOR** • Inspect the refrigerant pressure sensor. (See 07-40B-14 REFRIGERANT PRESSURE SENSOR INSPECTION [MANUAL AIR CONDITIONER].) (See 07-40A-30 REFRIGERANT PRESSURE SENSOR INSPECTION [FULL-AUTO AIR CONDITIONER].) • Is there any malfunction?	Yes	Replace the refrigerant pressure sensor, then go to the next step. (See 07-40B-13 REFRIGERANT PRESSURE SENSOR REMOVAL/INSTALLATION [MANUAL AIR CONDITIONER].) (See 07-40A-29 REFRIGERANT PRESSURE SENSOR REMOVAL/INSTALLATION [FULL-AUTO AIR CONDITIONER].)
		No	Go to the next step.
8	**VERIFY DTC TROUBLESHOOTING COMPLETED** • Make sure to reconnect all disconnected connectors. • Clear the DTC from the PCM memory using the M-MDS. (See 01-02-12 AFTER REPAIR PROCEDURE [SKYACTIV-G 2.0].) • Perform the KOEO or KOER self test. (See 01-02-12 KOEO/KOER SELF TEST [SKYACTIV-G 2.0].) • Is the same DTC present?	Yes	Repeat the inspection from Step 1. • If the malfunction recurs, replace the PCM. (See 01-40-10 PCM REMOVAL/INSTALLATION [SKYACTIV-G 2.0].) Go to the next step.
		No	Go to the next step.
9	**VERIFY AFTER REPAIR PROCEDURE** • Perform the “AFTER REPAIR PROCEDURE”. (See 01-02-12 AFTER REPAIR PROCEDURE [SKYACTIV-G 2.0].) • Are any DTCs present?	Yes	Go to the applicable DTC inspection. (See 01-02-14 DTC TABLE [SKYACTIV-G 2.0].)
		No	DTC troubleshooting completed.

ON-BOARD DIAGNOSTIC [SKYACTIV-G 2.0]

DTC P0533:00 [SKYACTIV-G 2.0]

id0102h1850300

DTC P0533:00	**Refrigerant pressure sensor circuit high input**
DETECTION CONDITION	• The PCM monitors the input voltage from the refrigerant pressure sensor when the ignition switch is ON. If the input voltage at the PCM terminal 2AX is **above 4.9 V** for **5 s**, the PCM determines that the refrigerant pressure sensor circuit has a malfunction. **Diagnostic support note** • This is a continuous monitor (other). • The check engine light does not illuminate. • FREEZE FRAME DATA (Mode 2)/Snapshot data is not available. • The DTC is stored in the PCM memory.
FAIL-SAFE FUNCTION	—
POSSIBLE CAUSE	• Refrigerant pressure sensor connector or terminals malfunction • PCM connector or terminals malfunction • Refrigerant pressure sensor malfunction • Short to power supply in wiring harness between refrigerant pressure sensor terminal B and PCM terminal 2AX • Open circuit in wiring harness between the following terminals: — Refrigerant pressure sensor terminal B—PCM terminal 2AX — Refrigerant pressure sensor terminal C—PCM terminal 2AJ • PCM malfunction

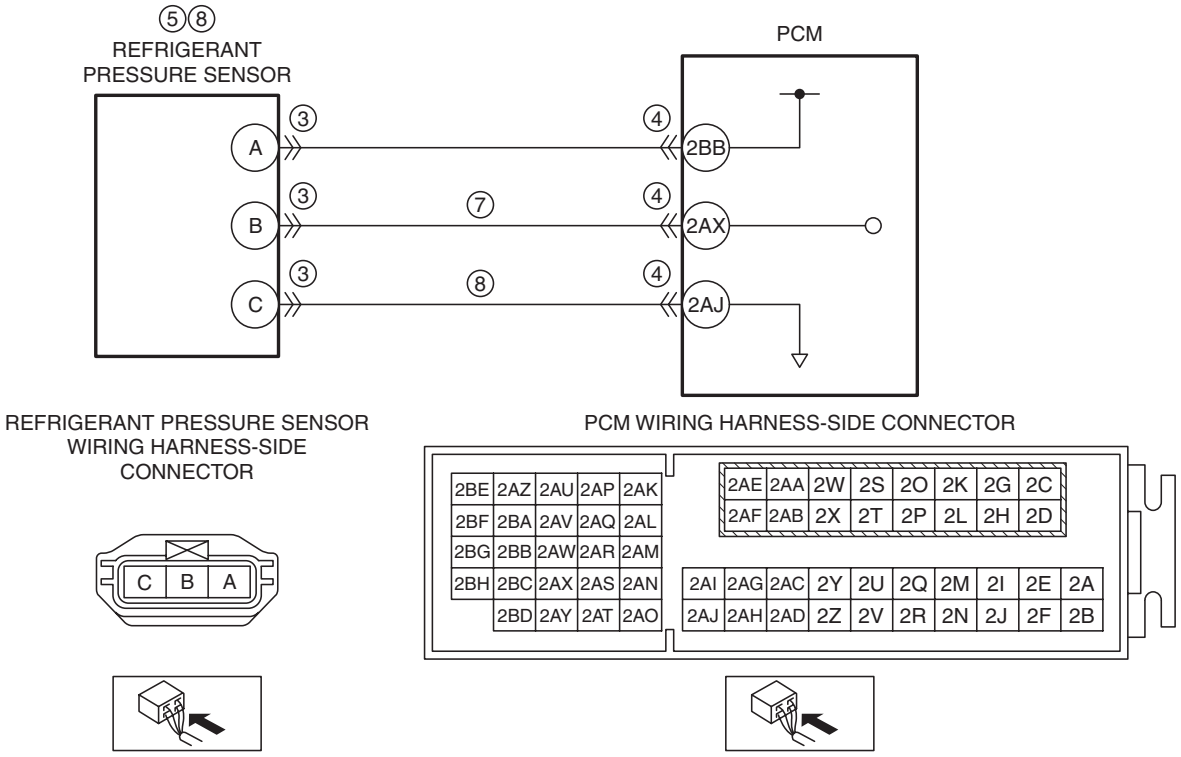

Diagnostic Procedure

STEP	INSPECTION		ACTION
1	**VERIFY RELATED SERVICE INFORMATION AVAILABILITY** • Verify related Service Information availability. • Is any related Service Information available?	Yes	Perform repair or diagnosis according to the available Service Information. • If the vehicle is not repaired, go to the next step.
		No	Go to the next step.
2	**CLASSIFY REFRIGERANT PRESSURE SENSOR MALFUNCTION OR WIRING HARNESS MALFUNCTION** • Access the AC_PRES PID using the M-MDS. (See 01-02-8 ON-BOARD DIAGNOSTIC TEST [SKYACTIV-G 2.0].) • Verify the AC_PRES PID value. • Is the AC_PRES PID value **5 V** or **B+**?	Yes	Go to Step 6.
		No	Go to the next step.

ON-BOARD DIAGNOSTIC [SKYACTIV-G 2.0]

STEP	INSPECTION		ACTION
3	**INSPECT REFRIGERANT PRESSURE SENSOR CONNECTOR CONDITION** • Switch the ignition to off. • Disconnect the refrigerant pressure sensor connector. • Inspect for poor connection (such as damaged/ pulled-out pins, corrosion). • Is there any malfunction?	Yes	Repair or replace the connector and/or terminals, then go to Step 9.
		No	Go to the next step.
4	**INSPECT PCM CONNECTOR CONDITION** • Disconnect the PCM connector. • Inspect for poor connection (such as damaged/ pulled-out pins, corrosion). • Is there any malfunction?	Yes	Repair or replace the connector and/or terminals, then go to Step 9.
		No	Go to the next step.
5	**INSPECT REFRIGERANT PRESSURE SENSOR** • Inspect the refrigerant pressure sensor. (See 07-40B-14 REFRIGERANT PRESSURE SENSOR INSPECTION [MANUAL AIR CONDITIONER].) (See 07-40A-30 REFRIGERANT PRESSURE SENSOR INSPECTION [FULL-AUTO AIR CONDITIONER].) • Is there any malfunction?	Yes	Replace the refrigerant pressure sensor, then go to Step 9. (See 07-40B-13 REFRIGERANT PRESSURE SENSOR REMOVAL/INSTALLATION [MANUAL AIR CONDITIONER].) (See 07-40A-29 REFRIGERANT PRESSURE SENSOR REMOVAL/INSTALLATION [FULL-AUTO AIR CONDITIONER].)
		No	Go to Step 9.
6	**CLASSIFY REFRIGERANT PRESSURE SENSOR SIGNAL CIRCUIT MALFUNCTION OR REFRIGERANT PRESSURE SENSOR GROUND CIRCUIT MALFUNCTION** • Switch the ignition to off. • Disconnect the refrigerant pressure sensor connector. • Access the AC_PRES PID using the M-MDS. (See 01-02-8 ON-BOARD DIAGNOSTIC TEST [SKYACTIV-G 2.0].) • Verify the AC_PRES PID value. • Is the AC_PRES PID value **5 V** or **B+**?	Yes	Go to the next step.
		No	Go to Step 8.
7	**INSPECT REFRIGERANT PRESSURE SENSOR SIGNAL CIRCUIT FOR OPEN CIRCUIT** • Verify that the refrigerant pressure sensor connector is disconnected. • Switch the ignition to off. • Disconnect the PCM connector. • Inspect for continuity between refrigerant pressure sensor terminal B (wiring harness-side) and PCM terminal 2AX (wiring harness-side). • Is there continuity?	Yes	Repair or replace the wiring harness for a possible short to power supply, then go to Step 9.
		No	Repair or replace the wiring harness for a possible open circuit, then go to Step 9.
8	**INSPECT REFRIGERANT PRESSURE SENSOR GROUND CIRCUIT FOR OPEN CIRCUIT** • Verify that the refrigerant pressure sensor connector is disconnected. • Switch the ignition to off. • Disconnect the PCM connector. • Inspect for continuity between refrigerant pressure sensor terminal C (wiring harness-side) and PCM terminal 2AJ (wiring harness-side). • Is there continuity?	Yes	Replace the refrigerant pressure sensor, then go to the next step. (See 07-40B-13 REFRIGERANT PRESSURE SENSOR REMOVAL/INSTALLATION [MANUAL AIR CONDITIONER].) (See 07-40A-29 REFRIGERANT PRESSURE SENSOR REMOVAL/INSTALLATION [FULL-AUTO AIR CONDITIONER].)
		No	Repair or replace the wiring harness for a possible open circuit, then go to the next step.

ON-BOARD DIAGNOSTIC [SKYACTIV-G 2.0]

STEP	INSPECTION		ACTION
9	**VERIFY DTC TROUBLESHOOTING COMPLETED** • Make sure to reconnect all disconnected connectors. • Clear the DTC from the PCM memory using the M-MDS. (See 01-02-12 AFTER REPAIR PROCEDURE [SKYACTIV-G 2.0].) • Perform the KOEO or KOER self test. (See 01-02-12 KOEO/KOER SELF TEST [SKYACTIV-G 2.0].) • Is the same DTC present?	Yes	Repeat the inspection from Step 1. • If the malfunction recurs, replace the PCM. (See 01-40-10 PCM REMOVAL/INSTALLATION [SKYACTIV-G 2.0].) Go to the next step.
		No	Go to the next step.
10	**VERIFY AFTER REPAIR PROCEDURE** • Perform the “AFTER REPAIR PROCEDURE”. (See 01-02-12 AFTER REPAIR PROCEDURE [SKYACTIV-G 2.0].) • Are any DTCs present?	Yes	Go to the applicable DTC inspection. (See 01-02-14 DTC TABLE [SKYACTIV-G 2.0].)
		No	DTC troubleshooting completed.

ON-BOARD DIAGNOSTIC [SKYACTIV-G 2.0]

DTC P0555:00 [SKYACTIV-G 2.0]

id0102h1950200

DTC P0555:00	**Power brake unit vacuum sensor circuit problem**
DETECTION CONDITION	• The PCM monitors the power brake unit vacuum sensor signal voltage while the ignition switch is ON. If the PCM detects the power brake unit vacuum sensor voltage is **below 0.15 V** or **above 4.8 V** for **5 s**, the PCM determines that the power brake unit vacuum sensor circuit has problem. **Diagnostic support note** • This is a continuous monitor (other). • The check engine light does not illuminate. • FREEZE FRAME DATA (Mode 2)/Snapshot data is not available. • The DTC is stored in the PCM memory.
FAIL-SAFE FUNCTION	• Inhibits engine-stop by operating the i-stop function.
POSSIBLE CAUSE	• Power brake unit vacuum sensor connector or terminals malfunction • Short to ground in wiring harness between the following terminals: — Power brake unit vacuum sensor terminal C—PCM terminal 2BG — Power brake unit vacuum sensor terminal B—PCM terminal 2Q • PCM connector or terminals malfunction • Short to power supply in wiring harness between power brake unit vacuum sensor terminal C and PCM terminal 2BG • Power brake unit vacuum sensor circuits are shorted to each other • Open circuit in wiring harness between the following terminals: — Power brake unit vacuum sensor terminal C—PCM terminal 2BG — Power brake unit vacuum sensor terminal B—PCM terminal 2Q — Power brake unit vacuum sensor terminal A—PCM terminal 2AH • PCM malfunction

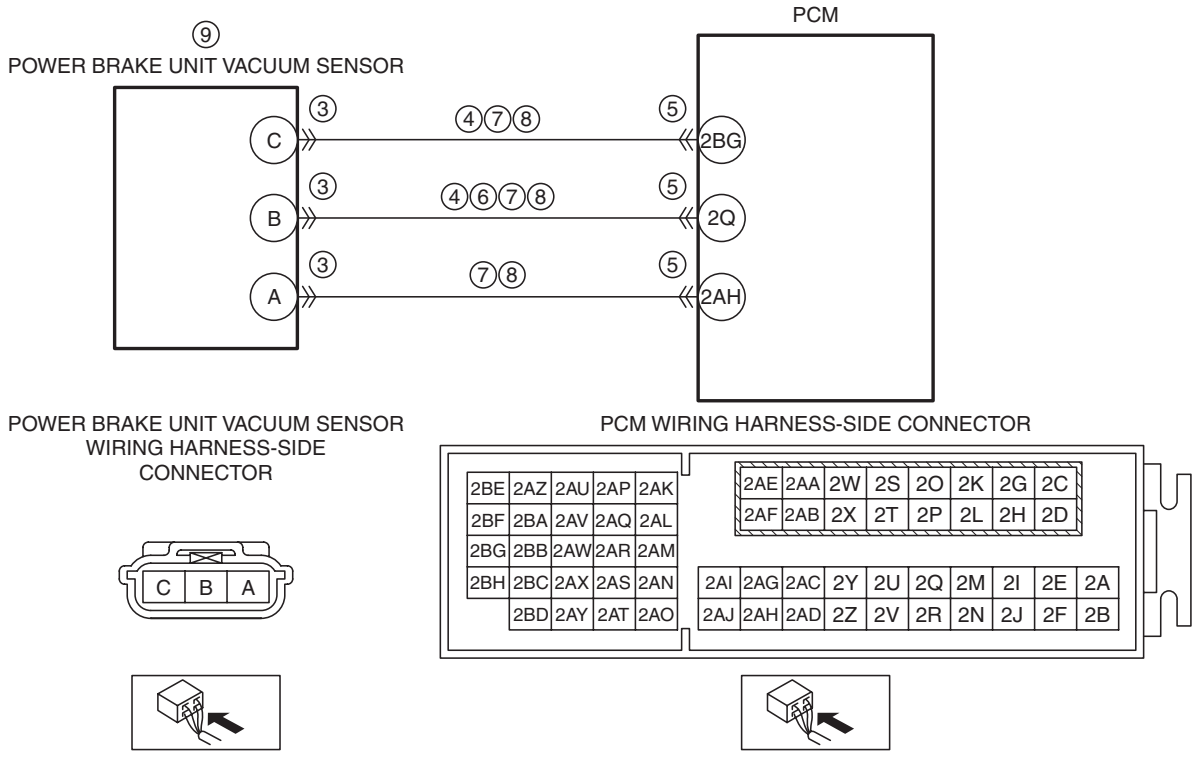

ON-BOARD DIAGNOSTIC [SKYACTIV-G 2.0]

Diagnostic Procedure

STEP	INSPECTION		ACTION
1	**VERIFY RELATED SERVICE INFORMATION AVAILABILITY** • Verify related Service Information availability. • Is any related Service Information available?	Yes	Perform repair or diagnosis according to the available Service Information. • If the vehicle is not repaired, go to the next step.
		No	Go to the next step.
2	**VERIFY RELATED PENDING CODE AND/OR DTC** • Switch the ignition to off, then to ON (engine off). • Perform the Pending Trouble Code Access Procedure and DTC Reading Procedure. (See 01-02-8 ON-BOARD DIAGNOSTIC TEST [SKYACTIV-G 2.0].) • Are any other PENDING CODEs and/or DTCs present?	Yes	Go to the applicable PENDING CODE or DTC inspection. (See 01-02-14 DTC TABLE [SKYACTIV-G 2.0].)
		No	Go to the next step.
3	**INSPECT POWER BRAKE UNIT VACUUM SENSOR CONNECTOR CONDITION** • Switch the ignition to off. • Disconnect the power brake unit vacuum sensor connector. • Inspect for poor connection (such as damaged/ pulled-out pins, corrosion). • Is there any malfunction?	Yes	Repair or replace the connector and/or terminals, then go to Step 10.
		No	Go to the next step.
4	**INSPECT POWER BRAKE UNIT VACUUM SENSOR CIRCUIT FOR SHORT TO GROUND** • Verify that the power brake unit vacuum sensor connector is disconnected. • Inspect for continuity between the following terminals (wiring harness-side) and body ground: — Power brake unit vacuum sensor terminal C — Power brake unit vacuum sensor terminal B • Is there continuity?	Yes	If the short to ground circuit could be detected in the wiring harness: • Repair or replace the wiring harness for a possible short to ground. If the short to ground circuit could not be detected in the wiring harness: • Replace the PCM (short to ground in the PCM internal circuit). (See 01-40-10 PCM REMOVAL/INSTALLATION [SKYACTIV-G 2.0].) Go to Step 10.
		No	Go to the next step.
5	**INSPECT PCM CONNECTOR CONDITION** • Disconnect the PCM connector. • Inspect for poor connection (such as damaged/ pulled-out pins, corrosion). • Is there any malfunction?	Yes	Repair or replace the connector and/or terminals, then go to Step 10.
		No	Go to the next step.
6	**INSPECT POWER BRAKE UNIT VACUUM SENSOR SIGNAL CIRCUIT FOR SHORT TO POWER SUPPLY** • Verify that the power brake unit vacuum sensor and PCM connectors are disconnected. • Switch the ignition ON (engine off or on). • Measure the voltage at the power brake unit vacuum sensor terminal B (wiring harness-side). • Is the voltage **0 V**?	Yes	Go to the next step.
		No	Repair or replace the wiring harness for a possible short to power supply, then go to Step 10.
7	**INSPECT POWER BRAKE UNIT VACUUM SENSOR CIRCUITS FOR SHORT TO EACH OTHER** • Verify that the power brake unit vacuum sensor and PCM connectors are disconnected. • Switch the ignition to off. • Inspect for continuity between power brake unit vacuum sensor terminals C, B and A (wiring harness-side). • Is there continuity?	Yes	Repair or replace the wiring harness for a possible short to each other, then go to Step 10.
		No	Go to the next step.

ON-BOARD DIAGNOSTIC [SKYACTIV-G 2.0]

STEP	INSPECTION		ACTION
8	**INSPECT POWER BRAKE UNIT VACUUM SENSOR CIRCUIT FOR OPEN CIRCUIT** • Verify that the power brake unit vacuum sensor and PCM connectors are disconnected. • Inspect for continuity between the following terminals (wiring harness-side): — Power brake unit vacuum sensor terminal C—PCM terminal 2BG — Power brake unit vacuum sensor terminal B—PCM terminal 2Q — Power brake unit vacuum sensor terminal A—PCM terminal 2AH • Is there continuity?	Yes	Go to the next step.
		No	Repair or replace the wiring harness for a possible open circuit, then go to Step 10.
9	**INSPECT POWER BRAKE UNIT VACUUM SENSOR** • Inspect the power brake unit vacuum sensor. (See 01-40-68 POWER BRAKE UNIT VACUUM SENSOR INSPECTION [SKYACTIV-G 2.0].) • Is there any malfunction?	Yes	Replace the power brake unit vacuum sensor, then go to the next step. (See 04-11-19 POWER BRAKE UNIT VACUUM SENSOR REMOVAL/INSTALLATION.)
		No	Go to the next step.
10	**VERIFY DTC TROUBLESHOOTING COMPLETED** • Make sure to reconnect all disconnected connectors. • Clear the DTC from the PCM memory using the M-MDS. (See 01-02-12 AFTER REPAIR PROCEDURE [SKYACTIV-G 2.0].) • Perform the KOEO or KOER self test. (See 01-02-12 KOEO/KOER SELF TEST [SKYACTIV-G 2.0].) • Is the same DTC present?	Yes	Repeat the inspection from Step 1. • If the malfunction recurs, replace the PCM. (See 01-40-10 PCM REMOVAL/INSTALLATION [SKYACTIV-G 2.0].) Go to the next step.
		No	Go to the next step.
11	**VERIFY AFTER REPAIR PROCEDURE** • Perform the “AFTER REPAIR PROCEDURE”. (See 01-02-12 AFTER REPAIR PROCEDURE [SKYACTIV-G 2.0].) • Are any DTCs present?	Yes	Go to the applicable DTC inspection. (See 01-02-14 DTC TABLE [SKYACTIV-G 2.0].)
		No	DTC troubleshooting completed.

ON-BOARD DIAGNOSTIC [SKYACTIV-G 2.0]

DTC P0571:00 [SKYACTIV-G 2.0]

id0102h1705500

DTC P0571:00	**Brake switch circuit problem**
DETECTION CONDITION	• The PCM monitors changes in input voltage for brake switch No.1 and No.2. • The brake switch circuit malfunction is determined when the following **2 conditions** are repeated **5 times or more**. — Brake switch No.1 and No.2 are on or off simultaneously for a continuous **3 s or more**. — The brake is operated. **Diagnostic support note** • This is a continuous monitor (other). • The check engine light illuminates if the PCM detects the above malfunction condition during the first drive cycle. • FREEZE FRAME DATA (Mode 2)/Snapshot data is not available. • The DTC is stored in the PCM memory.
FAIL-SAFE FUNCTION	—
POSSIBLE CAUSE	**Caution** • **Inspect the brake switch with it installed to the brake pedal, otherwise the brake switch may not operate normally. If the brake switch is removed from the brake pedal, replace the brake switch with a new one.** • Brake switch connector or terminals malfunction • Short to ground or open circuit in brake switch No.1 power supply circuit — Short to ground in wiring harness between MAIN 200 A fuse and brake switch terminal A — MAIN 200 A fuse and/or STOP 10 A fuse malfunction — Open circuit in wiring harness between battery positive terminal and brake switch terminal A • Open circuit in wiring harness between brake switch terminal B and body ground • Short to ground in wiring harness between the following terminals: — Brake switch terminal D—PCM terminal 2G — Brake switch terminal C—PCM terminal 2R • PCM connector or terminals malfunction • Short to power supply in wiring harness between the following terminals: — Brake switch terminal D—PCM terminal 2G — Brake switch terminal C—PCM terminal 2R • Open circuit in wiring harness between the following terminals: — Brake switch terminal D—PCM terminal 2G — Brake switch terminal C—PCM terminal 2R • Brake switch malfunction • PCM malfunction

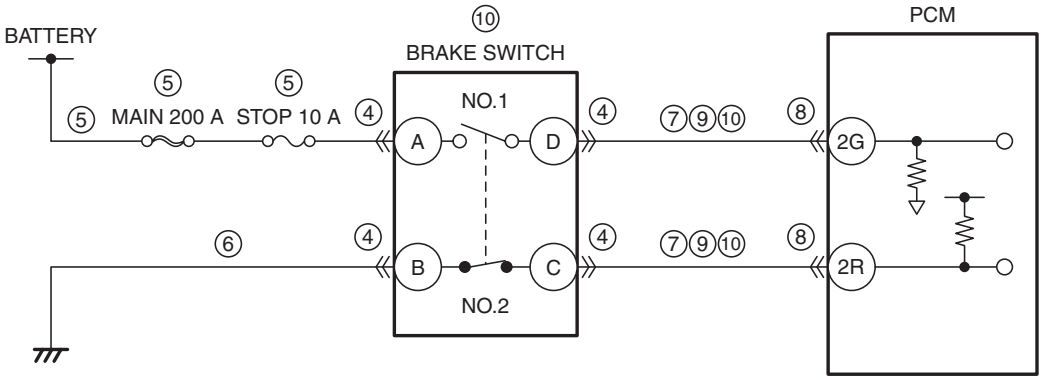

BRAKE SWITCH WIRING HARNESS-SIDE CONNECTOR

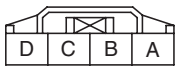

PCM WIRING HARNESS-SIDE CONNECTOR

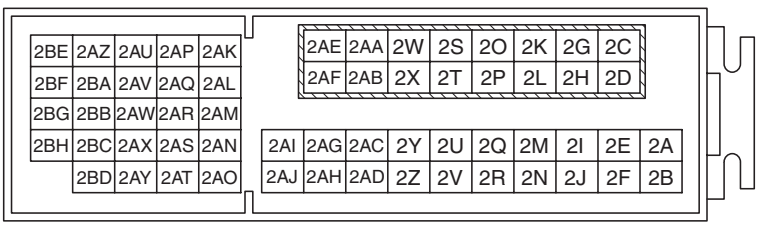

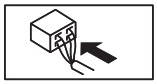

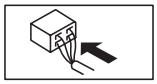

ON-BOARD DIAGNOSTIC [SKYACTIV-G 2.0]

Diagnostic Procedure

STEP	INSPECTION		ACTION
1	**VERIFY FREEZE FRAME DATA (MODE 2)/ SNAPSHOT DATA HAS BEEN RECORDED** • Has the FREEZE FRAME DATA (Mode 2)/ snapshot data been recorded?	Yes	Go to the next step.
		No	Record the FREEZE FRAME DATA (Mode 2)/snapshot data on the repair order, then go to the next step.
2	**VERIFY RELATED SERVICE INFORMATION AVAILABILITY** • Verify related Service Information availability. • Is any related Service Information available?	Yes	Perform repair or diagnosis according to the available Service Information. • If the vehicle is not repaired, go to the next step.
		No	Go to the next step.
3	**VERIFY RELATED PENDING CODE AND/OR DTC** • Switch the ignition to off, then to ON (engine off). • Perform the Pending Trouble Code Access Procedure and DTC Reading Procedure. (See 01-02-8 ON-BOARD DIAGNOSTIC TEST [SKYACTIV-G 2.0].) • Is the PENDING CODE/DTC P0703:00 also present?	Yes	Go to the applicable PENDING CODE or DTC inspection. (See 01-02-268 DTC P0703:00 [SKYACTIV-G 2.0].)
		No	Go to the next step.
4	**INSPECT BRAKE SWITCH CONNECTOR CONDITION** • Switch the ignition to off. • Disconnect the brake switch connector. • Inspect for poor connection (such as damaged/ pulled-out pins, corrosion). • Is there any malfunction?	Yes	Repair or replace the connector and/or terminals, then go to Step 11.
		No	Go to the next step.
5	**INSPECT BRAKE SWITCH NO.1 POWER SUPPLY CIRCUIT FOR SHORT TO GROUND OR OPEN CIRCUIT** • Verify that the brake switch connector is disconnected. • Measure the voltage at the brake switch terminal A (wiring harness-side). • Is the voltage **B+**?	Yes	Go to the next step.
		No	Inspect the MAIN 200 A fuse and STOP 10 A fuse. • If the fuse is blown: — Repair or replace the wiring harness for a possible short to ground. — Replace the malfunctioning fuse. • If the fuse is deteriorated: — Replace the malfunctioning fuse. • If all fuses are normal: — Repair or replace the wiring harness for a possible open circuit. Go to Step 11.
6	**INSPECT BRAKE SWITCH NO.2 GROUND CIRCUIT FOR OPEN CIRCUIT** • Verify that the brake switch connector is disconnected. • Inspect for continuity between brake switch terminal B (wiring harness-side) and body ground. • Is there continuity?	Yes	Go to the next step.
		No	Repair or replace the wiring harness for a possible open circuit, then go to Step 11.
7	**INSPECT BRAKE SWITCH CIRCUIT FOR SHORT TO GROUND** • Verify that the brake switch connector is disconnected. • Inspect for continuity between the following terminals (wiring harness-side) and body ground: — Brake switch terminal D — Brake switch terminal C • Is there continuity?	Yes	If the short to ground circuit could be detected in the wiring harness: • Repair or replace the wiring harness for a possible short to ground. If the short to ground circuit could not be detected in the wiring harness: • Replace the PCM (short to ground in the PCM internal circuit). (See 01-40-10 PCM REMOVAL/INSTALLATION [SKYACTIV-G 2.0].) Go to Step 11.
		No	Go to the next step.
8	**INSPECT PCM CONNECTOR CONDITION** • Disconnect the PCM connector. • Inspect for poor connection (such as damaged/ pulled-out pins, corrosion). • Is there any malfunction?	Yes	Repair or replace the connector and/or terminals, then go to Step 11.
		No	Go to the next step.

ON-BOARD DIAGNOSTIC [SKYACTIV-G 2.0]

STEP	INSPECTION		ACTION
9	**INSPECT BRAKE SWITCH CIRCUIT FOR SHORT TO POWER SUPPLY** • Verify that the brake switch and PCM connectors are disconnected. • Switch the ignition ON (engine off or on). • Measure the voltage at the following terminals (wiring harness-side): — Brake switch terminal D — Brake switch terminal C • Is the voltage **0 V**?	Yes	Go to the next step.
		No	Repair or replace the wiring harness for a possible short to power supply, then go to Step 11.
10	**INSPECT BRAKE SWITCH CIRCUIT FOR OPEN CIRCUIT** • Verify that the brake switch and PCM connectors are disconnected. • Switch the ignition to off. • Inspect for continuity between the following terminals (wiring harness-side): — Brake switch terminal D—PCM terminal 2G — Brake switch terminal C—PCM terminal 2R • Is there continuity?	Yes	Replace the brake switch, then go to the next step. (See 04-11-9 BRAKE PEDAL REMOVAL/INSTALLATION [R.H.D.].) (See 04-11-8 BRAKE PEDAL REMOVAL/INSTALLATION [L.H.D.].)
		No	Repair or replace the wiring harness for a possible open circuit, then go to the next step.
11	**VERIFY DTC TROUBLESHOOTING COMPLETED** • Make sure to reconnect all disconnected connectors. • Clear the DTC from the PCM memory using the M-MDS. (See 01-02-12 AFTER REPAIR PROCEDURE [SKYACTIV-G 2.0].) • Switch the ignition ON (engine off or on). • Depress the brake pedal for **15 s** and release **more than 5 times**. • Perform the DTC Reading Procedure. (See 01-02-8 ON-BOARD DIAGNOSTIC TEST [SKYACTIV-G 2.0].) • Is the same DTC present?	Yes	Repeat the inspection from Step 1. • If the malfunction recurs, replace the PCM. (See 01-40-10 PCM REMOVAL/INSTALLATION [SKYACTIV-G 2.0].) Go to the next step.
		No	Go to the next step.
12	**VERIFY AFTER REPAIR PROCEDURE** • Perform the “AFTER REPAIR PROCEDURE”. (See 01-02-12 AFTER REPAIR PROCEDURE [SKYACTIV-G 2.0].) • Are any DTCs present?	Yes	Go to the applicable DTC inspection. (See 01-02-14 DTC TABLE [SKYACTIV-G 2.0].)
		No	DTC troubleshooting completed.

ON-BOARD DIAGNOSTIC [SKYACTIV-G 2.0]

DTC P057F:00 [SKYACTIV-G 2.0]

id0102h1401000

DTC P057F:00	**Power supply malfunction**
DETECTION CONDITION	• The battery charge/discharge flow exceeds the specification. **Diagnostic support note** • This is a continuous monitor (other). • The check engine light does not illuminate. • FREEZE FRAME DATA (Mode 2)/Snapshot data is not available. • The DTC is stored in the PCM memory.
FAIL-SAFE FUNCTION	• Inhibits engine-stop by operating the i-stop function. • Inhibits a part of the generator output control.
POSSIBLE CAUSE	• Battery malfunction — Battery deterioration • PCM malfunction
SYSTEM WIRING DIAGRAM	—

Diagnostic Procedure

STEP	INSPECTION		ACTION
1	**VERIFY RELATED SERVICE INFORMATION AVAILABILITY** • Verify related Service Information availability. • Is any related Service Information available?	Yes	Perform repair or diagnosis according to the available Service Information. • If the vehicle is not repaired, go to the next step.
		No	Go to the next step.
2	**VERIFY RELATED PENDING CODE AND/OR DTC** • Switch the ignition to off, then to ON (engine off). • Perform the Pending Trouble Code Access Procedure and DTC Reading Procedure. (See 01-02-8 ON-BOARD DIAGNOSTIC TEST [SKYACTIV-G 2.0].) • Are any other PENDING CODEs and/or DTCs present?	Yes	Go to the applicable PENDING CODE or DTC inspection. (See 01-02-14 DTC TABLE [SKYACTIV-G 2.0].)
		No	Go to the next step.
3	**INSPECT BATTERY** • Switch the ignition to off. • Inspect the battery. (See 01-17A-7 BATTERY INSPECTION [SKYACTIV-G 2.0].) • Is there any malfunction?	Yes	Recharge or replace the battery, then go to the next step. (See 01-17A-9 BATTERY RECHARGING [SKYACTIV-G 2.0].) (See 01-17A-3 BATTERY REMOVAL/INSTALLATION [SKYACTIV-G 2.0].)
		No	Go to the next step.
4	**VERIFY DTC TROUBLESHOOTING COMPLETED** • Make sure to reconnect all disconnected connectors. • Clear the DTC from the PCM memory using the M-MDS. (See 01-02-12 AFTER REPAIR PROCEDURE [SKYACTIV-G 2.0].) • Perform the KOEO or KOER self test. (See 01-02-12 KOEO/KOER SELF TEST [SKYACTIV-G 2.0].) • Is the same DTC present?	Yes	Replace the PCM, then go to the next step. (See 01-40-10 PCM REMOVAL/INSTALLATION [SKYACTIV-G 2.0].)
		No	Go to the next step.
5	**VERIFY AFTER REPAIR PROCEDURE** • Perform the “AFTER REPAIR PROCEDURE”. (See 01-02-12 AFTER REPAIR PROCEDURE [SKYACTIV-G 2.0].) • Are any DTCs present?	Yes	Go to the applicable DTC inspection. (See 01-02-14 DTC TABLE [SKYACTIV-G 2.0].)
		No	DTC troubleshooting completed.

ON-BOARD DIAGNOSTIC [SKYACTIV-G 2.0]

DTC P058A:00 [SKYACTIV-G 2.0]

id0102h1401100

DTC P058A:00	Current sensor problem
DETECTION CONDITION	• The following conditions are met: — Current sensor internal malfunction — Battery voltage malfunction — Battery fluid temperature malfunction **Diagnostic support note** • This is a continuous monitor (other). • The check engine light does not illuminate. • FREEZE FRAME DATA (Mode 2)/Snapshot data is not available. • The DTC is stored in the PCM memory.
FAIL-SAFE FUNCTION	• Inhibits engine-stop by operating the i-stop function. • Inhibits a part of the generator output control.
POSSIBLE CAUSE	• Current sensor connector or terminals malfunction • Front body control module (FBCM) connector or terminals malfunction • Short to power supply in wiring harness between the following terminals: — Battery positive terminal—Current sensor terminal A — Current sensor terminal B—Front body control module (FBCM) terminal 2E • PCM connector or terminals malfunction • Short to power supply in wiring harness between the following terminals: — Front body control module (FBCM) terminal 2P—PCM terminal 2AK — Front body control module (FBCM) terminal 2N—PCM terminal 2AL • Current sensor malfunction • Front body control module (FBCM) malfunction • PCM malfunction

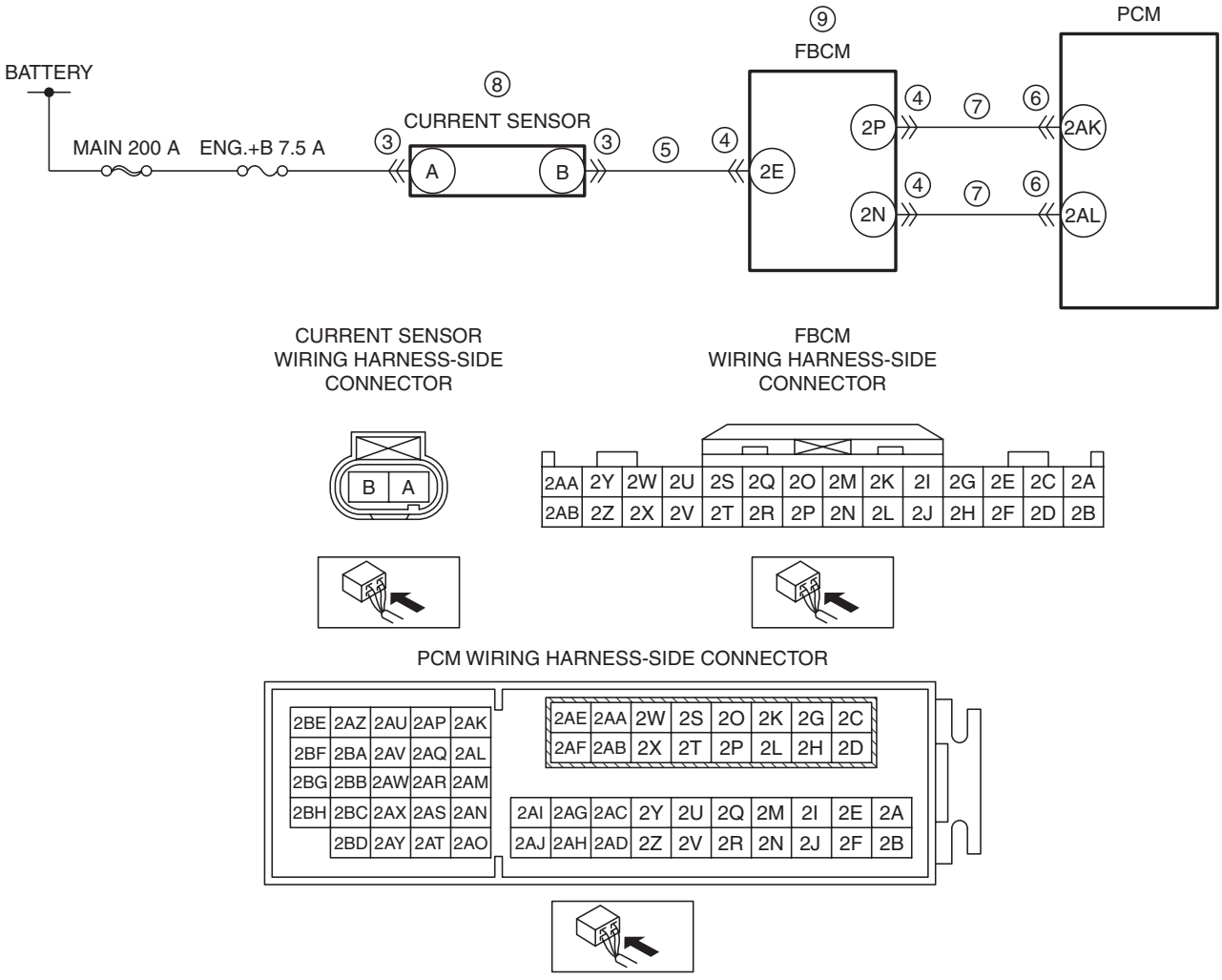

ON-BOARD DIAGNOSTIC [SKYACTIV-G 2.0]

Diagnostic Procedure

STEP	INSPECTION		ACTION
1	**VERIFY RELATED SERVICE INFORMATION AVAILABILITY** • Verify related Service Information availability. • Is any related Service Information available?	Yes	Perform repair or diagnosis according to the available Service Information. • If the vehicle is not repaired, go to the next step.
		No	Go to the next step.
2	**VERIFY RELATED PENDING CODE AND/OR DTC** • Switch the ignition to off, then to ON (engine off). • Perform the Pending Trouble Code Access Procedure and DTC Reading Procedure. (See 01-02-8 ON-BOARD DIAGNOSTIC TEST [SKYACTIV-G 2.0].) • Are any other PENDING CODEs and/or DTCs present?	Yes	Go to the applicable PENDING CODE or DTC inspection. (See 01-02-14 DTC TABLE [SKYACTIV-G 2.0].)
		No	Go to the next step.
3	**INSPECT CURRENT SENSOR CONNECTOR CONDITION** **Note** • Always disconnect current sensor connector before disconnecting the negative battery cable. • Switch the ignition to off. • Disconnect the current sensor connector. • Inspect for poor connection (such as damaged/ pulled-out pins, corrosion). • Is there any malfunction?	Yes	Repair or replace the connector and/or terminals, then go to Step 10.
		No	Go to the next step.
4	**INSPECT FRONT BODY CONTROL MODULE (FBCM) CONNECTOR CONDITION** • Disconnect the front body control module (FBCM) connector. • Inspect for poor connection (such as damaged/ pulled-out pins, corrosion). • Is there any malfunction?	Yes	Repair or replace the connector and/or terminals, then go to Step 10.
		No	Go to the next step.
5	**INSPECT CURRENT SENSOR CIRCUIT FOR SHORT TO POWER SUPPLY** • Verify that the current sensor and front body control module (FBCM) connectors are disconnected. • Switch the ignition ON (engine off or on). • Measure the voltage at the following terminals (wiring harness-side): — Current sensor terminal A — Current sensor terminal B • Is the voltage **above B+**?	Yes	Repair or replace the wiring harness for a possible short to power supply, then go to Step 10.
		No	Go to the next step.
6	**INSPECT PCM CONNECTOR CONDITION** • Disconnect the PCM connector. • Switch the ignition to off. • Inspect for poor connection (such as damaged/ pulled-out pins, corrosion). • Is there any malfunction?	Yes	Repair or replace the connector and/or terminals, then go to Step 10.
		No	Go to the next step.
7	**INSPECT FRONT BODY CONTROL MODULE (FBCM) CIRCUIT FOR SHORT TO POWER SUPPLY** • Verify that the current sensor, front body control module (FBCM) and PCM connectors are disconnected. • Switch the ignition ON (engine off or on). • Measure the voltage at the following terminals (wiring harness-side): — Front body control module (FBCM) terminal 2P — Front body control module (FBCM) terminal 2N • Is the voltage **above B+**?	Yes	Repair or replace the wiring harness for a possible short to power supply, then go to Step 10.
		No	Go to the next step.

ON-BOARD DIAGNOSTIC [SKYACTIV-G 2.0]

STEP	INSPECTION		ACTION
8	**INSPECT CURRENT SENSOR** • Inspect the current sensor. (See 01-40-66 CURRENT SENSOR INSPECTION [SKYACTIV-G 2.0].) • Is there any malfunction?	Yes	Replace the current sensor, then go to Step 10. (See 01-40-65 CURRENT SENSOR REMOVAL/ INSTALLATION [SKYACTIV-G 2.0].)
		No	Go to the next step.
9	**INSPECT FRONT BODY CONTROL MODULE (FBCM)** • Inspect the front body control module (FBCM). (See 09-40-3 FRONT BODY CONTROL MODULE (FBCM) INSPECTION.) • Is there any malfunction?	Yes	Replace the front body control module (FBCM), then go to the next step. (See 09-40-2 FRONT BODY CONTROL MODULE (FBCM) REMOVAL/INSTALLATION.)
		No	Go to the next step.
10	**VERIFY DTC TROUBLESHOOTING COMPLETED** • Make sure to reconnect all disconnected connectors. • Clear the DTC from the PCM memory using the M-MDS. (See 01-02-12 AFTER REPAIR PROCEDURE [SKYACTIV-G 2.0].) • Perform the KOEO or KOER self test. (See 01-02-12 KOEO/KOER SELF TEST [SKYACTIV-G 2.0].) • Is the PENDING CODE for this DTC present?	Yes	Repeat the inspection from Step 1. • If the malfunction recurs, replace the PCM. (See 01-40-10 PCM REMOVAL/INSTALLATION [SKYACTIV-G 2.0].) Go to the next step.
		No	Go to the next step.
11	**VERIFY AFTER REPAIR PROCEDURE** • Perform the “AFTER REPAIR PROCEDURE”. (See 01-02-12 AFTER REPAIR PROCEDURE [SKYACTIV-G 2.0].) • Are any DTCs present?	Yes	Go to the applicable DTC inspection. (See 01-02-14 DTC TABLE [SKYACTIV-G 2.0].)
		No	DTC troubleshooting completed.

DTC P0600:00 [SKYACTIV-G 2.0]

id0102h1850400

DTC P0600:00	Serial communication link
DETECTION CONDITION	• PCM internal malfunction. **Diagnostic support note** • This is a continuous monitor (CCM). • The check engine light illuminates if the PCM detects the above malfunction condition during the first drive cycle. • FREEZE FRAME DATA (Mode 2)/Snapshot data is available. • The DTC is stored in the PCM memory.
FAIL-SAFE FUNCTION	—
POSSIBLE CAUSE	• PCM malfunction
SYSTEM WIRING DIAGRAM	—

Diagnostic Procedure

STEP	INSPECTION		ACTION
1	**VERIFY FREEZE FRAME DATA (MODE 2)/ SNAPSHOT DATA HAS BEEN RECORDED** • Has the FREEZE FRAME DATA (Mode 2)/ snapshot data been recorded?	Yes	Go to the next step.
		No	Record the FREEZE FRAME DATA (Mode 2)/snapshot data on the repair order, then go to the next step.
2	**VERIFY RELATED SERVICE INFORMATION AVAILABILITY** • Verify related Service Information availability. • Is any related Service Information available?	Yes	Perform repair or diagnosis according to the available Service Information. • If the vehicle is not repaired, go to the next step.
		No	Go to the next step.

ON-BOARD DIAGNOSTIC [SKYACTIV-G 2.0]

STEP	INSPECTION		ACTION
3	**VERIFY DTC TROUBLESHOOTING COMPLETED** • Make sure to reconnect all disconnected connectors. • Clear the DTC from the PCM memory using the M-MDS. (See 01-02-12 AFTER REPAIR PROCEDURE [SKYACTIV-G 2.0].) • Perform the KOEO or KOER self test. (See 01-02-12 KOEO/KOER SELF TEST [SKYACTIV-G 2.0].) • Is the same DTC present?	Yes	Replace the PCM, then go to the next step. (See 01-40-10 PCM REMOVAL/INSTALLATION [SKYACTIV-G 2.0].)
		No	Go to the next step.
4	**VERIFY AFTER REPAIR PROCEDURE** • Perform the “AFTER REPAIR PROCEDURE”. (See 01-02-12 AFTER REPAIR PROCEDURE [SKYACTIV-G 2.0].) • Are any DTCs present?	Yes	Go to the applicable DTC inspection. (See 01-02-14 DTC TABLE [SKYACTIV-G 2.0].)
		No	DTC troubleshooting completed.

DTC P0601:00 [SKYACTIV-G 2.0]

id0102h1705600

DTC P0601:00	PCM memory check sum error
DETECTION CONDITION	• PCM internal memory check sum error. **Diagnostic support note** • This is a continuous monitor (CCM). • The check engine light illuminates if the PCM detects the above malfunction condition during the first drive cycle. • FREEZE FRAME DATA (Mode 2)/Snapshot data is available. • The DTC is stored in the PCM memory.
FAIL-SAFE FUNCTION	• Restricts the upper limit of the engine speed. • Stops the drive-by-wire control (throttle valve is open at **approx. 8** ° by return spring force).
POSSIBLE CAUSE	• PCM connector or terminals malfunction • PCM internal memory malfunction
SYSTEM WIRING DIAGRAM	—

Diagnostic Procedure

STEP	INSPECTION		ACTION
1	**VERIFY FREEZE FRAME DATA (MODE 2)/ SNAPSHOT DATA HAS BEEN RECORDED** • Has the FREEZE FRAME DATA (Mode 2)/ snapshot data been recorded?	Yes	Go to the next step.
		No	Record the FREEZE FRAME DATA (Mode 2)/snapshot data on the repair order, then go to the next step.
2	**VERIFY RELATED SERVICE INFORMATION AVAILABILITY** • Verify related Service Information availability. • Is any related Service Information available?	Yes	Perform repair or diagnosis according to the available Service Information. • If the vehicle is not repaired, go to the next step.
		No	Go to the next step.
3	**INSPECT PCM CONNECTOR CONDITION** • Switch the ignition to off. • Disconnect the PCM connector. • Inspect for poor connection (such as damaged/ pulled-out pins, corrosion). • Is there any malfunction?	Yes	Repair or replace the connector and/or terminals, then go to the next step.
		No	Go to the next step.

ON-BOARD DIAGNOSTIC [SKYACTIV-G 2.0]

STEP	INSPECTION		ACTION
4	**VERIFY DTC TROUBLESHOOTING COMPLETED** • Make sure to reconnect all disconnected connectors. • Clear the DTC from the PCM memory using the M-MDS. (See 01-02-12 AFTER REPAIR PROCEDURE [SKYACTIV-G 2.0].) • Start the engine. • Perform the KOEO or KOER self test. (See 01-02-12 KOEO/KOER SELF TEST [SKYACTIV-G 2.0].) • Is the same DTC present?	Yes	Replace the PCM, then go to the next step. (See 01-40-10 PCM REMOVAL/INSTALLATION [SKYACTIV-G 2.0].)
		No	Go to the next step.
5	**VERIFY AFTER REPAIR PROCEDURE** • Perform the “AFTER REPAIR PROCEDURE”. (See 01-02-12 AFTER REPAIR PROCEDURE [SKYACTIV-G 2.0].) • Are any DTCs present?	Yes	Go to the applicable DTC inspection. (See 01-02-14 DTC TABLE [SKYACTIV-G 2.0].)
		No	DTC troubleshooting completed.

DTC P0602:00 [SKYACTIV-G 2.0]

id0102h1705700

DTC P0602:00	PCM programming error
DETECTION CONDITION	• No configuration data in the PCM. **Note** • If the “PCM CONFIGURATION” is successful, the PCM stores the DTC P0602:00 and illuminates the check engine light (system is normal). Clear the DTC P0602:00 using the M-MDS after the “PCM CONFIGURATION”. • The check engine light goes out after three drive cycles with no failure (the DTCs remain in PCM). **Diagnostic support note** • This is a continuous monitor (CCM). • The check engine light illuminates if the PCM detects the above malfunction condition during the first drive cycle. • FREEZE FRAME DATA (Mode 2)/Snapshot data is available. • The DTC is stored in the PCM memory.
FAIL-SAFE FUNCTION	—
POSSIBLE CAUSE	• Configuration has not been completed • PCM connector or terminals malfunction • PCM malfunction
SYSTEM WIRING DIAGRAM	—

Diagnostic Procedure

STEP	INSPECTION		ACTION
1	**VERIFY FREEZE FRAME DATA (MODE 2)/ SNAPSHOT DATA HAS BEEN RECORDED** • Has the FREEZE FRAME DATA (Mode 2)/ snapshot data been recorded?	Yes	Go to the next step.
		No	Record the FREEZE FRAME DATA (Mode 2)/snapshot data on the repair order, then go to the next step.
2	**VERIFY RELATED SERVICE INFORMATION AVAILABILITY** • Verify related Service Information availability. • Is any related Service Information available?	Yes	Perform repair or diagnosis according to the available Service Information. • If the vehicle is not repaired, go to the next step.
		No	Go to the next step.

ON-BOARD DIAGNOSTIC [SKYACTIV-G 2.0]

STEP	INSPECTION		ACTION
3	**PERFORM PCM CONFIGURATION** • Perform the PCM configuration (using read/write function). (See 01-40-39 PCM CONFIGURATION (USING READ/WRITE FUNCTION) [SKYACTIV-G 2.0].) • Clear the DTC from the PCM memory using the M-MDS. (See 01-02-12 AFTER REPAIR PROCEDURE [SKYACTIV-G 2.0].) • Start the engine. • Perform the KOEO or KOER self test. (See 01-02-12 KOEO/KOER SELF TEST [SKYACTIV-G 2.0].) • Is the same DTC present?	Yes	Go to the next step.
		No	Go to Step 6.
4	**INSPECT PCM CONNECTOR CONDITION** • Switch the ignition to off. • Disconnect the PCM connector. • Inspect for poor connection (such as damaged/pulled-out pins, corrosion). • Is there any malfunction?	Yes	Repair or replace the connector and/or terminals, then go to the next step.
		No	Perform the PCM configuration (using read/write function) again. (See 01-40-39 PCM CONFIGURATION (USING READ/WRITE FUNCTION) [SKYACTIV-G 2.0].) • If the malfunction recurs, perform the PCM configuration (using as-built data). (See 01-40-39 PCM CONFIGURATION (USING AS-BUILT DATA) [SKYACTIV-G 2.0].) Go to the next step.
5	**VERIFY DTC TROUBLESHOOTING COMPLETED** • Make sure to reconnect all disconnected connectors. • Clear the DTC from the PCM memory using the M-MDS. (See 01-02-12 AFTER REPAIR PROCEDURE [SKYACTIV-G 2.0].) • Start the engine. • Perform the KOEO or KOER self test. (See 01-02-12 KOEO/KOER SELF TEST [SKYACTIV-G 2.0].) • Is the same DTC present?	Yes	Replace the PCM, then go to the next step. (See 01-40-10 PCM REMOVAL/INSTALLATION [SKYACTIV-G 2.0].)
		No	Go to the next step.
6	**VERIFY AFTER REPAIR PROCEDURE** • Perform the “AFTER REPAIR PROCEDURE”. (See 01-02-12 AFTER REPAIR PROCEDURE [SKYACTIV-G 2.0].) • Are any DTCs present?	Yes	Go to the applicable DTC inspection. (See 01-02-14 DTC TABLE [SKYACTIV-G 2.0].)
		No	DTC troubleshooting completed.

ON-BOARD DIAGNOSTIC [SKYACTIV-G 2.0]

DTC P0604:00 [SKYACTIV-G 2.0]

id0102h1705800

DTC P0604:00	PCM RAM error
DETECTION CONDITION	• PCM internal RAM malfunction. **Diagnostic support note** • This is a continuous monitor (CCM). • The check engine light illuminates if the PCM detects the above malfunction condition during the first drive cycle. • FREEZE FRAME DATA (Mode 2)/Snapshot data is available. • The DTC is stored in the PCM memory.
FAIL-SAFE FUNCTION	• Restricts the upper limit of the engine speed. • Stops the drive-by-wire control (throttle valve is open at **approx. 8** ° by return spring force).
POSSIBLE CAUSE	• PCM connector or terminals malfunction • PCM internal RAM malfunction
SYSTEM WIRING DIAGRAM	—

Diagnostic Procedure

STEP	INSPECTION		ACTION
1	**VERIFY FREEZE FRAME DATA (MODE 2)/ SNAPSHOT DATA HAS BEEN RECORDED** • Has the FREEZE FRAME DATA (Mode 2)/ snapshot data been recorded?	Yes	Go to the next step.
		No	Record the FREEZE FRAME DATA (Mode 2)/snapshot data on the repair order, then go to the next step.
2	**VERIFY RELATED SERVICE INFORMATION AVAILABILITY** • Verify related Service Information availability. • Is any related Service Information available?	Yes	Perform repair or diagnosis according to the available Service Information. • If the vehicle is not repaired, go to the next step.
		No	Go to the next step.
3	**INSPECT PCM CONNECTOR CONDITION** • Switch the ignition to off. • Disconnect the PCM connector. • Inspect for poor connection (such as damaged/ pulled-out pins, corrosion). • Is there any malfunction?	Yes	Repair or replace the connector and/or terminals, then go to the next step.
		No	Go to the next step.
4	**VERIFY DTC TROUBLESHOOTING COMPLETED** • Make sure to reconnect all disconnected connectors. • Clear the DTC from the PCM memory using the M-MDS. (See 01-02-12 AFTER REPAIR PROCEDURE [SKYACTIV-G 2.0].) • Start the engine. • Perform the KOEO or KOER self test. (See 01-02-12 KOEO/KOER SELF TEST [SKYACTIV-G 2.0].) • Is the same DTC present?	Yes	Replace the PCM, then go to the next step. (See 01-40-10 PCM REMOVAL/INSTALLATION [SKYACTIV-G 2.0].)
		No	Go to the next step.
5	**VERIFY AFTER REPAIR PROCEDURE** • Perform the “AFTER REPAIR PROCEDURE”. (See 01-02-12 AFTER REPAIR PROCEDURE [SKYACTIV-G 2.0].) • Are any DTCs present?	Yes	Go to the applicable DTC inspection. (See 01-02-14 DTC TABLE [SKYACTIV-G 2.0].)
		No	DTC troubleshooting completed.

ON-BOARD DIAGNOSTIC [SKYACTIV-G 2.0]

DTC P0606:00 [SKYACTIV-G 2.0]

id0102h1705900

DTC P0606:00	PCM processor error
DETECTION CONDITION	• PCM internal CPU malfunction. **Diagnostic support note** • This is a continuous monitor (CCM). • The check engine light illuminates if the PCM detects the above malfunction condition during the first drive cycle. • FREEZE FRAME DATA (Mode 2)/Snapshot data is available. • The DTC is stored in the PCM memory.
FAIL-SAFE FUNCTION	• Restricts the upper limit of the engine speed. • Stops the drive-by-wire control (throttle valve is open at **approx. 8** ° by return spring force).
POSSIBLE CAUSE	• PCM connector or terminals malfunction • PCM malfunction — PCM internal CPU malfunction
SYSTEM WIRING DIAGRAM	—

Diagnostic Procedure

STEP	INSPECTION		ACTION
1	**VERIFY FREEZE FRAME DATA (MODE 2)/ SNAPSHOT DATA HAS BEEN RECORDED** • Has the FREEZE FRAME DATA (Mode 2)/ snapshot data been recorded?	Yes	Go to the next step.
		No	Record the FREEZE FRAME DATA (Mode 2)/snapshot data on the repair order, then go to the next step.
2	**VERIFY RELATED SERVICE INFORMATION AVAILABILITY** • Verify related Service Information availability. • Is any related Service Information available?	Yes	Perform repair or diagnosis according to the available Service Information. • If the vehicle is not repaired, go to the next step.
		No	Go to the next step.
3	**INSPECT PCM CONNECTOR CONDITION** • Switch the ignition to off. • Disconnect the PCM connector. • Inspect for poor connection (such as damaged/ pulled-out pins, corrosion). • Is there any malfunction?	Yes	Repair or replace the connector and/or terminals, then go to the next step.
		No	Go to the next step.
4	**VERIFY DTC TROUBLESHOOTING COMPLETED** • Make sure to reconnect all disconnected connectors. • Clear the DTC from the PCM memory using the M-MDS. (See 01-02-12 AFTER REPAIR PROCEDURE [SKYACTIV-G 2.0].) • Start the engine. • Perform the KOEO or KOER self test. (See 01-02-12 KOEO/KOER SELF TEST [SKYACTIV-G 2.0].) • Is the same DTC present?	Yes	Replace the PCM, then go to the next step. (See 01-40-10 PCM REMOVAL/INSTALLATION [SKYACTIV-G 2.0].)
		No	Go to the next step.
5	**VERIFY AFTER REPAIR PROCEDURE** • Perform the “AFTER REPAIR PROCEDURE”. (See 01-02-12 AFTER REPAIR PROCEDURE [SKYACTIV-G 2.0].) • Are any DTCs present?	Yes	Go to the applicable DTC inspection. (See 01-02-14 DTC TABLE [SKYACTIV-G 2.0].)
		No	DTC troubleshooting completed.

ON-BOARD DIAGNOSTIC [SKYACTIV-G 2.0]

DTC P0607:00 [SKYACTIV-G 2.0]

id0102h1850500

DTC P0607:00	**Control module performance problem**
DETECTION CONDITION	• PCM internal malfunction. **Diagnostic support note** • This is a continuous monitor (CCM). • The check engine light illuminates if the PCM detects the above malfunction condition during the first drive cycle. • FREEZE FRAME DATA (Mode 2)/Snapshot data is not available. • The DTC is stored in the PCM memory.
FAIL-SAFE FUNCTION	—
POSSIBLE CAUSE	• PCM internal malfunction
SYSTEM WIRING DIAGRAM	—

Diagnostic Procedure

STEP	INSPECTION		ACTION
1	**VERIFY FREEZE FRAME DATA (MODE 2)/ SNAPSHOT DATA HAS BEEN RECORDED** • Has the FREEZE FRAME DATA (Mode 2)/ snapshot data been recorded?	Yes	Go to the next step.
		No	Record the FREEZE FRAME DATA (Mode 2)/snapshot data on the repair order, then go to the next step.
2	**VERIFY RELATED SERVICE INFORMATION AVAILABILITY** • Verify related Service Information availability. • Is any related Service Information available?	Yes	Perform repair or diagnosis according to the available Service Information. • If the vehicle is not repaired, go to the next step.
		No	Go to the next step.
3	**VERIFY DTC TROUBLESHOOTING COMPLETED** • Clear the DTC from the PCM memory using the M-MDS. (See 01-02-12 AFTER REPAIR PROCEDURE [SKYACTIV-G 2.0].) • Perform the KOEO or KOER self test. (See 01-02-12 KOEO/KOER SELF TEST [SKYACTIV-G 2.0].) • Is the same DTC present?	Yes	Replace the PCM, then go to the next step. (See 01-40-10 PCM REMOVAL/INSTALLATION [SKYACTIV-G 2.0].)
		No	Go to the next step.
4	**VERIFY AFTER REPAIR PROCEDURE** • Perform the “AFTER REPAIR PROCEDURE”. (See 01-02-12 AFTER REPAIR PROCEDURE [SKYACTIV-G 2.0].) • Are any DTCs present?	Yes	Go to the applicable DTC inspection. (See 01-02-14 DTC TABLE [SKYACTIV-G 2.0].)
		No	DTC troubleshooting completed.

ON-BOARD DIAGNOSTIC [SKYACTIV-G 2.0]

DTC P0610:00 [SKYACTIV-G 2.0]

id0102h1706000

DTC P0610:00	PCM vehicle configuration error
DETECTION CONDITION	• PCM data configuration error. **Diagnostic support note** • This is a continuous monitor (CCM). • The check engine light illuminates if the PCM detects the above malfunction condition during the first drive cycle. • FREEZE FRAME DATA (Mode 2)/Snapshot data is available. • The DTC is stored in the PCM memory.
FAIL-SAFE FUNCTION	—
POSSIBLE CAUSE	• Configuration procedure has not been completed • PCM connector or terminals malfunction • PCM malfunction
SYSTEM WIRING DIAGRAM	—

Diagnostic Procedure

STEP	INSPECTION		ACTION
1	**VERIFY FREEZE FRAME DATA (MODE 2)/ SNAPSHOT DATA HAS BEEN RECORDED** • Has the FREEZE FRAME DATA (Mode 2)/ snapshot data been recorded?	Yes	Go to the next step.
		No	Record the FREEZE FRAME DATA (Mode 2)/snapshot data on the repair order, then go to the next step.
2	**VERIFY RELATED SERVICE INFORMATION AVAILABILITY** • Verify related Service Information availability. • Is any related Service Information available?	Yes	Perform repair or diagnosis according to the available Service Information. • If the vehicle is not repaired, go to the next step.
		No	Go to the next step.
3	**PERFORM PCM CONFIGURATION** • Perform the PCM configuration (using read/ write function). (See 01-40-39 PCM CONFIGURATION (USING READ/WRITE FUNCTION) [SKYACTIV-G 2.0].) • Clear the DTC from the PCM memory using the M-MDS. (See 01-02-12 AFTER REPAIR PROCEDURE [SKYACTIV-G 2.0].) • Start the engine. • Perform the KOEO or KOER self test. (See 01-02-12 KOEO/KOER SELF TEST [SKYACTIV-G 2.0].) • Is the same DTC present?	Yes	Go to the next step.
		No	Go to Step 6.
4	**INSPECT PCM CONNECTOR CONDITION** • Switch the ignition to off. • Disconnect the PCM connector. • Inspect for poor connection (such as damaged/ pulled-out pins, corrosion). • Is there any malfunction?	Yes	Repair or replace the connector and/or terminals, then go to the next step.
		No	Perform the PCM configuration (using read/write function) again. (See 01-40-39 PCM CONFIGURATION (USING READ/ WRITE FUNCTION) [SKYACTIV-G 2.0].) • If the malfunction recurs, perform the PCM configuration (using as-built data). (See 01-40-39 PCM CONFIGURATION (USING AS-BUILT DATA) [SKYACTIV-G 2.0].) Go to the next step.

ON-BOARD DIAGNOSTIC [SKYACTIV-G 2.0]

STEP	INSPECTION		ACTION
5	**VERIFY DTC TROUBLESHOOTING COMPLETED** • Make sure to reconnect all disconnected connectors. • Clear the DTC from the PCM memory using the M-MDS. (See 01-02-12 AFTER REPAIR PROCEDURE [SKYACTIV-G 2.0].) • Start the engine. • Perform the KOEO or KOER self test. (See 01-02-12 KOEO/KOER SELF TEST [SKYACTIV-G 2.0].) • Is the same DTC present?	Yes	Replace the PCM, then go to the next step. (See 01-40-10 PCM REMOVAL/INSTALLATION [SKYACTIV-G 2.0].)
		No	Go to the next step.
6	**VERIFY AFTER REPAIR PROCEDURE** • Perform the “AFTER REPAIR PROCEDURE”. (See 01-02-12 AFTER REPAIR PROCEDURE [SKYACTIV-G 2.0].) • Are any DTCs present?	Yes	Go to the applicable DTC inspection. (See 01-02-14 DTC TABLE [SKYACTIV-G 2.0].)
		No	DTC troubleshooting completed.

DTC P0615:00 [SKYACTIV-G 2.0]

id0102h1061500

DTC P0615:00	**Starter relay circuit problem**
DETECTION CONDITION	• The PCM records DTCs when the number of times the engine has been started reaches the warranted performance frequency for the starter or starter relay. **Diagnostic support note** • This is a continuous monitor (other). • The check engine light does not illuminate. • FREEZE FRAME DATA (Mode 2)/Snapshot data is not available. • The DTC is stored in the PCM memory.
FAIL-SAFE FUNCTION	• Inhibits engine-stop by operating the i-stop function.
POSSIBLE CAUSE	• Number of times engine has been started has reached warranted performance frequency for starter or starter relay. • PCM malfunction
SYSTEM WIRING DIAGRAM	—

Diagnostic Procedure

STEP	INSPECTION		ACTION
1	**VERIFY RELATED SERVICE INFORMATION AVAILABILITY** • Verify related Service Information availability. • Is any related Service Information available?	Yes	Perform repair or diagnosis according to the available Service Information. • If the vehicle is not repaired, go to the next step.
		No	Go to the next step.
2	**REPLACE STARTER AND STARTER RELAY** • Switch the ignition to off. • Replace the starter and starter relay. (See 01-19A-2 STARTER REMOVAL/INSTALLATION [SKYACTIV-G 2.0].)	—	Go to the next step.
3	**VERIFY DTC TROUBLESHOOTING COMPLETED** • Clear the DTC from the PCM memory using the M-MDS. (See 01-02-12 AFTER REPAIR PROCEDURE [SKYACTIV-G 2.0].) • Perform the KOEO or KOER self test. (See 01-02-12 KOEO/KOER SELF TEST [SKYACTIV-G 2.0].) • Is the same DTC present?	Yes	Replace the PCM, then go to the next step. (See 01-40-10 PCM REMOVAL/INSTALLATION [SKYACTIV-G 2.0].)
		No	Go to the next step.

ON-BOARD DIAGNOSTIC [SKYACTIV-G 2.0]

STEP	INSPECTION		ACTION
4	**VERIFY AFTER REPAIR PROCEDURE** • Perform the “AFTER REPAIR PROCEDURE”. (See 01-02-12 AFTER REPAIR PROCEDURE [SKYACTIV-G 2.0].) • Are any DTCs present?	Yes	Go to the applicable DTC inspection. (See 01-02-14 DTC TABLE [SKYACTIV-G 2.0].)
		No	DTC troubleshooting completed.

DTC P061B:00 [SKYACTIV-G 2.0]

id0102h1302400

DTC P061B:00	**Internal control module torque calculation performance problem**
DETECTION CONDITION	• Indicates that a calculation error occurred in the PCM. • There is a malfunction in the sensor input signal to the PCM. **Diagnostic support note** • This is a continuous monitor (CCM). • The check engine light illuminates if the PCM detects the above malfunction condition during the first drive cycle. • FREEZE FRAME DATA (Mode 2)/Snapshot data is available. • The DTC is stored in the PCM memory.
FAIL-SAFE FUNCTION	• Restricts the upper limit of the engine speed.
POSSIBLE CAUSE	**Note** • This DTC is an informational DTC and may be set in combination with a number of other DTCs which are causing the FMEM. Diagnose other DTCs first. • PCM connector or terminals malfunction • PCM malfunction
SYSTEM WIRING DIAGRAM	—

Diagnostic Procedure

STEP	INSPECTION		ACTION
1	**VERIFY FREEZE FRAME DATA (MODE 2)/ SNAPSHOT DATA HAS BEEN RECORDED** • Has the FREEZE FRAME DATA (Mode 2)/ snapshot data been recorded?	Yes	Go to the next step.
		No	Record the FREEZE FRAME DATA (Mode 2)/snapshot data on the repair order, then go to the next step.
2	**VERIFY RELATED SERVICE INFORMATION AVAILABILITY** • Verify related Service Information availability. • Is any related Service Information available?	Yes	Perform repair or diagnosis according to the available Service Information. • If the vehicle is not repaired, go to the next step.
		No	Go to the next step.
3	**VERIFY RELATED PENDING CODE AND/OR DTC** • Switch the ignition to off, then to ON (engine off). • Perform the Pending Trouble Code Access Procedure and DTC Reading Procedure. (See 01-02-8 ON-BOARD DIAGNOSTIC TEST [SKYACTIV-G 2.0].) • Are any other PENDING CODEs and/or DTCs present?	Yes	Go to the applicable PENDING CODE or DTC inspection. (See 01-02-14 DTC TABLE [SKYACTIV-G 2.0].)
		No	Go to the next step.
4	**INSPECT PCM CONNECTOR CONDITION** • Switch the ignition to off. • Disconnect the PCM connector. • Inspect for poor connection (such as damaged/ pulled-out pins, corrosion). • Is there any malfunction?	Yes	Repair or replace the connector and/or terminals, then go to the next step.
		No	Reconnect the PCM connector and verify that the connector seat correctly, then go to the next step.

ON-BOARD DIAGNOSTIC [SKYACTIV-G 2.0]

STEP	INSPECTION		ACTION
5	**VERIFY DTC TROUBLESHOOTING COMPLETED** • Make sure to reconnect all disconnected connectors. • Clear the DTC from the PCM memory using the M-MDS. (See 01-02-12 AFTER REPAIR PROCEDURE [SKYACTIV-G 2.0].) • Perform the KOEO or KOER self test. (See 01-02-12 KOEO/KOER SELF TEST [SKYACTIV-G 2.0].) • Is the same DTC present?	Yes	Replace the PCM, then go to the next step. (See 01-40-10 PCM REMOVAL/INSTALLATION [SKYACTIV-G 2.0].)
		No	Go to the next step.
6	**VERIFY AFTER REPAIR PROCEDURE** • Perform the “AFTER REPAIR PROCEDURE”. (See 01-02-12 AFTER REPAIR PROCEDURE [SKYACTIV-G 2.0].) • Are any DTCs present?	Yes	Go to the applicable DTC inspection. (See 01-02-14 DTC TABLE [SKYACTIV-G 2.0].)
		No	DTC troubleshooting completed.

DTC P061D:00 [SKYACTIV-G 2.0]

id0102h1302500

DTC P061D:00	**Internal control module engine air mass performance problem**
DETECTION CONDITION	• Indicates an error occurred in the PCM. **Diagnostic support note** • This is a continuous monitor (CCM). • The check engine light illuminates if the PCM detects the above malfunction condition during the first drive cycle. • FREEZE FRAME DATA (Mode 2)/Snapshot data is available. • The DTC is stored in the PCM memory.
FAIL-SAFE FUNCTION	• Restricts the upper limit of the engine speed.
POSSIBLE CAUSE	• PCM connector or terminals malfunction • Software incompatibility issue • PCM malfunction
SYSTEM WIRING DIAGRAM	—

Diagnostic Procedure

STEP	INSPECTION		ACTION
1	**VERIFY FREEZE FRAME DATA (MODE 2)/ SNAPSHOT DATA HAS BEEN RECORDED** • Has the FREEZE FRAME DATA (Mode 2)/ snapshot data been recorded?	Yes	Go to the next step.
		No	Record the FREEZE FRAME DATA (Mode 2)/snapshot data on the repair order, then go to the next step.
2	**VERIFY RELATED SERVICE INFORMATION AVAILABILITY** • Verify related Service Information availability. • Is any related Service Information available?	Yes	Perform repair or diagnosis according to the available Service Information. • If the vehicle is not repaired, go to the next step.
		No	Go to the next step.
3	**INSPECT PCM CONNECTOR CONDITION** • Switch the ignition to off. • Disconnect the PCM connector. • Inspect for poor connection (such as damaged/ pulled-out pins, corrosion). • Is there any malfunction?	Yes	Repair or replace the connector and/or terminals, then go to Step 5.
		No	Reconnect the PCM connector and verify that the connector seat correctly, then go to the next step.

ON-BOARD DIAGNOSTIC [SKYACTIV-G 2.0]

STEP	INSPECTION		ACTION
4	**INSPECT PCM FOR LATEST CALIBRATION** • Program the PCM to the latest calibration. • Switch the ignition to off. • Perform the KOEO self test. (See 01-02-12 KOEO/KOER SELF TEST [SKYACTIV-G 2.0].) • Switch the ignition to off. • Perform the KOER self test. (See 01-02-12 KOEO/KOER SELF TEST [SKYACTIV-G 2.0].) • Use the customer information to recreate the concern. • Perform the KOEO or KOER self test. (See 01-02-12 KOEO/KOER SELF TEST [SKYACTIV-G 2.0].) • Is the same DTC present?	Yes	Replace the PCM, then go to the next step. (See 01-40-10 PCM REMOVAL/INSTALLATION [SKYACTIV-G 2.0].)
		No	Go to the next step.
5	**VERIFY DTC TROUBLESHOOTING COMPLETED** • Make sure to reconnect all disconnected connectors. • Clear the DTC from the PCM memory using the M-MDS. (See 01-02-12 AFTER REPAIR PROCEDURE [SKYACTIV-G 2.0].) • Perform the KOEO or KOER self test. (See 01-02-12 KOEO/KOER SELF TEST [SKYACTIV-G 2.0].) • Is the same DTC present?	Yes	Repeat the inspection from Step 1. • If the malfunction recurs, replace the PCM. (See 01-40-10 PCM REMOVAL/INSTALLATION [SKYACTIV-G 2.0].) Go to the next step.
		No	Go to the next step.
6	**VERIFY AFTER REPAIR PROCEDURE** • Perform the “AFTER REPAIR PROCEDURE”. (See 01-02-12 AFTER REPAIR PROCEDURE [SKYACTIV-G 2.0].) • Are any DTCs present?	Yes	Go to the applicable DTC inspection. (See 01-02-14 DTC TABLE [SKYACTIV-G 2.0].)
		No	DTC troubleshooting completed.

ON-BOARD DIAGNOSTIC [SKYACTIV-G 2.0]

DTC P061F:00 [SKYACTIV-G 2.0]

id0102h1302600

DTC P061F:00	**Internal control module throttle valve actuator controller performance problem**
DETECTION CONDITION	• When any of the following conditions is met: — CAN communication line between start stop unit and PCM malfunction — Start stop unit internal malfunction — PCM internal malfunction **Diagnostic support note** • This is a continuous monitor (other). • The check engine light does not illuminate. • FREEZE FRAME DATA (Mode 2)/Snapshot data is not available. • The DTC is stored in the PCM memory.
FAIL-SAFE FUNCTION	—
POSSIBLE CAUSE	**Note** • This DTC is an informational DTC and may be set in combination with a number of other DTCs which are causing the FMEM. Diagnose other DTCs first. • CAN communication line between start stop unit and PCM malfunction • Start stop unit connector or terminals malfunction • PCM connector or terminals malfunction • Start stop unit malfunction • PCM malfunction
SYSTEM WIRING DIAGRAM	—

Diagnostic Procedure

STEP	INSPECTION		ACTION
1	**VERIFY RELATED SERVICE INFORMATION AVAILABILITY** • Verify related Service Information availability. • Is any related Service Information available?	Yes	Perform repair or diagnosis according to the available Service Information. • If the vehicle is not repaired, go to the next step.
		No	Go to the next step.
2	**VERIFY RELATED PENDING CODE AND/OR DTC** • Switch the ignition to off, then to ON (engine off). • Perform the Pending Trouble Code Access Procedure and DTC Reading Procedure. (See 01-02-8 ON-BOARD DIAGNOSTIC TEST [SKYACTIV-G 2.0].) • Are any other PENDING CODEs and/or DTCs present?	Yes	Go to the applicable PENDING CODE or DTC inspection. (See 01-02-14 DTC TABLE [SKYACTIV-G 2.0].)
		No	Go to the next step.
3	**INSPECT START STOP UNIT CONNECTOR CONDITION** • Switch the ignition to off. • Disconnect the start stop unit connector. • Inspect for poor connection (such as damaged/ pulled-out pins, corrosion). • Is there any malfunction?	Yes	Repair or replace the connector and/or terminals, then go to Step 5.
		No	Go to the next step.
4	**INSPECT PCM CONNECTOR CONDITION** • Disconnect the PCM connector. • Inspect for poor connection (such as damaged/ pulled-out pins, corrosion). • Is there any malfunction?	Yes	Repair or replace the connector and/or terminals, then go to the next step.
		No	Reconnect the PCM connector and verify that the connector seat correctly, then go to the next step.

ON-BOARD DIAGNOSTIC [SKYACTIV-G 2.0]

STEP	INSPECTION		ACTION
5	**VERIFY DTC TROUBLESHOOTING COMPLETED** • Make sure to reconnect all disconnected connectors. • Clear the DTC from the PCM memory using the M-MDS. (See 01-02-12 AFTER REPAIR PROCEDURE [SKYACTIV-G 2.0].) • Perform the KOEO or KOER self test. (See 01-02-12 KOEO/KOER SELF TEST [SKYACTIV-G 2.0].) • Is the same DTC present?	Yes	Replace the PCM, then go to the next step. (See 01-40-10 PCM REMOVAL/INSTALLATION [SKYACTIV-G 2.0].)
		No	Go to the next step.
6	**VERIFY AFTER REPAIR PROCEDURE** • Perform the “AFTER REPAIR PROCEDURE”. (See 01-02-12 AFTER REPAIR PROCEDURE [SKYACTIV-G 2.0].) • Are any DTCs present?	Yes	Go to the applicable DTC inspection. (See 01-02-14 DTC TABLE [SKYACTIV-G 2.0].)
		No	DTC troubleshooting completed.

ON-BOARD DIAGNOSTIC [SKYACTIV-G 2.0]

DTC P0628:00 [SKYACTIV-G 2.0]

id0102h1148600

DTC P0628:00	**Fuel pump control module circuit low input**
DETECTION CONDITION	• When the PCM outputs a duty signal to the fuel pump control module, the difference in voltage between fuel pump unit terminals B and D is **less than 1.5 V** for a continuous **5 s**. **Diagnostic support note** • This is a continuous monitor (CCM). • The check engine light illuminates if the PCM detects the above malfunction condition during the first drive cycle. • FREEZE FRAME DATA (Mode 2)/Snapshot data is available. • The DTC is stored in the PCM memory.
FAIL-SAFE FUNCTION	—
POSSIBLE CAUSE	• Fuel pump unit connector or terminals malfunction • Fuel pump unit malfunction • Fuel pump control module connector or terminals malfunction • Short to ground in wiring harness between fuel pump unit terminal A and fuel pump control module terminal 2C • Open circuit in wiring harness between the following terminals: — Fuel pump unit terminal A—Fuel pump control module terminal 2C — Fuel pump unit terminal B—Fuel pump control module terminal 2D • Fuel pump control module malfunction • PCM malfunction

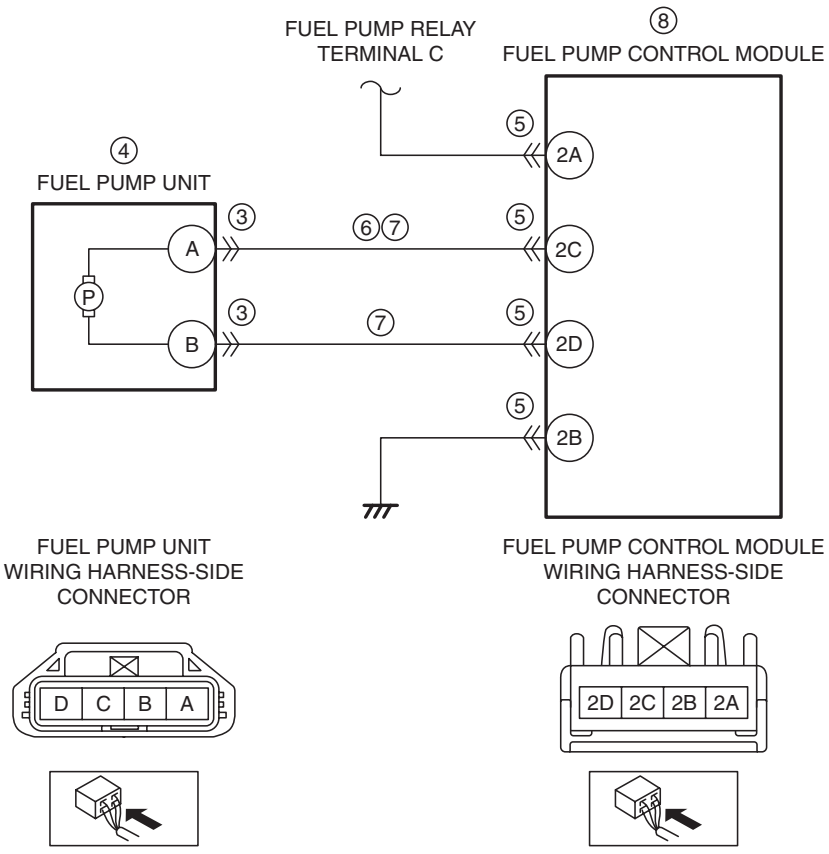

Diagnostic Procedure

STEP	INSPECTION		ACTION
1	**VERIFY FREEZE FRAME DATA (MODE 2)/ SNAPSHOT DATA HAS BEEN RECORDED** • Has the FREEZE FRAME DATA (Mode 2)/ snapshot data been recorded?	Yes	Go to the next step.
		No	Record the FREEZE FRAME DATA (Mode 2)/snapshot data on the repair order, then go to the next step.
2	**VERIFY RELATED SERVICE INFORMATION AVAILABILITY** • Verify related Service Information availability. • Is any related Service Information available?	Yes	Perform repair or diagnosis according to the available Service Information. • If the vehicle is not repaired, go to the next step.
		No	Go to the next step.

ON-BOARD DIAGNOSTIC [SKYACTIV-G 2.0]

STEP	INSPECTION		ACTION
3	**INSPECT FUEL PUMP UNIT CONNECTOR CONDITION** • Switch the ignition to off. • Disconnect the fuel pump unit connector. • Inspect for poor connection (such as damaged/ pulled-out pins, corrosion). • Is there any malfunction?	Yes	Repair or replace the connector and/or terminals, then go to Step 9.
		No	Go to the next step.
4	**INSPECT FUEL PUMP UNIT** • Inspect the fuel pump unit. (See 01-14A-44 FUEL PUMP UNIT INSPECTION [SKYACTIV-G 2.0].) • Is there any malfunction?	Yes	Replace the fuel pump unit, then go to Step 9. (See 01-14A-38 FUEL PUMP UNIT REMOVAL/ INSTALLATION [SKYACTIV-G 2.0].)
		No	Go to the next step.
5	**INSPECT FUEL PUMP CONTROL MODULE CONNECTOR CONDITION** • Disconnect the fuel pump control module connector. • Inspect for poor connection (such as damaged/ pulled-out pins, corrosion). • Is there any malfunction?	Yes	Repair or replace the connector and/or terminals, then go to Step 9.
		No	Go to the next step.
6	**INSPECT FUEL PUMP UNIT CONTROL CIRCUIT FOR SHORT TO GROUND** • Verify that the fuel pump unit and fuel pump control module connectors are disconnected. • Inspect for continuity between fuel pump unit terminal A (wiring harness-side) and body ground. • Is there continuity?	Yes	Repair or replace the wiring harness for a possible short to ground, then go to Step 9.
		No	Go to the next step.
7	**INSPECT FUEL PUMP UNIT CIRCUIT FOR OPEN CIRCUIT** • Verify that the fuel pump unit and fuel pump control module connectors are disconnected. • Inspect for continuity between the following terminals (wiring harness-side): — Fuel pump unit terminal A—Fuel pump control module terminal 2C — Fuel pump unit terminal B—Fuel pump control module terminal 2D • Is there continuity?	Yes	Go to the next step.
		No	Repair or replace the wiring harness for a possible open circuit, then go to Step 9.
8	**INSPECT FUEL PUMP CONTROL MODULE** • Inspect the fuel pump control module. (See 01-14A-64 FUEL PUMP CONTROL MODULE INSPECTION [SKYACTIV-G 2.0].) • Is there any malfunction?	Yes	Replace the fuel pump control module, then go to the next step. (See 01-14A-63 FUEL PUMP CONTROL MODULE REMOVAL/INSTALLATION [SKYACTIV-G 2.0].)
		No	Go to the next step.
9	**VERIFY DTC TROUBLESHOOTING COMPLETED** • Make sure to reconnect all disconnected connectors. • Clear the DTC from the PCM memory using the M-MDS. (See 01-02-12 AFTER REPAIR PROCEDURE [SKYACTIV-G 2.0].) • Perform the KOEO or KOER self test. (See 01-02-12 KOEO/KOER SELF TEST [SKYACTIV-G 2.0].) • Is the same DTC present?	Yes	Repeat the inspection from Step 1. • If the malfunction recurs, replace the PCM. (See 01-40-10 PCM REMOVAL/INSTALLATION [SKYACTIV-G 2.0].) Go to the next step.
		No	Go to the next step.
10	**VERIFY AFTER REPAIR PROCEDURE** • Perform the “AFTER REPAIR PROCEDURE”. (See 01-02-12 AFTER REPAIR PROCEDURE [SKYACTIV-G 2.0].) • Are any DTCs present?	Yes	Go to the applicable DTC inspection. (See 01-02-14 DTC TABLE [SKYACTIV-G 2.0].)
		No	DTC troubleshooting completed.

ON-BOARD DIAGNOSTIC [SKYACTIV-G 2.0]

DTC P0629:00 [SKYACTIV-G 2.0]

id0102h1148700

DTC P0629:00	Fuel pump control module circuit high input
DETECTION CONDITION	• Over-current is detected. **Diagnostic support note** • This is a continuous monitor (CCM). • The check engine light illuminates if the PCM detects the above malfunction condition during the first drive cycle. • FREEZE FRAME DATA (Mode 2)/Snapshot data is available. • The DTC is stored in the PCM memory.
FAIL-SAFE FUNCTION	• Stops the fuel pump control.
POSSIBLE CAUSE	• Fuel pump unit connector or terminals malfunction • Fuel pump unit malfunction • Fuel pump control module connector or terminals malfunction • Short to power supply in wiring harness between the following terminals: — Fuel pump unit terminal A—Fuel pump control module terminal 2C — Fuel pump unit terminal B—Fuel pump control module terminal 2D • Fuel pump control module malfunction • PCM malfunction

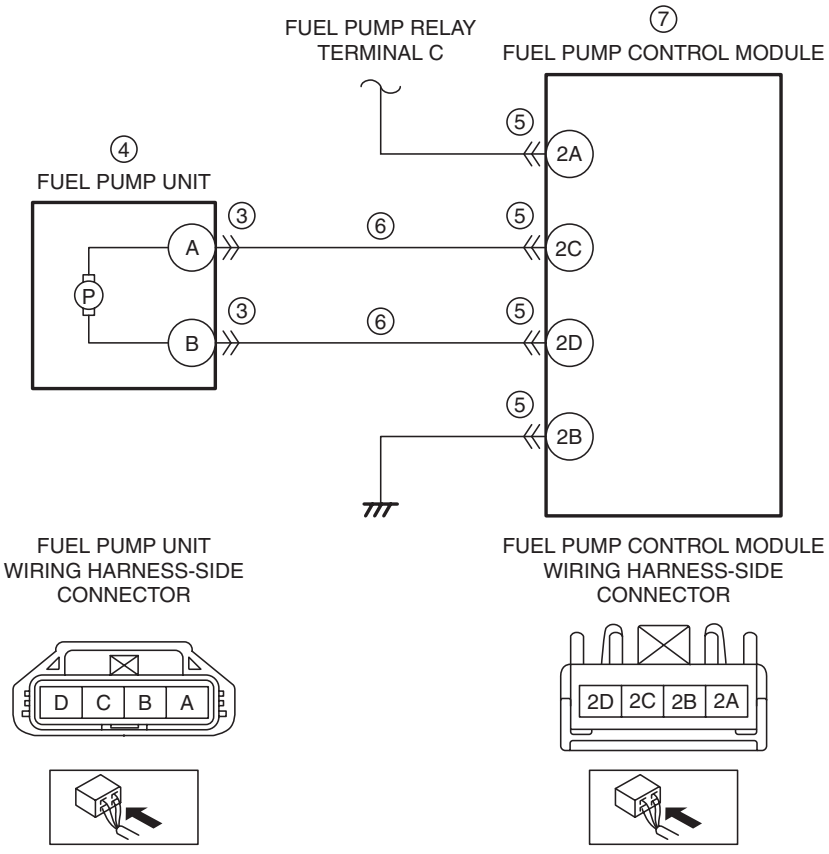

Diagnostic Procedure

STEP	INSPECTION		ACTION
1	**VERIFY FREEZE FRAME DATA (MODE 2)/ SNAPSHOT DATA HAS BEEN RECORDED** • Has the FREEZE FRAME DATA (Mode 2)/ snapshot data been recorded?	Yes	Go to the next step.
		No	Record the FREEZE FRAME DATA (Mode 2)/snapshot data on the repair order, then go to the next step.
2	**VERIFY RELATED SERVICE INFORMATION AVAILABILITY** • Verify related Service Information availability. • Is any related Service Information available?	Yes	Perform repair or diagnosis according to the available Service Information. • If the vehicle is not repaired, go to the next step.
		No	Go to the next step.

ON-BOARD DIAGNOSTIC [SKYACTIV-G 2.0]

STEP	INSPECTION		ACTION
3	**INSPECT FUEL PUMP UNIT CONNECTOR CONDITION** • Switch the ignition to off. • Disconnect the fuel pump unit connector. • Inspect for poor connection (such as damaged/ pulled-out pins, corrosion). • Is there any malfunction?	Yes	Repair or replace the connector and/or terminals, then go to Step 8.
		No	Go to the next step.
4	**INSPECT FUEL PUMP UNIT** • Inspect the fuel pump unit. (See 01-14A-44 FUEL PUMP UNIT INSPECTION [SKYACTIV-G 2.0].) • Is there any malfunction?	Yes	Replace the fuel pump unit, then go to Step 8. (See 01-14A-38 FUEL PUMP UNIT REMOVAL/ INSTALLATION [SKYACTIV-G 2.0].)
		No	Go to the next step.
5	**INSPECT FUEL PUMP CONTROL MODULE CONNECTOR CONDITION** • Disconnect the fuel pump control module connector. • Inspect for poor connection (such as damaged/ pulled-out pins, corrosion). • Is there any malfunction?	Yes	Repair or replace the connector and/or terminals, then go to Step 8.
		No	Go to the next step.
6	**INSPECT FUEL PUMP UNIT CIRCUIT FOR SHORT TO POWER SUPPLY** • Verify that the fuel pump unit and fuel pump control module connectors are disconnected. • Switch the ignition ON (engine off or on). • Measure the voltage at the following terminals (wiring harness-side): — Fuel pump unit terminal A — Fuel pump unit terminal B • Is the voltage **0 V**?	Yes	Go to the next step.
		No	Repair or replace the wiring harness for a possible short to power supply, then go to Step 8.
7	**INSPECT FUEL PUMP CONTROL MODULE** • Inspect the fuel pump control module. (See 01-14A-64 FUEL PUMP CONTROL MODULE INSPECTION [SKYACTIV-G 2.0].) • Is there any malfunction?	Yes	Replace the fuel pump control module, then go to the next step. (See 01-14A-63 FUEL PUMP CONTROL MODULE REMOVAL/INSTALLATION [SKYACTIV-G 2.0].)
		No	Go to the next step.
8	**VERIFY DTC TROUBLESHOOTING COMPLETED** • Make sure to reconnect all disconnected connectors. • Clear the DTC from the PCM memory using the M-MDS. (See 01-02-12 AFTER REPAIR PROCEDURE [SKYACTIV-G 2.0].) • Perform the KOEO or KOER self test. (See 01-02-12 KOEO/KOER SELF TEST [SKYACTIV-G 2.0].) • Is the same DTC present?	Yes	Repeat the inspection from Step 1. • If the malfunction recurs, replace the PCM. (See 01-40-10 PCM REMOVAL/INSTALLATION [SKYACTIV-G 2.0].) Go to the next step.
		No	Go to the next step.
9	**VERIFY AFTER REPAIR PROCEDURE** • Perform the “AFTER REPAIR PROCEDURE”. (See 01-02-12 AFTER REPAIR PROCEDURE [SKYACTIV-G 2.0].) • Are any DTCs present?	Yes	Go to the applicable DTC inspection. (See 01-02-14 DTC TABLE [SKYACTIV-G 2.0].)
		No	DTC troubleshooting completed.

ON-BOARD DIAGNOSTIC [SKYACTIV-G 2.0]

DTC P0638:00 [SKYACTIV-G 2.0]

id0102h1706100

DTC P0638:00	Throttle valve actuator control range/performance problem
DETECTION CONDITION	• The PCM compares the actual TP with the target TP. If the difference is more than the threshold value, the PCM determines that there is a throttle valve actuator control range/performance problem. **Diagnostic support note** • This is a continuous monitor (CCM). • The check engine light illuminates if the PCM detects the above malfunction condition during the first drive cycle. • FREEZE FRAME DATA (Mode 2)/Snapshot data is available. • The DTC is stored in the PCM memory.
FAIL-SAFE FUNCTION	• Restricts the upper limit of the engine speed. • Stops the drive-by-wire control (throttle valve is open at **approx. 8** ° by return spring force).
POSSIBLE CAUSE	• Throttle body connector or terminals malfunction • Short to ground in wiring harness between the following terminals: — Throttle body terminal E—PCM terminal 1CG — Throttle body terminal F—PCM terminal 1CC • PCM connector or terminals malfunction • Short to power supply in wiring harness between the following terminals: — Throttle body terminal E—PCM terminal 1CG — Throttle body terminal F—PCM terminal 1CC • Open circuit in wiring harness between the following terminals: — Throttle body terminal E—PCM terminal 1CG — Throttle body terminal F—PCM terminal 1CC • Throttle valve actuator malfunction • Throttle valve malfunction • PCM malfunction

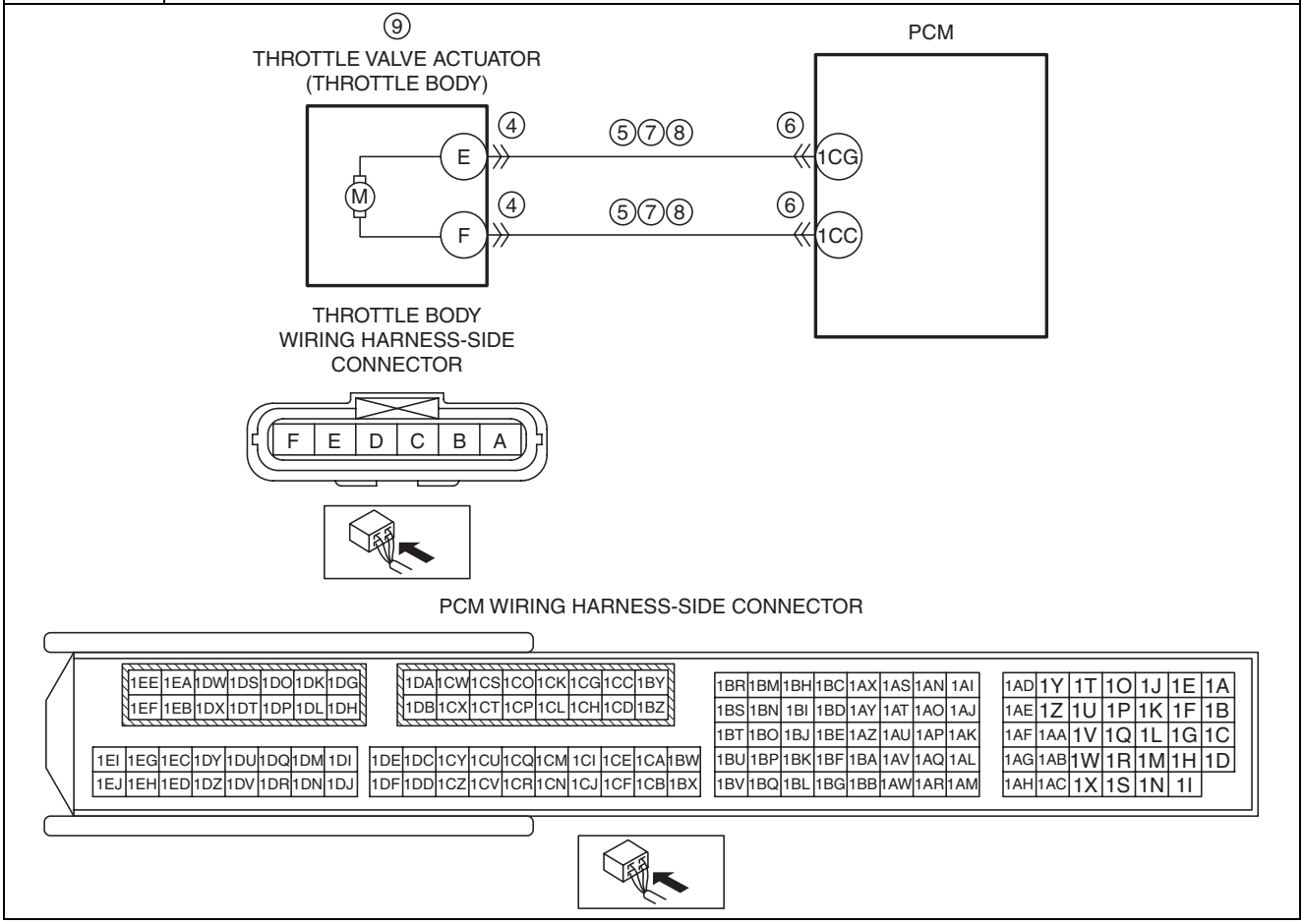

ON-BOARD DIAGNOSTIC [SKYACTIV-G 2.0]

Diagnostic Procedure

STEP	INSPECTION		ACTION
1	**VERIFY FREEZE FRAME DATA (MODE 2)/ SNAPSHOT DATA HAS BEEN RECORDED** • Has the FREEZE FRAME DATA (Mode 2)/ snapshot data been recorded?	Yes	Go to the next step.
		No	Record the FREEZE FRAME DATA (Mode 2)/snapshot data on the repair order, then go to the next step.
2	**VERIFY RELATED SERVICE INFORMATION AVAILABILITY** • Verify related Service Information availability. • Is any related Service Information available?	Yes	Perform repair or diagnosis according to the available Service Information. • If the vehicle is not repaired, go to the next step.
		No	Go to the next step.
3	**VERIFY RELATED PENDING CODE AND/OR DTC** • Switch the ignition to off, then to ON (engine off). • Perform the Pending Trouble Code Access Procedure and DTC Reading Procedure. (See 01-02-8 ON-BOARD DIAGNOSTIC TEST [SKYACTIV-G 2.0].) • Are any other PENDING CODEs and/or DTCs present?	Yes	Go to the applicable PENDING CODE or DTC inspection. (See 01-02-14 DTC TABLE [SKYACTIV-G 2.0].)
		No	Go to the next step.
4	**INSPECT THROTTLE BODY CONNECTOR CONDITION** • Switch the ignition to off. • Disconnect the throttle body connector. • Inspect for poor connection (such as damaged/ pulled-out pins, corrosion). • Is there any malfunction?	Yes	Repair or replace the connector and/or terminals, then go to Step 10.
		No	Go to the next step.
5	**INSPECT THROTTLE VALVE ACTUATOR CIRCUIT FOR SHORT TO GROUND** • Verify that the throttle body connector is disconnected. • Inspect for continuity between the following terminals (wiring harness-side) and body ground: — Throttle body terminal E — Throttle body terminal F • Is there continuity?	Yes	If the short to ground circuit could be detected in the wiring harness: • Repair or replace the wiring harness for a possible short to ground. If the short to ground circuit could not be detected in the wiring harness: • Replace the PCM (short to ground in the PCM internal circuit). (See 01-40-10 PCM REMOVAL/INSTALLATION [SKYACTIV-G 2.0].) Go to Step 10.
		No	Go to the next step.
6	**INSPECT PCM CONNECTOR CONDITION** • Disconnect the PCM connector. • Inspect for poor connection (such as damaged/ pulled-out pins, corrosion). • Is there any malfunction?	Yes	Repair or replace the connector and/or terminals, then go to Step 10.
		No	Go to the next step.
7	**INSPECT THROTTLE VALVE ACTUATOR CIRCUIT FOR SHORT TO POWER SUPPLY** • Verify that the throttle body and PCM connectors are disconnected. • Switch the ignition ON (engine off or on). • Measure the voltage at the following terminals (wiring harness-side): — Throttle body terminal E—PCM terminal 1CG — Throttle body terminal F—PCM terminal 1CC • Is the voltage **0 V**?	Yes	Go to the next step.
		No	Repair or replace the wiring harness for a possible short to power supply, then go to Step 10.

ON-BOARD DIAGNOSTIC [SKYACTIV-G 2.0]

STEP	INSPECTION		ACTION
8	**INSPECT THROTTLE VALVE ACTUATOR CIRCUIT FOR OPEN CIRCUIT** • Verify that the throttle body and PCM connectors are disconnected. • Switch the ignition to off. • Inspect for continuity between the following terminals (wiring harness-side): — Throttle body terminal E—PCM terminal 1CG — Throttle body terminal F—PCM terminal 1CC • Is there continuity?	Yes	Go to the next step.
		No	Repair or replace the wiring harness for a possible open circuit, then go to Step 10.
9	**INSPECT THROTTLE VALVE** • Perform the Electronic Control Throttle Operation Inspection. (See 01-03-118 ENGINE CONTROL SYSTEM OPERATION INSPECTION [SKYACTIV-G 2.0].) • Is there any malfunction?	Yes	Replace the throttle body, then go to the next step. (See 01-13A-6 INTAKE-AIR SYSTEM REMOVAL/INSTALLATION [SKYACTIV-G 2.0].)
		No	Go to the next step.
10	**VERIFY DTC TROUBLESHOOTING COMPLETED** • Make sure to reconnect all disconnected connectors. • Clear the DTC from the PCM memory using the M-MDS. (See 01-02-12 AFTER REPAIR PROCEDURE [SKYACTIV-G 2.0].) • Start the engine. • Perform the KOEO or KOER self test. (See 01-02-12 KOEO/KOER SELF TEST [SKYACTIV-G 2.0].) • Is the same DTC present?	Yes	Repeat the inspection from Step 1. • If the malfunction recurs, replace the PCM. (See 01-40-10 PCM REMOVAL/INSTALLATION [SKYACTIV-G 2.0].) Go to the next step.
		No	Go to the next step.
11	**VERIFY AFTER REPAIR PROCEDURE** • Perform the “AFTER REPAIR PROCEDURE”. (See 01-02-12 AFTER REPAIR PROCEDURE [SKYACTIV-G 2.0].) • Are any DTCs present?	Yes	Go to the applicable DTC inspection. (See 01-02-14 DTC TABLE [SKYACTIV-G 2.0].)
		No	DTC troubleshooting completed.

ON-BOARD DIAGNOSTIC [SKYACTIV-G 2.0]

DTC P064D:00 [SKYACTIV-G 2.0]

id0102h1302700

DTC P064D:00	Internal control module A/F sensor processor performance problem
DETECTION CONDITION	• The A/F sensor IC integrated in the PCM converts to the voltage value for the fuel control and for the diagnosis based on the A/F sensor signal current and sends to the CPU (integrated in the PCM). If there is a transmission format error from the A/F sensor IC to the PCM, the PCM will detect a transmission error. **MONITORING CONDITIONS** — Drive Mode 03 (Variable Valve Timing, A/F Sensor Heater, HO2S Heater, A/F Sensor, HO2S and TWC Repair Verification Drive Mode) — Following conditions are met: • Engine is running • Battery voltage: **11—18 V** **Diagnostic support note** • This is a continuous monitor (CCM). • The check engine light illuminates if the PCM detects the above malfunction condition during the first drive cycle. • FREEZE FRAME DATA (Mode 2)/Snapshot data is available. • The DTC is stored in the PCM memory.
FAIL-SAFE FUNCTION	• Fixes the duty value of the A/F sensor heater. • Stops the fuel feedback control.
POSSIBLE CAUSE	• PCM internal malfunction (between CPU and A/F sensor control IC communication line)
SYSTEM WIRING DIAGRAM	—

Diagnostic Procedure

STEP	INSPECTION		ACTION
1	**VERIFY FREEZE FRAME DATA (MODE 2)/ SNAPSHOT DATA HAS BEEN RECORDED** • Has the FREEZE FRAME DATA (Mode 2)/ snapshot data been recorded?	Yes	Go to the next step.
		No	Record the FREEZE FRAME DATA (Mode 2)/snapshot data on the repair order, then go to the next step.
2	**VERIFY RELATED SERVICE INFORMATION AVAILABILITY** • Verify related Service Information availability. • Is any related Service Information available?	Yes	Perform repair or diagnosis according to the available Service Information. • If the vehicle is not repaired, go to the next step.
		No	Go to the next step.
3	**VERIFY DTC TROUBLESHOOTING COMPLETED** • Clear the DTC from the PCM memory using the M-MDS. (See 01-02-12 AFTER REPAIR PROCEDURE [SKYACTIV-G 2.0].) • Perform the Drive Mode 03 (Variable Valve Timing, A/F Sensor Heater, HO2S Heater, A/F Sensor, HO2S and TWC Repair Verification Drive Mode). (See 01-02-13 OBD DRIVE MODE [SKYACTIV-G 2.0].) • Is the same DTC present?	Yes	Replace the PCM, then go to the next step. (See 01-40-10 PCM REMOVAL/INSTALLATION [SKYACTIV-G 2.0].)
		No	Go to the next step.
4	**VERIFY AFTER REPAIR PROCEDURE** • Perform the “AFTER REPAIR PROCEDURE”. (See 01-02-12 AFTER REPAIR PROCEDURE [SKYACTIV-G 2.0].) • Are any DTCs present?	Yes	Go to the applicable DTC inspection. (See 01-02-14 DTC TABLE [SKYACTIV-G 2.0].)
		No	DTC troubleshooting completed.

ON-BOARD DIAGNOSTIC [SKYACTIV-G 2.0]

DTC P0685:00 [SKYACTIV-G 2.0]

id0102h1302800

DTC P0685:00	Main relay control circuit open
DETECTION CONDITION	• This DTC sets when the ignition switch position run circuit indicates the key is in the off, ACC, or LOCK position, and the amount of time the PCM remains powered through the PCM power relay exceeds a predetermined amount of time. **Diagnostic support note** • This is a continuous monitor (CCM). • The check engine light illuminates if the PCM detects the above malfunction condition in two consecutive drive cycles or in one drive cycle while the DTC for the same malfunction has been stored in the PCM. • PENDING CODE is available if the PCM detects the above malfunction condition during first drive cycle. • FREEZE FRAME DATA (Mode 2)/Snapshot data is available. • The DTC is stored in the PCM memory.
FAIL-SAFE FUNCTION	—
POSSIBLE CAUSE	• Main relay malfunction • Short to ground or open circuit in main relay power supply circuit: — Short to ground in wiring harness between MAIN 200 A fuse and main relay terminal D — MAIN 200 A fuse and/or ENG.MAIN 40 A fuse malfunction — Open circuit in wiring harness between battery positive terminal and main relay terminal D • ENGINE2 15 A fuse malfunction • Short to ground in wiring harness between the following terminals: — Main relay terminal C—PCM terminal 2S — Main relay terminal C—PCM terminal 2T • PCM connector or terminals malfunction • Open circuit in wiring harness between PCM terminal 1BZ and body ground • Open circuit in wiring harness between PCM terminal 2AA and body ground • Open circuit in wiring harness between the following terminals: — Main relay terminal C—PCM terminal 2S — Main relay terminal C—PCM terminal 2T • PCM malfunction

ON-BOARD DIAGNOSTIC [SKYACTIV-G 2.0]

DTC P0685:00	Main relay control circuit open

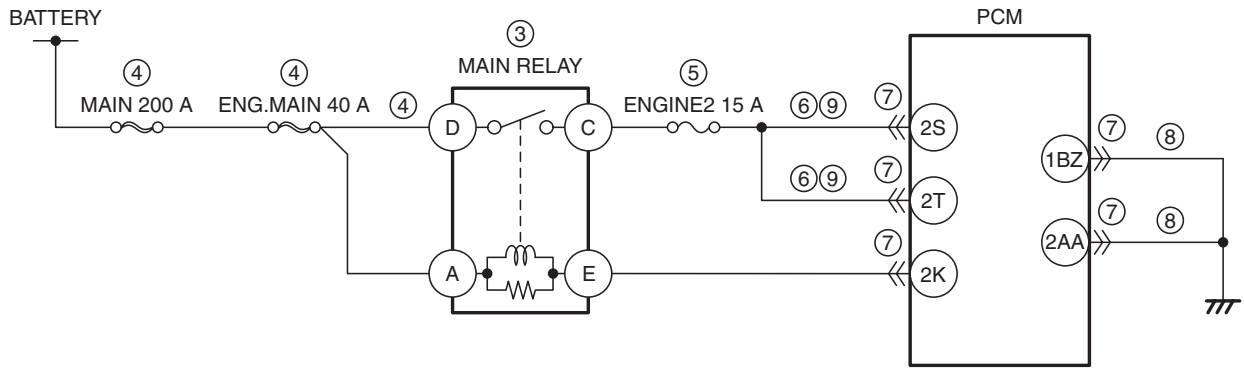

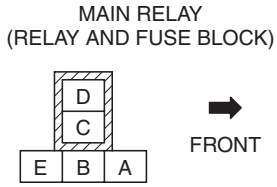

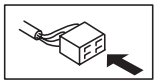

PCM WIRING HARNESS-SIDE CONNECTOR

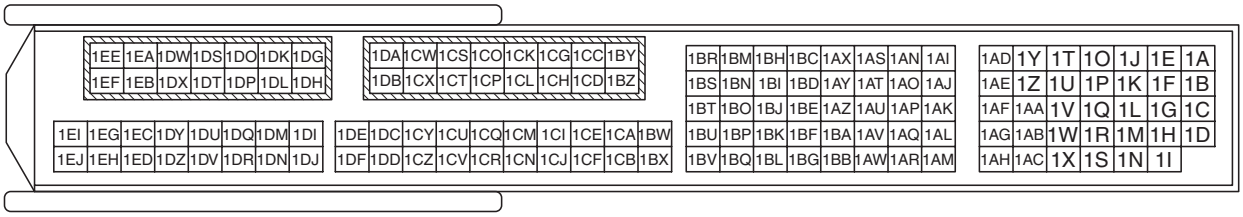

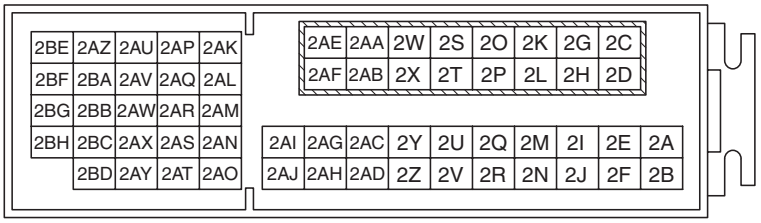

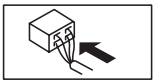

Diagnostic Procedure

STEP	INSPECTION		ACTION
1	**VERIFY FREEZE FRAME DATA (MODE 2)/ SNAPSHOT DATA HAS BEEN RECORDED** • Has the FREEZE FRAME DATA (Mode 2)/ snapshot data been recorded?	Yes	Go to the next step.
		No	Record the FREEZE FRAME DATA (Mode 2)/snapshot data on the repair order, then go to the next step.
2	**VERIFY RELATED SERVICE INFORMATION AVAILABILITY** • Verify related Service Information availability. • Is any related Service Information available?	Yes	Perform repair or diagnosis according to the available Service Information. • If the vehicle is not repaired, go to the next step.
		No	Go to the next step.
3	**INSPECT MAIN RELAY** • Switch the ignition to off. • Remove the main relay. • Inspect the main relay. (See 09-21-29 RELAY INSPECTION.) • Is there any malfunction?	Yes	Replace the main relay, then go to Step 10.
		No	Go to the next step.

ON-BOARD DIAGNOSTIC [SKYACTIV-G 2.0]

STEP	INSPECTION		ACTION
4	**INSPECT MAIN RELAY POWER SUPPLY CIRCUIT FOR SHORT TO GROUND OR OPEN CIRCUIT** • Main relay is removed. • Measure the voltage at the main relay terminal D (wiring harness-side). • Is the voltage **B+**?	Yes	Go to the next step.
		No	Inspect the MAIN 200 A fuse and ENG.MAIN 40 A fuse. • If the fuse is blown: — Repair or replace the wiring harness for a possible short to ground. — Replace the malfunctioning fuse. • If the fuse is deteriorated: — Replace the malfunctioning fuse. • If all fuses are normal: — Repair or replace the wiring harness for a possible open circuit. Go to Step 10.
5	**INSPECT ENGINE2 15 A FUSE** • Remove the ENGINE2 15 A fuse. • Inspect the ENGINE2 15 A fuse. • Is there any malfunction?	Yes	If the fuse is blown: • Repair or replace the wiring harness for a possible short to ground. • Replace the fuse. If the fuse is deteriorated: • Replace the fuse. Go to Step 10.
		No	Reinstall the ENGINE2 15 A fuse, then go to the next step.
6	**INSPECT PCM POWER SUPPLY CIRCUIT FOR SHORT TO GROUND** • Main relay is removed. • Inspect for continuity between main relay terminal C (wiring harness-side) and body ground. • Is there continuity?	Yes	If the short to ground circuit could be detected in the wiring harness: • Repair or replace the wiring harness for a possible short to ground. If the short to ground circuit could not be detected in the wiring harness: • Replace the PCM (short to ground in the PCM internal circuit). (See 01-40-10 PCM REMOVAL/INSTALLATION [SKYACTIV-G 2.0].) Go to Step 10.
		No	Go to the next step.
7	**INSPECT PCM CONNECTOR CONDITION** • Disconnect the PCM connector. • Inspect for poor connection (such as damaged/pulled-out pins, corrosion). • Is there any malfunction?	Yes	Repair or replace the connector and/or terminals, then go to Step 10.
		No	Go to the next step.
8	**INSPECT PCM GROUND CIRCUIT FOR OPEN CIRCUIT** • Main relay is removed. • Verify that the PCM connector is disconnected. • Inspect for continuity between the following harnesses: — PCM terminal 1BZ (wiring harness-side)—Body ground — PCM terminal 2AA (wiring harness-side)—Body ground • Is there continuity?	Yes	Go to the next step.
		No	Repair or replace the wiring harness for a possible open circuit, then go to Step 10.
9	**INSPECT PCM POWER SUPPLY CIRCUIT FOR OPEN CIRCUIT** • Main relay is removed. • Verify that the PCM connector is disconnected. • Inspect for continuity between the following terminals (wiring harness-side): — Main relay terminal C—PCM terminal 2S — Main relay terminal C—PCM terminal 2T • Is there continuity?	Yes	Go to the next step.
		No	Repair or replace the wiring harness for a possible open circuit, then go to the next step.

ON-BOARD DIAGNOSTIC [SKYACTIV-G 2.0]

STEP	INSPECTION		ACTION
10	**VERIFY DTC TROUBLESHOOTING COMPLETED** • Make sure to reconnect all disconnected connectors. • Clear the DTC from the PCM memory using the M-MDS. (See 01-02-12 AFTER REPAIR PROCEDURE [SKYACTIV-G 2.0].) • Start the engine and warm it up completely. • Perform the Pending Trouble Code Access Procedure. (See 01-02-8 ON-BOARD DIAGNOSTIC TEST [SKYACTIV-G 2.0].) • Is the PENDING CODE for this DTC present?	Yes	Repeat the inspection from Step 1. • If the malfunction recurs, replace the PCM. (See 01-40-10 PCM REMOVAL/INSTALLATION [SKYACTIV-G 2.0].) Go to the next step.
		No	Go to the next step.
11	**VERIFY AFTER REPAIR PROCEDURE** • Perform the “AFTER REPAIR PROCEDURE”. (See 01-02-12 AFTER REPAIR PROCEDURE [SKYACTIV-G 2.0].) • Are any DTCs present?	Yes	Go to the applicable DTC inspection. (See 01-02-14 DTC TABLE [SKYACTIV-G 2.0].)
		No	DTC troubleshooting completed.

DTC P06B8:00 [SKYACTIV-G 2.0]

id0102h1316200

DTC P06B8:00	**Internal control module non-volatile RAM error**
DETECTION CONDITION	• PCM internal EEPROM malfunction. **Diagnostic support note** • This is a continuous monitor (other). • The check engine light illuminates if the PCM detects the above malfunction condition during the first drive cycle. • FREEZE FRAME DATA (Mode 2)/Snapshot data is available. • The DTC is stored in the PCM memory.
FAIL-SAFE FUNCTION	—
POSSIBLE CAUSE	• PCM connector or terminals malfunction • PCM internal EEPROM malfunction
SYSTEM WIRING DIAGRAM	—

Diagnostic Procedure

STEP	INSPECTION		ACTION
1	**VERIFY FREEZE FRAME DATA (MODE 2)/ SNAPSHOT DATA HAS BEEN RECORDED** • Has the FREEZE FRAME DATA (Mode 2)/ snapshot data been recorded?	Yes	Go to the next step.
		No	Record the FREEZE FRAME DATA (Mode 2)/snapshot data on the repair order, then go to the next step.
2	**VERIFY RELATED SERVICE INFORMATION AVAILABILITY** • Verify related Service Information availability. • Is any related Service Information available?	Yes	Perform repair or diagnosis according to the available Service Information. • If the vehicle is not repaired, go to the next step.
		No	Go to the next step.
3	**INSPECT PCM CONNECTOR CONDITION** • Switch the ignition to off. • Disconnect the PCM connector. • Inspect for poor connection (such as damaged/ pulled-out pins, corrosion). • Is there any malfunction?	Yes	Repair or replace the connector and/or terminals, then go to the next step.
		No	Go to the next step.

ON-BOARD DIAGNOSTIC [SKYACTIV-G 2.0]

STEP	INSPECTION		ACTION
4	**VERIFY DTC TROUBLESHOOTING COMPLETED** • Make sure to reconnect all disconnected connectors. • Clear the DTC from the PCM memory using the M-MDS. (See 01-02-12 AFTER REPAIR PROCEDURE [SKYACTIV-G 2.0].) • Perform the KOEO or KOER self test. (See 01-02-12 KOEO/KOER SELF TEST [SKYACTIV-G 2.0].) • Is the same DTC present?	Yes	Replace the PCM, then go to the next step. (See 01-40-10 PCM REMOVAL/INSTALLATION [SKYACTIV-G 2.0].)
		No	Go to the next step.
5	**VERIFY AFTER REPAIR PROCEDURE** • Perform the “AFTER REPAIR PROCEDURE”. (See 01-02-12 AFTER REPAIR PROCEDURE [SKYACTIV-G 2.0].) • Are any DTCs present?	Yes	Go to the applicable DTC inspection. (See 01-02-14 DTC TABLE [SKYACTIV-G 2.0].)
		No	DTC troubleshooting completed.

ON-BOARD DIAGNOSTIC [SKYACTIV-G 2.0]

DTC P06DA:00 [SKYACTIV-G 2.0]

id0102h1009300

DTC P06DA:00	**Engine oil solenoid valve circuit problem**
DETECTION CONDITION	• The engine oil solenoid valve control current exceeds the specification or the control voltage at the PCM terminal 1AS is less than the specification relative to the PCM control condition. **Diagnostic support note** • This is a continuous monitor (other). • The check engine light does not illuminate. • FREEZE FRAME DATA (Mode 2)/Snapshot data is not available. • The DTC is stored in the PCM memory.
FAIL-SAFE FUNCTION	—
POSSIBLE CAUSE	• Engine oil solenoid valve connector or terminals malfunction • Short to ground or open circuit in engine oil solenoid valve power supply circuit — Short to ground in wiring harness between ENGINE2 15 A fuse and engine oil solenoid valve terminal A — ENGINE2 15 A fuse malfunction — Open circuit in wiring harness between main relay terminal C and engine oil solenoid valve terminal A • Short to ground in wiring harness between engine oil solenoid valve terminal B and PCM terminal 1AS • PCM connector or terminals malfunction • Short to power supply in wiring harness between engine oil solenoid valve terminal B and PCM terminal 1AS • Open circuit in wiring harness between engine oil solenoid valve terminal B and PCM terminal 1AS • Engine oil solenoid valve malfunction • PCM malfunction

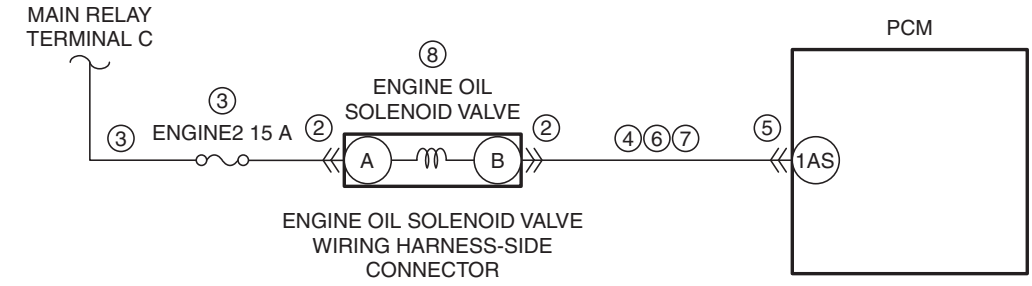

PCM WIRING HARNESS-SIDE CONNECTOR

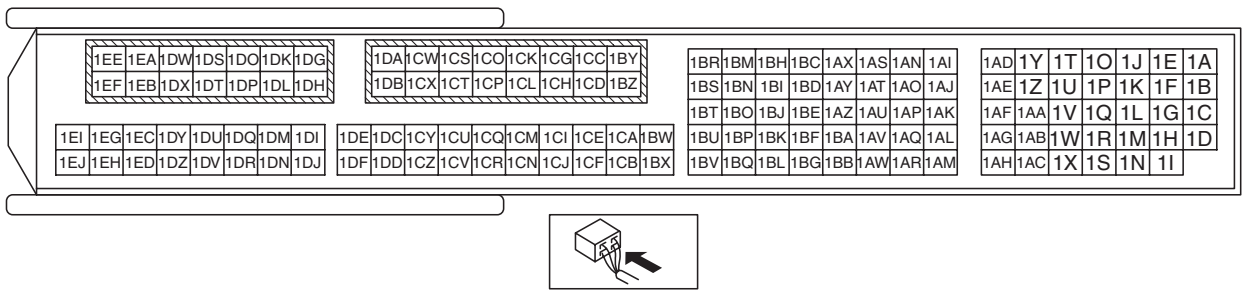

ON-BOARD DIAGNOSTIC [SKYACTIV-G 2.0]

Diagnostic Procedure

STEP	INSPECTION		ACTION
1	**VERIFY RELATED SERVICE INFORMATION AVAILABILITY** • Verify related Service Information availability. • Is any related Service Information available?	Yes	Perform repair or diagnosis according to the available Service Information. • If the vehicle is not repaired, go to the next step.
		No	Go to the next step.
2	**INSPECT ENGINE OIL SOLENOID VALVE CONNECTOR CONDITION** • Switch the ignition to off. • Disconnect the engine oil solenoid valve connector. • Inspect for poor connection (such as damaged/ pulled-out pins, corrosion). • Is there any malfunction?	Yes	Repair or replace the connector and/or terminals, then go to Step 9.
		No	Go to the next step.
3	**INSPECT ENGINE OIL SOLENOID VALVE POWER SUPPLY CIRCUIT FOR SHORT TO GROUND OR OPEN CIRCUIT** • Verify that the engine oil solenoid valve connector is disconnected. • Switch the ignition ON (engine off or on). • Measure the voltage at the engine oil solenoid valve terminal A (wiring harness-side). • Is the voltage **B+**?	Yes	Go to the next step.
		No	Inspect the ENGINE2 15 A fuse. • If the fuse is blown: — Repair or replace the wiring harness for a possible short to ground. — Replace the fuse. • If the fuse is deteriorated: — Replace the fuse. • If the fuse is normal: — Repair or replace the wiring harness for a possible open circuit. Go to Step 9.
4	**INSPECT ENGINE OIL SOLENOID VALVE CONTROL CIRCUIT FOR SHORT TO GROUND** • Verify that the engine oil solenoid valve connector is disconnected. • Switch the ignition to off. • Inspect for continuity between engine oil solenoid valve terminal B (wiring harness-side) and body ground. • Is there continuity?	Yes	If the short to ground circuit could be detected in the wiring harness: • Repair or replace the wiring harness for a possible short to ground. If the short to ground circuit could not be detected in the wiring harness: • Replace the PCM (short to ground in the PCM internal circuit). (See 01-40-10 PCM REMOVAL/INSTALLATION [SKYACTIV-G 2.0].) Go to Step 9.
		No	Go to the next step.
5	**INSPECT PCM CONNECTOR CONDITION** • Disconnect the PCM connector. • Inspect for poor connection (such as damaged/ pulled-out pins, corrosion). • Is there any malfunction?	Yes	Repair or replace the connector and/or terminals, then go to Step 9.
		No	Go to the next step.
6	**INSPECT ENGINE OIL SOLENOID VALVE CONTROL CIRCUIT FOR SHORT TO POWER SUPPLY** • Verify that the engine oil solenoid valve and PCM connectors are disconnected. • Switch the ignition ON (engine off or on). • Measure the voltage at the engine oil solenoid valve terminal B (wiring harness-side). • Is the voltage **0 V**?	Yes	Go to the next step.
		No	Repair or replace the wiring harness for a possible short to power supply, then go to Step 9.
7	**INSPECT ENGINE OIL SOLENOID VALVE CONTROL CIRCUIT FOR OPEN CIRCUIT** • Verify that the engine oil solenoid valve and PCM connectors are disconnected. • Switch the ignition to off. • Inspect for continuity between engine oil solenoid valve terminal B (wiring harness-side) and PCM terminal 1AS (wiring harness-side). • Is there continuity?	Yes	Go to the next step.
		No	Repair or replace the wiring harness for a possible open circuit, then go to Step 9.
8	**INSPECT ENGINE OIL SOLENOID VALVE** • Inspect the engine oil solenoid valve. (See 01-11A-12 ENGINE OIL SOLENOID VALVE INSPECTION [SKYACTIV-G 2.0].) • Is there any malfunction?	Yes	Replace the engine oil solenoid valve, then go to the next step. (See 01-11A-10 ENGINE OIL SOLENOID VALVE REMOVAL/INSTALLATION [SKYACTIV-G 2.0].)
		No	Go to the next step.

ON-BOARD DIAGNOSTIC [SKYACTIV-G 2.0]

STEP	INSPECTION		ACTION
9	**VERIFY DTC TROUBLESHOOTING COMPLETED** • Make sure to reconnect all disconnected connectors. • Clear the DTC from the PCM memory using the M-MDS. (See 01-02-12 AFTER REPAIR PROCEDURE [SKYACTIV-G 2.0].) • Perform the KOER self test. (See 01-02-12 KOEO/KOER SELF TEST [SKYACTIV-G 2.0].) • Is the same DTC present?	Yes	Repeat the inspection from Step 1. • If the malfunction recurs, replace the PCM. (See 01-40-10 PCM REMOVAL/INSTALLATION [SKYACTIV-G 2.0].) Go to the next step.
		No	Go to the next step.
10	**VERIFY AFTER REPAIR PROCEDURE** • Perform the “AFTER REPAIR PROCEDURE”. (See 01-02-12 AFTER REPAIR PROCEDURE [SKYACTIV-G 2.0].) • Are any DTCs present?	Yes	Go to the applicable DTC inspection. (See 01-02-14 DTC TABLE [SKYACTIV-G 2.0].)
		No	DTC troubleshooting completed.

ON-BOARD DIAGNOSTIC [SKYACTIV-G 2.0]

DTC P0703:00 [SKYACTIV-G 2.0]

id0102h1706500

DTC P0703:00	**Brake switch input circuit problem**
DETECTION CONDITION	• The PCM monitors the input signal from the brake switch No.1. If the input signal does not change while following decelerating **8 times**, the PCM determines that there is a brake switch No.1 input circuit problem. **MONITORING CONDITIONS** — Vehicle speed: from **above 30 km/h {19 mph}** to **30 km/h {19 mph} or less** — Deceleration rate: **exceeds 2.4 km/h {1.5 mph} per sec** **Diagnostic support note** • This is a continuous monitor (CCM). • The check engine light illuminates if the PCM detects the above malfunction condition in two consecutive drive cycles or in one drive cycle while the DTC for the same malfunction has been stored in the PCM. • PENDING CODE is available if the PCM detects the above malfunction condition during first drive cycle. • FREEZE FRAME DATA (Mode 2)/Snapshot data is available. • The DTC is stored in the PCM memory.
FAIL-SAFE FUNCTION	—
POSSIBLE CAUSE	**Caution** • **Inspect the brake switch with it installed to the brake pedal, otherwise the brake switch may not operate normally. If the brake switch is removed from the brake pedal, replace the brake switch with a new one.** • Brake switch connector or terminals malfunction • Short to ground or open circuit in brake switch No.1 power supply circuit — Short to ground in wiring harness between MAIN 200 A fuse and brake switch terminal A — MAIN 200 A fuse and/or STOP 10 A fuse malfunction — Open circuit in wiring harness between battery positive terminal and brake switch terminal A • Short to ground in wiring harness between brake switch terminal D and PCM terminal 2G • PCM connector or terminals malfunction • Short to power supply in wiring harness between brake switch terminal D and PCM terminal 2G • Open circuit in wiring harness between brake switch terminal D and PCM terminal 2G • Brake switch No.1 malfunction • PCM malfunction

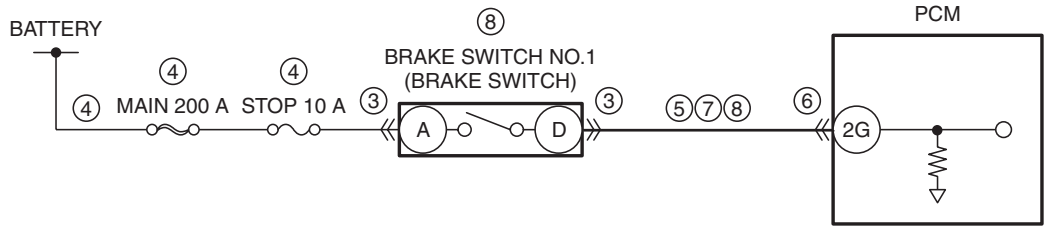

BRAKE SWITCH WIRING HARNESS-SIDE CONNECTOR

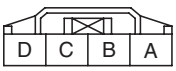

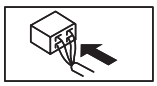

PCM WIRING HARNESS-SIDE CONNECTOR

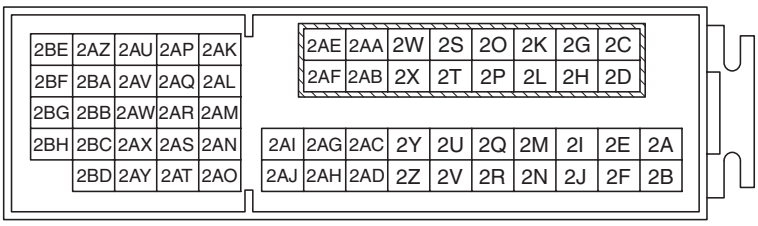

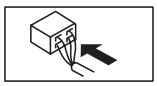

ON-BOARD DIAGNOSTIC [SKYACTIV-G 2.0]

Diagnostic Procedure

STEP	INSPECTION		ACTION
1	**VERIFY FREEZE FRAME DATA (MODE 2)/ SNAPSHOT DATA HAS BEEN RECORDED** • Has the FREEZE FRAME DATA (Mode 2)/ snapshot data been recorded?	Yes	Go to the next step.
		No	Record the FREEZE FRAME DATA (Mode 2)/snapshot data on the repair order, then go to the next step.
2	**VERIFY RELATED SERVICE INFORMATION AVAILABILITY** • Verify related Service Information availability. • Is any related Service Information available?	Yes	Perform repair or diagnosis according to the available Service Information. • If the vehicle is not repaired, go to the next step.
		No	Go to the next step.
3	**INSPECT BRAKE SWITCH CONNECTOR CONDITION** • Switch the ignition to off. • Disconnect the brake switch connector. • Inspect for poor connection (such as damaged/ pulled-out pins, corrosion). • Is there any malfunction?	Yes	Repair or replace the connector and/or terminals, then go to Step 9.
		No	Go to the next step.
4	**INSPECT BRAKE SWITCH NO.1 POWER SUPPLY CIRCUIT FOR SHORT TO GROUND OR OPEN CIRCUIT** • Verify that the brake switch connector is disconnected. • Measure the voltage at the brake switch terminal A (wiring harness-side). • Is the voltage **B+**?	Yes	Go to the next step.
		No	Inspect the MAIN 200 A fuse and STOP 10 A fuse. • If the fuse is blown: — Repair or replace the wiring harness for a possible short to ground. — Replace the malfunctioning fuse. • If the fuse is deteriorated: — Replace the malfunctioning fuse. • If all fuses are normal: — Repair or replace the wiring harness for a possible open circuit. Go to Step 9.
5	**INSPECT BRAKE SWITCH NO.1 SIGNAL CIRCUIT FOR SHORT TO GROUND** • Verify that the brake switch connector is disconnected. • Inspect for continuity between brake switch terminal D (wiring harness-side) and body ground. • Is there continuity?	Yes	If the short to ground circuit could be detected in the wiring harness: • Repair or replace the wiring harness for a possible short to ground. If the short to ground circuit could not be detected in the wiring harness: • Replace the PCM (short to ground in the PCM internal circuit). (See 01-40-10 PCM REMOVAL/INSTALLATION [SKYACTIV-G 2.0].) Go to Step 9.
		No	Go to the next step.
6	**INSPECT PCM CONNECTOR CONDITION** • Disconnect the PCM connector. • Inspect for poor connection (such as damaged/ pulled-out pins, corrosion). • Is there any malfunction?	Yes	Repair or replace the connector and/or terminals, then go to Step 9.
		No	Go to the next step.
7	**INSPECT BRAKE SWITCH NO.1 SIGNAL CIRCUIT FOR SHORT TO POWER SUPPLY** • Verify that the brake switch and PCM connectors are disconnected. • Switch the ignition ON (engine off or on). • Measure the voltage at the brake switch terminal D (wiring harness-side). • Is the voltage **0 V**?	Yes	Go to the next step.
		No	Repair or replace the wiring harness for a possible short to power supply, then go to Step 9.
8	**INSPECT BRAKE SWITCH NO.1 SIGNAL CIRCUIT FOR OPEN CIRCUIT** • Verify that the brake switch and PCM connectors are disconnected. • Switch the ignition to off. • Inspect for continuity between brake switch terminal D (wiring harness-side) and PCM terminal 2G (wiring harness-side). • Is there continuity?	Yes	Replace the brake switch, then go to the next step. (See 04-11-9 BRAKE PEDAL REMOVAL/INSTALLATION [R.H.D.].) (See 04-11-8 BRAKE PEDAL REMOVAL/INSTALLATION [L.H.D.].)
		No	Repair or replace the wiring harness for a possible open circuit, then go to the next step.

ON-BOARD DIAGNOSTIC [SKYACTIV-G 2.0]

STEP	INSPECTION		ACTION
9	**VERIFY DTC TROUBLESHOOTING COMPLETED** • Make sure to reconnect all disconnected connectors. • Clear the DTC from the PCM memory using the M-MDS. (See 01-02-12 AFTER REPAIR PROCEDURE [SKYACTIV-G 2.0].) • Drive the vehicle. • Repeat deceleration **8 times** under both of the following conditions: — Vehicle speed: from **above 30 km/h {19 mph}** to **30 km/h {19 mph} or less** — Deceleration rate: **exceeds 2.4 km/h {1.5 mph} per sec** • Perform the Pending Trouble Code Access Procedure. (See 01-02-8 ON-BOARD DIAGNOSTIC TEST [SKYACTIV-G 2.0].) • Is the PENDING CODE for this DTC present?	Yes	Repeat the inspection from Step 1. • If the malfunction recurs, replace the PCM. (See 01-40-10 PCM REMOVAL/INSTALLATION [SKYACTIV-G 2.0].) Go to the next step.
		No	Go to the next step.
10	**VERIFY AFTER REPAIR PROCEDURE** • Perform the “AFTER REPAIR PROCEDURE”. (See 01-02-12 AFTER REPAIR PROCEDURE [SKYACTIV-G 2.0].) • Are any DTCs present?	Yes	Go to the applicable DTC inspection. (See 01-02-14 DTC TABLE [SKYACTIV-G 2.0].)
		No	DTC troubleshooting completed.

ON-BOARD DIAGNOSTIC [SKYACTIV-G 2.0]

DTC P0704:00 [SKYACTIV-G 2.0]

id0102h1706600

DTC P0704:00	**CPP switch input circuit problem**
DETECTION CONDITION	• The PCM monitors changes in input voltage from the CPP switch. If the PCM does not detect a voltage change while the vehicle runs with vehicle speed **above 30 km/h {19 mph}** and stops **8 times** alternately, the PCM determines that the CPP switch circuit has a malfunction. **Diagnostic support note** • This is a continuous monitor (CCM). • The check engine light illuminates if the PCM detects the above malfunction condition in two consecutive drive cycles or in one drive cycle while the DTC for the same malfunction has been stored in the PCM. • PENDING CODE is available if the PCM detects the above malfunction condition during first drive cycle. • FREEZE FRAME DATA (Mode 2)/Snapshot data is available. • The DTC is stored in the PCM memory.
FAIL-SAFE FUNCTION	—
POSSIBLE CAUSE	**Caution** • **Inspect the CPP switch with it installed to the clutch pedal, otherwise the CPP switch may not operate normally after inspection. If the CPP switch is removed from the clutch pedal, replace the CPP switch with a new one.** • CPP switch connector or terminals malfunction • CPP switch malfunction • Open circuit in wiring harness between CPP switch terminal B and body ground • Short to ground in wiring harness between CPP switch terminal A and PCM terminal 2J • PCM connector or terminals malfunction • Open circuit in wiring harness between CPP switch terminal A and PCM terminal 2J • PCM malfunction

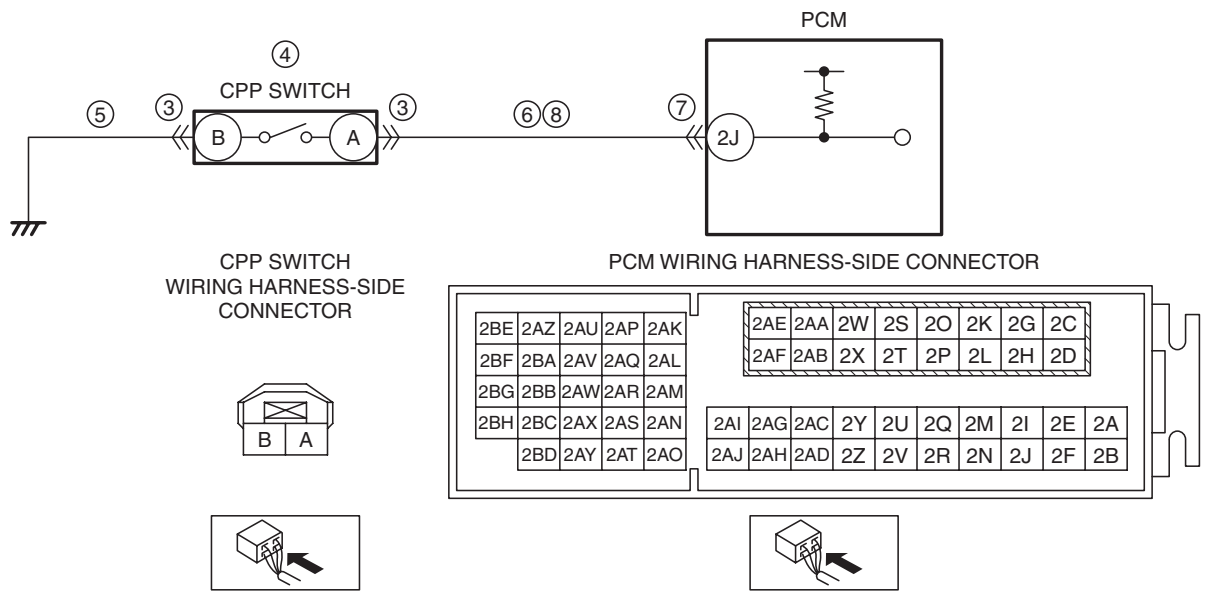

Diagnostic Procedure

STEP	INSPECTION		ACTION
1	**VERIFY FREEZE FRAME DATA (MODE 2)/ SNAPSHOT DATA HAS BEEN RECORDED** • Has the FREEZE FRAME DATA (Mode 2)/ snapshot data been recorded?	Yes	Go to the next step.
		No	Record the FREEZE FRAME DATA (Mode 2)/snapshot data on the repair order, then go to the next step.
2	**VERIFY RELATED SERVICE INFORMATION AVAILABILITY** • Verify related Service Information availability. • Is any related Service Information available?	Yes	Perform repair or diagnosis according to the available Service Information. • If the vehicle is not repaired, go to the next step.
		No	Go to the next step.

ON-BOARD DIAGNOSTIC [SKYACTIV-G 2.0]

STEP	INSPECTION		ACTION
3	**INSPECT CPP SWITCH CONNECTOR CONDITION** • Switch the ignition to off. • Disconnect the CPP switch connector. • Inspect for poor connection (such as damaged/pulled-out pins, corrosion). • Is there any malfunction?	Yes	Repair or replace the connector and/or terminals, then go to Step 9.
		No	Go to the next step.
4	**INSPECT CPP SWITCH** • Inspect the CPP switch. (See 01-40-40 CLUTCH PEDAL POSITION (CPP) SWITCH INSPECTION [SKYACTIV-G 2.0].) • Is there any malfunction?	Yes	Replace the CPP switch, then go to Step 9. (See 05-10A-13 CLUTCH PEDAL POSITION SWITCH REMOVAL/INSTALLATION [C66M-R, C66MX-R].)
		No	Go to the next step.
5	**INSPECT CPP SWITCH GROUND CIRCUIT FOR OPEN CIRCUIT** • Verify that the CPP switch connector is disconnected. • Inspect for continuity between CPP switch terminal B (wiring harness-side) and body ground. • Is there continuity?	Yes	Go to the next step.
		No	Repair or replace the wiring harness for a possible open circuit, then go to Step 9.
6	**INSPECT CPP SWITCH SIGNAL CIRCUIT FOR SHORT TO GROUND** • Verify that the CPP switch connector is disconnected. • Inspect for continuity between CPP switch terminal A (wiring harness-side) and body ground. • Is there continuity?	Yes	If the short to ground circuit could be detected in the wiring harness: • Repair or replace the wiring harness for a possible short to ground. If the short to ground circuit could not be detected in the wiring harness: • Replace the PCM (short to ground in the PCM internal circuit). (See 01-40-10 PCM REMOVAL/INSTALLATION [SKYACTIV-G 2.0].) Go to Step 9.
		No	Go to the next step.
7	**INSPECT PCM CONNECTOR CONDITION** • Disconnect the PCM connector. • Inspect for poor connection (such as damaged/pulled-out pins, corrosion). • Is there any malfunction?	Yes	Repair or replace the connector and/or terminals, then go to Step 9.
		No	Go to the next step.
8	**INSPECT CPP SWITCH SIGNAL CIRCUIT FOR OPEN CIRCUIT** • Verify that the CPP switch and PCM connectors are disconnected. • Inspect for continuity between CPP switch terminal A (wiring harness-side) and PCM terminal 2J (wiring harness-side). • Is there continuity?	Yes	Go to the next step.
		No	Repair or replace the wiring harness for a possible open circuit, then go to the next step.
9	**VERIFY DTC TROUBLESHOOTING COMPLETED** • Make sure to reconnect all disconnected connectors. • Clear the DTC from the PCM memory using the M-MDS. (See 01-02-12 AFTER REPAIR PROCEDURE [SKYACTIV-G 2.0].) • Operate the clutch pedal while driving the vehicle **above 30 km/h {19 mph}** and stopping **8 times** alternately. • Perform the Pending Trouble Code Access Procedure. (See 01-02-8 ON-BOARD DIAGNOSTIC TEST [SKYACTIV-G 2.0].) • Is the PENDING CODE for this DTC present?	Yes	Repeat the inspection from Step 1. • If the malfunction recurs, replace the PCM. (See 01-40-10 PCM REMOVAL/INSTALLATION [SKYACTIV-G 2.0].) Go to the next step.
		No	Go to the next step.
10	**VERIFY AFTER REPAIR PROCEDURE** • Perform the “AFTER REPAIR PROCEDURE”. (See 01-02-12 AFTER REPAIR PROCEDURE [SKYACTIV-G 2.0].) • Are any DTCs present?	Yes	Go to the applicable DTC inspection. (See 01-02-14 DTC TABLE [SKYACTIV-G 2.0].)
		No	DTC troubleshooting completed.

ON-BOARD DIAGNOSTIC [SKYACTIV-G 2.0]

DTC P07BE:00 [SKYACTIV-G 2.0]

id0102h1950300

DTC P07BE:00	**Transmission indeterminate failure (failed to neutral)**
DETECTION CONDITION	• Correlation malfunction between neutral switches No.1 and No.2. **Diagnostic support note** • This is a continuous monitor (other). • The check engine light does not illuminate. • FREEZE FRAME DATA (Mode 2)/Snapshot data is not available. • The DTC is stored in the PCM memory.
FAIL-SAFE FUNCTION	—
POSSIBLE CAUSE	• Neutral switch No.2 connector or terminals malfunction • Neutral switch No.2 malfunction • Open circuit in wiring harness between neutral switch No.2 terminal C and body ground • Short to ground in wiring harness between neutral switch No.2 terminal B and PCM terminal 1G • PCM connector or terminals malfunction • Open circuit in wiring harness between neutral switch No.2 terminal B and PCM terminal 1G • PCM malfunction

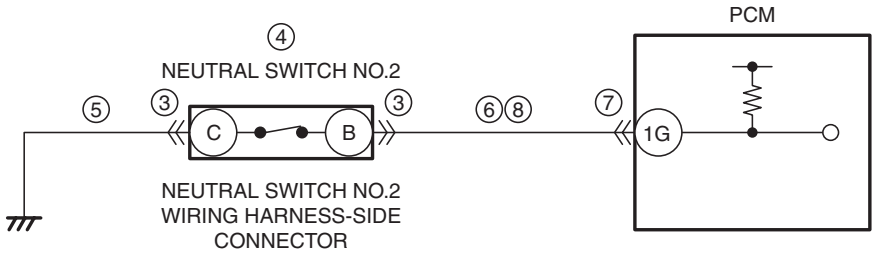

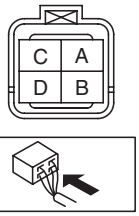

PCM WIRING HARNESS-SIDE CONNECTOR

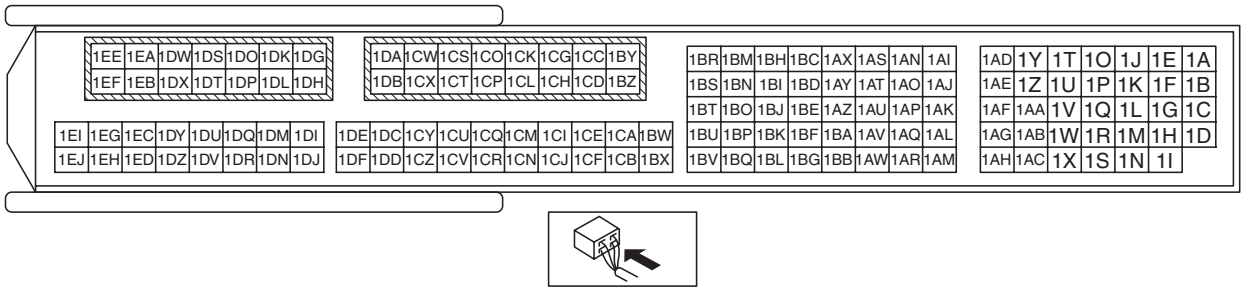

Diagnostic Procedure

STEP	INSPECTION		ACTION
1	**VERIFY RELATED SERVICE INFORMATION AVAILABILITY** • Verify related Service Information availability. • Is any related Service Information available?	Yes	Perform repair or diagnosis according to the available Service Information. • If the vehicle is not repaired, go to the next step.
		No	Go to the next step.
2	**VERIFY RELATED PENDING CODE AND/OR DTC** • Switch the ignition to off, then to ON (engine off). • Perform the Pending Trouble Code Access Procedure and DTC Reading Procedure. (See 01-02-8 ON-BOARD DIAGNOSTIC TEST [SKYACTIV-G 2.0].) • Is the PENDING CODE/DTC P0850:00 also present?	Yes	Go to the applicable PENDING CODE or DTC inspection. (See 01-02-275 DTC P0850:00 [SKYACTIV-G 2.0].)
		No	Go to the next step.

ON-BOARD DIAGNOSTIC [SKYACTIV-G 2.0]

STEP	INSPECTION		ACTION
3	**INSPECT NEUTRAL SWITCH NO.2 CONNECTOR CONDITION** • Switch the ignition to off. • Disconnect the neutral switch No.2 connector. • Inspect for poor connection (such as damaged/ pulled-out pins, corrosion). • Is there any malfunction?	Yes	Repair or replace the connector and/or terminals, then go to Step 9.
		No	Go to the next step.
4	**INSPECT NEUTRAL SWITCH NO.2** • Inspect the neutral switch No.2. (See 01-40-40 NEUTRAL SWITCH INSPECTION [SKYACTIV-G 2.0].) • Is there any malfunction?	Yes	Replace the neutral switch No.2, then go to Step 9. (See 05-15A-2 NEUTRAL SWITCH REMOVAL/ INSTALLATION [C66M-R, C66MX-R].)
		No	Go to the next step.
5	**INSPECT NEUTRAL SWITCH NO.2 GROUND CIRCUIT FOR OPEN CIRCUIT** • Verify that the neutral switch No.2 connector is disconnected. • Inspect for continuity between neutral switch No.2 terminal C (wiring harness-side) and body ground. • Is there continuity?	Yes	Go to the next step.
		No	Repair or replace the wiring harness for a possible open circuit, then go to Step 9.
6	**INSPECT NEUTRAL SWITCH NO.2 SIGNAL CIRCUIT FOR SHORT TO GROUND** • Verify that the neutral switch No.2 connector is disconnected. • Inspect for continuity between neutral switch No.2 terminal B (wiring harness-side) and body ground. • Is there continuity?	Yes	If the short to ground circuit could be detected in the wiring harness: • Repair or replace the wiring harness for a possible short to ground. If the short to ground circuit could not be detected in the wiring harness: • Replace the PCM (short to ground in the PCM internal circuit). (See 01-40-10 PCM REMOVAL/INSTALLATION [SKYACTIV-G 2.0].) Go to Step 9.
		No	Go to the next step.
7	**INSPECT PCM CONNECTOR CONDITION** • Disconnect the PCM connector. • Inspect for poor connection (such as damaged/ pulled-out pins, corrosion). • Is there any malfunction?	Yes	Repair or replace the connector and/or terminals, then go to Step 9.
		No	Go to the next step.
8	**INSPECT NEUTRAL SWITCH NO.2 SIGNAL CIRCUIT FOR OPEN CIRCUIT** • Verify that the neutral switch No.2 and PCM connectors are disconnected. • Inspect for continuity between neutral switch No.2 terminal B (wiring harness-side) and PCM terminal 1G (wiring harness-side). • Is there continuity?	Yes	Go to the next step.
		No	Repair or replace the wiring harness for a possible open circuit, then go to the next step.
9	**VERIFY DTC TROUBLESHOOTING COMPLETED** • Make sure to reconnect all disconnected connectors. • Clear the DTC from the PCM memory using the M-MDS. (See 01-02-12 AFTER REPAIR PROCEDURE [SKYACTIV-G 2.0].) • Perform the KOEO or KOER self test. (See 01-02-12 KOEO/KOER SELF TEST [SKYACTIV-G 2.0].) • Is the same DTC present?	Yes	Repeat the inspection from Step 1. • If the malfunction recurs, replace the PCM. (See 01-40-10 PCM REMOVAL/INSTALLATION [SKYACTIV-G 2.0].) Go to the next step.
		No	Go to the next step.
10	**VERIFY AFTER REPAIR PROCEDURE** • Perform the “AFTER REPAIR PROCEDURE”. (See 01-02-12 AFTER REPAIR PROCEDURE [SKYACTIV-G 2.0].) • Are any DTCs present?	Yes	Go to the applicable DTC inspection. (See 01-02-14 DTC TABLE [SKYACTIV-G 2.0].)
		No	DTC troubleshooting completed.

ON-BOARD DIAGNOSTIC [SKYACTIV-G 2.0]

DTC P0850:00 [SKYACTIV-G 2.0]

id0102h1706700

DTC P0850:00	**Neutral switch No.1 input circuit problem**
DETECTION CONDITION	• The PCM monitors changes in input voltage from the neutral switch No.1. If the PCM does not detect a voltage change while driving the vehicle at a vehicle speed **above 30 km/h {19 mph}** and clutch pedal is pressed and released **10 times** repeatedly, the PCM determines that the neutral switch No.1 circuit has a malfunction. **Diagnostic support note** • This is a continuous monitor (CCM). • The check engine light illuminates if the PCM detects the above malfunction condition in two consecutive drive cycles or in one drive cycle while the DTC for the same malfunction has been stored in the PCM. • PENDING CODE is available if the PCM detects the above malfunction condition during first drive cycle. • FREEZE FRAME DATA (Mode 2)/Snapshot data is available. • The DTC is stored in the PCM memory.
FAIL-SAFE FUNCTION	—
POSSIBLE CAUSE	• Neutral switch No.1 connector or terminals malfunction • Neutral switch No.1 malfunction • Open circuit in wiring harness between neutral switch No.1 terminal B and body ground • Short to ground in wiring harness between neutral switch No.1 terminal A and PCM terminal 1K • PCM connector or terminals malfunction • Open circuit in wiring harness between neutral switch No.1 terminal A and PCM terminal 1K • PCM malfunction

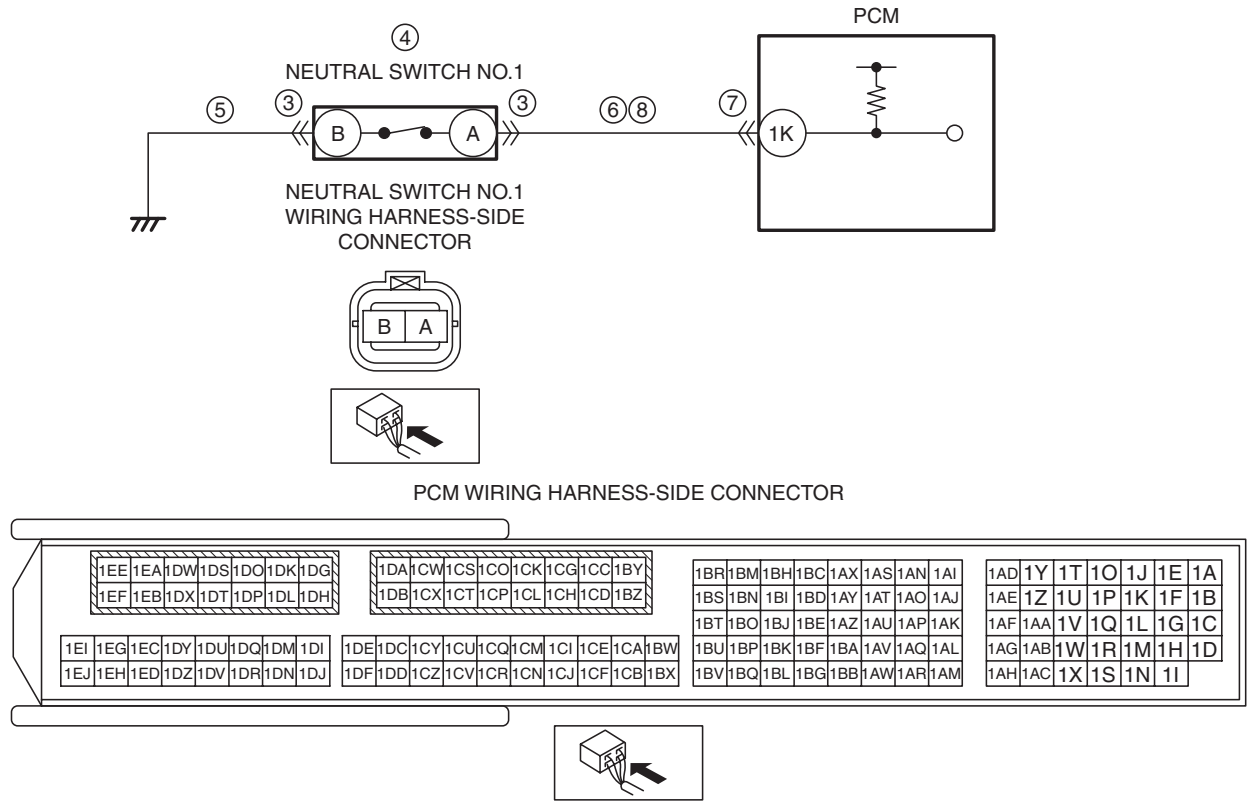

Diagnostic Procedure

STEP	INSPECTION		ACTION
1	**VERIFY FREEZE FRAME DATA (MODE 2)/ SNAPSHOT DATA HAS BEEN RECORDED** • Has the FREEZE FRAME DATA (Mode 2)/ snapshot data been recorded?	Yes	Go to the next step.
		No	Record the FREEZE FRAME DATA (Mode 2)/snapshot data on the repair order, then go to the next step.
2	**VERIFY RELATED SERVICE INFORMATION AVAILABILITY** • Verify related Service Information availability. • Is any related Service Information available?	Yes	Perform repair or diagnosis according to the available Service Information. • If the vehicle is not repaired, go to the next step.
		No	Go to the next step.

ON-BOARD DIAGNOSTIC [SKYACTIV-G 2.0]

STEP	INSPECTION		ACTION
3	**INSPECT NEUTRAL SWITCH NO.1 CONNECTOR CONDITION** • Switch the ignition to off. • Disconnect the neutral switch No.1 connector. • Inspect for poor connection (such as damaged/ pulled-out pins, corrosion). • Is there any malfunction?	Yes	Repair or replace the connector and/or terminals, then go to Step 9.
		No	Go to the next step.
4	**INSPECT NEUTRAL SWITCH NO.1** • Inspect the neutral switch No.1. (See 01-40-40 NEUTRAL SWITCH INSPECTION [SKYACTIV-G 2.0].) • Is there any malfunction?	Yes	Replace the neutral switch No.1, then go to Step 9. (See 05-15A-2 NEUTRAL SWITCH REMOVAL/ INSTALLATION [C66M-R, C66MX-R].)
		No	Go to the next step.
5	**INSPECT NEUTRAL SWITCH NO.1 GROUND CIRCUIT FOR OPEN CIRCUIT** • Verify that the neutral switch No.1 connector is disconnected. • Inspect for continuity between neutral switch No.1 terminal B (wiring harness-side) and body ground. • Is there continuity?	Yes	Go to the next step.
		No	Repair or replace the wiring harness for a possible open circuit, then go to Step 9.
6	**INSPECT NEUTRAL SWITCH NO.1 SIGNAL CIRCUIT FOR SHORT TO GROUND** • Verify that the neutral switch No.1 connector is disconnected. • Inspect for continuity between neutral switch No.1 terminal A (wiring harness-side) and body ground. • Is there continuity?	Yes	If the short to ground circuit could be detected in the wiring harness: • Repair or replace the wiring harness for a possible short to ground. If the short to ground circuit could not be detected in the wiring harness: • Replace the PCM (short to ground in the PCM internal circuit). (See 01-40-10 PCM REMOVAL/INSTALLATION [SKYACTIV-G 2.0].) Go to Step 9.
		No	Go to the next step.
7	**INSPECT PCM CONNECTOR CONDITION** • Disconnect the PCM connector. • Inspect for poor connection (such as damaged/ pulled-out pins, corrosion). • Is there any malfunction?	Yes	Repair or replace the connector and/or terminals, then go to Step 9.
		No	Go to the next step.
8	**INSPECT NEUTRAL SWITCH NO.1 SIGNAL CIRCUIT FOR OPEN CIRCUIT** • Verify that the neutral switch No.1 and PCM connectors are disconnected. • Inspect for continuity between neutral switch No.1 terminal A (wiring harness-side) and PCM terminal 1K (wiring harness-side). • Is there continuity?	Yes	Go to the next step.
		No	Repair or replace the wiring harness for a possible open circuit, then go to the next step.
9	**VERIFY DTC TROUBLESHOOTING COMPLETED** • Make sure to reconnect all disconnected connectors. • Clear the DTC from the PCM memory using the M-MDS. (See 01-02-12 AFTER REPAIR PROCEDURE [SKYACTIV-G 2.0].) • Drive the vehicle **above 30 km/h {19 mph}** and stop the vehicle. • Depress and release the clutch pedal **more than 10 times** during drive cycle. • Perform the Pending Trouble Code Access Procedure. (See 01-02-8 ON-BOARD DIAGNOSTIC TEST [SKYACTIV-G 2.0].) • Is the PENDING CODE for this DTC present?	Yes	Repeat the inspection from Step 1. • If the malfunction recurs, replace the PCM. (See 01-40-10 PCM REMOVAL/INSTALLATION [SKYACTIV-G 2.0].) Go to the next step.
		No	Go to the next step.
10	**VERIFY AFTER REPAIR PROCEDURE** • Perform the “AFTER REPAIR PROCEDURE”. (See 01-02-12 AFTER REPAIR PROCEDURE [SKYACTIV-G 2.0].) • Are any DTCs present?	Yes	Go to the applicable DTC inspection. (See 01-02-14 DTC TABLE [SKYACTIV-G 2.0].)
		No	DTC troubleshooting completed.

ON-BOARD DIAGNOSTIC [SKYACTIV-G 2.0]

DTC P0A0F:00 [SKYACTIV-G 2.0]

id0102h1950400

DTC P0A0F:00	Engine failed to restart
DETECTION CONDITION	• Any of following conditions occurs: — When the engine should restart after it is stopped by the i-stop control, it does not start even though it is cranked for **3 s or more**. — When the engine should restart after it is stopped by the i-stop control, it does not cranked. **Diagnostic support note** • This is a continuous monitor (other). • The check engine light does not illuminate. • FREEZE FRAME DATA (Mode 2)/Snapshot data is not available. • The DTC is stored in the PCM memory.
FAIL-SAFE FUNCTION	• Inhibits engine-stop by operating the i-stop function.
POSSIBLE CAUSE	• Related parts malfunction — Starter relay malfunction — Battery malfunction — Wiring harness malfunction between starter relay and PCM, or poor connector contact — Starter malfunction • Piston stop position malfunction during idling stop — Generator control malfunction — CKP sensor signal malfunction — Throttle valve operation malfunction (drive-by-wire control malfunction) — Intake air system related malfunction (air suction, vacuum hose breakage) — Purge control malfunction — Generator drive belt wear — Engine starting system malfunction • Mechanical (engine) malfunction — Improper intake valve timing — Improper operation of electric variable valve timing control system • Electric variable valve timing driver malfunction • Electric variable valve timing motor malfunction • Electric variable valve timing actuator malfunction — Improper exhaust valve timing — Improper operation of hydraulic variable valve timing control system • PCM malfunction
SYSTEM WIRING DIAGRAM	—

Diagnostic Procedure

STEP	INSPECTION		ACTION
1	**VERIFY RELATED SERVICE INFORMATION AVAILABILITY** • Verify related Service Information availability. • Is any related Service Information available?	Yes	Perform repair or diagnosis according to the available Service Information. • If the vehicle is not repaired, go to the next step.
		No	Go to the next step.
2	**VERIFY RELATED PENDING CODE AND/OR DTC** • Switch the ignition to off, then to ON (engine off). • Perform the Pending Trouble Code Access Procedure and DTC Reading Procedure. (See 01-02-8 ON-BOARD DIAGNOSTIC TEST [SKYACTIV-G 2.0].) • Is the PENDING CODE/DTC P1260:00 also present?	Yes	Go to the applicable PENDING CODE or DTC inspection. (See 01-02-289 DTC P1260:00 [SKYACTIV-G 2.0].)
		No	Go to the next step.
3	**INSPECT FOR A MALFUNCTION RELATED INABILITY TO START ENGINE** • Start the engine. • Does the engine start normally?	Yes	Perform the applicable symptom troubleshooting. (See 01-03-19 NO.3 WILL NOT CRANK [SKYACTIV-G 2.0].) (See 01-03-25 NO.4 HARD TO START/LONG CRANK/ERRATIC START/ERRATIC CRANK [SKYACTIV-G 2.0].) (See 01-03-37 NO.6 CRANKS NORMALLY BUT WILL NOT START [SKYACTIV-G 2.0].)
		No	Go to the next step.

ON-BOARD DIAGNOSTIC [SKYACTIV-G 2.0]

STEP	INSPECTION		ACTION
4	**DETERMINE IF MALFUNCTION IS CAUSED BY ROUGH IDLING OR A PISTON-STOP POSITION CONTROL MALFUNCTION** • Start the engine and warm it up completely. • Is the idle speed stabilized?	Yes	Go to the next step.
		No	Go to Step 10.
5	**INSPECT GENERATOR CONTROL SYSTEM OPERATION** • Start the engine and let it idle. • Access the ALTT V PID using the M-MDS. (See 01-02-8 ON-BOARD DIAGNOSTIC TEST [SKYACTIV-G 2.0].) • Does the PID value increase when the rear window defroster, headlights, and blower motor are operated simultaneously?	Yes	Go to the next step.
		No	Inspect the following: • Wiring harness between generator terminal 2B and PCM terminal 1BE • Wiring harness between generator terminal 2A and PCM terminal 1AF • Generator (See 01-17A-19 GENERATOR INSPECTION [SKYACTIV-G 2.0].) — If there is any malfunction: • Repair or replace the malfunctioning part according to the inspection results, then go to Step 17.
6	**INSPECT CKP SENSOR SIGNAL** • Verify the CKP sensor signal using the oscilloscope. (See 01-40-17 PCM INSPECTION [SKYACTIV-G 2.0].) • Is there any malfunction?	Yes	Go to the next step.
		No	Go to Step 8.
7	**INSPECT CKP SENSOR PULSE WHEEL** • Visually inspect the CKP sensor pulse wheel. • Are there any damage or scratches at the CKP sensor pulse wheel?	Yes	Replace the CKP sensor pulse wheel, then go to Step 17.
		No	Inspect the wiring harness between the following terminals: • CKP sensor terminal A—PCM terminal 1BN • CKP sensor terminal C—PCM terminal 1AD • CKP sensor terminal B—PCM terminal 1AH — If there is any malfunction: • Repair or replace the suspected wiring harness, then go to Step 17. — If there is no malfunction: • Replace the CKP sensor, then go to Step 17. (See 01-40-59 CRANKSHAFT POSITION (CKP) SENSOR REMOVAL/INSTALLATION [SKYACTIV-G 2.0].)
8	**INSPECT DRIVE-BY-WIRE CONTROL SYSTEM OPERATION** • Perform the Drive-by-wire Control System Inspection. (See 01-03-118 ENGINE CONTROL SYSTEM OPERATION INSPECTION [SKYACTIV-G 2.0].) • Is there any malfunction?	Yes	Repair or replace the malfunctioning part according to the inspection results, then go to Step 17.
		No	Go to the next step.
9	**INSPECT GENERATOR DRIVE BELT** • Inspect the generator drive belt. (See 01-10A-9 DRIVE BELT INSPECTION [SKYACTIV-G 2.0].) • Is there any malfunction?	Yes	Replace the drive belt, then go to Step 17. (See 01-10A-10 DRIVE BELT REMOVAL/INSTALLATION [SKYACTIV-G 2.0].)
		No	Go to Step 17.
10	**INSPECT VACUUM HOSE CONNECTION** • Inspect the vacuum hose routine. (See 01-13A-4 INTAKE-AIR SYSTEM VACUUM HOSE ROUTING DIAGRAM [SKYACTIV-G 2.0].) • Are vacuum hoses routines properly?	Yes	Go to the next step.
		No	Reconnect the vacuum hose, then go to Step 17. (See 01-13A-4 INTAKE-AIR SYSTEM VACUUM HOSE ROUTING DIAGRAM [SKYACTIV-G 2.0].)
11	**INSPECT INTAKE-AIR SYSTEM FOR AIR SUCTION** • Inspect for leakage in intake-air system. • Is there any leakage?	Yes	Repair or replace the malfunctioning part according to the inspection results, then go to Step 17.
		No	Go to the next step.

ON-BOARD DIAGNOSTIC [SKYACTIV-G 2.0]

STEP	INSPECTION		ACTION
12	**INSPECT PURGE CONTROL SYSTEM OPERATION** • Perform the Purge Control System Inspection. (See 01-03-118 ENGINE CONTROL SYSTEM OPERATION INSPECTION [SKYACTIV-G 2.0].) • Is there any malfunction?	Yes	Repair or replace the malfunctioning part according to the inspection results, then go to Step 17.
		No	Go to the next step.
13	**INSPECT ELECTRIC VARIABLE VALVE TIMING DRIVER** • Inspect the electric variable valve timing driver. (See 01-10A-15 ELECTRIC VARIABLE VALVE TIMING MOTOR/DRIVER INSPECTION [SKYACTIV-G 2.0].) • Is there any malfunction?	Yes	Replace the electric variable valve timing motor/driver, then go to Step 17. (See 01-10A-16 ELECTRIC VARIABLE VALVE TIMING MOTOR/DRIVER REMOVAL/INSTALLATION [SKYACTIV-G 2.0].)
		No	Go to the next step.
14	**INSPECT ELECTRIC VARIABLE VALVE TIMING MOTOR** • Inspect the electric variable valve timing motor. (See 01-10A-15 ELECTRIC VARIABLE VALVE TIMING MOTOR/DRIVER INSPECTION [SKYACTIV-G 2.0].) • Is there any malfunction?	Yes	Replace the electric variable valve timing motor/driver, then go to Step 17. (See 01-10A-16 ELECTRIC VARIABLE VALVE TIMING MOTOR/DRIVER REMOVAL/INSTALLATION [SKYACTIV-G 2.0].)
		No	Go to the next step.
15	**INSPECT ELECTRIC VARIABLE VALVE TIMING ACTUATOR** • Inspect the electric variable valve timing actuator. (See 01-10A-22 ELECTRIC VARIABLE VALVE TIMING ACTUATOR INSPECTION [SKYACTIV-G 2.0].) • Is there any malfunction?	Yes	Replace the electric variable valve timing actuator, then go to Step 17. (See 01-10A-23 ELECTRIC VARIABLE VALVE TIMING ACTUATOR, HYDRAULIC VARIABLE VALVE TIMING ACTUATOR REMOVAL/INSTALLATION [SKYACTIV-G 2.0].)
		No	Go to the next step.
16	**INSPECT HYDRAULIC VARIABLE VALVE TIMING CONTROL SYSTEM OPERATION** • Perform the Hydraulic Variable Valve Timing Control System Operation Inspection. (See 01-03-118 ENGINE CONTROL SYSTEM OPERATION INSPECTION [SKYACTIV-G 2.0].) • Is there any malfunction?	Yes	Repair or replace the malfunctioning part according to the inspection results, then go to the next step.
		No	Go to the next step.
17	**VERIFY DTC TROUBLESHOOTING COMPLETED** • Make sure to reconnect all disconnected connectors. • Clear the DTC from the PCM memory using the M-MDS. (See 01-02-12 AFTER REPAIR PROCEDURE [SKYACTIV-G 2.0].) • Start the engine and warm it up completely. • Stop the engine by operating the i-stop function. • Restart the engine. • Perform the KOEO or KOER self test. (See 01-02-12 KOEO/KOER SELF TEST [SKYACTIV-G 2.0].) • Is the same DTC present?	Yes	Repeat the inspection from Step 1. • If the malfunction recurs, replace the PCM. (See 01-40-10 PCM REMOVAL/INSTALLATION [SKYACTIV-G 2.0].) Go to the next step.
		No	Go to the next step.
18	**VERIFY AFTER REPAIR PROCEDURE** • Perform the “AFTER REPAIR PROCEDURE”. (See 01-02-12 AFTER REPAIR PROCEDURE [SKYACTIV-G 2.0].) • Are any DTCs present?	Yes	Go to the applicable DTC inspection. (See 01-02-14 DTC TABLE [SKYACTIV-G 2.0].)
		No	DTC troubleshooting completed.

ON-BOARD DIAGNOSTIC [SKYACTIV-G 2.0]

DTC P0A8D:00 [SKYACTIV-G 2.0]

id0102h1009400

DTC P0A8D:00	Power supply system circuit low input
DETECTION CONDITION	• Any of the values for the battery voltage, voltage for PCM control, and voltage for DC-DC converter control is low when the engine is started. **Diagnostic support note** • This is a continuous monitor (other). • The check engine light does not illuminate. • FREEZE FRAME DATA (Mode 2)/Snapshot data is not available. • The DTC is stored in the PCM memory.
FAIL-SAFE FUNCTION	• Inhibits engine-stop by operating the i-stop function. • Inhibits a part of the generator output control.
POSSIBLE CAUSE	• Battery malfunction • DC-DC converter connector or terminals malfunction • Short to ground or open circuit in DC-DC converter power supply circuit — Short to ground in wiring harness between DCDC 50 A fuse and DC-DC converter terminal L — DCDC 50 A fuse malfunction — Open circuit in wiring harness between battery positive terminal and DC-DC converter terminal L • Short to ground or open circuit in DC-DC converter power supply circuit — Short to ground in wiring harness between C/U IG1 15 A fuse and DC-DC converter terminal H — C/U IG1 15 A fuse malfunction — Open circuit in wiring harness between IG1 relay terminal C and DC-DC converter terminal H • PCM connector or terminals malfunction • DC-DC converter malfunction • Current sensor malfunction • Front body control module (FBCM) malfunction • PCM malfunction

ON-BOARD DIAGNOSTIC [SKYACTIV-G 2.0]

DTC P0A8D:00	Power supply system circuit low input

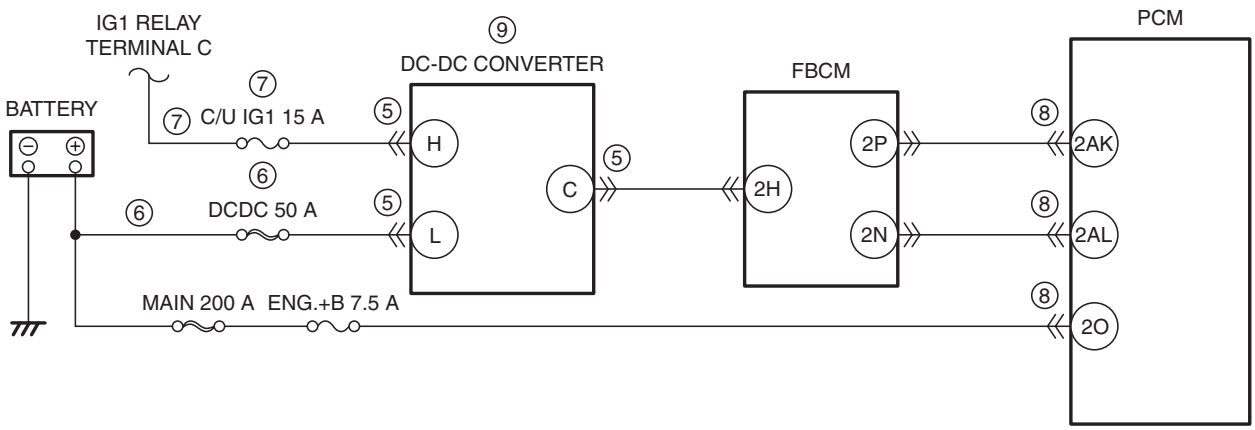

DC-DC CONVERTER WIRING HARNESS-SIDE CONNECTOR

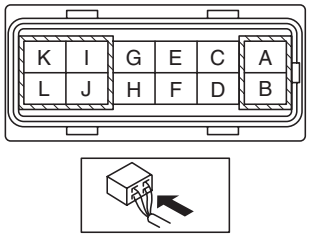

FBCM WIRING HARNESS-SIDE CONNECTOR

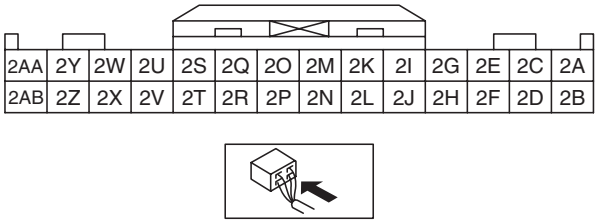

PCM WIRING HARNESS-SIDE CONNECTOR

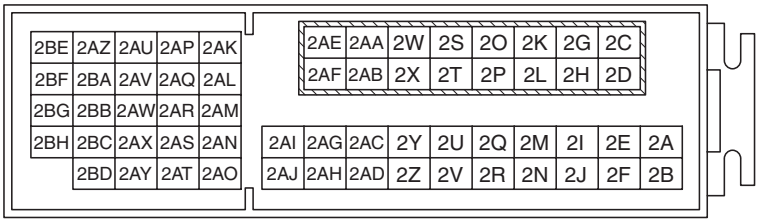

Diagnostic Procedure

STEP	INSPECTION		ACTION
1	**VERIFY RELATED SERVICE INFORMATION AVAILABILITY** • Verify related Service Information availability. • Is any related Service Information available?	Yes	Perform repair or diagnosis according to the available Service Information. • If the vehicle is not repaired, go to the next step.
		No	Go to the next step.
2	**VERIFY RELATED PENDING CODE AND/OR DTC** • Switch the ignition to off, then to ON (engine off). • Perform the Pending Trouble Code Access Procedure and DTC Reading Procedure. (See 01-02-8 ON-BOARD DIAGNOSTIC TEST [SKYACTIV-G 2.0].) • Are any other PENDING CODEs and/or DTCs present?	Yes	Go to the applicable DTC inspection. (See 01-02-14 DTC TABLE [SKYACTIV-G 2.0].)
		No	Go to the next step.
3	**CONFIRM FRONT BODY CONTROL MODULE (FBCM) DTC** • Perform the front body control module (FBCM) DTC inspection using the M-MDS. (See 09-02K-10 DTC INSPECTION [FRONT BODY CONTROL MODULE (FBCM)].) • Are any DTCs present?	Yes	Go to the applicable DTC inspection. (See 09-02K-13 DTC TABLE [FRONT BODY CONTROL MODULE (FBCM)].)
		No	Go to the next step.

ON-BOARD DIAGNOSTIC [SKYACTIV-G 2.0]

STEP	INSPECTION		ACTION
4	**INSPECT BATTERY** • Switch the ignition to off. • Inspect the battery. (See 01-17A-7 BATTERY INSPECTION [SKYACTIV-G 2.0].) • Is there any malfunction?	Yes	Recharge or replace the battery, then go to Step 10. (See 01-17A-9 BATTERY RECHARGING [SKYACTIV-G 2.0].) (See 01-17A-3 BATTERY REMOVAL/INSTALLATION [SKYACTIV-G 2.0].)
		No	Go to the next step.
5	**INSPECT DC-DC CONVERTER CONNECTOR CONDITION** • Switch the ignition to off. • Disconnect the DC-DC converter connector. • Inspect for poor connection (such as damaged/pulled-out pins, corrosion). • Is there any malfunction?	Yes	Repair or replace the connector and/or terminals, then go to Step 10.
		No	Go to the next step.
6	**INSPECT DC-DC CONVERTER POWER SUPPLY CIRCUIT FOR SHORT TO GROUND OR OPEN CIRCUIT** • Verify that the DC-DC converter connector is disconnected. • Measure the voltage at the DC-DC converter terminal L (wiring harness-side). • Is the voltage **B+**?	Yes	Go to the next step.
		No	Inspect the DCDC 50 A fuse. • If the fuse is blown: — Repair or replace the wiring harness for a possible short to ground. — Replace the fuse. • If the fuse is deteriorated: — Replace the fuse. • If the fuse is normal: — Repair or replace the wiring harness for a possible open circuit. Go to Step 10.
7	**INSPECT DC-DC CONVERTER POWER SUPPLY CIRCUIT FOR SHORT TO GROUND OR OPEN CIRCUIT** • Verify that the DC-DC converter connector is disconnected. • Switch the ignition ON (engine off or on). • Measure the voltage at the DC-DC converter terminal H (wiring harness-side). • Is the voltage **B+**?	Yes	Go to the next step.
		No	Inspect the C/U IG1 15 A fuse. • If the fuse is blown: — Repair or replace the wiring harness for a possible short to ground. — Replace the fuse. • If the fuse is deteriorated: — Replace the fuse. • If the fuse is normal: — Repair or replace the wiring harness for a possible open circuit. Go to Step 10.
8	**INSPECT PCM CONNECTOR CONDITION** • Switch the ignition to off. • Disconnect the PCM connector. • Inspect for poor connection (such as damaged/pulled-out pins, corrosion). • Is there any malfunction?	Yes	Repair or replace the connector and/or terminals, then go to Step 10.
		No	Go to the next step.
9	**INSPECT DC-DC CONVERTER** • Inspect the DC-DC converter. (See 01-17A-27 DC-DC CONVERTER INSPECTION [SKYACTIV-G 2.0].) • Is there any malfunction?	Yes	Replace the DC-DC converter, then go to the next step. (See 01-17A-26 DC-DC CONVERTER REMOVAL/INSTALLATION [SKYACTIV-G 2.0].)
		No	Replace the current sensor, then go to the next step. (See 01-40-65 CURRENT SENSOR REMOVAL/INSTALLATION [SKYACTIV-G 2.0].)
10	**VERIFY DTC TROUBLESHOOTING COMPLETED** • Make sure to reconnect all disconnected connectors. • Clear the DTC from the PCM memory using the M-MDS. (See 01-02-12 AFTER REPAIR PROCEDURE [SKYACTIV-G 2.0].) • Perform the KOER self test. (See 01-02-12 KOEO/KOER SELF TEST [SKYACTIV-G 2.0].) • Is the same DTC present?	Yes	Repeat the inspection from Step 1. • If the malfunction recurs, replace the PCM. (See 01-40-10 PCM REMOVAL/INSTALLATION [SKYACTIV-G 2.0].) Go to the next step.
		No	Go to the next step.
11	**VERIFY AFTER REPAIR PROCEDURE** • Perform the “AFTER REPAIR PROCEDURE”. (See 01-02-12 AFTER REPAIR PROCEDURE [SKYACTIV-G 2.0].) • Are any DTCs present?	Yes	Go to the applicable DTC inspection. (See 01-02-14 DTC TABLE [SKYACTIV-G 2.0].)
		No	DTC troubleshooting completed.

ON-BOARD DIAGNOSTIC [SKYACTIV-G 2.0]

DTC P0A94:00 [SKYACTIV-G 2.0]

id0102h1004400

DTC P0A94:00	DC-DC converter control circuit signal error
DETECTION CONDITION	• Internal malfunction signal from DC-DC converter via front body control module (FBCM) is received.(CAN/LIN communication). • Input signal from the DC-DC converter limits the pressure increase time. • Input signal from the DC-DC converter does not implement pressure increase after a pressure increase command to the DC-DC converter. **Diagnostic support note** • This is a continuous monitor (other). • The check engine light does not illuminate. • FREEZE FRAME DATA (Mode 2)/Snapshot data is not available. • The DTC is stored in the PCM memory.
FAIL-SAFE FUNCTION	• Inhibits engine-stop by operating the i-stop function.
POSSIBLE CAUSE	• Battery malfunction • DC-DC converter connector or terminals malfunction • Short to ground or open circuit in DC-DC converter power supply circuit — Short to ground in wiring harness between DCDC 50 A fuse and DC-DC converter terminal L — DCDC 50 A fuse malfunction — Open circuit in wiring harness between battery positive terminal and DC-DC converter terminal L • Short to ground in wiring harness between DC-DC converter terminal F and PCM terminal 2P • PCM connector or terminals malfunction • Short to power supply in wiring harness between DC-DC converter terminal F and PCM terminal 2P • Open circuit in wiring harness between DC-DC converter terminal F and PCM terminal 2P • DC-DC converter malfunction • Front body control module (FBCM) malfunction • PCM malfunction

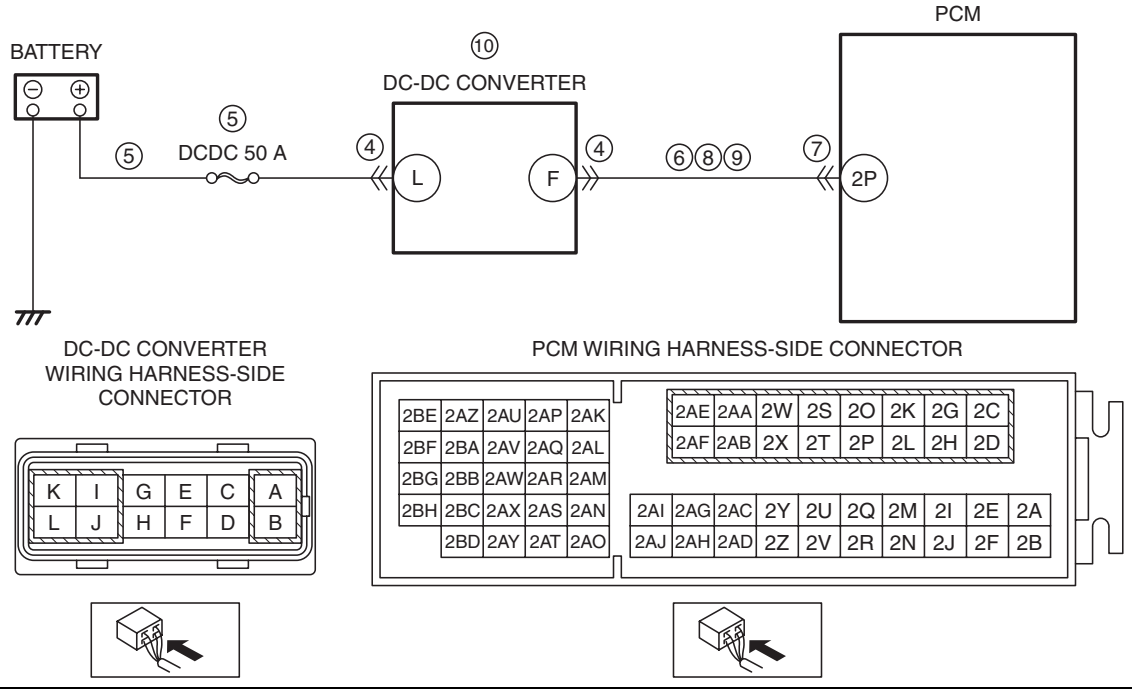

ON-BOARD DIAGNOSTIC [SKYACTIV-G 2.0]

Diagnostic Procedure

STEP	INSPECTION		ACTION
1	**VERIFY RELATED SERVICE INFORMATION AVAILABILITY** • Verify related Service Information availability. • Is any related Service Information available?	Yes	Perform repair or diagnosis according to the available Service Information. • If the vehicle is not repaired, go to the next step.
		No	Go to the next step.
2	**VERIFY RELATED PENDING CODE AND/OR DTC** • Switch the ignition to off, then to ON (engine off). • Perform the Pending Trouble Code Access Procedure and DTC Reading Procedure. (See 01-02-8 ON-BOARD DIAGNOSTIC TEST [SKYACTIV-G 2.0].) • Are any other PENDING CODEs and/or DTCs present?	Yes	Go to the applicable PENDING CODE or DTC inspection. (See 01-02-14 DTC TABLE [SKYACTIV-G 2.0].)
		No	Go to the next step.
3	**CONFIRM FRONT BODY CONTROL MODULE (FBCM) DTC** • Perform the front body control module (FBCM) DTC inspection using the M-MDS. (See 09-02K-10 DTC INSPECTION [FRONT BODY CONTROL MODULE (FBCM)].) • Are any DTCs present?	Yes	Go to the applicable DTC inspection. (See 09-02K-13 DTC TABLE [FRONT BODY CONTROL MODULE (FBCM)].)
		No	Go to the next step.
4	**INSPECT BATTERY** • Switch the ignition to off. • Inspect the battery. (See 01-17A-7 BATTERY INSPECTION [SKYACTIV-G 2.0].) • Is there any malfunction?	Yes	Recharge or replace the battery, then go to Step 12. (See 01-17A-9 BATTERY RECHARGING [SKYACTIV-G 2.0].) (See 01-17A-3 BATTERY REMOVAL/INSTALLATION [SKYACTIV-G 2.0].)
		No	Go to the next step.
5	**INSPECT DC-DC CONVERTER CONNECTOR CONDITION** • Switch the ignition to off. • Disconnect the DC-DC converter connector. • Inspect for poor connection (such as damaged/pulled-out pins, corrosion). • Is there any malfunction?	Yes	Repair or replace the connector and/or terminals, then go to Step 12.
		No	Go to the next step.
6	**INSPECT DC-DC CONVERTER POWER SUPPLY CIRCUIT FOR SHORT TO GROUND OR OPEN CIRCUIT** • Verify that the DC-DC converter connector is disconnected. • Measure the voltage at the DC-DC converter terminal L (wiring harness-side). • Is the voltage **B+**?	Yes	Go to the next step.
		No	Inspect the DCDC 50 A fuse. • If the fuse is blown: — Repair or replace the wiring harness for a possible short to ground. — Replace the fuse. • If the fuse is deteriorated: — Replace the fuse. • If the fuse is normal: — Repair or replace the wiring harness for a possible open circuit. Go to Step 12.
7	**INSPECT DC-DC CONVERTER SIGNAL CIRCUIT FOR SHORT TO GROUND** • Verify that the DC-DC converter connector is disconnected. • Inspect for continuity between DC-DC converter terminal F (wiring harness-side) and body ground. • Is there continuity?	Yes	If the short to ground circuit could be detected in the wiring harness: • Repair or replace the wiring harness for a possible short to ground. If the short to ground circuit could not be detected in the wiring harness: • Replace the PCM (short to ground in the PCM internal circuit). (See 01-40-10 PCM REMOVAL/INSTALLATION [SKYACTIV-G 2.0].) Go to Step 12.
		No	Go to the next step.
8	**INSPECT PCM CONNECTOR CONDITION** • Disconnect the PCM connector. • Inspect for poor connection (such as damaged/pulled-out pins, corrosion). • Is there any malfunction?	Yes	Repair or replace the connector and/or terminals, then go to Step 12.
		No	Go to the next step.

ON-BOARD DIAGNOSTIC [SKYACTIV-G 2.0]

STEP	INSPECTION		ACTION
9	**INSPECT DC-DC CONVERTER SIGNAL CIRCUIT FOR SHORT TO POWER SUPPLY** • Verify that the DC-DC converter and PCM connectors are disconnected. • Switch the ignition ON (engine off or on). • Measure the voltage at the DC-DC converter terminal F (wiring harness-side). • Is the voltage **0 V**?	Yes	Go to the next step.
		No	Repair or replace the wiring harness for a possible short to power supply, then go to Step 12.
10	**INSPECT DC-DC CONVERTER SIGNAL CIRCUIT FOR OPEN CIRCUIT** • Verify that the DC-DC converter and PCM connectors are disconnected. • Switch the ignition to off. • Inspect for continuity between DC-DC converter terminal F (wiring harness-side) and PCM terminal 2P (wiring harness-side). • Is there continuity?	Yes	Go to the next step.
		No	Repair or replace the wiring harness for a possible open circuit, then go to Step 12.
11	**INSPECT DC-DC CONVERTER** • Inspect the DC-DC converter. (See 01-17A-27 DC-DC CONVERTER INSPECTION [SKYACTIV-G 2.0].) • Is there any malfunction?	Yes	Replace the DC-DC converter, then go to the next step. (See 01-17A-26 DC-DC CONVERTER REMOVAL/INSTALLATION [SKYACTIV-G 2.0].)
		No	Go to the next step.
12	**VERIFY DTC TROUBLESHOOTING COMPLETED** • Make sure to reconnect all disconnected connectors. • Clear the DTC from the PCM memory using the M-MDS. (See 01-02-12 AFTER REPAIR PROCEDURE [SKYACTIV-G 2.0].) • Perform the KOER self test. (See 01-02-12 KOEO/KOER SELF TEST [SKYACTIV-G 2.0].) • Is the same DTC present?	Yes	Repeat the inspection from Step 1. • If the malfunction recurs, replace the PCM. (See 01-40-10 PCM REMOVAL/INSTALLATION [SKYACTIV-G 2.0].) Go to the next step.
		No	Go to the next step.
13	**VERIFY AFTER REPAIR PROCEDURE** • Perform the “AFTER REPAIR PROCEDURE”. (See 01-02-12 AFTER REPAIR PROCEDURE [SKYACTIV-G 2.0].) • Are any DTCs present?	Yes	Go to the applicable DTC inspection. (See 01-02-14 DTC TABLE [SKYACTIV-G 2.0].)
		No	DTC troubleshooting completed.

ON-BOARD DIAGNOSTIC [SKYACTIV-G 2.0]

DTC P111A:00 [SKYACTIV-G 2.0]

id0102h1415000

DTC P111A:00	**Engine coolant temperature is high**
DETECTION CONDITION	• The engine coolant temperature is **122 °C or more**. **Diagnostic support note** • This is a continuous monitor (other). • The check engine light does not illuminate. • FREEZE FRAME DATA (Mode 2)/Snapshot data is not available. • The DTC is stored in the PCM memory.
FAIL-SAFE FUNCTION	• Limits the intake air amount.
POSSIBLE CAUSE	• Cooling system malfunction • High engine speed condition continues • ECT sensor malfunction • PCM malfunction

Diagnostic Procedure

STEP	INSPECTION		ACTION
1	**VERIFY RELATED SERVICE INFORMATION AVAILABILITY** • Verify related Service Information availability. • Is any related Service Information available?	Yes	Perform repair or diagnosis according to the available Service Information. • If the vehicle is not repaired, go to the next step.
		No	Go to the next step.
2	**VERIFY RELATED PENDING CODE AND/OR DTC** • Switch the ignition to off, then to ON (engine off). • Perform the Pending Trouble Code Access Procedure and DTC Reading Procedure. (See 01-02-8 ON-BOARD DIAGNOSTIC TEST [SKYACTIV-G 2.0].) • Are any other PENDING CODEs and/or DTCs present?	Yes	Go to the applicable PENDING CODE or DTC inspection. (See 01-02-14 DTC TABLE [SKYACTIV-G 2.0].)
		No	Go to the next step.
3	**INSPECT EFFECT OF VEHICLE CONDITION FOR MALFUNCTION** • Verify how the customer drives the vehicle by asking the customer the following: — Engine speed is high and remains high for continuous long periods like when climbing a long steep grade. • Is the engine generating excessive heat when driven?	Yes	Go to the next step.
		No	Go to Step 5.
4	**DETERMINE IF MALFUNCTION CAUSE IS OVERHEATING OR OTHER** **Caution** • **While performing this step, always operate the vehicle in a safe and lawful manner.** • **When the M-MDS is used to observe monitor system status while driving, be sure to have another technician with you, or record the data in the M-MDS using the PID/DATA MONITOR AND RECORD capturing function and inspect later.** • Access the ECT PID using the M-MDS. (See 01-02-8 ON-BOARD DIAGNOSTIC TEST [SKYACTIV-G 2.0].) • Is the ECT PID value **less than 122 °C {241 °F}** while the vehicle is driven on a flat road?	Yes	Explain to the customer that the vehicle is normal. Go to Step 6.
		No	The cause of this concern could be from the cooling system overheating. • Perform the symptom troubleshooting “NO.17 COOLING SYSTEM CONCERNS-OVERHEATING”. (See 01-03-88 NO.17 COOLING SYSTEM CONCERNS-OVERHEATING [SKYACTIV-G 2.0].)
5	**INSPECT ECT SENSOR** • Inspect the ECT sensor. (See 01-40-43 ENGINE COOLANT TEMPERATURE (ECT) SENSOR INSPECTION [SKYACTIV-G 2.0].) • Is there any malfunction?	Yes	Replace the ECT sensor, then go to the next step. (See 01-40-41 ENGINE COOLANT TEMPERATURE (ECT) SENSOR REMOVAL/INSTALLATION [SKYACTIV-G 2.0].)
		No	Go to the next step.

ON-BOARD DIAGNOSTIC [SKYACTIV-G 2.0]

STEP	INSPECTION		ACTION
6	**VERIFY DTC TROUBLESHOOTING COMPLETED** • Make sure to reconnect all disconnected connectors. • Clear the DTC from the PCM memory using the M-MDS. (See 01-02-12 AFTER REPAIR PROCEDURE [SKYACTIV-G 2.0].) • Perform the Drive Mode 03 (Variable Valve Timing, A/F Sensor Heater, HO2S Heater, A/F Sensor, HO2S and TWC Repair Verification Drive Mode). (See 01-02-13 OBD DRIVE MODE [SKYACTIV-G 2.0].) • Is the same DTC present?	Yes	Repeat the inspection from Step 1. • If the malfunction recurs, replace the PCM. (See 01-40-10 PCM REMOVAL/INSTALLATION [SKYACTIV-G 2.0].) Go to the next step.
		No	Go to the next step.
7	**VERIFY AFTER REPAIR PROCEDURE** • Perform the “AFTER REPAIR PROCEDURE”. (See 01-02-12 AFTER REPAIR PROCEDURE [SKYACTIV-G 2.0].) • Are any DTCs present?	Yes	Go to the applicable DTC inspection. (See 01-02-14 DTC TABLE [SKYACTIV-G 2.0].)
		No	DTC troubleshooting completed.

ON-BOARD DIAGNOSTIC [SKYACTIV-G 2.0]

DTC P117A:00 [SKYACTIV-G 2.0]

id0102h1316900

DTC P117A:00	**Engine oil temperature is high**
DETECTION CONDITION	• With the transmission in 4th gear or lower gear, an engine speed of **6,100 rpm** continues for **6 min**. **Diagnostic support note** • This is a continuous monitor (other). • The check engine light does not illuminate. • FREEZE FRAME DATA (Mode 2)/Snapshot data is not available. • The DTC is stored in the PCM memory.
FAIL-SAFE FUNCTION	• Limits the intake air amount.
POSSIBLE CAUSE	• High engine speed condition continues • PCM malfunction

Diagnostic Procedure

STEP	INSPECTION		ACTION
1	**VERIFY RELATED SERVICE INFORMATION AVAILABILITY** • Verify related Service Information availability. • Is any related Service Information available?	Yes	Perform repair or diagnosis according to the available Service Information. • If the vehicle is not repaired, go to the next step.
		No	Go to the next step.
2	**VERIFY RELATED PENDING CODE AND/OR DTC** • Switch the ignition to off, then to ON (engine off). • Perform the Pending Trouble Code Access Procedure and DTC Reading Procedure. (See 01-02-8 ON-BOARD DIAGNOSTIC TEST [SKYACTIV-G 2.0].) • Is the PENDING CODE/DTC P0335:00 also present?	Yes	Go to the applicable PENDING CODE or DTC inspection. (See 01-02-191 DTC P0335:00 [SKYACTIV-G 2.0].)
		No	Go to the next step.
3	**INSPECT EFFECT OF VEHICLE CONDITION FOR MALFUNCTION** • Verify how the customer drives the vehicle by asking the customer the following: • Does the engine speed exceed **6,100 rpm** for **6 min or more** while driving in 4th gear or lower gear?	Yes	Explain to the customer that the vehicle is normal. (malfunction caused by continuous engine speed exceeding **6,100 rpm** for **6 min or more** while in 4th gear or lower gear) If there is a concern with customer's driving, provide the customer some pertinent advice (such as gear selection, how to use manual mode).
		No	Go to the next step.
4	**VERIFY DTC TROUBLESHOOTING COMPLETED** • Make sure to reconnect all disconnected connectors. • Clear the DTC from the PCM memory using the M-MDS. (See 01-02-12 AFTER REPAIR PROCEDURE [SKYACTIV-G 2.0].) • Perform the Drive Mode 03 (Variable Valve Timing, A/F Sensor Heater, HO2S Heater, A/F Sensor, HO2S and TWC Repair Verification Drive Mode). (See 01-02-13 OBD DRIVE MODE [SKYACTIV-G 2.0].) • Is the same DTC present?	Yes	Repeat the inspection from Step 1. • If the malfunction recurs, replace the PCM. (See 01-40-10 PCM REMOVAL/INSTALLATION [SKYACTIV-G 2.0].) Go to the next step.
		No	Go to the next step.
5	**VERIFY AFTER REPAIR PROCEDURE** • Perform the "AFTER REPAIR PROCEDURE". (See 01-02-12 AFTER REPAIR PROCEDURE [SKYACTIV-G 2.0].) • Are any DTCs present?	Yes	Go to the applicable DTC inspection. (See 01-02-14 DTC TABLE [SKYACTIV-G 2.0].)
		No	DTC troubleshooting completed.

ON-BOARD DIAGNOSTIC [SKYACTIV-G 2.0]

DTC P1260:00 [SKYACTIV-G 2.0]

id0102h1856800

DTC P1260:00	**Immobilizer system problem**
DETECTION CONDITION	• The start stop unit detects an immobilizer system malfunction. **Diagnostic support note** • This is a continuous monitor (other). • The check engine light does not illuminate. • FREEZE FRAME DATA (Mode 2)/Snapshot data is not available. • The DTC is not stored in the PCM memory.
FAIL-SAFE FUNCTION	—
POSSIBLE CAUSE	• Immobilizer system malfunction • PCM malfunction
SYSTEM WIRING DIAGRAM	—

Diagnostic Procedure

STEP	INSPECTION		ACTION
1	**VERIFY RELATED SERVICE INFORMATION AVAILABILITY** • Verify related Service Information availability. • Is any related Service Information available?	Yes	Perform repair or diagnosis according to the available Service Information. • If the vehicle is not repaired, go to the next step.
		No	Go to the next step.
2	**VERIFY IMMOBILIZER SYSTEM DTC** • Verify the immobilizer system DTC. (See 09-02B-3 DTC INSPECTION [IMMOBILIZER SYSTEM].) • Are any DTCs present?	Yes	Go to the applicable DTC inspection. (See 09-02B-4 DTC TABLE [IMMOBILIZER SYSTEM].)
		No	Go to the next step.
3	**VERIFY DTC TROUBLESHOOTING COMPLETED** • Clear the DTC from the PCM memory using the M-MDS. (See 01-02-12 AFTER REPAIR PROCEDURE [SKYACTIV-G 2.0].) • Perform the KOEO self test. (See 01-02-12 KOEO/KOER SELF TEST [SKYACTIV-G 2.0].) • Is the same DTC present?	Yes	Replace the PCM, then go to the next step. (See 01-40-10 PCM REMOVAL/INSTALLATION [SKYACTIV-G 2.0].)
		No	Go to the next step.
4	**VERIFY AFTER REPAIR PROCEDURE** • Perform the “AFTER REPAIR PROCEDURE”. (See 01-02-12 AFTER REPAIR PROCEDURE [SKYACTIV-G 2.0].) • Are any DTCs present?	Yes	Go to the applicable DTC inspection. (See 01-02-14 DTC TABLE [SKYACTIV-G 2.0].)
		No	DTC troubleshooting completed.

ON-BOARD DIAGNOSTIC [SKYACTIV-G 2.0]

DTC P1380:00 [SKYACTIV-G 2.0]

id0102h1009700

DTC P1380:00	Electric variable valve timing control circuit problem
DETECTION CONDITION	• A malfunction is detected in the results of the on-board diagnostic test received from electric variable valve timing driver. **Diagnostic support note** • This is a continuous monitor (CCM). • The check engine light does not illuminate. • FREEZE FRAME DATA (Mode 2)/Snapshot data is not available. • The DTC is stored in the PCM memory.
FAIL-SAFE FUNCTION	• Stops activation of the electric variable valve timing driver.
POSSIBLE CAUSE	• Electric variable valve timing motor/driver connectors or terminals malfunction • Short to ground in wiring harness between electric variable valve timing motor/driver terminal 1A and PCM terminal 1AE • PCM connector or terminals malfunction • Short to power supply in wiring harness between electric variable valve timing motor/driver terminal 1A and PCM terminal 1AE • Open circuit in wiring harness between electric variable valve timing motor/driver terminal 1A and PCM terminal 1AE • Electric variable valve timing driver malfunction • Electric variable valve timing motor malfunction • PCM malfunction

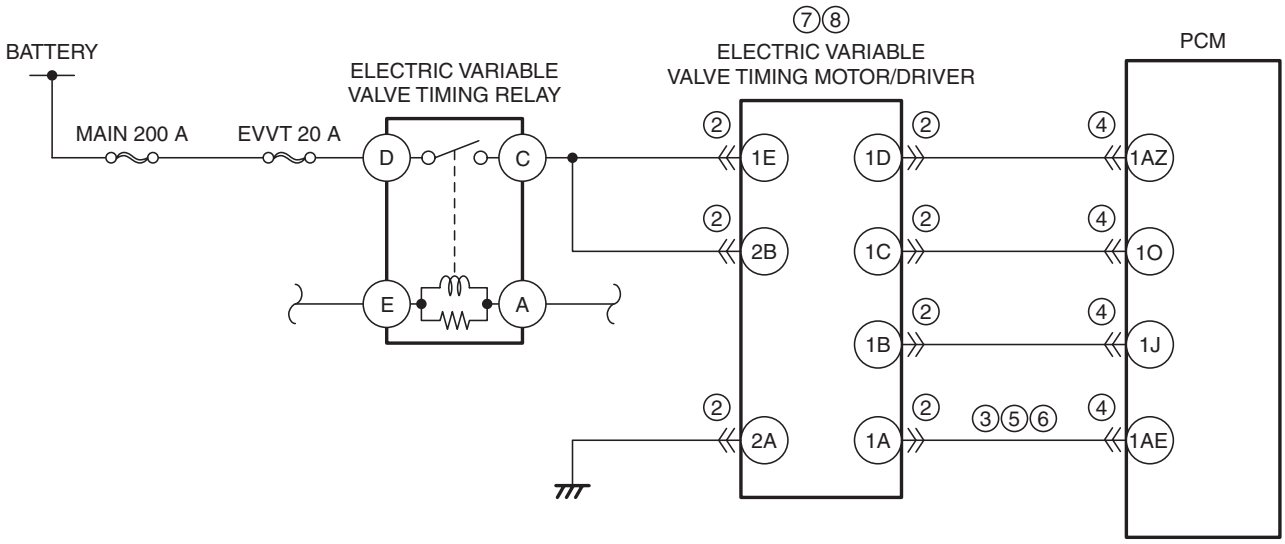

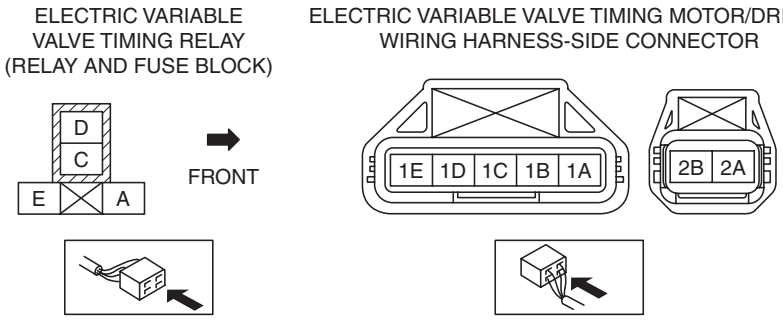

PCM WIRING HARNESS-SIDE CONNECTOR

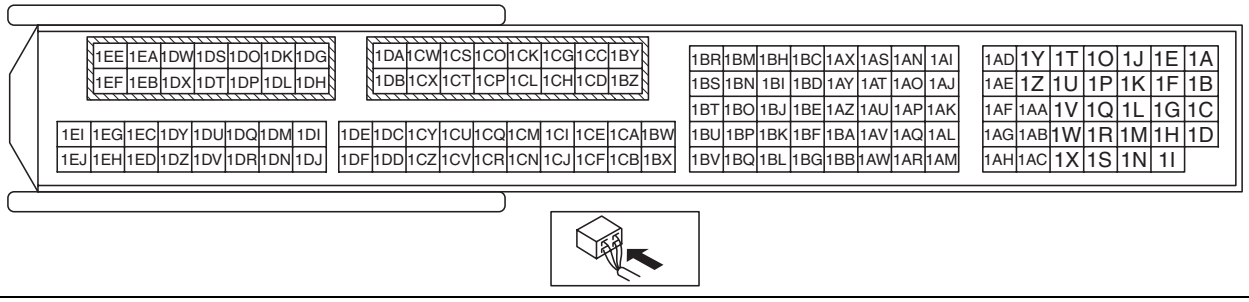

ON-BOARD DIAGNOSTIC [SKYACTIV-G 2.0]

Diagnostic Procedure

STEP	INSPECTION		ACTION
1	**VERIFY RELATED SERVICE INFORMATION AVAILABILITY** • Verify related Service Information availability. • Is any related Service Information available?	Yes	Perform repair or diagnosis according to the available Service Information. • If the vehicle is not repaired, go to the next step.
		No	Go to the next step.
2	**INSPECT ELECTRIC VARIABLE VALVE TIMING MOTOR/DRIVER CONNECTOR CONDITION** • Switch the ignition to off. • Disconnect the electric variable valve timing motor/driver connector. • Inspect for poor connection (such as damaged/ pulled-out pins, corrosion). • Is there any malfunction?	Yes	Repair or replace the connector and/or terminals, then go to Step 9.
		No	Go to the next step.
3	**INSPECT ELECTRIC VARIABLE VALVE TIMING MOTOR/DRIVER SIGNAL CIRCUIT FOR SHORT TO GROUND** • Verify that the electric variable valve timing motor/driver connector is disconnected. • Inspect for continuity between electric variable valve timing motor/driver terminal 1A (wiring harness-side) and body ground. • Is there continuity?	Yes	If the short to ground circuit could be detected in the wiring harness: • Repair or replace the wiring harness for a possible short to ground. If the short to ground circuit could not be detected in the wiring harness: • Replace the PCM (short to ground in the PCM internal circuit). (See 01-40-10 PCM REMOVAL/INSTALLATION [SKYACTIV-G 2.0].) Go to Step 9.
		No	Go to the next step.
4	**INSPECT PCM CONNECTOR CONDITION** • Disconnect the PCM connector. • Inspect for poor connection (such as damaged/ pulled-out pins, corrosion). • Is there any malfunction?	Yes	Repair or replace the connector and/or terminals, then go to Step 9.
		No	Go to the next step.
5	**INSPECT ELECTRIC VARIABLE VALVE TIMING MOTOR/DRIVER SIGNAL CIRCUIT FOR SHORT TO POWER SUPPLY** • Verify that the electric variable valve timing motor/driver and PCM connectors are disconnected. • Switch the ignition ON (engine off or on). • Measure the voltage at the electric variable valve timing motor/driver terminal 1A (wiring harness-side). • Is the voltage **0 V**?	Yes	Go to the next step.
		No	Repair or replace the wiring harness for a possible short to power supply, then go to Step 9.
6	**INSPECT ELECTRIC VARIABLE VALVE TIMING MOTOR/DRIVER SIGNAL CIRCUIT FOR OPEN CIRCUIT** • Verify that the electric variable valve timing motor/driver and PCM connectors are disconnected. • Switch the ignition to off. • Inspect for continuity between electric variable valve timing motor/driver terminal 1A (wiring harness-side) and PCM terminal 1AE (wiring harness-side). • Is there continuity?	Yes	Go to the next step.
		No	Repair or replace the wiring harness for a possible open circuit, then go to Step 9.
7	**INSPECT ELECTRIC VARIABLE VALVE TIMING DRIVER** • Inspect the electric variable valve timing driver. (See 01-10A-15 ELECTRIC VARIABLE VALVE TIMING MOTOR/DRIVER INSPECTION [SKYACTIV-G 2.0].) • Is there any malfunction?	Yes	Replace the electric variable valve timing motor/driver, then go to Step 9. (See 01-10A-16 ELECTRIC VARIABLE VALVE TIMING MOTOR/DRIVER REMOVAL/INSTALLATION [SKYACTIV-G 2.0].)
		No	Go to the next step.

ON-BOARD DIAGNOSTIC [SKYACTIV-G 2.0]

STEP	INSPECTION		ACTION
8	**INSPECT ELECTRIC VARIABLE VALVE TIMING MOTOR** • Inspect the electric variable valve timing motor. (See 01-10A-15 ELECTRIC VARIABLE VALVE TIMING MOTOR/DRIVER INSPECTION [SKYACTIV-G 2.0].) • Is there any malfunction?	Yes	Replace the electric variable valve timing motor/driver, then go to the next step. (See 01-10A-16 ELECTRIC VARIABLE VALVE TIMING MOTOR/DRIVER REMOVAL/INSTALLATION [SKYACTIV-G 2.0].)
		No	Go to the next step.
9	**VERIFY DTC TROUBLESHOOTING COMPLETED** • Make sure to reconnect all disconnected connectors. • Clear the DTC from the PCM memory using the M-MDS. (See 01-02-12 AFTER REPAIR PROCEDURE [SKYACTIV-G 2.0].) • Perform the KOER self test. (See 01-02-12 KOEO/KOER SELF TEST [SKYACTIV-G 2.0].) • Is the same DTC present?	Yes	Repeat the inspection from Step 1. • If the malfunction recurs, replace the PCM. (See 01-40-10 PCM REMOVAL/INSTALLATION [SKYACTIV-G 2.0].) Go to the next step.
		No	Go to the next step.
10	**VERIFY AFTER REPAIR PROCEDURE** • Perform the “AFTER REPAIR PROCEDURE”. (See 01-02-12 AFTER REPAIR PROCEDURE [SKYACTIV-G 2.0].) • Are any DTCs present?	Yes	Go to the applicable DTC inspection. (See 01-02-14 DTC TABLE [SKYACTIV-G 2.0].)
		No	DTC troubleshooting completed.

ON-BOARD DIAGNOSTIC [SKYACTIV-G 2.0]

DTC P151B:00 [SKYACTIV-G 2.0]

id0102h1889300

DTC P151B:00	**IAC system problem**
DETECTION CONDITION	• The PCM cannot control the idle speed toward the target idle speed during the KOER self test. **Diagnostic support note** • The check engine light does not illuminate. • FREEZE FRAME DATA (Mode 2)/Snapshot data is not available. • The DTC is stored in the PCM memory.
FAIL-SAFE FUNCTION	—
POSSIBLE CAUSE	• A/C magnetic clutch malfunction • Drive-by-wire control system related sensor malfunction — TP sensor malfunction • Purge solenoid valve malfunction • Air cleaner element restricted • Throttle body passage blockage • Engine malfunction — Insufficient engine compression (over capacity of blow-by gas) — Poor quality fuel • Generator malfunction • PCM malfunction
SYSTEM WIRING DIAGRAM	—

Diagnostic Procedure

STEP	INSPECTION		ACTION
1	**VERIFY RELATED SERVICE INFORMATION AVAILABILITY** • Verify related Service Information availability. • Is any related Service Information available?	Yes	Perform repair or diagnosis according to the available Service Information. • If the vehicle is not repaired, go to the next step.
		No	Go to the next step.
2	**VERIFY RELATED PENDING CODE AND/OR DTC** • Switch the ignition to off, then to ON (engine off). • Perform the Pending Trouble Code Access Procedure and DTC Reading Procedure. (See 01-02-8 ON-BOARD DIAGNOSTIC TEST [SKYACTIV-G 2.0].) • Are any other PENDING CODEs and/or DTCs present?	Yes	Go to the applicable PENDING CODE or DTC inspection. (See 01-02-14 DTC TABLE [SKYACTIV-G 2.0].)
		No	Go to the next step.
3	**INSPECT A/C MAGNETIC CLUTCH OPERATION** • Turn the fan switch off. • Is the magnetic clutch still on?	Yes	Perform the symptom troubleshooting “NO.24 A/C IS ALWAYS ON OR A/C COMPRESSOR RUNS CONTINUOUSLY”. (See 01-03-106 NO.24 A/C IS ALWAYS ON OR A/C COMPRESSOR RUNS CONTINUOUSLY [SKYACTIV-G 2.0].)
		No	Go to the next step.
4	**INSPECT DRIVE-BY-WIRE CONTROL SYSTEM MALFUNCTION** • Inspect the TP sensor. (See 01-40-50 THROTTLE POSITION (TP) SENSOR INSPECTION [SKYACTIV-G 2.0].) • Is there any malfunction?	Yes	Replace the throttle body, then go to Step 10. (See 01-13A-6 INTAKE-AIR SYSTEM REMOVAL/ INSTALLATION [SKYACTIV-G 2.0].)
		No	Go to the next step.
5	**INSPECT PURGE SOLENOID VALVE** • Inspect the purge solenoid valve. (See 01-16A-12 PURGE SOLENOID VALVE INSPECTION [SKYACTIV-G 2.0].) • Is there any malfunction?	Yes	Replace the purge solenoid valve, then go to Step 10. (See 01-16A-10 PURGE SOLENOID VALVE REMOVAL/ INSTALLATION [SKYACTIV-G 2.0].)
		No	Go to the next step.
6	**INSPECT AIR CLEANER ELEMENT** • Remove the air cleaner element with the engine is running. • Does the engine speed increase?	Yes	Clean or replace the air cleaner element, then go to Step 10.
		No	Go to the next step.

ON-BOARD DIAGNOSTIC [SKYACTIV-G 2.0]

STEP	INSPECTION		ACTION
7	**INSPECT THROTTLE BODY PASSAGE** • Visually inspect the throttle body passage. • Is the throttle body passage dirty and/or restricted?	Yes	Clean or replace the throttle body passage, then go to Step 10. (See 01-13A-6 INTAKE-AIR SYSTEM REMOVAL/INSTALLATION [SKYACTIV-G 2.0].)
		No	Go to the next step.
8	**INSPECT ENGINE COMPRESSION** • Inspect the engine compression. (See 01-10A-14 COMPRESSION INSPECTION [SKYACTIV-G 2.0].) • Are compression pressures within specification? **Specification:** • Compression [European (L.H.D. U.K.) specs.] — Standard: **978 kPa {9.97 kgf/cm^2, 142 psi} (300 rpm)** — Minimum: **783 kPa {7.98 kgf/cm^2, 114 psi} (300 rpm)** — Maximum difference between cylinders: **166 kPa {1.69 kgf/cm^2, 24.1 psi}** • Compression [Except European (L.H.D. U.K.) specs.] — Standard: **885 kPa {9.02 kgf/cm^2, 128 psi} (300 rpm)** — Minimum: **708 kPa {7.22 kgf/cm^2, 103 psi} (300 rpm)** — Maximum difference between cylinders: **150 kPa {1.53 kgf/cm^2, 21.8 psi}** **Note** • Because the SKYACTIV-G 2.0 retards the intake valve closing timing, compression pressure is low.	Yes	Go to the next step.
		No	Overhaul the engine for repairs, then go to Step 10.
9	**INSPECT GENERATOR** • Inspect the generator. (See 01-17A-19 GENERATOR INSPECTION [SKYACTIV-G 2.0].) • Is there any malfunction?	Yes	Repair or replace the malfunctioning part according to the inspection results, then go to the next step. (See 01-17A-25 GENERATOR DISASSEMBLY/ASSEMBLY [SKYACTIV-G 2.0].) (See 01-17A-17 GENERATOR REMOVAL/INSTALLATION [SKYACTIV-G 2.0].)
		No	Go to the next step.
10	**VERIFY DTC TROUBLESHOOTING COMPLETED** • Make sure to reconnect all disconnected connectors. • Clear the DTC from the PCM memory using the M-MDS. (See 01-02-12 AFTER REPAIR PROCEDURE [SKYACTIV-G 2.0].) • Perform the KOER self test. (See 01-02-12 KOEO/KOER SELF TEST [SKYACTIV-G 2.0].) • Is the same DTC present?	Yes	Repeat the inspection from Step 1. • If the malfunction recurs, replace the PCM. (See 01-40-10 PCM REMOVAL/INSTALLATION [SKYACTIV-G 2.0].) Go to the next step.
		No	Go to the next step.
11	**VERIFY AFTER REPAIR PROCEDURE** • Perform the “AFTER REPAIR PROCEDURE”. (See 01-02-12 AFTER REPAIR PROCEDURE [SKYACTIV-G 2.0].) • Are any DTCs present?	Yes	Go to the applicable DTC inspection. (See 01-02-14 DTC TABLE [SKYACTIV-G 2.0].)
		No	DTC troubleshooting completed.

ON-BOARD DIAGNOSTIC [SKYACTIV-G 2.0]

DTC P176E:00 [SKYACTIV-G 2.0]

id0102h1960100

DTC P176E:00	Clutch stroke sensor/Starter interlock switch correlation problem
DETECTION CONDITION	• Correlation malfunction between clutch stroke sensor and starter interlock switch. — If the clutch stroke sensor circuit voltage **above 4.9 V** or **below 0.1 V** for **10 s**, the PCM determines that the clutch stroke sensor circuit has a malfunction. — CPP switch stuck ON or OFF. — Starter interlock switch stuck ON. **Diagnostic support note** • This is a continuous monitor (other). • The check engine light does not illuminate. • FREEZE FRAME DATA (Mode 2)/Snapshot data is not available. • The DTC is stored in the PCM memory.
FAIL-SAFE FUNCTION	—
POSSIBLE CAUSE	• CPP switch, clutch stroke sensor and/or starter interlock switch loose • Starter interlock switch connector or terminals malfunction • Starter interlock switch malfunction • Short to ground in wiring harness between starter interlock switch terminal A and PCM terminal 2BD • PCM connector or terminals malfunction • CPP switch connector or terminals malfunction • CPP switch malfunction • Open circuit in wiring harness between CPP switch terminal B and body ground • Short to ground in wiring harness between CPP switch terminal A and PCM terminal 2J • Open circuit in wiring harness between CPP switch terminal A and PCM terminal 2J • Short to power supply in wiring harness between CPP switch terminal A and PCM terminal 2J • Clutch stroke sensor connector or terminals malfunction • Short to ground in wiring harness between the following terminals: — Clutch stroke sensor terminal C—PCM terminal 2BG — Clutch stroke sensor terminal B—PCM terminal 2M • Short to power supply in wiring harness between clutch stroke sensor terminal B and PCM terminal 2M • Clutch stroke sensor circuits are shorted to each other. • Open circuit in wiring harness between the following terminals: — Clutch stroke sensor terminal C—PCM terminal 2BG — Clutch stroke sensor terminal B—PCM terminal 2M — Clutch stroke sensor terminal A—PCM terminal 2AH • Clutch stroke sensor malfunction • PCM malfunction

ON-BOARD DIAGNOSTIC [SKYACTIV-G 2.0]

DTC P176E:00	Clutch stroke sensor/Starter interlock switch correlation problem

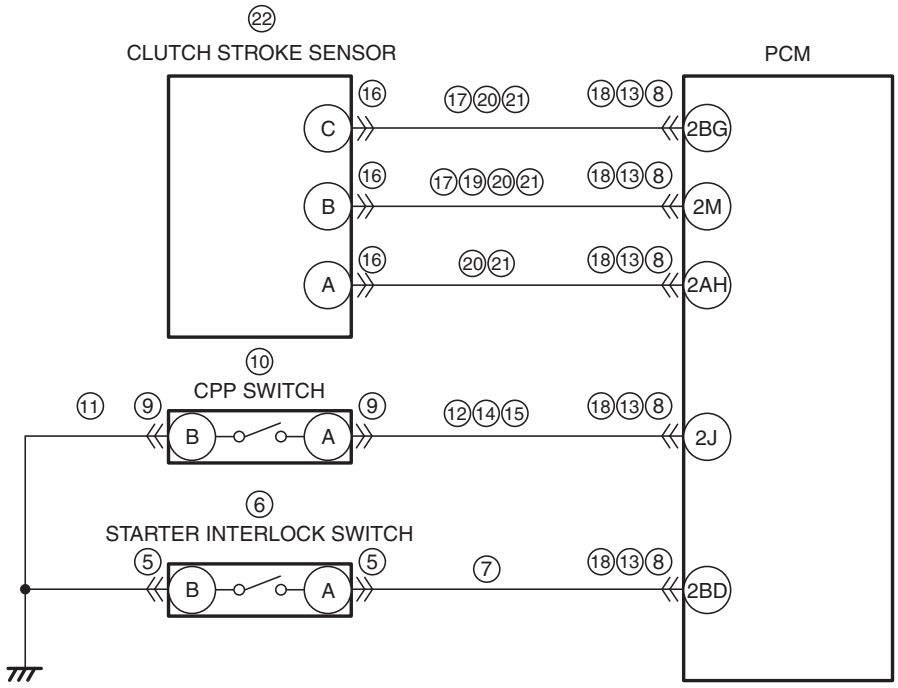

CLUTCH STROKE SENSOR WIRING HARNESS-SIDE CONNECTOR

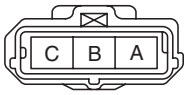

STARTER INTERLOCK SWITCH WIRING HARNESS-SIDE CONNECTOR

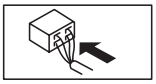

CPP SWITCH WIRING HARNESS-SIDE CONNECTOR

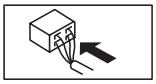

PCM WIRING HARNESS-SIDE CONNECTOR

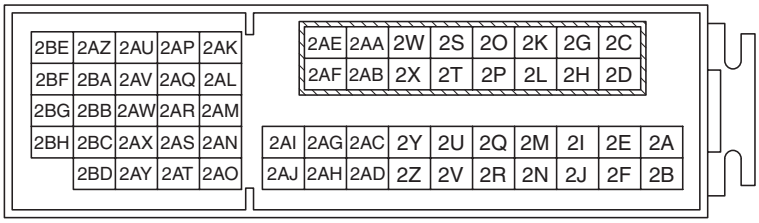

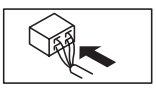

ON-BOARD DIAGNOSTIC [SKYACTIV-G 2.0]

Diagnostic Procedure

STEP	INSPECTION		ACTION
1	**VERIFY RELATED SERVICE INFORMATION AVAILABILITY** • Verify related Service Information availability. • Is any related Service Information available?	Yes	Perform repair or diagnosis according to the available Service Information. • If the vehicle is not repaired, go to the next step.
		No	Go to the next step.
2	**VERIFY RELATED PENDING CODE AND/OR DTC** • Switch the ignition to off, then to ON (engine off). • Perform the Pending Trouble Code Access Procedure and DTC Reading Procedure. (See 01-02-8 ON-BOARD DIAGNOSTIC TEST [SKYACTIV-G 2.0].) • Is the PENDING CODE/DTC P0704:00 also present?	Yes	Go to the applicable PENDING CODE or DTC inspection. (See 01-02-271 DTC P0704:00 [SKYACTIV-G 2.0].)
		No	Go to the next step.
3	**INSPECT INSTALLATION OF CPP SWITCH, CLUTCH STROKE SENSOR AND STARTER INTERLOCK SWITCH** • Inspect installation of CPP switch, clutch stroke sensor and starter interlock switch. • Are the CPP switch, clutch stroke sensor and starter interlock switch installed securely?	Yes	Go to the next step.
		No	Retighten the malfunctioning switch and/or sensor, then go to Step 23.
4	**DETERMINE MALFUNCTIONING SYSTEM** • Inspect the following: (See 01-02-8 ON-BOARD DIAGNOSTIC TEST [SKYACTIV-G 2.0].) — PCM PID: • CPP (OFF/ON) • CPP (%) — PCM terminal 2BD voltage • Is there any malfunction? (See 01-40-17 PCM INSPECTION [SKYACTIV-G 2.0].)	Yes	If the PCM terminal 2BD voltage is not normal: • Go to the next step. If the CPP PID (OFF/ON) is not normal: • Go to Step 9. If the CPP PID (%) is not normal: • Go to Step 16.
		No	Intermittent concern exists. • Perform the “INTERMITTENT CONCERN TROUBLESHOOTING” procedure. (See 01-03-116 INTERMITTENT CONCERN TROUBLESHOOTING [SKYACTIV-G 2.0].)
5	**INSPECT STARTER INTERLOCK SWITCH CONNECTOR CONDITION** • Switch the ignition to off. • Disconnect the starter interlock switch connector. • Inspect for poor connection (such as damaged/pulled-out pins, corrosion). • Is there any malfunction?	Yes	Repair or replace the connector and/or terminals, then go to Step 23.
		No	Go to the next step.
6	**INSPECT STARTER INTERLOCK SWITCH** • Inspect the starter interlock switch. (See 01-19A-9 STARTER INTERLOCK SWITCH INSPECTION [SKYACTIV-G 2.0].) • Is there any malfunction?	Yes	Replace the starter interlock switch, then go to Step 23.
		No	Go to the next step.
7	**INSPECT STARTER INTERLOCK SWITCH SIGNAL CIRCUIT FOR SHORT TO GROUND** • Verify that the starter interlock switch connector is disconnected. • Inspect for continuity between starter interlock switch terminal A (wiring harness-side) and body ground. • Is there continuity?	Yes	If the short to ground circuit could be detected in the wiring harness: • Repair or replace the wiring harness for a possible short to ground. If the short to ground circuit could not be detected in the wiring harness: • Replace the PCM (short to ground in the PCM internal circuit). (See 01-40-10 PCM REMOVAL/INSTALLATION [SKYACTIV-G 2.0].) Go to Step 23.
		No	Go to the next step.
8	**INSPECT PCM CONNECTOR CONDITION** • Disconnect the PCM connector. • Inspect for poor connection (such as damaged/pulled-out pins, corrosion). • Is there any malfunction?	Yes	Repair or replace the connector and/or terminals, then go to Step 23.
		No	Go to the next step.

ON-BOARD DIAGNOSTIC [SKYACTIV-G 2.0]

STEP	INSPECTION		ACTION
9	**INSPECT CPP SWITCH CONNECTOR CONDITION** • Switch the ignition to off. • Disconnect the CPP switch connector. • Inspect for poor connection (such as damaged/pulled-out pins, corrosion). • Is there any malfunction?	Yes	Repair or replace the connector and/or terminals, then go to Step 23.
		No	Go to the next step.
10	**INSPECT CPP SWITCH** • Inspect the CPP switch. (See 01-40-40 CLUTCH PEDAL POSITION (CPP) SWITCH INSPECTION [SKYACTIV-G 2.0].) • Is there any malfunction?	Yes	Replace the CPP switch, then go to Step 23. (See 05-10A-13 CLUTCH PEDAL POSITION SWITCH REMOVAL/INSTALLATION [C66M-R, C66MX-R].)
		No	Go to the next step.
11	**INSPECT CPP SWITCH GROUND CIRCUIT FOR OPEN CIRCUIT** • Verify that the CPP switch connector is disconnected. • Inspect for continuity between CPP switch terminal B (wiring harness-side) and body ground. • Is there continuity?	Yes	Go to the next step.
		No	Repair or replace the wiring harness for a possible open circuit, then go to Step 23.
12	**INSPECT CPP SWITCH SIGNAL CIRCUIT FOR SHORT TO GROUND** • Verify that the CPP switch connector is disconnected. • Inspect for continuity between CPP switch terminal A (wiring harness-side) and body ground. • Is there continuity?	Yes	If the short to ground circuit could be detected in the wiring harness: • Repair or replace the wiring harness for a possible short to ground. If the short to ground circuit could not be detected in the wiring harness: • Replace the PCM (short to ground in the PCM internal circuit). (See 01-40-10 PCM REMOVAL/INSTALLATION [SKYACTIV-G 2.0].) Go to Step 23.
		No	Go to the next step.
13	**INSPECT PCM CONNECTOR CONDITION** • Disconnect the PCM connector. • Inspect for poor connection (such as damaged/pulled-out pins, corrosion). • Is there any malfunction?	Yes	Repair or replace the connector and/or terminals, then go to Step 23.
		No	Go to the next step.
14	**INSPECT CPP SWITCH SIGNAL CIRCUIT FOR OPEN CIRCUIT** • Verify that the CPP switch and PCM connectors are disconnected. • Inspect for continuity between CPP switch terminal A (wiring harness-side) and PCM terminal 2J (wiring harness-side). • Is there continuity?	Yes	Go to the next step.
		No	Repair or replace the wiring harness for a possible open circuit, then go to Step 23.
15	**INSPECT CPP SWITCH SIGNAL CIRCUIT FOR SHORT TO POWER SUPPLY** • Verify that the CPP switch and PCM connectors are disconnected. • Switch the ignition ON (engine off or on). • Measure the voltage at the CPP switch terminal A (wiring harness-side). • Is the voltage **0 V**?	Yes	Repeat Step 4.
		No	Repair or replace harness for a possible short to power supply, then go to Step 23.
16	**INSPECT CLUTCH STROKE SENSOR CONNECTOR CONDITION** • Switch the ignition to off. • Disconnect the clutch stroke sensor connector. • Inspect for poor connection (such as damaged/pulled-out pins, corrosion). • Is there any malfunction?	Yes	Repair or replace the connector and/or terminals, then go to Step 23.
		No	Go to the next step.

ON-BOARD DIAGNOSTIC [SKYACTIV-G 2.0]

STEP	INSPECTION		ACTION
17	**INSPECT CLUTCH STROKE SENSOR CIRCUIT FOR SHORT TO GROUND** • Verify that the clutch stroke sensor connector is disconnected. • Inspect for continuity between the following terminals (wiring harness-side) and body ground: — Clutch stroke sensor terminal C — Clutch stroke sensor terminal B • Is there continuity?	Yes	If the short to ground circuit could be detected in the wiring harness: • Repair or replace the wiring harness for a possible short to ground. If the short to ground circuit could not be detected in the wiring harness: • Replace the PCM (short to ground in the PCM internal circuit). (See 01-40-10 PCM REMOVAL/INSTALLATION [SKYACTIV-G 2.0].) Go to Step 23.
		No	Go to the next step.
18	**INSPECT PCM CONNECTOR CONDITION** • Disconnect the PCM connector. • Inspect for poor connection (such as damaged/pulled-out pins, corrosion). • Is there any malfunction?	Yes	Repair or replace the connector and/or terminals, then go to Step 23.
		No	Go to the next step.
19	**INSPECT CLUTCH STROKE SENSOR CIRCUIT FOR SHORT TO POWER SUPPLY** • Verify that the clutch stroke sensor and PCM connectors are disconnected. • Switch the ignition ON (engine off or on). • Measure the voltage at the clutch stroke sensor terminal B (wiring harness-side). • Is the voltage **0 V**?	Yes	Go to the next step.
		No	Repair or replace harness for a possible short to power supply, then go to Step 23.
20	**INSPECT CLUTCH STROKE SENSOR CIRCUIT FOR SHORT TO EACH OTHER** • Verify that the clutch stroke sensor and PCM connectors are disconnected. • Switch the ignition to off. • Inspect for continuity between clutch stroke sensor terminals C, B and A (wiring harness-side). • Is there continuity?	Yes	Repair or replace the wiring harness for a possible short to each other, then go to Step 23.
		No	Go to the next step.
21	**INSPECT CLUTCH STROKE SENSOR CIRCUIT FOR OPEN CIRCUIT** • Verify that the clutch stroke sensor and PCM connectors are disconnected. • Inspect for continuity between the following terminals (wiring harness-side): — Clutch stroke sensor terminal C—PCM terminal 2BG — Clutch stroke sensor terminal B—PCM terminal 2M — Clutch stroke sensor terminal A—PCM terminal 2AH • Is there continuity?	Yes	Go to the next step.
		No	Repair or replace the wiring harness for a possible open circuit, then go to Step 23.
22	**INSPECT CLUTCH STROKE SENSOR** • Inspect the clutch stroke sensor. (See 01-40-67 CLUTCH STROKE SENSOR INSPECTION [SKYACTIV-G 2.0].) • Is there any malfunction?	Yes	Replace the clutch master cylinder, then go to the next step. (See 05-10A-17 CLUTCH MASTER CYLINDER REMOVAL/INSTALLATION [C66M-R, C66MX-R].)
		No	Repeat Step 4.
23	**VERIFY DTC TROUBLESHOOTING COMPLETED** • Make sure to reconnect all disconnected connectors. • Clear the DTC from the PCM memory using the M-MDS. (See 01-02-12 AFTER REPAIR PROCEDURE [SKYACTIV-G 2.0].) • Perform the KOEO or KOER self test. (See 01-02-12 KOEO/KOER SELF TEST [SKYACTIV-G 2.0].) • Is the same DTC present?	Yes	Repeat the inspection from Step 1. • If the malfunction recurs, replace the PCM. (See 01-40-10 PCM REMOVAL/INSTALLATION [SKYACTIV-G 2.0].) Go to the next step.
		No	Go to the next step.

ON-BOARD DIAGNOSTIC [SKYACTIV-G 2.0]

STEP	INSPECTION		ACTION
24	**VERIFY AFTER REPAIR PROCEDURE** • Perform the “AFTER REPAIR PROCEDURE”. (See 01-02-12 AFTER REPAIR PROCEDURE [SKYACTIV-G 2.0].) • Are any DTCs present?	Yes	Go to the applicable DTC inspection. (See 01-02-14 DTC TABLE [SKYACTIV-G 2.0].)
		No	DTC troubleshooting completed.

DTC P2096:00 [SKYACTIV-G 2.0]

id0102h1707500

DTC P2096:00	Target A/F feedback system too lean
DETECTION CONDITION	• The PCM monitors the target A/F fuel trim when under the target A/F feedback control. If the fuel trim is more than the specification, the PCM determines that the target A/F feedback system is too lean. **Diagnostic support note** • This is a continuous monitor (fuel system). • The check engine light illuminates if the PCM detects the above malfunction condition in two consecutive drive cycles or in one drive cycle while the DTC for the same malfunction has been stored in the PCM. • PENDING CODE is available if the PCM detects the above malfunction condition during first drive cycle. • FREEZE FRAME DATA (Mode 2)/Snapshot data is available. • The DTC is stored in the PCM memory.
FAIL-SAFE FUNCTION	—
POSSIBLE CAUSE	• Erratic signal to PCM — ECT sensor signal malfunction — MAF sensor signal malfunction — TP sensor signal malfunction — Related connector or terminals malfunction — Related wiring harness malfunction • Air suction in intake-air system • MAF sensor malfunction • Erratic signal from HO2S — Exhaust system leakage (between TWC and HO2S) — HO2S malfunction • Erratic signal from A/F sensor — Exhaust system leakage (between exhaust manifold and A/F sensor) — A/F sensor malfunction • IAT sensor No.1 malfunction • Improper operation of fuel injector — Fuel injector malfunction — Fuel injector related wiring harness malfunction • High-pressure side fuel delivery system malfunction — Fuel pressure sensor malfunction — Spill valve control solenoid valve control circuit malfunction (damage to driver in PCM caused by short circuit to ground system) — Spill valve control solenoid valve (built-into high pressure fuel pump) malfunction — Relief valve (built-into high pressure fuel pump) malfunction — High pressure fuel pump malfunction • Low-pressure side fuel delivery system malfunction — Low pressure side fuel line restriction (between fuel pump unit and high pressure fuel pump) — Fuel filter clogged — Pressure regulator (built-into fuel pump unit) malfunction — Fuel pump unit malfunction • Improper operation of ignition system — Spark plug malfunction — Ignition coil malfunction — Ignition coil related wiring harness malfunction • Insufficient engine compression • ECT sensor malfunction • PCM malfunction
SYSTEM WIRING DIAGRAM	—

ON-BOARD DIAGNOSTIC [SKYACTIV-G 2.0]

Diagnostic Procedure

STEP	INSPECTION		ACTION
1	**IDENTIFY TRIGGER DTC FOR FREEZE FRAME DATA (MODE 2)** • Perform the Freeze Frame PID Data Access Procedure. (See 01-02-8 ON-BOARD DIAGNOSTIC TEST [SKYACTIV-G 2.0].) • Is the DTC P2096:00 on FREEZE FRAME DATA (Mode 2)?	Yes	Go to the next step.
		No	Go to the troubleshooting procedure for DTC on FREEZE FRAME DATA (Mode 2). (See 01-02-14 DTC TABLE [SKYACTIV-G 2.0].)
2	**VERIFY FREEZE FRAME DATA (MODE 2)/ SNAPSHOT DATA AND DIAGNOSTIC MONITORING TEST RESULTS HAVE BEEN RECORDED** • Have the FREEZE FRAME DATA (Mode 2)/ snapshot data and DIAGNOSTIC MONITORING TEST RESULTS (fuel system related) been recorded?	Yes	Go to the next step.
		No	Record the FREEZE FRAME DATA (Mode 2)/snapshot data and DIAGNOSTIC MONITORING TEST RESULTS on the repair order, then go to the next step.
3	**VERIFY RELATED SERVICE INFORMATION AVAILABILITY** • Verify related Service Information availability. • Is any related Service Information available?	Yes	Perform repair or diagnosis according to the available Service Information. • If the vehicle is not repaired, go to the next step.
		No	Go to the next step.
4	**VERIFY RELATED PENDING CODE AND/OR DTC** • Switch the ignition to off, then to ON (engine off). • Perform the Pending Trouble Code Access Procedure and DTC Reading Procedure. (See 01-02-8 ON-BOARD DIAGNOSTIC TEST [SKYACTIV-G 2.0].) • Is the PENDING CODE/DTC P0171:00 also present?	Yes	Go to the applicable PENDING CODE or DTC inspection. (See 01-02-132 DTC P0171:00 [SKYACTIV-G 2.0].)
		No	Go to the next step.
5	**VERIFY CURRENT INPUT SIGNAL STATUS** • Access the following PIDs using the M-MDS: (See 01-02-8 ON-BOARD DIAGNOSTIC TEST [SKYACTIV-G 2.0].) — ECT — MAF — TP REL • Are the PIDs normal? (See 01-40-17 PCM INSPECTION [SKYACTIV-G 2.0].)	Yes	Go to the next step.
		No	Inspect the suspected sensor and related wiring harness. Repair or replace the malfunctioning part according to the inspection results, then go to Step 23.
6	**VERIFY CURRENT INPUT SIGNAL STATUS UNDER FREEZE FRAME DATA (MODE 2) CONDITION** **Caution** • **While performing this step, always operate the vehicle in a safe and lawful manner.** • **When the M-MDS is used to observe monitor system status while driving, be sure to have another technician with you, or record the data in the M-MDS using the PID/DATA MONITOR AND RECORD capturing function and inspect later.** • Access the same PIDs as in Step 5 while simulating under the FREEZE FRAME DATA (Mode 2) conditions. (See 01-02-8 ON-BOARD DIAGNOSTIC TEST [SKYACTIV-G 2.0].) • Are the PIDs normal? (See 01-40-17 PCM INSPECTION [SKYACTIV-G 2.0].)	Yes	Go to the next step.
		No	Inspect the suspected sensor and related wiring harness. Repair or replace the malfunctioning part according to the inspection results, then go to Step 23.

ON-BOARD DIAGNOSTIC [SKYACTIV-G 2.0]

STEP	INSPECTION		ACTION
7	**VERIFY CURRENT INPUT SIGNAL STATUS OF MAF SENSOR** • Start the engine. • Access the MAF PID using the M-MDS. (See 01-02-8 ON-BOARD DIAGNOSTIC TEST [SKYACTIV-G 2.0].) • Verify that the MAF PID value changes quickly while increasing (racing) the engine rpm. • Is the MAF PID value normal? (See 01-40-17 PCM INSPECTION [SKYACTIV-G 2.0].)	Yes	Go to Step 9.
		No	Go to the next step.
8	**INSPECT INTAKE AIR SYSTEM FOR EXCESSIVE AIR SUCTION** • Visually inspect for loose, cracked or damaged hoses on intake air system. **Note** • Engine speed may change when rust penetrating agent is splayed on the air suction area. • Is there any malfunction?	Yes	Repair or replace the malfunctioning part according to the inspection results, then go to Step 23.
		No	Replace the MAF sensor/IAT sensor No.1, then go to Step 23. (See 01-13A-6 INTAKE-AIR SYSTEM REMOVAL/INSTALLATION [SKYACTIV-G 2.0].)
9	**INSPECT CURRENT SIGNAL STATUS OF HO2S** • Inspect the HO2S. (See 01-40-58 HEATED OXYGEN SENSOR (HO2S) INSPECTION [SKYACTIV-G 2.0].) • Is there any malfunction?	Yes	Go to the next step.
		No	Go to Step 11.
10	**INSPECT EXHAUST SYSTEM FOR LEAKAGE** • Visually inspect for exhaust leakage between TWC and HO2S. • Is there any leakage?	Yes	Repair or replace the malfunctioning part according to the inspection results, then go to Step 23.
		No	Replace the HO2S, then go to Step 23. (See 01-40-56 HEATED OXYGEN SENSOR (HO2S) REMOVAL/INSTALLATION [SKYACTIV-G 2.0].)
11	**INSPECT CURRENT SIGNAL STATUS OF A/F SENSOR** • Inspect the A/F sensor. (See 01-40-55 AIR FUEL RATIO (A/F) SENSOR INSPECTION [SKYACTIV-G 2.0].) • Is there any malfunction?	Yes	Go to the next step.
		No	Go to Step 13.
12	**INSPECT EXHAUST SYSTEM FOR LEAKAGE** • Visually inspect for exhaust leakage between exhaust manifold and A/F sensor. • Is there any leakage?	Yes	Repair or replace the malfunctioning part according to the inspection results, then go to Step 23.
		No	Replace the A/F sensor, then go to Step 23. (See 01-40-52 AIR FUEL RATIO (A/F) SENSOR REMOVAL/INSTALLATION [SKYACTIV-G 2.0].)
13	**INSPECT IAT SENSOR NO.1** • Inspect the IAT sensor No.1. (See 01-40-46 INTAKE AIR TEMPERATURE (IAT) SENSOR INSPECTION [SKYACTIV-G 2.0].) • Is there any malfunction?	Yes	Replace the MAF sensor/IAT sensor No.1, then go to Step 23. (See 01-13A-6 INTAKE-AIR SYSTEM REMOVAL/INSTALLATION [SKYACTIV-G 2.0].)
		No	Go to the next step.
14	**INSPECT FUEL INJECTOR OPERATION** • Perform the Fuel Injector Operation Inspection. (See 01-03-118 ENGINE CONTROL SYSTEM OPERATION INSPECTION [SKYACTIV-G 2.0].) • Is there any malfunction?	Yes	Repair or replace the malfunctioning part according to the inspection results, then go to Step 23.
		No	Go to the next step.

ON-BOARD DIAGNOSTIC [SKYACTIV-G 2.0]

STEP	INSPECTION		ACTION
15	**INSPECT FUEL PRESSURE (HIGH-SIDE)** • Start the engine and warm it up completely. • Access the FUEL_PRES PID using the M-MDS at idle. (See 01-02-8 ON-BOARD DIAGNOSTIC TEST [SKYACTIV-G 2.0].) • Is the FUEL_PRES PID value **approx. 3 MPa {31 kgf/cm^2, 435 psi}**?	Yes	Go to Step 19.
		No	Lower than **3 MPa {31 kgf/cm2, 435 psi}**: • Inspect the following: — Fuel leakage at the fuel line and fuel injector — Fuel pump • Perform the Fuel Pump (Low-pressure Side) Operation Inspection. (See 01-03-118 ENGINE CONTROL SYSTEM OPERATION INSPECTION [SKYACTIV-G 2.0].) — Fuel pressure sensor (See 01-40-52 FUEL PRESSURE SENSOR INSPECTION [SKYACTIV-G 2.0].) — High pressure fuel pump (See 01-14A-49 HIGH PRESSURE FUEL PUMP INSPECTION [SKYACTIV-G 2.0].) • If there is any malfunction: — Repair or replace the malfunctioning part according to the inspection results, then go to Step 23. • If there is no malfunction: — Go to Step 18. Higher than **3 MPa {31 kgf/cm2, 435 psi}**: • Go to the next step.
16	**IDENTIFY CAUSE BY FUEL PRESSURE SENSOR OR HIGH PRESSURE FUEL PUMP** • Is the vehicle acceleration performance normal?	Yes	Go to the next step.
		No	Go to Step 18.
17	**INSPECT FUEL PRESSURE SENSOR** • Inspect the fuel pressure sensor. (See 01-40-52 FUEL PRESSURE SENSOR INSPECTION [SKYACTIV-G 2.0].) • Is there any malfunction?	Yes	Replace the fuel distributor, then go to Step 23. (See 01-14A-51 FUEL INJECTOR REMOVAL/INSTALLATION [SKYACTIV-G 2.0].)
		No	Go to Step 19.
18	**INSPECT SPILL VALVE CONTROL SOLENOID VALVE CONTROL CIRCUIT FOR SHORT TO GROUND** • Switch the ignition to off. • Disconnect the high pressure fuel pump and PCM connectors. • Inspect for continuity between high pressure fuel pump terminal A (wiring harness-side) and body ground. • Is there continuity?	Yes	Repair or replace the wiring harness for a possible short to ground, then go to Step 23.
		No	Replace the high pressure fuel pump, then go to Step 23. (See 01-14A-44 HIGH PRESSURE FUEL PUMP REMOVAL/INSTALLATION [SKYACTIV-G 2.0].)
19	**INSPECT FUEL PRESSURE (LOW-SIDE)** • Connect the fuel pressure gauge between fuel pump and high pressure fuel pump. • Measure the low side fuel pressure. (See 01-14A-8 FUEL LINE PRESSURE INSPECTION [SKYACTIV-G 2.0].) • Is the low side fuel pressure within specification? **Specification:** • **405—485 kPa {4.13—4.94 kgf/cm^2, 58.8—70.3 psi}**	Yes	Go to the next step.
		No	Inspect the following: • Fuel line restriction • Fuel filter clogged — If there is any malfunction: • Repair or replace the malfunctioning part according to the inspection results. — If there is no malfunction: • Replace the fuel pump unit. (See 01-14A-38 FUEL PUMP UNIT REMOVAL/INSTALLATION [SKYACTIV-G 2.0].) Go to Step 23.
20	**INSPECT IGNITION SYSTEM OPERATION** • Perform the Spark Test. (See 01-03-118 ENGINE CONTROL SYSTEM OPERATION INSPECTION [SKYACTIV-G 2.0].) • Is a strong blue spark visible at each cylinder?	Yes	Go to the next step.
		No	Repair or replace the malfunctioning part according to the inspection results, then go to Step 23.

ON-BOARD DIAGNOSTIC [SKYACTIV-G 2.0]

STEP	INSPECTION		ACTION
21	**INSPECT ENGINE COMPRESSION** • Inspect the engine compression. (See 01-10A-14 COMPRESSION INSPECTION [SKYACTIV-G 2.0].) • Are compression pressures within specification? **Specification:** • Compression [European (L.H.D. U.K.) specs.] — Standard: **978 kPa {9.97 kgf/cm^2, 142 psi} (300 rpm)** — Minimum: **783 kPa {7.98 kgf/cm^2, 114 psi} (300 rpm)** — Maximum difference between cylinders: **166 kPa {1.69 kgf/cm^2, 24.1 psi}** • Compression [Except European (L.H.D. U.K.) specs.] — Standard: **885 kPa {9.02 kgf/cm^2, 128 psi} (300 rpm)** — Minimum: **708 kPa {7.22 kgf/cm^2, 103 psi} (300 rpm)** — Maximum difference between cylinders: **150 kPa {1.53 kgf/cm^2, 21.8 psi}** **Note** • Because the SKYACTIV-G 2.0 retards the intake valve closing timing, compression pressure is low.	Yes	Repair or replace the malfunctioning part according to the inspection results, then go to Step 23.
		No	Go to the next step.
22	**INSPECT ECT SENSOR** • Inspect the ECT sensor. (See 01-40-43 ENGINE COOLANT TEMPERATURE (ECT) SENSOR INSPECTION [SKYACTIV-G 2.0].) • Is there any malfunction?	Yes	Replace the ECT sensor, then go to the next step. (See 01-40-41 ENGINE COOLANT TEMPERATURE (ECT) SENSOR REMOVAL/INSTALLATION [SKYACTIV-G 2.0].)
		No	Go to the next step.
23	**VERIFY DTC TROUBLESHOOTING COMPLETED** • Make sure to reconnect all disconnected connectors. • Clear the DTC from the PCM memory using the M-MDS. (See 01-02-12 AFTER REPAIR PROCEDURE [SKYACTIV-G 2.0].) • Perform the Pending Trouble Code Access Procedure. (See 01-02-8 ON-BOARD DIAGNOSTIC TEST [SKYACTIV-G 2.0].) • Is the PENDING CODE for this DTC present?	Yes	Repeat the inspection from Step 1. • If the malfunction recurs, replace the PCM. (See 01-40-10 PCM REMOVAL/INSTALLATION [SKYACTIV-G 2.0].) Go to the next step.
		No	Go to the next step.
24	**VERIFY AFTER REPAIR PROCEDURE** • Perform the “AFTER REPAIR PROCEDURE”. (See 01-02-12 AFTER REPAIR PROCEDURE [SKYACTIV-G 2.0].) • Are any DTCs present?	Yes	Go to the applicable DTC inspection. (See 01-02-14 DTC TABLE [SKYACTIV-G 2.0].)
		No	DTC troubleshooting completed.

ON-BOARD DIAGNOSTIC [SKYACTIV-G 2.0]

DTC P2090:00 [SKYACTIV-G 2.0]

id0102h1009800

DTC P2090:00	**OCV circuit low input**
DETECTION CONDITION	• The PCM monitors the OCV voltage. If the PCM detects the OCV control voltage (calculated from the OCV) is below the specification voltage (calculated from the battery positive voltage), the PCM determines that the OCV circuit has a malfunction. **Diagnostic support note** • This is a continuous monitor (CCM). • The check engine light illuminates if the PCM detects the above malfunction condition during the first drive cycle. • FREEZE FRAME DATA (Mode 2)/Snapshot data is available. • The DTC is stored in the PCM memory.
FAIL-SAFE FUNCTION	• Performs the exhaust variable valve timing control with a maximum cam retard request.
POSSIBLE CAUSE	• OCV connector or terminals malfunction • Short to ground or open circuit in OCV power supply circuit — Short to ground in wiring harness between ENGINE2 15 A fuse and OCV terminal B — ENGINE2 15 A fuse malfunction — Open circuit in wiring harness between main relay terminal C and OCV terminal B • Short to ground in wiring harness between OCV terminal A and PCM terminal 1AN • PCM connector or terminals malfunction • Open circuit in wiring harness between OCV terminal A and PCM terminal 1AN • OCV malfunction • PCM malfunction

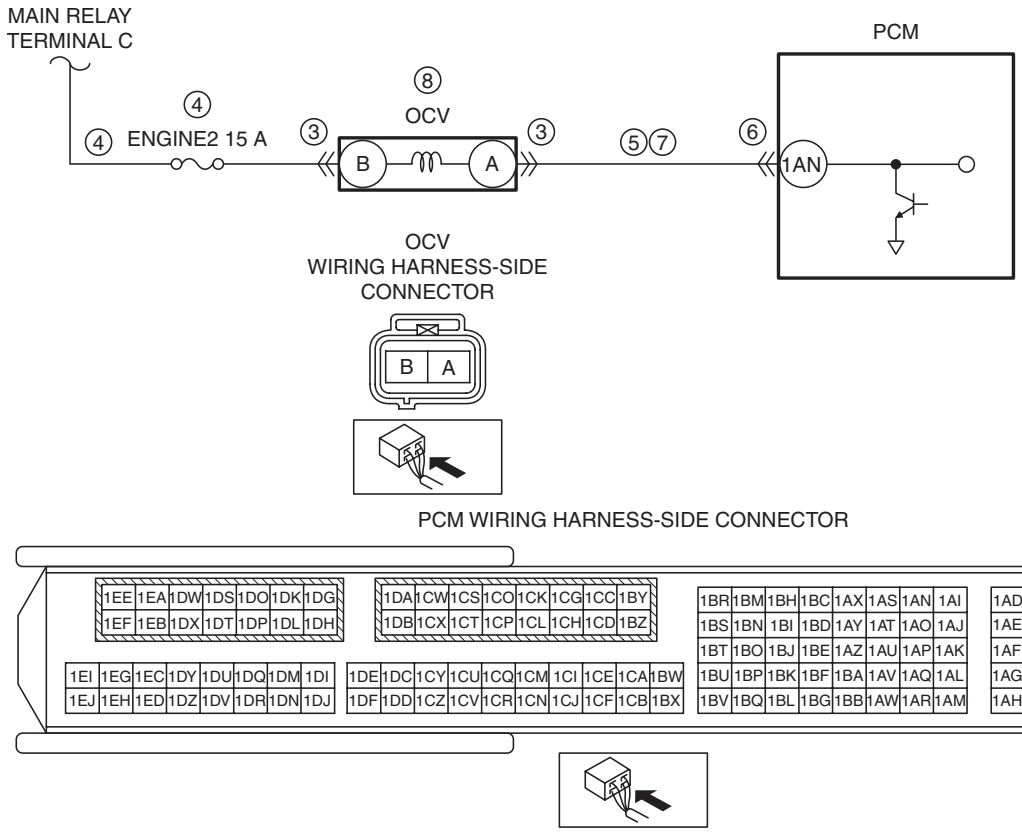

Diagnostic Procedure

STEP	INSPECTION		ACTION
1	**VERIFY FREEZE FRAME DATA (MODE 2)/ SNAPSHOT DATA HAS BEEN RECORDED** • Has the FREEZE FRAME DATA (Mode 2)/ snapshot data been recorded?	Yes	Go to the next step.
		No	Record the FREEZE FRAME DATA (Mode 2)/snapshot data on the repair order, then go to the next step.
2	**VERIFY RELATED SERVICE INFORMATION AVAILABILITY** • Verify related Service Information availability. • Is any related Service Information available?	Yes	Perform repair or diagnosis according to the available Service Information. • If the vehicle is not repaired, go to the next step.
		No	Go to the next step.

ON-BOARD DIAGNOSTIC [SKYACTIV-G 2.0]

STEP	INSPECTION		ACTION
3	**INSPECT OCV CONNECTOR CONDITION** • Switch the ignition to off. • Disconnect the OCV connector. • Inspect for poor connection (such as damaged/pulled-out pins, corrosion). • Is there any malfunction?	Yes	Repair or replace the connector and/or terminals, then go to Step 9.
		No	Go to the next step.
4	**INSPECT OCV POWER SUPPLY CIRCUIT FOR SHORT TO GROUND OR OPEN CIRCUIT** • Verify that the OCV connector is disconnected. • Switch the ignition ON (engine off or on). • Measure the voltage at the OCV terminal B (wiring harness-side). • Is the voltage **B+**?	Yes	Go to the next step.
		No	Inspect the ENGINE2 15 A fuse. • If the fuse is blown: — Repair or replace the wiring harness for a possible short to ground. — Replace the fuse. • If the fuse is deteriorated: — Replace the fuse. • If the fuse is normal: — Repair or replace the wiring harness for a possible open circuit. Go to Step 9.
5	**INSPECT OCV SIGNAL CIRCUIT FOR SHORT TO GROUND** • Verify that the OCV connector is disconnected. • Switch the ignition to off. • Inspect for continuity between OCV terminal A (wiring harness-side) and body ground. • Is there continuity?	Yes	If the short to ground circuit could be detected in the wiring harness: • Repair or replace the wiring harness for a possible short to ground. If the short to ground circuit could not be detected in the wiring harness: • Replace the PCM (short to ground in the PCM internal circuit). (See 01-40-10 PCM REMOVAL/INSTALLATION [SKYACTIV-G 2.0].) Go to Step 9.
		No	Go to the next step.
6	**INSPECT PCM CONNECTOR CONDITION** • Disconnect the PCM connector. • Inspect for poor connection (such as damaged/pulled-out pins, corrosion). • Is there any malfunction?	Yes	Repair or replace the connector and/or terminals, then go to Step 9.
		No	Go to the next step.
7	**INSPECT OCV SIGNAL CIRCUIT FOR OPEN CIRCUIT** • Verify that the OCV and PCM connectors are disconnected. • Inspect for continuity between OCV terminal A (wiring harness-side) and PCM terminal 1AN (wiring harness-side). • Is there continuity?	Yes	Go to the next step.
		No	Repair or replace the wiring harness for a possible open circuit, then go to Step 9.
8	**INSPECT OCV** • Inspect the OCV. (See 01-10A-37 OIL CONTROL VALVE (OCV) INSPECTION [SKYACTIV-G 2.0].) • Is there any malfunction?	Yes	Replace the OCV, then go to the next step. (See 01-10A-38 OIL CONTROL VALVE (OCV) REMOVAL/INSTALLATION [SKYACTIV-G 2.0].)
		No	Go to the next step.
9	**VERIFY DTC TROUBLESHOOTING COMPLETED** • Make sure to reconnect all disconnected connectors. • Clear the DTC from the PCM memory using the M-MDS. (See 01-02-12 AFTER REPAIR PROCEDURE [SKYACTIV-G 2.0].) • Perform the KOER self test. (See 01-02-12 KOEO/KOER SELF TEST [SKYACTIV-G 2.0].) • Is the same DTC present?	Yes	Repeat the inspection from Step 1. • If the malfunction recurs, replace the PCM. (See 01-40-10 PCM REMOVAL/INSTALLATION [SKYACTIV-G 2.0].) Go to the next step.
		No	Go to the next step.
10	**VERIFY AFTER REPAIR PROCEDURE** • Perform the “AFTER REPAIR PROCEDURE”. (See 01-02-12 AFTER REPAIR PROCEDURE [SKYACTIV-G 2.0].) • Are any DTCs present?	Yes	Go to the applicable DTC inspection. (See 01-02-14 DTC TABLE [SKYACTIV-G 2.0].)
		No	DTC troubleshooting completed.

ON-BOARD DIAGNOSTIC [SKYACTIV-G 2.0]

DTC P2091:00 [SKYACTIV-G 2.0]

id0102h1010000

DTC P2091:00	**OCV circuit high input**
DETECTION CONDITION	• The PCM monitors the OCV current. If the PCM detects that the OCV control current (calculated from the OCV) is above the specification current, the PCM determines that the OCV circuit has a malfunction. **Diagnostic support note** • This is a continuous monitor (CCM). • The check engine light illuminates if the PCM detects the above malfunction condition during the first drive cycle. • FREEZE FRAME DATA (Mode 2)/Snapshot data is available. • The DTC is stored in the PCM memory.
FAIL-SAFE FUNCTION	• Performs the exhaust variable valve timing control with a maximum cam retard request.
POSSIBLE CAUSE	• OCV connector or terminals malfunction • PCM connector or terminals malfunction • Short to power supply in wiring harness between OCV terminal A and PCM terminal 1AN • OCV malfunction • PCM malfunction

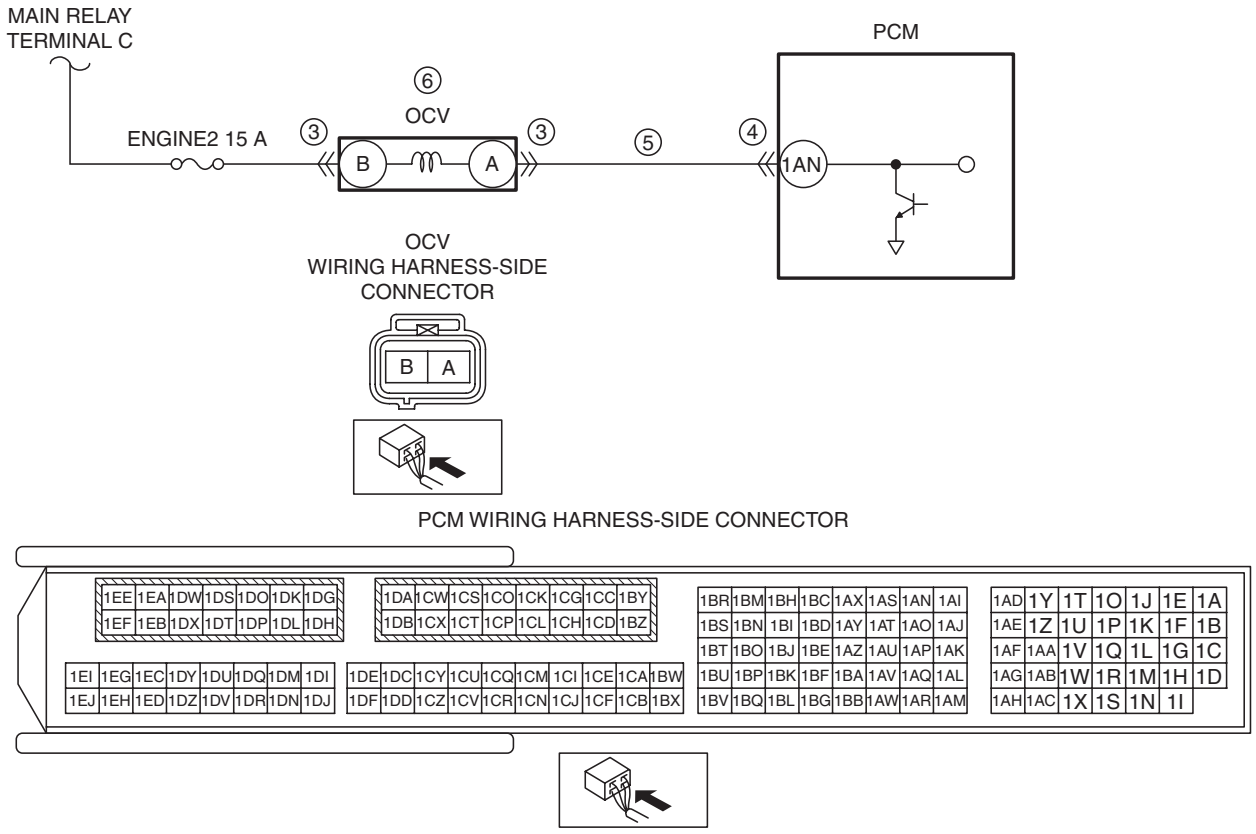

Diagnostic Procedure

STEP	INSPECTION		ACTION
1	**VERIFY FREEZE FRAME DATA (MODE 2)/ SNAPSHOT DATA HAS BEEN RECORDED** • Has the FREEZE FRAME DATA (Mode 2)/ snapshot data been recorded?	Yes	Go to the next step.
		No	Record the FREEZE FRAME DATA (Mode 2)/snapshot data on the repair order, then go to the next step.
2	**VERIFY RELATED SERVICE INFORMATION AVAILABILITY** • Verify related Service Information availability. • Is any related Service Information available?	Yes	Perform repair or diagnosis according to the available Service Information. • If the vehicle is not repaired, go to the next step.
		No	Go to the next step.

ON-BOARD DIAGNOSTIC [SKYACTIV-G 2.0]

STEP	INSPECTION		ACTION
3	**INSPECT OCV CONNECTOR CONDITION** • Switch the ignition to off. • Disconnect the OCV connector. • Inspect for poor connection (such as damaged/ pulled-out pins, corrosion). • Is there any malfunction?	Yes	Repair or replace the connector and/or terminals, then go to Step 7.
		No	Go to the next step.
4	**INSPECT PCM CONNECTOR CONDITION** • Disconnect the PCM connector. • Inspect for poor connection (such as damaged/ pulled-out pins, corrosion). • Is there any malfunction?	Yes	Repair or replace the connector and/or terminals, then go to Step 7.
		No	Go to the next step.
5	**INSPECT OCV CONTROL CIRCUIT FOR SHORT TO POWER SUPPLY** • Verify that the OCV and PCM connectors are disconnected. • Switch the ignition ON (engine off or on). • Measure the voltage at the OCV terminal A (wiring harness-side). • Is the voltage **0 V**?	Yes	Go to the next step.
		No	Repair or replace the wiring harness for a possible short to power supply, then go to Step 7.
6	**INSPECT OCV** • Inspect the OCV. (See 01-10A-37 OIL CONTROL VALVE (OCV) INSPECTION [SKYACTIV-G 2.0].) • Is there any malfunction?	Yes	Replace the OCV, then go to the next step. (See 01-10A-38 OIL CONTROL VALVE (OCV) REMOVAL/ INSTALLATION [SKYACTIV-G 2.0].)
		No	Go to the next step.
7	**VERIFY DTC TROUBLESHOOTING COMPLETED** • Make sure to reconnect all disconnected connectors. • Clear the DTC from the PCM memory using the M-MDS. (See 01-02-12 AFTER REPAIR PROCEDURE [SKYACTIV-G 2.0].) • Perform the KOER self test. (See 01-02-12 KOEO/KOER SELF TEST [SKYACTIV-G 2.0].) • Is the same DTC present?	Yes	Repeat the inspection from Step 1. • If the malfunction recurs, replace the PCM. (See 01-40-10 PCM REMOVAL/INSTALLATION [SKYACTIV-G 2.0].) Go to the next step.
		No	Go to the next step.
8	**VERIFY AFTER REPAIR PROCEDURE** • Perform the “AFTER REPAIR PROCEDURE”. (See 01-02-12 AFTER REPAIR PROCEDURE [SKYACTIV-G 2.0].) • Are any DTCs present?	Yes	Go to the applicable DTC inspection. (See 01-02-14 DTC TABLE [SKYACTIV-G 2.0].)
		No	DTC troubleshooting completed.

ON-BOARD DIAGNOSTIC [SKYACTIV-G 2.0]

DTC P2097:00 [SKYACTIV-G 2.0]

id0102h1707600

DTC P2097:00	**Target A/F feedback system too rich**
DETECTION CONDITION	• The PCM monitors the target A/F fuel trim when under the target A/F feedback control. If the fuel trim is less than specification, the PCM determines that the target A/F feedback system is too rich. **Diagnostic support note** • This is a continuous monitor (fuel system). • The check engine light illuminates if the PCM detects the above malfunction condition in two consecutive drive cycles or in one drive cycle while the DTC for the same malfunction has been stored in the PCM. • PENDING CODE is available if the PCM detects the above malfunction condition during first drive cycle. • FREEZE FRAME DATA (Mode 2)/Snapshot data is available. • The DTC is stored in the PCM memory.
FAIL-SAFE FUNCTION	—
POSSIBLE CAUSE	• Erratic signal to PCM — ECT sensor signal malfunction — MAF sensor signal malfunction — TP sensor signal malfunction — Related connector or terminals malfunction — Related wiring harness malfunction • Erratic signal from HO2S — HO2S malfunction • Erratic signal from A/F sensor — Exhaust system leakage (between exhaust manifold and A/F sensor) — A/F sensor malfunction • IAT sensor No.1 malfunction • Purge solenoid valve malfunction • Improper operation of fuel injector — Fuel injector malfunction — Fuel injector related wiring harness malfunction • High-pressure side fuel delivery system malfunction — Fuel pressure sensor malfunction — Spill valve control solenoid valve control circuit malfunction (damage to driver in PCM caused by short circuit to ground system) — Spill valve control solenoid valve (built-into high pressure fuel pump) malfunction — Relief valve (built-into high pressure fuel pump) malfunction — High pressure fuel pump malfunction • Low-pressure side fuel delivery system malfunction — Low pressure side fuel line restriction (between fuel pump unit and high pressure fuel pump) — Fuel filter clogged — Pressure regulator (built-into fuel pump unit) malfunction — Fuel pump unit malfunction • Insufficient engine compression • ECT sensor malfunction • PCM malfunction
SYSTEM WIRING DIAGRAM	—

Diagnostic Procedure

STEP	INSPECTION		ACTION
1	**IDENTIFY TRIGGER DTC FOR FREEZE FRAME DATA (MODE 2)** • Perform the Freeze Frame PID Data Access Procedure. (See 01-02-8 ON-BOARD DIAGNOSTIC TEST [SKYACTIV-G 2.0].) • Is the DTC P2097:00 on FREEZE FRAME DATA (Mode 2)?	Yes	Go to the next step.
		No	Go to the troubleshooting procedure for DTC on FREEZE FRAME DATA (Mode 2). (See 01-02-14 DTC TABLE [SKYACTIV-G 2.0].)
2	**VERIFY FREEZE FRAME DATA (MODE 2)/ SNAPSHOT DATA AND DIAGNOSTIC MONITORING TEST RESULTS HAVE BEEN RECORDED** • Have the FREEZE FRAME DATA (Mode 2)/ snapshot data and DIAGNOSTIC MONITORING TEST RESULTS (fuel system related) been recorded?	Yes	Go to the next step.
		No	Record the FREEZE FRAME DATA (Mode 2)/snapshot data and DIAGNOSTIC MONITORING TEST RESULTS on the repair order, then go to the next step.

ON-BOARD DIAGNOSTIC [SKYACTIV-G 2.0]

STEP	INSPECTION		ACTION
3	**VERIFY RELATED SERVICE INFORMATION AVAILABILITY** • Verify related Service Information availability. • Is any related Service Information available?	Yes	Perform repair or diagnosis according to the available Service Information. • If the vehicle is not repaired, go to the next step.
		No	Go to the next step.
4	**VERIFY RELATED PENDING CODE AND/OR DTC** • Switch the ignition to off, then to ON (engine off). • Perform the Pending Trouble Code Access Procedure and DTC Reading Procedure. (See 01-02-8 ON-BOARD DIAGNOSTIC TEST [SKYACTIV-G 2.0].) • Is the PENDING CODE/DTC P0172:00 also present?	Yes	Go to the applicable PENDING CODE or DTC inspection. (See 01-02-138 DTC P0172:00 [SKYACTIV-G 2.0].)
		No	Go to the next step.
5	**VERIFY CURRENT INPUT SIGNAL STATUS** • Access the following PIDs using the M-MDS: (See 01-02-8 ON-BOARD DIAGNOSTIC TEST [SKYACTIV-G 2.0].) — ECT — MAF — TP REL • Are the PIDs normal? (See 01-40-17 PCM INSPECTION [SKYACTIV-G 2.0].)	Yes	Go to the next step.
		No	Inspect the suspected sensor and related wiring harness. Repair or replace the malfunctioning part according to the inspection results, then go to Step 21.
6	**VERIFY CURRENT INPUT SIGNAL STATUS UNDER FREEZE FRAME DATA (MODE 2) CONDITION** **Caution** • **While performing this step, always operate the vehicle in a safe and lawful manner.** • **When the M-MDS is used to observe monitor system status while driving, be sure to have another technician with you, or record the data in the M-MDS using the PID/DATA MONITOR AND RECORD capturing function and inspect later.** • Access the same PIDs as in Step 5 while simulating under the FREEZE FRAME DATA (Mode 2) conditions. (See 01-02-8 ON-BOARD DIAGNOSTIC TEST [SKYACTIV-G 2.0].) • Are the PIDs normal? (See 01-40-17 PCM INSPECTION [SKYACTIV-G 2.0].)	Yes	Go to the next step.
		No	Inspect the suspected sensor and related wiring harness. Repair or replace the malfunctioning part according to the inspection results, then go to Step 21.
7	**INSPECT CURRENT SIGNAL STATUS OF HO2S** • Inspect the HO2S. (See 01-40-58 HEATED OXYGEN SENSOR (HO2S) INSPECTION [SKYACTIV-G 2.0].) • Is there any malfunction?	Yes	Replace the HO2S, then go to Step 21. (See 01-40-56 HEATED OXYGEN SENSOR (HO2S) REMOVAL/INSTALLATION [SKYACTIV-G 2.0].)
		No	Go to the next step.
8	**INSPECT CURRENT SIGNAL STATUS OF A/F SENSOR** • Inspect the A/F sensor. (See 01-40-55 AIR FUEL RATIO (A/F) SENSOR INSPECTION [SKYACTIV-G 2.0].) • Is there any malfunction?	Yes	Go to the next step.
		No	Go to Step 10.
9	**INSPECT EXHAUST SYSTEM FOR LEAKAGE** • Visually inspect for exhaust leakage between exhaust manifold and A/F sensor. • Is there any leakage?	Yes	Repair or replace the malfunctioning part according to the inspection results, then go to Step 21.
		No	Replace the A/F sensor, then go to Step 21. (See 01-40-52 AIR FUEL RATIO (A/F) SENSOR REMOVAL/INSTALLATION [SKYACTIV-G 2.0].)

ON-BOARD DIAGNOSTIC [SKYACTIV-G 2.0]

STEP	INSPECTION		ACTION
10	**INSPECT IAT SENSOR NO.1** • Inspect the IAT sensor No.1. (See 01-40-46 INTAKE AIR TEMPERATURE (IAT) SENSOR INSPECTION [SKYACTIV-G 2.0].) • Is there any malfunction?	Yes	Replace the MAF sensor/IAT sensor No.1, then go to Step 21. (See 01-13A-6 INTAKE-AIR SYSTEM REMOVAL/ INSTALLATION [SKYACTIV-G 2.0].)
		No	Go to the next step.
11	**INSPECT LONG TERM FUEL TRIM** • Access the LONGFT1 PID using the M-MDS. (See 01-02-8 ON-BOARD DIAGNOSTIC TEST [SKYACTIV-G 2.0].) • Compare the LONGFT1 PID value with recorded FREEZE FRAME DATA (Mode 2). • Is the LONGFT1 PID value above the FREEZE FRAME DATA (Mode 2)?	Yes	Go to the next step.
		No	Go to Step 13.
12	**INSPECT PURGE SOLENOID VALVE** • Inspect the purge solenoid valve. (See 01-16A-12 PURGE SOLENOID VALVE INSPECTION [SKYACTIV-G 2.0].) • Is there any malfunction?	Yes	Replace the purge solenoid valve, then go to Step 21. (See 01-16A-10 PURGE SOLENOID VALVE REMOVAL/ INSTALLATION [SKYACTIV-G 2.0].)
		No	Go to the next step.
13	**INSPECT FUEL INJECTOR OPERATION** • Perform the Fuel Injector Operation Inspection. (See 01-03-118 ENGINE CONTROL SYSTEM OPERATION INSPECTION [SKYACTIV-G 2.0].) • Is there any malfunction?	Yes	Repair or replace the malfunctioning part according to the inspection results, then go to Step 21.
		No	Go to the next step.
14	**INSPECT FUEL PRESSURE (HIGH-SIDE)** • Start the engine and warm it up completely. • Access the FUEL_PRES PID using the M-MDS at idle. (See 01-02-8 ON-BOARD DIAGNOSTIC TEST [SKYACTIV-G 2.0].) • Is the FUEL_PRES PID value **approx. 3 MPa {31 kgf/cm^2, 435 psi}**?	Yes	Go to Step 18.
		No	Lower than **3 MPa {31 kgf/cm2, 435 psi}**: • Inspect the following: — Fuel leakage at the fuel line and fuel injector — Fuel pump • Perform the Fuel Pump (Low-pressure Side) Operation Inspection. (See 01-03-118 ENGINE CONTROL SYSTEM OPERATION INSPECTION [SKYACTIV-G 2.0].) — Fuel pressure sensor (See 01-40-52 FUEL PRESSURE SENSOR INSPECTION [SKYACTIV-G 2.0].) — High pressure fuel pump (See 01-14A-49 HIGH PRESSURE FUEL PUMP INSPECTION [SKYACTIV-G 2.0].) • If there is any malfunction: — Repair or replace the malfunctioning part according to the inspection results, then go to Step 21. • If there is no malfunction: — Go to Step 17. Higher than **3 MPa {31 kgf/cm2, 435 psi}**: • Go to the next step.
15	**IDENTIFY CAUSE BY FUEL PRESSURE SENSOR OR HIGH PRESSURE FUEL PUMP** • Is the vehicle acceleration performance normal?	Yes	Go to the next step.
		No	Go to Step 17.
16	**INSPECT FUEL PRESSURE SENSOR** • Inspect the fuel pressure sensor. (See 01-40-52 FUEL PRESSURE SENSOR INSPECTION [SKYACTIV-G 2.0].) • Is there any malfunction?	Yes	Replace the fuel distributor, then go to Step 21. (See 01-14A-51 FUEL INJECTOR REMOVAL/ INSTALLATION [SKYACTIV-G 2.0].)
		No	Go to Step 18.
17	**INSPECT SPILL VALVE CONTROL SOLENOID VALVE CONTROL CIRCUIT FOR SHORT TO GROUND** • Switch the ignition to off. • Disconnect the high pressure fuel pump and PCM connectors. • Inspect for continuity between high pressure fuel pump terminal A (wiring harness-side) and body ground. • Is there continuity?	Yes	Repair or replace the wiring harness for a possible short to ground, then go to Step 21.
		No	Replace the high pressure fuel pump, then go to Step 21. (See 01-14A-44 HIGH PRESSURE FUEL PUMP REMOVAL/INSTALLATION [SKYACTIV-G 2.0].)

ON-BOARD DIAGNOSTIC [SKYACTIV-G 2.0]

STEP	INSPECTION		ACTION
18	**INSPECT FUEL PRESSURE (LOW-SIDE)** • Connect the fuel pressure gauge between fuel pump and high pressure fuel pump. • Measure the low side fuel pressure. (See 01-14A-8 FUEL LINE PRESSURE INSPECTION [SKYACTIV-G 2.0].) • Is the low side fuel pressure within specification? **Specification:** • **405—485 kPa {4.13—4.94 kgf/cm^2, 58.8—70.3 psi}**	Yes	Go to the next step.
		No	Inspect the following: • Fuel line restriction • Fuel filter clogged — If there is any malfunction: • Repair or replace the malfunctioning part according to the inspection results. — If there is no malfunction: • Replace the fuel pump unit. (See 01-14A-38 FUEL PUMP UNIT REMOVAL/INSTALLATION [SKYACTIV-G 2.0].) Go to Step 21.
19	**INSPECT ENGINE COMPRESSION** • Inspect the engine compression. (See 01-10A-14 COMPRESSION INSPECTION [SKYACTIV-G 2.0].) • Are compression pressures within specification? **Specification:** • Compression [European (L.H.D. U.K.) specs.] — Standard: **978 kPa {9.97 kgf/cm^2, 142 psi} (300 rpm)** — Minimum: **783 kPa {7.98 kgf/cm^2, 114 psi} (300 rpm)** — Maximum difference between cylinders: **166 kPa {1.69 kgf/cm^2, 24.1 psi}** • Compression [Except European (L.H.D. U.K.) specs.] — Standard: **885 kPa {9.02 kgf/cm^2, 128 psi} (300 rpm)** — Minimum: **708 kPa {7.22 kgf/cm^2, 103 psi} (300 rpm)** — Maximum difference between cylinders: **150 kPa {1.53 kgf/cm^2, 21.8 psi}** **Note** • Because the SKYACTIV-G 2.0 retards the intake valve closing timing, compression pressure is low.	Yes	Go to the next step.
		No	Repair or replace the malfunctioning part according to the inspection results, then go to Step 21.
20	**INSPECT ECT SENSOR** • Inspect the ECT sensor. (See 01-40-43 ENGINE COOLANT TEMPERATURE (ECT) SENSOR INSPECTION [SKYACTIV-G 2.0].) • Is there any malfunction?	Yes	Replace the ECT sensor, then go to the next step. (See 01-40-41 ENGINE COOLANT TEMPERATURE (ECT) SENSOR REMOVAL/INSTALLATION [SKYACTIV-G 2.0].)
		No	Go to the next step.
21	**VERIFY DTC TROUBLESHOOTING COMPLETED** • Make sure to reconnect all disconnected connectors. • Clear the DTC from the PCM memory using the M-MDS. (See 01-02-12 AFTER REPAIR PROCEDURE [SKYACTIV-G 2.0].) • Perform the Pending Trouble Code Access Procedure. (See 01-02-8 ON-BOARD DIAGNOSTIC TEST [SKYACTIV-G 2.0].) • Is the PENDING CODE for this DTC present?	Yes	Repeat the inspection from Step 1. • If the malfunction recurs, replace the PCM. (See 01-40-10 PCM REMOVAL/INSTALLATION [SKYACTIV-G 2.0].) Go to the next step.
		No	Go to the next step.
22	**VERIFY AFTER REPAIR PROCEDURE** • Perform the “AFTER REPAIR PROCEDURE”. (See 01-02-12 AFTER REPAIR PROCEDURE [SKYACTIV-G 2.0].) • Are any DTCs present?	Yes	Go to the applicable DTC inspection. (See 01-02-14 DTC TABLE [SKYACTIV-G 2.0].)
		No	DTC troubleshooting completed.

ON-BOARD DIAGNOSTIC [SKYACTIV-G 2.0]

DTC P2101:00 [SKYACTIV-G 2.0]

id0102h1707700

DTC P2101:00	Throttle valve actuator control motor circuit range/performance problem
DETECTION CONDITION	• The PCM turns the main relay on, but if the input voltage is **6.0 V or less**, then the PCM determines that the main relay control circuit voltage is low. • There is a system error in the electrical throttle control system of the PCM. **Diagnostic support note** • This is a continuous monitor (CCM). • The check engine light illuminates if the PCM detects the above malfunction condition during the first drive cycle. • FREEZE FRAME DATA (Mode 2)/Snapshot data is available. • The DTC is stored in the PCM memory.
FAIL-SAFE FUNCTION	• Restricts the upper limit of the engine speed. • Stops the drive-by-wire control (throttle valve is open at **approx. 8** ° by return spring force).
POSSIBLE CAUSE	• Main relay malfunction • Short to ground or open circuit in main relay power supply circuit: — Short to ground in wiring harness between the following terminals: • MAIN 200 A fuse—Main relay terminal D • MAIN 200 A fuse—Main relay terminal A — MAIN 200 A fuse and/or ENG.MAIN 40 A fuse malfunction — Open circuit in wiring harness between the following terminals: • Battery positive terminal—Main relay terminal D • Battery positive terminal—Main relay terminal A • ENGINE2 15 A fuse malfunction • Short to ground in wiring harness between the following terminals: — Main relay terminal C—PCM terminal 1CK — Main relay terminal C—PCM terminal 2S — Main relay terminal E—PCM terminal 2K • PCM connector or terminals malfunction • Open circuit in wiring harness between the following terminals: — Main relay terminal C—PCM terminal 1CK — Main relay terminal C—PCM terminal 2S — Main relay terminal E—PCM terminal 2K • TP sensor No.1 and/or related circuit malfunction • TP sensor No.1 malfunction • TP sensor No.2 and/or related circuit malfunction • TP sensor No.2 malfunction • PCM malfunction

ON-BOARD DIAGNOSTIC [SKYACTIV-G 2.0]

DTC P2101:00	Throttle valve actuator control motor circuit range/performance problem

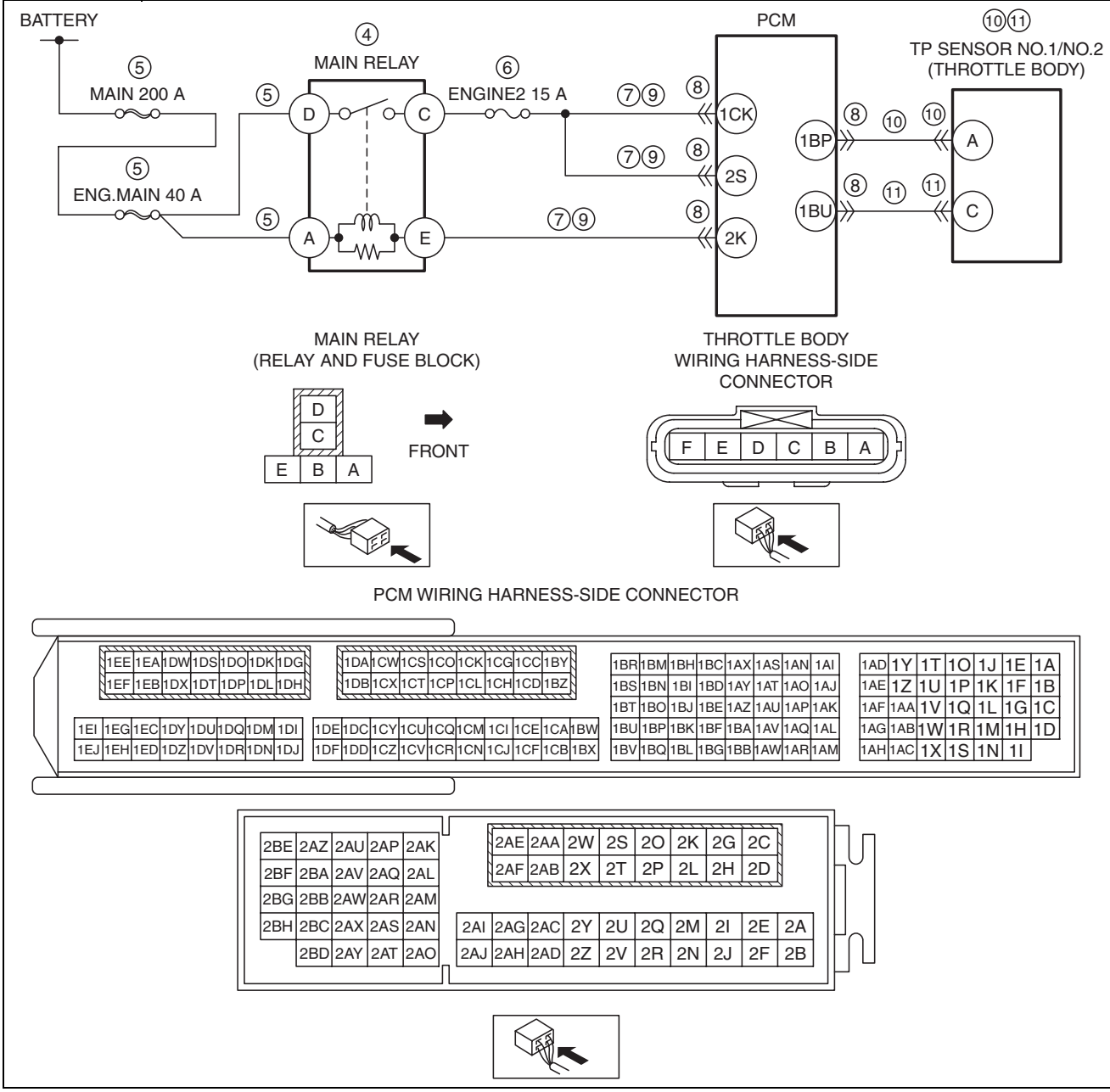

Diagnostic Procedure

STEP	INSPECTION		ACTION
1	**VERIFY FREEZE FRAME DATA (MODE 2)/ SNAPSHOT DATA HAS BEEN RECORDED** • Has the FREEZE FRAME DATA (Mode 2)/ snapshot data been recorded?	Yes	Go to the next step.
		No	Record the FREEZE FRAME DATA (Mode 2)/snapshot data on the repair order, then go to the next step.
2	**VERIFY RELATED SERVICE INFORMATION AVAILABILITY** • Verify related Service Information availability. • Is any related Service Information available?	Yes	Perform repair or diagnosis according to the available Service Information. • If the vehicle is not repaired, go to the next step.
		No	Go to the next step.

ON-BOARD DIAGNOSTIC [SKYACTIV-G 2.0]

STEP	INSPECTION		ACTION
3	**VERIFY RELATED PENDING CODE AND/OR DTC** • Switch the ignition to off, then to ON (engine off). • Perform the Pending Trouble Code Access Procedure and DTC Reading Procedure. (See 01-02-8 ON-BOARD DIAGNOSTIC TEST [SKYACTIV-G 2.0].) • Are any other PENDING CODEs and/or DTCs present?	Yes	Go to the applicable PENDING CODE or DTC inspection. (See 01-02-14 DTC TABLE [SKYACTIV-G 2.0].)
		No	Go to the next step.
4	**INSPECT MAIN RELAY** • Switch the ignition to off. • Remove the main relay. • Inspect the main relay. (See 09-21-29 RELAY INSPECTION.) • Is there any malfunction?	Yes	Replace the main relay, then go to Step 12.
		No	Go to the next step.
5	**INSPECT MAIN RELAY POWER SUPPLY CIRCUIT FOR SHORT TO GROUND OR OPEN CIRCUIT** • Main relay is removed. • Measure the voltage at the following terminals (wiring harness-side): — Main relay terminal D — Main relay terminal A • Is the voltage **B+**?	Yes	Go to the next step.
		No	Inspect the MAIN 200 A fuse and ENG.MAIN 40 A fuse. • If the fuse is blown: — Repair or replace the wiring harness for a possible short to ground. — Replace the malfunctioning fuse. • If the fuse is deteriorated: — Replace the malfunctioning fuse. • If all fuses are normal: — Repair or replace the wiring harness for a possible open circuit. Go to Step 12.
6	**INSPECT ENGINE2 15 A FUSE** • Remove the ENGINE2 15 A fuse. • Inspect the ENGINE2 15 A fuse. • Is there any malfunction?	Yes	If the fuse is blown: • Repair or replace the wiring harness for a possible short to ground. • Replace the fuse. If the fuse is deteriorated: • Replace the fuse. Go to Step 12.
		No	Reinstall the ENGINE2 15 A fuse, then go to the next step.
7	**INSPECT MAIN RELAY CIRCUIT FOR SHORT TO GROUND** • Main relay is removed. • Inspect for continuity between the following terminals (wiring harness-side) and body ground: — Main relay terminal C — Main relay terminal E • Is there continuity?	Yes	If the short to ground circuit could be detected in the wiring harness: • Repair or replace the wiring harness for a possible short to ground. If the short to ground circuit could not be detected in the wiring harness: • Replace the PCM (short to ground in the PCM internal circuit). (See 01-40-10 PCM REMOVAL/INSTALLATION [SKYACTIV-G 2.0].) Go to Step 12.
		No	Go to the next step.
8	**INSPECT PCM CONNECTOR CONDITION** • Disconnect the PCM connector. • Inspect for poor connection (such as damaged/pulled-out pins, corrosion). • Is there any malfunction?	Yes	Repair or replace the connector and/or terminals, then go to Step 12.
		No	Go to the next step.
9	**INSPECT MAIN RELAY CIRCUIT FOR OPEN CIRCUIT** • Main relay is removed. • Verify that the PCM connector is disconnected. • Inspect for continuity between the following terminals (wiring harness-side): — Main relay terminal C—PCM terminal 1CK — Main relay terminal C—PCM terminal 2S — Main relay terminal E—PCM terminal 2K • Is there continuity?	Yes	Go to the next step.
		No	Repair or replace the wiring harness for a possible open circuit, then go to Step 12.

ON-BOARD DIAGNOSTIC [SKYACTIV-G 2.0]

STEP	INSPECTION		ACTION
10	**INSPECT TP SENSOR NO.1** • Reconnect all disconnected connectors. • Inspect the TP sensor No.1. (See 01-40-50 THROTTLE POSITION (TP) SENSOR INSPECTION [SKYACTIV-G 2.0].) • Is there any malfunction?	Yes	Inspect the TP sensor No.1 related circuits and connectors. • If there is any malfunction: — Repair or replace the malfunctioning part according to the inspection results. • If there is no malfunction: — Replace the throttle body. (See 01-13A-6 INTAKE-AIR SYSTEM REMOVAL/INSTALLATION [SKYACTIV-G 2.0].) Go to Step 12.
		No	Go to the next step.
11	**INSPECT TP SENSOR NO.2** • Inspect the TP sensor No.2. (See 01-40-50 THROTTLE POSITION (TP) SENSOR INSPECTION [SKYACTIV-G 2.0].) • Is there any malfunction?	Yes	Inspect the TP sensor No.2 related circuits and connectors. • If there is any malfunction: — Repair or replace the malfunctioning part according to the inspection results. • If there is no malfunction: — Replace the throttle body. (See 01-13A-6 INTAKE-AIR SYSTEM REMOVAL/INSTALLATION [SKYACTIV-G 2.0].) Go to the next step.
		No	Go to the next step.
12	**VERIFY DTC TROUBLESHOOTING COMPLETED** • Make sure to reconnect all disconnected connectors. • Clear the DTC from the PCM memory using the M-MDS. (See 01-02-12 AFTER REPAIR PROCEDURE [SKYACTIV-G 2.0].) • Perform the KOEO self test. (See 01-02-12 KOEO/KOER SELF TEST [SKYACTIV-G 2.0].) • Is the same DTC present?	Yes	Repeat the inspection from Step 1. • If the malfunction recurs, replace the PCM. (See 01-40-10 PCM REMOVAL/INSTALLATION [SKYACTIV-G 2.0].) Go to the next step.
		No	Go to the next step.
13	**VERIFY AFTER REPAIR PROCEDURE** • Perform the “AFTER REPAIR PROCEDURE”. (See 01-02-12 AFTER REPAIR PROCEDURE [SKYACTIV-G 2.0].) • Are any DTCs present?	Yes	Go to the applicable DTC inspection. (See 01-02-14 DTC TABLE [SKYACTIV-G 2.0].)
		No	DTC troubleshooting completed.

ON-BOARD DIAGNOSTIC [SKYACTIV-G 2.0]

DTC P2107:00 [SKYACTIV-G 2.0]

id0102h1707800

DTC P2107:00	**Throttle valve actuator control module processor error**
DETECTION CONDITION	• Throttle valve actuator control module internal processor error. **Diagnostic support note** • This is a continuous monitor (CCM). • The check engine light illuminates if the PCM detects the above malfunction condition during the first drive cycle. • FREEZE FRAME DATA (Mode 2)/Snapshot data is available. • The DTC is stored in the PCM memory.
FAIL-SAFE FUNCTION	• Restricts the upper limit of the engine speed. • Stops the drive-by-wire control (throttle valve is open at **approx. 8** ° by return spring force).
POSSIBLE CAUSE	• Throttle body connector or terminals malfunction • PCM connector or terminals malfunction • Throttle body circuits are shorted to each other • PCM malfunction — Throttle valve actuator control module internal processor malfunction

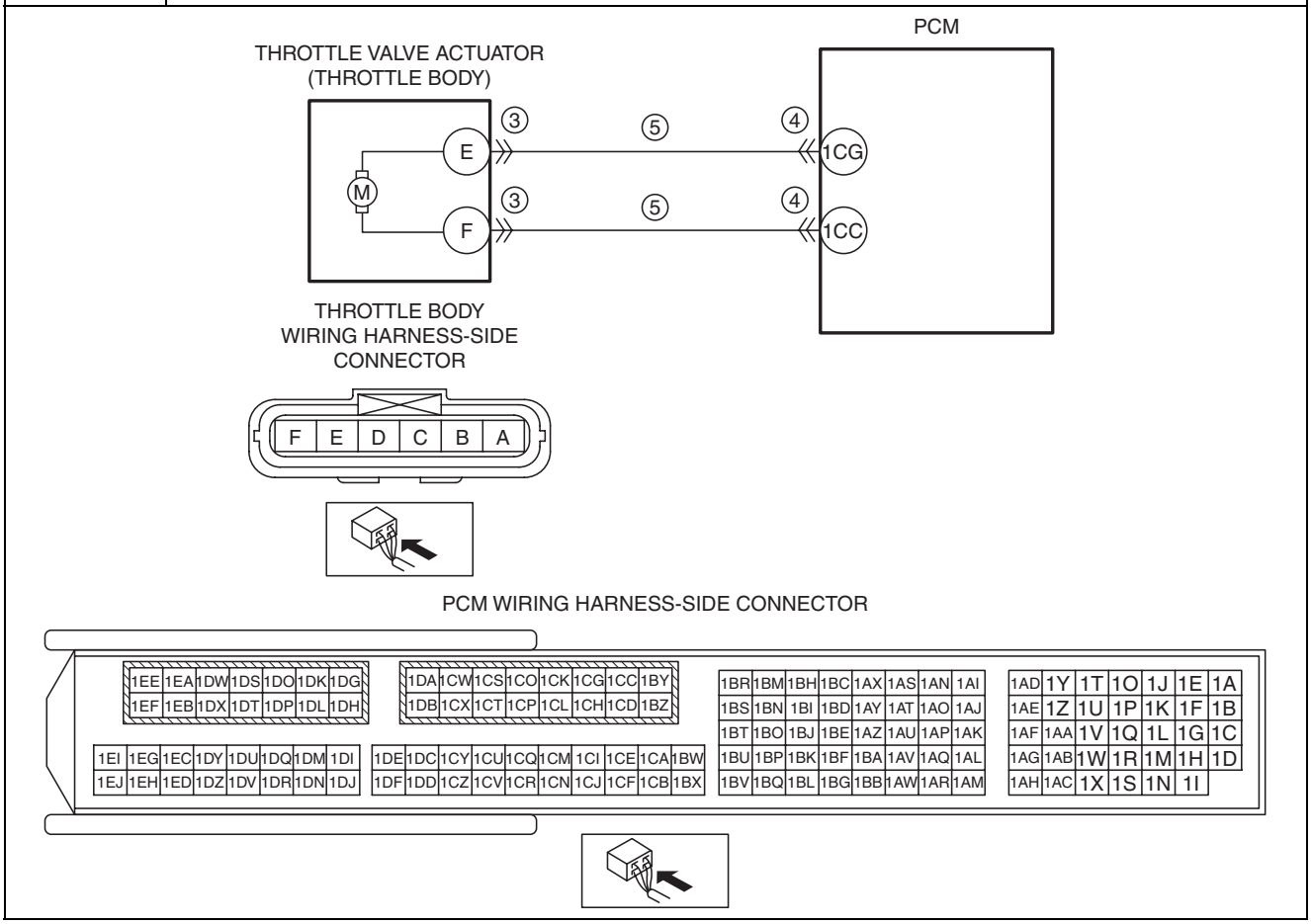

Diagnostic Procedure

STEP	INSPECTION		ACTION
1	**VERIFY FREEZE FRAME DATA (MODE 2)/ SNAPSHOT DATA HAS BEEN RECORDED** • Has the FREEZE FRAME DATA (Mode 2)/ snapshot data been recorded?	Yes	Go to the next step.
		No	Record the FREEZE FRAME DATA (Mode 2)/snapshot data on the repair order, then go to the next step.
2	**VERIFY RELATED SERVICE INFORMATION AVAILABILITY** • Verify related Service Information availability. • Is any related Service Information available?	Yes	Perform repair or diagnosis according to the available Service Information. • If the vehicle is not repaired, go to the next step.
		No	Go to the next step.

ON-BOARD DIAGNOSTIC [SKYACTIV-G 2.0]

STEP	INSPECTION		ACTION
3	**INSPECT THROTTLE BODY CONNECTOR CONDITION** • Switch the ignition to off. • Disconnect the throttle body connector. • Inspect for poor connection (such as damaged/pulled-out pins, corrosion). • Is there any malfunction?	Yes	Repair or replace the connector and/or terminals, then go to Step 6.
		No	Go to the next step.
4	**INSPECT PCM CONNECTOR CONDITION** • Disconnect the PCM connector. • Inspect for poor connection (such as damaged/pulled-out pins, corrosion). • Is there any malfunction?	Yes	Repair or replace the connector and/or terminals, then go to Step 6.
		No	Go to the next step.
5	**INSPECT THROTTLE VALVE ACTUATOR CIRCUITS FOR SHORT TO EACH OTHER** • Verify that the throttle body and PCM connectors are disconnected. • Inspect for continuity between throttle body terminals E and F (wiring harness-side). • Is there continuity?	Yes	Repair or replace the wiring harness for a possible short to each other, then go to the next step.
		No	Go to the next step.
6	**VERIFY DTC TROUBLESHOOTING COMPLETED** • Make sure to reconnect all disconnected connectors. • Clear the DTC from the PCM memory using the M-MDS. (See 01-02-12 AFTER REPAIR PROCEDURE [SKYACTIV-G 2.0].) • Start the engine. • Perform the KOEO or KOER self test. (See 01-02-12 KOEO/KOER SELF TEST [SKYACTIV-G 2.0].) • Is the same DTC present?	Yes	Repeat the inspection from Step 1. • If the malfunction recurs, replace the PCM. (See 01-40-10 PCM REMOVAL/INSTALLATION [SKYACTIV-G 2.0].) Go to the next step.
		No	Go to the next step.
7	**VERIFY AFTER REPAIR PROCEDURE** • Perform the “AFTER REPAIR PROCEDURE”. (See 01-02-12 AFTER REPAIR PROCEDURE [SKYACTIV-G 2.0].) • Are any DTCs present?	Yes	Go to the applicable DTC inspection. (See 01-02-14 DTC TABLE [SKYACTIV-G 2.0].)
		No	DTC troubleshooting completed.

ON-BOARD DIAGNOSTIC [SKYACTIV-G 2.0]

DTC P2109:00 [SKYACTIV-G 2.0]

id0102h1708000

DTC P2109:00	**TP sensor minimum stop range/performance problem**
DETECTION CONDITION	• If the fully-close throttle position is **5.1 ° or lower**, or **15.9 ° or more** (even though the fully-close throttle position learning is finished), the PCM determines there is a malfunction. **Diagnostic support note** • This is a continuous monitor (CCM). • The check engine light illuminates if the PCM detects the above malfunction condition during the first drive cycle. • FREEZE FRAME DATA (Mode 2)/Snapshot data is available. • The DTC is stored in the PCM memory.
FAIL-SAFE FUNCTION	• Restricts the upper limit of the engine speed. • Stops the drive-by-wire control (throttle valve is open at **approx. 8 °** by return spring force).
POSSIBLE CAUSE	• Throttle body connector or terminals malfunction • Short to ground in wiring harness between the following terminals: — Throttle body terminal E—PCM terminal 1CG — Throttle body terminal F—PCM terminal 1CC • PCM connector or terminals malfunction • Short to power supply in wiring harness between the following terminals: — Throttle body terminal E—PCM terminal 1CG — Throttle body terminal F—PCM terminal 1CC • Open circuit in wiring harness between the following terminals: — Throttle body terminal E—PCM terminal 1CG — Throttle body terminal F—PCM terminal 1CC • Improper operation of drive-by-wire control system • Throttle valve actuator malfunction • Throttle valve malfunction • PCM malfunction

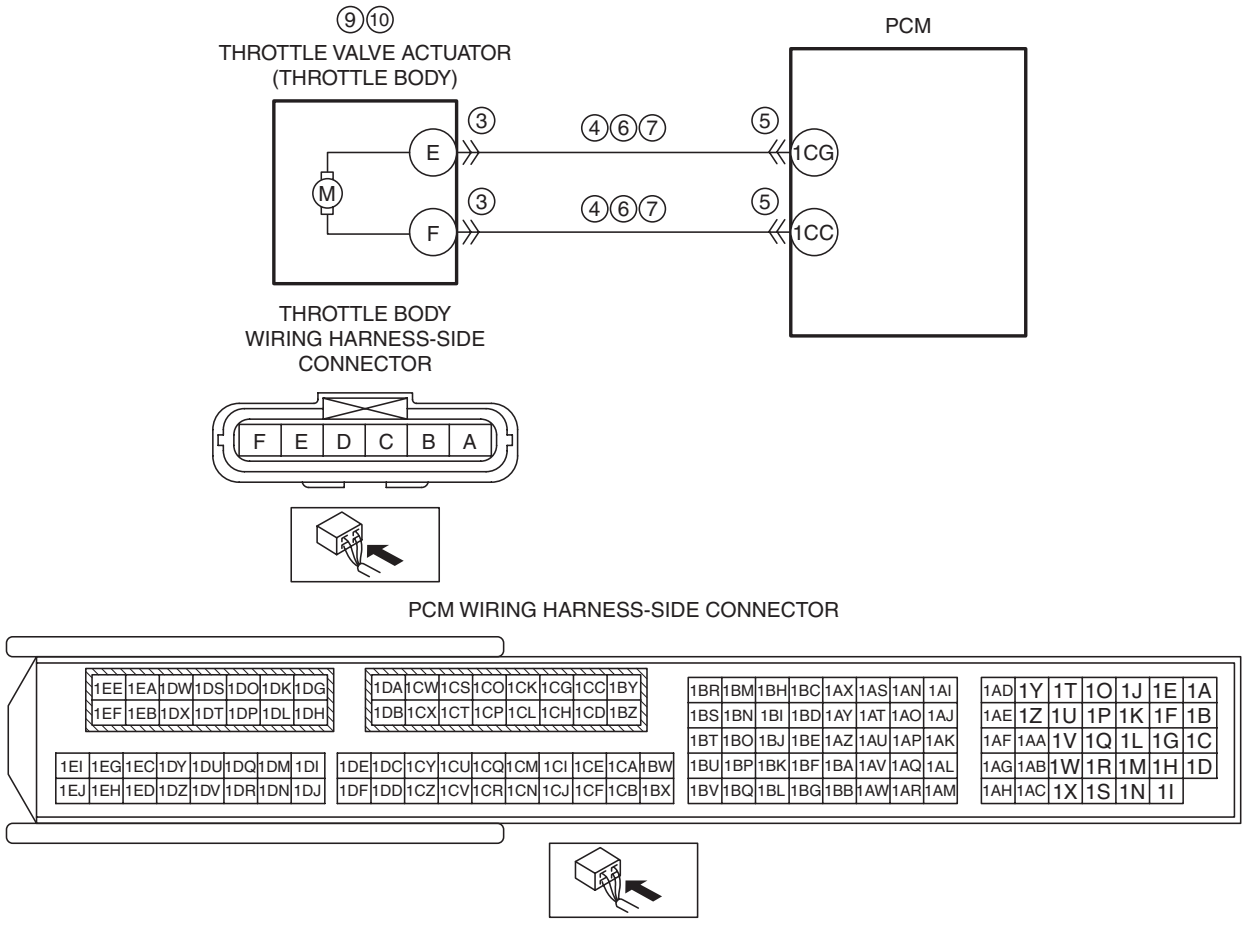

ON-BOARD DIAGNOSTIC [SKYACTIV-G 2.0]

Diagnostic Procedure

STEP	INSPECTION		ACTION
1	**VERIFY FREEZE FRAME DATA (MODE 2)/ SNAPSHOT DATA HAS BEEN RECORDED** • Has the FREEZE FRAME DATA (Mode 2)/ snapshot data been recorded?	Yes	Go to the next step.
		No	Record the FREEZE FRAME DATA (Mode 2)/snapshot data on the repair order, then go to the next step.
2	**VERIFY RELATED SERVICE INFORMATION AVAILABILITY** • Verify related Service Information availability. • Is any related Service Information available?	Yes	Perform repair or diagnosis according to the available Service Information. • If the vehicle is not repaired, go to the next step.
		No	Go to the next step.
3	**INSPECT THROTTLE BODY CONNECTOR CONDITION** • Switch the ignition to off. • Disconnect the throttle body connector. • Inspect for poor connection (such as damaged/ pulled-out pins, corrosion). • Is there any malfunction?	Yes	Repair or replace the connector and/or terminals, then go to Step 11.
		No	Go to the next step.
4	**INSPECT THROTTLE VALVE ACTUATOR CIRCUIT FOR SHORT TO GROUND** • Verify that the throttle body connector is disconnected. • Inspect for continuity between the following terminals (wiring harness-side) and body ground: — Throttle body terminal E — Throttle body terminal F • Is there continuity?	Yes	If the short to ground circuit could be detected in the wiring harness: • Repair or replace the wiring harness for a possible short to ground. If the short to ground circuit could not be detected in the wiring harness: • Replace the PCM (short to ground in the PCM internal circuit). (See 01-40-10 PCM REMOVAL/INSTALLATION [SKYACTIV-G 2.0].) Go to Step 11.
		No	Go to the next step.
5	**INSPECT PCM CONNECTOR CONDITION** • Disconnect the PCM connector. • Inspect for poor connection (such as damaged/ pulled-out pins, corrosion). • Is there any malfunction?	Yes	Repair or replace the connector and/or terminals, then go to Step 11.
		No	Go to the next step.
6	**INSPECT THROTTLE VALVE ACTUATOR CIRCUIT FOR SHORT TO POWER SUPPLY** • Verify that the throttle body and PCM connectors are disconnected. • Switch the ignition ON (engine off or on). • Measure the voltage at the following terminals (wiring harness-side): — Throttle body terminal E—PCM terminal 1CG — Throttle body terminal F—PCM terminal 1CC • Is the voltage **0 V**?	Yes	Go to the next step.
		No	Repair or replace the wiring harness for a possible short to power supply, then go to Step 11.
7	**INSPECT THROTTLE VALVE ACTUATOR CIRCUIT FOR OPEN CIRCUIT** • Verify that the throttle body and PCM connectors are disconnected. • Switch the ignition to off. • Inspect for continuity between the following terminals (wiring harness-side): — Throttle body terminal E—PCM terminal 1CG — Throttle body terminal F—PCM terminal 1CC • Is there continuity?	Yes	Go to the next step.
		No	Repair or replace the wiring harness for a possible open circuit, then go to Step 11.
8	**INSPECT DRIVE-BY-WIRE CONTROL SYSTEM OPERATION** • Perform the Drive-by-wire Control System Inspection. (See 01-03-118 ENGINE CONTROL SYSTEM OPERATION INSPECTION [SKYACTIV-G 2.0].) • Is there any malfunction?	Yes	Repair or replace the malfunctioning part according to the inspection results, then go to Step 11.
		No	Go to the next step.

ON-BOARD DIAGNOSTIC [SKYACTIV-G 2.0]

STEP	INSPECTION		ACTION
9	**INSPECT THROTTLE VALVE ACTUATOR** • Inspect the throttle valve actuator. (See 01-13A-13 THROTTLE BODY INSPECTION [SKYACTIV-G 2.0].) • Is there any malfunction?	Yes	Replace the throttle body, then go to Step 11. (See 01-13A-6 INTAKE-AIR SYSTEM REMOVAL/INSTALLATION [SKYACTIV-G 2.0].)
		No	Go to the next step.
10	**INSPECT THROTTLE VALVE** • Inspect the throttle valve. (See 01-13A-13 THROTTLE BODY INSPECTION [SKYACTIV-G 2.0].) • Is there any malfunction?	Yes	Replace the throttle body, then go to the next step. (See 01-13A-6 INTAKE-AIR SYSTEM REMOVAL/INSTALLATION [SKYACTIV-G 2.0].)
		No	Go to the next step.
11	**VERIFY DTC TROUBLESHOOTING COMPLETED** • Make sure to reconnect all disconnected connectors. • Clear the DTC from the PCM memory using the M-MDS. (See 01-02-12 AFTER REPAIR PROCEDURE [SKYACTIV-G 2.0].) • Perform the KOEO or KOER self test. (See 01-02-12 KOEO/KOER SELF TEST [SKYACTIV-G 2.0].) • Is the same DTC present?	Yes	Repeat the inspection from Step 1. • If the malfunction recurs, replace the PCM. (See 01-40-10 PCM REMOVAL/INSTALLATION [SKYACTIV-G 2.0].) Go to the next step.
		No	Go to the next step.
12	**VERIFY AFTER REPAIR PROCEDURE** • Perform the “AFTER REPAIR PROCEDURE”. (See 01-02-12 AFTER REPAIR PROCEDURE [SKYACTIV-G 2.0].) • Are any DTCs present?	Yes	Go to the applicable DTC inspection. (See 01-02-14 DTC TABLE [SKYACTIV-G 2.0].)
		No	DTC troubleshooting completed.

DTC P2110:00 [SKYACTIV-G 2.0]

id0102h1303500

DTC P2110:00	**Throttle valve actuator control system-forced limited RPM**
DETECTION CONDITION	• The throttle valve actuator control system is in the failure mode effects management mode. **Diagnostic support note** • This is a continuous monitor (CCM). • The check engine light illuminates if the PCM detects the above malfunction condition during the first drive cycle. • FREEZE FRAME DATA (Mode 2)/Snapshot data is available. • The DTC is stored in the PCM memory.
FAIL-SAFE FUNCTION	• Restricts the upper limit of the engine speed. • Stops the drive-by-wire control (throttle valve is open at **approx. 8** ° by return spring force).
POSSIBLE CAUSE	• Throttle body malfunction • PCM malfunction — Throttle valve actuator control module internal processor error (built-into PCM) — Fuel injector control driver internal processor error (built-into PCM)
SYSTEM WIRING DIAGRAM	—

Diagnostic Procedure

STEP	INSPECTION		ACTION
1	**VERIFY FREEZE FRAME DATA (MODE 2)/SNAPSHOT DATA HAS BEEN RECORDED** • Has the FREEZE FRAME DATA (Mode 2)/snapshot data been recorded?	Yes	Go to the next step.
		No	Record the FREEZE FRAME DATA (Mode 2)/snapshot data on the repair order, then go to the next step.
2	**VERIFY RELATED SERVICE INFORMATION AVAILABILITY** • Verify related Service Information availability. • Is any related Service Information available?	Yes	Perform repair or diagnosis according to the available Service Information. • If the vehicle is not repaired, go to the next step.
		No	Go to the next step.

ON-BOARD DIAGNOSTIC [SKYACTIV-G 2.0]

STEP	INSPECTION		ACTION
3	**VERIFY RELATED PENDING CODE AND/OR DTC** • Switch the ignition to off, then to ON (engine off). • Perform the Pending Trouble Code Access Procedure and DTC Reading Procedure. (See 01-02-8 ON-BOARD DIAGNOSTIC TEST [SKYACTIV-G 2.0].) • Are any other PENDING CODEs and/or DTCs present?	Yes	Go to the applicable PENDING CODE or DTC inspection. (See 01-02-14 DTC TABLE [SKYACTIV-G 2.0].)
		No	Go to the next step.
4	**INSPECT THROTTLE BODY AND PCM** • Switch the ignition to off. • Visually inspect the following for obvious signs of damage: — Throttle body — PCM • Is a concern present?	Yes	Isolate the concern and repair if necessary, then go to Step 6.
		No	Go to the next step.
5	**INSPECT THROTTLE BODY** • Inspect the throttle body. (See 01-13A-13 THROTTLE BODY INSPECTION [SKYACTIV-G 2.0].) • Is there any malfunction?	Yes	Replace the throttle body, then go to the next step. (See 01-13A-6 INTAKE-AIR SYSTEM REMOVAL/INSTALLATION [SKYACTIV-G 2.0].)
		No	Go to the next step.
6	**VERIFY DTC TROUBLESHOOTING COMPLETED** • Make sure to reconnect all disconnected connectors. • Clear the DTC from the PCM memory using the M-MDS. (See 01-02-12 AFTER REPAIR PROCEDURE [SKYACTIV-G 2.0].) • Perform the KOER self test. (See 01-02-12 KOEO/KOER SELF TEST [SKYACTIV-G 2.0].) • Is the same DTC present?	Yes	Repeat the inspection from Step 1. • If the malfunction recurs, replace the PCM. (See 01-40-10 PCM REMOVAL/INSTALLATION [SKYACTIV-G 2.0].) Go to the next step.
		No	Go to the next step.
7	**VERIFY AFTER REPAIR PROCEDURE** • Perform the “AFTER REPAIR PROCEDURE”. (See 01-02-12 AFTER REPAIR PROCEDURE [SKYACTIV-G 2.0].) • Are any DTCs present?	Yes	Go to the applicable DTC inspection. (See 01-02-14 DTC TABLE [SKYACTIV-G 2.0].)
		No	DTC troubleshooting completed.

ON-BOARD DIAGNOSTIC [SKYACTIV-G 2.0]

DTC P2112:00 [SKYACTIV-G 2.0]

id0102h1708100

DTC P2112:00	**Throttle valve actuator motor current range/performance problem**
DETECTION CONDITION	• If the duty ratio is **95 % or more**, the PCM determines that there is a throttle valve actuator control system range/performance problem. **Diagnostic support note** • This is a continuous monitor (CCM). • The check engine light illuminates if the PCM detects the above malfunction condition during the first drive cycle. • FREEZE FRAME DATA (Mode 2)/Snapshot data is available. • The DTC is stored in the PCM memory.
FAIL-SAFE FUNCTION	• Restricts the upper limit of the engine speed. • Stops the drive-by-wire control (throttle valve is open at **approx. 8** ° by return spring force).
POSSIBLE CAUSE	• Throttle body connector or terminals malfunction • PCM connector or terminals malfunction • Open circuit in wiring harness between the following terminals: — Throttle body terminal E—PCM terminal 1CG — Throttle body terminal F—PCM terminal 1CC • Throttle valve actuator malfunction • Throttle valve malfunction • PCM malfunction — Throttle valve actuator control module malfunction

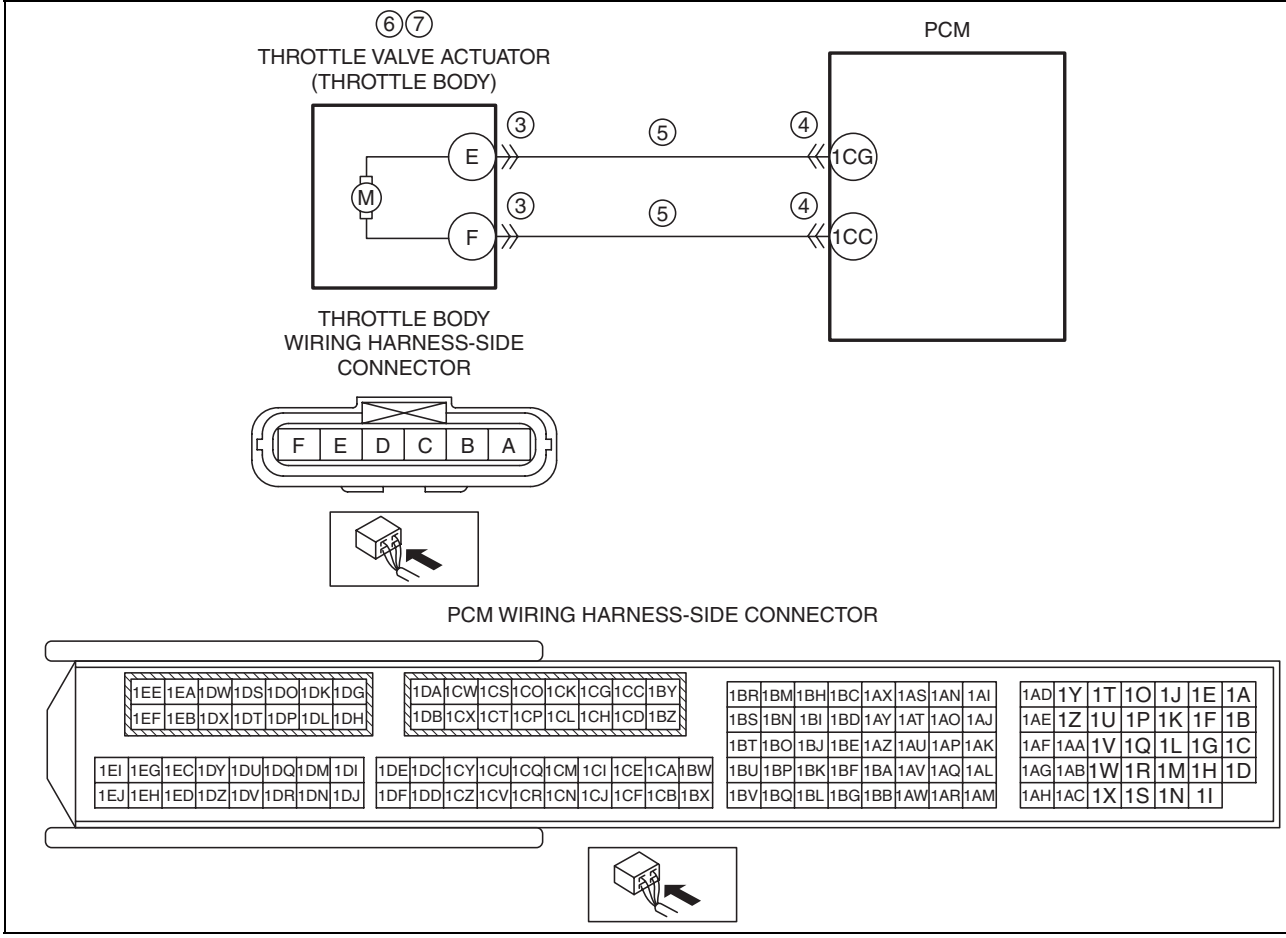

ON-BOARD DIAGNOSTIC [SKYACTIV-G 2.0]

Diagnostic Procedure

STEP	INSPECTION		ACTION
1	**VERIFY FREEZE FRAME DATA (MODE 2)/ SNAPSHOT DATA HAS BEEN RECORDED** • Has the FREEZE FRAME DATA (Mode 2)/ snapshot data been recorded?	Yes	Go to the next step.
		No	Record the FREEZE FRAME DATA (Mode 2)/snapshot data on the repair order, then go to the next step.
2	**VERIFY RELATED SERVICE INFORMATION AVAILABILITY** • Verify related Service Information availability. • Is any related Service Information available?	Yes	Perform repair or diagnosis according to the available Service Information. • If the vehicle is not repaired, go to the next step.
		No	Go to the next step.
3	**INSPECT THROTTLE BODY CONNECTOR CONDITION** • Switch the ignition to off. • Disconnect the throttle body connector. • Inspect for poor connection (such as damaged/ pulled-out pins, corrosion). • Is there any malfunction?	Yes	Repair or replace the connector and/or terminals, then go to Step 8.
		No	Go to the next step.
4	**INSPECT PCM CONNECTOR CONDITION** • Disconnect the PCM connector. • Inspect for poor connection (such as damaged/ pulled-out pins, corrosion). • Is there any malfunction?	Yes	Repair or replace the connector and/or terminals, then go to Step 8.
		No	Go to the next step.
5	**INSPECT THROTTLE VALVE ACTUATOR CIRCUIT FOR OPEN CIRCUIT** • Verify that the throttle body and PCM connectors are disconnected. • Inspect for continuity between the following terminals (wiring harness-side): — Throttle body terminal E—PCM terminal 1CG — Throttle body terminal F—PCM terminal 1CC • Is there continuity?	Yes	Go to the next step.
		No	Repair or replace the wiring harness for a possible open circuit, then go to Step 8.
6	**INSPECT THROTTLE VALVE** • Inspect the throttle valve. (See 01-13A-13 THROTTLE BODY INSPECTION [SKYACTIV-G 2.0].) • Is there any malfunction?	Yes	Replace the throttle body, then go to Step 8. (See 01-13A-6 INTAKE-AIR SYSTEM REMOVAL/ INSTALLATION [SKYACTIV-G 2.0].)
		No	Go to the next step.
7	**INSPECT THROTTLE VALVE ACTUATOR** • Inspect the throttle valve actuator. (See 01-13A-13 THROTTLE BODY INSPECTION [SKYACTIV-G 2.0].) • Is there any malfunction?	Yes	Replace the throttle body, then go to the next step. (See 01-13A-6 INTAKE-AIR SYSTEM REMOVAL/ INSTALLATION [SKYACTIV-G 2.0].)
		No	Go to the next step.
8	**VERIFY DTC TROUBLESHOOTING COMPLETED** • Clear the DTC from the PCM memory using the M-MDS. (See 01-02-12 AFTER REPAIR PROCEDURE [SKYACTIV-G 2.0].) • Perform the KOER self test. (See 01-02-12 KOEO/KOER SELF TEST [SKYACTIV-G 2.0].) • Is the same DTC present?	Yes	Replace the PCM, then go to the next step. (See 01-40-10 PCM REMOVAL/INSTALLATION [SKYACTIV-G 2.0].)
		No	Go to the next step.
9	**VERIFY AFTER REPAIR PROCEDURE** • Perform the “AFTER REPAIR PROCEDURE”. (See 01-02-12 AFTER REPAIR PROCEDURE [SKYACTIV-G 2.0].) • Are any DTCs present?	Yes	Go to the applicable DTC inspection. (See 01-02-14 DTC TABLE [SKYACTIV-G 2.0].)
		No	DTC troubleshooting completed.

ON-BOARD DIAGNOSTIC [SKYACTIV-G 2.0]

DTC P2119:00 [SKYACTIV-G 2.0]

id0102h1708200

DTC P2119:00	**Throttle valve actuator control throttle body range/performance problem**
DETECTION CONDITION	• The PCM compares the actual TP with initial setting TP when the ignition is switched to off. If the TP is higher than the initial setting TP, the PCM determines that there is a throttle valve return spring malfunction. **Diagnostic support note** • This is a continuous monitor (CCM). • The check engine light illuminates if the PCM detects the above malfunction condition during the first drive cycle. • FREEZE FRAME DATA (Mode 2)/Snapshot data is available. • The DTC is stored in the PCM memory.
FAIL-SAFE FUNCTION	• Restricts the upper limit of the engine speed.
POSSIBLE CAUSE	• Throttle body connector or terminals malfunction • PCM connector or terminals malfunction • Drive-by-wire control malfunction • Throttle body (return spring) malfunction • PCM malfunction
SYSTEM WIRING DIAGRAM	—

Diagnostic Procedure

STEP	INSPECTION		ACTION
1	**VERIFY FREEZE FRAME DATA (MODE 2)/ SNAPSHOT DATA HAS BEEN RECORDED** • Has the FREEZE FRAME DATA (Mode 2)/ snapshot data been recorded?	Yes	Go to the next step.
		No	Record the FREEZE FRAME DATA (Mode 2)/snapshot data on the repair order, then go to the next step.
2	**VERIFY RELATED SERVICE INFORMATION AVAILABILITY** • Verify related Service Information availability. • Is any related Service Information available?	Yes	Perform repair or diagnosis according to the available Service Information. • If the vehicle is not repaired, go to the next step.
		No	Go to the next step.
3	**INSPECT THROTTLE BODY CONNECTOR CONDITION** • Switch the ignition to off. • Disconnect the throttle body connector. • Inspect for poor connection (such as damaged/ pulled-out pins, corrosion). • Is there any malfunction?	Yes	Repair or replace the connector and/or terminals, then go to Step 7.
		No	Go to the next step.
4	**INSPECT PCM CONNECTOR CONDITION** • Disconnect the PCM connector. • Inspect for poor connection (such as damaged/ pulled-out pins, corrosion). • Is there any malfunction?	Yes	Repair or replace the connector and/or terminals, then go to Step 7.
		No	Go to the next step.
5	**INSPECT DRIVE-BY-WIRE CONTROL SYSTEM OPERATION** • Perform the Drive-by-wire Control System Inspection. (See 01-03-118 ENGINE CONTROL SYSTEM OPERATION INSPECTION [SKYACTIV-G 2.0].) • Is there any malfunction?	Yes	Repair or replace the malfunctioning part according to the inspection results, then go to Step 7.
		No	Go to the next step.
6	**INSPECT THROTTLE BODY** • Inspect the throttle body. (See 01-13A-13 THROTTLE BODY INSPECTION [SKYACTIV-G 2.0].) • Is there any malfunction?	Yes	Replace the throttle body, then go to the next step. (See 01-13A-6 INTAKE-AIR SYSTEM REMOVAL/ INSTALLATION [SKYACTIV-G 2.0].)
		No	Go to the next step.

ON-BOARD DIAGNOSTIC [SKYACTIV-G 2.0]

STEP	INSPECTION		ACTION
7	**VERIFY DTC TROUBLESHOOTING COMPLETED** • Make sure to reconnect all disconnected connectors. • Clear the DTC from the PCM memory using the M-MDS. (See 01-02-12 AFTER REPAIR PROCEDURE [SKYACTIV-G 2.0].) • Switch the ignition ON (engine off or on) and wait for **1 min or more**. • Switch the ignition to off. • Perform the KOEO or KOER self test. (See 01-02-12 KOEO/KOER SELF TEST [SKYACTIV-G 2.0].) • Is the same DTC present?	Yes	Repeat the inspection from Step 1. • If the malfunction recurs, replace the PCM. (See 01-40-10 PCM REMOVAL/INSTALLATION [SKYACTIV-G 2.0].) Go to the next step.
		No	Go to the next step.
8	**VERIFY AFTER REPAIR PROCEDURE** • Perform the “AFTER REPAIR PROCEDURE”. (See 01-02-12 AFTER REPAIR PROCEDURE [SKYACTIV-G 2.0].) • Are any DTCs present?	Yes	Go to the applicable DTC inspection. (See 01-02-14 DTC TABLE [SKYACTIV-G 2.0].)
		No	DTC troubleshooting completed.

ON-BOARD DIAGNOSTIC [SKYACTIV-G 2.0]

DTC P2122:00 [SKYACTIV-G 2.0]

id0102h1708300

DTC P2122:00	**APP sensor No.1 circuit low input**
DETECTION CONDITION	• The PCM monitors the input voltage from APP sensor No.1 when the engine is running. If the input voltage at the PCM terminal 2AN is **less than 0.1 V**, the PCM determines that the APP sensor No.1 circuit input voltage is low. **Diagnostic support note** • This is a continuous monitor (CCM). • The check engine light illuminates if the PCM detects the above malfunction condition during the first drive cycle. • FREEZE FRAME DATA (Mode 2)/Snapshot data is available. • The DTC is stored in the PCM memory.
FAIL-SAFE FUNCTION	• Regulates the upper limit of the APP sensor output.
POSSIBLE CAUSE	• APP sensor connector or terminals malfunction • Short to ground in wiring harness between the following terminals: — APP sensor terminal A—PCM terminal 2AR — APP sensor terminal B—PCM terminal 2AN • PCM connector or terminals malfunction • APP sensor No.1 signal circuit and ground circuit are shorted to each other • Open circuit in wiring harness between the following terminals: — APP sensor terminal A—PCM terminal 2AR — APP sensor terminal B—PCM terminal 2AN • APP sensor No.1 malfunction • PCM malfunction

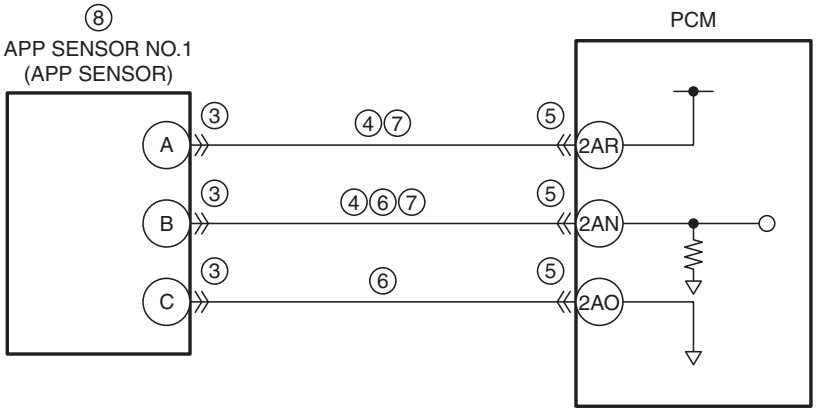

APP SENSOR WIRING HARNESS-SIDE CONNECTOR

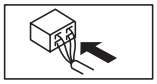

PCM WIRING HARNESS-SIDE CONNECTOR

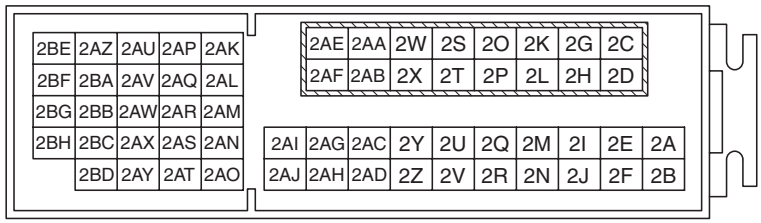

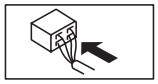

Diagnostic Procedure

STEP	INSPECTION		ACTION
1	**VERIFY FREEZE FRAME DATA (MODE 2)/ SNAPSHOT DATA HAS BEEN RECORDED** • Has the FREEZE FRAME DATA (Mode 2)/ snapshot data been recorded?	Yes	Go to the next step.
		No	Record the FREEZE FRAME DATA (Mode 2)/snapshot data on the repair order, then go to the next step.
2	**VERIFY RELATED SERVICE INFORMATION AVAILABILITY** • Verify related Service Information availability. • Is any related Service Information available?	Yes	Perform repair or diagnosis according to the available Service Information. • If the vehicle is not repaired, go to the next step.
		No	Go to the next step.

ON-BOARD DIAGNOSTIC [SKYACTIV-G 2.0]

STEP	INSPECTION		ACTION
3	**INSPECT APP SENSOR CONNECTOR CONDITION** • Switch the ignition to off. • Disconnect the APP sensor connector. • Inspect for poor connection (such as damaged/pulled-out pins, corrosion). • Is there any malfunction?	Yes	Repair or replace the connector and/or terminals, then go to Step 9.
		No	Go to the next step.
4	**INSPECT APP SENSOR NO.1 CIRCUIT FOR SHORT TO GROUND** • Verify that the APP sensor connector is disconnected. • Inspect for continuity between the following terminals (wiring harness-side) and body ground: — APP sensor terminal A — APP sensor terminal B • Is there continuity?	Yes	If the short to ground circuit could be detected in the wiring harness: • Repair or replace the wiring harness for a possible short to ground. If the short to ground circuit could not be detected in the wiring harness: • Replace the PCM (short to ground in the PCM internal circuit). (See 01-40-10 PCM REMOVAL/INSTALLATION [SKYACTIV-G 2.0].) Go to Step 9.
		No	Go to the next step.
5	**INSPECT PCM CONNECTOR CONDITION** • Disconnect the PCM connector. • Inspect for poor connection (such as damaged/pulled-out pins, corrosion). • Is there any malfunction?	Yes	Repair or replace the connector and/or terminals, then go to Step 9.
		No	Go to the next step.
6	**INSPECT APP SENSOR NO.1 SIGNAL CIRCUIT AND GROUND CIRCUIT FOR SHORT TO EACH OTHER** • Verify that the APP sensor and PCM connectors are disconnected. • Inspect for continuity between APP sensor terminals B and C (wiring harness-side). • Is there continuity?	Yes	Repair or replace the wiring harness for a possible short to each other, then go to Step 9.
		No	Go to the next step.
7	**INSPECT APP SENSOR NO.1 CIRCUIT FOR OPEN CIRCUIT** • Verify that the APP sensor and PCM connectors are disconnected. • Inspect for continuity between the following terminals (wiring harness-side): — APP sensor terminal A—PCM terminal 2AR — APP sensor terminal B—PCM terminal 2AN • Is there continuity?	Yes	Go to the next step.
		No	Repair or replace the wiring harness for a possible open circuit, then go to Step 9.
8	**INSPECT APP SENSOR NO.1** • Reconnect all disconnected connectors. • Inspect the APP sensor No.1. (See 01-40-51 ACCELERATOR PEDAL POSITION (APP) SENSOR INSPECTION [SKYACTIV-G 2.0].) • Is there any malfunction?	Yes	Replace the accelerator pedal, then go to the next step. (See 01-13A-14 ACCELERATOR PEDAL REMOVAL/INSTALLATION [SKYACTIV-G 2.0].)
		No	Go to the next step.
9	**VERIFY DTC TROUBLESHOOTING COMPLETED** • Make sure to reconnect all disconnected connectors. • Clear the DTC from the PCM memory using the M-MDS. (See 01-02-12 AFTER REPAIR PROCEDURE [SKYACTIV-G 2.0].) • Start the engine. • Perform the KOEO or KOER self test. (See 01-02-12 KOEO/KOER SELF TEST [SKYACTIV-G 2.0].) • Is the same DTC present?	Yes	Repeat the inspection from Step 1. • If the malfunction recurs, replace the PCM. (See 01-40-10 PCM REMOVAL/INSTALLATION [SKYACTIV-G 2.0].) Go to the next step.
		No	Go to the next step.
10	**VERIFY AFTER REPAIR PROCEDURE** • Perform the “AFTER REPAIR PROCEDURE”. (See 01-02-12 AFTER REPAIR PROCEDURE [SKYACTIV-G 2.0].) • Are any DTCs present?	Yes	Go to the applicable DTC inspection. (See 01-02-14 DTC TABLE [SKYACTIV-G 2.0].)
		No	DTC troubleshooting completed.

ON-BOARD DIAGNOSTIC [SKYACTIV-G 2.0]

DTC P2123:00 [SKYACTIV-G 2.0]

id0102h1708400

DTC P2123:00	**APP sensor No.1 circuit high input**
DETECTION CONDITION	• The PCM monitors the input voltage from APP sensor No.1 when the engine is running. If the input voltage at the PCM terminal 2AN is **above 4.9 V**, the PCM determines that the APP sensor No.1 circuit input voltage is high. **Diagnostic support note** • This is a continuous monitor (CCM). • The check engine light illuminates if the PCM detects the above malfunction condition during the first drive cycle. • FREEZE FRAME DATA (Mode 2)/Snapshot data is available. • The DTC is stored in the PCM memory.
FAIL-SAFE FUNCTION	• Regulates the upper limit of the APP sensor output.
POSSIBLE CAUSE	• APP sensor connector or terminals malfunction • PCM connector or terminals malfunction • APP sensor No.1 malfunction • Short to power supply in wiring harness between APP sensor terminal B and PCM terminal 2AN • Open circuit in wiring harness between APP sensor terminal C and PCM terminal 2AO • PCM malfunction

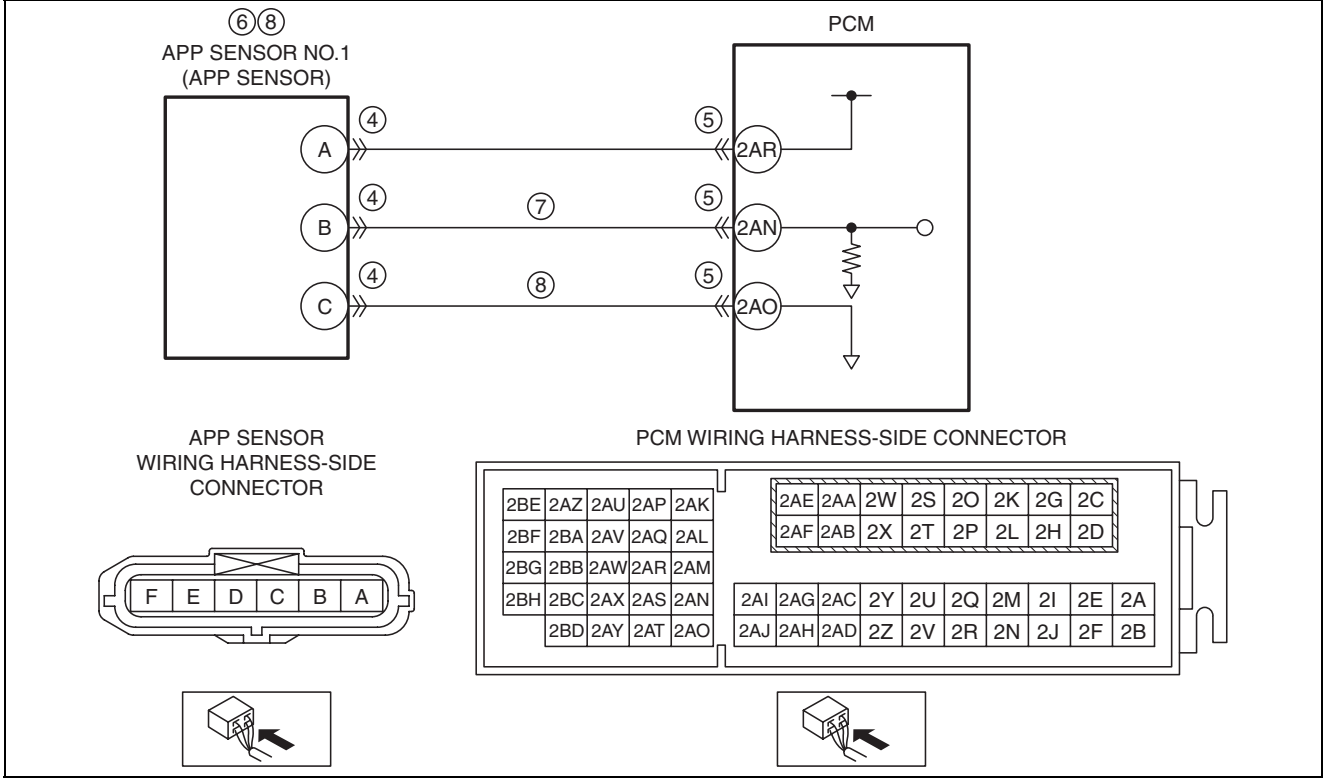

Diagnostic Procedure

STEP	INSPECTION		ACTION
1	**VERIFY FREEZE FRAME DATA (MODE 2)/ SNAPSHOT DATA HAS BEEN RECORDED** • Has the FREEZE FRAME DATA (Mode 2)/ snapshot data been recorded?	Yes	Go to the next step.
		No	Record the FREEZE FRAME DATA (Mode 2)/snapshot data on the repair order, then go to the next step.
2	**VERIFY RELATED SERVICE INFORMATION AVAILABILITY** • Verify related Service Information availability. • Is any related Service Information available?	Yes	Perform repair or diagnosis according to the available Service Information. • If the vehicle is not repaired, go to the next step.
		No	Go to the next step.

ON-BOARD DIAGNOSTIC [SKYACTIV-G 2.0]

STEP	INSPECTION		ACTION
3	**CLASSIFY APP SENSOR NO.1 MALFUNCTION OR WIRING HARNESS MALFUNCTION** • Access the APP1 PID using the M-MDS. (See 01-02-8 ON-BOARD DIAGNOSTIC TEST [SKYACTIV-G 2.0].) • Verify the APP1 PID value. • Is the APP1 PID value **5 V** or **B+**?	Yes	Go to Step 7.
		No	Go to the next step.
4	**INSPECT APP SENSOR CONNECTOR CONDITION** • Switch the ignition to off. • Disconnect the APP sensor connector. • Inspect for poor connection (such as damaged/ pulled-out pins, corrosion). • Is there any malfunction?	Yes	Repair or replace the connector and/or terminals, then go to Step 9.
		No	Go to the next step.
5	**INSPECT PCM CONNECTOR CONDITION** • Disconnect the PCM connector. • Inspect for poor connection (such as damaged/ pulled-out pins, corrosion). • Is there any malfunction?	Yes	Repair or replace the connector and/or terminals, then go to Step 9.
		No	Go to the next step.
6	**INSPECT APP SENSOR NO.1** • Reconnect all disconnected connectors. • Inspect the APP sensor No.1. (See 01-40-51 ACCELERATOR PEDAL POSITION (APP) SENSOR INSPECTION [SKYACTIV-G 2.0].) • Is there any malfunction?	Yes	Replace the accelerator pedal, then go to Step 9. (See 01-13A-14 ACCELERATOR PEDAL REMOVAL/ INSTALLATION [SKYACTIV-G 2.0].)
		No	Go to Step 9.
7	**INSPECT APP SENSOR NO.1 SIGNAL CIRCUIT FOR SHORT TO POWER SUPPLY** • Switch the ignition to off. • Disconnect the APP sensor connector. • Access the APP1 PID using the M-MDS. (See 01-02-8 ON-BOARD DIAGNOSTIC TEST [SKYACTIV-G 2.0].) • Verify the APP1 PID value. • Is the APP1 PID value **5 V** or **B+**?	Yes	Repair or replace the wiring harness for a possible short to power supply, then go to Step 9.
		No	Go to the next step.
8	**INSPECT APP SENSOR NO.1 GROUND CIRCUIT FOR OPEN CIRCUIT** • Verify that the APP sensor connector is disconnected. • Switch the ignition to off. • Disconnect the PCM connector. • Inspect for continuity between APP sensor terminal C (wiring harness-side) and PCM terminal 2AO (wiring harness-side). • Is there continuity?	Yes	Replace the accelerator pedal, then go to the next step. (See 01-13A-14 ACCELERATOR PEDAL REMOVAL/ INSTALLATION [SKYACTIV-G 2.0].)
		No	Repair or replace the wiring harness for a possible open circuit, then go to the next step.
9	**VERIFY DTC TROUBLESHOOTING COMPLETED** • Make sure to reconnect all disconnected connectors. • Clear the DTC from the PCM memory using the M-MDS. (See 01-02-12 AFTER REPAIR PROCEDURE [SKYACTIV-G 2.0].) • Start the engine. • Perform the KOEO or KOER self test. (See 01-02-12 KOEO/KOER SELF TEST [SKYACTIV-G 2.0].) • Is the same DTC present?	Yes	Repeat the inspection from Step 1. • If the malfunction recurs, replace the PCM. (See 01-40-10 PCM REMOVAL/INSTALLATION [SKYACTIV-G 2.0].) Go to the next step.
		No	Go to the next step.
10	**VERIFY AFTER REPAIR PROCEDURE** • Perform the “AFTER REPAIR PROCEDURE”. (See 01-02-12 AFTER REPAIR PROCEDURE [SKYACTIV-G 2.0].) • Are any DTCs present?	Yes	Go to the applicable DTC inspection. (See 01-02-14 DTC TABLE [SKYACTIV-G 2.0].)
		No	DTC troubleshooting completed.

ON-BOARD DIAGNOSTIC [SKYACTIV-G 2.0]

DTC P2127:00 [SKYACTIV-G 2.0]

id0102h1708500

DTC P2127:00	**APP sensor No.2 circuit low input**
DETECTION CONDITION	• The PCM monitors the input voltage from APP sensor No.2 when the engine is running. If the input voltage at the PCM terminal 2AS is **less than 0.1 V**, the PCM determines that the APP sensor No.2 circuit has a malfunction. **Diagnostic support note** • This is a continuous monitor (CCM). • The check engine light illuminates if the PCM detects the above malfunction condition during the first drive cycle. • FREEZE FRAME DATA (Mode 2)/Snapshot data is available. • The DTC is stored in the PCM memory.
FAIL-SAFE FUNCTION	• Regulates the upper limit of the APP sensor output.
POSSIBLE CAUSE	• APP sensor connector or terminals malfunction • Short to ground in wiring harness between the following terminals: — APP sensor terminal F—PCM terminal 2AW — APP sensor terminal E—PCM terminal 2AS • PCM connector or terminals malfunction • APP sensor No.2 signal circuit and ground circuit are shorted to each other • Open circuit in wiring harness between the following terminals: — APP sensor terminal F—PCM terminal 2AW — APP sensor terminal E—PCM terminal 2AS • APP sensor No.2 malfunction • PCM malfunction

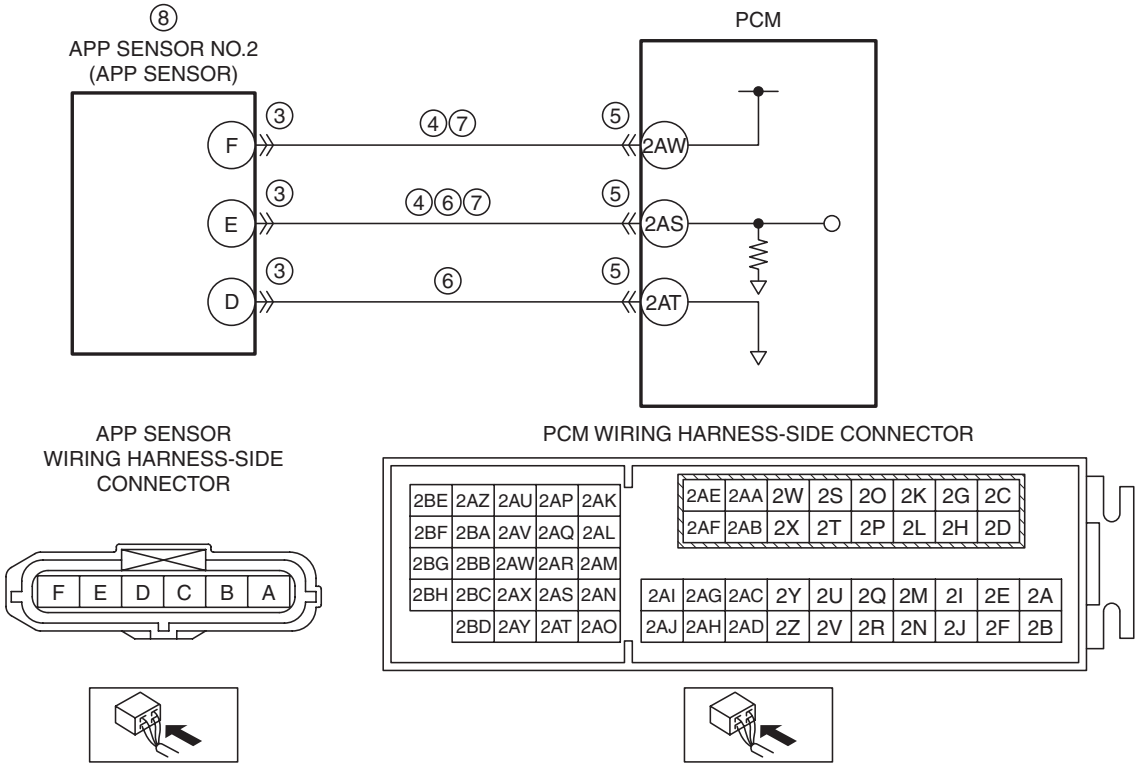

Diagnostic Procedure

STEP	INSPECTION		ACTION
1	**VERIFY FREEZE FRAME DATA (MODE 2)/ SNAPSHOT DATA HAS BEEN RECORDED** • Has the FREEZE FRAME DATA (Mode 2)/ snapshot data been recorded?	Yes	Go to the next step.
		No	Record the FREEZE FRAME DATA (Mode 2)/snapshot data on the repair order, then go to the next step.
2	**VERIFY RELATED SERVICE INFORMATION AVAILABILITY** • Verify related Service Information availability. • Is any related Service Information available?	Yes	Perform repair or diagnosis according to the available Service Information. • If the vehicle is not repaired, go to the next step.
		No	Go to the next step.

ON-BOARD DIAGNOSTIC [SKYACTIV-G 2.0]

STEP	INSPECTION		ACTION
3	**INSPECT APP SENSOR CONNECTOR CONDITION** • Switch the ignition to off. • Disconnect the APP sensor connector. • Inspect for poor connection (such as damaged/pulled-out pins, corrosion). • Is there any malfunction?	Yes	Repair or replace the connector and/or terminals, then go to Step 9.
		No	Go to the next step.
4	**INSPECT APP SENSOR NO.2 CIRCUIT FOR SHORT TO GROUND** • Verify that the APP sensor connector is disconnected. • Inspect for continuity between the following terminals (wiring harness-side) and body ground: — APP sensor terminal F — APP sensor terminal E • Is there continuity?	Yes	If the short to ground circuit could be detected in the wiring harness: • Repair or replace the wiring harness for a possible short to ground. If the short to ground circuit could not be detected in the wiring harness: • Replace the PCM (short to ground in the PCM internal circuit). (See 01-40-10 PCM REMOVAL/INSTALLATION [SKYACTIV-G 2.0].) Go to Step 9.
		No	Go to the next step.
5	**INSPECT PCM CONNECTOR CONDITION** • Disconnect the PCM connector. • Inspect for poor connection (such as damaged/pulled-out pins, corrosion). • Is there any malfunction?	Yes	Repair or replace the connector and/or terminals, then go to Step 9.
		No	Go to the next step.
6	**INSPECT APP SENSOR NO.2 SIGNAL CIRCUIT AND GROUND CIRCUIT FOR SHORT TO EACH OTHER** • Verify that the APP sensor and PCM connectors are disconnected. • Inspect for continuity between APP sensor terminals E and D (wiring harness-side). • Is there continuity?	Yes	Repair or replace the wiring harness for a possible short to each other, then go to Step 9.
		No	Go to the next step.
7	**INSPECT APP SENSOR NO.2 CIRCUIT FOR OPEN CIRCUIT** • Verify that the APP sensor and PCM connectors are disconnected. • Inspect for continuity between the following terminals (wiring harness-side): — APP sensor terminal F—PCM terminal 2AW — APP sensor terminal E—PCM terminal 2AS • Is there continuity?	Yes	Go to the next step.
		No	Repair or replace the wiring harness for a possible open circuit, then go to Step 9.
8	**INSPECT APP SENSOR NO.2** • Reconnect all disconnected connectors. • Inspect the APP sensor No.2. (See 01-40-51 ACCELERATOR PEDAL POSITION (APP) SENSOR INSPECTION [SKYACTIV-G 2.0].) • Is there any malfunction?	Yes	Replace the accelerator pedal, then go to the next step. (See 01-13A-14 ACCELERATOR PEDAL REMOVAL/INSTALLATION [SKYACTIV-G 2.0].)
		No	Go to the next step.
9	**VERIFY DTC TROUBLESHOOTING COMPLETED** • Make sure to reconnect all disconnected connectors. • Clear the DTC from the PCM memory using the M-MDS. (See 01-02-12 AFTER REPAIR PROCEDURE [SKYACTIV-G 2.0].) • Start the engine. • Perform the KOEO or KOER self test. (See 01-02-12 KOEO/KOER SELF TEST [SKYACTIV-G 2.0].) • Is the same DTC present?	Yes	Repeat the inspection from Step 1. • If the malfunction recurs, replace the PCM. (See 01-40-10 PCM REMOVAL/INSTALLATION [SKYACTIV-G 2.0].) Go to the next step.
		No	Go to the next step.
10	**VERIFY AFTER REPAIR PROCEDURE** • Perform the “AFTER REPAIR PROCEDURE”. (See 01-02-12 AFTER REPAIR PROCEDURE [SKYACTIV-G 2.0].) • Are any DTCs present?	Yes	Go to the applicable DTC inspection. (See 01-02-14 DTC TABLE [SKYACTIV-G 2.0].)
		No	DTC troubleshooting completed.

ON-BOARD DIAGNOSTIC [SKYACTIV-G 2.0]

DTC P2128:00 [SKYACTIV-G 2.0]

id0102h1708600

DTC P2128:00	**APP sensor No.2 circuit high input**
DETECTION CONDITION	• The PCM monitors the input voltage from APP sensor No.2 when the engine is running. If the input voltage at the PCM terminal 2AS is **more than 4.9 V**, the PCM determines that the APP sensor No.2 circuit has a malfunction. **Diagnostic support note** • This is a continuous monitor (CCM). • The check engine light illuminates if the PCM detects the above malfunction condition during the first drive cycle. • FREEZE FRAME DATA (Mode 2)/Snapshot data is available. • The DTC is stored in the PCM memory.
FAIL-SAFE FUNCTION	• Regulates the upper limit of the APP sensor output.
POSSIBLE CAUSE	• APP sensor connector or terminals malfunction • PCM connector or terminals malfunction • APP sensor No.2 malfunction • Short to power supply in wiring harness between APP sensor terminal E and PCM terminal 2AS • Open circuit in wiring harness between APP sensor terminal D and PCM terminal 2AT • PCM malfunction

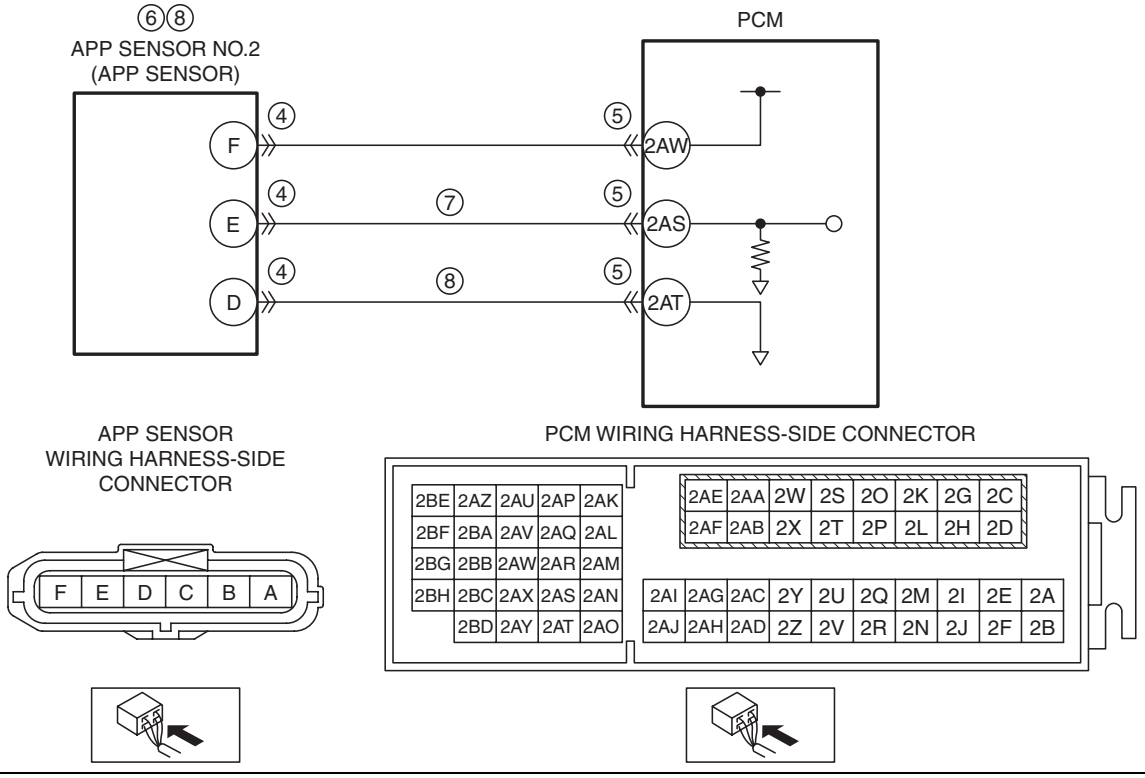

Diagnostic Procedure

STEP	INSPECTION		ACTION
1	**VERIFY FREEZE FRAME DATA (MODE 2)/ SNAPSHOT DATA HAS BEEN RECORDED** • Has the FREEZE FRAME DATA (Mode 2)/ snapshot data been recorded?	Yes	Go to the next step.
		No	Record the FREEZE FRAME DATA (Mode 2)/snapshot data on the repair order, then go to the next step.
2	**VERIFY RELATED SERVICE INFORMATION AVAILABILITY** • Verify related Service Information availability. • Is any related Service Information available?	Yes	Perform repair or diagnosis according to the available Service Information. • If the vehicle is not repaired, go to the next step.
		No	Go to the next step.

ON-BOARD DIAGNOSTIC [SKYACTIV-G 2.0]

STEP	INSPECTION		ACTION
3	**CLASSIFY APP SENSOR NO.2 MALFUNCTION OR WIRING HARNESS MALFUNCTION** • Access the APP2 PID using the M-MDS. (See 01-02-8 ON-BOARD DIAGNOSTIC TEST [SKYACTIV-G 2.0].) • Verify the APP2 PID value. • Is the APP2 PID value **5 V** or **B+**?	Yes	Go to Step 7.
		No	Go to the next step.
4	**INSPECT APP SENSOR CONNECTOR CONDITION** • Switch the ignition to off. • Disconnect the APP sensor connector. • Inspect for poor connection (such as damaged/ pulled-out pins, corrosion). • Is there any malfunction?	Yes	Repair or replace the connector and/or terminals, then go to Step 9.
		No	Go to the next step.
5	**INSPECT PCM CONNECTOR CONDITION** • Disconnect the PCM connector. • Inspect for poor connection (such as damaged/ pulled-out pins, corrosion). • Is there any malfunction?	Yes	Repair or replace the connector and/or terminals, then go to Step 9.
		No	Go to the next step.
6	**INSPECT APP SENSOR NO.2** • Reconnect all disconnected connectors. • Inspect the APP sensor No.2. (See 01-40-51 ACCELERATOR PEDAL POSITION (APP) SENSOR INSPECTION [SKYACTIV-G 2.0].) • Is there any malfunction?	Yes	Replace the accelerator pedal, then go to Step 9. (See 01-13A-14 ACCELERATOR PEDAL REMOVAL/ INSTALLATION [SKYACTIV-G 2.0].)
		No	Go to Step 9.
7	**INSPECT APP SENSOR NO.2 SIGNAL CIRCUIT FOR SHORT TO POWER SUPPLY** • Switch the ignition to off. • Disconnect the APP sensor connector. • Access the APP2 PID using the M-MDS. (See 01-02-8 ON-BOARD DIAGNOSTIC TEST [SKYACTIV-G 2.0].) • Verify the APP2 PID value. • Is the APP2 PID value **5 V** or **B+**?	Yes	Repair or replace the wiring harness for a possible short to power supply, then go to Step 9.
		No	Go to the next step.
8	**INSPECT APP SENSOR NO.2 GROUND CIRCUIT FOR OPEN CIRCUIT** • Verify that the APP sensor connector is disconnected. • Switch the ignition to off. • Disconnect the PCM connector. • Inspect for continuity between APP sensor terminal D (wiring harness-side) and PCM terminal 2AT (wiring harness-side). • Is there continuity?	Yes	Replace the accelerator pedal, then go to the next step. (See 01-13A-14 ACCELERATOR PEDAL REMOVAL/ INSTALLATION [SKYACTIV-G 2.0].)
		No	Repair or replace the wiring harness for a possible open circuit, then go to the next step.
9	**VERIFY DTC TROUBLESHOOTING COMPLETED** • Make sure to reconnect all disconnected connectors. • Clear the DTC from the PCM memory using the M-MDS. (See 01-02-12 AFTER REPAIR PROCEDURE [SKYACTIV-G 2.0].) • Start the engine. • Perform the KOEO or KOER self test. (See 01-02-12 KOEO/KOER SELF TEST [SKYACTIV-G 2.0].) • Is the same DTC present?	Yes	Repeat the inspection from Step 1. • If the malfunction recurs, replace the PCM. (See 01-40-10 PCM REMOVAL/INSTALLATION [SKYACTIV-G 2.0].) Go to the next step.
		No	Go to the next step.
10	**VERIFY AFTER REPAIR PROCEDURE** • Perform the “AFTER REPAIR PROCEDURE”. (See 01-02-12 AFTER REPAIR PROCEDURE [SKYACTIV-G 2.0].) • Are any DTCs present?	Yes	Go to the applicable DTC inspection. (See 01-02-14 DTC TABLE [SKYACTIV-G 2.0].)
		No	DTC troubleshooting completed.

ON-BOARD DIAGNOSTIC [SKYACTIV-G 2.0]

DTC P2135:00 [SKYACTIV-G 2.0]

id0102h1708700

DTC P2135:00	**TP sensor No.1/No.2 voltage correlation problem**
DETECTION CONDITION	• The PCM compares the input voltage from TP sensor No.1 with the input voltage from TP sensor No.2. If the difference is more than the specification, the PCM determines that there is a TP sensor No.1/No.2 voltage correlation problem. **Diagnostic support note** • This is a continuous monitor (CCM). • The check engine light illuminates if the PCM detects the above malfunction condition during the first drive cycle. • FREEZE FRAME DATA (Mode 2)/Snapshot data is available. • The DTC is stored in the PCM memory.
FAIL-SAFE FUNCTION	• Restricts the upper limit of the engine speed. • Stops the drive-by-wire control (throttle valve is open at **approx. 8** ° by return spring force).
POSSIBLE CAUSE	• Throttle body connector or terminals malfunction • PCM connector or terminals malfunction • TP sensor No.1 malfunction • TP sensor No.2 malfunction • PCM malfunction
SYSTEM WIRING DIAGRAM	—

Diagnostic Procedure

STEP	INSPECTION		ACTION
1	**VERIFY FREEZE FRAME DATA (MODE 2)/ SNAPSHOT DATA HAS BEEN RECORDED** • Has the FREEZE FRAME DATA (Mode 2)/ snapshot data been recorded?	Yes	Go to the next step.
		No	Record the FREEZE FRAME DATA (Mode 2)/snapshot data on the repair order, then go to the next step.
2	**VERIFY RELATED SERVICE INFORMATION AVAILABILITY** • Verify related Service Information availability. • Is any related Service Information available?	Yes	Perform repair or diagnosis according to the available Service Information. • If the vehicle is not repaired, go to the next step.
		No	Go to the next step.
3	**VERIFY RELATED PENDING CODE AND/OR DTC** • Switch the ignition to off, then to ON (engine off). • Perform the Pending Trouble Code Access Procedure and DTC Reading Procedure. (See 01-02-8 ON-BOARD DIAGNOSTIC TEST [SKYACTIV-G 2.0].) • Is the PENDING CODE/DTC P0122:00, P0123:00, P0222:00 or P0223:00 also present?	Yes	Go to the applicable PENDING CODE or DTC inspection. (See 01-02-94 DTC P0122:00 [SKYACTIV-G 2.0].) (See 01-02-97 DTC P0123:00 [SKYACTIV-G 2.0].) (See 01-02-164 DTC P0222:00 [SKYACTIV-G 2.0].) (See 01-02-167 DTC P0223:00 [SKYACTIV-G 2.0].)
		No	Go to the next step.
4	**INSPECT THROTTLE BODY CONNECTOR CONDITION** • Switch the ignition to off. • Disconnect the throttle body connector. • Inspect for poor connection (such as damaged/ pulled-out pins, corrosion). • Is there any malfunction?	Yes	Repair or replace the connector and/or terminals, then go to Step 7.
		No	Go to the next step.
5	**INSPECT PCM CONNECTOR CONDITION** • Disconnect the PCM connector. • Inspect for poor connection (such as damaged/ pulled-out pins, corrosion). • Is there any malfunction?	Yes	Repair or replace the connector and/or terminals, then go to Step 7.
		No	Go to the next step.
6	**INSPECT TP SENSOR NO.1 AND NO.2** • Reconnect all disconnected connectors. • Inspect the TP sensor No.1 and No.2. (See 01-40-50 THROTTLE POSITION (TP) SENSOR INSPECTION [SKYACTIV-G 2.0].) • Is there any malfunction?	Yes	Replace the throttle body, then go to the next step. (See 01-13A-6 INTAKE-AIR SYSTEM REMOVAL/ INSTALLATION [SKYACTIV-G 2.0].)
		No	Intermittent concern exists. • Perform the “INTERMITTENT CONCERN TROUBLESHOOTING” procedure. (See 01-03-116 INTERMITTENT CONCERN TROUBLESHOOTING [SKYACTIV-G 2.0].)

ON-BOARD DIAGNOSTIC [SKYACTIV-G 2.0]

STEP	INSPECTION		ACTION
7	**VERIFY DTC TROUBLESHOOTING COMPLETED** • Make sure to reconnect all disconnected connectors. • Clear the DTC from the PCM memory using the M-MDS. (See 01-02-12 AFTER REPAIR PROCEDURE [SKYACTIV-G 2.0].) • Start the engine. • Perform the KOEO or KOER self test. (See 01-02-12 KOEO/KOER SELF TEST [SKYACTIV-G 2.0].) • Is the same DTC present?	Yes	Repeat the inspection from Step 1. • If the malfunction recurs, replace the PCM. (See 01-40-10 PCM REMOVAL/INSTALLATION [SKYACTIV-G 2.0].) Go to the next step.
		No	Go to the next step.
8	**VERIFY AFTER REPAIR PROCEDURE** • Perform the “AFTER REPAIR PROCEDURE”. (See 01-02-12 AFTER REPAIR PROCEDURE [SKYACTIV-G 2.0].) • Are any DTCs present?	Yes	Go to the applicable DTC inspection. (See 01-02-14 DTC TABLE [SKYACTIV-G 2.0].)
		No	DTC troubleshooting completed.

DTC P2138:00 [SKYACTIV-G 2.0]

id0102h1708800

DTC P2138:00	**APP sensor No.1/No.2 voltage correlation problem**
DETECTION CONDITION	• The PCM compares the input voltage from APP sensor No.1 with the input voltage from APP sensor No.2 when the engine is running. If the difference is more than the specification, the PCM determines that there is an APP sensor No.1/No.2 angle correlation problem. **Diagnostic support note** • This is a continuous monitor (CCM). • The check engine light illuminates if the PCM detects the above malfunction condition during the first drive cycle. • FREEZE FRAME DATA (Mode 2)/Snapshot data is available. • The DTC is stored in the PCM memory.
FAIL-SAFE FUNCTION	• Restricts the upper limit of the engine speed. • Stops the drive-by-wire control (throttle valve is open at **approx. 8** ° by return spring force).
POSSIBLE CAUSE	• APP sensor connector or terminals malfunction • PCM connector or terminals malfunction • APP sensor No.1 malfunction • APP sensor No.2 malfunction • PCM malfunction
SYSTEM WIRING DIAGRAM	—

Diagnostic Procedure

STEP	INSPECTION		ACTION
1	**VERIFY FREEZE FRAME DATA (MODE 2)/ SNAPSHOT DATA HAS BEEN RECORDED** • Has the FREEZE FRAME DATA (Mode 2)/ snapshot data been recorded?	Yes	Go to the next step.
		No	Record the FREEZE FRAME DATA (Mode 2)/snapshot data on the repair order, then go to the next step.
2	**VERIFY RELATED SERVICE INFORMATION AVAILABILITY** • Verify related Service Information availability. • Is any related Service Information available?	Yes	Perform repair or diagnosis according to the available Service Information. • If the vehicle is not repaired, go to the next step.
		No	Go to the next step.
3	**VERIFY RELATED PENDING CODE AND/OR DTC** • Switch the ignition to off, then to ON (engine off). • Perform the Pending Trouble Code Access Procedure and DTC Reading Procedure. (See 01-02-8 ON-BOARD DIAGNOSTIC TEST [SKYACTIV-G 2.0].) • Is the PENDING CODE/DTC P2122:00, P2123:00, P2127:00 or P2128:00 also present?	Yes	Go to the applicable PENDING CODE or DTC inspection. (See 01-02-327 DTC P2122:00 [SKYACTIV-G 2.0].) (See 01-02-329 DTC P2123:00 [SKYACTIV-G 2.0].) (See 01-02-331 DTC P2127:00 [SKYACTIV-G 2.0].) (See 01-02-333 DTC P2128:00 [SKYACTIV-G 2.0].)
		No	Go to the next step.

ON-BOARD DIAGNOSTIC [SKYACTIV-G 2.0]

STEP	INSPECTION		ACTION
4	**INSPECT APP SENSOR CONNECTOR CONDITION** • Switch the ignition to off. • Disconnect the APP sensor connector. • Inspect for poor connection (such as damaged/ pulled-out pins, corrosion). • Is there any malfunction?	Yes	Repair or replace the connector and/or terminals, then go to Step 7.
		No	Go to the next step.
5	**INSPECT PCM CONNECTOR CONDITION** • Disconnect the PCM connector. • Inspect for poor connection (such as damaged/ pulled-out pins, corrosion). • Is there any malfunction?	Yes	Repair or replace the connector and/or terminals, then go to Step 7.
		No	Go to the next step.
6	**INSPECT APP SENSOR NO.1 AND NO.2** • Reconnect all disconnected connectors. • Inspect the APP sensor No.1 and No.2. (See 01-40-51 ACCELERATOR PEDAL POSITION (APP) SENSOR INSPECTION [SKYACTIV-G 2.0].) • Is there any malfunction?	Yes	Replace the accelerator pedal, then go to the next step. (See 01-13A-14 ACCELERATOR PEDAL REMOVAL/ INSTALLATION [SKYACTIV-G 2.0].)
		No	Intermittent concern exists. • Perform the “INTERMITTENT CONCERN TROUBLESHOOTING” procedure. (See 01-03-116 INTERMITTENT CONCERN TROUBLESHOOTING [SKYACTIV-G 2.0].)
7	**VERIFY DTC TROUBLESHOOTING COMPLETED** • Make sure to reconnect all disconnected connectors. • Clear the DTC from the PCM memory using the M-MDS. (See 01-02-12 AFTER REPAIR PROCEDURE [SKYACTIV-G 2.0].) • Start the engine. • Perform the KOEO or KOER self test. (See 01-02-12 KOEO/KOER SELF TEST [SKYACTIV-G 2.0].) • Is the same DTC present?	Yes	Repeat the inspection from Step 1. • If the malfunction recurs, replace the PCM. (See 01-40-10 PCM REMOVAL/INSTALLATION [SKYACTIV-G 2.0].) Go to the next step.
		No	Go to the next step.
8	**VERIFY AFTER REPAIR PROCEDURE** • Perform the “AFTER REPAIR PROCEDURE”. (See 01-02-12 AFTER REPAIR PROCEDURE [SKYACTIV-G 2.0].) • Are any DTCs present?	Yes	Go to the applicable DTC inspection. (See 01-02-14 DTC TABLE [SKYACTIV-G 2.0].)
		No	DTC troubleshooting completed.

ON-BOARD DIAGNOSTIC [SKYACTIV-G 2.0]

DTC P2199:00 [SKYACTIV-G 2.0]

id0102h1415100

DTC P2199:00	**IAT sensor No.2 circuit range/performance problem**
DETECTION CONDITION	• IAT sensor No.1 and IAT sensor No.2 are compared after the engine is started* and correlation error occurs. *: Ignition switch on when **6 h or more** has passed since the ignition was switched off. **Diagnostic support note** • This is a continuous monitor (CCM). • The check engine light illuminates if the PCM detects the above malfunction condition in two consecutive drive cycles or in one drive cycle while the DTC for the same malfunction has been stored in the PCM. • PENDING CODE is available if the PCM detects the above malfunction condition during first drive cycle. • FREEZE FRAME DATA (Mode 2)/Snapshot data is available. • The DTC is stored in the PCM memory.
FAIL-SAFE FUNCTION	—
POSSIBLE CAUSE	• MAF sensor/IAT sensor No.1 connector or terminals malfunction • MAP sensor/IAT sensor No.2 connector or terminals malfunction • IAT sensor No.1 malfunction • IAT sensor No.2 malfunction • PCM connector or terminals malfunction • PCM malfunction
SYSTEM WIRING DIAGRAM	—

Diagnostic Procedure

STEP	INSPECTION		ACTION
1	**VERIFY FREEZE FRAME DATA (MODE 2)/ SNAPSHOT DATA HAS BEEN RECORDED** • Has the FREEZE FRAME DATA (Mode 2)/ snapshot data been recorded?	Yes	Go to the next step.
		No	Record the FREEZE FRAME DATA (Mode 2)/snapshot data on the repair order, then go to the next step.
2	**VERIFY RELATED SERVICE INFORMATION AVAILABILITY** • Verify related Service Information availability. • Is any related Service Information available?	Yes	Perform repair or diagnosis according to the available Service Information. • If the vehicle is not repaired, go to the next step.
		No	Go to the next step.
3	**INSPECT MAF SENSOR/IAT SENSOR NO.1 CONNECTOR CONDITION** • Switch the ignition to off. • Disconnect the MAF sensor/IAT sensor No.1 connector. • Inspect for poor connection (such as damaged/ pulled-out pins, corrosion). • Is there any malfunction?	Yes	Repair or replace the connector and/or terminals, then go to Step 8.
		No	Go to the next step.
4	**INSPECT MAP SENSOR/IAT SENSOR NO.2 CONNECTOR CONDITION** • Disconnect the MAP sensor/IAT sensor No.2 connector. • Inspect for poor connection (such as damaged/ pulled-out pins, corrosion). • Is there any malfunction?	Yes	Repair or replace the connector and/or terminals, then go to Step 8.
		No	Go to the next step.
5	**INSPECT IAT SENSOR NO.1** • Inspect the IAT sensor No.1. (See 01-40-46 INTAKE AIR TEMPERATURE (IAT) SENSOR INSPECTION [SKYACTIV-G 2.0].) • Is there any malfunction?	Yes	Replace the MAF sensor/IAT sensor No.1, then go to Step 8. (See 01-13A-6 INTAKE-AIR SYSTEM REMOVAL/ INSTALLATION [SKYACTIV-G 2.0].)
		No	Go to the next step.
6	**INSPECT IAT SENSOR NO.2** • Inspect the IAT sensor No.2. (See 01-40-46 INTAKE AIR TEMPERATURE (IAT) SENSOR INSPECTION [SKYACTIV-G 2.0].) • Is there any malfunction?	Yes	Replace the MAP sensor/IAT sensor No.2, then go to Step 8. (See 01-40-48 MANIFOLD ABSOLUTE PRESSURE (MAP) SENSOR/INTAKE AIR TEMPERATURE (IAT) SENSOR NO.2 REMOVAL/INSTALLATION [SKYACTIV-G 2.0].)
		No	Go to the next step.

ON-BOARD DIAGNOSTIC [SKYACTIV-G 2.0]

STEP	INSPECTION		ACTION
7	**INSPECT PCM CONNECTOR CONDITION** • Disconnect the PCM connector. • Inspect for poor connection (such as damaged/ pulled-out pins, corrosion). • Is there any malfunction?	Yes	Repair or replace the connector and/or terminals, then go to the next step.
		No	Go to the next step.
8	**VERIFY DTC TROUBLESHOOTING COMPLETED** • Make sure to reconnect all disconnected connectors. • Clear the DTC from the PCM memory using the M-MDS. (See 01-02-12 AFTER REPAIR PROCEDURE [SKYACTIV-G 2.0].) • Start the engine and run the engine under the FREEZE FRAME DATA (Mode 2) condition. • Perform the Pending Trouble Code Access Procedure. (See 01-02-8 ON-BOARD DIAGNOSTIC TEST [SKYACTIV-G 2.0].) • Is the PENDING CODE for this DTC present?	Yes	Repeat the inspection from Step 1. • If the malfunction recurs, replace the PCM. (See 01-40-10 PCM REMOVAL/INSTALLATION [SKYACTIV-G 2.0].) Go to the next step.
		No	Go to the next step.
9	**VERIFY AFTER REPAIR PROCEDURE** • Perform the “AFTER REPAIR PROCEDURE”. (See 01-02-12 AFTER REPAIR PROCEDURE [SKYACTIV-G 2.0].) • Are any DTCs present?	Yes	Go to the applicable DTC inspection. (See 01-02-14 DTC TABLE [SKYACTIV-G 2.0].)
		No	DTC troubleshooting completed.

DTC P2228:00 [SKYACTIV-G 2.0]

id0102h1153200

DTC P2228:00	BARO sensor circuit low input
DETECTION CONDITION	• The PCM monitors input voltage from the BARO sensor. If the input voltage is below specified value for **5 s**, the PCM determines that the BARO sensor circuit has a malfunction. **Diagnostic support note** • This is a continuous monitor (CCM). • The check engine light illuminates if the PCM detects the above malfunction condition during the first drive cycle. • FREEZE FRAME DATA (Mode 2)/Snapshot data is available. • The DTC is stored in the PCM memory.
FAIL-SAFE FUNCTION	• Fixes the barometric pressure for the engine control at **101.32 kPa {759.96 mmHg, 29.920 inHg}**.
POSSIBLE CAUSE	• BARO sensor (built-into PCM) malfunction • PCM malfunction
SYSTEM WIRING DIAGRAM	—

Diagnostic Procedure

STEP	INSPECTION		ACTION
1	**VERIFY FREEZE FRAME DATA (MODE 2)/ SNAPSHOT DATA HAS BEEN RECORDED** • Has the FREEZE FRAME DATA (Mode 2)/ snapshot data been recorded?	Yes	Go to the next step.
		No	Record the FREEZE FRAME DATA (Mode 2)/snapshot data on the repair order, then go to the next step.
2	**VERIFY RELATED SERVICE INFORMATION AVAILABILITY** • Verify related Service Information availability. • Is any related Service Information available?	Yes	Perform repair or diagnosis according to the available Service Information. • If the vehicle is not repaired, go to the next step.
		No	Go to the next step.
3	**INSPECT BARO SENSOR** • Inspect the BARO sensor. (See 01-40-49 BAROMETRIC PRESSURE (BARO) SENSOR INSPECTION [SKYACTIV-G 2.0].) • Is there any malfunction?	Yes	Replace the PCM, then go to the next step. (See 01-40-10 PCM REMOVAL/INSTALLATION [SKYACTIV-G 2.0].)
		No	Go to the next step.

ON-BOARD DIAGNOSTIC [SKYACTIV-G 2.0]

STEP	INSPECTION		ACTION
4	**VERIFY DTC TROUBLESHOOTING COMPLETED** • Clear the DTC from the PCM memory using the M-MDS. (See 01-02-12 AFTER REPAIR PROCEDURE [SKYACTIV-G 2.0].) • Perform the KOEO or KOER self test. (See 01-02-12 KOEO/KOER SELF TEST [SKYACTIV-G 2.0].) • Is the same DTC present?	Yes	Replace the PCM, then go to the next step. (See 01-40-10 PCM REMOVAL/INSTALLATION [SKYACTIV-G 2.0].)
		No	Go to the next step.
5	**VERIFY AFTER REPAIR PROCEDURE** • Perform the “AFTER REPAIR PROCEDURE”. (See 01-02-12 AFTER REPAIR PROCEDURE [SKYACTIV-G 2.0].) • Are any DTCs present?	Yes	Go to the applicable DTC inspection. (See 01-02-14 DTC TABLE [SKYACTIV-G 2.0].)
		No	DTC troubleshooting completed.

DTC P2229:00 [SKYACTIV-G 2.0]

id0102h1153300

DTC P2229:00	BARO sensor circuit high input
DETECTION CONDITION	• The PCM monitors input voltage from the BARO sensor. If the input voltage is above specified value for **5 s**, the PCM determines that the BARO sensor circuit has a malfunction. **Diagnostic support note** • This is a continuous monitor (CCM). • The check engine light illuminates if the PCM detects the above malfunction condition during the first drive cycle. • FREEZE FRAME DATA (Mode 2)/Snapshot data is available. • The DTC is stored in the PCM memory.
FAIL-SAFE FUNCTION	• Fixes the barometric pressure for the engine control at **101.32 kPa {759.96 mmHg, 29.920 inHg}**.
POSSIBLE CAUSE	• BARO sensor (built-into PCM) malfunction • PCM malfunction
SYSTEM WIRING DIAGRAM	—

Diagnostic Procedure

STEP	INSPECTION		ACTION
1	**VERIFY FREEZE FRAME DATA (MODE 2)/ SNAPSHOT DATA HAS BEEN RECORDED** • Has the FREEZE FRAME DATA (Mode 2)/ snapshot data been recorded?	Yes	Go to the next step.
		No	Record the FREEZE FRAME DATA (Mode 2)/snapshot data on the repair order, then go to the next step.
2	**VERIFY RELATED SERVICE INFORMATION AVAILABILITY** • Verify related Service Information availability. • Is any related Service Information available?	Yes	Perform repair or diagnosis according to the available Service Information. • If the vehicle is not repaired, go to the next step.
		No	Go to the next step.
3	**INSPECT BARO SENSOR** • Inspect the BARO sensor. (See 01-40-49 BAROMETRIC PRESSURE (BARO) SENSOR INSPECTION [SKYACTIV-G 2.0].) • Is there any malfunction?	Yes	Replace the PCM, then go to the next step. (See 01-40-10 PCM REMOVAL/INSTALLATION [SKYACTIV-G 2.0].)
		No	Go to the next step.
4	**VERIFY DTC TROUBLESHOOTING COMPLETED** • Clear the DTC from the PCM memory using the M-MDS. (See 01-02-12 AFTER REPAIR PROCEDURE [SKYACTIV-G 2.0].) • Perform the KOEO or KOER self test. (See 01-02-12 KOEO/KOER SELF TEST [SKYACTIV-G 2.0].) • Is the same DTC present?	Yes	Replace the PCM, then go to the next step. (See 01-40-10 PCM REMOVAL/INSTALLATION [SKYACTIV-G 2.0].)
		No	Go to the next step.

ON-BOARD DIAGNOSTIC [SKYACTIV-G 2.0]

STEP	INSPECTION		ACTION
5	**VERIFY AFTER REPAIR PROCEDURE** • Perform the “AFTER REPAIR PROCEDURE”. (See 01-02-12 AFTER REPAIR PROCEDURE [SKYACTIV-G 2.0].) • Are any DTCs present?	Yes	Go to the applicable DTC inspection. (See 01-02-14 DTC TABLE [SKYACTIV-G 2.0].)
		No	DTC troubleshooting completed.

DTC P2237:00 [SKYACTIV-G 2.0]

id0102h1851200

DTC P2237:00	**A/F sensor positive current control circuit open**
DETECTION CONDITION	• The PCM monitors A/F sensor positive current control circuit voltage. If the voltage is between **2.2 V** and **2.4 V** while the engine is running, the PCM determines that the A/F sensor positive current control circuit is open. **Diagnostic support note** • This is a continuous monitor (A/F sensor, HO2S). • The check engine light illuminates if the PCM detects the above malfunction condition in two consecutive drive cycles or in one drive cycle while the DTC for the same malfunction has been stored in the PCM. • PENDING CODE is available if the PCM detects the above malfunction condition during first drive cycle. • FREEZE FRAME DATA (Mode 2)/Snapshot data is available. • The DTC is stored in the PCM memory.
FAIL-SAFE FUNCTION	• Fixes the duty value of the A/F sensor heater. • Stops the fuel feedback control.
POSSIBLE CAUSE	• A/F sensor connector or terminals malfunction • PCM connector or terminals malfunction • Open circuit in wiring harness between A/F sensor terminal B and PCM terminal 1AG • A/F sensor malfunction • PCM malfunction

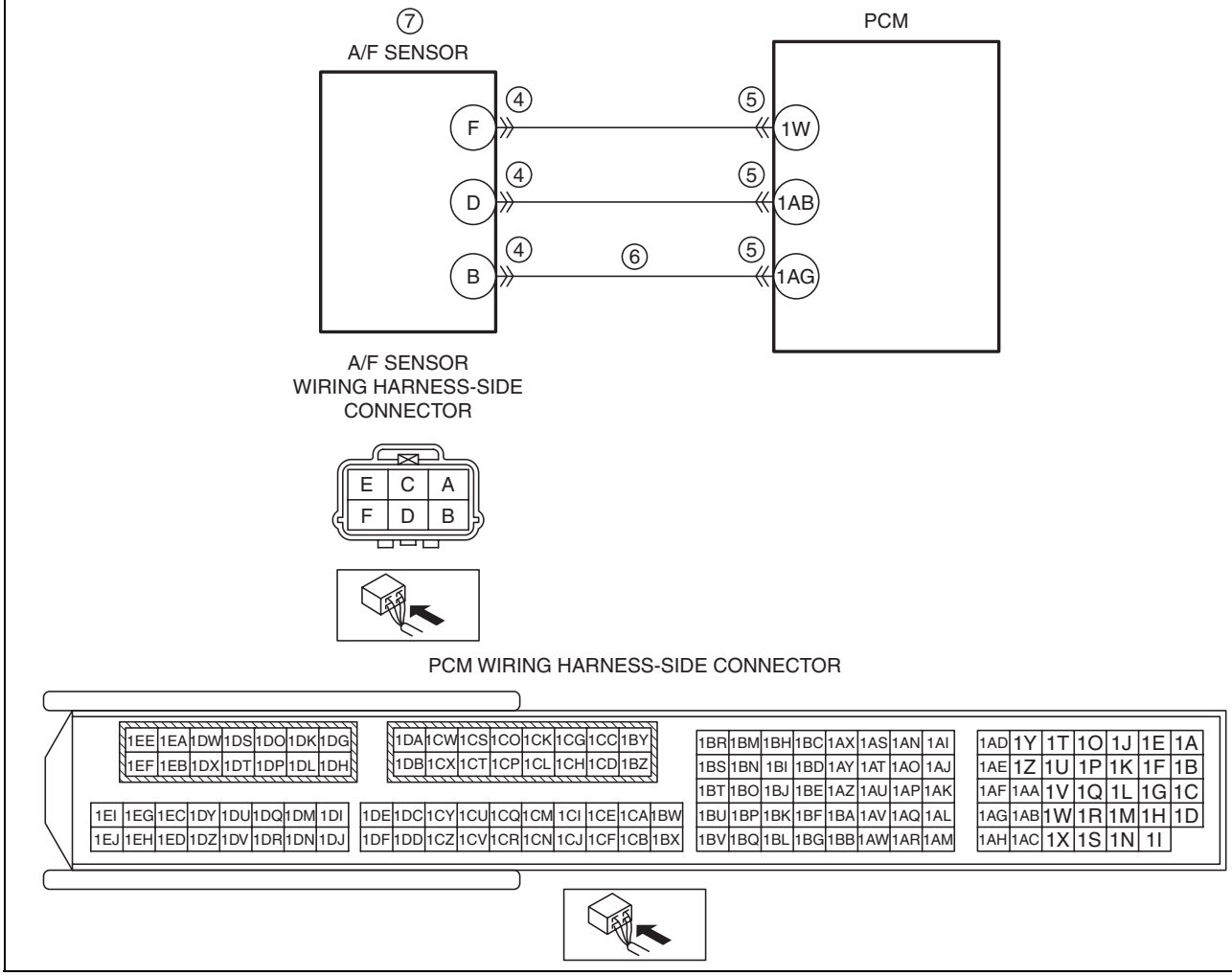

ON-BOARD DIAGNOSTIC [SKYACTIV-G 2.0]

Diagnostic Procedure

STEP	INSPECTION		ACTION
1	**IDENTIFY TRIGGER DTC FOR FREEZE FRAME DATA (MODE 2)** • Perform the Freeze Frame PID Data Access Procedure. (See 01-02-8 ON-BOARD DIAGNOSTIC TEST [SKYACTIV-G 2.0].) • Is the DTC P2237:00 on FREEZE FRAME DATA (Mode 2)?	Yes	Go to the next step.
		No	Go to the troubleshooting procedure for DTC on FREEZE FRAME DATA (Mode 2). (See 01-02-14 DTC TABLE [SKYACTIV-G 2.0].)
2	**VERIFY FREEZE FRAME DATA (MODE 2)/ SNAPSHOT DATA AND DIAGNOSTIC MONITORING TEST RESULTS HAVE BEEN RECORDED** • Have the FREEZE FRAME DATA (Mode 2)/ snapshot data and DIAGNOSTIC MONITORING TEST RESULTS (A/F sensor, HO2S related) been recorded?	Yes	Go to the next step.
		No	Record the FREEZE FRAME DATA (Mode 2)/snapshot data and DIAGNOSTIC MONITORING TEST RESULTS on the repair order, then go to the next step.
3	**VERIFY RELATED SERVICE INFORMATION AVAILABILITY** • Verify related Service Information availability. • Is any related Service Information available?	Yes	Perform repair or diagnosis according to the available Service Information. • If the vehicle is not repaired, go to the next step.
		No	Go to the next step.
4	**INSPECT A/F SENSOR CONNECTOR CONDITION** • Switch the ignition to off. • Disconnect the A/F sensor connector. • Inspect for poor connection (such as damaged/ pulled-out pins, corrosion). • Is there any malfunction?	Yes	Repair or replace the connector and/or terminals, then go to Step 8.
		No	Go to the next step.
5	**INSPECT PCM CONNECTOR CONDITION** • Disconnect the PCM connector. • Inspect for poor connection (such as damaged/ pulled-out pins, corrosion). • Is there any malfunction?	Yes	Repair or replace the connector and/or terminals, then go to Step 8.
		No	Go to the next step.
6	**INSPECT A/F SENSOR POSITIVE CURRENT CONTROL CIRCUIT FOR OPEN CIRCUIT** • Verify that the A/F sensor and PCM connectors are disconnected. • Inspect for continuity between A/F sensor terminal B (wiring harness-side) and PCM terminal 1AG (wiring harness-side). • Is there continuity?	Yes	Go to the next step.
		No	Repair or replace the wiring harness for a possible open circuit, then go to Step 8.
7	**INSPECT A/F SENSOR** • Reconnect all disconnected connectors. • Inspect the A/F sensor. (See 01-40-55 AIR FUEL RATIO (A/F) SENSOR INSPECTION [SKYACTIV-G 2.0].) • Is there any malfunction?	Yes	Replace the A/F sensor, then go to the next step. (See 01-40-52 AIR FUEL RATIO (A/F) SENSOR REMOVAL/INSTALLATION [SKYACTIV-G 2.0].)
		No	Go to the next step.

ON-BOARD DIAGNOSTIC [SKYACTIV-G 2.0]

STEP	INSPECTION		ACTION
8	**VERIFY DTC TROUBLESHOOTING COMPLETED** • Make sure to reconnect all disconnected connectors. • Clear the DTC from the PCM memory using the M-MDS. (See 01-02-12 AFTER REPAIR PROCEDURE [SKYACTIV-G 2.0].) • Perform the KOER self test or Drive Mode 03 (Variable Valve Timing, A/F Sensor Heater, HO2S Heater, A/F Sensor, HO2S and TWC Repair Verification Drive Mode). (See 01-02-12 KOEO/KOER SELF TEST [SKYACTIV-G 2.0].) (See 01-02-13 OBD DRIVE MODE [SKYACTIV-G 2.0].) • Is the PENDING CODE for this DTC present?	Yes	Repeat the inspection from Step 1. • If the malfunction recurs, replace the PCM. (See 01-40-10 PCM REMOVAL/INSTALLATION [SKYACTIV-G 2.0].) Go to the next step.
		No	Go to the next step.
9	**VERIFY AFTER REPAIR PROCEDURE** • Perform the “AFTER REPAIR PROCEDURE”. (See 01-02-12 AFTER REPAIR PROCEDURE [SKYACTIV-G 2.0].) • Are any DTCs present?	Yes	Go to the applicable DTC inspection. (See 01-02-14 DTC TABLE [SKYACTIV-G 2.0].)
		No	DTC troubleshooting completed.

ON-BOARD DIAGNOSTIC [SKYACTIV-G 2.0]

DTC P2243:00 [SKYACTIV-G 2.0]

id0102h1303600

DTC P2243:00	A/F sensor reference voltage circuit open
DETECTION CONDITION	• The PCM monitors the A/F sensor signal voltage at the PCM terminal 1W. If either of the following conditions is met, the PCM determines that the A/F sensor reference voltage circuit is open. — The PCM terminal 1W voltage is **above 5.3 V** for **30 s**. — The PCM detects DTC P0134:00 while the pending code P2243:00 is stored. **MONITORING CONDITIONS** — Drive Mode 03 (Variable Valve Timing, A/F Sensor Heater, HO2S Heater, A/F Sensor, HO2S and TWC Repair Verification Drive Mode) — Following conditions are met: • Engine is running • Battery voltage: **11—18 V** • A/F sensor element impedance: specified or more **Diagnostic support note** • This is a continuous monitor (A/F sensor, HO2S). • The check engine light illuminates if the PCM detects the above malfunction condition in two consecutive drive cycles or in one drive cycle while the DTC for the same malfunction has been stored in the PCM. • PENDING CODE is available if the PCM detects the above malfunction condition during first drive cycle. • FREEZE FRAME DATA (Mode 2)/Snapshot data is available. • The DTC is stored in the PCM memory.
FAIL-SAFE FUNCTION	• Fixes the duty value of the A/F sensor heater. • Stops the fuel feedback control.
POSSIBLE CAUSE	• A/F sensor connector or terminals malfunction • PCM connector or terminals malfunction • Open circuit in wiring harness between A/F sensor terminal F and PCM terminal 1W • A/F sensor malfunction • PCM malfunction

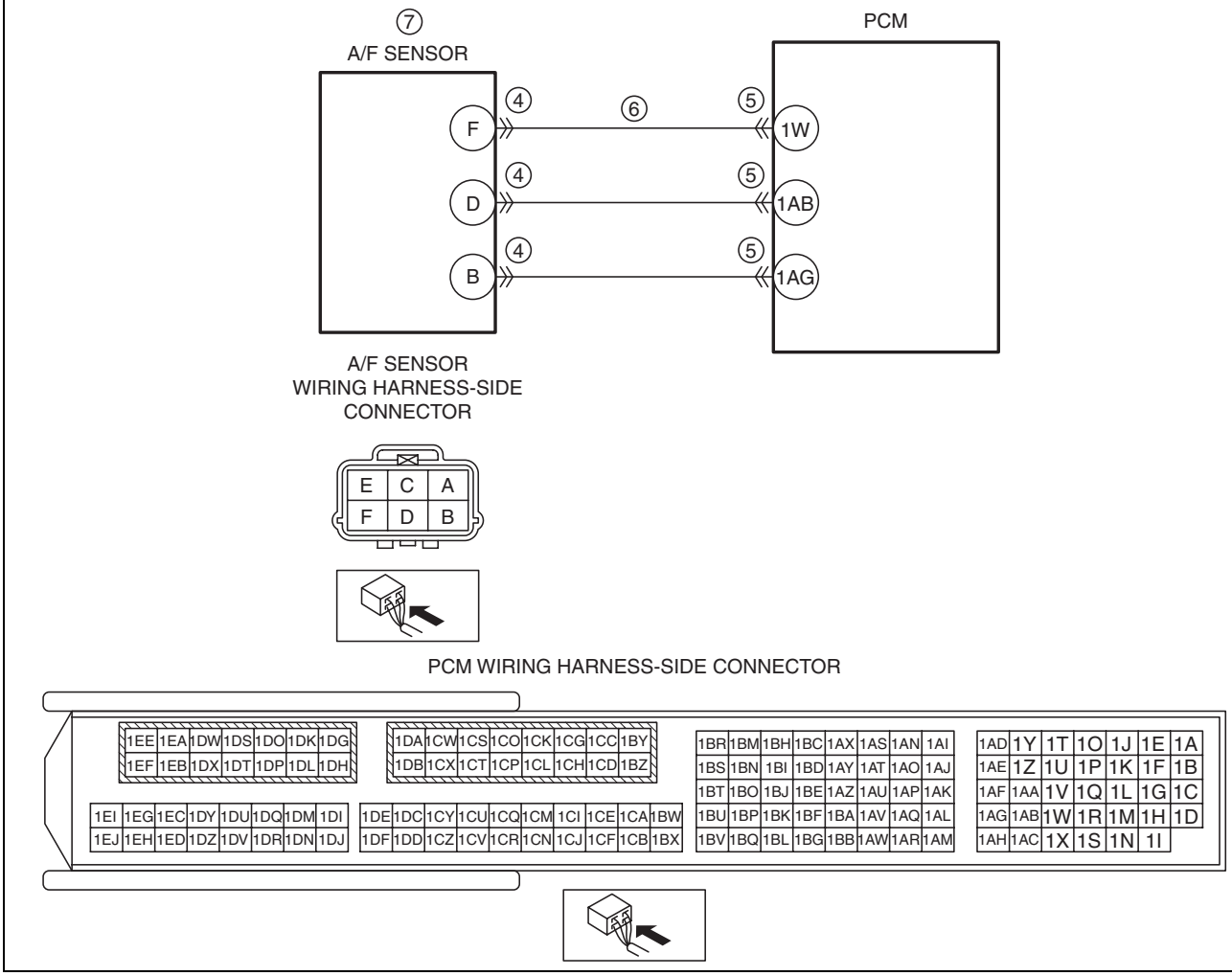

ON-BOARD DIAGNOSTIC [SKYACTIV-G 2.0]

Diagnostic Procedure

STEP	INSPECTION		ACTION
1	**IDENTIFY TRIGGER DTC FOR FREEZE FRAME DATA (MODE 2)** • Perform the Freeze Frame PID Data Access Procedure. (See 01-02-8 ON-BOARD DIAGNOSTIC TEST [SKYACTIV-G 2.0].) • Is the DTC P2243:00 on FREEZE FRAME DATA (Mode 2)?	Yes	Go to the next step.
		No	Go to the troubleshooting procedure for DTC on FREEZE FRAME DATA (Mode 2). (See 01-02-14 DTC TABLE [SKYACTIV-G 2.0].)
2	**VERIFY FREEZE FRAME DATA (MODE 2)/ SNAPSHOT DATA AND DIAGNOSTIC MONITORING TEST RESULTS HAVE BEEN RECORDED** • Have the FREEZE FRAME DATA (Mode 2)/ snapshot data and DIAGNOSTIC MONITORING TEST RESULTS (A/F sensor, HO2S related) been recorded?	Yes	Go to the next step.
		No	Record the FREEZE FRAME DATA (Mode 2)/snapshot data and DIAGNOSTIC MONITORING TEST RESULTS on the repair order, then go to the next step.
3	**VERIFY RELATED SERVICE INFORMATION AVAILABILITY** • Verify related Service Information availability. • Is any related Service Information available?	Yes	Perform repair or diagnosis according to the available Service Information. • If the vehicle is not repaired, go to the next step.
		No	Go to the next step.
4	**INSPECT A/F SENSOR CONNECTOR CONDITION** • Switch the ignition to off. • Disconnect the A/F sensor connector. • Inspect for poor connection (such as damaged/ pulled-out pins, corrosion). • Is there any malfunction?	Yes	Repair or replace the connector and/or terminals, then go to Step 8.
		No	Go to the next step.
5	**INSPECT PCM CONNECTOR CONDITION** • Disconnect the PCM connector. • Inspect for poor connection (such as damaged/ pulled-out pins, corrosion). • Is there any malfunction?	Yes	Repair or replace the connector and/or terminals, then go to Step 8.
		No	Go to the next step.
6	**INSPECT A/F SENSOR REFERENCE VOLTAGE CIRCUIT FOR OPEN CIRCUIT** • Verify that the A/F sensor and PCM connectors are disconnected. • Inspect for continuity between A/F sensor terminal F (wiring harness-side) and PCM terminal 1W (wiring harness-side). • Is there continuity?	Yes	Go to the next step.
		No	Repair or replace the wiring harness for a possible open circuit, then go to Step 8.
7	**INSPECT A/F SENSOR** • Reconnect all disconnected connectors. • Inspect the A/F sensor. (See 01-40-55 AIR FUEL RATIO (A/F) SENSOR INSPECTION [SKYACTIV-G 2.0].) • Is there any malfunction?	Yes	Replace the A/F sensor, then go to the next step. (See 01-40-52 AIR FUEL RATIO (A/F) SENSOR REMOVAL/INSTALLATION [SKYACTIV-G 2.0].)
		No	Go to the next step.

ON-BOARD DIAGNOSTIC [SKYACTIV-G 2.0]

STEP	INSPECTION		ACTION
8	**VERIFY DTC TROUBLESHOOTING COMPLETED** • Make sure to reconnect all disconnected connectors. • Clear the DTC from the PCM memory using the M-MDS. (See 01-02-12 AFTER REPAIR PROCEDURE [SKYACTIV-G 2.0].) • Perform the KOER self test or Drive Mode 03 (Variable Valve Timing, A/F Sensor Heater, HO2S Heater, A/F Sensor, HO2S and TWC Repair Verification Drive Mode). (See 01-02-12 KOEO/KOER SELF TEST [SKYACTIV-G 2.0].) (See 01-02-13 OBD DRIVE MODE [SKYACTIV-G 2.0].) • Is the PENDING CODE for this DTC present?	Yes	Repeat the inspection from Step 1. • If the malfunction recurs, replace the PCM. (See 01-40-10 PCM REMOVAL/INSTALLATION [SKYACTIV-G 2.0].) Go to the next step.
		No	Go to the next step.
9	**VERIFY AFTER REPAIR PROCEDURE** • Perform the “AFTER REPAIR PROCEDURE”. (See 01-02-12 AFTER REPAIR PROCEDURE [SKYACTIV-G 2.0].) • Are any DTCs present?	Yes	Go to the applicable DTC inspection. (See 01-02-14 DTC TABLE [SKYACTIV-G 2.0].)
		No	DTC troubleshooting completed.

ON-BOARD DIAGNOSTIC [SKYACTIV-G 2.0]

DTC P2251:00 [SKYACTIV-G 2.0]

id0102h1851300

DTC P2251:00	**A/F sensor negative current control circuit open**
DETECTION CONDITION	• The PCM monitors the A/F sensor signal voltage at the PCM terminal 1W. If either of the following conditions is met, the PCM determines that the A/F sensor negative current control circuit is open. **MONITORING CONDITIONS** — Circuit voltage oscillation or the PCM terminal 1W voltage is **below 5.3 V**. — The PCM detects the DTC P0134:00 while the pending code P2251:00 is stored. — A/F sensor element impedance: specified or more — Battery voltage: **11—18 V** **Diagnostic support note** • This is a continuous monitor (A/F sensor, HO2S). • The check engine light illuminates if the PCM detects the above malfunction condition in two consecutive drive cycles or in one drive cycle while the DTC for the same malfunction has been stored in the PCM. • PENDING CODE is available if the PCM detects the above malfunction condition during first drive cycle. • FREEZE FRAME DATA (Mode 2)/Snapshot data is available. • The DTC is stored in the PCM memory.
FAIL-SAFE FUNCTION	• Fixes the duty value of the A/F sensor heater. • Stops the fuel feedback control.
POSSIBLE CAUSE	• A/F sensor connector or terminals malfunction • PCM connector or terminals malfunction • Open circuit in wiring harness between A/F sensor terminal D and PCM terminal 1AB • A/F sensor malfunction • PCM malfunction

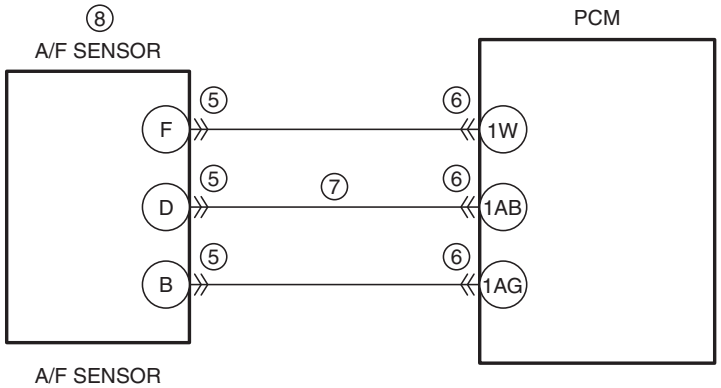

A/F SENSOR WIRING HARNESS-SIDE CONNECTOR

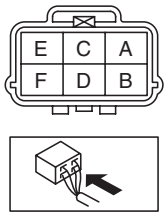

PCM WIRING HARNESS-SIDE CONNECTOR

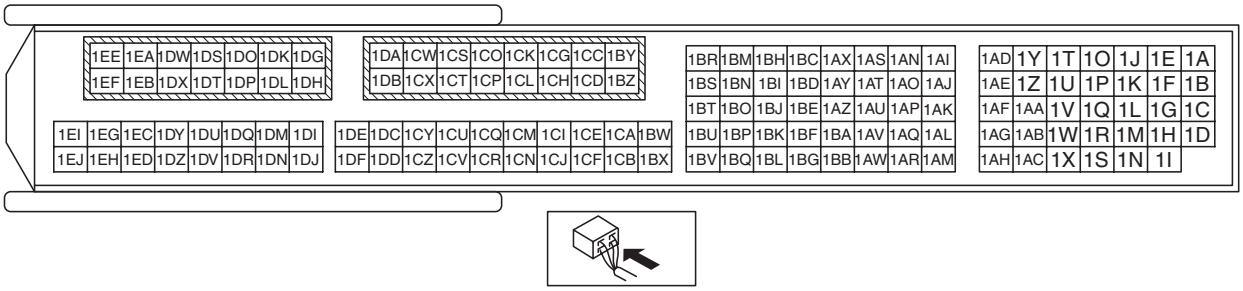

ON-BOARD DIAGNOSTIC [SKYACTIV-G 2.0]

Diagnostic Procedure

STEP	INSPECTION		ACTION
1	**IDENTIFY TRIGGER DTC FOR FREEZE FRAME DATA (MODE 2)** • Perform the Freeze Frame PID Data Access Procedure. (See 01-02-8 ON-BOARD DIAGNOSTIC TEST [SKYACTIV-G 2.0].) • Is the DTC P2251:00 on FREEZE FRAME DATA (Mode 2)?	Yes	Go to the next step.
		No	Go to the troubleshooting procedure for DTC on FREEZE FRAME DATA (Mode 2). (See 01-02-14 DTC TABLE [SKYACTIV-G 2.0].)
2	**VERIFY FREEZE FRAME DATA (MODE 2)/ SNAPSHOT DATA AND DIAGNOSTIC MONITORING TEST RESULTS HAVE BEEN RECORDED** • Have the FREEZE FRAME DATA (Mode 2)/ snapshot data and DIAGNOSTIC MONITORING TEST RESULTS (A/F sensor, HO2S related) been recorded?	Yes	Go to the next step.
		No	Record the FREEZE FRAME DATA (Mode 2)/snapshot data and DIAGNOSTIC MONITORING TEST RESULTS on the repair order, then go to the next step.
3	**VERIFY RELATED SERVICE INFORMATION AVAILABILITY** • Verify related Service Information availability. • Is any related Service Information available?	Yes	Perform repair or diagnosis according to the available Service Information. • If the vehicle is not repaired, go to the next step.
		No	Go to the next step.
4	**VERIFY RELATED PENDING CODE AND/OR DTC** • Switch the ignition to off, then to ON (engine off). • Perform the Pending Trouble Code Access Procedure and DTC Reading Procedure. (See 01-02-8 ON-BOARD DIAGNOSTIC TEST [SKYACTIV-G 2.0].) • Is the PENDING CODE/DTC P0031:00 or P0032:00 also present?	Yes	Go to the applicable PENDING CODE or DTC inspection. (See 01-02-41 DTC P0031:00 [SKYACTIV-G 2.0].) (See 01-02-44 DTC P0032:00 [SKYACTIV-G 2.0].)
		No	Go to the next step.
5	**INSPECT A/F SENSOR CONNECTOR CONDITION** • Switch the ignition to off. • Disconnect the A/F sensor connector. • Inspect for poor connection (such as damaged/ pulled-out pins, corrosion). • Is there any malfunction?	Yes	Repair or replace the connector and/or terminals, then go to Step 9.
		No	Go to the next step.
6	**INSPECT PCM CONNECTOR CONDITION** • Disconnect the PCM connector. • Inspect for poor connection (such as damaged/ pulled-out pins, corrosion). • Is there any malfunction?	Yes	Repair or replace the connector and/or terminals, then go to Step 9.
		No	Go to the next step.
7	**INSPECT A/F SENSOR NEGATIVE CURRENT CONTROL CIRCUIT FOR OPEN CIRCUIT** • Verify that the A/F sensor and PCM connectors are disconnected. • Inspect for continuity between A/F sensor terminal D (wiring harness-side) and PCM terminal 1AB (wiring harness-side). • Is there continuity?	Yes	Go to the next step.
		No	Repair or replace the wiring harness for a possible open circuit, then go to Step 9.
8	**INSPECT A/F SENSOR** • Reconnect all disconnected connectors. • Inspect the A/F sensor. (See 01-40-55 AIR FUEL RATIO (A/F) SENSOR INSPECTION [SKYACTIV-G 2.0].) • Is there any malfunction?	Yes	Replace the A/F sensor, then go to the next step. (See 01-40-52 AIR FUEL RATIO (A/F) SENSOR REMOVAL/INSTALLATION [SKYACTIV-G 2.0].)
		No	Go to the next step.

ON-BOARD DIAGNOSTIC [SKYACTIV-G 2.0]

STEP	INSPECTION		ACTION
9	**VERIFY DTC TROUBLESHOOTING COMPLETED** • Make sure to reconnect all disconnected connectors. • Clear the DTC from the PCM memory using the M-MDS. (See 01-02-12 AFTER REPAIR PROCEDURE [SKYACTIV-G 2.0].) • Perform the KOER self test or Drive Mode 03 (Variable Valve Timing, A/F Sensor Heater, HO2S Heater, A/F Sensor, HO2S and TWC Repair Verification Drive Mode). (See 01-02-12 KOEO/KOER SELF TEST [SKYACTIV-G 2.0].) (See 01-02-13 OBD DRIVE MODE [SKYACTIV-G 2.0].) • Is the PENDING CODE for this DTC present?	Yes	Repeat the inspection from Step 1. • If the malfunction recurs, replace the PCM. (See 01-40-10 PCM REMOVAL/INSTALLATION [SKYACTIV-G 2.0].) Go to the next step.
		No	Go to the next step.
10	**VERIFY AFTER REPAIR PROCEDURE** • Perform the “AFTER REPAIR PROCEDURE”. (See 01-02-12 AFTER REPAIR PROCEDURE [SKYACTIV-G 2.0].) • Are any DTCs present?	Yes	Go to the applicable DTC inspection. (See 01-02-14 DTC TABLE [SKYACTIV-G 2.0].)
		No	DTC troubleshooting completed.

ON-BOARD DIAGNOSTIC [SKYACTIV-G 2.0]

DTC P2299:00 [SKYACTIV-G 2.0]

id0102h1327200

DTC P2299:00	**Accelerator pedal: spring back malfunction**
DETECTION CONDITION	• Brake override system operates. **Diagnostic support note** • This is a continuous monitor (other). • The check engine light does not illuminate. • FREEZE FRAME DATA (Mode 2)/Snapshot data is not available. • The DTC is stored in the PCM memory.
FAIL-SAFE FUNCTION	• Controls the throttle valve so that the engine speed is at specification*. (Brake override system) *: For MTX vehicles, engine speed is **1,200 rpm** when in neutral, and **1,100 rpm** when not in neutral. For ATX vehicles, engine speed is **1,200 rpm** when in N position, and **1,100 rpm** when in D position.
POSSIBLE CAUSE	• Driver depresses accelerator and brake pedals simultaneously (during braking operation using left foot) • Accelerator pedal is pressed in by object such as floor mat • Accelerator pedal sticking • APP sensor signal malfunction — APP sensor malfunction — Related connector or terminals malfunction — Related wiring harness malfunction • Brake switch signal malfunction — Brake switch malfunction — Related connector or terminals malfunction — Related wiring harness malfunction — Brake pedal malfunction (increase in play due to joint pin wear) • PCM malfunction
SYSTEM WIRING DIAGRAM	—

Diagnostic Procedure

STEP	INSPECTION		ACTION
1	**VERIFY RELATED SERVICE INFORMATION AVAILABILITY** • Verify related Service Information availability. • Is any related Service Information available?	Yes	Perform repair or diagnosis according to the available Service Information. • If the vehicle is not repaired, go to the next step.
		No	Go to the next step.
2	**VERIFY DTC REPEATABILITY** • Clear the DTC from the PCM memory using the M-MDS. (See 01-02-12 AFTER REPAIR PROCEDURE [SKYACTIV-G 2.0].) • Perform the KOER self test. (See 01-02-12 KOEO/KOER SELF TEST [SKYACTIV-G 2.0].) • Is the same DTC present?	Yes	Go to the next step.
		No	DTC troubleshooting completed. • Explain to the customer that P2299:00 is stored by the brake override system operation.
3	**VERIFY CONDITION OF FLOOR MAT** • Is the condition of the driver side floor mat one of the following? — Floor mat is doubled over — Floor mat is spread against the accelerator pedal	Yes	Explain to the customer that the floor mat is preventing the accelerator pedal from springing back after release. • Go to Step 11.
		No	Go to the next step.
4	**INSPECT APP SENSOR** • Is the condition of the accelerator pedal one of the following? — Accelerator pedal sticking has occurred when operated — There is evidence of accelerator pedal disassembly	Yes	Replace the accelerator pedal, then go to Step 11. (See 01-13A-14 ACCELERATOR PEDAL REMOVAL/INSTALLATION [SKYACTIV-G 2.0].)
		No	Go to the next step.
5	**VERIFY CURRENT INPUT SIGNAL STATUS OF APP SENSOR** • Access the APP PID using the M-MDS. (See 01-02-8 ON-BOARD DIAGNOSTIC TEST [SKYACTIV-G 2.0].) • Is the value for PID APP **0 %** when the accelerator pedal is not depressed? • Does the value for PID APP change when the accelerator pedal is continually depressed?	Yes	Go to Step 7.
		No	Go to the next step.

ON-BOARD DIAGNOSTIC [SKYACTIV-G 2.0]

STEP	INSPECTION		ACTION
6	**INSPECT APP SENSOR RELATED WIRING HARNESS AND CONNECTOR** • Inspect the wiring harness related to the APP sensor for connector disconnection, short circuit, and poor contact. • Is there any malfunction?	Yes	Repair or replace the malfunctioning part according to the inspection results, then go to Step 11.
		No	APP sensor malfunction. • Replace the accelerator pedal, then go to Step 11. (See 01-13A-14 ACCELERATOR PEDAL REMOVAL/INSTALLATION [SKYACTIV-G 2.0].)
7	**VERIFY CURRENT INPUT SIGNAL STATUS OF BRAKE SWITCH** • Access the following PIDs using the M-MDS: (See 01-02-8 ON-BOARD DIAGNOSTIC TEST [SKYACTIV-G 2.0].) — BOO — BPA • Are all PIDs normal?	Yes	Go to Step 10.
		No	Go to the next step.
8	**INSPECT BRAKE SWITCH** • Inspect the brake switch. (See 04-11-11 BRAKE SWITCH INSPECTION.) • Is there any malfunction?	Yes	Replace the brake switch, then go to Step 11. (See 04-11-9 BRAKE PEDAL REMOVAL/INSTALLATION [R.H.D.].) (See 04-11-8 BRAKE PEDAL REMOVAL/INSTALLATION [L.H.D.].)
		No	Go to the next step.
9	**INSPECT BRAKE PEDAL PLAY AMOUNT** • Inspect the brake pedal play amount. (See 04-11-7 BRAKE PEDAL INSPECTION.) • Is the amount of brake pedal play normal?	Yes	Inspect the wiring harness related to the brake switch for connector disconnection, short circuit, and poor contact. • If there is any malfunction: — Repair or replace the malfunctioning part according to the inspection results, then go to Step 11.
		No	Repair or replace the malfunctioning part according to the inspection results, then go to Step 11.
10	**VERIFY IF A DTC RELATED TO DRIVE-BY-WIRE CONTROL IS DETECTED** • Perform the KOER self test. (See 01-02-12 KOEO/KOER SELF TEST [SKYACTIV-G 2.0].) • Is a DTC related to the drive-by-wire control present?	Yes	Go to the applicable DTC inspection. (See 01-02-14 DTC TABLE [SKYACTIV-G 2.0].)
		No	It is possible that the accelerator and brake pedals have been depressed simultaneously. (during braking operation using left foot) • Go to the next step.
11	**VERIFY DTC TROUBLESHOOTING COMPLETED** • Make sure to reconnect all disconnected connectors. • Clear the DTC from the PCM memory using the M-MDS. (See 01-02-12 AFTER REPAIR PROCEDURE [SKYACTIV-G 2.0].) • Perform the KOER self test. (See 01-02-12 KOEO/KOER SELF TEST [SKYACTIV-G 2.0].) • Is the same DTC present?	Yes	Repeat the inspection from Step 1. • If the malfunction recurs, replace the PCM. (See 01-40-10 PCM REMOVAL/INSTALLATION [SKYACTIV-G 2.0].) Go to the next step.
		No	Go to the next step.
12	**VERIFY AFTER REPAIR PROCEDURE** • Perform the “AFTER REPAIR PROCEDURE”. (See 01-02-12 AFTER REPAIR PROCEDURE [SKYACTIV-G 2.0].) • Are any DTCs present?	Yes	Go to the applicable DTC inspection. (See 01-02-14 DTC TABLE [SKYACTIV-G 2.0].)
		No	DTC troubleshooting completed.

ON-BOARD DIAGNOSTIC [SKYACTIV-G 2.0]

DTC P2302:00 [SKYACTIV-G 2.0]

id0102h1743000

DTC P2302:00	**Ion sensor No.1 circuit problem**
DETECTION CONDITION	• After the engine is started, when the engine speed is **2,000 rpm or less**, the signal input to the PCM from ion sensor No.1 is in error. **Diagnostic support note** • This is a continuous monitor (other). • The check engine light does not illuminate. • FREEZE FRAME DATA (Mode 2)/Snapshot data is not available. • The DTC is stored in the PCM memory.
FAIL-SAFE FUNCTION	—
POSSIBLE CAUSE	• Cylinder No.1 misfire • Ignition coil/ion sensor No.1 connector or terminals malfunction • Short to ground or open circuit in ion sensor No.1 power supply circuit — Short to ground in wiring harness between ENGINE2 15 A fuse and ignition coil/ion sensor No.1 terminal A — ENGINE2 15 A fuse malfunction — Open circuit in wiring harness between main relay terminal C and ignition coil/ion sensor No.1 terminal A • Open circuit in wiring harness between ignition coil/ion sensor No.1 terminal D and body ground • Short to ground in wiring harness between ignition coil/ion sensor No.1 terminal C and PCM terminal 1BK • PCM connector or terminals malfunction • Short to power supply in wiring harness between ignition coil/ion sensor No.1 terminal C and PCM terminal 1BK • Open circuit in wiring harness between ignition coil/ion sensor No.1 terminal C and PCM terminal 1BK • Ion sensor No.1 malfunction • PCM malfunction

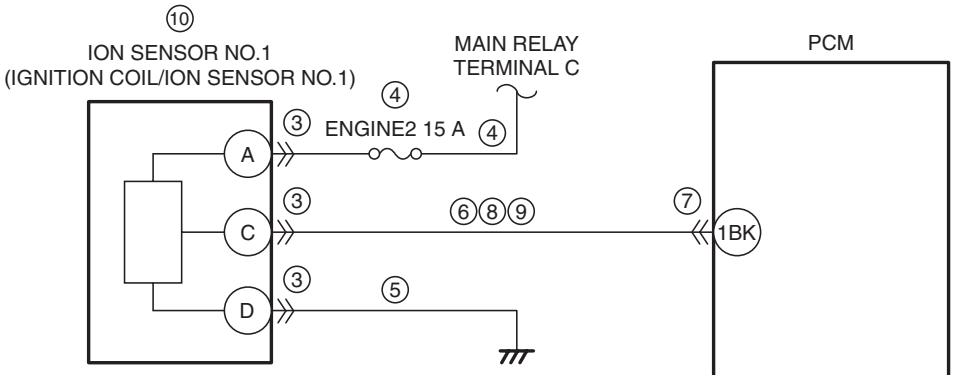

IGNITION COIL/ION SENSOR NO.1 WIRING HARNESS-SIDE CONNECTOR

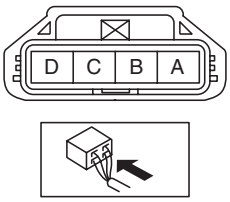

PCM WIRING HARNESS-SIDE CONNECTOR

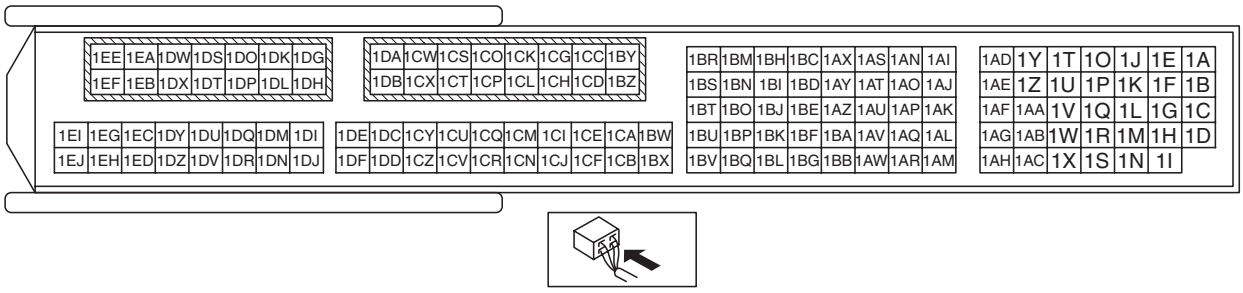

ON-BOARD DIAGNOSTIC [SKYACTIV-G 2.0]

Diagnostic Procedure

STEP	INSPECTION		ACTION
1	**VERIFY RELATED SERVICE INFORMATION AVAILABILITY** • Verify related Service Information availability. • Is any related Service Information available?	Yes	Perform repair or diagnosis according to the available Service Information. • If the vehicle is not repaired, go to the next step.
		No	Go to the next step.
2	**VERIFY RELATED PENDING CODE AND/OR DTC** • Switch the ignition to off, then to ON (engine off). • Perform the Pending Trouble Code Access Procedure and DTC Reading Procedure. (See 01-02-8 ON-BOARD DIAGNOSTIC TEST [SKYACTIV-G 2.0].) • Is the PENDING CODE/DTC P0301:00 also present?	Yes	Go to the applicable PENDING CODE or DTC inspection. (See 01-02-182 DTC P0301:00, P0302:00, P0303:00, P0304:00 [SKYACTIV-G 2.0].)
		No	Go to the next step.
3	**INSPECT IGNITION COIL/ION SENSOR NO.1 CONNECTOR CONDITION** • Switch the ignition to off. • Disconnect the ignition coil/ion sensor No.1 connector. • Inspect for poor connection (such as damaged/ pulled-out pins, corrosion). • Is there any malfunction?	Yes	Repair or replace the connector and/or terminals, then go to Step 11.
		No	Go to the next step.
4	**INSPECT ION SENSOR NO.1 POWER SUPPLY CIRCUIT FOR SHORT TO GROUND OR OPEN CIRCUIT** • Verify that the ignition coil/ion sensor No.1 connector is disconnected. • Switch the ignition ON (engine off or on). • Measure the voltage at the ignition coil/ion sensor No.1 terminal A (wiring harness-side). • Is the voltage **B+**?	Yes	Go to the next step.
		No	Inspect the ENGINE2 15 A fuse. • If the fuse is blown: — Repair or replace the wiring harness for a possible short to ground. — Replace the fuse. • If the fuse is deteriorated: — Replace the fuse. • If the fuse is normal: — Repair or replace the wiring harness for a possible open circuit. Go to Step 11.
5	**INSPECT ION SENSOR NO.1 GROUND CIRCUIT FOR OPEN CIRCUIT** • Verify that the ignition coil/ion sensor No.1 connector is disconnected. • Switch the ignition to off. • Inspect for continuity between ignition coil/ion sensor No.1 terminal D (wiring harness-side) and body ground. • Is there continuity?	Yes	Go to the next step.
		No	Repair or replace the wiring harness for a possible open circuit, then go to Step 11.
6	**INSPECT ION SENSOR NO.1 SIGNAL CIRCUIT FOR SHORT TO GROUND** • Verify that the ignition coil/ion sensor No.1 connector is disconnected. • Inspect for continuity between ignition coil/ion sensor No.1 terminal C (wiring harness-side) and body ground. • Is there continuity?	Yes	If the short to ground circuit could be detected in the wiring harness: • Repair or replace the wiring harness for a possible short to ground. If the short to ground circuit could not be detected in the wiring harness: • Replace the PCM (short to ground in the PCM internal circuit). (See 01-40-10 PCM REMOVAL/INSTALLATION [SKYACTIV-G 2.0].) Go to Step 11.
		No	Go to the next step.
7	**INSPECT PCM CONNECTOR CONDITION** • Disconnect the PCM connector. • Inspect for poor connection (such as damaged/ pulled-out pins, corrosion). • Is there any malfunction?	Yes	Repair or replace the connector and/or terminals, then go to Step 11.
		No	Go to the next step.

ON-BOARD DIAGNOSTIC [SKYACTIV-G 2.0]

STEP	INSPECTION		ACTION
8	**INSPECT ION SENSOR NO.1 SIGNAL CIRCUIT FOR SHORT TO POWER SUPPLY** • Verify that the ignition coil/ion sensor No.1 and PCM connectors are disconnected. • Switch the ignition ON (engine off or on). • Measure the voltage at the ignition coil/ion sensor No.1 terminal C (wiring harness-side). • Is the voltage **0 V**?	Yes	Go to the next step.
		No	Repair or replace the wiring harness for a possible short to power supply, then go to Step 11.
9	**INSPECT ION SENSOR NO.1 SIGNAL CIRCUIT FOR OPEN CIRCUIT** • Verify that the ignition coil/ion sensor No.1 and PCM connectors are disconnected. • Switch the ignition to off. • Inspect for continuity between ignition coil/ion sensor No.1 terminal C (wiring harness-side) and PCM terminal 1BK (wiring harness-side). • Is there continuity?	Yes	Go to the next step.
		No	Repair or replace the wiring harness for a possible open circuit, then go to Step 11.
10	**INSPECT ION SENSOR NO.1** • Inspect the ion sensor No.1. (See 01-40-68 ION SENSOR INSPECTION [SKYACTIV-G 2.0].) • Is there any malfunction?	Yes	Replace the ignition coil/ion sensor No.1, then go to the next step. (See 01-18-2 IGNITION COIL/ION SENSOR REMOVAL/INSTALLATION [SKYACTIV-G 2.0].)
		No	Go to the next step.
11	**VERIFY DTC TROUBLESHOOTING COMPLETED** • Make sure to reconnect all disconnected connectors. • Clear the DTC from the PCM memory using the M-MDS. (See 01-02-12 AFTER REPAIR PROCEDURE [SKYACTIV-G 2.0].) • Start the engine. • Perform the KOER self test. (See 01-02-12 KOEO/KOER SELF TEST [SKYACTIV-G 2.0].) • Is the same DTC present?	Yes	Repeat the inspection from Step 1. • If the malfunction recurs, replace the PCM. (See 01-40-10 PCM REMOVAL/INSTALLATION [SKYACTIV-G 2.0].) Go to the next step.
		No	Go to the next step.
12	**VERIFY AFTER REPAIR PROCEDURE** • Perform the “AFTER REPAIR PROCEDURE”. (See 01-02-12 AFTER REPAIR PROCEDURE [SKYACTIV-G 2.0].) • Are any DTCs present?	Yes	Go to the applicable DTC inspection. (See 01-02-14 DTC TABLE [SKYACTIV-G 2.0].)
		No	DTC troubleshooting completed.

ON-BOARD DIAGNOSTIC [SKYACTIV-G 2.0]

DTC P2305:00 [SKYACTIV-G 2.0]

id0102h1743100

DTC P2305:00	**Ion sensor No.2 circuit problem**
DETECTION CONDITION	• After the engine is started, when the engine speed is **2,000 rpm or less**, the signal input to the PCM from ion sensor No.2 is in error. **Diagnostic support note** • This is a continuous monitor (other). • The check engine light does not illuminate. • FREEZE FRAME DATA (Mode 2)/Snapshot data is not available. • The DTC is stored in the PCM memory.
FAIL-SAFE FUNCTION	—
POSSIBLE CAUSE	• Cylinder No.2 misfire • Ignition coil/ion sensor No.2 connector or terminals malfunction • Short to ground or open circuit in ion sensor No.2 power supply circuit — Short to ground in wiring harness between ENGINE2 15 A fuse and ignition coil/ion sensor No.2 terminal A — ENGINE2 15 A fuse malfunction — Open circuit in wiring harness between main relay terminal C and ignition coil/ion sensor No.2 terminal A • Open circuit in wiring harness between ignition coil/ion sensor No.2 terminal D and body ground • Short to ground in wiring harness between ignition coil/ion sensor No.2 terminal C and PCM terminal 1BF • PCM connector or terminals malfunction • Short to power supply in wiring harness between ignition coil/ion sensor No.2 terminal C and PCM terminal 1BF • Open circuit in wiring harness between ignition coil/ion sensor No.2 terminal C and PCM terminal 1BF • Ion sensor No.2 malfunction • PCM malfunction

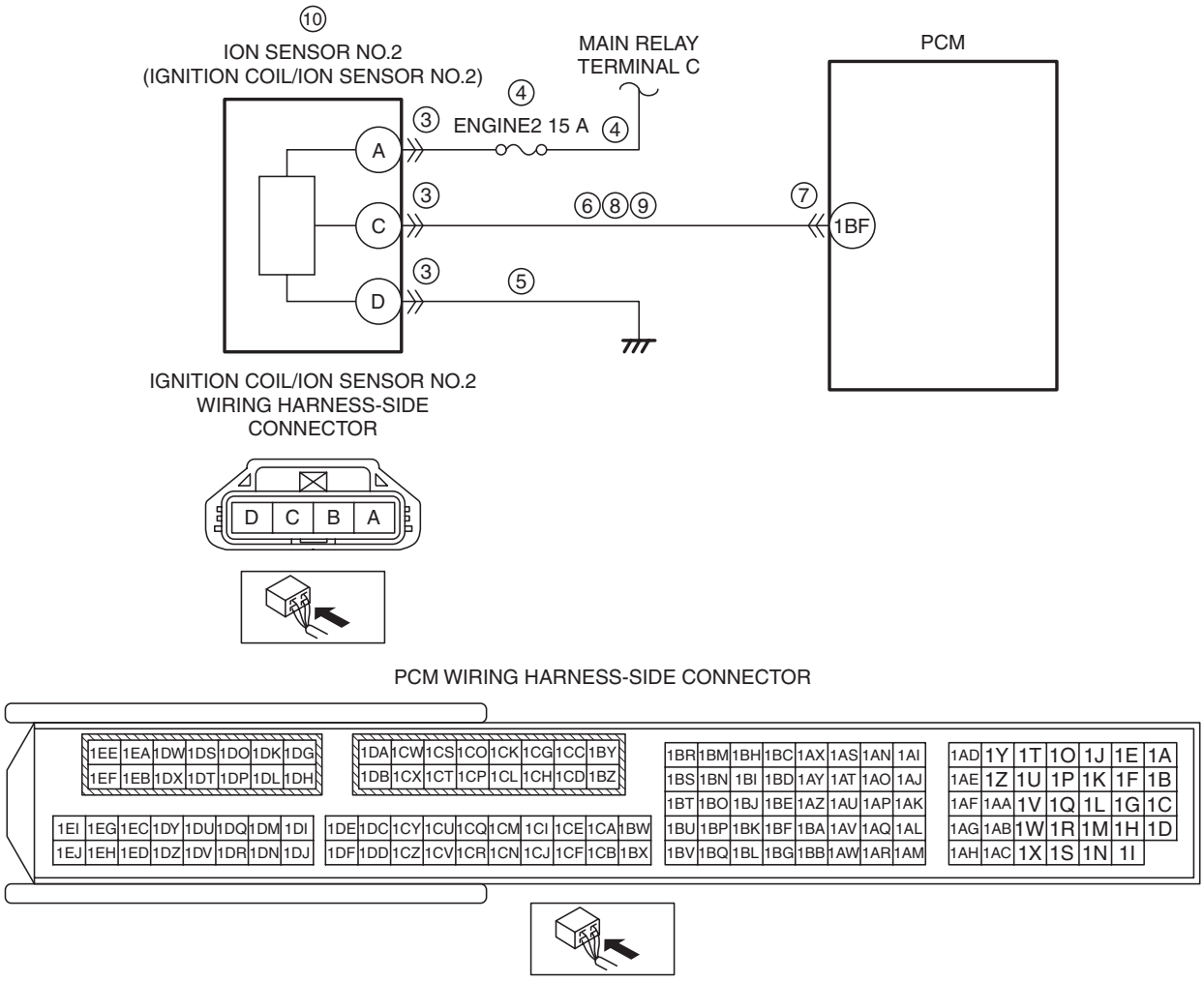

ON-BOARD DIAGNOSTIC [SKYACTIV-G 2.0]

Diagnostic Procedure

STEP	INSPECTION		ACTION
1	**VERIFY RELATED SERVICE INFORMATION AVAILABILITY** • Verify related Service Information availability. • Is any related Service Information available?	Yes	Perform repair or diagnosis according to the available Service Information. • If the vehicle is not repaired, go to the next step.
		No	Go to the next step.
2	**VERIFY RELATED PENDING CODE AND/OR DTC** • Switch the ignition to off, then to ON (engine off). • Perform the Pending Trouble Code Access Procedure and DTC Reading Procedure. (See 01-02-8 ON-BOARD DIAGNOSTIC TEST [SKYACTIV-G 2.0].) • Is the PENDING CODE/DTC P0302:00 also present?	Yes	Go to the applicable PENDING CODE or DTC inspection. (See 01-02-182 DTC P0301:00, P0302:00, P0303:00, P0304:00 [SKYACTIV-G 2.0].)
		No	Go to the next step.
3	**INSPECT IGNITION COIL/ION SENSOR NO.2 CONNECTOR CONDITION** • Switch the ignition to off. • Disconnect the ignition coil/ion sensor No.2 connector. • Inspect for poor connection (such as damaged/ pulled-out pins, corrosion). • Is there any malfunction?	Yes	Repair or replace the connector and/or terminals, then go to Step 11.
		No	Go to the next step.
4	**INSPECT ION SENSOR NO.2 POWER SUPPLY CIRCUIT FOR SHORT TO GROUND OR OPEN CIRCUIT** • Verify that the ignition coil/ion sensor No.2 connector is disconnected. • Switch the ignition ON (engine off or on). • Measure the voltage at the ignition coil/ion sensor No.2 terminal A (wiring harness-side). • Is the voltage **B+**?	Yes	Go to the next step.
		No	Inspect the ENGINE2 15 A fuse. • If the fuse is blown: — Repair or replace the wiring harness for a possible short to ground. — Replace the fuse. • If the fuse is deteriorated: — Replace the fuse. • If the fuse is normal: — Repair or replace the wiring harness for a possible open circuit. Go to Step 11.
5	**INSPECT ION SENSOR NO.2 GROUND CIRCUIT FOR OPEN CIRCUIT** • Verify that the ignition coil/ion sensor No.2 connector is disconnected. • Switch the ignition to off. • Inspect for continuity between ignition coil/ion sensor No.2 terminal D (wiring harness-side) and body ground. • Is there continuity?	Yes	Go to the next step.
		No	Repair or replace the wiring harness for a possible open circuit, then go to Step 11.
6	**INSPECT ION SENSOR NO.2 SIGNAL CIRCUIT FOR SHORT TO GROUND** • Verify that the ignition coil/ion sensor No.2 connector is disconnected. • Inspect for continuity between ignition coil/ion sensor No.2 terminal C (wiring harness-side) and body ground. • Is there continuity?	Yes	If the short to ground circuit could be detected in the wiring harness: • Repair or replace the wiring harness for a possible short to ground. If the short to ground circuit could not be detected in the wiring harness: • Replace the PCM (short to ground in the PCM internal circuit). (See 01-40-10 PCM REMOVAL/INSTALLATION [SKYACTIV-G 2.0].) Go to Step 11.
		No	Go to the next step.
7	**INSPECT PCM CONNECTOR CONDITION** • Disconnect the PCM connector. • Inspect for poor connection (such as damaged/ pulled-out pins, corrosion). • Is there any malfunction?	Yes	Repair or replace the connector and/or terminals, then go to Step 11.
		No	Go to the next step.

ON-BOARD DIAGNOSTIC [SKYACTIV-G 2.0]

STEP	INSPECTION		ACTION
8	**INSPECT ION SENSOR NO.2 SIGNAL CIRCUIT FOR SHORT TO POWER SUPPLY** • Verify that the ignition coil/ion sensor No.2 and PCM connectors are disconnected. • Switch the ignition ON (engine off or on). • Measure the voltage at the ignition coil/ion sensor No.2 terminal C (wiring harness-side). • Is the voltage **0 V**?	Yes	Go to the next step.
		No	Repair or replace the wiring harness for a possible short to power supply, then go to Step 11.
9	**INSPECT ION SENSOR NO.2 SIGNAL CIRCUIT FOR OPEN CIRCUIT** • Verify that the ignition coil/ion sensor No.2 and PCM connectors are disconnected. • Switch the ignition to off. • Inspect for continuity between ignition coil/ion sensor No.2 terminal C (wiring harness-side) and PCM terminal 1BF (wiring harness-side). • Is there continuity?	Yes	Go to the next step.
		No	Repair or replace the wiring harness for a possible open circuit, then go to Step 11.
10	**INSPECT ION SENSOR NO.2** • Inspect the ion sensor No.2. (See 01-40-68 ION SENSOR INSPECTION [SKYACTIV-G 2.0].) • Is there any malfunction?	Yes	Replace the ignition coil/ion sensor No.2, then go to the next step. (See 01-18-2 IGNITION COIL/ION SENSOR REMOVAL/INSTALLATION [SKYACTIV-G 2.0].)
		No	Go to the next step.
11	**VERIFY DTC TROUBLESHOOTING COMPLETED** • Make sure to reconnect all disconnected connectors. • Clear the DTC from the PCM memory using the M-MDS. (See 01-02-12 AFTER REPAIR PROCEDURE [SKYACTIV-G 2.0].) • Start the engine. • Perform the KOER self test. (See 01-02-12 KOEO/KOER SELF TEST [SKYACTIV-G 2.0].) • Is the same DTC present?	Yes	Repeat the inspection from Step 1. • If the malfunction recurs, replace the PCM. (See 01-40-10 PCM REMOVAL/INSTALLATION [SKYACTIV-G 2.0].) Go to the next step.
		No	Go to the next step.
12	**VERIFY AFTER REPAIR PROCEDURE** • Perform the “AFTER REPAIR PROCEDURE”. (See 01-02-12 AFTER REPAIR PROCEDURE [SKYACTIV-G 2.0].) • Are any DTCs present?	Yes	Go to the applicable DTC inspection. (See 01-02-14 DTC TABLE [SKYACTIV-G 2.0].)
		No	DTC troubleshooting completed.

ON-BOARD DIAGNOSTIC [SKYACTIV-G 2.0]

DTC P2308:00 [SKYACTIV-G 2.0]

id0102h1743200

DTC P2308:00	**Ion sensor No.3 circuit problem**
DETECTION CONDITION	• After the engine is started, when the engine speed is **2,000 rpm or less**, the signal input to the PCM from ion sensor No.3 is in error. **Diagnostic support note** • This is a continuous monitor (other). • The check engine light does not illuminate. • FREEZE FRAME DATA (Mode 2)/Snapshot data is not available. • The DTC is stored in the PCM memory.
FAIL-SAFE FUNCTION	—
POSSIBLE CAUSE	• Cylinder No.3 misfire • Ignition coil/ion sensor No.3 connector or terminals malfunction • Short to ground or open circuit in ion sensor No.3 power supply circuit — Short to ground in wiring harness between ENGINE2 15 A fuse and ignition coil/ion sensor No.3 terminal A — ENGINE2 15 A fuse malfunction — Open circuit in wiring harness between main relay terminal C and ignition coil/ion sensor No.3 terminal A • Open circuit in wiring harness between ignition coil/ion sensor No.3 terminal D and body ground • Short to ground in wiring harness between ignition coil/ion sensor No.3 terminal C and PCM terminal 1BA • PCM connector or terminals malfunction • Short to power supply in wiring harness between ignition coil/ion sensor No.3 terminal C and PCM terminal 1BA • Open circuit in wiring harness between ignition coil/ion sensor No.3 terminal C and PCM terminal 1BA • Ion sensor No.3 malfunction • PCM malfunction

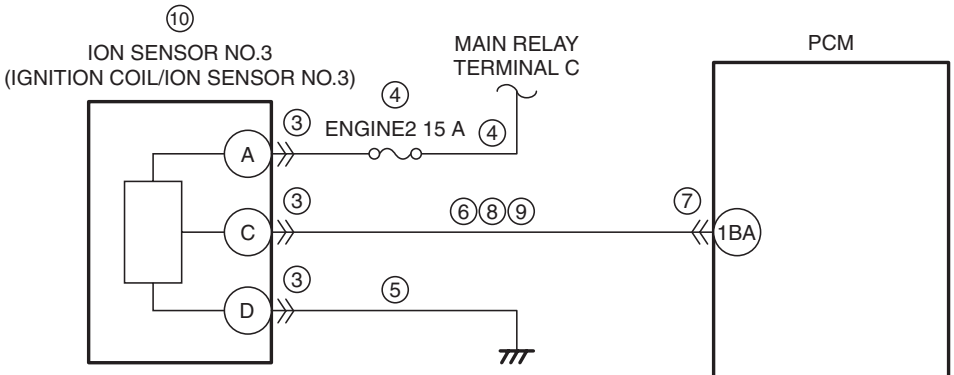

IGNITION COIL/ION SENSOR NO.3 WIRING HARNESS-SIDE CONNECTOR

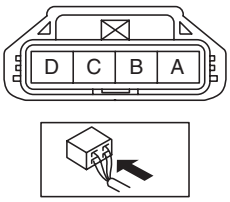

PCM WIRING HARNESS-SIDE CONNECTOR

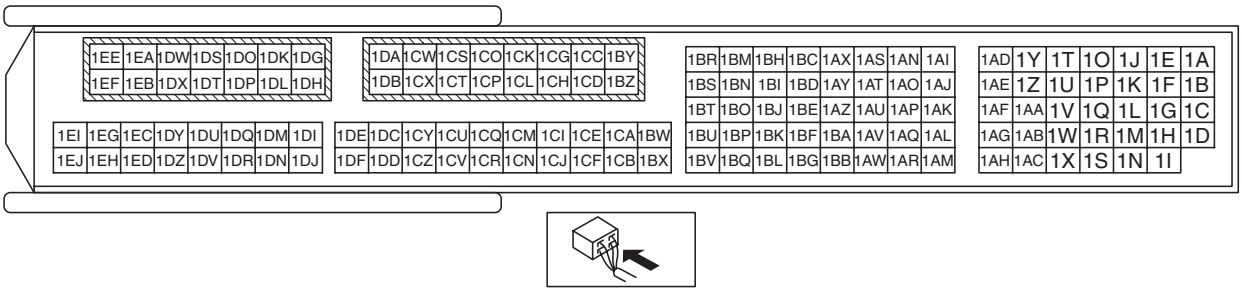

ON-BOARD DIAGNOSTIC [SKYACTIV-G 2.0]

Diagnostic Procedure

STEP	INSPECTION		ACTION
1	**VERIFY RELATED SERVICE INFORMATION AVAILABILITY** • Verify related Service Information availability. • Is any related Service Information available?	Yes	Perform repair or diagnosis according to the available Service Information. • If the vehicle is not repaired, go to the next step.
		No	Go to the next step.
2	**VERIFY RELATED PENDING CODE AND/OR DTC** • Switch the ignition to off, then to ON (engine off). • Perform the Pending Trouble Code Access Procedure and DTC Reading Procedure. (See 01-02-8 ON-BOARD DIAGNOSTIC TEST [SKYACTIV-G 2.0].) • Is the PENDING CODE/DTC P0303:00 also present?	Yes	Go to the applicable PENDING CODE or DTC inspection. (See 01-02-182 DTC P0301:00, P0302:00, P0303:00, P0304:00 [SKYACTIV-G 2.0].)
		No	Go to the next step.
3	**INSPECT IGNITION COIL/ION SENSOR NO.3 CONNECTOR CONDITION** • Switch the ignition to off. • Disconnect the ignition coil/ion sensor No.3 connector. • Inspect for poor connection (such as damaged/ pulled-out pins, corrosion). • Is there any malfunction?	Yes	Repair or replace the connector and/or terminals, then go to Step 11.
		No	Go to the next step.
4	**INSPECT ION SENSOR NO.3 POWER SUPPLY CIRCUIT FOR SHORT TO GROUND OR OPEN CIRCUIT** • Verify that the ignition coil/ion sensor No.3 connector is disconnected. • Switch the ignition ON (engine off or on). • Measure the voltage at the ignition coil/ion sensor No.3 terminal A (wiring harness-side). • Is the voltage **B+**?	Yes	Go to the next step.
		No	Inspect the ENGINE2 15 A fuse. • If the fuse is blown: — Repair or replace the wiring harness for a possible short to ground. — Replace the fuse. • If the fuse is deteriorated: — Replace the fuse. • If the fuse is normal: — Repair or replace the wiring harness for a possible open circuit. Go to Step 11.
5	**INSPECT ION SENSOR NO.3 GROUND CIRCUIT FOR OPEN CIRCUIT** • Verify that the ignition coil/ion sensor No.3 connector is disconnected. • Switch the ignition to off. • Inspect for continuity between ignition coil/ion sensor No.3 terminal D (wiring harness-side) and body ground. • Is there continuity?	Yes	Go to the next step.
		No	Repair or replace the wiring harness for a possible open circuit, then go to Step 11.
6	**INSPECT ION SENSOR NO.3 SIGNAL CIRCUIT FOR SHORT TO GROUND** • Verify that the ignition coil/ion sensor No.3 connector is disconnected. • Inspect for continuity between ignition coil/ion sensor No.3 terminal C (wiring harness-side) and body ground. • Is there continuity?	Yes	If the short to ground circuit could be detected in the wiring harness: • Repair or replace the wiring harness for a possible short to ground. If the short to ground circuit could not be detected in the wiring harness: • Replace the PCM (short to ground in the PCM internal circuit). (See 01-40-10 PCM REMOVAL/INSTALLATION [SKYACTIV-G 2.0].) Go to Step 11.
		No	Go to the next step.
7	**INSPECT PCM CONNECTOR CONDITION** • Disconnect the PCM connector. • Inspect for poor connection (such as damaged/ pulled-out pins, corrosion). • Is there any malfunction?	Yes	Repair or replace the connector and/or terminals, then go to Step 11.
		No	Go to the next step.

ON-BOARD DIAGNOSTIC [SKYACTIV-G 2.0]

STEP	INSPECTION		ACTION
8	**INSPECT ION SENSOR NO.3 SIGNAL CIRCUIT FOR SHORT TO POWER SUPPLY** • Verify that the ignition coil/ion sensor No.3 and PCM connectors are disconnected. • Switch the ignition ON (engine off or on). • Measure the voltage at the ignition coil/ion sensor No.3 terminal C (wiring harness-side). • Is the voltage **0 V**?	Yes	Go to the next step.
		No	Repair or replace the wiring harness for a possible short to power supply, then go to Step 11.
9	**INSPECT ION SENSOR NO.3 SIGNAL CIRCUIT FOR OPEN CIRCUIT** • Verify that the ignition coil/ion sensor No.3 and PCM connectors are disconnected. • Switch the ignition to off. • Inspect for continuity between ignition coil/ion sensor No.3 terminal C (wiring harness-side) and PCM terminal 1BA (wiring harness-side). • Is there continuity?	Yes	Go to the next step.
		No	Repair or replace the wiring harness for a possible open circuit, then go to Step 11.
10	**INSPECT ION SENSOR NO.3** • Inspect the ion sensor No.3. (See 01-40-68 ION SENSOR INSPECTION [SKYACTIV-G 2.0].) • Is there any malfunction?	Yes	Replace the ignition coil/ion sensor No.3, then go to the next step. (See 01-18-2 IGNITION COIL/ION SENSOR REMOVAL/INSTALLATION [SKYACTIV-G 2.0].)
		No	Go to the next step.
11	**VERIFY DTC TROUBLESHOOTING COMPLETED** • Make sure to reconnect all disconnected connectors. • Clear the DTC from the PCM memory using the M-MDS. (See 01-02-12 AFTER REPAIR PROCEDURE [SKYACTIV-G 2.0].) • Start the engine. • Perform the KOER self test. (See 01-02-12 KOEO/KOER SELF TEST [SKYACTIV-G 2.0].) • Is the same DTC present?	Yes	Repeat the inspection from Step 1. • If the malfunction recurs, replace the PCM. (See 01-40-10 PCM REMOVAL/INSTALLATION [SKYACTIV-G 2.0].) Go to the next step.
		No	Go to the next step.
12	**VERIFY AFTER REPAIR PROCEDURE** • Perform the “AFTER REPAIR PROCEDURE”. (See 01-02-12 AFTER REPAIR PROCEDURE [SKYACTIV-G 2.0].) • Are any DTCs present?	Yes	Go to the applicable DTC inspection. (See 01-02-14 DTC TABLE [SKYACTIV-G 2.0].)
		No	DTC troubleshooting completed.

ON-BOARD DIAGNOSTIC [SKYACTIV-G 2.0]

DTC P2311:00 [SKYACTIV-G 2.0]

id0102h1743300

DTC P2311:00	**Ion sensor No.4 circuit problem**
DETECTION CONDITION	• After the engine is started, when the engine speed is **2,000 rpm or less**, the signal input to the PCM from ion sensor No.4 is in error. **Diagnostic support note** • This is a continuous monitor (other). • The check engine light does not illuminate. • FREEZE FRAME DATA (Mode 2)/Snapshot data is not available. • The DTC is stored in the PCM memory.
FAIL-SAFE FUNCTION	—
POSSIBLE CAUSE	• Cylinder No.4 misfire • Ignition coil/ion sensor No.4 connector or terminals malfunction • Short to ground or open circuit in ion sensor No.4 power supply circuit — Short to ground in wiring harness between ENGINE2 15 A fuse and ignition coil/ion sensor No.4 terminal A — ENGINE2 15 A fuse malfunction — Open circuit in wiring harness between main relay terminal C and ignition coil/ion sensor No.4 terminal A • Open circuit in wiring harness between ignition coil/ion sensor No.4 terminal D and body ground • Short to ground in wiring harness between ignition coil/ion sensor No.4 terminal C and PCM terminal 1AV • PCM connector or terminals malfunction • Short to power supply in wiring harness between ignition coil/ion sensor No.4 terminal C and PCM terminal 1AV • Open circuit in wiring harness between ignition coil/ion sensor No.4 terminal C and PCM terminal 1AV • Ion sensor No.4 malfunction • PCM malfunction

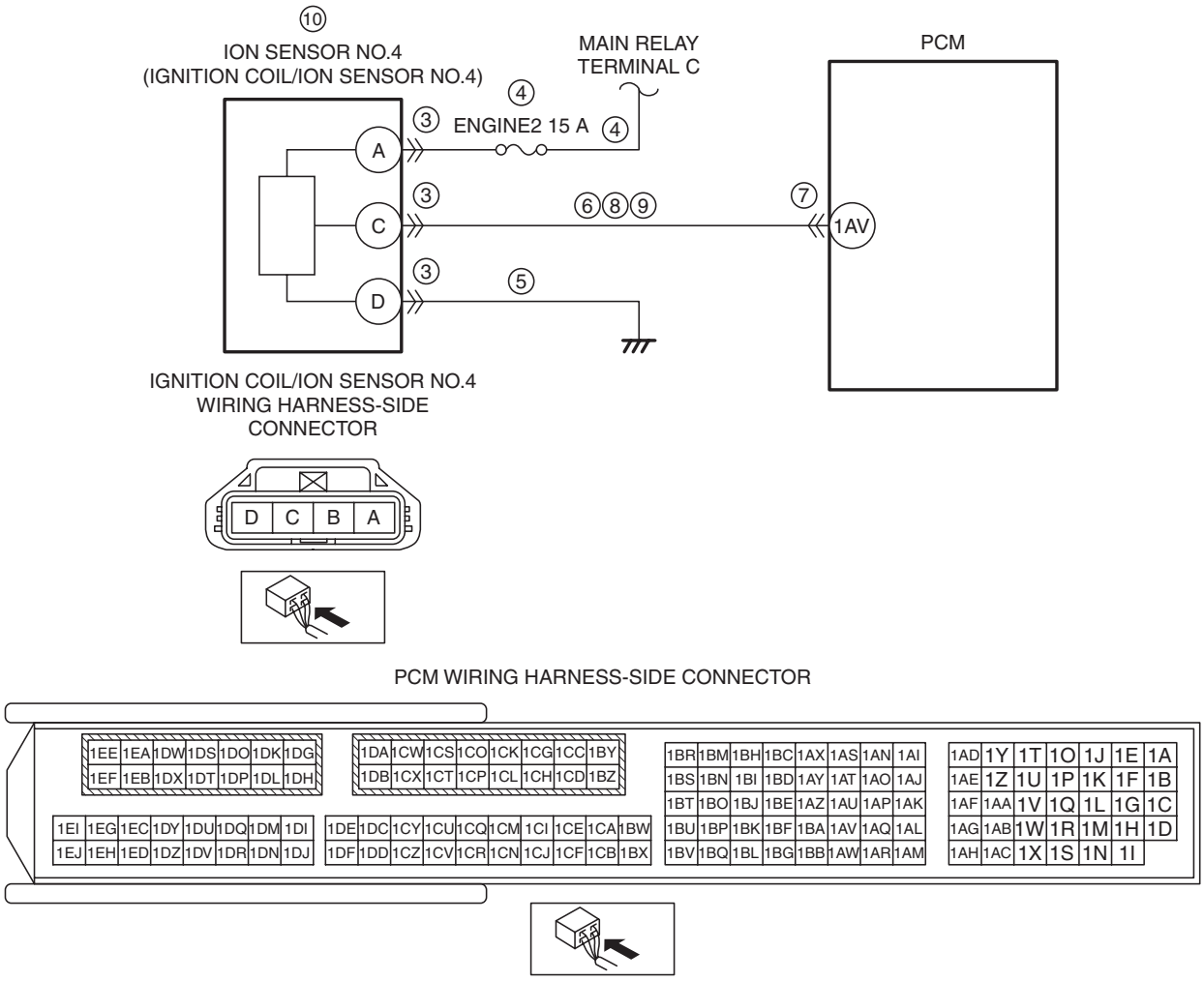

ON-BOARD DIAGNOSTIC [SKYACTIV-G 2.0]

Diagnostic Procedure

STEP	INSPECTION		ACTION
1	**VERIFY RELATED SERVICE INFORMATION AVAILABILITY** • Verify related Service Information availability. • Is any related Service Information available?	Yes	Perform repair or diagnosis according to the available Service Information. • If the vehicle is not repaired, go to the next step.
		No	Go to the next step.
2	**VERIFY RELATED PENDING CODE AND/OR DTC** • Switch the ignition to off, then to ON (engine off). • Perform the Pending Trouble Code Access Procedure and DTC Reading Procedure. (See 01-02-8 ON-BOARD DIAGNOSTIC TEST [SKYACTIV-G 2.0].) • Is the PENDING CODE/DTC P0304:00 also present?	Yes	Go to the applicable PENDING CODE or DTC inspection. (See 01-02-182 DTC P0301:00, P0302:00, P0303:00, P0304:00 [SKYACTIV-G 2.0].)
		No	Go to the next step.
3	**INSPECT IGNITION COIL/ION SENSOR NO.4 CONNECTOR CONDITION** • Switch the ignition to off. • Disconnect the ignition coil/ion sensor No.4 connector. • Inspect for poor connection (such as damaged/ pulled-out pins, corrosion). • Is there any malfunction?	Yes	Repair or replace the connector and/or terminals, then go to Step 11.
		No	Go to the next step.
4	**INSPECT ION SENSOR NO.4 POWER SUPPLY CIRCUIT FOR SHORT TO GROUND OR OPEN CIRCUIT** • Verify that the ignition coil/ion sensor No.4 connector is disconnected. • Switch the ignition ON (engine off or on). • Measure the voltage at the ignition coil/ion sensor No.4 terminal A (wiring harness-side). • Is the voltage **B+**?	Yes	Go to the next step.
		No	Inspect the ENGINE2 15 A fuse. • If the fuse is blown: — Repair or replace the wiring harness for a possible short to ground. — Replace the fuse. • If the fuse is deteriorated: — Replace the fuse. • If the fuse is normal: — Repair or replace the wiring harness for a possible open circuit. Go to Step 11.
5	**INSPECT ION SENSOR NO.4 GROUND CIRCUIT FOR OPEN CIRCUIT** • Verify that the ignition coil/ion sensor No.4 connector is disconnected. • Switch the ignition to off. • Inspect for continuity between ignition coil/ion sensor No.4 terminal D (wiring harness-side) and body ground. • Is there continuity?	Yes	Go to the next step.
		No	Repair or replace the wiring harness for a possible open circuit, then go to Step 11.
6	**INSPECT ION SENSOR NO.4 SIGNAL CIRCUIT FOR SHORT TO GROUND** • Verify that the ignition coil/ion sensor No.4 connector is disconnected. • Inspect for continuity between ignition coil/ion sensor No.4 terminal C (wiring harness-side) and body ground. • Is there continuity?	Yes	If the short to ground circuit could be detected in the wiring harness: • Repair or replace the wiring harness for a possible short to ground. If the short to ground circuit could not be detected in the wiring harness: • Replace the PCM (short to ground in the PCM internal circuit). (See 01-40-10 PCM REMOVAL/INSTALLATION [SKYACTIV-G 2.0].) Go to Step 11.
		No	Go to the next step.
7	**INSPECT PCM CONNECTOR CONDITION** • Disconnect the PCM connector. • Inspect for poor connection (such as damaged/ pulled-out pins, corrosion). • Is there any malfunction?	Yes	Repair or replace the connector and/or terminals, then go to Step 11.
		No	Go to the next step.

ON-BOARD DIAGNOSTIC [SKYACTIV-G 2.0]

STEP	INSPECTION		ACTION
8	**INSPECT ION SENSOR NO.4 SIGNAL CIRCUIT FOR SHORT TO POWER SUPPLY** • Verify that the ignition coil/ion sensor No.4 and PCM connectors are disconnected. • Switch the ignition ON (engine off or on). • Measure the voltage at the ignition coil/ion sensor No.4 terminal C (wiring harness-side). • Is the voltage **0 V**?	Yes	Go to the next step.
		No	Repair or replace the wiring harness for a possible short to power supply, then go to Step 11.
9	**INSPECT ION SENSOR NO.4 SIGNAL CIRCUIT FOR OPEN CIRCUIT** • Verify that the ignition coil/ion sensor No.4 and PCM connectors are disconnected. • Switch the ignition to off. • Inspect for continuity between ignition coil/ion sensor No.4 terminal C (wiring harness-side) and PCM terminal 1AV (wiring harness-side). • Is there continuity?	Yes	Go to the next step.
		No	Repair or replace the wiring harness for a possible open circuit, then go to Step 11.
10	**INSPECT ION SENSOR NO.4** • Inspect the ion sensor No.4. (See 01-40-68 ION SENSOR INSPECTION [SKYACTIV-G 2.0].) • Is there any malfunction?	Yes	Replace the ignition coil/ion sensor No.4, then go to the next step. (See 01-18-2 IGNITION COIL/ION SENSOR REMOVAL/INSTALLATION [SKYACTIV-G 2.0].)
		No	Go to the next step.
11	**VERIFY DTC TROUBLESHOOTING COMPLETED** • Make sure to reconnect all disconnected connectors. • Clear the DTC from the PCM memory using the M-MDS. (See 01-02-12 AFTER REPAIR PROCEDURE [SKYACTIV-G 2.0].) • Start the engine. • Perform the KOER self test. (See 01-02-12 KOEO/KOER SELF TEST [SKYACTIV-G 2.0].) • Is the same DTC present?	Yes	Repeat the inspection from Step 1. • If the malfunction recurs, replace the PCM. (See 01-40-10 PCM REMOVAL/INSTALLATION [SKYACTIV-G 2.0].) Go to the next step.
		No	Go to the next step.
12	**VERIFY AFTER REPAIR PROCEDURE** • Perform the “AFTER REPAIR PROCEDURE”. (See 01-02-12 AFTER REPAIR PROCEDURE [SKYACTIV-G 2.0].) • Are any DTCs present?	Yes	Go to the applicable DTC inspection. (See 01-02-14 DTC TABLE [SKYACTIV-G 2.0].)
		No	DTC troubleshooting completed.

ON-BOARD DIAGNOSTIC [SKYACTIV-G 2.0]

DTC P2502:00 [SKYACTIV-G 2.0]

id0102h1709500

DTC P2502:00	**Charging system voltage problem**
DETECTION CONDITION	• The PCM determines that the generator output voltage is **more than 17 V**, and the battery voltage is **less than 11 V**, **for 5 s** while the engine is running. **Diagnostic support note** • This is a continuous monitor (other). • The check engine light does not illuminate. • FREEZE FRAME DATA (Mode 2)/Snapshot data is not available. • The DTC is stored in the PCM memory.
FAIL-SAFE FUNCTION	• Illuminates the charging system warning light.
POSSIBLE CAUSE	• Battery malfunction • Loose generator terminal 1A installation nut • Battery positive terminal is poorly connected • Short to ground or open circuit in battery charging circuit — Short to ground in wiring harness between STARTER 250 A fuse and generator terminal 1A — STARTER 250 A fuse malfunction — Open circuit in wiring harness between battery positive terminal and generator terminal 1A • Generator malfunction • PCM malfunction

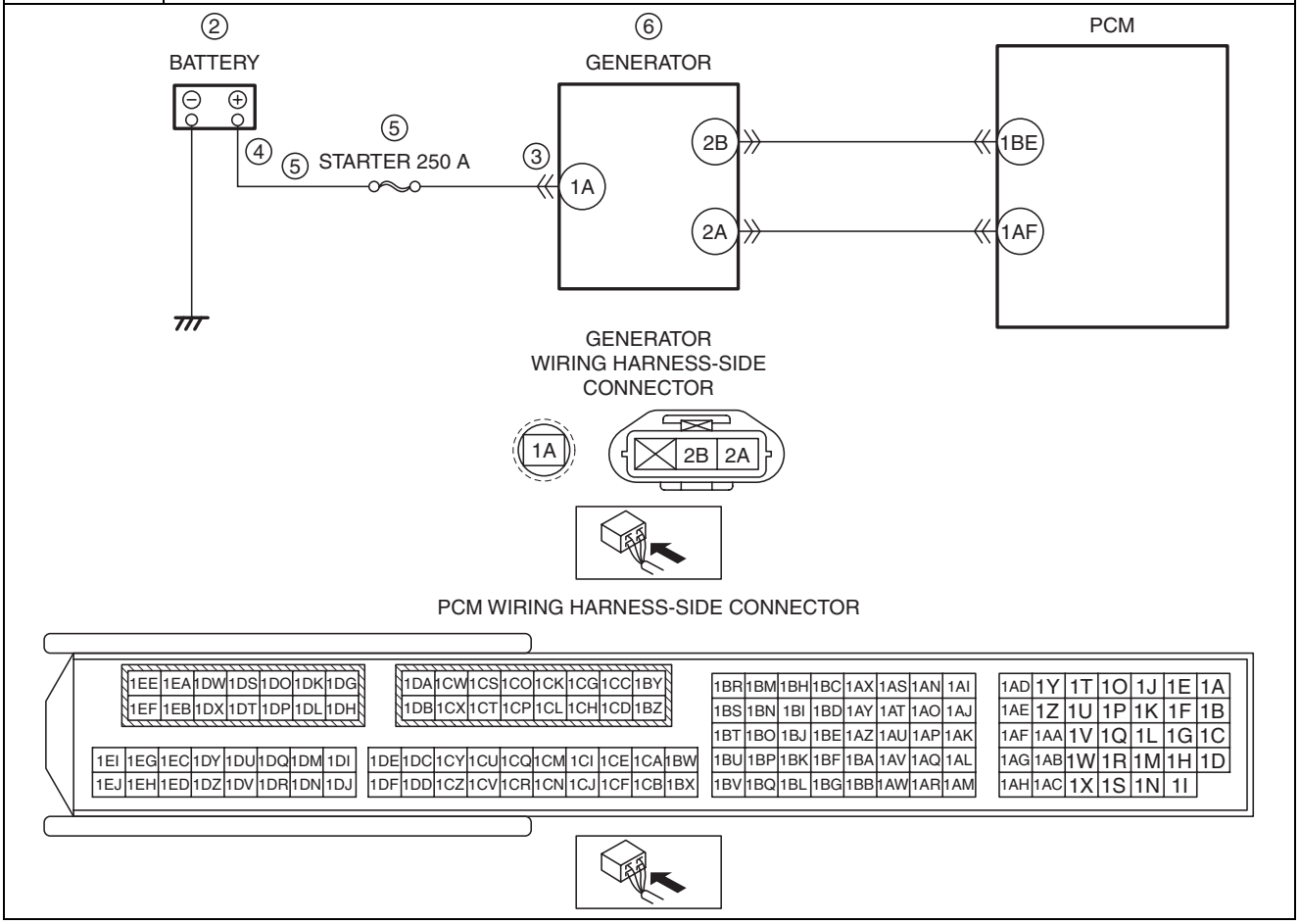

ON-BOARD DIAGNOSTIC [SKYACTIV-G 2.0]

Diagnostic Procedure

STEP	INSPECTION		ACTION
1	**VERIFY RELATED SERVICE INFORMATION AVAILABILITY** • Verify related Service Information availability. • Is any related Service Information available?	Yes	Perform repair or diagnosis according to the available Service Information. • If the vehicle is not repaired, go to the next step.
		No	Go to the next step.
2	**INSPECT BATTERY** • Switch the ignition to off. • Inspect the battery. (See 01-17A-7 BATTERY INSPECTION [SKYACTIV-G 2.0].) (See 01-17A-8 BATTERY INSPECTION [SKYACTIV-G 2.0 (WITHOUT i-stop)].) • Is there any malfunction?	Yes	Recharge or replace the battery, then go to Step 7. (See 01-17A-9 BATTERY RECHARGING [SKYACTIV-G 2.0].) (See 01-17A-10 BATTERY RECHARGING [SKYACTIV-G 2.0 (WITHOUT i-stop)].) (See 01-17A-3 BATTERY REMOVAL/INSTALLATION [SKYACTIV-G 2.0].)
		No	Go to the next step.
3	**INSPECT POOR INSTALLATION OF GENERATOR TERMINAL** • Switch the ignition to off. • Inspect for looseness of the generator terminal 1A installation nut. • Is the nut loose?	Yes	Tighten the generator terminal 1A installation nut, then go to Step 7.
		No	Go to the next step.
4	**INSPECT POOR INSTALLATION OF BATTERY POSITIVE TERMINAL** • Inspect for looseness of the battery positive terminal. • Is the terminal loose?	Yes	Connect the battery positive terminal correctly, then go to Step 7.
		No	Go to the next step.
5	**INSPECT BATTERY CHARGING CIRCUIT FOR SHORT TO GROUND OR OPEN CIRCUIT** • Disconnect the generator terminal 1A. • Measure the voltage at the generator terminal 1A (wiring harness-side). • Is the voltage **B+**?	Yes	Go to the next step.
		No	Inspect the STARTER 250 A fuse. • If the fuse is blown: — Repair or replace the wiring harness for a possible short to ground. — Replace the fuse. • If the fuse is deteriorated: — Replace the fuse. • If the fuse is normal: — Repair or replace the wiring harness for a possible open circuit. Go to Step 7.
6	**INSPECT GENERATOR** • Inspect the generator. (See 01-17A-19 GENERATOR INSPECTION [SKYACTIV-G 2.0].) • Is there any malfunction?	Yes	Repair or replace the malfunctioning part according to the inspection results, then go to the next step. (See 01-17A-25 GENERATOR DISASSEMBLY/ASSEMBLY [SKYACTIV-G 2.0].) (See 01-17A-17 GENERATOR REMOVAL/INSTALLATION [SKYACTIV-G 2.0].)
		No	Go to the next step.
7	**VERIFY DTC TROUBLESHOOTING COMPLETED** • Make sure to reconnect all disconnected connectors. • Clear the DTC from the PCM memory using the M-MDS. (See 01-02-12 AFTER REPAIR PROCEDURE [SKYACTIV-G 2.0].) • Perform the KOER self test. (See 01-02-12 KOEO/KOER SELF TEST [SKYACTIV-G 2.0].) • Is the same DTC present?	Yes	Repeat the inspection from Step 1. • If the malfunction recurs, replace the PCM. (See 01-40-10 PCM REMOVAL/INSTALLATION [SKYACTIV-G 2.0].) Go to the next step.
		No	Go to the next step.
8	**VERIFY AFTER REPAIR PROCEDURE** • Perform the “AFTER REPAIR PROCEDURE”. (See 01-02-12 AFTER REPAIR PROCEDURE [SKYACTIV-G 2.0].) • Are any DTCs present?	Yes	Go to the applicable DTC inspection. (See 01-02-14 DTC TABLE [SKYACTIV-G 2.0].)
		No	DTC troubleshooting completed.

ON-BOARD DIAGNOSTIC [SKYACTIV-G 2.0]

DTC P2503:00 [SKYACTIV-G 2.0]

id0102h1709600

DTC P2503:00	Charging system voltage low input
DETECTION CONDITION	• The PCM determines that the generator output voltage is **less than 8.5 V**, and the generator target output current is **more than 20 A**, for **5 s** while the engine is running. **Diagnostic support note** • This is a continuous monitor (other). • The check engine light does not illuminate. • FREEZE FRAME DATA (Mode 2)/Snapshot data is not available. • The DTC is stored in the PCM memory.
FAIL-SAFE FUNCTION	• Illuminates the charging system warning light.
POSSIBLE CAUSE	• Drive belt exceeds limit • Generator connector or terminals malfunction • Short to ground in wiring harness between the following terminals: — Generator terminal 2B—PCM terminal 1BE — Generator terminal 2A—PCM terminal 1AF • PCM connector or terminals malfunction • Open circuit in wiring harness between the following terminals: — Generator terminal 2B—PCM terminal 1BE — Generator terminal 2A—PCM terminal 1AF • Generator malfunction • PCM malfunction

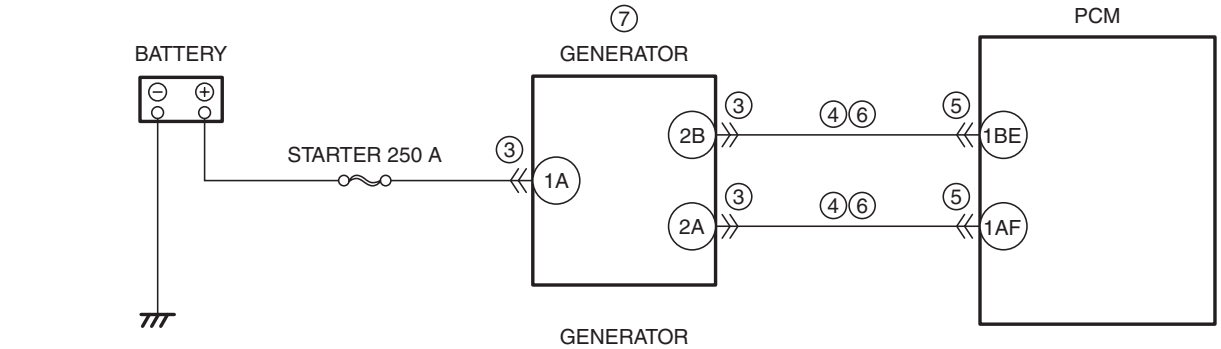

GENERATOR WIRING HARNESS-SIDE CONNECTOR

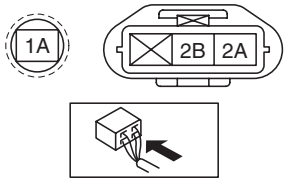

PCM WIRING HARNESS-SIDE CONNECTOR

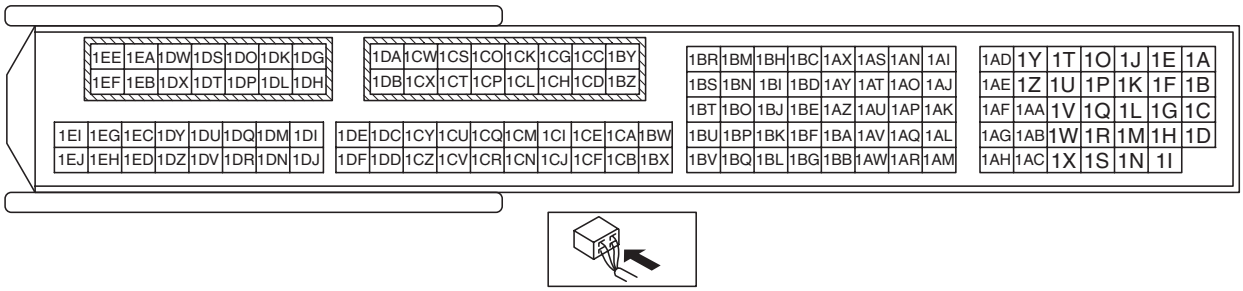

ON-BOARD DIAGNOSTIC [SKYACTIV-G 2.0]

Diagnostic Procedure

STEP	INSPECTION		ACTION
1	**VERIFY RELATED SERVICE INFORMATION AVAILABILITY** • Verify related Service Information availability. • Is any related Service Information available?	Yes	Perform repair or diagnosis according to the available Service Information. • If the vehicle is not repaired, go to the next step.
		No	Go to the next step.
2	**INSPECT DRIVE BELT CONDITION** • Verify that the drive belt auto tensioner indicator mark does not exceed limit. (See 01-10A-9 DRIVE BELT INSPECTION [SKYACTIV-G 2.0].) • Is there any malfunction?	Yes	Replace the drive belt, then go to Step 8. (See 01-10A-10 DRIVE BELT REMOVAL/INSTALLATION [SKYACTIV-G 2.0].)
		No	Go to the next step.
3	**INSPECT GENERATOR CONNECTOR CONDITION** • Switch the ignition to off. • Disconnect the generator connector. • Inspect for poor connection (such as damaged/ pulled-out pins, corrosion). • Is there any malfunction?	Yes	Repair or replace the connector and/or terminals, then go to Step 8.
		No	Go to the next step.
4	**INSPECT GENERATOR CIRCUIT FOR SHORT TO GROUND** • Verify that the generator connector is disconnected. • Inspect for continuity between the following terminals (wiring harness-side) and body ground: — Generator terminal 2B — Generator terminal 2A • Is there continuity?	Yes	If the short to ground circuit could be detected in the wiring harness: • Repair or replace the wiring harness for a possible short to ground. If the short to ground circuit could not be detected in the wiring harness: • Replace the PCM (short to ground in the PCM internal circuit). (See 01-40-10 PCM REMOVAL/INSTALLATION [SKYACTIV-G 2.0].) Go to Step 8.
		No	Go to the next step.
5	**INSPECT PCM CONNECTOR CONDITION** • Disconnect the PCM connector. • Inspect for poor connection (such as damaged/ pulled-out pins, corrosion). • Is there any malfunction?	Yes	Repair or replace the connector and/or terminals, then go to Step 8.
		No	Go to the next step.
6	**INSPECT GENERATOR CIRCUIT FOR OPEN CIRCUIT** • Verify that the generator and PCM connectors are disconnected. • Inspect for continuity between the following terminals (wiring harness-side): — Generator terminal 2B—PCM terminal 1BE — Generator terminal 2A—PCM terminal 1AF • Is there continuity?	Yes	Go to the next step.
		No	Repair or replace the wiring harness for a possible open circuit, then go to Step 8.
7	**INSPECT GENERATOR** • Inspect the generator. (See 01-17A-19 GENERATOR INSPECTION [SKYACTIV-G 2.0].) • Is there any malfunction?	Yes	Repair or replace the malfunctioning part according to the inspection results, then go to the next step. (See 01-17A-25 GENERATOR DISASSEMBLY/ASSEMBLY [SKYACTIV-G 2.0].) (See 01-17A-17 GENERATOR REMOVAL/INSTALLATION [SKYACTIV-G 2.0].)
		No	Go to the next step.
8	**VERIFY DTC TROUBLESHOOTING COMPLETED** • Make sure to reconnect all disconnected connectors. • Clear the DTC from the PCM memory using the M-MDS. (See 01-02-12 AFTER REPAIR PROCEDURE [SKYACTIV-G 2.0].) • Perform the KOER self test. (See 01-02-12 KOEO/KOER SELF TEST [SKYACTIV-G 2.0].) • Is the same DTC present?	Yes	Repeat the inspection from Step 1. • If the malfunction recurs, replace the PCM. (See 01-40-10 PCM REMOVAL/INSTALLATION [SKYACTIV-G 2.0].) Go to the next step.
		No	Go to the next step.

ON-BOARD DIAGNOSTIC [SKYACTIV-G 2.0]

STEP	INSPECTION		ACTION
9	**VERIFY AFTER REPAIR PROCEDURE** • Perform the “AFTER REPAIR PROCEDURE”. (See 01-02-12 AFTER REPAIR PROCEDURE [SKYACTIV-G 2.0].) • Are any DTCs present?	Yes	Go to the applicable DTC inspection. (See 01-02-14 DTC TABLE [SKYACTIV-G 2.0].)
		No	DTC troubleshooting completed.

DTC P2504:00 [SKYACTIV-G 2.0]

id0102h1709700

DTC P2504:00	**Charging system voltage high input**
DETECTION CONDITION	• The PCM determines that the generator output voltage is **more than 18.5 V**, or battery voltage is **more than 16.0 V**, for **5 s** while the engine is running. **Diagnostic support note** • This is a continuous monitor (other). • The check engine light does not illuminate. • FREEZE FRAME DATA (Mode 2)/Snapshot data is not available. • The DTC is stored in the PCM memory.
FAIL-SAFE FUNCTION	• Illuminates the charging system warning light.
POSSIBLE CAUSE	• Generator connector or terminals malfunction • PCM connector or terminals malfunction • Short to power supply in wiring harness between generator terminal 2B and PCM terminal 1BE • Generator malfunction • PCM malfunction

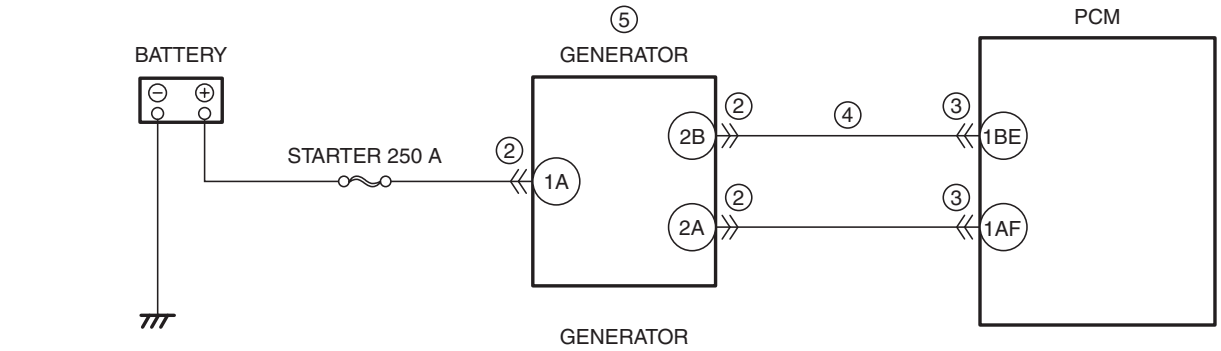

GENERATOR WIRING HARNESS-SIDE CONNECTOR

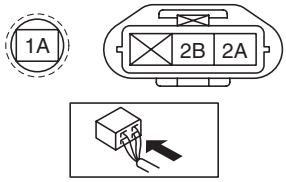

PCM WIRING HARNESS-SIDE CONNECTOR

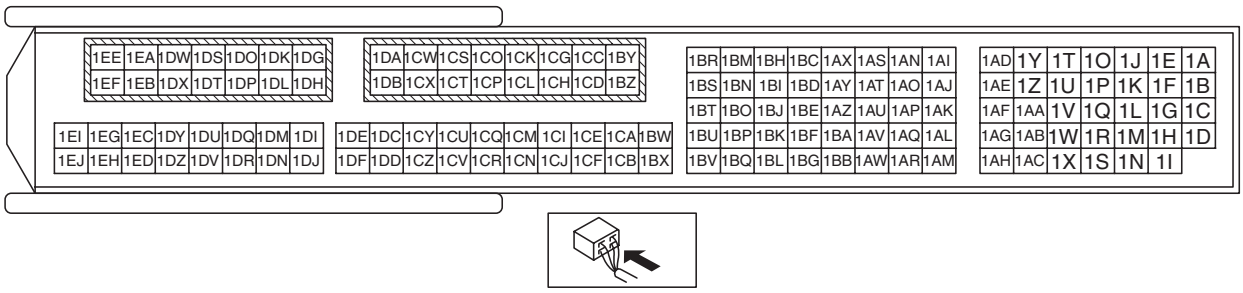

ON-BOARD DIAGNOSTIC [SKYACTIV-G 2.0]

Diagnostic Procedure

STEP	INSPECTION		ACTION
1	**VERIFY RELATED SERVICE INFORMATION AVAILABILITY** • Verify related Service Information availability. • Is any related Service Information available?	Yes	Perform repair or diagnosis according to the available Service Information. • If the vehicle is not repaired, go to the next step.
		No	Go to the next step.
2	**INSPECT GENERATOR CONNECTOR CONDITION** • Switch the ignition to off. • Disconnect the generator connector. • Inspect for poor connection (such as damaged/ pulled-out pins, corrosion). • Is there any malfunction?	Yes	Repair or replace the connector and/or terminals, then go to Step 6.
		No	Go to the next step.
3	**INSPECT PCM CONNECTOR CONDITION** • Disconnect the PCM connector. • Inspect for poor connection (such as damaged/ pulled-out pins, corrosion). • Is there any malfunction?	Yes	Repair or replace the connector and/or terminals, then go to Step 6.
		No	Go to the next step.
4	**INSPECT GENERATOR CONTROL CIRCUIT FOR SHORT TO POWER SUPPLY** • Verify that the generator and PCM connectors are disconnected. • Switch the ignition ON (engine off or on). • Measure the voltage at the generator terminal 2B (wiring harness-side). • Is the voltage **0 V**?	Yes	Go to the next step.
		No	Repair or replace the wiring harness for a possible short to power supply, then go to Step 6.
5	**INSPECT GENERATOR** • Switch the ignition to off. • Inspect the generator. (See 01-17A-19 GENERATOR INSPECTION [SKYACTIV-G 2.0].) • Is there any malfunction?	Yes	Repair or replace the malfunctioning part according to the inspection results, then go to the next step. (See 01-17A-25 GENERATOR DISASSEMBLY/ASSEMBLY [SKYACTIV-G 2.0].) (See 01-17A-17 GENERATOR REMOVAL/INSTALLATION [SKYACTIV-G 2.0].)
		No	Go to the next step.
6	**VERIFY DTC TROUBLESHOOTING COMPLETED** • Make sure to reconnect all disconnected connectors. • Clear the DTC from the PCM memory using the M-MDS. (See 01-02-12 AFTER REPAIR PROCEDURE [SKYACTIV-G 2.0].) • Perform the KOER self test. (See 01-02-12 KOEO/KOER SELF TEST [SKYACTIV-G 2.0].) • Is the same DTC present?	Yes	Repeat the inspection from Step 1. • If the malfunction recurs, replace the PCM. (See 01-40-10 PCM REMOVAL/INSTALLATION [SKYACTIV-G 2.0].) Go to the next step.
		No	Go to the next step.
7	**VERIFY AFTER REPAIR PROCEDURE** • Perform the “AFTER REPAIR PROCEDURE”. (See 01-02-12 AFTER REPAIR PROCEDURE [SKYACTIV-G 2.0].) • Are any DTCs present?	Yes	Go to the applicable DTC inspection. (See 01-02-14 DTC TABLE [SKYACTIV-G 2.0].)
		No	DTC troubleshooting completed.

ON-BOARD DIAGNOSTIC [SKYACTIV-G 2.0]

DTC P2507:00 [SKYACTIV-G 2.0]

id0102h1709800

DTC P2507:00	PCM battery voltage low input
DETECTION CONDITION	• The PCM monitors the voltage of backup battery positive terminal. If the PCM detects that the battery positive terminal voltage is **below 6 V** for **5 s**, the PCM determines that the backup voltage circuit has a malfunction. **Diagnostic support note** • This is a continuous monitor (CCM). • The check engine light illuminates if the PCM detects the above malfunction condition during the first drive cycle. • FREEZE FRAME DATA (Mode 2)/Snapshot data is available. • The DTC is stored in the PCM memory.
FAIL-SAFE FUNCTION	—
POSSIBLE CAUSE	• Battery malfunction • Short to ground or open circuit in backup voltage circuit — Short to ground in wiring harness between MAIN 200 A fuse and PCM terminal 2O — MAIN 200 A fuse and/or ENG.+B 7.5 A fuse malfunction — Open circuit in wiring harness between battery positive terminal and PCM terminal 2O • PCM connector or terminals malfunction • PCM malfunction

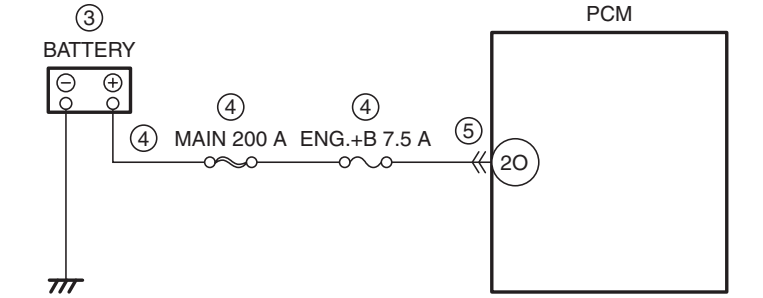

PCM WIRING HARNESS-SIDE CONNECTOR

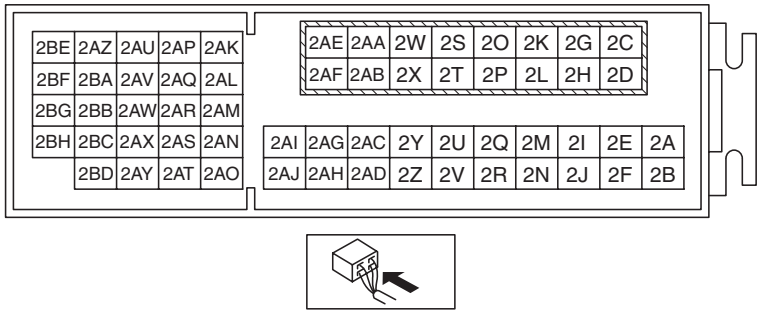

Diagnostic Procedure

STEP	INSPECTION		ACTION
1	**VERIFY FREEZE FRAME DATA (MODE 2)/ SNAPSHOT DATA HAS BEEN RECORDED** • Has the FREEZE FRAME DATA (Mode 2)/ snapshot data been recorded?	Yes	Go to the next step.
		No	Record the FREEZE FRAME DATA (Mode 2)/snapshot data on the repair order, then go to the next step.
2	**VERIFY RELATED SERVICE INFORMATION AVAILABILITY** • Verify related Service Information availability. • Is any related Service Information available?	Yes	Perform repair or diagnosis according to the available Service Information. • If the vehicle is not repaired, go to the next step.
		No	Go to the next step.
3	**INSPECT BATTERY** • Switch the ignition to off. • Inspect the battery. (See 01-17A-7 BATTERY INSPECTION [SKYACTIV-G 2.0].) (See 01-17A-8 BATTERY INSPECTION [SKYACTIV-G 2.0 (WITHOUT i-stop)].) • Is there any malfunction?	Yes	Recharge or replace the battery, then go to Step 6. (See 01-17A-9 BATTERY RECHARGING [SKYACTIV-G 2.0].) (See 01-17A-10 BATTERY RECHARGING [SKYACTIV-G 2.0 (WITHOUT i-stop)].) (See 01-17A-3 BATTERY REMOVAL/INSTALLATION [SKYACTIV-G 2.0].)
		No	Go to the next step.

ON-BOARD DIAGNOSTIC [SKYACTIV-G 2.0]

STEP	INSPECTION		ACTION
4	**INSPECT BACKUP VOLTAGE CIRCUIT FOR SHORT TO GROUND OR OPEN CIRCUIT** • Reconnect all disconnected connectors. • Access the VPWR PID using the M-MDS. (See 01-02-8 ON-BOARD DIAGNOSTIC TEST [SKYACTIV-G 2.0].) • Verify the VPWR PID value. • Is the VPWR PID value **B+**?	Yes	Go to the next step.
		No	Inspect the MAIN 200 A fuse and ENG.+B 7.5 A fuse. • If the fuse is blown: — Repair or replace the wiring harness for a possible short to ground. — Replace the malfunctioning fuse. • If the fuse is deteriorated: — Replace the malfunctioning fuse. • If all fuses are normal: — Repair or replace the wiring harness for a possible open circuit. Go to Step 6.
5	**INSPECT PCM CONNECTOR CONDITION** • Switch the ignition to off. • Disconnect the PCM connector. • Inspect for poor connection (such as damaged/pulled-out pins, corrosion). • Is there any malfunction?	Yes	Repair or replace the connector and/or terminals, then go to the next step.
		No	Go to the next step.
6	**VERIFY DTC TROUBLESHOOTING COMPLETED** • Make sure to reconnect all disconnected connectors. • Clear the DTC from the PCM memory using the M-MDS. (See 01-02-12 AFTER REPAIR PROCEDURE [SKYACTIV-G 2.0].) • Start the engine and warm it up completely. • Perform the KOEO or KOER self test. (See 01-02-12 KOEO/KOER SELF TEST [SKYACTIV-G 2.0].) • Is the same DTC present?	Yes	Repeat the inspection from Step 1. • If the malfunction recurs, replace the PCM. (See 01-40-10 PCM REMOVAL/INSTALLATION [SKYACTIV-G 2.0].) Go to the next step.
		No	Go to the next step.
7	**VERIFY AFTER REPAIR PROCEDURE** • Perform the “AFTER REPAIR PROCEDURE”. (See 01-02-12 AFTER REPAIR PROCEDURE [SKYACTIV-G 2.0].) • Are any DTCs present?	Yes	Go to the applicable DTC inspection. (See 01-02-14 DTC TABLE [SKYACTIV-G 2.0].)
		No	DTC troubleshooting completed.

ON-BOARD DIAGNOSTIC [SKYACTIV-G 2.0]

DTC P2610:00 [SKYACTIV-G 2.0]

id0102h1303800

DTC P2610:00	Instrument cluster internal engine off timer performance problem
DETECTION CONDITION	• Instrument cluster internal engine off timer is damaged. **Diagnostic support note** • This is a continuous monitor (CCM). • The check engine light illuminates if the PCM detects the above malfunction condition in two consecutive drive cycles or in one drive cycle while the DTC for the same malfunction has been stored in the PCM. • PENDING CODE is available if the PCM detects the above malfunction condition during first drive cycle. • FREEZE FRAME DATA (Mode 2)/Snapshot data is available. • The DTC is stored in the PCM memory.
FAIL-SAFE FUNCTION	—
POSSIBLE CAUSE	• Instrument cluster power supply circuit malfunction (In this case, the instrument cluster records DTC U3003:16.) • Instrument cluster internal engine off timer malfunction • PCM malfunction
SYSTEM WIRING DIAGRAM	—

Diagnostic Procedure

STEP	INSPECTION		ACTION
1	**VERIFY FREEZE FRAME DATA (MODE 2)/ SNAPSHOT DATA HAS BEEN RECORDED** • Has the FREEZE FRAME DATA (Mode 2)/ snapshot data been recorded?	Yes	Go to the next step.
		No	Record the FREEZE FRAME DATA (Mode 2)/snapshot data on the repair order, then go to the next step.
2	**VERIFY RELATED SERVICE INFORMATION AVAILABILITY** • Verify related Service Information availability. • Is any related Service Information available?	Yes	Perform repair or diagnosis according to the available Service Information. • If the vehicle is not repaired, go to the next step.
		No	Go to the next step.
3	**VERIFY STORED DTC IN INSTRUMENT CLUSTER** • Switch the ignition to off, then to ON (engine off). • Retrieve the instrument cluster DTC using the M-MDS. (See 09-02G-7 DTC INSPECTION [INSTRUMENT CLUSTER].) • Are any DTCs present?	Yes	Go to the applicable DTC inspection. (See 09-02G-10 DTC TABLE [INSTRUMENT CLUSTER].)
		No	Go to the next step.
4	**INSPECT INSTRUMENT CLUSTER BACKUP VOLTAGE CIRCUIT** • Switch the ignition to off. • Remove the MAIN 200 A fuse and ROOM 15 A fuse. • Inspect the MAIN 200 A fuse and ROOM 15 A fuse. • Is there any malfunction?	Yes	Replace the malfunctioning fuse. Switch the ignition ON (engine on) and wait for **10 s or more**. Switch the ignition to off. Go to the next step.
		No	Replace the instrument cluster, then go to the next step. (See 09-22-6 INSTRUMENT CLUSTER REMOVAL/ INSTALLATION.)
5	**VERIFY DTC TROUBLESHOOTING COMPLETED** • Clear the DTC from the PCM memory using the M-MDS. (See 01-02-12 AFTER REPAIR PROCEDURE [SKYACTIV-G 2.0].) • Start the engine and warm it up completely. • Perform the KOER self test. (See 01-02-12 KOEO/KOER SELF TEST [SKYACTIV-G 2.0].) • Is the PENDING CODE for this DTC present?	Yes	Replace the PCM, then go to the next step. (See 01-40-10 PCM REMOVAL/INSTALLATION [SKYACTIV-G 2.0].)
		No	Go to the next step.
6	**VERIFY AFTER REPAIR PROCEDURE** • Perform the “AFTER REPAIR PROCEDURE”. (See 01-02-12 AFTER REPAIR PROCEDURE [SKYACTIV-G 2.0].) • Are any DTCs present?	Yes	Go to the applicable DTC inspection. (See 01-02-14 DTC TABLE [SKYACTIV-G 2.0].)
		No	DTC troubleshooting completed.

ON-BOARD DIAGNOSTIC [SKYACTIV-G 2.0]

DTC U0073:00, U0101:00, U0121:00, U0131:00, U0140:00, U0151:00, U0155:00, U0214:00, U0235:00 [SKYACTIV-G 2.0]

id0102h1910800

DTC U0073:00	CAN system communication error (HS CAN)
DETECTION CONDITION	• Malfunction in CAN bus communication line. **Diagnostic support note** • This is a continuous monitor (other). • The check engine light does not illuminate. • FREEZE FRAME DATA (Mode 2)/Snapshot data is not available. • The DTC is stored in the PCM memory.
FAIL-SAFE FUNCTION	—
POSSIBLE CAUSE	• CAN bus communication line malfunction • PCM malfunction
SYSTEM WIRING DIAGRAM	—

DTC U0101:00	CAN communication: communication error to TCM
DETECTION CONDITION	• Communication error between the TCM continues for **5 s or more**. **Diagnostic support note** • This is a continuous monitor (other). • The check engine light illuminates if the PCM detects the above malfunction condition during the first drive cycle. • FREEZE FRAME DATA (Mode 2)/Snapshot data is available. • The DTC is stored in the PCM memory.
FAIL-SAFE FUNCTION	• Controls the turbine rotation signal at **0**. • Inhibits the AT torque reduction request.
POSSIBLE CAUSE	**Note** • During malfunction diagnosis, first verify the malfunction detection of DTC U0074:00 or U0115:00 for the TCM. • CAN communication line between PCM and TCM malfunction • TCM malfunction • PCM malfunction
SYSTEM WIRING DIAGRAM	—

DTC U0121:00	CAN communication: communication error to DSC HU/CM
DETECTION CONDITION	• Communication error between the DSC HU/CM continues for **5 s or more**. **Diagnostic support note** • This is a continuous monitor (other). • The check engine light illuminates if the PCM detects the above malfunction condition during the first drive cycle. • FREEZE FRAME DATA (Mode 2)/Snapshot data is available. • The DTC is stored in the PCM memory.
FAIL-SAFE FUNCTION	• Inhibits the DSC control.
POSSIBLE CAUSE	• CAN communication line between PCM and DSC HU/CM malfunction • DSC HU/CM malfunction • PCM malfunction
SYSTEM WIRING DIAGRAM	—

ON-BOARD DIAGNOSTIC [SKYACTIV-G 2.0]

DTC U0131:00	**CAN communication: communication error to EPS control module**
DETECTION CONDITION	• Communication error between the EPS control module continues for **5 s or more**. **Diagnostic support note** • This is a continuous monitor (other). • The check engine light does not illuminate. • FREEZE FRAME DATA (Mode 2)/Snapshot data is not available. • The DTC is stored in the PCM memory.
FAIL-SAFE FUNCTION	—
POSSIBLE CAUSE	• CAN communication line between PCM and EPS control module malfunction • EPS control module malfunction • PCM malfunction
SYSTEM WIRING DIAGRAM	—

DTC U0140:00	**CAN communication: communication error to front body control module (FBCM)**
DETECTION CONDITION	• Communication error between the front body control module (FBCM) continues for **5 s or more**. **Diagnostic support note** • This is a continuous monitor (other). • The check engine light does not illuminate. • FREEZE FRAME DATA (Mode 2)/Snapshot data is not available. • The DTC is stored in the PCM memory.
FAIL-SAFE FUNCTION	—
POSSIBLE CAUSE	• CAN communication line between PCM and front body control module (FBCM) malfunction • Front body control module (FBCM) malfunction • PCM malfunction
SYSTEM WIRING DIAGRAM	—

DTC U0151:00	**CAN communication: communication error to SAS control module**
DETECTION CONDITION	• Communication error between the SAS control module continues for **5 s or more**. **Diagnostic support note** • This is a continuous monitor (other). • The check engine light does not illuminate. • FREEZE FRAME DATA (Mode 2)/Snapshot data is not available. • The DTC is stored in the PCM memory.
FAIL-SAFE FUNCTION	—
POSSIBLE CAUSE	• CAN communication line between PCM and SAS control module malfunction • SAS control module malfunction • PCM malfunction
SYSTEM WIRING DIAGRAM	—

DTC U0155:00	**CAN communication: communication error to instrument cluster**
DETECTION CONDITION	• Communication error between the instrument cluster continues for **5 s or more**. **Diagnostic support note** • This is a continuous monitor (other). • The check engine light illuminates if the PCM detects the above malfunction condition during the first drive cycle. • FREEZE FRAME DATA (Mode 2)/Snapshot data is available. • The DTC is stored in the PCM memory.
FAIL-SAFE FUNCTION	—

ON-BOARD DIAGNOSTIC [SKYACTIV-G 2.0]

DTC U0155:00	**CAN communication: communication error to instrument cluster**
POSSIBLE CAUSE	• CAN communication line between PCM and instrument cluster malfunction • Instrument cluster malfunction • PCM malfunction
SYSTEM WIRING DIAGRAM	—

DTC U0214:00	**CAN communication: communication error to start stop unit**
DETECTION CONDITION	• Communication error between the start stop unit continues for **5 s or more**. **Diagnostic support note** • This is a continuous monitor (other). • The check engine light does not illuminate. • FREEZE FRAME DATA (Mode 2)/Snapshot data is not available. • The DTC is stored in the PCM memory.
FAIL-SAFE FUNCTION	• Inhibits the i-stop control and flashes the i-stop warning light (amber) (engine stalls while engine is stopped by i-stop control).
POSSIBLE CAUSE	• CAN communication line between PCM and start stop unit malfunction • Start stop unit malfunction • PCM malfunction
SYSTEM WIRING DIAGRAM	—

DTC U0235:00	**CAN communication: communication error to laser sensor**
DETECTION CONDITION	• Communication error between the laser sensor continues for **5 s or more**. **Diagnostic support note** • This is a continuous monitor (other). • The check engine light does not illuminate. • FREEZE FRAME DATA (Mode 2)/Snapshot data is not available. • The DTC is stored in the PCM memory.
FAIL-SAFE FUNCTION	• The smart city brake support function is cancelled.
POSSIBLE CAUSE	• CAN communication line between PCM and laser sensor malfunction • Laser sensor malfunction • PCM malfunction
SYSTEM WIRING DIAGRAM	—

Diagnostic Procedure

- Inspect according to the diagnostic procedure in ON-BOARD DIAGNOSTIC [MULTIPLEX COMMUNICATION SYSTEM]. (See 10-02A-1 FOREWORD [SKYACTIV-G 2.0 (L.H.D.)].) (See 10-02B-1 FOREWORD [SKYACTIV-G 2.0 (R.H.D.)].)

ON-BOARD DIAGNOSTIC [SKYACTIV-G 2.0]

DTC U0074:00 [SKYACTIV-G 2.0]

id0102h1339600

DTC U0074:00	**CAN system communication error (local CAN between PCM and TCM)**
DETECTION CONDITION	• Malfunction in CAN bus communication line. **Diagnostic support note** • This is a continuous monitor (other). • The check engine light does not illuminate. • FREEZE FRAME DATA (Mode 2)/Snapshot data is not available. • The DTC is stored in the PCM memory.
FAIL-SAFE FUNCTION	—
POSSIBLE CAUSE	• CAN communication line between PCM and TCM (local CAN between PCM and TCM) malfunction • TCM DTC is stored. • PCM malfunction • TCM malfunction

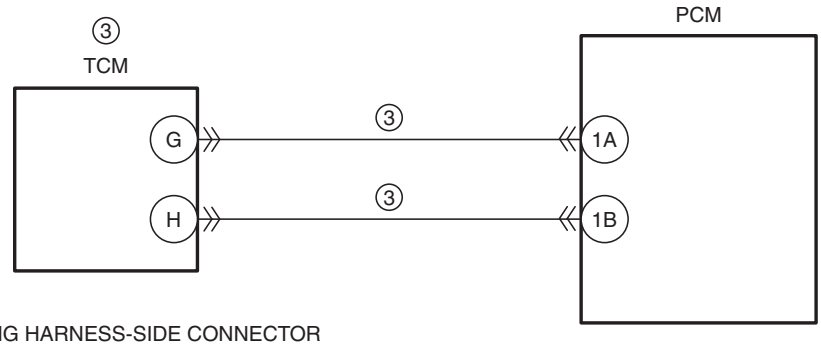

TCM WIRING HARNESS-SIDE CONNECTOR

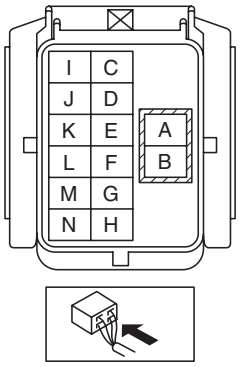

PCM WIRING HARNESS-SIDE CONNECTOR

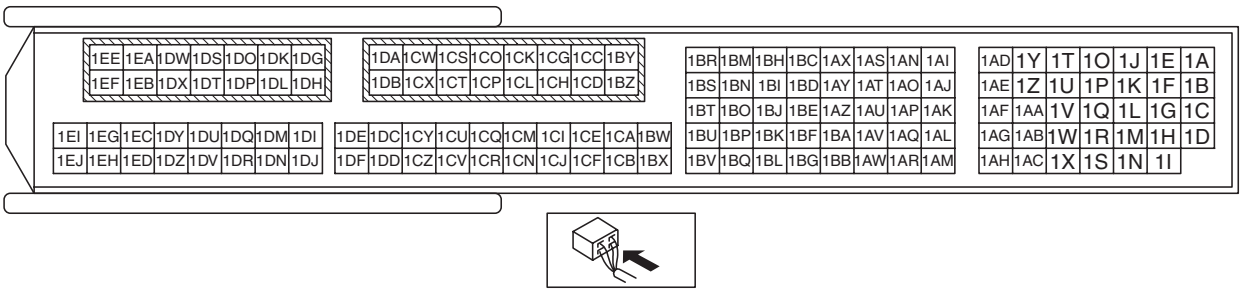

ON-BOARD DIAGNOSTIC [SKYACTIV-G 2.0]

Diagnostic Procedure

STEP	INSPECTION		ACTION
1	**VERIFY RELATED SERVICE INFORMATION AVAILABILITY** • Verify related Service Information availability. • Is any related Service Information available?	Yes	Perform repair or diagnosis according to the available Service Information. • If the vehicle is not repaired, go to the next step.
		No	Go to the next step.
2	**VERIFY RELATED PENDING CODE AND/OR DTC** • Switch the ignition to off, then to ON (engine off). • Perform the Pending Trouble Code Access Procedure and DTC Reading Procedure. (See 01-02-8 ON-BOARD DIAGNOSTIC TEST [SKYACTIV-G 2.0].) • Are any other PENDING CODEs and/or DTCs present?	Yes	Go to the applicable PENDING CODE or DTC inspection. (See 01-02-14 DTC TABLE [SKYACTIV-G 2.0].)
		No	Go to the next step.
3	**CONFIRM TCM DTC** • Perform the TCM DTC inspection using the M-MDS. (See 05-02A-7 ON-BOARD DIAGNOSTIC SYSTEM DTC INSPECTION [FW6A-EL, FW6AX-EL].) • Are any DTCs present?	Yes	DTC U0074:00 or U0115:00 is displayed: • CAN communication line can be considered the cause. — Repair or replace the wiring harness between PCM and TCM, then go to the next step. DTC other than U0074:00 and U0115:00 is displayed: • Go to the applicable DTC inspection. (See 05-02A-11 ON-BOARD DIAGNOSTIC SYSTEM DTC TABLE [FW6A-EL, FW6AX-EL].)
		No	TCM can be considered the cause. • Replace the control valve body, then go to the next step. (See 05-17A-67 CONTROL VALVE BODY REMOVAL/INSTALLATION [FW6A-EL, FW6AX-EL].)
4	**VERIFY DTC TROUBLESHOOTING COMPLETED** • Clear the DTC from the PCM memory using the M-MDS. (See 01-02-12 AFTER REPAIR PROCEDURE [SKYACTIV-G 2.0].) • Perform the KOEO or KOER self test. (See 01-02-12 KOEO/KOER SELF TEST [SKYACTIV-G 2.0].) • Is the same DTC present?	Yes	Replace the PCM, then go to the next step. (See 01-40-10 PCM REMOVAL/INSTALLATION [SKYACTIV-G 2.0].)
		No	Go to the next step.
5	**VERIFY AFTER REPAIR PROCEDURE** • Perform the “AFTER REPAIR PROCEDURE”. (See 01-02-12 AFTER REPAIR PROCEDURE [SKYACTIV-G 2.0].) • Are any DTCs present?	Yes	Go to the applicable DTC inspection. (See 01-02-14 DTC TABLE [SKYACTIV-G 2.0].)
		No	DTC troubleshooting completed.

ON-BOARD DIAGNOSTIC [SKYACTIV-G 2.0]

DTC U0298:00 [SKYACTIV-G 2.0]

id0102h1910500

DTC U0298:00	CAN/LIN communication system: DC-DC converter information communication error with front body control module (FBCM)
DETECTION CONDITION	• PCM detects a DC-DC converter information communication error from front body control module (FBCM). **Diagnostic support note** • This is a continuous monitor (other). • The check engine light does not illuminate. • FREEZE FRAME DATA (Mode 2)/Snapshot data is not available. • The DTC is stored in the PCM memory.
FAIL-SAFE FUNCTION	• Inhibits engine-stop by operating the i-stop function.
POSSIBLE CAUSE	• Communication line between DC-DC converter and front body control module (FBCM) malfunction • Communication line between front body control module (FBCM) and PCM malfunction • DC-DC converter connector or terminals malfunction • Short to ground or open circuit in DC-DC converter power supply circuit — Short to ground in wiring harness between DCDC 50 A fuse and DC-DC converter terminal L — DCDC 50 A fuse malfunction — Open circuit in wiring harness between battery positive terminal and DC-DC converter terminal L • Short to ground or open circuit in DC-DC converter power supply circuit — Short to ground in wiring harness between C/U IG1 15 A fuse and DC-DC converter terminal H — C/U IG1 15 A fuse malfunction — Open circuit in wiring harness between IG1 relay terminal C and DC-DC converter terminal H • Front body control module (FBCM) connector or terminals malfunction • Short to ground in wiring harness between the following terminals: — DC-DC converter terminal C—Front body control module (FBCM) terminal 2H — Front body control module (FBCM) terminal 2P—PCM terminal 2AK — Front body control module (FBCM) terminal 2N—PCM terminal 2AL • Open circuit in wiring harness between DC-DC converter terminal C and front body control module (FBCM) terminal 2H • PCM connector or terminals malfunction • Open circuit in wiring harness between the following terminals: — Front body control module (FBCM) terminal 2P—PCM terminal 2AK — Front body control module (FBCM) terminal 2N—PCM terminal 2AL • DC-DC converter malfunction • Front body control module (FBCM) malfunction • PCM malfunction

ON-BOARD DIAGNOSTIC [SKYACTIV-G 2.0]

DTC U0298:00	CAN/LIN communication system: DC-DC converter information communication error with front body control module (FBCM)

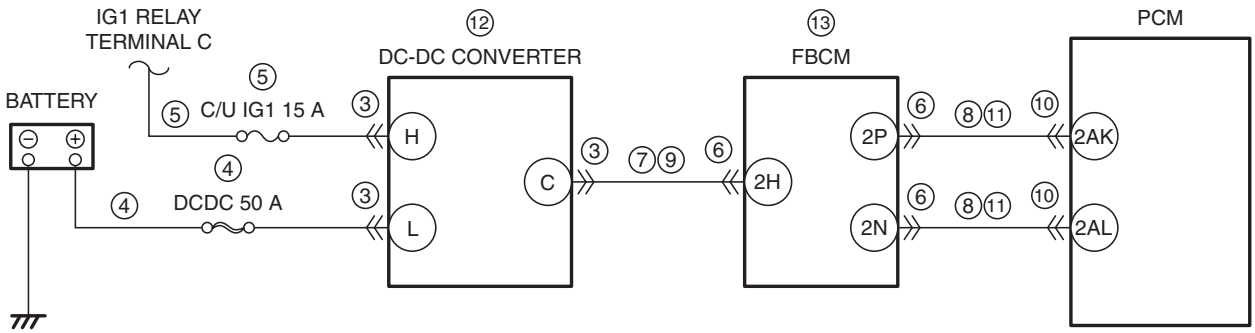

DC-DC CONVERTER WIRING HARNESS-SIDE CONNECTOR

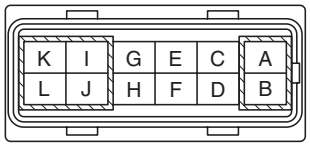

FBCM WIRING HARNESS-SIDE CONNECTOR

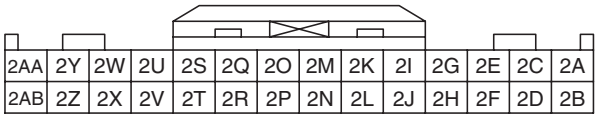

PCM WIRING HARNESS-SIDE CONNECTOR

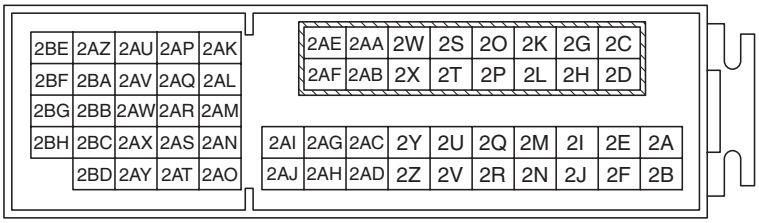

Diagnostic Procedure

STEP	INSPECTION		ACTION
1	**VERIFY RELATED SERVICE INFORMATION AVAILABILITY** • Verify related Service Information availability. • Is any related Service Information available?	Yes	Perform repair or diagnosis according to the available Service Information. • If the vehicle is not repaired, go to the next step.
		No	Go to the next step.
2	**VERIFY RELATED PENDING CODE AND/OR DTC** • Switch the ignition to off, then to ON (engine off). • Perform the Pending Trouble Code Access Procedure and DTC Reading Procedure. (See 01-02-8 ON-BOARD DIAGNOSTIC TEST [SKYACTIV-G 2.0].) • Are any other PENDING CODEs and/or DTCs present?	Yes	Go to the applicable PENDING CODE or DTC inspection. (See 01-02-14 DTC TABLE [SKYACTIV-G 2.0].)
		No	Go to the next step.
3	**INSPECT DC-DC CONVERTER CONNECTOR CONDITION** • Switch the ignition to off. • Disconnect the DC-DC converter connector. • Inspect for poor connection (such as damaged/ pulled-out pins, corrosion). • Is there any malfunction?	Yes	Repair or replace the connector and/or terminals, then go to Step 14.
		No	Go to the next step.

ON-BOARD DIAGNOSTIC [SKYACTIV-G 2.0]

STEP	INSPECTION		ACTION
4	**INSPECT DC-DC CONVERTER POWER SUPPLY CIRCUIT FOR SHORT TO GROUND OR OPEN CIRCUIT** • Verify that the DC-DC converter connector is disconnected. • Measure the voltage at the DC-DC converter terminal L (wiring harness-side). • Is the voltage **B+**?	Yes	Go to the next step.
		No	Inspect the DCDC 50 A fuse. • If the fuse is blown: — Repair or replace the wiring harness for a possible short to ground. — Replace the fuse. • If the fuse is deteriorated: — Replace the fuse. • If the fuse is normal: — Repair or replace the wiring harness for a possible open circuit. Go to Step 14.
5	**INSPECT DC-DC CONVERTER POWER SUPPLY CIRCUIT FOR SHORT TO GROUND OR OPEN CIRCUIT** • Verify that the DC-DC converter connector is disconnected. • Switch the ignition ON (engine off or on). • Measure the voltage at the DC-DC converter terminal H (wiring harness-side). • Is the voltage **B+**?	Yes	Go to the next step.
		No	Inspect the C/U IG1 15 A fuse. • If the fuse is blown: — Repair or replace the wiring harness for a possible short to ground. — Replace the fuse. • If the fuse is deteriorated: — Replace the fuse. • If the fuse is normal: — Repair or replace the wiring harness for a possible open circuit. Go to Step 14.
6	**INSPECT FRONT BODY CONTROL MODULE (FBCM) CONNECTOR CONDITION** • Switch the ignition to off. • Disconnect the front body control module (FBCM) connector. • Inspect for poor connection (such as damaged/ pulled-out pins, corrosion). • Is there any malfunction?	Yes	Repair or replace the connector and/or terminals, then go to Step 14.
		No	Go to the next step.
7	**INSPECT DC-DC CONVERTER SIGNAL CIRCUIT FOR SHORT TO GROUND** • Verify that the DC-DC converter and front body control module (FBCM) connectors are disconnected. • Inspect for continuity between DC-DC converter terminal C (wiring harness-side) and body ground. • Is there continuity?	Yes	Repair or replace the wiring harness for a possible short to ground, then go to Step 14.
		No	Go to the next step.
8	**INSPECT FRONT BODY CONTROL MODULE (FBCM) CIRCUIT FOR SHORT TO GROUND** • Verify that the DC-DC converter and front body control module (FBCM) connectors are disconnected. • Inspect for continuity between the following terminals (wiring harness-side) and body ground: — Front body control module (FBCM) terminal 2P — Front body control module (FBCM) terminal 2N • Is there continuity?	Yes	If the short to ground circuit could be detected in the wiring harness: • Repair or replace the wiring harness for a possible short to ground. If the short to ground circuit could not be detected in the wiring harness: • Replace the PCM (short to ground in the PCM internal circuit). (See 01-40-10 PCM REMOVAL/INSTALLATION [SKYACTIV-G 2.0].) Go to Step 14.
		No	Go to the next step.
9	**INSPECT DC-DC CONVERTER SIGNAL CIRCUIT FOR OPEN CIRCUIT** • Verify that the DC-DC converter and front body control module (FBCM) connectors are disconnected. • Inspect for continuity between DC-DC converter terminal C (wiring harness-side) and front body control module (FBCM) terminal 2H (wiring harness-side). • Is there continuity?	Yes	Go to the next step.
		No	Repair or replace the wiring harness for a possible open circuit, then go to Step 14.

ON-BOARD DIAGNOSTIC [SKYACTIV-G 2.0]

STEP	INSPECTION		ACTION
10	**INSPECT PCM CONNECTOR CONDITION** • Disconnect the PCM connector. • Inspect for poor connection (such as damaged/pulled-out pins, corrosion). • Is there any malfunction?	Yes	Repair or replace the connector and/or terminals, then go to Step 14.
		No	Go to the next step.
11	**INSPECT FRONT BODY CONTROL MODULE (FBCM) CIRCUIT FOR OPEN CIRCUIT** • Verify that the DC-DC converter, front body control module (FBCM) and PCM connectors are disconnected. • Inspect for continuity between the following terminals (wiring harness-side): — Front body control module (FBCM) terminal 2P—PCM terminal 2AK — Front body control module (FBCM) terminal 2N—PCM terminal 2AL • Is there continuity?	Yes	Go to the next step.
		No	Repair or replace the wiring harness for a possible open circuit, then go to Step 14.
12	**INSPECT DC-DC CONVERTER** • Inspect the DC-DC converter. (See 01-17A-27 DC-DC CONVERTER INSPECTION [SKYACTIV-G 2.0].) • Is there any malfunction?	Yes	Replace the DC-DC converter, then go to Step 14. (See 01-17A-26 DC-DC CONVERTER REMOVAL/INSTALLATION [SKYACTIV-G 2.0].)
		No	Go to the next step.
13	**INSPECT FRONT BODY CONTROL MODULE (FBCM)** • Inspect the front body control module (FBCM). (See 09-40-3 FRONT BODY CONTROL MODULE (FBCM) INSPECTION.) • Is there any malfunction?	Yes	Replace the front body control module (FBCM), then go to the next step. (See 09-40-2 FRONT BODY CONTROL MODULE (FBCM) REMOVAL/INSTALLATION.)
		No	Go to the next step.
14	**VERIFY DTC TROUBLESHOOTING COMPLETED** • Make sure to reconnect all disconnected connectors. • Clear the DTC from the PCM memory using the M-MDS. (See 01-02-12 AFTER REPAIR PROCEDURE [SKYACTIV-G 2.0].) • Perform the KOEO or KOER self test. (See 01-02-12 KOEO/KOER SELF TEST [SKYACTIV-G 2.0].) • Is the same DTC present?	Yes	Repeat the inspection from Step 1. • If the malfunction recurs, replace the PCM. (See 01-40-10 PCM REMOVAL/INSTALLATION [SKYACTIV-G 2.0].) Go to the next step.
		No	Go to the next step.
15	**VERIFY AFTER REPAIR PROCEDURE** • Perform the “AFTER REPAIR PROCEDURE”. (See 01-02-12 AFTER REPAIR PROCEDURE [SKYACTIV-G 2.0].) • Are any DTCs present?	Yes	Go to the applicable DTC inspection. (See 01-02-14 DTC TABLE [SKYACTIV-G 2.0].)
		No	DTC troubleshooting completed.

ON-BOARD DIAGNOSTIC [SKYACTIV-G 2.0]

DTC U0302:00 [SKYACTIV-G 2.0]

id0102h1901000

DTC U0302:00	TCM processor error
DETECTION CONDITION	• When any of the following conditions is met: — CAN communication line between TCM and PCM malfunction — TCM internal malfunction **Diagnostic support note** • This is a continuous monitor (other). • The check engine light illuminates if the PCM detects the above malfunction condition during the first drive cycle. • FREEZE FRAME DATA (Mode 2)/Snapshot data is available. • The DTC is stored in the PCM memory.
FAIL-SAFE FUNCTION	—
POSSIBLE CAUSE	• TCM connector or terminals malfunction • PCM connector or terminals malfunction • CAN communication line between PCM and TCM (local CAN between PCM and TCM) malfunction • TCM DTC is stored. • PCM malfunction • TCM malfunction

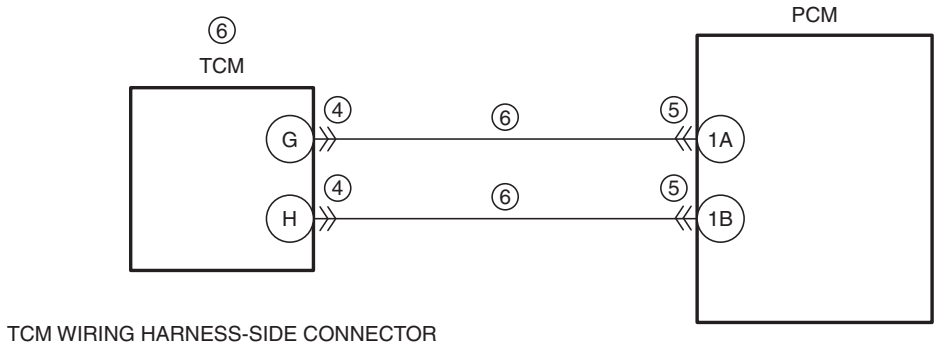

TCM WIRING HARNESS-SIDE CONNECTOR

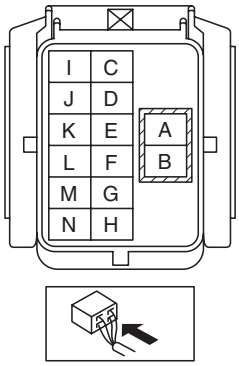

PCM WIRING HARNESS-SIDE CONNECTOR

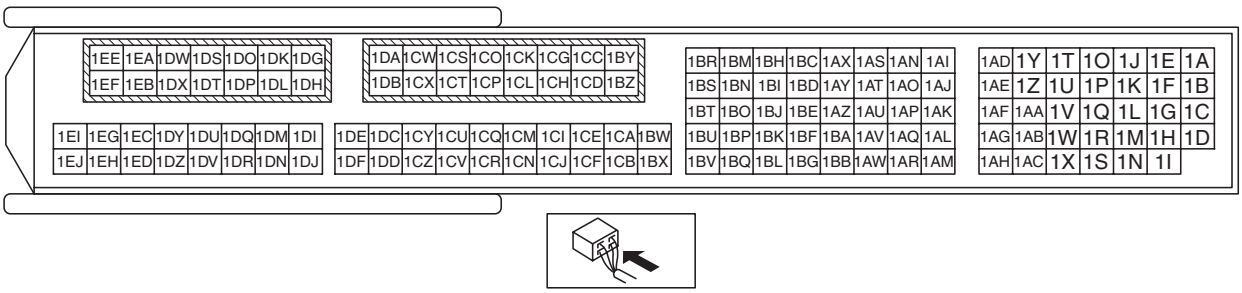

ON-BOARD DIAGNOSTIC [SKYACTIV-G 2.0]

Diagnostic Procedure

STEP	INSPECTION		ACTION
1	**VERIFY FREEZE FRAME DATA (MODE 2)/ SNAPSHOT DATA AND DIAGNOSTIC MONITORING TEST RESULTS HAVE BEEN RECORDED** • Have the FREEZE FRAME DATA (Mode 2)/ snapshot data and DIAGNOSTIC MONITORING TEST RESULTS (other related) been recorded?	Yes	Go to the next step.
		No	Record the FREEZE FRAME DATA (Mode 2)/snapshot data and DIAGNOSTIC MONITORING TEST RESULTS on the repair order, then go to the next step.
2	**VERIFY RELATED SERVICE INFORMATION AVAILABILITY** • Verify related Service Information availability. • Is any related Service Information available?	Yes	Perform repair or diagnosis according to the available Service Information. • If the vehicle is not repaired, go to the next step.
		No	Go to the next step.
3	**VERIFY RELATED PENDING CODE AND/OR DTC** • Switch the ignition to off, then to ON (engine off). • Perform the Pending Trouble Code Access Procedure and DTC Reading Procedure. (See 01-02-8 ON-BOARD DIAGNOSTIC TEST [SKYACTIV-G 2.0].) • Are any other PENDING CODEs and/or DTCs present?	Yes	Go to the applicable PENDING CODE or DTC inspection. (See 01-02-14 DTC TABLE [SKYACTIV-G 2.0].)
		No	Go to the next step.
4	**INSPECT TCM CONNECTOR CONDITION** • Switch the ignition to off. • Disconnect the TCM connector. • Inspect for poor connection (such as damaged/ pulled-out pins, corrosion). • Is there any malfunction?	Yes	Repair or replace the connector and/or terminals, then go to Step 7.
		No	Go to the next step.
5	**INSPECT PCM CONNECTOR CONDITION** • Disconnect the PCM connector. • Inspect for poor connection (such as damaged/ pulled-out pins, corrosion). • Is there any malfunction?	Yes	Repair or replace the connector and/or terminals, then go to Step 7.
		No	Go to the next step.
6	**CONFIRM TCM DTC** • Perform the TCM DTC inspection using the M-MDS. (See 05-02A-7 ON-BOARD DIAGNOSTIC SYSTEM DTC INSPECTION [FW6A-EL, FW6AX-EL].) • Are any DTCs present?	Yes	DTC U0074:00 or U0115:00 is displayed: • CAN communication line can be considered the cause. — Repair or replace the wiring harness between PCM and TCM, then go to the next step. DTC other than U0074:00 and U0115:00 is displayed: • Go to the applicable DTC inspection. (See 05-02A-11 ON-BOARD DIAGNOSTIC SYSTEM DTC TABLE [FW6A-EL, FW6AX-EL].)
		No	TCM can be considered the cause. • Replace the control valve body, then go to the next step. (See 05-17A-67 CONTROL VALVE BODY REMOVAL/ INSTALLATION [FW6A-EL, FW6AX-EL].)
7	**VERIFY DTC TROUBLESHOOTING COMPLETED** • Make sure to reconnect all disconnected connectors. • Clear the DTC from the PCM memory using the M-MDS. (See 01-02-12 AFTER REPAIR PROCEDURE [SKYACTIV-G 2.0].) • Perform the KOEO or KOER self test. (See 01-02-12 KOEO/KOER SELF TEST [SKYACTIV-G 2.0].) • Is the same DTC present?	Yes	Repeat the inspection from Step 1. • If the malfunction recurs, replace the PCM. (See 01-40-10 PCM REMOVAL/INSTALLATION [SKYACTIV-G 2.0].) Go to the next step.
		No	Go to the next step.
8	**VERIFY AFTER REPAIR PROCEDURE** • Perform the “AFTER REPAIR PROCEDURE”. (See 01-02-12 AFTER REPAIR PROCEDURE [SKYACTIV-G 2.0].) • Are any DTCs present?	Yes	Go to the applicable DTC inspection. (See 01-02-14 DTC TABLE [SKYACTIV-G 2.0].)
		No	DTC troubleshooting completed.

ON-BOARD DIAGNOSTIC [SKYACTIV-G 2.0]

DTC U0315:00 [SKYACTIV-G 2.0]

id0102h1901200

DTC U0315:00	DSC HU/CM error
DETECTION CONDITION	• When any of the following conditions is met: — CAN communication line between DSC HU/CM and PCM malfunction — DSC HU/CM internal malfunction **Diagnostic support note** • This is a continuous monitor (other). • The check engine light does not illuminate. • FREEZE FRAME DATA (Mode 2)/Snapshot data is not available. • The DTC is stored in the PCM memory.
FAIL-SAFE FUNCTION	—
POSSIBLE CAUSE	• CAN drive error (instrument cluster or PCM) • CAN communication line between DSC HU/CM and PCM malfunction • DSC HU/CM connector or terminals malfunction • PCM connector or terminals malfunction • DSC HU/CM malfunction • PCM malfunction

DSC HU/CM WIRING HARNESS-SIDE CONNECTOR

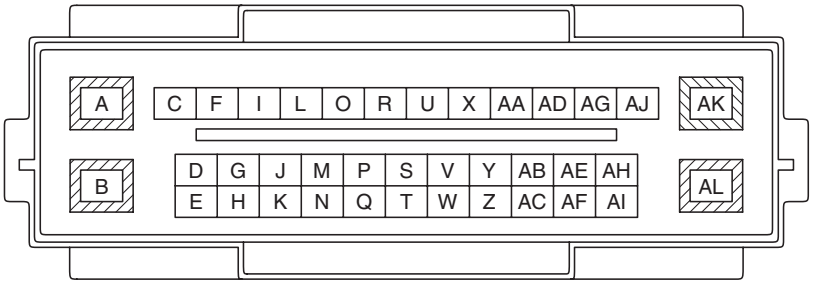

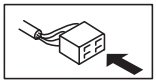

PCM WIRING HARNESS-SIDE CONNECTOR

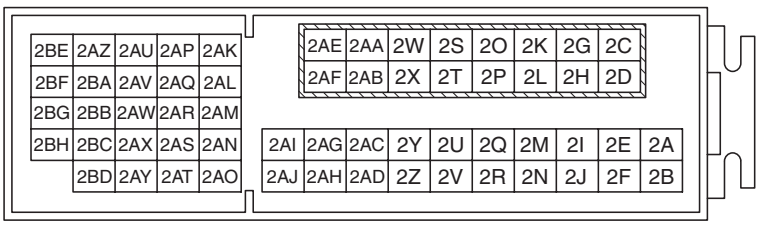

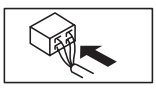

ON-BOARD DIAGNOSTIC [SKYACTIV-G 2.0]

Diagnostic Procedure

STEP	INSPECTION		ACTION
1	**VERIFY RELATED SERVICE INFORMATION AVAILABILITY** • Verify related Service Information availability. • Is any related Service Information available?	Yes	Perform repair or diagnosis according to the available Service Information. • If the vehicle is not repaired, go to the next step.
		No	Go to the next step.
2	**VERIFY DTC FOR MODULE COMMUNICATION** • Switch the ignition to off, then to ON (engine off). • Perform the DTC Reading Procedure. (See 01-02-8 ON-BOARD DIAGNOSTIC TEST [SKYACTIV-G 2.0].) • Are any other PENDING CODEs and/or DTCs present?	Yes	Go to the applicable PENDING CODE or DTC inspection. (See 01-02-14 DTC TABLE [SKYACTIV-G 2.0].)
		No	Go to the next step.
3	**CONFIRM DSC HU/CM DTC** • Perform the DSC HU/CM DTC inspection using the M-MDS. (See 04-02A-7 ON-BOARD DIAGNOSIS [DYNAMIC STABILITY CONTROL (DSC)].) • Are any DTCs present?	Yes	Go to the applicable DTC inspection. (See 04-02A-7 ON-BOARD DIAGNOSIS [DYNAMIC STABILITY CONTROL (DSC)].)
		No	Go to the next step.
4	**INSPECT DSC HU/CM CONNECTOR CONDITION** • Switch the ignition to off. • Disconnect the DSC HU/CM connector. • Inspect for poor connection (such as damaged/ pulled-out pins, corrosion). • Is there any malfunction?	Yes	Repair or replace the connector and/or terminals, then go to Step 6.
		No	Go to the next step.
5	**INSPECT PCM CONNECTOR CONDITION** • Disconnect the PCM connector. • Inspect for poor connection (such as damaged/ pulled-out pins, corrosion). • Is there any malfunction?	Yes	Repair or replace the connector and/or terminals, then go to the next step.
		No	DSC HU/CM can be considered the cause. • Replace the DSC HU/CM, then go to the next step. (See 04-15-4 DSC HU/CM REMOVAL/INSTALLATION.)
6	**VERIFY DTC TROUBLESHOOTING COMPLETED** • Make sure to reconnect all disconnected connectors. • Clear the DTC from the PCM memory using the M-MDS. (See 01-02-12 AFTER REPAIR PROCEDURE [SKYACTIV-G 2.0].) • Perform the KOEO or KOER self test. (See 01-02-12 KOEO/KOER SELF TEST [SKYACTIV-G 2.0].) • Is the same DTC present?	Yes	Repeat the inspection from Step 1. • If the malfunction recurs, replace the PCM. (See 01-40-10 PCM REMOVAL/INSTALLATION [SKYACTIV-G 2.0].) Go to the next step.
		No	Go to the next step.
7	**VERIFY AFTER REPAIR PROCEDURE** • Perform the “AFTER REPAIR PROCEDURE”. (See 01-02-12 AFTER REPAIR PROCEDURE [SKYACTIV-G 2.0].) • Are any DTCs present?	Yes	Go to the applicable DTC inspection. (See 01-02-14 DTC TABLE [SKYACTIV-G 2.0].)
		No	DTC troubleshooting completed.

ON-BOARD DIAGNOSTIC [SKYACTIV-G 2.0]

DTC U0320:00 [SKYACTIV-G 2.0]

id0102h1901300

DTC U0320:00	EPS control module error
DETECTION CONDITION	• When any of the following conditions is met: — CAN communication line between EPS control module and PCM malfunction — EPS control module internal malfunction **Diagnostic support note** • This is a continuous monitor (other). • The check engine light does not illuminate. • FREEZE FRAME DATA (Mode 2)/Snapshot data is not available. • The DTC is stored in the PCM memory.
FAIL-SAFE FUNCTION	—
POSSIBLE CAUSE	• CAN drive error (instrument cluster or PCM) • CAN communication line between EPS control module and PCM malfunction • EPS control module connector or terminals malfunction • PCM connector or terminals malfunction • EPS control module malfunction • PCM malfunction

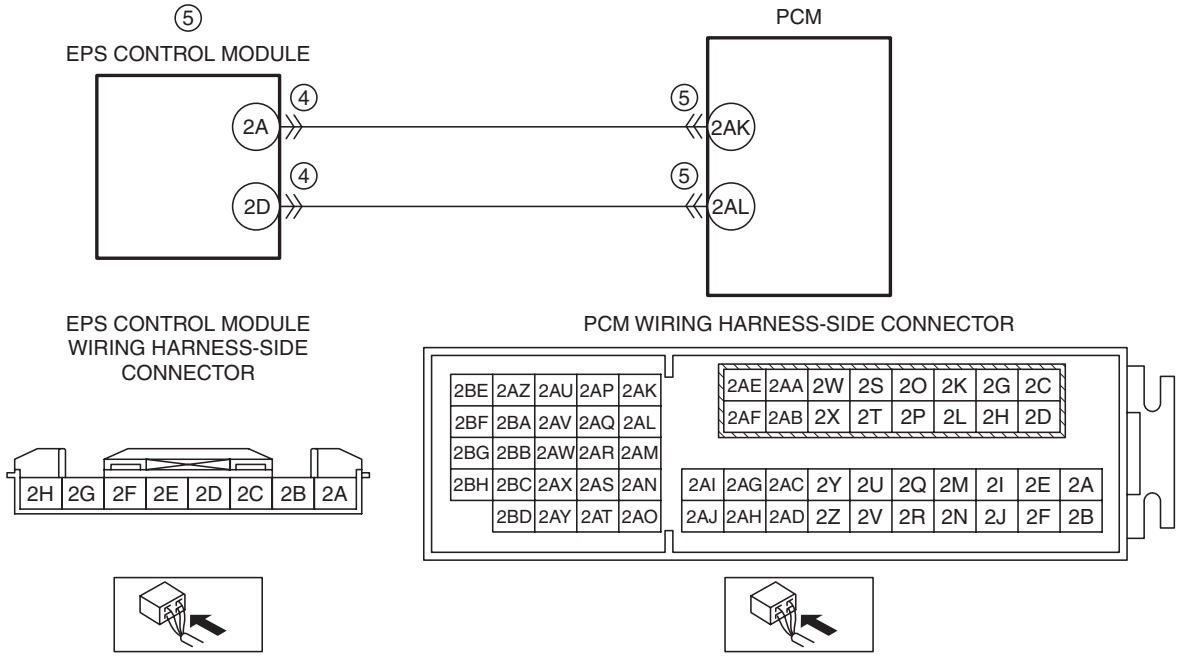

Diagnostic Procedure

STEP	INSPECTION		ACTION
1	**VERIFY RELATED SERVICE INFORMATION AVAILABILITY** • Verify related Service Information availability. • Is any related Service Information available?	Yes	Perform repair or diagnosis according to the available Service Information. • If the vehicle is not repaired, go to the next step.
		No	Go to the next step.
2	**VERIFY DTC FOR MODULE COMMUNICATION** • Switch the ignition to off, then to ON (engine off). • Perform the DTC Reading Procedure. (See 01-02-8 ON-BOARD DIAGNOSTIC TEST [SKYACTIV-G 2.0].) • Are any other PENDING CODEs and/or DTCs present?	Yes	Go to the applicable PENDING CODE or DTC inspection. (See 01-02-14 DTC TABLE [SKYACTIV-G 2.0].)
		No	Go to the next step.
3	**CONFIRM EPS CONTROL MODULE DTC** • Perform the EPS control module DTC inspection using the M-MDS. (See 06-02-5 ELECTRIC POWER STEERING (EPS) ON-BOARD DIAGNOSIS.) • Are any DTCs present?	Yes	Go to the applicable DTC inspection. (See 06-02-5 ELECTRIC POWER STEERING (EPS) ON-BOARD DIAGNOSIS.)
		No	Go to the next step.

ON-BOARD DIAGNOSTIC [SKYACTIV-G 2.0]

STEP	INSPECTION		ACTION
4	**INSPECT EPS CONTROL MODULE CONNECTOR CONDITION** • Switch the ignition to off. • Disconnect the EPS control module connector. • Inspect for poor connection (such as damaged/ pulled-out pins, corrosion). • Is there any malfunction?	Yes	Repair or replace the connector and/or terminals, then go to Step 6.
		No	Go to the next step.
5	**INSPECT PCM CONNECTOR CONDITION** • Disconnect the PCM connector. • Inspect for poor connection (such as damaged/ pulled-out pins, corrosion). • Is there any malfunction?	Yes	Repair or replace the connector and/or terminals, then go to the next step.
		No	EPS control module can be considered the cause. • Replace the EPS control module, then go to the next step.
6	**VERIFY DTC TROUBLESHOOTING COMPLETED** • Make sure to reconnect all disconnected connectors. • Clear the DTC from the PCM memory using the M-MDS. (See 01-02-12 AFTER REPAIR PROCEDURE [SKYACTIV-G 2.0].) • Perform the KOEO or KOER self test. (See 01-02-12 KOEO/KOER SELF TEST [SKYACTIV-G 2.0].) • Is the same DTC present?	Yes	Repeat the inspection from Step 1. • If the malfunction recurs, replace the PCM. (See 01-40-10 PCM REMOVAL/INSTALLATION [SKYACTIV-G 2.0].) Go to the next step.
		No	Go to the next step.
7	**VERIFY AFTER REPAIR PROCEDURE** • Perform the “AFTER REPAIR PROCEDURE”. (See 01-02-12 AFTER REPAIR PROCEDURE [SKYACTIV-G 2.0].) • Are any DTCs present?	Yes	Go to the applicable DTC inspection. (See 01-02-14 DTC TABLE [SKYACTIV-G 2.0].)
		No	DTC troubleshooting completed.

ON-BOARD DIAGNOSTIC [SKYACTIV-G 2.0]

DTC U0323:00 [SKYACTIV-G 2.0]

id0102h1901400

DTC U0323:00	Instrument cluster error
DETECTION CONDITION	• When any of the following conditions is met: — CAN communication line between instrument cluster and PCM malfunction — Instrument cluster internal malfunction **Diagnostic support note** • This is a continuous monitor (other). • The check engine light does not illuminate. • FREEZE FRAME DATA (Mode 2)/Snapshot data is not available. • The DTC is stored in the PCM memory.
FAIL-SAFE FUNCTION	—
POSSIBLE CAUSE	• CAN drive error (instrument cluster or PCM) • CAN communication line between instrument cluster and PCM malfunction • PCM connector or terminals malfunction • Instrument cluster connector or terminals malfunction • Instrument cluster malfunction • PCM malfunction

INSTRUMENT CLUSTER
WIRING HARNESS-SIDE CONNECTOR

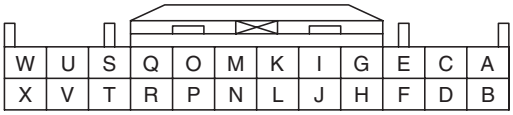

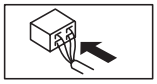

PCM WIRING HARNESS-SIDE CONNECTOR

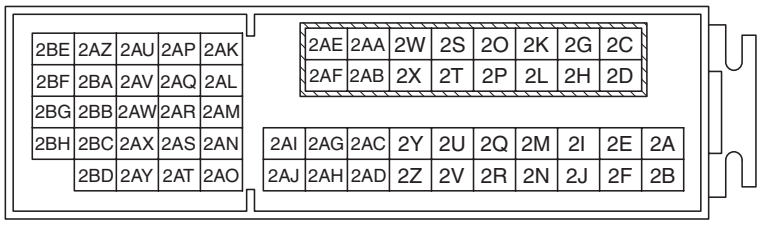

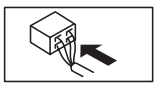

ON-BOARD DIAGNOSTIC [SKYACTIV-G 2.0]

Diagnostic Procedure

STEP	INSPECTION		ACTION
1	**VERIFY RELATED SERVICE INFORMATION AVAILABILITY** • Verify related Service Information availability. • Is any related Service Information available?	Yes	Perform repair or diagnosis according to the available Service Information. • If the vehicle is not repaired, go to the next step.
		No	Go to the next step.
2	**VERIFY DTC FOR MODULE COMMUNICATION** • Switch the ignition to off, then to ON (engine off). • Perform the DTC Reading Procedure. (See 01-02-8 ON-BOARD DIAGNOSTIC TEST [SKYACTIV-G 2.0].) • Are any other PENDING CODEs and/or DTCs present?	Yes	Go to the applicable PENDING CODE or DTC inspection. (See 01-02-14 DTC TABLE [SKYACTIV-G 2.0].)
		No	Go to the next step.
3	**CONFIRM INSTRUMENT CLUSTER DTC** • Perform the instrument cluster DTC inspection using the M-MDS. (See 09-02G-7 DTC INSPECTION [INSTRUMENT CLUSTER].) • Are any DTCs present?	Yes	DTC U0100:00 is displayed: • CAN communication line can be considered the cause. — Repair or replace the wiring harness between PCM and instrument cluster, then go to the next step. DTC other than U0100:00 is displayed: • Go to the applicable DTC inspection. (See 09-02G-10 DTC TABLE [INSTRUMENT CLUSTER].)
		No	Go to the next step.
4	**INSPECT INSTRUMENT CLUSTER CONNECTOR CONDITION** • Switch the ignition to off. • Disconnect the instrument cluster connector. • Inspect for poor connection (such as damaged/ pulled-out pins, corrosion). • Is there any malfunction?	Yes	Repair or replace the connector and/or terminals, then go to Step 6.
		No	Go to the next step.
5	**INSPECT PCM CONNECTOR CONDITION** • Disconnect the PCM connector. • Inspect for poor connection (such as damaged/ pulled-out pins, corrosion). • Is there any malfunction?	Yes	Repair or replace the connector and/or terminals, then go to Step 6.
		No	Replace the instrument cluster, then go to the next step. (See 09-22-6 INSTRUMENT CLUSTER REMOVAL/ INSTALLATION.)
6	**VERIFY DTC TROUBLESHOOTING COMPLETED** • Make sure to reconnect all disconnected connectors. • Clear the DTC from the PCM memory using the M-MDS. (See 01-02-12 AFTER REPAIR PROCEDURE [SKYACTIV-G 2.0].) • Perform the KOEO or KOER self test. (See 01-02-12 KOEO/KOER SELF TEST [SKYACTIV-G 2.0].) • Is the same DTC present?	Yes	Repeat the inspection from Step 1. • If the malfunction recurs, replace the PCM. (See 01-40-10 PCM REMOVAL/INSTALLATION [SKYACTIV-G 2.0].) Go to the next step.
		No	Go to the next step.
7	**VERIFY AFTER REPAIR PROCEDURE** • Perform the “AFTER REPAIR PROCEDURE”. (See 01-02-12 AFTER REPAIR PROCEDURE [SKYACTIV-G 2.0].) • Are any DTCs present?	Yes	Go to the applicable DTC inspection. (See 01-02-14 DTC TABLE [SKYACTIV-G 2.0].)
		No	DTC troubleshooting completed.

ON-BOARD DIAGNOSTIC [SKYACTIV-G 2.0]

DTC U0336:00 [SKYACTIV-G 2.0]

id0102h1901500

DTC U0336:00	SAS control module error
DETECTION CONDITION	• When any of the following conditions is met: — CAN communication line between SAS control module and PCM malfunction — SAS control module internal malfunction **Diagnostic support note** • This is a continuous monitor (other). • The check engine light does not illuminate. • FREEZE FRAME DATA (Mode 2)/Snapshot data is not available. • The DTC is stored in the PCM memory.
FAIL-SAFE FUNCTION	—
POSSIBLE CAUSE	• CAN drive error (instrument cluster or PCM) • CAN communication line between SAS control module and PCM malfunction • SAS control module connector or terminals malfunction • PCM connector or terminals malfunction • SAS control module malfunction • PCM malfunction

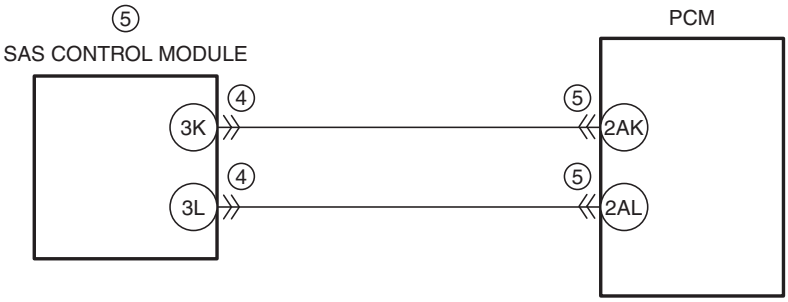

SAS CONTROL MODULE WIRING HARNESS-SIDE CONNECTOR

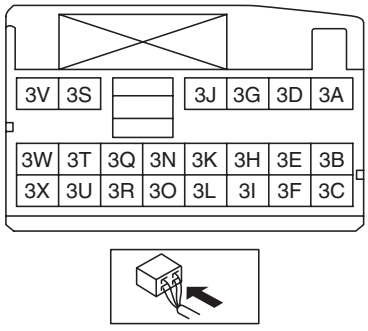

PCM WIRING HARNESS-SIDE CONNECTOR

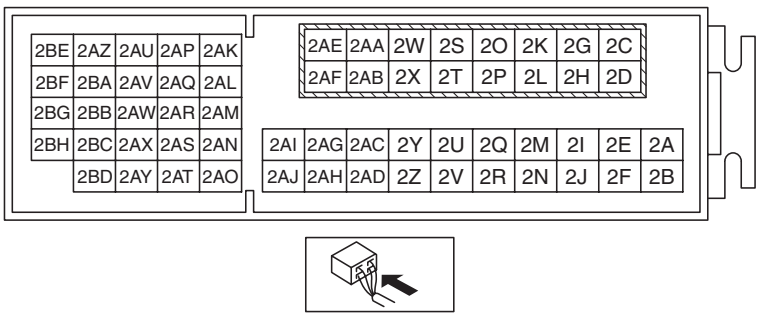

ON-BOARD DIAGNOSTIC [SKYACTIV-G 2.0]

Diagnostic Procedure

STEP	INSPECTION		ACTION
1	**VERIFY RELATED SERVICE INFORMATION AVAILABILITY** • Verify related Service Information availability. • Is any related Service Information available?	Yes	Perform repair or diagnosis according to the available Service Information. • If the vehicle is not repaired, go to the next step.
		No	Go to the next step.
2	**VERIFY DTC FOR MODULE COMMUNICATION** • Switch the ignition to off, then to ON (engine off). • Perform the DTC Reading Procedure. (See 01-02-8 ON-BOARD DIAGNOSTIC TEST [SKYACTIV-G 2.0].) • Are any other PENDING CODEs and/or DTCs present?	Yes	Go to the applicable PENDING CODE or DTC inspection. (See 01-02-14 DTC TABLE [SKYACTIV-G 2.0].)
		No	Go to the next step.
3	**CONFIRM SAS CONTROL MODULE DTC** • Perform the SAS control module DTC inspection using the M-MDS. (See 08-02-7 DTC INSPECTION.) • Are any DTCs present?	Yes	Go to the applicable DTC inspection. (See 08-02-11 DTC TABLE.)
		No	Go to the next step.
4	**INSPECT SAS CONTROL MODULE CONNECTOR CONDITION** • Switch the ignition to off. • Disconnect the SAS control module connector. • Inspect for poor connection (such as damaged/ pulled-out pins, corrosion). • Is there any malfunction?	Yes	Repair or replace the connector and/or terminals, then go to Step 6.
		No	Go to the next step.
5	**INSPECT PCM CONNECTOR CONDITION** • Disconnect the PCM connector. • Inspect for poor connection (such as damaged/ pulled-out pins, corrosion). • Is there any malfunction?	Yes	Repair or replace the connector and/or terminals, then go to the next step.
		No	SAS control module can be considered the cause. • Replace the SAS control module, then go to the next step. (See 08-10-20 SAS CONTROL MODULE REMOVAL/ INSTALLATION.)
6	**VERIFY DTC TROUBLESHOOTING COMPLETED** • Make sure to reconnect all disconnected connectors. • Clear the DTC from the PCM memory using the M-MDS. (See 01-02-12 AFTER REPAIR PROCEDURE [SKYACTIV-G 2.0].) • Perform the KOEO or KOER self test. (See 01-02-12 KOEO/KOER SELF TEST [SKYACTIV-G 2.0].) • Is the same DTC present?	Yes	Repeat the inspection from Step 1. • If the malfunction recurs, replace the PCM. (See 01-40-10 PCM REMOVAL/INSTALLATION [SKYACTIV-G 2.0].) Go to the next step.
		No	Go to the next step.
7	**VERIFY AFTER REPAIR PROCEDURE** • Perform the “AFTER REPAIR PROCEDURE”. (See 01-02-12 AFTER REPAIR PROCEDURE [SKYACTIV-G 2.0].) • Are any DTCs present?	Yes	Go to the applicable DTC inspection. (See 01-02-14 DTC TABLE [SKYACTIV-G 2.0].)
		No	DTC troubleshooting completed.

ON-BOARD DIAGNOSTIC [SKYACTIV-G 2.0]

DTC U0338:00 [SKYACTIV-G 2.0]

id0102h1901600

DTC U0338:00	Start stop unit error
DETECTION CONDITION	• When any of the following conditions is met: — CAN communication line between start stop unit and PCM malfunction — Start stop unit internal malfunction **Diagnostic support note** • This is a continuous monitor (other). • The check engine light does not illuminate. • FREEZE FRAME DATA (Mode 2)/Snapshot data is not available. • The DTC is stored in the PCM memory.
FAIL-SAFE FUNCTION	—
POSSIBLE CAUSE	• CAN drive error (instrument cluster or PCM) • CAN communication line between start stop unit and PCM malfunction • Start stop unit connector or terminals malfunction • PCM connector or terminals malfunction • Start stop unit malfunction • PCM malfunction

START STOP UNIT
WIRING HARNESS-SIDE CONNECTOR

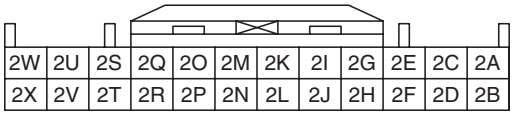

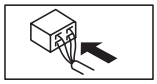

PCM WIRING HARNESS-SIDE CONNECTOR

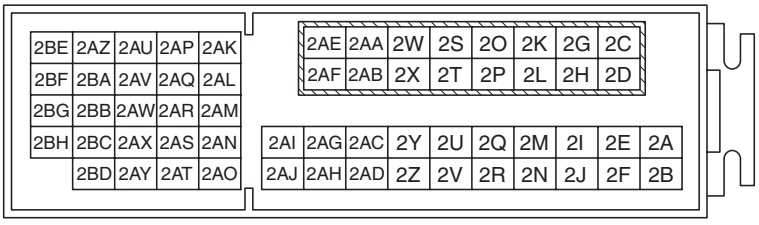

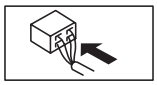

ON-BOARD DIAGNOSTIC [SKYACTIV-G 2.0]

Diagnostic Procedure

STEP	INSPECTION		ACTION
1	**VERIFY RELATED SERVICE INFORMATION AVAILABILITY** • Verify related Service Information availability. • Is any related Service Information available?	Yes	Perform repair or diagnosis according to the available Service Information. • If the vehicle is not repaired, go to the next step.
		No	Go to the next step.
2	**VERIFY DTC FOR MODULE COMMUNICATION** • Switch the ignition to off, then to ON (engine off). • Perform the DTC Reading Procedure. (See 01-02-8 ON-BOARD DIAGNOSTIC TEST [SKYACTIV-G 2.0].) • Are any other PENDING CODEs and/or DTCs present?	Yes	Go to the applicable PENDING CODE or DTC inspection. (See 01-02-14 DTC TABLE [SKYACTIV-G 2.0].)
		No	Go to the next step.
3	**CONFIRM START STOP UNIT DTC** • Perform the start stop unit DTC inspection using the M-MDS. (See 09-02C-6 DTC INSPECTION [START STOP UNIT].) • Are any DTCs present?	Yes	Go to the applicable DTC inspection. (See 09-02C-8 DTC TABLE [START STOP UNIT].)
		No	Go to the next step.
4	**INSPECT START STOP UNIT CONNECTOR CONDITION** • Switch the ignition to off. • Disconnect the start stop unit connector. • Inspect for poor connection (such as damaged/ pulled-out pins, corrosion). • Is there any malfunction?	Yes	Repair or replace the connector and/or terminals, then go to Step 6.
		No	Go to the next step.
5	**INSPECT PCM CONNECTOR CONDITION** • Disconnect the PCM connector. • Inspect for poor connection (such as damaged/ pulled-out pins, corrosion). • Is there any malfunction?	Yes	Repair or replace the connector and/or terminals, then go to the next step.
		No	Start stop unit can be considered the cause. • Replace the start stop unit, then go to the next step. (See 09-14-53 START STOP UNIT REMOVAL/ INSTALLATION.)
6	**VERIFY DTC TROUBLESHOOTING COMPLETED** • Make sure to reconnect all disconnected connectors. • Clear the DTC from the PCM memory using the M-MDS. (See 01-02-12 AFTER REPAIR PROCEDURE [SKYACTIV-G 2.0].) • Perform the KOEO or KOER self test. (See 01-02-12 KOEO/KOER SELF TEST [SKYACTIV-G 2.0].) • Is the same DTC present?	Yes	Repeat the inspection from Step 1. • If the malfunction recurs, replace the PCM. (See 01-40-10 PCM REMOVAL/INSTALLATION [SKYACTIV-G 2.0].) Go to the next step.
		No	Go to the next step.
7	**VERIFY AFTER REPAIR PROCEDURE** • Perform the “AFTER REPAIR PROCEDURE”. (See 01-02-12 AFTER REPAIR PROCEDURE [SKYACTIV-G 2.0].) • Are any DTCs present?	Yes	Go to the applicable DTC inspection. (See 01-02-14 DTC TABLE [SKYACTIV-G 2.0].)
		No	DTC troubleshooting completed.

ON-BOARD DIAGNOSTIC [SKYACTIV-G 2.0]

DTC U0433:00 [SKYACTIV-G 2.0]

id0102h1901700

DTC U0433:00	**Abnormal message from rear body control module (RBCM)**
DETECTION CONDITION	• Correct data cannot be received from rear body control module (RBCM). **Diagnostic support note** • This is a continuous monitor (other). • The check engine light does not illuminate. • FREEZE FRAME DATA (Mode 2)/Snapshot data is not available. • The DTC is stored in the PCM memory.
FAIL-SAFE FUNCTION	• Illuminates the TCS/DSC indicator light. • Inhibits the TCS (engine control) and DSC controls.
POSSIBLE CAUSE	• CAN communication line between rear body control module (RBCM) and PCM malfunction • PCM connector or terminals malfunction • Instrument cluster connector or terminals malfunction • Rear body control module (RBCM) connector or terminals malfunction • Rear body control module (RBCM) malfunction • Instrument cluster malfunction • PCM malfunction

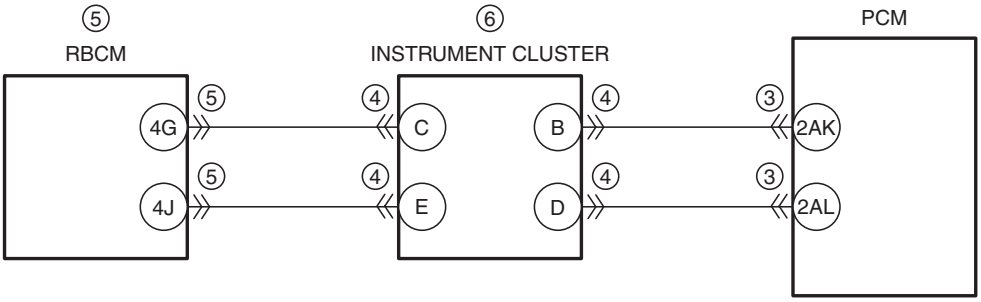

INSTRUMENT CLUSTER
WIRING HARNESS-SIDE CONNECTOR

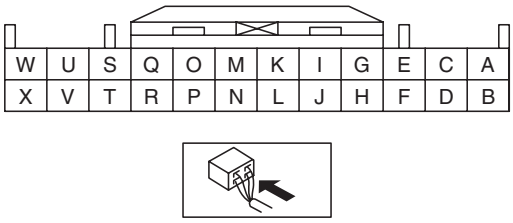

RBCM
WIRING HARNESS-SIDE CONNECTOR

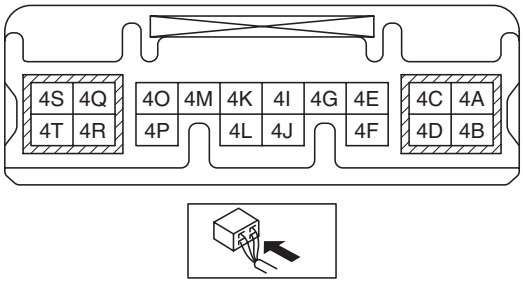

PCM WIRING HARNESS-SIDE CONNECTOR

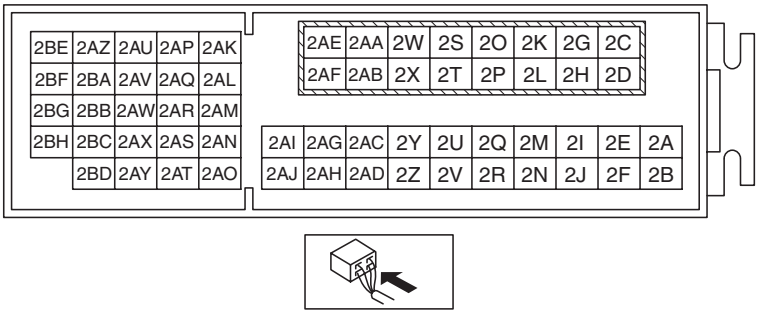

ON-BOARD DIAGNOSTIC [SKYACTIV-G 2.0]

Diagnostic Procedure

STEP	INSPECTION		ACTION
1	**VERIFY RELATED SERVICE INFORMATION AVAILABILITY** • Verify related Service Information availability. • Is any related Service Information available?	Yes	Perform repair or diagnosis according to the available Service Information. • If the vehicle is not repaired, go to the next step.
		No	Go to the next step.
2	**CONFIRM REAR BODY CONTROL MODULE (RBCM) DTC** • Switch the ignition to off, then to ON (engine off). • Perform the rear body control module (RBCM) DTC inspection using the M-MDS. (See 09-02L-9 DTC INSPECTION [REAR BODY CONTROL MODULE (RBCM)].) • Are any DTCs present?	Yes	Go to the applicable DTC inspection. (See 09-02L-12 DTC TABLE [REAR BODY CONTROL MODULE (RBCM)].)
		No	Go to the next step.
3	**INSPECT PCM CONNECTOR CONDITION** • Switch the ignition to off. • Disconnect the PCM connector. • Inspect for poor connection (such as damaged/pulled-out pins, corrosion). • Is there any malfunction?	Yes	Repair or replace the connector and/or terminals, then go to Step 7.
		No	Go to the next step.
4	**INSPECT INSTRUMENT CLUSTER CONNECTOR CONDITION** • Disconnect the instrument cluster connector. • Inspect for poor connection (such as damaged/pulled-out pins, corrosion). • Is there any malfunction?	Yes	Repair or replace the connector and/or terminals, then go to Step 7.
		No	Go to the next step.
5	**INSPECT REAR BODY CONTROL MODULE (RBCM) CONNECTOR CONDITION** • Disconnect the rear body control module (RBCM) connector. • Inspect for poor connection (such as damaged/pulled-out pins, corrosion). • Is there any malfunction?	Yes	Repair or replace the connector and/or terminals, then go to Step 7.
		No	Rear body control module (RBCM) can be considered the cause. • Inspect the rear body control module (RBCM). (See 09-40-11 REAR BODY CONTROL MODULE (RBCM) INSPECTION.) — If there is any malfunction: • Replace the rear body control module (RBCM), then go to Step 7. (See 09-40-9 REAR BODY CONTROL MODULE (RBCM) REMOVAL/INSTALLATION.) — If there is no malfunction: • Go to the next step.
6	**INSPECT INSTRUMENT CLUSTER** • Inspect the instrument cluster. (See 09-22-11 INSTRUMENT CLUSTER INSPECTION.) • Is there any malfunction?	Yes	Replace the instrument cluster, then go to the next step. (See 09-22-6 INSTRUMENT CLUSTER REMOVAL/INSTALLATION.)
		No	Go to the next step.
7	**VERIFY DTC TROUBLESHOOTING COMPLETED** • Make sure to reconnect all disconnected connectors. • Clear the DTC from the PCM memory using the M-MDS. (See 01-02-12 AFTER REPAIR PROCEDURE [SKYACTIV-G 2.0].) • Perform the KOEO or KOER self test. (See 01-02-12 KOEO/KOER SELF TEST [SKYACTIV-G 2.0].) • Is the same DTC present?	Yes	Repeat the inspection from Step 1. • If the malfunction recurs, replace the PCM. (See 01-40-10 PCM REMOVAL/INSTALLATION [SKYACTIV-G 2.0].) Go to the next step.
		No	Go to the next step.
8	**VERIFY AFTER REPAIR PROCEDURE** • Perform the “AFTER REPAIR PROCEDURE”. (See 01-02-12 AFTER REPAIR PROCEDURE [SKYACTIV-G 2.0].) • Are any DTCs present?	Yes	Go to the applicable DTC inspection. (See 01-02-14 DTC TABLE [SKYACTIV-G 2.0].)
		No	DTC troubleshooting completed.

ON-BOARD DIAGNOSTIC [SKYACTIV-G 2.0]

DTC U1007:00 [SKYACTIV-G 2.0]

id0102h1855400

DTC U1007:00	CAN/LIN communication system: current sensor information communication error with front body control module (FBCM)
DETECTION CONDITION	• PCM detects a current sensor information communication error from front body control module (FBCM). **Diagnostic support note** • This is a continuous monitor (other). • The check engine light does not illuminate. • FREEZE FRAME DATA (Mode 2)/Snapshot data is not available. • The DTC is stored in the PCM memory.
FAIL-SAFE FUNCTION	• Inhibits engine-stop by operating the i-stop function. • Inhibits a part of the generator output control.
POSSIBLE CAUSE	• Communication line between current sensor and front body control module (FBCM) malfunction • Communication line between front body control module (FBCM) and PCM malfunction • Current sensor connector or terminals malfunction • Short to ground or open circuit in current sensor power supply circuit — Short to ground in wiring harness between MAIN 200 A fuse and current sensor terminal A — MAIN 200 A fuse and/or ENG.+B 7.5 A fuse malfunction — Open circuit in wiring harness between battery positive terminal and current sensor terminal A • Front body control module (FBCM) connector or terminals malfunction • Short to ground in wiring harness between the following terminals: — Current sensor terminal B—Front body control module (FBCM) terminal 2E — Front body control module (FBCM) terminal 2P—PCM terminal 2AK — Front body control module (FBCM) terminal 2N—PCM terminal 2AL • Open circuit in wiring harness between current sensor terminal B and front body control module (FBCM) terminal 2E • PCM connector or terminals malfunction • Open circuit in wiring harness between the following terminals: — Front body control module (FBCM) terminal 2P—PCM terminal 2AK — Front body control module (FBCM) terminal 2N—PCM terminal 2AL • Current sensor malfunction • Front body control module (FBCM) malfunction • PCM malfunction

ON-BOARD DIAGNOSTIC [SKYACTIV-G 2.0]

DTC U1007:00	CAN/LIN communication system: current sensor information communication error with front body control module (FBCM)

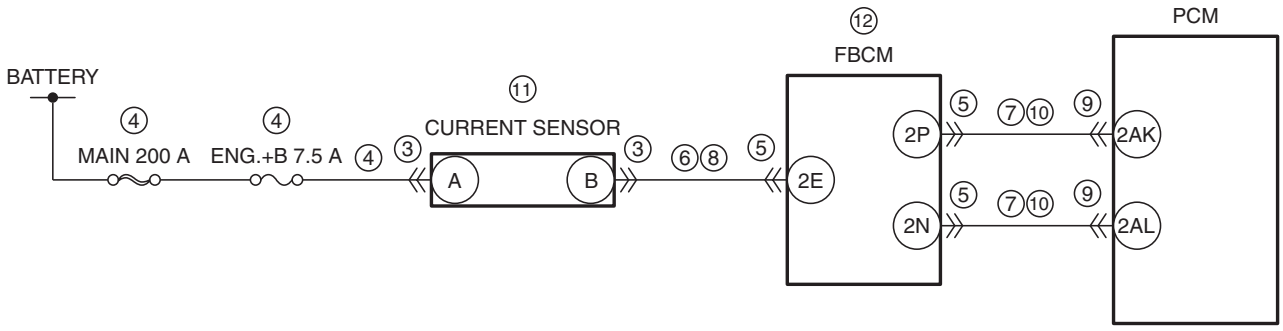

CURRENT SENSOR WIRING HARNESS-SIDE CONNECTOR

FBCM WIRING HARNESS-SIDE CONNECTOR

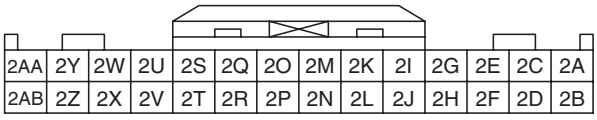

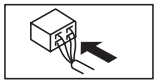

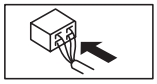

PCM WIRING HARNESS-SIDE CONNECTOR

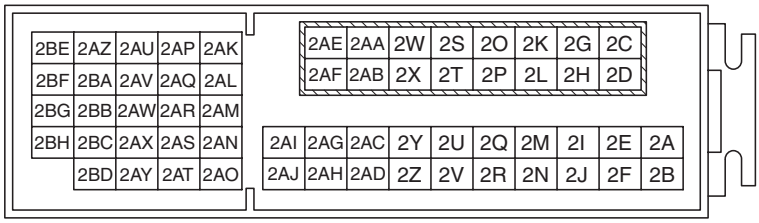

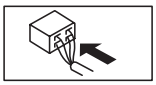

Diagnostic Procedure

STEP	INSPECTION		ACTION
1	**VERIFY RELATED SERVICE INFORMATION AVAILABILITY** • Verify related Service Information availability. • Is any related Service Information available?	Yes	Perform repair or diagnosis according to the available Service Information. • If the vehicle is not repaired, go to the next step.
		No	Go to the next step.
2	**VERIFY RELATED PENDING CODE AND/OR DTC** • Switch the ignition to off, then to ON (engine off). • Perform the Pending Trouble Code Access Procedure and DTC Reading Procedure. (See 01-02-8 ON-BOARD DIAGNOSTIC TEST [SKYACTIV-G 2.0].) • Are any other PENDING CODEs and/or DTCs present?	Yes	Go to the applicable PENDING CODE or DTC inspection. (See 01-02-14 DTC TABLE [SKYACTIV-G 2.0].)
		No	Go to the next step.

ON-BOARD DIAGNOSTIC [SKYACTIV-G 2.0]

STEP	INSPECTION		ACTION
3	**INSPECT CURRENT SENSOR CONNECTOR CONDITION** **Note** • Always disconnect current sensor connector before disconnecting the negative battery cable. • Switch the ignition to off. • Disconnect the current sensor connector. • Inspect for poor connection (such as damaged/ pulled-out pins, corrosion). • Is there any malfunction?	Yes	Repair or replace the connector and/or terminals, then go to Step 13.
		No	Go to the next step.
4	**INSPECT CURRENT SENSOR POWER SUPPLY CIRCUIT FOR SHORT TO GROUND OR OPEN CIRCUIT** • Verify that the current sensor connector is disconnected. • Measure the voltage at the current sensor terminal A (wiring harness-side). • Is the voltage **B+**?	Yes	Go to the next step.
		No	Inspect the MAIN 200 A fuse and ENG.+B 7.5 A fuse. • If the fuse is blown: — Repair or replace the wiring harness for a possible short to ground. — Replace the malfunctioning fuse. • If the fuse is deteriorated: — Replace the malfunctioning fuse. • If all fuses are normal: — Repair or replace the wiring harness for a possible open circuit. Go to Step 13.
5	**INSPECT FRONT BODY CONTROL MODULE (FBCM) CONNECTOR CONDITION** • Disconnect the front body control module (FBCM) connector. • Inspect for poor connection (such as damaged/ pulled-out pins, corrosion). • Is there any malfunction?	Yes	Repair or replace the connector and/or terminals, then go to Step 13.
		No	Go to the next step.
6	**INSPECT CURRENT SENSOR SIGNAL CIRCUIT FOR SHORT TO GROUND** • Verify that the current sensor and front body control module (FBCM) connectors are disconnected. • Inspect for continuity between current sensor terminal B (wiring harness-side) and body ground. • Is there continuity?	Yes	Repair or replace the wiring harness for a possible short to ground, then go to Step 13.
		No	Go to the next step.
7	**INSPECT FRONT BODY CONTROL MODULE (FBCM) CIRCUIT FOR SHORT TO GROUND** • Verify that the current sensor and front body control module (FBCM) connectors are disconnected. • Inspect for continuity between the following terminals (wiring harness-side) and body ground: — Front body control module (FBCM) terminal 2P — Front body control module (FBCM) terminal 2N • Is there continuity?	Yes	If the short to ground circuit could be detected in the wiring harness: • Repair or replace the wiring harness for a possible short to ground. If the short to ground circuit could not be detected in the wiring harness: • Replace the PCM (short to ground in the PCM internal circuit). (See 01-40-10 PCM REMOVAL/INSTALLATION [SKYACTIV-G 2.0].) Go to Step 13.
		No	Go to the next step.
8	**INSPECT CURRENT SENSOR SIGNAL CIRCUIT FOR OPEN CIRCUIT** • Verify that the current sensor and front body control module (FBCM) connectors are disconnected. • Inspect for continuity between current sensor terminal B (wiring harness-side) and front body control module (FBCM) terminal 2E (wiring harness-side). • Is there continuity?	Yes	Go to the next step.
		No	Repair or replace the wiring harness for a possible open circuit, then go to Step 13.

ON-BOARD DIAGNOSTIC [SKYACTIV-G 2.0]

STEP	INSPECTION		ACTION
9	**INSPECT PCM CONNECTOR CONDITION** • Disconnect the PCM connector. • Inspect for poor connection (such as damaged/ pulled-out pins, corrosion). • Is there any malfunction?	Yes	Repair or replace the connector and/or terminals, then go to Step 13.
		No	Go to the next step.
10	**INSPECT FRONT BODY CONTROL MODULE (FBCM) CIRCUIT FOR OPEN CIRCUIT** • Verify that the current sensor, front body control module (FBCM) and PCM connectors are disconnected. • Inspect for continuity between the following terminals (wiring harness-side): — Front body control module (FBCM) terminal 2P—PCM terminal 2AK — Front body control module (FBCM) terminal 2N—PCM terminal 2AL • Is there continuity?	Yes	Go to the next step.
		No	Repair or replace the wiring harness for a possible open circuit, then go to Step 13.
11	**INSPECT CURRENT SENSOR** • Inspect the current sensor. (See 01-40-66 CURRENT SENSOR INSPECTION [SKYACTIV-G 2.0].) • Is there any malfunction?	Yes	Replace the current sensor, then go to Step 13. (See 01-40-65 CURRENT SENSOR REMOVAL/ INSTALLATION [SKYACTIV-G 2.0].)
		No	Go to the next step.
12	**INSPECT FRONT BODY CONTROL MODULE (FBCM)** • Inspect the front body control module (FBCM). (See 09-40-3 FRONT BODY CONTROL MODULE (FBCM) INSPECTION.) • Is there any malfunction?	Yes	Replace the front body control module (FBCM), then go to the next step. (See 09-40-2 FRONT BODY CONTROL MODULE (FBCM) REMOVAL/INSTALLATION.)
		No	Go to the next step.
13	**VERIFY DTC TROUBLESHOOTING COMPLETED** • Make sure to reconnect all disconnected connectors. • Clear the DTC from the PCM memory using the M-MDS. (See 01-02-12 AFTER REPAIR PROCEDURE [SKYACTIV-G 2.0].) • Perform the KOEO or KOER self test. (See 01-02-12 KOEO/KOER SELF TEST [SKYACTIV-G 2.0].) • Is the PENDING CODE for this DTC present?	Yes	Repeat the inspection from Step 1. • If the malfunction recurs, replace the PCM. (See 01-40-10 PCM REMOVAL/INSTALLATION [SKYACTIV-G 2.0].) Go to the next step.
		No	Go to the next step.
14	**VERIFY AFTER REPAIR PROCEDURE** • Perform the “AFTER REPAIR PROCEDURE”. (See 01-02-12 AFTER REPAIR PROCEDURE [SKYACTIV-G 2.0].) • Are any DTCs present?	Yes	Go to the applicable DTC inspection. (See 01-02-14 DTC TABLE [SKYACTIV-G 2.0].)
		No	DTC troubleshooting completed.

ON-BOARD DIAGNOSTIC [SKYACTIV-G 2.0]

DTC U2300:00 [SKYACTIV-G 2.0]

id0102h1228300

DTC U2300:00	Global central configuration error
DETECTION CONDITION	• Any of following conditions occurs: — No configuration of instrument cluster — The configuration signal with the estimated CAN ID is not sent from the instrument cluster. — The configuration signal value sent via CAN from the instrument cluster is unknown or invalid. — The configuration signal value sent via CAN from the instrument cluster is a value other than the estimated value. — The configuration signal value sent via CAN from the instrument cluster does not match the PCM value. **Diagnostic support note** • This is a continuous monitor (other). • The check engine light does not illuminate. • FREEZE FRAME DATA (Mode 2)/Snapshot data is not available. • The DTC is stored in the PCM memory.
FAIL-SAFE FUNCTION	• Operates by the previously learned configuration value.
POSSIBLE CAUSE	• CAN drive error (instrument cluster or PCM) • Configuration data for the instrument cluster is incorrectly set • CAN communication line between instrument cluster and PCM malfunction • PCM connector or terminals malfunction • Instrument cluster connector or terminals malfunction • Instrument cluster loose • Instrument cluster malfunction • Error in non-volatile memory in PCM • PCM malfunction

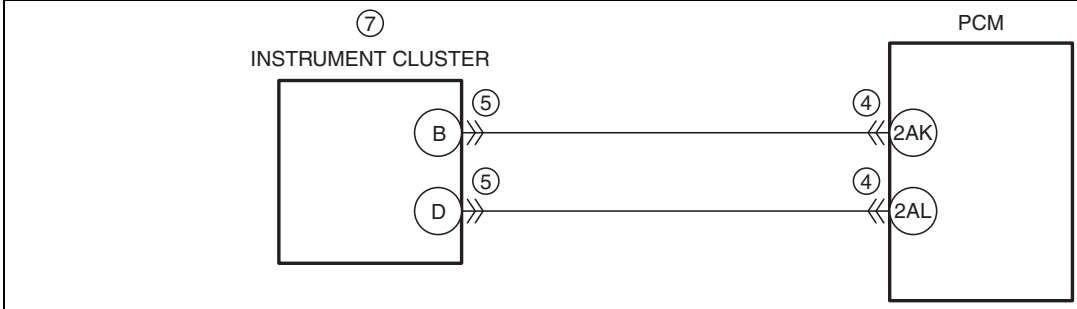

INSTRUMENT CLUSTER
WIRING HARNESS-SIDE CONNECTOR

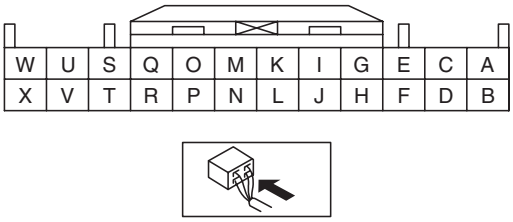

PCM WIRING HARNESS-SIDE CONNECTOR

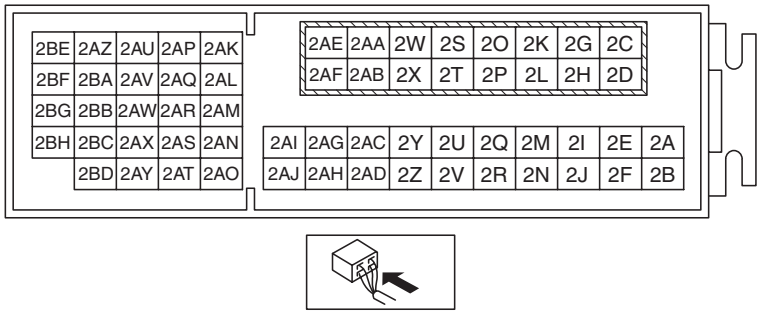

ON-BOARD DIAGNOSTIC [SKYACTIV-G 2.0]

Diagnostic Procedure

STEP	INSPECTION		ACTION
1	**VERIFY RELATED SERVICE INFORMATION AVAILABILITY** • Verify related Service Information availability. • Is any related Service Information available?	Yes	Perform repair or diagnosis according to the available Service Information. • If the vehicle is not repaired, go to the next step.
		No	Go to the next step.
2	**VERIFY DTC FOR MODULE COMMUNICATION** • Switch the ignition to off, then to ON (engine off). • Perform the DTC Reading Procedure. (See 01-02-8 ON-BOARD DIAGNOSTIC TEST [SKYACTIV-G 2.0].) • Is the DTC U0155:00 also present?	Yes	Go to the applicable DTC inspection. (See 01-02-373 DTC U0073:00, U0101:00, U0121:00, U0131:00, U0140:00, U0151:00, U0155:00, U0214:00, U0235:00 [SKYACTIV-G 2.0].)
		No	Go to the next step.
3	**CONFIRM INSTRUMENT CLUSTER DTC** • Perform the instrument cluster DTC inspection using the M-MDS. (See 09-02G-7 DTC INSPECTION [INSTRUMENT CLUSTER].) • Are any DTCs present?	Yes	Go to the applicable DTC inspection. (See 09-02G-10 DTC TABLE [INSTRUMENT CLUSTER].)
		No	Go to the next step.
4	**INSPECT PCM CONNECTOR CONDITION** • Switch the ignition to off. • Disconnect the PCM connector. • Inspect for poor connection (such as damaged/ pulled-out pins, corrosion). • Is there any malfunction?	Yes	Repair or replace the connector and/or terminals, then go to Step 8.
		No	Go to the next step.
5	**INSPECT INSTRUMENT CLUSTER CONNECTOR CONDITION** • Disconnect the instrument cluster connector. • Inspect for poor connection (such as damaged/ pulled-out pins, corrosion). • Is there any malfunction?	Yes	Repair or replace the connector and/or terminals, then go to Step 8.
		No	Go to the next step.
6	**INSPECT INSTALLATION OF INSTRUMENT CLUSTER** • Inspect installation of instrument cluster. • Is the instrument cluster installed securely?	Yes	Go to the next step.
		No	Retighten the instrument cluster, then go to Step 8. (See 09-22-6 INSTRUMENT CLUSTER REMOVAL/ INSTALLATION.)
7	**INSPECT INSTRUMENT CLUSTER** • Inspect the instrument cluster. (See 09-22-11 INSTRUMENT CLUSTER INSPECTION.) • Is there any malfunction?	Yes	Replace the instrument cluster, then go to the next step. (See 09-22-6 INSTRUMENT CLUSTER REMOVAL/ INSTALLATION.)
		No	Go to the next step.
8	**VERIFY DTC TROUBLESHOOTING COMPLETED** • Make sure to reconnect all disconnected connectors. • Clear the DTC from the PCM memory using the M-MDS. (See 01-02-12 AFTER REPAIR PROCEDURE [SKYACTIV-G 2.0].) • Switch the ignition ON (engine off or on) and wait for **15 s or more**. • Wait until the main relay is off (**approx. 1 min**). • Perform the KOER self test. (See 01-02-12 KOEO/KOER SELF TEST [SKYACTIV-G 2.0].) • Is the same DTC present?	Yes	Repeat the inspection from Step 1. • If the malfunction recurs, replace the PCM. (See 01-40-10 PCM REMOVAL/INSTALLATION [SKYACTIV-G 2.0].) Go to the next step.
		No	Go to the next step.
9	**VERIFY AFTER REPAIR PROCEDURE** • Perform the “AFTER REPAIR PROCEDURE”. (See 01-02-12 AFTER REPAIR PROCEDURE [SKYACTIV-G 2.0].) • Are any DTCs present?	Yes	Go to the applicable DTC inspection. (See 01-02-14 DTC TABLE [SKYACTIV-G 2.0].)
		No	DTC troubleshooting completed.

ON-BOARD DIAGNOSTIC [SKYACTIV-G 2.0]

DTC U3000:41 [SKYACTIV-G 2.0]

id0102h1851600

DTC U3000:41	**PCM processor error**
DETECTION CONDITION	• PCM internal EEPROM malfunction. **Diagnostic support note** • This is a continuous monitor (other). • The check engine light does not illuminate. • FREEZE FRAME DATA (Mode 2)/Snapshot data is not available. • The DTC is not stored in the PCM memory.
FAIL-SAFE FUNCTION	—
POSSIBLE CAUSE	• PCM internal malfunction
SYSTEM WIRING DIAGRAM	—

Diagnostic Procedure

STEP	INSPECTION		ACTION
1	**VERIFY RELATED SERVICE INFORMATION AVAILABILITY** • Verify related Service Information availability. • Is any related Service Information available?	Yes	Perform repair or diagnosis according to the available Service Information. • If the vehicle is not repaired, go to the next step.
		No	Go to the next step.
2	**VERIFY DTC TROUBLESHOOTING COMPLETED** • Clear the DTC from the PCM memory using the M-MDS. (See 01-02-12 AFTER REPAIR PROCEDURE [SKYACTIV-G 2.0].) • Perform the KOEO self test. (See 01-02-12 KOEO/KOER SELF TEST [SKYACTIV-G 2.0].) • Is the same DTC present?	Yes	Replace the PCM, then go to the next step. (See 01-40-10 PCM REMOVAL/INSTALLATION [SKYACTIV-G 2.0].)
		No	Go to the next step.
3	**VERIFY AFTER REPAIR PROCEDURE** • Perform the “AFTER REPAIR PROCEDURE”. (See 01-02-12 AFTER REPAIR PROCEDURE [SKYACTIV-G 2.0].) • Are any DTCs present?	Yes	Go to the applicable DTC inspection. (See 01-02-14 DTC TABLE [SKYACTIV-G 2.0].)
		No	DTC troubleshooting completed.

01-03 SYMPTOM TROUBLESHOOTING [SKYACTIV-G 2.0]

FOREWORD [SKYACTIV-G 2.0] 01-03–2
Troubleshooting Procedure 01-03–2
Repair order form 01-03–3
Action for Non-repeatable Malfunction 01-03–5
SYMPTOM DIAGNOSTIC INDEX [SKYACTIV-G 2.0] 01-03–5
CONTROL SYSTEM DEVICE AND CONTROL RELATIONSHIP CHART [SKYACTIV-G 2.0] 01-03–7
QUICK DIAGNOSTIC CHART [SKYACTIV-G 2.0] 01-03–9
NO.1 BLOWN FUSES [SKYACTIV-G 2.0] 01-03–17
NO.2 CHECK ENGINE LIGHT ILLUMINATES [SKYACTIV-G 2.0] 01-03–18
NO.3 WILL NOT CRANK [SKYACTIV-G 2.0] 01-03–19
NO.4 HARD TO START/LONG CRANK/ERRATIC START/ERRATIC CRANK [SKYACTIV-G 2.0] 01-03–25
NO.5 ENGINE STALLS-AFTER START/AT IDLE [SKYACTIV-G 2.0] . . . 01-03–31
NO.6 CRANKS NORMALLY BUT WILL NOT START [SKYACTIV-G 2.0] 01-03–37
NO.7 ENGINE OIL PRESSURE WARNING LIGHT ILLUMINATES [SKYACTIV-G 2.0] 01-03–43
NO.8 ENGINE RUNS ROUGH/ROLLING IDLE [SKYACTIV-G 2.0] 01-03–45
NO.9 FAST IDLE/RUNS ON [SKYACTIV-G 2.0] 01-03–51
NO.10 LOW IDLE/STALLS DURING DECELERATION [SKYACTIV-G 2.0] 01-03–54
NO.11 ENGINE STALLS/QUITS, ENGINE RUNS ROUGH, MISSES, BUCK/JERK, HESITATION/STUMBLE, SURGES [SKYACTIV-G 2.0] 01-03–60
NO.12 LACK/LOSS OF POWER-ACCELERATION/CRUISE [SKYACTIV-G 2.0] 01-03–68
NO.13 KNOCKING/PINGING-ACCELERATION/CRUISE [SKYACTIV-G 2.0] 01-03–74
NO.14 POOR FUEL ECONOMY [SKYACTIV-G 2.0] 01-03–77
NO.15 EMISSION COMPLIANCE [SKYACTIV-G 2.0] 01-03–84
NO.16 HIGH OIL CONSUMPTION/LEAKAGE [SKYACTIV-G 2.0] 01-03–87
NO.17 COOLING SYSTEM CONCERNS-OVERHEATING [SKYACTIV-G 2.0] 01-03–88
NO.18 COOLING SYSTEM CONCERNS-RUNS COLD [SKYACTIV-G 2.0] 01-03–90
NO.19 EXHAUST SMOKE [SKYACTIV-G 2.0] 01-03–92
NO.20 FUEL ODOR (IN ENGINE COMPARTMENT) [SKYACTIV-G 2.0] 01-03–97
NO.21 ENGINE NOISE [SKYACTIV-G 2.0] 01-03–99
NO.22 VIBRATION CONCERNS (ENGINE) [SKYACTIV-G 2.0] 01-03–101
NO.23 A/C DOES NOT WORK SUFFICIENTLY [SKYACTIV-G 2.0] 01-03–101
NO.24 A/C IS ALWAYS ON OR A/C COMPRESSOR RUNS CONTINUOUSLY [SKYACTIV-G 2.0] 01-03–106
NO.25 A/C IS NOT CUT OFF UNDER WIDE OPEN THROTTLE CONDITIONS [SKYACTIV-G 2.0] 01-03–108
NO.26 EXHAUST SULPHUR SMELL [SKYACTIV-G 2.0] 01-03–108
NO.27 SPARK PLUG CONDITION [SKYACTIV-G 2.0] 01-03–111
INTERMITTENT CONCERN TROUBLESHOOTING [SKYACTIV-G 2.0] 01-03–116
Vibration Method 01-03–116
Water Sprinkling Method 01-03–118
ENGINE CONTROL SYSTEM OPERATION INSPECTION [SKYACTIV-G 2.0] 01-03–118
Main Relay Operation Inspection 01-03–118
Intake Manifold Vacuum Inspection 01-03–118
Electric Variable Valve Timing Driver Control System Inspection 01-03–119
Engine Oil Solenoid Valve Control System Inspection 01-03–119
Drive-by-wire Control System Inspection 01-03–120
Fuel Injector Operation Inspection 01-03–121
Fuel Cut Control System Inspection . . . 01-03–122
Fuel Pump (Low-pressure Side) Operation Inspection 01-03–122
Fuel Pump (Low-pressure Side) Control System Inspection 01-03–123
Spark Test 01-03–123
Purge Control System Inspection 01-03–124
A/C Cut-off Control System Inspection 01-03–125
Cooling Fan Control System Inspection 01-03–125
Hydraulic Variable Valve Timing Control System Operation Inspection 01-03–126

SYMPTOM TROUBLESHOOTING [SKYACTIV-G 2.0]

FOREWORD [SKYACTIV-G 2.0]

id0103e6800300

- If there is any vehicle malfunction complaint lodged by a customer, perform malfunction diagnosis according to the troubleshooting procedure.

Troubleshooting Procedure

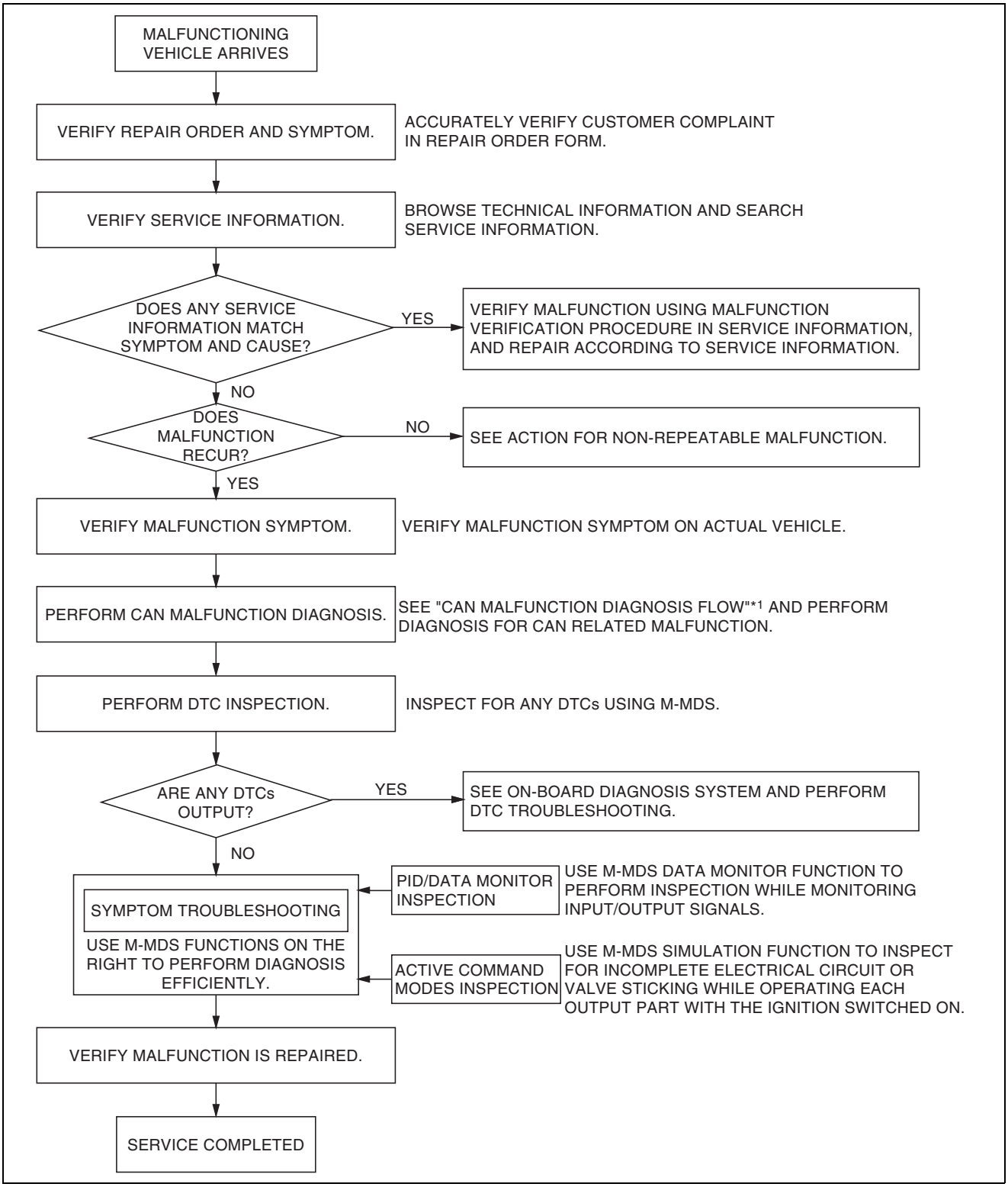

ac5wzw0000417

*1 : 10-02A-3 CONTROLLER AREA NETWORK (CAN) MALFUNCTION DIAGNOSIS FLOW [SKYACTIV-G 2.0 (L.H.D.)]/10-02B-3 CONTROLLER AREA NETWORK (CAN) MALFUNCTION DIAGNOSIS FLOW [SKYACTIV-G 2.0 (R.H.D.)]

Repair order form and malfunction symptom check sheet

	Repair order	Check with customer	Diagnosis	Repair	Explanation to customer
Date/time					
In-charge					

Customer statement (When? What? What time(s)? Where it occurs. Warning light illumination? Can anyone replicate problem?)

Vehicle body number:	Registration date:	Date of malfunction occurrence:	Odometer reading km {mph}
Engine (SOHC/DOHC/RE/DE) (Cab /EGI/ Turbo/ Miller cycle/ LPG/Direct injection)		Transmission (MT/HAT/EC-AT/CVT)	

Environmental conditions				Occurrence frequency	Driving conditions									
Weather	Ambient temp.	Drive scenario	Grade		Fuel	Warm-up condition	Driving operation	Driving posture	Load	Accelerator opening angle	Shift position	Eng RPM	Vehicle speed	Pattern of use
Sunny Cloudy Rain Snow High wind Wind gusts N/A Other	-10˚C {14˚F} or less -10— 0˚C {14—32˚F} 0—10˚C {32—50˚F} 10—15˚C {50—59˚F} 15—20˚C {59—58˚F} 20—25˚C {68—77˚F} 25—30˚C {77—86˚F} 30—35˚C {86—95˚F} 35—4{0˚C {95—104˚F} 40—45˚C {104—113˚F} 45˚C {113˚F} or more N/A Other	Depart/arrive Traffic jam (city) Standard city street Suburbs Highway Uneven road Dry road surface Wet road surface Snow bound road Icy road Other	Flat Upgrade Down grade N/A Other	Once/day 2-3 times/day 4-5 times/day Many times/day Once/week 2-3 times/week 4-5 times/week Once/month 2-3 times/month 4-5 times/month Other	Regular High Oct. Diesel LPG Other Fuel gauge F E	Cold Half-warmed Fully warmed N/A Other Water temp. gauge H C	When starting After starting Re-starting (min. after stopped) Idling Racing Accel. from stop Normal driving Deceleration Braking Soft braking Clutch disengage Sudden accel. Light accel. Shifting (km/h {mph} → km/h {mph}) Other	Vehicle stopped Straight-on driving Reversing Right turn Left turn Other	Headlights on Exterior lights on A/C on AUTO ˚C{˚F} Blower: 1 step Blower: 2 steps Blower: 3 steps Blower: 4 steps Power steering lock to lock Rear defrost on Wipers on Audio on Other	0/8 1/8 2/8 3/8 4/8 5/8 6/8 7/8 8/8	MT: 1 2 3 4 5 6 N R AT: P R N D S L Hold M (km/h {mph})	Idle Less than 1,000 Less than 1,500 Less than 2,000 Less than 2,500 Less than 3,000 Less than 4,000 Less than 4,500 Less than 5,000 Less than 5,500 Less than 6,000 Less than 6,500 7,000 or more	5 km/h {3 mph} 10 km/h {6.2 mph} 20 km/h {12 mph} 30 km/h {19 mph} 40 km/h {25 mph} 50 km/h {31 mph} 60 km/h {37 mph} 70 km/h {43 mph} 80 km/h {50 mph} 90 km/h {56 mph} 100 km/h {62.1 mph} 110 km/h {68.4 mph} 120 km/h {74.6 mph} 130 km/h {80.8 mph} 140 km/h {87 mph} 150 km/h {93.2 mph} 160 km/h {99.4 mph}	Work_____% Minor use_____% Trips_____% Other_____% Between ENG. start→Stop: Distance, time Approx km Approx Hrs. No. of occupants: Load condition kg Other

DTC, measured data (fuel pressure, intake manifold vacuum, throttle sensor electromotive force, air flow electromotive force, other), maintenance, repair, accident history, installation of commercial devices

BACK TO CHAPTER INDEX
MAZDA CX5 WORKSHOP REPAIR MANUAL
TO MODEL INDEX

SYMPTOM TROUBLESHOOTING [SKYACTIV-G 2.0]

Dealer name:	Vehicle body number:	Odometer reading:
Vehicle-in date:	Estimated repair completion date:	Person in-charge:
Subject (Content):		
Audio memory		

	1	2	3	4	5	6	Fuel level
FM1							E F
FM2							
AM							

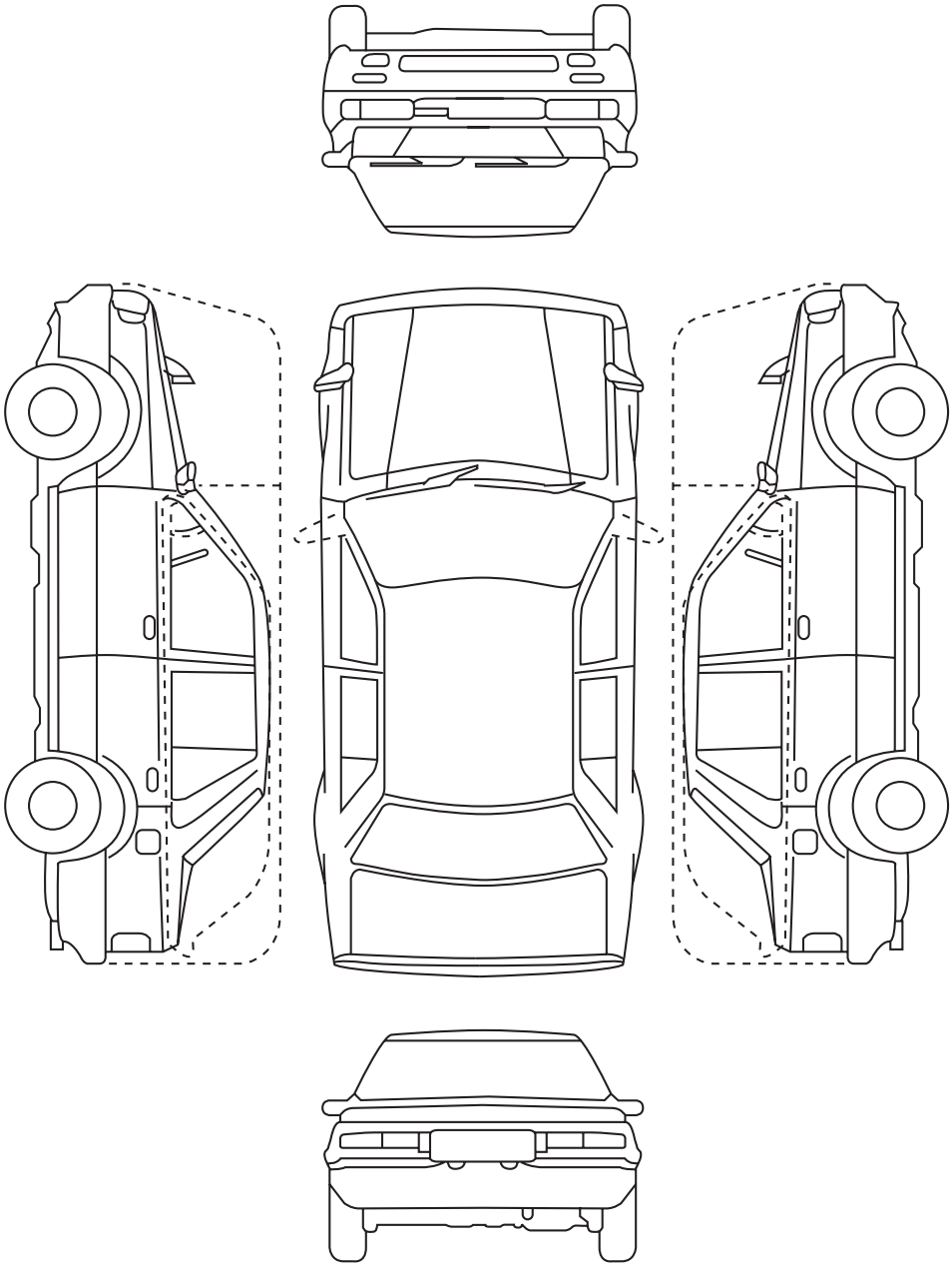

ac5wzw0000382

SYMPTOM TROUBLESHOOTING [SKYACTIV-G 2.0]

Action for Non-repeatable Malfunction

- If the malfunction does not recur, verify the malfunction cause by performing the following actions:
  - — Based on the repair order form, attempt to drive the vehicle or perform tests to replicate the malfunction, record the data (such as PCM circuit voltage) at that time, and detect the malfunction cause.
  - — Shake the wiring harness or connector of the electrical component which is suspected to be the cause of the malfunction, and inspect for malfunction or occurrence of any DTCs.

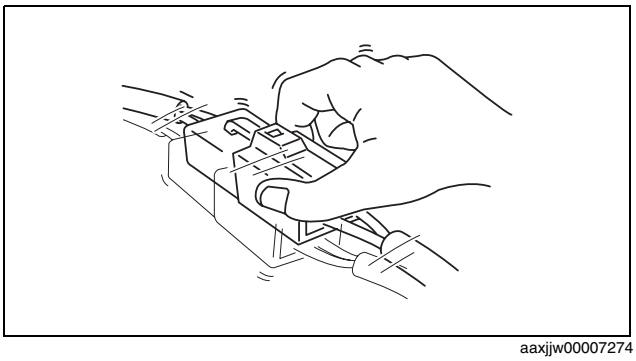

aaxjjw00007274

  - — Inspect the female terminals on the connector of the electric component which is suspected to be the cause of the malfunction for poor connection.

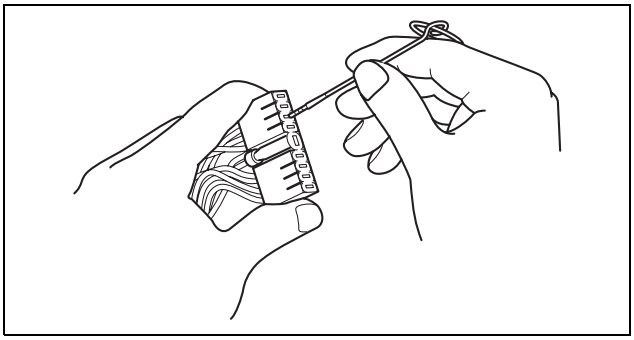

am3uuw0000750

SYMPTOM DIAGNOSTIC INDEX [SKYACTIV-G 2.0]

id0103e6800500

- Verify malfunction symptoms using the following diagnostic index, then go to the appropriate troubleshooting chart.

Diagnostic Index

No.	TROUBLESHOOTING ITEM		DESCRIPTION
1	Blown fuses		—
2	Check engine light illuminates		• Check engine light illuminates incorrectly.
3	Will not crank		• Starter does not work.
4	Hard to start/long crank/erratic start/erratic crank		• Starter cranks engine at normal speed but engine requires excessive cranking time before starting. • Battery is operating normally.
5	Engine stalls	After start/at idle	• Engine stops unexpectedly at idle, after start, or both.
6	Cranks normally but will not start		• Starter cranks engine at normal speed but engine will not run. • Refer to symptom troubleshooting “NO.5 ENGINE STALLS-AFTER START/AT IDLE” if this symptom appears after engine stalls. • Fuel is in tank. • Battery is in normal condition.
7	Engine oil pressure warning light illuminates		• Engine oil pressure warning light illuminates incorrectly.
8	Engine runs rough/rolling idle		• Engine speed fluctuates between specified idle speed and lower speed and, engine shakes excessively. • Idle speed is too slow and engine shakes excessively.
9	Fast idle/runs on		• Engine speed continues at fast idle after warm-up. • Engine runs after ignition switch is turned off.
10	Low idle/stalls during deceleration		• Engine stops unexpectedly at beginning of deceleration or recovery from deceleration.

SYMPTOM TROUBLESHOOTING [SKYACTIV-G 2.0]

No.	TROUBLESHOOTING ITEM		DESCRIPTION
11	Engine stalls/quits	Acceleration/cruise	• Engine stops unexpectedly at beginning of acceleration or during acceleration. • Engine stops unexpectedly while cruising.
	Engine runs rough	Acceleration/cruise	• Engine speed fluctuates during acceleration or cruising.
	Misses	Acceleration/cruise	• Engine misses during acceleration or cruising.
	Buck/jerk	Acceleration/cruise/ deceleration	• Vehicle bucks/jerks during acceleration, cruising, or deceleration.
	Hesitation/stumble	Acceleration	• Momentary pause at beginning of acceleration or during acceleration.
	Surges	Acceleration/cruise	• Momentary minor irregularity in engine output.
12	Lack/loss of power	Acceleration/cruise	• Performance is poor under load. (e.g., power down when climbing hills)
13	Knocking/pinging	Acceleration/cruise	• Sound is produced when air/fuel mixture is ignited by something other than spark plug. (e.g., hot spot in combustion chamber)
14	Poor fuel economy		• Fuel economy is unsatisfactory.
15	Emission compliance		• Fails emissions test.
16	High oil consumption/leakage		• Oil consumption is excessive.
17	Cooling system concerns	Overheating	• Engine runs at higher than normal temperature/overheats.
18	Cooling system concerns	Runs cold	• Engine does not reach normal operating temperature.
19	Exhaust smoke		• Blue, black, or white smoke from exhaust system.
20	Fuel odor (in engine compartment)		• Gasoline fuel smell or visible leakage.
21	Engine noise		• Engine noise from under bonnet.
22	Vibration concerns (engine)		• Vibration from under bonnet or driveline.
23	A/C does not work sufficiently		• A/C compressor magnetic clutch does not engage when A/C switch is turned on.
24	A/C is always on or A/C compressor runs continuously		• A/C compressor magnetic clutch does not disengage.
25	A/C is not cut off under wide open throttle conditions		• A/C compressor magnetic clutch does not disengage under WOT.
26	Exhaust sulphur smell		• Rotten egg smell (sulphur) from exhaust.
27	Spark plug condition		• Incorrect spark plug condition.
28	ATX concerns	Upshift/downshift/ engagement	• ATX concerns not related to engine performance.
i-stop related troubleshooting item			(See 11-03-9 SYMPTOM DIAGNOSTIC INDEX [SKYACTIV-G 2.0].)

SYMPTOM TROUBLESHOOTING [SKYACTIV-G 2.0]

CONTROL SYSTEM DEVICE AND CONTROL RELATIONSHIP CHART [SKYACTIV-G 2.0]

id0103e6800200

×: Applicable

Item	MAIN RELAY CONTROL	DRIVE-BY-WIRE CONTROL	HYDRAULIC VARIABLE VALVE TIMING CONTROL	ELECTRIC VARIABLE VALVE TIMING CONTROL	FUEL INJECTION CONTROL	FUEL PUMP CONTROL	HIGH PRESSURE FUEL PUMP CONTROL	ELECTRONIC SPARK ADVANCE CONTROL	PURGE CONTROL	A/F SENSOR HEATER CONTROL HO2S HEATER CONTROL	A/C CUT-OFF CONTROL	ELECTRICAL FAN CONTROL	STARTER CUT-OFF CONTROL	GENERATOR CONTROL	i-stop CONTROL	DC-DC CONVERTER CONTROL	ENGINE OIL CONTROL
Input device																	
APP sensor No.1, No.2		×	×		×			×	×		×	×			×		
TP sensor No.1, No.2		×			×						×				×		
MAF sensor		×	×	×	×		×	×	×	×		×			×		×
IAT sensor No.1		×		×	×			×	×			×		×*3	×		
IAT sensor No.2		×		×	×			×							×		
MAP sensor		×		×	×			×	×						×		×
CKP sensor		×	×	×	×	×	×	×	×	×	×	×	×	×	×		×
Intake CMP sensor		×		×	×			×							×		
Exhaust CMP sensor		×	×		×		×	×							×		
ECT sensor		×	×	×	×		×	×	×	×	×	×	×	×*3	×		×
Fuel pressure sensor		×			×	×	×								×		
BARO sensor		×		×	×	×			×			×			×		
Power brake unit vacuum sensor*2															×		
Ion sensor No.1—No.4				×	×												
KS								×									
A/F sensor					×				×								
HO2S					×												
Refrigerant pressure sensor*4											×	×					
IG1 relay	×		×		×	×		×		×		×	×		×	×	
Brake switch (No.1 signal)		×													×		
Brake switch (No.2 signal)		×															
Transaxle range sensor (ATX)		×			×								×		×		
CPP switch (MTX)		×			×			×			×				×		
Starter interlock switch (MTX)													×				
Clutch stroke sensor (MTX)*2															×		
Neutral switch No.1 (MTX)		×			×			×			×				×		
Neutral switch No.2 (MTX)*2															×		
Electric variable valve timing motor/driver				×											×		
Battery			×			×	×	×	×					×	×		
Generator (Stator coil)		×															
CAN*1		×			×			×			×	×	×	×*2	×	×	
Output device																	
Main relay	×																
Throttle valve actuator		×													×		
Electric variable valve timing motor/driver				×	×										×		

SYMPTOM TROUBLESHOOTING [SKYACTIV-G 2.0]

Item	MAIN RELAY CONTROL	DRIVE-BY-WIRE CONTROL	HYDRAULIC VARIABLE VALVE TIMING CONTROL	ELECTRIC VARIABLE VALVE TIMING CONTROL	FUEL INJECTION CONTROL	FUEL PUMP CONTROL	HIGH PRESSURE FUEL PUMP CONTROL	ELECTRONIC SPARK ADVANCE CONTROL	PURGE CONTROL	A/F SENSOR HEATER CONTROL HO2S HEATER CONTROL	A/C CUT-OFF CONTROL	ELECTRICAL FAN CONTROL	STARTER CUT-OFF CONTROL	GENERATOR CONTROL	i-stop CONTROL	DC-DC CONVERTER CONTROL	ENGINE OIL CONTROL
Electric variable valve timing relay				×											×		
OCV			×														
Fuel injector No.1—No.4					×										×		
Fuel injector relay					×										×		
Fuel pump control module						×											
Fuel pump relay						×											
Spill valve control solenoid valve (High pressure fuel pump)							×										
Ignition coil No.1—No.4								×							×		
Purge solenoid valve									×								
A/F sensor heater										×							
HO2S heater										×							
A/C relay*4											×						
Cooling fan relay No.1, No.2, No.3												×					
Starter relay													×		×		
Generator (Field coil)														×	×		
DC-DC converter*2															×	×	
Engine oil solenoid valve																	×

*1 : TCM (ATX), DSC HU/CM, front body control module (FBCM), rear body control module (RBCM), instrument cluster, start stop unit, EPS control module
*2 : Vehicles with i-stop system
*3 : Vehicles without i-stop system
*4 : Vehicles with air conditioner

SYMPTOM TROUBLESHOOTING [SKYACTIV-G 2.0]

QUICK DIAGNOSTIC CHART [SKYACTIV-G 2.0]

id0103e6800600

X: Applied

	Troubleshooting item / Possible factor		Starter motor malfunction (mechanical or electrical)	Starter circuit including ignition switch is open	Improper engine oil level	Low or dead battery	Charging system malfunction	Improper engine compression	Improper dipstick	Base engine malfunction	Drive plate (ATX) or flywheel (MTX) is seized	Improper tension or damaged drive belts	Improper engine coolant level	Water and anti-freeze mixture is improper	Cooling system malfunction (radiator, hoses,overflow system, thermostat, etc.)	Cooling fan system malfunction
1	Blown fuses															
2	Check engine light illuminates															
3	Will not crank		X	X		X	X			X	X					
4	Hard to start/long crank/erratic start/erratic crank		X					X		X						
5	Engine stalls	After start/at idle						X								
6	Cranks normally but will not start							X								
7	Engine oil pressure warning light illuminates															
8	Engine runs rough/rolling idle							X								
9	Fast idle/runs on															
10	Low idle/stalls during deceleration							X								
11	Engine stalls/quits	Acceleration/cruise						X								
	Engine runs rough	Acceleration/cruise						X								
	Misses	Acceleration/cruise						X								
	Buck/jerk	Acceleration/cruise/deceleration						X								
	Hesitation/stumble	Acceleration						X								
	Surges	Acceleration/cruise						X								
12	Lack/loss of power	Acceleration/cruise						X								
13	Knocking/pinging	Acceleration/cruise						X								X
14	Poor fuel economy							X					X		X	X
15	Emission compliance							X		X					X	
16	High oil consumption/leakage								X	X						
17	Cooling system concerns	Overheating										X	X	X	X	X
18	Cooling system concerns	Runs cold													X	X
19	Exhaust smoke							X		X					X	
20	Fuel odor (in engine compartment)															
21	Engine noise											X				
22	Vibration concerns (engine)															
23	A/C does not work sufficiently															
24	A/C is always on or A/C compressor runs continuously															
25	A/C is not cut off under wide open throttle conditions															
26	Exhaust sulphur smell															
27	Spark plug condition							X								
28	ATX concerns	Upshift/downshift/engagement	See Section 05-03 TRANSMISSION/TRANSAXLE, SYMPTOM TROUBLESHOOTING [FW6A-EL, FW6AX-EL]													

ac5wzw0000380

SYMPTOM TROUBLESHOOTING [SKYACTIV-G 2.0]

X: Applied

	Troubleshooting item / Possible factor		Engine or transaxle mounts are improperly installed	Cooling fan or condenser fan seats improper	Fuel quality	Improper engine oil viscosity	Improper valve timing	Oil leakage (internal, turbocharger, external)	Improper oil or fluid level	Coolant leakage (internal, turbocharger, external)	Electric variable valve timing system malfunction	Hydraulic variable valve timing system malfunction	Engine overheating	Air cleaner element clogged or restricted	Air leakage from intake-air system (loose tubes, cracks, gaskets breakage)	Air suction in intake-air system	Intake-air system restriction
1	Blown fuses																
2	Check engine light illuminates										X	X					
3	Will not crank																
4	Hard to start/long crank/erratic start/erratic crank				X		X							X	X		X
5	Engine stalls	After start/at idle			X						X	X	X		X		X
6	Cranks normally but will not start				X		X						X	X	X		X
7	Engine oil pressure warning light illuminates																
8	Engine runs rough/rolling idle				X		X						X		X		X
9	Fast idle/runs on										X	X			X		
10	Low idle/stalls during deceleration						X								X		X
11	Engine stalls/quits	Acceleration/cruise			X		X						X	X			X
	Engine runs rough	Acceleration/cruise			X		X						X	X			X
	Misses	Acceleration/cruise			X		X						X	X			X
	Buck/jerk	Acceleration/cruise/deceleration			X		X						X	X			X
	Hesitation/stumble	Acceleration			X		X						X	X			X
	Surges	Acceleration/cruise			X		X						X	X			X
12	Lack/loss of power	Acceleration/cruise			X		X				X	X	X	X	X		X
13	Knocking/pinging	Acceleration/cruise			X								X		X		
14	Poor fuel economy				X		X							X			
15	Emission compliance				X		X						X	X	X		
16	High oil consumption/leakage					X		X									
17	Cooling system concerns	Overheating								X							
18	Cooling system concerns	Runs cold															
19	Exhaust smoke							X		X				X	X		
20	Fuel odor (in engine compartment)																
21	Engine noise								X								
22	Vibration concerns (engine)		X	X													
23	A/C does not work sufficiently																
24	A/C is always on or A/C compressor runs continuously																
25	A/C is not cut off under wide open throttle conditions																
26	Exhaust sulphur smell				X												
27	Spark plug condition																
28	ATX concerns	Upshift/downshift/engagement	See Section 05-03 TRANSMISSION/TRANSAXLE, SYMPTOM TROUBLESHOOTING [FW6A-EL, FW6AX-EL]														

ac5wzw0000380

SYMPTOM TROUBLESHOOTING [SKYACTIV-G 2.0]

X: Applied

Troubleshooting item / Possible factor			Drive-by-wire control system improper operation	Drive-by-wire control system operates with brake override system	Throttle body malfunction	Vacuum leakage (vacuum hose damage, misrouting)	Ignition coil malfunction (e.g. open, short or cracks)	Initial ignition timing misadjustment (CKP and pulse wheel misadjustment)	Spark plug malfunction	Fuel pump (low-pressure side) malfunction (mechanically or electrically)	Pressure regulator (built-into fuel pump unit at fuel tank)	Inadequate fuel pressure (high-pressure side)	Inadequate fuel pressure (low-pressure side)	Fuel line restricted or clogged
1	Blown fuses													
2	Check engine light illuminates		X											
3	Will not crank													
4	Hard to start/long crank/erratic start/erratic crank		X		X	X	X	X	X	X		X	X	X
5	Engine stalls	After start/at idle	X			X	X			X		X	X	X
6	Cranks normally but will not start		X			X	X		X	X		X	X	X
7	Engine oil pressure warning light illuminates													
8	Engine runs rough/rolling idle		X			X	X		X	X		X	X	
9	Fast idle/runs on		X		X									
10	Low idle/stalls during deceleration		X			X						X	X	X
11	Engine stalls/quits	Acceleration/cruise	X		X	X			X	X		X	X	X
	Engine runs rough	Acceleration/cruise	X		X	X			X	X		X	X	X
	Misses	Acceleration/cruise	X		X	X			X	X		X	X	X
	Buck/jerk	Acceleration/cruise/deceleration	X	X	X	X			X	X		X	X	X
	Hesitation/stumble	Acceleration	X	X	X	X			X	X		X	X	X
	Surges	Acceleration/cruise	X	X	X	X			X	X		X	X	X
12	Lack/loss of power	Acceleration/cruise	X	X	X	X	X		X	X		X	X	X
13	Knocking/pinging	Acceleration/cruise	X				X					X	X	
14	Poor fuel economy					X	X		X			X	X	X
15	Emission compliance		X		X	X			X			X	X	
16	High oil consumption/leakage													
17	Cooling system concerns	Overheating												
18	Cooling system concerns	Runs cold												
19	Exhaust smoke						X		X			X	X	
20	Fuel odor (in engine compartment)											X	X	
21	Engine noise					X								
22	Vibration concerns (engine)													
23	A/C does not work sufficiently													
24	A/C is always on or A/C compressor runs continuously													
25	A/C is not cut off under wide open throttle conditions													
26	Exhaust sulphur smell					X						X	X	
27	Spark plug condition													
28	ATX concerns	Upshift/downshift/engagement	See Section 05-03 TRANSMISSION/TRANSAXLE, SYMPTOM TROUBLESHOOTING [FW6A-EL, FW6AX-EL]											

ac5wzw0000381

SYMPTOM TROUBLESHOOTING [SKYACTIV-G 2.0]

X: Applied

Troubleshooting item			Possible factor: Fuel injector malfunction (inoperative)	Fuel filters restricted or clogged	Fuel pressure limiter malfunction (built-into common rail)	Spill valve control solenoid valve malfunction (built-into high pressure fuel pump)	Fuel leakage at fuel line	High pressure fuel pump malfunction	Incorrect fuel injection timing or amount	Improper air/fuel ratio mixture control	Exhaust system or catalytic converter restriction	Exhaust gas leakage	Catalytic converter malfunction	PCV valve malfunction
1	Blown fuses													
2	Check engine light illuminates		X							X			X	
3	Will not crank													
4	Hard to start/long crank/erratic start/erratic crank		X	X	X	X	X	X	X	X	X			X
5	Engine stalls	After start/at idle	X		X	X	X	X	X	X	X			X
6	Cranks normally but will not start		X		X	X	X	X	X	X	X			X
7	Engine oil pressure warning light illuminates													
8	Engine runs rough/rolling idle		X	X	X	X	X	X			X			X
9	Fast idle/runs on		X			X								
10	Low idle/stalls during deceleration		X		X	X	X	X	X					
11	Engine stalls/quits	Acceleration/cruise	X		X	X		X	X	X	X			X
	Engine runs rough	Acceleration/cruise	X		X	X		X	X	X	X			X
	Misses	Acceleration/cruise	X		X	X		X	X	X	X			X
	Buck/jerk	Acceleration/cruise/deceleration	X		X	X		X	X	X	X			X
	Hesitation/stumble	Acceleration	X		X	X		X	X	X	X			X
	Surges	Acceleration/cruise	X		X	X		X	X	X	X			X
12	Lack/loss of power	Acceleration/cruise			X	X		X	X		X	X		X
13	Knocking/pinging	Acceleration/cruise	X			X			X		X			
14	Poor fuel economy		X	X			X	X	X		X			X
15	Emission compliance		X		X	X		X	X	X	X		X	X
16	High oil consumption/leakage													X
17	Cooling system concerns	Overheating												
18	Cooling system concerns	Runs cold												
19	Exhaust smoke		X						X			X		X
20	Fuel odor (in engine compartment)		X				X							
21	Engine noise													
22	Vibration concerns (engine)													
23	A/C does not work sufficiently													
24	A/C is always on or A/C compressor runs continuously													
25	A/C is not cut off under wide open throttle conditions													
26	Exhaust sulphur smell													X
27	Spark plug condition													
28	ATX concerns	Upshift/downshift/engagement	See Section 05-03 TRANSMISSION/TRANSAXLE, SYMPTOM TROUBLESHOOTING [FW6A-EL, FW6AX-EL]											

ac5wzw0000381

SYMPTOM TROUBLESHOOTING [SKYACTIV-G 2.0]

X: Applied

Troubleshooting item / Possible factor			Constant voltage supply circuit malfunction	Main relay malfunction (mechanically or electrically)	No battery power supply to PCM	Poor PCM ground or vehicle ground (open)	Electrical connector disconnection	ECT sensor or related circuit malfunction	Transaxle range sensor malfunction (ATX)	Brake switch or related circuit malfunction	A/F sensor or HO2S or related circuit malfunction	IAT sensor No.1 (integrated in MAF sensor/ IAT sensor No.1) or related circuit malfunction	Fuel pressure sensor or related circuit malfunction	MAP sensor or related circuit malfunction
1	Blown fuses													
2	Check engine light illuminates						X	X		X	X	X	X	X
3	Will not crank			X										
4	Hard to start/long crank/erratic start/erratic crank							X			X		X	
5	Engine stalls	After start/at idle			X	X		X			X		X	
6	Cranks normally but will not start						X	X			X		X	
7	Engine oil pressure warning light illuminates													
8	Engine runs rough/rolling idle						X	X					X	X
9	Fast idle/runs on							X						
10	Low idle/stalls during deceleration							X		X	X		X	
11	Engine stalls/quits	Acceleration/cruise		X				X				X	X	X
	Engine runs rough	Acceleration/cruise		X				X				X	X	X
	Misses	Acceleration/cruise		X				X				X	X	X
	Buck/jerk	Acceleration/cruise/deceleration		X				X				X	X	X
	Hesitation/stumble	Acceleration		X				X				X	X	X
	Surges	Acceleration/cruise		X				X				X	X	X
12	Lack/loss of power	Acceleration/cruise						X				X	X	X
13	Knocking/pinging	Acceleration/cruise										X	X	X
14	Poor fuel economy							X				X	X	X
15	Emission compliance							X			X	X	X	X
16	High oil consumption/leakage													
17	Cooling system concerns	Overheating												
18	Cooling system concerns	Runs cold												
19	Exhaust smoke							X			X	X		X
20	Fuel odor (in engine compartment)													
21	Engine noise													
22	Vibration concerns (engine)													
23	A/C does not work sufficiently													
24	A/C is always on or A/C compressor runs continuously													
25	A/C is not cut off under wide open throttle conditions													
26	Exhaust sulphur smell						X							
27	Spark plug condition													
28	ATX concerns	Upshift/downshift/engagement	See Section 05-03 TRANSMISSION/TRANSAXLE, SYMPTOM TROUBLESHOOTING [FW6A-EL, FW6AX-EL]											

ac5wzw0000381

SYMPTOM TROUBLESHOOTING [SKYACTIV-G 2.0]

X: Applied

	Troubleshooting item / Possible factor		Intake CMP sensor damaged (e.g.open or short circuit)	Intake CMP sensor pulse wheel (intake camshaft) damaged	Exhaust CMP sensor damaged (e.g.open or short circuit)	Exhaust CMP sensor pulse wheel (exhaust camshaft) damaged	Improper gap between CKP sensor and pulse wheel	CKP sensor damaged (e.g.open or short circuit)	CKP sensor pulse wheel damaged	CPP switch or related circuit malfunction (MTX)	Neutral switch or related circuit malfunction (MTX)	MAF sensor or related circuit malfunction	KS or related circuit malfunction	TP sensor or related circuit malfunction	APP sensor or related circuit malfunction	Improper vehicle speed signal	Cruise control system operation improperly
1	Blown fuses																
2	Check engine light illuminates		X		X		X					X	X	X	X	X	
3	Will not crank											X					
4	Hard to start/long crank/erratic start/erratic crank		X	X	X	X	X	X	X			X					
5	Engine stalls	After start/at idle	X	X	X	X	X	X	X			X			X		
6	Cranks normally but will not start		X	X	X	X	X	X	X			X			X		
7	Engine oil pressure warning light illuminates																
8	Engine runs rough/rolling idle		X	X	X	X	X	X	X			X			X		
9	Fast idle/runs on									X	X				X		X
10	Low idle/stalls during deceleration		X	X	X	X	X	X	X	X	X	X		X	X		
11	Engine stalls/quits	Acceleration/cruise	X	X	X	X	X	X	X	X	X	X		X	X	X	
	Engine runs rough	Acceleration/cruise	X	X	X	X	X	X	X	X	X	X		X	X	X	
	Misses	Acceleration/cruise	X	X	X	X	X	X	X	X	X	X		X	X	X	
	Buck/jerk	Acceleration/cruise/deceleration	X	X	X	X	X	X	X	X	X	X		X	X	X	
	Hesitation/stumble	Acceleration	X	X	X	X	X	X	X	X	X	X		X	X	X	
	Surges	Acceleration/cruise	X	X	X	X	X	X	X	X	X	X		X	X	X	
12	Lack/loss of power	Acceleration/cruise	X	X	X	X	X	X	X	X	X	X			X	X	
13	Knocking/pinging	Acceleration/cruise	X	X	X	X						X	X		X		
14	Poor fuel economy		X	X	X	X	X	X	X			X			X	X	
15	Emission compliance		X	X	X	X	X	X	X			X		X	X	X	
16	High oil consumption/leakage																
17	Cooling system concerns	Overheating															
18	Cooling system concerns	Runs cold															
19	Exhaust smoke						X					X		X	X	X	
20	Fuel odor (in engine compartment)																
21	Engine noise																
22	Vibration concerns (engine)																
23	A/C does not work sufficiently																
24	A/C is always on or A/C compressor runs continuously																
25	A/C is not cut off under wide open throttle conditions														X		
26	Exhaust sulphur smell																
27	Spark plug condition																
28	ATX concerns	Upshift/downshift/engagement	See Section 05-03 TRANSMISSION/TRANSAXLE, SYMPTOM TROUBLESHOOTING [FW6A-EL, FW6AX-EL]														

ac5wzw0000381

SYMPTOM TROUBLESHOOTING [SKYACTIV-G 2.0]

X: Applied

	Troubleshooting item / Possible factor		A/C system improper operation	Improper refrigerant charging amount	A/C relay (A/C control signal circuit) malfunction	A/C compressor magnetic clutch malfunction	Clutch slippage (MTX)	ATX related parts malfunction (ATX)	Improper ATF level (ATX)	Brake dragging	Loose parts	Improper balance of wheels and tires	Drive line malfunction	Suspension malfunction	Immobilizer system operating properly	Immobilizer system or related circuit malfunction	Advanced keyless entry system malfunction	i-stop system improper operation
1	Blown fuses																	
2	Check engine light illuminates																	
3	Will not crank														X	X	X	X
4	Hard to start/long crank/erratic start/erratic crank																	
5	Engine stalls	After start/at idle	X	X	X													
6	Cranks normally but will not start																	
7	Engine oil pressure warning light illuminates																	
8	Engine runs rough/rolling idle		X	X	X													
9	Fast idle/runs on				X													
10	Low idle/stalls during deceleration		X			X					X							
11	Engine stalls/quits	Acceleration/cruise	X				X	X			X							
	Engine runs rough	Acceleration/cruise	X				X	X			X							
	Misses	Acceleration/cruise	X				X	X			X							
	Buck/jerk	Acceleration/cruise/deceleration	X				X	X			X							
	Hesitation/stumble	Acceleration	X				X	X			X							
	Surges	Acceleration/cruise	X				X	X			X							
12	Lack/loss of power	Acceleration/cruise	X		X		X			X								
13	Knocking/pinging	Acceleration/cruise																
14	Poor fuel economy		X				X		X	X								
15	Emission compliance																	
16	High oil consumption/leakage																	
17	Cooling system concerns	Overheating	X	X														
18	Cooling system concerns	Runs cold																
19	Exhaust smoke																	
20	Fuel odor (in engine compartment)																	
21	Engine noise										X							
22	Vibration concerns (engine)										X	X	X	X				
23	A/C does not work sufficiently		X	X	X	X												
24	A/C is always on or A/C compressor runs continuously		X		X	X												
25	A/C is not cut off under wide open throttle conditions																	
26	Exhaust sulphur smell																	
27	Spark plug condition																	
28	ATX concerns	Upshift/downshift/engagement	See Section 05-03 TRANSMISSION/TRANSAXLE, SYMPTOM TROUBLESHOOTING [FW6A-EL, FW6AX-EL]															

ac5wzw0000381

SYMPTOM TROUBLESHOOTING [SKYACTIV-G 2.0]

X: Applied

Troubleshooting item			Possible factor	i-stop OFF switch malfunction	Instrument cluster malfunction	Driver-side buckle switch malfunction	Door latch switch or liftgate latch switch malfunction	Bonnet latch switch malfunction	Battery malfunction (deterioration)	Ambient temperature sensor malfunction	ABS wheel-speed sensor malfunction	Clutch stroke sensor malfunction (MTX)	Steering angle sensor malfunction	Driver-side air mix actuator malfunction	Climate control unit malfunction	Battery fluid temperature sensor malfunction	Keyless antenna malfunction
1	Blown fuses																
2	Check engine light illuminates																
3	Will not crank																
4	Hard to start/long crank/erratic start/erratic crank																
5	Engine stalls	After start/at idle															
6	Cranks normally but will not start																
7	Engine oil pressure warning light illuminates				X												
8	Engine runs rough/rolling idle																
9	Fast idle/runs on																
10	Low idle/stalls during deceleration																
11	Engine stalls/quits	Acceleration/cruise															
	Engine runs rough	Acceleration/cruise															
	Misses	Acceleration/cruise															
	Buck/jerk	Acceleration/cruise/deceleration															
	Hesitation/stumble	Acceleration															
	Surges	Acceleration/cruise															
12	Lack/loss of power	Acceleration/cruise															
13	Knocking/pinging	Acceleration/cruise															
14	Poor fuel economy																
15	Emission compliance																
16	High oil consumption/leakage																
17	Cooling system concerns	Overheating															
18	Cooling system concerns	Runs cold															
19	Exhaust smoke																
20	Fuel odor (in engine compartment)																
21	Engine noise																
22	Vibration concerns (engine)																
23	A/C does not work sufficiently																
24	A/C is always on or A/C compressor runs continuously																
25	A/C is not cut off under wide open throttle conditions																
26	Exhaust sulphur smell																
27	Spark plug condition																
28	ATX concerns	Upshift/downshift/engagement	See Section 05-03 TRANSMISSION/TRANSAXLE, SYMPTOM TROUBLESHOOTING [FW6A-EL, FW6AX-EL]														

ac5wzw0000382

SYMPTOM TROUBLESHOOTING [SKYACTIV-G 2.0]

NO.1 BLOWN FUSES [SKYACTIV-G 2.0]

id0103e6507100

1	BLOWN FUSES

[TROUBLESHOOTING HINTS]

- Inspect condition of fuse.

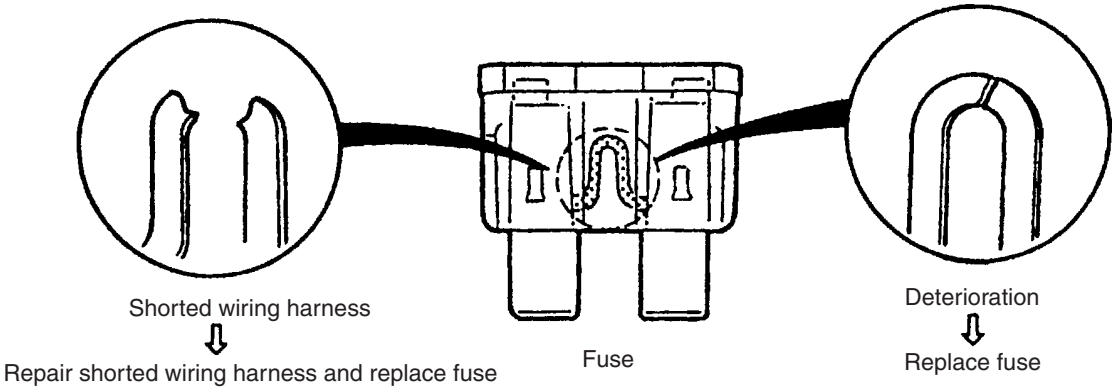

Damaged fuse	Related wiring harness
MAIN	• FAN GE fuse • ADD FAN GE fuse • FUEL PUMP fuse • IG2 fuse • ENG.+B fuse • ENG.MAIN fuse • INJECTOR fuse • EVVT fuse
FAN GE	• Cooling fan relay No.1
ADD FAN GE	• Cooling fan relay No.3
ENGINE.IG1	• Fuel pump relay • PCM
FUEL PUMP	• Fuel pump relay
STARTER	• Generator • Starter
DCDC	• DC-DC converter
AUDIO2	• Ignition relay (ACC_STAB)
METER2	• Ignition relay (IG1_STAB)
C/U IG1	• DC-DC converter • Ignition relay (IG1_STAB)
IG2	• ACC relay • Starter relay
ENG.+B	• Current sensor • PCM
ENG.MAIN	• Main relay
INJECTOR	• Fuel injector relay
EVVT	• Electric variable valve timing relay
ENGINE1	• Electric variable valve timing relay • A/F sensor • HO2S • MAF sensor/IAT sensor No.1 • Intake CMP sensor
ENGINE2	• Fuel injector relay • Purge solenoid valve • OCV • PCM • Engine oil solenoid valve • Exhaust CMP sensor • Ignition coil/ion sensor No.1 • Ignition coil/ion sensor No.2 • Ignition coil/ion sensor No.3 • Ignition coil/ion sensor No.4

SYMPTOM TROUBLESHOOTING [SKYACTIV-G 2.0]

Damaged fuse	Related wiring harness
ENGINE3	• Cooling fan relay No.1 • Cooling fan relay No.2 • Cooling fan relay No.3

NO.2 CHECK ENGINE LIGHT ILLUMINATES [SKYACTIV-G 2.0]

id0103e6205000

2	CHECK ENGINE LIGHT ILLUMINATES
DESCRIPTION	• Check engine light illuminates incorrectly.
POSSIBLE CAUSE	• Check engine light illuminates for emission-related concern (DTC is stored in PCM) • Short to ground in wiring harness between the following terminals: — Instrument cluster terminal B—PCM terminal 2AK — Instrument cluster terminal D—PCM terminal 2AL • Open circuit in wiring harness between the following terminals: — Instrument cluster terminal B—PCM terminal 2AK — Instrument cluster terminal D—PCM terminal 2AL • Instrument cluster malfunction **Note** • If check engine light blinks at a steady rate, a misfire condition could possibly exist.

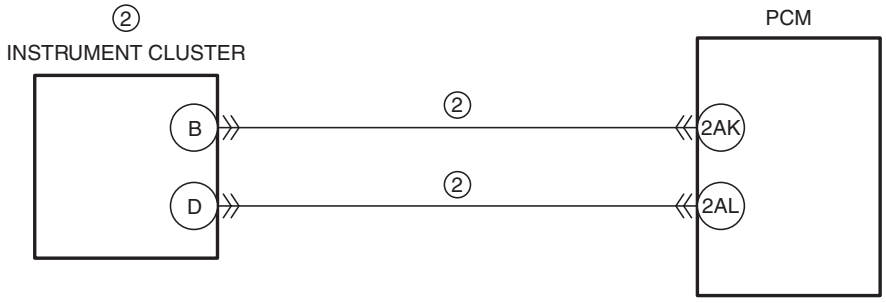

INSTRUMENT CLUSTER
WIRING HARNESS-SIDE CONNECTOR

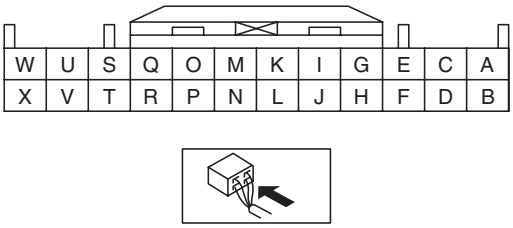

PCM WIRING HARNESS-SIDE CONNECTOR

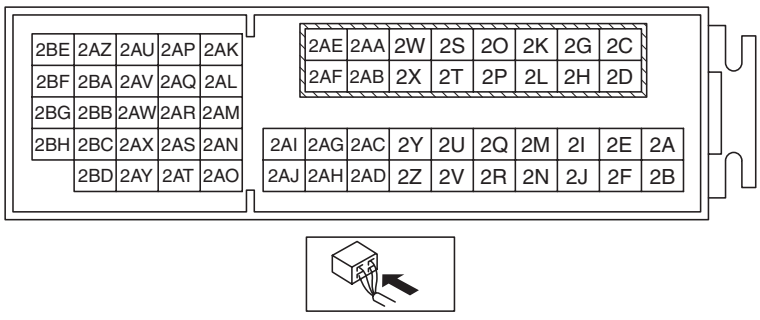

SYMPTOM TROUBLESHOOTING [SKYACTIV-G 2.0]

Diagnostic Procedure

STEP	INSPECTION	RESULTS	ACTION
1	**VERIFY PCM DTC** • Retrieve any DTCs using the M-MDS. (See 01-02-8 ON-BOARD DIAGNOSTIC TEST [SKYACTIV-G 2.0].) • Are any DTCs present?	Yes	Go to the applicable DTC inspection. (See 01-02-14 DTC TABLE [SKYACTIV-G 2.0].)
		No	Go to the next step.
2	**INSPECT INSTRUMENT CLUSTER** • Inspect the instrument cluster. (See 09-22-11 INSTRUMENT CLUSTER INSPECTION.) • Is there any malfunction?	Yes	Replace the instrument cluster. (See 09-22-6 INSTRUMENT CLUSTER REMOVAL/INSTALLATION.)
		No	Inspect for short or open circuit between the following terminals: • Instrument cluster terminal B—PCM terminal 2AK • Instrument cluster terminal D—PCM terminal 2AL Repair or replace the wiring harness if necessary.
3	Verify the test results. • If normal, return to the diagnostic index to service any additional symptoms. (See 01-03-5 SYMPTOM DIAGNOSTIC INDEX [SKYACTIV-G 2.0].) • If a malfunction remains, inspect the related Service Information and perform the repair or diagnosis. — If the vehicle is repaired, troubleshooting is completed. — If the vehicle is not repaired or additional diagnostic information is not available, replace the PCM. (See 01-40-10 PCM REMOVAL/INSTALLATION [SKYACTIV-G 2.0].)		

NO.3 WILL NOT CRANK [SKYACTIV-G 2.0]

id0103e6800900

3	WILL NOT CRANK
DESCRIPTION	• Starter does not work.
POSSIBLE CAUSE	• Poor connection of push button start connector • Instrument cluster or related wiring harness malfunction • Immobilizer system malfunction • PCM continuous memory DTC is stored • Open circuit in wiring harness between the following terminals: — Main relay terminal E—PCM terminal 2K — Main relay terminal C—PCM terminal 2S, 1CK — DLC-2—PCM terminal 2AK, 2AL • Main relay malfunction (stuck open) • Open or poor ground circuit • Poor connection of vehicle body ground • Battery malfunction • Fuse malfunction • Starter relay malfunction • Starter relay related wiring harness malfunction — Between starter relay terminal E and PCM terminal 2AZ — Between starter relay terminal E and start stop unit terminal 1D — Between start stop unit terminal 2V and starter relay terminal A • Following circuit malfunction: — Between battery positive terminal and starter terminal 1A — Between battery positive terminal and starter relay terminal D — Between starter relay terminal C and starter terminal 2A • Starter interlock switch and related wiring harness malfunction (MTX) • Starting system malfunction • Following circuit and/or connector malfunction: — Between push button start terminal A and start stop unit terminal 1AC — Between push button start terminal B and start stop unit terminal 1AE — Between PCM terminal 2AK and start stop unit terminal 2M — Between PCM terminal 2AL and start stop unit terminal 2O • Seized engine, flywheel (MTX) or drive plate (ATX) • Engine damage during compression due to liquid (such as water, fuel, or engine oil) penetration into cylinder

SYMPTOM TROUBLESHOOTING [SKYACTIV-G 2.0]

3	WILL NOT CRANK

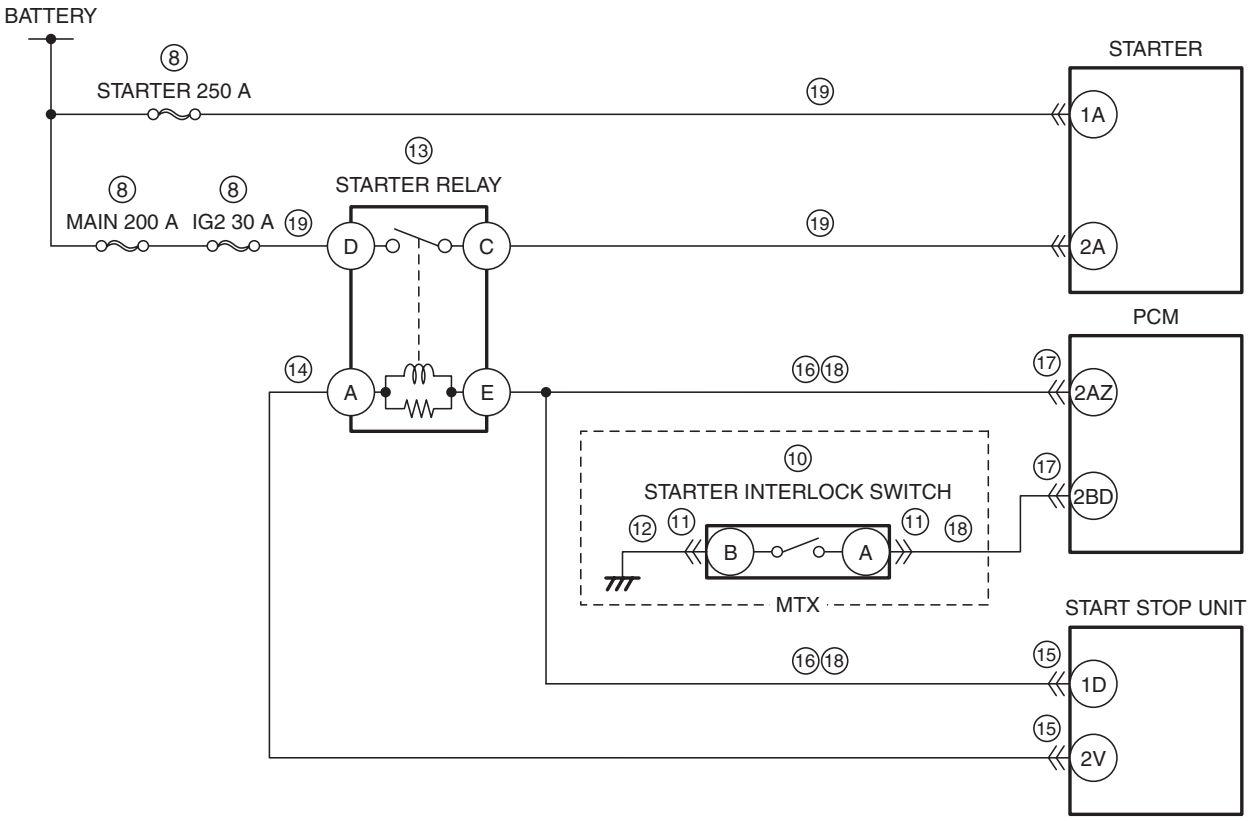

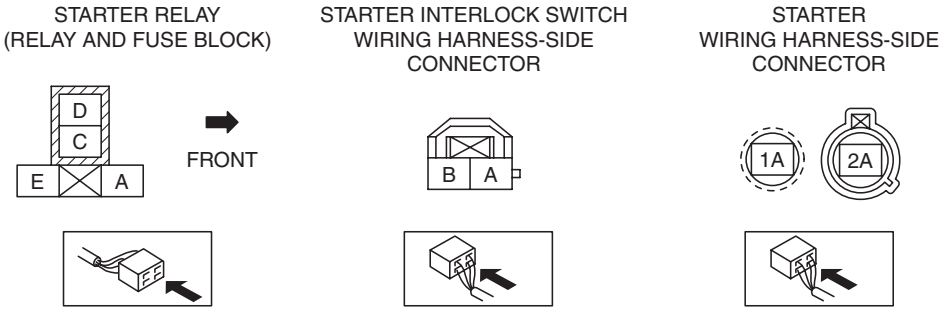

START STOP UNIT
WIRING HARNESS-SIDE CONNECTOR

1AE	1AC	1AA	1Y	1W	1U	1S	1Q	1O	1M	1K	1I	1G	1E	1C	1A
1AF	1AD	1AB	1Z	1X	1V	1T	1R	1P	1N	1L	1J	1H	1F	1D	1B

2W	2U	2S	2Q	2O	2M	2K	2I	2G	2E	2C	2A
2X	2V	2T	2R	2P	2N	2L	2J	2H	2F	2D	2B

PCM WIRING HARNESS-SIDE CONNECTOR

2BE	2AZ	2AU	2AP	2AK
2BF	2BA	2AV	2AQ	2AL
2BG	2BB	2AW	2AR	2AM
2BH	2BC	2AX	2AS	2AN
	2BD	2AY	2AT	2AO

2AE	2AA	2W	2S	2O	2K	2G	2C	
2AF	2AB	2X	2T	2P	2L	2H	2D	

2AI	2AG	2AC	2Y	2U	2Q	2M	2I	2E	2A
2AJ	2AH	2AD	2Z	2V	2R	2N	2J	2F	2B

SYMPTOM TROUBLESHOOTING [SKYACTIV-G 2.0]

Diagnostic Procedure

STEP	INSPECTION	RESULTS	ACTION
1	**DETERMINE IF MALFUNCTION CAUSE IS IMMOBILIZER SYSTEM OR OTHER** • Are any of the following conditions present? — Engine does not start completely. — PCM DTC P1260:00 is displayed.	Yes	Both conditions present: • Go to Step 4.
		No	Either or other condition present: • Go to the next step.
2	**INSPECT PUSH BUTTON START CONNECTOR CONNECTION** • Inspect the connection of push button start connector. • Is the push button start connector securely connected to the coil antenna?	Yes	Go to the next step.
		No	Reconnect the push button start securely, then repeat from Step 1.
3	**DETERMINE IF MALFUNCTION CAUSE IS INSTRUMENT CLUSTER OR OTHER** • Does the security indicator light illuminate?	Yes	Go to the next step.
		No	Inspect the instrument cluster and related wiring harness. (See 09-22-11 INSTRUMENT CLUSTER INSPECTION.) Repair or replace the malfunctioning part according to the inspection results. (See 09-22-6 INSTRUMENT CLUSTER REMOVAL/INSTALLATION.)
4	**VERIFY IMMOBILIZER SYSTEM DTC** • Retrieve the immobilizer system DTC using the M-MDS. (See 09-02B-3 DTC INSPECTION [IMMOBILIZER SYSTEM].) • Are any DTCs present?	Yes	Go to the applicable DTC inspection. (See 09-02B-4 DTC TABLE [IMMOBILIZER SYSTEM].)
		No	Go to the next step.
5	**DETERMINE IF MALFUNCTION CAUSE IS i-stop SYSTEM OR OTHER** • Turn off the i-stop system. • Verify the symptom. • Is the symptom confirmed?	Yes	Go to the next step.
		No	Perform the symptom troubleshooting “NO.6 ENGINE DOES NOT RESTART”. (See 11-03-30 NO.6 ENGINE DOES NOT RESTART [SKYACTIV-G 2.0].)
6	**VERIFY PCM DTC** • Retrieve any DTCs using the M-MDS. (See 01-02-8 ON-BOARD DIAGNOSTIC TEST [SKYACTIV-G 2.0].) • Are any continuous memory DTCs present?	Yes	Continuous memory DTC is displayed: • Go to the applicable DTC inspection. (See 01-02-14 DTC TABLE [SKYACTIV-G 2.0].) Communication error message is displayed: • Inspect the following: — Open circuit in wiring harness between main relay terminal E and PCM terminal 2K — Open circuit in wiring harness between main relay terminal C and PCM terminal 1CK or 2S — Main relay (stuck open) — Open or short circuit in wiring harness between DLC-2 and PCM terminal 2AK or 2AL — Open or poor ground circuit (PCM terminal 1BZ, 1CL, 1CP, 1CT, 1CX, 1DB, 1DH, 1DL and 2AA) — Poor connection of vehicle body ground • Repair or replace the malfunctioning part according to the inspection results.
		No	Go to the next step.
7	**INSPECT POWER SUPPLY** • Access the VPWR PID using the M-MDS. (See 01-02-8 ON-BOARD DIAGNOSTIC TEST [SKYACTIV-G 2.0].) • Verify the VPWR PID value. • Is the VPWR PID value **B+**?	Yes	Go to the next step.
		No	Inspect the following: • Battery connection • Battery condition (See 01-17A-7 BATTERY INSPECTION [SKYACTIV-G 2.0].) • Fuse (See 01-03-17 NO.1 BLOWN FUSES [SKYACTIV-G 2.0].) — If there is any malfunction: • Repair or replace the malfunctioning part according to the inspection results, then repeat this step.

SYMPTOM TROUBLESHOOTING [SKYACTIV-G 2.0]

STEP	INSPECTION	RESULTS	ACTION
8	**DETERMINE IF MALFUNCTION CAUSE IS STARTER RELAY CONTROL SIGNAL CIRCUIT OR OTHER** • Switch the ignition to start. • Is a clicking sound heard from the starter relay?	Yes	Go to Step 18.
		No	ATX: • Go to Step 12. MTX: • Go to the next step.
9	**DETERMINE IF MALFUNCTION CAUSE IS STARTER INTERLOCK SWITCH OR OTHER** • Switch the ignition to off. • Short the starter interlock switch terminals A and B (wiring harness-side) using a jumper wire. • Switch the ignition to start. • Does the engine start?	Yes	Inspect the starter interlock switch. (See 01-19A-9 STARTER INTERLOCK SWITCH INSPECTION [SKYACTIV-G 2.0].) • If there is any malfunction: — Replace the starter interlock switch, then repeat Step 8. (See 05-10A-14 STARTER INTERLOCK SWITCH REMOVAL/INSTALLATION [C66M-R, C66MX-R].) • If there is no malfunction: — Go to the next step.
		No	Go to the next step.
10	**INSPECT STARTER INTERLOCK SWITCH CONNECTOR CONDITION** • Switch the ignition to off. • Disconnect the starter interlock switch connector. • Inspect for poor connection (such as damaged/pulled-out pins, corrosion). • Is there any malfunction?	Yes	Repair or replace the connector and/or terminals, then repeat Step 8.
		No	Go to the next step.
11	**INSPECT STARTER INTERLOCK SWITCH GROUND CIRCUIT FOR OPEN CIRCUIT** • Verify that the starter interlock switch connector is disconnected. • Inspect for continuity between starter interlock switch terminal B (wiring harness-side) and body ground. • Is there continuity?	Yes	Go to the next step.
		No	Repair or replace the wiring harness for a possible open circuit, then repeat Step 8.
12	**INSPECT STARTER RELAY** • Remove the starter relay. • Inspect the starter relay. (See 09-21-29 RELAY INSPECTION.) • Is there any malfunction?	Yes	Replace the starter relay. Repeat Step 8.
		No	Go to the next step.
13	**INSPECT STARTER RELAY CONTROL CIRCUIT FOR SHORT TO GROUND OR OPEN CIRCUIT** • Starter relay is removed. • Verify that the starter interlock switch connector is disconnected. (MTX) • Measure the voltage at the starter relay terminal A (wiring harness-side) while cranking the engine. • Is the voltage **B+**?	Yes	Go to the next step.
		No	Repair or replace the wiring harness for a possible short to ground or open circuit. Repeat Step 8.
14	**INSPECT START STOP UNIT CONNECTOR CONDITION** • Switch the ignition to off. • Disconnect the start stop unit connector. • Inspect for poor connection (such as damaged/pulled-out pins, corrosion). • Is there any malfunction?	Yes	Repair or replace the connector and/or terminals, then repeat Step 8.
		No	Go to the next step.

SYMPTOM TROUBLESHOOTING [SKYACTIV-G 2.0]

STEP	INSPECTION	RESULTS	ACTION
15	**INSPECT STARTER RELAY CONTROL CIRCUIT FOR SHORT TO GROUND** • Starter relay is removed. • Verify that the starter interlock switch and start stop unit connectors are disconnected. • Inspect for continuity between starter relay terminal E (wiring harness-side) and body ground. • Is there continuity?	Yes	If the short to ground circuit could be detected in the wiring harness: • Repair or replace the wiring harness for a possible short to ground. If the short to ground circuit could not be detected in the wiring harness: • Replace the PCM (short to ground in the PCM internal circuit). (See 01-40-10 PCM REMOVAL/INSTALLATION [SKYACTIV-G 2.0].) Repeat Step 8.
		No	Go to the next step.
16	**INSPECT PCM CONNECTOR CONDITION** • Disconnect the PCM connector. • Inspect for poor connection (such as damaged/pulled-out pins, corrosion). • Is there any malfunction?	Yes	Repair or replace the connector and/or terminals, then repeat Step 8.
		No	Go to the next step.
17	**INSPECT STARTER RELAY CONTROL CIRCUIT FOR OPEN CIRCUIT** • Starter relay is removed. • Verify that the starter interlock switch, start stop unit and PCM connectors are disconnected. • Inspect for continuity between the following terminals (wiring harness-side): — Starter relay terminal E—PCM terminal 2AZ — Starter interlock switch terminal A—PCM terminal 2BD (MTX) — Starter relay terminal E—Start stop unit terminal 1D • Is there continuity?	Yes	Inspect the start stop unit. (See 09-14-56 START STOP UNIT INSPECTION.) • If there is any malfunction: — Replace the start stop unit, then repeat Step 8. (See 09-14-54 START STOP UNIT REMOVAL/INSTALLATION.) • If there is no malfunction: — Go to the next step.
		No	Repair or replace the wiring harness for a possible open circuit, then repeat Step 8.
18	**INSPECT WIRING HARNESS OF STARTER POWER SUPPLY CIRCUIT** • Inspect the following circuit: — Between battery positive terminal and starter terminal 1A — Between battery positive terminal and starter relay terminal D — Between starter relay terminal C and starter terminal 2A • Is there any malfunction?	Yes	Repair or replace the suspected wiring harness.
		No	Go to the next step.
19	**INSPECT STARTING SYSTEM** • Inspect the starting system. (See 01-19A-4 STARTER INSPECTION [SKYACTIV-G 2.0].) • Is there any malfunction?	Yes	Repair or replace the malfunctioning part according to the inspection results.
		No	Go to the next step.
20	**INSPECT IMMOBILIZER SYSTEM RELATED CIRCUIT** • Inspect the following wiring harness and connectors: — Between push button start terminal A and start stop unit terminal 1AC — Between push button start terminal B and start stop unit terminal 1AE — Between PCM terminal 2AK and start stop unit terminal 2M — Between PCM terminal 2AL and start stop unit terminal 2O • Is there any malfunction?	Yes	Repair or replace the malfunctioning part according to the inspection results.
		No	Go to the next step.
21	**VERIFY PRESENT MALFUNCTION DTC** • Perform the KOEO self test. (See 01-02-12 KOEO/KOER SELF TEST [SKYACTIV-G 2.0].) • Are any DTCs present?	Yes	Go to the applicable DTC inspection. (See 01-02-14 DTC TABLE [SKYACTIV-G 2.0].)
		No	Go to the next step.

SYMPTOM TROUBLESHOOTING [SKYACTIV-G 2.0]

STEP	INSPECTION	RESULTS	ACTION
22	**DETERMINE IF MALFUNCTION CAUSE IS BASE ENGINE OR OTHER** • Inspect for a seized flywheel (MTX) or drive plate (ATX). • Is the flywheel (MTX) or drive plate (ATX) seized?	Yes	Repair or replace the malfunctioning part according to the inspection results.
		No	Base engine malfunction or engine damage during compression due to liquid (such as water, fuel, or engine oil) penetration into cylinder. • Overhaul or replace the engine.
23	Verify the test results. • If normal, return to the diagnostic index to service any additional symptoms. (See 01-03-5 SYMPTOM DIAGNOSTIC INDEX [SKYACTIV-G 2.0].) • If a malfunction remains, inspect the related Service Information and perform the repair or diagnosis. — If the vehicle is repaired, troubleshooting is completed. — If the vehicle is not repaired or additional diagnostic information is not available, replace the PCM. (See 01-40-10 PCM REMOVAL/INSTALLATION [SKYACTIV-G 2.0].)		

SYMPTOM TROUBLESHOOTING [SKYACTIV-G 2.0]

NO.4 HARD TO START/LONG CRANK/ERRATIC START/ERRATIC CRANK [SKYACTIV-G 2.0]

id0103e6801000

4	HARD TO START/LONG CRANK/ERRATIC START/ERRATIC CRANK
DESCRIPTION	• Starter cranks engine at normal speed but engine requires excessive cranking time before starting. • Battery is operating normally.
POSSIBLE CAUSE	**Note** • If the ignition is not switched off (to LOCK or ACC) after the engine stalls, and then an engine restart is attempted, the PCM corrects the difference between CKP sensor and CMP sensor signals caused by engine stalling, which may result in more time needed to restart the engine. • Engine overheating • PCM DTC is stored • Erratic signal to PCM — ECT sensor or related circuit malfunction — MAF sensor or related circuit malfunction — MAP sensor or related circuit malfunction — A/F sensor or related circuit malfunction — HO2S or related circuit malfunction — Improper air/fuel mixture ratio control • Improper operation of drive-by-wire control system • Incorrect fuel injection timing • Fuel injector malfunction • Purge solenoid valve malfunction • Contamination in MAF sensor • Under the condition in which the engine starts and stops repeatedly while the vehicle is not driven, the fuel injected prior to complete ignition during engine start may drop into the oil pan from the cylinder and mix with the engine oil. The situation in which excess quantities of fuel continue to be injected due to an engine coolant temperature signal error is the same. • Intermittent open circuit in PCM ground circuit • Poor fuel quality • Fuel leakage • Air leakage from intake-air system • Intake-air system restriction • Vacuum leakage • Improper engine oil viscosity • Erratic signal from CMP sensor — Loose installation — Damaged trigger wheel (intake camshaft and/or exhaust camshaft) — Open or short circuit in related wiring harness • Erratic signal from CKP sensor — Loose installation — Damaged trigger wheel (crankshaft pulley) — Open or short circuit in related wiring harness • Inadequate fuel pressure (high or low pressure side) — Fuel pressure sensor malfunction — High pressure fuel pump malfunction — Spill valve control solenoid valve control circuit malfunction (damage to driver in PCM caused by short circuit to ground system) — Spill valve control solenoid valve malfunction (built-into high pressure fuel pump) — Relief valve (built-into high pressure fuel pump) malfunction — Fuel line restriction — Fuel filter clogged — Fuel pump unit malfunction • Starting system malfunction • Low engine compression • Improper intake valve timing • Improper exhaust valve timing • Spark plug malfunction • Erratic signal to ignition coils • Exhaust system or TWC restriction • PCV valve malfunction • Injector driver (built-into PCM) malfunction

SYMPTOM TROUBLESHOOTING [SKYACTIV-G 2.0]

4	HARD TO START/LONG CRANK/ERRATIC START/ERRATIC CRANK
POSSIBLE CAUSE	**Warning** **The following troubleshooting flow chart contains the fuel system diagnosis and repair procedures. Read the following warnings before performing the fuel system services:** • **Fuel vapor is hazardous. It can easily ignite, causing serious injury and damage. Always keep sparks and flames away from fuel.** • **Fuel line spills and leakage are dangerous. Fuel can ignite and cause serious injury or death and damage. Fuel can also irritate skin and eyes. To prevent this, always complete "BEFORE SERVICE PRECAUTION" and "AFTER SERVICE PRECAUTION" described in this manual. (See 01-14A-6 BEFORE SERVICE PRECAUTION [SKYACTIV-G 2.0].) (See 01-14A-7 AFTER SERVICE PRECAUTION [SKYACTIV-G 2.0].)** **Caution** • **Disconnecting/connecting the quick release connector without cleaning it may possibly cause damage to the fuel pipe and quick release connector. Always clean the quick release connector joint area before disconnecting/connecting, and make sure that it is free of foreign material.**

Diagnostic Procedure

STEP	INSPECTION	RESULTS	ACTION
1	**DETERMINE IF MALFUNCTION CAUSE IS OVERHEATING OR OTHER** **Caution** • **While performing this step, always operate the vehicle in a safe and lawful manner.** • **When the M-MDS is used to observe monitor system status while driving, be sure to have another technician with you, or record the data in the M-MDS using the PID/DATA MONITOR AND RECORD capturing function and inspect later.** • Access the ECT PID using the M-MDS. (See 01-02-8 ON-BOARD DIAGNOSTIC TEST [SKYACTIV-G 2.0].) • Is the ECT PID value **less than 116 °C {241 °F}** during driving?	Yes	Go to the next step.
		No	The cause of this concern could be from the cooling system overheating. • Perform the symptom troubleshooting "NO.17 COOLING SYSTEM CONCERNS-OVERHEATING". (See 01-03-88 NO.17 COOLING SYSTEM CONCERNS-OVERHEATING [SKYACTIV-G 2.0].)
2	**VERIFY PCM DTC** • Retrieve any DTCs using the M-MDS. (See 01-02-8 ON-BOARD DIAGNOSTIC TEST [SKYACTIV-G 2.0].) • Are any DTCs present?	Yes	Go to the applicable DTC inspection. (See 01-02-14 DTC TABLE [SKYACTIV-G 2.0].)
		No	Go to the next step.

SYMPTOM TROUBLESHOOTING [SKYACTIV-G 2.0]

STEP	INSPECTION	RESULTS	ACTION
3	**VERIFY CURRENT INPUT SIGNAL STATUS** **Caution** • **While performing this step, always operate the vehicle in a safe and lawful manner.** • **When the M-MDS is used to observe monitor system status while driving, be sure to have another technician with you, or record the data in the M-MDS using the PID/DATA MONITOR AND RECORD capturing function and inspect later.** • Access the following PIDs using the M-MDS: (See 01-02-8 ON-BOARD DIAGNOSTIC TEST [SKYACTIV-G 2.0].) — ECT — MAF — MAP — O2S11 — O2S12 — SHRTFT1 — LONGFT1 • Do the PIDs indicate the correct values under the trouble condition? (See 01-40-17 PCM INSPECTION [SKYACTIV-G 2.0].)	Yes	Go to the next step.
		No	ECT PID is not as specified: • Inspect the ECT sensor. (See 01-40-43 ENGINE COOLANT TEMPERATURE (ECT) SENSOR INSPECTION [SKYACTIV-G 2.0].) MAF PID is not as specified: • Inspect the MAF sensor. (See 01-40-45 MASS AIR FLOW (MAF) SENSOR INSPECTION [SKYACTIV-G 2.0].) MAP PID is not as specified: • Inspect the MAP sensor. (See 01-40-49 MANIFOLD ABSOLUTE PRESSURE (MAP) SENSOR INSPECTION [SKYACTIV-G 2.0].) O2S11, SHRTFT1, LONGFT1 PIDs are not as specified: • Inspect the A/F sensor. (See 01-40-55 AIR FUEL RATIO (A/F) SENSOR INSPECTION [SKYACTIV-G 2.0].) O2S12 PID is not as specified: • Inspect the HO2S. (See 01-40-58 HEATED OXYGEN SENSOR (HO2S) INSPECTION [SKYACTIV-G 2.0].) Repair or replace the malfunctioning part according to the inspection results. • If the malfunction remains: — Perform the “INTERMITTENT CONCERN TROUBLESHOOTING” procedure. (See 01-03-116 INTERMITTENT CONCERN TROUBLESHOOTING [SKYACTIV-G 2.0].)
4	**DETERMINE IF MALFUNCTION CAUSE IS DRIVE-BY-WIRE CONTROL SYSTEM OR OTHER** • Will the engine run smoothly at part throttle?	Yes	Go to the next step.
		No	Go to Step 6.
5	**INSPECT DRIVE-BY-WIRE CONTROL SYSTEM OPERATION** • Perform the TP sweep inspection. (See 01-03-118 ENGINE CONTROL SYSTEM OPERATION INSPECTION [SKYACTIV-G 2.0].) • Does the drive-by-wire control system work properly?	Yes	Visually inspect the throttle body (damage/scratching). • If there is any malfunction: — Repair or replace the malfunctioning part according to the inspection results. • If there is no malfunction: — Go to the next step.
		No	Repair or replace the malfunctioning part according to the inspection results.
6	**INSPECT FUEL INJECTOR OPERATION** • Perform the Fuel Injector Operation Inspection. (See 01-03-118 ENGINE CONTROL SYSTEM OPERATION INSPECTION [SKYACTIV-G 2.0].) • Do the fuel injectors operate properly?	Yes	Go to the next step.
		No	Repair or replace the malfunctioning part according to the inspection results.
7	**INSPECT PURGE CONTROL SYSTEM OPERATION** • Perform the Purge Control System Inspection. (See 01-03-118 ENGINE CONTROL SYSTEM OPERATION INSPECTION [SKYACTIV-G 2.0].) • Does the purge solenoid valve work properly?	Yes	Go to the next step.
		No	Repair or replace the malfunctioning part according to the inspection results.
8	**INSPECT MAF SENSOR** • Inspect the MAF sensor for the following: — Contamination • Is there any malfunction?	Yes	Repair or replace the malfunctioning part according to the inspection results.
		No	Go to the next step.
9	**INSPECT PCM FOR POOR GROUND** • Verify the PCM ground point condition. • Is there any ground point loose or lifting in the PCM?	Yes	Repair the ground point.
		No	Go to the next step.

SYMPTOM TROUBLESHOOTING [SKYACTIV-G 2.0]

STEP	INSPECTION	RESULTS	ACTION
10	**INSPECT RELATED PART CONDITION** • Inspect the following: — Fuel quality (proper octane, contamination, winter/summer blend) — Fuel leakage — Intake-air system leakage or restriction — Vacuum leakage — Engine oil viscosity — CKP sensor, intake CMP sensor and exhaust CMP sensor • Installation condition (See 01-40-59 CRANKSHAFT POSITION (CKP) SENSOR REMOVAL/INSTALLATION [SKYACTIV-G 2.0].) (See 01-40-61 CAMSHAFT POSITION (CMP) SENSOR REMOVAL/INSTALLATION [SKYACTIV-G 2.0].) • Damaged trigger wheel, intake camshaft and exhaust camshaft • Is there any malfunction?	Yes	Service if necessary. • Repeat this step.
		No	Go to the next step.
11	**INSPECT FUEL PRESSURE (HIGH-SIDE)** • Start the engine and warm it up completely. • Access the FUEL_PRES PID using the M-MDS at idle. (See 01-02-8 ON-BOARD DIAGNOSTIC TEST [SKYACTIV-G 2.0].) • Is the FUEL_PRES PID value **approx. 3 MPa {31 kgf/cm^2, 435 psi}**?	Yes	Go to Step 15.
		No	Lower than **3 MPa {31 kgf/cm2, 435 psi}**: • Inspect the following: — Fuel leakage at the fuel line and fuel injector — Fuel pump • Perform the Fuel Pump (Low-pressure Side) Operation Inspection. (See 01-03-118 ENGINE CONTROL SYSTEM OPERATION INSPECTION [SKYACTIV-G 2.0].) — Fuel pressure sensor (See 01-40-52 FUEL PRESSURE SENSOR INSPECTION [SKYACTIV-G 2.0].) — High pressure fuel pump (See 01-14A-49 HIGH PRESSURE FUEL PUMP INSPECTION [SKYACTIV-G 2.0].) • If there is any malfunction: — Repair or replace the malfunctioning part according to the inspection results. • If there is no malfunction: — Go to Step 14. Higher than **3 MPa {31 kgf/cm2, 435 psi}**: • Go to the next step.
12	**DETERMINE IF MALFUNCTION CAUSE IS FUEL PRESSURE SENSOR OR HIGH PRESSURE FUEL PUMP** • Is the vehicle acceleration performance normal?	Yes	Go to the next step.
		No	Go to Step 14.
13	**INSPECT FUEL PRESSURE SENSOR** • Inspect the fuel pressure sensor. (See 01-40-52 FUEL PRESSURE SENSOR INSPECTION [SKYACTIV-G 2.0].) • Is there any malfunction?	Yes	Replace the fuel distributor. (See 01-14A-51 FUEL INJECTOR REMOVAL/INSTALLATION [SKYACTIV-G 2.0].)
		No	Go to Step 15.
14	**INSPECT SPILL VALVE CONTROL SOLENOID VALVE CONTROL CIRCUIT FOR SHORT TO GROUND** • Switch the ignition to off. • Disconnect the high pressure fuel pump and PCM connectors. • Inspect for continuity between high pressure fuel pump terminal A (wiring harness-side) and body ground. • Is there continuity?	Yes	Repair or replace the wiring harness for a possible short to ground. • If the malfunction remains: — Replace the PCM. (damage to driver in PCM) (See 01-40-10 PCM REMOVAL/INSTALLATION [SKYACTIV-G 2.0].)
		No	Replace the high pressure fuel pump. (See 01-14A-44 HIGH PRESSURE FUEL PUMP REMOVAL/INSTALLATION [SKYACTIV-G 2.0].)

SYMPTOM TROUBLESHOOTING [SKYACTIV-G 2.0]

STEP	INSPECTION	RESULTS	ACTION
15	**INSPECT FUEL PRESSURE (LOW-SIDE)** • Connect the fuel pressure gauge between fuel pump and high pressure fuel pump. • Measure the low side fuel pressure. (See 01-14A-8 FUEL LINE PRESSURE INSPECTION [SKYACTIV-G 2.0].) • Is the low side fuel pressure within specification? **Specification:** • **405—485 kPa {4.13—4.94 kgf/cm^2, 58.8—70.3 psi}**	Yes	Go to the next step.
		No	Inspect the following: • Fuel line restriction • Fuel filter clogged — If there is any malfunction: • Repair or replace the malfunctioning part according to the inspection results. — If there is no malfunction: • Replace the fuel pump unit. (See 01-14A-38 FUEL PUMP UNIT REMOVAL/INSTALLATION [SKYACTIV-G 2.0].)
16	**INSPECT STARTING SYSTEM** • Inspect the starting system. (See 01-19A-4 STARTER INSPECTION [SKYACTIV-G 2.0].) • Does the starting system work properly?	Yes	Go to the next step.
		No	Repair or replace the malfunctioning part according to the inspection results.
17	**INSPECT ENGINE COMPRESSION** • Measure the compression pressure for each cylinder. (See 01-10A-14 COMPRESSION INSPECTION [SKYACTIV-G 2.0].) • Are compression pressures within specification? **Specification:** • Compression [European (L.H.D. U.K.) specs.] — Standard: **978 kPa {9.97 kgf/cm^2, 142 psi} (300 rpm)** — Minimum: **783 kPa {7.98 kgf/cm^2, 114 psi} (300 rpm)** — Maximum difference between cylinders: **166 kPa {1.69 kgf/cm^2, 24.1 psi}** • Compression [Except European (L.H.D. U.K.) specs.] — Standard: **885 kPa {9.02 kgf/cm^2, 128 psi} (300 rpm)** — Minimum: **708 kPa {7.22 kgf/cm^2, 103 psi} (300 rpm)** — Maximum difference between cylinders: **150 kPa {1.53 kgf/cm^2, 21.8 psi}** **Note** • Because the SKYACTIV-G 2.0 retards the intake valve closing timing, compression pressure is low.	Yes	Go to the next step.
		No	Inspect the following: • Damaged valve seat • Worn valve stem and valve guide • Worn or stuck piston ring • Worn piston, piston ring or cylinder • Improper intake valve timing • Improper exhaust valve timing Service if necessary.
18	**INSPECT IGNITION SYSTEM OPERATION** • Perform the Spark Test. (See 01-03-118 ENGINE CONTROL SYSTEM OPERATION INSPECTION [SKYACTIV-G 2.0].) • Is a strong blue spark visible at each cylinder?	Yes	Go to the next step.
		No	Repair or replace the malfunctioning part according to the inspection results.
19	**INSPECT EXHAUST SYSTEM FOR RESTRICTION** • Inspect for restriction in the exhaust system and the TWC. • Is there any restriction?	Yes	Repair or replace the malfunctioning part according to the inspection results.
		No	Go to the next step.

SYMPTOM TROUBLESHOOTING [SKYACTIV-G 2.0]

STEP	INSPECTION	RESULTS	ACTION
20	**INSPECT IF MALFUNCTION CAUSE IS PCV VALVE OR INJECTOR DRIVER (PCM INTEGRATED)** • Inspect the PCV valve. (See 01-16A-15 POSITIVE CRANKCASE VENTILATION (PCV) VALVE INSPECTION [SKYACTIV-G 2.0].) • Is there any malfunction?	Yes	Replace the PCV valve. (See 01-16A-13 POSITIVE CRANKCASE VENTILATION (PCV) VALVE REMOVAL/ INSTALLATION [SKYACTIV-G 2.0].)
		No	Injector driver malfunction. • Replace the PCM. (See 01-40-10 PCM REMOVAL/INSTALLATION [SKYACTIV-G 2.0].) If the problem remains, overhaul the engine.
21	Verify the test results. • If normal, return to the diagnostic index to service any additional symptoms. (See 01-03-5 SYMPTOM DIAGNOSTIC INDEX [SKYACTIV-G 2.0].) • If a malfunction remains, inspect the related Service Information and perform the repair or diagnosis. — If the vehicle is repaired, troubleshooting is completed. — If the vehicle is not repaired or additional diagnostic information is not available, replace the PCM. (See 01-40-10 PCM REMOVAL/INSTALLATION [SKYACTIV-G 2.0].)		

SYMPTOM TROUBLESHOOTING [SKYACTIV-G 2.0]

NO.5 ENGINE STALLS-AFTER START/AT IDLE [SKYACTIV-G 2.0]

id0103e6801100

5	ENGINE STALLS-AFTER START/AT IDLE
DESCRIPTION	• Engine stops unexpectedly at idle, after start, or both.
POSSIBLE CAUSE	• Engine overheating • PCM DTC is stored • Erratic signal to PCM — APP sensor or related circuit malfunction — ECT sensor or related circuit malfunction — MAF sensor or related circuit malfunction — MAP sensor or related circuit malfunction — A/F sensor or related circuit malfunction — HO2S or related circuit malfunction — Improper air/fuel mixture ratio control • Improper operation of A/C system • Improper operation of drive-by-wire control system • Purge solenoid valve malfunction • Open circuit in MAF sensor ground circuit • Intermittent open circuit in PCM ground circuit • Poor fuel quality • Air leakage from intake-air system • Intake-air system restriction • Electrical connector disconnected • No battery power supply to PCM or poor ground • Fuel leakage • Vacuum leakage • Erratic signal from CMP sensor — Loose installation — Damaged trigger wheel (intake camshaft and/or exhaust camshaft) — Open or short circuit in related wiring harness • No signal from CKP sensor — Loose installation — Damaged trigger wheel (crankshaft pulley) — Open or short circuit in related wiring harness • Inadequate fuel pressure (high or low pressure side) — Open or short circuit in the fuel pump (low-side) body or related wiring harness — Fuel pressure sensor or related circuit malfunction — Fuel pump (low-side) body mechanical malfunction — High pressure fuel pump malfunction — Spill valve control solenoid valve control circuit malfunction (damage to driver in PCM caused by short circuit to ground system) — Spill valve control solenoid valve malfunction (built-into high pressure fuel pump) — Relief valve (built-into high pressure fuel pump) malfunction — Fuel line restriction — Fuel filter clogged • Fuel injector malfunction • Incorrect fuel injection timing • Improper operation of electric variable valve timing control system (PCM DTC is stored.) • Improper operation of hydraulic variable valve timing control system • Ignition system malfunction • Ignition coil malfunction • Low engine compression • Improper intake valve timing • Improper exhaust valve timing • Exhaust system and/or TWC restricted or clogged • PCV valve malfunction • Injector driver (built-into PCM) malfunction

SYMPTOM TROUBLESHOOTING [SKYACTIV-G 2.0]

5	ENGINE STALLS-AFTER START/AT IDLE
POSSIBLE CAUSE	**Warning** **The following troubleshooting flow chart contains the fuel system diagnosis and repair procedures. Read the following warnings before performing the fuel system services:** • **Fuel vapor is hazardous. It can easily ignite, causing serious injury and damage. Always keep sparks and flames away from fuel.** • **Fuel line spills and leakage are dangerous. Fuel can ignite and cause serious injury or death and damage. Fuel can also irritate skin and eyes. To prevent this, always complete "BEFORE SERVICE PRECAUTION" and "AFTER SERVICE PRECAUTION" described in this manual. (See 01-14A-6 BEFORE SERVICE PRECAUTION [SKYACTIV-G 2.0].) (See 01-14A-7 AFTER SERVICE PRECAUTION [SKYACTIV-G 2.0].)** **Caution** • **Disconnecting/connecting the quick release connector without cleaning it may possibly cause damage to the fuel pipe and quick release connector. Always clean the quick release connector joint area before disconnecting/connecting, and make sure that it is free of foreign material.**

Diagnostic Procedure

STEP	INSPECTION	RESULTS	ACTION
1	**VERIFY IF MALFUNCTION CAUSE IS OVERHEATING** **Caution** • **While performing this step, always operate the vehicle in a safe and lawful manner.** • **When the M-MDS is used to observe monitor system status while driving, be sure to have another technician with you, or record the data in the M-MDS using the PID/DATA MONITOR AND RECORD capturing function and inspect later.** • Access the ECT PID using the M-MDS. (See 01-02-8 ON-BOARD DIAGNOSTIC TEST [SKYACTIV-G 2.0].) • Is the ECT PID value **less than 116 °C {241 °F}** during driving?	Yes	Go to the next step.
		No	The cause of this concern could be from the cooling system overheating. • Perform the symptom troubleshooting "NO.17 COOLING SYSTEM CONCERNS-OVERHEATING". (See 01-03-88 NO.17 COOLING SYSTEM CONCERNS-OVERHEATING [SKYACTIV-G 2.0].)
2	**VERIFY PCM DTC** • Retrieve any DTCs using the M-MDS. (See 01-02-8 ON-BOARD DIAGNOSTIC TEST [SKYACTIV-G 2.0].) • Are any DTCs present?	Yes	Go to the applicable DTC inspection. (See 01-02-14 DTC TABLE [SKYACTIV-G 2.0].)
		No	Go to the next step.

SYMPTOM TROUBLESHOOTING [SKYACTIV-G 2.0]

STEP	INSPECTION	RESULTS	ACTION
3	**VERIFY CURRENT INPUT SIGNAL STATUS** **Caution** • **While performing this step, always operate the vehicle in a safe and lawful manner.** • **When the M-MDS is used to observe monitor system status while driving, be sure to have another technician with you, or record the data in the M-MDS using the PID/DATA MONITOR AND RECORD capturing function and inspect later.** • Access the following PIDs using the M-MDS: (See 01-02-8 ON-BOARD DIAGNOSTIC TEST [SKYACTIV-G 2.0].) — APP1 — APP2 — ECT — MAF — MAP — O2S11 — O2S12 — SHRTFT1 — LONGFT1 • Do the PIDs indicate the correct values under the trouble condition? (See 01-40-17 PCM INSPECTION [SKYACTIV-G 2.0].)	Yes	Go to the next step.
		No	APP1, APP2 PIDs are not as specified: • Inspect the APP sensor. (See 01-40-51 ACCELERATOR PEDAL POSITION (APP) SENSOR INSPECTION [SKYACTIV-G 2.0].) ECT PID is not as specified: • Inspect the ECT sensor. (See 01-40-43 ENGINE COOLANT TEMPERATURE (ECT) SENSOR INSPECTION [SKYACTIV-G 2.0].) MAF PID is not as specified: • Inspect the MAF sensor. (See 01-40-45 MASS AIR FLOW (MAF) SENSOR INSPECTION [SKYACTIV-G 2.0].) MAP PID is not as specified: • Inspect the MAP sensor. (See 01-40-49 MANIFOLD ABSOLUTE PRESSURE (MAP) SENSOR INSPECTION [SKYACTIV-G 2.0].) O2S11, SHRTFT1, LONGFT1 PIDs are not as specified: • Inspect the A/F sensor. (See 01-40-55 AIR FUEL RATIO (A/F) SENSOR INSPECTION [SKYACTIV-G 2.0].) O2S12 PID is not as specified: • Inspect the HO2S. (See 01-40-58 HEATED OXYGEN SENSOR (HO2S) INSPECTION [SKYACTIV-G 2.0].) Repair or replace the malfunctioning part according to the inspection results. • If the malfunction remains: — Perform the “INTERMITTENT CONCERN TROUBLESHOOTING” procedure. (See 01-03-116 INTERMITTENT CONCERN TROUBLESHOOTING [SKYACTIV-G 2.0].)
4	**INSPECT PCM POWER SUPPLY VOLTAGE** • Access the VPWR PID using the M-MDS. (See 01-02-8 ON-BOARD DIAGNOSTIC TEST [SKYACTIV-G 2.0].) • Is the VPWR PID value **B+**?	Yes	Go to the next step.
		No	Repair or replace the wiring harness between main relay terminal C and PCM terminal 2S and 1CK.
5	**INSPECT A/C CUT-OFF CONTROL SYSTEM OPERATION** • Perform the A/C Cut-off Control System Inspection. (See 01-03-118 ENGINE CONTROL SYSTEM OPERATION INSPECTION [SKYACTIV-G 2.0].) • Does the A/C cut-off operation work properly?	Yes	Go to the next step.
		No	Repair or replace the malfunctioning part according to the inspection results.
6	**DETERMINE IF MALFUNCTION CAUSE IS DRIVE-BY-WIRE CONTROL SYSTEM OR OTHER** • Will the engine run smoothly at part throttle?	Yes	Go to the next step.
		No	Go to Step 8.
7	**INSPECT DRIVE-BY-WIRE CONTROL SYSTEM OPERATION** • Perform the TP sweep inspection. (See 01-03-118 ENGINE CONTROL SYSTEM OPERATION INSPECTION [SKYACTIV-G 2.0].) • Does the drive-by-wire control system work properly?	Yes	Visually inspect the throttle body (damage/scratching). • If there is any malfunction: — Repair or replace the malfunctioning part according to the inspection results. • If there is no malfunction: — Go to the next step.
		No	Repair or replace the malfunctioning part according to the inspection results.

SYMPTOM TROUBLESHOOTING [SKYACTIV-G 2.0]

STEP	INSPECTION	RESULTS	ACTION
8	**INSPECT PURGE CONTROL SYSTEM OPERATION** • Perform the Purge Control System Inspection. (See 01-03-118 ENGINE CONTROL SYSTEM OPERATION INSPECTION [SKYACTIV-G 2.0].) • Does the purge solenoid valve work properly?	Yes	Go to the next step.
		No	Repair or replace the malfunctioning part according to the inspection results.
9	**INSPECT MAF SENSOR GROUND CIRCUIT FOR OPEN CIRCUIT** • Inspect the MAF sensor for the following: — MAF sensor terminal B voltage (ground circuit) • Is there any malfunction?	Yes	Repair or replace the suspected wiring harness.
		No	Go to the next step.
10	**INSPECT PCM FOR POOR GROUND** • Verify the PCM ground point condition. • Is there any ground point loose or lifting in the PCM?	Yes	Repair the ground point.
		No	Go to the next step.
11	**INSPECT RELATED PART CONDITION** • Inspect the following: — Fuel quality (proper octane, contamination, winter/summer blend) — Intake-air system leakage or restriction — Electrical connectors — Poor connection for PCM ground and body ground — Fuel leakage — Vacuum leakage — CKP sensor, intake CMP sensor and exhaust CMP sensor • Installation condition (See 01-40-59 CRANKSHAFT POSITION (CKP) SENSOR REMOVAL/INSTALLATION [SKYACTIV-G 2.0].) (See 01-40-61 CAMSHAFT POSITION (CMP) SENSOR REMOVAL/INSTALLATION [SKYACTIV-G 2.0].) • Damaged trigger wheel, intake camshaft and exhaust camshaft • Is there any malfunction?	Yes	Service if necessary. • Repeat this step.
		No	Go to the next step.
12	**INSPECT FUEL PRESSURE (HIGH-SIDE)** • Start the engine and warm it up completely. • Access the FUEL_PRES PID using the M-MDS at idle. (See 01-02-8 ON-BOARD DIAGNOSTIC TEST [SKYACTIV-G 2.0].) • Is the FUEL_PRES PID value **approx. 3 MPa {31 kgf/cm^2, 435 psi}**?	Yes	Go to Step 16.
		No	Lower than **3 MPa {31 kgf/cm2, 435 psi}**: • Inspect the following: — Fuel leakage at the fuel line and fuel injector — Fuel pump • Perform the Fuel Pump (Low-pressure Side) Operation Inspection. (See 01-03-118 ENGINE CONTROL SYSTEM OPERATION INSPECTION [SKYACTIV-G 2.0].) — Fuel pressure sensor (See 01-40-52 FUEL PRESSURE SENSOR INSPECTION [SKYACTIV-G 2.0].) — High pressure fuel pump (See 01-14A-49 HIGH PRESSURE FUEL PUMP INSPECTION [SKYACTIV-G 2.0].) • If there is any malfunction: — Repair or replace the malfunctioning part according to the inspection results. • If there is no malfunction: — Go to Step 15. Higher than **3 MPa {31 kgf/cm2, 435 psi}**: • Go to the next step.

SYMPTOM TROUBLESHOOTING [SKYACTIV-G 2.0]

STEP	INSPECTION	RESULTS	ACTION
13	**DETERMINE IF MALFUNCTION CAUSE IS FUEL PRESSURE SENSOR OR HIGH PRESSURE FUEL PUMP** • Is the vehicle acceleration performance normal?	Yes	Go to the next step.
		No	Go to Step 15.
14	**INSPECT FUEL PRESSURE SENSOR** • Inspect the fuel pressure sensor. (See 01-40-52 FUEL PRESSURE SENSOR INSPECTION [SKYACTIV-G 2.0].) • Is there any malfunction?	Yes	Replace the fuel distributor. (See 01-14A-51 FUEL INJECTOR REMOVAL/INSTALLATION [SKYACTIV-G 2.0].)
		No	Go to Step 16.
15	**INSPECT SPILL VALVE CONTROL SOLENOID VALVE CONTROL CIRCUIT FOR SHORT TO GROUND** • Switch the ignition to off. • Disconnect the high pressure fuel pump and PCM connectors. • Inspect for continuity between high pressure fuel pump terminal A (wiring harness-side) and body ground. • Is there continuity?	Yes	Repair or replace the wiring harness for a possible short to ground. • If the malfunction remains: — Replace the PCM. (damage to driver in PCM) (See 01-40-10 PCM REMOVAL/INSTALLATION [SKYACTIV-G 2.0].)
		No	Replace the high pressure fuel pump. (See 01-14A-44 HIGH PRESSURE FUEL PUMP REMOVAL/INSTALLATION [SKYACTIV-G 2.0].)
16	**INSPECT FUEL PRESSURE (LOW-SIDE)** • Connect the fuel pressure gauge between fuel pump and high pressure fuel pump. • Measure the low side fuel pressure. (See 01-14A-8 FUEL LINE PRESSURE INSPECTION [SKYACTIV-G 2.0].) • Is the low side fuel pressure within specification? **Specification:** • **405—485 kPa {4.13—4.94 kgf/cm^2, 58.8—70.3 psi}**	Yes	Go to the next step.
		No	Inspect the following: • Fuel line restriction • Fuel filter clogged — If there is any malfunction: • Repair or replace the malfunctioning part according to the inspection results. — If there is no malfunction: • Replace the fuel pump unit. (See 01-14A-38 FUEL PUMP UNIT REMOVAL/INSTALLATION [SKYACTIV-G 2.0].)
17	**INSPECT FUEL INJECTOR OPERATION** • Perform the Fuel Injector Operation Inspection. (See 01-03-118 ENGINE CONTROL SYSTEM OPERATION INSPECTION [SKYACTIV-G 2.0].) • Do the fuel injectors operate properly?	Yes	Go to the next step.
		No	Repair or replace the malfunctioning part according to the inspection results.
18	**INSPECT HYDRAULIC VARIABLE VALVE TIMING CONTROL SYSTEM OPERATION** • Perform the Hydraulic Variable Valve Timing Control System Operation Inspection. (See 01-03-118 ENGINE CONTROL SYSTEM OPERATION INSPECTION [SKYACTIV-G 2.0].) • Does the hydraulic variable valve timing control system work properly?	Yes	Go to the next step.
		No	Repair or replace the malfunctioning part according to the inspection results.

SYMPTOM TROUBLESHOOTING [SKYACTIV-G 2.0]

STEP	INSPECTION	RESULTS	ACTION
19	**INSPECT ENGINE COMPRESSION** • Measure the compression pressure for each cylinder. (See 01-10A-14 COMPRESSION INSPECTION [SKYACTIV-G 2.0].) • Are compression pressures within specification? **Specification:** • Compression [European (L.H.D. U.K.) specs.] — Standard: **978 kPa {9.97 kgf/cm^2, 142 psi} (300 rpm)** — Minimum: **783 kPa {7.98 kgf/cm^2, 114 psi} (300 rpm)** — Maximum difference between cylinders: **166 kPa {1.69 kgf/cm^2, 24.1 psi}** • Compression [Except European (L.H.D. U.K.) specs.] — Standard: **885 kPa {9.02 kgf/cm^2, 128 psi} (300 rpm)** — Minimum: **708 kPa {7.22 kgf/cm^2, 103 psi} (300 rpm)** — Maximum difference between cylinders: **150 kPa {1.53 kgf/cm^2, 21.8 psi}** **Note** • Because the SKYACTIV-G 2.0 retards the intake valve closing timing, compression pressure is low.	Yes	Go to the next step.
		No	Inspect the following: • Damaged valve seat • Worn valve stem and valve guide • Worn or stuck piston ring • Worn piston, piston ring or cylinder • Improper intake valve timing • Improper exhaust valve timing Service if necessary.
20	**INSPECT IGNITION SYSTEM OPERATION** • Perform the Spark Test. (See 01-03-118 ENGINE CONTROL SYSTEM OPERATION INSPECTION [SKYACTIV-G 2.0].) • Is a strong blue spark visible at each cylinder?	Yes	Go to the next step.
		No	Repair or replace the malfunctioning part according to the inspection results.
21	**INSPECT EXHAUST SYSTEM FOR RESTRICTION** • Inspect for restriction in the exhaust system and the TWC. • Is there any restriction?	Yes	Repair or replace the malfunctioning part according to the inspection results.
		No	Go to the next step.
22	**INSPECT IF MALFUNCTION CAUSE IS PCV VALVE OR INJECTOR DRIVER (PCM INTEGRATED)** • Inspect the PCV valve. (See 01-16A-15 POSITIVE CRANKCASE VENTILATION (PCV) VALVE INSPECTION [SKYACTIV-G 2.0].) • Is there any malfunction?	Yes	Replace the PCV valve. (See 01-16A-13 POSITIVE CRANKCASE VENTILATION (PCV) VALVE REMOVAL/INSTALLATION [SKYACTIV-G 2.0].)
		No	Injector driver malfunction. • Replace the PCM. (See 01-40-10 PCM REMOVAL/INSTALLATION [SKYACTIV-G 2.0].) If the problem remains, overhaul the engine.
23	Verify the test results. • If normal, return to the diagnostic index to service any additional symptoms. (See 01-03-5 SYMPTOM DIAGNOSTIC INDEX [SKYACTIV-G 2.0].) • If a malfunction remains, inspect the related Service Information and perform the repair or diagnosis. — If the vehicle is repaired, troubleshooting is completed. — If the vehicle is not repaired or additional diagnostic information is not available, replace the PCM. (See 01-40-10 PCM REMOVAL/INSTALLATION [SKYACTIV-G 2.0].)		

SYMPTOM TROUBLESHOOTING [SKYACTIV-G 2.0]

NO.6 CRANKS NORMALLY BUT WILL NOT START [SKYACTIV-G 2.0]

id0103e6801200

6	CRANKS NORMALLY BUT WILL NOT START
DESCRIPTION	• Starter cranks engine at normal speed but engine will not run. • Refer to symptom troubleshooting “NO.5 ENGINE STALLS-AFTER START/AT IDLE” if this symptom appears after engine stalls. • Fuel is in tank. • Battery is in normal condition.
POSSIBLE CAUSE	• Because engine is started with accelerator pedal fully depressed, it goes into dechoke mode and fuel is not injected • Engine overheating • PCM DTC is stored • Erratic signal to PCM — APP sensor or related circuit malfunction — ECT sensor or related circuit malfunction — MAF sensor or related circuit malfunction — A/F sensor or related circuit malfunction — HO2S or related circuit malfunction — Improper air/fuel mixture ratio control • Power is not supplied from main relay • Power is not supplied from fuel injector relay and/or fuel pump relay • Improper operation of drive-by-wire control system • Purge solenoid valve malfunction • No signal from MAF sensor • Poor fuel quality • Air leakage from intake-air system • Intake-air system restriction • Electrical connector disconnected • No battery power supply to PCM or poor ground • Fuse malfunction • Fuel leakage • Vacuum leakage • No signal from CMP sensor — Loose installation — Damaged trigger wheel (exhaust camshaft) — Open or short circuit in related wiring harness • No signal from CKP sensor — Loose installation — Damaged trigger wheel (crankshaft pulley) — Open or short circuit in related wiring harness • Inadequate fuel pressure (high or low pressure side) — Open or short circuit in the fuel pump (low-side) body or related wiring harness — Fuel pressure sensor or related circuit malfunction — High pressure fuel pump malfunction — Spill valve control solenoid valve control circuit malfunction (damage to driver in PCM caused by short circuit to ground system) — Spill valve control solenoid valve malfunction (built-into high pressure fuel pump) — Fuel line restriction — Fuel filter clogged — Fuel pump (low-side) body mechanical malfunction • Incorrect fuel injection timing • Fuel injector malfunction • Improper operation of electric variable valve timing control system (PCM DTC is stored.) • Improper operation of hydraulic variable valve timing control system • Low engine compression • Improper intake valve timing • Improper exhaust valve timing • Ignition system malfunction • Ignition coil malfunction • Vapor occurs around fuel pump (fuel problem) • Because vapor occurs in high pressure fuel pump, fuel injector cannot adjust fuel injection to correct amount • Exhaust system and/or TWC restricted or clogged • PCV valve malfunction • Injector driver (built-into PCM) malfunction

SYMPTOM TROUBLESHOOTING [SKYACTIV-G 2.0]

6	CRANKS NORMALLY BUT WILL NOT START
POSSIBLE CAUSE	**Warning** **The following troubleshooting flow chart contains the fuel system diagnosis and repair procedures. Read the following warnings before performing the fuel system services:** • **Fuel vapor is hazardous. It can easily ignite, causing serious injury and damage. Always keep sparks and flames away from fuel.** • **Fuel line spills and leakage are dangerous. Fuel can ignite and cause serious injury or death and damage. Fuel can also irritate skin and eyes. To prevent this, always complete "BEFORE SERVICE PRECAUTION" and "AFTER SERVICE PRECAUTION" described in this manual. (See 01-14A-6 BEFORE SERVICE PRECAUTION [SKYACTIV-G 2.0].) (See 01-14A-7 AFTER SERVICE PRECAUTION [SKYACTIV-G 2.0].)** **Caution** • **Disconnecting/connecting the quick release connector without cleaning it may possibly cause damage to the fuel pipe and quick release connector. Always clean the quick release connector joint area before disconnecting/connecting, and make sure that it is free of foreign material.**

Diagnostic Procedure

STEP	INSPECTION	RESULTS	ACTION
1	**INSPECT EFFECT OF VEHICLE CONDITION FOR MALFUNCTION** • Verify how the customer drives the vehicle by asking the customer the following: — Because engine is started with accelerator pedal fully depressed, it goes into dechoke mode and fuel is not injected • Is the engine started with accelerator pedal fully depressed?	Yes	Explain to the customer that the vehicle is normal and give them advice on how to start the engine and a specific example of the conditions in which the engine goes into dechoke mode.
		No	Go to the next step.
2	**VERIFY IF MALFUNCTION CAUSE IS OVERHEATING** • Access the ECT PID using the M-MDS. (See 01-02-8 ON-BOARD DIAGNOSTIC TEST [SKYACTIV-G 2.0].) • Is the ECT PID value **less than 116 °C {241 °F}** during driving?	Yes	Go to the next step.
		No	The cause of this concern could be from the cooling system overheating. • Perform the symptom troubleshooting "NO.17 COOLING SYSTEM CONCERNS-OVERHEATING". (See 01-03-88 NO.17 COOLING SYSTEM CONCERNS-OVERHEATING [SKYACTIV-G 2.0].)
3	**VERIFY PCM DTC** • Retrieve any DTCs using the M-MDS. (See 01-02-8 ON-BOARD DIAGNOSTIC TEST [SKYACTIV-G 2.0].) • Are any DTCs present?	Yes	Go to the applicable DTC inspection. (See 01-02-14 DTC TABLE [SKYACTIV-G 2.0].)
		No	Go to the next step.

SYMPTOM TROUBLESHOOTING [SKYACTIV-G 2.0]

STEP	INSPECTION	RESULTS	ACTION
4	**VERIFY CURRENT INPUT SIGNAL STATUS** **Caution** • **While performing this step, always operate the vehicle in a safe and lawful manner.** • **When the M-MDS is used to observe monitor system status while driving, be sure to have another technician with you, or record the data in the M-MDS using the PID/DATA MONITOR AND RECORD capturing function and inspect later.** • Access the following PIDs using the M-MDS: (See 01-02-8 ON-BOARD DIAGNOSTIC TEST [SKYACTIV-G 2.0].) — APP1 — APP2 — ECT — MAF — O2S11 — O2S12 — SHRTFT1 — LONGFT1 • Do the PIDs indicate the correct values under the trouble condition? (See 01-40-17 PCM INSPECTION [SKYACTIV-G 2.0].)	Yes	Go to the next step.
		No	APP1, APP2 PIDs are not as specified: • Inspect the APP sensor. (See 01-40-51 ACCELERATOR PEDAL POSITION (APP) SENSOR INSPECTION [SKYACTIV-G 2.0].) ECT PID is not as specified: • Inspect the ECT sensor. (See 01-40-43 ENGINE COOLANT TEMPERATURE (ECT) SENSOR INSPECTION [SKYACTIV-G 2.0].) MAF PID is not as specified: • Inspect the MAF sensor. (See 01-40-45 MASS AIR FLOW (MAF) SENSOR INSPECTION [SKYACTIV-G 2.0].) O2S11, SHRTFT1, LONGFT1 PIDs are not as specified: • Inspect the A/F sensor. (See 01-40-55 AIR FUEL RATIO (A/F) SENSOR INSPECTION [SKYACTIV-G 2.0].) O2S12 PID is not as specified: • Inspect the HO2S. (See 01-40-58 HEATED OXYGEN SENSOR (HO2S) INSPECTION [SKYACTIV-G 2.0].) Repair or replace the malfunctioning part according to the inspection results. • If the malfunction remains: — Perform the “INTERMITTENT CONCERN TROUBLESHOOTING” procedure. (See 01-03-116 INTERMITTENT CONCERN TROUBLESHOOTING [SKYACTIV-G 2.0].)
5	**DETERMINE IF MALFUNCTION CAUSE IS DRIVE-BY-WIRE CONTROL SYSTEM OR OTHER** • Will the engine run smoothly at part throttle?	Yes	Go to the next step.
		No	Go to Step 7.
6	**INSPECT DRIVE-BY-WIRE CONTROL SYSTEM OPERATION** • Perform the TP sweep inspection. (See 01-03-118 ENGINE CONTROL SYSTEM OPERATION INSPECTION [SKYACTIV-G 2.0].) • Does the drive-by-wire control system work properly?	Yes	Visually inspect the throttle body (damage/scratching). • If there is any malfunction: — Repair or replace the malfunctioning part according to the inspection results. • If there is no malfunction: — Go to the next step.
		No	Repair or replace the malfunctioning part according to the inspection results.
7	**INSPECT PURGE CONTROL SYSTEM OPERATION** • Perform the Purge Control System Inspection. (See 01-03-118 ENGINE CONTROL SYSTEM OPERATION INSPECTION [SKYACTIV-G 2.0].) • Does the purge solenoid valve work properly?	Yes	Go to the next step.
		No	Repair or replace the malfunctioning part according to the inspection results.
8	**VERIFY IF MALFUNCTION CAUSE IS MAF SENSOR SIGNAL** **Note** • If the inspection in Step 8 is performed, the PCM detects a DTC and performs fail-safe control. After performing the inspection, clear DTCs using the M-MDS. • Switch the ignition to off. • Disconnect the MAF sensor/IAT sensor No.1 connector. • Start the engine. • Does the engine start normally?	Yes	Clean the MAF sensor. Verify that the symptom is solved. • If the symptom remains, inspect the MAF sensor related wiring harness and connector. — If there is any malfunction: • Repair or replace the malfunctioning part according to the inspection results. — If there is no malfunction: • Replace the MAF sensor/IAT sensor No.1. (See 01-13A-6 INTAKE-AIR SYSTEM REMOVAL/INSTALLATION [SKYACTIV-G 2.0].)
		No	Go to the next step.

SYMPTOM TROUBLESHOOTING [SKYACTIV-G 2.0]

STEP	INSPECTION	RESULTS	ACTION
9	**INSPECT FUEL INJECTOR RELAY** • Switch the ignition to off. • Remove the fuel injector relay. • Inspect the fuel injector relay. (See 09-21-29 RELAY INSPECTION.) • Is there any malfunction?	Yes	Replace the fuel injector relay.
		No	Reinstall the fuel injector relay, then go to the next step.
10	**INSPECT FUEL PUMP RELAY** • Remove the fuel pump relay. • Inspect the fuel pump relay. (See 09-21-29 RELAY INSPECTION.) • Is there any malfunction?	Yes	Replace the fuel pump relay.
		No	Inspect for short or open circuit between the following terminals: • IG1 relay terminal C—PCM terminal 2AQ • Battery positive terminal—PCM terminal 1CO • Battery positive terminal—PCM terminal 1CS • Battery positive terminal—PCM terminal 1CW • Battery positive terminal—PCM terminal 1DA • Battery positive terminal—PCM terminal 1DG • Battery positive terminal—PCM terminal 1DK • PCM terminal 2S—Body ground — If there is any malfunction: • Repair or replace the malfunctioning part according to the inspection results. — If there is no malfunction: • Reinstall the fuel pump relay, then go to the next step.
11	**INSPECT RELATED PART CONDITION** • Inspect the following: — Fuel quality (proper octane, contamination, winter/summer blend) — Intake-air system leakage or restriction — Electrical connectors — Poor connection for PCM ground and body ground — Fuses — Fuel leakage — Vacuum leakage — CKP sensor and exhaust CMP sensor • Installation condition (See 01-40-59 CRANKSHAFT POSITION (CKP) SENSOR REMOVAL/INSTALLATION [SKYACTIV-G 2.0].) (See 01-40-61 CAMSHAFT POSITION (CMP) SENSOR REMOVAL/INSTALLATION [SKYACTIV-G 2.0].) • Damaged trigger wheel exhaust camshaft • Is there any malfunction?	Yes	Service if necessary. • Repeat this step.
		No	Go to the next step.

SYMPTOM TROUBLESHOOTING [SKYACTIV-G 2.0]

STEP	INSPECTION	RESULTS	ACTION
12	**INSPECT FUEL PRESSURE (HIGH-SIDE)** • Access the FUEL_PRES PID using the M-MDS while cranking the engine. (See 01-02-8 ON-BOARD DIAGNOSTIC TEST [SKYACTIV-G 2.0].) • Is the FUEL_PRES PID value within specification? **Specification:** • **4—6 MPa {41—61 kgf/cm^2, 581—870 psi}**	Yes	Go to Step 14.
		No	Lower than specification: • Inspect the following: — Fuel leakage at the fuel line and fuel injector — Fuel pump • Perform the Fuel Pump (Low-pressure Side) Operation Inspection. (See 01-03-118 ENGINE CONTROL SYSTEM OPERATION INSPECTION [SKYACTIV-G 2.0].) — Fuel pressure sensor (See 01-40-52 FUEL PRESSURE SENSOR INSPECTION [SKYACTIV-G 2.0].) — High pressure fuel pump (See 01-14A-49 HIGH PRESSURE FUEL PUMP INSPECTION [SKYACTIV-G 2.0].) • If there is any malfunction: — Repair or replace the malfunctioning part according to the inspection results. • If there is no malfunction: — Go to the next step. Higher than specification: • Go to the next step.
13	**INSPECT SPILL VALVE CONTROL SOLENOID VALVE CONTROL CIRCUIT FOR SHORT TO GROUND** • Switch the ignition to off. • Disconnect the high pressure fuel pump and PCM connectors. • Inspect for continuity between high pressure fuel pump terminal A (wiring harness-side) and body ground. • Is there continuity?	Yes	Repair or replace the wiring harness for a possible short to ground. • If the malfunction remains: — Replace the PCM. (damage to driver in PCM) (See 01-40-10 PCM REMOVAL/INSTALLATION [SKYACTIV-G 2.0].)
		No	Replace the high pressure fuel pump. (See 01-14A-44 HIGH PRESSURE FUEL PUMP REMOVAL/INSTALLATION [SKYACTIV-G 2.0].)
14	**INSPECT FUEL PRESSURE (LOW-SIDE)** • Connect the fuel pressure gauge between fuel pump and high pressure fuel pump. • Measure the low side fuel pressure. (See 01-14A-8 FUEL LINE PRESSURE INSPECTION [SKYACTIV-G 2.0].) • Is the low side fuel pressure within specification? **Specification:** • **405—485 kPa {4.13—4.94 kgf/cm^2, 58.8—70.3 psi}**	Yes	Go to the next step.
		No	Inspect the following: • Fuel line restriction • Fuel filter clogged — If there is any malfunction: • Repair or replace the malfunctioning part according to the inspection results. — If there is no malfunction: • Replace the fuel pump unit. (See 01-14A-38 FUEL PUMP UNIT REMOVAL/INSTALLATION [SKYACTIV-G 2.0].)
15	**INSPECT FUEL INJECTOR OPERATION** • Perform the Fuel Injector Operation Inspection. (See 01-03-118 ENGINE CONTROL SYSTEM OPERATION INSPECTION [SKYACTIV-G 2.0].) • Do the fuel injectors operate properly?	Yes	Go to the next step.
		No	Repair or replace the malfunctioning part according to the inspection results.
16	**INSPECT HYDRAULIC VARIABLE VALVE TIMING CONTROL SYSTEM OPERATION** • Perform the Hydraulic Variable Valve Timing Control System Operation Inspection. (See 01-03-118 ENGINE CONTROL SYSTEM OPERATION INSPECTION [SKYACTIV-G 2.0].) • Does the hydraulic variable valve timing control system work properly?	Yes	Go to the next step.
		No	Repair or replace the malfunctioning part according to the inspection results.
17	**INSPECT FUEL TANK** • Inspect the fuel tank. (See 01-14A-26 FUEL TANK INSPECTION [SKYACTIV-G 2.0].) • Is vapor occurring?	Yes	Replace the fuel tank. (See 01-14A-13 FUEL TANK REMOVAL/INSTALLATION [SKYACTIV-G 2.0].)
		No	Go to the next step.

SYMPTOM TROUBLESHOOTING [SKYACTIV-G 2.0]

STEP	INSPECTION	RESULTS	ACTION
18	**INSPECT HIGH PRESSURE FUEL PUMP** • Inspect the high pressure fuel pump. (See 01-14A-49 HIGH PRESSURE FUEL PUMP INSPECTION [SKYACTIV-G 2.0].) • Is there any malfunction?	Yes	Replace the high pressure fuel pump. (See 01-14A-44 HIGH PRESSURE FUEL PUMP REMOVAL/INSTALLATION [SKYACTIV-G 2.0].)
		No	Go to the next step.
19	**INSPECT ENGINE COMPRESSION** • Measure the compression pressure for each cylinder. (See 01-10A-14 COMPRESSION INSPECTION [SKYACTIV-G 2.0].) • Are compression pressures within specification? **Specification:** • Compression [European (L.H.D. U.K.) specs.] — Standard: **978 kPa {9.97 kgf/cm^2, 142 psi} (300 rpm)** — Minimum: **783 kPa {7.98 kgf/cm^2, 114 psi} (300 rpm)** — Maximum difference between cylinders: **166 kPa {1.69 kgf/cm^2, 24.1 psi}** • Compression [Except European (L.H.D. U.K.) specs.] — Standard: **885 kPa {9.02 kgf/cm^2, 128 psi} (300 rpm)** — Minimum: **708 kPa {7.22 kgf/cm^2, 103 psi} (300 rpm)** — Maximum difference between cylinders: **150 kPa {1.53 kgf/cm^2, 21.8 psi}** **Note** • Because the SKYACTIV-G 2.0 retards the intake valve closing timing, compression pressure is low.	Yes	Go to the next step.
		No	Inspect the following: • Damaged valve seat • Worn valve stem and valve guide • Worn or stuck piston ring • Worn piston, piston ring or cylinder • Improper intake valve timing • Improper exhaust valve timing Service if necessary.
20	**INSPECT IGNITION SYSTEM OPERATION** **Note** • Because the malfunction may have been resolved by removing the carbon adhered to the spark plug during the spark inspection for the spark plug, verify that the repairs have been completed. • Perform the Spark Test. (See 01-03-118 ENGINE CONTROL SYSTEM OPERATION INSPECTION [SKYACTIV-G 2.0].) • Is a strong blue spark visible at each cylinder?	Yes	Go to the next step.
		No	Repair or replace the malfunctioning part according to the inspection results.
21	**INSPECT EXHAUST SYSTEM FOR RESTRICTION** • Inspect for restriction in the exhaust system and the TWC. • Is there any restriction?	Yes	Repair or replace the malfunctioning part according to the inspection results.
		No	Go to the next step.
22	**INSPECT IF MALFUNCTION CAUSE IS PCV VALVE OR INJECTOR DRIVER (PCM INTEGRATED)** • Inspect the PCV valve. (See 01-16A-15 POSITIVE CRANKCASE VENTILATION (PCV) VALVE INSPECTION [SKYACTIV-G 2.0].) • Is there any malfunction?	Yes	Replace the PCV valve. (See 01-16A-13 POSITIVE CRANKCASE VENTILATION (PCV) VALVE REMOVAL/INSTALLATION [SKYACTIV-G 2.0].)
		No	Injector driver malfunction. • Replace the PCM. (See 01-40-10 PCM REMOVAL/INSTALLATION [SKYACTIV-G 2.0].) If the problem remains, overhaul the engine.

SYMPTOM TROUBLESHOOTING [SKYACTIV-G 2.0]

STEP	INSPECTION	RESULTS	ACTION
23	Verify the test results. • If normal, return to the diagnostic index to service any additional symptoms. (See 01-03-5 SYMPTOM DIAGNOSTIC INDEX [SKYACTIV-G 2.0].) • If a malfunction remains, inspect the related Service Information and perform the repair or diagnosis. — If the vehicle is repaired, troubleshooting is completed. — If the vehicle is not repaired or additional diagnostic information is not available, replace the PCM. (See 01-40-10 PCM REMOVAL/INSTALLATION [SKYACTIV-G 2.0].)		

01

NO.7 ENGINE OIL PRESSURE WARNING LIGHT ILLUMINATES [SKYACTIV-G 2.0]

id0103e6893100

7	ENGINE OIL PRESSURE WARNING LIGHT ILLUMINATES
DESCRIPTION	• Engine oil pressure warning light illuminates incorrectly.
POSSIBLE CAUSE	• Improper engine oil level • Engine oil leakage • Oil pressure switch connector or terminals malfunction • Short to ground in wiring harness between oil pressure switch terminal A and PCM terminal 1P • Open circuit in wiring harness between oil pressure switch terminal A and PCM terminal 1P • PCM connector or terminals malfunction • Oil pressure switch malfunction • Oil pump malfunction • Instrument cluster malfunction • PCM malfunction

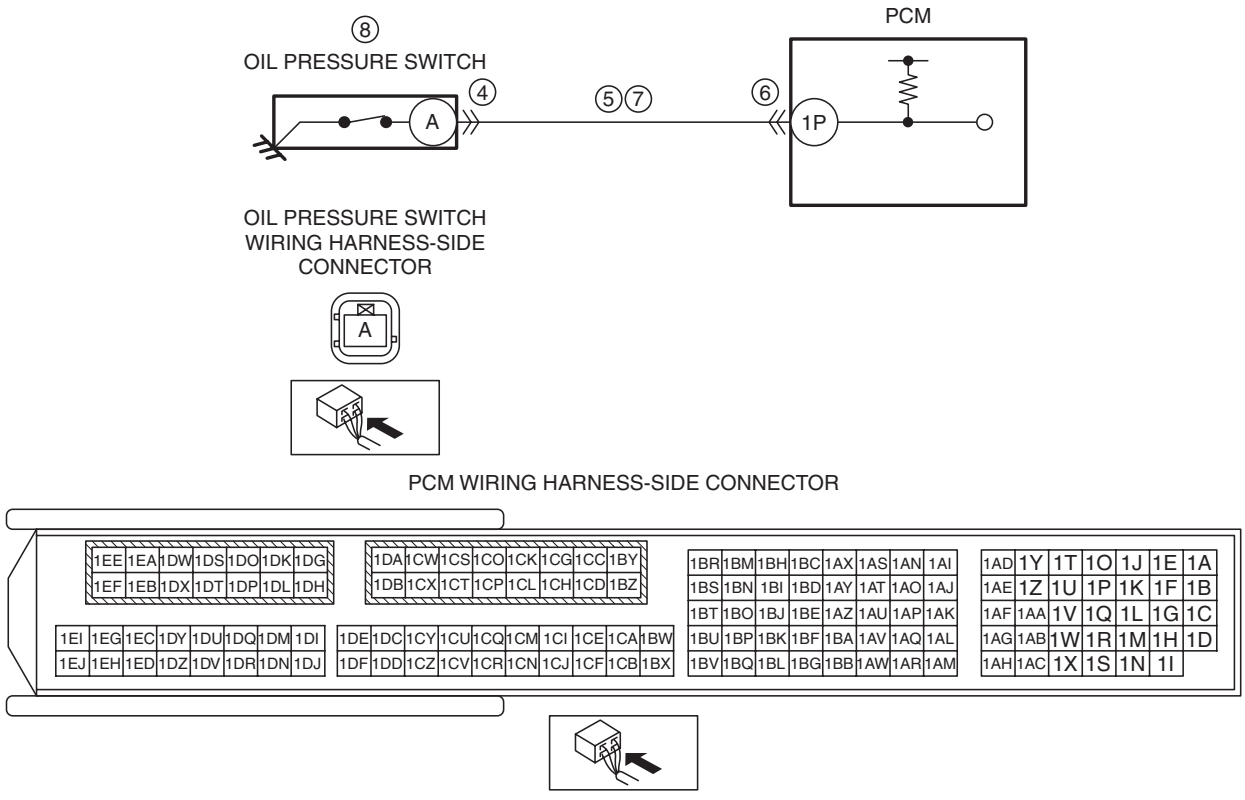

SYMPTOM TROUBLESHOOTING [SKYACTIV-G 2.0]

Diagnostic Procedure

STEP	INSPECTION	RESULTS	ACTION
1	**INSPECT ENGINE OIL LEVEL** • Inspect the engine oil level. (See 01-11A-3 ENGINE OIL LEVEL INSPECTION [SKYACTIV-G 2.0].) • Is there any malfunction?	Yes	Engine oil level is below L: • Add genuine motor oil, then go to the next step. Engine oil level is above F: • Replace the engine oil, then go to the next step. (penetration of fuel into engine oil can be considered) (See 01-11A-3 ENGINE OIL REPLACEMENT [SKYACTIV-G 2.0].)
		No	Go to Step 3.
2	**VERIFY IF ENGINE OIL PRESSURE WARNING LIGHT ILLUMINATES** • Start the engine. • Increase and keep the engine speed at **2,500 rpm** for **5 s**. • Does the engine oil pressure warning light illuminate?	Yes	Go to the next step.
		No	Symptom troubleshooting is completed.
3	**VERIFY DTC** • Retrieve the PCM and instrument cluster DTCs using the M-MDS. (See 01-02-8 ON-BOARD DIAGNOSTIC TEST [SKYACTIV-G 2.0].) (See 09-02G-7 DTC INSPECTION [INSTRUMENT CLUSTER].) • Are any DTCs present?	Yes	Go to the applicable DTC inspection. (See 01-02-14 DTC TABLE [SKYACTIV-G 2.0].) (See 09-02G-10 DTC TABLE [INSTRUMENT CLUSTER].)
		No	Go to the next step.
4	**INSPECT OIL PRESSURE SWITCH CONNECTOR CONDITION** • Switch the ignition to off. • Disconnect the oil pressure switch connector. • Inspect for poor connection (such as damaged/pulled-out pins, corrosion). • Is there any malfunction?	Yes	Repair or replace the connector and/or terminals.
		No	Go to the next step.
5	**INSPECT OIL PRESSURE SWITCH CONTROL CIRCUIT FOR SHORT TO GROUND** • Verify that the oil pressure switch connector is disconnected. • Inspect for continuity between oil pressure switch terminal A (wiring harness-side) and body ground. • Is there continuity?	Yes	If the short to ground circuit could be detected in the wiring harness: • Repair or replace the wiring harness for a possible short to ground. If the short to ground circuit could not be detected in the wiring harness: • Replace the PCM (short to ground in the PCM internal circuit). (See 01-40-10 PCM REMOVAL/INSTALLATION [SKYACTIV-G 2.0].)
		No	Go to the next step.
6	**INSPECT PCM CONNECTOR CONDITION** • Disconnect the PCM connector. • Inspect for poor connection (such as damaged/pulled-out pins, corrosion). • Is there any malfunction?	Yes	Repair or replace the connector and/or terminals.
		No	Go to the next step.
7	**INSPECT OIL PRESSURE SWITCH SIGNAL CIRCUIT FOR OPEN CIRCUIT** • Verify that the oil pressure switch and PCM connectors are disconnected. • Inspect for continuity between oil pressure switch terminal A (wiring harness-side) and PCM terminal 1P (wiring harness-side). • Is there continuity?	Yes	Go to the next step.
		No	Repair or replace the wiring harness for a possible open circuit.
8	**INSPECT ENGINE OIL PRESSURE** • Inspect the engine oil pressure. (See 01-11A-7 OIL PRESSURE INSPECTION [SKYACTIV-G 2.0].) • Is there any malfunction?	Yes	Replace the oil pump, then go to the next step. (See 01-11A-15 OIL PUMP REMOVAL/INSTALLATION [SKYACTIV-G 2.0].)
		No	Replace the oil pressure switch, then go to the next step. (See 01-11A-10 ENGINE OIL SOLENOID VALVE REMOVAL/INSTALLATION [SKYACTIV-G 2.0].)

SYMPTOM TROUBLESHOOTING [SKYACTIV-G 2.0]

STEP	INSPECTION	RESULTS	ACTION
9	Verify the test results. • If normal, return to the diagnostic index to service any additional symptoms. (See 01-03-5 SYMPTOM DIAGNOSTIC INDEX [SKYACTIV-G 2.0].) • If a malfunction remains, inspect the related Service Information and perform the repair or diagnosis. — If the vehicle is repaired, troubleshooting is completed. — If the vehicle is not repaired or additional diagnostic information is not available, replace the PCM. (See 01-40-10 PCM REMOVAL/INSTALLATION [SKYACTIV-G 2.0].)		

NO.8 ENGINE RUNS ROUGH/ROLLING IDLE [SKYACTIV-G 2.0]

id0103e6801400

8	ENGINE RUNS ROUGH/ROLLING IDLE
DESCRIPTION	• Engine speed fluctuates between specified idle speed and lower speed and, engine shakes excessively. • Idle speed is too slow and engine shakes excessively.
POSSIBLE CAUSE	• Engine overheating • PCM DTC is stored • Erratic signal to PCM — APP sensor or related circuit malfunction — ECT sensor or related circuit malfunction — MAF sensor or related circuit malfunction — MAP sensor or related circuit malfunction — A/F sensor or related circuit malfunction — HO2S or related circuit malfunction — Improper air/fuel mixture ratio control operation • Improper load signal input — Improper A/C request signal • Improper operation of A/C system • Improper operation of drive-by-wire control system • Incorrect fuel injection timing • Unbalanced fuel injection amount for each cylinder • Purge solenoid valve malfunction • Poor fuel quality • Air leakage from intake-air system • Intake-air system restriction • Electrical connector disconnected • Fuel leakage • Vacuum leakage • Improper engine oil viscosity • Erratic or no signal from CMP sensor — Loose installation — Damaged trigger wheel (intake camshaft and/or exhaust camshaft) — Open or short circuit in related wiring harness • Erratic signal from CKP sensor — Loose installation — Damaged trigger wheel (crankshaft pulley) — Open or short circuit in related wiring harness • Inadequate fuel pressure (high or low pressure side) — Fuel pressure sensor or related circuit malfunction — High pressure fuel pump malfunction — Spill valve control solenoid valve control circuit malfunction (damage to driver in PCM caused by short circuit to ground system) — Spill valve control solenoid valve (built-into high pressure fuel pump) malfunction — Relief valve (built-into high pressure fuel pump) malfunction — Fuel pump (low-side) body mechanical malfunction — Fuel filter clogged — Fuel injector malfunction • Improper operation of electric variable valve timing control system (PCM DTC is stored.) • Improper operation of hydraulic variable valve timing control system • Low engine compression or excessive unbalance for each cylinder • Improper intake valve timing • Improper exhaust valve timing • Spark plug malfunction • Incorrect signal to ignition coil • Exhaust system or TWC restricted or clogged • PCV valve malfunction • Injector driver (built-into PCM) malfunction

SYMPTOM TROUBLESHOOTING [SKYACTIV-G 2.0]

8	ENGINE RUNS ROUGH/ROLLING IDLE
POSSIBLE CAUSE	**Warning** **The following troubleshooting flow chart contains the fuel system diagnosis and repair procedures. Read the following warnings before performing the fuel system services:** • **Fuel vapor is hazardous. It can easily ignite, causing serious injury and damage. Always keep sparks and flames away from fuel.** • **Fuel line spills and leakage are dangerous. Fuel can ignite and cause serious injury or death and damage. Fuel can also irritate skin and eyes. To prevent this, always complete "BEFORE SERVICE PRECAUTION" and "AFTER SERVICE PRECAUTION" described in this manual. (See 01-14A-6 BEFORE SERVICE PRECAUTION [SKYACTIV-G 2.0].) (See 01-14A-7 AFTER SERVICE PRECAUTION [SKYACTIV-G 2.0].)** **Caution** • **Disconnecting/connecting the quick release connector without cleaning it may possibly cause damage to the fuel pipe and quick release connector. Always clean the quick release connector joint area before disconnecting/connecting, and make sure that it is free of foreign material.**

Diagnostic Procedure

STEP	INSPECTION	RESULTS	ACTION
1	**VERIFY IF MALFUNCTION INCLUDES HARD ENGINE STARTING** • Verify the vehicle engine condition. • Can idling be maintained?	Yes	Go to the next step.
		No	Perform the symptom troubleshooting "NO.5 ENGINE STALLS-AFTER START/AT IDLE". (See 01-03-31 NO.5 ENGINE STALLS-AFTER START/AT IDLE [SKYACTIV-G 2.0].)
2	**VERIFY IF MALFUNCTION CAUSE IS OVERHEATING** **Caution** • **While performing this step, always operate the vehicle in a safe and lawful manner.** • **When the M-MDS is used to observe monitor system status while driving, be sure to have another technician with you, or record the data in the M-MDS using the PID/DATA MONITOR AND RECORD capturing function and inspect later.** • Access the ECT PID using the M-MDS. (See 01-02-8 ON-BOARD DIAGNOSTIC TEST [SKYACTIV-G 2.0].) • Is the ECT PID value **less than 116 °C {241 °F}** during driving?	Yes	Go to the next step.
		No	The cause of this concern could be from the cooling system overheating. • Perform the symptom troubleshooting "NO.17 COOLING SYSTEM CONCERNS-OVERHEATING". (See 01-03-88 NO.17 COOLING SYSTEM CONCERNS-OVERHEATING [SKYACTIV-G 2.0].)
3	**VERIFY PCM DTC** • Retrieve any DTCs using the M-MDS. (See 01-02-8 ON-BOARD DIAGNOSTIC TEST [SKYACTIV-G 2.0].) • Are any DTCs present?	Yes	Go to the applicable DTC inspection. (See 01-02-14 DTC TABLE [SKYACTIV-G 2.0].)
		No	Go to the next step.

SYMPTOM TROUBLESHOOTING [SKYACTIV-G 2.0]

STEP	INSPECTION	RESULTS	ACTION
4	**VERIFY CURRENT INPUT SIGNAL STATUS** **Caution** • **While performing this step, always operate the vehicle in a safe and lawful manner.** • **When the M-MDS is used to observe monitor system status while driving, be sure to have another technician with you, or record the data in the M-MDS using the PID/DATA MONITOR AND RECORD capturing function and inspect later.** • Access the following PIDs using the M-MDS: (See 01-02-8 ON-BOARD DIAGNOSTIC TEST [SKYACTIV-G 2.0].) — APP1 — APP2 — ECT — MAF — MAP — O2S11 — O2S12 — SHRTFT1 — LONGFT1 • Do the PIDs indicate the correct values under the trouble condition? (See 01-40-17 PCM INSPECTION [SKYACTIV-G 2.0].)	Yes	Go to the next step.
		No	APP1, APP2 PIDs are not as specified: • Inspect the APP sensor. (See 01-40-51 ACCELERATOR PEDAL POSITION (APP) SENSOR INSPECTION [SKYACTIV-G 2.0].) ECT PID is not as specified: • Inspect the ECT sensor. (See 01-40-43 ENGINE COOLANT TEMPERATURE (ECT) SENSOR INSPECTION [SKYACTIV-G 2.0].) MAF PID is not as specified: • Inspect the MAF sensor. (See 01-40-45 MASS AIR FLOW (MAF) SENSOR INSPECTION [SKYACTIV-G 2.0].) MAP PID is not as specified: • Inspect the MAP sensor. (See 01-40-49 MANIFOLD ABSOLUTE PRESSURE (MAP) SENSOR INSPECTION [SKYACTIV-G 2.0].) O2S11, SHRTFT1, LONGFT1 PIDs are not as specified: • Inspect the A/F sensor. (See 01-40-55 AIR FUEL RATIO (A/F) SENSOR INSPECTION [SKYACTIV-G 2.0].) O2S12 PID is not as specified: • Inspect the HO2S. (See 01-40-58 HEATED OXYGEN SENSOR (HO2S) INSPECTION [SKYACTIV-G 2.0].) Repair or replace the malfunctioning part according to the inspection results. • If the malfunction remains: — Perform the “INTERMITTENT CONCERN TROUBLESHOOTING” procedure. (See 01-03-116 INTERMITTENT CONCERN TROUBLESHOOTING [SKYACTIV-G 2.0].)
5	**DETERMINE IF MALFUNCTION CAUSE IS A/C REQUEST SIGNAL OR OTHER** • Access the AC_REQ PID using the M-MDS. (See 01-02-8 ON-BOARD DIAGNOSTIC TEST [SKYACTIV-G 2.0].) • Monitor the AC_REQ PID while turning on and off the air conditioner with switch on the control panel. • Does the AC_REQ PID value change from on to off according to switch control panel?	Yes	Go to the next step.
		No	If the AC_REQ PID is always ON: • Perform the symptom troubleshooting “NO.24 A/C IS ALWAYS ON OR A/C COMPRESSOR RUNS CONTINUOUSLY”. (See 01-03-106 NO.24 A/C IS ALWAYS ON OR A/C COMPRESSOR RUNS CONTINUOUSLY [SKYACTIV-G 2.0].) If the AC_REQ PID is always OFF: • Perform the symptom troubleshooting “NO.23 A/C DOES NOT WORK SUFFICIENTLY”. (See 01-03-101 NO.23 A/C DOES NOT WORK SUFFICIENTLY [SKYACTIV-G 2.0].)
6	**INSPECT A/C CUT-OFF CONTROL SYSTEM OPERATION** • Perform the A/C Cut-off Control System Inspection. (See 01-03-118 ENGINE CONTROL SYSTEM OPERATION INSPECTION [SKYACTIV-G 2.0].) • Does the A/C cut-off operation work properly?	Yes	Go to the next step.
		No	Repair or replace the malfunctioning part according to the inspection results.
7	**INSPECT DRIVE-BY-WIRE CONTROL SYSTEM OPERATION** • Perform the TP sweep inspection. (See 01-03-118 ENGINE CONTROL SYSTEM OPERATION INSPECTION [SKYACTIV-G 2.0].) • Does the drive-by-wire control system work properly?	Yes	Visually inspect the throttle body (damage/scratching). • If there is any malfunction: — Repair or replace the malfunctioning part according to the inspection results. • If there is no malfunction: — Go to the next step.
		No	Repair or replace the malfunctioning part according to the inspection results.

SYMPTOM TROUBLESHOOTING [SKYACTIV-G 2.0]

STEP	INSPECTION	RESULTS	ACTION
8	**INSPECT FUEL INJECTOR OPERATION** • Perform the Fuel Injector Operation Inspection. (See 01-03-118 ENGINE CONTROL SYSTEM OPERATION INSPECTION [SKYACTIV-G 2.0].) • Do the fuel injectors operate properly?	Yes	Go to the next step.
		No	Repair or replace the malfunctioning part according to the inspection results.
9	**INSPECT PURGE CONTROL SYSTEM OPERATION** • Perform the Purge Control System Inspection. (See 01-03-118 ENGINE CONTROL SYSTEM OPERATION INSPECTION [SKYACTIV-G 2.0].) • Does the purge solenoid valve work properly?	Yes	Go to the next step.
		No	Repair or replace the malfunctioning part according to the inspection results.
10	**INSPECT RELATED PART CONDITION** • Inspect the following: — Fuel quality (proper octane, contamination, winter/summer blend) — Intake-air system restriction or leakage — Electrical connectors connection — Fuel leakage in fuel system — Vacuum leakage — Engine oil viscosity — CKP sensor, intake CMP sensor and exhaust CMP sensor • Installation condition (See 01-40-59 CRANKSHAFT POSITION (CKP) SENSOR REMOVAL/INSTALLATION [SKYACTIV-G 2.0].) (See 01-40-61 CAMSHAFT POSITION (CMP) SENSOR REMOVAL/INSTALLATION [SKYACTIV-G 2.0].) • Damaged trigger wheel, intake camshaft and exhaust camshaft • Is there any malfunction?	Yes	Service if necessary. • Repeat this step.
		No	Go to the next step.
11	**INSPECT FUEL PRESSURE (HIGH-SIDE)** • Start the engine and warm it up completely. • Access the FUEL_PRES PID using the M-MDS at idle. (See 01-02-8 ON-BOARD DIAGNOSTIC TEST [SKYACTIV-G 2.0].) • Is the FUEL_PRES PID value **approx. 3 MPa {31 kgf/cm^2, 435 psi}**?	Yes	Go to Step 15.
		No	Lower than **3 MPa {31 kgf/cm2, 435 psi}**: • Inspect the following: — Fuel leakage at the fuel line and fuel injector — Fuel pump • Perform the Fuel Pump (Low-pressure Side) Operation Inspection. (See 01-03-118 ENGINE CONTROL SYSTEM OPERATION INSPECTION [SKYACTIV-G 2.0].) — Fuel pressure sensor (See 01-40-52 FUEL PRESSURE SENSOR INSPECTION [SKYACTIV-G 2.0].) — High pressure fuel pump (See 01-14A-49 HIGH PRESSURE FUEL PUMP INSPECTION [SKYACTIV-G 2.0].) • If there is any malfunction: — Repair or replace the malfunctioning part according to the inspection results. • If there is no malfunction: — Go to Step 14. Higher than **3 MPa {31 kgf/cm2, 435 psi}**: • Go to the next step.
12	**DETERMINE IF MALFUNCTION CAUSE IS FUEL PRESSURE SENSOR OR HIGH PRESSURE FUEL PUMP** • Is the vehicle acceleration performance normal?	Yes	Go to the next step.
		No	Go to Step 14.

SYMPTOM TROUBLESHOOTING [SKYACTIV-G 2.0]

STEP	INSPECTION	RESULTS	ACTION
13	**INSPECT FUEL PRESSURE SENSOR** • Inspect the fuel pressure sensor. (See 01-40-52 FUEL PRESSURE SENSOR INSPECTION [SKYACTIV-G 2.0].) • Is there any malfunction?	Yes	Replace the fuel distributor. (See 01-14A-51 FUEL INJECTOR REMOVAL/INSTALLATION [SKYACTIV-G 2.0].)
		No	Go to Step 15.
14	**INSPECT SPILL VALVE CONTROL SOLENOID VALVE CONTROL CIRCUIT FOR SHORT TO GROUND** • Switch the ignition to off. • Disconnect the high pressure fuel pump and PCM connectors. • Inspect for continuity between high pressure fuel pump terminal A (wiring harness-side) and body ground. • Is there continuity?	Yes	Repair or replace the wiring harness for a possible short to ground. • If the malfunction remains: — Replace the PCM. (damage to driver in PCM) (See 01-40-10 PCM REMOVAL/INSTALLATION [SKYACTIV-G 2.0].)
		No	Replace the high pressure fuel pump. (See 01-14A-44 HIGH PRESSURE FUEL PUMP REMOVAL/INSTALLATION [SKYACTIV-G 2.0].)
15	**INSPECT FUEL PRESSURE (LOW-SIDE)** • Connect the fuel pressure gauge between fuel pump and high pressure fuel pump. • Measure the low side fuel pressure. (See 01-14A-8 FUEL LINE PRESSURE INSPECTION [SKYACTIV-G 2.0].) • Is the low side fuel pressure within specification? **Specification:** • **405—485 kPa {4.13—4.94 kgf/cm^2, 58.8—70.3 psi}**	Yes	Go to the next step.
		No	Inspect the following: • Fuel line restriction • Fuel filter clogged — If there is any malfunction: • Repair or replace the malfunctioning part according to the inspection results. — If there is no malfunction: • Replace the fuel pump unit. (See 01-14A-38 FUEL PUMP UNIT REMOVAL/INSTALLATION [SKYACTIV-G 2.0].)
16	**INSPECT HYDRAULIC VARIABLE VALVE TIMING CONTROL SYSTEM OPERATION** • Perform the Hydraulic Variable Valve Timing Control System Operation Inspection. (See 01-03-118 ENGINE CONTROL SYSTEM OPERATION INSPECTION [SKYACTIV-G 2.0].) • Does the hydraulic variable valve timing control system work properly?	Yes	Go to the next step.
		No	Repair or replace the malfunctioning part according to the inspection results.
17	**INSPECT ENGINE COMPRESSION** • Measure the compression pressure for each cylinder. (See 01-10A-14 COMPRESSION INSPECTION [SKYACTIV-G 2.0].) • Are compression pressures within specification? **Specification:** • Compression [European (L.H.D. U.K.) specs.] — Standard: **978 kPa {9.97 kgf/cm^2, 142 psi} (300 rpm)** — Minimum: **783 kPa {7.98 kgf/cm^2, 114 psi} (300 rpm)** — Maximum difference between cylinders: **166 kPa {1.69 kgf/cm^2, 24.1 psi}** • Compression [Except European (L.H.D. U.K.) specs.] — Standard: **885 kPa {9.02 kgf/cm^2, 128 psi} (300 rpm)** — Minimum: **708 kPa {7.22 kgf/cm^2, 103 psi} (300 rpm)** — Maximum difference between cylinders: **150 kPa {1.53 kgf/cm^2, 21.8 psi}** **Note** • Because the SKYACTIV-G 2.0 retards the intake valve closing timing, compression pressure is low.	Yes	Go to the next step.
		No	Inspect the following: • Damaged valve seat • Worn valve stem and valve guide • Worn or stuck piston ring • Worn piston, piston ring or cylinder • Improper intake valve timing • Improper exhaust valve timing Service if necessary.

SYMPTOM TROUBLESHOOTING [SKYACTIV-G 2.0]

STEP	INSPECTION	RESULTS	ACTION
18	**INSPECT IGNITION SYSTEM OPERATION** • Perform the Spark Test. (See 01-03-118 ENGINE CONTROL SYSTEM OPERATION INSPECTION [SKYACTIV-G 2.0].) • Is a strong blue spark visible at each cylinder?	Yes	Go to the next step.
		No	Repair or replace the malfunctioning part according to the inspection results.
19	**INSPECT EXHAUST SYSTEM FOR RESTRICTION** • Inspect for restriction in the exhaust system and the TWC. • Is there any restriction?	Yes	Repair or replace the malfunctioning part according to the inspection results.
		No	Go to the next step.
20	**INSPECT IF MALFUNCTION CAUSE IS PCV VALVE OR INJECTOR DRIVER (PCM INTEGRATED)** • Inspect the PCV valve. (See 01-16A-15 POSITIVE CRANKCASE VENTILATION (PCV) VALVE INSPECTION [SKYACTIV-G 2.0].) • Is there any malfunction?	Yes	Replace the PCV valve. (See 01-16A-13 POSITIVE CRANKCASE VENTILATION (PCV) VALVE REMOVAL/INSTALLATION [SKYACTIV-G 2.0].)
		No	Injector driver malfunction. • Replace the PCM. (See 01-40-10 PCM REMOVAL/INSTALLATION [SKYACTIV-G 2.0].) If the problem remains, overhaul the engine.
21	Verify the test results. • If normal, return to the diagnostic index to service any additional symptoms. (See 01-03-5 SYMPTOM DIAGNOSTIC INDEX [SKYACTIV-G 2.0].) • If a malfunction remains, inspect the related Service Information and perform the repair or diagnosis. — If the vehicle is repaired, troubleshooting is completed. — If the vehicle is not repaired or additional diagnostic information is not available, replace the PCM. (See 01-40-10 PCM REMOVAL/INSTALLATION [SKYACTIV-G 2.0].)		

SYMPTOM TROUBLESHOOTING [SKYACTIV-G 2.0]

NO.9 FAST IDLE/RUNS ON [SKYACTIV-G 2.0]

id0103e6801500

9	FAST IDLE/RUNS ON
DESCRIPTION	• Engine speed continues at fast idle after warm-up. • Engine runs after ignition switch is turned off.
POSSIBLE CAUSE	• Cooling system malfunction • PCM DTC is stored • Accelerator pedal stuck depressed • Erratic signal to PCM — APP sensor or related circuit malfunction — CPP switch or related circuit malfunction (MTX) — Neutral switch No.1 or related circuit malfunction (MTX) — Communication error between TCM and PCM (ATX) — A/F sensor or related circuit malfunction — HO2S or related circuit malfunction — Improper air/fuel mixture ratio control operation • Improper load signal input — Improper A/C request signal • Improper operation of drive-by-wire control system • Throttle body malfunction • Fuel injector malfunction • Spill valve control solenoid valve (built-into high pressure fuel pump) malfunction • Improper operation of cruise control system • Air leakage from intake-air system • Injector driver (built-into PCM) malfunction **Warning** **The following troubleshooting flow chart contains the fuel system diagnosis and repair procedures. Read the following warnings before performing the fuel system services:** • **Fuel vapor is hazardous. It can easily ignite, causing serious injury and damage. Always keep sparks and flames away from fuel.** • **Fuel line spills and leakage are dangerous. Fuel can ignite and cause serious injury or death and damage. Fuel can also irritate skin and eyes. To prevent this, always complete "BEFORE SERVICE PRECAUTION" and "AFTER SERVICE PRECAUTION" described in this manual. (See 01-14A-6 BEFORE SERVICE PRECAUTION [SKYACTIV-G 2.0].) (See 01-14A-7 AFTER SERVICE PRECAUTION [SKYACTIV-G 2.0].)** **Caution** • **Disconnecting/connecting the quick release connector without cleaning it may possibly cause damage to the fuel pipe and quick release connector. Always clean the quick release connector joint area before disconnecting/connecting, and make sure that it is free of foreign material.**

Diagnostic Procedure

STEP	INSPECTION	RESULTS	ACTION
1	**INSPECT COOLING SYSTEM FOR MALFUNCTION** • Access the ECT PID using the M-MDS. (See 01-02-8 ON-BOARD DIAGNOSTIC TEST [SKYACTIV-G 2.0].) • Start the engine and warm it up completely. • Is the ECT PID value between **82—112 °C {180—234 °F}**?	Yes	Go to the next step.
		No	ECT PID value is **higher than 112 °C {234 °F}**: • Perform the symptom troubleshooting "NO.17 COOLING SYSTEM CONCERNS-OVERHEATING". (See 01-03-88 NO.17 COOLING SYSTEM CONCERNS-OVERHEATING [SKYACTIV-G 2.0].) ECT PID value is **less than 82 °C {180 °F}**: • Perform the symptom troubleshooting "NO.18 COOLING SYSTEM CONCERNS-RUNS COLD". (See 01-03-90 NO.18 COOLING SYSTEM CONCERNS-RUNS COLD [SKYACTIV-G 2.0].)
2	**VERIFY PCM DTC** • Retrieve any DTCs using the M-MDS. (See 01-02-8 ON-BOARD DIAGNOSTIC TEST [SKYACTIV-G 2.0].) • Are any DTCs present?	Yes	Go to the applicable DTC inspection. (See 01-02-14 DTC TABLE [SKYACTIV-G 2.0].)
		No	Go to the next step.

SYMPTOM TROUBLESHOOTING [SKYACTIV-G 2.0]

STEP	INSPECTION	RESULTS	ACTION
3	**VERIFY CURRENT INPUT SIGNAL STATUS** **Caution** • **While performing this step, always operate the vehicle in a safe and lawful manner.** • **When the M-MDS is used to observe monitor system status while driving, be sure to have another technician with you, or record the data in the M-MDS using the PID/DATA MONITOR AND RECORD capturing function and inspect later.** • Access the following PIDs using the M-MDS: (See 01-02-8 ON-BOARD DIAGNOSTIC TEST [SKYACTIV-G 2.0].) — APP1 — APP2 — CPP (MTX) — CPP/PNP (MTX) — O2S11 — O2S12 — SHRTFT1 — LONGFT1 • Do the PIDs indicate the correct values under the trouble condition? (See 01-40-17 PCM INSPECTION [SKYACTIV-G 2.0].)	Yes	Go to the next step.
		No	APP1, APP2 PIDs are not as specified: • Inspect the APP sensor. (See 01-40-51 ACCELERATOR PEDAL POSITION (APP) SENSOR INSPECTION [SKYACTIV-G 2.0].) CPP PID is not as specified: (MTX) • Inspect the CPP switch. (See 01-40-40 CLUTCH PEDAL POSITION (CPP) SWITCH INSPECTION [SKYACTIV-G 2.0].) CPP/PNP PID is not as specified: (MTX) • Inspect the neutral switch No.1. (See 01-40-40 NEUTRAL SWITCH INSPECTION [SKYACTIV-G 2.0].) O2S11, SHRTFT1, LONGFT1 PIDs are not as specified: • Inspect the A/F sensor. (See 01-40-55 AIR FUEL RATIO (A/F) SENSOR INSPECTION [SKYACTIV-G 2.0].) O2S12 PID is not as specified: • Inspect the HO2S. (See 01-40-58 HEATED OXYGEN SENSOR (HO2S) INSPECTION [SKYACTIV-G 2.0].) Repair or replace the malfunctioning part according to the inspection results. • If the malfunction remains: — Inspect communication error between TCM and PCM. (ATX) • Repair or replace the malfunctioning part according to the inspection results if necessary. — Perform the “INTERMITTENT CONCERN TROUBLESHOOTING” procedure. (See 01-03-116 INTERMITTENT CONCERN TROUBLESHOOTING [SKYACTIV-G 2.0].)
4	**DETERMINE IF MALFUNCTION CAUSE IS A/C REQUEST SIGNAL OR OTHER** • Access the AC_REQ PID using the M-MDS. (See 01-02-8 ON-BOARD DIAGNOSTIC TEST [SKYACTIV-G 2.0].) • Monitor the AC_REQ PID while turning on and off the air conditioner with switch on the control panel. • Does the AC_REQ PID value change from on to off according to switch control panel?	Yes	Go to the next step.
		No	If the AC_REQ PID is always ON: • Perform the symptom troubleshooting “NO.24 A/C IS ALWAYS ON OR A/C COMPRESSOR RUNS CONTINUOUSLY”. (See 01-03-106 NO.24 A/C IS ALWAYS ON OR A/C COMPRESSOR RUNS CONTINUOUSLY [SKYACTIV-G 2.0].) If the AC_REQ PID is always OFF: • Perform the symptom troubleshooting “NO.23 A/C DOES NOT WORK SUFFICIENTLY”. (See 01-03-101 NO.23 A/C DOES NOT WORK SUFFICIENTLY [SKYACTIV-G 2.0].)
5	**INSPECT DRIVE-BY-WIRE CONTROL SYSTEM OPERATION** • Perform the TP sweep inspection. (See 01-03-118 ENGINE CONTROL SYSTEM OPERATION INSPECTION [SKYACTIV-G 2.0].) • Does the drive-by-wire control system work properly?	Yes	Visually inspect the throttle body (damage/scratching). • If there is any malfunction: — Repair or replace the malfunctioning part according to the inspection results. • If there is no malfunction: — Go to the next step.
		No	Repair or replace the malfunctioning part according to the inspection results.
6	**INSPECT FUEL INJECTOR OPERATION** • Perform the Fuel Injector Operation Inspection. (See 01-03-118 ENGINE CONTROL SYSTEM OPERATION INSPECTION [SKYACTIV-G 2.0].) • Do the fuel injectors operate properly?	Yes	Go to the next step.
		No	Repair or replace the malfunctioning part according to the inspection results.
7	**INSPECT HIGH PRESSURE FUEL PUMP** • Inspect the high pressure fuel pump. (See 01-14A-49 HIGH PRESSURE FUEL PUMP INSPECTION [SKYACTIV-G 2.0].) • Is there any malfunction?	Yes	Replace the high pressure fuel pump. (See 01-14A-44 HIGH PRESSURE FUEL PUMP REMOVAL/INSTALLATION [SKYACTIV-G 2.0].)
		No	Go to the next step.

SYMPTOM TROUBLESHOOTING [SKYACTIV-G 2.0]

STEP	INSPECTION	RESULTS	ACTION
8	**INSPECT CRUISE CONTROL SYSTEM** • Inspect the operation of cruise control system. • Does the cruise control system work properly?	Yes	Go to the next step.
		No	Repair or replace the malfunctioning part according to the inspection results.
9	**INSPECT INTAKE-AIR SYSTEM FOR AIR LEAKAGE** • Inspect for leakage in intake-air system. • Is there any leakage?	Yes	Repair or replace the malfunctioning part according to the inspection results.
		No	Injector driver malfunction. • Replace the PCM. (See 01-40-10 PCM REMOVAL/INSTALLATION [SKYACTIV-G 2.0].) If the problem remains, overhaul the engine.
10	Verify the test results. • If normal, return to the diagnostic index to service any additional symptoms. (See 01-03-5 SYMPTOM DIAGNOSTIC INDEX [SKYACTIV-G 2.0].) • If a malfunction remains, inspect the related Service Information and perform the repair or diagnosis. — If the vehicle is repaired, troubleshooting is completed. — If the vehicle is not repaired or additional diagnostic information is not available, replace the PCM. (See 01-40-10 PCM REMOVAL/INSTALLATION [SKYACTIV-G 2.0].)		

SYMPTOM TROUBLESHOOTING [SKYACTIV-G 2.0]

NO.10 LOW IDLE/STALLS DURING DECELERATION [SKYACTIV-G 2.0]

id0103e6801600

10	LOW IDLE/STALLS DURING DECELERATION
DESCRIPTION	• Engine stops unexpectedly at beginning of deceleration or recovery from deceleration.
POSSIBLE CAUSE	• PCM DTC is stored • Erratic signal to PCM — APP sensor or related circuit malfunction — Brake switch or related circuit malfunction — CPP switch or related circuit malfunction (MTX) — Neutral switch No.1 or related circuit malfunction (MTX) — Communication error between TCM and PCM (ATX) — ECT sensor or related circuit malfunction — MAF sensor or related circuit malfunction — MAP sensor or related circuit malfunction — A/F sensor or related circuit malfunction — HO2S or related circuit malfunction — TP sensor or related circuit malfunction — Generator malfunction (part, system, control malfunction) • Amount of generator voltage is large — Improper air/fuel mixture ratio control • Improper operation of A/C magnetic clutch • Improper operation of drive-by-wire control system • Incorrect fuel injection timing • Fuel injector malfunction • Purge solenoid valve malfunction • Poor fuel quality • Air leakage from intake-air system • Intake-air system restriction • Fuel leakage • Vacuum leakage • Engine mount installation loose • Erratic signal from intake CMP sensor — Loose installation — Damaged trigger wheel (intake camshaft and/or exhaust camshaft) — Open or short circuit in related wiring harness • Erratic signal from CKP sensor — Loose installation — Damaged trigger wheel (crankshaft pulley) — Open or short circuit in related wiring harness • Inadequate fuel pressure (high or low pressure side) — Fuel pressure sensor or related circuit malfunction — High pressure fuel pump malfunction — Spill valve control solenoid valve control circuit malfunction (damage to driver in PCM caused by short circuit to ground system) — Spill valve control solenoid valve (built-into high pressure fuel pump) malfunction — Relief valve (built-into high pressure fuel pump) malfunction — Fuel line restriction — Fuel filter clogged — Fuel pump unit malfunction • Low engine compression • Improper intake valve timing • Improper exhaust valve timing • Injector driver (built-into PCM) malfunction **Warning** **The following troubleshooting flow chart contains the fuel system diagnosis and repair procedures. Read the following warnings before performing the fuel system services:** • **Fuel vapor is hazardous. It can easily ignite, causing serious injury and damage. Always keep sparks and flames away from fuel.** • **Fuel line spills and leakage are dangerous. Fuel can ignite and cause serious injury or death and damage. Fuel can also irritate skin and eyes. To prevent this, always complete "BEFORE SERVICE PRECAUTION" and "AFTER SERVICE PRECAUTION" described in this manual. (See 01-14A-6 BEFORE SERVICE PRECAUTION [SKYACTIV-G 2.0].) (See 01-14A-7 AFTER SERVICE PRECAUTION [SKYACTIV-G 2.0].)** **Caution** • **Disconnecting/connecting the quick release connector without cleaning it may possibly cause damage to the fuel pipe and quick release connector. Always clean the quick release connector joint area before disconnecting/connecting, and make sure that it is free of foreign material.**

SYMPTOM TROUBLESHOOTING [SKYACTIV-G 2.0]

Diagnostic Procedure

STEP	INSPECTION	RESULTS	ACTION
1	**VERIFY IF MALFUNCTION INCLUDES HARD ENGINE STARTING** • Is the engine unable to start after it has stalled?	Yes	If the engine is unable to start, perform the symptom troubleshooting “NO.3 WILL NOT CRANK” and “NO.6 CRANKS NORMALLY BUT WILL NOT START”. (See 01-03-19 NO.3 WILL NOT CRANK [SKYACTIV-G 2.0].) (See 01-03-37 NO.6 CRANKS NORMALLY BUT WILL NOT START [SKYACTIV-G 2.0].)
		No	Go to the next step.
2	**VERIFY IF MALFUNCTION INCLUDES ROUGH IDLING** • Does the engine idle rough?	Yes	Perform the symptom troubleshooting “NO.8 ENGINE RUNS ROUGH/ROLLING IDLE”. (See 01-03-45 NO.8 ENGINE RUNS ROUGH/ ROLLING IDLE [SKYACTIV-G 2.0].)
		No	Go to the next step.
3	**VERIFY PCM DTC** • Retrieve any DTCs using the M-MDS. (See 01-02-8 ON-BOARD DIAGNOSTIC TEST [SKYACTIV-G 2.0].) • Are any DTCs present?	Yes	Go to the applicable DTC inspection. (See 01-02-14 DTC TABLE [SKYACTIV-G 2.0].)
		No	Go to the next step.

SYMPTOM TROUBLESHOOTING [SKYACTIV-G 2.0]

STEP	INSPECTION	RESULTS	ACTION
4	**VERIFY CURRENT INPUT SIGNAL STATUS** **Caution** • **While performing this step, always operate the vehicle in a safe and lawful manner.** • **When the M-MDS is used to observe monitor system status while driving, be sure to have another technician with you, or record the data in the M-MDS using the PID/DATA MONITOR AND RECORD capturing function and inspect later.** • Access the following PIDs using the M-MDS: (See 01-02-8 ON-BOARD DIAGNOSTIC TEST [SKYACTIV-G 2.0].) — APP1 — APP2 — BOO — CPP (MTX) — CPP/PNP (MTX) — ECT — MAF — MAP — TP REL — O2S11 — O2S12 — SHRTFT1 — LONGFT1 — ALTT V • Do the PIDs indicate the correct values under the trouble condition? (See 01-40-17 PCM INSPECTION [SKYACTIV-G 2.0].)	Yes	Go to the next step.
		No	APP1, APP2 PIDs are not as specified: • Inspect the APP sensor. (See 01-40-51 ACCELERATOR PEDAL POSITION (APP) SENSOR INSPECTION [SKYACTIV-G 2.0].) BOO PID is not as specified: • Inspect the brake switch. (See 04-11-11 BRAKE SWITCH INSPECTION.) CPP PID is not as specified: (MTX) • Inspect the CPP switch. (See 01-40-40 CLUTCH PEDAL POSITION (CPP) SWITCH INSPECTION [SKYACTIV-G 2.0].) CPP/PNP PID is not as specified: (MTX) • Inspect the neutral switch No.1. (See 01-40-40 NEUTRAL SWITCH INSPECTION [SKYACTIV-G 2.0].) ECT PID is not as specified: • Inspect the ECT sensor. (See 01-40-43 ENGINE COOLANT TEMPERATURE (ECT) SENSOR INSPECTION [SKYACTIV-G 2.0].) MAF PID is not as specified: • Inspect the MAF sensor. (See 01-40-45 MASS AIR FLOW (MAF) SENSOR INSPECTION [SKYACTIV-G 2.0].) MAP PID is not as specified: • Inspect the MAP sensor. (See 01-40-49 MANIFOLD ABSOLUTE PRESSURE (MAP) SENSOR INSPECTION [SKYACTIV-G 2.0].) TP REL PID is not as specified: • Inspect the TP sensor. (See 01-40-50 THROTTLE POSITION (TP) SENSOR INSPECTION [SKYACTIV-G 2.0].) O2S11, SHRTFT1, LONGFT1 PIDs are not as specified: • Inspect the A/F sensor. (See 01-40-55 AIR FUEL RATIO (A/F) SENSOR INSPECTION [SKYACTIV-G 2.0].) O2S12 PID is not as specified: • Inspect the HO2S. (See 01-40-58 HEATED OXYGEN SENSOR (HO2S) INSPECTION [SKYACTIV-G 2.0].) ALTT V PID is not as specified: • Inspect the generator. (See 01-17A-19 GENERATOR INSPECTION [SKYACTIV-G 2.0].) Repair or replace the malfunctioning part according to the inspection results. • If the malfunction remains: — Inspect communication error between TCM and PCM. (ATX) • Repair or replace the malfunctioning part according to the inspection results if necessary. — Perform the “INTERMITTENT CONCERN TROUBLESHOOTING” procedure. (See 01-03-116 INTERMITTENT CONCERN TROUBLESHOOTING [SKYACTIV-G 2.0].)

SYMPTOM TROUBLESHOOTING [SKYACTIV-G 2.0]

STEP	INSPECTION	RESULTS	ACTION
5	**DETERMINE IF MALFUNCTION CAUSE IS A/C REQUEST SIGNAL OR OTHER** • Access the AC_REQ PID using the M-MDS. (See 01-02-8 ON-BOARD DIAGNOSTIC TEST [SKYACTIV-G 2.0].) • Monitor the AC_REQ PID while turning on and off the air conditioner with switch on the control panel. • Does the AC_REQ PID value change from on to off according to switch control panel?	Yes	Go to the next step.
		No	If the AC_REQ PID is always ON: • Perform the symptom troubleshooting “NO.24 A/C IS ALWAYS ON OR A/C COMPRESSOR RUNS CONTINUOUSLY”. (See 01-03-106 NO.24 A/C IS ALWAYS ON OR A/C COMPRESSOR RUNS CONTINUOUSLY [SKYACTIV-G 2.0].) If the AC_REQ PID is always OFF: • Perform the symptom troubleshooting “NO.23 A/C DOES NOT WORK SUFFICIENTLY”. (See 01-03-101 NO.23 A/C DOES NOT WORK SUFFICIENTLY [SKYACTIV-G 2.0].)
6	**INSPECT A/C CUT-OFF CONTROL SYSTEM OPERATION** • Perform the A/C Cut-off Control System Inspection. (See 01-03-118 ENGINE CONTROL SYSTEM OPERATION INSPECTION [SKYACTIV-G 2.0].) • Does the A/C cut-off operation work properly?	Yes	Go to the next step.
		No	Repair or replace the malfunctioning part according to the inspection results.
7	**INSPECT DRIVE-BY-WIRE CONTROL SYSTEM OPERATION** • Perform the TP sweep inspection. (See 01-03-118 ENGINE CONTROL SYSTEM OPERATION INSPECTION [SKYACTIV-G 2.0].) • Does the drive-by-wire control system work properly?	Yes	Visually inspect the throttle body (damage/scratching). • If there is any malfunction: — Repair or replace the malfunctioning part according to the inspection results. • If there is no malfunction: — Go to the next step.
		No	Repair or replace the malfunctioning part according to the inspection results.
8	**INSPECT FUEL INJECTOR OPERATION** • Perform the Fuel Injector Operation Inspection. (See 01-03-118 ENGINE CONTROL SYSTEM OPERATION INSPECTION [SKYACTIV-G 2.0].) • Do the fuel injectors operate properly?	Yes	Go to the next step.
		No	Repair or replace the malfunctioning part according to the inspection results.
9	**INSPECT PURGE CONTROL SYSTEM OPERATION** • Perform the Purge Control System Inspection. (See 01-03-118 ENGINE CONTROL SYSTEM OPERATION INSPECTION [SKYACTIV-G 2.0].) • Does the purge solenoid valve work properly?	Yes	Go to the next step.
		No	Repair or replace the malfunctioning part according to the inspection results.

SYMPTOM TROUBLESHOOTING [SKYACTIV-G 2.0]

STEP	INSPECTION	RESULTS	ACTION
10	**INSPECT RELATED PART CONDITION** • Inspect the following: — Fuel quality (proper octane, contamination, winter/summer blend) — Intake-air system restriction or leakage — Fuel leakage in fuel system — Vacuum leakage — Engine mount loose — CKP sensor, intake CMP sensor and exhaust CMP sensor • Installation condition (See 01-40-59 CRANKSHAFT POSITION (CKP) SENSOR REMOVAL/INSTALLATION [SKYACTIV-G 2.0].) (See 01-40-61 CAMSHAFT POSITION (CMP) SENSOR REMOVAL/INSTALLATION [SKYACTIV-G 2.0].) • Damaged trigger wheel, intake camshaft and exhaust camshaft • Is there any malfunction?	Yes	Service if necessary. • Repeat this step.
		No	Go to the next step.
11	**INSPECT FUEL PRESSURE (HIGH-SIDE)** • Start the engine and warm it up completely. • Access the FUEL_PRES PID using the M-MDS at idle. (See 01-02-8 ON-BOARD DIAGNOSTIC TEST [SKYACTIV-G 2.0].) • Is the FUEL_PRES PID value **approx. 3 MPa {31 kgf/cm^2, 435 psi}**?	Yes	Go to Step 15.
		No	Lower than **3 MPa {31 kgf/cm2, 435 psi}**: • Inspect the following: — Fuel leakage at the fuel line and fuel injector — Fuel pump • Perform the Fuel Pump (Low-pressure Side) Operation Inspection. (See 01-03-118 ENGINE CONTROL SYSTEM OPERATION INSPECTION [SKYACTIV-G 2.0].) — Fuel pressure sensor (See 01-40-52 FUEL PRESSURE SENSOR INSPECTION [SKYACTIV-G 2.0].) — High pressure fuel pump (See 01-14A-49 HIGH PRESSURE FUEL PUMP INSPECTION [SKYACTIV-G 2.0].) • If there is any malfunction: — Repair or replace the malfunctioning part according to the inspection results. • If there is no malfunction: — Go to Step 14. Higher than **3 MPa {31 kgf/cm2, 435 psi}**: • Go to the next step.
12	**DETERMINE IF MALFUNCTION CAUSE IS FUEL PRESSURE SENSOR OR HIGH PRESSURE FUEL PUMP** • Is the vehicle acceleration performance normal?	Yes	Go to the next step.
		No	Go to Step 14.
13	**INSPECT FUEL PRESSURE SENSOR** • Inspect the fuel pressure sensor. (See 01-40-52 FUEL PRESSURE SENSOR INSPECTION [SKYACTIV-G 2.0].) • Is there any malfunction?	Yes	Replace the fuel distributor. (See 01-14A-51 FUEL INJECTOR REMOVAL/INSTALLATION [SKYACTIV-G 2.0].)
		No	Go to Step 15.
14	**INSPECT SPILL VALVE CONTROL SOLENOID VALVE CONTROL CIRCUIT FOR SHORT TO GROUND** • Switch the ignition to off. • Disconnect the high pressure fuel pump and PCM connectors. • Inspect for continuity between high pressure fuel pump terminal A (wiring harness-side) and body ground. • Is there continuity?	Yes	Repair or replace the wiring harness for a possible short to ground. • If the malfunction remains: — Replace the PCM. (damage to driver in PCM) (See 01-40-10 PCM REMOVAL/INSTALLATION [SKYACTIV-G 2.0].)
		No	Replace the high pressure fuel pump. (See 01-14A-44 HIGH PRESSURE FUEL PUMP REMOVAL/INSTALLATION [SKYACTIV-G 2.0].)

SYMPTOM TROUBLESHOOTING [SKYACTIV-G 2.0]

STEP	INSPECTION	RESULTS	ACTION
15	**INSPECT FUEL PRESSURE (LOW-SIDE)** • Connect the fuel pressure gauge between fuel pump and high pressure fuel pump. • Measure the low side fuel pressure. (See 01-14A-8 FUEL LINE PRESSURE INSPECTION [SKYACTIV-G 2.0].) • Is the low side fuel pressure within specification? **Specification:** • **405—485 kPa {4.13—4.94 kgf/cm^2, 58.8—70.3 psi}**	Yes	ATX: • Inspect the TCC operation. — If there is any malfunction: • Repair or replace the malfunctioning part according to the inspection results. — If there is no malfunction: • Go to the next step. MTX: • Go to the next step.
		No	Inspect the following: • Fuel line restriction • Fuel filter clogged — If there is any malfunction: • Repair or replace the malfunctioning part according to the inspection results. — If there is no malfunction: • Replace the fuel pump unit. (See 01-14A-38 FUEL PUMP UNIT REMOVAL/INSTALLATION [SKYACTIV-G 2.0].)
16	**INSPECT IF MALFUNCTION CAUSE IS ENGINE COMPRESSION OR INJECTOR DRIVER (PCM INTEGRATED)** • Measure the compression pressure for each cylinder. (See 01-10A-14 COMPRESSION INSPECTION [SKYACTIV-G 2.0].) • Are compression pressures within specification? **Specification:** • Compression [European (L.H.D. U.K.) specs.] — Standard: **978 kPa {9.97 kgf/cm^2, 142 psi} (300 rpm)** — Minimum: **783 kPa {7.98 kgf/cm^2, 114 psi} (300 rpm)** — Maximum difference between cylinders: **166 kPa {1.69 kgf/cm^2, 24.1 psi}** • Compression [Except European (L.H.D. U.K.) specs.] — Standard: **885 kPa {9.02 kgf/cm^2, 128 psi} (300 rpm)** — Minimum: **708 kPa {7.22 kgf/cm^2, 103 psi} (300 rpm)** — Maximum difference between cylinders: **150 kPa {1.53 kgf/cm^2, 21.8 psi}** **Note** • Because the SKYACTIV-G 2.0 retards the intake valve closing timing, compression pressure is low.	Yes	Injector driver malfunction. • Replace the PCM. (See 01-40-10 PCM REMOVAL/INSTALLATION [SKYACTIV-G 2.0].) If the problem remains, overhaul the engine.
		No	Inspect the following: • Damaged valve seat • Worn valve stem and valve guide • Worn or stuck piston ring • Worn piston, piston ring or cylinder • Improper intake valve timing • Improper exhaust valve timing Service if necessary.
17	Verify the test results. • If normal, return to the diagnostic index to service any additional symptoms. (See 01-03-5 SYMPTOM DIAGNOSTIC INDEX [SKYACTIV-G 2.0].) • If a malfunction remains, inspect the related Service Information and perform the repair or diagnosis. — If the vehicle is repaired, troubleshooting is completed. — If the vehicle is not repaired or additional diagnostic information is not available, replace the PCM. (See 01-40-10 PCM REMOVAL/INSTALLATION [SKYACTIV-G 2.0].)		

SYMPTOM TROUBLESHOOTING [SKYACTIV-G 2.0]

NO.11 ENGINE STALLS/QUITS, ENGINE RUNS ROUGH, MISSES, BUCK/JERK, HESITATION/STUMBLE, SURGES [SKYACTIV-G 2.0]

id0103e6801700

11	**ENGINE STALLS/QUITS-ACCELERATION/CRUISE** **ENGINE RUNS ROUGH-ACCELERATION/CRUISE** **MISSES-ACCELERATION/CRUISE** **BUCK/JERK-ACCELERATION/CRUISE/DECELERATION** **HESITATION/STUMBLE-ACCELERATION** **SURGES-ACCELERATION/CRUISE**
DESCRIPTION	• Engine stops unexpectedly at beginning of acceleration or during acceleration. • Engine stops unexpectedly while cruising. • Engine speed fluctuates during acceleration or cruising. • Engine misses during acceleration or cruising. • Vehicle bucks/jerks during acceleration, cruising, or deceleration. • Momentary pause at beginning of acceleration or during acceleration. • Momentary minor irregularity in engine output.
POSSIBLE CAUSE	• Engine overheating • Drive-by-wire control system operates with brake override system • PCM DTC is stored • Erratic signal to PCM — APP sensor or related circuit malfunction — CPP switch or related circuit malfunction (MTX) — Neutral switch No.1 or related circuit malfunction (MTX) — Communication error between TCM and PCM (ATX) — ECT sensor or related circuit malfunction — Fuel pressure sensor or related circuit malfunction — IAT sensor No.1 (integrated in MAF sensor/IAT sensor No.1) or related circuit malfunction — MAF sensor or related circuit malfunction — MAP sensor or related circuit malfunction — A/F sensor or related circuit malfunction — HO2S or related circuit malfunction — Improper air/fuel mixture ratio control operation — Intermittent open or short circuit MAF sensor, APP sensor, TP sensor • Improper operation of A/C system • Improper operation of drive-by-wire control system • Throttle body malfunction • Incorrect fuel injection timing • Fuel injector malfunction • Purge solenoid valve malfunction • Improper A/F sensor signal — A/F sensor malfunction — Open or short circuit in related wiring harness — Loose installation — Exhaust system leakage • Main relay intermittent malfunction • Poor fuel quality • Air leakage from intake-air system • Intake-air system restriction • Air cleaner restriction • Clutch slippage (MTX) • Fuel leakage • Vacuum leakage • Engine mount installation loose • Erratic or no signal from CMP sensor — Loose installation — Damaged trigger wheel (intake camshaft and/or exhaust camshaft) — Open or short circuit in related wiring harness • Erratic signal from CKP sensor — Loose installation — Damaged trigger wheel (crankshaft pulley) — Open or short circuit in related wiring harness • Inadequate fuel pressure (high or low pressure side) — Fuel pressure sensor malfunction — High pressure fuel pump malfunction — Spill valve control solenoid valve control circuit malfunction (damage to driver in PCM caused by short circuit to ground system) — Spill valve control solenoid valve (built-into high pressure fuel pump) malfunction — Relief valve (built-into high pressure fuel pump) malfunction — Fuel line restricted or clogged — Fuel pump mechanical malfunction

SYMPTOM TROUBLESHOOTING [SKYACTIV-G 2.0]

11	**ENGINE STALLS/QUITS-ACCELERATION/CRUISE** **ENGINE RUNS ROUGH-ACCELERATION/CRUISE** **MISSES-ACCELERATION/CRUISE** **BUCK/JERK-ACCELERATION/CRUISE/DECELERATION** **HESITATION/STUMBLE-ACCELERATION** **SURGES-ACCELERATION/CRUISE**
POSSIBLE CAUSE	• Improper intake valve timing due to timing chain jumping • Improper exhaust valve timing due to timing chain jumping • Low engine compression • Improper intake valve timing • Improper exhaust valve timing • Spark plug malfunction • Throttle valve restricted or clogged • Exhaust system and/or TWC restriction (PCM DTC is stored.) • PCV valve malfunction • Check valve (two-way) malfunction • Injector driver (built-into PCM) malfunction • ATX internal malfunction (ATX) **Warning** **The following troubleshooting flow chart contains the fuel system diagnosis and repair procedures. Read the following warnings before performing the fuel system services:** • **Fuel vapor is hazardous. It can easily ignite, causing serious injury and damage. Always keep sparks and flames away from fuel.** • **Fuel line spills and leakage are dangerous. Fuel can ignite and cause serious injury or death and damage. Fuel can also irritate skin and eyes. To prevent this, always complete "BEFORE SERVICE PRECAUTION" and "AFTER SERVICE PRECAUTION" described in this manual. (See 01-14A-6 BEFORE SERVICE PRECAUTION [SKYACTIV-G 2.0].) (See 01-14A-7 AFTER SERVICE PRECAUTION [SKYACTIV-G 2.0].)** **Caution** • **Disconnecting/connecting the quick release connector without cleaning it may possibly cause damage to the fuel pipe and quick release connector. Always clean the quick release connector joint area before disconnecting/connecting, and make sure that it is free of foreign material.**

Diagnostic Procedure

STEP	INSPECTION	RESULTS	ACTION
1	**VERIFY IF MALFUNCTION INCLUDES HARD ENGINE STARTING** • Is the engine unable to start after it has stalled?	Yes	If the engine is unable to start, perform the symptom troubleshooting "NO.3 WILL NOT CRANK" and "NO.6 CRANKS NORMALLY BUT WILL NOT START". (See 01-03-19 NO.3 WILL NOT CRANK [SKYACTIV-G 2.0].) (See 01-03-37 NO.6 CRANKS NORMALLY BUT WILL NOT START [SKYACTIV-G 2.0].)
		No	Go to the next step.
2	**VERIFY IF MALFUNCTION INCLUDES ROUGH IDLING** • Does the engine idle rough?	Yes	Perform the symptom troubleshooting "NO.8 ENGINE RUNS ROUGH/ROLLING IDLE". (See 01-03-45 NO.8 ENGINE RUNS ROUGH/ROLLING IDLE [SKYACTIV-G 2.0].)
		No	Go to the next step.

SYMPTOM TROUBLESHOOTING [SKYACTIV-G 2.0]

STEP	INSPECTION	RESULTS	ACTION
3	**VERIFY IF MALFUNCTION CAUSE IS OVERHEATING** **Caution** • **While performing this step, always operate the vehicle in a safe and lawful manner.** • **When the M-MDS is used to observe monitor system status while driving, be sure to have another technician with you, or record the data in the M-MDS using the PID/DATA MONITOR AND RECORD capturing function and inspect later.** • Access the ECT PID using the M-MDS. (See 01-02-8 ON-BOARD DIAGNOSTIC TEST [SKYACTIV-G 2.0].) • Is the ECT PID value **less than 116 °C {241 °F}** during driving?	Yes	Go to the next step.
		No	The cause of this concern could be from the cooling system overheating. • Perform the symptom troubleshooting “NO.17 COOLING SYSTEM CONCERNS-OVERHEATING”. (See 01-03-88 NO.17 COOLING SYSTEM CONCERNS-OVERHEATING [SKYACTIV-G 2.0].)
4	**CONFIRM DRIVE-BY-WIRE CONTROL SYSTEM OPERATES WITH BRAKE OVERRIDE SYSTEM** • Retrieve the PCM DTC using the M-MDS. (See 01-02-8 ON-BOARD DIAGNOSTIC TEST [SKYACTIV-G 2.0].) • Is the DTC P2299:00 present?	Yes	Go to the applicable DTC inspection. (drive-by-wire control system operates with brake override system.) (See 01-02-350 DTC P2299:00 [SKYACTIV-G 2.0].)
		No	Go to the next step.
5	**VERIFY PCM DTC** • Retrieve any DTCs using the M-MDS. (See 01-02-8 ON-BOARD DIAGNOSTIC TEST [SKYACTIV-G 2.0].) • Are any DTCs present?	Yes	Go to the applicable DTC inspection. (See 01-02-14 DTC TABLE [SKYACTIV-G 2.0].)
		No	Go to the next step.

SYMPTOM TROUBLESHOOTING [SKYACTIV-G 2.0]

STEP	INSPECTION	RESULTS	ACTION
6	**VERIFY CURRENT INPUT SIGNAL STATUS** **Caution** • **While performing this step, always operate the vehicle in a safe and lawful manner.** • **When the M-MDS is used to observe monitor system status while driving, be sure to have another technician with you, or record the data in the M-MDS using the PID/DATA MONITOR AND RECORD capturing function and inspect later.** • Access the following PIDs using the M-MDS: (See 01-02-8 ON-BOARD DIAGNOSTIC TEST [SKYACTIV-G 2.0].) — APP1 — APP2 — CPP (MTX) — CPP/PNP (MTX) — ECT — FUEL_PRES — IAT — MAF — MAP — O2S11 — O2S12 — SHRTFT1 — LONGFT1 • Do the PIDs indicate the correct values under the trouble condition? (See 01-40-17 PCM INSPECTION [SKYACTIV-G 2.0].)	Yes	Go to the next step.
		No	APP1, APP2 PIDs are not as specified: • Inspect the APP sensor. (See 01-40-51 ACCELERATOR PEDAL POSITION (APP) SENSOR INSPECTION [SKYACTIV-G 2.0].) CPP PID is not as specified: (MTX) • Inspect the CPP switch. (See 01-40-40 CLUTCH PEDAL POSITION (CPP) SWITCH INSPECTION [SKYACTIV-G 2.0].) CPP/PNP PID is not as specified: (MTX) • Inspect the neutral switch No.1. (See 01-40-40 NEUTRAL SWITCH INSPECTION [SKYACTIV-G 2.0].) ECT PID is not as specified: • Inspect the ECT sensor. (See 01-40-43 ENGINE COOLANT TEMPERATURE (ECT) SENSOR INSPECTION [SKYACTIV-G 2.0].) FUEL_PRES PID is not as specified: • Inspect the fuel pressure sensor. (See 01-40-52 FUEL PRESSURE SENSOR INSPECTION [SKYACTIV-G 2.0].) IAT PID is not as specified: • Inspect the IAT sensor No.1. (See 01-40-46 INTAKE AIR TEMPERATURE (IAT) SENSOR INSPECTION [SKYACTIV-G 2.0].) MAF PID is not as specified: • Inspect the MAF sensor. (See 01-40-45 MASS AIR FLOW (MAF) SENSOR INSPECTION [SKYACTIV-G 2.0].) MAP PID is not as specified: • Inspect the MAP sensor. (See 01-40-49 MANIFOLD ABSOLUTE PRESSURE (MAP) SENSOR INSPECTION [SKYACTIV-G 2.0].) O2S11, SHRTFT1, LONGFT1 PIDs are not as specified: • Inspect the A/F sensor. (See 01-40-55 AIR FUEL RATIO (A/F) SENSOR INSPECTION [SKYACTIV-G 2.0].) O2S12 PID is not as specified: • Inspect the HO2S. (See 01-40-58 HEATED OXYGEN SENSOR (HO2S) INSPECTION [SKYACTIV-G 2.0].) Repair or replace the malfunctioning part according to the inspection results. • If the malfunction remains: — Inspect communication error between TCM and PCM. (ATX) • Repair or replace the malfunctioning part according to the inspection results if necessary. — Perform the “INTERMITTENT CONCERN TROUBLESHOOTING” procedure. (See 01-03-116 INTERMITTENT CONCERN TROUBLESHOOTING [SKYACTIV-G 2.0].)
7	**INSPECT A/C CUT-OFF CONTROL SYSTEM OPERATION** • Perform the A/C Cut-off Control System Inspection. (See 01-03-118 ENGINE CONTROL SYSTEM OPERATION INSPECTION [SKYACTIV-G 2.0].) • Does the A/C cut-off operation work properly?	Yes	Go to the next step.
		No	Repair or replace the malfunctioning part according to the inspection results.

SYMPTOM TROUBLESHOOTING [SKYACTIV-G 2.0]

STEP	INSPECTION	RESULTS	ACTION
8	**INSPECT DRIVE-BY-WIRE CONTROL SYSTEM OPERATION** • Perform the TP sweep inspection. (See 01-03-118 ENGINE CONTROL SYSTEM OPERATION INSPECTION [SKYACTIV-G 2.0].) • Does the drive-by-wire control system work properly?	Yes	Visually inspect the throttle body (damage/scratching). • If there is any malfunction: — Repair or replace the malfunctioning part according to the inspection results. • If there is no malfunction: — Go to the next step.
		No	Repair or replace the malfunctioning part according to the inspection results.
9	**INSPECT FUEL INJECTOR OPERATION** • Perform the Fuel Injector Operation Inspection. (See 01-03-118 ENGINE CONTROL SYSTEM OPERATION INSPECTION [SKYACTIV-G 2.0].) • Do the fuel injectors operate properly?	Yes	Go to the next step.
		No	Repair or replace the malfunctioning part according to the inspection results.
10	**INSPECT PURGE CONTROL SYSTEM OPERATION** • Perform the Purge Control System Inspection. (See 01-03-118 ENGINE CONTROL SYSTEM OPERATION INSPECTION [SKYACTIV-G 2.0].) • Does the purge solenoid valve work properly?	Yes	Go to the next step.
		No	Repair or replace the malfunctioning part according to the inspection results.
11	**INSPECT CURRENT A/F SENSOR SIGNAL** • Inspect the A/F sensor. (See 01-40-55 AIR FUEL RATIO (A/F) SENSOR INSPECTION [SKYACTIV-G 2.0].) • Is there any malfunction?	Yes	Go to the next step.
		No	Go to Step 13.
12	**DETERMINE IF MALFUNCTION CAUSE IS A/F SENSOR MALFUNCTION OR A/F SENSOR RELATED WIRING HARNESS MALFUNCTION** **Note** • If the inspection in Step 12 is performed, the PCM detects a DTC and performs fail-safe control. After performing the inspection, clear DTCs using the M-MDS. • Switch the ignition to off. • Disconnect the A/F sensor connector. • Verify the symptom. • Does the symptom disappear?	Yes	Replace the A/F sensor. (See 01-40-52 AIR FUEL RATIO (A/F) SENSOR REMOVAL/INSTALLATION [SKYACTIV-G 2.0].)
		No	Inspect the following: • Exhaust system leakage between exhaust manifold and A/F sensor • Loose installation of A/F sensor — If there is any malfunction: • Repair or replace the malfunctioning part according to the inspection results. — If there is no malfunction: • Inspect the A/F sensor signal circuit. • Repair or replace the suspected wiring harness if necessary.
13	**INSPECT MAIN RELAY OPERATION** • Perform the Main Relay Operation Inspection with wiggle the related harness. (See 01-03-118 ENGINE CONTROL SYSTEM OPERATION INSPECTION [SKYACTIV-G 2.0].) • Does the main relay operate properly?	Yes	Go to the next step.
		No	Repair or replace the malfunctioning part according to the inspection results.

SYMPTOM TROUBLESHOOTING [SKYACTIV-G 2.0]

STEP	INSPECTION	RESULTS	ACTION
14	**INSPECT RELATED PART CONDITION** • Inspect the following: — Fuel quality (proper octane, contamination, winter/summer blend) — Air leakage from intake-air system — Intake-air system restriction — Air cleaner element — Clutch slippage (MTX) — Fuel leakage from fuel line — Vacuum leakage — Engine mount loose — CKP sensor, intake CMP sensor and exhaust CMP sensor • Installation condition (See 01-40-59 CRANKSHAFT POSITION (CKP) SENSOR REMOVAL/INSTALLATION [SKYACTIV-G 2.0].) (See 01-40-61 CAMSHAFT POSITION (CMP) SENSOR REMOVAL/INSTALLATION [SKYACTIV-G 2.0].) • Damaged trigger wheel, intake camshaft and exhaust camshaft • Is there any malfunction?	Yes	Service if necessary. • Repeat this step.
		No	Go to the next step.
15	**INSPECT FUEL PRESSURE (HIGH-SIDE)** • Start the engine and warm it up completely. • Access the FUEL_PRES PID using the M-MDS at idle. (See 01-02-8 ON-BOARD DIAGNOSTIC TEST [SKYACTIV-G 2.0].) • Is the FUEL_PRES PID value **approx. 3 MPa {31 kgf/cm^2, 435 psi}**?	Yes	Go to Step 19.
		No	Lower than **3 MPa {31 kgf/cm2, 435 psi}**: • Inspect the following: — Fuel leakage at the fuel line and fuel injector — Fuel pump • Perform the Fuel Pump (Low-pressure Side) Operation Inspection. (See 01-03-118 ENGINE CONTROL SYSTEM OPERATION INSPECTION [SKYACTIV-G 2.0].) — Fuel pressure sensor (See 01-40-52 FUEL PRESSURE SENSOR INSPECTION [SKYACTIV-G 2.0].) — High pressure fuel pump (See 01-14A-49 HIGH PRESSURE FUEL PUMP INSPECTION [SKYACTIV-G 2.0].) • If there is any malfunction: — Repair or replace the malfunctioning part according to the inspection results. • If there is no malfunction: — Go to Step 18. Higher than **3 MPa {31 kgf/cm2, 435 psi}**: • Go to the next step.
16	**DETERMINE IF MALFUNCTION CAUSE IS FUEL PRESSURE SENSOR OR HIGH PRESSURE FUEL PUMP** • Is the vehicle acceleration performance normal?	Yes	Go to the next step.
		No	Go to Step 18.
17	**INSPECT FUEL PRESSURE SENSOR** • Inspect the fuel pressure sensor. (See 01-40-52 FUEL PRESSURE SENSOR INSPECTION [SKYACTIV-G 2.0].) • Is there any malfunction?	Yes	Replace the fuel distributor. (See 01-14A-51 FUEL INJECTOR REMOVAL/INSTALLATION [SKYACTIV-G 2.0].)
		No	Go to Step 19.
18	**INSPECT SPILL VALVE CONTROL SOLENOID VALVE CONTROL CIRCUIT FOR SHORT TO GROUND** • Switch the ignition to off. • Disconnect the high pressure fuel pump and PCM connectors. • Inspect for continuity between high pressure fuel pump terminal A (wiring harness-side) and body ground. • Is there continuity?	Yes	Repair or replace the wiring harness for a possible short to ground. • If the malfunction remains: — Replace the PCM. (damage to driver in PCM) (See 01-40-10 PCM REMOVAL/INSTALLATION [SKYACTIV-G 2.0].)
		No	Replace the high pressure fuel pump. (See 01-14A-44 HIGH PRESSURE FUEL PUMP REMOVAL/INSTALLATION [SKYACTIV-G 2.0].)

SYMPTOM TROUBLESHOOTING [SKYACTIV-G 2.0]

STEP	INSPECTION	RESULTS	ACTION
19	**INSPECT FUEL PRESSURE (LOW-SIDE)** • Connect the fuel pressure gauge between fuel pump and high pressure fuel pump. • Measure the low side fuel pressure. (See 01-14A-8 FUEL LINE PRESSURE INSPECTION [SKYACTIV-G 2.0].) • Is the low side fuel pressure within specification? **Specification:** • **405—485 kPa {4.13—4.94 kgf/cm^2, 58.8—70.3 psi}**	Yes	Go to the next step.
		No	Inspect the following: • Fuel line restriction • Fuel filter clogged — If there is any malfunction: • Repair or replace the malfunctioning part according to the inspection results. — If there is no malfunction: • Replace the fuel pump unit. (See 01-14A-38 FUEL PUMP UNIT REMOVAL/INSTALLATION [SKYACTIV-G 2.0].)
20	**INSPECT THROTTLE BODY FOR CLOGGING** • Visually inspect the throttle valve. (See 01-13A-6 INTAKE-AIR SYSTEM REMOVAL/INSTALLATION [SKYACTIV-G 2.0].) • Is any foreign material adhering around the throttle valve?	Yes	Clean the throttle valve.
		No	Go to the next step.
21	**INSPECT ENGINE COMPRESSION** • Measure the compression pressure for each cylinder. (See 01-10A-14 COMPRESSION INSPECTION [SKYACTIV-G 2.0].) • Are compression pressures within specification? **Specification:** • Compression [European (L.H.D. U.K.) specs.] — Standard: **978 kPa {9.97 kgf/cm^2, 142 psi} (300 rpm)** — Minimum: **783 kPa {7.98 kgf/cm^2, 114 psi} (300 rpm)** — Maximum difference between cylinders: **166 kPa {1.69 kgf/cm^2, 24.1 psi}** • Compression [Except European (L.H.D. U.K.) specs.] — Standard: **885 kPa {9.02 kgf/cm^2, 128 psi} (300 rpm)** — Minimum: **708 kPa {7.22 kgf/cm^2, 103 psi} (300 rpm)** — Maximum difference between cylinders: **150 kPa {1.53 kgf/cm^2, 21.8 psi}** **Note** • Because the SKYACTIV-G 2.0 retards the intake valve closing timing, compression pressure is low.	Yes	Go to the next step.
		No	Inspect the following: • Damaged valve seat • Worn valve stem and valve guide • Worn or stuck piston ring • Worn piston, piston ring or cylinder • Improper intake valve timing • Improper exhaust valve timing Service if necessary.
22	**INSPECT IGNITION SYSTEM OPERATION** • Perform the Spark Test. (See 01-03-118 ENGINE CONTROL SYSTEM OPERATION INSPECTION [SKYACTIV-G 2.0].) • Is a strong blue spark visible at each cylinder?	Yes	Go to the next step.
		No	Repair or replace the malfunctioning part according to the inspection results.
23	**INSPECT EXHAUST SYSTEM FOR RESTRICTION** • Inspect for restriction in the exhaust system and the TWC. • Is there any restriction?	Yes	Repair or replace the malfunctioning part according to the inspection results.
		No	Go to the next step.

SYMPTOM TROUBLESHOOTING [SKYACTIV-G 2.0]

STEP	INSPECTION	RESULTS	ACTION
24	**INSPECT IF MALFUNCTION CAUSE IS PCV VALVE OR INJECTOR DRIVER (PCM INTEGRATED)** • Inspect the PCV valve. (See 01-16A-15 POSITIVE CRANKCASE VENTILATION (PCV) VALVE INSPECTION [SKYACTIV-G 2.0].) • Is there any malfunction?	Yes	Replace the PCV valve. (See 01-16A-13 POSITIVE CRANKCASE VENTILATION (PCV) VALVE REMOVAL/INSTALLATION [SKYACTIV-G 2.0].)
		No	Injector driver malfunction. • Replace the PCM. (See 01-40-10 PCM REMOVAL/INSTALLATION [SKYACTIV-G 2.0].) If the problem remains, overhaul the engine.
25	Verify the test results. • If normal, return to the diagnostic index to service any additional symptoms. (See 01-03-5 SYMPTOM DIAGNOSTIC INDEX [SKYACTIV-G 2.0].) • If a malfunction remains, inspect the related Service Information and perform the repair or diagnosis. — If the vehicle is repaired, troubleshooting is completed. — If the vehicle is not repaired or additional diagnostic information is not available, replace the PCM. (See 01-40-10 PCM REMOVAL/INSTALLATION [SKYACTIV-G 2.0].)		

SYMPTOM TROUBLESHOOTING [SKYACTIV-G 2.0]

NO.12 LACK/LOSS OF POWER-ACCELERATION/CRUISE [SKYACTIV-G 2.0]

id0103e6801800

12	LACK/LOSS OF POWER-ACCELERATION/CRUISE
DESCRIPTION	• Performance is poor under load. (e.g., power down when climbing hills)
POSSIBLE CAUSE	• Engine overheating • Drive-by-wire control system operates with brake override system • PCM DTC is stored • Improper operation of A/C system • Improper operation of drive-by-wire control system • Throttle body malfunction • Incorrect fuel injection timing • Fuel injector malfunction • Purge solenoid valve malfunction • Erratic signal to PCM — APP sensor or related circuit malfunction — CPP switch or related circuit malfunction (MTX) — Neutral switch No.1 or related circuit malfunction (MTX) — Communication error between TCM and PCM (ATX) — ECT sensor or related circuit malfunction — Fuel pressure sensor or related circuit malfunction — IAT sensor No.1 (integrated in MAF sensor/IAT sensor No.1) or related circuit malfunction — MAF sensor or related circuit malfunction — MAP sensor or related circuit malfunction — A/F sensor or related circuit malfunction — HO2S or related circuit malfunction — Improper air/fuel mixture ratio control operation — Intermittent open or short circuit MAF sensor, APP sensor, TP sensor • Fuel leakage • Poor fuel quality • Air leakage or restriction in intake-air system • Air cleaner restricted or dirty • Vacuum leakage • Clutch slippage (MTX) • Brake dragging • Tire air pressure malfunction • Erratic or no signal from CMP sensor — Loose installation — Damaged trigger wheel (intake camshaft and/or exhaust camshaft) — Open or short circuit in related wiring harness • Erratic signal from CKP sensor — Loose installation — Damaged trigger wheel (crankshaft pulley) — Open or short circuit in related wiring harness • Inadequate fuel pressure (high or low pressure side) — Fuel pressure sensor malfunction — High pressure fuel pump malfunction — Spill valve control solenoid valve control circuit malfunction (damage to driver in PCM caused by short circuit to ground system) — Spill valve control solenoid valve (built-into high pressure fuel pump) malfunction — Relief valve (built-into high pressure fuel pump) malfunction — Fuel line restricted or clogged — Fuel pump mechanical malfunction • Improper operation of electric variable valve timing control system (PCM DTC is stored.) • Improper operation of hydraulic variable valve timing control system • Throttle valve restricted or clogged • Low engine compression • Improper intake valve timing due to timing chain jumping • Improper exhaust valve timing due to timing chain jumping • Spark plug malfunction • Incorrect signal to ignition coil • Exhaust system and/or TWC restriction • PCV valve malfunction • Injector driver (built-into PCM) malfunction • ATX internal malfunction (ATX)

SYMPTOM TROUBLESHOOTING [SKYACTIV-G 2.0]

12	LACK/LOSS OF POWER-ACCELERATION/CRUISE
POSSIBLE CAUSE	**Warning** **The following troubleshooting flow chart contains the fuel system diagnosis and repair procedures. Read the following warnings before performing the fuel system services:** • **Fuel vapor is hazardous. It can easily ignite, causing serious injury and damage. Always keep sparks and flames away from fuel.** • **Fuel line spills and leakage are dangerous. Fuel can ignite and cause serious injury or death and damage. Fuel can also irritate skin and eyes. To prevent this, always complete "BEFORE SERVICE PRECAUTION" and "AFTER SERVICE PRECAUTION" described in this manual. (See 01-14A-6 BEFORE SERVICE PRECAUTION [SKYACTIV-G 2.0].) (See 01-14A-7 AFTER SERVICE PRECAUTION [SKYACTIV-G 2.0].)** **Caution** • **Disconnecting/connecting the quick release connector without cleaning it may possibly cause damage to the fuel pipe and quick release connector. Always clean the quick release connector joint area before disconnecting/connecting, and make sure that it is free of foreign material.**

Diagnostic Procedure

STEP	INSPECTION	RESULTS	ACTION
1	**VERIFY IF MALFUNCTION INCLUDES ROUGH IDLING** • Does the engine idle rough?	Yes	Perform the symptom troubleshooting "NO.8 ENGINE RUNS ROUGH/ROLLING IDLE". (See 01-03-45 NO.8 ENGINE RUNS ROUGH/ ROLLING IDLE [SKYACTIV-G 2.0].)
		No	Go to the next step.
2	**VERIFY IF MALFUNCTION CAUSE IS OVERHEATING** • Is the engine overheating?	Yes	Perform the symptom troubleshooting "NO.17 COOLING SYSTEM CONCERNS-OVERHEATING". (See 01-03-88 NO.17 COOLING SYSTEM CONCERNS-OVERHEATING [SKYACTIV-G 2.0].)
		No	Go to the next step.
3	**CONFIRM DRIVE-BY-WIRE CONTROL SYSTEM OPERATES WITH BRAKE OVERRIDE SYSTEM** • Retrieve the PCM DTC using the M-MDS. (See 01-02-8 ON-BOARD DIAGNOSTIC TEST [SKYACTIV-G 2.0].) • Is the DTC P2299:00 present?	Yes	Go to the applicable DTC inspection. (drive-by-wire control system operates with brake override system.) (See 01-02-350 DTC P2299:00 [SKYACTIV-G 2.0].)
		No	Go to the next step.
4	**VERIFY PCM DTC** • Retrieve any DTCs using the M-MDS. (See 01-02-8 ON-BOARD DIAGNOSTIC TEST [SKYACTIV-G 2.0].) • Are any DTCs present?	Yes	Go to the applicable DTC inspection. (See 01-02-14 DTC TABLE [SKYACTIV-G 2.0].)
		No	Go to the next step.

SYMPTOM TROUBLESHOOTING [SKYACTIV-G 2.0]

STEP	INSPECTION	RESULTS	ACTION
5	**VERIFY CURRENT INPUT SIGNAL STATUS** **Caution** • **While performing this step, always operate the vehicle in a safe and lawful manner.** • **When the M-MDS is used to observe monitor system status while driving, be sure to have another technician with you, or record the data in the M-MDS using the PID/DATA MONITOR AND RECORD capturing function and inspect later.** • Access the following PIDs using the M-MDS: (See 01-02-8 ON-BOARD DIAGNOSTIC TEST [SKYACTIV-G 2.0].) — APP1 — APP2 — CPP (MTX) — CPP/PNP (MTX) — ECT — FUEL_PRES — IAT — MAF — MAP — TP REL — O2S11 — O2S12 — SHRTFT1 — LONGFT1 • Do the PIDs indicate the correct values under the trouble condition? (See 01-40-17 PCM INSPECTION [SKYACTIV-G 2.0].)	Yes	Go to the next step.
		No	APP1, APP2 PIDs are not as specified: • Inspect the APP sensor. (See 01-40-51 ACCELERATOR PEDAL POSITION (APP) SENSOR INSPECTION [SKYACTIV-G 2.0].) CPP PID is not as specified: (MTX) • Inspect the CPP switch. (See 01-40-40 CLUTCH PEDAL POSITION (CPP) SWITCH INSPECTION [SKYACTIV-G 2.0].) CPP/PNP PID is not as specified: (MTX) • Inspect the neutral switch No.1. (See 01-40-40 NEUTRAL SWITCH INSPECTION [SKYACTIV-G 2.0].) ECT PID is not as specified: • Inspect the ECT sensor. (See 01-40-43 ENGINE COOLANT TEMPERATURE (ECT) SENSOR INSPECTION [SKYACTIV-G 2.0].) FUEL_PRES PID is not as specified: • Inspect the fuel pressure sensor. (See 01-40-52 FUEL PRESSURE SENSOR INSPECTION [SKYACTIV-G 2.0].) IAT PID is not as specified: • Inspect the IAT sensor No.1. (See 01-40-46 INTAKE AIR TEMPERATURE (IAT) SENSOR INSPECTION [SKYACTIV-G 2.0].) MAF PID is not as specified: • Inspect the MAF sensor. (See 01-40-45 MASS AIR FLOW (MAF) SENSOR INSPECTION [SKYACTIV-G 2.0].) MAP PID is not as specified: • Inspect the MAP sensor. (See 01-40-49 MANIFOLD ABSOLUTE PRESSURE (MAP) SENSOR INSPECTION [SKYACTIV-G 2.0].) TP REL PID is not as specified: • Inspect the TP sensor. (See 01-40-50 THROTTLE POSITION (TP) SENSOR INSPECTION [SKYACTIV-G 2.0].) O2S11, SHRTFT1, LONGFT1 PIDs are not as specified: • Inspect the A/F sensor. (See 01-40-55 AIR FUEL RATIO (A/F) SENSOR INSPECTION [SKYACTIV-G 2.0].) O2S12 PID is not as specified: • Inspect the HO2S. (See 01-40-58 HEATED OXYGEN SENSOR (HO2S) INSPECTION [SKYACTIV-G 2.0].) Repair or replace the malfunctioning part according to the inspection results. • If the malfunction remains: — Inspect communication error between TCM and PCM. (ATX) • Repair or replace the malfunctioning part according to the inspection results if necessary. — Perform the “INTERMITTENT CONCERN TROUBLESHOOTING” procedure. (See 01-03-116 INTERMITTENT CONCERN TROUBLESHOOTING [SKYACTIV-G 2.0].)
6	**INSPECT A/C CUT-OFF CONTROL SYSTEM OPERATION** • Perform the A/C Cut-off Control System Inspection. (See 01-03-118 ENGINE CONTROL SYSTEM OPERATION INSPECTION [SKYACTIV-G 2.0].) • Does the A/C cut-off operation work properly?	Yes	Go to the next step.
		No	Repair or replace the malfunctioning part according to the inspection results.

SYMPTOM TROUBLESHOOTING [SKYACTIV-G 2.0]

STEP	INSPECTION	RESULTS	ACTION
7	**INSPECT DRIVE-BY-WIRE CONTROL SYSTEM OPERATION** • Perform the TP sweep inspection. (See 01-03-118 ENGINE CONTROL SYSTEM OPERATION INSPECTION [SKYACTIV-G 2.0].) • Does the drive-by-wire control system work properly?	Yes	Go to the next step.
		No	Repair or replace the malfunctioning part according to the inspection results.
8	**INSPECT FUEL INJECTOR OPERATION** • Perform the Fuel Injector Operation Inspection. (See 01-03-118 ENGINE CONTROL SYSTEM OPERATION INSPECTION [SKYACTIV-G 2.0].) • Do the fuel injectors operate properly?	Yes	Go to the next step.
		No	Repair or replace the malfunctioning part according to the inspection results.
9	**INSPECT PURGE CONTROL SYSTEM OPERATION** • Perform the Purge Control System Inspection. (See 01-03-118 ENGINE CONTROL SYSTEM OPERATION INSPECTION [SKYACTIV-G 2.0].) • Does the purge solenoid valve work properly?	Yes	Go to the next step.
		No	Repair or replace the malfunctioning part according to the inspection results.
10	**INSPECT FUEL SYSTEM FOR FUEL LEAKAGE** • Inspect for fuel leakage in the fuel line. • Is there any leakage?	Yes	Repair or replace the malfunctioning part according to the inspection results.
		No	Go to the next step.
11	**INSPECT RELATED PART CONDITION** • Inspect the following: — Fuel quality (proper octane, contamination, winter/summer blend) — Air leakage or restriction in intake-air system — Air cleaner restricted or dirty — Vacuum leakage — Clutch slippage (MTX) — Brake dragging — Tire air pressure — CKP sensor, intake CMP sensor and exhaust CMP sensor • Installation condition (See 01-40-59 CRANKSHAFT POSITION (CKP) SENSOR REMOVAL/INSTALLATION [SKYACTIV-G 2.0].) (See 01-40-61 CAMSHAFT POSITION (CMP) SENSOR REMOVAL/INSTALLATION [SKYACTIV-G 2.0].) • Damaged trigger wheel, intake camshaft and exhaust camshaft • Is there any malfunction?	Yes	Service if necessary. • Repeat this step.
		No	Go to the next step.

SYMPTOM TROUBLESHOOTING [SKYACTIV-G 2.0]

STEP	INSPECTION	RESULTS	ACTION
12	**INSPECT FUEL PRESSURE (HIGH-SIDE)** • Start the engine and warm it up completely. • Access the FUEL_PRES PID using the M-MDS at idle. (See 01-02-8 ON-BOARD DIAGNOSTIC TEST [SKYACTIV-G 2.0].) • Is the FUEL_PRES PID value **approx. 3 MPa {31 kgf/cm^2, 435 psi}**?	Yes	Go to Step 14.
		No	Lower than **3 MPa {31 kgf/cm2, 435 psi}**: • Inspect the following: — Fuel leakage at the fuel line and fuel injector — Fuel pump • Perform the Fuel Pump (Low-pressure Side) Operation Inspection. (See 01-03-118 ENGINE CONTROL SYSTEM OPERATION INSPECTION [SKYACTIV-G 2.0].) — Fuel pressure sensor (See 01-40-52 FUEL PRESSURE SENSOR INSPECTION [SKYACTIV-G 2.0].) — High pressure fuel pump (See 01-14A-49 HIGH PRESSURE FUEL PUMP INSPECTION [SKYACTIV-G 2.0].) • If there is any malfunction: — Repair or replace the malfunctioning part according to the inspection results. • If there is no malfunction: — Go to the next step. Higher than **3 MPa {31 kgf/cm2, 435 psi}**: • Go to the next step.
13	**INSPECT SPILL VALVE CONTROL SOLENOID VALVE CONTROL CIRCUIT FOR SHORT TO GROUND** • Switch the ignition to off. • Disconnect the high pressure fuel pump and PCM connectors. • Inspect for continuity between high pressure fuel pump terminal A (wiring harness-side) and body ground. • Is there continuity?	Yes	Repair or replace the wiring harness for a possible short to ground. • If the malfunction remains: — Replace the PCM. (damage to driver in PCM) (See 01-40-10 PCM REMOVAL/INSTALLATION [SKYACTIV-G 2.0].)
		No	Replace the high pressure fuel pump. (See 01-14A-44 HIGH PRESSURE FUEL PUMP REMOVAL/INSTALLATION [SKYACTIV-G 2.0].)
14	**INSPECT FUEL PRESSURE (LOW-SIDE)** • Connect the fuel pressure gauge between fuel pump and high pressure fuel pump. • Measure the low side fuel pressure. (See 01-14A-8 FUEL LINE PRESSURE INSPECTION [SKYACTIV-G 2.0].) • Is the low side fuel pressure within specification? **Specification:** • **405—485 kPa {4.13—4.94 kgf/cm^2, 58.8—70.3 psi}**	Yes	Go to the next step.
		No	Inspect the following: • Fuel line restriction • Fuel filter clogged — If there is any malfunction: • Repair or replace the malfunctioning part according to the inspection results. — If there is no malfunction: • Replace the fuel pump unit. (See 01-14A-38 FUEL PUMP UNIT REMOVAL/INSTALLATION [SKYACTIV-G 2.0].)
15	**INSPECT HYDRAULIC VARIABLE VALVE TIMING CONTROL SYSTEM OPERATION** • Perform the Hydraulic Variable Valve Timing Control System Operation Inspection. (See 01-03-118 ENGINE CONTROL SYSTEM OPERATION INSPECTION [SKYACTIV-G 2.0].) • Does the hydraulic variable valve timing control system work properly?	Yes	Go to the next step.
		No	Repair or replace the malfunctioning part according to the inspection results.
16	**INSPECT THROTTLE BODY FOR CLOGGING** • Visually inspect the throttle valve. (See 01-13A-6 INTAKE-AIR SYSTEM REMOVAL/INSTALLATION [SKYACTIV-G 2.0].) • Is any foreign material adhering around the throttle valve?	Yes	Clean the throttle valve.
		No	Go to the next step.

SYMPTOM TROUBLESHOOTING [SKYACTIV-G 2.0]

STEP	INSPECTION	RESULTS	ACTION
17	**INSPECT ENGINE COMPRESSION** • Measure the compression pressure for each cylinder. (See 01-10A-14 COMPRESSION INSPECTION [SKYACTIV-G 2.0].) • Are compression pressures within specification? **Specification:** • Compression [European (L.H.D. U.K.) specs.] — Standard: **978 kPa {9.97 kgf/cm^2, 142 psi} (300 rpm)** — Minimum: **783 kPa {7.98 kgf/cm^2, 114 psi} (300 rpm)** — Maximum difference between cylinders: **166 kPa {1.69 kgf/cm^2, 24.1 psi}** • Compression [Except European (L.H.D. U.K.) specs.] — Standard: **885 kPa {9.02 kgf/cm^2, 128 psi} (300 rpm)** — Minimum: **708 kPa {7.22 kgf/cm^2, 103 psi} (300 rpm)** — Maximum difference between cylinders: **150 kPa {1.53 kgf/cm^2, 21.8 psi}** **Note** • Because the SKYACTIV-G 2.0 retards the intake valve closing timing, compression pressure is low.	Yes	Go to the next step.
		No	Inspect the following: • Damaged valve seat • Worn valve stem and valve guide • Worn or stuck piston ring • Worn piston, piston ring or cylinder • Improper intake valve timing • Improper exhaust valve timing Service if necessary.
18	**VERIFY SPARK PLUG CONDITION** • Inspect the spark plug condition. (See 01-18-3 SPARK PLUG INSPECTION [SKYACTIV-G 2.0].) • Is the spark plug wet, covered with carbon or grayish white?	Yes	Spark plug is wet or covered with carbon: • Perform the Spark Test. (See 01-03-118 ENGINE CONTROL SYSTEM OPERATION INSPECTION [SKYACTIV-G 2.0].) — Repair or replace the malfunctioning part according to the inspection results. Spark plug is grayish white: • Inspect the fuel injector for restriction. — Repair or replace the malfunctioning part according to the inspection results.
		No	Go to the next step.
19	**INSPECT EXHAUST SYSTEM FOR RESTRICTION** • Inspect for restriction in the exhaust system and the TWC. • Is there any restriction?	Yes	Repair or replace the malfunctioning part according to the inspection results.
		No	Go to the next step.
20	**INSPECT IF MALFUNCTION CAUSE IS PCV VALVE OR INJECTOR DRIVER (PCM INTEGRATED)** • Inspect the PCV valve. (See 01-16A-15 POSITIVE CRANKCASE VENTILATION (PCV) VALVE INSPECTION [SKYACTIV-G 2.0].) • Is there any malfunction?	Yes	Replace the PCV valve. (See 01-16A-13 POSITIVE CRANKCASE VENTILATION (PCV) VALVE REMOVAL/INSTALLATION [SKYACTIV-G 2.0].)
		No	Injector driver malfunction. • Replace the PCM. (See 01-40-10 PCM REMOVAL/INSTALLATION [SKYACTIV-G 2.0].) If the problem remains, overhaul the engine.
21	Verify the test results. • If normal, return to the diagnostic index to service any additional symptoms. (See 01-03-5 SYMPTOM DIAGNOSTIC INDEX [SKYACTIV-G 2.0].) • If a malfunction remains, inspect the related Service Information and perform the repair or diagnosis. — If the vehicle is repaired, troubleshooting is completed. — If the vehicle is not repaired or additional diagnostic information is not available, replace the PCM. (See 01-40-10 PCM REMOVAL/INSTALLATION [SKYACTIV-G 2.0].)		

SYMPTOM TROUBLESHOOTING [SKYACTIV-G 2.0]

NO.13 KNOCKING/PINGING-ACCELERATION/CRUISE [SKYACTIV-G 2.0]

id0103e6812100

13	KNOCKING/PINGING-ACCELERATION/CRUISE
DESCRIPTION	• Sound is produced when air/fuel mixture is ignited by something other than spark plug. (e.g., hot spot in combustion chamber)
POSSIBLE CAUSE	• Poor fuel quality — Fuel RON is not specified — Excessive cleaning agents added in fuel • Combustion temperature is high — Engine overheating due to cooling system malfunction — Carbon accumulation (production of heat spot) — Plug thermal value is low — Plug malfunction (production of heat spot) • Ignition timing for calculating PCM is incorrect — PCM DTC is stored — Estimated intake air amount is deviated — ECT sensor or related circuit malfunction — IAT sensor No.2 (integrated in MAP sensor) or related circuit malfunction — Temperature correction is incorrect — Air leakage or restriction in intake-air system — MAF sensor or related circuit malfunction — MAP sensor or related circuit malfunction — KS or related circuit malfunction **Warning** **The following troubleshooting flow chart contains the fuel system diagnosis and repair procedures. Read the following warnings before performing the fuel system services:** • **Fuel vapor is hazardous. It can easily ignite, causing serious injury and damage. Always keep sparks and flames away from fuel.** • **Fuel line spills and leakage are dangerous. Fuel can ignite and cause serious injury or death and damage. Fuel can also irritate skin and eyes. To prevent this, always complete "BEFORE SERVICE PRECAUTION" and "AFTER SERVICE PRECAUTION" described in this manual. (See 01-14A-6 BEFORE SERVICE PRECAUTION [SKYACTIV-G 2.0].) (See 01-14A-7 AFTER SERVICE PRECAUTION [SKYACTIV-G 2.0].)** **Caution** • **Disconnecting/connecting the quick release connector without cleaning it may possibly cause damage to the fuel pipe and quick release connector. Always clean the quick release connector joint area before disconnecting/connecting, and make sure that it is free of foreign material.**

Diagnostic Procedure

STEP	INSPECTION	RESULTS	ACTION
1	**VERIFY IF MALFUNCTION INCLUDES ROUGH IDLING** • Does the engine idle rough?	Yes	Perform the symptom troubleshooting "NO.8 ENGINE RUNS ROUGH/ROLLING IDLE". (See 01-03-45 NO.8 ENGINE RUNS ROUGH/ ROLLING IDLE [SKYACTIV-G 2.0].)
		No	Go to the next step.
2	**REPLACE FUEL** • Drain the remaining fuel in the fuel tank and add the specified fuel. • Leave idling **for approx. 15 min** to refill the hose with fuel. • Does the symptom disappear?	Yes	Symptom troubleshooting completed. (If customer has used fuel additive, give them advice not to use it)
		No	Go to the next step.

SYMPTOM TROUBLESHOOTING [SKYACTIV-G 2.0]

STEP	INSPECTION	RESULTS	ACTION
3	**VERIFY IF MALFUNCTION CAUSE IS OVERHEATING** **Caution** • **While performing this step, always operate the vehicle in a safe and lawful manner.** • **When the M-MDS is used to observe monitor system status while driving, be sure to have another technician with you, or record the data in the M-MDS using the PID/DATA MONITOR AND RECORD capturing function and inspect later.** • Access the ECT PID using the M-MDS. (See 01-02-8 ON-BOARD DIAGNOSTIC TEST [SKYACTIV-G 2.0].) • Is the ECT PID value **less than 116 °C {241 °F}** during driving?	Yes	Go to the next step.
		No	The cause of this concern could be from the cooling system overheating. • Perform the symptom troubleshooting “NO.17 COOLING SYSTEM CONCERNS-OVERHEATING”. (See 01-03-88 NO.17 COOLING SYSTEM CONCERNS-OVERHEATING [SKYACTIV-G 2.0].)
4	**VERIFY SPARK PLUG CONDITION** • Remove all spark plugs. (See 01-18-3 SPARK PLUG REMOVAL/INSTALLATION [SKYACTIV-G 2.0].) • Inspect the spark plug. (See 01-18-3 SPARK PLUG INSPECTION [SKYACTIV-G 2.0].) • Is there any malfunction?	Yes	Replace the spark plug. (See 01-18-3 SPARK PLUG REMOVAL/INSTALLATION [SKYACTIV-G 2.0].)
		No	Go to the next step.
5	**INSPECT INTAKE AIR SYSTEM FOR AIR SUCTION** • Verify if there is air suction into the intake air system (such as between MAF sensor and intake valve, vacuum hose). • Is there any malfunction?	Yes	Repair or replace the malfunctioning part according to the inspection results.
		No	Go to the next step.
6	**INSPECT MAP SENSOR** • Access the following PIDs using the M-MDS: (See 01-02-8 ON-BOARD DIAGNOSTIC TEST [SKYACTIV-G 2.0].) — MAP — BARO • Measure the intake manifold vacuum when idling (no load). (See 01-13A-5 INTAKE MANIFOLD VACUUM INSPECTION [SKYACTIV-G 2.0].) • Does the difference between PIDs BARO and MAP nearly match the intake manifold vacuum value?	Yes	Go to the next step.
		No	Replace the MAP sensor/IAT sensor No.2. (See 01-40-48 MANIFOLD ABSOLUTE PRESSURE (MAP) SENSOR/INTAKE AIR TEMPERATURE (IAT) SENSOR NO.2 REMOVAL/INSTALLATION [SKYACTIV-G 2.0].)
7	**INSPECT MAF SENSOR** • Inspect the MAF sensor. (See 01-40-45 MASS AIR FLOW (MAF) SENSOR INSPECTION [SKYACTIV-G 2.0].) • Is there any malfunction?	Yes	Replace the MAF sensor/IAT sensor No.1. (See 01-13A-6 INTAKE-AIR SYSTEM REMOVAL/INSTALLATION [SKYACTIV-G 2.0].)
		No	Go to the next step.
8	**INSPECT MAP SENSOR** • Inspect the MAP sensor resistance. (See 01-40-49 MANIFOLD ABSOLUTE PRESSURE (MAP) SENSOR INSPECTION [SKYACTIV-G 2.0].) • Is there any malfunction?	Yes	Replace the MAP sensor/IAT sensor No.2. (See 01-40-48 MANIFOLD ABSOLUTE PRESSURE (MAP) SENSOR/INTAKE AIR TEMPERATURE (IAT) SENSOR NO.2 REMOVAL/INSTALLATION [SKYACTIV-G 2.0].)
		No	Go to the next step.
9	**INSPECT ECT SENSOR** • Inspect the ECT sensor resistance. (See 01-40-43 ENGINE COOLANT TEMPERATURE (ECT) SENSOR INSPECTION [SKYACTIV-G 2.0].) • Is there any malfunction?	Yes	Replace the ECT sensor. (See 01-40-41 ENGINE COOLANT TEMPERATURE (ECT) SENSOR REMOVAL/INSTALLATION [SKYACTIV-G 2.0].)
		No	Go to the next step.

SYMPTOM TROUBLESHOOTING [SKYACTIV-G 2.0]

STEP	INSPECTION	RESULTS	ACTION
10	**REPLACE KS** • Replace the KS. (See 01-40-64 KNOCK SENSOR (KS) REMOVAL/INSTALLATION [SKYACTIV-G 2.0].) • Does the symptom disappear?	Yes	Symptom troubleshooting completed.
		No	Remove the accumulated matter in the cylinder head using the following procedure: • Carbon remover • Overhauling
11	Verify the test results. • If normal, return to the diagnostic index to service any additional symptoms. (See 01-03-5 SYMPTOM DIAGNOSTIC INDEX [SKYACTIV-G 2.0].) • If a malfunction remains, inspect the related Service Information and perform the repair or diagnosis. — If the vehicle is repaired, troubleshooting is completed. — If the vehicle is not repaired or additional diagnostic information is not available, replace the PCM. (See 01-40-10 PCM REMOVAL/INSTALLATION [SKYACTIV-G 2.0].)		

SYMPTOM TROUBLESHOOTING [SKYACTIV-G 2.0]

NO.14 POOR FUEL ECONOMY [SKYACTIV-G 2.0]

id0103e6802000

14	POOR FUEL ECONOMY
DESCRIPTION	• Fuel economy is unsatisfactory.
POSSIBLE CAUSE	• Engine cooling system malfunction • PCM DTC is stored • Erratic signal to PCM — APP sensor or related circuit malfunction — ECT sensor or related circuit malfunction — IAT sensor No.1 (integrated in MAF sensor/IAT sensor No.1) or related circuit malfunction — MAF sensor or related circuit malfunction — MAP sensor or related circuit malfunction — TP sensor or related circuit malfunction — Intermittent open or short circuit MAF sensor, APP sensor, TP sensor • Improper operation of cooling fan control system • Improper operation of A/C system • Incorrect fuel injection timing • Fuel injector malfunction • Short to power supply in wiring harness between IG1 relay terminal C and PCM terminal 2H • Contaminated air cleaner element • Air leakage or restriction in intake-air system • Poor fuel quality • Improper coolant level • Clutch slippage (MTX) • Improper ATF level (ATX) • Brake dragging • Tire air pressure malfunction • Vacuum leakage • Fuel leakage • Contamination in MAF sensor • Tires, wheels (large size) • Change of intake air system components and exhaust system components • Engine operation time is longer than traveled distance — Vehicle is driven in congested traffic frequently — Left idling for long periods • Amount of fuel injection increases — Overloaded — Frequent acceleration/deceleration — Frequently driving on ascending roads — Travel distance per one drive is short (amount of time for warm-up is long during engine operation) — Improper load signal input • Improper A/C request signal • Driver forgets to switch electronic device off • Electronic device is frequently used with engine stopped (no power generation) • Vehicle left undriven for long periods • Large amount of parasitic draw (especially after-market electronic devices) • Erratic or no signal from CMP sensor — Loose installation — Damaged trigger wheel (intake camshaft and/or exhaust camshaft) — Open or short circuit in related wiring harness • Erratic signal from CKP sensor — Loose installation — Damaged trigger wheel (crankshaft pulley) — Open or short circuit in related wiring harness • Inadequate fuel pressure (high-pressure side) — Fuel pressure sensor malfunction — High pressure fuel pump malfunction — Spill valve control solenoid valve control circuit malfunction (damage to driver in PCM caused by short circuit to ground system) — Spill valve control solenoid valve (built-into high pressure fuel pump) malfunction — Relief valve (built-into high pressure fuel pump) malfunction — Fuel line restricted or clogged — Fuel pump unit malfunction • Improper engine compression • Improper intake valve timing due to timing chain jumping • Improper exhaust valve timing due to timing chain jumping • Spark plug malfunction • Exhaust system and/or TWC restriction • PCV valve malfunction • Injector driver (built-into PCM) malfunction

SYMPTOM TROUBLESHOOTING [SKYACTIV-G 2.0]

14	POOR FUEL ECONOMY
POSSIBLE CAUSE	**Warning** **The following troubleshooting flow chart contains the fuel system diagnosis and repair procedures. Read the following warnings before performing the fuel system services:** • **Fuel vapor is hazardous. It can easily ignite, causing serious injury and damage. Always keep sparks and flames away from fuel.** • **Fuel line spills and leakage are dangerous. Fuel can ignite and cause serious injury or death and damage. Fuel can also irritate skin and eyes. To prevent this, always complete "BEFORE SERVICE PRECAUTION" and "AFTER SERVICE PRECAUTION" described in this manual. (See 01-14A-6 BEFORE SERVICE PRECAUTION [SKYACTIV-G 2.0].) (See 01-14A-7 AFTER SERVICE PRECAUTION [SKYACTIV-G 2.0].)** **Caution** • **Disconnecting/connecting the quick release connector without cleaning it may possibly cause damage to the fuel pipe and quick release connector. Always clean the quick release connector joint area before disconnecting/connecting, and make sure that it is free of foreign material.**

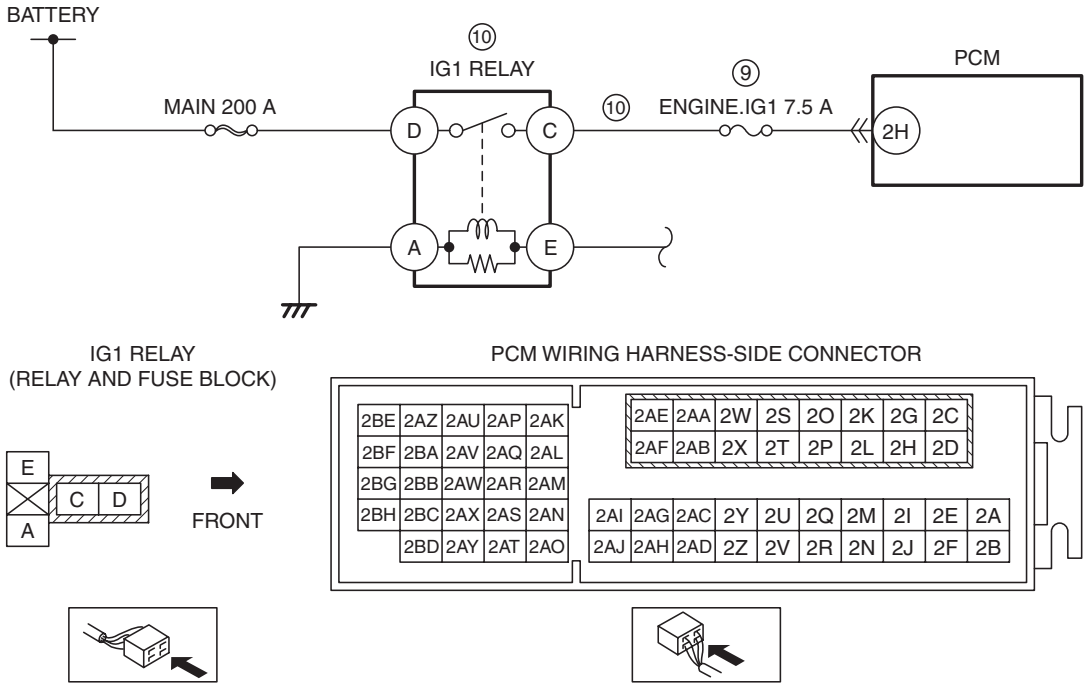

Diagnostic Procedure

STEP	INSPECTION	RESULTS	ACTION
1	**VERIFY IF MALFUNCTION CAUSED BY ENGINE MALFUNCTION** • Verify the vehicle engine condition. • Can malfunction symptoms other than "NO.14 POOR FUEL ECONOMY" be verified?	Yes	Go to the applicable symptom troubleshooting. (See 01-03-5 SYMPTOM DIAGNOSTIC INDEX [SKYACTIV-G 2.0].)
		No	Go to the next step.
2	**INSPECT COOLING SYSTEM FOR MALFUNCTION** • Is any cooling system concern (overheating, runs cold) present?	Yes	Perform the applicable symptom troubleshooting. (See 01-03-88 NO.17 COOLING SYSTEM CONCERNS-OVERHEATING [SKYACTIV-G 2.0].) (See 01-03-90 NO.18 COOLING SYSTEM CONCERNS-RUNS COLD [SKYACTIV-G 2.0].)
		No	Go to the next step.
3	**VERIFY PCM DTC** • Retrieve any DTCs using the M-MDS. (See 01-02-8 ON-BOARD DIAGNOSTIC TEST [SKYACTIV-G 2.0].) • Are any DTCs present?	Yes	Go to the applicable DTC inspection. (See 01-02-14 DTC TABLE [SKYACTIV-G 2.0].)
		No	Go to the next step.

SYMPTOM TROUBLESHOOTING [SKYACTIV-G 2.0]

STEP	INSPECTION	RESULTS	ACTION
4	**VERIFY CURRENT INPUT SIGNAL STATUS** **Caution** • **While performing this step, always operate the vehicle in a safe and lawful manner.** • **When the M-MDS is used to observe monitor system status while driving, be sure to have another technician with you, or record the data in the M-MDS using the PID/DATA MONITOR AND RECORD capturing function and inspect later.** • Access the following PIDs using the M-MDS: (See 01-02-8 ON-BOARD DIAGNOSTIC TEST [SKYACTIV-G 2.0].) — APP1 — APP2 — ECT — IAT — MAF — MAP — TP REL • Do the PIDs indicate the correct values under the trouble condition? (See 01-40-17 PCM INSPECTION [SKYACTIV-G 2.0].)	Yes	Go to the next step.
		No	APP1, APP2 PIDs are not as specified: • Inspect the APP sensor. (See 01-40-51 ACCELERATOR PEDAL POSITION (APP) SENSOR INSPECTION [SKYACTIV-G 2.0].) ECT PID is not as specified: • Inspect the ECT sensor. (See 01-40-43 ENGINE COOLANT TEMPERATURE (ECT) SENSOR INSPECTION [SKYACTIV-G 2.0].) IAT PID is not as specified: • Inspect the IAT sensor No.1. (See 01-40-46 INTAKE AIR TEMPERATURE (IAT) SENSOR INSPECTION [SKYACTIV-G 2.0].) MAF PID is not as specified: • Inspect the MAF sensor. (See 01-40-45 MASS AIR FLOW (MAF) SENSOR INSPECTION [SKYACTIV-G 2.0].) MAP PID is not as specified: • Inspect the MAP sensor. (See 01-40-49 MANIFOLD ABSOLUTE PRESSURE (MAP) SENSOR INSPECTION [SKYACTIV-G 2.0].) TP REL PID is not as specified: • Inspect the TP sensor. (See 01-40-50 THROTTLE POSITION (TP) SENSOR INSPECTION [SKYACTIV-G 2.0].) Repair or replace the malfunctioning part according to the inspection results. • If the malfunction remains: — Perform the “INTERMITTENT CONCERN TROUBLESHOOTING” procedure. (See 01-03-116 INTERMITTENT CONCERN TROUBLESHOOTING [SKYACTIV-G 2.0].)
5	**DETERMINE IF MALFUNCTION CAUSE IS A/C REQUEST SIGNAL OR OTHER** • Access the AC_REQ PID using the M-MDS. (See 01-02-8 ON-BOARD DIAGNOSTIC TEST [SKYACTIV-G 2.0].) • Monitor the AC_REQ PID while turning on and off the air conditioner with switch on the control panel. • Does the AC_REQ PID value change from on to off according to switch control panel?	Yes	Go to the next step.
		No	If the AC_REQ PID is always ON: • Perform the symptom troubleshooting “NO.24 A/C IS ALWAYS ON OR A/C COMPRESSOR RUNS CONTINUOUSLY”. (See 01-03-106 NO.24 A/C IS ALWAYS ON OR A/C COMPRESSOR RUNS CONTINUOUSLY [SKYACTIV-G 2.0].) If the AC_REQ PID is always OFF: • Perform the symptom troubleshooting “NO.23 A/C DOES NOT WORK SUFFICIENTLY”. (See 01-03-101 NO.23 A/C DOES NOT WORK SUFFICIENTLY [SKYACTIV-G 2.0].)
6	**INSPECT COOLING FAN CONTROL SYSTEM OPERATION** • Perform the Cooling Fan Control System Inspection. (See 01-03-118 ENGINE CONTROL SYSTEM OPERATION INSPECTION [SKYACTIV-G 2.0].) • Does the cooling fan control system operate properly?	Yes	Go to the next step.
		No	Repair or replace the malfunctioning part according to the inspection results.
7	**INSPECT A/C CUT-OFF CONTROL SYSTEM OPERATION** • Perform the A/C Cut-off Control System Inspection. (See 01-03-118 ENGINE CONTROL SYSTEM OPERATION INSPECTION [SKYACTIV-G 2.0].) • Does the A/C cut-off operation work properly?	Yes	Go to the next step.
		No	Repair or replace the malfunctioning part according to the inspection results.

SYMPTOM TROUBLESHOOTING [SKYACTIV-G 2.0]

STEP	INSPECTION	RESULTS	ACTION
8	**INSPECT FUEL INJECTOR OPERATION** • Perform the Fuel Injector Operation Inspection. (See 01-03-118 ENGINE CONTROL SYSTEM OPERATION INSPECTION [SKYACTIV-G 2.0].) • Do the fuel injectors operate properly?	Yes	Go to the next step.
		No	Repair or replace the malfunctioning part according to the inspection results.
9	**INSPECT ENGINE.IG1 7.5 A FUSE** • Switch the ignition to off. • Remove the ENGINE.IG1 7.5 A fuse. • Inspect the ENGINE.IG1 7.5 A fuse. • Is there any malfunction?	Yes	If the fuse is blown: • Repair or replace the wiring harness for a possible short to ground. • Replace the fuse. If the fuse is deteriorated: • Replace the fuse. Go to the next step.
		No	Reinstall the ENGINE.IG1 7.5 A fuse, then go to the next step.
10	**INSPECT IG1 RELAY CIRCUIT FOR SHORT TO POWER SUPPLY** • Remove the IG1 relay. • Disconnect the PCM connector. • Measure the voltage at the IG1 relay terminal C (wiring harness-side). • Is the voltage **0 V**?	Yes	Inspect the IG1 relay. (See 09-21-29 RELAY INSPECTION.) • If there is any malfunction: — Replace the IG1 relay. • If there is no malfunction: — Reconnect all disconnected connectors. — Go to the next step.
		No	Repair or replace the wiring harness for a possible short to power supply.

SYMPTOM TROUBLESHOOTING [SKYACTIV-G 2.0]

STEP	INSPECTION	RESULTS	ACTION
11	**INSPECT RELATED PART CONDITION** • Inspect the following: — Air cleaner element for contamination — Intake-air system restriction — Fuel quality (proper octane, contamination, winter/summer blend) — Coolant level — Clutch slippage (MTX) — ATF level (ATX) — Brake dragging — Tire air pressure — Vacuum leakage — Fuel leakage — MAF sensor contaminated — Tires, wheels (large size) — Change of intake air system components and exhaust system components — Engine operation time is longer than traveled distance • Vehicle is driven in congested traffic frequently • Left idling for long periods — Amount of fuel injection increases • Overloaded • Frequent acceleration/deceleration • Frequently driving on ascending roads • Travel distance per one drive is short — Driver forgets to switch electronic device off — Electronic device is frequently used with engine stopped (no power generation) — Vehicle left undriven for long periods — Large amount of parasitic draw — CKP sensor, intake CMP sensor and exhaust CMP sensor • Installation condition (See 01-40-59 CRANKSHAFT POSITION (CKP) SENSOR REMOVAL/INSTALLATION [SKYACTIV-G 2.0].) (See 01-40-61 CAMSHAFT POSITION (CMP) SENSOR REMOVAL/INSTALLATION [SKYACTIV-G 2.0].) • Damaged trigger wheel, intake camshaft and exhaust camshaft • Is there any malfunction?	Yes	Service if necessary. • Repeat this step.
		No	Go to the next step.

SYMPTOM TROUBLESHOOTING [SKYACTIV-G 2.0]

STEP	INSPECTION	RESULTS	ACTION
12	**INSPECT FUEL PRESSURE (HIGH-SIDE)** • Start the engine and warm it up completely. • Access the FUEL_PRES PID using the M-MDS at idle. (See 01-02-8 ON-BOARD DIAGNOSTIC TEST [SKYACTIV-G 2.0].) • Is the FUEL_PRES PID value **approx. 3 MPa {31 kgf/cm^2, 435 psi}**?	Yes	Go to Step 16.
		No	Lower than **3 MPa {31 kgf/cm2, 435 psi}**: • Inspect the following: — Fuel leakage at the fuel line and fuel injector — Fuel pump • Perform the Fuel Pump (Low-pressure Side) Operation Inspection. (See 01-03-118 ENGINE CONTROL SYSTEM OPERATION INSPECTION [SKYACTIV-G 2.0].) — Fuel pressure sensor (See 01-40-52 FUEL PRESSURE SENSOR INSPECTION [SKYACTIV-G 2.0].) — High pressure fuel pump (See 01-14A-49 HIGH PRESSURE FUEL PUMP INSPECTION [SKYACTIV-G 2.0].) • If there is any malfunction: — Repair or replace the malfunctioning part according to the inspection results. • If there is no malfunction: — Go to Step 15. Higher than **3 MPa {31 kgf/cm2, 435 psi}**: • Go to the next step.
13	**DETERMINE IF MALFUNCTION CAUSE IS FUEL PRESSURE SENSOR OR HIGH PRESSURE FUEL PUMP** • Is the vehicle acceleration performance normal?	Yes	Go to the next step.
		No	Go to Step 15.
14	**INSPECT FUEL PRESSURE SENSOR** • Inspect the fuel pressure sensor. (See 01-40-52 FUEL PRESSURE SENSOR INSPECTION [SKYACTIV-G 2.0].) • Is there any malfunction?	Yes	Replace the fuel distributor. (See 01-14A-51 FUEL INJECTOR REMOVAL/INSTALLATION [SKYACTIV-G 2.0].)
		No	Go to Step 16.
15	**INSPECT SPILL VALVE CONTROL SOLENOID VALVE CONTROL CIRCUIT FOR SHORT TO GROUND** • Switch the ignition to off. • Disconnect the high pressure fuel pump and PCM connectors. • Inspect for continuity between high pressure fuel pump terminal A (wiring harness-side) and body ground. • Is there continuity?	Yes	Repair or replace the wiring harness for a possible short to ground. • If the malfunction remains: — Replace the PCM. (damage to driver in PCM) (See 01-40-10 PCM REMOVAL/INSTALLATION [SKYACTIV-G 2.0].)
		No	Replace the high pressure fuel pump. (See 01-14A-44 HIGH PRESSURE FUEL PUMP REMOVAL/INSTALLATION [SKYACTIV-G 2.0].)
16	**INSPECT FUEL PRESSURE (LOW-SIDE)** • Connect the fuel pressure gauge between fuel pump and high pressure fuel pump. • Measure the low side fuel pressure. (See 01-14A-8 FUEL LINE PRESSURE INSPECTION [SKYACTIV-G 2.0].) • Is the low side fuel pressure within specification? **Specification:** • **405—485 kPa {4.13—4.94 kgf/cm^2, 58.8—70.3 psi}**	Yes	Go to the next step.
		No	Inspect the following: • Fuel line restriction • Fuel filter clogged — If there is any malfunction: • Repair or replace the malfunctioning part according to the inspection results. — If there is no malfunction: • Replace the fuel pump unit. (See 01-14A-38 FUEL PUMP UNIT REMOVAL/INSTALLATION [SKYACTIV-G 2.0].)

SYMPTOM TROUBLESHOOTING [SKYACTIV-G 2.0]

STEP	INSPECTION	RESULTS	ACTION
17	**INSPECT ENGINE COMPRESSION** • Measure the compression pressure for each cylinder. (See 01-10A-14 COMPRESSION INSPECTION [SKYACTIV-G 2.0].) • Are compression pressures within specification? **Specification:** • Compression [European (L.H.D. U.K.) specs.] — Standard: **978 kPa {9.97 kgf/cm^2, 142 psi} (300 rpm)** — Minimum: **783 kPa {7.98 kgf/cm^2, 114 psi} (300 rpm)** — Maximum difference between cylinders: **166 kPa {1.69 kgf/cm^2, 24.1 psi}** • Compression [Except European (L.H.D. U.K.) specs.] — Standard: **885 kPa {9.02 kgf/cm^2, 128 psi} (300 rpm)** — Minimum: **708 kPa {7.22 kgf/cm^2, 103 psi} (300 rpm)** — Maximum difference between cylinders: **150 kPa {1.53 kgf/cm^2, 21.8 psi}** **Note** • Because the SKYACTIV-G 2.0 retards the intake valve closing timing, compression pressure is low.	Yes	Go to the next step.
		No	Inspect the following: • Damaged valve seat • Worn valve stem and valve guide • Worn or stuck piston ring • Worn piston, piston ring or cylinder • Improper intake valve timing • Improper exhaust valve timing Service if necessary.
18	**INSPECT IGNITION SYSTEM OPERATION** • Perform the Spark Test. (See 01-03-118 ENGINE CONTROL SYSTEM OPERATION INSPECTION [SKYACTIV-G 2.0].) • Is the strong blue spark visible at each cylinder?	Yes	Go to the next step.
		No	Repair or replace the malfunctioning part according to the inspection results.
19	**INSPECT EXHAUST SYSTEM FOR RESTRICTION** • Inspect for restriction in the exhaust system and the TWC. • Is there any restriction?	Yes	Repair or replace the malfunctioning part according to the inspection results.
		No	Go to the next step.
20	**INSPECT IF MALFUNCTION CAUSE IS PCV VALVE OR INJECTOR DRIVER (PCM INTEGRATED)** • Inspect the PCV valve. (See 01-16A-15 POSITIVE CRANKCASE VENTILATION (PCV) VALVE INSPECTION [SKYACTIV-G 2.0].) • Is there any malfunction?	Yes	Replace the PCV valve. (See 01-16A-13 POSITIVE CRANKCASE VENTILATION (PCV) VALVE REMOVAL/INSTALLATION [SKYACTIV-G 2.0].)
		No	Injector driver malfunction. • Replace the PCM. (See 01-40-10 PCM REMOVAL/INSTALLATION [SKYACTIV-G 2.0].) If the problem remains, overhaul the engine.
21	Verify the test results. • If normal, return to the diagnostic index to service any additional symptoms. (See 01-03-5 SYMPTOM DIAGNOSTIC INDEX [SKYACTIV-G 2.0].) • If a malfunction remains, inspect the related Service Information and perform the repair or diagnosis. — If the vehicle is repaired, troubleshooting is completed. — If the vehicle is not repaired or additional diagnostic information is not available, replace the PCM. (See 01-40-10 PCM REMOVAL/INSTALLATION [SKYACTIV-G 2.0].)		

SYMPTOM TROUBLESHOOTING [SKYACTIV-G 2.0]

NO.15 EMISSION COMPLIANCE [SKYACTIV-G 2.0]

id0103e6802100

15	EMISSION COMPLIANCE
DESCRIPTION	• Fails emissions test.
POSSIBLE CAUSE	• Engine overheating • Cooling system malfunction • PCM DTC is stored • Incorrect ignition timing • Spark plug malfunction • Purge solenoid valve malfunction • Inadequate fuel pressure — Fuel leakage at the fuel line and/or fuel injector — Fuel pressure sensor or related circuit malfunction — High pressure fuel pump malfunction — Spill valve control solenoid valve control circuit malfunction (damage to driver in PCM caused by short circuit to ground system) — Spill valve control solenoid valve (built-into high pressure fuel pump) malfunction — Relief valve (built-into high pressure fuel pump) malfunction — Fuel line restriction — Fuel pump unit malfunction • Air leakage from intake-air system • Vacuum lines leakage or blockage • Charcoal canister damage • Improper engine coolant level • Excessive carbon built-up in combustion chamber • Improper engine compression • Improper intake valve timing • Improper exhaust valve timing • Exhaust system and/or TWC restriction • TWC malfunction (PCM DTC is stored.) • PCV valve malfunction or incorrect valve installation **Warning** **The following troubleshooting flow chart contains the fuel system diagnosis and repair procedures. Read the following warnings before performing the fuel system services:** • **Fuel vapor is hazardous. It can easily ignite, causing serious injury and damage. Always keep sparks and flames away from fuel.** • **Fuel line spills and leakage are dangerous. Fuel can ignite and cause serious injury or death and damage. Fuel can also irritate skin and eyes. To prevent this, always complete "BEFORE SERVICE PRECAUTION" and "AFTER SERVICE PRECAUTION" described in this manual. (See 01-14A-6 BEFORE SERVICE PRECAUTION [SKYACTIV-G 2.0].) (See 01-14A-7 AFTER SERVICE PRECAUTION [SKYACTIV-G 2.0].)** **Caution** • **Disconnecting/connecting the quick release connector without cleaning it may possibly cause damage to the fuel pipe and quick release connector. Always clean the quick release connector joint area before disconnecting/connecting, and make sure that it is free of foreign material.**

Diagnostic Procedure

STEP	INSPECTION	RESULTS	ACTION
1	**VERIFY PCM DTC** • Retrieve any DTCs using the M-MDS. (See 01-02-8 ON-BOARD DIAGNOSTIC TEST [SKYACTIV-G 2.0].) • Are any DTCs present?	Yes	Go to the applicable DTC inspection. (See 01-02-14 DTC TABLE [SKYACTIV-G 2.0].)
		No	Go to the next step.
2	**VERIFY DRIVE MODE CONDITION** • Verify that the drive mode is completed. • Is the drive mode completed?	Yes	Go to the next step.
		No	Perform the Drive Mode. (See 01-02-13 OBD DRIVE MODE [SKYACTIV-G 2.0].)
3	**INSPECT FOR ANY OTHER MALFUNCTION** • Can malfunction symptoms other than "NO.15 EMISSION COMPLIANCE" be verified?	Yes	Go to the applicable symptom troubleshooting. (See 01-03-5 SYMPTOM DIAGNOSTIC INDEX [SKYACTIV-G 2.0].)
		No	Go to the next step.

SYMPTOM TROUBLESHOOTING [SKYACTIV-G 2.0]

STEP	INSPECTION	RESULTS	ACTION
4	**VERIFY CO AND HC CONCENTRATION** • Verify CO and HC concentration. • Is the CO or HC concentration excessive?	Yes	Go to Step 6. **Note** • If the HC concentration is normal and the CO concentration is excessive, a rich A/F can be considered the cause. • If the CO concentration is normal and the HC concentration is excessive, a A/F lean can be considered the cause. • If the CO and HC concentration is excessive, incomplete combustion or a rich A/F can be considered the cause.
		No	Go to the next step.
5	**VERIFY NOx CONCENTRATION** • Verify NOx concentration. • Is the NOx concentration excessive?	Yes	Go to the next step.
		No	Symptom troubleshooting is completed.
6	**VERIFY IF MALFUNCTION CAUSED BY IGNITION TIMING MALFUNCTION** • Inspect the ignition timing. (See 01-10A-4 ENGINE TUNE-UP [SKYACTIV-G 2.0].) • Is there any malfunction?	Yes	Inspect the following: • Spark plug (See 01-18-3 SPARK PLUG INSPECTION [SKYACTIV-G 2.0].) • Ignition coil/ion sensor No.1 (See 01-18-2 IGNITION COIL INSPECTION [SKYACTIV-G 2.0].) • Ignition coil/ion sensor No.2 • Ignition coil/ion sensor No.3 • Ignition coil/ion sensor No.4 — If there is any malfunction: • Repair or replace the malfunctioning part according to the inspection results, then go to Step 17. — If there is no malfunction: • Go to Step 17.
		No	Go to the next step.
7	**INSPECT PURGE CONTROL SYSTEM OPERATION** • Perform the Purge Control System Inspection. (See 01-03-118 ENGINE CONTROL SYSTEM OPERATION INSPECTION [SKYACTIV-G 2.0].) • Does the purge solenoid valve work properly?	Yes	Go to the next step.
		No	Repair or replace the malfunctioning part according to the inspection results, then go to Step 17.
8	**INSPECT FUEL PRESSURE (HIGH-SIDE)** • Start the engine and warm it up completely. • Access the FUEL_PRES PID using the M-MDS at idle. (See 01-02-8 ON-BOARD DIAGNOSTIC TEST [SKYACTIV-G 2.0].) • Is the FUEL_PRES PID value **approx. 3 MPa {31 kgf/cm^2, 435 psi}**?	Yes	Go to the next step.
		No	Lower than **3 MPa {31 kgf/cm2, 435 psi}**: • Inspect the following: — Fuel leakage at the fuel line and fuel injector — Fuel pump • Perform the Fuel Pump (Low-pressure Side) Operation Inspection. (See 01-03-118 ENGINE CONTROL SYSTEM OPERATION INSPECTION [SKYACTIV-G 2.0].) — Fuel pressure sensor (See 01-40-52 FUEL PRESSURE SENSOR INSPECTION [SKYACTIV-G 2.0].) — High pressure fuel pump (See 01-14A-49 HIGH PRESSURE FUEL PUMP INSPECTION [SKYACTIV-G 2.0].) Higher than **3 MPa {31 kgf/cm2, 435 psi}**: • Inspect the following: — Fuel line and fuel injector restriction — Fuel pressure sensor (See 01-40-52 FUEL PRESSURE SENSOR INSPECTION [SKYACTIV-G 2.0].) — High pressure fuel pump (Relief valve clogged) Repair or replace the malfunctioning part according to the inspection results, then go to Step 17.

SYMPTOM TROUBLESHOOTING [SKYACTIV-G 2.0]

STEP	INSPECTION	RESULTS	ACTION
9	**INSPECT INTAKE-AIR SYSTEM FOR AIR LEAKAGE** • Inspect for leakage in intake-air system. • Is there any leakage?	Yes	Repair or replace the malfunctioning part according to the inspection results, then go to Step 17.
		No	Go to the next step.
10	**INSPECT RESTRICTION IN VENTILATION HOSE** • Inspect for restriction in the ventilation hose. • Is there any restriction?	Yes	Repair or replace the malfunctioning part according to the inspection results, then go to Step 17.
		No	Go to the next step.
11	**VERIFY IF MALFUNCTION CAUSE IS CHARCOAL CANISTER** • Visually inspect the charcoal canister. (See 01-16A-8 CHARCOAL CANISTER INSPECTION [SKYACTIV-G 2.0].) • Is the charcoal canister damaged?	Yes	Repair or replace the malfunctioning part according to the inspection results, then go to Step 17. (See 01-16A-6 CHARCOAL CANISTER REMOVAL/ INSTALLATION [SKYACTIV-G 2.0].)
		No	Go to the next step.
12	**VERIFY IF MALFUNCTION CAUSED BY LACK OF ENGINE COOLANT** • Inspect the engine coolant level. (See 01-12A-3 ENGINE COOLANT LEVEL INSPECTION [SKYACTIV-G 2.0].) • Is there any malfunction?	Yes	Add engine coolant and verify that there is no engine coolant leakage. (See 01-12A-4 ENGINE COOLANT REPLACEMENT [SKYACTIV-G 2.0].) (See 01-12A-7 ENGINE COOLANT LEAKAGE INSPECTION [SKYACTIV-G 2.0].) • If there is any malfunction: — Repair or replace the malfunctioning part according to the inspection results, then go to Step 17. • If there is no malfunction: — Go to Step 17.
		No	Go to the next step.
13	**VERIFY CARBON ACCUMULATION CONDITION IN COMBUSTION CHAMBER** • Verify carbon accumulation condition in combustion chamber. • Has carbon accumulated?	Yes	Repair or replace the malfunctioning part according to the inspection results, then go to Step 17.
		No	Go to the next step.
14	**INSPECT ENGINE COMPRESSION** • Measure the compression pressure for each cylinder. (See 01-10A-14 COMPRESSION INSPECTION [SKYACTIV-G 2.0].) • Are compression pressures within specification? **Specification:** • Compression [European (L.H.D. U.K.) specs.] — Standard: **978 kPa {9.97 kgf/cm^2, 142 psi} (300 rpm)** — Minimum: **783 kPa {7.98 kgf/cm^2, 114 psi} (300 rpm)** — Maximum difference between cylinders: **166 kPa {1.69 kgf/cm^2, 24.1 psi}** • Compression [Except European (L.H.D. U.K.) specs.] — Standard: **885 kPa {9.02 kgf/cm^2, 128 psi} (300 rpm)** — Minimum: **708 kPa {7.22 kgf/cm^2, 103 psi} (300 rpm)** — Maximum difference between cylinders: **150 kPa {1.53 kgf/cm^2, 21.8 psi}** **Note** • Because the SKYACTIV-G 2.0 retards the intake valve closing timing, compression pressure is low.	Yes	Go to the next step.
		No	Inspect the following: • Damaged valve seat • Worn valve stem and valve guide • Worn or stuck piston ring • Worn piston, piston ring or cylinder • Improper intake valve timing • Improper exhaust valve timing Repair or replace the malfunctioning part according to the inspection results, then go to Step 17.

SYMPTOM TROUBLESHOOTING [SKYACTIV-G 2.0]

STEP	INSPECTION	RESULTS	ACTION
15	**INSPECT TWC FOR RESTRICTION** • Inspect for restriction in the TWC. • Is there any restriction?	Yes	Repair or replace the malfunctioning part according to the inspection results, then go to Step 17. (See 01-15A-2 EXHAUST SYSTEM REMOVAL/ INSTALLATION [SKYACTIV-G 2.0].)
		No	Go to the next step.
16	**INSPECT PCV VALVE** • Inspect the PCV valve. (See 01-16A-15 POSITIVE CRANKCASE VENTILATION (PCV) VALVE INSPECTION [SKYACTIV-G 2.0].) • Is there any malfunction?	Yes	Replace the PCV valve, then go to the next step. (See 01-16A-13 POSITIVE CRANKCASE VENTILATION (PCV) VALVE REMOVAL/ INSTALLATION [SKYACTIV-G 2.0].)
		No	Go to the next step.
17	**VERIFY SYMPTOM TROUBLESHOOTING COMPLETED** • Measure CO, HC, and NOx concentration again. • Is CO, HC, and NOx concentration within specification?	Yes	Symptom troubleshooting is completed.
		No	Repeat the inspection from Step 1.

NO.16 HIGH OIL CONSUMPTION/LEAKAGE [SKYACTIV-G 2.0]

id0103e6802200

16	HIGH OIL CONSUMPTION/LEAKAGE
DESCRIPTION	• Oil consumption is excessive.
POSSIBLE CAUSE	• Improper dipstick • Improper engine oil viscosity • Oil leakage • PCV valve malfunction • Engine internal parts malfunction

Diagnostic Procedure

STEP	INSPECTION	RESULTS	ACTION
1	**INSPECT ENGINE OIL AND RELATED PARTS** • Inspect the following: — Proper dipstick — Proper engine oil viscosity — Engine oil level • Is there any malfunction?	Yes	Service if necessary. • Repeat this step.
		No	Go to the next step.
2	**VISUALLY INSPECT FOR ENGINE OIL LEAKAGE** • Inspect for engine oil leakage outside of the engine. • Is there any leakage?	Yes	Repair or replace the malfunctioning part according to the inspection results.
		No	Go to the next step.
3	**INSPECT IF MALFUNCTION CAUSE IS PCV VALVE OR ENGINE INTERNAL PART** • Inspect the PCV valve. (See 01-16A-15 POSITIVE CRANKCASE VENTILATION (PCV) VALVE INSPECTION [SKYACTIV-G 2.0].) • Is there any malfunction?	Yes	Replace the PCV valve. (See 01-16A-13 POSITIVE CRANKCASE VENTILATION (PCV) VALVE REMOVAL/ INSTALLATION [SKYACTIV-G 2.0].)
		No	Inspect the internal engine parts such as valves, valve guides, valve stem seals, cylinder head drain passage, and piston rings. Repair or replace the malfunctioning part according to the inspection results, then install the removed parts.
4	Verify the test results. • If normal, return to the diagnostic index to service any additional symptoms. (See 01-03-5 SYMPTOM DIAGNOSTIC INDEX [SKYACTIV-G 2.0].) • If a malfunction remains, inspect the related Service Information and perform the repair or diagnosis. — If the vehicle is repaired, troubleshooting is completed. — If the vehicle is not repaired or additional diagnostic information is not available, replace the PCM. (See 01-40-10 PCM REMOVAL/INSTALLATION [SKYACTIV-G 2.0].)		

SYMPTOM TROUBLESHOOTING [SKYACTIV-G 2.0]

NO.17 COOLING SYSTEM CONCERNS-OVERHEATING [SKYACTIV-G 2.0]

id0103e6802300

17	COOLING SYSTEM CONCERNS-OVERHEATING
DESCRIPTION	• Engine runs at higher than normal temperature/overheats.
POSSIBLE CAUSE	• Engine heat generation amount is too large — Engine speed is high and remains high for continuous long periods • PCM DTC is stored • Improper indication of low engine coolant temperature indicator light and/or high engine coolant temperature warning light — ECT sensor malfunction — Instrument cluster malfunction • Improper operation of A/C system • Cooling fan inoperative • Improper engine coolant level • Coolant leakage (engine internal, external) • Engine coolant performance deterioration • Improper water/anti-freeze mixture • Poor radiator condition • Radiator hose damage • Improper or damaged radiator cap • Coolant overflow system malfunction • Fans reverse rotation • Blown fuse • Leakage at coolant hoses and/or radiator • Leakage around heater unit in passenger compartment • Drive belt damage • Improper drive belt tension • Thermostat malfunction • Excessive A/C system pressure

Diagnostic Procedure

STEP	INSPECTION	RESULTS	ACTION
1	**INSPECT EFFECT OF VEHICLE CONDITION FOR MALFUNCTION** • Verify how the customer drives the vehicle by asking the customer the following: — Engine speed is high and remains high for continuous long periods like when climbing a long steep grade. • Is the engine generating excessive heat when driven?	Yes	Explain to the customer that the vehicle is normal and give them advice how to use vehicle and specific example of the conditions in which the engine overheats.
		No	Go to the next step.
2	**DETERMINE IF MALFUNCTION CAUSE IS A/C SYSTEM OR OTHER** • Start the engine and run it at idle speed. • Turn the A/C switch off. • Does the A/C compressor disengaged?	Yes	Go to the next step.
		No	Perform the symptom troubleshooting “NO.24 A/C IS ALWAYS ON OR A/C COMPRESSOR RUNS CONTINUOUSLY”. (See 01-03-106 NO.24 A/C IS ALWAYS ON OR A/C COMPRESSOR RUNS CONTINUOUSLY [SKYACTIV-G 2.0].)
3	**VERIFY PCM DTC** • Retrieve any DTCs using the M-MDS. (See 01-02-8 ON-BOARD DIAGNOSTIC TEST [SKYACTIV-G 2.0].) • Are any DTCs present?	Yes	Go to the applicable DTC inspection. (See 01-02-14 DTC TABLE [SKYACTIV-G 2.0].)
		No	Go to the next step.

SYMPTOM TROUBLESHOOTING [SKYACTIV-G 2.0]

STEP	INSPECTION	RESULTS	ACTION
4	**INSPECT ECT SENSOR SIGNAL** • Access the ECT PID using the M-MDS. (See 01-02-8 ON-BOARD DIAGNOSTIC TEST [SKYACTIV-G 2.0].) • Compare the ECT PID and low engine coolant temperature indicator light and high engine coolant temperature warning light operation. • Is the ECT PID value same as indicator/ warning light readings?	Yes	Go to the next step.
		No	Inspect the ECT sensor. (See 01-40-43 ENGINE COOLANT TEMPERATURE (ECT) SENSOR INSPECTION [SKYACTIV-G 2.0].) • If there is any malfunction: — Replace the ECT sensor. (See 01-40-41 ENGINE COOLANT TEMPERATURE (ECT) SENSOR REMOVAL/ INSTALLATION [SKYACTIV-G 2.0].) • If there is no malfunction: — Perform the instrument cluster symptom troubleshooting “LOW ENGINE COOLANT TEMPERATURE INDICATOR LIGHT/HIGH ENGINE COOLANT TEMPERATURE WARNING LIGHT ILLUMINATES OR FLASHES CONTINUOUSLY”. (See 09-03K-4 LOW ENGINE COOLANT TEMPERATURE INDICATOR LIGHT/HIGH ENGINE COOLANT TEMPERATURE WARNING LIGHT ILLUMINATES OR FLASHES CONTINUOUSLY [INSTRUMENT CLUSTER].)
5	**INSPECT COOLING FAN CONTROL SYSTEM OPERATION** • Perform the Cooling Fan Control System Inspection. (See 01-03-118 ENGINE CONTROL SYSTEM OPERATION INSPECTION [SKYACTIV-G 2.0].) • Does the cooling fan control system operate properly?	Yes	Go to the next step.
		No	Repair or replace the malfunctioning part according to the inspection results.
6	**INSPECT RELATED PART CONDITION** • Inspect the following: — Engine coolant level — Engine coolant performance — Water and anti-freeze mixture — Radiator condition — Collapsed or restricted radiator hoses — Radiator pressure cap — Coolant overflow system — Fan rotational direction — Fuses • Is there any malfunction?	Yes	Service if necessary. • Repeat this step.
		No	Go to the next step.
7	**INSPECT COOLANT LEAKAGE AT COOLING SYSTEM PART** • Inspect for leakage at coolant hoses and/or radiator. • Is there any leakage?	Yes	Repair or replace the malfunctioning part according to the inspection results.
		No	Go to the next step.
8	**INSPECT COOLANT LEAKAGE AT HEATER UNIT** • Inspect for leakage around heater unit in passenger compartment. • Is there any leakage?	Yes	Repair or replace the malfunctioning part according to the inspection results.
		No	Go to the next step.
9	**INSPECT DRIVE BELT** • Inspect the drive belt. (See 01-10A-9 DRIVE BELT INSPECTION [SKYACTIV-G 2.0].) • Is there any malfunction?	Yes	Replace the drive belt. (See 01-10A-10 DRIVE BELT REMOVAL/ INSTALLATION [SKYACTIV-G 2.0].)
		No	Go to the next step.

SYMPTOM TROUBLESHOOTING [SKYACTIV-G 2.0]

STEP	INSPECTION	RESULTS	ACTION
10	**INSPECT THERMOSTAT** • Cool down the engine. • Remove the thermostat. (See 01-12A-12 THERMOSTAT REMOVAL/ INSTALLATION [SKYACTIV-G 2.0].) • Inspect the thermostat operation. (See 01-12A-13 THERMOSTAT INSPECTION [SKYACTIV-G 2.0].) • Is there any malfunction?	Yes	Replace the thermostat. (See 01-12A-12 THERMOSTAT REMOVAL/ INSTALLATION [SKYACTIV-G 2.0].)
		No	Reinstall the thermostat. (See 01-12A-12 THERMOSTAT REMOVAL/ INSTALLATION [SKYACTIV-G 2.0].) The engine coolant temperature and thermostat are normal. • Inspect the engine block for leakage or blockage. • Repair or replace the malfunctioning part according to the inspection results.
11	Verify the test results. • If normal, return to the diagnostic index to service any additional symptoms. (See 01-03-5 SYMPTOM DIAGNOSTIC INDEX [SKYACTIV-G 2.0].) • If a malfunction remains, inspect the related Service Information and perform the repair or diagnosis. — If the vehicle is repaired, troubleshooting is completed. — If the vehicle is not repaired or additional diagnostic information is not available, replace the PCM. (See 01-40-10 PCM REMOVAL/INSTALLATION [SKYACTIV-G 2.0].)		

NO.18 COOLING SYSTEM CONCERNS-RUNS COLD [SKYACTIV-G 2.0]

id0103e6802400

18	COOLING SYSTEM CONCERNS-RUNS COLD
DESCRIPTION	• Engine does not reach normal operating temperature.
POSSIBLE CAUSE	• Improper indication of low engine coolant temperature indicator light and/or high engine coolant temperature warning light — ECT sensor malfunction — Instrument cluster malfunction • Cooling fan system malfunction • Condenser fan system malfunction • Thermostat malfunction

Diagnostic Procedure

STEP	INSPECTION	RESULTS	ACTION
1	**DETERMINE IF MALFUNCTION CAUSE IS HVAC SYSTEM OR ENGINE** • Is a customer complaint “Lack of passenger compartment heat” only?	Yes	Inspect the A/C heater system. Repair or replace the malfunctioning part according to the inspection results.
		No	Go to the next step.
2	**VERIFY IDLE SPEED** • Does the engine speed continue at fast idle?	Yes	Perform the symptom troubleshooting “NO.9 FAST IDLE/RUNS ON”. (See 01-03-51 NO.9 FAST IDLE/RUNS ON [SKYACTIV-G 2.0].)
		No	Go to the next step.
3	**INSPECT ECT SENSOR SIGNAL** • Access the ECT PID using the M-MDS. (See 01-02-8 ON-BOARD DIAGNOSTIC TEST [SKYACTIV-G 2.0].) • Compare the ECT PID and low engine coolant temperature indicator light and high engine coolant temperature warning light operation. • Is the ECT PID value same as indicator/ warning light readings?	Yes	Go to the next step.
		No	Inspect the ECT sensor. (See 01-40-43 ENGINE COOLANT TEMPERATURE (ECT) SENSOR INSPECTION [SKYACTIV-G 2.0].) • If there is any malfunction: — Replace the ECT sensor. (See 01-40-41 ENGINE COOLANT TEMPERATURE (ECT) SENSOR REMOVAL/ INSTALLATION [SKYACTIV-G 2.0].) • If there is no malfunction: — Perform the instrument cluster symptom troubleshooting “LOW ENGINE COOLANT TEMPERATURE INDICATOR LIGHT/HIGH ENGINE COOLANT TEMPERATURE WARNING LIGHT ILLUMINATES OR FLASHES CONTINUOUSLY”. (See 09-03K-4 LOW ENGINE COOLANT TEMPERATURE INDICATOR LIGHT/HIGH ENGINE COOLANT TEMPERATURE WARNING LIGHT ILLUMINATES OR FLASHES CONTINUOUSLY [INSTRUMENT CLUSTER].)

SYMPTOM TROUBLESHOOTING [SKYACTIV-G 2.0]

STEP	INSPECTION	RESULTS	ACTION
4	**INSPECT COOLING FAN CONTROL SYSTEM OPERATION** • Perform the Cooling Fan Control System Inspection. (See 01-03-118 ENGINE CONTROL SYSTEM OPERATION INSPECTION [SKYACTIV-G 2.0].) • Does the cooling fan control system operate properly?	Yes	Go to the next step.
		No	Repair or replace the malfunctioning part according to the inspection results.
5	**INSPECT THERMOSTAT** • Cool down the engine. • Remove the thermostat. (See 01-12A-12 THERMOSTAT REMOVAL/INSTALLATION [SKYACTIV-G 2.0].) • Inspect the thermostat operation. (See 01-12A-13 THERMOSTAT INSPECTION [SKYACTIV-G 2.0].) • Is there any malfunction?	Yes	Replace the thermostat. (See 01-12A-12 THERMOSTAT REMOVAL/INSTALLATION [SKYACTIV-G 2.0].)
		No	Reinstall the thermostat, then go to the next step. (See 01-12A-12 THERMOSTAT REMOVAL/INSTALLATION [SKYACTIV-G 2.0].)
6	Verify the test results. • If normal, return to the diagnostic index to service any additional symptoms. (See 01-03-5 SYMPTOM DIAGNOSTIC INDEX [SKYACTIV-G 2.0].) • If a malfunction remains, inspect the related Service Information and perform the repair or diagnosis. — If the vehicle is repaired, troubleshooting is completed. — If the vehicle is not repaired or additional diagnostic information is not available, replace the PCM. (See 01-40-10 PCM REMOVAL/INSTALLATION [SKYACTIV-G 2.0].)		

SYMPTOM TROUBLESHOOTING [SKYACTIV-G 2.0]

NO.19 EXHAUST SMOKE [SKYACTIV-G 2.0]

id0103e6802500

19	EXHAUST SMOKE
DESCRIPTION	• Blue, black, or white smoke from exhaust system.
POSSIBLE CAUSE	**Blue smoke (Burning oil):** • PCV valve malfunction • Engine internal oil leakage **White smoke (Water in combustion):** • Cooling system malfunction (coolant loss) • Engine internal coolant leakage **Black smoke (Rich fuel mixture):** • Erratic signal to PCM — APP sensor or related circuit malfunction — ECT sensor or related circuit malfunction — IAT sensor No.1 (integrated in MAF sensor/IAT sensor No.1) or related circuit malfunction — MAF sensor or related circuit malfunction — MAP sensor or related circuit malfunction — A/F sensor or related circuit malfunction — HO2S or related circuit malfunction — TP sensor or related circuit malfunction • Improper fuel injection timing and amount • Air cleaner restriction • Intake-air system is collapsed or restricted • Leakage at engine intake manifold and/or exhaust manifold • Inadequate/Excessive fuel pressure — Fuel pressure sensor malfunction — High pressure fuel pump malfunction — Spill valve control solenoid valve control circuit malfunction (damage to driver in PCM caused by short circuit to ground system) — Spill valve control solenoid valve (built-into high pressure fuel pump) malfunction — Relief valve (built-into high pressure fuel pump) malfunction — Fuel line restricted or clogged — Fuel pump unit malfunction • Ignition system malfunction • Improper engine compression • Improper intake valve timing • Improper exhaust valve timing • Injector driver (built-into PCM) malfunction **Warning** **The following troubleshooting flow chart contains the fuel system diagnosis and repair procedures. Read the following warnings before performing the fuel system services:** • **Fuel vapor is hazardous. It can easily ignite, causing serious injury and damage. Always keep sparks and flames away from fuel.** • **Fuel line spills and leakage are dangerous. Fuel can ignite and cause serious injury or death and damage. Fuel can also irritate skin and eyes. To prevent this, always complete "BEFORE SERVICE PRECAUTION" and "AFTER SERVICE PRECAUTION" described in this manual. (See 01-14A-6 BEFORE SERVICE PRECAUTION [SKYACTIV-G 2.0].) (See 01-14A-7 AFTER SERVICE PRECAUTION [SKYACTIV-G 2.0].)** **Caution** • **Disconnecting/connecting the quick release connector without cleaning it may possibly cause damage to the fuel pipe and quick release connector. Always clean the quick release connector joint area before disconnecting/connecting, and make sure that it is free of foreign material.**

SYMPTOM TROUBLESHOOTING [SKYACTIV-G 2.0]

Diagnostic Procedure

STEP	INSPECTION	RESULTS	ACTION
1	**VERIFY EXHAUST COLOR** • What color is smoke coming from the exhaust system?	Blue	Burning oil is indicated. • Go to the next step.
		White	Water in combustion is indicated. • Go to Step 4.
		Black	Rich fuel mixture is indicated. • Go to Step 5.
2	**INSPECT PCV VALVE** • Inspect the PCV valve. (See 01-16A-15 POSITIVE CRANKCASE VENTILATION (PCV) VALVE INSPECTION [SKYACTIV-G 2.0].) • Is there any malfunction?	Yes	Replace the PCV valve. (See 01-16A-13 POSITIVE CRANKCASE VENTILATION (PCV) VALVE REMOVAL/ INSTALLATION [SKYACTIV-G 2.0].)
		No	Go to the next step.
3	**INSPECT ENGINE INTERNAL PARTS** • Inspect for the following engine internal parts: — Damaged valve guide, stems or valve seals — Blocked oil drain passage in cylinder head — Piston ring is not seated, seized or worn — Damage cylinder bore • Is there any malfunction?	Yes	Repair or replace the malfunctioning part according to the inspection results.
		No	Engine internal parts are normal. • If other driveability symptoms are present: — Return to the diagnostic index to service additional symptoms. (See 01-03-5 SYMPTOM DIAGNOSTIC INDEX [SKYACTIV-G 2.0].)
4	**INSPECT ENGINE FOR ENGINE COOLANT LEAKAGE** • Does the cooling system hold the coolant pressure? (See 01-12A-7 ENGINE COOLANT LEAKAGE INSPECTION [SKYACTIV-G 2.0].)	Yes	Inspect the following: • Cylinder head gasket leakage • Intake manifold gasket leakage • Cracked or porous engine block Repair or replace the malfunctioning part according to the inspection results. • If other driveability symptoms are present: — Return to the diagnostic index to service additional symptoms. (See 01-03-5 SYMPTOM DIAGNOSTIC INDEX [SKYACTIV-G 2.0].)
		No	Inspect for the cause. Repair or replace the malfunctioning part according to the inspection results.

SYMPTOM TROUBLESHOOTING [SKYACTIV-G 2.0]

STEP	INSPECTION	RESULTS	ACTION
5	**VERIFY CURRENT INPUT SIGNAL STATUS** **Caution** • **While performing this step, always operate the vehicle in a safe and lawful manner.** • **When the M-MDS is used to observe monitor system status while driving, be sure to have another technician with you, or record the data in the M-MDS using the PID/DATA MONITOR AND RECORD capturing function and inspect later.** • Access the following PIDs using the M-MDS: (See 01-02-8 ON-BOARD DIAGNOSTIC TEST [SKYACTIV-G 2.0].) — APP1 — APP2 — ECT — IAT — MAF — MAP — TP REL — O2S11 — O2S12 — SHRTFT1 — LONGFT1 • Monitor the PIDs under the black smoke appeared engine condition. • Do the PIDs indicate normal according to engine conditions? (See 01-40-17 PCM INSPECTION [SKYACTIV-G 2.0].)	Yes	Go to the next step.
		No	APP1, APP2 PIDs are not as specified: • Inspect the APP sensor. (See 01-40-51 ACCELERATOR PEDAL POSITION (APP) SENSOR INSPECTION [SKYACTIV-G 2.0].) ECT PID is not as specified: • Inspect the ECT sensor. (See 01-40-43 ENGINE COOLANT TEMPERATURE (ECT) SENSOR INSPECTION [SKYACTIV-G 2.0].) IAT PID is not as specified: • Inspect the IAT sensor No.1. (See 01-40-46 INTAKE AIR TEMPERATURE (IAT) SENSOR INSPECTION [SKYACTIV-G 2.0].) MAF PID is not as specified: • Inspect the MAF sensor. (See 01-40-45 MASS AIR FLOW (MAF) SENSOR INSPECTION [SKYACTIV-G 2.0].) MAP PID is not as specified: • Inspect the MAP sensor. (See 01-40-49 MANIFOLD ABSOLUTE PRESSURE (MAP) SENSOR INSPECTION [SKYACTIV-G 2.0].) TP REL PID is not as specified: • Inspect the TP sensor. (See 01-40-50 THROTTLE POSITION (TP) SENSOR INSPECTION [SKYACTIV-G 2.0].) O2S11, SHRTFT1, LONGFT1 PIDs are not as specified: • Inspect the A/F sensor. (See 01-40-55 AIR FUEL RATIO (A/F) SENSOR INSPECTION [SKYACTIV-G 2.0].) O2S12 PID is not as specified: • Inspect the HO2S. (See 01-40-58 HEATED OXYGEN SENSOR (HO2S) INSPECTION [SKYACTIV-G 2.0].) Repair or replace the malfunctioning part according to the inspection results. • If the malfunction remains: — Perform the “INTERMITTENT CONCERN TROUBLESHOOTING” procedure. (See 01-03-116 INTERMITTENT CONCERN TROUBLESHOOTING [SKYACTIV-G 2.0].)
6	**INSPECT FUEL INJECTOR OPERATION** • Perform the Fuel Injector Operation Inspection. (See 01-03-118 ENGINE CONTROL SYSTEM OPERATION INSPECTION [SKYACTIV-G 2.0].) • Do the fuel injectors operate properly?	Yes	Go to the next step.
		No	Repair or replace the malfunctioning part according to the inspection results.
7	**INSPECT INTAKE AIR SYSTEM** • Inspect the following for intake-air system: — Air cleaner restriction — Collapsed or restricted air hose — Leakage • Is there any malfunction?	Yes	Repair or replace the malfunctioning part according to the inspection results.
		No	Go to the next step.
8	**INSPECT EXHAUST SYSTEM FOR LEAKAGE** • Visually inspect for exhaust leakage from exhaust manifold. • Is there any leakage?	Yes	Repair or replace the malfunctioning part according to the inspection results.
		No	Go to the next step.

SYMPTOM TROUBLESHOOTING [SKYACTIV-G 2.0]

STEP	INSPECTION	RESULTS	ACTION
9	**INSPECT FUEL PRESSURE (HIGH-SIDE)** • Start the engine and warm it up completely. • Access the FUEL_PRES PID using the M-MDS at idle. (See 01-02-8 ON-BOARD DIAGNOSTIC TEST [SKYACTIV-G 2.0].) • Is the FUEL_PRES PID value **approx. 3 MPa {31 kgf/cm^2, 435 psi}**?	Yes	Go to Step 13.
		No	Lower than **3 MPa {31 kgf/cm2, 435 psi}**: • Inspect the following: — Fuel leakage at the fuel line and fuel injector — Fuel pump • Perform the Fuel Pump (Low-pressure Side) Operation Inspection. (See 01-03-118 ENGINE CONTROL SYSTEM OPERATION INSPECTION [SKYACTIV-G 2.0].) — Fuel pressure sensor (See 01-40-52 FUEL PRESSURE SENSOR INSPECTION [SKYACTIV-G 2.0].) — High pressure fuel pump (See 01-14A-49 HIGH PRESSURE FUEL PUMP INSPECTION [SKYACTIV-G 2.0].) • If there is any malfunction: — Repair or replace the malfunctioning part according to the inspection results. • If there is no malfunction: — Go to Step 12. Higher than **3 MPa {31 kgf/cm2, 435 psi}**: • Go to the next step.
10	**DETERMINE IF MALFUNCTION CAUSE IS FUEL PRESSURE SENSOR OR HIGH PRESSURE FUEL PUMP** • Is the vehicle acceleration performance normal?	Yes	Go to the next step.
		No	Go to Step 12.
11	**INSPECT FUEL PRESSURE SENSOR** • Inspect the fuel pressure sensor. (See 01-40-52 FUEL PRESSURE SENSOR INSPECTION [SKYACTIV-G 2.0].) • Is there any malfunction?	Yes	Replace the fuel distributor. (See 01-14A-51 FUEL INJECTOR REMOVAL/INSTALLATION [SKYACTIV-G 2.0].)
		No	Go to Step 13.
12	**INSPECT SPILL VALVE CONTROL SOLENOID VALVE CONTROL CIRCUIT FOR SHORT TO GROUND** • Switch the ignition to off. • Disconnect the high pressure fuel pump and PCM connectors. • Inspect for continuity between high pressure fuel pump terminal A (wiring harness-side) and body ground. • Is there continuity?	Yes	Repair or replace the wiring harness for a possible short to ground. • If the malfunction remains: — Replace the PCM. (damage to driver in PCM) (See 01-40-10 PCM REMOVAL/INSTALLATION [SKYACTIV-G 2.0].)
		No	Replace the high pressure fuel pump. (See 01-14A-44 HIGH PRESSURE FUEL PUMP REMOVAL/INSTALLATION [SKYACTIV-G 2.0].)
13	**INSPECT FUEL PRESSURE (LOW-SIDE)** • Connect the fuel pressure gauge between fuel pump and high pressure fuel pump. • Measure the low side fuel pressure. (See 01-14A-8 FUEL LINE PRESSURE INSPECTION [SKYACTIV-G 2.0].) • Is the low side fuel pressure within specification? **Specification:** • **405—485 kPa {4.13—4.94 kgf/cm^2, 58.8—70.3 psi}**	Yes	Go to the next step.
		No	Inspect the following: • Fuel line restriction • Fuel filter clogged — If there is any malfunction: • Repair or replace the malfunctioning part according to the inspection results. — If there is no malfunction: • Replace the fuel pump unit. (See 01-14A-38 FUEL PUMP UNIT REMOVAL/INSTALLATION [SKYACTIV-G 2.0].)
14	**INSPECT IGNITION SYSTEM OPERATION** • Perform the Spark Test. (See 01-03-118 ENGINE CONTROL SYSTEM OPERATION INSPECTION [SKYACTIV-G 2.0].) • Is a strong blue spark visible at each cylinder?	Yes	Go to the next step.
		No	Repair or replace the malfunctioning part according to the inspection results.

SYMPTOM TROUBLESHOOTING [SKYACTIV-G 2.0]

STEP	INSPECTION	RESULTS	ACTION
15	**INSPECT IF MALFUNCTION CAUSE IS ENGINE COMPRESSION OR INJECTOR DRIVER (PCM INTEGRATED)** • Measure the compression pressure for each cylinder. (See 01-10A-14 COMPRESSION INSPECTION [SKYACTIV-G 2.0].) • Are compression pressures within specification? **Specification:** • Compression [European (L.H.D. U.K.) specs.] — Standard: **978 kPa {9.97 kgf/cm^2, 142 psi} (300 rpm)** — Minimum: **783 kPa {7.98 kgf/cm^2, 114 psi} (300 rpm)** — Maximum difference between cylinders: **166 kPa {1.69 kgf/cm^2, 24.1 psi}** • Compression [Except European (L.H.D. U.K.) specs.] — Standard: **885 kPa {9.02 kgf/cm^2, 128 psi} (300 rpm)** — Minimum: **708 kPa {7.22 kgf/cm^2, 103 psi} (300 rpm)** — Maximum difference between cylinders: **150 kPa {1.53 kgf/cm^2, 21.8 psi}** **Note** • Because the SKYACTIV-G 2.0 retards the intake valve closing timing, compression pressure is low.	Yes	Injector driver malfunction. • Replace the PCM. (See 01-40-10 PCM REMOVAL/INSTALLATION [SKYACTIV-G 2.0].) If the problem remains, overhaul the engine.
		No	Inspect the following: • Damaged valve seat • Worn valve stem and valve guide • Worn or stuck piston ring • Worn piston, piston ring or cylinder • Improper intake valve timing • Improper exhaust valve timing Service if necessary.
16	Verify the test results. • If normal, return to the diagnostic index to service any additional symptoms. (See 01-03-5 SYMPTOM DIAGNOSTIC INDEX [SKYACTIV-G 2.0].) • If a malfunction remains, inspect the related Service Information and perform the repair or diagnosis. — If the vehicle is repaired, troubleshooting is completed. — If the vehicle is not repaired or additional diagnostic information is not available, replace the PCM. (See 01-40-10 PCM REMOVAL/INSTALLATION [SKYACTIV-G 2.0].)		

SYMPTOM TROUBLESHOOTING [SKYACTIV-G 2.0]

NO.20 FUEL ODOR (IN ENGINE COMPARTMENT) [SKYACTIV-G 2.0]

id0103e6802600

20	FUEL ODOR (IN ENGINE COMPARTMENT)
DESCRIPTION	• Gasoline fuel smell or visible leakage.
POSSIBLE CAUSE	• Missing or loose fuel filler cap • Fuel leakage from fuel system • Improper connection of evaporative related vacuum hoses • Purge solenoid valve malfunction • Excessive fuel pressure • Charcoal canister malfunction • Fuel system vent system blockage • Fuel pressure sensor malfunction • High pressure fuel pump malfunction **Warning** **The following troubleshooting flow chart contains the fuel system diagnosis and repair procedures. Read the following warnings before performing the fuel system services:** • **Fuel vapor is hazardous. It can easily ignite, causing serious injury and damage. Always keep sparks and flames away from fuel.** • **Fuel line spills and leakage are dangerous. Fuel can ignite and cause serious injury or death and damage. Fuel can also irritate skin and eyes. To prevent this, always complete "BEFORE SERVICE PRECAUTION" and "AFTER SERVICE PRECAUTION" described in this manual. (See 01-14A-6 BEFORE SERVICE PRECAUTION [SKYACTIV-G 2.0].) (See 01-14A-7 AFTER SERVICE PRECAUTION [SKYACTIV-G 2.0].)** **Caution** • **Disconnecting/connecting the quick release connector without cleaning it may possibly cause damage to the fuel pipe and quick release connector. Always clean the quick release connector joint area before disconnecting/connecting, and make sure that it is free of foreign material.**

Diagnostic Procedure

STEP	INSPECTION	RESULTS	ACTION
1	**INSPECT FOR MISSING OR LOOSE FUEL FILLER CAP** • Visually inspect if the fuel filler cap is missing or loose. • Is there any malfunction?	Yes	Repair or replace the fuel filler cap.
		No	Go to the next step.
2	**INSPECT FUEL SYSTEM FOR FUEL LEAKAGE** • Visually inspect the fuel leakage at the fuel line. • Is there any leakage?	Yes	Repair or replace the malfunctioning part according to the inspection results.
		No	Go to the next step.
3	**INSPECT VACUUM HOSE CONNECTION** • Inspect the vacuum hose routing. (See 01-13A-4 INTAKE-AIR SYSTEM VACUUM HOSE ROUTING DIAGRAM [SKYACTIV-G 2.0].) • Are vacuum hoses routed properly?	Yes	Go to the next step.
		No	Reconnect the vacuum hose. (See 01-13A-4 INTAKE-AIR SYSTEM VACUUM HOSE ROUTING DIAGRAM [SKYACTIV-G 2.0].)
4	**INSPECT PURGE SOLENOID VALVE** • Inspect the airflow of purge solenoid valve. (See 01-16A-12 PURGE SOLENOID VALVE INSPECTION [SKYACTIV-G 2.0].) • Is the purge solenoid airflow properly?	Yes	Go to the next step.
		No	Replace the purge solenoid valve. (See 01-16A-10 PURGE SOLENOID VALVE REMOVAL/INSTALLATION [SKYACTIV-G 2.0].)

SYMPTOM TROUBLESHOOTING [SKYACTIV-G 2.0]

STEP	INSPECTION	RESULTS	ACTION
5	**INSPECT WHETHER MALFUNCTION IS IN HIGH PRESSURE FUEL PUMP OR CHARCOAL CANISTER** • Start the engine and warm it up completely. • Access the FUEL_PRES PID using the M-MDS at idle. (See 01-02-8 ON-BOARD DIAGNOSTIC TEST [SKYACTIV-G 2.0].) • Is the FUEL_PRES PID value **approx. 3 MPa {31 kgf/cm^2, 435 psi}**?	Yes	Inspect the charcoal canister for fuel saturation. • If excess amount of liquid fuel is present: — Replace the charcoal canister. (See 01-16A-6 CHARCOAL CANISTER REMOVAL/INSTALLATION [SKYACTIV-G 2.0].)
		No	Inspect the fuel pressure sensor and the high pressure fuel pump. (See 01-40-52 FUEL PRESSURE SENSOR INSPECTION [SKYACTIV-G 2.0].) (See 01-14A-49 HIGH PRESSURE FUEL PUMP INSPECTION [SKYACTIV-G 2.0].) Replace the fuel distributor and/or the high pressure fuel pump if necessary. (See 01-14A-51 FUEL INJECTOR REMOVAL/INSTALLATION [SKYACTIV-G 2.0].) (See 01-14A-44 HIGH PRESSURE FUEL PUMP REMOVAL/INSTALLATION [SKYACTIV-G 2.0].)
6	Verify the test results. • If normal, return to the diagnostic index to service any additional symptoms. (See 01-03-5 SYMPTOM DIAGNOSTIC INDEX [SKYACTIV-G 2.0].) • If a malfunction remains, inspect the related Service Information and perform the repair or diagnosis. — If the vehicle is repaired, troubleshooting is completed. — If the vehicle is not repaired or additional diagnostic information is not available, replace the PCM. (See 01-40-10 PCM REMOVAL/INSTALLATION [SKYACTIV-G 2.0].)		

SYMPTOM TROUBLESHOOTING [SKYACTIV-G 2.0]

NO.21 ENGINE NOISE [SKYACTIV-G 2.0]

id0103e6802700

21	ENGINE NOISE
DESCRIPTION	• Engine noise from under bonnet.
POSSIBLE CAUSE	**Squeal, click or chirp noise:** • Improper engine oil level • Loose installation of solenoid valves • Improper drive belt tension • Generator installation • Auto tensioner bearing malfunction • Splash shield or under cover loose (splash water to drive belt) **Rumble or grinding sound noise:** • Improper drive belt tension • Loose parts **Hiss sound noise:** • Vacuum leakage • Loose spark plug • Air leakage from the intake-air system **Rattle noise:** • Loose parts **Rap or roar noise:** • Dynamic damper loose • Exhaust system loose • Intake-air system loose **Other noise:** • Electric variable valve timing actuator malfunction • Hydraulic variable valve timing actuator malfunction • Timing chain noise • Tappet noise **Warning** **The following troubleshooting flow chart contains the fuel system diagnosis and repair procedures. Read the following warnings before performing the fuel system services:** • **Fuel vapor is hazardous. It can easily ignite, causing serious injury and damage. Always keep sparks and flames away from fuel.** • **Fuel line spills and leakage are dangerous. Fuel can ignite and cause serious injury or death and damage. Fuel can also irritate skin and eyes. To prevent this, always complete "BEFORE SERVICE PRECAUTION" and "AFTER SERVICE PRECAUTION" described in this manual. (See 01-14A-6 BEFORE SERVICE PRECAUTION [SKYACTIV-G 2.0].) (See 01-14A-7 AFTER SERVICE PRECAUTION [SKYACTIV-G 2.0].)** **Caution** • **Disconnecting/connecting the quick release connector without cleaning it may possibly cause damage to the fuel pipe and quick release connector. Always clean the quick release connector joint area before disconnecting/connecting, and make sure that it is free of foreign material.**

Diagnostic Procedure

STEP	INSPECTION	RESULTS	ACTION
1	**VERIFY IF THERE IS SQUEAL, CLICK, OR CHIRP SOUND** • Is squeal, click or chirp sound present?	Yes	Inspect the following: • Engine oil level • Solenoid valves installation • Drive belt tension • Generator installation • Auto tensioner bearing damaged • Splash shield or under cover loose Repair or replace the malfunctioning part according to the inspection results.
		No	Go to the next step.
2	**VERIFY IF THERE IS RUMBLE OR GRIND SOUND** • Is rumble or grinding sound present?	Yes	Inspect the following: • Drive belt tension • Loose parts in engine compartment If there is any malfunction: • Repair or replace the malfunctioning part according to the inspection results.
		No	Go to the next step.

SYMPTOM TROUBLESHOOTING [SKYACTIV-G 2.0]

STEP	INSPECTION	RESULTS	ACTION
3	**VERIFY IF THERE IS RATTLE SOUND** • Is rattle sound present?	Yes	Inspect the location of rattle for loose parts. Repair or replace the malfunctioning part according to the inspection results.
		No	Go to the next step.
4	**VERIFY IF THERE IS HISS SOUND** • Is hiss sound present?	Yes	Inspect the following: • Vacuum leakage • Spark plug loose • Intake-air system leakage Repair or replace the malfunctioning part according to the inspection results.
		No	Go to the next step.
5	**VERIFY IF THERE IS RAP OR ROAR SOUND** • Is rap or roar sound present?	Yes	Inspect the following: • Exhaust system installation • Intake-air system installation • Dynamic damper installation Repair or replace the malfunctioning part according to the inspection results.
		No	Go to the next step.
6	**VERIFY IF THERE IS KNOCK SOUND** • Is knocking noise present?	Yes	Perform the symptom troubleshooting “NO.13 KNOCKING/PINGING-ACCELERATION/CRUISE”. (See 01-03-74 NO.13 KNOCKING/PINGING-ACCELERATION/CRUISE [SKYACTIV-G 2.0].)
		No	If noise comes from engine internal: • Inspect the following: — Timing chain — Tappet noise — Electric variable valve timing actuator — Hydraulic variable valve timing actuator — Engine compression • Repair or replace the malfunctioning part according to the inspection results.
7	Verify the test results. • If normal, return to the diagnostic index to service any additional symptoms. (See 01-03-5 SYMPTOM DIAGNOSTIC INDEX [SKYACTIV-G 2.0].) • If a malfunction remains, inspect the related Service Information and perform the repair or diagnosis. — If the vehicle is repaired, troubleshooting is completed. — If the vehicle is not repaired or additional diagnostic information is not available, replace the PCM. (See 01-40-10 PCM REMOVAL/INSTALLATION [SKYACTIV-G 2.0].)		

SYMPTOM TROUBLESHOOTING [SKYACTIV-G 2.0]

NO.22 VIBRATION CONCERNS (ENGINE) [SKYACTIV-G 2.0]

id0103e6802800

22	VIBRATION CONCERNS (ENGINE)
DESCRIPTION	• Vibration from under bonnet or driveline.
POSSIBLE CAUSE	• Loose attaching bolts or worn parts • Components malfunction such as worn parts

Diagnostic Procedure

STEP	INSPECTION	RESULTS	ACTION
1	**VERIFY PART INSTALLATION CONDITION** • Inspect the following components for loose attaching bolts or worn parts: — Cooling fan — Condenser fan — Drive belt and pulley — Engine mounts — Exhaust system • Is there any malfunction?	Yes	Readjust installation position or retighten the suspect parts. Repair or replace the malfunctioning part according to the inspection results for other parts.
		No	Inspect the following systems: • Wheels • Transmission and mounts • Driveline • Suspension Repair or replace the malfunctioning part according to the inspection results.
2	Verify the test results. • If normal, return to the diagnostic index to service any additional symptoms. (See 01-03-5 SYMPTOM DIAGNOSTIC INDEX [SKYACTIV-G 2.0].) • If a malfunction remains, inspect the related Service Information and perform the repair or diagnosis. — If the vehicle is repaired, troubleshooting is completed. — If the vehicle is not repaired or additional diagnostic information is not available, replace the PCM. (See 01-40-10 PCM REMOVAL/INSTALLATION [SKYACTIV-G 2.0].)		

NO.23 A/C DOES NOT WORK SUFFICIENTLY [SKYACTIV-G 2.0]

id0103e6802900

23	A/C DOES NOT WORK SUFFICIENTLY
DESCRIPTION	• A/C compressor magnetic clutch does not engage when A/C switch is turned on.
POSSIBLE CAUSE	• PCM, instrument cluster or climate control unit DTC is stored • Refrigerant pressure sensor malfunction • Improper refrigerant charging amount • Seized A/C compressor • Evaporator temperature sensor malfunction • Open or short circuit in wiring harness between the following terminals: — Evaporator temperature sensor terminal B—Climate control unit terminal H (vehicles with manual air conditioner) — Evaporator temperature sensor terminal A—Climate control unit terminal F (vehicles with manual air conditioner) — Evaporator temperature sensor terminal B—Climate control unit terminal 1F (vehicles with full-auto air conditioner) — Evaporator temperature sensor terminal A—Climate control unit terminal 1X (vehicles with full-auto air conditioner) • Instrument cluster malfunction (Does not receive A/C request signal from climate control unit or transmit it to PCM) • Climate control unit malfunction (A/C switch malfunction or climate control unit does not determine A/C request or transmit A/C request signal) • Open circuit in wiring harness between magnetic clutch and body ground • A/C relay stuck open • Open circuit in wiring harness between the following terminals: — Front body control module (FBCM) terminal 1C—A/C relay terminal A — Battery positive terminal—A/C relay terminal C — A/C relay terminal D—Magnetic clutch terminal A — A/C relay terminal E—PCM terminal 2AF

SYMPTOM TROUBLESHOOTING [SKYACTIV-G 2.0]

23	A/C DOES NOT WORK SUFFICIENTLY

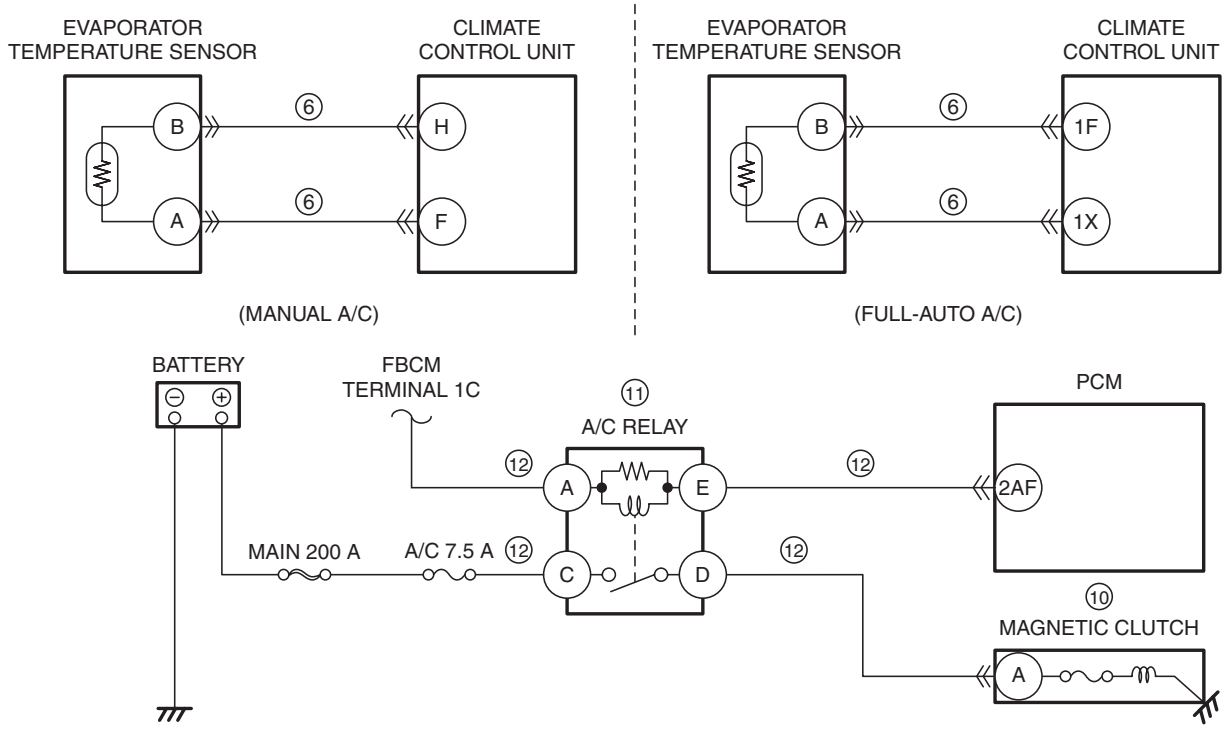

A/C RELAY (RELAY AND FUSE BLOCK)

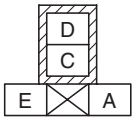

FRONT

EVAPORATOR TEMPERATURE SENSOR WIRING HARNESS-SIDE CONNECTOR

MAGNETIC CLUTCH WIRING HARNESS-SIDE CONNECTOR

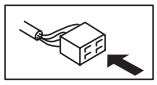

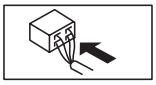

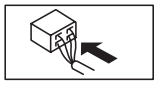

CLIMATE CONTROL UNIT WIRING HARNESS-SIDE CONNECTOR

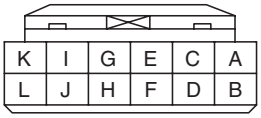

(MANUAL A/C)

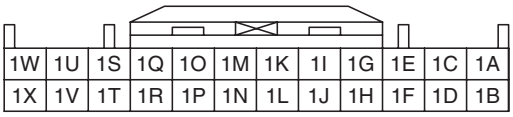

(FULL-AUTO A/C)

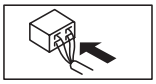

PCM WIRING HARNESS-SIDE CONNECTOR

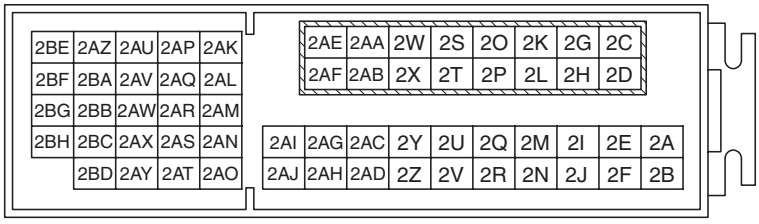

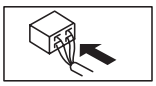

SYMPTOM TROUBLESHOOTING [SKYACTIV-G 2.0]

Diagnostic Procedure

STEP	INSPECTION	RESULTS	ACTION
1	**VERIFY PCM, INSTRUMENT CLUSTER AND CLIMATE CONTROL UNIT DTC** • Retrieve the PCM, instrument cluster and climate control unit DTCs using the M-MDS. (See 01-02-8 ON-BOARD DIAGNOSTIC TEST [SKYACTIV-G 2.0].) (See 09-02G-7 DTC INSPECTION [INSTRUMENT CLUSTER].) (See 07-02-6 DTC DISPLAY [FULL-AUTO AIR CONDITIONER].) • Are any DTCs present?	Yes	Go to the applicable DTC inspection. (See 01-02-14 DTC TABLE [SKYACTIV-G 2.0].) (See 09-02G-10 DTC TABLE [INSTRUMENT CLUSTER].) (See 07-02-7 DTC TABLE [FULL-AUTO AIR CONDITIONER].)
		No	Go to the next step.
2	**DETERMINE IF MALFUNCTION CAUSE IS A/C RELAY CONTROL SIGNAL OR A/C REQUEST SIGNAL** • Access the PCM PID ACCS using the M-MDS. (See 01-02-8 ON-BOARD DIAGNOSTIC TEST [SKYACTIV-G 2.0].) • Start the engine and idle it. • Turn the ACCS PID to ON from OFF using the M-MDS simulation function. • Is the magnetic clutch engaged?	Yes	Go to the next step.
		No	Go to Step 9.
3	**DETERMINE IF MALFUNCTION CAUSE IS REFRIGERANT PRESSURE SENSOR OR OTHER** • Access the PCM PID AC_REQ using the M-MDS. (See 01-02-8 ON-BOARD DIAGNOSTIC TEST [SKYACTIV-G 2.0].) • Monitor the AC_REQ PID while turning on and off the air conditioner with switch on the control panel. • Is the AC_REQ PID value normal? (See 01-40-17 PCM INSPECTION [SKYACTIV-G 2.0].)	Yes	Go to the next step.
		No	Go to Step 5.
4	**INSPECT REFRIGERANT PRESSURE SENSOR** • Inspect the refrigerant pressure sensor. (See 07-40B-14 REFRIGERANT PRESSURE SENSOR INSPECTION [MANUAL AIR CONDITIONER].) (See 07-40A-30 REFRIGERANT PRESSURE SENSOR INSPECTION [FULL-AUTO AIR CONDITIONER].) • Is there any malfunction?	Yes	Repair or replace the malfunctioning part according to the inspection results.
		No	Inspect the following: • Refrigerant charging amount • A/C compressor seized Repair or replace the malfunctioning part according to the inspection results if necessary.
5	**DETERMINE IF MALFUNCTION CAUSE IS EVAPORATOR TEMPERATURE SENSOR OR OTHER** • Measure the voltage at the climate control unit terminal H (wiring harness-side). (vehicles with manual air conditioner) • Measure the voltage at the climate control unit terminal 1F (wiring harness-side). (vehicles with full-auto air conditioner) • Is the voltage normal? (See 07-40B-25 CLIMATE CONTROL UNIT INSPECTION [MANUAL AIR CONDITIONER].) (See 07-40A-33 CLIMATE CONTROL UNIT INSPECTION [FULL-AUTO AIR CONDITIONER].)	Yes	Vehicles with manual air conditioner: • Go to Step 7. Vehicles with full-auto air conditioner: • Go to Step 9.
		No	Go to the next step.

SYMPTOM TROUBLESHOOTING [SKYACTIV-G 2.0]

STEP	INSPECTION	RESULTS	ACTION
6	**INSPECT EVAPORATOR TEMPERATURE SENSOR** • Inspect the evaporator temperature sensor. (See 07-40B-12 EVAPORATOR TEMPERATURE SENSOR INSPECTION [MANUAL AIR CONDITIONER].) (See 07-40A-27 EVAPORATOR TEMPERATURE SENSOR INSPECTION [FULL-AUTO AIR CONDITIONER].) • Is there any malfunction?	Yes	Replace the evaporator temperature sensor. (See 07-40B-11 EVAPORATOR TEMPERATURE SENSOR REMOVAL/INSTALLATION [MANUAL AIR CONDITIONER].) (See 07-40A-26 EVAPORATOR TEMPERATURE SENSOR REMOVAL/INSTALLATION [FULL-AUTO AIR CONDITIONER].)
		No	Inspect for short or open circuit between the following terminals: • Evaporator temperature sensor terminal B—Climate control unit terminal H (vehicles with manual air conditioner) • Evaporator temperature sensor terminal A—Climate control unit terminal F (vehicles with manual air conditioner) • Evaporator temperature sensor terminal B—Climate control unit terminal 1F (vehicles with full-auto air conditioner) • Evaporator temperature sensor terminal A—Climate control unit terminal 1X (vehicles with full-auto air conditioner) Repair or replace the suspected wiring harness if necessary.
7	**DETERMINE IF MALFUNCTION CAUSE IS INSTRUMENT CLUSTER OR OTHER** • Verify the information display indication of A/C system while turning on and off the air conditioner with switch on the control panel. • Does the information display indicate properly?	Yes	Instrument cluster does not receive the A/C request signal from climate control unit or transmit it to PCM. • Replace the instrument cluster. (See 09-22-6 INSTRUMENT CLUSTER REMOVAL/INSTALLATION.)
		No	Go to the next step.
8	**DETERMINE IF MALFUNCTION CAUSE IS A/C REQUEST SIGNAL RELATED WIRING HARNESS OR CLIMATE CONTROL UNIT** • Switch the ignition to off. • Inspect for open or short circuit between climate control unit terminal B (wiring harness-side) and instrument cluster terminal L (wiring harness-side). • Is there any malfunction?	Yes	Repair or replace the suspected wiring harness.
		No	A/C switch malfunction, or climate control unit can not determine the A/C request or transmit the A/C request signal. • Replace the climate control unit. (See 07-40B-16 CLIMATE CONTROL UNIT REMOVAL/INSTALLATION [MANUAL AIR CONDITIONER].) (See 07-40A-32 CLIMATE CONTROL UNIT REMOVAL/INSTALLATION [FULL-AUTO AIR CONDITIONER].)
9	**DETERMINE IF MALFUNCTION CAUSE IS A/C CONTROL SIGNAL OR MAGNETIC CLUTCH** • Start the engine and idle it. • Access the PCM PID ACCS using the M-MDS. (See 01-02-8 ON-BOARD DIAGNOSTIC TEST [SKYACTIV-G 2.0].) • Turn the ACCS PID to ON from OFF using the M-MDS simulation function. • Measure the voltage at the magnetic clutch terminal A (wiring harness-side). • Is the voltage **10.5 V or more**?	Yes	Go to the next step.
		No	Go to Step 11.
10	**INSPECT IF MALFUNCTION CAUSE IS MAGNETIC CLUTCH OR MAGNETIC CLUTCH GROUND CIRCUIT** • Switch the ignition to off. • Disconnect the magnetic clutch connector. • Inspect for continuity between magnetic clutch terminal A (part-side) and body ground. • Is there continuity?	Yes	Inspect the magnetic clutch. (See 07-40B-9 MAGNETIC CLUTCH INSPECTION [MANUAL AIR CONDITIONER].) (See 07-40A-19 MAGNETIC CLUTCH INSPECTION [FULL-AUTO AIR CONDITIONER].) Replace the magnetic clutch if necessary.
		No	Inspect the A/C compressor. (poor contact to ground) • If there is any malfunction: — Repair or replace the malfunctioning part according to the inspection results. • If there is no malfunction: — Replace the A/C compressor. (internal circuit open)

SYMPTOM TROUBLESHOOTING [SKYACTIV-G 2.0]

STEP	INSPECTION	RESULTS	ACTION
11	**INSPECT A/C RELAY** • Switch the ignition to off. • Remove the A/C relay. • Inspect the A/C relay. (See 09-21-29 RELAY INSPECTION.) • Is there any malfunction?	Yes	Replace the A/C relay.
		No	Go to the next step.
12	**INSPECT A/C RELAY CONTROL CIRCUIT FOR OPEN CIRCUIT** • A/C relay is removed. • Disconnect the PCM connector. • Inspect for continuity between A/C relay terminal E (wiring harness-side) and PCM terminal 2AF (wiring harness-side). • Is there continuity?	Yes	Inspect for continuity between the following: • Front body control module (FBCM) terminal 1C—A/C relay terminal A • Battery positive terminal—A/C relay terminal C • A/C relay terminal D—Magnetic clutch terminal A Repair or replace the wiring harness for a possible open circuit.
		No	Repair or replace the wiring harness for a possible open circuit.
13	Verify the test results. • If normal, return to the diagnostic index to service any additional symptoms. (See 01-03-5 SYMPTOM DIAGNOSTIC INDEX [SKYACTIV-G 2.0].) • If a malfunction remains, inspect the related Service Information and perform the repair or diagnosis. — If the vehicle is repaired, troubleshooting is completed. — If the vehicle is not repaired or additional diagnostic information is not available, replace the PCM. (See 01-40-10 PCM REMOVAL/INSTALLATION [SKYACTIV-G 2.0].)		

SYMPTOM TROUBLESHOOTING [SKYACTIV-G 2.0]

NO.24 A/C IS ALWAYS ON OR A/C COMPRESSOR RUNS CONTINUOUSLY [SKYACTIV-G 2.0]

id0103e6803000

24	A/C IS ALWAYS ON OR A/C COMPRESSOR RUNS CONTINUOUSLY
DESCRIPTION	• A/C compressor magnetic clutch does not disengage.
POSSIBLE CAUSE	• PCM, instrument cluster or climate control unit DTC is stored • Short to power supply in wiring harness between A/C relay terminal D and magnetic clutch terminal A • Magnetic clutch engagement is stuck • Climate control unit malfunction (Climate control unit always transmits A/C request signal) • A/C relay is stuck closed • Short to ground in wiring harness between A/C relay terminal E and PCM terminal 2AF

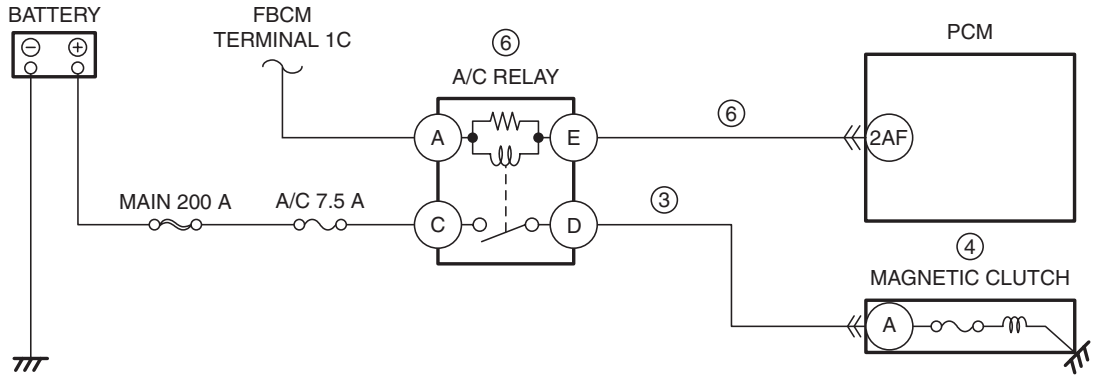

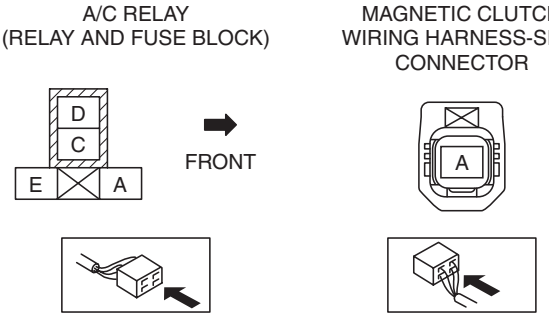

PCM WIRING HARNESS-SIDE CONNECTOR

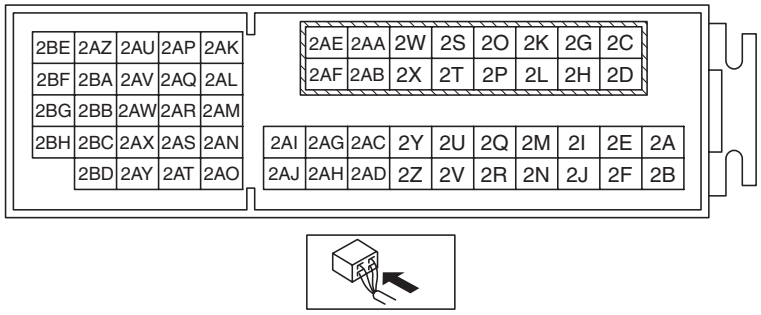

SYMPTOM TROUBLESHOOTING [SKYACTIV-G 2.0]

Diagnostic Procedure

STEP	INSPECTION	RESULTS	ACTION
1	**VERIFY PCM, INSTRUMENT CLUSTER AND CLIMATE CONTROL UNIT DTC** • Retrieve the PCM, instrument cluster and climate control unit DTCs using the M-MDS. (See 01-02-8 ON-BOARD DIAGNOSTIC TEST [SKYACTIV-G 2.0].) (See 09-02G-7 DTC INSPECTION [INSTRUMENT CLUSTER].) (See 07-02-6 DTC DISPLAY [FULL-AUTO AIR CONDITIONER].) • Are any DTCs present?	Yes	Go to the applicable DTC inspection. (See 01-02-14 DTC TABLE [SKYACTIV-G 2.0].) (See 09-02G-10 DTC TABLE [INSTRUMENT CLUSTER].) (See 07-02-7 DTC TABLE [FULL-AUTO AIR CONDITIONER].)
		No	Go to the next step.
2	**DETERMINE IF MALFUNCTION CAUSE IS MAGNETIC CLUTCH OR OTHER** • Start the engine and idle it. • Turn the A/C switch on. • Remove the A/C relay. • Does the magnetic clutch disengage?	Yes	Go to Step 5.
		No	Go to the next step.
3	**INSPECT IF MALFUNCTION CAUSE IS MAGNETIC CLUTCH POWER SUPPLY CIRCUIT OR MAGNETIC CLUTCH** • A/C relay is removed. • Switch the ignition to off. • Disconnect the magnetic clutch connector. • Start the engine and idle it. • Does the magnetic clutch disengage?	Yes	Inspect for short to power supply circuit between magnetic clutch terminal A and A/C relay terminal D. Repair or replace the wiring harness for a possible short to power supply if necessary.
		No	Go to the next step.
4	**INSPECT MAGNETIC CLUTCH CLEARANCE** • Verify the magnetic clutch clearance. (See 07-40B-9 MAGNETIC CLUTCH ADJUSTMENT [MANUAL AIR CONDITIONER].) (See 07-40A-18 MAGNETIC CLUTCH ADJUSTMENT [FULL-AUTO AIR CONDITIONER].) • Is the magnetic clutch clearance normal?	Yes	Inspect the magnetic clutch to see if it is stuck. (See 07-40B-9 MAGNETIC CLUTCH INSPECTION [MANUAL AIR CONDITIONER].) (See 07-40A-19 MAGNETIC CLUTCH INSPECTION [FULL-AUTO AIR CONDITIONER].) Replace the magnetic clutch if necessary. (See 07-40B-7 MAGNETIC CLUTCH DISASSEMBLY/ASSEMBLY [MANUAL AIR CONDITIONER].) (See 07-40A-17 MAGNETIC CLUTCH DISASSEMBLY/ASSEMBLY [FULL-AUTO AIR CONDITIONER].)
		No	Adjust the magnetic clutch clearance. (See 07-40B-9 MAGNETIC CLUTCH ADJUSTMENT [MANUAL AIR CONDITIONER].) (See 07-40A-18 MAGNETIC CLUTCH ADJUSTMENT [FULL-AUTO AIR CONDITIONER].)
5	**DETERMINE IF MALFUNCTION CAUSE IS A/C RELAY CONTROL SIGNAL OR A/C REQUEST SIGNAL** • Access the PCM PID ACCS using the M-MDS. (See 01-02-8 ON-BOARD DIAGNOSTIC TEST [SKYACTIV-G 2.0].) • Monitor the PID ACCS while turning on and off the air conditioner with switch on the control panel. • Is the ACCS PID value always ON?	Yes	Climate control unit always transmits A/C request signal. • Replace the climate control unit. (See 07-40B-16 CLIMATE CONTROL UNIT REMOVAL/INSTALLATION [MANUAL AIR CONDITIONER].) (See 07-40A-32 CLIMATE CONTROL UNIT REMOVAL/INSTALLATION [FULL-AUTO AIR CONDITIONER].)
		No	Go to the next step.
6	**INSPECT A/C RELAY** • Inspect the A/C relay. (See 09-21-29 RELAY INSPECTION.) • Is there any malfunction?	Yes	Replace the A/C relay.
		No	Inspect for short to ground circuit between A/C relay terminal E and PCM terminal 2AF. Repair or replace the wiring harness for a possible short to ground if necessary.
7	Verify the test results. • If normal, return to the diagnostic index to service any additional symptoms. (See 01-03-5 SYMPTOM DIAGNOSTIC INDEX [SKYACTIV-G 2.0].) • If a malfunction remains, inspect the related Service Information and perform the repair or diagnosis. — If the vehicle is repaired, troubleshooting is completed. — If the vehicle is not repaired or additional diagnostic information is not available, replace the PCM. (See 01-40-10 PCM REMOVAL/INSTALLATION [SKYACTIV-G 2.0].)		

SYMPTOM TROUBLESHOOTING [SKYACTIV-G 2.0]

NO.25 A/C IS NOT CUT OFF UNDER WIDE OPEN THROTTLE CONDITIONS [SKYACTIV-G 2.0]

id0103e6803100

25	A/C IS NOT CUT OFF UNDER WIDE OPEN THROTTLE CONDITIONS
DESCRIPTION	• A/C compressor magnetic clutch does not disengage under WOT.
POSSIBLE CAUSE	• APP sensor malfunction • Loosely installed APP sensor • PCM DTC is stored

Diagnostic Procedure

STEP	INSPECTION	RESULTS	ACTION
1	**DETERMINE IF MALFUNCTION CAUSE IS A/C SYSTEM OR OTHER** • Turn the A/C switch off. • Does the magnetic clutch disengage?	Yes	Go to the next step.
		No	Perform the symptom troubleshooting “NO.24 A/C IS ALWAYS ON OR A/C COMPRESSOR RUNS CONTINUOUSLY”. (See 01-03-106 NO.24 A/C IS ALWAYS ON OR A/C COMPRESSOR RUNS CONTINUOUSLY [SKYACTIV-G 2.0].)
2	**VERIFY PCM DTC** • Retrieve any DTCs using the M-MDS. (See 01-02-8 ON-BOARD DIAGNOSTIC TEST [SKYACTIV-G 2.0].) • Are any DTCs present?	Yes	Go to the applicable DTC inspection. (See 01-02-14 DTC TABLE [SKYACTIV-G 2.0].)
		No	Go to the next step.
3	Verify the test results. • If normal, return to the diagnostic index to service any additional symptoms. (See 01-03-5 SYMPTOM DIAGNOSTIC INDEX [SKYACTIV-G 2.0].) • If a malfunction remains, inspect the related Service Information and perform the repair or diagnosis. — If the vehicle is repaired, troubleshooting is completed. — If the vehicle is not repaired or additional diagnostic information is not available, replace the PCM. (See 01-40-10 PCM REMOVAL/INSTALLATION [SKYACTIV-G 2.0].)		

NO.26 EXHAUST SULPHUR SMELL [SKYACTIV-G 2.0]

id0103e6803200

26	EXHAUST SULPHUR SMELL
DESCRIPTION	• Rotten egg smell (sulphur) from exhaust.
POSSIBLE CAUSE	• Electrical connectors are disconnected or connected poorly • Vacuum lines are disconnected or connected improperly. • Poor fuel quality • PCM DTC is stored • Inadequate fuel pressure — Fuel pressure sensor malfunction — High pressure fuel pump malfunction — Spill valve control solenoid valve control circuit malfunction (damage to driver in PCM caused by short circuit to ground system) — Spill valve control solenoid valve (built-into high pressure fuel pump) malfunction — Relief valve (built-into high pressure fuel pump) malfunction — Fuel line restricted or clogged — Fuel pump unit malfunction • Charcoal canister malfunction • Fuel tank vent system malfunction **Warning** **The following troubleshooting flow chart contains the fuel system diagnosis and repair procedures. Read the following warnings before performing the fuel system services:** • **Fuel vapor is hazardous. It can easily ignite, causing serious injury and damage. Always keep sparks and flames away from fuel.** • **Fuel line spills and leakage are dangerous. Fuel can ignite and cause serious injury or death and damage. Fuel can also irritate skin and eyes. To prevent this, always complete “BEFORE SERVICE PRECAUTION” and “AFTER SERVICE PRECAUTION” described in this manual. (See 01-14A-6 BEFORE SERVICE PRECAUTION [SKYACTIV-G 2.0].) (See 01-14A-7 AFTER SERVICE PRECAUTION [SKYACTIV-G 2.0].)** **Caution** • **Disconnecting/connecting the quick release connector without cleaning it may possibly cause damage to the fuel pipe and quick release connector. Always clean the quick release connector joint area before disconnecting/connecting, and make sure that it is free of foreign material.**

SYMPTOM TROUBLESHOOTING [SKYACTIV-G 2.0]

Diagnostic Procedure

STEP	INSPECTION	RESULTS	ACTION
1	**VERIFY IF THERE IS POOR DRIVEABILITY OR EXHAUST GAS RELATED MALFUNCTION** • Are any driveability or exhaust smoke concerns present?	Yes	Go to the applicable symptom troubleshooting. (See 01-03-5 SYMPTOM DIAGNOSTIC INDEX [SKYACTIV-G 2.0].)
		No	Go to the next step.
2	**INSPECT RELATED PART CONDITION** • Inspect the following: — Electrical connections — Vacuum lines — Fuel quality • Is there any malfunction?	Yes	Service if necessary. • Repeat this step.
		No	Go to the next step.
3	**VERIFY PCM DTC** • Retrieve any DTCs using the M-MDS. (See 01-02-8 ON-BOARD DIAGNOSTIC TEST [SKYACTIV-G 2.0].) • Are any DTCs present?	Yes	Go to the applicable DTC inspection. (See 01-02-14 DTC TABLE [SKYACTIV-G 2.0].)
		No	Go to the next step.
4	**INSPECT FUEL PRESSURE (HIGH-SIDE)** • Start the engine and warm it up completely. • Access the FUEL_PRES PID using the M-MDS at idle. (See 01-02-8 ON-BOARD DIAGNOSTIC TEST [SKYACTIV-G 2.0].) • Is the FUEL_PRES PID value **approx. 3 MPa {31 kgf/cm^2, 435 psi}**?	Yes	Go to Step 8.
		No	Lower than **3 MPa {31 kgf/cm2, 435 psi}**: • Inspect the following: — Fuel leakage at the fuel line and fuel injector — Fuel pump • Perform the Fuel Pump (Low-pressure Side) Operation Inspection. (See 01-03-118 ENGINE CONTROL SYSTEM OPERATION INSPECTION [SKYACTIV-G 2.0].) — Fuel pressure sensor (See 01-40-52 FUEL PRESSURE SENSOR INSPECTION [SKYACTIV-G 2.0].) — High pressure fuel pump (See 01-14A-49 HIGH PRESSURE FUEL PUMP INSPECTION [SKYACTIV-G 2.0].) • If there is any malfunction: — Repair or replace the malfunctioning part according to the inspection results. • If there is no malfunction: — Go to Step 7. Higher than **3 MPa {31 kgf/cm2, 435 psi}**: • Go to the next step.
5	**DETERMINE IF MALFUNCTION CAUSE IS FUEL PRESSURE SENSOR OR HIGH PRESSURE FUEL PUMP** • Is the vehicle acceleration performance normal?	Yes	Go to the next step.
		No	Go to Step 7.
6	**INSPECT FUEL PRESSURE SENSOR** • Inspect the fuel pressure sensor. (See 01-40-52 FUEL PRESSURE SENSOR INSPECTION [SKYACTIV-G 2.0].) • Is there any malfunction?	Yes	Replace the fuel distributor. (See 01-14A-51 FUEL INJECTOR REMOVAL/INSTALLATION [SKYACTIV-G 2.0].)
		No	Go to Step 8.
7	**INSPECT SPILL VALVE CONTROL SOLENOID VALVE CONTROL CIRCUIT FOR SHORT TO GROUND** • Switch the ignition to off. • Disconnect the high pressure fuel pump and PCM connectors. • Inspect for continuity between high pressure fuel pump terminal A (wiring harness-side) and body ground. • Is there continuity?	Yes	Repair or replace the wiring harness for a possible short to ground. • If the malfunction remains: — Replace the PCM. (damage to driver in PCM) (See 01-40-10 PCM REMOVAL/INSTALLATION [SKYACTIV-G 2.0].)
		No	Replace the high pressure fuel pump. (See 01-14A-44 HIGH PRESSURE FUEL PUMP REMOVAL/INSTALLATION [SKYACTIV-G 2.0].)

SYMPTOM TROUBLESHOOTING [SKYACTIV-G 2.0]

STEP	INSPECTION	RESULTS	ACTION
8	**INSPECT FUEL PRESSURE (LOW-SIDE)** • Connect the fuel pressure gauge between fuel pump and high pressure fuel pump. • Measure the low side fuel pressure. (See 01-14A-8 FUEL LINE PRESSURE INSPECTION [SKYACTIV-G 2.0].) • Is the low side fuel pressure within specification? **Specification:** • **405—485 kPa {4.13—4.94 kgf/cm^2, 58.8—70.3 psi}**	Yes	Go to the next step.
		No	Inspect the following: • Fuel line restriction • Fuel filter clogged — If there is any malfunction: • Repair or replace the malfunctioning part according to the inspection results. — If there is no malfunction: • Replace the fuel pump unit. (See 01-14A-38 FUEL PUMP UNIT REMOVAL/INSTALLATION [SKYACTIV-G 2.0].)
9	**DETERMINE IF MALFUNCTION CAUSE IS CHARCOAL CANISTER OR FUEL TANK VENT SYSTEM** • Inspect the charcoal canister for fuel saturation. (See 01-16A-8 CHARCOAL CANISTER INSPECTION [SKYACTIV-G 2.0].) • Is there excess amount of liquid fuel present in canister?	Yes	Replace the charcoal canister. (See 01-16A-6 CHARCOAL CANISTER REMOVAL/INSTALLATION [SKYACTIV-G 2.0].)
		No	Inspect the fuel tank vent system. • If the fuel tank vent system is normal: — Suggest trying a different brand since sulfur content can vary in different fuels. • If fuel tank vent system is not normal: — Repair or replace the malfunctioning part according to the inspection results.
10	Verify the test results. • If normal, return to the diagnostic index to service any additional symptoms. (See 01-03-5 SYMPTOM DIAGNOSTIC INDEX [SKYACTIV-G 2.0].) • If a malfunction remains, inspect the related Service Information and perform the repair or diagnosis. — If the vehicle is repaired, troubleshooting is completed. — If the vehicle is not repaired or additional diagnostic information is not available, replace the PCM. (See 01-40-10 PCM REMOVAL/INSTALLATION [SKYACTIV-G 2.0].)		

SYMPTOM TROUBLESHOOTING [SKYACTIV-G 2.0]

NO.27 SPARK PLUG CONDITION [SKYACTIV-G 2.0]

id0103e6804400

27	SPARK PLUG CONDITION
DESCRIPTION	• Incorrect spark plug condition.
POSSIBLE CAUSE	**Note** • Inspecting the spark plug conditions can determine whether a problem is related to a specific cylinder or possibly all cylinders. **Wet/carbon stuck on specific plug:** • Spark—Weak, not visible • Air/fuel mixture—Excessive fuel injection volume • Compression—No compression, low compression • Malfunction spark plug **Grayish white with specific plug:** • Air/fuel mixture—Insufficient fuel injection volume • Malfunction spark plug **Wet/carbon is stuck on all plugs:** • Spark—Spark weak • Air/fuel mixture—Too rich, excessive fuel line pressure • Erratic signal to PCM — ECT sensor or related circuit malfunction — MAF sensor or related circuit malfunction — A/F sensor or related circuit malfunction — HO2S or related circuit malfunction • Compression—Low compression • Restriction in intake/exhaust system **Grayish white with all plugs:** • Erratic signal to PCM — ECT sensor or related circuit malfunction — MAF sensor or related circuit malfunction — A/F sensor or related circuit malfunction — HO2S or related circuit malfunction • Air/fuel mixture—Too lean, insufficient fuel line pressure **Warning** • **The following troubleshooting flow chart contains the fuel system diagnosis and repair procedures. Read the following warnings before servicing the fuel system:** **— Fuel vapor is hazardous. It can easily ignite, causing serious injury and damage. Always keep sparks and flames away from fuel.** **— Fuel line spills and leakage are dangerous. Fuel can ignite and cause serious injuries or death and damage. Fuel can also irritate skin and eyes. To prevent this, always complete "BEFORE SERVICE PRECAUTION" and "AFTER SERVICE PRECAUTION" described in this manual. (See 01-14A-6 BEFORE SERVICE PRECAUTION [SKYACTIV-G 2.0].) (See 01-14A-7 AFTER SERVICE PRECAUTION [SKYACTIV-G 2.0].)** **Caution** • **Disconnecting/connecting the quick release connector without cleaning it may cause damage to the fuel pipe and the quick release connector. Always clean the quick release connector joint area before disconnecting/connecting, and make sure that it is free of foreign material.**

Diagnostic Procedure

STEP	INSPECTION	RESULTS	ACTION
1	**VERIFY SPARK PLUG CONDITION** • Remove all spark plugs. (See 01-18-3 SPARK PLUG REMOVAL/INSTALLATION [SKYACTIV-G 2.0].) • Inspect the spark plug. (See 01-18-3 SPARK PLUG INSPECTION [SKYACTIV-G 2.0].) • Is there any malfunction?	Yes	Specific plug is wet or covered with carbon: • Go to the next step. Specific plug looks grayish white: • Go to Step 7. All plugs are wet or covered with carbon: • Go to Step 9. All plugs look grayish white: • Go to Step 15.
		No	Symptom troubleshooting completed.
2	**DETERMINE IF MALFUNCTION CAUSE IS ENGINE OIL LOSS OR OTHER** • Are the spark plugs wet/covered with carbon from the engine oil?	Yes	Inspect all areas related to oil, working up and down. Repair or replace the malfunctioning part according to the inspection results.
		No	Go to the next step.

SYMPTOM TROUBLESHOOTING [SKYACTIV-G 2.0]

STEP	INSPECTION	RESULTS	ACTION
3	**INSPECT SPARK PLUG** • Inspect the spark plugs for the following: — Air gap — Cracked insulator — Heat range — Worn electrode • Is there any malfunction?	Yes	Replace the spark plug. (See 01-18-3 SPARK PLUG REMOVAL/ INSTALLATION [SKYACTIV-G 2.0].)
		No	Go to the next step.
4	**INSPECT ENGINE COMPRESSION** • Inspect the compression pressure at the suspected cylinder. (See 01-10A-14 COMPRESSION INSPECTION [SKYACTIV-G 2.0].) • Are compression pressures within specification? **Specification:** • Compression [European (L.H.D. U.K.) specs.] — Standard: **978 kPa {9.97 kgf/cm^2, 142 psi} (300 rpm)** — Minimum: **783 kPa {7.98 kgf/cm^2, 114 psi} (300 rpm)** — Maximum difference between cylinders: **166 kPa {1.69 kgf/cm^2, 24.1 psi}** • Compression [Except European (L.H.D. U.K.) specs.] — Standard: **885 kPa {9.02 kgf/cm^2, 128 psi} (300 rpm)** — Minimum: **708 kPa {7.22 kgf/cm^2, 103 psi} (300 rpm)** — Maximum difference between cylinders: **150 kPa {1.53 kgf/cm^2, 21.8 psi}** **Note** • Because the SKYACTIV-G 2.0 retards the intake valve closing timing, compression pressure is low.	Yes	Go to the next step.
		No	Repair or replace the malfunctioning part according to the inspection results.
5	**INSPECT IGNITION SYSTEM OPERATION** • Reinstall all spark plugs. (See 01-18-3 SPARK PLUG REMOVAL/ INSTALLATION [SKYACTIV-G 2.0].) • Perform the Spark Test at the suspected cylinder. (See 01-03-118 ENGINE CONTROL SYSTEM OPERATION INSPECTION [SKYACTIV-G 2.0].) • Is a strong blue spark visible (compare with normal cylinder)?	Yes	Go to the next step.
		No	Repair or replace the malfunctioning part according to the inspection results.

SYMPTOM TROUBLESHOOTING [SKYACTIV-G 2.0]

STEP	INSPECTION	RESULTS	ACTION
6	**INSPECT FUEL LINE PRESSURE** • Inspect the fuel line pressure. (See 01-14A-8 FUEL LINE PRESSURE INSPECTION [SKYACTIV-G 2.0].) • Is the low side fuel pressure within specification? **Specification:** • **405—485 kPa {4.13—4.94 kgf/cm^2, 58.8—70.3 psi}**	Yes	Inspect the fuel injector for the following: • Injection volume • Leakage • Open or short circuit in injector Repair or replace the malfunctioning part according to the inspection results.
		No	Zero or low: • Inspect the fuel pump relay and the fuel pump circuit. (See 09-21-29 RELAY INSPECTION.) • Inspect the fuel line for restriction. — If there is any malfunction: • Repair or replace the malfunctioning part according to the inspection results. — If there is no malfunction: • Replace the fuel pump unit. (Pressure regulator or fuel pump malfunction) (See 01-14A-38 FUEL PUMP UNIT REMOVAL/INSTALLATION [SKYACTIV-G 2.0].) High: • Replace the fuel pump unit. (Pressure regulator malfunction) (See 01-14A-38 FUEL PUMP UNIT REMOVAL/INSTALLATION [SKYACTIV-G 2.0].)
7	**INSPECT SPARK PLUG** • Inspect the spark plug for the following: — Air gap — Heat range • Is there any malfunction?	Yes	Replace the spark plug. (See 01-18-3 SPARK PLUG REMOVAL/INSTALLATION [SKYACTIV-G 2.0].)
		No	Go to the next step.
8	**INSPECT FUEL INJECTOR OPERATION** • Perform the Fuel Injector Operation Inspection. (See 01-03-118 ENGINE CONTROL SYSTEM OPERATION INSPECTION [SKYACTIV-G 2.0].) • Do the fuel injectors operate properly?	Yes	Go to the next step.
		No	Repair or replace the malfunctioning part according to the inspection results.
9	**INSPECT AIR CLEANER ELEMENT** • Is the air cleaner element clean?	Yes	Go to the next step.
		No	Replace the air cleaner element.
10	**VERIFY CURRENT INPUT SIGNAL STATUS** • Access the following PIDs using the M-MDS: (See 01-02-8 ON-BOARD DIAGNOSTIC TEST [SKYACTIV-G 2.0].) — ECT — MAF — O2S11 (When engine can be started) — O2S12 (When engine can be started) • Are the PIDs normal? (See 01-40-17 PCM INSPECTION [SKYACTIV-G 2.0].)	Yes	Go to the next step.
		No	ECT PID is not as specified: • Inspect for an intermittent open circuit of the ECT sensor and the related wiring harness. (See 01-40-43 ENGINE COOLANT TEMPERATURE (ECT) SENSOR INSPECTION [SKYACTIV-G 2.0].) MAF PID is not as specified: • Inspect for an intermittent open circuit of the MAF sensor and the related wiring harness. (See 01-40-45 MASS AIR FLOW (MAF) SENSOR INSPECTION [SKYACTIV-G 2.0].) O2S11 PID is not as specified: • Inspect for an intermittent open circuit of the A/F sensor and the related wiring harness. (See 01-40-55 AIR FUEL RATIO (A/F) SENSOR INSPECTION [SKYACTIV-G 2.0].) O2S12 PID is not as specified: • Inspect for an intermittent open circuit of the HO2S and the related wiring harness. (See 01-40-58 HEATED OXYGEN SENSOR (HO2S) INSPECTION [SKYACTIV-G 2.0].) Repair or replace the malfunctioning part according to the inspection results.

SYMPTOM TROUBLESHOOTING [SKYACTIV-G 2.0]

STEP	INSPECTION	RESULTS	ACTION
11	**INSPECT PURGE CONTROL SYSTEM OPERATION** • Perform the Purge Control System Inspection when the engine can be started. (See 01-03-118 ENGINE CONTROL SYSTEM OPERATION INSPECTION [SKYACTIV-G 2.0].) • Is there any malfunction?	Yes	Repair or replace the malfunctioning part according to the inspection results.
		No	Go to the next step.
12	**INSPECT IGNITION SYSTEM OPERATION** • Perform the Spark Test. (See 01-03-118 ENGINE CONTROL SYSTEM OPERATION INSPECTION [SKYACTIV-G 2.0].) • Is a strong blue spark visible at each cylinder?	Yes	Go to the next step.
		No	Repair or replace the malfunctioning part according to the inspection results.
13	**INSPECT ENGINE COMPRESSION** • Measure the compression pressure for each cylinder. (See 01-10A-14 COMPRESSION INSPECTION [SKYACTIV-G 2.0].) • Are compression pressures within specification? **Specification:** • Compression [European (L.H.D. U.K.) specs.] — Standard: **978 kPa {9.97 kgf/cm^2, 142 psi} (300 rpm)** — Minimum: **783 kPa {7.98 kgf/cm^2, 114 psi} (300 rpm)** — Maximum difference between cylinders: **166 kPa {1.69 kgf/cm^2, 24.1 psi}** • Compression [Except European (L.H.D. U.K.) specs.] — Standard: **885 kPa {9.02 kgf/cm^2, 128 psi} (300 rpm)** — Minimum: **708 kPa {7.22 kgf/cm^2, 103 psi} (300 rpm)** — Maximum difference between cylinders: **150 kPa {1.53 kgf/cm^2, 21.8 psi}** **Note** • Because the SKYACTIV-G 2.0 retards the intake valve closing timing, compression pressure is low.	Yes	Go to the next step.
		No	Repair or replace the malfunctioning part according to the inspection results.
14	**INSPECT FUEL LINE PRESSURE** • Inspect the fuel line pressure. (See 01-14A-8 FUEL LINE PRESSURE INSPECTION [SKYACTIV-G 2.0].) • Is the low side fuel pressure within specification? **Specification:** • **405—485 kPa {4.13—4.94 kgf/cm^2, 58.8—70.3 psi}**	Yes	Visually inspect for deformed exhaust system parts. Repair or replace the malfunctioning part according to the inspection results.
		No	Zero or low: • Inspect the fuel pump relay and the fuel pump circuit. (See 09-21-29 RELAY INSPECTION.) • Inspect the fuel line for restriction. — If there is any malfunction: • Repair or replace the malfunctioning part according to the inspection results. — If there is no malfunction: • Replace the fuel pump unit. (Pressure regulator or fuel pump malfunction) (See 01-14A-38 FUEL PUMP UNIT REMOVAL/INSTALLATION [SKYACTIV-G 2.0].) High: • Replace the fuel pump unit. (Pressure regulator malfunction) (See 01-14A-38 FUEL PUMP UNIT REMOVAL/INSTALLATION [SKYACTIV-G 2.0].)

SYMPTOM TROUBLESHOOTING [SKYACTIV-G 2.0]

STEP	INSPECTION	RESULTS	ACTION
15	**VERIFY CURRENT INPUT SIGNAL STATUS** • Access the following PIDs using the M-MDS: (See 01-02-8 ON-BOARD DIAGNOSTIC TEST [SKYACTIV-G 2.0].) — ECT — MAF — O2S11 (When engine can be started) — O2S12 (When engine can be started) • Are the PIDs normal? (See 01-40-17 PCM INSPECTION [SKYACTIV-G 2.0].)	Yes	Go to the next step.
		No	ECT PID is not as specified: • Inspect for an intermittent open circuit of the ECT sensor and the related wiring harness. (See 01-40-43 ENGINE COOLANT TEMPERATURE (ECT) SENSOR INSPECTION [SKYACTIV-G 2.0].) MAF PID is not as specified: • Inspect for an intermittent open circuit of the MAF sensor and the related wiring harness. (See 01-40-45 MASS AIR FLOW (MAF) SENSOR INSPECTION [SKYACTIV-G 2.0].) O2S11 PID is not as specified: • Inspect for an intermittent open circuit of the A/F sensor and the related wiring harness. (See 01-40-55 AIR FUEL RATIO (A/F) SENSOR INSPECTION [SKYACTIV-G 2.0].) O2S12 PID is not as specified: • Inspect for an intermittent open circuit of the HO2S and the related wiring harness. (See 01-40-58 HEATED OXYGEN SENSOR (HO2S) INSPECTION [SKYACTIV-G 2.0].) Repair or replace the malfunctioning part according to the inspection results.
16	**INSPECT INTAKE-AIR SYSTEM FOR AIR SUCTION** • If the engine cannot be started: — Inspect the intake air system for air leakage. • If the engine can be started: — Perform the Intake Manifold Vacuum Inspection. (See 01-03-118 ENGINE CONTROL SYSTEM OPERATION INSPECTION [SKYACTIV-G 2.0].) • Is air being sucked in from intake air system?	Yes	Repair or replace the malfunctioning part according to the inspection results.
		No	Go to the next step.
17	**INSPECT FUEL LINE PRESSURE** • Inspect the fuel line pressure. (See 01-14A-8 FUEL LINE PRESSURE INSPECTION [SKYACTIV-G 2.0].) • Is the low side fuel pressure within specification? **Specification:** • **405—485 kPa {4.13—4.94 kgf/cm^2, 58.8—70.3 psi}**	Yes	Inspect the PCM ground condition. Repair or replace the malfunctioning part according to the inspection results.
		No	Zero or low: • Inspect the fuel pump relay and the fuel pump circuit. (See 09-21-29 RELAY INSPECTION.) • Inspect the fuel line for restriction. — If there is any malfunction: • Repair or replace the malfunctioning part according to the inspection results. — If there is no malfunction: • Replace the fuel pump unit. (Pressure regulator or fuel pump malfunction) (See 01-14A-38 FUEL PUMP UNIT REMOVAL/INSTALLATION [SKYACTIV-G 2.0].) High: • Replace the fuel pump unit. (Pressure regulator malfunction) (See 01-14A-38 FUEL PUMP UNIT REMOVAL/INSTALLATION [SKYACTIV-G 2.0].)
18	Verify the test results. • If normal, return to the diagnostic index to service any additional symptoms. (See 01-03-5 SYMPTOM DIAGNOSTIC INDEX [SKYACTIV-G 2.0].) • If a malfunction remains, inspect the related Service Information and perform the repair or diagnosis. — If the vehicle is repaired, troubleshooting is completed. — If the vehicle is not repaired or additional diagnostic information is not available, replace the PCM. (See 01-40-10 PCM REMOVAL/INSTALLATION [SKYACTIV-G 2.0].)		

SYMPTOM TROUBLESHOOTING [SKYACTIV-G 2.0]

INTERMITTENT CONCERN TROUBLESHOOTING [SKYACTIV-G 2.0]

id0103e6800400

Vibration Method

- If a malfunction occurs or becomes worse while driving on a rough road or when the engine is vibrating, perform the steps below.

Note

- There are several reasons why the vehicle or engine vibration could cause an electrical malfunction. Check the following:
  - — Connectors are not fully seated.
  - — Wiring harnesses do not have full play.
  - — Wires laying across brackets or moving parts.
  - — Wires routed too close to hot parts.
- An improperly routed, improperly clamped, or loose harness can cause a wiring harness to become pinched between parts.
- The connector joints, points of vibration, and places where the wiring harnesses pass through the firewall and body panels are the major areas to be checked.

Inspection Method for Switch Connectors or Wires

1. Connect the M-MDS to the DLC-2.
2. Switch the ignition ON (engine off).

Note

- If engine starts and runs, perform the following steps during idle.

3. Access the PIDs for the switch you are inspecting.
4. Turn the switch on manually.
5. Slightly shake each connector or wiring harness vertically and horizontally while monitoring the PID.
   - If the PID value is unstable, check for a poor connection.

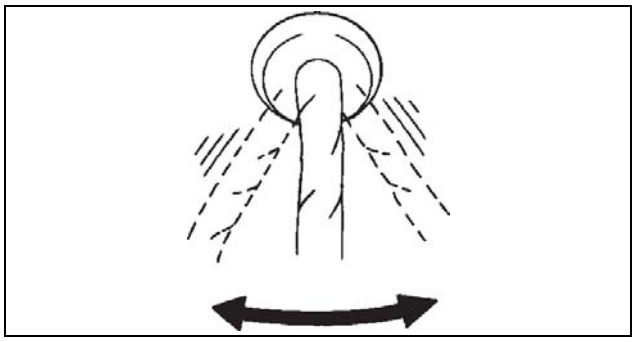

acxuuw00002361

SYMPTOM TROUBLESHOOTING [SKYACTIV-G 2.0]

Inspection Method for Sensor Connectors or Wires

1. Connect the M-MDS to the DLC-2.
2. Switch the ignition ON (engine off).

Note
- If the engine starts and runs, perform the following steps during idling.

3. Access the PIDs for the switch you are inspecting.
4. Slightly shake each connector or wiring harness vertically and horizontally while monitoring the PID.
   - If the PID value is unstable, check for poor connection.

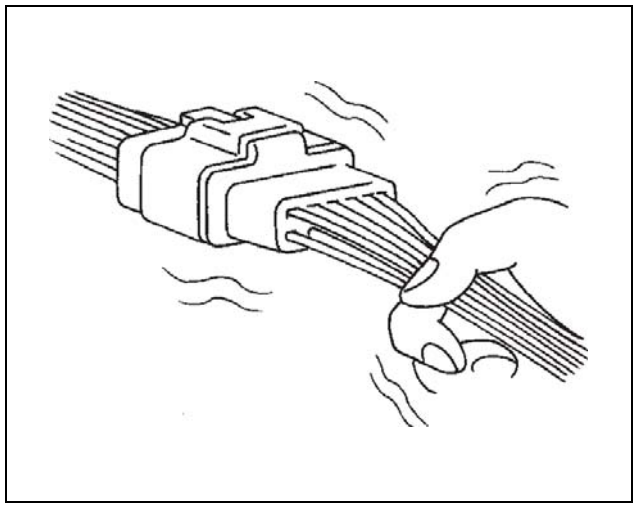

am5ezw0000653

Inspection Method for Sensors

1. Connect the M-MDS to the DLC-2.
2. Switch the ignition ON (engine off).

Note
- If the engine starts and runs, perform the following steps during idle.

3. Access the PIDs for the switch you are inspecting.
4. Shake the sensor slightly with your finger.
   - If the PID value is unstable or a malfunction occurs, check for a poor connection or a poorly mounted sensor or both.

Inspection Method for Actuators or Relays

1. Connect the M-MDS to the DLC-2.
2. Switch the ignition ON (engine off).

Note
- If engine starts and runs, perform the following steps during idling.

3. Prepare the output state control function for actuators or relays that you are inspecting.
4. Shake the actuator or relay with your finger for **3 s** after the output state control function is activated.
   - If a variable click sound is heard, check for a poor connection or a poorly mounted actuator or both, or the relay.

Note
- Shake the relays too strongly may result in open circuits.

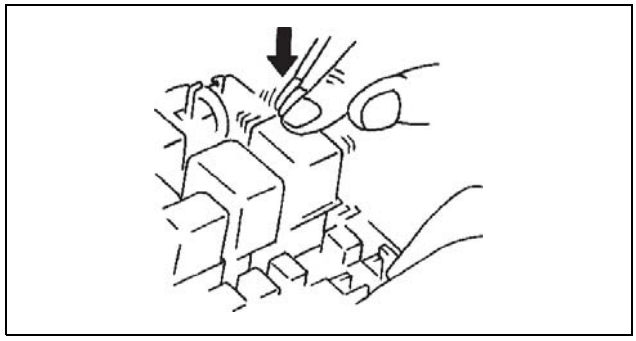

am5ezw0000653

SYMPTOM TROUBLESHOOTING [SKYACTIV-G 2.0]

Water Sprinkling Method
If a malfunction occurs only during high humidity or rainy/snowy weather, perform the following steps:

Caution
- **Indirectly change the temperature and humidity by spraying water onto the front of the radiator.**
- **If a vehicle is subject to water leakage, the leakage may damage the control module. When testing a vehicle with a water leakage problem, special caution must be used.**

1. Connect the M-MDS to the DLC-2 if you are inspecting sensors or switches.
2. Switch the ignition ON (engine off).

Note
- If the engine starts and runs, perform the following steps at idle.

3. Access the PIDs for the sensor or the switch if you are inspecting sensors or switches.
4. If you are inspecting the switch, turn it on manually.
5. Spray water onto the vehicle or run it through a car wash.
   - If the PID value is unstable or a malfunction occurs, repair or replace parts if necessary.

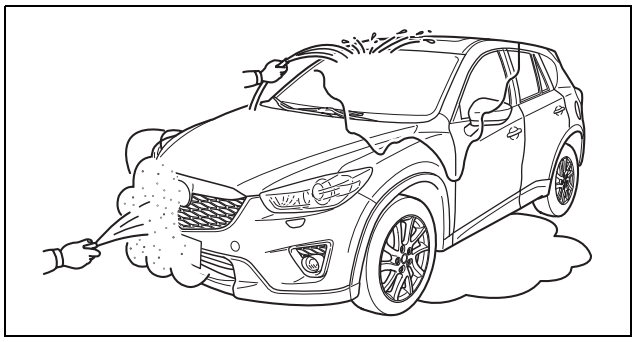

ac5wzw0000060

ENGINE CONTROL SYSTEM OPERATION INSPECTION [SKYACTIV-G 2.0]

id0103e6803700

Main Relay Operation Inspection
1. Verify that the main relay clicks when the ignition is switched to ON and then off.
   - If there is no operation sound, inspect the following:
     — Main relay (See 09-21-29 RELAY INSPECTION.)
     — Wiring harness and connector between battery and main relay terminal A
     — Wiring harness and connector between PCM terminal 2K and main relay terminal E

Intake Manifold Vacuum Inspection
1. Verify the air intake hoses are installed properly.
2. Start the engine and let it idle.
3. Disconnect the vacuum hose between the intake manifold and purge solenoid valve from the intake manifold side.
4. Connect a vacuum gauge to the intake manifold and measure the intake manifold vacuum.
   - If not within specification, inspect the following:

Specification
–60.0 kPa {–450 mmHg, –17.7 inHg}

Note
- Air suction can be located by engine speed change when lubricant is sprayed on the area where suction is occurring. Check the following places:
  — Air suction at throttle body, charge air cooler, intake manifold and PCV valve installation points
  — Engine compression (See 01-10A-14 COMPRESSION INSPECTION [SKYACTIV-G 2.0].)

SYMPTOM TROUBLESHOOTING [SKYACTIV-G 2.0]

Electric Variable Valve Timing Driver Control System Inspection

1. Connect the M-MDS to the DLC-2.
2. Perform the KOER self test. (See 01-02-12 KOEO/KOER SELF TEST [SKYACTIV-G 2.0].)
3. Verify that DTC P0010:00 or P1380:00 is not displayed. (See 01-02-8 ON-BOARD DIAGNOSTIC TEST [SKYACTIV-G 2.0].)
   - If DTC P0010:00 or P1380:00 is displayed, perform the DTC inspection. (See 01-02-28 DTC P0010:00 [SKYACTIV-G 2.0].) (See 01-02-290 DTC P1380:00 [SKYACTIV-G 2.0].)
4. Perform the Drive Mode 03 (Variable Valve Timing, A/F Sensor Heater, HO2S Heater, A/F Sensor, HO2S and TWC Repair Verification Drive Mode). (See 01-02-13 OBD DRIVE MODE [SKYACTIV-G 2.0].)
5. Verify that DTC P0011:00 or P0012:00 is not displayed. (See 01-02-8 ON-BOARD DIAGNOSTIC TEST [SKYACTIV-G 2.0].)
   - If DTC P0011:00 or P0012:00 is displayed, perform the DTC inspection. (See 01-02-33 DTC P0011:00 [SKYACTIV-G 2.0].) (See 01-02-35 DTC P0012:00 [SKYACTIV-G 2.0].)
6. Access the following PCM PIDs using the M-MDS. (See 01-02-8 ON-BOARD DIAGNOSTIC TEST [SKYACTIV-G 2.0].)
   - VT_IN_ACT
   - VT_IN_DES

   Caution
   - **While performing this step, always operate the vehicle in a safe and lawful manner.**
   - **When the M-MDS is used to observe monitor system status while driving, be sure to have another technician with you, or record the data in the M-MDS using the PID/DATA MONITOR AND RECORD capturing function and inspect later.**

7. Accelerate and decelerate the vehicle, and drive at normal speed, and verify that the data monitor item VT_IN_ACT value changes in conjunction with the VT_IN_DES value.
   - If this change cannot be verified, replace the electric variable valve timing motor/driver. (See 01-10A-16 ELECTRIC VARIABLE VALVE TIMING MOTOR/DRIVER REMOVAL/INSTALLATION [SKYACTIV-G 2.0].)

Engine Oil Solenoid Valve Control System Inspection

1. Connect the M-MDS to the DLC-2.
2. Perform the KOER self test. (See 01-02-12 KOEO/KOER SELF TEST [SKYACTIV-G 2.0].)
3. Verify that DTC P06DA:00 is not displayed. (See 01-02-8 ON-BOARD DIAGNOSTIC TEST [SKYACTIV-G 2.0].)
   - If DTC P06DA:00 is displayed, perform the DTC inspection. (See 01-02-265 DTC P06DA:00 [SKYACTIV-G 2.0].)
4. Inspect the engine oil pressure. (See 01-11A-7 OIL PRESSURE INSPECTION [SKYACTIV-G 2.0].)
   - If the engine oil pressure is not as specified, repair or replace the malfunctioning part according to the inspection results:
5. Access the following PCM PIDs using the M-MDS. (See 01-02-8 ON-BOARD DIAGNOSTIC TEST [SKYACTIV-G 2.0].)
   - OIL_P_SOL
   - RPM
   - ECT
6. With the engine coolant temperature at **98 °C**, increase the engine speed to **4,000 rpm or higher**, and verify that the oil pressure gauge value changes when the data monitor item OIL_P_SOL value is changed from ON to OFF.
   - If the oil pressure gauge value change cannot be verified, inspect the engine oil solenoid valve. (Perform the Engine Oil Solenoid Valve Operation Inspection.) (See 01-11A-12 ENGINE OIL SOLENOID VALVE INSPECTION [SKYACTIV-G 2.0].)

SYMPTOM TROUBLESHOOTING [SKYACTIV-G 2.0]

Drive-by-wire Control System Inspection
Engine coolant temperature compensation inspection

1. Connect the M-MDS to the DLC-2.
2. Select the following PIDs: (See 01-02-8 ON-BOARD DIAGNOSTIC TEST [SKYACTIV-G 2.0].)
   - ECT
   - IAT
   - RPM
3. Verify that the engine is cold, then start the engine.
4. Verify that the engine speed decreases as the engine warms up.
   - If the engine speed does not decrease or decreases slowly, inspect the following:
     — ECT sensor and related wiring harness (See 01-40-43 ENGINE COOLANT TEMPERATURE (ECT) SENSOR INSPECTION [SKYACTIV-G 2.0].)
     — Throttle body and related wiring harness (See 01-13A-13 THROTTLE BODY INSPECTION [SKYACTIV-G 2.0].)

Load compensation inspection

1. Start the engine and let it idle.
2. Connect the M-MDS to the DLC-2.
3. Verify that DTC P0506:00 or P0507:00 is not displayed. (See 01-02-8 ON-BOARD DIAGNOSTIC TEST [SKYACTIV-G 2.0].)
   - If DTC P0506:00 or P0507:00 is displayed, perform the DTC inspection. (See 01-02-216 DTC P0506:00 [SKYACTIV-G 2.0].) (See 01-02-218 DTC P0507:00 [SKYACTIV-G 2.0].)
4. Select the RPM PID.

   Note
   - Excludes temporary idle speed drop just after the loads are turned on.

5. Verify that the engine speed is within specification under each load condition.
   - If the load condition is not as specified, inspect the following:
     — A/C switch and related wiring harness system (A/C request signal is always on or off) (See 01-03-101 NO.23 A/C DOES NOT WORK SUFFICIENTLY [SKYACTIV-G 2.0].) (See 01-03-106 NO.24 A/C IS ALWAYS ON OR A/C COMPRESSOR RUNS CONTINUOUSLY [SKYACTIV-G 2.0].)
     — Electrical load
     — Charging system (See 01-17A-7 BATTERY INSPECTION [SKYACTIV-G 2.0].) (See 01-17A-19 GENERATOR INSPECTION [SKYACTIV-G 2.0].)

Idle-up speed (MTX: Neutral position, ATX: P, N position)
No load: 470—570 rpm (MTX), 550—650 rpm (ATX)
A/C on: 650—800 rpm
Electrical loads on: 600—750 rpm

Electronic Control Throttle Operation Inspection

1. Connect the M-MDS to the DLC-2.
2. Perform the KOEO or KOER self test. (See 01-02-12 KOEO/KOER SELF TEST [SKYACTIV-G 2.0].)
3. Verify that none of the following DTCs are displayed:
   - P0122:00, P0123:00, P0222:00, P0223:00, P0638:00, P2101:00, P2107:00, P2109:00, P2110:00, P2112:00, P2119:00, P2122:00, P2123:00, P2127:00, P2128:00, P2135:00, P2138:00
     — If any one DTC is displayed, perform the DTC inspection. (See 01-02-14 DTC TABLE [SKYACTIV-G 2.0].)
4. Access the following PCM PIDs using the M-MDS. (See 01-02-8 ON-BOARD DIAGNOSTIC TEST [SKYACTIV-G 2.0].)
   - ETC_ACT
   - ETC_DSD
5. With the accelerator pedal not depressed and with it depressed to the floor, verify that the data monitor item ETC_ACT value changes in conjunction with the ETC_DSD value.
   - If this change cannot be verified, perform the Resistance Inspection for the throttle body. (See 01-13A-13 THROTTLE BODY INSPECTION [SKYACTIV-G 2.0].)

SYMPTOM TROUBLESHOOTING [SKYACTIV-G 2.0]

Brake override system operation inspection

Note
- If the brake override system operates normally after performing the following inspection, the PCM detects DTC P2299:00.

1. Start the engine and let it idle.
2. Verify that the engine speed becomes **less than 1,200 rpm** under the following conditions.
   - Neutral (MTX)
   - N position (ATX)
   - Engine speed of **3,000 rpm or more** with accelerator pedal depressed
   - Brake pedal depressed
     - — If the engine speed becomes **approx. 1,200 rpm**, clear the PCM DTC using the M-MDS. (System operation is normal.)
     - — If the engine speed does not become **approx. 1,200 rpm**, inspect for the following parts, then repair or replace the malfunctioning part:
       - APP sensor (See 01-40-51 ACCELERATOR PEDAL POSITION (APP) SENSOR INSPECTION [SKYACTIV-G 2.0].)
       - Neutral switch No.1 (MTX) (See 01-40-40 NEUTRAL SWITCH INSPECTION [SKYACTIV-G 2.0].)
       - CPP switch (MTX) (See 01-40-40 CLUTCH PEDAL POSITION (CPP) SWITCH INSPECTION [SKYACTIV-G 2.0].)
       - Brake switch No.1 (See 04-11-11 BRAKE SWITCH INSPECTION.)
       - Brake switch No.2 (See 04-11-11 BRAKE SWITCH INSPECTION.)
       - Communication between PCM and TCM (ATX) (See 10-02A-1 FOREWORD [SKYACTIV-G 2.0 (L.H.D.)].) (See 10-02B-1 FOREWORD [SKYACTIV-G 2.0 (R.H.D.)].)

Fuel Injector Operation Inspection
If simulation function of M-MDS is used:

STEP	INSPECTION		ACTION
1	Start the engine and warm it up completely. Access the INJ_1, INJ_2, INJ_3 and INJ_4 PIDs using the M-MDS. (See 01-02-8 ON-BOARD DIAGNOSTIC TEST [SKYACTIV-G 2.0].) Turn each fuel injector from on to off using the PIDs for each cylinder. Does the engine speed drop?	Yes	Fuel injectors work properly.
		No	Engine speed does not drop an any cylinder: • Go to the next step. Engine speed drops on some cylinders: • Go to Step 4.
2	Perform the Main Relay Operation Inspection. (See01-03-118 Main Relay Operation Inspection.) Does the main relay work properly?	Yes	Go to the next step.
		No	Repair or replace the malfunctioning part according to the inspection results.
3	Inspect the fuel injector of the suspected cylinder. (See 01-14A-62 FUEL INJECTOR INSPECTION [SKYACTIV-G 2.0].) Is there any malfunction?	Yes	Replace the fuel injector. (See 01-14A-51 FUEL INJECTOR REMOVAL/INSTALLATION [SKYACTIV-G 2.0].)
		No	Inspect the fuel injector power and/or ground systems related wiring harness and connectors for the suspected cylinder. • If all items normal: — Replace the PCM. (See 01-40-10 PCM REMOVAL/INSTALLATION [SKYACTIV-G 2.0].) • If not: — Repair or replace the malfunctioning part according to the inspection results.
4	Perform the KOER self test using the M-MDS. (See 01-02-12 KOEO/KOER SELF TEST [SKYACTIV-G 2.0].) Are the DTCs P0201:00, P0202:00, P0203:00 and/or P0204:00 present?	Yes	Go to the appropriate DTC inspection. (See 01-02-152 DTC P0201:00 [SKYACTIV-G 2.0].) (See 01-02-155 DTC P0202:00 [SKYACTIV-G 2.0].) (See 01-02-158 DTC P0203:00 [SKYACTIV-G 2.0].) (See 01-02-161 DTC P0204:00 [SKYACTIV-G 2.0].)
		No	Go to the next step.

SYMPTOM TROUBLESHOOTING [SKYACTIV-G 2.0]

STEP	INSPECTION		ACTION
5	Inspect the fuel injector of the suspected cylinder. (See 01-14A-62 FUEL INJECTOR INSPECTION [SKYACTIV-G 2.0].) Is there any malfunction?	Yes	Replace the fuel injector. (See 01-14A-51 FUEL INJECTOR REMOVAL/INSTALLATION [SKYACTIV-G 2.0].)
		No	Inspect the following for the suspected cylinder: • PCM terminals (pulled-out pins, corrosion) • Fuel injector terminals (pulled-out pins, corrosion) • If all items normal: — Replace the PCM. (See 01-40-10 PCM REMOVAL/INSTALLATION [SKYACTIV-G 2.0].) • If not: — Repair or replace the malfunctioning part according to the inspection results.

If simulation function of M-MDS is not used:

STEP	INSPECTION		ACTION
1	Perform the KOER self test using the M-MDS. (See 01-02-12 KOEO/KOER SELF TEST [SKYACTIV-G 2.0].) Are the DTCs P0201:00, P0202:00, P0203:00 and/or P0204:00 present?	Yes	Go to the appropriate DTC inspection. (See 01-02-152 DTC P0201:00 [SKYACTIV-G 2.0].) (See 01-02-155 DTC P0202:00 [SKYACTIV-G 2.0].) (See 01-02-158 DTC P0203:00 [SKYACTIV-G 2.0].) (See 01-02-161 DTC P0204:00 [SKYACTIV-G 2.0].)
		No	Go to the next step.
2	Inspect the fuel injector of the suspected cylinder. (See 01-14A-62 FUEL INJECTOR INSPECTION [SKYACTIV-G 2.0].) Is there any malfunction?	Yes	Replace the fuel injector. (See 01-14A-51 FUEL INJECTOR REMOVAL/INSTALLATION [SKYACTIV-G 2.0].)
		No	Go to the next step.
3	Inspect the following for the suspected cylinder: • Fuel injector power and/or ground system related wiring harnesses and connectors • PCM terminals (pulled-out pins, corrosion) • Fuel injector terminals (pulled-out pins, corrosion) Is there any malfunction?	Yes	Repair or replace the malfunctioning part according to the inspection results.
		No	Replace the PCM. (See 01-40-10 PCM REMOVAL/INSTALLATION [SKYACTIV-G 2.0].)

Fuel Cut Control System Inspection

Note
- This inspection has to be performed after the Fuel Injector Operation Inspection.

If data monitor function of M-MDS is used:
1. Warm up the engine and idle it.
2. Connect the M-MDS to the DLC-2.
3. Select the RPM and the FUELPW PIDs. (See 01-02-8 ON-BOARD DIAGNOSTIC TEST [SKYACTIV-G 2.0].)
4. Monitor both PIDs while performing the following steps:
   (1) Depress the accelerator pedal and increase the RPM PID to **4,000 rpm**.
   (2) Quickly release the accelerator pedal (brake pedal is not depressed) and verify that the FUELPW PID is **0 msec**, and **2—5 msec** when the RPM PID drops **below 1,200 rpm**.
   - If not as specified, inspect the following:
     — ECT sensor and related wiring harness (See 01-40-43 ENGINE COOLANT TEMPERATURE (ECT) SENSOR INSPECTION [SKYACTIV-G 2.0].)

If data monitor function of M-MDS is not used:
1. Warm up the engine and idle it.
2. Measure the fuel injector control signal wave profile using the oscilloscope while performing the following steps:
   (1) Depress the accelerator pedal and increase the engine speed to **4,000 rpm**.
   (2) Quickly release the accelerator pedal (brake pedal is not depressed) and verify that the wave profile constant **B+**, and the wave appears when the engine speed drops **below 1,200 rpm**. (See 01-40-17 PCM INSPECTION [SKYACTIV-G 2.0].)
   - If not as specified, inspect the following:
     — ECT sensor and related wiring harness (See 01-40-43 ENGINE COOLANT TEMPERATURE (ECT) SENSOR INSPECTION [SKYACTIV-G 2.0].)

Fuel Pump (Low-pressure Side) Operation Inspection
1. Connect the M-MDS to the DLC-2.

SYMPTOM TROUBLESHOOTING [SKYACTIV-G 2.0]

2. Remove the fuel-filler cap.
3. Switch the ignition ON (engine off).
4. Turn the fuel pump relay from off to on using the FP PID and inspect if the operation sound of the fuel pump is heard. (See 01-02-8 ON-BOARD DIAGNOSTIC TEST [SKYACTIV-G 2.0].)
   - If operation sound is heard, fuel pump is normal.
   - If no operation sound is heard, proceed to the next step.
5. Measure the voltage at the wiring harness side fuel pump unit terminal A with the FP PID turned on.
   - If the voltage is as specified, inspect the following:
     — Fuel pump continuity
     — Fuel pump ground
     — Wiring harness between the fuel pump relay and PCM terminal 2AQ
   - If not as specified, inspect the following:
     — Fuel pump relay (See 09-21-29 RELAY INSPECTION.)
     — Wiring harness connector (Battery—Fuel pump relay—Fuel pump control module—Fuel pump unit)

Specification
8.0—11.5 V (Ignition switch at ON)

Fuel Pump (Low-pressure Side) Control System Inspection
If simulation function of M-MDS is used:
1. Connect the M-MDS to the DLC-2.
2. Switch the ignition ON (engine off).
3. Select the FP PID. (See 01-02-8 ON-BOARD DIAGNOSTIC TEST [SKYACTIV-G 2.0].)
4. Turn the fuel pump relay from off to on and inspect if the operation sound of the fuel pump relay is heard.
   - If no operation sound is heard, inspect the fuel pump relay. (See 09-21-29 RELAY INSPECTION.)
   - If the fuel pump relay is normal, inspect the following:
     — Wiring harness and connectors (Ignition switch—Fuel pump relay—PCM terminal 2AQ)

If simulation function of M-MDS is not used:
1. Crank the engine and verify that the fuel pump relay operation sound is heard.
2. If the operation sound is not heard, inspect the following:
   - Fuel pump relay (See 09-21-29 RELAY INSPECTION.)
   - Wiring harness and connectors (Ignition switch—Fuel pump relay—PCM terminal 2AQ)

Spark Test
1. Disconnect the fuel pump relay and fuel injector relay.
2. Verify that each ignition coil and connector is connected properly.
3. Inspect the ignition system in the following procedure:

Warning
- **High voltage in the ignition system can cause strong electrical shock which can result in serious injury. Avoid direct contact to the vehicle body during the following spark test.**

STEP	INSPECTION		ACTION
1	Disconnect the ignition coils from the spark plugs. Remove the spark plugs. (See 01-18-3 SPARK PLUG REMOVAL/INSTALLATION [SKYACTIV-G 2.0].) Verify that the spark plugs do not have carbon deposits. Is there any malfunction?	Yes	Perform no-load racing at **4,000 rpm** for **2 min**, **2 times** to burn off the carbon deposits. Repeat this step.
		No	Go to the next step.
2	Inspect the spark plugs for damage, wear, and proper plug gap. Is there any malfunction?	Yes	Re-gap or replace the spark plugs, then go to the next step. (See 01-18-3 SPARK PLUG REMOVAL/INSTALLATION [SKYACTIV-G 2.0].)
		No	Go to the next step.
3	Reconnect the spark plugs to the ignition coil. Ground the spark plugs to the engine. Is a strong blue spark visible at each cylinder while cranking the engine?	Yes	Ignition system is normal.
		No	Some cylinders do not spark: • Go to the next step. All cylinders do not spark: • Go to Step 5.

SYMPTOM TROUBLESHOOTING [SKYACTIV-G 2.0]

STEP	INSPECTION		ACTION
4	Switch the ignition to off. Inspect the wiring harness between the following terminals (wiring harness-side) for an open or short circuit: • Ignition coil/ion sensor No.1 terminal B—PCM terminal 1AY • Ignition coil/ion sensor No.2 terminal B—PCM terminal 1AT • Ignition coil/ion sensor No.3 terminal B—PCM terminal 1AO • Ignition coil/ion sensor No.4 terminal B—PCM terminal 1AJ Is there any malfunction?	Yes	Repair or replace the suspected wiring harness.
		No	Inspect the ignition coil. (See 01-18-2 IGNITION COIL INSPECTION [SKYACTIV-G 2.0].) Replace the ignition coil/ion sensor. (See 01-18-2 IGNITION COIL/ION SENSOR REMOVAL/INSTALLATION [SKYACTIV-G 2.0].)
5	Switch the ignition to off. Disconnect the ignition coil/ion sensor connectors. Switch the ignition ON (engine off or on). Measure the voltage at each ignition coil/ion sensor terminal A (wiring harness-side). Is the voltage **B+**?	Yes	Go to the next step.
		No	Inspect for power supply circuit in wiring harness between ignition switch and ignition coils. Repair or replace the wiring harness for a possible short to power supply.
6	Switch the ignition to off. Inspect for continuity between terminal D (wiring harness-side) in each ignition coils and body ground. Is there continuity?	Yes	Go to the next step.
		No	Inspect the connection of PCM ground point. • If there is any malfunction: — Repair or replace the malfunctioning part according to the inspection results. • If there is no malfunction: — Repair or replace the wiring harness for a possible open circuit. Repeat from Step 1.
7	Inspect the connection of PCM and ignition coil/ion sensor connectors. Does the PCM connector or ignition coil/ion sensor connectors have poor connection?	Yes	Repair or replace the connector. Repeat from Step 1.
		No	Go to the next step.
8	Inspect the CKP sensor and crankshaft pulley. (See 01-40-60 CRANKSHAFT POSITION (CKP) SENSOR INSPECTION [SKYACTIV-G 2.0].) Is there any malfunction?	Yes	Repair or replace the malfunctioning part according to the inspection results. (See 01-40-59 CRANKSHAFT POSITION (CKP) SENSOR REMOVAL/INSTALLATION [SKYACTIV-G 2.0].)
		No	Inspect for an open or short circuit in wiring harness and connector of the CKP sensor. Repair or replace the malfunctioning part according to the inspection results.

Purge Control System Inspection
If simulation function of M-MDS is used:

1. Start the engine.
2. Disconnect the vacuum hose between the purge solenoid valve and the charcoal canister.
3. Put a finger to the purge solenoid valve and verify that there is no vacuum applied when the engine is cold.
   - If there is a vacuum, inspect the following:
     — Wiring harness and connectors (Purge solenoid valve—PCM terminal 1AI)
     — Purge solenoid valve (stuck open) (See 01-16A-12 PURGE SOLENOID VALVE INSPECTION [SKYACTIV-G 2.0].)
4. Connect the M-MDS to the DLC-2 and verify that DTC P0443:00 is displayed. (See 01-02-8 ON-BOARD DIAGNOSTIC TEST [SKYACTIV-G 2.0].)
   - Perform the DTC inspection. (See 01-02-202 DTC P0443:00 [SKYACTIV-G 2.0].)
5. Select the EVAPCP PID.
6. Increase the duty value of the purge solenoid valve to **50 %** and inspect if the operation sound of the valve is heard.
   - If the operation sound is heard, inspect for loose or damaged vacuum hoses. (Intake manifold—Purge solenoid valve—Charcoal canister)
   - If the operation sound is not heard, perform the purge solenoid valve inspection. (See 01-16A-12 PURGE SOLENOID VALVE INSPECTION [SKYACTIV-G 2.0].)
7. Warm up the engine to normal operating temperature.
8. Monitor the EVAPCP PID using the M-MDS, and drive the vehicle **approx. 2000 rpm** for **30 s or more**. (See 01-02-8 ON-BOARD DIAGNOSTIC TEST [SKYACTIV-G 2.0].)
   - If the EVAPCP PID is **0 %**, inspect the following PIDs:
     — MAF, APP1, APP2, TP REL and LOAD PIDs (See 01-40-17 PCM INSPECTION [SKYACTIV-G 2.0].)

SYMPTOM TROUBLESHOOTING [SKYACTIV-G 2.0]

If simulation function of M-MDS is not used:

1. Start the engine.
2. Disconnect the vacuum hose between the purge solenoid valve and the charcoal canister.
3. Put a finger to the purge solenoid valve and verify that there is no vacuum applied when the engine is cold.
   - If there is a vacuum, inspect the following:
     — Wiring harness and connectors (Purge solenoid valve—PCM terminal 1AI)
     — Purge solenoid valve (See 01-16A-12 PURGE SOLENOID VALVE INSPECTION [SKYACTIV-G 2.0].)
4. Warm up the engine to the normal operating temperature.
5. Stop the engine.
6. Connect the M-MDS to the DLC-2 and verify that DTC P0443:00 is displayed.
   - Perform the DTC inspection. (See 01-02-202 DTC P0443:00 [SKYACTIV-G 2.0].)
7. Switch the ignition ON (engine off).
8. Select the ECT PID. (See 01-02-8 ON-BOARD DIAGNOSTIC TEST [SKYACTIV-G 2.0].)
9. Verify that the engine coolant temperature is **above 60 °C {140 °F}**.
   - If the M-MDS indicates that the temperature is **below 60 °C {140 °F}**, perform the ECT sensor inspection. (See 01-40-43 ENGINE COOLANT TEMPERATURE (ECT) SENSOR INSPECTION [SKYACTIV-G 2.0].)
10. Set the vehicle on a dynamometer or chassis roller.

    Warning
    - **When the dynamometer or chassis roller is operating, there is a possibility that the operator may come into contact with or be caught up in the rotating parts, leading to serious injuries or death. When performing work while the dynamometer or chassis roller is operating, be careful not to contact or be caught up in any of the rotating parts.**

11. Drive the vehicle at an engine speed to **approx. 2000 rpm** for **30 s or more**.
12. Put a finger to the purge solenoid valve and verify that there is no vacuum applied during Step 2.
    - If there is no vacuum, inspect the following:
      — Wiring harness and connector (Main relay—Purge solenoid valve—PCM terminal 1AI)
      — Purge solenoid valve (See 01-16A-12 PURGE SOLENOID VALVE INSPECTION [SKYACTIV-G 2.0].)
      — MAF, APP1, APP2, TP REL and LOAD PIDs (See 01-40-17 PCM INSPECTION [SKYACTIV-G 2.0].)
    - If there is vacuum, inspect the following:
      — Vacuum hose (Purge solenoid valve—Charcoal canister)

A/C Cut-off Control System Inspection

1. Start the engine.
2. Turn the A/C switch and fan switch on.
3. Verify that the A/C compressor magnetic clutch actuates.
   - If it does not actuate, perform the symptom troubleshooting “NO.23 A/C DOES NOT WORK SUFFICIENTLY“. (See 01-03-101 NO.23 A/C DOES NOT WORK SUFFICIENTLY [SKYACTIV-G 2.0].)
4. Fully open the throttle valve and verify that the A/C compressor magnetic clutch does not actuate for **2—5 s**.
   - If it actuates, inspect the following:
     — A/C relay (See 09-21-29 RELAY INSPECTION.)
     — Open or short to ground in wiring harness and connectors (Ignition switch—A/C relay—PCM terminal 2AF)
     — A/C related parts
     — APP1, APP2 PIDs (See 01-40-17 PCM INSPECTION [SKYACTIV-G 2.0].)

Cooling Fan Control System Inspection

1. Connect the M-MDS to the DLC-2.
2. Start the engine and warm it up to normal operating temperature.
3. Perform the KOER self test. (See 01-02-12 KOEO/KOER SELF TEST [SKYACTIV-G 2.0].)
4. Verify that DTC P0480:00 or P0482:00 is not shown and the cooling fan operates during the KOER self test.
   - If the DTC P0480:00 or P0482:00 is displayed, perform the DTC inspection. (See 01-02-209 DTC P0480:00 [SKYACTIV-G 2.0].) (See 01-02-211 DTC P0482:00 [SKYACTIV-G 2.0].)
   - If the cooling fans do not operate, proceed to the following:
     — Inspect the following parts in the indicated order in accordance with fan operation conditions.
       - Open circuit between cooling fan relay and battery positive terminal
       - Open circuit between cooling fan relay and ground
       - Poor connection of the cooling fan relay
     — If there is no malfunction:
       - Replace the cooling fan component. (See 01-12A-19 COOLING FAN MOTOR REMOVAL/INSTALLATION [SKYACTIV-G 2.0].)

SYMPTOM TROUBLESHOOTING [SKYACTIV-G 2.0]

Hydraulic Variable Valve Timing Control System Operation Inspection
When idling cannot be continued

1. Connect the M-MDS to the DLC-2 and verify that DTC P2090:00 or P2091:00 is displayed. (See 01-02-8 ON-BOARD DIAGNOSTIC TEST [SKYACTIV-G 2.0].)
   - Perform the DTC inspection. (See 01-02-305 DTC P2090:00 [SKYACTIV-G 2.0].) (See 01-02-307 DTC P2091:00 [SKYACTIV-G 2.0].)
2. Remove the OCV and verify that the spool valve is at maximum advanced position. (See 01-10A-38 OIL CONTROL VALVE (OCV) REMOVAL/INSTALLATION [SKYACTIV-G 2.0].)
3. Connect the OCV.
4. Switch the ignition ON (engine off).
5. Verify that the spool valve is at the maximum advanced position.
   - If the spool valve is stuck in the retard direction, inspect for the following:
     — Short circuit in wiring harnesses or connectors between OCV and PCM
6. Inspect the hydraulic variable valve timing actuator. (See 01-10A-21 HYDRAULIC VARIABLE VALVE TIMING ACTUATOR INSPECTION [SKYACTIV-G 2.0].)

When idling can be continued
If simulation function of M-MDS is used:

1. Warm up the engine to normal operating temperature.
2. Connect the M-MDS to the DLC-2.
3. Verify that DTC P2090:00 or P2091:00 is displayed. (See 01-02-8 ON-BOARD DIAGNOSTIC TEST [SKYACTIV-G 2.0].)
   — Perform the DTC inspection. (See 01-02-305 DTC P2090:00 [SKYACTIV-G 2.0].) (See 01-02-307 DTC P2091:00 [SKYACTIV-G 2.0].)
4. Start the engine and let it idle.
5. Select the VT EX_DES PID. (See 01-02-8 ON-BOARD DIAGNOSTIC TEST [SKYACTIV-G 2.0].)
6. Increase the OCV duty value and verify that the engine idles rough or stalls.
   - If as specified, inspect the timing belt component (valve timing deviation). (See 01-10A-21 HYDRAULIC VARIABLE VALVE TIMING ACTUATOR INSPECTION [SKYACTIV-G 2.0].)
   - If not as specified, go to the next step.
7. Remove the OCV while the connector is connected. (See 01-10A-38 OIL CONTROL VALVE (OCV) REMOVAL/INSTALLATION [SKYACTIV-G 2.0].)
8. Switch the ignition ON (engine off).
9. Select the VT EX_DES PID. (See 01-02-8 ON-BOARD DIAGNOSTIC TEST [SKYACTIV-G 2.0].)
10. Increase the OCV duty value and verify that the spool valve operates in the retard direction.
    - If as specified, inspect the following hydraulic passage for restriction and/or leakage:
      — Oil pressure switch—OCV
      — OCV—Exhaust camshaft
      — Exhaust camshaft internal passage
    - If not as specified, inspect the following:
      — OCV operation (See 01-10A-37 OIL CONTROL VALVE (OCV) INSPECTION [SKYACTIV-G 2.0].)
11. If they are normal, replace the exhaust camshaft pulley. (See 01-10A-23 ELECTRIC VARIABLE VALVE TIMING ACTUATOR, HYDRAULIC VARIABLE VALVE TIMING ACTUATOR REMOVAL/INSTALLATION [SKYACTIV-G 2.0].)

SYMPTOM TROUBLESHOOTING [SKYACTIV-G 2.0]

If simulation function of M-MDS is not used:

1. Connect the M-MDS to the DLC-2 and verify that DTC P2090:00 or P2091:00 is displayed.
   — Perform the DTC inspection. (See 01-02-305 DTC P2090:00 [SKYACTIV-G 2.0].) (See 01-02-307 DTC P2091:00 [SKYACTIV-G 2.0].)
2. Disconnect the OCV connector.
3. Warm up the engine and idle it.
4. Apply the battery voltage to the OCV and verify that the engine idles rough or stalls.
   - If the engine idles rough or stalls, inspect the timing belt component (valve timing deviation).
   - If the engine does not idle rough or stalls, go to the next step.
5. Remove the OCV and perform the spool valve operation inspection. (See 01-10A-38 OIL CONTROL VALVE (OCV) REMOVAL/INSTALLATION [SKYACTIV-G 2.0].)
   - If not as specified, inspect the following:
     — OCV (See 01-10A-37 OIL CONTROL VALVE (OCV) INSPECTION [SKYACTIV-G 2.0].)
     — Harnesses and connectors between OCV and PCM have an open or short circuit
   - If as specified, inspect the following hydraulic passages for restriction or leakage or both:
     — Oil pressure switch—OCV
     — OCV—Exhaust camshaft
     — Exhaust camshaft internal passage
6. If they are normal, replace the exhaust camshaft pulley. (See 01-10A-23 ELECTRIC VARIABLE VALVE TIMING ACTUATOR, HYDRAULIC VARIABLE VALVE TIMING ACTUATOR REMOVAL/INSTALLATION [SKYACTIV-G 2.0].)

01-10A MECHANICAL [SKYACTIV-G 2.0]

ENGINE LOCATION INDEX [SKYACTIV-G 2.0] 01-10A–3
ENGINE TUNE-UP [SKYACTIV-G 2.0] 01-10A–4
Engine Tune-up Preparation 01-10A–4
Idle Speed Inspection 01-10A–5
Ignition Timing Inspection 01-10A–5
Idle Mixture Inspection 01-10A–5
Idle-up Speed Control Inspection 01-10A–5
PLUG HOLE PLATE REMOVAL/INSTALLATION [SKYACTIV-G 2.0] 01-10A–6
Removal 01-10A–7
Installation 01-10A–8
DRIVE BELT INSPECTION [SKYACTIV-G 2.0] 01-10A–9
Generator Drive Belt 01-10A–9
Water Pump Drive Belt 01-10A–9
DRIVE BELT REMOVAL/INSTALLATION [SKYACTIV-G 2.0] 01-10A–10
Generator Drive Belt Removal/Installation 01-10A–10
Water Pump Drive Belt 01-10A–10
DRIVE BELT AUTO TENSIONER INSPECTION [SKYACTIV-G 2.0] 01-10A–12
COMPRESSION INSPECTION [SKYACTIV-G 2.0] 01-10A–14
ELECTRIC VARIABLE VALVE TIMING MOTOR/DRIVER INSPECTION [SKYACTIV-G 2.0] 01-10A–15
ELECTRIC VARIABLE VALVE TIMING MOTOR/DRIVER REMOVAL/INSTALLATION [SKYACTIV-G 2.0] 01-10A–16
No.3 Engine Mount Removal Note 01-10A–16
Electric Variable Valve Timing Motor/Driver Installation Note 01-10A–17
No.3 Engine Mount Installation Note 01-10A–19
HYDRAULIC VARIABLE VALVE TIMING ACTUATOR INSPECTION [SKYACTIV-G 2.0] 01-10A–21
ELECTRIC VARIABLE VALVE TIMING ACTUATOR INSPECTION [SKYACTIV-G 2.0] 01-10A–22
ELECTRIC VARIABLE VALVE TIMING ACTUATOR, HYDRAULIC VARIABLE VALVE TIMING ACTUATOR REMOVAL/INSTALLATION [SKYACTIV-G 2.0] 01-10A–23
Timing Chain Removal Note 01-10A–25
Electric Variable Valve Timing Actuator Removal Note 01-10A–28
Hydraulic Variable Valve Timing Actuator and Exhaust Camshaft Component Removal Note 01-10A–30
Hydraulic Variable Valve Timing Actuator Removal Note 01-10A–31
Hydraulic Variable Valve Timing Actuator Installation Note 01-10A–31
Hydraulic Variable Valve Timing Actuator and Exhaust Camshaft Component Installation Note 01-10A–32
Electric Variable Valve Timing Actuator Installation Note 01-10A–35
Timing Chain Installation Note 01-10A–36
Oil Shower Pipe Installation Note 01-10A–37
OIL CONTROL VALVE (OCV) INSPECTION [SKYACTIV-G 2.0] 01-10A–37
Coil Resistance Inspection 01-10A–37
Spool Valve Operation Inspection 01-10A–37
OIL CONTROL VALVE (OCV) REMOVAL/INSTALLATION [SKYACTIV-G 2.0] 01-10A–38
TIMING CHAIN REMOVAL/INSTALLATION [SKYACTIV-G 2.0] 01-10A–39
Cylinder Head Cover Removal Note . . . 01-10A–41
Water Pump Pulley Removal Note 01-10A–42
Crankshaft Pulley Lock Bolt Removal Note 01-10A–43
No.3 Engine Mount Removal Note 01-10A–43
Engine Front Cover Removal Note 01-10A–46
Timing Chain Removal Note 01-10A–47
Oil Pump Driven Sprocket Removal Note 01-10A–48
Oil Pump Driven Sprocket Installation Note 01-10A–49
Timing Chain Installation Note 01-10A–49
Engine Front Cover Installation Note . . . 01-10A–51
Electric Variable Valve Timing Motor/Driver Installation Note 01-10A–56
No.3 Engine Mount Installation Note . . . 01-10A–57
Crankshaft Pulley Lock Bolt Installation Note 01-10A–59
Water Pump Pulley Installation Note . . . 01-10A–59
Drive Belt Auto Tensioner Installation Note 01-10A–60
Oil Shower Pipe Installation Note 01-10A–61
Cylinder Head Cover Installation Note 01-10A–61
HYDRAULIC LASH ADJUSTER (HLA) INSPECTION [SKYACTIV-G 2.0] 01-10A–62
HLA Troubleshooting 01-10A–62
HLA Inspection 01-10A–63
HYDRAULIC LASH ADJUSTER (HLA) REMOVAL/INSTALLATION [SKYACTIV-G 2.0] 01-10A–63
Timing Chain Removal Note 01-10A–66
Electric Variable Valve Timing Actuator Removal Note 01-10A–69
Camshaft Removal Note 01-10A–71
Rocker Arm Removal Note 01-10A–72
HLA Removal Note 01-10A–72
HLA Installation Note 01-10A–72
Rocker Arm Installation Note 01-10A–73
Camshaft Installation Note 01-10A–73
Electric Variable Valve Timing Actuator Installation Note 01-10A–76
Timing Chain Installation Note 01-10A–77
Oil Shower Pipe Installation Note 01-10A–78
CYLINDER HEAD GASKET REPLACEMENT [SKYACTIV-G 2.0] . . . 01-10A–78
Camshaft Removal Note 01-10A–80
Rocker Arm Removal Note 01-10A–80
Cylinder Head Removal Note 01-10A–80

MECHANICAL [SKYACTIV-G 2.0]

Cylinder Head Installation Note 01-10A–81
Rocker Arm Installation Note 01-10A–81
Camshaft Installation Note 01-10A–82
Water Inlet Pipe Installation Note 01-10A–85
FRONT OIL SEAL REPLACEMENT [SKYACTIV-G 2.0] 01-10A–86
Crankshaft Pulley Lock Bolt Removal Note 01-10A–87
Front Oil Seal Removal Note 01-10A–87
Front Oil Seal Installation Note 01-10A–88
Crankshaft Pulley Lock Bolt Installation Note 01-10A–89
REAR OIL SEAL REPLACEMENT [SKYACTIV-G 2.0] 01-10A–89
Rear Oil Seal Removal Note 01-10A–90
Rear Oil Seal Installation Note 01-10A–90
ENGINE MOUNT DISASSEMBLY/ASSEMBLY [SKYACTIV-G 2.0] 01-10A–91
No.1 Engine Mount (2WD) 01-10A–91
No.1 Engine Mount (4WD) 01-10A–93
No.3 Engine Mount 01-10A–97
No.4 Engine Mount 01-10A–101
ENGINE REMOVAL/INSTALLATION [SKYACTIV-G 2.0] 01-10A–105
No.1 Engine Mount Rubber, Front Crossmember Component Removal Note 01-10A–109
No.3 Engine Mount, No.4 Engine Mount Bracket Removal Note 01-10A–109
Engine Mount Installation Note 01-10A–110
ENGINE DISASSEMBLY/ASSEMBLY [SKYACTIV-G 2.0] 01-10A–114
Exhaust Manifold Bracket Installation Note 01-10A–118
Oil Cooler Water Pipe Component Installation Note 01-10A–119

MECHANICAL [SKYACTIV-G 2.0]

ENGINE LOCATION INDEX [SKYACTIV-G 2.0]

id0110h2800100

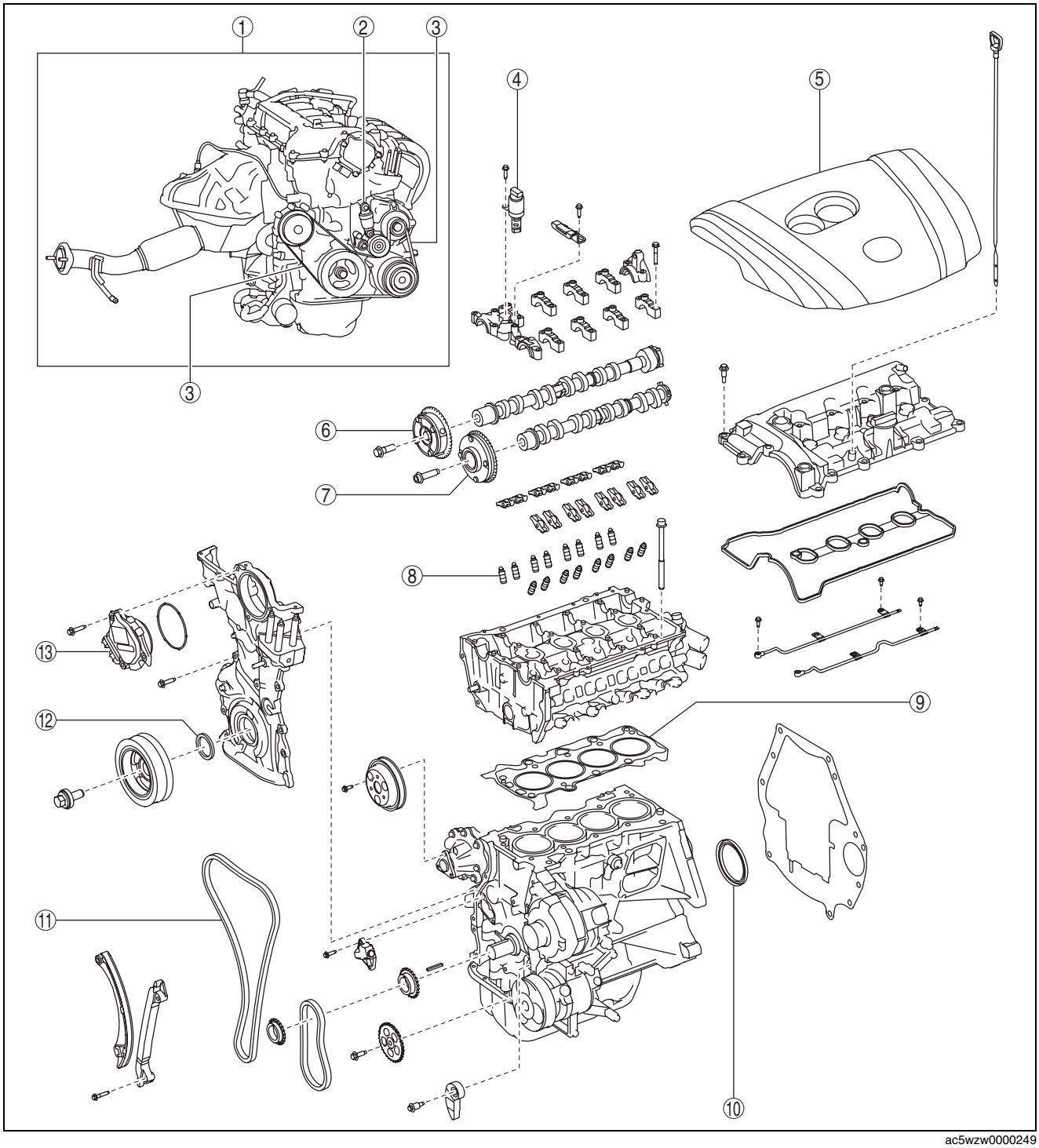

ac5wzw0000249

1	Engine (See 01-10A-4 ENGINE TUNE-UP [SKYACTIV-G 2.0].) (See 01-10A-14 COMPRESSION INSPECTION [SKYACTIV-G 2.0].) (See 01-10A-91 ENGINE MOUNT DISASSEMBLY/ ASSEMBLY [SKYACTIV-G 2.0].) (See 01-10A-105 ENGINE REMOVAL/ INSTALLATION [SKYACTIV-G 2.0].) (See 01-10A-114 ENGINE DISASSEMBLY/ ASSEMBLY [SKYACTIV-G 2.0].)

2	Drive belt auto tensioner (See 01-10A-12 DRIVE BELT AUTO TENSIONER INSPECTION [SKYACTIV-G 2.0].)
3	Drive belt (See 01-10A-9 DRIVE BELT INSPECTION [SKYACTIV-G 2.0].) (See 01-10A-10 DRIVE BELT REMOVAL/ INSTALLATION [SKYACTIV-G 2.0].)

MECHANICAL [SKYACTIV-G 2.0]

4	OCV (See 01-10A-37 OIL CONTROL VALVE (OCV) INSPECTION [SKYACTIV-G 2.0].) (See 01-10A-38 OIL CONTROL VALVE (OCV) REMOVAL/INSTALLATION [SKYACTIV-G 2.0].)
5	Plug hole plate (See 01-10A-6 PLUG HOLE PLATE REMOVAL/INSTALLATION [SKYACTIV-G 2.0].)
6	Hydraulic variable valve timing actuator (See 01-10A-21 HYDRAULIC VARIABLE VALVE TIMING ACTUATOR INSPECTION [SKYACTIV-G 2.0].) (See 01-10A-23 ELECTRIC VARIABLE VALVE TIMING ACTUATOR, HYDRAULIC VARIABLE VALVE TIMING ACTUATOR REMOVAL/INSTALLATION [SKYACTIV-G 2.0].)
7	Electric variable valve timing actuator (See 01-10A-22 ELECTRIC VARIABLE VALVE TIMING ACTUATOR INSPECTION [SKYACTIV-G 2.0].) (See 01-10A-23 ELECTRIC VARIABLE VALVE TIMING ACTUATOR, HYDRAULIC VARIABLE VALVE TIMING ACTUATOR REMOVAL/INSTALLATION [SKYACTIV-G 2.0].)
8	Hydraulic lash adjuster (HLA) (See 01-10A-62 HYDRAULIC LASH ADJUSTER (HLA) INSPECTION [SKYACTIV-G 2.0].) (See 01-10A-63 HYDRAULIC LASH ADJUSTER (HLA) REMOVAL/INSTALLATION [SKYACTIV-G 2.0].)
9	Cylinder head gasket (See 01-10A-78 CYLINDER HEAD GASKET REPLACEMENT [SKYACTIV-G 2.0].)
10	Rear oil seal (See 01-10A-89 REAR OIL SEAL REPLACEMENT [SKYACTIV-G 2.0].)
11	Timing chain (See 01-10A-39 TIMING CHAIN REMOVAL/INSTALLATION [SKYACTIV-G 2.0].)
12	Front oil seal (See 01-10A-86 FRONT OIL SEAL REPLACEMENT [SKYACTIV-G 2.0].)
13	Electric variable valve timing motor/driver (See 01-10A-15 ELECTRIC VARIABLE VALVE TIMING MOTOR/DRIVER INSPECTION [SKYACTIV-G 2.0].) (See 01-10A-16 ELECTRIC VARIABLE VALVE TIMING MOTOR/DRIVER REMOVAL/INSTALLATION [SKYACTIV-G 2.0].)

ENGINE TUNE-UP [SKYACTIV-G 2.0]

id0110h2800600

Engine Tune-up Preparation

Note
- If the accelerator pedal is depressed continuously for a specified time, the engine speed may decrease to the idle speed. This is due to the fuel cut control operation, which prevents overheating, and it does not indicate a malfunction. The engine speed returns to normal control when the accelerator pedal is released.

1. Connect the M-MDS to the DLC-2.
2. Shift the selector lever (ATX) or shift lever (MTX) to the following position:
   - MTX: Shift lever is in neutral position.
   - ATX: Selector lever is in P or N position.

Note
- The engine coolant temperature and oil temperature can be verified by M-MDS PID “ECT” and “OIL_TEMP”.

3. Run the engine speed at a constant **2,500 to 3,000 rpm** and warm up the engine (engine coolant temperature: **80 °C {176 °F}** or more, oil temperature: **60 °C {140 °F}** or more).
4. Turn off all electrical loads with the engine idling.
5. If the cooling fan is operating, wait until is stops.

Idle Speed Inspection

Note
- The idle speed cannot be adjusted.
- The M-MDS is required to verify the idle speed.

1. Complete the engine tune-up preparation. (See 01-10A-4 Engine Tune-up Preparation.)
2. Verify that the idle speed (M-MDS PID: RPM) is within the specification using the PID/data monitor function of the M-MDS. (See 01-40-17 PCM INSPECTION [SKYACTIV-G 2.0].)
   - If there is malfunction, refer to “ENGINE SYMPTOM TROUBLESHOOTING”. (See 01-03-5 SYMPTOM DIAGNOSTIC INDEX [SKYACTIV-G 2.0].)

Idle speed (MTX: Neutral position, ATX: P, N position)
MTX: 500—600 rpm
ATX: 550—650 rpm

Ignition Timing Inspection

Note
- The ignition timing cannot be adjusted.
- The M-MDS is required to verify the ignition timing.

1. Complete the engine tune-up preparation. (See 01-10A-4 Engine Tune-up Preparation.)
2. Verify the ignition timing (M-MDS PID: SPARKADV) using the PID/data monitor function of the M-MDS. (See 01-40-17 PCM INSPECTION [SKYACTIV-G 2.0].)

Ignition timing
Approx. BTDC 14°

3. Verify that ignition timing advances when the engine speed increases gradually.
   - If there is malfunction, refer to “ENGINE SYMPTOM TROUBLESHOOTING”. (See 01-03-5 SYMPTOM DIAGNOSTIC INDEX [SKYACTIV-G 2.0].)

Idle Mixture Inspection
1. Verify that the idle speed and ignition timing are within the specification. (See 01-10A-5 Idle Speed Inspection.) (See 01-10A-5 Ignition Timing Inspection.)
2. Insert an exhaust gas analyzer into the tailpipe.
3. Verify that the CO and HC concentrations are within regulation.
   - If there is malfunction, refer to “ENGINE SYMPTOM TROUBLESHOOTING”. (See 01-03-5 SYMPTOM DIAGNOSTIC INDEX [SKYACTIV-G 2.0].)
     — If no malfunction is detected, replace the catalytic converter. (See 01-15A-2 EXHAUST SYSTEM REMOVAL/INSTALLATION [SKYACTIV-G 2.0].)

CO concentration
Within the regulation

HC concentration
Within the regulation

Idle-up Speed Control Inspection

Note
- The idle speed cannot be adjusted.
- The M-MDS is required to verify the idle speed.

1. Complete the engine tune-up preparation. (See 01-10A-4 Engine Tune-up Preparation.)
2. Verify that the idle speed according to each load (M-MDS PID: RPM) is within the specification using the PID/data monitor function of the M-MDS (except idle speed decrease after applying load). (See 01-40-17 PCM INSPECTION [SKYACTIV-G 2.0].)
   - If the engine speed is not within the specification when a specified load is applied, inspect the related input parts, wiring harnesses, and connectors.

Idle-up speed (MTX: Neutral position, ATX: P, N position)
A/C on: 650—800 rpm
Electrical loads on: 600—750 rpm

MECHANICAL [SKYACTIV-G 2.0]

PLUG HOLE PLATE REMOVAL/INSTALLATION [SKYACTIV-G 2.0]

id0110h2803900

Caution

- **If the rubber on only one side of the plug hole plate front is lifted up, it could damage the adapter at the location shown in the figure. When removing the plug hole plate, lift up the rubbers at the same time.**

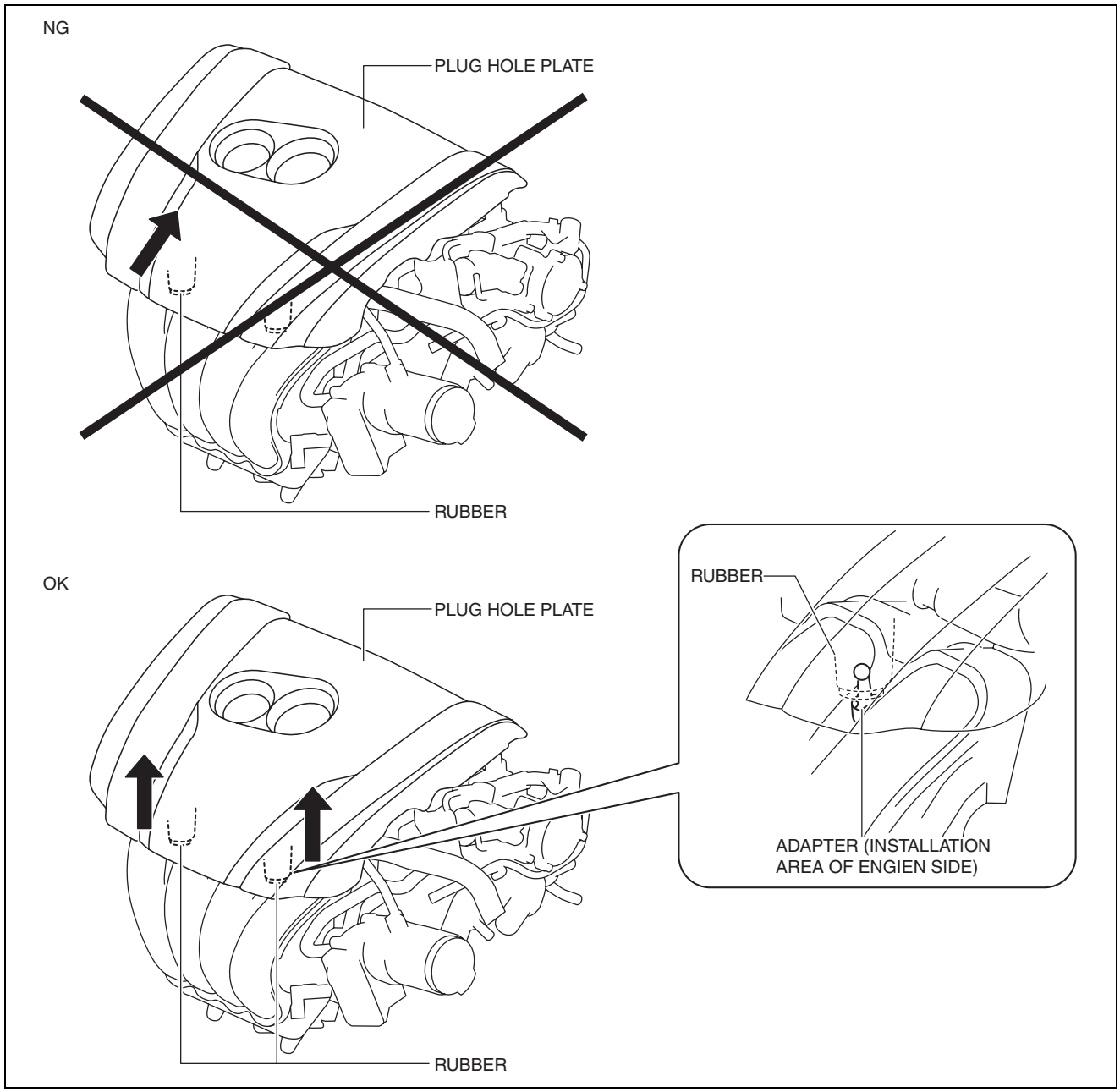

ac5wzw0000465

Removal

1. Pull up the front part of the plug hole plate at the same time and remove the rubber from the adapter on the engine side.

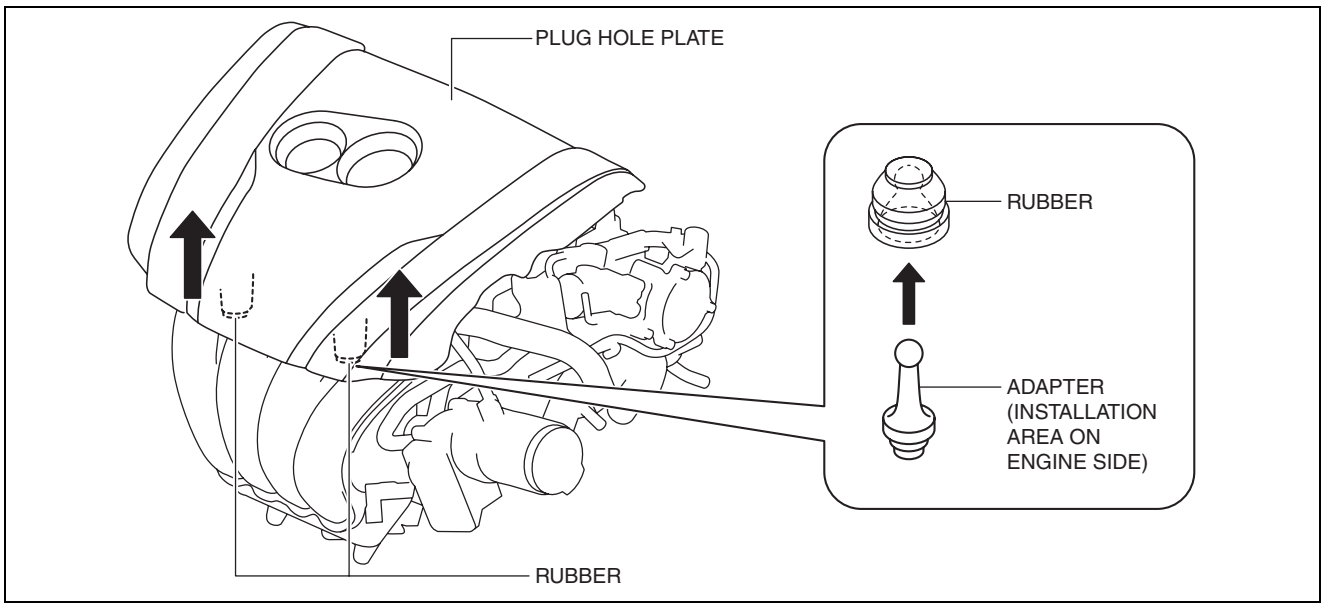

ac5uuw00000520

2. Pull up the plug hole plate in the order shown in the figure and remove the adapter from the rubber on the engine side.

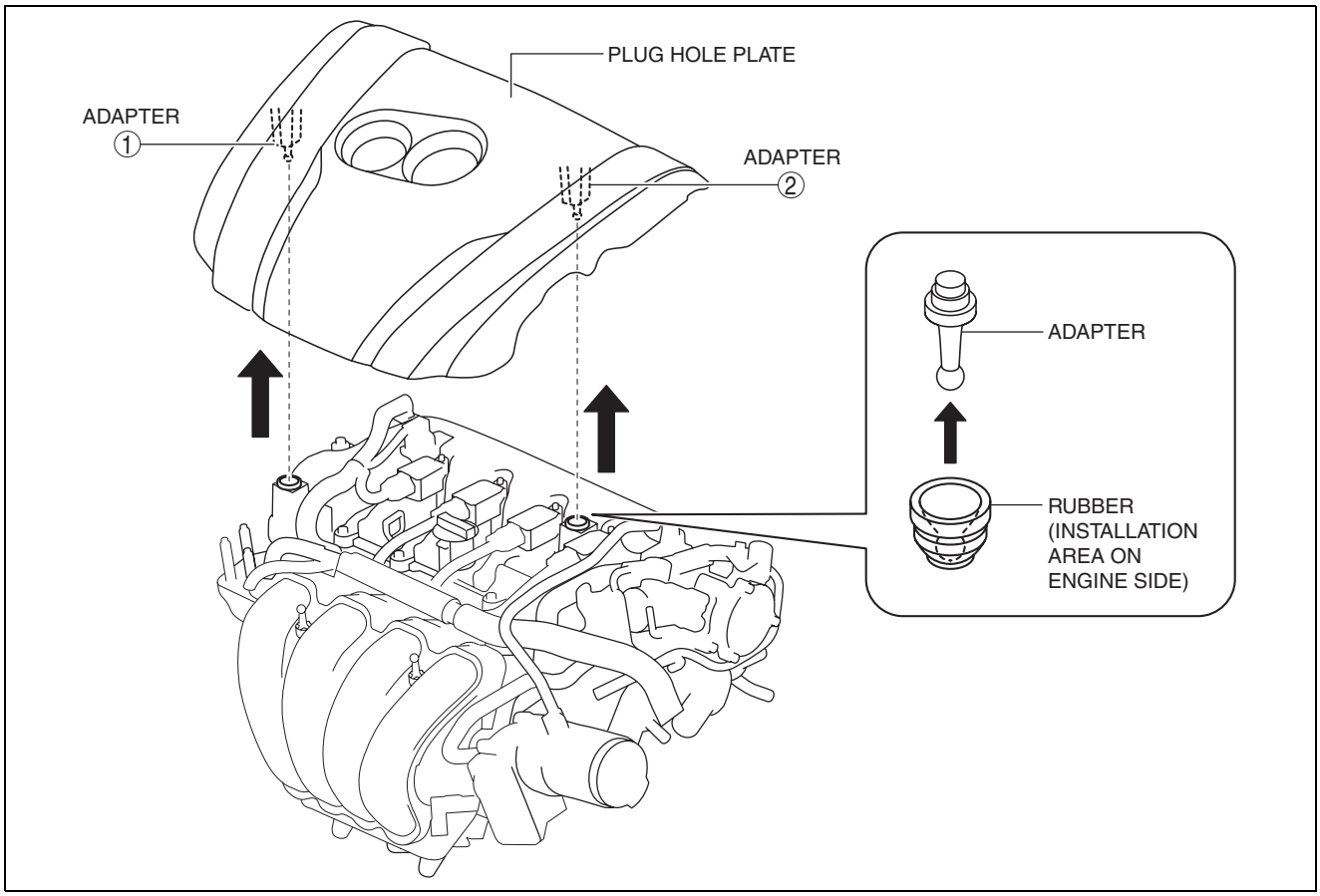

ac5uuw00000521

MECHANICAL [SKYACTIV-G 2.0]

Installation

1. Press the plug hole plate in the order shown in the figure to insert the adapter to the rubber on the engine side.

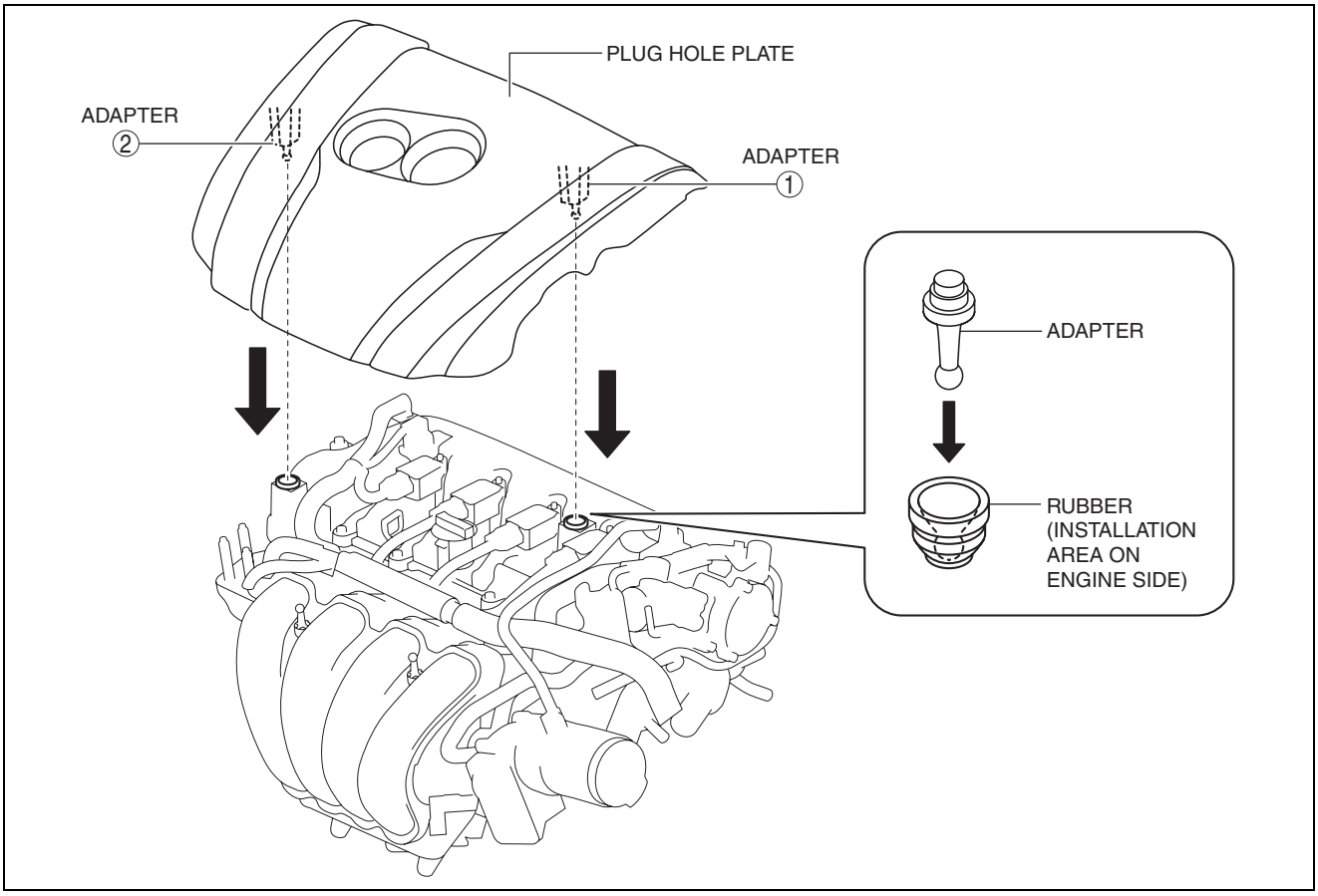

ac5uuw00000522

2. Press the front part of the plug hole plate at the same time to insert the rubber to the adapter on the engine side.

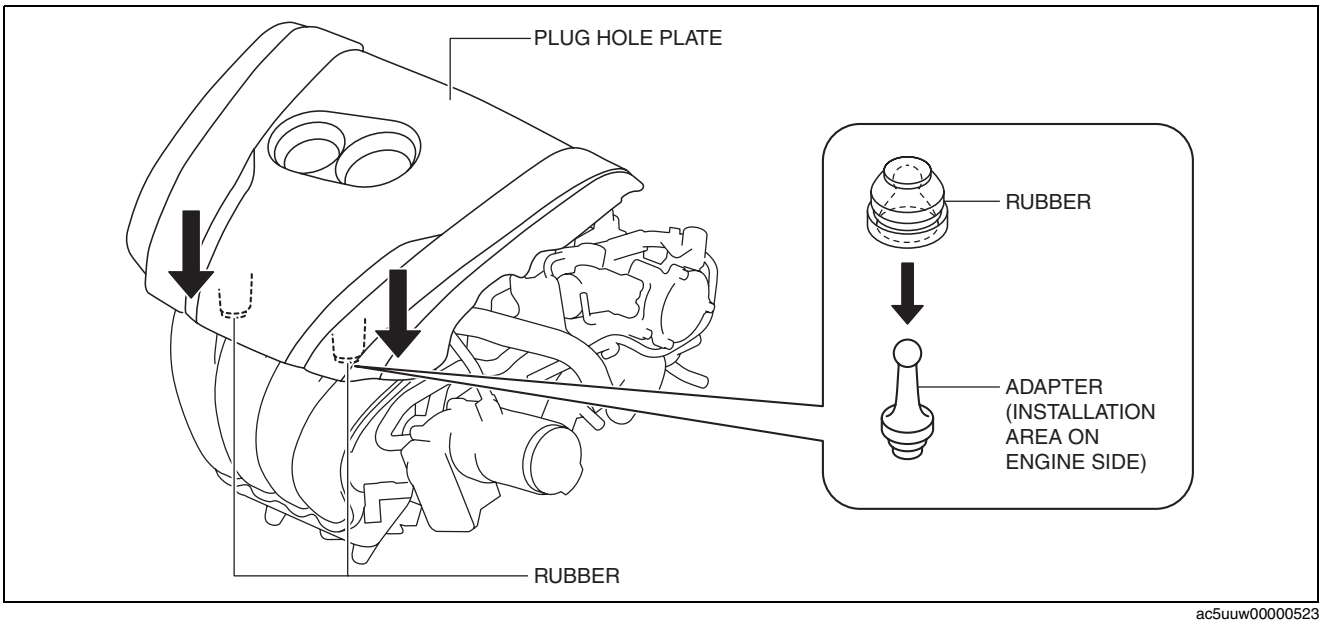

ac5uuw00000523

MECHANICAL [SKYACTIV-G 2.0]

DRIVE BELT INSPECTION [SKYACTIV-G 2.0]

id0110h2801500

Generator Drive Belt

Note
- The generator drive belt deflection/tension inspection is not necessary with the adoption of the drive belt auto tensioner.

1. Verify that the indicator part of the cast hexagon on the drive belt auto tensioner is within the normal range.
   - If it exceeds the limit, replace the drive belt. (See 01-10A-10 DRIVE BELT REMOVAL/INSTALLATION [SKYACTIV-G 2.0].)

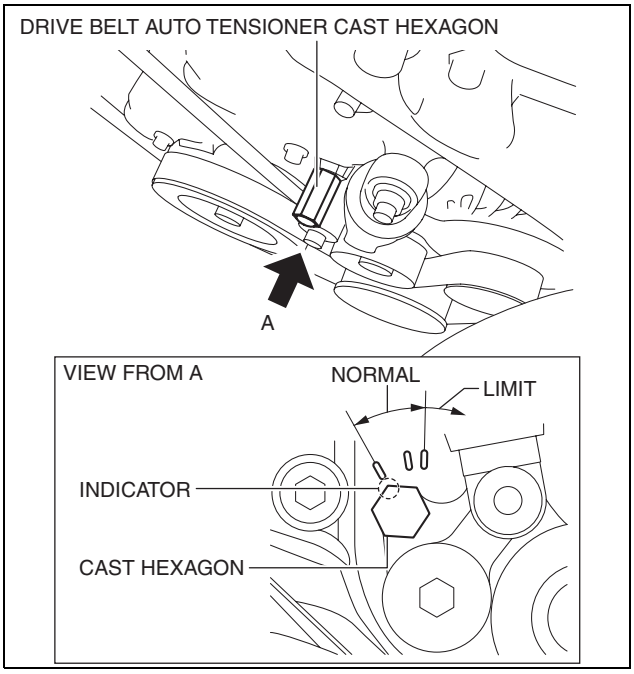

am3uuw0000888

Water Pump Drive Belt

Note
- The water pump drive belt deflection/tension inspection is not necessary with the adoption of the stretch-type water pump drive belt.

1. Visually inspect or feel that there is no wear, damage, or cracking on the inside and sides of the entire the belt.
   - Even if there is a little wear, damage, or cracking, replace the water pump drive belt. (See 01-10A-10 DRIVE BELT REMOVAL/INSTALLATION [SKYACTIV-G 2.0].)
2. Start the engine to verify that abnormal noise does not occur.
   - If abnormal noise occurs, replace the water pump drive belt. (See 01-10A-10 DRIVE BELT REMOVAL/INSTALLATION [SKYACTIV-G 2.0].)

MECHANICAL [SKYACTIV-G 2.0]

DRIVE BELT REMOVAL/INSTALLATION [SKYACTIV-G 2.0]

id0110h2801600

Warning
- **A hot engine can cause severe burns. Turn off the engine and wait until it is cool before servicing.**

Note
- Remove/install the drive belt from the underside of the vehicle.

Generator Drive Belt Removal/Installation

Caution
- **To prevent damage to the drive belt auto tensioner, do not apply excessive torque after the tensioner moves full-stroke.**

1. Remove the splash shield. (See 09-16-49 SPLASH SHIELD REMOVAL/INSTALLATION.)
2. Insert a wrench onto the cast hexagon on the drive belt auto tensioner and release the tension by slowly turning in the direction shown in the figure.
3. Remove the generator drive belt.
4. Install the generator drive belt.
5. Rotate the crankshaft pulley clockwise approx. halfway and verify that the generator drive belt is installed correctly.
   - If the rib of the drive belt and the groove of each pulley are not aligned, remove the drive belt and re-install it.
6. Verify that the indicator part of the cast hexagon on the drive belt auto tensioner is within the normal range.(See 01-10A-9 DRIVE BELT INSPECTION [SKYACTIV-G 2.0].)
7. Install the splash shield. (See 09-16-49 SPLASH SHIELD REMOVAL/INSTALLATION.)

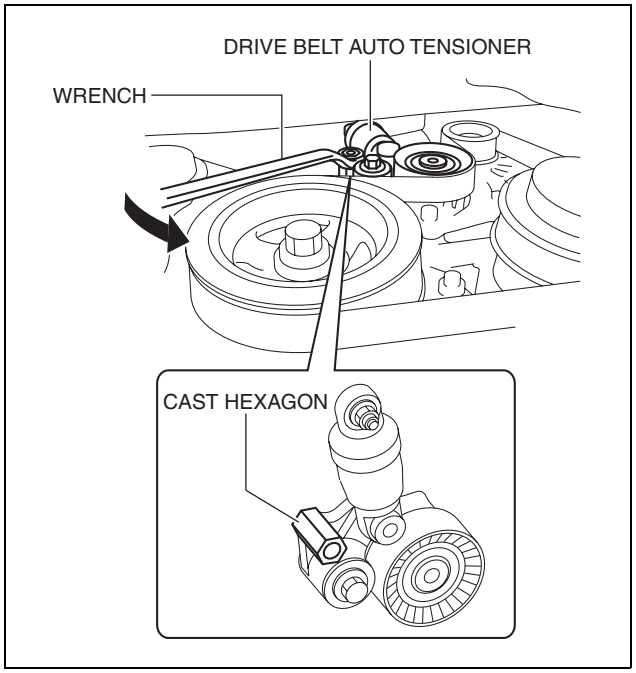

ac5uuw00000517

Water Pump Drive Belt
Removal

1. Remove the generator drive belt. (See 01-10A-10 Generator Drive Belt Removal/Installation.)
2. Apply a clean cloth to the water pump drive belt as shown in the figure.

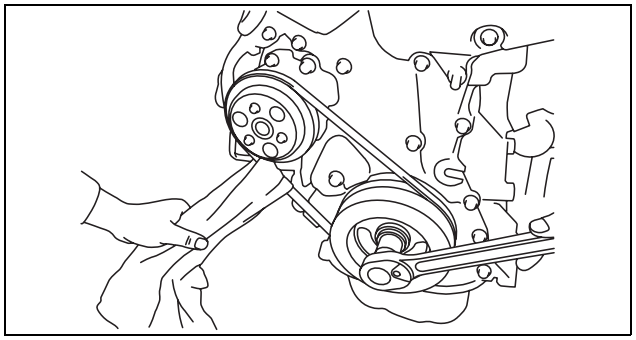

am3uuw0000888

3. Pull the cloth in the direction of the arrow and rotate the crankshaft pulley clockwise.

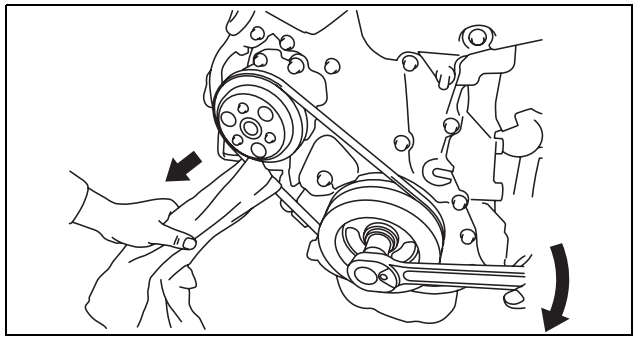
am3uuw0000888

Caution
- **To prevent damaging the drive belt, do not stop rotating the crankshaft pulley while performing the removal procedure (with inserted cloth between drive belt and water pump pulley).**

Note
- The rib of the drive belt can be slid from the groove of the water pump pulley by rotating the crankshaft pulley while pulling the cloth in the direction of the arrow.

4. Remove the water pump drive belt.

Installation

1. Set one side of the water pump drive belt into the groove of the crankshaft pulley.
2. Set the other side of the water pump drive belt into the groove of the water pump pulley with the smaller circumference.

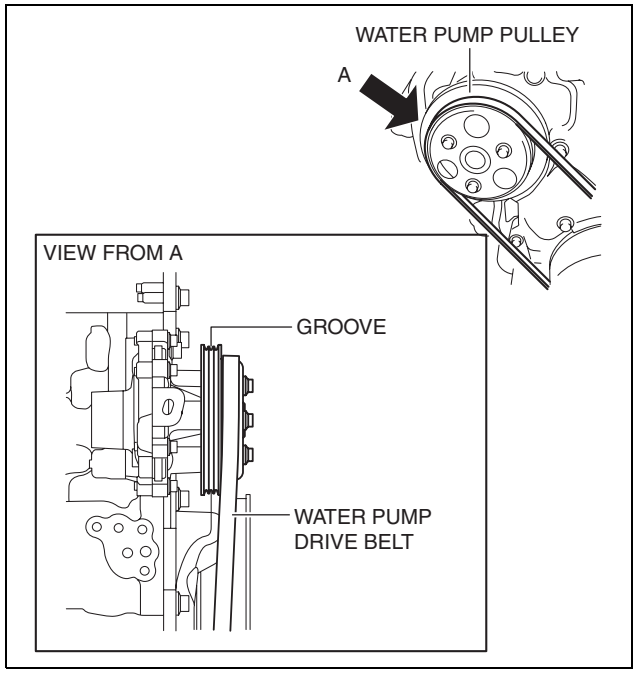

am3uuw0000889

Caution
- **Be careful not to get a finger caught in between the drive belt and pulley when performing the following procedure.**
- **Wearing gloves could result in fingers getting caught between the drive belt and pulley. Do not wear cotton gloves when performing the procedure.**

3. Press the drive belt up from the smaller circumference pulley into the groove of the larger circumference pulley, and rotate the crankshaft pulley clockwise.

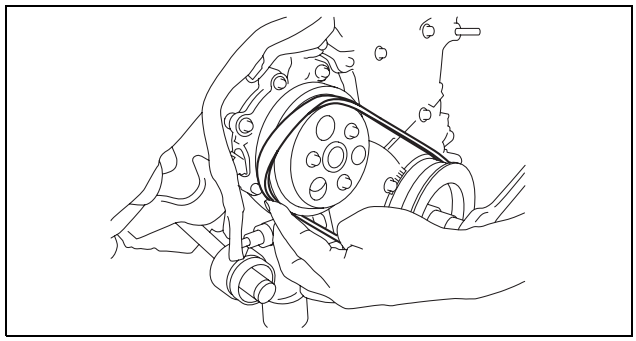
am3uuw0000889

Caution
- **To prevent damaging the drive belt, do not stop rotation of the crankshaft pulley while pressing the drive belt up from the height difference of the water pump pulley to the groove of the pulley.**

4. After drive belt installation, rotate the crankshaft pulley clockwise approx. halfway and verify that the water pump drive belt is installed correctly.
   - If the rib of the drive belt and the groove of the pulley are not aligned, remove the drive belt and re-install it.
5. Install the generator drive belt. (See 01-10A-10 Generator Drive Belt Removal/Installation.)

MECHANICAL [SKYACTIV-G 2.0]

DRIVE BELT AUTO TENSIONER INSPECTION [SKYACTIV-G 2.0]

id0110h2801700

Warning
- **A hot engine can cause severe burns. Turn off the engine and wait until it is cool before servicing.**

Caution
- **If the rubber part of the drive belt auto tensioner is damaged by a screwdriver or other tool, oil in the hydraulic pressure unit could leak and the tensioner may not operate normally. Be careful not to damage the rubber part of the drive belt auto tensioner.**

1. Remove the generator drive belt. (See 01-10A-10 DRIVE BELT REMOVAL/INSTALLATION [SKYACTIV-G 2.0].)

Caution
- **To prevent damage to the drive belt auto tensioner, do not apply excessive torque after the tensioner moves full-stroke.**

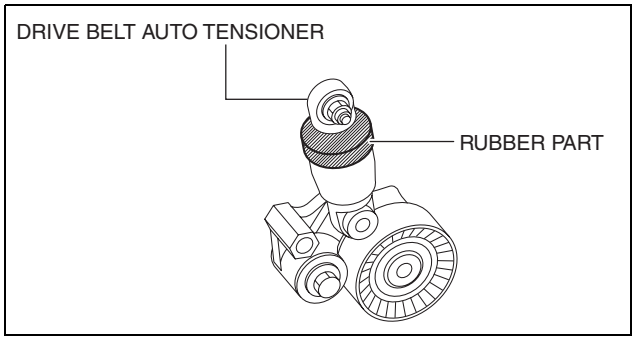

am3uuw0000889

2. Insert the wrench onto the cast hexagon on the drive belt auto tensioner, slowly turn it in the direction of the arrow shown in the figure, and fully depress.

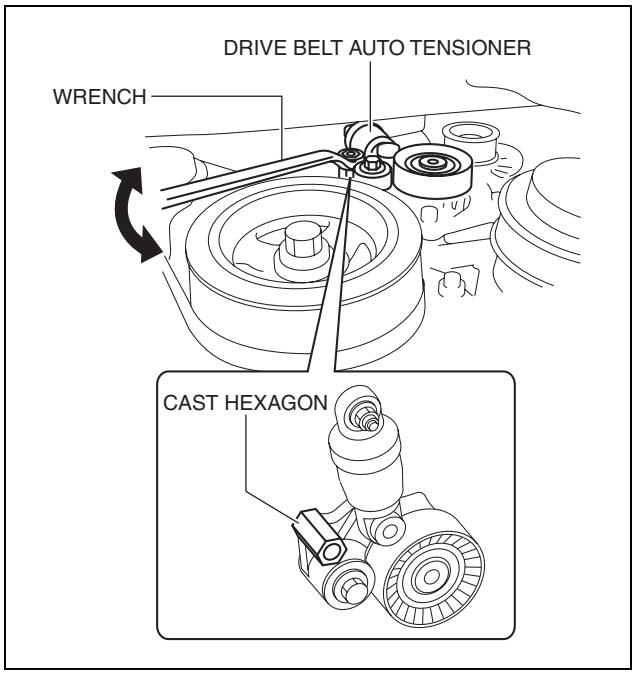

ac5uuw00002801

Note
- The drive belt auto tensioner is operated in the direction of the arrow by turning the wrench.

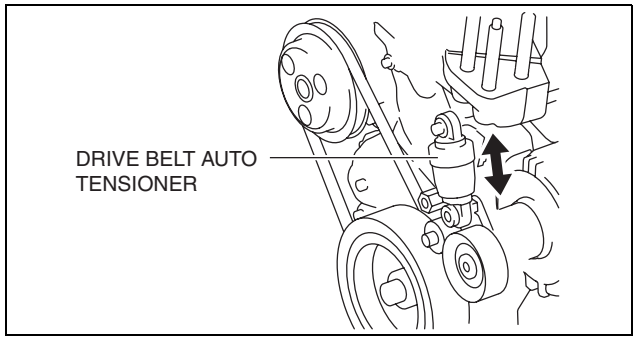

am3uuw0000889

3. Verify that the drive belt auto tensioner moves smoothly in the operational direction.
   - If it does not move smoothly, air infiltration into the inner hydraulic pressure unit can be considered. Move the drive belt auto tensioner up and down at full stroke three times to bleed the air.
     — After bleeding the air, if the drive belt auto tensioner still does not move smoothly when re-inspecting, replace the drive belt auto tensioner. (See 01-17A-17 GENERATOR REMOVAL/INSTALLATION [SKYACTIV-G 2.0]).

   Note
   - By moving the drive belt auto tensioner up and down full-stroke three times, the piston inside the tensioner moves to bleed the air.

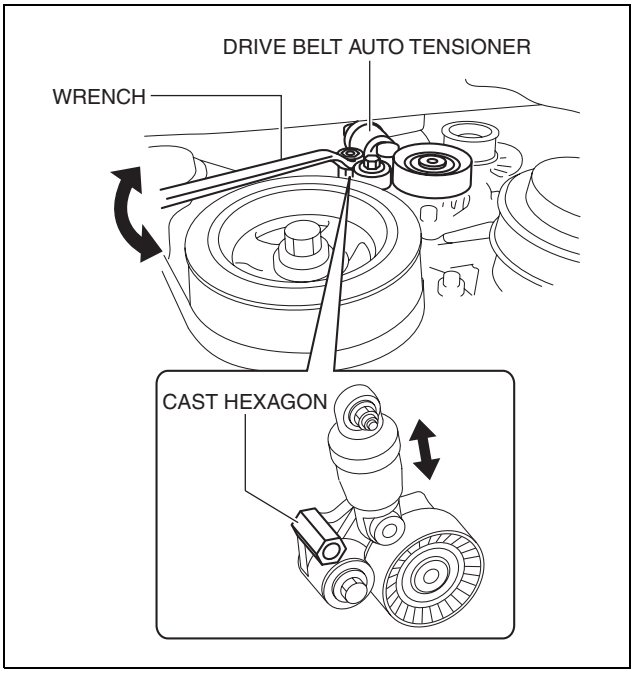

ac5wzw0000465

4. Turn the drive belt auto tensioner pulley by hand and verify that it rotates smoothly.
   - If it does not move smoothly, replace the drive belt auto tensioner. (See 01-17A-17 GENERATOR REMOVAL/INSTALLATION [SKYACTIV-G 2.0].)
5. Install the generator drive belt. (See 01-10A-10 DRIVE BELT REMOVAL/INSTALLATION [SKYACTIV-G 2.0].)

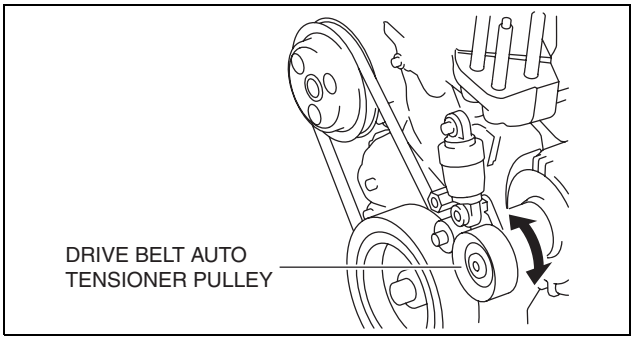

am3uuw0000889

MECHANICAL [SKYACTIV-G 2.0]

COMPRESSION INSPECTION [SKYACTIV-G 2.0]

id0110h2800300

Warning
- **Hot engines and oil can cause severe burns. Be careful not to burn yourself during removal/ installation of each component.**
- **Fuel vapor is hazardous. It can very easily ignite, causing serious injury and damage. Always keep sparks and flames away from fuel.**
- **Fuel line spills and leakage are dangerous. Fuel can ignite and cause serious injuries or death and damage. Fuel can also irritate skin and eyes. To prevent this, always complete the "Fuel Line Safety Procedure". (See 01-14A-6 BEFORE SERVICE PRECAUTION [SKYACTIV-G 2.0].)**

1. Verify that the battery is fully charged. (See 01-17A-7 BATTERY INSPECTION [SKYACTIV-G 2.0].)
   - Recharge it if necessary. (See 01-17A-9 BATTERY RECHARGING [SKYACTIV-G 2.0].)
2. Warm up the engine to the normal operating temperature.
3. Perform "Fuel Line Safety Procedures". (See 01-14A-6 BEFORE SERVICE PRECAUTION [SKYACTIV-G 2.0].)
4. Remove the following parts.
   (1) Plug hole plate. (See 01-10A-6 PLUG HOLE PLATE REMOVAL/INSTALLATION [SKYACTIV-G 2.0].)
   (2) Ignition coil/ion sensors. (See 01-18-2 IGNITION COIL/ION SENSOR REMOVAL/INSTALLATION [SKYACTIV-G 2.0].)
   (3) Spark plugs. (See 01-18-3 SPARK PLUG REMOVAL/INSTALLATION [SKYACTIV-G 2.0].)
   (4) Fuel pump relay
   (5) Fuel injector relay
5. Measure the compression pressure using the following procedure.
   (1) Press a compression gauge into the spark plug hole.
   (2) Fully depress the accelerator pedal.
   (3) Crank the engine and measure the compression pressure.

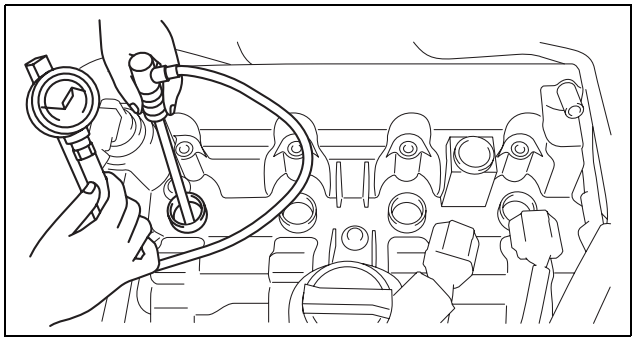
am3uuw0000879

Compression [European (L.H.D. U.K.) specs.]
Standard: 978 kPa {9.97 kgf/cm^2, 142 psi} [300 rpm]
Minimum: 783 kPa {7.98 kgf/cm^2, 114 psi} [300 rpm]
Maximum difference between cylinders: 166 kPa {1.69 kgf/cm^2, 24.1 psi}

Compression [Except European (L.H.D. U.K.) specs.]
Standard: 885 kPa {9.02 kgf/cm^2, 128 psi} [300 rpm]
Minimum: 708 kPa {7.22 kgf/cm^2, 103 psi} [300 rpm]
Maximum difference between cylinders: 150 kPa {1.53 kgf/cm^2, 21.8 psi}

Note
- Because the SKYACTIV-G 2.0 retards the intake valve closing timing, compression pressure is low.

   (4) Perform Steps (1) to (3) for all cylinders.
   (5) If it is less than the minimum specification, or there is a cylinder with a maximum value that exceeds the other cylinders, add a small quantity of engine oil through the spark plug hole and perform Steps (1) to (3).
      - If the pressure increases by adding the engine oil, the piston ring or the cylinder surface is worn, or they are damaged. Perform overhaul servicing.
      - If the pressure does not increase, valve seizure, valve attachment malfunction, or pressure leakage from the cylinder head gasket might be occurring. Perform overhaul servicing.
   (6) If the measured value is high, it is possible that there is an error in the electric variable valve timing system.
6. Remove the compression gauge.
7. Install the following parts.
   (1) Fuel injector relay
   (2) Fuel pump relay
   (3) Spark plugs. (See 01-18-3 SPARK PLUG REMOVAL/INSTALLATION [SKYACTIV-G 2.0].)
   (4) Ignition coil/ion sensors. (See 01-18-2 IGNITION COIL/ION SENSOR REMOVAL/INSTALLATION [SKYACTIV-G 2.0].)
   (5) Plug hole plate. (See 01-10A-6 PLUG HOLE PLATE REMOVAL/INSTALLATION [SKYACTIV-G 2.0].)

MECHANICAL [SKYACTIV-G 2.0]

ELECTRIC VARIABLE VALVE TIMING MOTOR/DRIVER INSPECTION [SKYACTIV-G 2.0]

id0110h2828100

Warning
- **A hot engine can cause severe burns. Turn off the engine and wait until it is cool before servicing.**

Caution
- **Do not disassemble the electric variable valve timing motor/driver because it is a precision unit.**
- **Do not apply excessive force when rotating the electric variable valve timing motor joint. If it is rotated with excessive force, the electric variable valve timing motor could be damaged.**

1. Disconnect the negative battery cable. (See 01-17A-11 NEGATIVE BATTERY CABLE DISCONNECTION/CONNECTION [SKYACTIV-G 2.0].) (See 01-17A-13 NEGATIVE BATTERY CABLE DISCONNECTION/CONNECTION [SKYACTIV-G 2.0 (WITHOUT i-stop)].)
2. Remove the plug hole plate. (See 01-10A-6 PLUG HOLE PLATE REMOVAL/INSTALLATION [SKYACTIV-G 2.0].)
3. Remove the electric variable valve timing motor/driver. (See 01-10A-16 ELECTRIC VARIABLE VALVE TIMING MOTOR/DRIVER REMOVAL/INSTALLATION [SKYACTIV-G 2.0].)
4. Rotate the electric variable valve timing motor joint to the left and right by your fingers and verify that it rotates smoothly in **15**° increments.

Note
- Rotate the joint area smoothly using only the tips of your fingers.
- The electric variable valve timing motor joint moves in **15**° increments, and if the joint is moved **24** times, it rotates one full rotation.

- If it does not rotate smoothly, replace the electric variable valve timing motor/driver.(See 01-10A-16 ELECTRIC VARIABLE VALVE TIMING MOTOR/DRIVER REMOVAL/INSTALLATION [SKYACTIV-G 2.0].)

5. Install in the reverse order of removal.

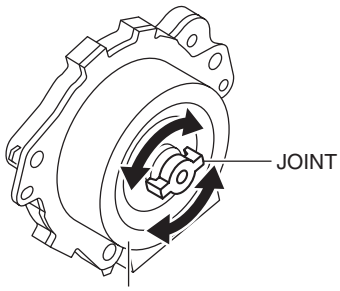

ELECTRIC VARIABLE VALVE TIMING MOTOR

am3uuw0000904

MECHANICAL [SKYACTIV-G 2.0]

ELECTRIC VARIABLE VALVE TIMING MOTOR/DRIVER REMOVAL/INSTALLATION [SKYACTIV-G 2.0]

id0110h2808100

Warning

- **A hot engine can cause severe burns. Turn off the engine and wait until it is cool before servicing.**

Caution

- **Applying excessive force (force of 100 N {10.2 kgf, 22.5 lbf} or more) to the electric variable valve timing motor/driver may cause a malfunction. When servicing, be careful not to apply excessive force to the electric variable valve timing motor/driver using other parts or tools.**
- **Do not disassemble the electric variable valve timing motor/driver because it is a precision unit.**

1. Disconnect the negative battery cable. (See 01-17A-11 NEGATIVE BATTERY CABLE DISCONNECTION/CONNECTION [SKYACTIV-G 2.0].) (See 01-17A-13 NEGATIVE BATTERY CABLE DISCONNECTION/CONNECTION [SKYACTIV-G 2.0 (WITHOUT i-stop)].)
2. Remove the plug hole plate. (See 01-10A-6 PLUG HOLE PLATE REMOVAL/INSTALLATION [SKYACTIV-G 2.0].)
3. Remove in the order indicated in the table.
4. Install in the reverse order of removal.

1	No. 3 engine mount (See 01-10A-16 No.3 Engine Mount Removal Note.) (See 01-10A-19 No.3 Engine Mount Installation Note.)
2	Electric variable valve timing motor/driver connector
3	Electric variable valve timing motor/driver (See 01-10A-17 Electric Variable Valve Timing Motor/Driver Installation Note.)
4	O-ring

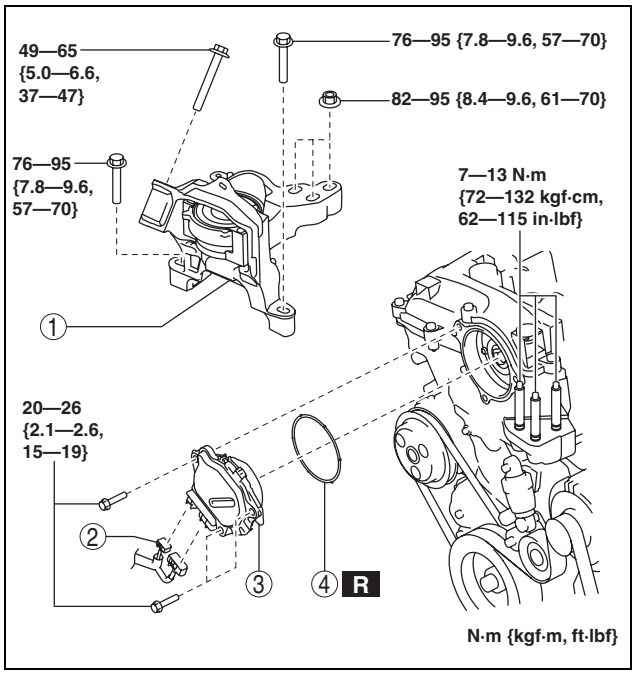

ac5uuw00000670

No.3 Engine Mount Removal Note

1. Remove the clips shown in the figure and set the ground cable aside.
2. Remove the front under cover No.2. (See 09-16-41 FRONT UNDER COVER No.2 REMOVAL/INSTALLATION.)

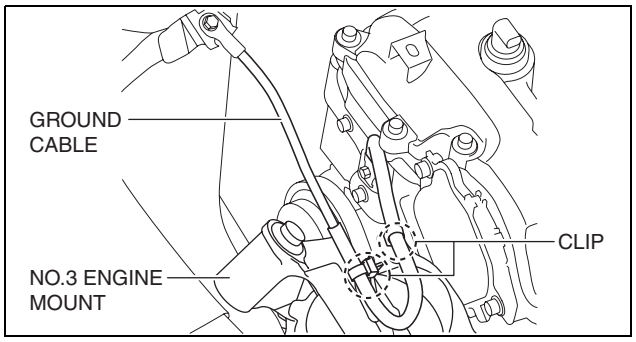

ac5uuw00000671

Caution

- **To prevent deformation of the oil pan, support the engine using the following methods.**
  - **— When using an engine lifter, insert rubber of appropriate size (approx. 20 mm {0.79 in} thickness) between the engine lifter and the oil pan to support the oil pan.**
  - **— When using a garage jack, place rubber of appropriate size (approx. 20 mm {0.79 in} thickness) on a batten which is large enough to cover the oil pan to support the oil pan.**

3. Before removing the No.3 engine mount, support the engine (oil pan) using a commercially available engine lifter or garage jack.

Caution

- **Slots have been adopted for the No.3 engine mount installation holes. If the No.3 engine mount is deviated from the original position when installing the No.3 engine mount, engine noise or vibration could increase. Before removing the No.3 engine mount, place alignment marks on the No.3 engine mount and body so that they can be assembled to the same positions as before removal.**

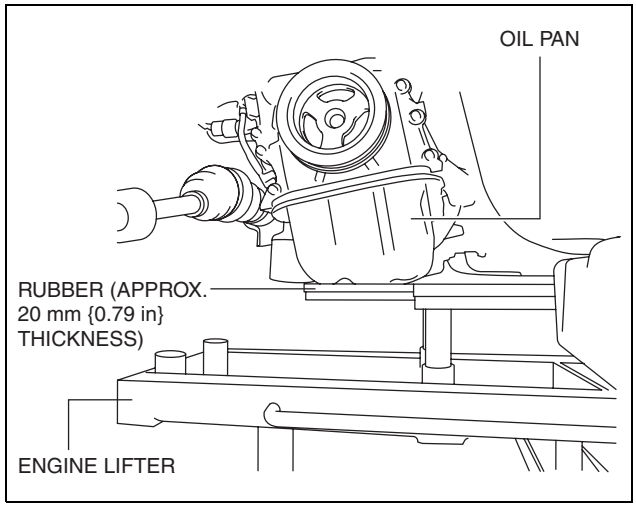

am3uuw0000890

4. Place alignment marks on the locations shown in the figure so that they can be assembled to the same positions as before removal.

Note

- Paint so that the No.3 engine mount is framed on the body side and the outline of the nut is framed on the No.3 engine mount side.

5. Remove the No. 3 engine mount.

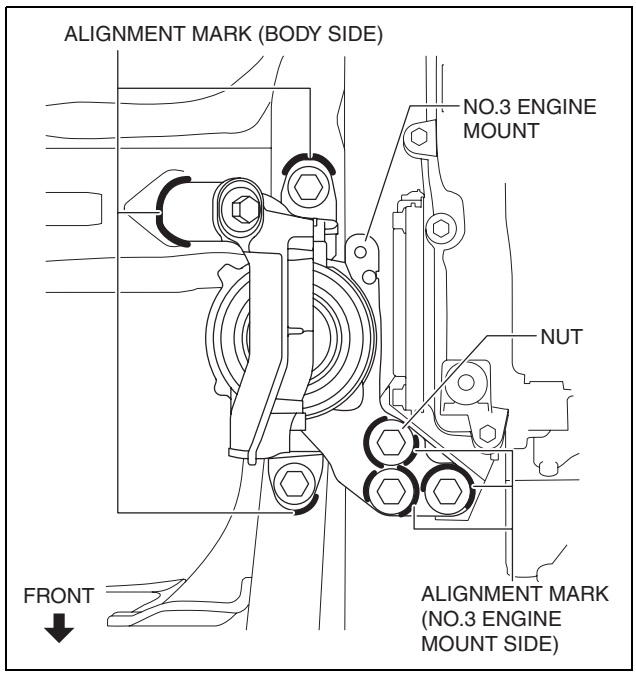

ac5uuw00000672

Electric Variable Valve Timing Motor/Driver Installation Note

1. Install a new O-ring to the O-ring installation groove of the engine front cover.

Caution

- **To prevent damage to the electric variable valve timing motor/driver, do not apply excessive force (force of 100 N {10.2 kgf, 22.5 lbf} or more) to the shaded areas shown in the figure.**

2. Install the electric variable valve timing motor/driver using the following procedures.

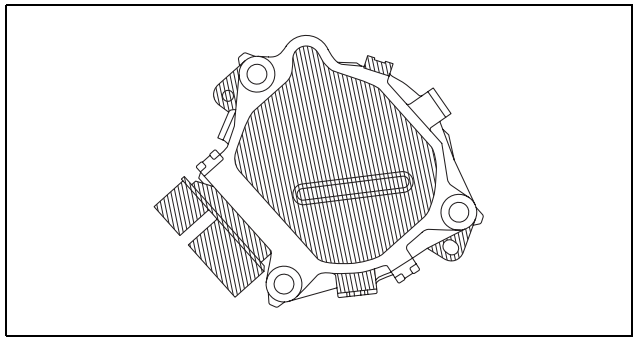

am3uuw0000890

MECHANICAL [SKYACTIV-G 2.0]

Note

- The eccentric shaft on the electric variable valve timing actuator side can be rotated to the left and right.
- The electric variable valve timing motor/driver can be assembled with the joint groove of the eccentric shaft in any position, and it will not lead to vehicle damage or performance reduction.

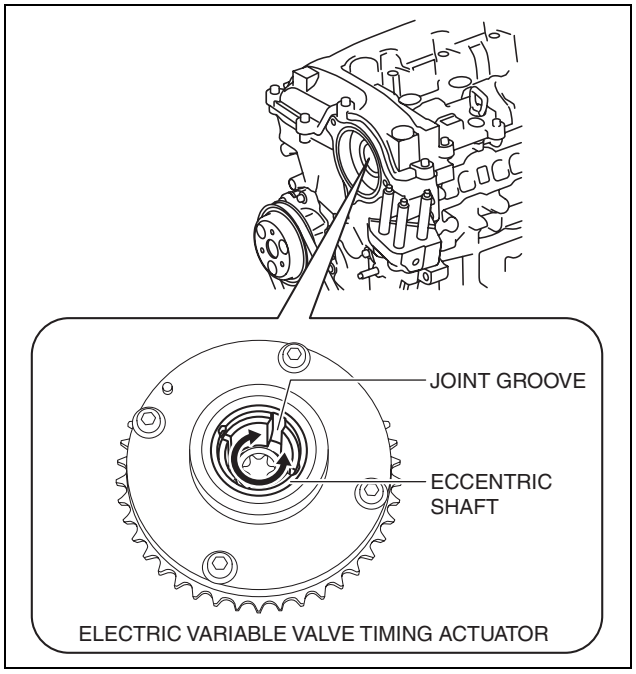

am3uuw0000904

(1) Before installation, rotate the joint of the end of the electric variable valve timing motor so that it is aligned to the joint groove on the electric variable valve timing actuator side.
(2) Engage the joint on the end of the electric variable valve timing motor with the joint groove on the electric variable valve timing actuator side.
(3) Attach the seal surface.
(4) Tighten the electric variable valve timing motor/driver installation bolts.

Tightening torque
20—26 N·m {2.1—2.6 kgf·m, 15—19 ft·lbf}

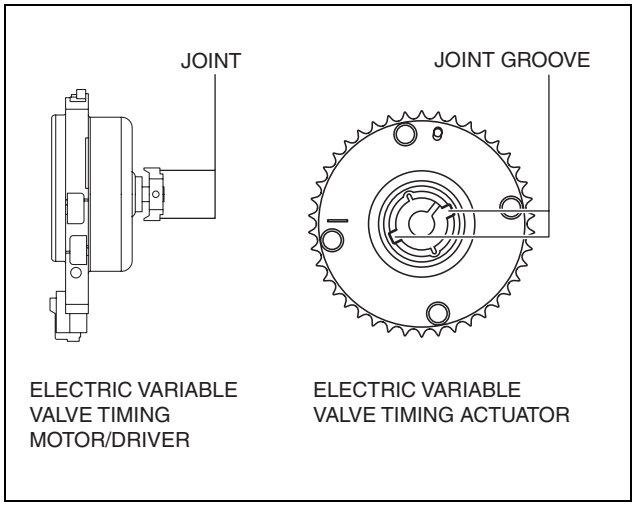

am3uuw0000904

MECHANICAL [SKYACTIV-G 2.0]

No.3 Engine Mount Installation Note

Caution

- **If the No.3 engine mount is deviated from the original position when installing the No.3 engine mount, engine noise or vibration could increase. When installing the No.3 engine mount, align the alignment mark placed during removal and install it to the original position.**

Note

- When replacing the No.3 engine mount, place a mark at the same position as the one placed before removal.
- If the No.3 engine mount nut is loosened, tighten the engine front cover stud bolts because they may be loosened.

1. Tighten the engine front cover stud bolts.

   Tightening torque
   7—13 N·m {72—132 kgf·cm, 62—115 in·lbf}

2. Temporarily tighten the No.3 engine mount installation bolts and nuts using the following procedure:
   (1) Align the alignment marks on the body side and No.3 engine mount, and temporarily tighten the bolts shown in the figure.

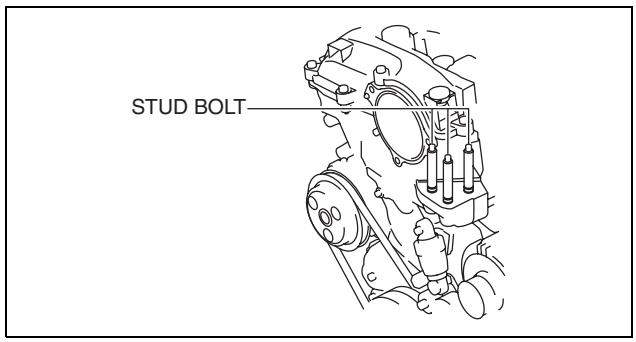

am3uuw0000902

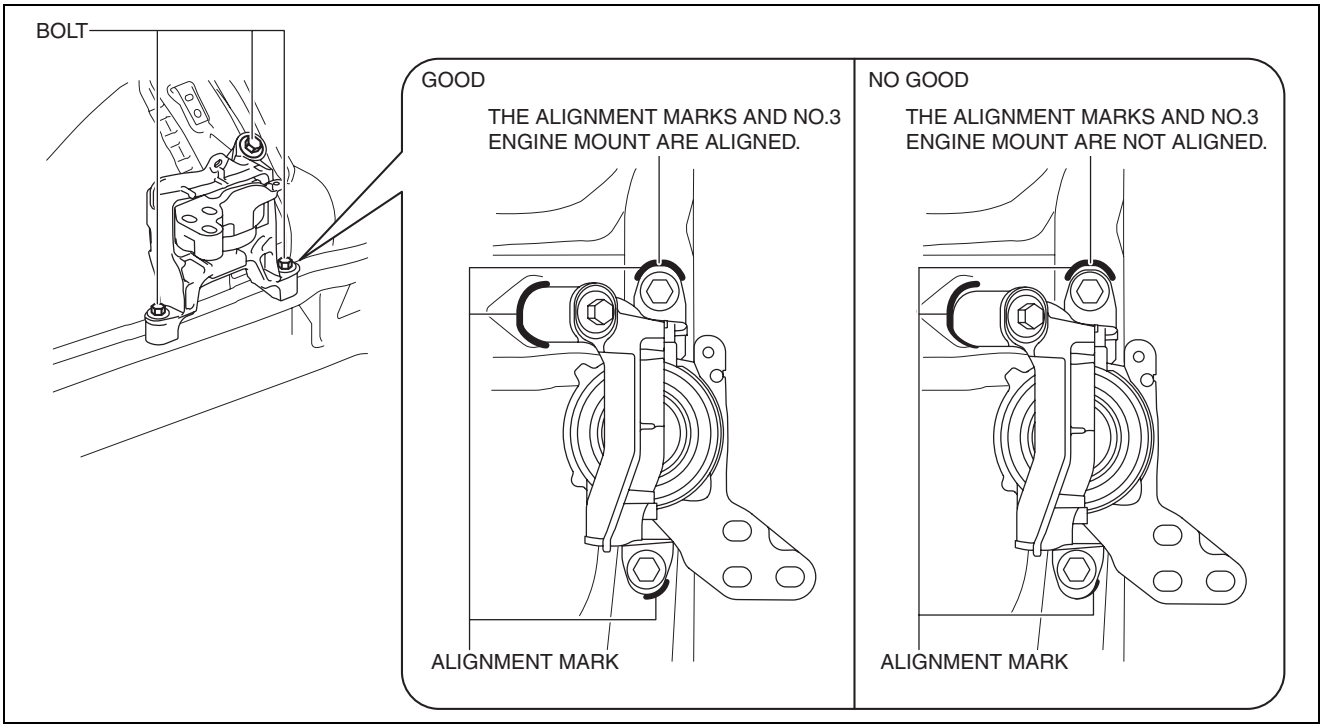

ac5wzw0000520

MECHANICAL [SKYACTIV-G 2.0]

(2) Temporarily tighten the nuts shown in the figure while aligning the alignment marks of the No.3 engine mount and nuts.

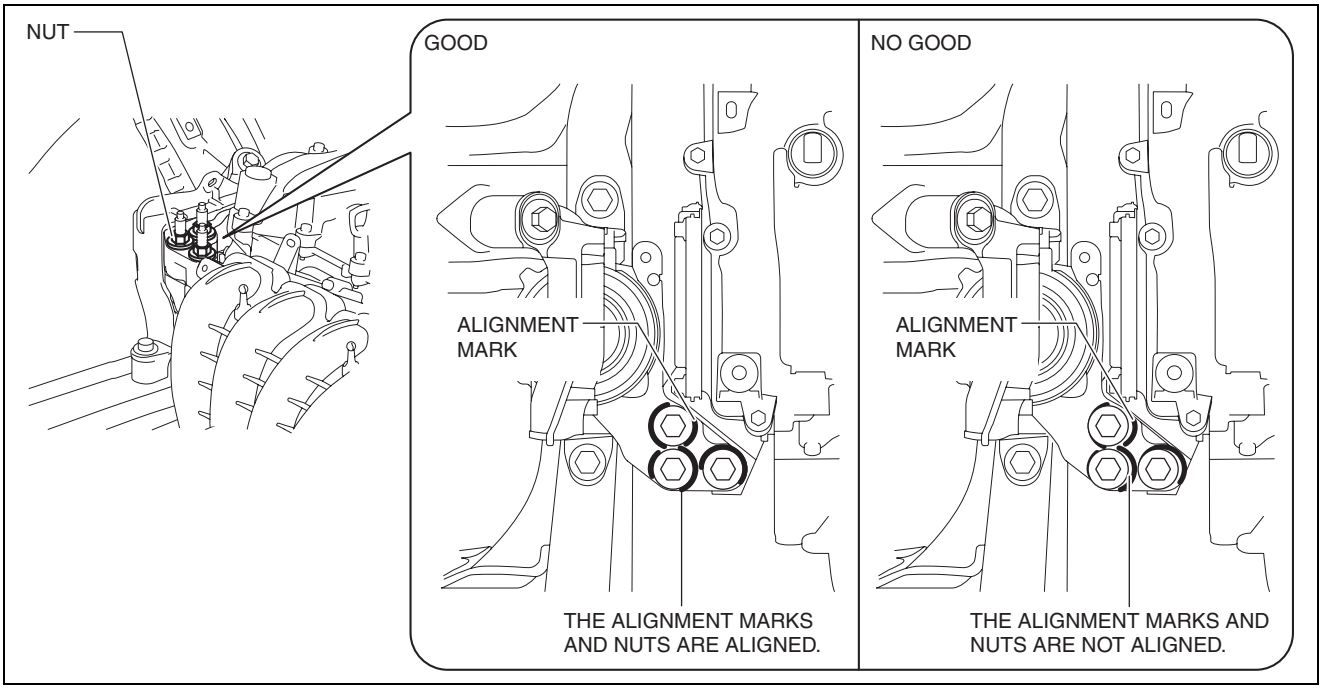

ac5wzw0000520

Note

- If the alignment marks are not aligned, align the alignment marks while slightly moving the engine and temporarily tighten the nuts.

3. Tighten the No.3 engine mount installation bolts and nuts in the order shown in the figure.

No.	Tightening torque
1	76—95 N·m {7.8—9.6 kgf·m, 57—70 ft·lbf}
2	82—95 N·m {8.4—9.6 kgf·m, 61—70 ft·lbf}
3	49—65 N·m {5.0—6.6 kgf·m, 37—47 ft·lbf}

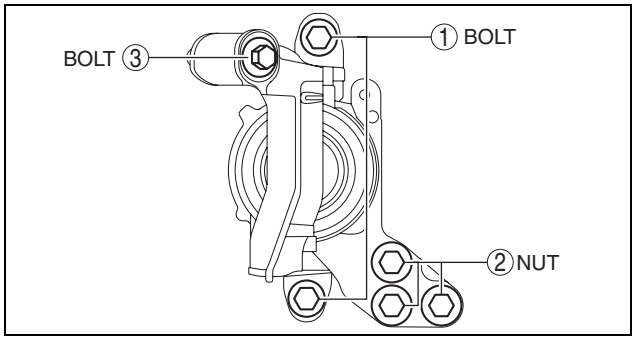

ac5uuw00000675

4. Remove the engine lifter or garage jack.
5. Install in the reverse order of removal.

MECHANICAL [SKYACTIV-G 2.0]

HYDRAULIC VARIABLE VALVE TIMING ACTUATOR INSPECTION [SKYACTIV-G 2.0]

id0110h2126800

Warning
- **A hot engine can cause severe burns. Turn off the engine and wait until it is cool before servicing.**

Caution
- **Do not disassemble the hydraulic variable valve timing actuator because it is a precision unit.**

1. Disconnect the negative battery cable. (See 01-17A-11 NEGATIVE BATTERY CABLE DISCONNECTION/CONNECTION [SKYACTIV-G 2.0].) (See 01-17A-13 NEGATIVE BATTERY CABLE DISCONNECTION/CONNECTION [SKYACTIV-G 2.0 (WITHOUT i-stop)].)
2. Remove the plug hole plate. (See 01-10A-6 PLUG HOLE PLATE REMOVAL/INSTALLATION [SKYACTIV-G 2.0].)
3. Remove the ignition coil/ion sensors. (See 01-18-2 IGNITION COIL/ION SENSOR REMOVAL/INSTALLATION [SKYACTIV-G 2.0].)
4. Remove the cylinder head cover. (See 01-10A-39 TIMING CHAIN REMOVAL/INSTALLATION [SKYACTIV-G 2.0].)
5. Verify that the notch of the rotor and projection of the cover on the hydraulic variable valve timing actuator are aligned and fitted.
   - If the notch of the rotor and projection of the cover are not aligned, rotate the crankshaft in the direction the engine rotates two turns and verify that they are aligned.
     - — If the notch of the rotor and projection of the cover are still not aligned, replace the hydraulic variable valve timing actuator. (See 01-10A-23 ELECTRIC VARIABLE VALVE TIMING ACTUATOR, HYDRAULIC VARIABLE VALVE TIMING ACTUATOR REMOVAL/INSTALLATION [SKYACTIV-G 2.0].)
   - If, when turning the crankshaft, there is a slapping noise from the hydraulic variable valve timing actuator each time before the cam reaches its maximum lift, it means that the actuator is not secured. Replace the hydraulic variable valve timing actuator. (See 01-10A-23 ELECTRIC VARIABLE VALVE TIMING ACTUATOR, HYDRAULIC VARIABLE VALVE TIMING ACTUATOR REMOVAL/INSTALLATION [SKYACTIV-G 2.0].)
6. Install in the reverse order of removal.

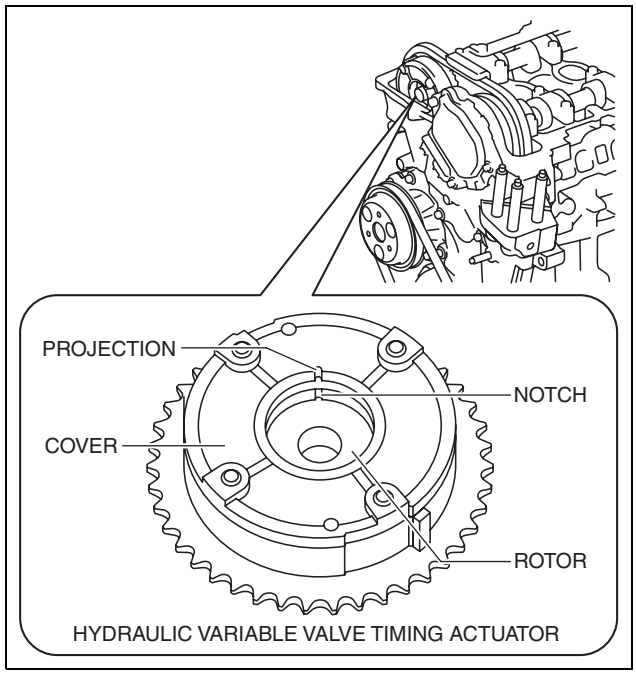

am3uuw0000888

MECHANICAL [SKYACTIV-G 2.0]

ELECTRIC VARIABLE VALVE TIMING ACTUATOR INSPECTION [SKYACTIV-G 2.0]

id0110h2555500

Warning
- **A hot engine can cause severe burns. Turn off the engine and wait until it is cool before servicing.**

Caution
- **Do not disassemble the electric variable valve timing actuator because it is a precision unit.**

1. Disconnect the negative battery cable. (See 01-17A-11 NEGATIVE BATTERY CABLE DISCONNECTION/CONNECTION [SKYACTIV-G 2.0].) (See 01-17A-13 NEGATIVE BATTERY CABLE DISCONNECTION/CONNECTION [SKYACTIV-G 2.0 (WITHOUT i-stop)].)
2. Remove the plug hole plate. (See 01-10A-6 PLUG HOLE PLATE REMOVAL/INSTALLATION [SKYACTIV-G 2.0].)
3. Remove the electric variable valve timing motor/driver. (See 01-10A-16 ELECTRIC VARIABLE VALVE TIMING MOTOR/DRIVER REMOVAL/INSTALLATION [SKYACTIV-G 2.0].)
4. Rotate the eccentric shaft of the electric variable valve timing actuator by hand and verify that it rotates smoothly.
   - If it does not rotate smoothly, replace the electric variable valve timing actuator. (See 01-10A-23 ELECTRIC VARIABLE VALVE TIMING ACTUATOR, HYDRAULIC VARIABLE VALVE TIMING ACTUATOR REMOVAL/INSTALLATION [SKYACTIV-G 2.0].)

   Note
   - Hook a finger onto the joint groove of the eccentric shaft to rotate the shaft easily.
   - The eccentric shaft stops rotating at the maximum retard position when it is rotated counterclockwise as viewed from the front, and at the maximum advance position when rotated clockwise.
   - The eccentric shaft rotates 15.8 turns from the maximum retard position to the maximum advance position.
5. Install in the reverse order of removal.

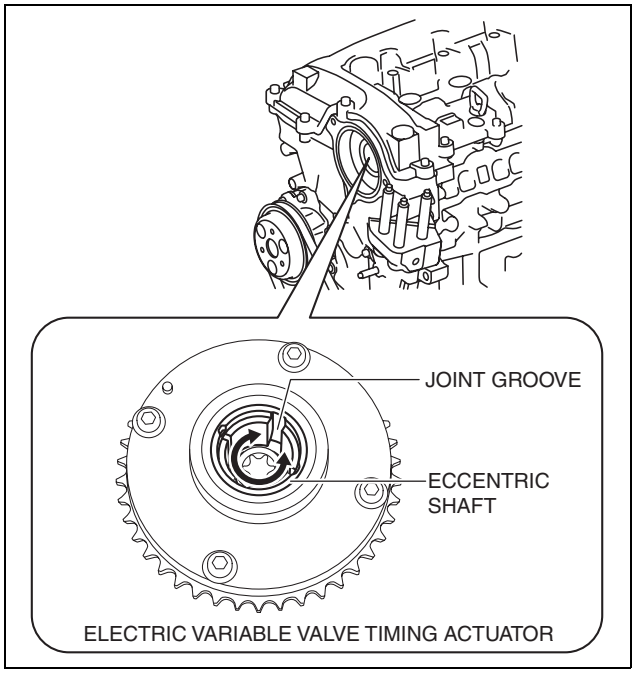

am3uuw0000903

MECHANICAL [SKYACTIV-G 2.0]

ELECTRIC VARIABLE VALVE TIMING ACTUATOR, HYDRAULIC VARIABLE VALVE TIMING ACTUATOR REMOVAL/INSTALLATION [SKYACTIV-G 2.0]

id0110h2126900

Warning

- **A hot engine can cause severe burns. Turn off the engine and wait until it is cool before servicing.**

Caution

- **Do not disassemble the electric variable valve timing actuator and hydraulic variable valve timing actuator because they are precision units.**
- **If the camshaft is rotated with the timing chain removed and the piston at the top dead center position, the valve may contact the piston and the engine could be damaged. When rotating the camshaft with the timing chain removed, rotate it after lowering the piston from the top dead center position.**
- **When rotating the camshaft using a wrench on the cast hexagon, the wrench may contact the rocker arm and damage the rocker arm. To prevent damage to the rocker arm when holding the camshaft on the cast hexagon, use the wrench at engine rear side as shown in the figure to secure a clearance between the cam.**

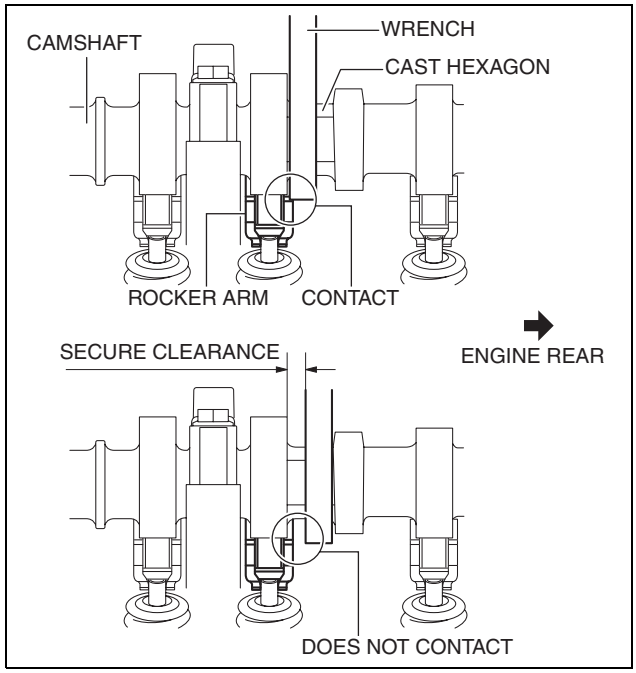

am3uuw0000875

Note

- Width at the cast hexagon of the camshaft is 22—24 mm {0.87—0.94 in}.

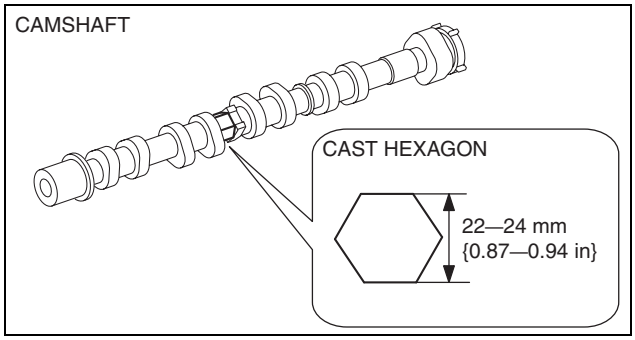

am3uuw0000902

1. Disconnect the negative battery cable. (See 01-17A-11 NEGATIVE BATTERY CABLE DISCONNECTION/CONNECTION [SKYACTIV-G 2.0].) (See 01-17A-13 NEGATIVE BATTERY CABLE DISCONNECTION/CONNECTION [SKYACTIV-G 2.0 (WITHOUT i-stop)].)
2. Remove the plug hole plate. (See 01-10A-6 PLUG HOLE PLATE REMOVAL/INSTALLATION [SKYACTIV-G 2.0].)
3. Remove the ignition coil/ion sensors. (See 01-18-2 IGNITION COIL/ION SENSOR REMOVAL/INSTALLATION [SKYACTIV-G 2.0].)
4. Remove the cylinder head cover. (See 01-10A-39 TIMING CHAIN REMOVAL/INSTALLATION [SKYACTIV-G 2.0].)
5. Remove the front under cover No.2. (See 09-16-41 FRONT UNDER COVER No.2 REMOVAL/INSTALLATION.)
6. Remove the electric variable valve timing motor/driver. (See 01-10A-16 ELECTRIC VARIABLE VALVE TIMING

MECHANICAL [SKYACTIV-G 2.0]

MOTOR/DRIVER REMOVAL/INSTALLATION [SKYACTIV-G 2.0].)
7. Remove the vacuum pump. (Only when hydraulic variable valve timing actuator is removed.) (See 04-11-21 VACUUM PUMP REMOVAL/INSTALLATION [SKYACTIV-G 2.0].)
8. Remove the high pressure fuel pump and rear housing. (Only when hydraulic variable valve timing actuator is removed.) (See 01-14A-44 HIGH PRESSURE FUEL PUMP REMOVAL/INSTALLATION [SKYACTIV-G 2.0].)
9. Remove in the order indicated in the table.
10. Install in the reverse order of removal.
11. Start the engine and inspect the following:
    - Ignition timing, idle speed and idle mixture. (See 01-10A-4 ENGINE TUNE-UP [SKYACTIV-G 2.0].)

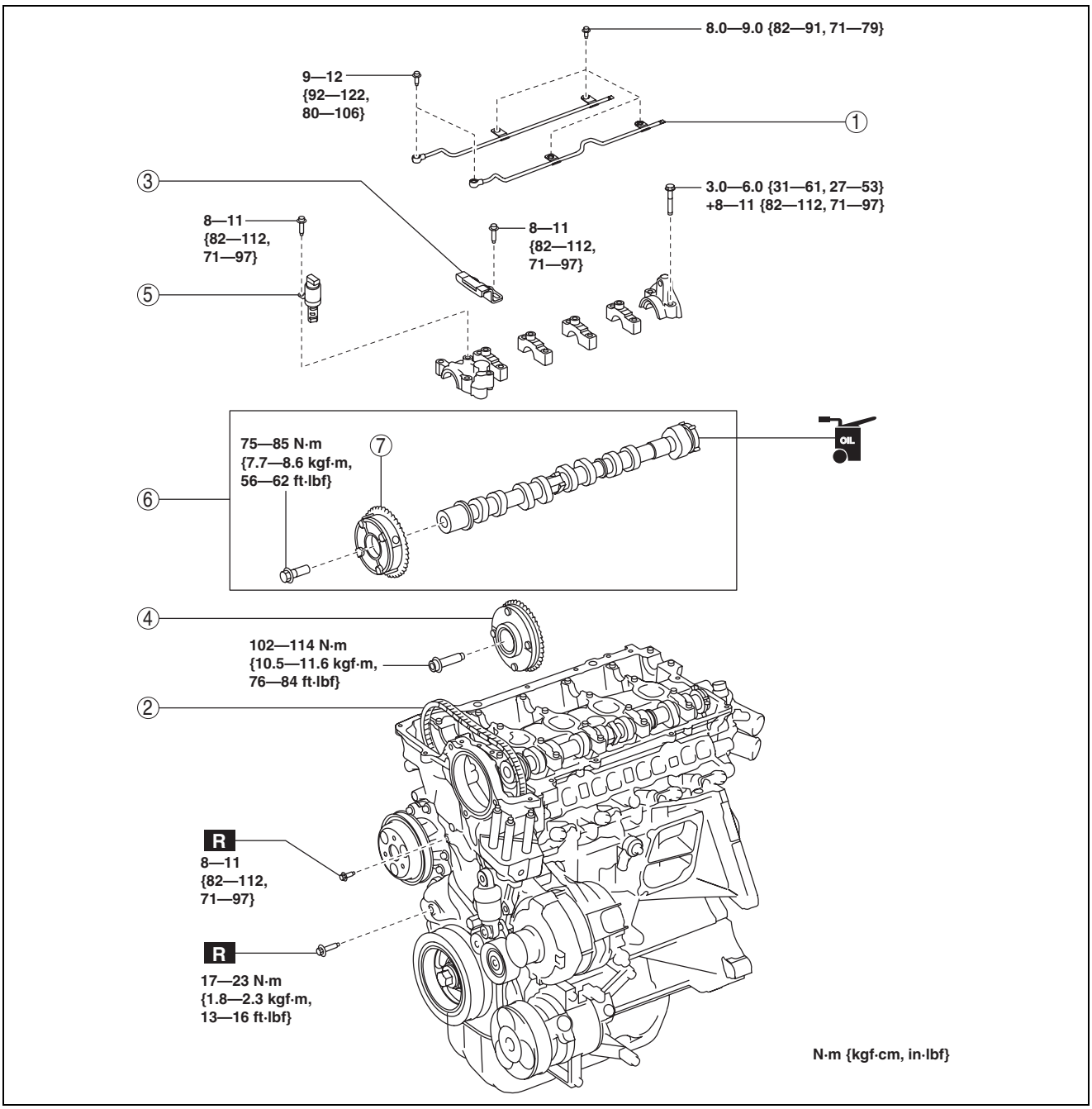

ac5uuw00001623

1	Oil shower pipe (See 01-10A-37 Oil Shower Pipe Installation Note.)
2	Timing chain (See 01-10A-25 Timing Chain Removal Note.) (See 01-10A-36 Timing Chain Installation Note.)
3	Chain guide (No.1)

4	Electric variable valve timing actuator (See 01-10A-28 Electric Variable Valve Timing Actuator Removal Note.) (See 01-10A-35 Electric Variable Valve Timing Actuator Installation Note.)
5	OCV

MECHANICAL [SKYACTIV-G 2.0]

6	Hydraulic variable valve timing actuator and exhaust camshaft component (See 01-10A-30 Hydraulic Variable Valve Timing Actuator and Exhaust Camshaft Component Removal Note.) (See 01-10A-32 Hydraulic Variable Valve Timing Actuator and Exhaust Camshaft Component Installation Note.)

7	Hydraulic variable valve timing actuator (See 01-10A-31 Hydraulic Variable Valve Timing Actuator Removal Note.) (See 01-10A-31 Hydraulic Variable Valve Timing Actuator Installation Note.)

Timing Chain Removal Note

1. Release the tension on the timing chain using the following procedure:

Note

- Release the tension on the timing chain by securing the timing chain tensioner arm through the service hole on the engine front cover.

(1) Remove the blind plugs (upper and lower) on the engine front cover service holes.

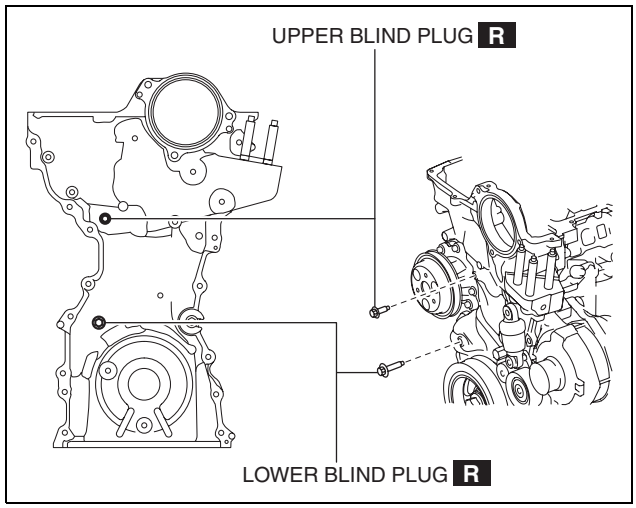

am3uuw0000876

(2) Insert an M6 bolt (**35—60 mm {1.4—2.3 in}** length with thread to the end) to the upper service hole and tighten it until it contacts the tensioner arm, then loosen it **approx. 180 degrees**. (Set the bolt so that it sits slightly in front of the tensioner arm.)

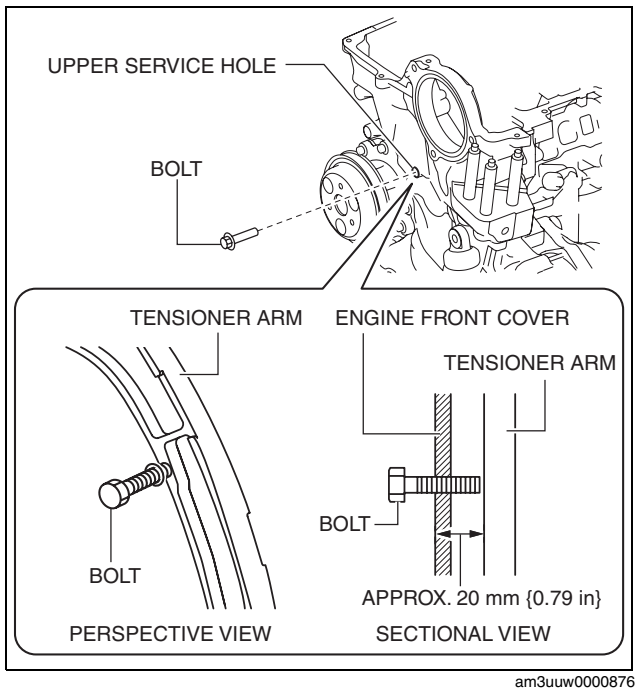

am3uuw0000876

Note

- The bolt contacts the tensioner arm when it is inserted **approx. 20 mm {0.79 in}**.
- Hold the exhaust camshaft using a wrench on the cast hexagon and move it back and forth a few times as shown in the figure. This will drain the oil from the chain tensioner and make the following servicing easier.

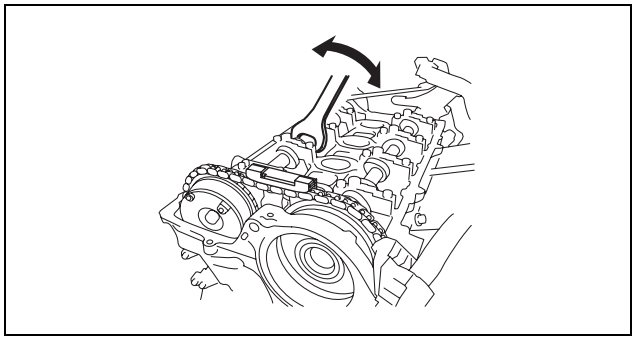

am3uuw0000876

(3) Insert a precision screwdriver into the lower service hole.

(4) While moving the exhaust camshaft back and forth in the direction of the arrow using a wrench on the cast hexagon, press down the link plate of the timing chain tensioner using a precision screwdriver and release the plunger lock.

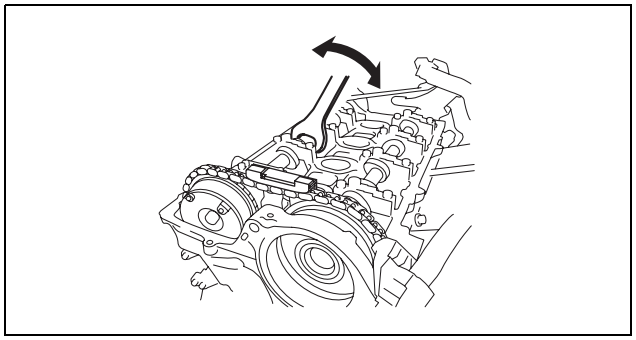

am3uuw0000876

Note

- When moving the exhaust camshaft back and forth, the timing chain pushes the plunger in the chain tensioner making it easier to operate the link plate.

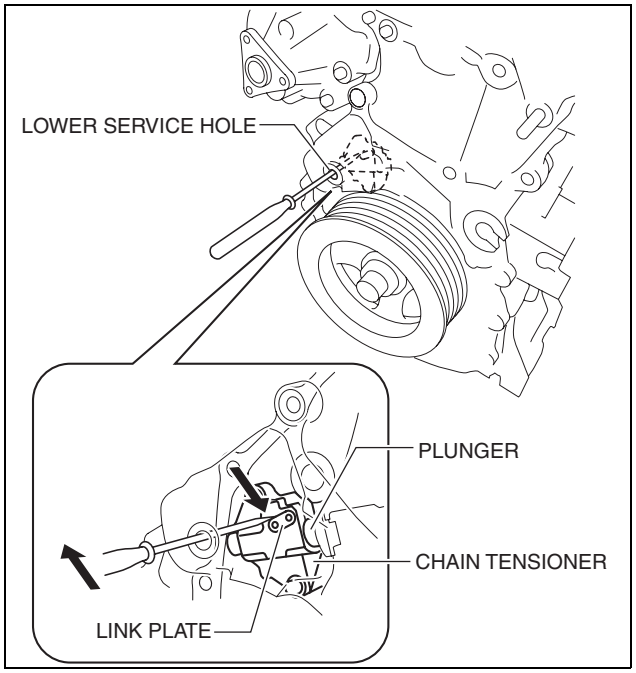

am3uuw0000876

(5) With the plunger lock released, rotate the exhaust camshaft clockwise until the timing chain loosens.

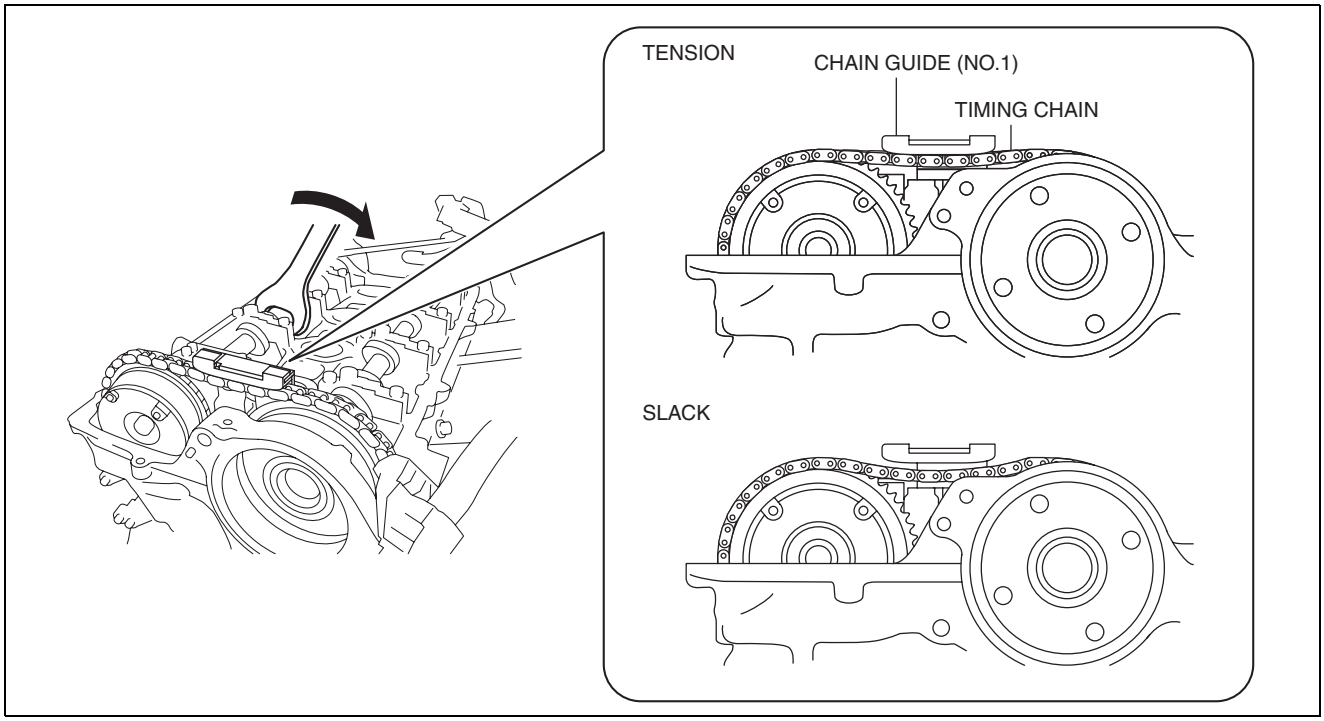

am3uuw0000876

(6) With the chain loosened, tighten the M6 bolt in the upper service hole so that the bolt is inserted **approx. 5 mm {0.2 in}** additionally to secure the tensioner arm.

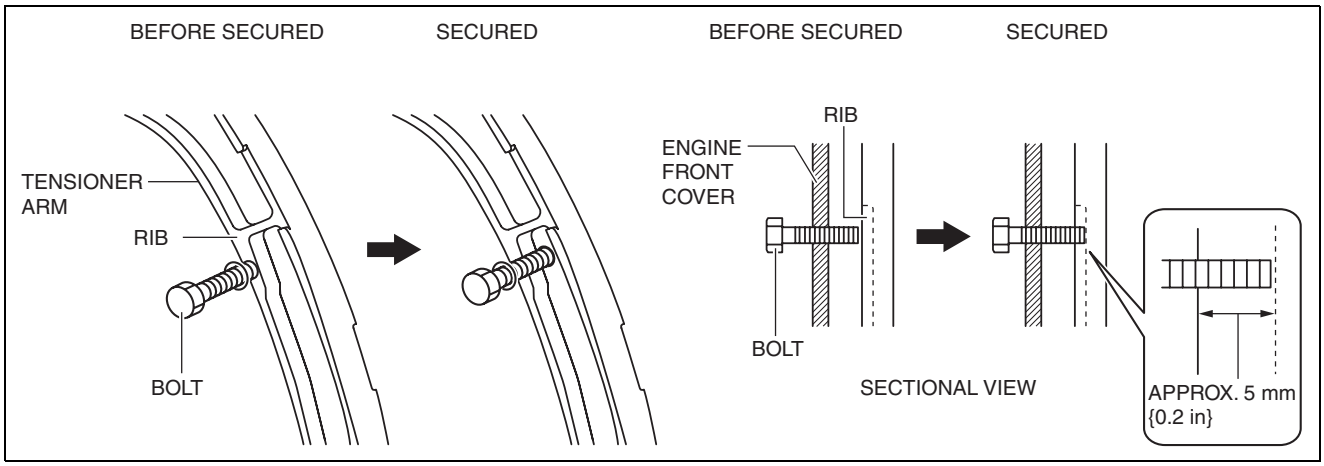

am3uuw0000876

- If the bolt cannot be inserted **approx. 5 mm {0.2 in}**, the plunger lock of the chain tensioner may not release, or the chain may not loosen enough. Return the bolt to the original position and restart the procedure from step (3).

Note

- By rotating the exhaust camshaft clockwise, the timing chain pushes the tensioner arm and the rib position deviates. The entire tensioner arm can be secured by hooking the bolt onto the deviated rib.

(7) After securing the tensioner arm, remove the chain guide (No.1).

MECHANICAL [SKYACTIV-G 2.0]

Electric Variable Valve Timing Actuator Removal Note

Caution

- **Keep the timing chain pulled up during and after the work in which it has been set aside from the sprocket. If the chain falls down, it may disengage from the sprocket on the crankshaft side and deviate, leading to valve timing deviation.**
- **After servicing, always verify the valve timing.**

1. Rotate the crankshaft clockwise so that cylinder No.1 is positioned around before top dead center (TDC) as shown in the figure.

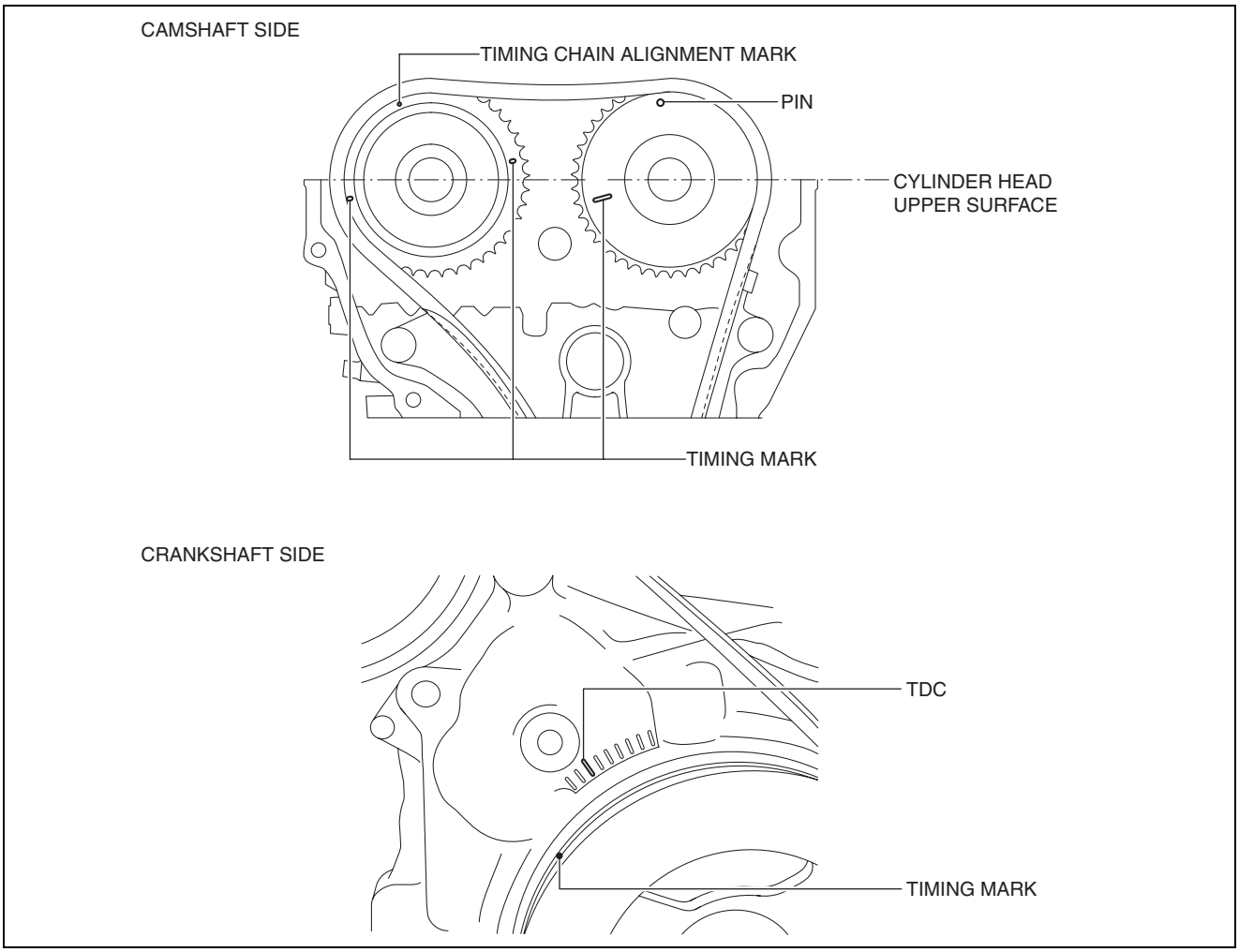

am3uuw0000876

Note

- With cylinder No.1 positioned around before top dead center (TDC), there is no large movement (rotation) of the exhaust camshaft when the timing chain is removed. Therefore, installation of the electric variable valve timing actuator to the camshaft will be easier. (If there is a large movement of the exhaust camshaft, installation of the electric variable valve timing actuator to the camshaft must be performed while loosening the chain by rotating the exhaust camshaft.)

2. Mark the timing chain and each actuator so that they can be reassembled in the same condition as before removal.

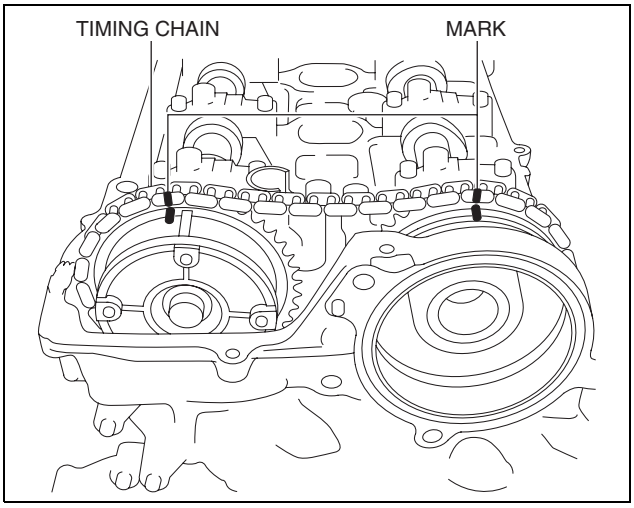

am3uuw0000877

3. Hold the intake camshaft using a wrench on the cast hexagon and remove the electric variable valve timing actuator installation bolt.

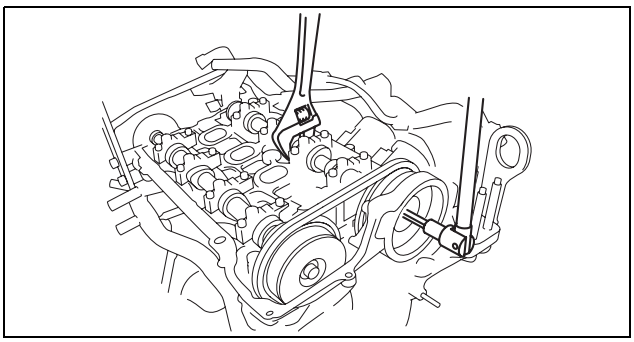
am3uuw0000877

4. Using a screwdriver wrapped in a clean cloth, lightly press the electric variable valve timing actuator to the front and separate the intake camshaft and the actuator.

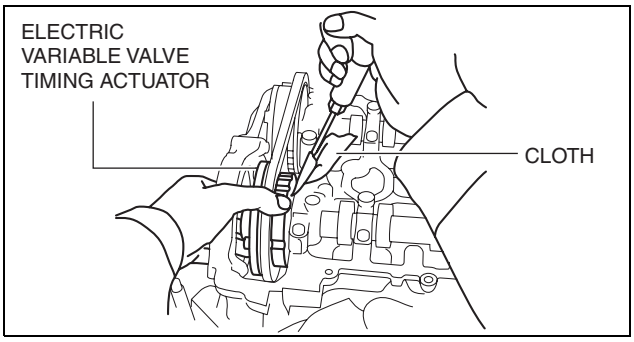

am3uuw0000903

5. Remove the timing chain from the exhaust and intake camshaft sprockets and set is aside, and remove the electric variable valve timing actuator.

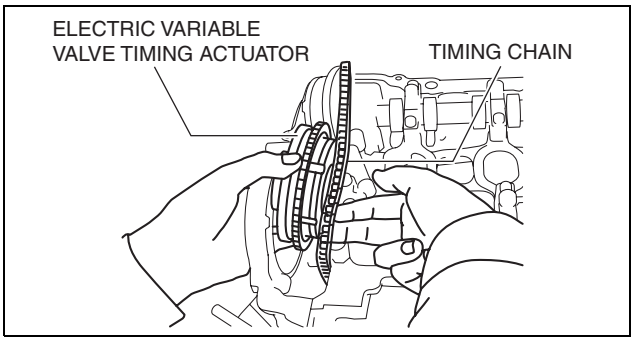

am3uuw0000903

6. Return the timing chain to the exhaust camshaft sprocket, and pull the timing chain up and suspend it using a rope as shown in the figure.

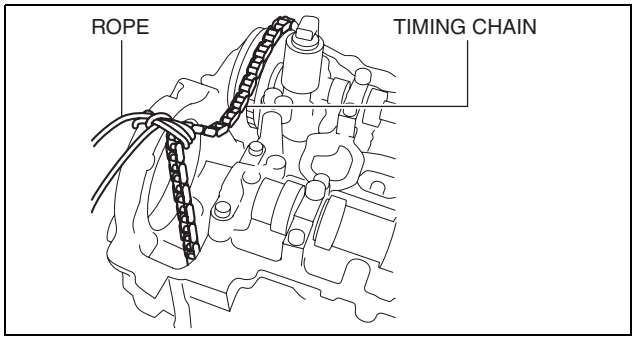

am3uuw0000877

Hydraulic Variable Valve Timing Actuator and Exhaust Camshaft Component Removal Note

Caution
- **Keep the timing chain pulled up during and after the work in which it has been set aside from the sprocket. If the chain falls down, it may disengage from the sprocket on the crankshaft side and deviate, leading to valve timing deviation.**
- **After servicing, always verify the valve timing.**

1. Leave the timing chain as it is, which was suspended after electric variable valve timing actuator removal.
2. Temporarily install the cylinder head cover bolt to the position shown in the figure to use it for suspending the timing chain.

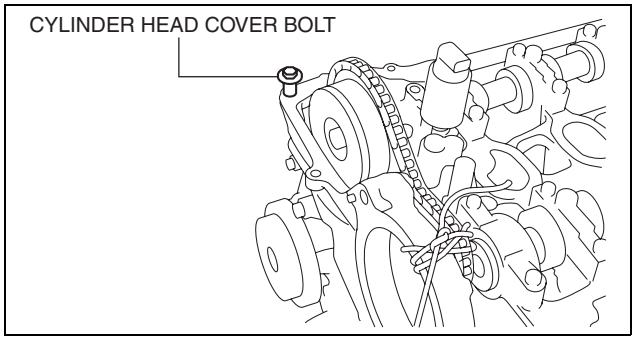

am3uuw0000877

3. Loosen the exhaust-side camshaft cap bolts in two or three passes in the order shown in the figure, and remove the camshaft cap.

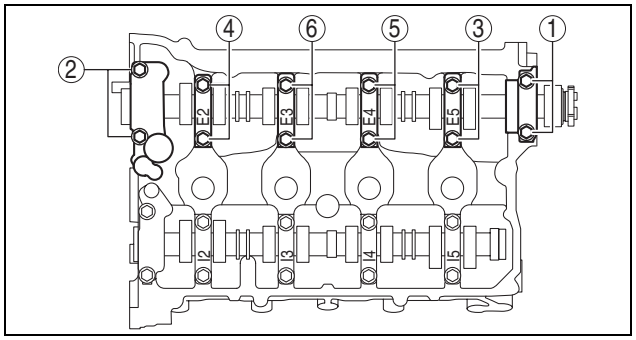

am3uuw0000877

4. While setting the timing chain aside, remove the hydraulic variable valve timing actuator and the exhaust camshaft as a single unit.

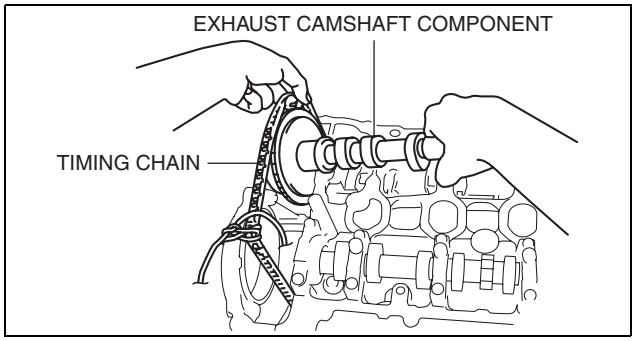

am3uuw0000877

5. Pull up the timing chain and suspend it using a rope as shown in the figure.

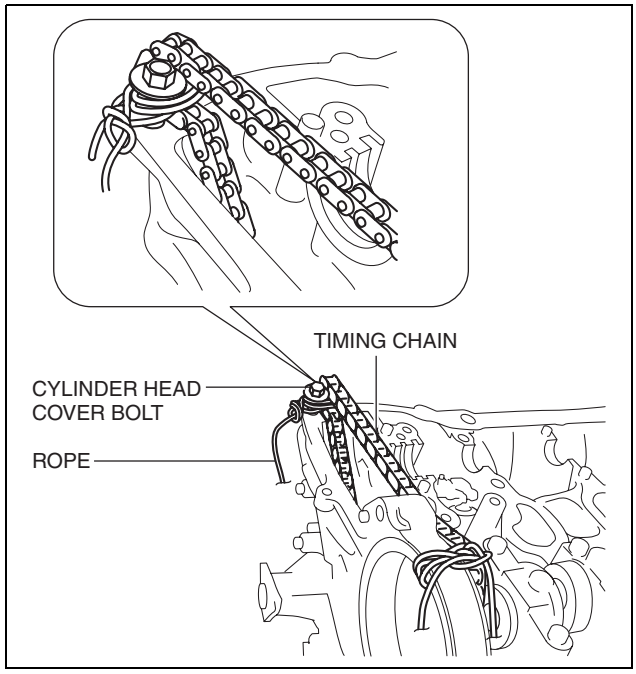

am3uuw0000877

Hydraulic Variable Valve Timing Actuator Removal Note

1. Lock the exhaust camshaft against rotation by holding the exhaust camshaft with a vise and securing the cast hexagon with a wrench.
2. Loosen the hydraulic variable valve timing actuator installation bolt and remove the actuator.

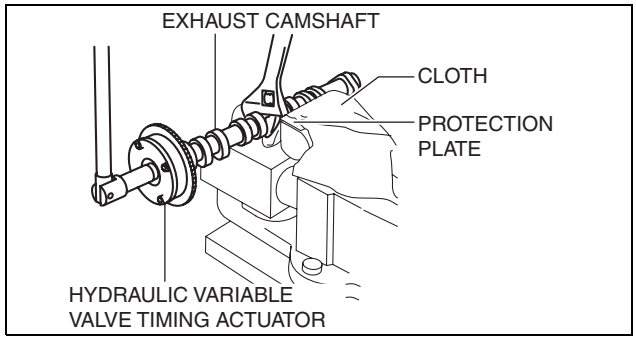

am3uuw0000877

Hydraulic Variable Valve Timing Actuator Installation Note

1. When replacing the hydraulic variable valve timing actuator, place a mark at the same position as the one placed before removal.
2. Align the knock pin on the end of the exhaust camshaft with the knock pin installation hole on the actuator side, and temporarily assemble the bolt.

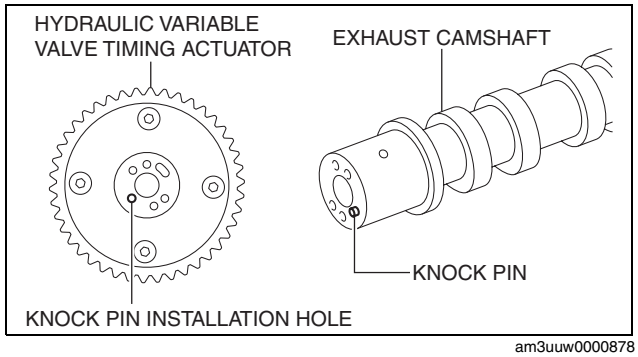

am3uuw0000878

MECHANICAL [SKYACTIV-G 2.0]

3. Lock the exhaust camshaft against rotation by holding the exhaust camshaft with a vise and securing the cast hexagon with a wrench.
4. Tighten the hydraulic variable valve timing actuator installation bolt.

Tightening torque
75—85 N·m {7.7—8.6 kgf·m, 56—62 ft·lbf}

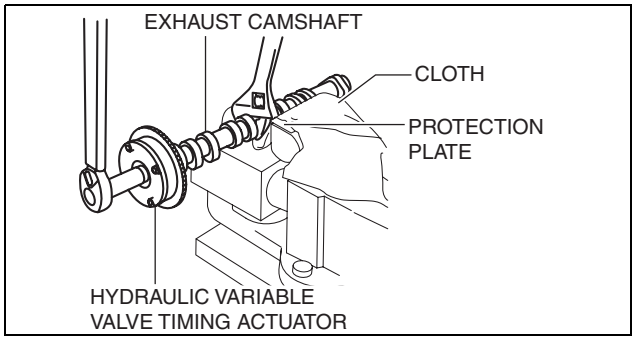

am3zzw0001258

Hydraulic Variable Valve Timing Actuator and Exhaust Camshaft Component Installation Note

1. As shown in the figure, apply gear oil (SAE No. 90 or equivalent) or engine oil to the center area (exhaust side) of each journal of the cylinder head.

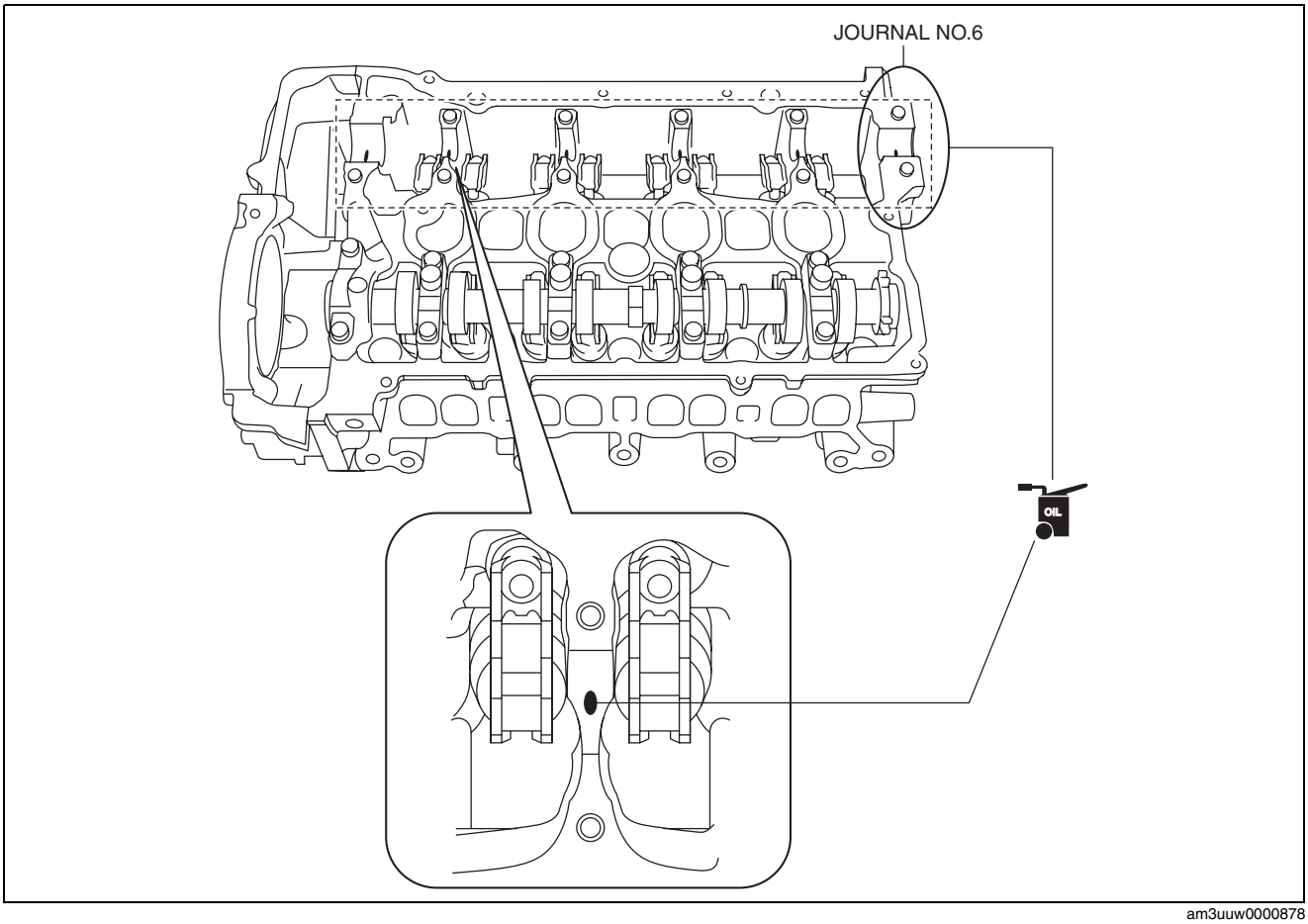

am3uuw0000878

Caution

- **Apply 0.05 ml {0.05 cc, 0.003 in^3} or less of oil to journal No.6.**

2. Remove the rope suspending the timing chain on the exhaust side.

MECHANICAL [SKYACTIV-G 2.0]

3. While aligning the mark on the timing chain placed during removal with the one on the hydraulic variable valve timing actuator, place the exhaust camshaft component on the cylinder head.
4. As shown in the figure, apply gear oil (SAE No. 90 or equivalent) or engine oil to the center area of each journal of the exhaust camshaft.

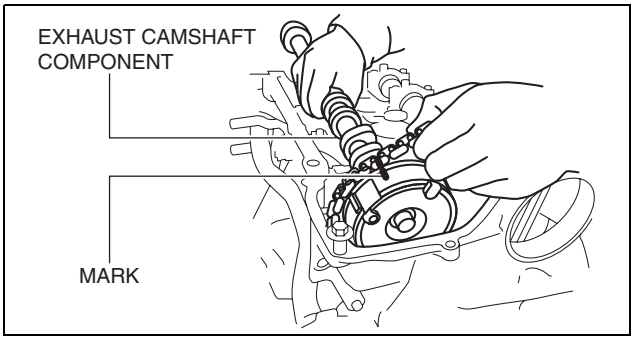

am3uuw0000878

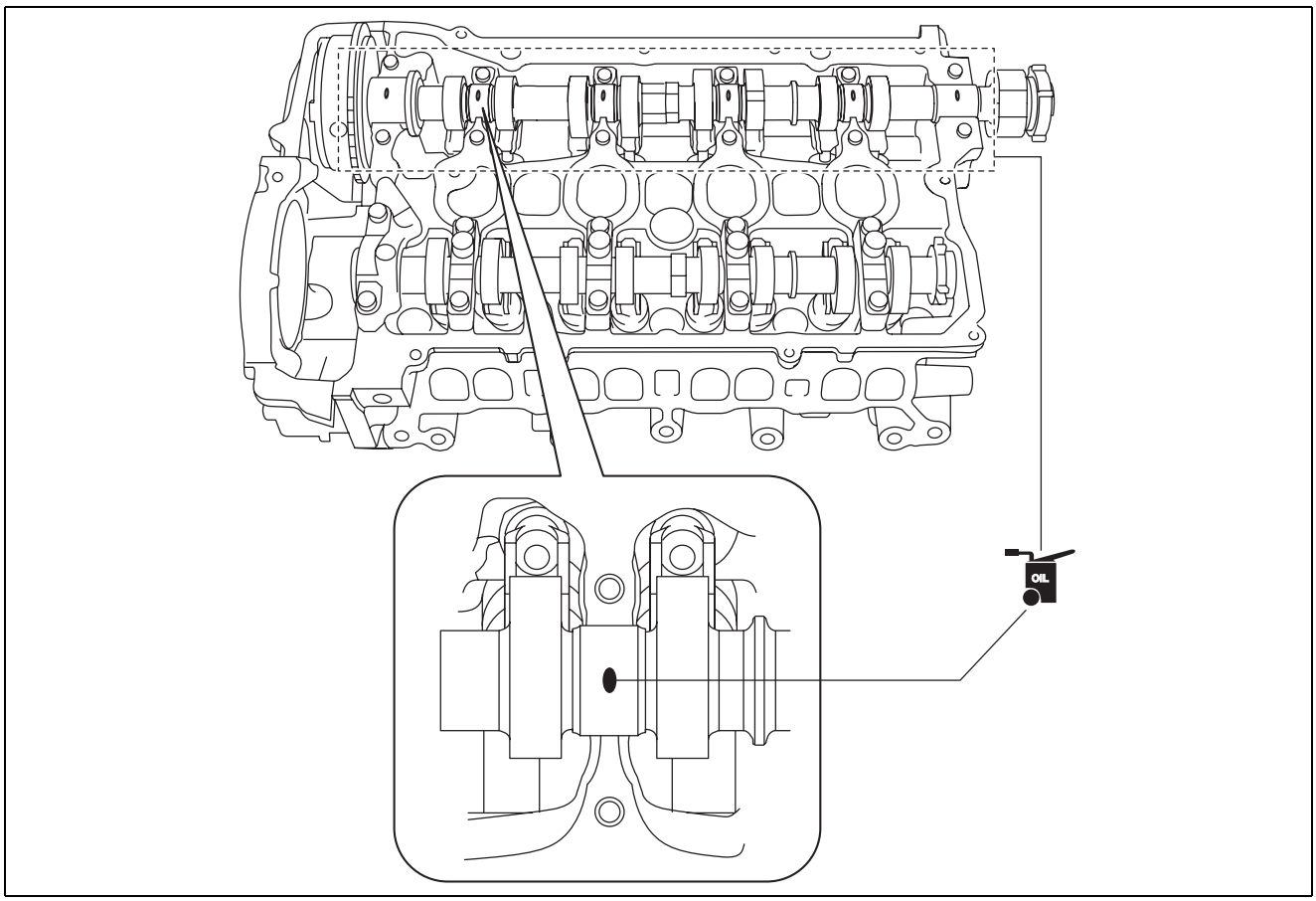

am3uuw0000878

MECHANICAL [SKYACTIV-G 2.0]

5. Apply adhesive agent (Loctite 962T) around journal No.6 of the cylinder head or the exhaust-side rear camshaft cap.

   Caution
   - **Verify that there is no adhesive agent on the journal.**

   Adhesive agent bead width
   0.5—1.5 mm {0.02—0.05 in}

6. Install the camshaft caps in the marked number order, and temporarily tighten the camshaft cap installation bolts in two or three passes evenly.
7. Tighten the camshaft cap installation bolts in two steps in the order shown in the figure.

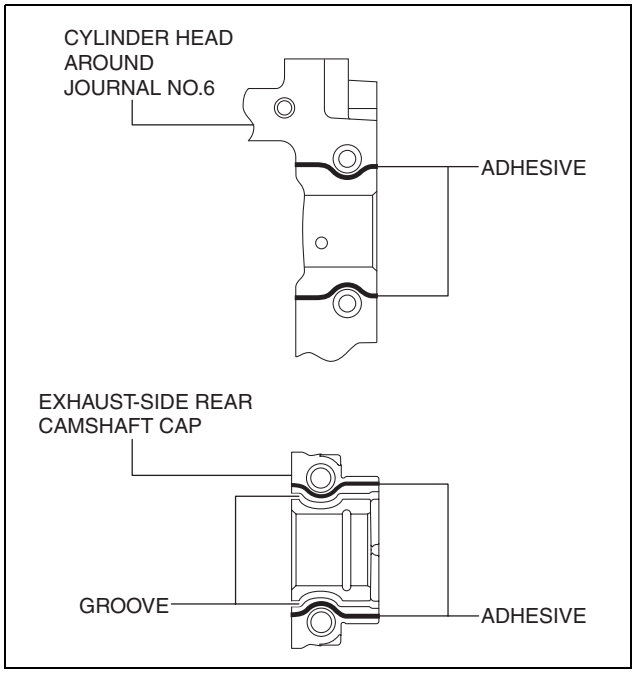

ac5uuw00000473

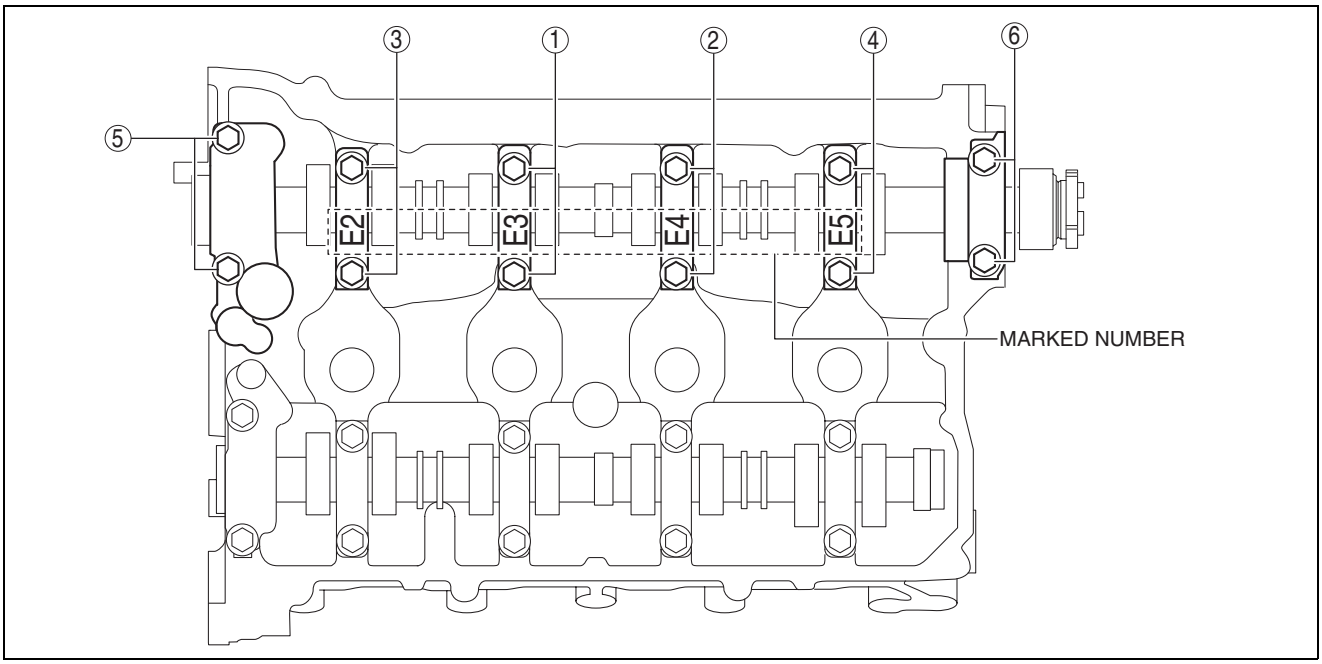

am3uuw0000878

Tightening torque
First step: 3.0—6.0 N·m {31—61 kgf·cm, 27—53 in·lbf}
Second step: 8—11 N·m {82—112 kgf·cm, 71—97 in·lbf}

MECHANICAL [SKYACTIV-G 2.0]

Electric Variable Valve Timing Actuator Installation Note

1. When replacing the electric variable valve timing actuator with a new one, place a mark at the same position as the one placed before removal.
2. Remove the rope suspending the timing chain on the intake side.
3. Remove the timing chain from the exhaust and intake camshaft sprockets and set it aside to the rear, then insert the electric variable valve timing actuator between the engine front cover and the cylinder head.
4. Return the timing chain to the exhaust camshaft sprocket.

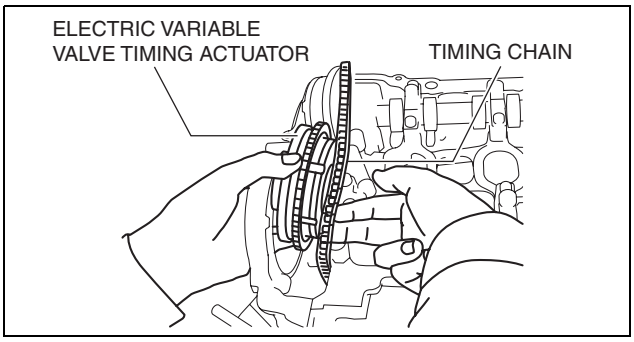

am3uuw0000903

5. While aligning the mark on the timing chain placed during removal with the one on the electric variable valve timing actuator, engage the chain with the sprocket.

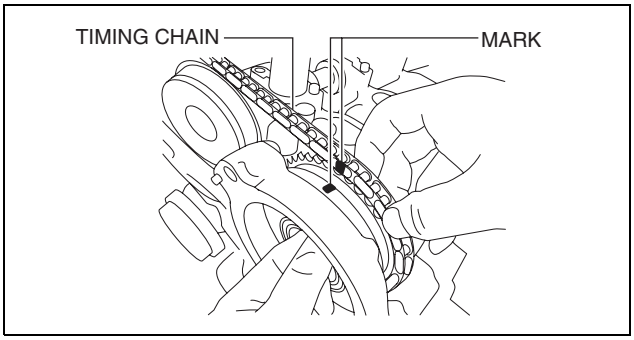

am3uuw0000878

6. Align the knock pin on the end of the intake camshaft with the notch on the actuator side, then assemble the actuator.

   Note
   - Adjust the knock pin with the notch while adjusting the knock pin position by rotating the camshaft.

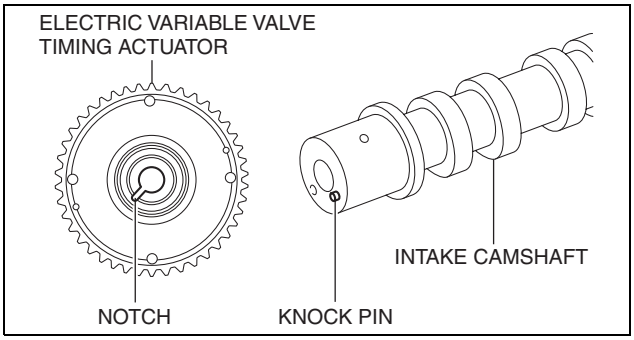

am3uuw0000903

7. Hold the intake camshaft using a wrench on the cast hexagon, and tighten the electric variable valve timing actuator installation bolt.

   Tightening torque
   102—114 N·m {10.5—11.6 kgf·m, 76—84 ft·lbf}

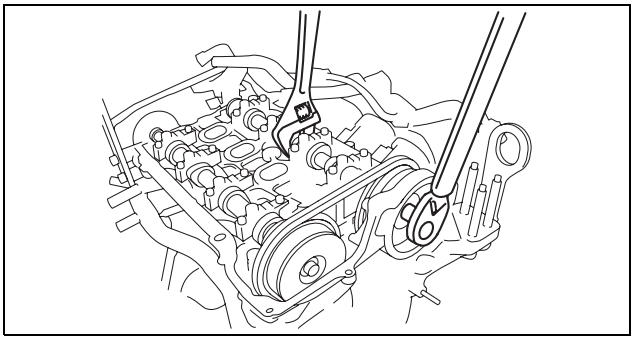

am3uuw0000878

MECHANICAL [SKYACTIV-G 2.0]

Timing Chain Installation Note

1. Install the chain guide (No.1).
2. Remove the bolt securing the tensioner arm and apply tension to the timing chain.
3. Rotate the crankshaft clockwise two turns and verify that the valve timing is correct.

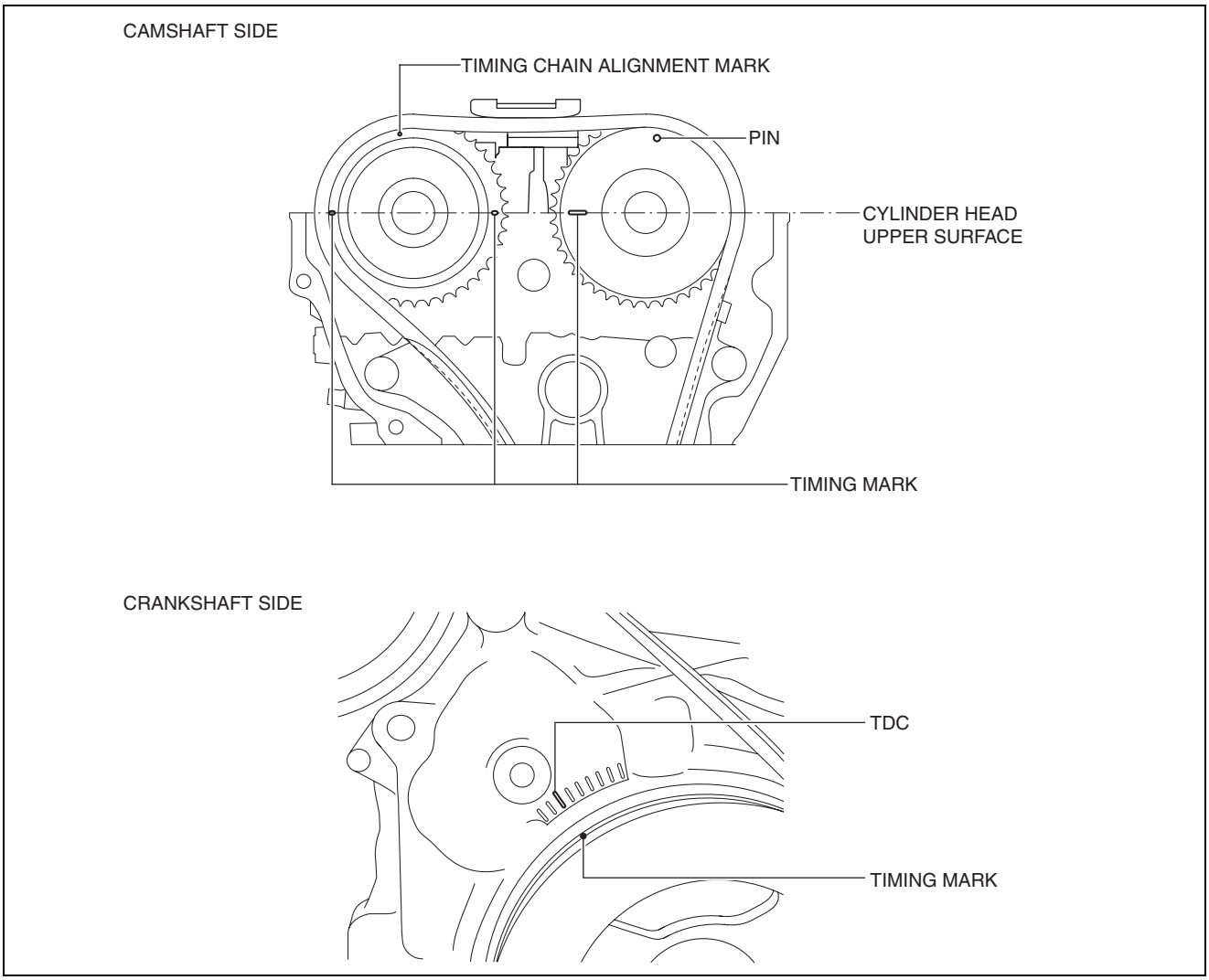

am3uuw0000879

- If the valve timing is not correct, remove the engine front cover and reassemble the timing chain to each sprocket. (See 01-10A-39 TIMING CHAIN REMOVAL/INSTALLATION [SKYACTIV-G 2.0].)

4. Install the blind plugs (upper and lower) for the engine front cover service holes.

Tightening torque
Upper: 8—11 N·m {82—112 kgf·cm, 71—97 in·lbf}
Lower: 17—23 N·m {1.8—2.3 kgf·m, 13—16 ft·lbf}

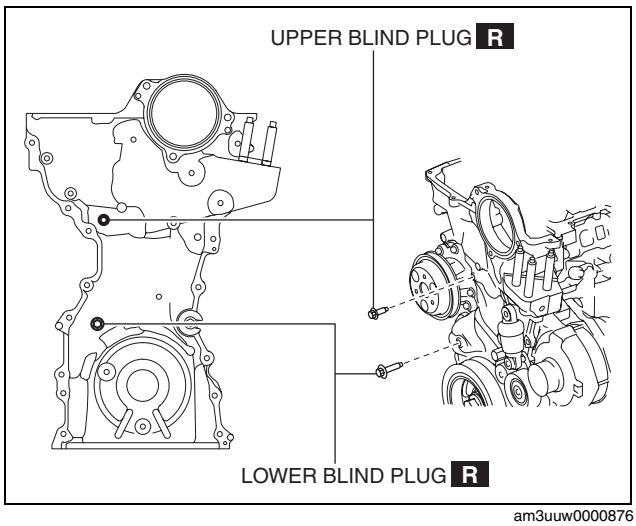

am3uuw0000876

MECHANICAL [SKYACTIV-G 2.0]

Oil Shower Pipe Installation Note

1. Install the oil shower pipe in the order shown in the figure.

Tightening torque

Installation position	Tightening torque
1	9—12 N·m {92—122 kgf·cm, 80—106 in·lbf}
2, 3	8.0—9.0 N·m {82—91 kgf·cm, 71—79 in·lbf}

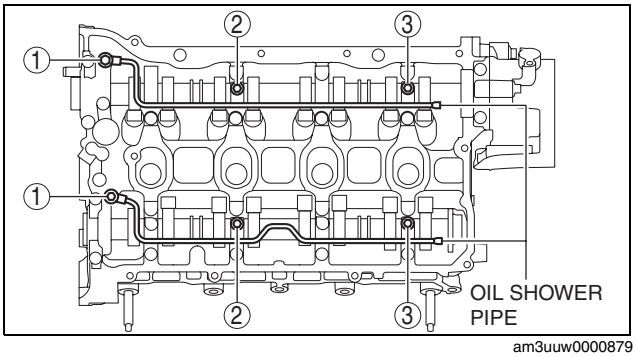

am3uuw0000879

OIL CONTROL VALVE (OCV) INSPECTION [SKYACTIV-G 2.0]

id0110h2801400

Coil Resistance Inspection

1. Disconnect the negative battery cable. (See 01-17A-11 NEGATIVE BATTERY CABLE DISCONNECTION/CONNECTION [SKYACTIV-G 2.0].) (See 01-17A-13 NEGATIVE BATTERY CABLE DISCONNECTION/CONNECTION [SKYACTIV-G 2.0 (WITHOUT i-stop)].)
2. Remove the plug hole plate. (See 01-10A-6 PLUG HOLE PLATE REMOVAL/INSTALLATION [SKYACTIV-G 2.0].)
3. Disconnect the OCV connector.
4. Measure the resistance between terminals A and B using an ohmmeter.

   OCV coil resistance
   6.9—7.5 ohms [20°C {68°F}]

   - If not as specified, replace the OCV. (See 01-10A-38 OIL CONTROL VALVE (OCV) REMOVAL/INSTALLATION [SKYACTIV-G 2.0].)
5. Install in the reverse order of removal.

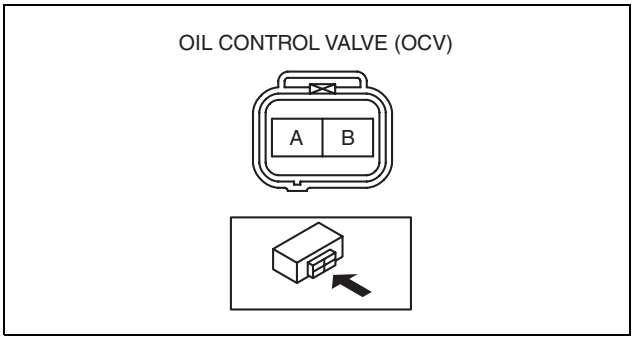

ac5wzw0000319

Spool Valve Operation Inspection

1. Disconnect the negative battery cable. (See 01-17A-11 NEGATIVE BATTERY CABLE DISCONNECTION/CONNECTION [SKYACTIV-G 2.0].) (See 01-17A-13 NEGATIVE BATTERY CABLE DISCONNECTION/CONNECTION [SKYACTIV-G 2.0 (WITHOUT i-stop)].)
2. Remove the OCV. (See 01-10A-38 OIL CONTROL VALVE (OCV) REMOVAL/INSTALLATION [SKYACTIV-G 2.0].)
3. Verify that the spool valve in the OCV is in the maximum valve timing advance position as indicated in the figure.
   - If not as specified, replace the OCV. (See 01-10A-38 OIL CONTROL VALVE (OCV) REMOVAL/INSTALLATION [SKYACTIV-G 2.0].)
4. Verify that the battery is fully charged. (See 01-17A-7 BATTERY INSPECTION [SKYACTIV-G 2.0].)
   - If not as specified, recharge the battery. (See 01-17A-9 BATTERY RECHARGING [SKYACTIV-G 2.0].)

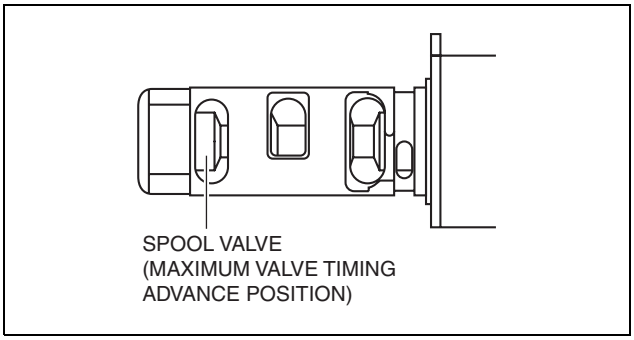

ac5wzw0000320

MECHANICAL [SKYACTIV-G 2.0]

Note
- When applying battery positive voltage between the OCV terminals, the connection can be either of the following:
  - — Positive battery cable to terminal A, negative battery cable to terminal B
  - — Positive battery cable to terminal B, negative battery cable to terminal A

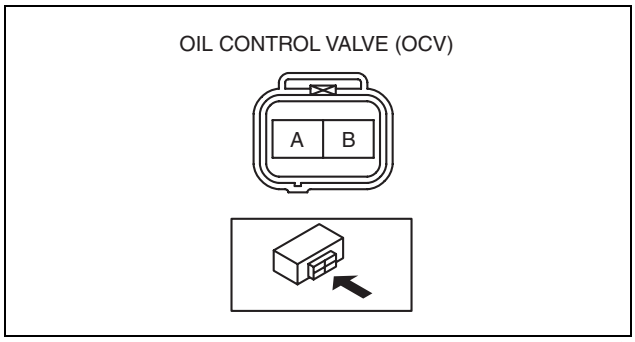

ac5wzw0000319

5. Apply battery positive voltage between the OCV terminals and verify that the spool valve operates and moves to the maximum valve timing retard position.
   - If not as specified, replace the OCV. (See 01-10A-38 OIL CONTROL VALVE (OCV) REMOVAL/INSTALLATION [SKYACTIV-G 2.0].)
6. Stop applying battery positive voltage and verify that the spool valve returns to the maximum valve timing advance position.
   - If not as specified, replace the OCV. (See 01-10A-38 OIL CONTROL VALVE (OCV) REMOVAL/INSTALLATION [SKYACTIV-G 2.0].)

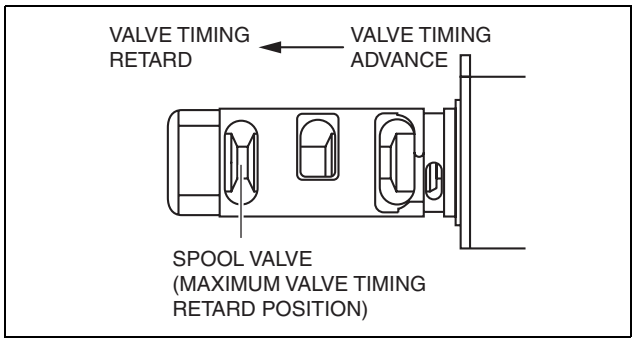

ac5wzw0000320

7. Install the OCV. (See 01-10A-38 OIL CONTROL VALVE (OCV) REMOVAL/INSTALLATION [SKYACTIV-G 2.0].)

OIL CONTROL VALVE (OCV) REMOVAL/INSTALLATION [SKYACTIV-G 2.0]

id0110h2801300

Warning
- **A hot engine can cause severe burns. Turn off the engine and wait until it is cool before servicing.**

1. Disconnect the negative battery cable. (See 01-17A-11 NEGATIVE BATTERY CABLE DISCONNECTION/CONNECTION [SKYACTIV-G 2.0].) (See 01-17A-13 NEGATIVE BATTERY CABLE DISCONNECTION/CONNECTION [SKYACTIV-G 2.0 (WITHOUT i-stop)].)
2. Remove the plug hole plate. (See 01-10A-6 PLUG HOLE PLATE REMOVAL/INSTALLATION [SKYACTIV-G 2.0].)
3. Remove the ignition coil/ion sensors. (See 01-18-2 IGNITION COIL/ION SENSOR REMOVAL/INSTALLATION [SKYACTIV-G 2.0].)
4. Remove the cylinder head cover. (See 01-10A-39 TIMING CHAIN REMOVAL/INSTALLATION [SKYACTIV-G 2.0].)
5. Remove in the order indicated in the table.
6. Install in the reverse order of removal.

1	OCV installation bolt
2	OCV

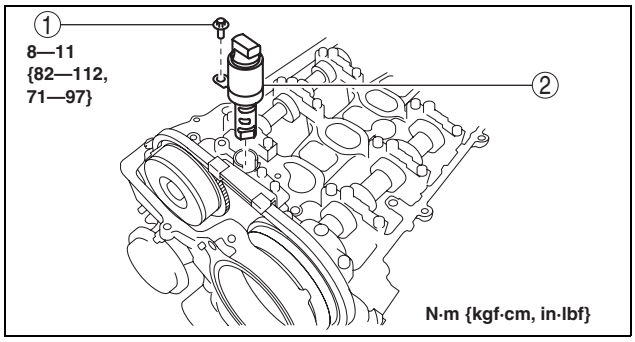

am3uuw0000888

MECHANICAL [SKYACTIV-G 2.0]

TIMING CHAIN REMOVAL/INSTALLATION [SKYACTIV-G 2.0]

id0110h2801000

Warning

- **A hot engine can cause severe burns. Turn off the engine and wait until it is cool before servicing.**

Caution

- **If the camshaft is rotated with the timing chain removed and the piston at the top dead center position, the valve may contact the piston and the engine could be damaged. When rotating the camshaft with the timing chain removed, rotate it after lowering the piston from the top dead center position.**
- **When rotating the camshaft using a wrench on the cast hexagon, the wrench may contact the rocker arm and damage the rocker arm. To prevent damage to the rocker arm when holding the camshaft on the cast hexagon, use the wrench at engine rear side as shown in the figure to secure a clearance between the cam.**

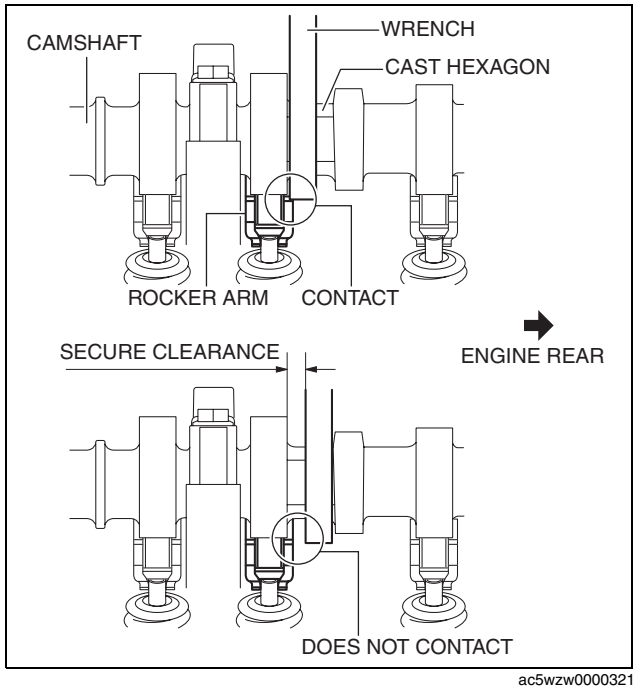

ac5wzw0000321

Note

- Width at the cast hexagon of the camshaft is 22—24 mm {0.87—0.94 in}.

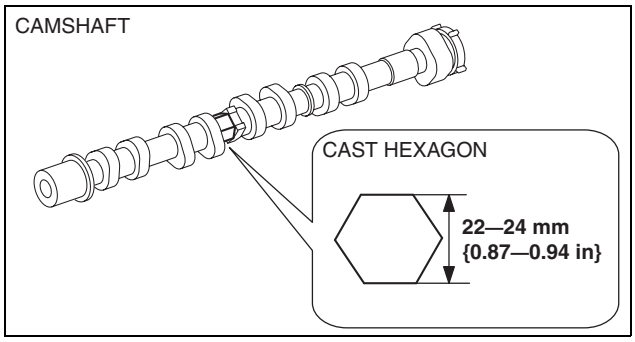

ac5wzw0000321

1. Disconnect the negative battery cable. (See 01-17A-11 NEGATIVE BATTERY CABLE DISCONNECTION/CONNECTION [SKYACTIV-G 2.0].) (See 01-17A-13 NEGATIVE BATTERY CABLE DISCONNECTION/CONNECTION [SKYACTIV-G 2.0 (WITHOUT i-stop)].)
2. Remove the plug hole plate. (See 01-10A-6 PLUG HOLE PLATE REMOVAL/INSTALLATION [SKYACTIV-G 2.0].)
3. Remove the ignition coil/ion sensors. (See 01-18-2 IGNITION COIL/ION SENSOR REMOVAL/INSTALLATION [SKYACTIV-G 2.0].)
4. Remove the front under cover No.2. (See 09-16-41 FRONT UNDER COVER No.2 REMOVAL/INSTALLATION.)
5. Remove the splash shield. (See 09-16-49 SPLASH SHIELD REMOVAL/INSTALLATION.)
6. Remove the drive belt. (See 01-10A-10 DRIVE BELT REMOVAL/INSTALLATION [SKYACTIV-G 2.0].)
7. Drain the engine oil. (See 01-11A-3 ENGINE OIL REPLACEMENT [SKYACTIV-G 2.0].)
8. Remove the oil pan. (See 01-11A-12 OIL PAN REMOVAL/INSTALLATION [SKYACTIV-G 2.0].)
9. Remove in the order indicated in the table.
10. Install in the reverse order of removal.

MECHANICAL [SKYACTIV-G 2.0]

11. Refill with the specified type and amount of the engine oil. (See 01-11A-3 ENGINE OIL REPLACEMENT [SKYACTIV-G 2.0].)
12. Start the engine and inspect the following:
    - Leakage of engine oil.
    - Runout and contact of pulley and belt.
    - Ignition timing, idle speed and idle mixture. (See 01-10A-4 ENGINE TUNE-UP [SKYACTIV-G 2.0].)

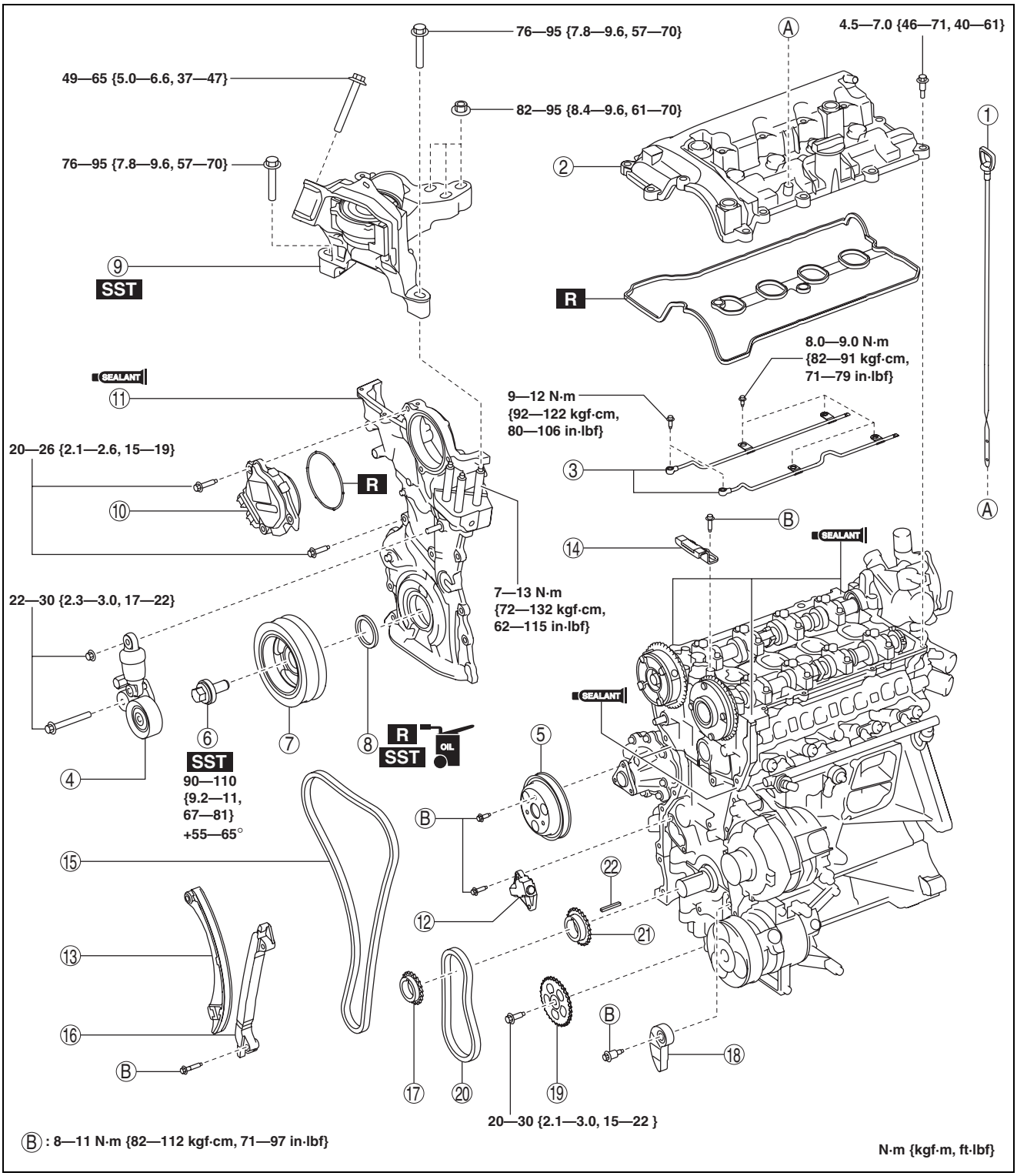

ac5wzw0000321

MECHANICAL [SKYACTIV-G 2.0]

1	Dipstick
2	Cylinder head cover (See 01-10A-41 Cylinder Head Cover Removal Note.) (See 01-10A-61 Cylinder Head Cover Installation Note.)
3	Oil shower pipe (See 01-10A-61 Oil Shower Pipe Installation Note.)
4	Drive belt auto tensioner (See 01-10A-60 Drive Belt Auto Tensioner Installation Note.)
5	Water pump pulley (See 01-10A-42 Water Pump Pulley Removal Note.) (See 01-10A-59 Water Pump Pulley Installation Note.)
6	Crankshaft pulley lock bolt (See 01-10A-43 Crankshaft Pulley Lock Bolt Removal Note.) (See 01-10A-59 Crankshaft Pulley Lock Bolt Installation Note.)
7	Crankshaft pulley
8	Front oil seal (See 01-10A-86 FRONT OIL SEAL REPLACEMENT [SKYACTIV-G 2.0].)
9	No.3 engine mount (See 01-10A-43 No.3 Engine Mount Removal Note.) (See 01-10A-57 No.3 Engine Mount Installation Note.)
10	Electric variable valve timing motor/driver (See 01-10A-56 Electric Variable Valve Timing Motor/Driver Installation Note.)
11	Engine front cover (See 01-10A-46 Engine Front Cover Removal Note.) (See 01-10A-51 Engine Front Cover Installation Note.)
12	Chain tensioner (See 01-10A-47 Timing Chain Removal Note.) (See 01-10A-49 Timing Chain Installation Note.)
13	Tensioner arm (See 01-10A-47 Timing Chain Removal Note.) (See 01-10A-49 Timing Chain Installation Note.)
14	Chain guide (No.1) (See 01-10A-47 Timing Chain Removal Note.) (See 01-10A-49 Timing Chain Installation Note.)
15	Timing chain (See 01-10A-47 Timing Chain Removal Note.) (See 01-10A-49 Timing Chain Installation Note.)
16	Chain guide (No.2)
17	Crankshaft sprocket
18	Oil pump chain tensioner
19	Oil pump driven sprocket (See 01-10A-48 Oil Pump Driven Sprocket Removal Note.) (See 01-10A-49 Oil Pump Driven Sprocket Installation Note.)
20	Oil pump chain
21	Oil pump drive sprocket
22	Key

Cylinder Head Cover Removal Note

1. Disconnect the OCV connector.
2. Remove the wiring harness clips secured to the cylinder head cover.
3. Remove the wiring harness clip secured to the intake manifold as shown in the figure, and set the wiring harness aside.
4. Disconnect the ventilation hose.
5. Disconnect the brake vacuum hose from the intake manifold and set it aside.
6. Remove the cylinder head cover.

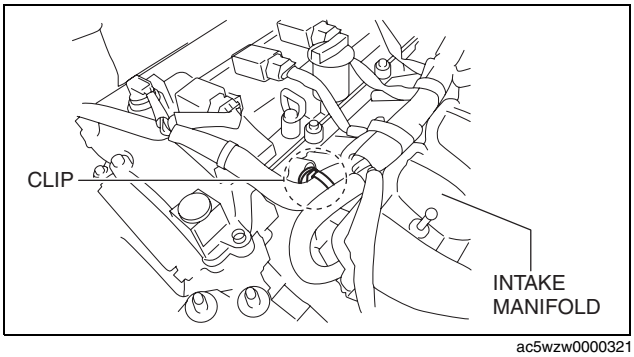

ac5wzw0000321

MECHANICAL [SKYACTIV-G 2.0]

Water Pump Pulley Removal Note

Caution

- **Be careful not to damage the belt groove and surface of the water pump pulley when using tools, otherwise it will cause wear, breakage, abnormal noise of the drive belt (stretch belt), damage to the pulley, and rust.**

1. Align the water pump pulley hole with the water pump hole as shown in the figure.

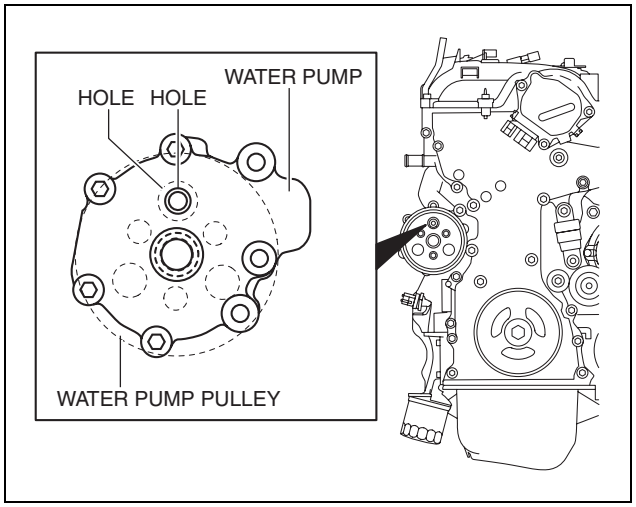

ac5wzw0000321

2. Insert an appropriate bolt (length **approx. 70 mm {2.8 in}**) into the water pump hole as shown in the figure, and lock the water pump pulley against rotation.
3. Remove the water pump pulley.
4. Remove the bolt used for locking the water pump pulley against rotation.

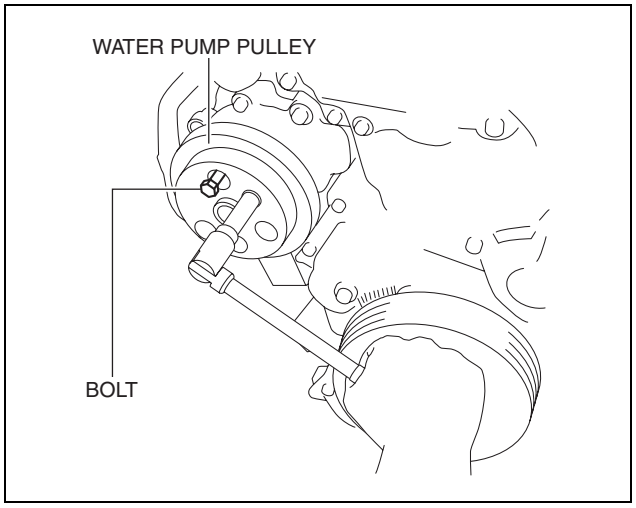

ac5wzw0000321

MECHANICAL [SKYACTIV-G 2.0]

Crankshaft Pulley Lock Bolt Removal Note

Caution

- **To prevent damage to the crankshaft pulley, protect the crankshaft pulley with a clean cloth so that the bar part (205-072) of the SST does not contact the crankshaft pulley.**
- **To prevent damage to the engine front cover, be careful not to allow the tab part (49 B011 105) of the SST to get caught between the crankshaft pulley and the engine front cover.**

1. Install the **SST** to the crankshaft pulley, and lock the crankshaft against rotation.
2. Remove the crankshaft pulley lock bolt.

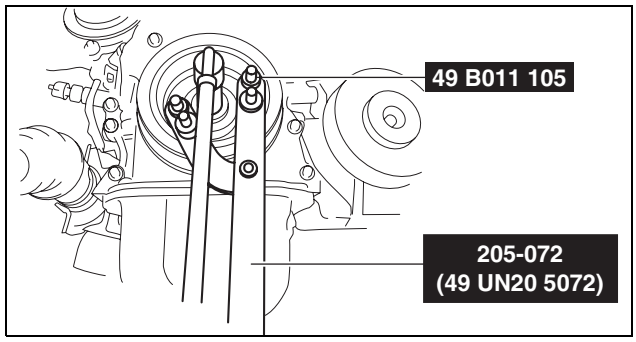

ac5wzw0000321

No.3 Engine Mount Removal Note

1. Remove the clips shown in the figure and set the ground cable aside.

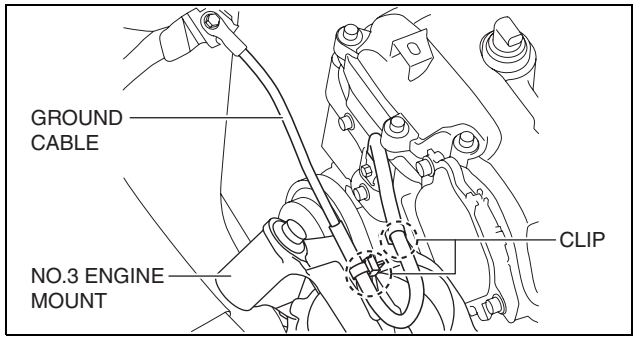

ac5wzw0000321

2. Install the **SST** using **part number 99794 1025** or an **M10 x 1.25**, length **25 mm {0.98 in}** bolt as shown in the figure.

Caution

- **Slots have been adopted for the No.3 engine mount installation holes. If the No.3 engine mount is deviated from the original position when installing the No.3 engine mount, engine noise or vibration could increase. Before removing the No.3 engine mount, place alignment marks on the No.3 engine mount and body so that they can be assembled to the same positions as before removal.**

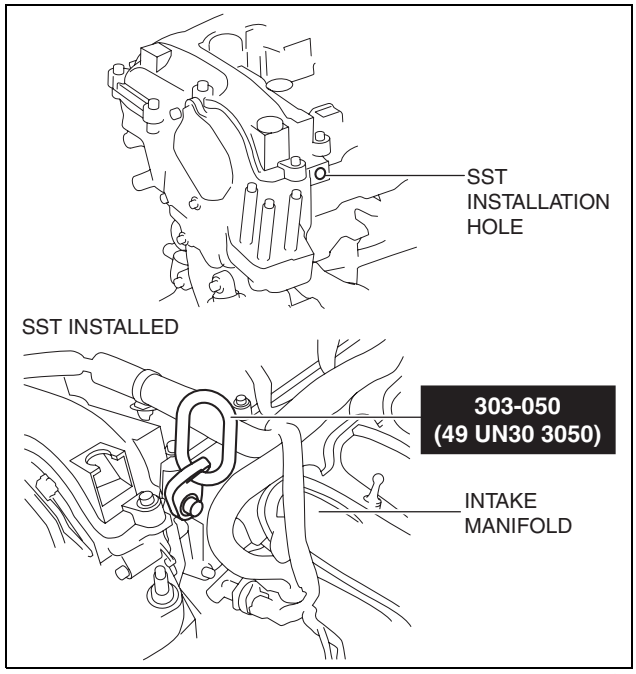

ac5wzw0000465

3. Place alignment marks on the locations shown in the figure so that they can be assembled to the same positions as before removal.

Note
- Paint so that the No.3 engine mount is framed on the body side and the outline of the nut is framed on the No.3 engine mount side.

4. Install the **SST** using the following procedures.

Caution
- **Refer to the SST instruction manual for the basic handing procedure.**

Note
- Install front feet No. 2 to the left and right front shafts of the **SST**.

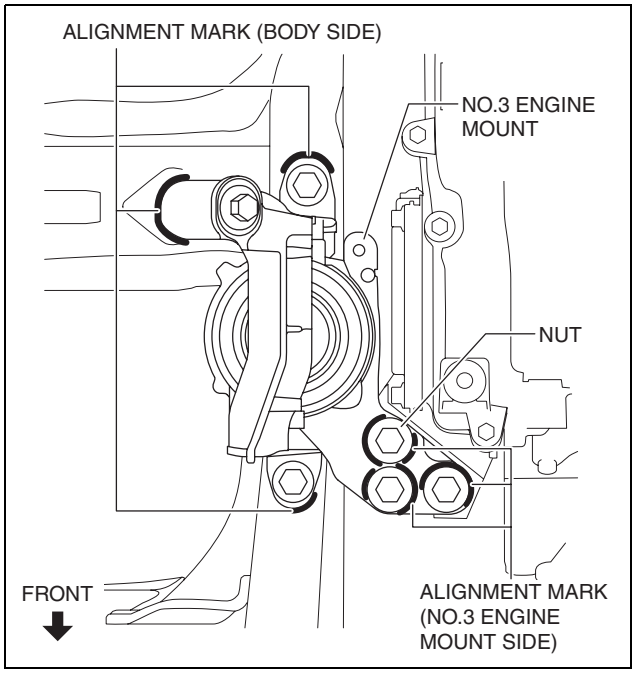

ac5wzw0000322

(1) Protect the positions shown in the figure using tape.

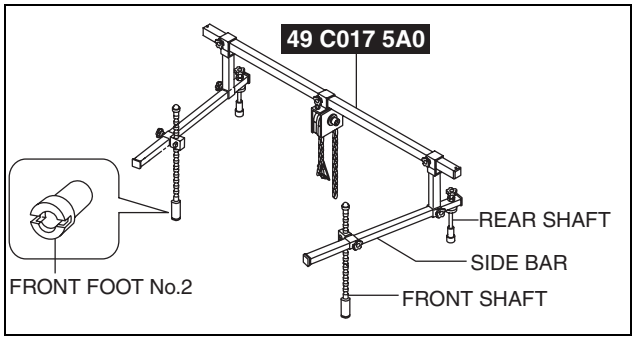

ac5wzw0000322

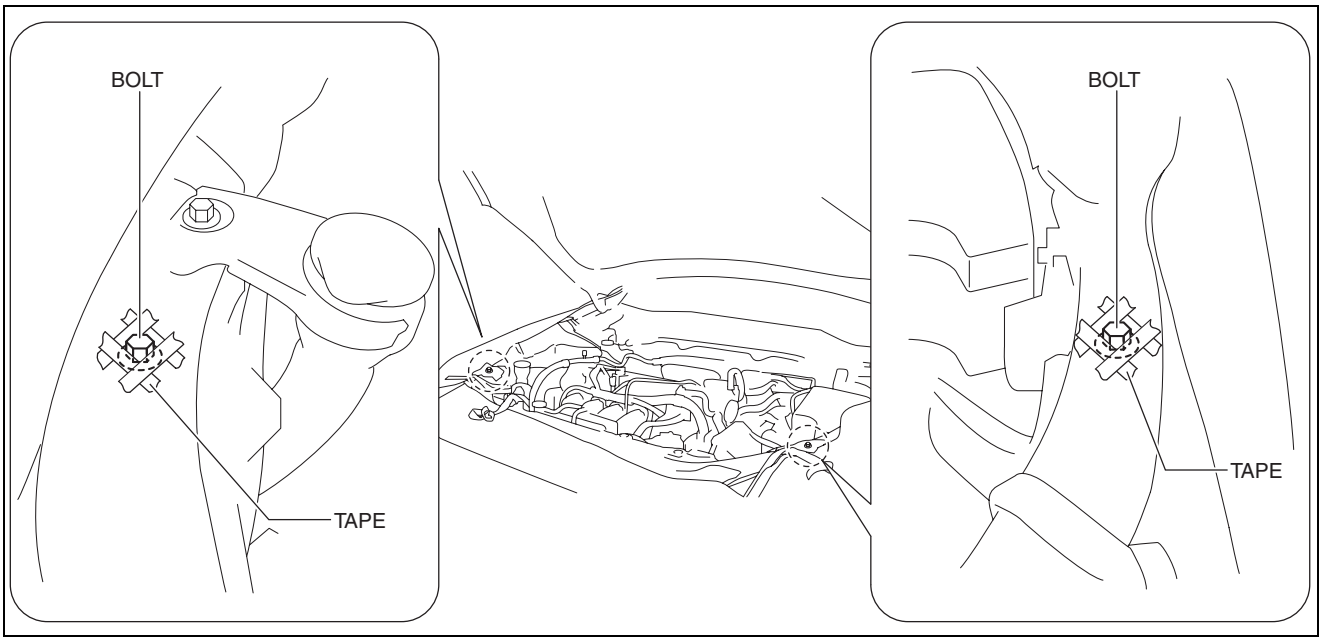

ac5wzw0000250

(2) As shown in the figure, set the rear shafts of the **SST** to the left and right shock absorber nuts.

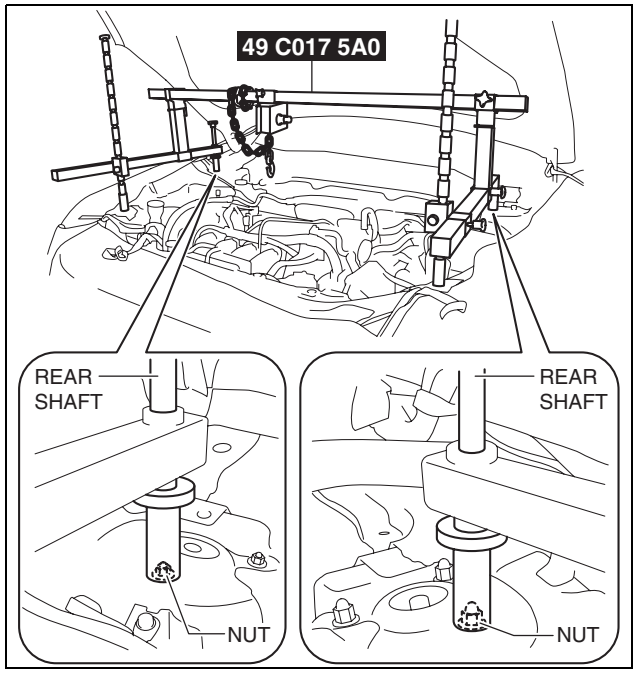

ac5wzw0000322

(3) As shown in the figure, set the front shafts of the SST to the left and right bolts.

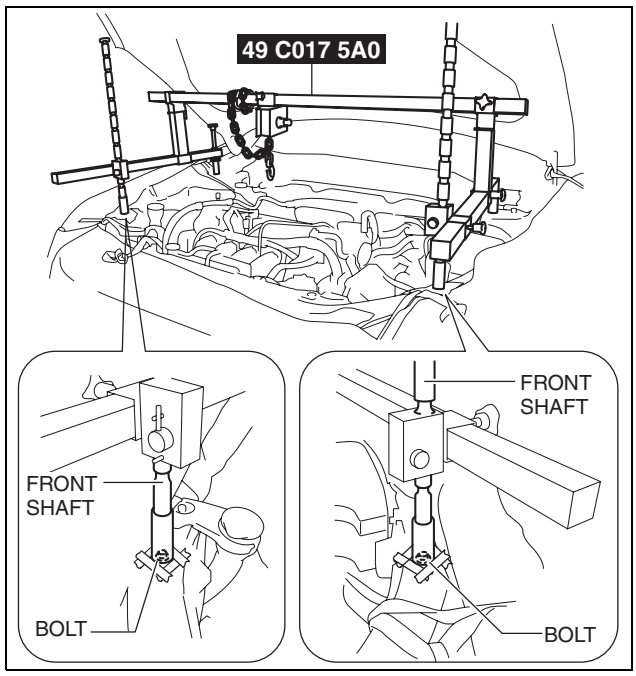

ac5wzw0000285

(4) Adjust the height of the left and right side bars of the **SST** so that they are leveled, then tighten each part.
(5) Apply tension to the chain to hold the engine.

5. Remove the No.3 engine mount.

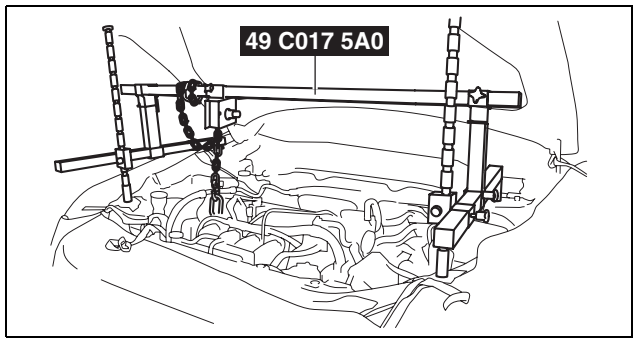

ac5uuw00000631

MECHANICAL [SKYACTIV-G 2.0]

Engine Front Cover Removal Note

1. Remove the insulator shown in the figure.

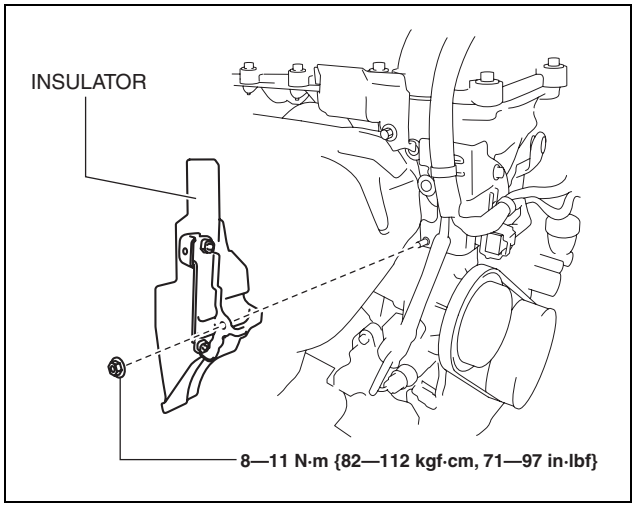

ac5wzw0000322

2. Set the ground cable and wiring harness bracket shown in the figure aside.
3. Remove the engine front cover installation bolts.
4. Using a screwdriver wrapped in a cloth, peel the sealant away a little at a time, and remove the engine front cover.

Caution

- **Do not apply excessive force to the screwdriver. Otherwise, the engine front cover could be damaged.**
- **Be careful not to scratch or damage the seal surface. Otherwise, it could cause oil leakage.**

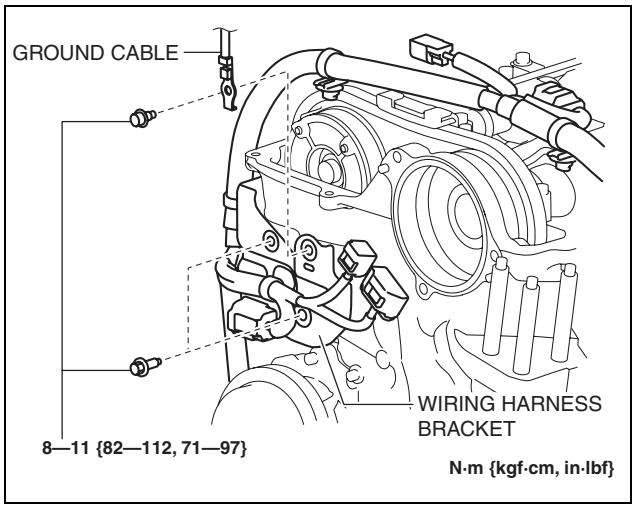

ac5wzw0000322

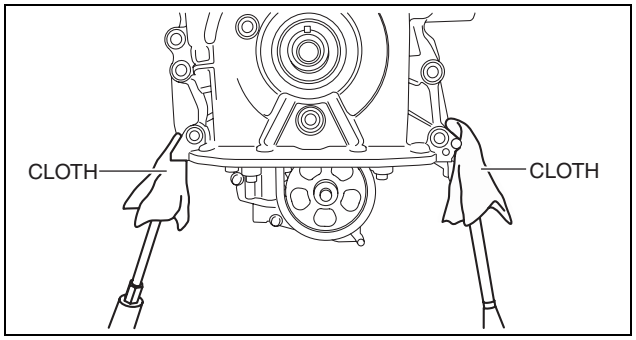

ac5wzw0000322

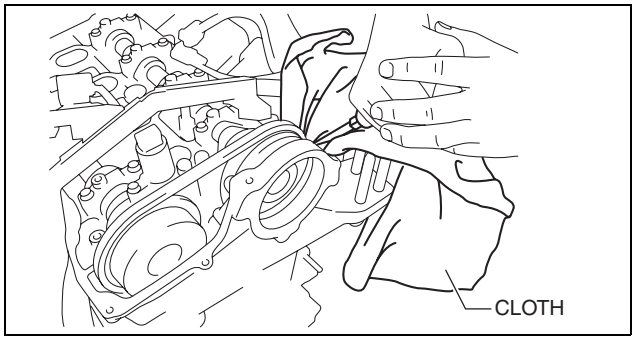

ac5wzw0000322

Timing Chain Removal Note

1. Rotate the crankshaft clockwise to align the timing marks and the key position as shown in the figure, and set cylinder No.1 at top dead center (TDC).

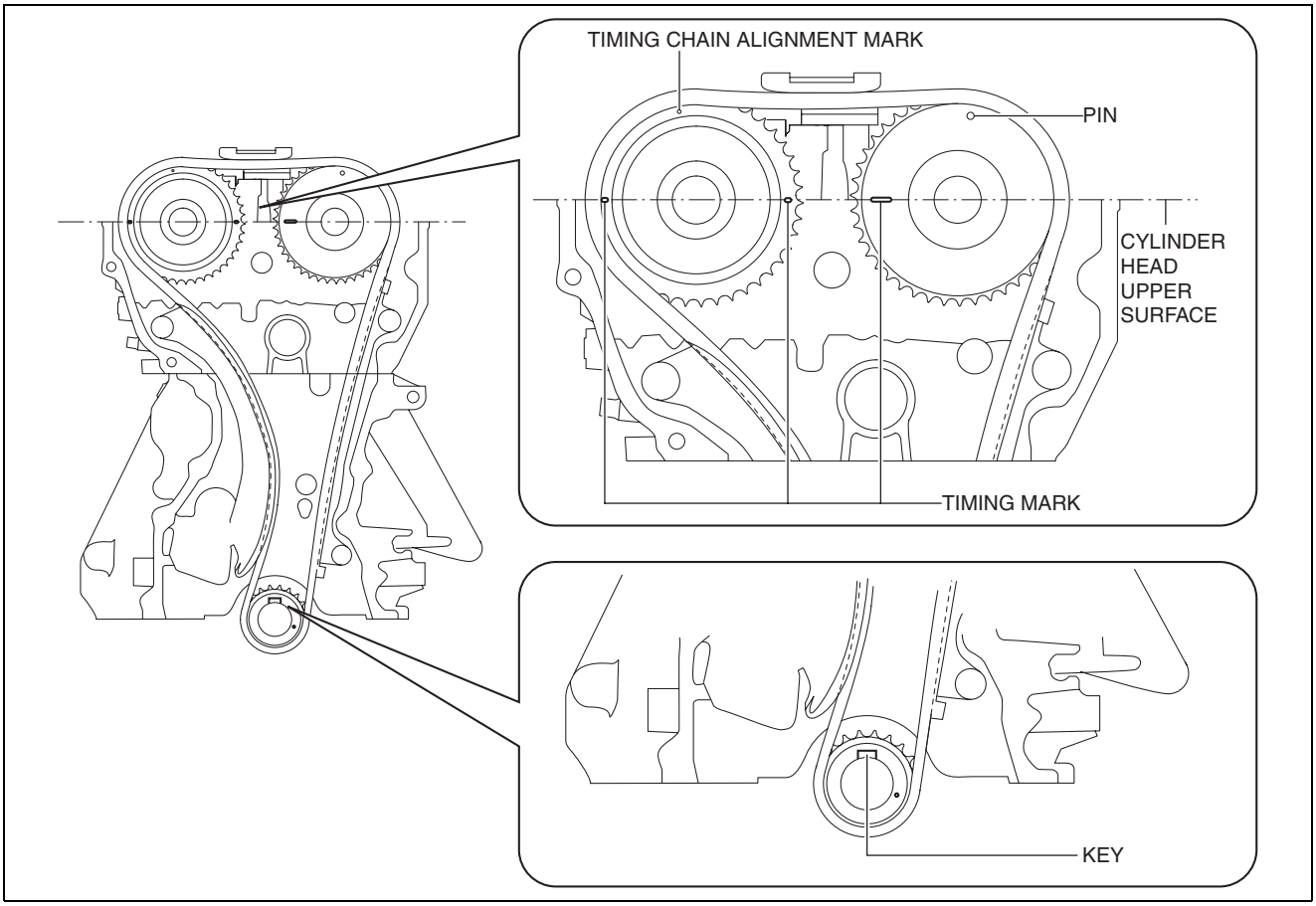

ac5wzw0000322

2. While moving the exhaust camshaft back and forth in the direction of the arrow using a wrench on the cast hexagon, press down the link plate of the timing chain tensioner using a precision screwdriver and release the plunger lock.

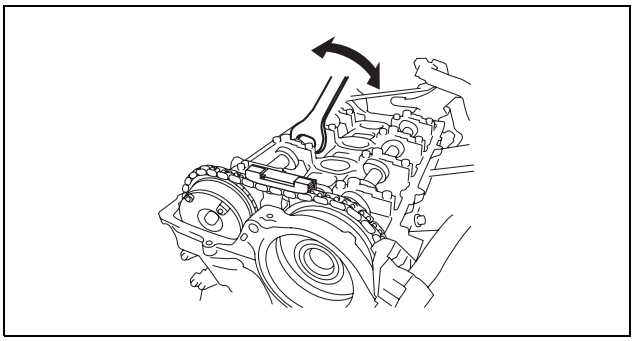

ac5wzw0000322

Note

- When moving the exhaust camshaft back and forth, the timing chain pushes the plunger in the chain tensioner making it easier to operate the link plate.

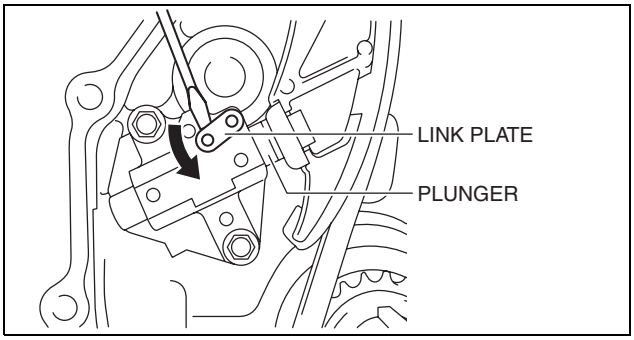

ac5wzw0000323

MECHANICAL [SKYACTIV-G 2.0]

3. Push back the plunger slowly in the direction shown in the figure with the link plate still pushed down.
4. Remove the screwdriver from the link plate with the plunger still pushed down.
5. Release the force slightly from the plunger, and move it back and forth **2—3 mm {0.08—0.11 in}**.

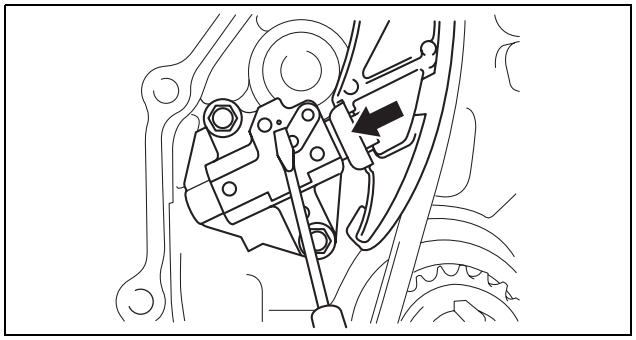
ac5wzw0000323

6. Insert a wire with an **approx. diameter of 1.5 mm {0.059 in}** or a paper clip where the link plate hole and the tensioner body hole overlap to secure the link plate and lock the plunger.
7. Remove the chain tensioner, tensioner arm, and the chain guide (No.1).
8. Remove the timing chain.

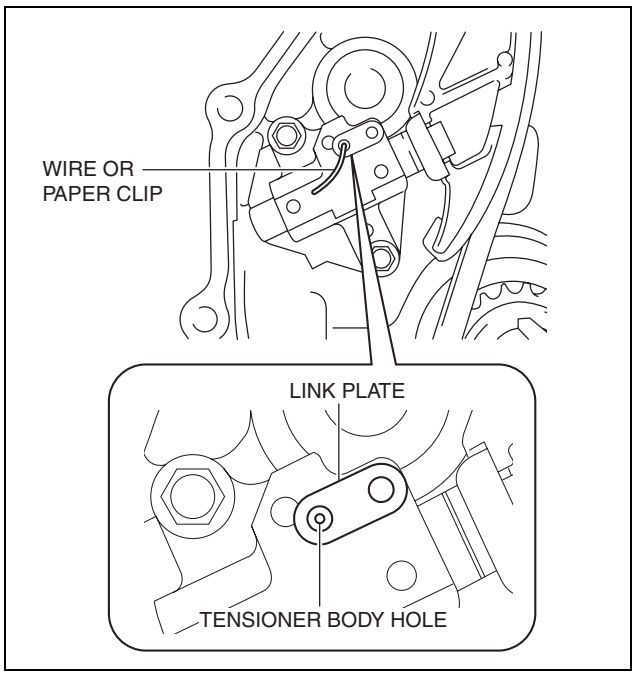

ac5wzw0000323

Oil Pump Driven Sprocket Removal Note

1. Temporarily assemble the crankshaft pulley lock bolt, and lock the oil pump against rotation as shown in the figure.
2. Remove the oil pump driven sprocket.
3. Remove the temporarily assembled crankshaft pulley lock bolt.

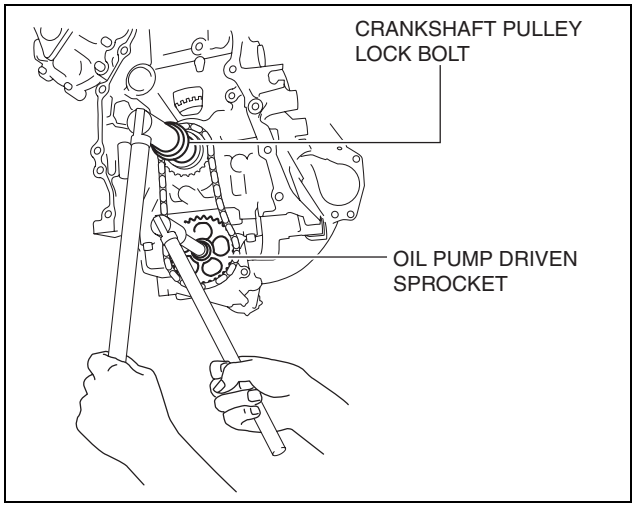

ac5wzw0000323

MECHANICAL [SKYACTIV-G 2.0]

Oil Pump Driven Sprocket Installation Note

1. Temporarily assemble the crankshaft pulley lock bolt, and lock the oil pump against rotation as shown in the figure.
2. Install the oil pump driven sprocket.

   Tightening torque
   20—30 N·m {2.1—3.0 kgf·m, 15—22 ft·lbf}

3. Remove the temporarily assembled crankshaft pulley lock bolt.

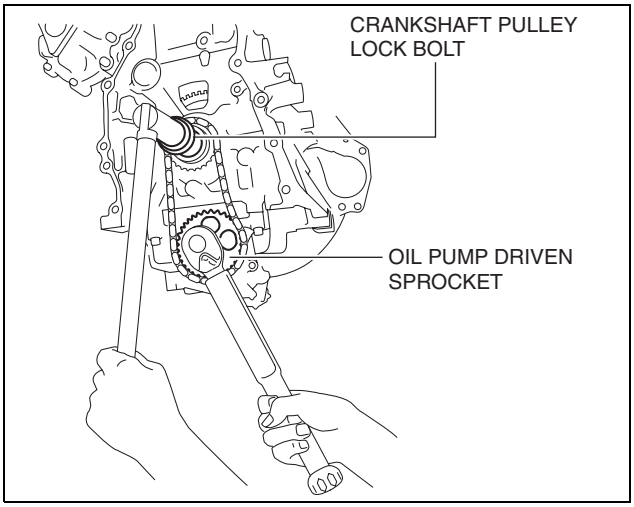

ac5wzw0000323

Timing Chain Installation Note

1. Verify that the timing marks and the key are aligned to the position shown in the figure.

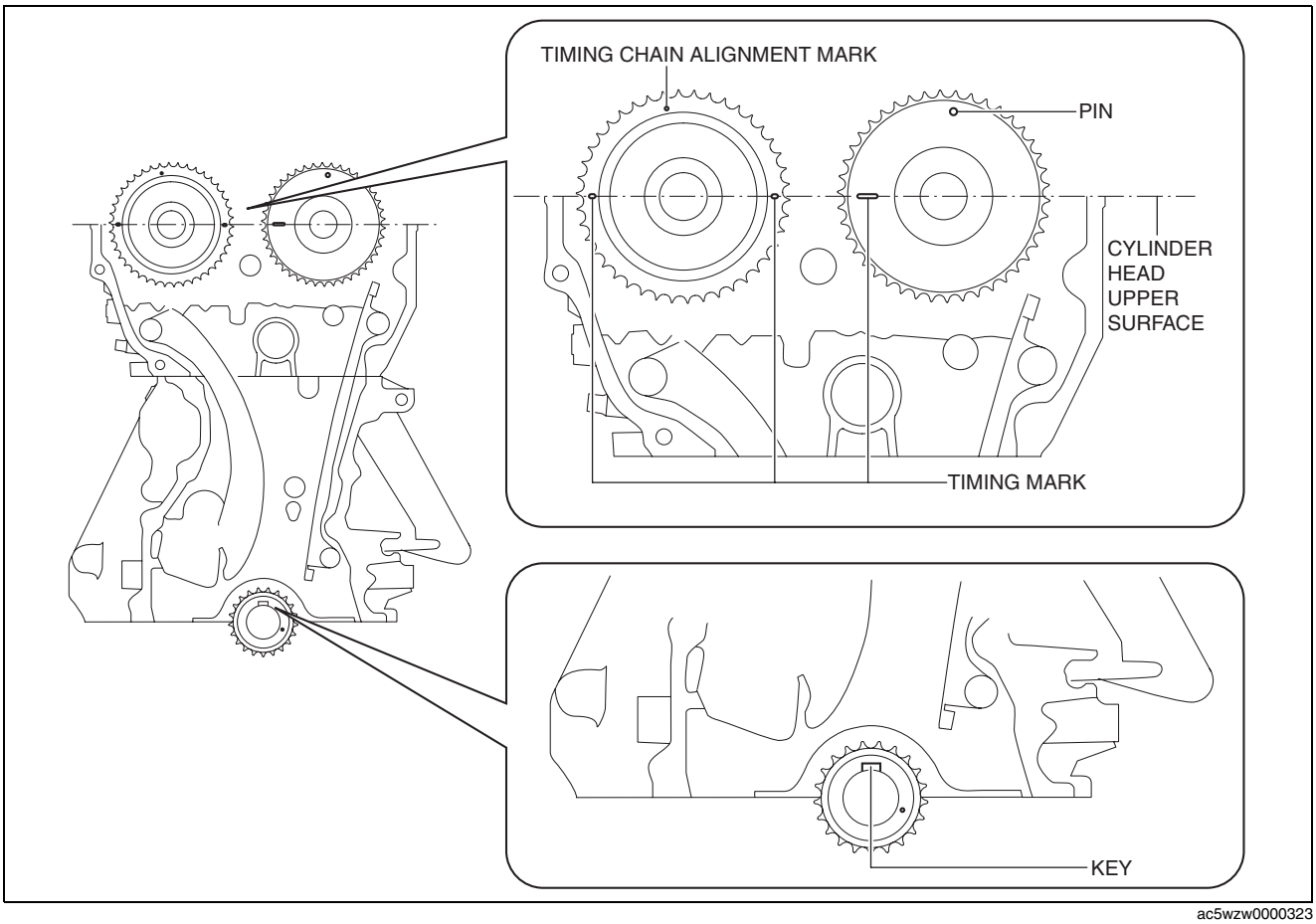

ac5wzw0000323

- If they are not in the position shown in the figure, rotate the camshaft and crankshaft to set the cylinder No.1 top dead center (TDC).

MECHANICAL [SKYACTIV-G 2.0]

2. Install the timing chain while aligning the marks on each sprocket and the timing chain as shown in the figure.

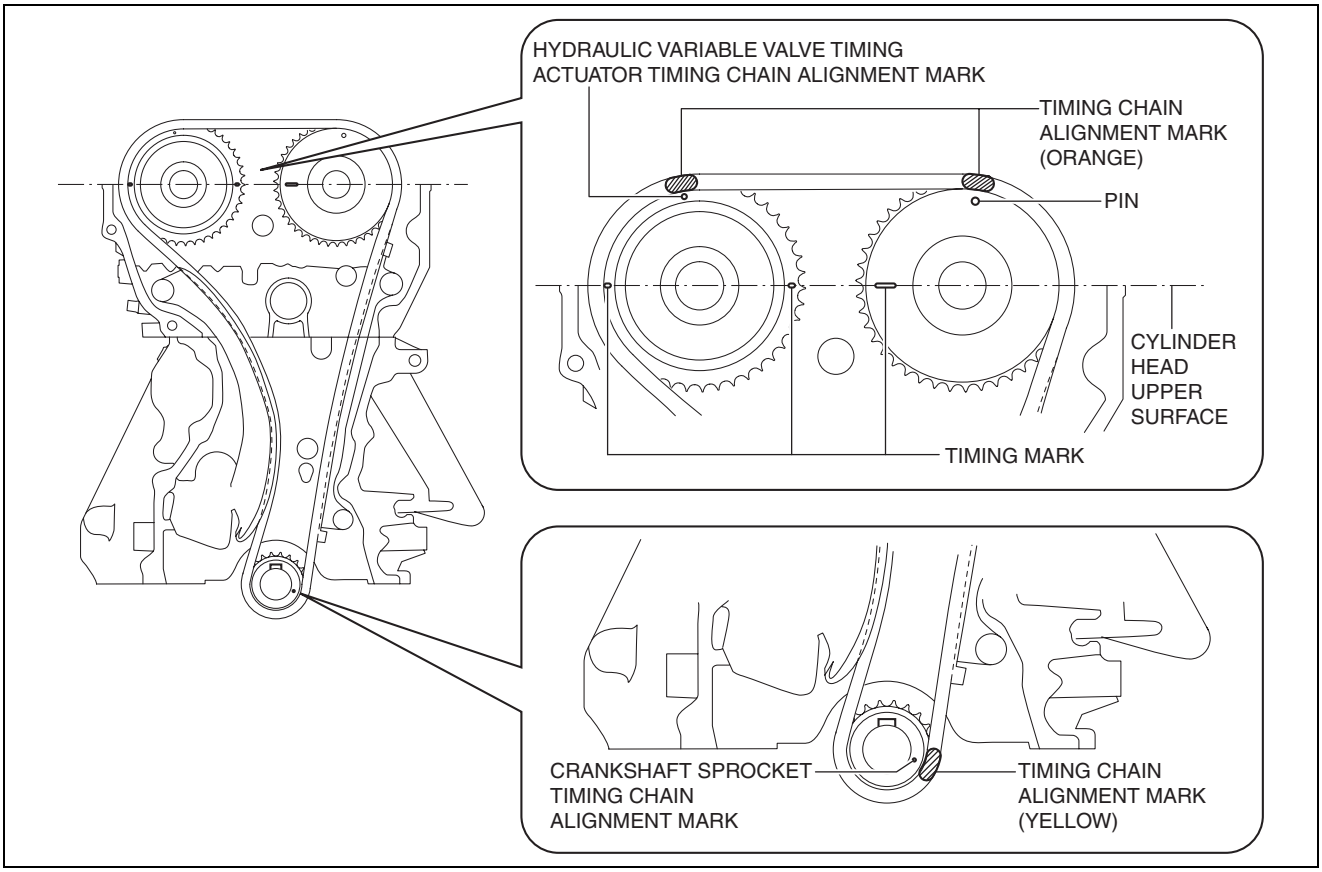

ac5wzw0000323

3. Install the chain guide (No.1).
4. Install the tensioner arm.
5. Install the chain tensioner.
6. After installing the chain tensioner, remove the installed wire or paper clip, and then apply tension to the timing chain.
   - If a new chain tensioner is used, remove the installed stopper.
7. Verify that there is no looseness in the timing chain, and re-verify that each sprocket is in the specified location.

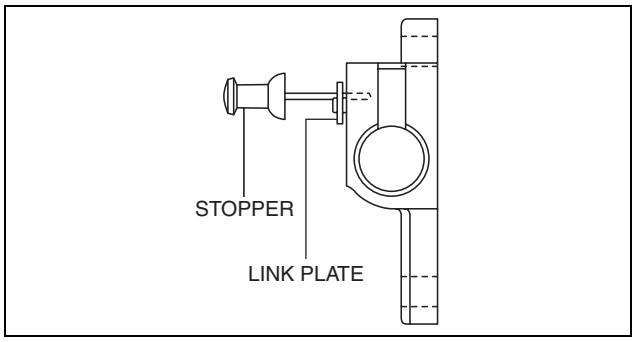

ac5wzw0000323

8. Rotate the crankshaft clockwise two turns and inspect the valve timing.

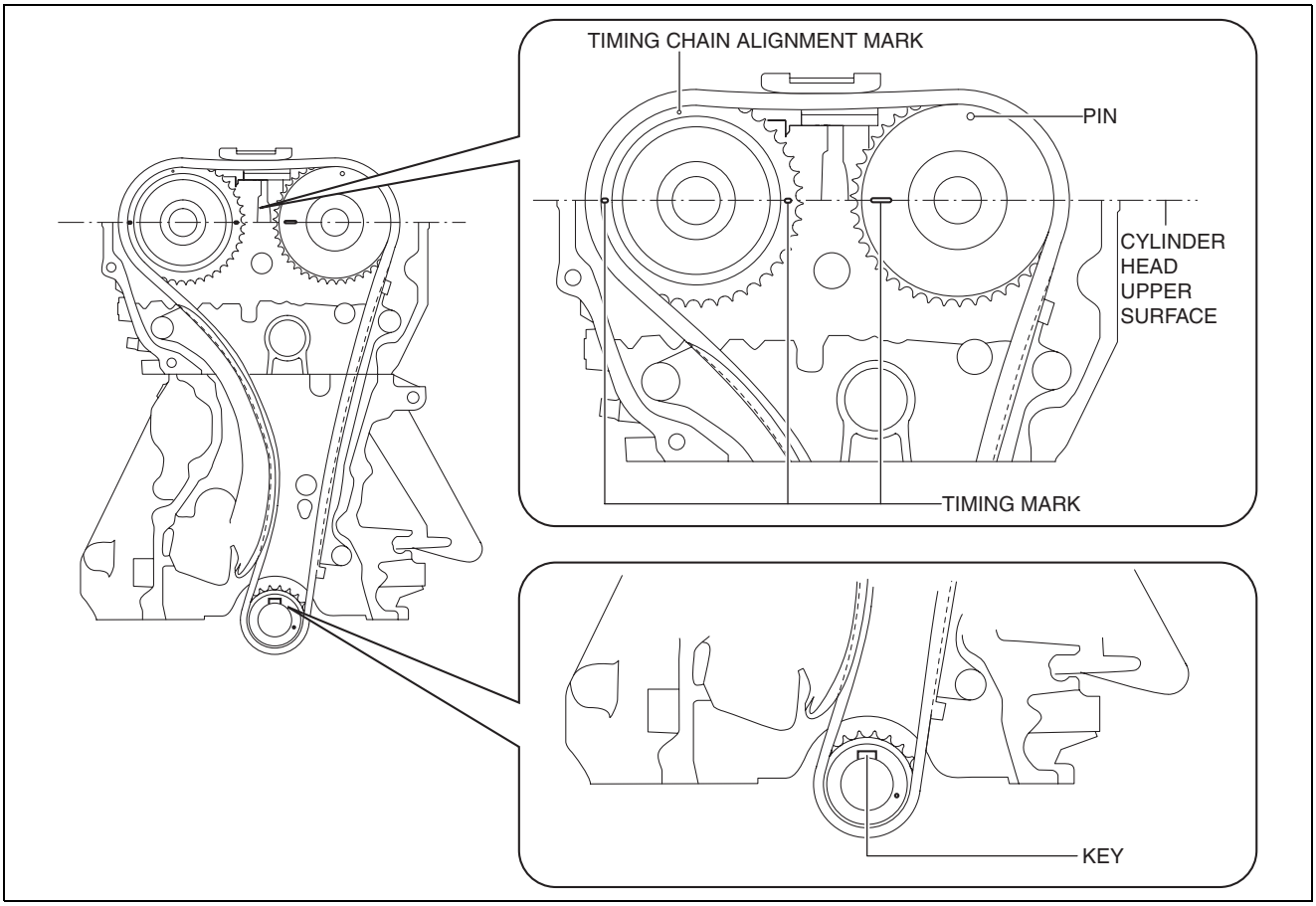

ac5wzw0000322

Engine Front Cover Installation Note

Note

- For a new engine front cover, the positioning pins in the two locations shown in the figure project to the outside of the engine.

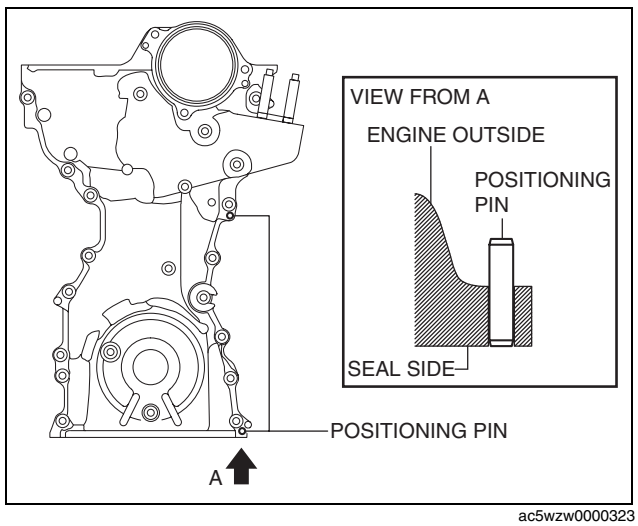

ac5wzw0000323

MECHANICAL [SKYACTIV-G 2.0]

1. If the engine front cover is newly replaced, tap the positioning pins in the two locations to the seal surface side.
2. Remove oil, dirt, and sealant adhering to the engine front cover, cylinder head, and cylinder block.
3. When reusing an engine front cover installation bolts, remove sealant adhering to the bolts.

Caution

- **Apply the silicon sealant in a single, unbroken line.**
- **To prevent silicone sealant from hardening, adhere the engine front cover and the cylinder block firmly within 10 min. after applying silicone sealant. After adhering them, tighten the installation bolts immediately.**

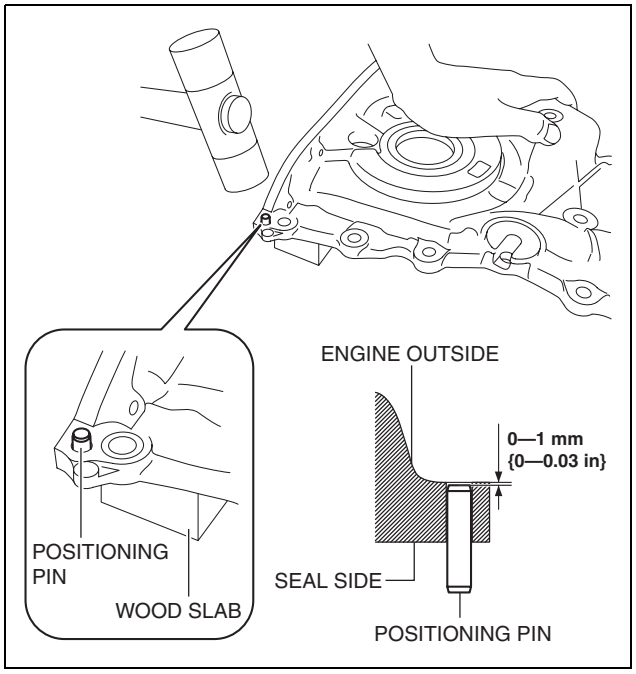

ac5wzw0000323

- **If a bolt with sealant adhering to it is used, it could result in cracks in the cylinder head and cylinder block.**

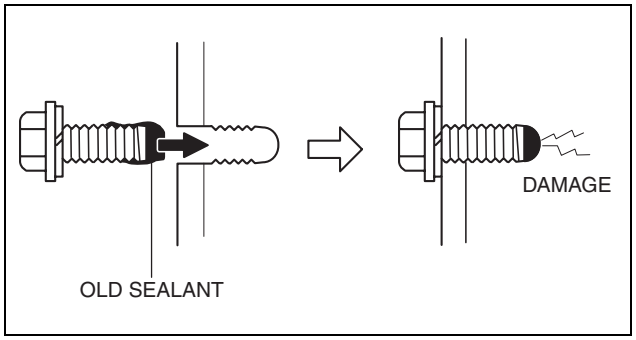

ac5wzw0000324

4. Apply silicone sealant to the engine front cover as shown in the figure.

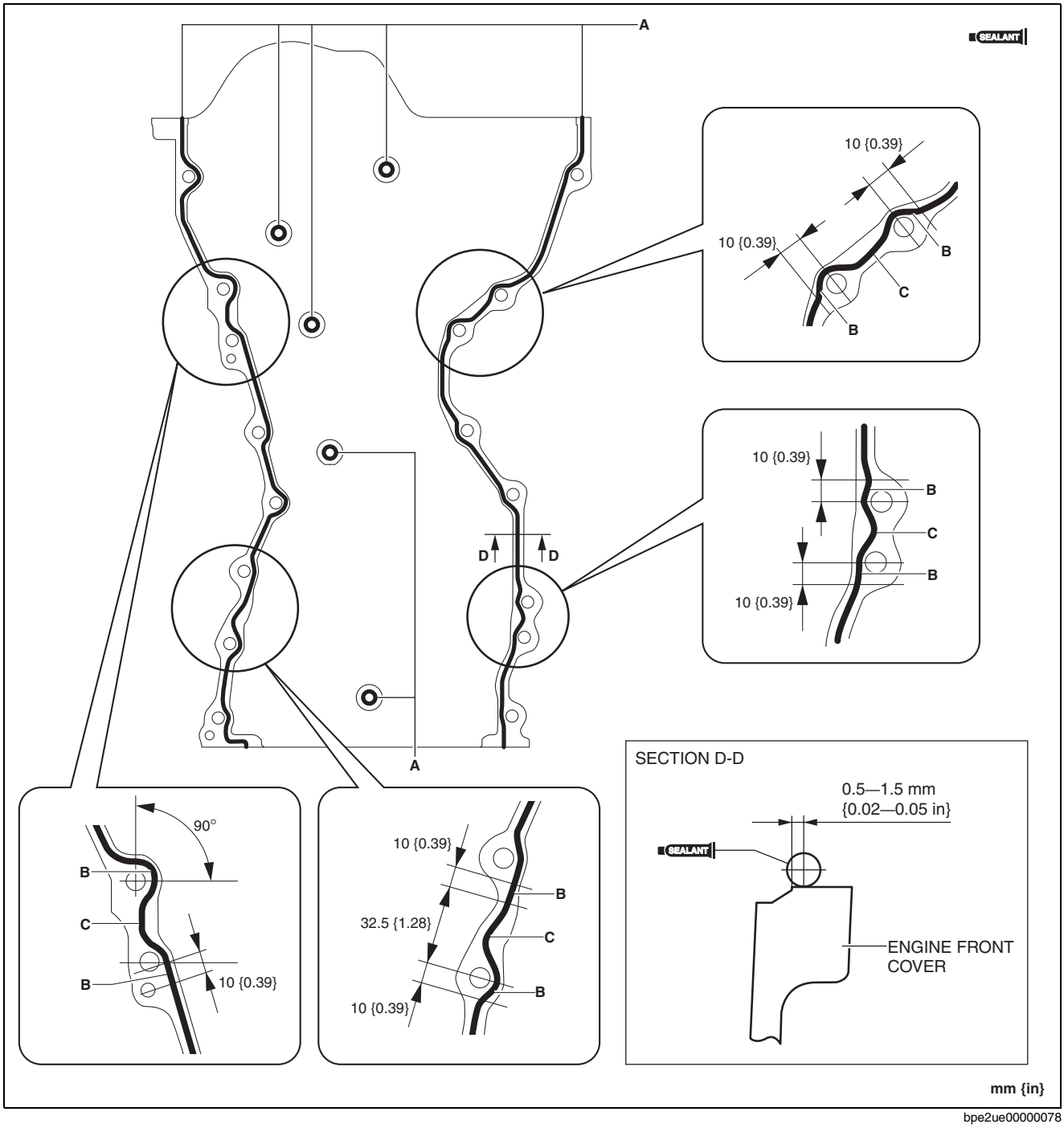

bpe2ue00000078

Bead thickness
A: 2—6 mm {0.1—0.2 in}
B: 4—6 mm {0.16—0.23 in}
C: 4—8 mm {0.2—0.3 in}

MECHANICAL [SKYACTIV-G 2.0]

5. Apply silicone sealant to the areas shown in the figure.

Caution
- **Apply the silicone sealant so that it goes into the cylinder head gasket.**

6. Install the engine front cover to the engine.

Note
- Temporarily install an appropriate bolt to the drive belt auto tensioner installation bolt hole to prevent:
  - — A silicone sealant adhesion malfunction in the drive belt auto tensioner installation bolt hole.
  - — A bolt mis-installation due to silicone sealant hardening.

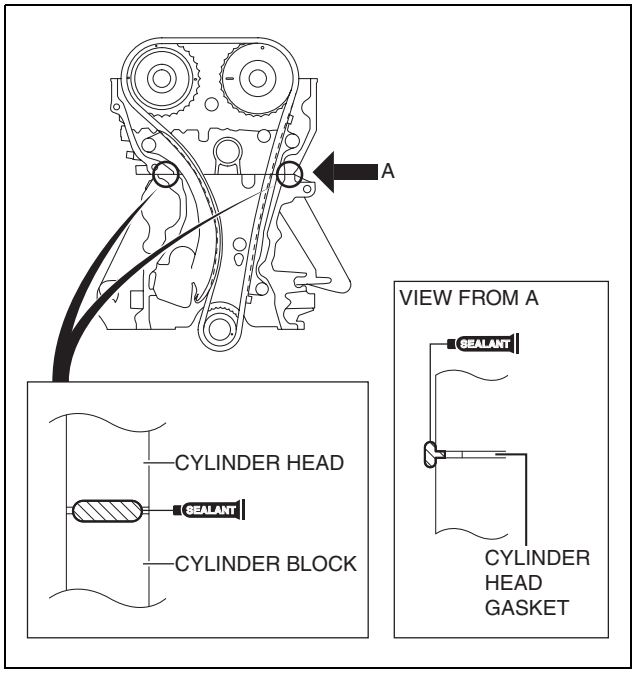

ac5wzw0000324

7. Prepare an appropriate **M8 x 1.25** bolt (length **40 mm {1.6 in}**).

Caution
- **For the number 10 bolt of the tightening order, install the bolts with washers.**

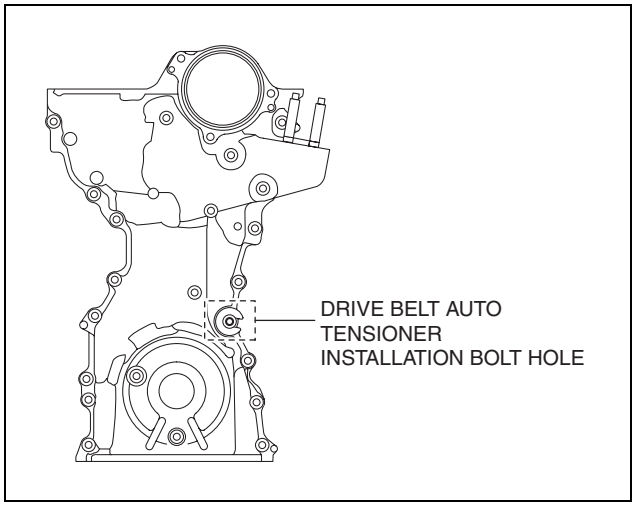

am3uuw0000886

8. Tighten the engine front cover installation bolts in the order shown in the figure.

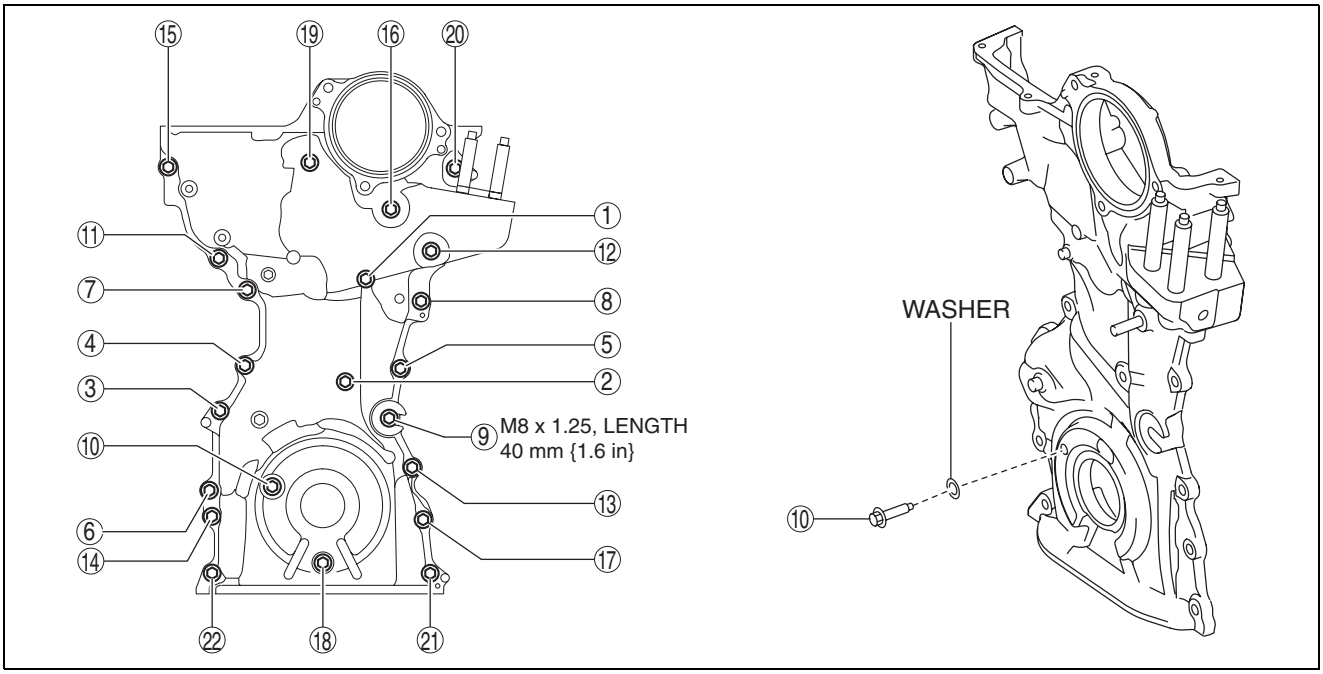

ac5wzw0000324

Tightening torque
20—26 N·m {2.1—2.6 kgf·cm, 15—19 in·lbf}

9. Remove the bolt installed to the drive belt auto tensioner installation bolt hole when installing the drive belt auto tensioner.
10. Install the ground cable and wiring harness bracket shown in the figure.

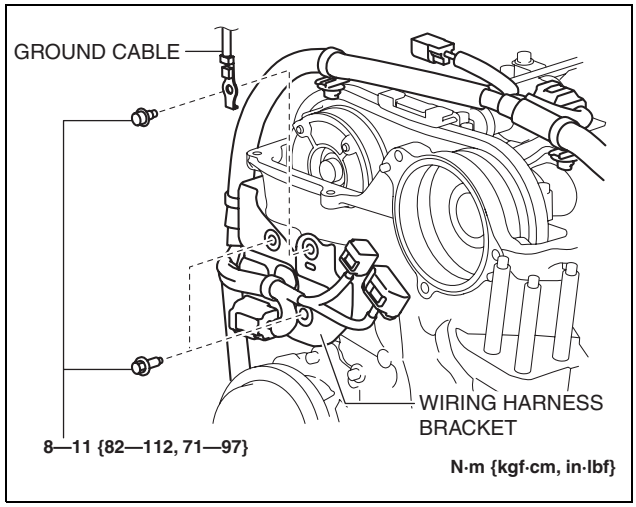

ac5wzw0000322

MECHANICAL [SKYACTIV-G 2.0]

Electric Variable Valve Timing Motor/Driver Installation Note

1. Install a new O-ring to the O-ring installation groove of the engine front cover.

Caution

- **To prevent damage to the electric variable valve timing motor/driver, do not apply excessive force (force of 100 N {10.2 kgf, 22.5 lbf} or more) to the shaded areas shown in the figure.**

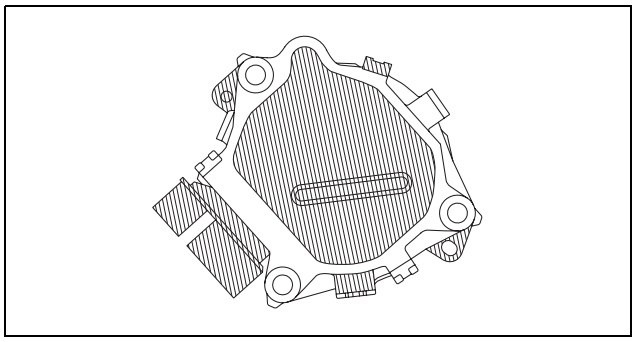
ac5wzw0000324

2. Install the electric variable valve timing motor/driver using the following procedures.

Note

- The eccentric shaft on the electric variable valve timing actuator side can be rotated to the left and right.
- The electric variable valve timing motor/driver can be assembled with the joint groove of the eccentric shaft in any position, and it will not lead to vehicle damage or performance reduction.

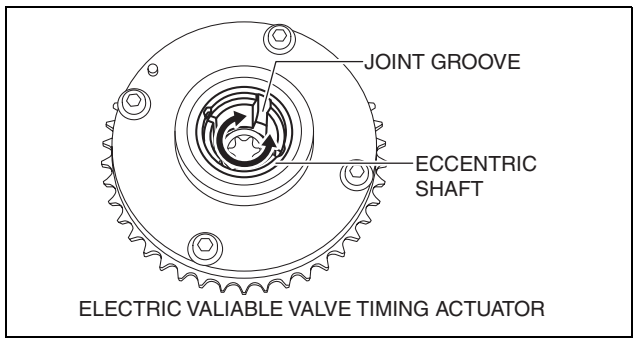

ac5wzw0000324

(1) Before installation, rotate the joint of the end of the electric variable valve timing motor so that it is aligned to the joint groove on the electric variable valve timing actuator side.
(2) Engage the joint on the end of the electric variable valve timing motor with the joint groove on the electric variable valve timing actuator side.
(3) Attach the seal surface.
(4) Tighten the electric variable valve timing motor/driver installation bolts.

Tightening torque
20—26 N·m {2.1—2.6 kgf·m, 15—19 ft·lbf}

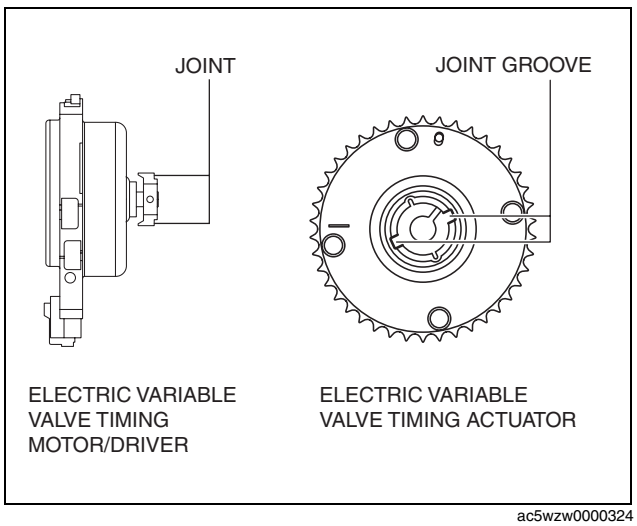

ac5wzw0000324

MECHANICAL [SKYACTIV-G 2.0]

No.3 Engine Mount Installation Note

Caution

- **If the No.3 engine mount is deviated from the original position when installing the No.3 engine mount, engine noise or vibration could increase. When installing the No.3 engine mount, align the alignment mark placed during removal and install it to the original position.**

Note

- When replacing the No.3 engine mount, place a mark at the same position as the one placed before removal.
- If the No.3 engine mount nut is loosened, tighten the engine front cover stud bolts because they may be loosened.

1. Tighten the engine front cover stud bolts.

   Tightening torque
   7—13 N·m {72—132 kgf·cm, 62—115 in·lbf}

2. Temporarily tighten the No.3 engine mount installation bolts and nuts using the following procedure:
   (1) Align the alignment marks on the body side and No.3 engine mount, and temporarily tighten the bolts shown in the figure.

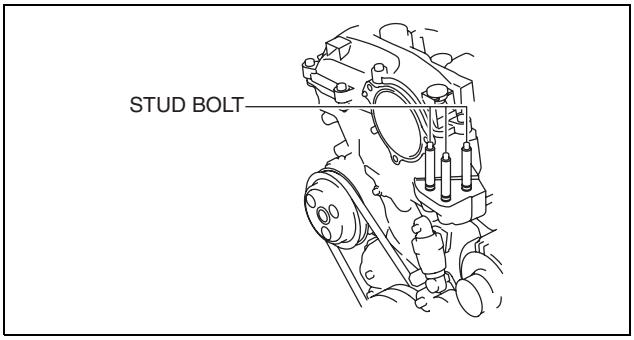

ac5wzw0000324

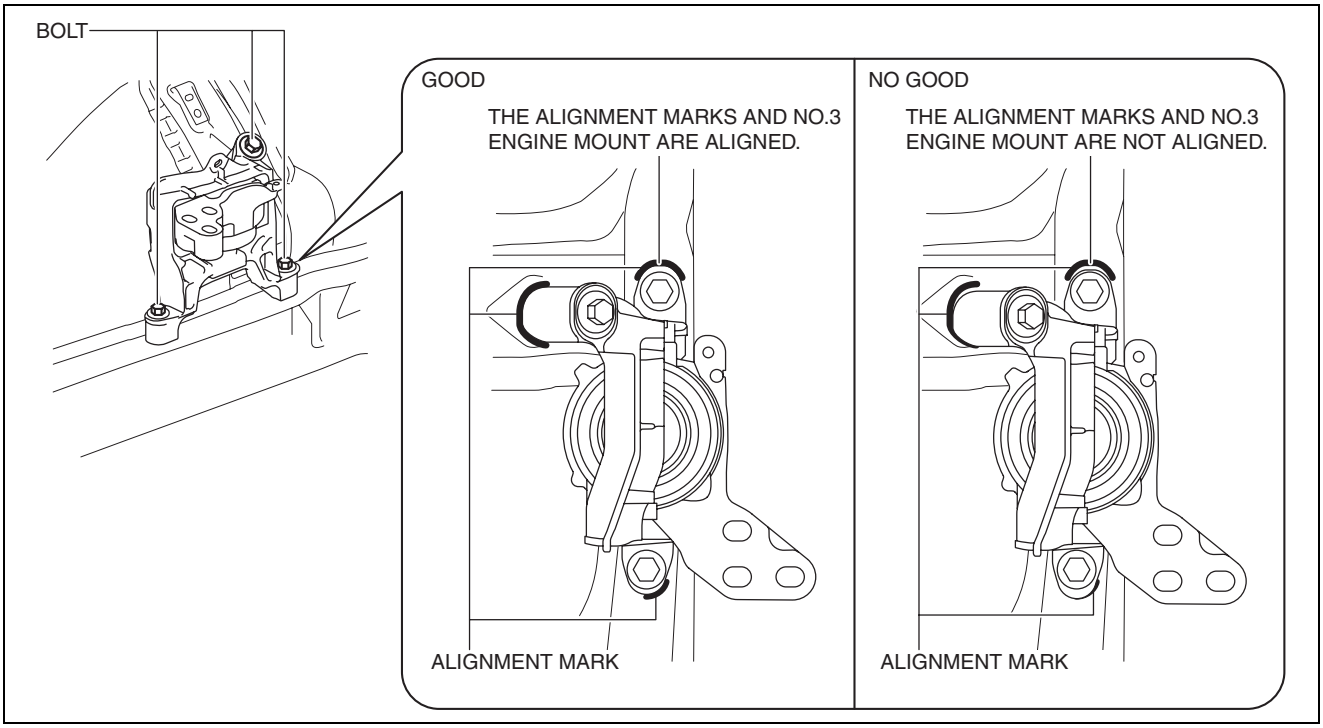

ac5wzw0000519

(2) Temporarily tighten the nuts shown in the figure while aligning the alignment marks of the No.3 engine mount and nuts.

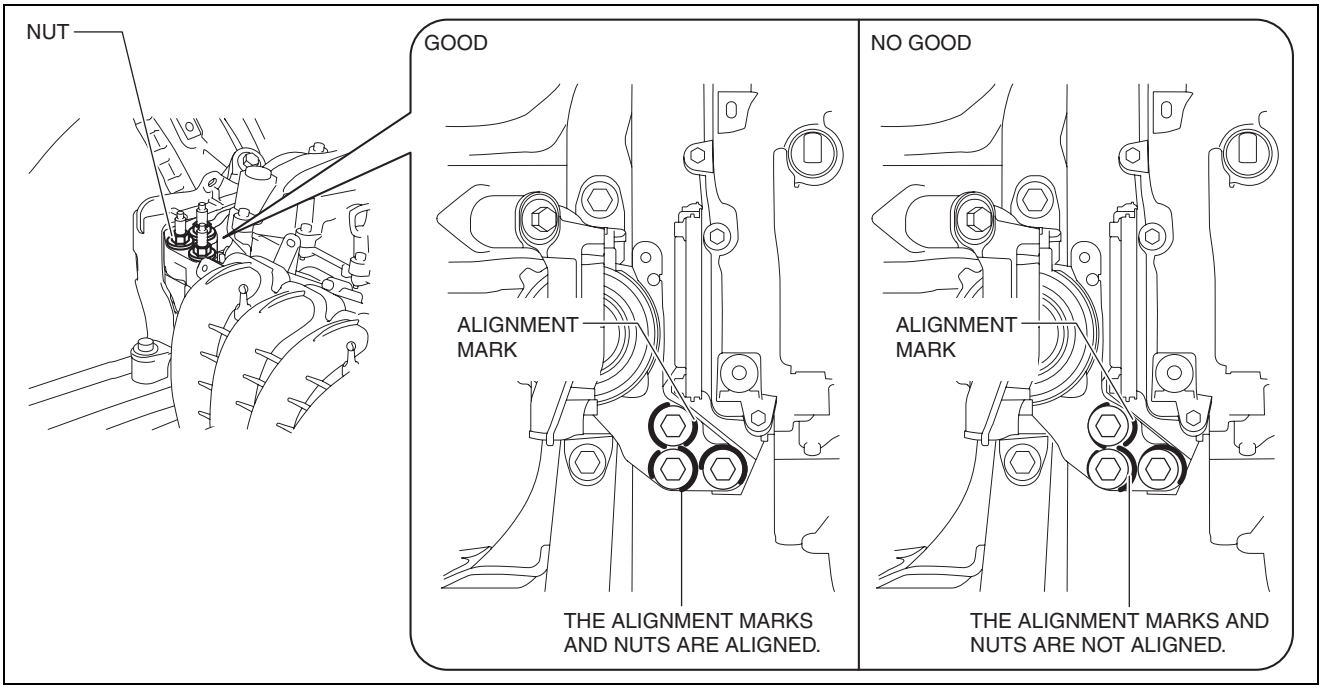

ac5wzw0000519

Note
- If the alignment marks are not aligned, align the alignment marks while slightly moving the engine and temporarily tighten the nuts.

3. Tighten the No.3 engine mount installation bolts and nuts in the order as shown in the figure.

No.	Tightening torque
1	76—95 N·m {7.8—9.6 kgf·m, 57—70 ft·lbf}
2	82—95 N·m {8.4—9.6 kgf·m, 61—70 ft·lbf}
3	49—65 N·m {5.0—6.6 kgf·m, 37—47 ft·lbf}

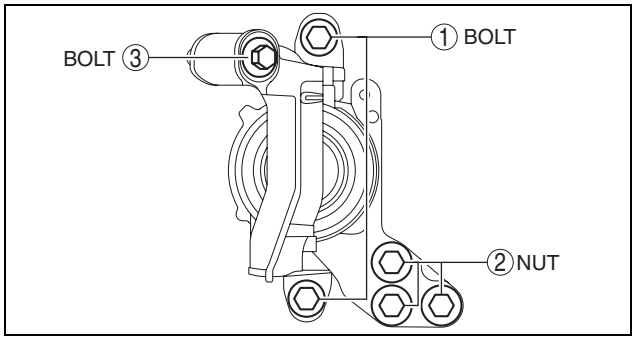

ac5wzw0000324

4. Remove the **SST**.
5. Install the clip of ground cable to the No.3 engine mount.

MECHANICAL [SKYACTIV-G 2.0]

Crankshaft Pulley Lock Bolt Installation Note

Caution

- **To prevent damage to the crankshaft pulley, protect the crankshaft pulley with a clean cloth so that the bar part (205-072) of the SST does not contact the crankshaft pulley.**
- **To prevent damage to the engine front cover, be careful not to allow the tab part (49 B011 105) of the SST to get caught between the crankshaft pulley and the engine front cover.**

1. Install the **SST** on the crankshaft pulley to lock the crankshaft against rotation.
2. Tighten the crankshaft pulley lock bolt in the order shown in the following two steps.

Tightening procedure
Step 1: 90—110 N·m {9.2—11 kgf·m, 67—81 ft·lbf}
Step 2: 55—65°

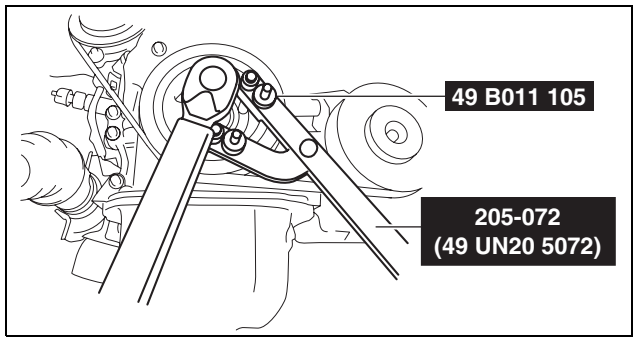

ac5wzw0000325

Water Pump Pulley Installation Note

Caution

- **Be careful not to damage the belt groove and surface of the water pump pulley when using tools, otherwise it will cause wear, breakage, abnormal noise of the drive belt (stretch belt), damage to the pulley, and rust.**

1. Install the water pump pulley to the water pump and temporarily tighten the bolt.
2. Align the water pump pulley hole with the water pump hole as shown in the figure.

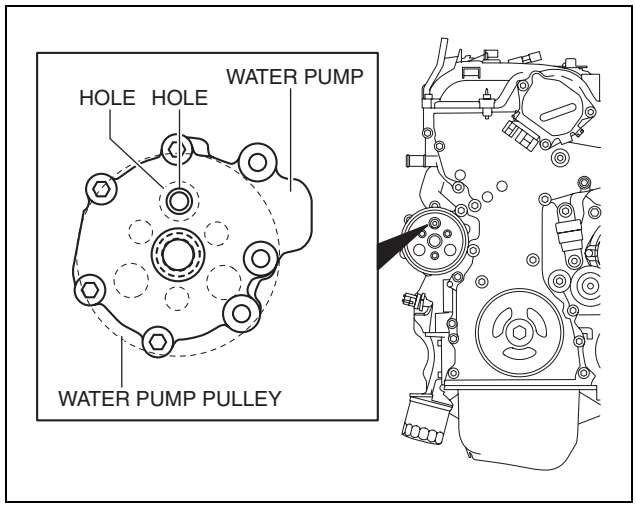

ac5wzw0000321

3. Insert an appropriate bolt (length **70 mm {2.8 in}**) into the water pump hole shown in the figure and lock the water pump pulley against rotation.
4. Completely tighten the water pump pulley bolt to the specified torque.

   Tightening torque
   8—11 N·m {82—112 kgf·cm, 71—97 in·lbf}

5. Remove the bolt used for locking the water pump pulley against rotation.

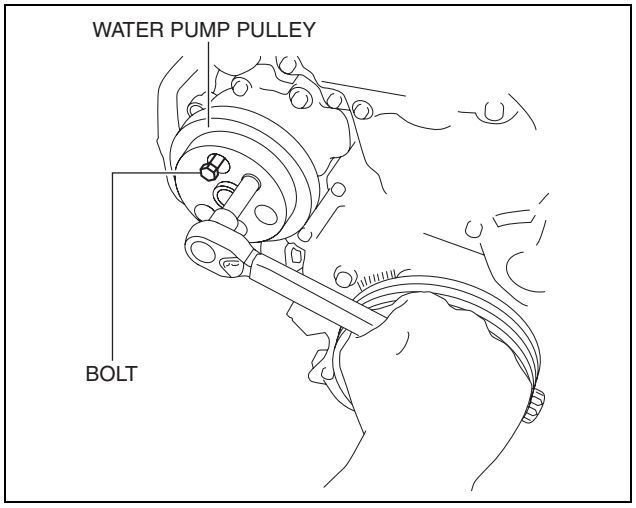

ac5wzw0000325

Drive Belt Auto Tensioner Installation Note

Caution
- **To allow the drive belt auto tensioner to function correctly, always bleed the air from the drive belt auto tensioner using the following procedure after assembling the drive belt auto tensioner.**

1. Install the drive belt auto tensioner to the engine.

   Caution
   - **To prevent damage to the drive belt auto tensioner, do not apply excessive torque after the tensioner moves full-stroke.**

2. Insert the wrench onto the cast hexagon on the drive belt auto tensioner, move the drive belt auto tensioner up and down at full-stroke three times to bleed the air.

   Note
   - By moving the drive belt auto tensioner up and down full-stroke three times, the piston inside the tensioner moves to bleed the air.

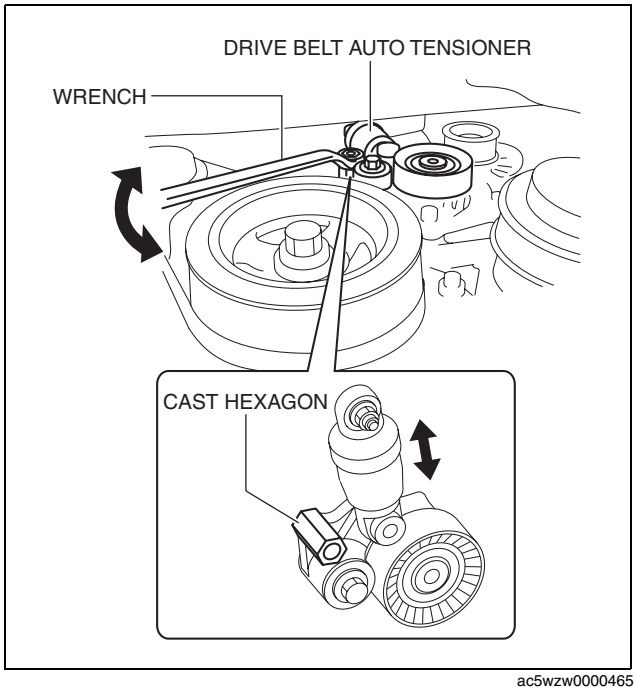

ac5wzw0000465

MECHANICAL [SKYACTIV-G 2.0]

Oil Shower Pipe Installation Note

1. Install the oil shower pipe in the order shown in the figure.

Tightening torque

Installation position	Tightening torque
1	9—12 N·m {92—122 kgf·cm, 80—106 in·lbf}
2, 3	8.0—9.0 N·m {82—91 kgf·cm, 71—79 in·lbf}

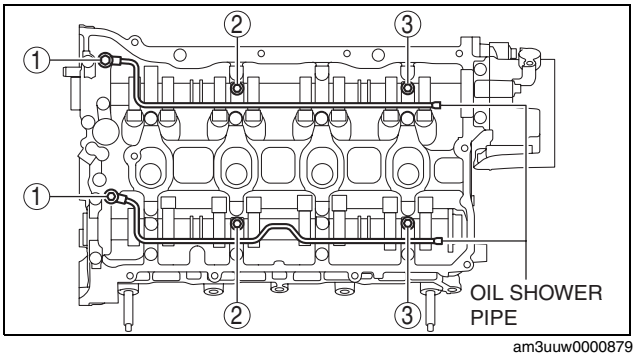

am3uuw0000879

Cylinder Head Cover Installation Note

Caution

- **To assure the sealing performance of the cylinder head cover, be careful of the following:**
  - **— Verify that the cylinder head cover gasket is inserted into the cylinder head cover groove and install the cylinder head cover.**
  - **— Remove oil, dirt, and sealant from the seal surface.**
- **To prevent silicone sealant from hardening, adhere the cylinder head cover and the cylinder head firmly within 10 min. after applying silicone sealant. After adhering them, tighten the installation bolts immediately.**

1. Insert a new cylinder head cover gasket into the cylinder head cover groove.
2. Apply silicone sealant to the areas shown in the figure.

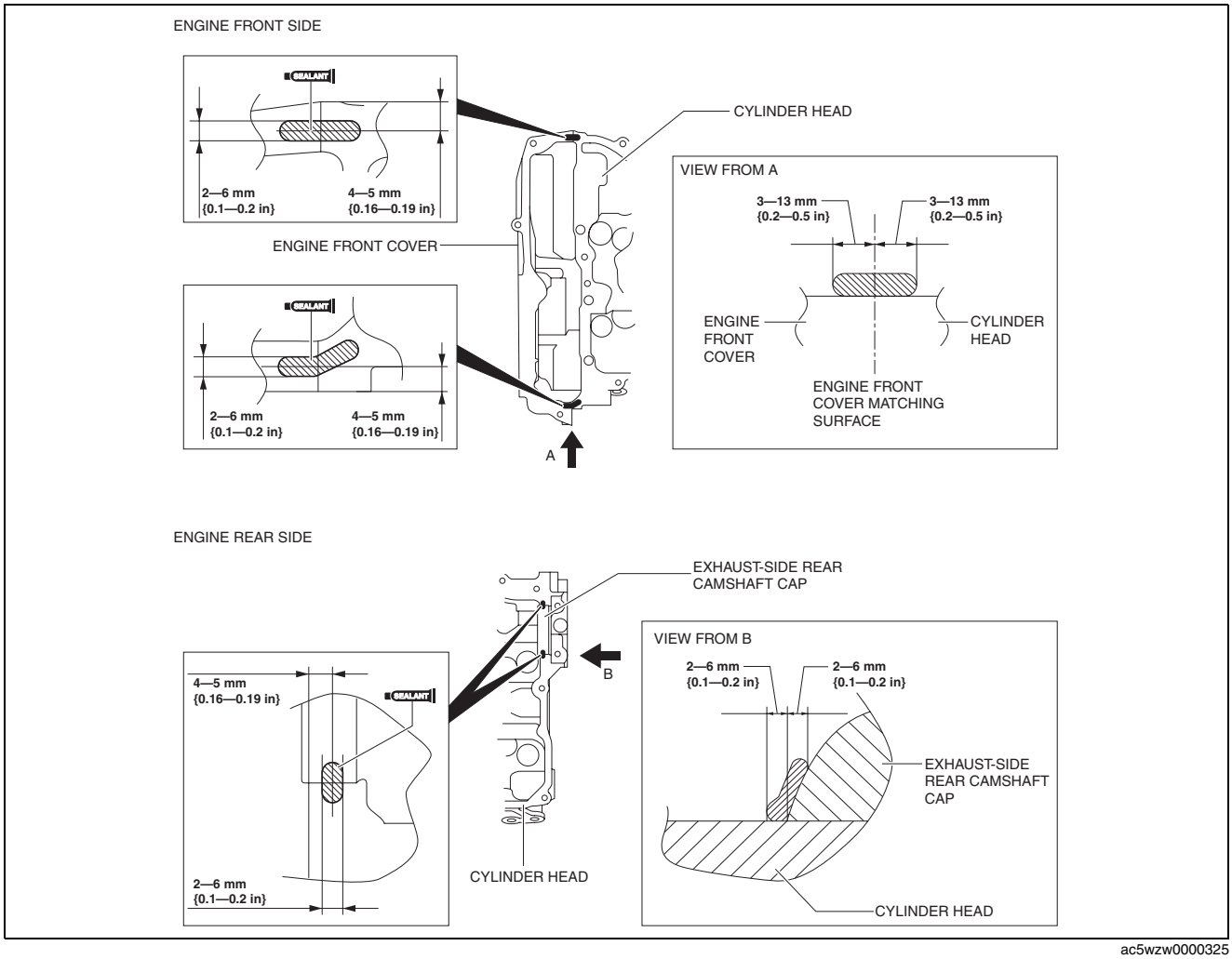

ac5wzw0000325

MECHANICAL [SKYACTIV-G 2.0]

3. Tighten the cylinder cover bolts in the order shown in the figure.

   Tightening torque
   4.5—7.0 N·m {46—71 kgf·cm, 40—61 in·lbf}

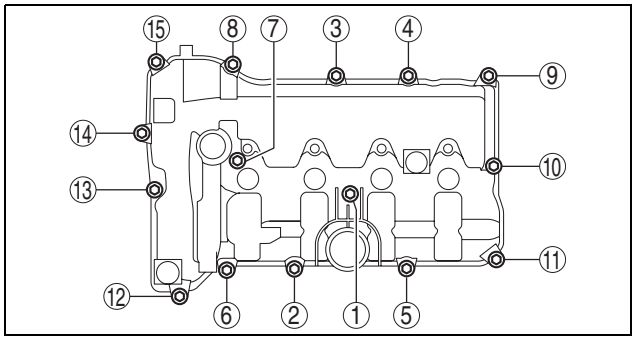

ac5wzw0000325

HYDRAULIC LASH ADJUSTER (HLA) INSPECTION [SKYACTIV-G 2.0]

id0110h2805000

HLA Troubleshooting

Item	Occurrence	Possible cause	Action
1	After replacing oil, sound occurs when starting engine	Oil shortage in oil passage	• Maintain the engine speed between 2,000 to 3,000 rpm for approx. 2 s and 10 min*, and verify that the sound disappears. — If the sound disappears, the HLA is normal. — If the sound does not disappear, go to item 5.
2	Sound occurs at instant when engine is started on vehicle left for 1 day		
3	Starter cranked for 3 s or more and sound occurs directly after engine is started	HLA oil shortage	
4	Sound occurs directly after engine is started with newly replaced HLA		
5	Sound occurs continuously for 10 min or more	Insufficient oil pressure	• Inspect the oil pressure. (See 01-11A-7 OIL PRESSURE INSPECTION [SKYACTIV-G 2.0].) — If less than the specification, inspect each part of the engine.
		HLA malfunction	• Inspect the HLA. (See 01-10A-63 HLA Inspection.)
6	Sound occurs during idling after high-speed driving	Incorrect engine oil level	• Inspect the engine oil level. (See 01-11A-3 ENGINE OIL LEVEL INSPECTION [SKYACTIV-G 2.0].)
		Engine oil deterioration	• Replace the engine oil. (See 01-11A-3 ENGINE OIL REPLACEMENT [SKYACTIV-G 2.0].)

* : Period of time engine oil flows to the HLA, this value includes tolerance caused by the ambient temperature and the oil used.

MECHANICAL [SKYACTIV-G 2.0]

HLA Inspection

1. Disconnect the negative battery cable. (See 01-17A-11 NEGATIVE BATTERY CABLE DISCONNECTION/CONNECTION [SKYACTIV-G 2.0].) (See 01-17A-13 NEGATIVE BATTERY CABLE DISCONNECTION/CONNECTION [SKYACTIV-G 2.0 (WITHOUT i-stop)].)
2. Remove the plug hole plate. (See 01-10A-6 PLUG HOLE PLATE REMOVAL/INSTALLATION [SKYACTIV-G 2.0].)
3. Remove the ignition coil/ion sensors. (See 01-18-2 IGNITION COIL/ION SENSOR REMOVAL/INSTALLATION [SKYACTIV-G 2.0].)
4. Remove the cylinder head cover. (See 01-10A-39 TIMING CHAIN REMOVAL/INSTALLATION [SKYACTIV-G 2.0].)
5. Press the rocker arm from above and verify that the HLA does not drop.
   - If the HLA drops, replace the HLA. (See 01-10A-63 HYDRAULIC LASH ADJUSTER (HLA) REMOVAL/INSTALLATION [SKYACTIV-G 2.0].)
6. Install in the reverse order of removal.

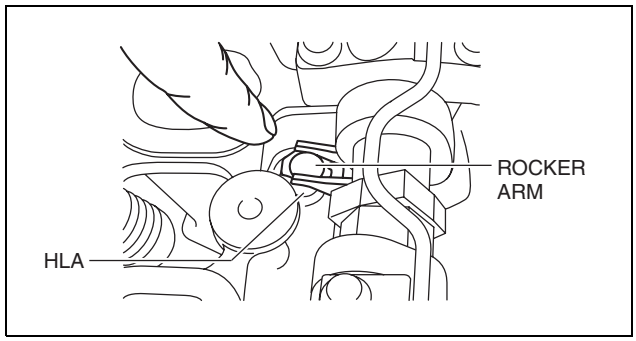

am3uuw0000890

HYDRAULIC LASH ADJUSTER (HLA) REMOVAL/INSTALLATION [SKYACTIV-G 2.0]

id0110h2804100

Warning

- **A hot engine can cause severe burns. Turn off the engine and wait until it is cool before servicing.**

Caution

- **If the camshaft is rotated with the timing chain removed and the piston at the top dead center position, the valve may contact the piston and the engine could be damaged. When rotating the camshaft with the timing chain removed, rotate it after lowering the piston from the top dead center position.**
- **When rotating the camshaft using a wrench on the cast hexagon, the wrench may contact the rocker arm and damage the rocker arm. To prevent damage to the rocker arm when holding the camshaft on the cast hexagon, use the wrench at engine rear side as shown in the figure to secure a clearance between the cam.**

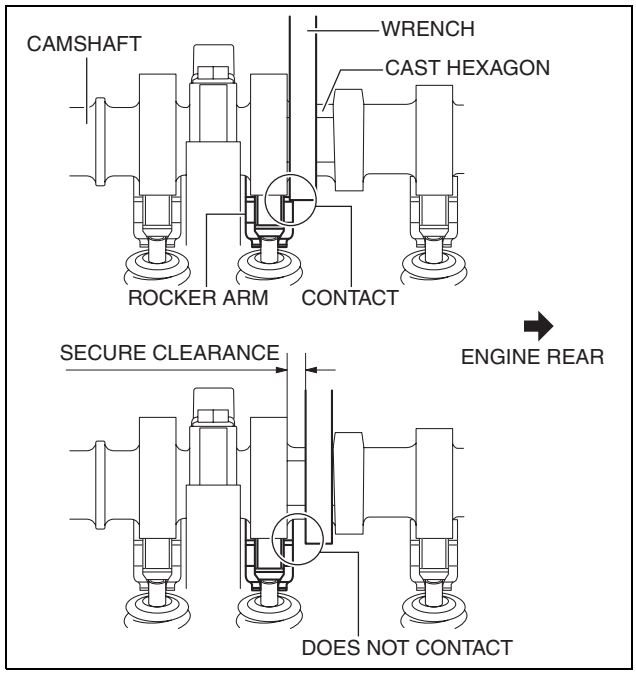

am3uuw0000896

MECHANICAL [SKYACTIV-G 2.0]

Note
- Width at the cast hexagon of the camshaft is 22—24 mm {0.87—0.94 in}.

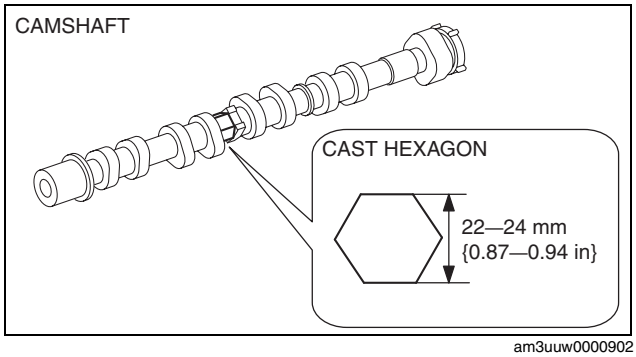

am3uuw0000902

1. Disconnect the negative battery cable. (See 01-17A-11 NEGATIVE BATTERY CABLE DISCONNECTION/CONNECTION [SKYACTIV-G 2.0].) (See 01-17A-13 NEGATIVE BATTERY CABLE DISCONNECTION/CONNECTION [SKYACTIV-G 2.0 (WITHOUT i-stop)].)
2. Remove the plug hole plate. (See 01-10A-6 PLUG HOLE PLATE REMOVAL/INSTALLATION [SKYACTIV-G 2.0].)
3. Remove the ignition coil/ion sensors. (See 01-18-2 IGNITION COIL/ION SENSOR REMOVAL/INSTALLATION [SKYACTIV-G 2.0].)
4. Remove the cylinder head cover. (See 01-10A-39 TIMING CHAIN REMOVAL/INSTALLATION [SKYACTIV-G 2.0].)
5. Remove the front under cover No.2. (See 09-16-41 FRONT UNDER COVER No.2 REMOVAL/INSTALLATION.)
6. Remove the electric variable valve timing motor/driver. (See 01-10A-16 ELECTRIC VARIABLE VALVE TIMING MOTOR/DRIVER REMOVAL/INSTALLATION [SKYACTIV-G 2.0].)
7. Remove the vacuum pump. (See 04-11-21 VACUUM PUMP REMOVAL/INSTALLATION [SKYACTIV-G 2.0].)
8. Remove the high pressure fuel pump and rear housing. (See 01-14A-44 HIGH PRESSURE FUEL PUMP REMOVAL/INSTALLATION [SKYACTIV-G 2.0].)
9. Remove in the order indicated in the table.
10. Install in the reverse order of removal.
11. Start the engine and inspect the following:
    - Ignition timing, idle speed and idle mixture. (See 01-10A-4 ENGINE TUNE-UP [SKYACTIV-G 2.0].)

MECHANICAL [SKYACTIV-G 2.0]

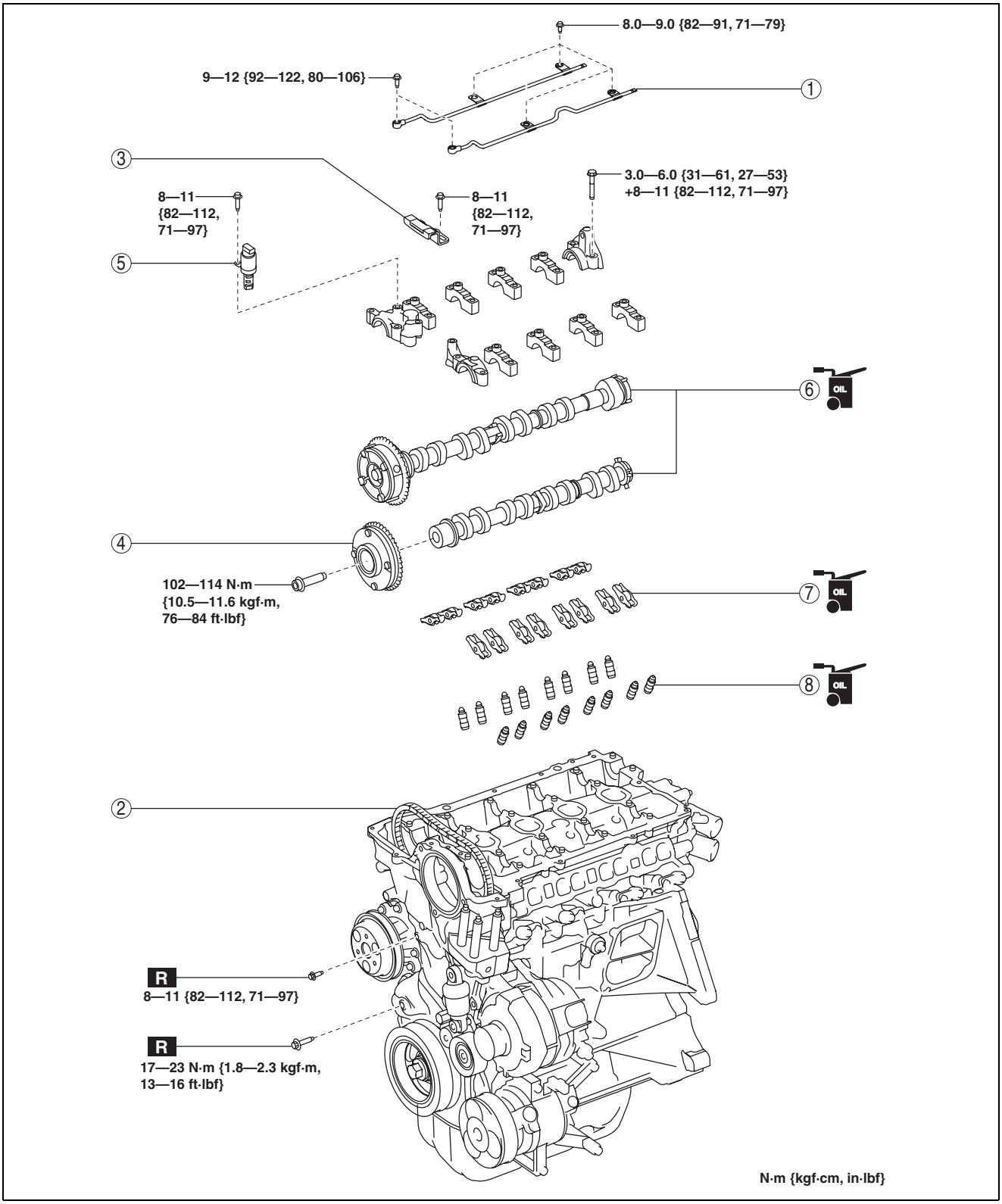

ac5uuw00001629

1	Oil shower pipe (See 01-10A-78 Oil Shower Pipe Installation Note.)
2	Timing chain (See 01-10A-66 Timing Chain Removal Note.) (See 01-10A-77 Timing Chain Installation Note.)
3	Chain guide (No.1)

4	Electric variable valve timing actuator (See 01-10A-69 Electric Variable Valve Timing Actuator Removal Note.) (See 01-10A-76 Electric Variable Valve Timing Actuator Installation Note.)
5	OCV

MECHANICAL [SKYACTIV-G 2.0]

6	Camshaft (See 01-10A-71 Camshaft Removal Note.) (See 01-10A-73 Camshaft Installation Note.)
7	Rocker arm (See 01-10A-72 Rocker Arm Removal Note.) (See 01-10A-73 Rocker Arm Installation Note.)
8	HLA (See 01-10A-72 HLA Removal Note.) (See 01-10A-72 HLA Installation Note.)

Timing Chain Removal Note

1. Release the tension on the timing chain using the following procedure:

Note

- Release the tension on the timing chain by securing the timing chain tensioner arm through the service hole on the engine front cover.

(1) Remove the blind plugs (upper and lower) on the engine front cover service holes.

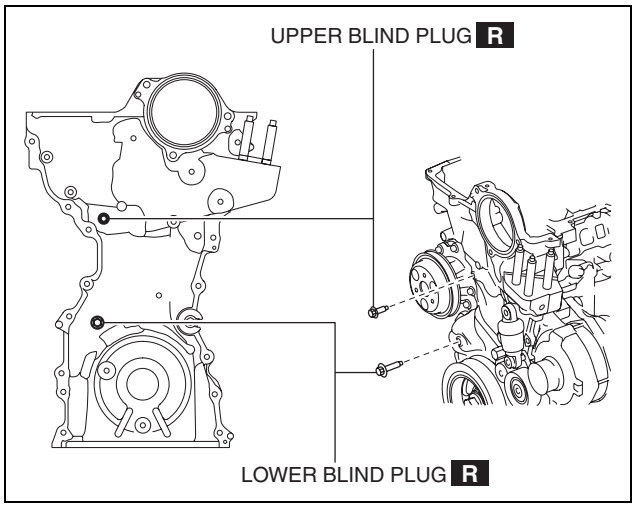

am3uuw0000897

(2) Insert an M6 bolt (**35—60 mm {1.4—2.3 in}** length with thread to the end) to the upper service hole and tighten it until it contacts the tensioner arm, then loosen it **approx. 180 degrees**. (Set the bolt so that it sits slightly in front of the tensioner arm.)

Note

- The bolt contacts the tensioner arm when it is inserted **approx. 20 mm {0.79 in}**.

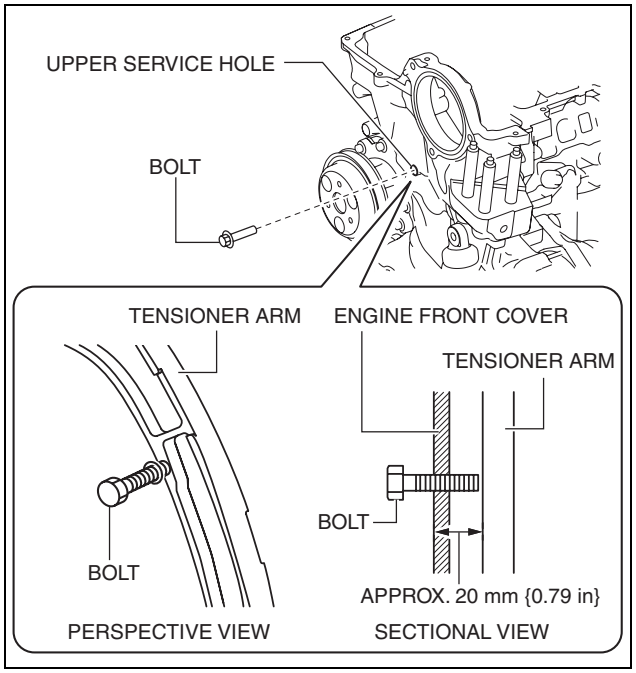

am3uuw0000897

- Hold the exhaust camshaft using a wrench on the cast hexagon and move it back and forth a few times as shown in the figure. This will drain the oil from the chain tensioner and make the following servicing easier.

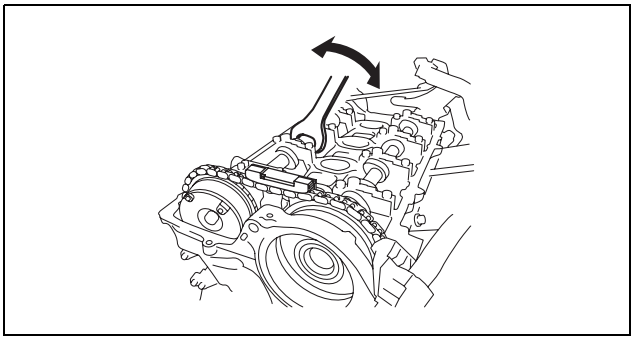
am3uuw0000897

(3) Insert a precision screwdriver into the lower service hole.

(4) While moving the exhaust camshaft back and forth in the direction of the arrow using a wrench on the cast hexagon, press down the link plate of the timing chain tensioner using a precision screwdriver and release the plunger lock.

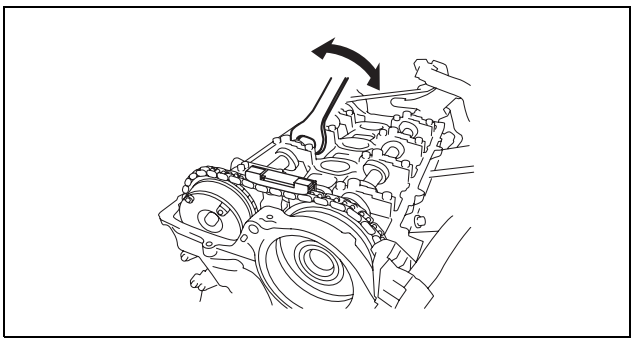
am3uuw0000897

Note

- When moving the exhaust camshaft back and forth, the timing chain pushes the plunger in the chain tensioner making it easier to operate the link plate.

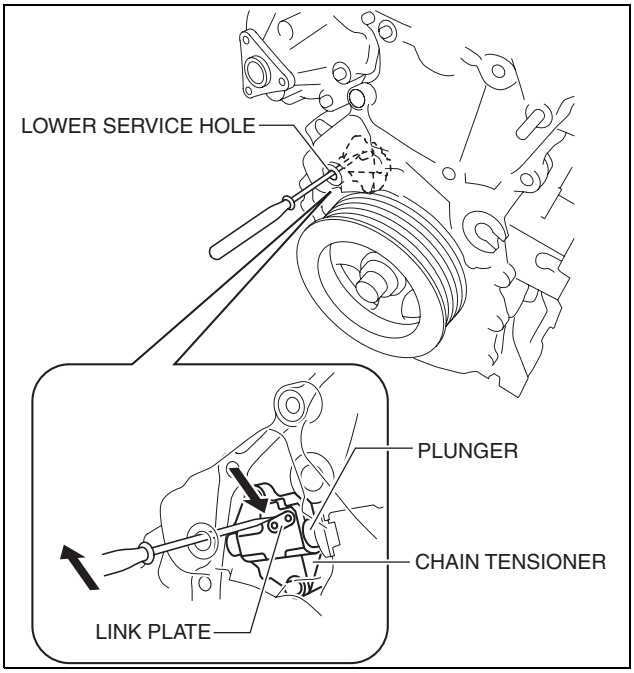

am3uuw0000897

MECHANICAL [SKYACTIV-G 2.0]

(5) With the plunger lock released, rotate the exhaust camshaft clockwise until the timing chain loosens.

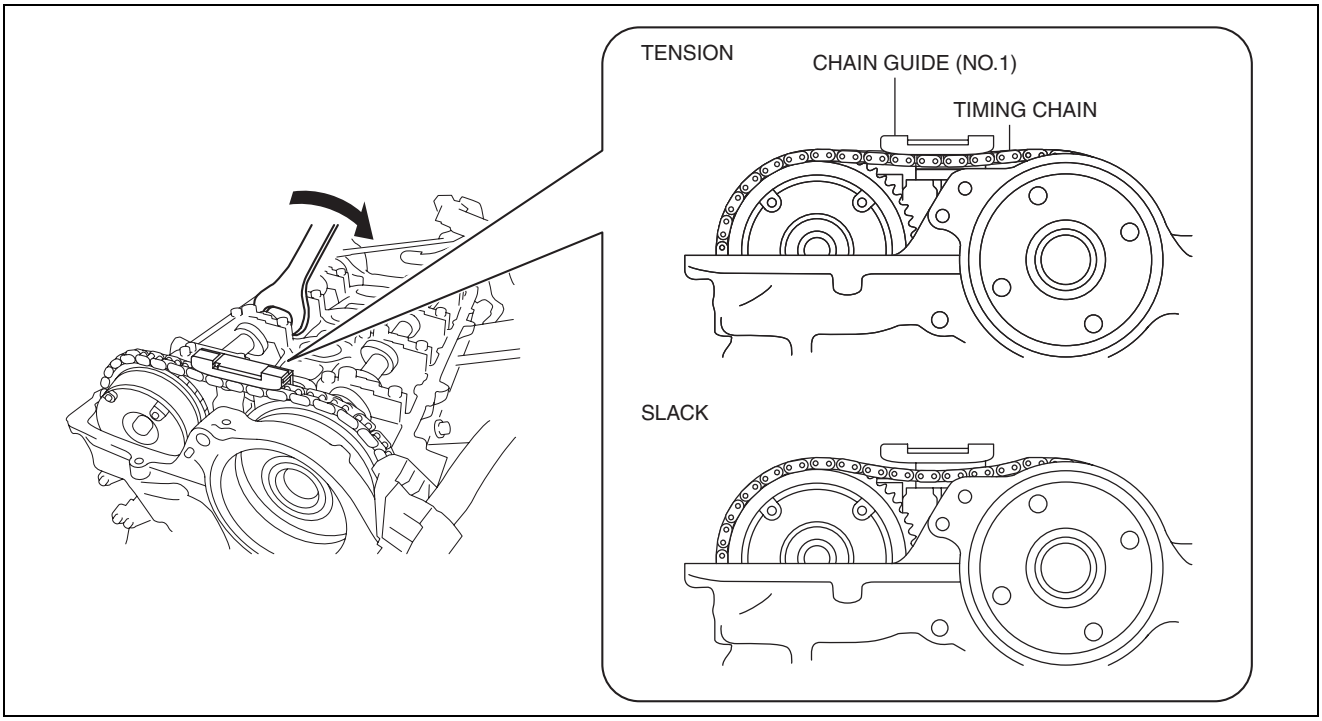

am3uuw0000897

(6) With the chain loosened, tighten the M6 bolt in the upper service hole so that the bolt is inserted **approx. 5 mm {0.2 in}** additionally to secure the tensioner arm.

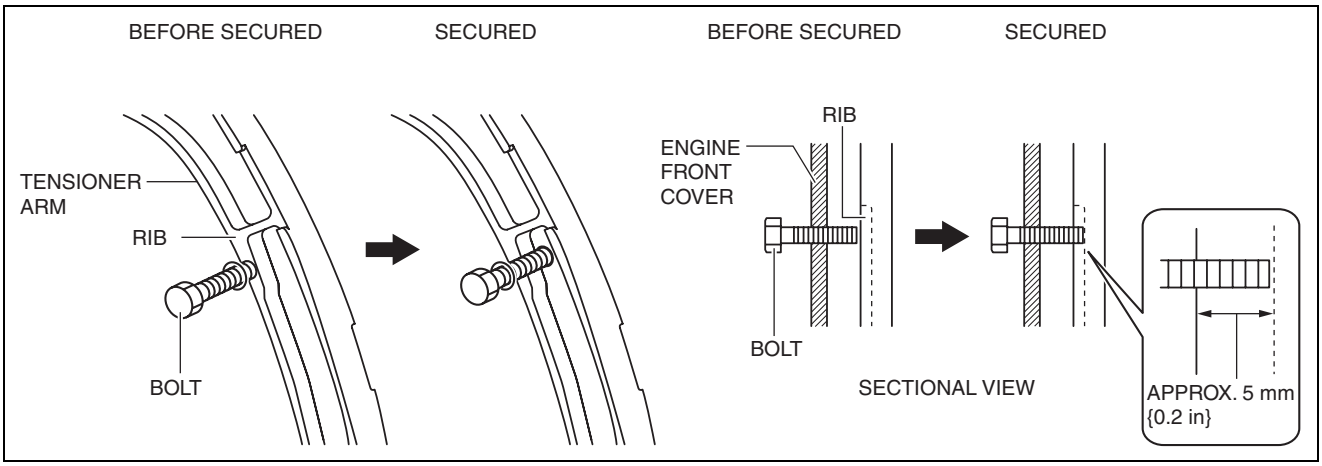

am3uuw0000897

- If the bolt cannot be inserted **approx. 5 mm {0.2 in}**, the plunger lock of the chain tensioner may not release, or the chain may not loosen enough. Return the bolt to the original position and restart the procedure from step (3).

Note

- By rotating the exhaust camshaft clockwise, the timing chain pushes the tensioner arm and the rib position deviates. The entire tensioner arm can be secured by hooking the bolt onto the deviated rib.

(7) After securing the tensioner arm, remove the chain guide (No.1).

MECHANICAL [SKYACTIV-G 2.0]

Electric Variable Valve Timing Actuator Removal Note

Caution

- **Keep the timing chain pulled up during and after the work in which it has been set aside from the sprocket. If the chain falls down, it may disengage from the sprocket on the crankshaft side and deviate, leading to valve timing deviation.**
- **After servicing, always verify the valve timing.**

1. Rotate the crankshaft clockwise so that cylinder No.1 is positioned around before top dead center (TDC) as shown in the figure.

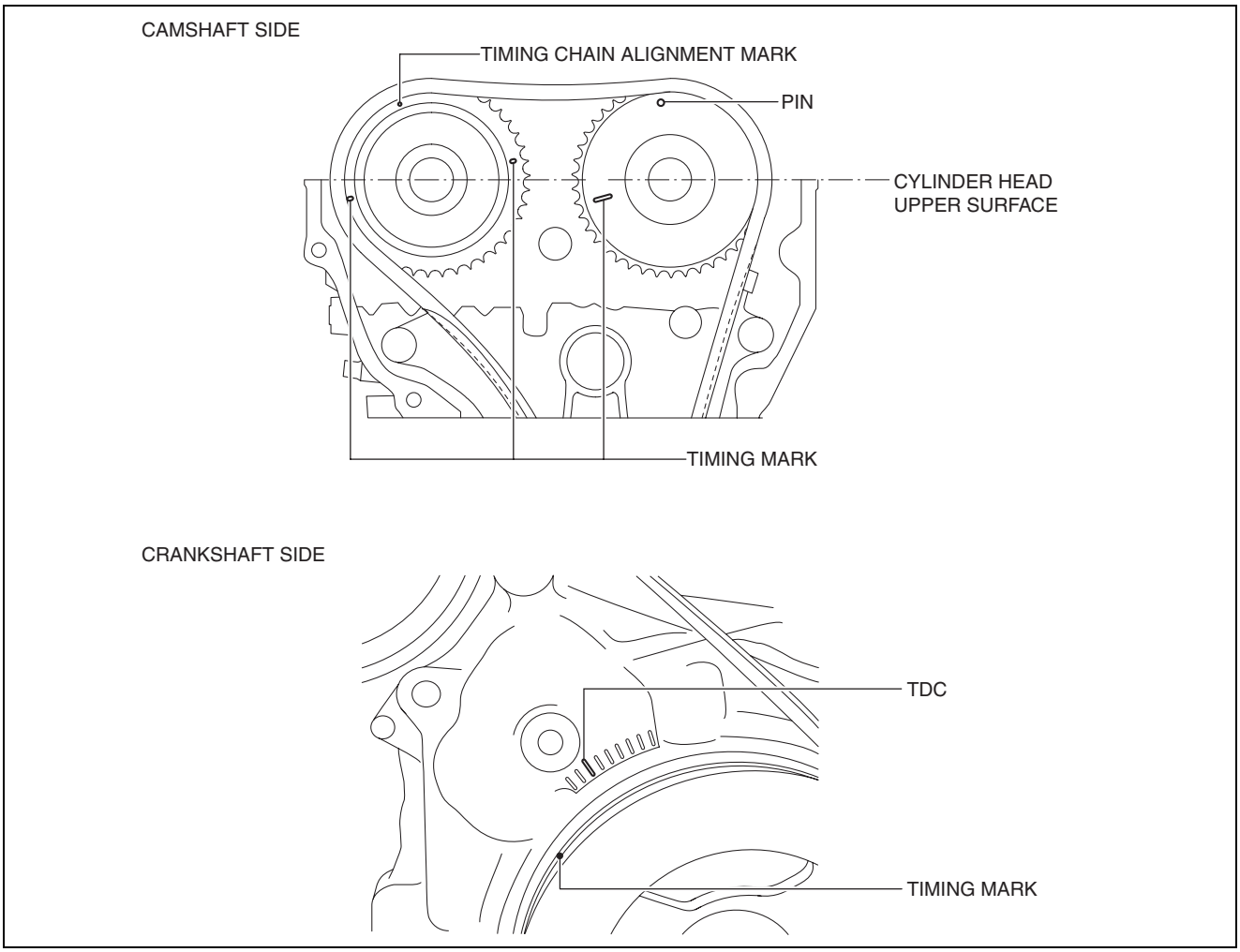

am3uuw0000897

Note

- With cylinder No.1 positioned around before top dead center (TDC), there is no large movement (rotation) of the exhaust camshaft when the timing chain is removed. Therefore, installation of the electric variable valve timing actuator to the camshaft will be easier. (If there is a large movement of the exhaust camshaft, installation of the electric variable valve timing actuator to the camshaft must be performed while loosening the chain by rotating the exhaust camshaft.)

MECHANICAL [SKYACTIV-G 2.0]

2. Mark the timing chain and each actuator so that they can be reassembled in the same condition as before removal.

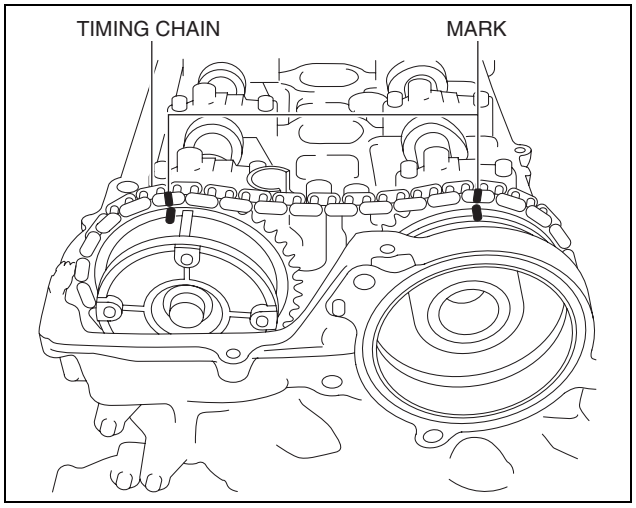

am3uuw0000897

3. Hold the intake camshaft using a wrench on the cast hexagon and remove the electric variable valve timing actuator installation bolt.

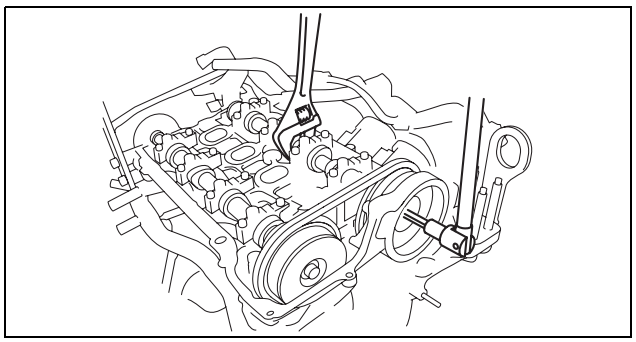
am3uuw0000898

4. Using a screwdriver wrapped in a clean cloth, lightly press the electric variable valve timing actuator to the front and separate the intake camshaft and the actuator.

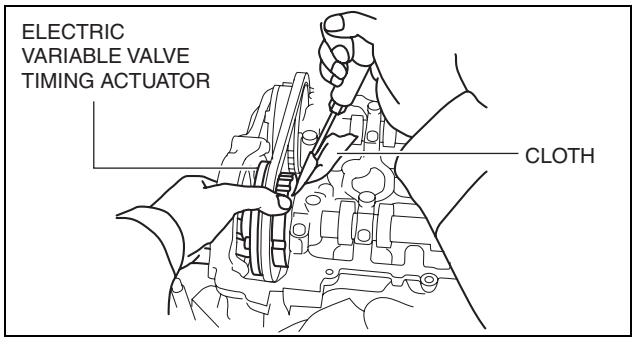

am3uuw0000904

5. Remove the timing chain from the exhaust and intake camshaft sprockets and set is aside, and remove the electric variable valve timing actuator.

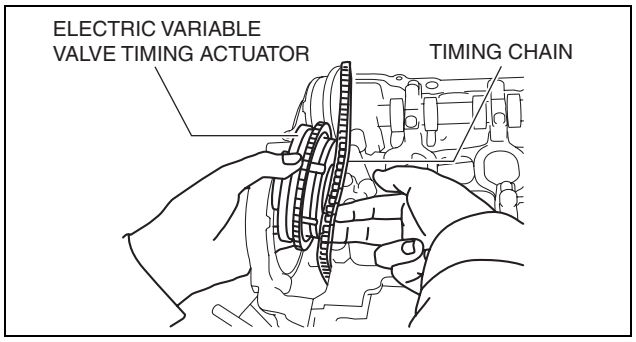

am3uuw0000904

6. Return the timing chain to the exhaust camshaft sprocket, and pull the timing chain up and suspend it using a rope as shown in the figure.

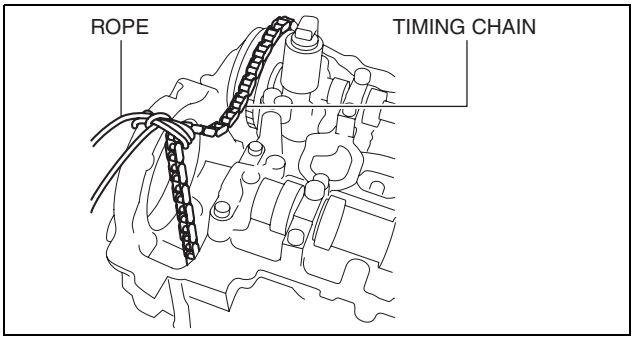

am3uuw0000898

Camshaft Removal Note

Caution
- **Keep the timing chain pulled up during and after the work in which it has been set aside from the sprocket. If the chain falls down, it may disengage from the sprocket on the crankshaft side and deviate, leading to valve timing deviation.**
- **After servicing, always verify the valve timing.**

Note
- Remove the exhaust camshaft and the hydraulic variable valve timing actuator as a single unit.

1. Leave the timing chain as it is, which was suspended after electric variable valve timing actuator removal.
2. Temporarily install the cylinder head cover bolt to the position shown in the figure to use it for suspending the timing chain.

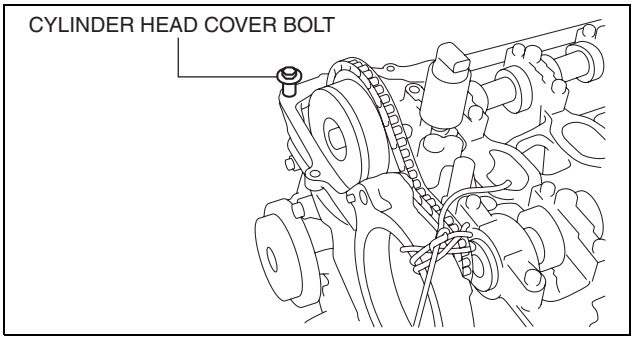

am3uuw0000898

3. Loosen the camshaft cap bolts in two or three passes in the order shown in the figure, and remove the camshaft cap.
4. Remove the intake camshaft.

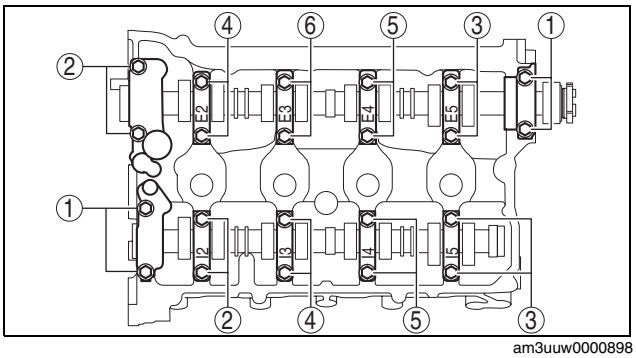

am3uuw0000898

5. While setting the timing chain aside, remove the hydraulic variable valve timing actuator and the exhaust camshaft as a single unit.

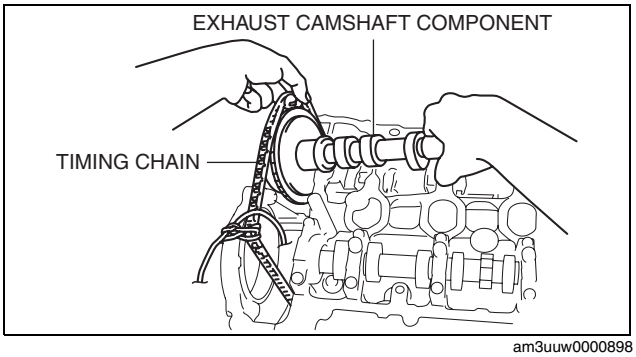

am3uuw0000898

6. Pull up the timing chain and suspend it using a rope as shown in the figure.

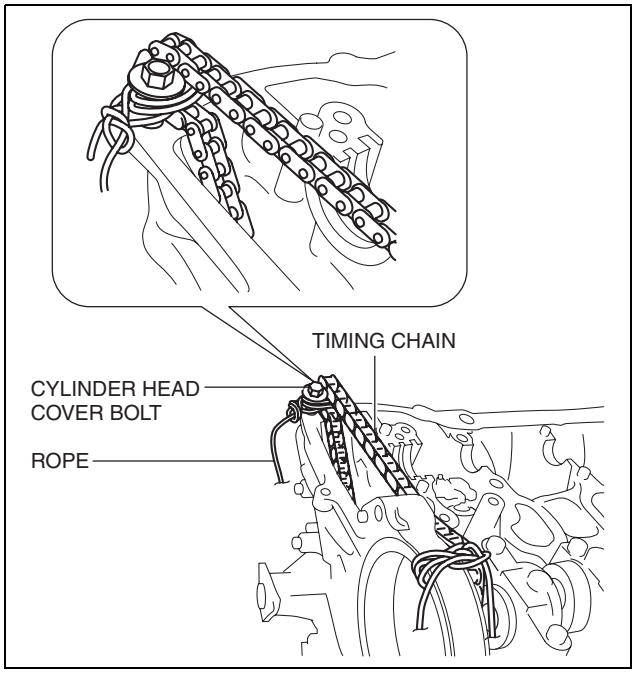

am3uuw0000898

Rocker Arm Removal Note

1. Keep the rocker arms in the order of removal to enable reassembly in their original positions.

HLA Removal Note

1. Keep the HLAs in the order of removal to enable reassembly in their original positions.

HLA Installation Note

1. Perform HLA air bleeding using the following procedure.
   (1) Put the HLA in a container filled with engine oil.

Caution

- **Do not insert the round bar firmly because the check ball spring force is extremely weak.**

   (2) While lightly pressing the check ball using a round bar (**approx. 1.0 mm {0.039 in}** diameter), bleed air by moving the plunger up and down.
   (3) Press the end of the plunger in the oil and verify that there is no rebounding feel.
      - If rebounding feel cannot be eliminated, replace the HLA.

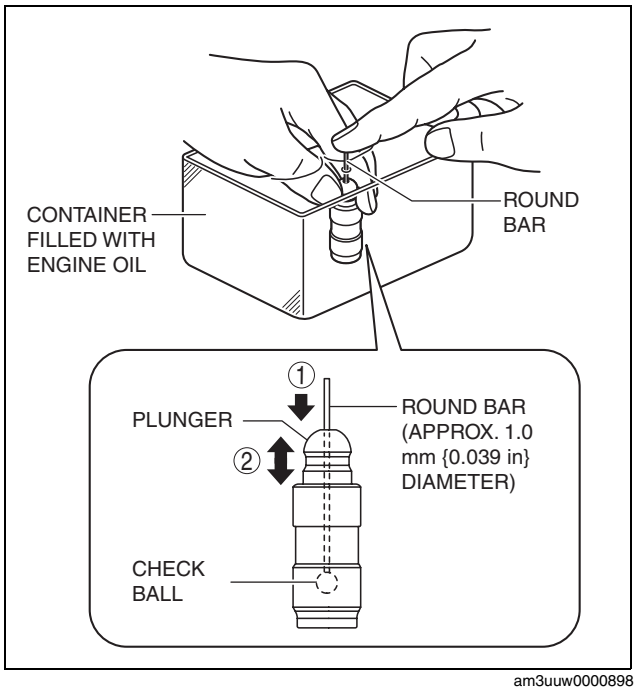

am3uuw0000898

2. Visually inspect the HLA surface where it contacts the rocker arm for wear or damage.
   - If there is any malfunction, replace the HLA.
3. Assemble the HLAs to their original positions.

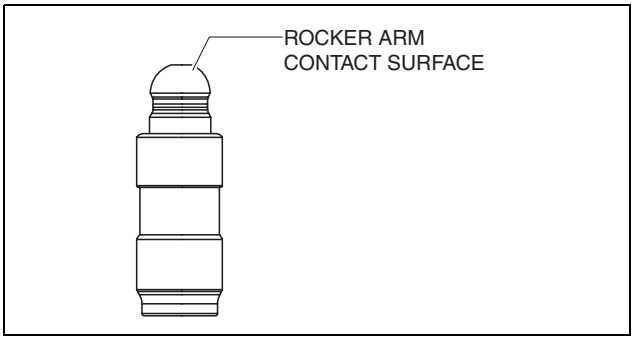

am3uuw0000898

Rocker Arm Installation Note

1. Apply engine oil to the HLAs and the end of the valve stems.
2. Install the rocker arms to the same positions as before removal.

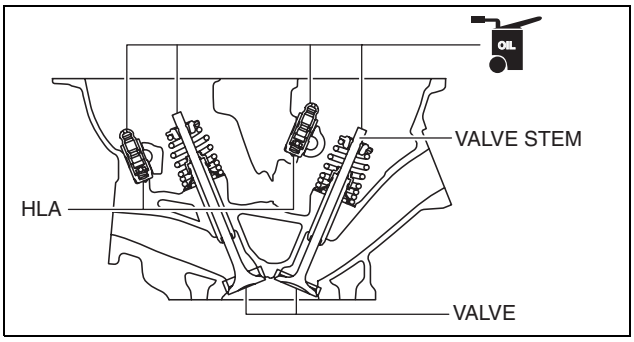

am3uuw0000899

Camshaft Installation Note

1. As shown in the figure, apply gear oil (SAE No. 90 or equivalent) or engine oil to the center area of each journal of the cylinder head.

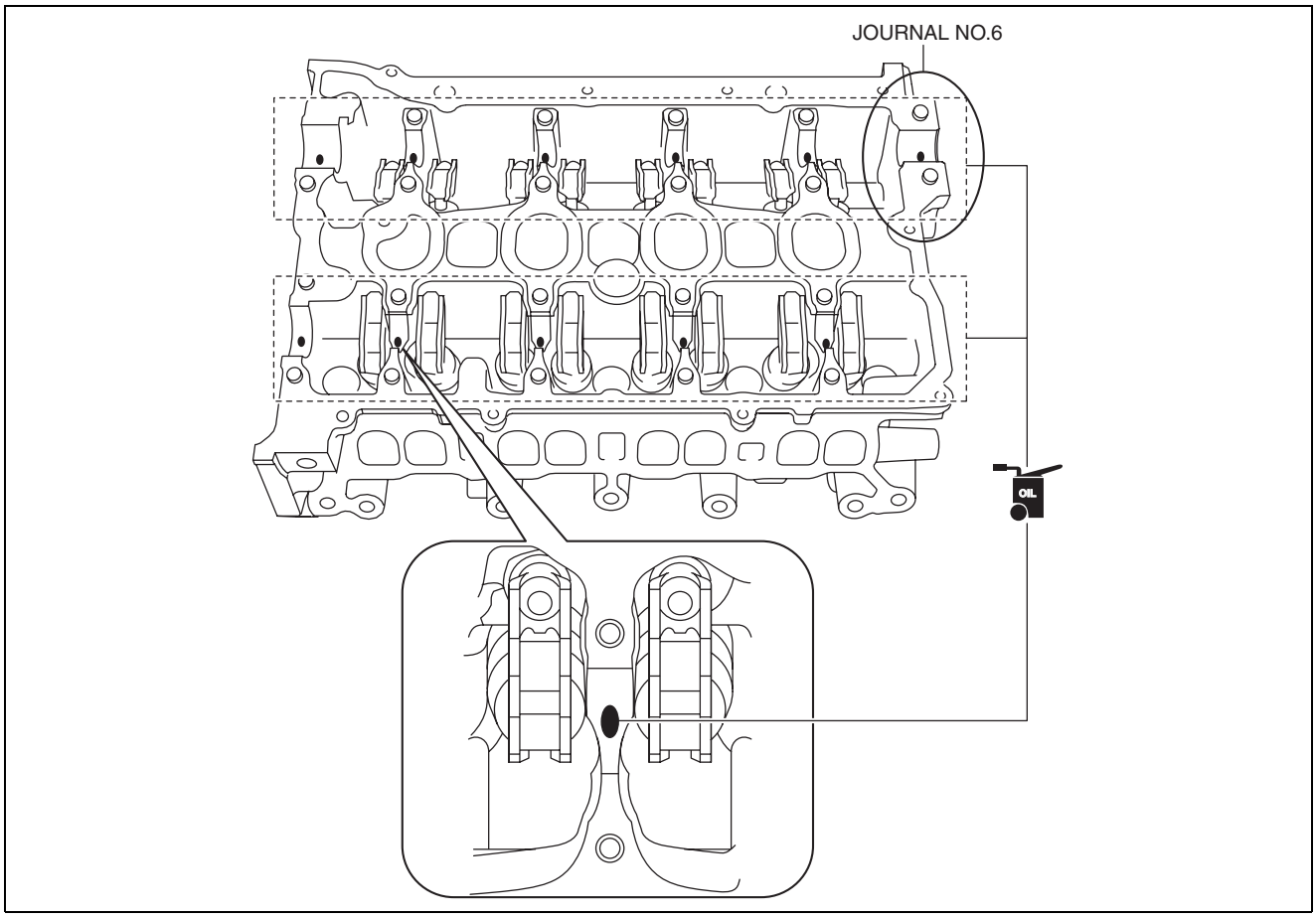

am3uuw0000899

MECHANICAL [SKYACTIV-G 2.0]

Caution

- **Apply 0.05 ml {0.05 cc, 0.003 in^3} or less of oil to journal No.6.**

2. As shown in the figure, align the cam position of cylinder No.1 around top dead center (TDC) and place the intake camshaft on the cylinder head.
3. Remove the rope suspending the timing chain on the exhaust side.

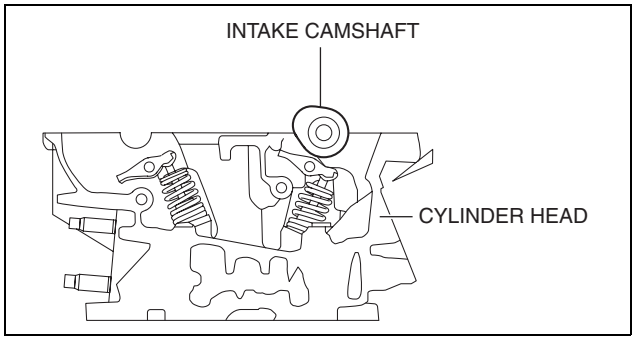

am3uuw0000899

4. While aligning the mark on the timing chain placed during removal with the one on the hydraulic variable valve timing actuator, place the exhaust camshaft component on the cylinder head.
5. As shown in the figure, apply gear oil (SAE No. 90 or equivalent) or engine oil to the center area of each journal of the camshaft.

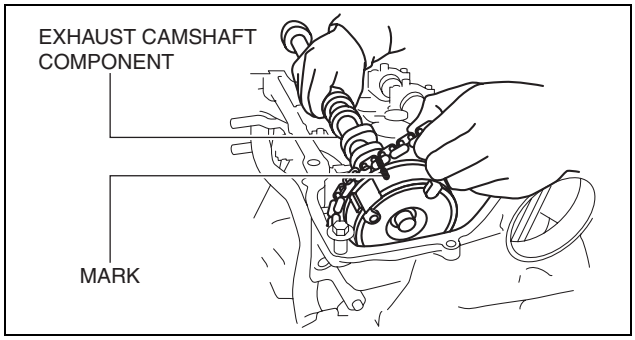

am3uuw0000899

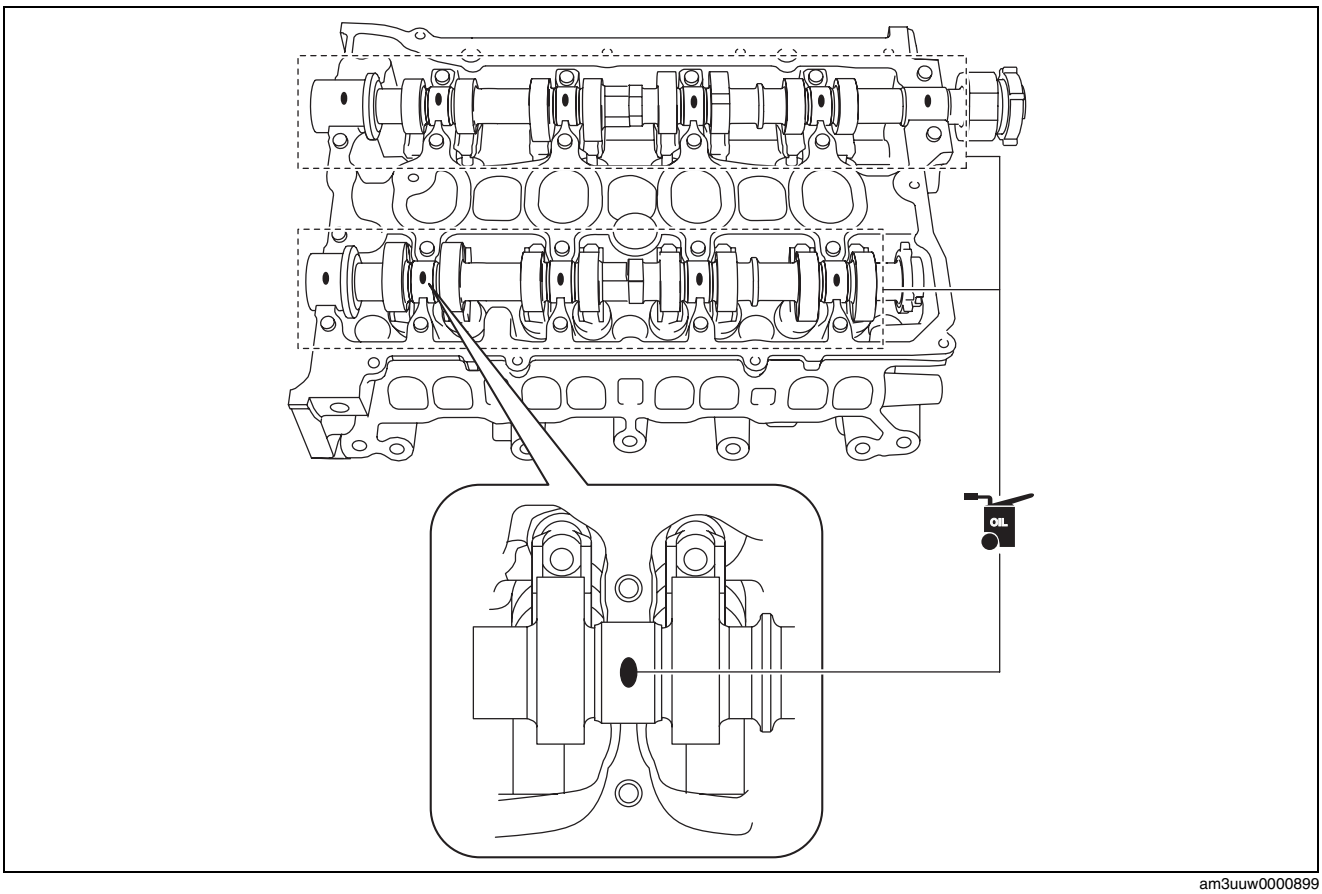

am3uuw0000899

6. Apply adhesive agent (Loctite 962T) around journal No.6 of the cylinder head or the exhaust-side rear camshaft cap.

Caution
- **Verify that there is no adhesive agent on the journal.**

Adhesive agent bead width
0.5—1.5 mm {0.02—0.05 in}

7. Install the camshaft caps in the marked number order, and temporarily tighten the camshaft cap installation bolts in two or three passes evenly.
8. Tighten the camshaft cap installation bolts in two steps in the order shown in the figure.

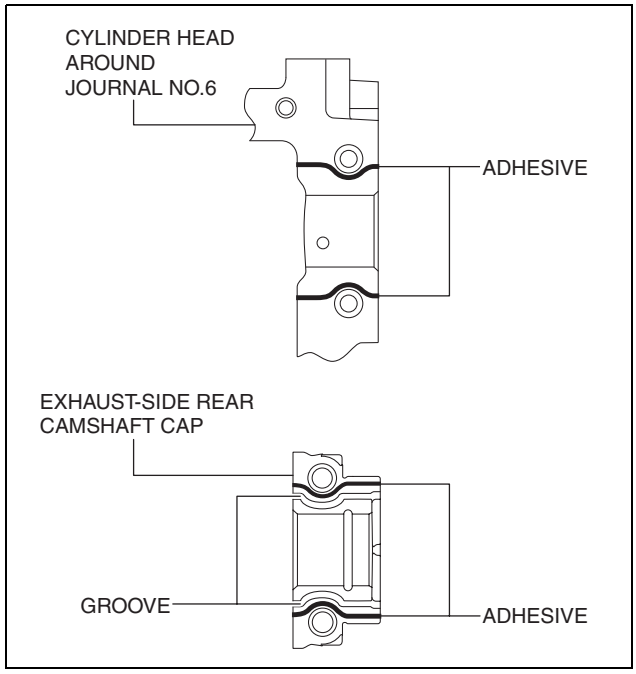

ac5uuw00000525

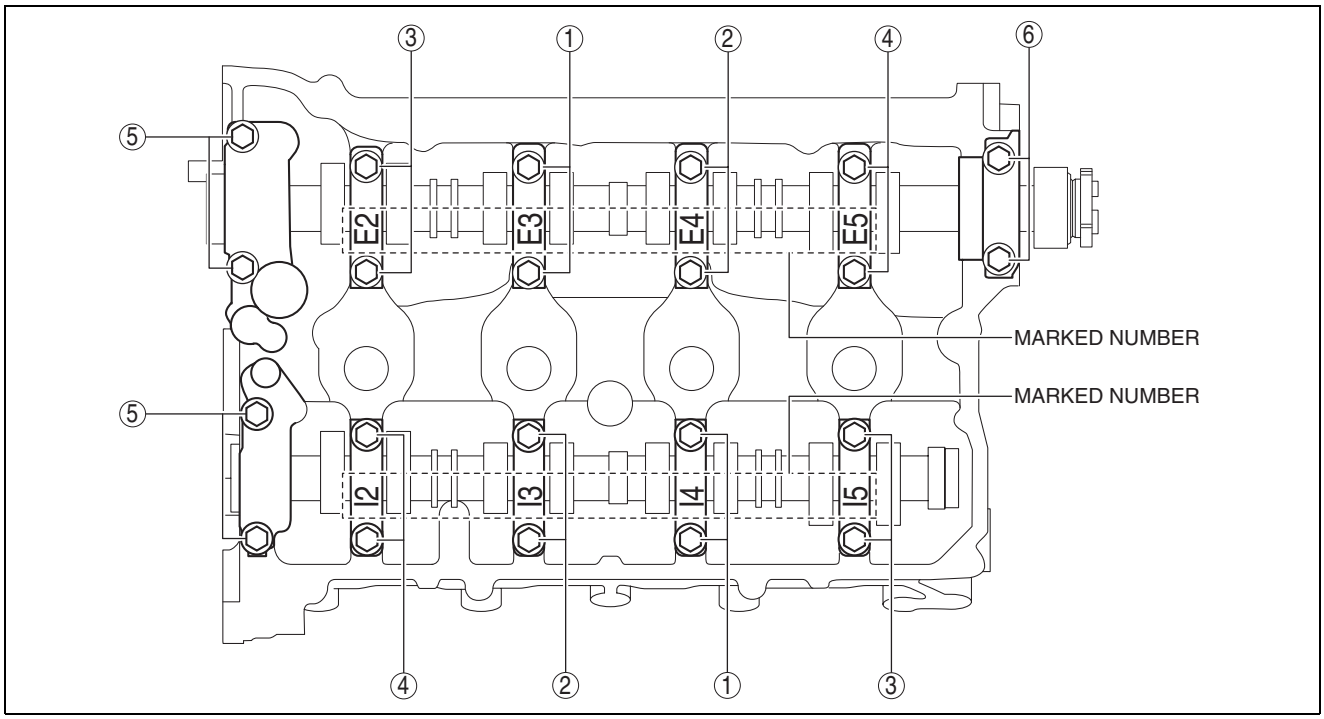

am3uuw0000899

Tightening torque
First step: 3.0—6.0 N·m {31—61 kgf·cm, 27—53 in·lbf}
Second step: 8—11 N·m {82—112 kgf·cm, 71—97 in·lbf}

MECHANICAL [SKYACTIV-G 2.0]

Electric Variable Valve Timing Actuator Installation Note

1. Remove the rope suspending the timing chain on the intake side.
2. Remove the timing chain from the exhaust and intake camshaft sprockets and set it aside to the rear, then insert the electric variable valve timing actuator between the engine front cover and the cylinder head.
3. Return the timing chain to the exhaust camshaft sprocket.

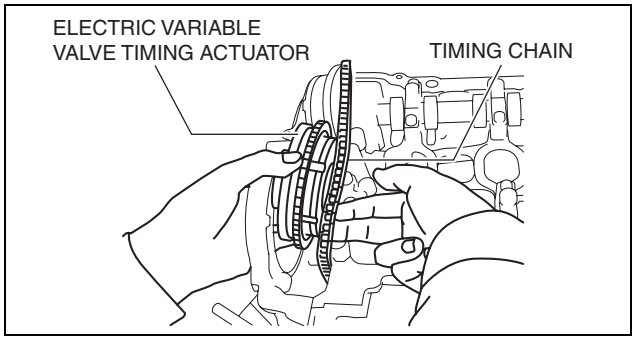

am3uuw0000904

4. While aligning the mark on the timing chain placed during removal with the one on the electric variable valve timing actuator, engage the chain with the sprocket.

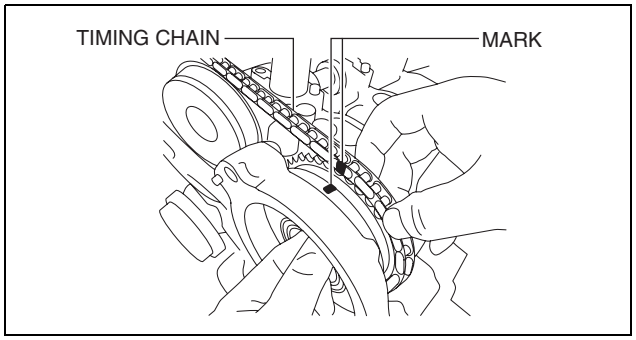

am3uuw0000899

5. Align the knock pin on the end of the intake camshaft with the notch on the actuator side, then assemble the actuator.

   Note
   - Adjust the knock pin with the notch while adjusting the knock pin position by rotating the camshaft.

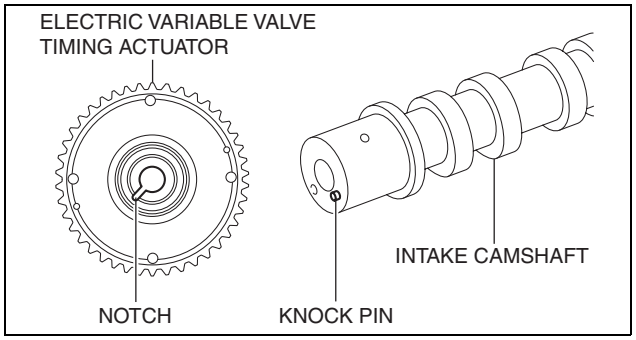

am3uuw0000904

6. Hold the intake camshaft using a wrench on the cast hexagon, and tighten the electric variable valve timing actuator installation bolt.

   Tightening torque
   102—114 N·m {10.5—11.6 kgf·m, 76—84 ft·lbf}

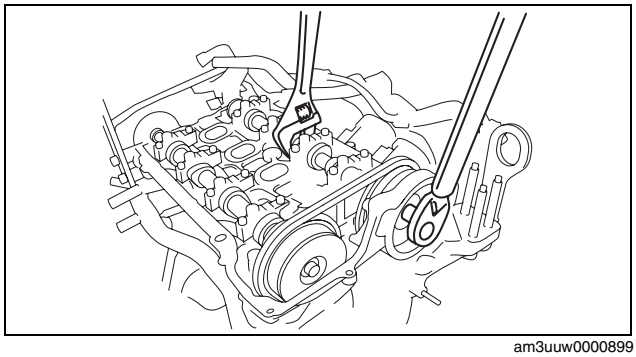
am3uuw0000899

MECHANICAL [SKYACTIV-G 2.0]

Timing Chain Installation Note

1. Install the chain guide (No.1).
2. Remove the bolt securing the tensioner arm and apply tension to the timing chain.
3. Rotate the crankshaft clockwise two turns and verify that the valve timing is correct.

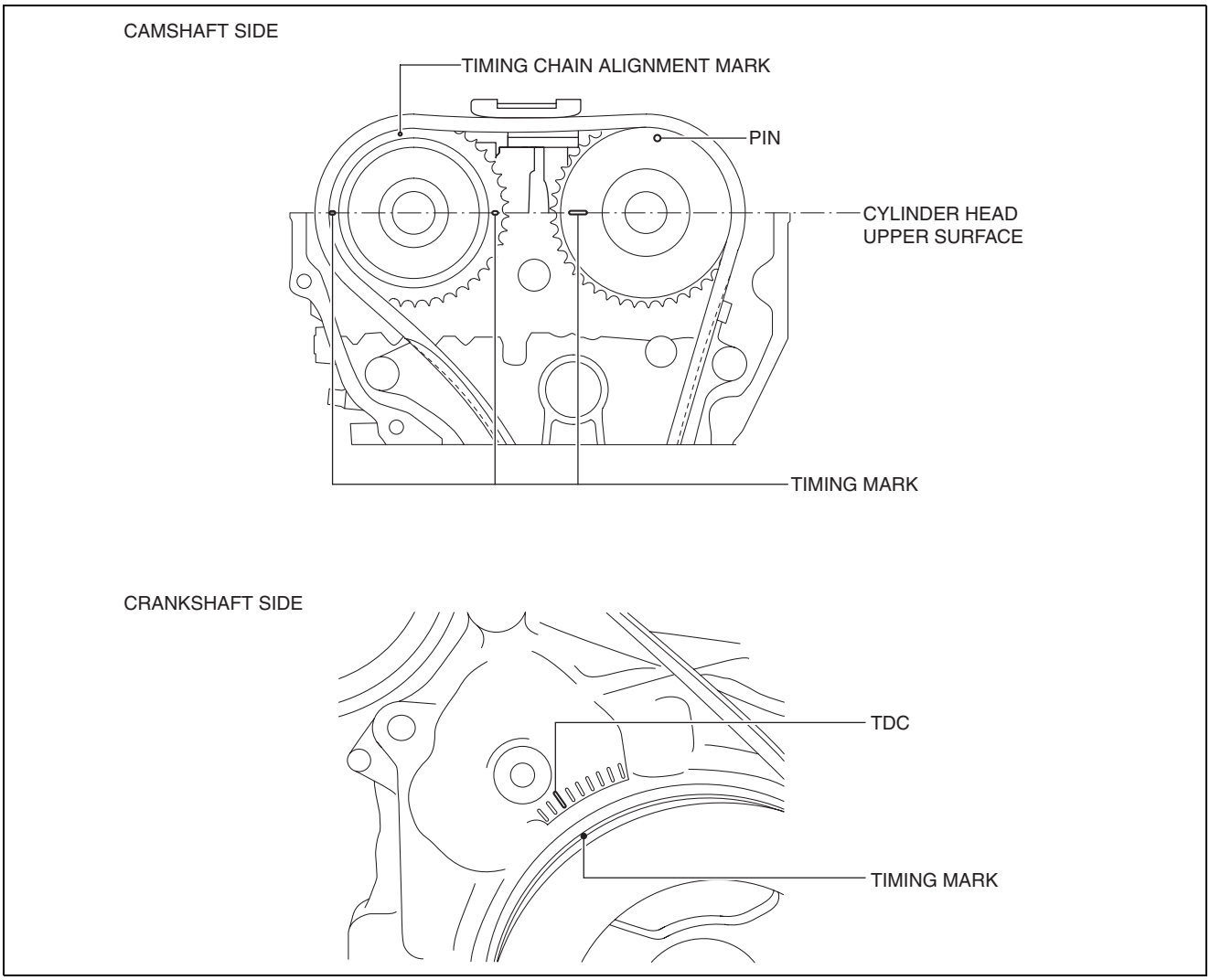

am3uuw0000900

- If the valve timing is not correct, remove the engine front cover and reassemble the timing chain to each sprocket. (See 01-10A-39 TIMING CHAIN REMOVAL/INSTALLATION [SKYACTIV-G 2.0].)

4. Install the blind plugs (upper and lower) for the engine front cover service holes.

Tightening torque
Upper: 8—11 N·m {82—112 kgf·cm, 71—97 in·lbf}
Lower: 17—23 N·m {1.8—2.3 kgf·m, 13—16 ft·lbf}

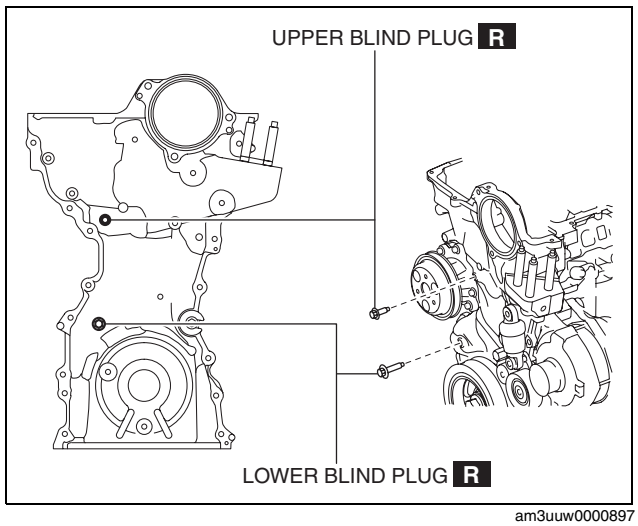

am3uuw0000897

MECHANICAL [SKYACTIV-G 2.0]

Oil Shower Pipe Installation Note

1. Install the oil shower pipe in the order shown in the figure.

Tightening torque

Installation position	Tightening torque
1	9—12 N·m {92—122 kgf·cm, 80—106 in·lbf}
2, 3	8.0—9.0 N·m {82—91 kgf·cm, 71—79 in·lbf}

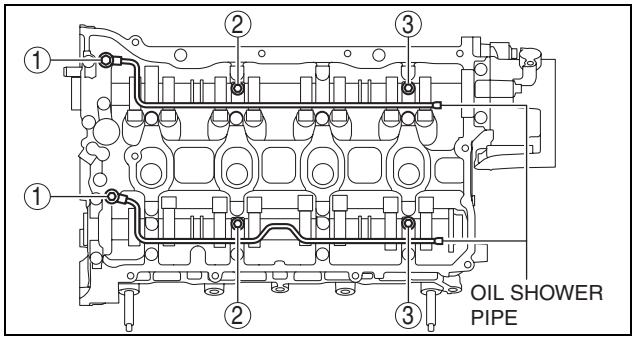

am3uuw0000879

CYLINDER HEAD GASKET REPLACEMENT [SKYACTIV-G 2.0]

id0110h2800700

Warning

- **A hot engine can cause severe burns. Turn off the engine and wait until it is cool before servicing.**
- **Fuel vapor is hazardous. It can very easily ignite, causing serious injury and damage. Always keep sparks and flames away from fuel.**
- **Fuel line spills and leakage are dangerous. Fuel can ignite and cause serious injuries or death and damage. Fuel can also irritate skin and eyes. To prevent this, always complete the "Fuel Line Safety Procedure". (See 01-14A-6 BEFORE SERVICE PRECAUTION [SKYACTIV-G 2.0].)**

Caution

- **If the camshaft is rotated with the timing chain removed and the piston at the top dead center position, the valve may contact the piston and the engine could be damaged. When rotating the camshaft with the timing chain removed, rotate it after lowering the piston from the top dead center position.**

1. Disconnect the negative battery cable. (See 01-17A-11 NEGATIVE BATTERY CABLE DISCONNECTION/CONNECTION [SKYACTIV-G 2.0].) (See 01-17A-13 NEGATIVE BATTERY CABLE DISCONNECTION/CONNECTION [SKYACTIV-G 2.0 (WITHOUT i-stop)].)
2. Remove the plug hole plate. (See 01-10A-6 PLUG HOLE PLATE REMOVAL/INSTALLATION [SKYACTIV-G 2.0].)
3. Remove the ignition coil/ion sensors. (See 01-18-2 IGNITION COIL/ION SENSOR REMOVAL/INSTALLATION [SKYACTIV-G 2.0].)
4. Remove the front under cover No.2. (See 09-16-41 FRONT UNDER COVER No.2 REMOVAL/INSTALLATION.)
5. Remove the splash shield. (See 09-16-49 SPLASH SHIELD REMOVAL/INSTALLATION.)
6. Remove the drive belt. (See 01-10A-10 DRIVE BELT REMOVAL/INSTALLATION [SKYACTIV-G 2.0].)
7. Drain the engine oil. (See 01-11A-3 ENGINE OIL REPLACEMENT [SKYACTIV-G 2.0].)
8. Drain the engine coolant. (See 01-12A-4 ENGINE COOLANT REPLACEMENT [SKYACTIV-G 2.0].)
9. Remove the intake manifold. (See 01-13A-6 INTAKE-AIR SYSTEM REMOVAL/INSTALLATION [SKYACTIV-G 2.0].)
10. Set aside the exhaust manifold to the vehicle rear. (See 01-15A-2 EXHAUST SYSTEM REMOVAL/INSTALLATION [SKYACTIV-G 2.0].)
11. Disconnect the radiator hose (upper, lower).
12. Remove the vacuum pump. (See 04-11-21 VACUUM PUMP REMOVAL/INSTALLATION [SKYACTIV-G 2.0].)
13. Remove the high pressure fuel pump and rear housing. (See 01-14A-44 HIGH PRESSURE FUEL PUMP REMOVAL/INSTALLATION [SKYACTIV-G 2.0].)
14. Disconnect the heater hose from the water outlet and water inlet pipe.
15. Remove the oil pan. (See 01-11A-12 OIL PAN REMOVAL/INSTALLATION [SKYACTIV-G 2.0].)
16. Remove the timing chain and chain guide. (See 01-10A-39 TIMING CHAIN REMOVAL/INSTALLATION [SKYACTIV-G 2.0].)
17. Remove the OCV. (See 01-10A-38 OIL CONTROL VALVE (OCV) REMOVAL/INSTALLATION [SKYACTIV-G 2.0].)
18. Remove in the order indicated in the table.
19. Install in the reverse order of removal.
20. Refill with the specified type and amount of the engine oil. (See 01-11A-3 ENGINE OIL REPLACEMENT [SKYACTIV-G 2.0].)
21. Refill the engine coolant. (See 01-12A-4 ENGINE COOLANT REPLACEMENT [SKYACTIV-G 2.0].)

MECHANICAL [SKYACTIV-G 2.0]

22. Start the engine, and inspect and adjust the following:
    - Leakage of engine oil, engine coolant.
    - Runout and contact of pulley and belt.
    - Ignition timing, idle speed and idle mixture. (See 01-10A-4 ENGINE TUNE-UP [SKYACTIV-G 2.0].)
    - Compression pressure (See 01-10A-14 COMPRESSION INSPECTION [SKYACTIV-G 2.0].)

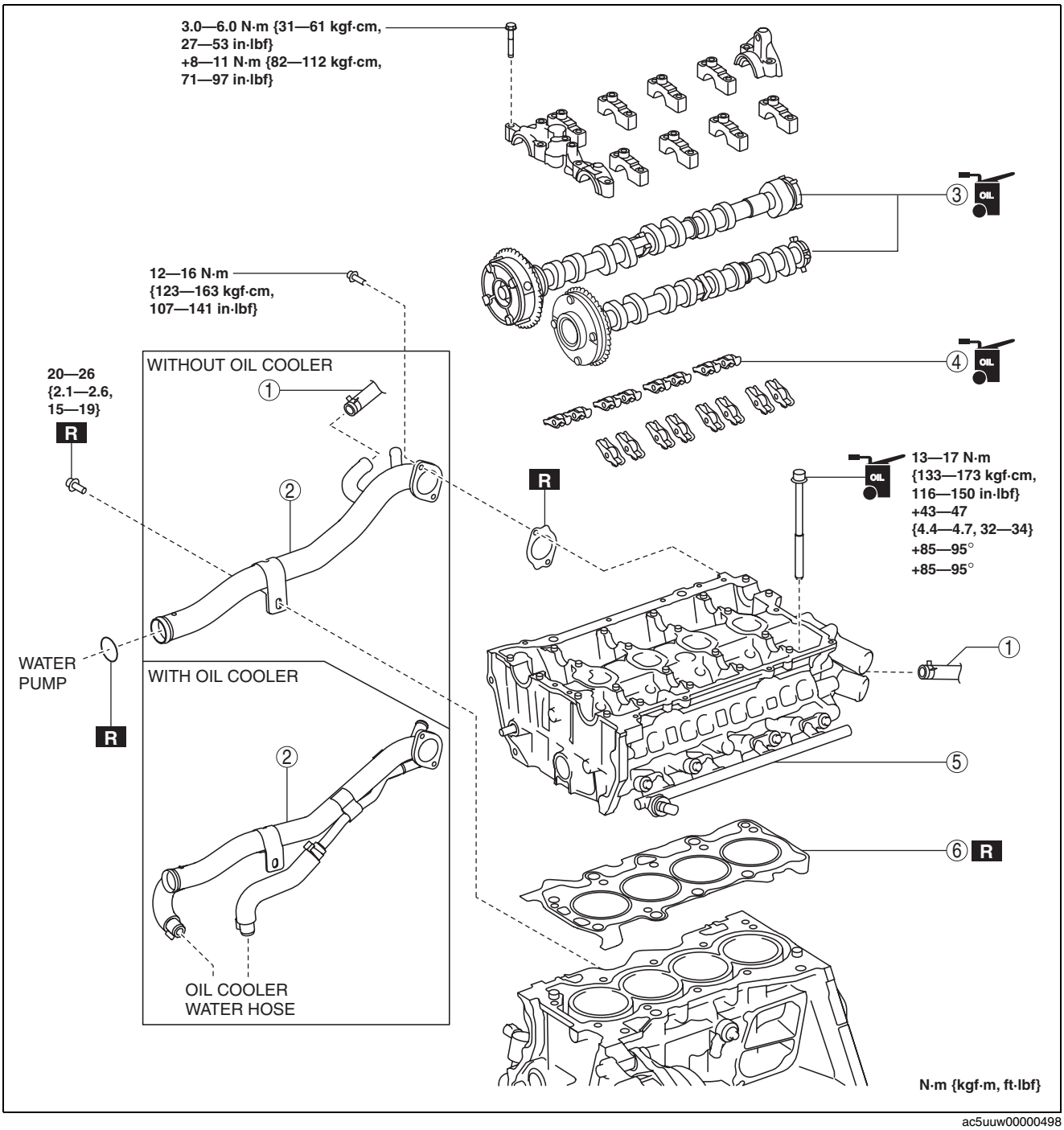

ac5uuw00000498

1	Water hose (if equipped)
2	Water inlet pipe (See 01-10A-85 Water Inlet Pipe Installation Note.)
3	Camshaft (See 01-10A-80 Camshaft Removal Note.) (See 01-10A-82 Camshaft Installation Note.)

4	Rocker arm (See 01-10A-80 Rocker Arm Removal Note.) (See 01-10A-81 Rocker Arm Installation Note.)
5	Cylinder head (See 01-10A-80 Cylinder Head Removal Note.) (See 01-10A-81 Cylinder Head Installation Note.)
6	Cylinder head gasket

MECHANICAL [SKYACTIV-G 2.0]

Camshaft Removal Note

1. Loosen the camshaft cap installation bolts in a few passes in the order shown in the figure and remove the camshaft caps.
2. Remove the camshaft.

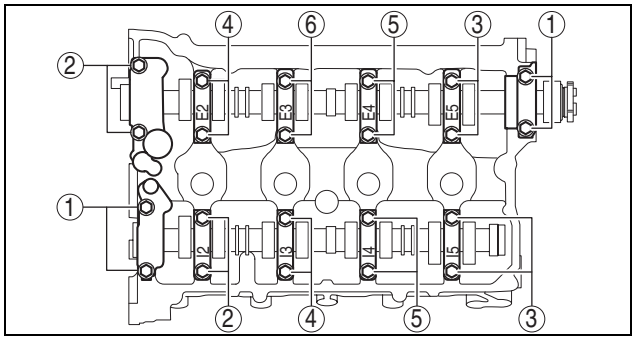

am3uuw0000881

Rocker Arm Removal Note

1. Keep the rocker arms in the order of removal to enable reassembly in their original positions.

Cylinder Head Removal Note

1. Temporarily install the oil pan to support the engine from under the vehicle.

Caution

- **To prevent deformation of the oil pan, support the engine using the following methods.**
  - **— When using an engine lifter, insert rubber of appropriate size (approx. 20 mm {0.79 in} thickness) between the engine lifter and the oil pan to support the oil pan.**
  - **— When using a garage jack, place rubber of appropriate size (approx. 20 mm {0.79 in} thickness) on a batten which is large enough to cover the oil pan to support the oil pan.**

2. Support the engine (oil pan) using a commercially available engine lifter or garage jack.
3. Remove the chain on the **SST** that suspended the engine and set it aside.

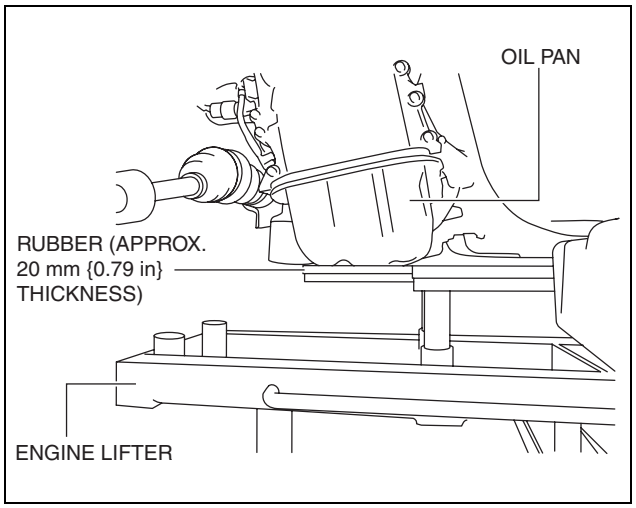

am3uuw0000881

4. Loosen the cylinder head installation bolts in two or three passes in the order shown in the figure and remove them.
5. Remove the cylinder head.

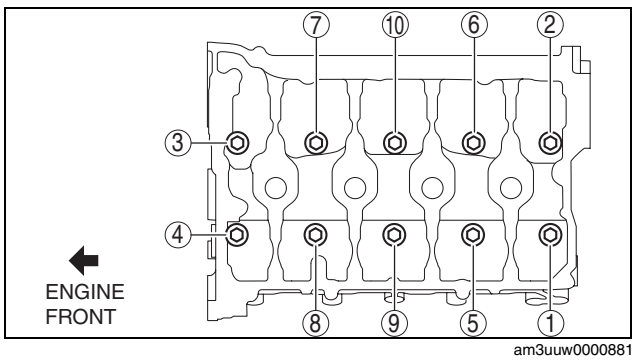

am3uuw0000881

MECHANICAL [SKYACTIV-G 2.0]

Cylinder Head Installation Note

Caution
- **If the following condition is met, replace the cylinder head bolts.**
  - **— Length exceeds maximum specification**

Cylinder head bolt length L
145.2—145.8 mm {5.717—5.740 in}

Cylinder head bolt length L maximum
146.5 mm {5.767 in}

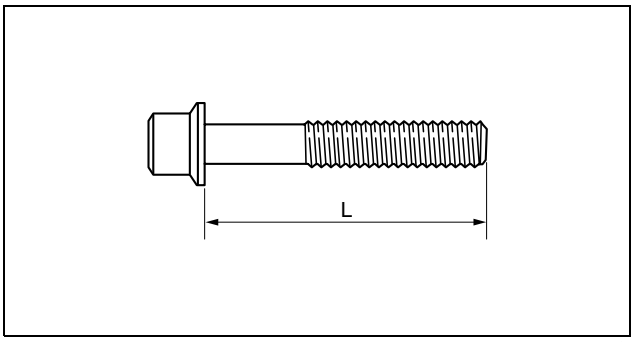

am3zzw0000245

1. When a cylinder head bolt is reused, apply engine oil to any part of the following:
   - Bolt seating surface
   - Cylinder head seating surface

2. Tighten the cylinder head bolts in the order shown in the following 4 steps.

   Tightening torque
   Step 1: 13—17 N·m {133—173 kgf·cm, 116—150 in·lbf}
   Step 2: 43—47 N·m {4.4—4.7 kgf·m, 32—34 ft·lbf}
   Step 3: 85—95°
   Step 4: 85—95°

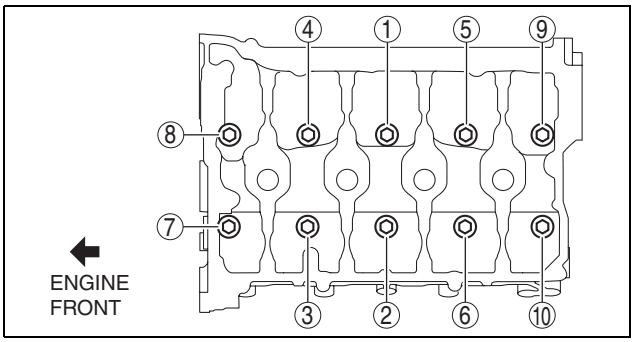

am3uuw0000881

3. Install the chain for the **SST** which was set aside and secure the engine.
4. Remove the engine lifter or garage jack.
5. Remove the temporarily assembled oil pan.

Rocker Arm Installation Note

1. Apply engine oil to the HLAs and the end of the valve stems.
2. Install the rocker arms to the same positions as before removal.

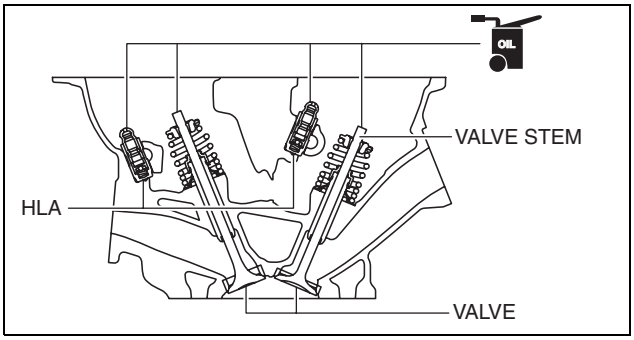

am3uuw0000881

MECHANICAL [SKYACTIV-G 2.0]

Camshaft Installation Note

1. As shown in the figure, apply gear oil (SAE No. 90 or equivalent) or engine oil to the center area of each journal of the cylinder head.

Caution

- **Apply 0.05 ml {0.05 cc, 0.003 in^3} or less of oil to journal No.6.**

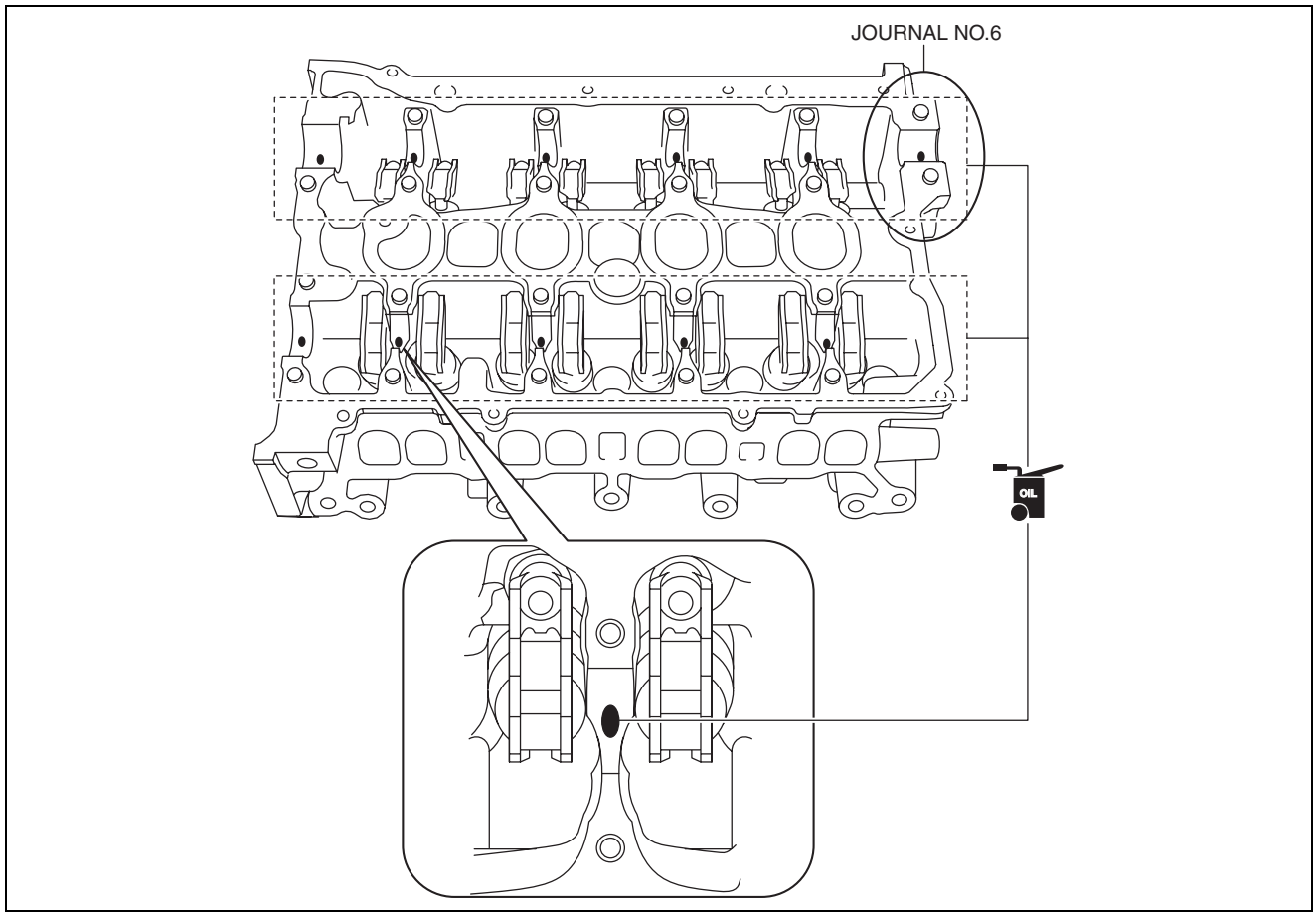

am3uuw0000882

2. Install the camshaft with cylinder No.1 cam aligned to the TDC position as shown in the figure.

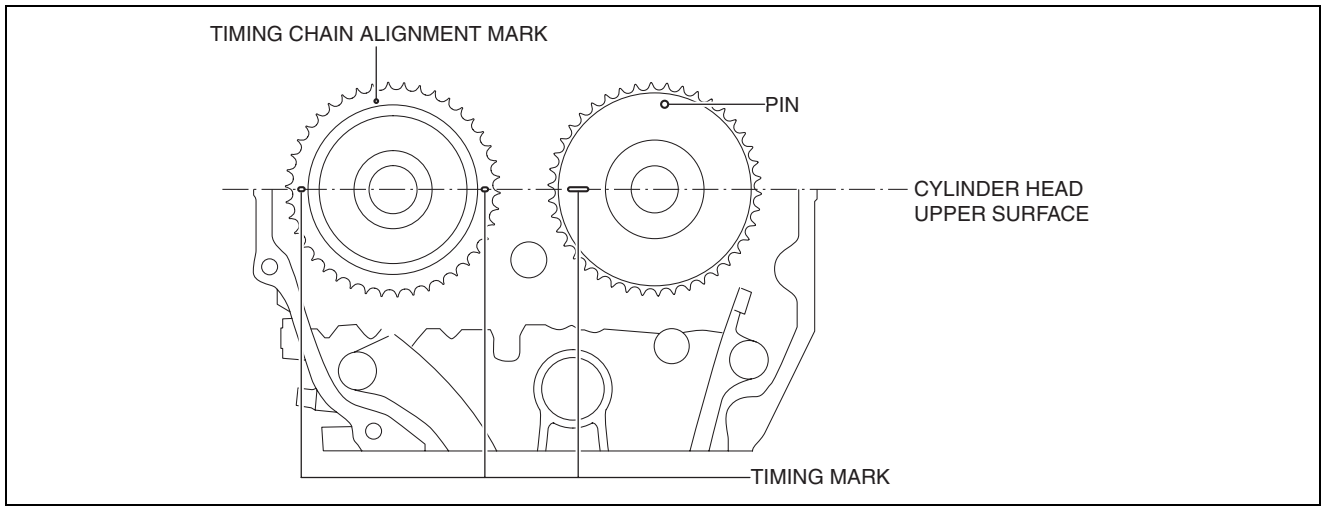

am3uuw0000882

3. As shown in the figure, apply gear oil (SAE No. 90 or equivalent) or engine oil to the center area of each journal of the camshaft.

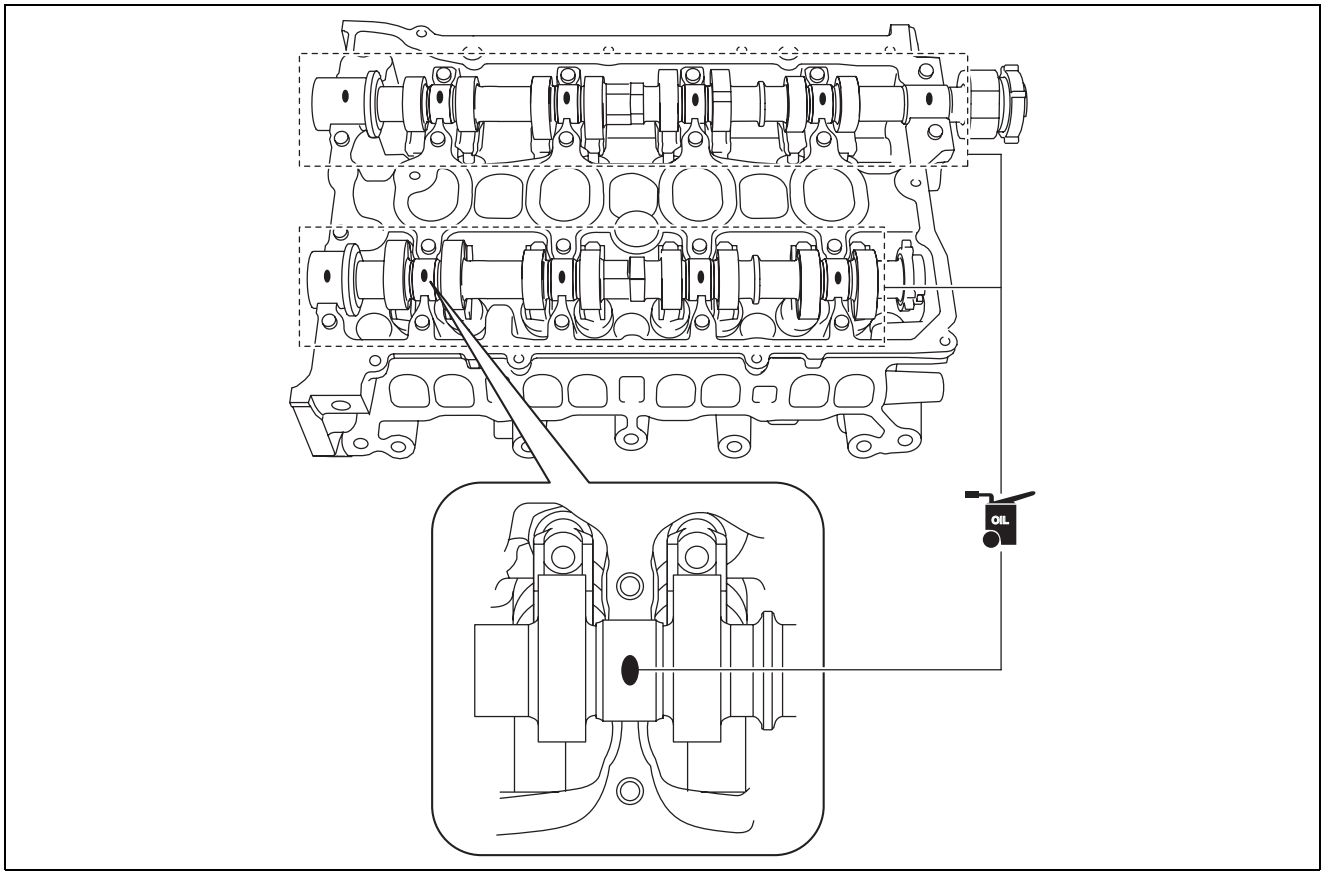

am3uuw0000882

4. Apply adhesive agent (Loctite 962T) around journal No.6 of the cylinder head or the exhaust-side rear camshaft cap.

Caution
- **Verify that there is no adhesive agent on the journal.**

Adhesive agent bead width
0.5—1.5 mm {0.02—0.05 in}

5. Install the camshaft caps in the marked number order, and temporarily tighten the camshaft cap installation bolts in two or three passes evenly.

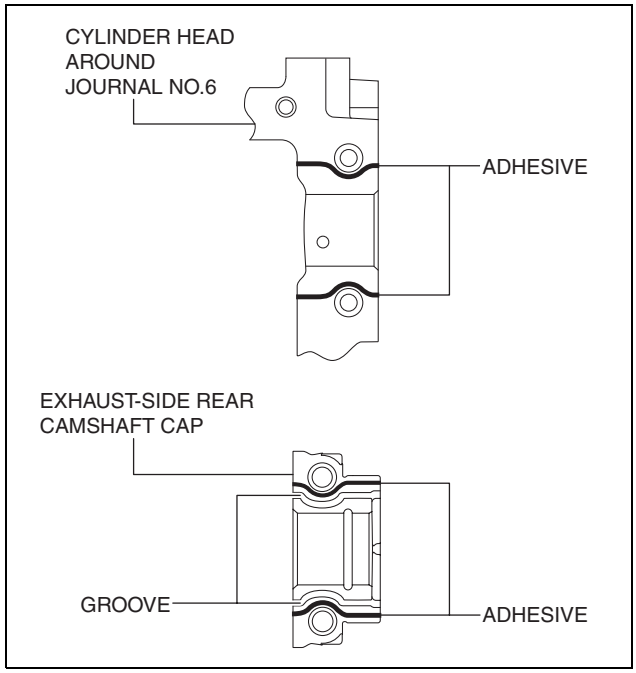

ac5uuw00000499

MECHANICAL [SKYACTIV-G 2.0]

6. Tighten the camshaft cap installation bolts in two steps in the order shown in the figure.

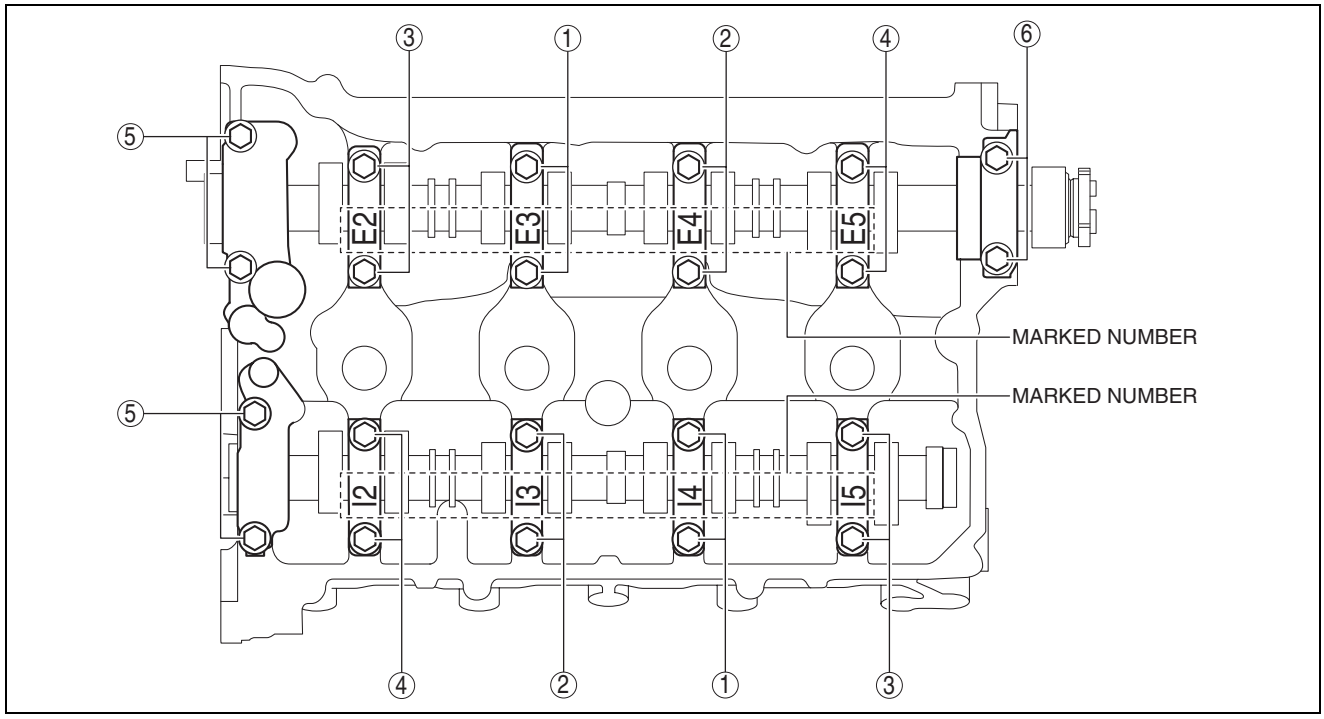

am3uuw0000882

Tightening torque
First step: 3.0—6.0 N·m {31—61 kgf·cm, 27—53 in·lbf}
Second step: 8—11 N·m {82—112 kgf·cm, 71—97 in·lbf}

MECHANICAL [SKYACTIV-G 2.0]

Water Inlet Pipe Installation Note

Caution

- **Do not apply oil (engine oil, ATF etc.) to the O-ring of the water inlet pipe. Otherwise, the O-ring could swell causing a seal malfunction.**

1. Clean away the sealant adhering to the bolt hole on the cylinder block side of the water inlet pipe stay.
2. Apply engine coolant to the O-ring.
3. Install the O-ring to the water inlet pipe.
4. Insert the water inlet pipe into the water pump being careful not to damage the O-ring.
5. Install the water inlet pipe gasket with the gasket projection facing the direction shown in the figure.

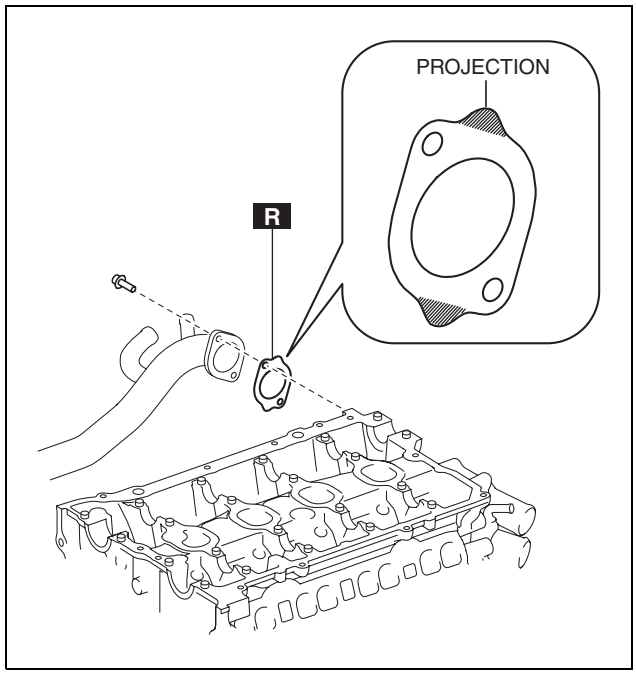

ac5uuw00000500

6. Tighten the bolts in the order shown in the figure.

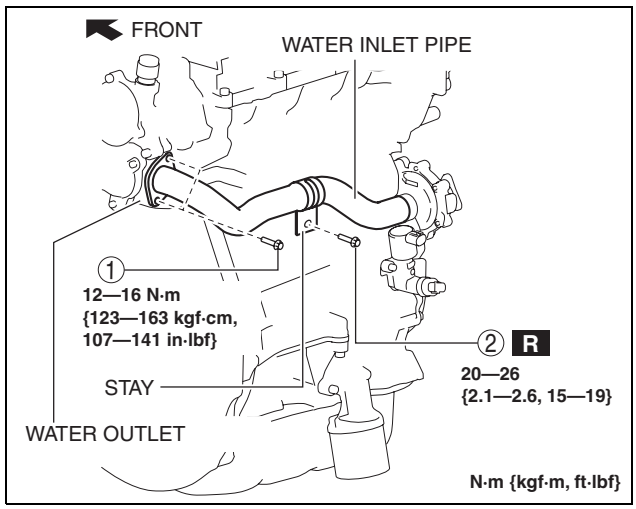

am3uuw0000882

MECHANICAL [SKYACTIV-G 2.0]

FRONT OIL SEAL REPLACEMENT [SKYACTIV-G 2.0]

id0110h2800800

Warning

- **A hot engine can cause severe burns. Turn off the engine and wait until it is cool before servicing.**

1. Remove the front under cover No.2. (See 09-16-41 FRONT UNDER COVER No.2 REMOVAL/INSTALLATION.)
2. Remove the splash shield. (See 09-16-49 SPLASH SHIELD REMOVAL/INSTALLATION.)
3. Remove the drive belt. (See 01-10A-10 DRIVE BELT REMOVAL/INSTALLATION [SKYACTIV-G 2.0].)
4. Remove in the order indicated in the table.
5. Install in the reverse order of removal.

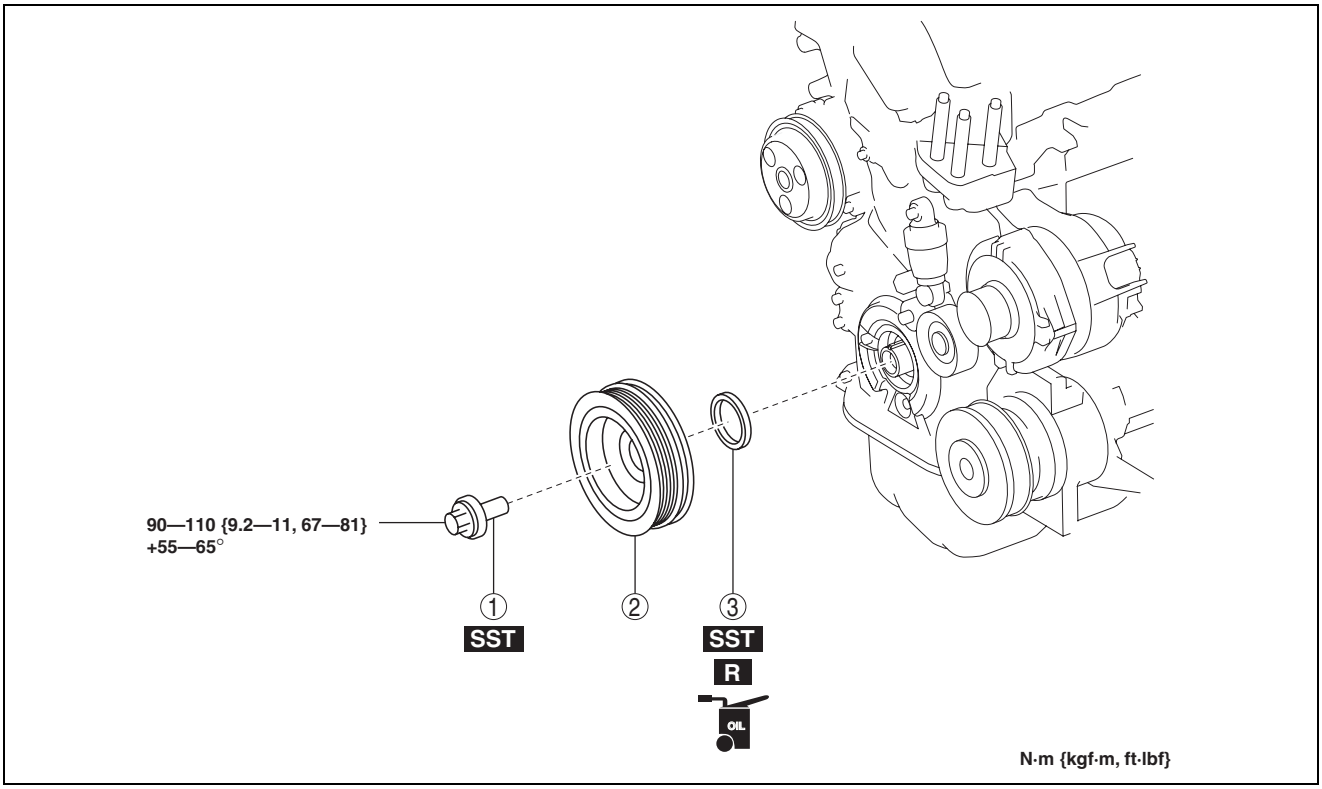

am3uuw0000882

1	Crankshaft pulley lock bolt (See 01-10A-87 Crankshaft Pulley Lock Bolt Removal Note.) (See 01-10A-89 Crankshaft Pulley Lock Bolt Installation Note.)

2	Crankshaft pulley
3	Front oil seal (See 01-10A-87 Front Oil Seal Removal Note.) (See 01-10A-88 Front Oil Seal Installation Note.)

Crankshaft Pulley Lock Bolt Removal Note

Caution

- **To prevent damage to the crankshaft pulley, protect the crankshaft pulley with a clean cloth so that the bar part (205-072) of the SST does not contact the crankshaft pulley.**
- **To prevent damage to the engine front cover, be careful not to allow the tab part (49 B011 105) of the SST to get caught between the crankshaft pulley and the engine front cover.**

1. Hold the crankshaft pulley using the **SSTs**.
2. Remove the crankshaft pulley lock bolt.

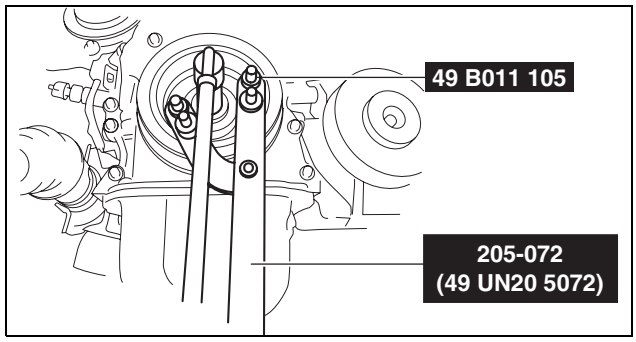

ac5uuw00000501

Front Oil Seal Removal Note

1. Cut the oil seal lip using a utility knife.
2. Remove the oil seal using a flathead screwdriver with the tip protected by a clean cloth to prevent damage to the oil seal sliding part of the crankshaft.

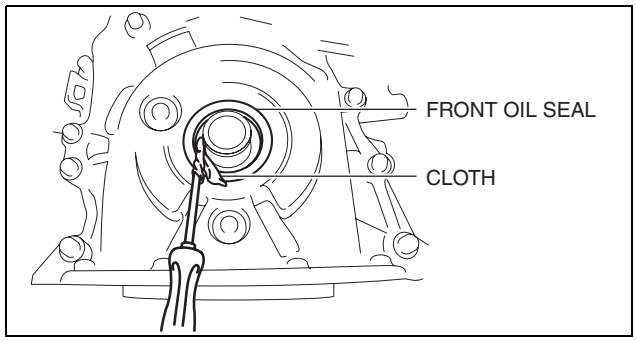

am3uuw0000882

MECHANICAL [SKYACTIV-G 2.0]

Front Oil Seal Installation Note

1. Apply clean engine oil to the inner surface of a new front oil seal.
2. Insert the front oil seal into the engine front cover by hand.
3. Tap the oil seal in evenly using the **SST** and a hammer.

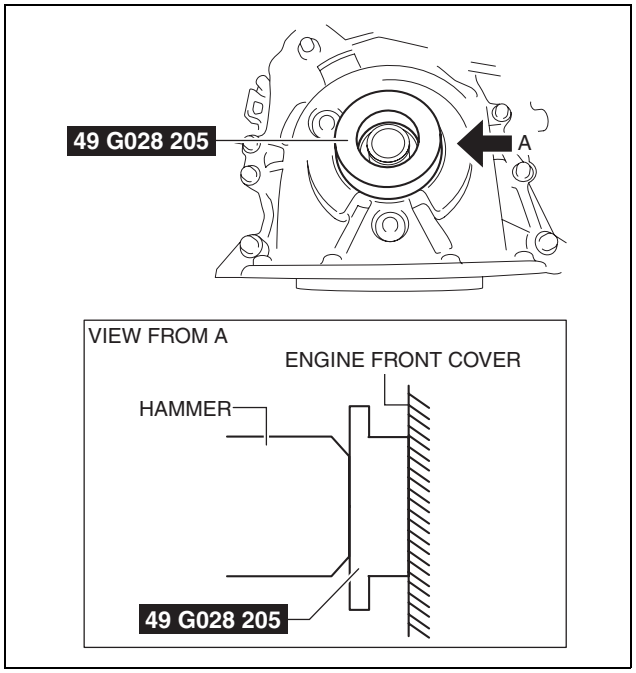

am3uuw0000883

Front oil seal press-in amount
0—0.5 mm {0—0.019 in}

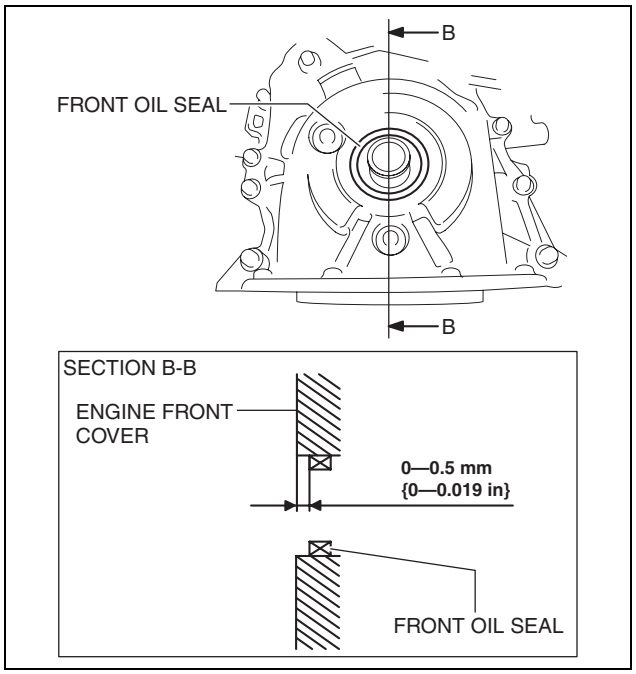

am3uuw0000883

MECHANICAL [SKYACTIV-G 2.0]

Crankshaft Pulley Lock Bolt Installation Note

Caution
- **To prevent damage to the crankshaft pulley, protect the crankshaft pulley with a clean cloth so that the bar part (205-072) of the SST does not contact the crankshaft pulley.**
- **To prevent damage to the engine front cover, be careful not to allow the tab part (49 B011 105) of the SST to get caught between the crankshaft pulley and the engine front cover.**

1. Hold the crankshaft pulley using the **SSTs**.
2. Tighten the crankshaft pulley lock bolt in the order shown in the following two steps.

Tightening torque
Step 1: 90—110 N·m {9.2—11 kgf·m, 67—81 ft·lbf}
Step 2: 55—65°

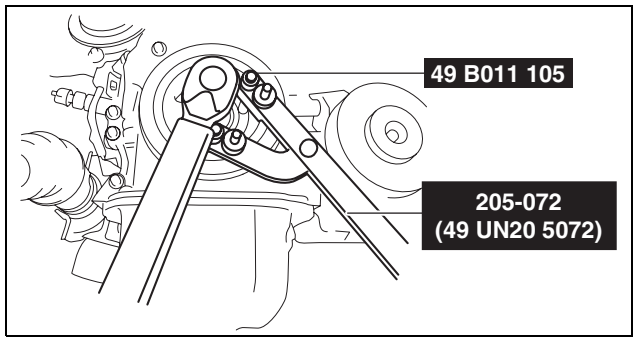

ac5uuw00000502

REAR OIL SEAL REPLACEMENT [SKYACTIV-G 2.0]

id0110h2800900

1. Remove the transaxle. (See 05-15A-4 MANUAL TRANSAXLE REMOVAL/INSTALLATION [C66M-R] (MTX, 2WD).) (See 05-15A-18 MANUAL TRANSAXLE REMOVAL/INSTALLATION [C66MX-R] (MTX, 4WD).) (See 05-17A-28 AUTOMATIC TRANSAXLE REMOVAL/INSTALLATION [FW6A-EL] (ATX, 2WD).) (See 05-17A-43 AUTOMATIC TRANSAXLE REMOVAL/INSTALLATION [FW6AX-EL] (ATX, 4WD).)
2. Remove the flywheel (MTX) or the drive plate (ATX). (See 05-10A-25 CLUTCH UNIT REMOVAL/INSTALLATION [C66M-R, C66MX-R] (MTX).) (See 05-17A-59 DRIVE PLATE REMOVAL/INSTALLATION [FW6A-EL, FW6AX-EL] (ATX).)
3. Remove in the order indicated in the table.
4. Install in the reverse order of removal.

1	Rear oil seal (See 01-10A-90 Rear Oil Seal Removal Note.) (See 01-10A-90 Rear Oil Seal Installation Note.)

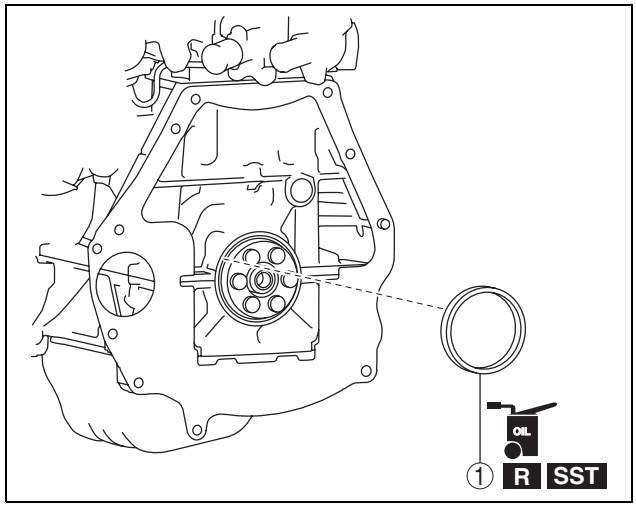

ac5uuw00000503

MECHANICAL [SKYACTIV-G 2.0]

Rear Oil Seal Removal Note

1. Cut the oil seal lip using a utility knife.
2. Remove the oil seal using a flathead screwdriver with the tip protected by a clean cloth to prevent damage to the oil seal sliding part of the crankshaft.

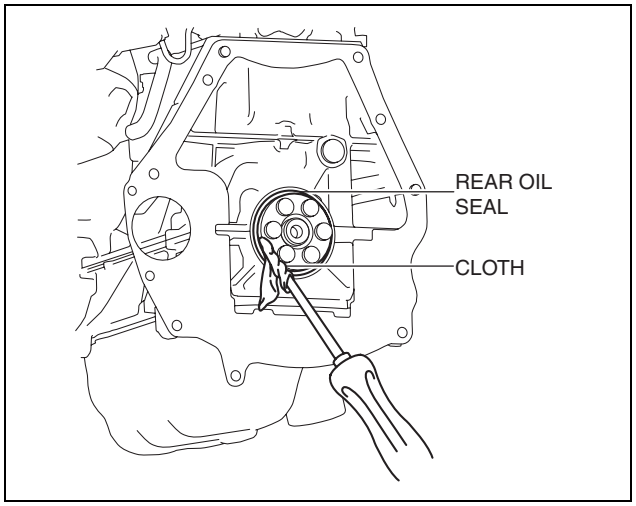

am3uuw0000883

Rear Oil Seal Installation Note

1. Apply clean engine oil to the inner surface of a new rear oil seal.
2. Insert the rear oil seal into the cylinder block by hand.
3. Tap the oil seal in evenly using the **SST** and a hammer.

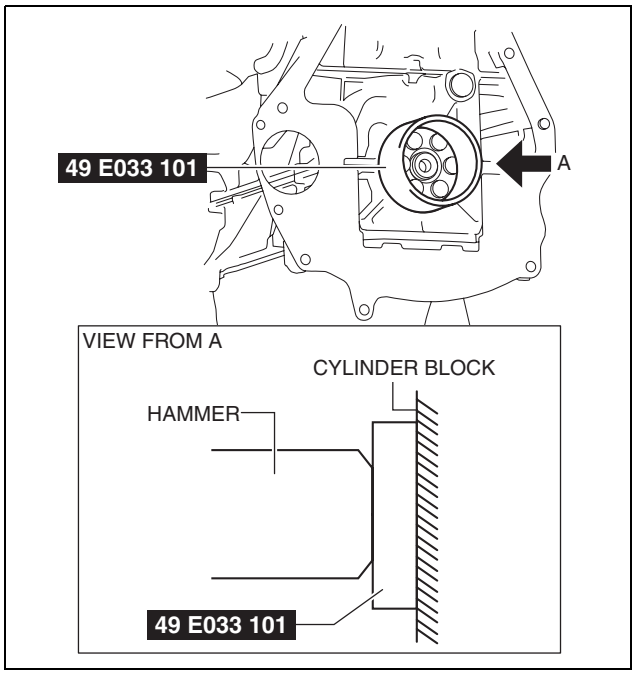

am3uuw0000883

MECHANICAL [SKYACTIV-G 2.0]

Rear oil seal press-in amount
0—0.5 mm {0—0.019 in}

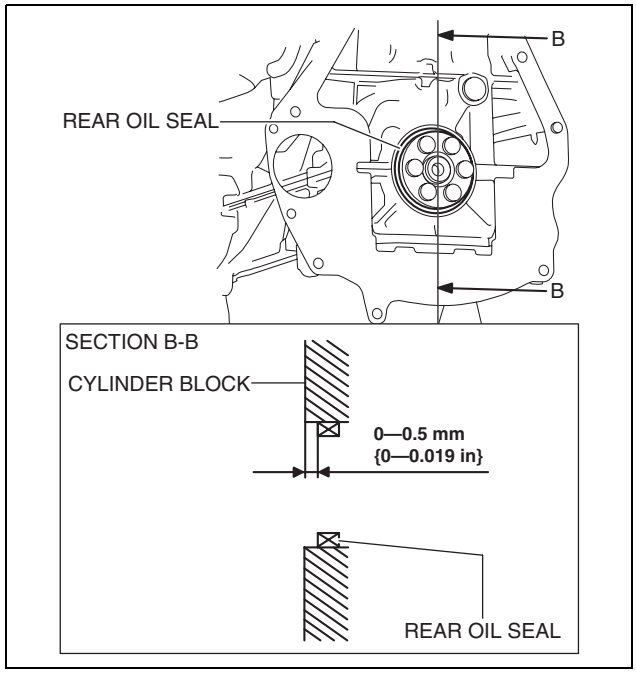

am3uuw0000883

ENGINE MOUNT DISASSEMBLY/ASSEMBLY [SKYACTIV-G 2.0]

id0110h2806900

No.1 Engine Mount (2WD)

1. Remove the front under cover No.2. (See 09-16-41 FRONT UNDER COVER No.2 REMOVAL/INSTALLATION.)
2. Remove in the order indicated in the table.
3. Install in the reverse order of removal.

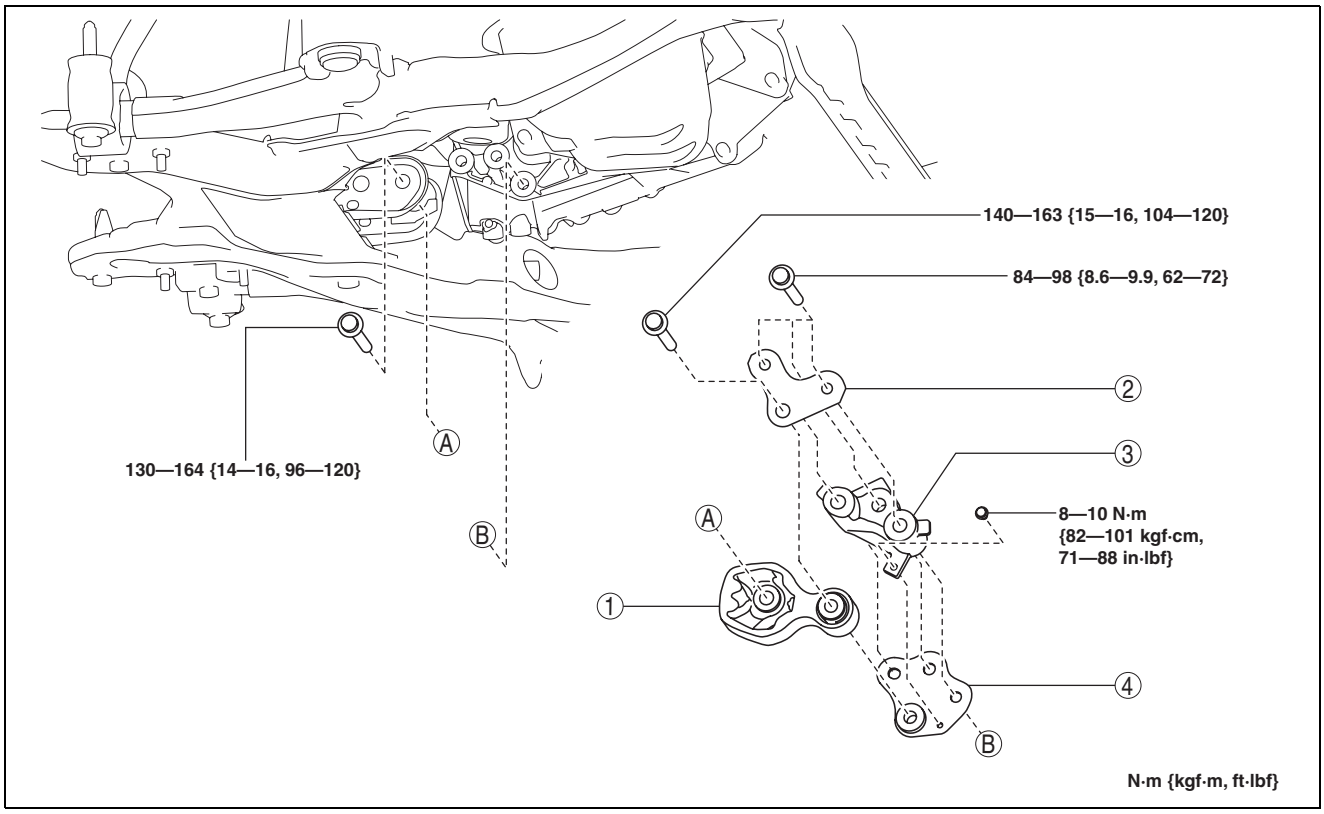

ac5uuw00000637

1	No.1 engine mount rubber (See 01-10A-92 No.1 engine mount rubber removal note (2WD).) (See 01-10A-92 No.1 engine mount installation note (2WD).)
2	Bracket plate (No.1) (See 01-10A-92 No.1 engine mount installation note (2WD).)

MECHANICAL [SKYACTIV-G 2.0]

3	No.1 engine mount bracket (See 01-10A-92 No.1 engine mount installation note (2WD).)
4	Bracket plate (No.2) (See 01-10A-92 No.1 engine mount installation note (2WD).)

No.1 engine mount rubber removal note (2WD)

1. Loosen the bolts shown in the figure.

   Note
   - The bracket plate (No.1) can move slightly by loosening the bolts shown in the figure and the No.1 engine mount rubber can be easily removed.

2. Remove the No.1 engine mount rubber.

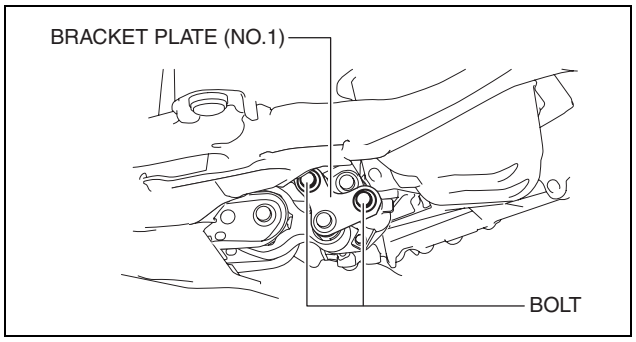

ac5uuw00000638

No.1 engine mount installation note (2WD)

1. Install the No.1 engine mount bracket, plate (No.1), and plate (No.2) and temporarily tighten the installation bolts.
2. Tighten the bolt shown in the figure.

   Tightening torque
   8—10 N·m {82—101 kgf·cm, 71—88 in·lbf}

3. Install the No.1 engine mount rubber and temporarily tighten the installation bolts.

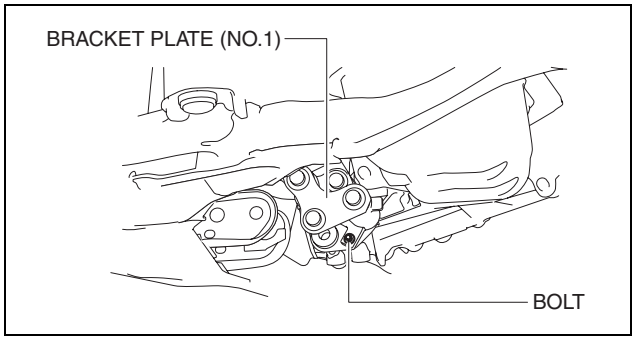

ac5uuw00000639

4. Tighten the No.1 engine mount bracket, plate (No.1) and plate (No.2) installation bolts in the order shown in the figure.

   Tightening torque
   84—98 N·m {8.6—9.9 kgf·m, 62—72 ft·lbf}

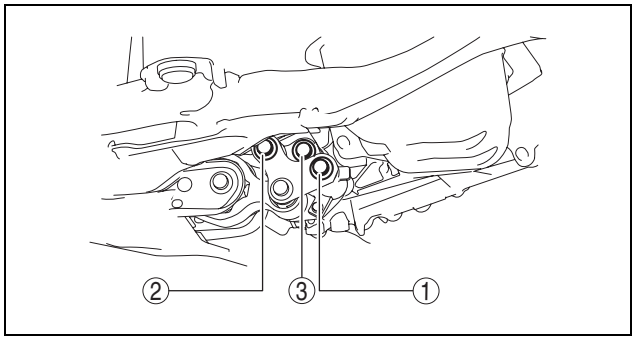

ac5uuw00000640

5. Tighten the No.1 engine mount rubber installation bolts.

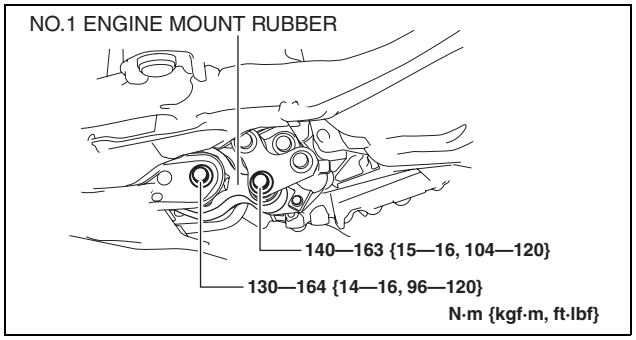

ac5uuw00000641

MECHANICAL [SKYACTIV-G 2.0]

No.1 Engine Mount (4WD)

Note

- When removing the No.1 engine mount rubber for 4WD vehicles, loosen the front crossmember installation bolts and perform the procedure with the front crossmember component lowered to 15—20 mm {0.60—0.78 in}.
- When removing the No.1 engine mount bracket for 4WD vehicles, perform the procedure with the front crossmember component and transfer completely removed from the vehicle.

1. Remove the front under cover No.1 and front under cover No.2. (See 09-16-40 FRONT UNDER COVER No.1 REMOVAL/INSTALLATION.) (See 09-16-41 FRONT UNDER COVER No.2 REMOVAL/INSTALLATION.)
2. Set the front mudguard away from the front crossmember and front bumper. (See 09-16-47 MUDGUARD REMOVAL/INSTALLATION.)
3. Remove the splash shield. (See 09-16-49 SPLASH SHIELD REMOVAL/INSTALLATION.)
4. Remove in the order indicated in the table.
5. Install in the reverse order of removal.
6. Inspect the front wheel alignment. (See 02-11-1 FRONT WHEEL ALIGNMENT.)

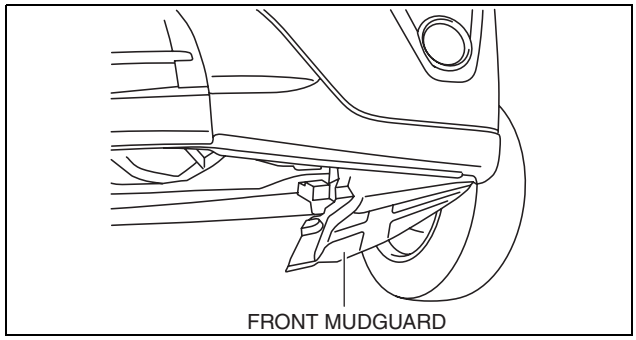

ac5uuw00000642

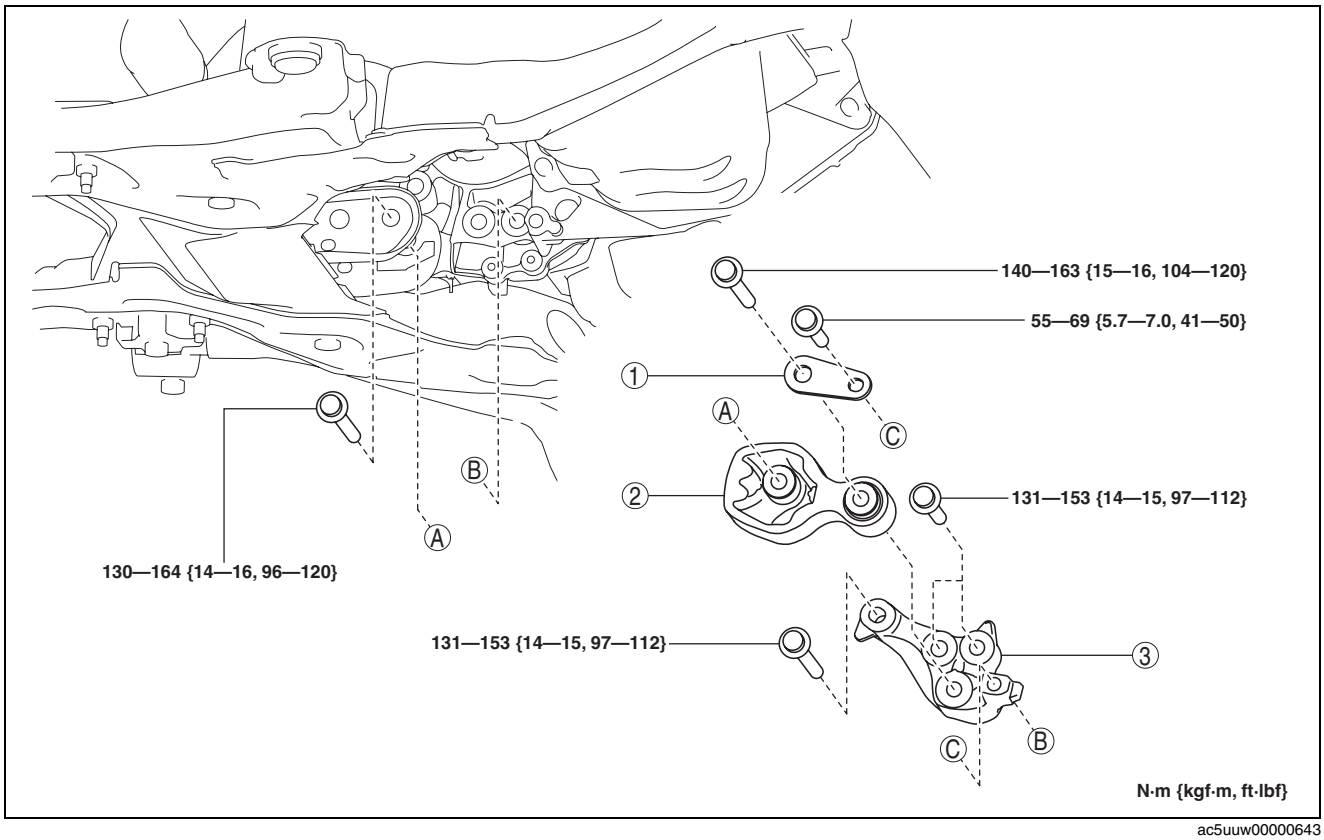

ac5uuw00000643

1	Bracket plate (See 01-10A-97 No.1 engine mount rubber, bracket plate installation note (4WD).)
2	No.1 engine mount rubber (See 01-10A-94 No.1 engine mount rubber removal note (4WD).) (See 01-10A-97 No.1 engine mount rubber, bracket plate installation note (4WD).)
3	No.1 engine mount bracket (See 01-10A-95 No.1 engine mount bracket removal note (4WD).) (See 01-10A-96 No.1 engine mount bracket installation note (4WD).)

MECHANICAL [SKYACTIV-G 2.0]

No.1 engine mount rubber removal note (4WD)

1. Remove the joint bolt (steering gear side) and disconnect the steering shaft from the steering gear and linkage. (See 06-13-4 STEERING WHEEL AND COLUMN REMOVAL/INSTALLATION.)
2. Remove the extension from the front crossmember.

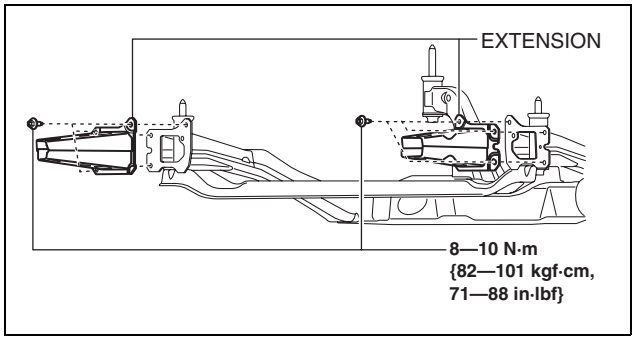

ac5uuw00000644

3. Remove the insulator shown in the figure.

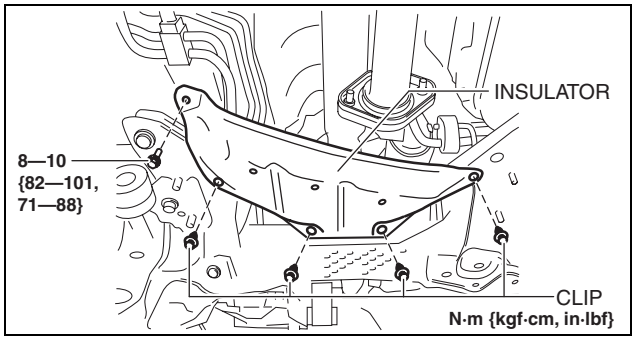

ac5uuw00000645

4. Remove the hanger rubber shown in the figure.
5. Disconnect the front stabilizer link (front stabilizer side). (See 02-13-10 FRONT STABILIZER REMOVAL/INSTALLATION.)

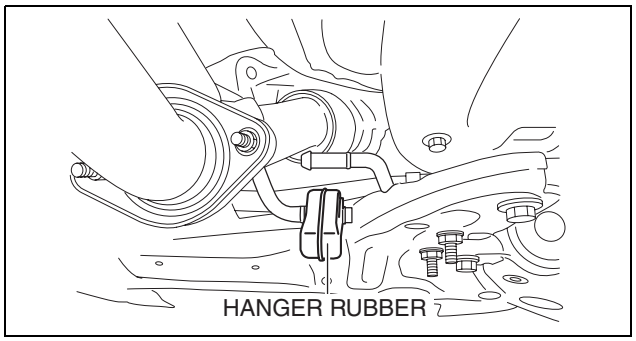

ac5uuw00000646

6. Remove the No.1 engine mount rubber installation bolt (front crossmember side).

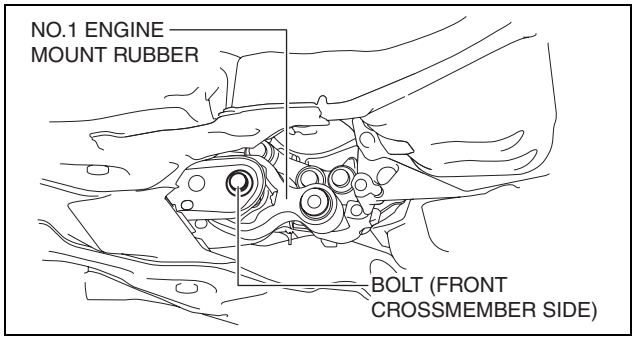

ac5uuw00000647

7. Support the front crossmember component using a jack.

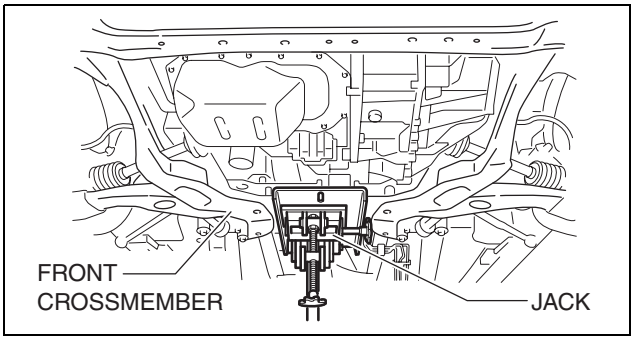

ac5uuw00000648

8. Loosen the front crossmember installation bolts (8) and lower the front crossmember component to 15—20 mm {0.60—0.78 in}.

Note
- To remove the No.1 engine mount rubber, lower the front crossmember component to make clearance between the component and transfer.

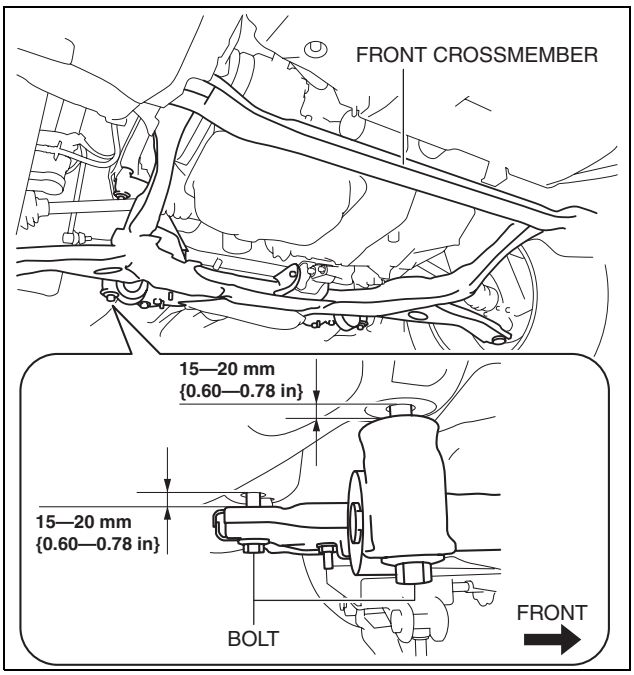

ac5uuw00000649

9. Remove the No.1 engine mount rubber.

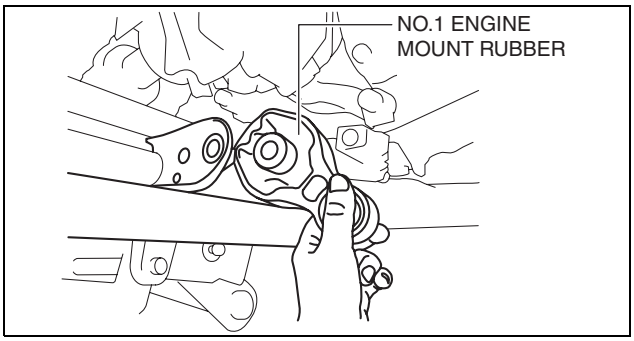

ac5uuw00000650

No.1 engine mount bracket removal note (4WD)

1. Remove the front crossmember component and No.1 engine mount rubber as a single unit. (See 02-13-15 FRONT CROSSMEMBER REMOVAL/INSTALLATION.)
2. Remove the exhaust manifold. (See 01-15A-2 EXHAUST SYSTEM REMOVAL/INSTALLATION [SKYACTIV-G 2.0].)
3. Remove the transfer. (See 03-16A-4 TRANSFER REMOVAL/INSTALLATION [C66MX-R] (MTX).) (See 03-16B-4 TRANSFER REMOVAL/INSTALLATION [FW6AX-EL] (ATX).)
4. Remove the No.1 engine mount bracket.

No.1 engine mount bracket installation note (4WD)

1. Install the No.1 engine mount bracket and tighten the bolts in the order shown in the figure.

   Tightening torque
   131—153 N·m {14—15 kgf·m, 97—112 ft·lbf}

2. Install in the reverse order of removal.

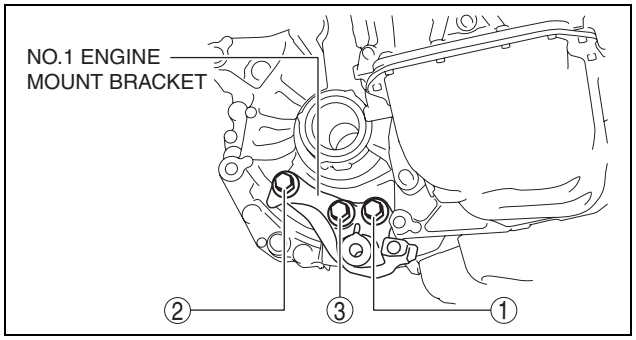

ac5uuw00000651

MECHANICAL [SKYACTIV-G 2.0]

No.1 engine mount rubber, bracket plate installation note (4WD)

1. Install the No.1 engine mount rubber to the front crossmember.
2. Tighten the front crossmember installation bolts. (See 02-13-15 FRONT CROSSMEMBER REMOVAL/INSTALLATION.)
3. Remove the jack.
4. Tighten the No.1 engine mount rubber installation bolts.
5. Install in the reverse order of removal.

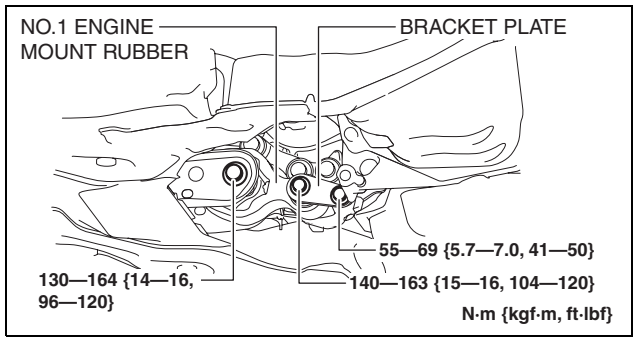

ac5uuw00000652

No.3 Engine Mount

Caution

- **Slots have been adopted for the No.3 engine mount installation holes. If the No.3 engine mount is deviated from the original position when installing the No.3 engine mount, engine noise or vibration could increase. Before removing the No.3 engine mount, place alignment marks on the No.3 engine mount and body so that they can be assembled to the same positions as before removal.**

1. Disconnect the negative battery cable. (See 01-17A-11 NEGATIVE BATTERY CABLE DISCONNECTION/CONNECTION [SKYACTIV-G 2.0].) (See 01-17A-13 NEGATIVE BATTERY CABLE DISCONNECTION/CONNECTION [SKYACTIV-G 2.0 (WITHOUT i-stop)].)
2. Remove the plug hole plate. (See 01-10A-6 PLUG HOLE PLATE REMOVAL/INSTALLATION [SKYACTIV-G 2.0].)
3. Remove in the order indicated in the table.
4. Install in the reverse order of removal.

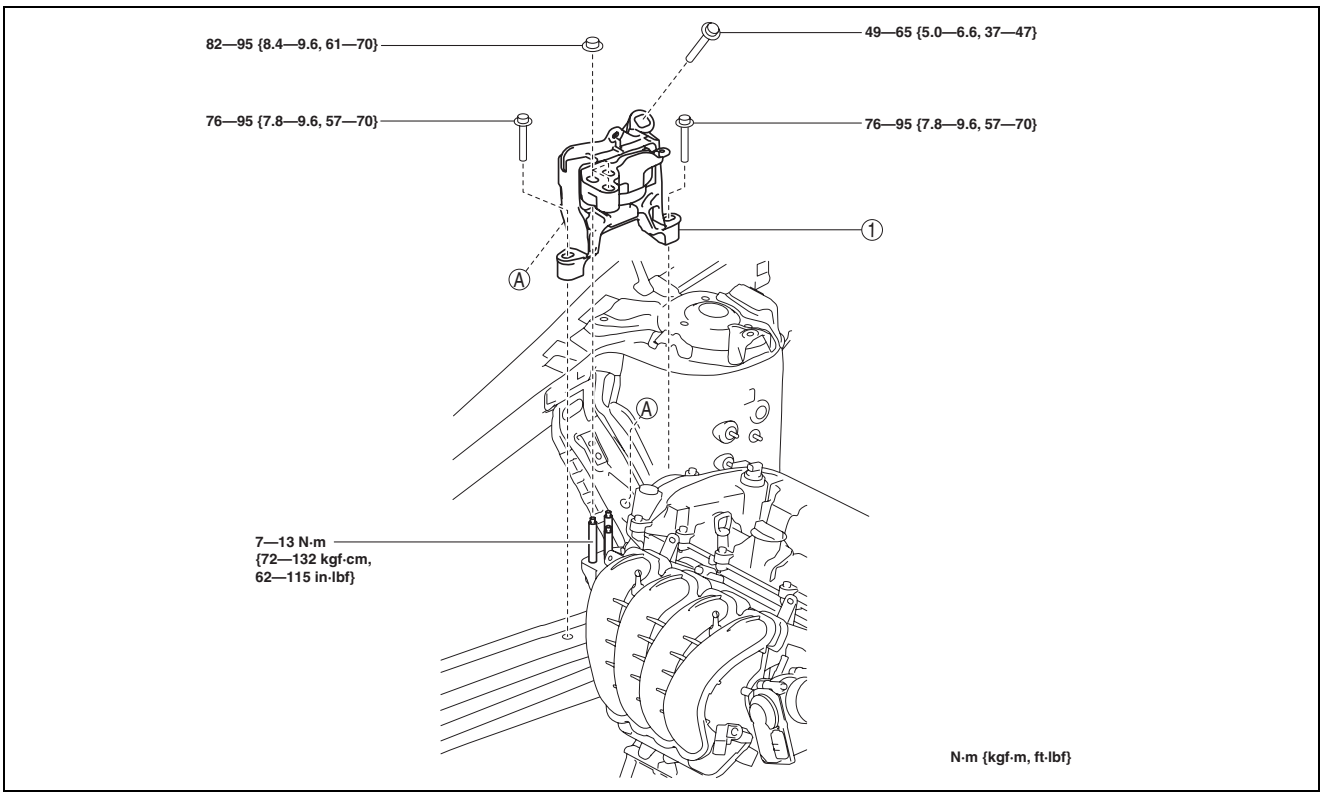

ac5wzw0000279

MECHANICAL [SKYACTIV-G 2.0]

1	No.3 engine mount (See 01-10A-98 No.3 engine mount removal note.) (See 01-10A-99 No.3 engine mount installation note.)

No.3 engine mount removal note

1. Remove the clips shown in the figure and set the ground cable aside.
2. Remove the front under cover No.2. (See 09-16-41 FRONT UNDER COVER No.2 REMOVAL/INSTALLATION.)

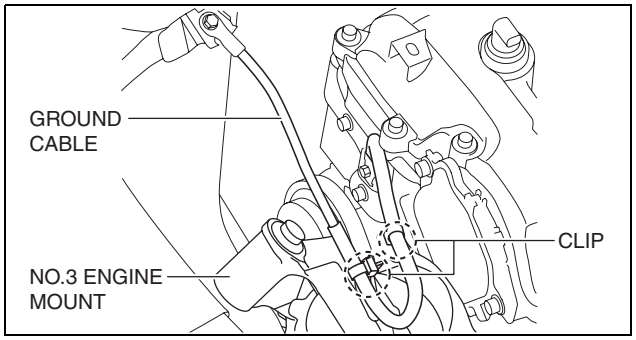

ac5uuw00000654

Caution

- **To prevent deformation of the oil pan, support the engine using the following methods.**
  - **— When using an engine lifter, insert rubber of appropriate size (approx. 20 mm {0.79 in} thickness) between the engine lifter and the oil pan to support the oil pan.**
  - **— When using a garage jack, place rubber of appropriate size (approx. 20 mm {0.79 in} thickness) on a batten which is large enough to cover the oil pan to support the oil pan.**

3. Before removing the No.3 engine mount, support the engine (oil pan) using a commercially available engine lifter or garage jack.

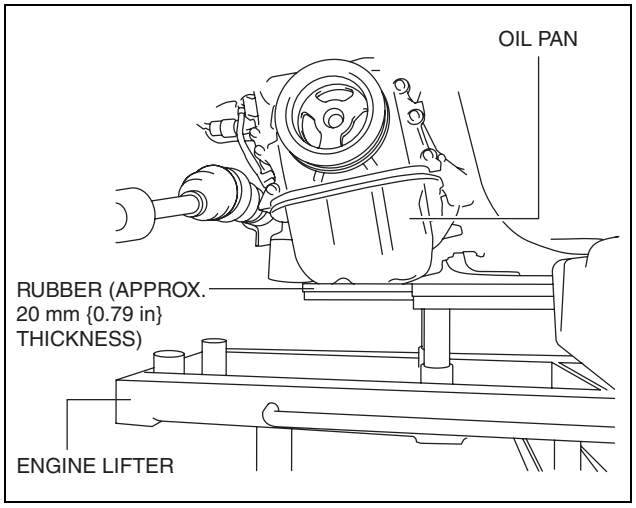

am3uuw0000890

4. Place alignment marks on the locations shown in the figure so that they can be assembled to the same positions as before removal.

   Note
   - Paint so that the No.3 engine mount is framed on the body side and the outline of the nut is framed on the No.3 engine mount side.

5. Remove the No.3 engine mount.

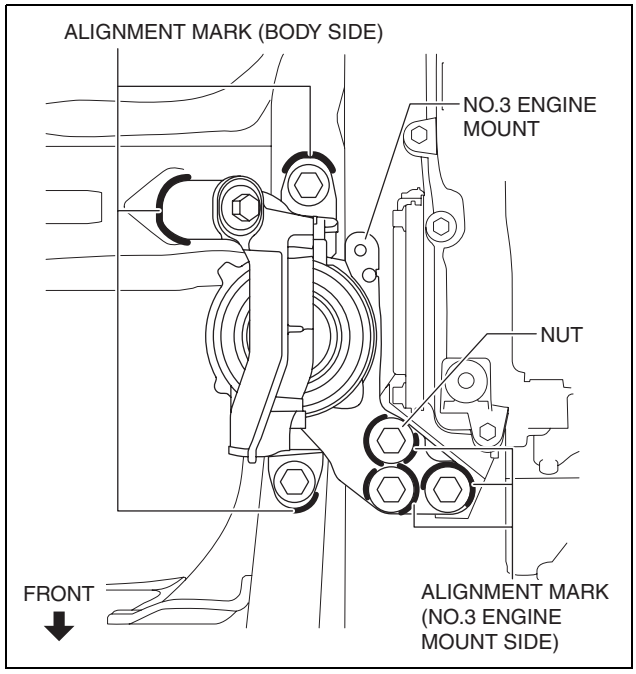

ac5uuw00000655

No.3 engine mount installation note

Note
- When replacing the No.3 engine mount, place a mark at the same position as the one placed before removal.
- If the No.3 engine mount nut is loosened, tighten the engine front cover stud bolts because they may be loosened.

1. Tighten the engine front cover stud bolts.

   Tightening torque
   7—13 N·m {72—132 kgf·cm, 62—115 in·lbf}

2. Temporarily tighten the No.3 engine mount installation bolts and nuts using the following procedure:

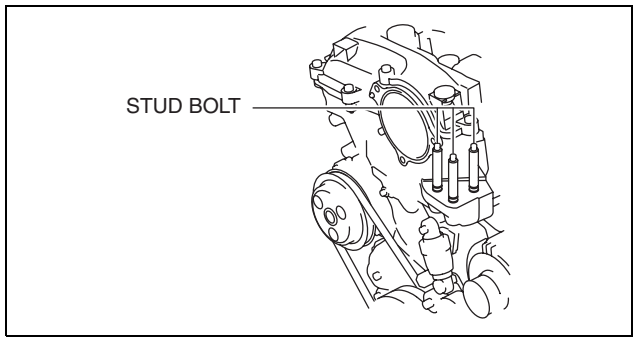

am3uuw0000880

MECHANICAL [SKYACTIV-G 2.0]

(1) Align the alignment marks on the body side and No.3 engine mount, and temporarily tighten the bolts shown in the figure.

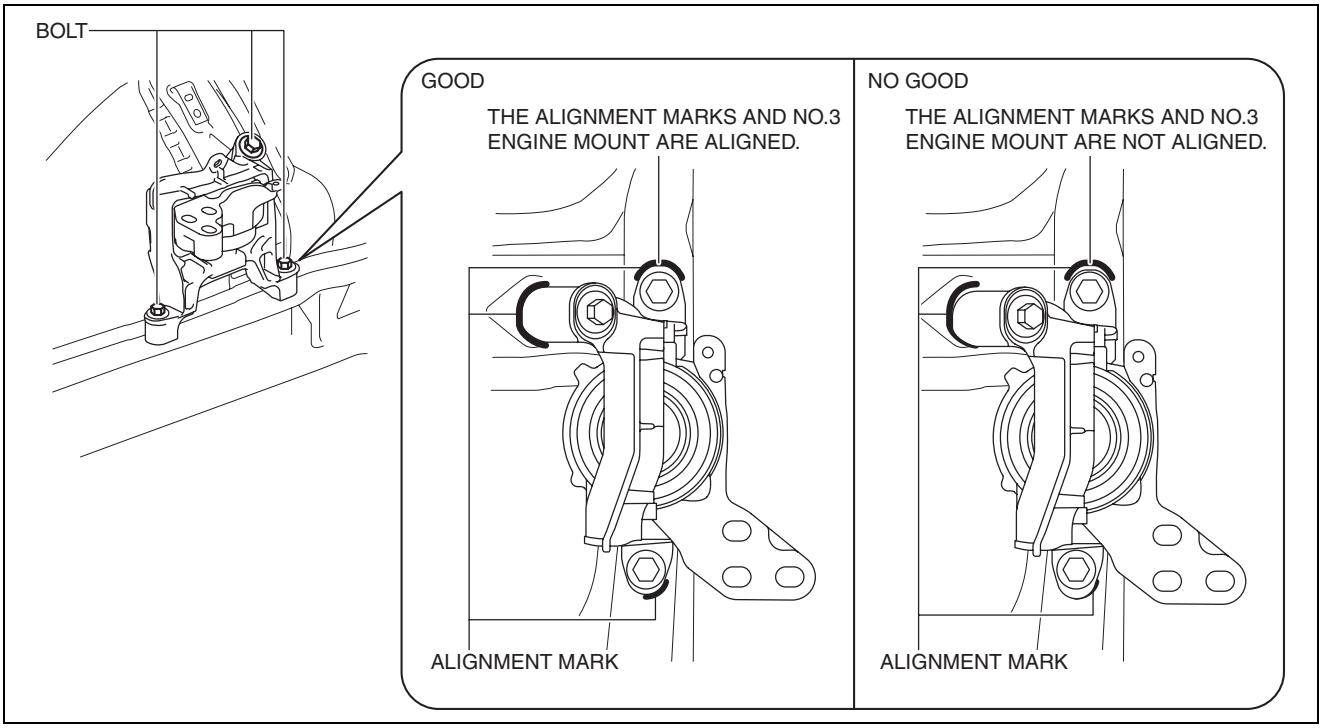

ac5wzw0000519

(2) Temporarily tighten the nuts shown in the figure while aligning the alignment marks of the No.3 engine mount and nuts.

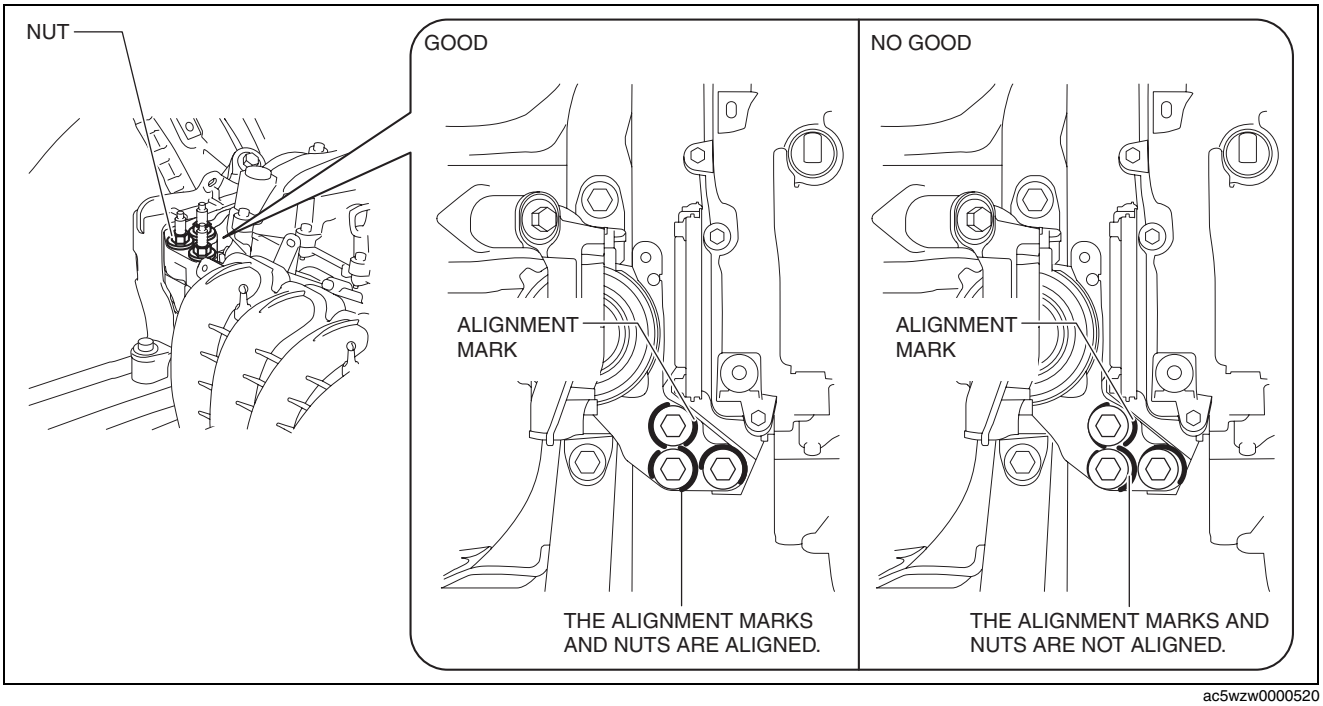

ac5wzw0000520

Note

- If the alignment marks are not aligned, align the alignment marks while slightly moving the engine and temporarily tighten the nuts.

MECHANICAL [SKYACTIV-G 2.0]

3. Tighten the No.3 engine mount installation bolts and nuts in the order shown in the figure.

No.	Tightening torque
1	76—95 N·m {7.8—9.6 kgf·m, 57—70 ft·lbf}
2	82—95 N·m {8.4—9.6 kgf·m, 61—70 ft·lbf}
3	49—65 N·m {5.0—6.6 kgf·m, 37—47 ft·lbf}

4. Remove the engine lifter or garage jack.
5. Install in the reverse order of removal.

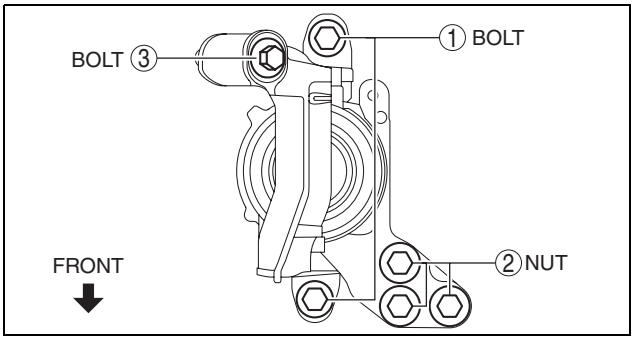

ac5uuw00000658

No.4 Engine Mount

Caution

- **Slots have been adopted for the No.4 engine mount bracket installation holes. If the No.4 engine mount bracket is deviated from the original position when installing the No.4 engine mount bracket, engine noise or vibration could increase. Before removing the No.4 engine mount bracket, place alignment marks on the No.4 engine mount bracket so that they can be assembled to the same positions as before removal.**

1. Disconnect the negative battery cable. (See 01-17A-11 NEGATIVE BATTERY CABLE DISCONNECTION/CONNECTION [SKYACTIV-G 2.0].) (See 01-17A-13 NEGATIVE BATTERY CABLE DISCONNECTION/CONNECTION [SKYACTIV-G 2.0 (WITHOUT i-stop)].)
2. Remove the air cleaner, air hose and fresh air duct as a single unit. (See 01-13A-6 INTAKE-AIR SYSTEM REMOVAL/INSTALLATION [SKYACTIV-G 2.0].)
3. Remove the battery tray and PCM component. (See 01-17A-3 BATTERY REMOVAL/INSTALLATION [SKYACTIV-G 2.0].)
4. Remove in the order indicated in the table.
5. Install in the reverse order of removal.

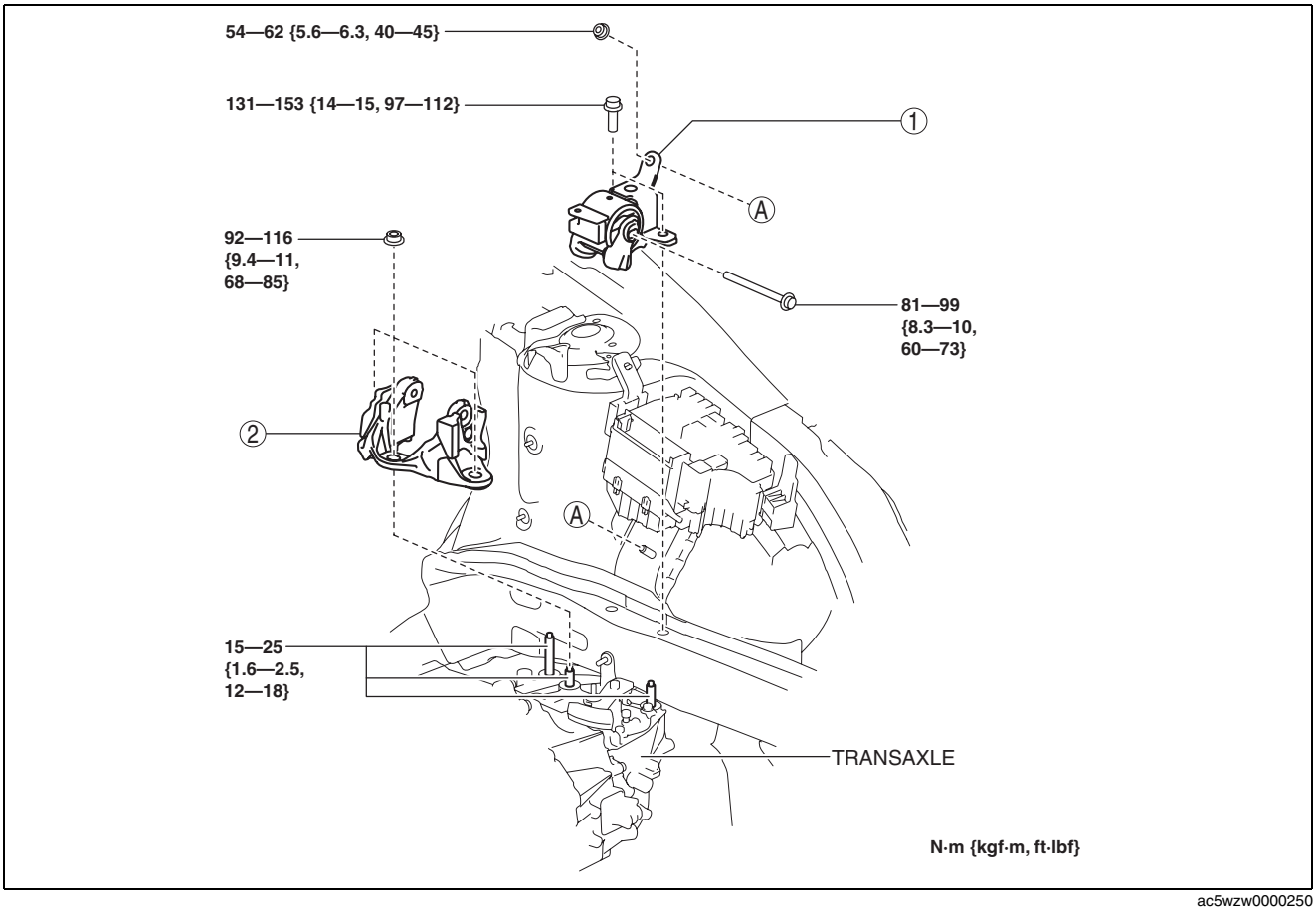

ac5wzw0000250

MECHANICAL [SKYACTIV-G 2.0]

1	No.4 engine mount rubber (See 01-10A-102 No.4 engine mount rubber removal note.) (See 01-10A-104 No.4 engine mount rubber installation note.)
2	No.4 engine mount bracket (See 01-10A-103 No.4 engine mount bracket removal note.) (See 01-10A-103 No.4 engine mount bracket installation note.)

No.4 engine mount rubber removal note

1. Remove the clips shown in the figure and set the wiring harness protector aside.
2. Remove the front under cover No.2. (See 09-16-41 FRONT UNDER COVER No.2 REMOVAL/INSTALLATION.)

Caution

- **To prevent the damage to the transaxle, support the transaxle using the following methods.**

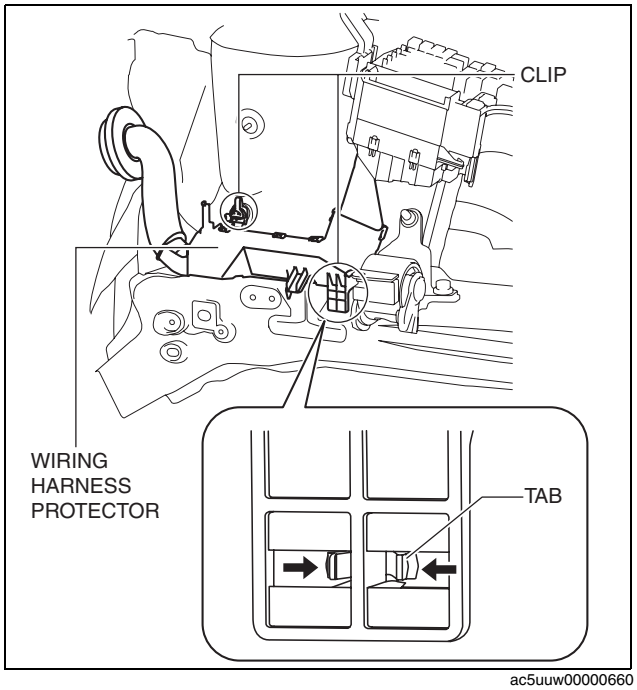

ac5uuw00000660

— **MTX: Support the clutch housing using a batten of appropriate size.**

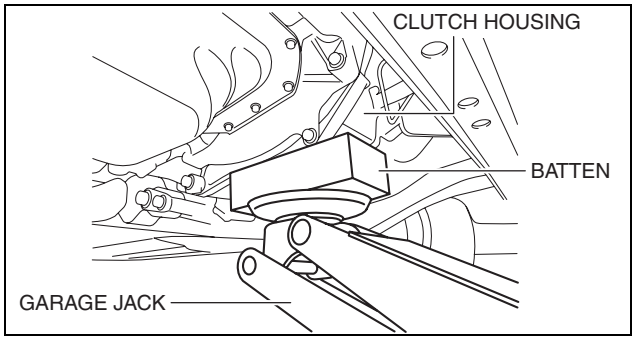

ac5uuw00000661

— **ATX: Place rubber of appropriate size (approx. 20 mm {0.79 in} thickness) on a batten which is large enough to cover the oil pan to support the oil pan.**

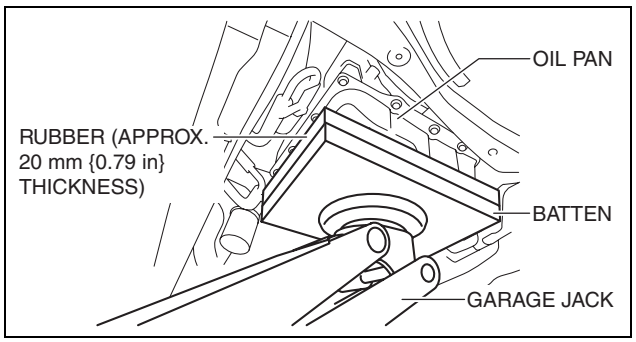

ac5uuw00000662

3. Before removing the No.4 engine mount rubber, support the transaxle using a commercially available engine lifter or garage jack.
4. Remove the No.4 engine mount rubber.

No.4 engine mount bracket removal note

1. Remove the bolt shown in the figure and set the ground cable aside.

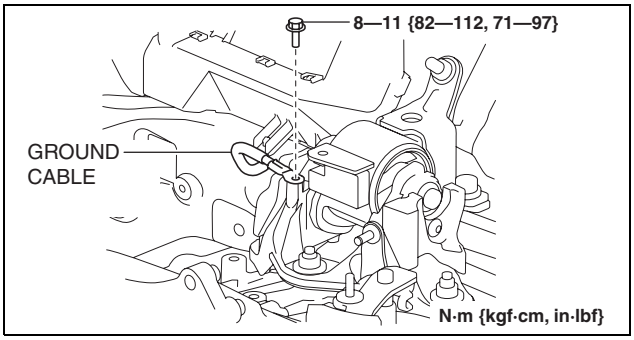

ac5uuw00000663

2. Place alignment marks on the locations shown in the figure so that they can be assembled to the same positions as before removal.

   Note
   - Paint so that the outline of the nut is framed on the bracket side.

3. Remove the No.4 engine mount bracket.

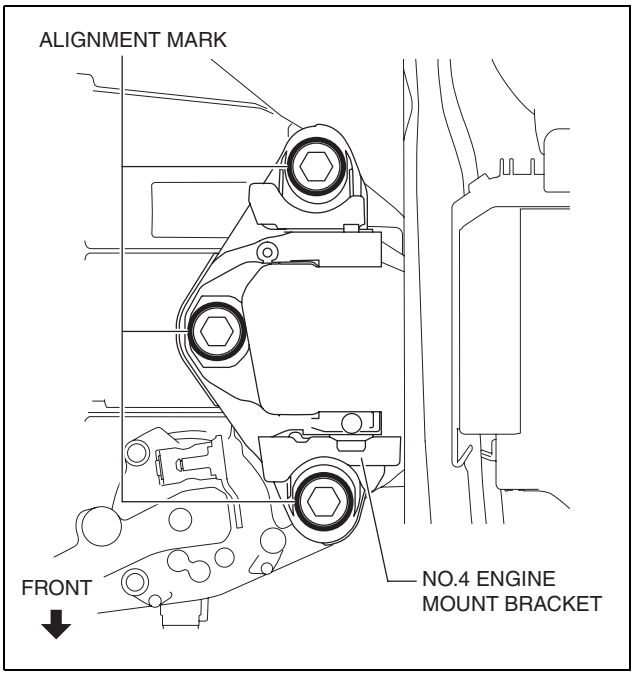

ac5uuw00000664

No.4 engine mount bracket installation note

Note
- When replacing the No.4 engine mount bracket, place a mark at the same position as the one placed before removal.
- If the No.4 engine mount bracket nut is loosened, tighten the transaxle stud bolts because they may be loosened.

1. Tighten the transaxle stud bolts.

   Tightening torque
   15—25 N·m {1.6—2.5 kgf·m, 12—18 ft·lbf}

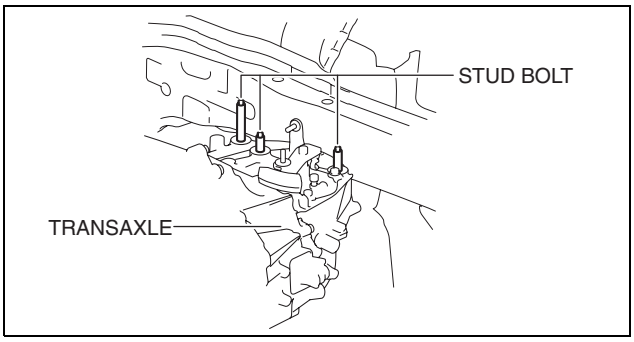

ac5uuw00000665

MECHANICAL [SKYACTIV-G 2.0]

2. Align the alignment marks on the No.4 engine mount bracket and nuts, and temporarily tighten the nuts shown in the figure.

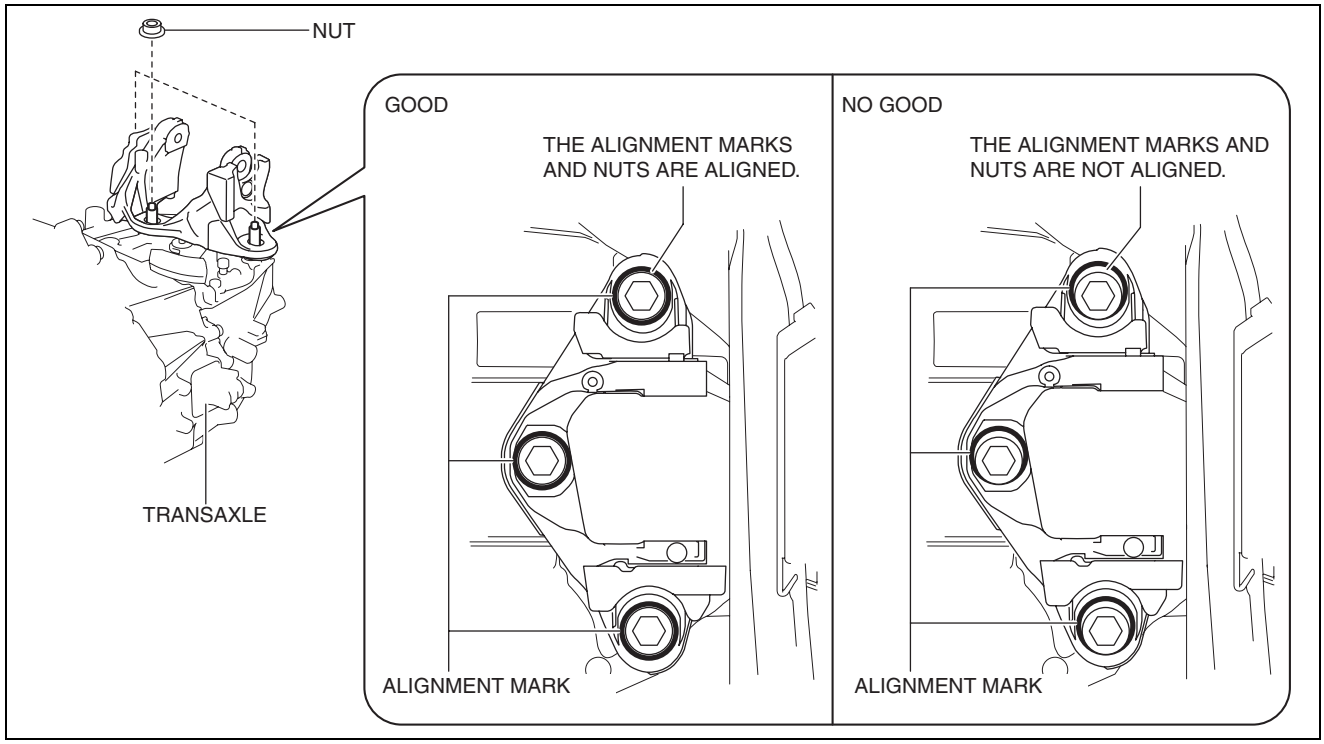

ac5wzw0000520

3. Tighten the No.4 engine mount bracket installation nuts in the order shown in the figure.

   Tightening torque
   92—116 N·m {9.4—11 kgf·m, 68—85 ft·lbf}

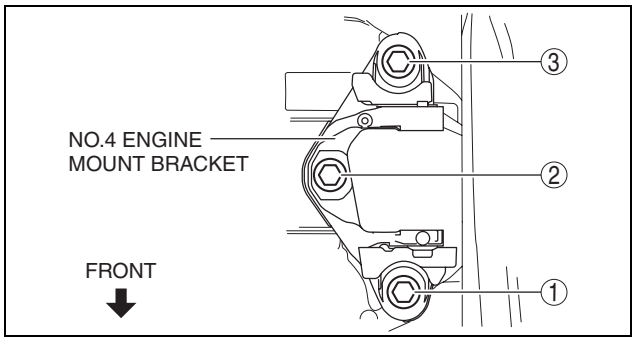

ac5uuw00000667

4. Install the ground cable to the No.4 engine mount bracket.

No.4 engine mount rubber installation note

1. Install the No.4 engine mount rubber and temporarily tighten the bolts and nut shown in the figure.

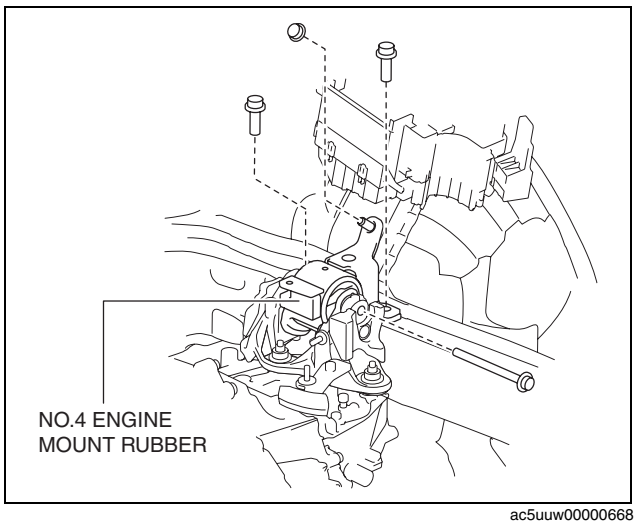

ac5uuw00000668

MECHANICAL [SKYACTIV-G 2.0]

2. Tighten the No.4 engine mount rubber installation bolts and nut in the order shown in the figure.

No.	Tightening torque
1, 2	131—153 N·m {14—15 kgf·m, 97—112 ft·lbf}
3	54—62 N·m {5.6—6.3 kgf·m, 40—45 ft·lbf}
4	81—99 N·m {8.3—10 kgf·m, 60—73 ft·lbf}

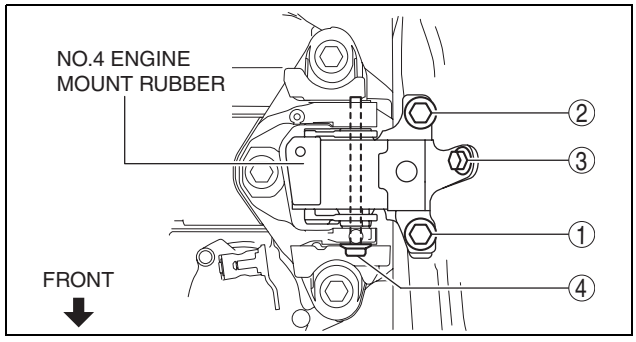

ac5uuw00000669

3. Remove the engine lifter or garage jack.
4. Install in the reverse order of removal.

ENGINE REMOVAL/INSTALLATION [SKYACTIV-G 2.0]

id0110h2800400

Warning

- **A hot engine can cause severe burns. Turn off the engine and wait until it is cool before servicing.**
- **Fuel vapor is hazardous. It can very easily ignite, causing serious injury and damage. Always keep sparks and flames away from fuel.**
- **Fuel line spills and leakage are dangerous. Fuel can ignite and cause serious injuries or death and damage. Fuel can also irritate skin and eyes. To prevent this, always complete the "Fuel Line Safety Procedure". (See 01-14A-6 BEFORE SERVICE PRECAUTION [SKYACTIV-G 2.0].)**

Caution

- **Secure the steering wheel using tape or a cable to prevent the steering shaft from rotating after disconnecting the steering shaft. If the steering wheel rotates after the steering shaft and the steering gear and linkage are disconnected, the internal parts of the clock spring could be damaged.**
- **Applying excessive force (force of 100 N {10.2 kgf, 22.5 lbf} or more) to the electric variable valve timing motor/driver may cause a malfunction. When servicing, be careful not to apply excessive force to the electric variable valve timing motor/driver using other parts or tools.**

Note

- Perform the engine and transaxle component removal/installation from below the vehicle.

1. Disconnect the negative battery cable. (See 01-17A-11 NEGATIVE BATTERY CABLE DISCONNECTION/CONNECTION [SKYACTIV-G 2.0].) (See 01-17A-13 NEGATIVE BATTERY CABLE DISCONNECTION/CONNECTION [SKYACTIV-G 2.0 (WITHOUT i-stop)].)
2. Remove the plug hole plate. (See 01-10A-6 PLUG HOLE PLATE REMOVAL/INSTALLATION [SKYACTIV-G 2.0].)
3. Remove the air cleaner, air hose and fresh air duct as a single unit. (See 01-13A-6 INTAKE-AIR SYSTEM REMOVAL/INSTALLATION [SKYACTIV-G 2.0].)
4. Remove the bolts, nut and connector shown in the figure, and set the wiring harness aside.
5. Remove the battery tray and PCM component. (See 01-17A-3 BATTERY REMOVAL/INSTALLATION [SKYACTIV-G 2.0].)
6. Remove the front under cover No.1 and No.2. (See 09-16-40 FRONT UNDER COVER No.1 REMOVAL/INSTALLATION.) (See 09-16-41 FRONT UNDER COVER No.2 REMOVAL/INSTALLATION.)
7. Remove the splash shield. (See 09-16-49 SPLASH SHIELD REMOVAL/INSTALLATION.)
8. Drain the engine coolant. (See 01-12A-4 ENGINE COOLANT REPLACEMENT [SKYACTIV-G 2.0].)
9. Drain the transaxle oil (MTX) or ATF (ATX). (See 05-15A-2 MANUAL TRANSAXLE OIL REPLACEMENT [C66M-R, C66MX-R].) (See 05-17A-12 AUTOMATIC TRANSAXLE FLUID (ATF) REPLACEMENT [FW6A-EL, FW6AX-EL].)
10. Remove the front wheels and tires. (See 02-10-1 GENERAL PROCEDURES (SUSPENSION).)
11. Disconnect the selector cable. (ATX) (See 05-18-2 AUTOMATIC TRANSAXLE SHIFT MECHANISM REMOVAL/INSTALLATION.)

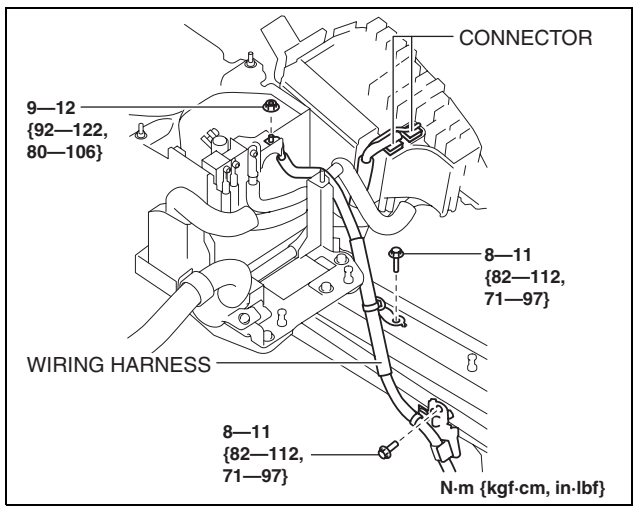

ac5uuw00000605

MECHANICAL [SKYACTIV-G 2.0]

12. Disconnect the control cable. (MTX) (See 05-16A-1 MANUAL TRANSAXLE SHIFT MECHANISM REMOVAL/INSTALLATION [C66M-R, C66MX-R].)
13. Remove the clutch release cylinder with the pipe still connected. (MTX) (See 05-10A-24 CLUTCH RELEASE CYLINDER REMOVAL/INSTALLATION [C66M-R, C66MX-R].)
14. Disconnect the brake vacuum hose. (See 04-11-5 VACUUM HOSE REMOVAL/INSTALLATION.)
15. Disconnect the evaporative hose. (See 01-16A-10 PURGE SOLENOID VALVE REMOVAL/INSTALLATION [SKYACTIV-G 2.0].)
16. Disconnect the fuel hose. (See 01-14A-49 QUICK RELEASE CONNECTOR REMOVAL/INSTALLATION [SKYACTIV-G 2.0].)
17. Disconnect the lower radiator hose. (See 01-12A-9 RADIATOR REMOVAL/INSTALLATION [SKYACTIV-G 2.0].)
18. Disconnect the upper radiator hose. (See 01-12A-19 COOLING FAN MOTOR REMOVAL/INSTALLATION [SKYACTIV-G 2.0].)
19. Disconnect the heater hose. (See 07-11-11 A/C UNIT REMOVAL/INSTALLATION.)
20. Remove the generator drive belt. (See 01-10A-10 DRIVE BELT REMOVAL/INSTALLATION [SKYACTIV-G 2.0].)
21. Remove the A/C compressor with the cooler hose still connected and secure it using wire or rope so that it is out of the way. (See 07-11-25 A/C COMPRESSOR REMOVAL/INSTALLATION.)
22. Remove the propeller shaft. (4WD) (See 03-15-2 PROPELLER SHAFT REMOVAL/INSTALLATION.)
23. Remove the TWC installation nuts (exhaust manifold side) and secure the TWC using wire or rope so that it is out of the way. (See 01-15A-2 EXHAUST SYSTEM REMOVAL/INSTALLATION [SKYACTIV-G 2.0].)
24. Disconnect the drive shaft (LH) from the transaxle side and set the drive shaft (LH) out of the way. (See 03-13-3 FRONT DRIVE SHAFT REMOVAL/INSTALLATION.)
25. Disconnect the drive shaft (RH) from the transaxle side and set the drive shaft (RH) out of the way. (2WD) (See 03-13-3 FRONT DRIVE SHAFT REMOVAL/INSTALLATION.)
26. Remove the drive shaft (RH). (4WD) (See 03-13-3 FRONT DRIVE SHAFT REMOVAL/INSTALLATION.)
27. Remove the bolt and clips, and set the ground cable aside.

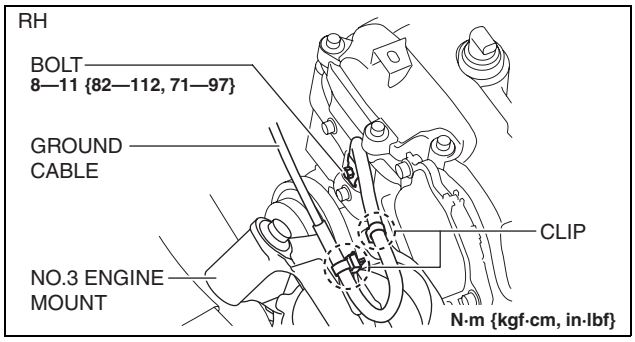

ac5uuw00000606

28. Remove in the order indicated in the table.
29. Install in the reverse order of removal.
30. Refill the transaxle oil (MTX) or ATF (ATX). (See 05-15A-2 MANUAL TRANSAXLE OIL REPLACEMENT [C66M-R, C66MX-R].) (See 05-17A-12 AUTOMATIC TRANSAXLE FLUID (ATF) REPLACEMENT [FW6A-EL, FW6AX-EL].)
31. Refill the engine coolant. (See 01-12A-4 ENGINE COOLANT REPLACEMENT [SKYACTIV-G 2.0].)
32. Start the engine, and inspect and adjust the following:
    - Front wheel alignment (See 02-11-1 FRONT WHEEL ALIGNMENT.)
    - Leakage of engine oil, engine coolant, ATF (ATX), transaxle oil (MTX), and fuel.
    - Runout and contact of pulley and belt.
    - Ignition timing, idle speed and idle mixture. (See 01-10A-4 ENGINE TUNE-UP [SKYACTIV-G 2.0].)
    - Engine-driven accessories operation.

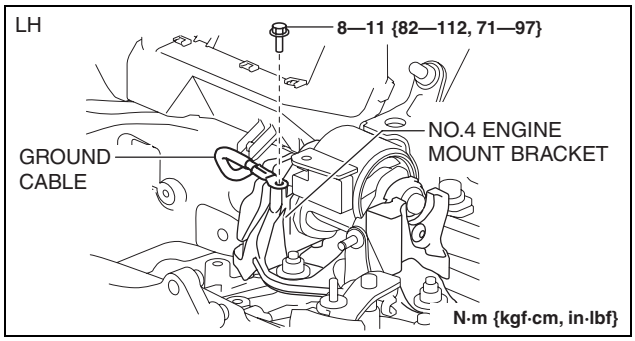

ac5uuw00000607

Note
- If the engine is overhauled and assembled to the vehicle, perform a road test to verify that there is no abnormal vibration and noise.

MECHANICAL [SKYACTIV-G 2.0]

2WD

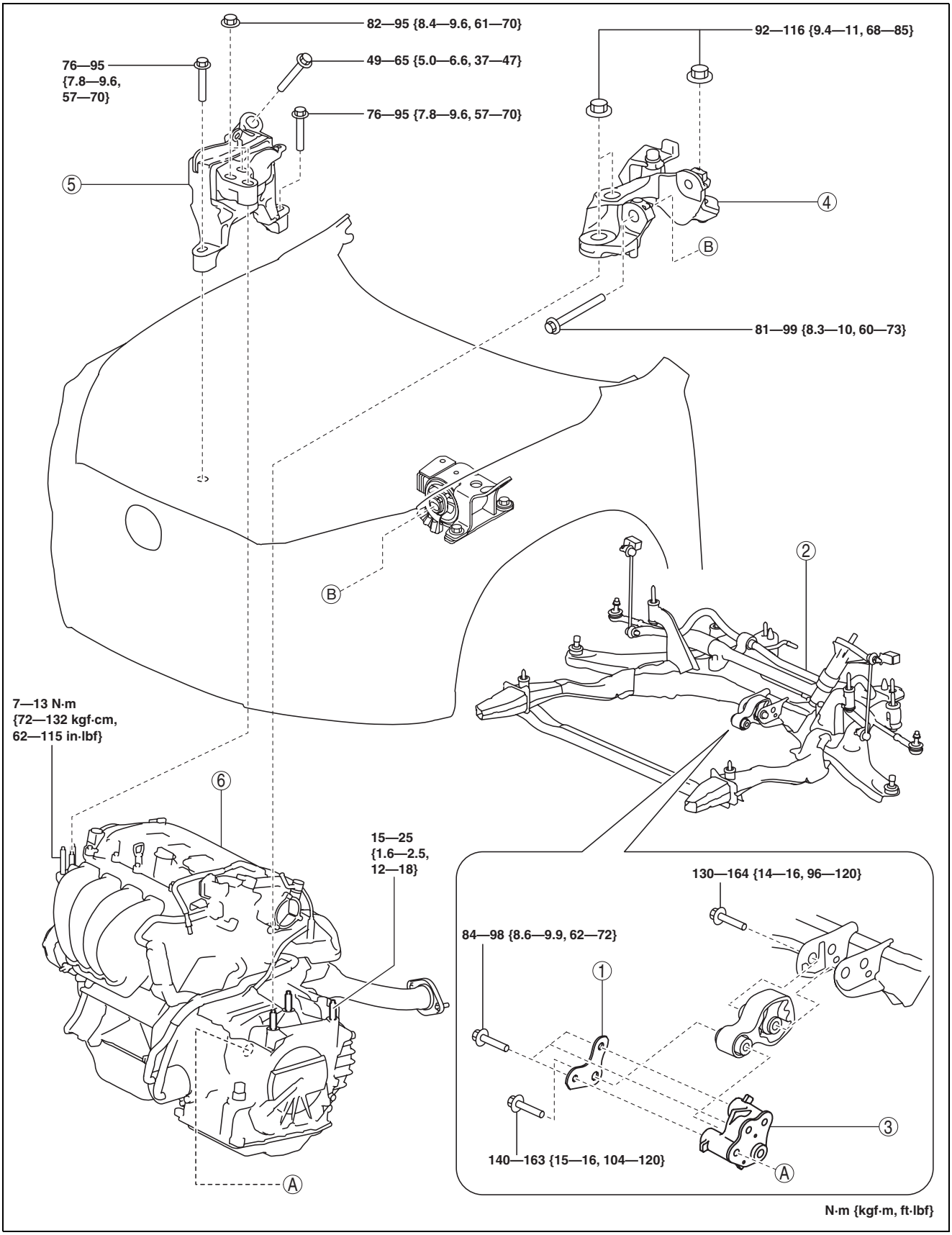

ac5wzw0000465

MECHANICAL [SKYACTIV-G 2.0]

1	Bracket plate (See 01-10A-110 Engine Mount Installation Note.)
2	No.1 engine mount rubber, front crossmember component (See 01-10A-109 No.1 Engine Mount Rubber, Front Crossmember Component Removal Note.) (See 01-10A-110 Engine Mount Installation Note.)
3	No.1 engine mount bracket (See 01-10A-110 Engine Mount Installation Note.)
4	No.4 engine mount bracket (See 01-10A-109 No.3 Engine Mount, No.4 Engine Mount Bracket Removal Note.) (See 01-10A-110 Engine Mount Installation Note.)
5	No.3 engine mount (See 01-10A-109 No.3 Engine Mount, No.4 Engine Mount Bracket Removal Note.) (See 01-10A-110 Engine Mount Installation Note.)
6	Engine, transaxle

4WD

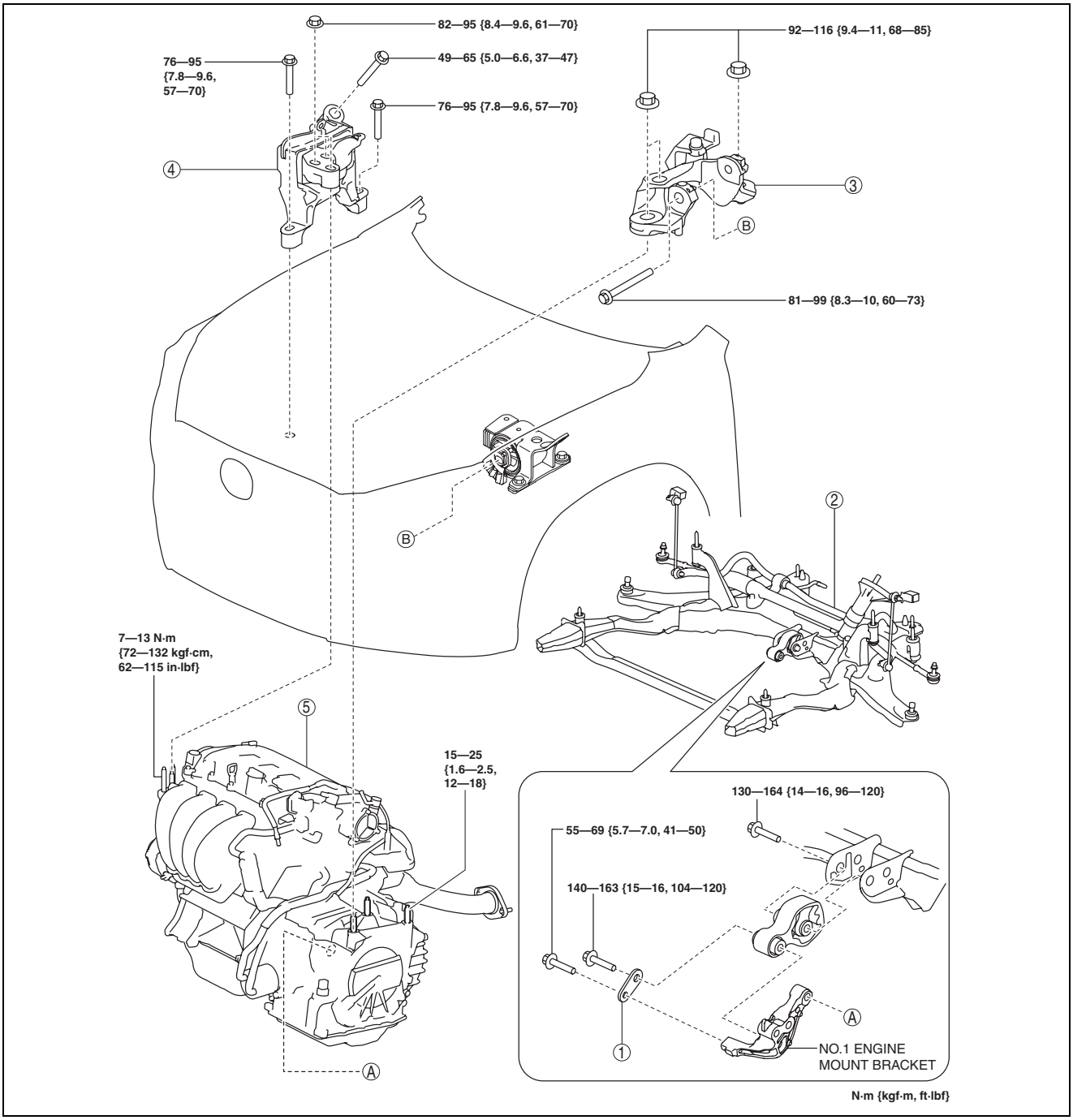

ac5uuw00000680

MECHANICAL [SKYACTIV-G 2.0]

1	Bracket plate (See 01-10A-110 Engine Mount Installation Note.)
2	No.1 engine mount rubber, front crossmember component (See 01-10A-109 No.1 Engine Mount Rubber, Front Crossmember Component Removal Note.) (See 01-10A-110 Engine Mount Installation Note.)
3	No.4 engine mount bracket (See 01-10A-109 No.3 Engine Mount, No.4 Engine Mount Bracket Removal Note.) (See 01-10A-110 Engine Mount Installation Note.)
4	No.3 engine mount (See 01-10A-109 No.3 Engine Mount, No.4 Engine Mount Bracket Removal Note.) (See 01-10A-110 Engine Mount Installation Note.)
5	Engine, transaxle

No.1 Engine Mount Rubber, Front Crossmember Component Removal Note

1. Loosen the No.1 engine mount rubber installation bolt (front crossmember side) shown in the figure.

2WD

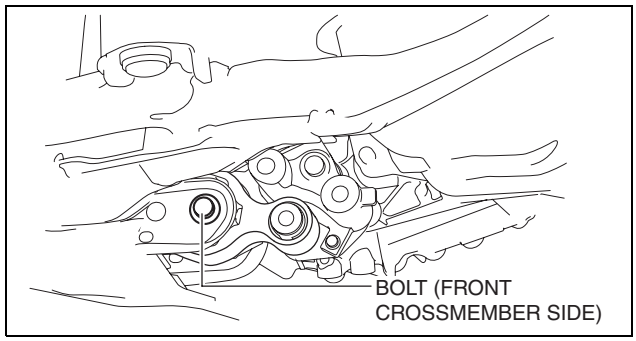

ac5uuw00000610

4WD

2. Remove the No.1 engine mount rubber and the front crossmember component as a single unit. (See 02-13-15 FRONT CROSSMEMBER REMOVAL/INSTALLATION.)

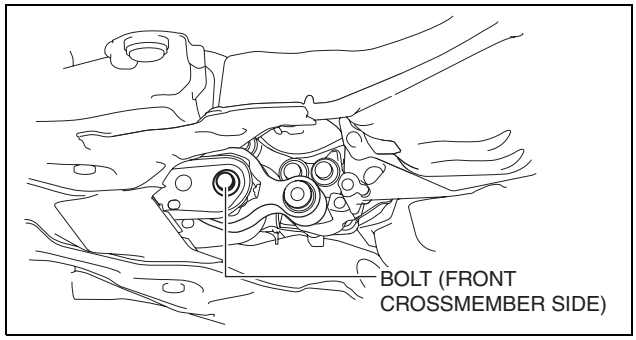

ac5uuw00000681

No.3 Engine Mount, No.4 Engine Mount Bracket Removal Note

Caution

- **When supporting the engine and transaxle, insert rubber of appropriate size (approx. 20 mm {0.79 in} thickness) between the engine lifter and the oil pan, transaxle to prevent the deformation of the oil pan and damage of the transaxle.**

1. Secure the engine and transaxle using a commercially available engine lifter.
2. Remove the No.4 engine mount bracket.
3. Remove the No.3 engine mount.

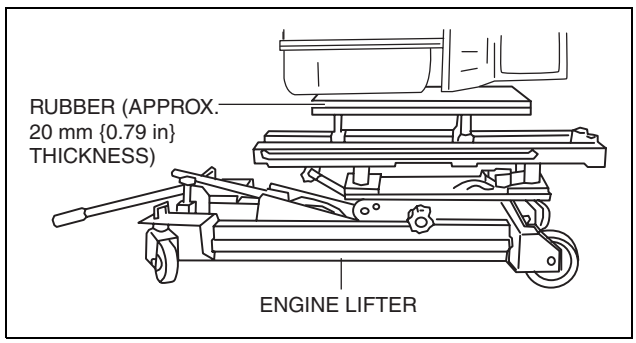

am3uuw0000880

MECHANICAL [SKYACTIV-G 2.0]

Engine Mount Installation Note

Caution
- **Slots have been adopted for the No.3 engine mount and No.4 engine mount bracket installation holes. Tighten the installation bolts and nuts so that they are centered on the slots. Otherwise, engine noise or vibration could increase.**

Note
- Retighten the engine front cover and transaxle stud bolts when the nuts of No.3 engine mount and No.4 engine mount bracket are loosened.

1. Tighten the engine front cover stud bolts.

   Tightening torque
   7—13 N·m {72—132 kgf·cm, 62—115 in·lbf}

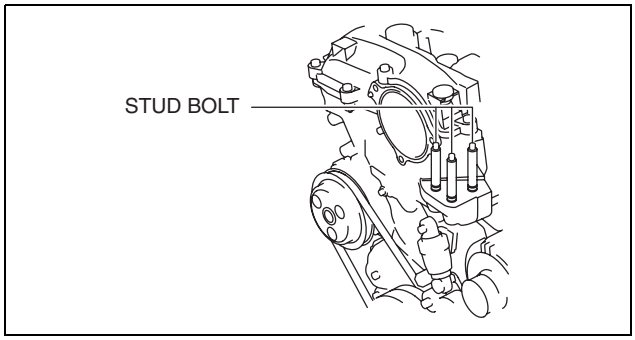

am3uuw0000880

2. Tighten the transaxle stud bolts.

   Tightening torque
   15—25 N·m {1.6—2.5 kgf·m, 12—18 ft·lbf}

   Caution
   - **When supporting the engine and transaxle, insert rubber of appropriate size (approx. 20 mm {0.79 in} thickness) between the engine lifter and the oil pan, transaxle to prevent the deformation of the oil pan and damage of the transaxle.**

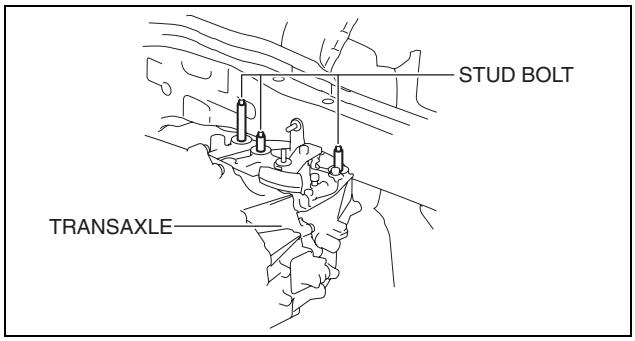

ac5uuw00000612

3. Secure the engine and transaxle using a commercially available engine lifter.
4. Temporarily tighten the No.3 engine mount installation bolts and nuts using the following procedure:

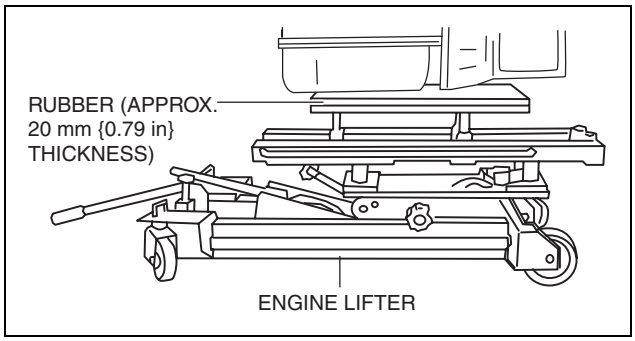

am3uuw0000880

(1) Temporarily tighten the bolts shown in the figure so that they are centered on the No.3 engine mount slots.

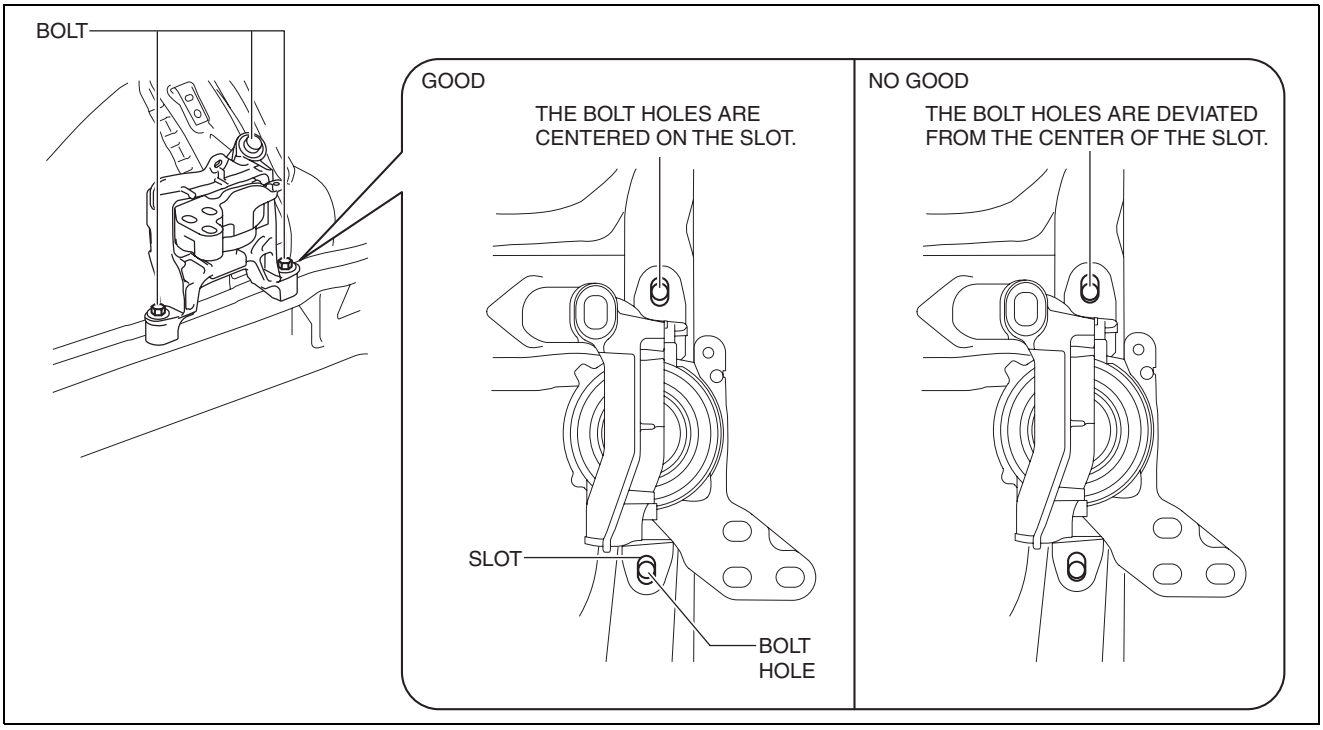

ac5wzw0000518

(2) Temporarily tighten the nuts shown in the figure so that the stud bolts of the engine front cover are centered on the No.3 engine mount slots.

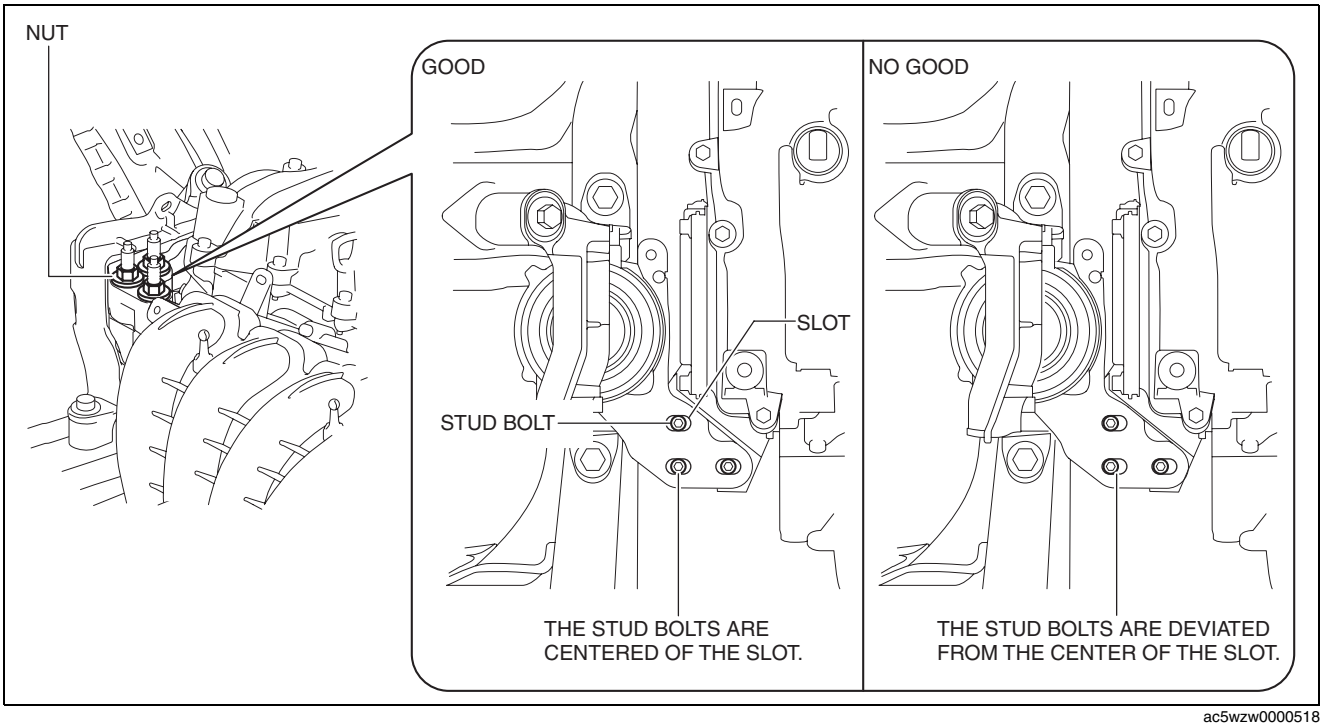

ac5wzw0000518

Note

- If the stud bolts are deviated from the center of the slot, align the stud bolts with the center of the slot while slightly moving the engine, and temporarily tighten the installation nuts.

5. Temporarily tighten the No.4 engine mount bracket installation bolt and nuts using the following procedure:

MECHANICAL [SKYACTIV-G 2.0]

(1) Temporarily tighten the bolt shown in the figure.
(2) Temporarily tighten the nuts shown in the figure so that they are centered on the No.4 engine mount bracket slots.

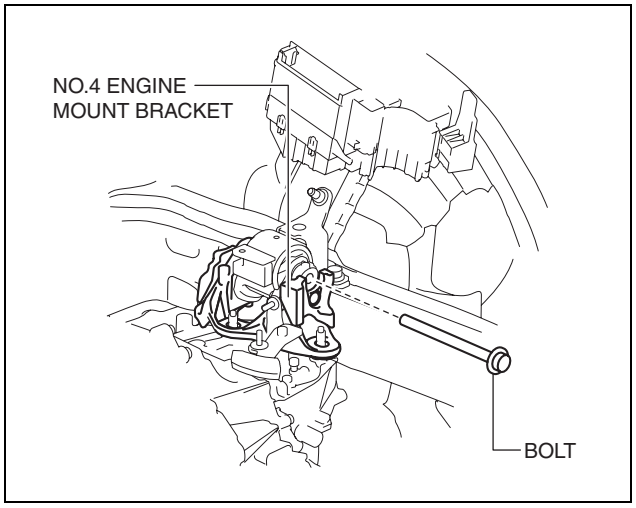

ac5uuw00000615

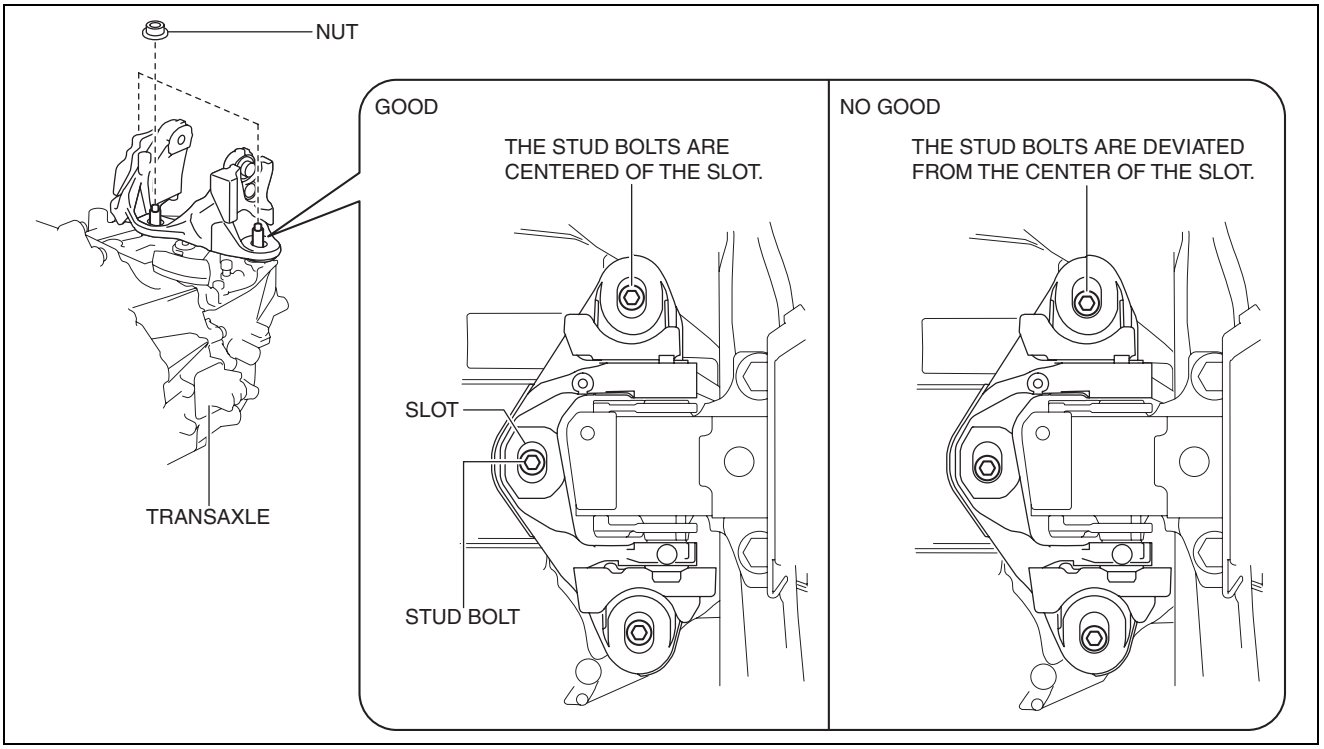

ac5wzw0000518

Note
- If the stud bolts are deviated from the center of the slot, align the stud bolts with the center of the slot while slightly moving the transaxle, and temporarily tighten the installation nuts.

6. Install the No.1 engine mount rubber and the front crossmember component as a single unit. (See 02-13-15 FRONT CROSSMEMBER REMOVAL/INSTALLATION.)

7. Temporarily tighten the following parts:
   2WD
   — No.1 engine mount bracket, No.1 engine mount rubber and bracket plate

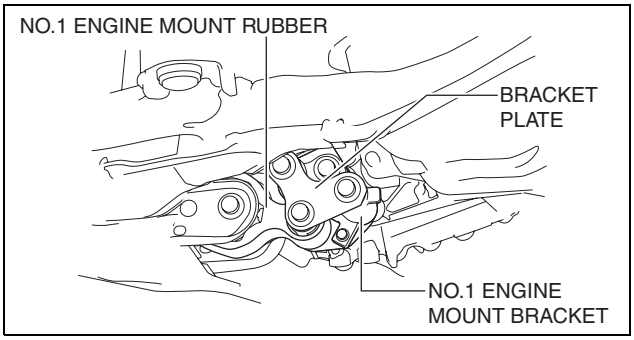

ac5uuw00000683

   4WD
   — No.1 engine mount rubber and bracket plate

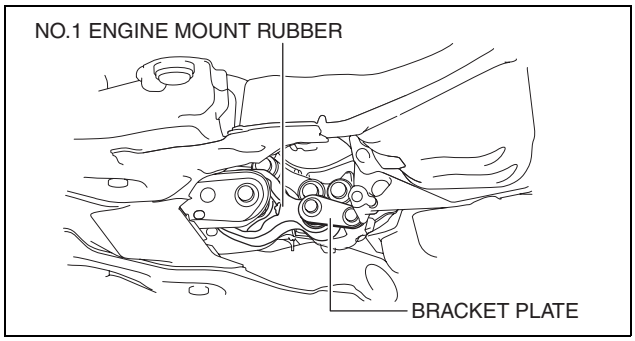

ac5uuw00000618

8. Tighten the No.1 engine mount bracket and bracket plate installation bolts in the order shown in the figure. (2WD)

   Tightening torque
   84—98 N·m {8.6—9.9 kgf·m, 62—72 ft·lbf}

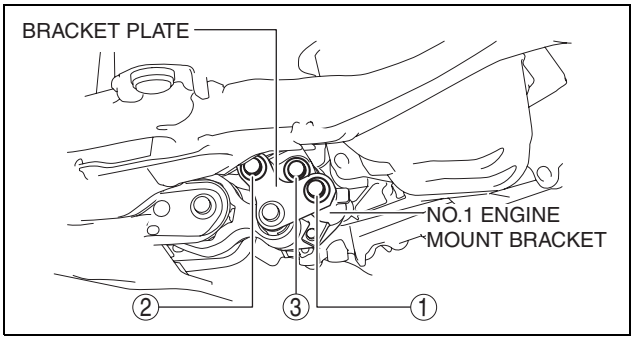

ac5uuw00000619

9. Tighten the No.3 engine mount installation bolts and nuts in the order shown in the figure.

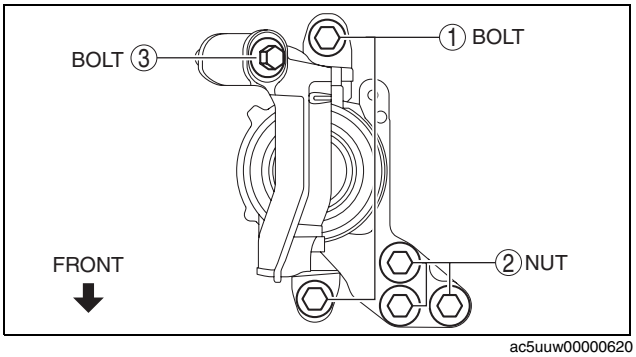

ac5uuw00000620

No.	Tightening torque
1	76—95 N·m {7.8—9.6 kgf·m, 57—70 ft·lbf}
2	82—95 N·m {8.4—9.6 kgf·m, 61—70 ft·lbf}
3	49—65 N·m {5.0—6.6 kgf·m, 37—47 ft·lbf}

MECHANICAL [SKYACTIV-G 2.0]

10. Tighten the No.4 engine mount bracket installation bolt and nuts in the order shown in the figure.

No.	Tightening torque
1, 2, 3	92—116 N·m {9.4—11 kgf·m, 68—85 ft·lbf}
4	81—99 N·m {8.3—10 kgf·m, 60—73 ft·lbf}

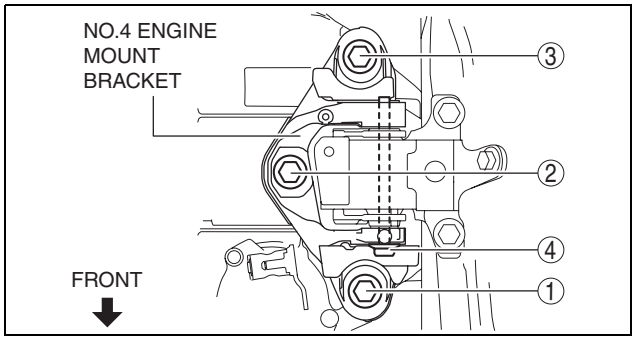

ac5uuw00000621

11. Tighten the No.1 engine mount rubber installation bolts.

2WD

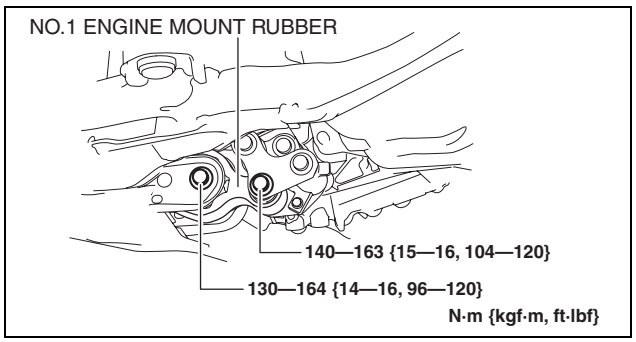

ac5uuw00000622

4WD

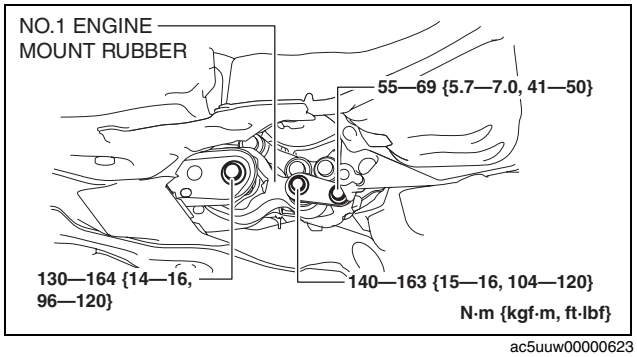

ac5uuw00000623

ENGINE DISASSEMBLY/ASSEMBLY [SKYACTIV-G 2.0]

id0110h2800500

Caution

- **When the transaxle is installed, do not suspend the engine. Otherwise, the SST installation area of the cylinder head may be damaged due to excess weight. Only suspend the engine after separating the engine and transaxle.**
- **Applying excessive force (force of 100 N {10.2 kgf, 22.5 lbf} or more) to the electric variable valve timing motor/driver may cause a malfunction. When servicing, be careful not to apply excessive force to the electric variable valve timing motor/driver using other parts or tools.**

1. To enable to install the **SST**, disconnect the clip shown in the figure and set the wiring harness aside.
2. Install the **SST** using **part number 99794 1025** or an **M10 x 1.25**, length **25 mm {0.98 in}** bolt as shown in the figure.

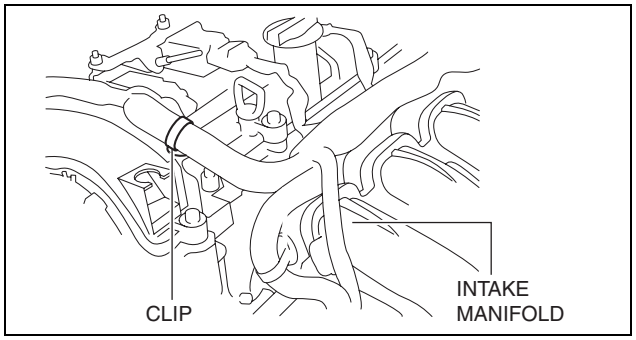

am3uuw0000880

MECHANICAL [SKYACTIV-G 2.0]

Engine front side

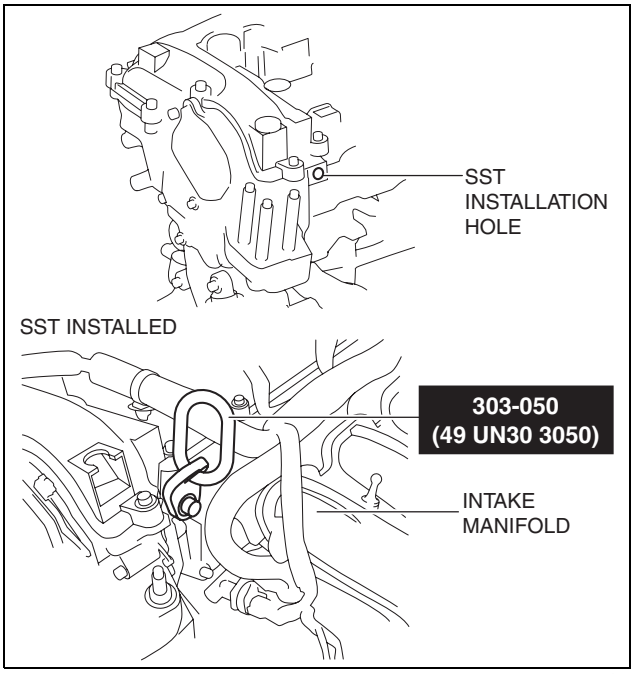

ac5wzw0000465

Engine rear side

Tightening torque
38—51 N·m {3.9—5.2 kgf·m, 29—37 ft·lbf}

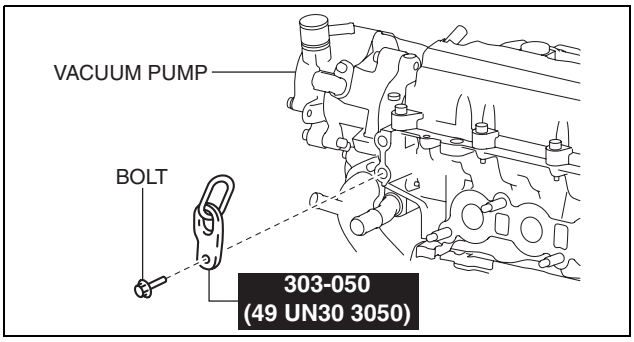

am3uuw0000880

3. Engage the hook for the **SST (49 L017 5A0)** to the **SST (49 UN30 3050)**.

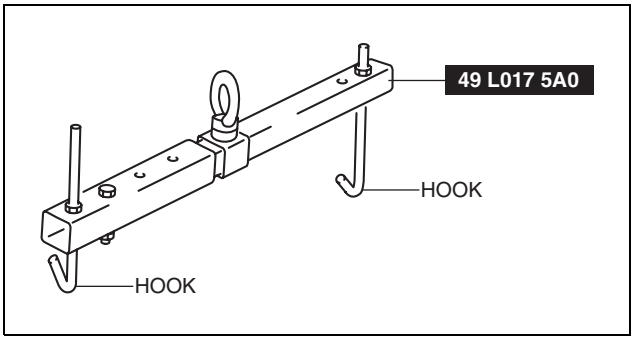

am3uuw0000881

4. To ensure the safety of the work (control engine and transaxle sway), set a hoist as shown in the figure.

Caution
- **Do not lift up the engine.**

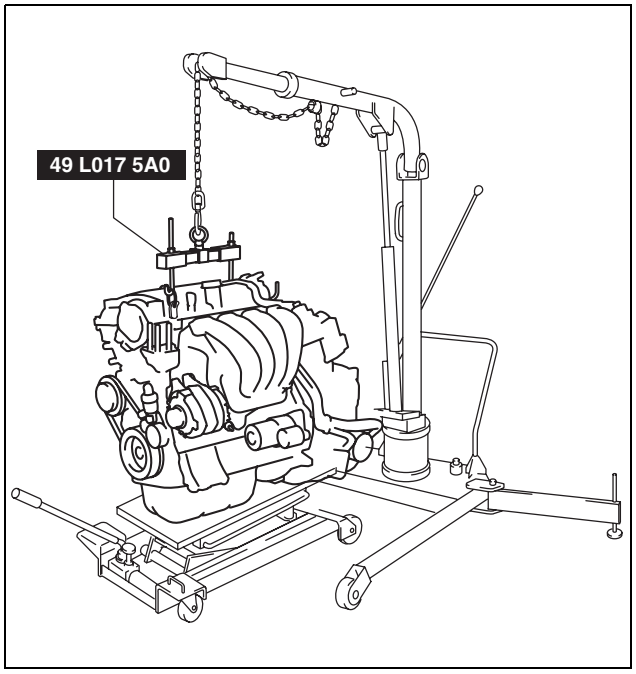

am3zzw0001259

5. Remove the insulator shown in the figure.
6. Remove the exhaust system. (See 01-15A-2 EXHAUST SYSTEM REMOVAL/INSTALLATION [SKYACTIV-G 2.0].)
7. Remove the exhaust manifold bracket shown in the figure. (See 05-15A-18 MANUAL TRANSAXLE REMOVAL/INSTALLATION [C66MX-R] (MTX).) (See 05-17A-43 AUTOMATIC TRANSAXLE REMOVAL/INSTALLATION [FW6AX-EL] (ATX).)

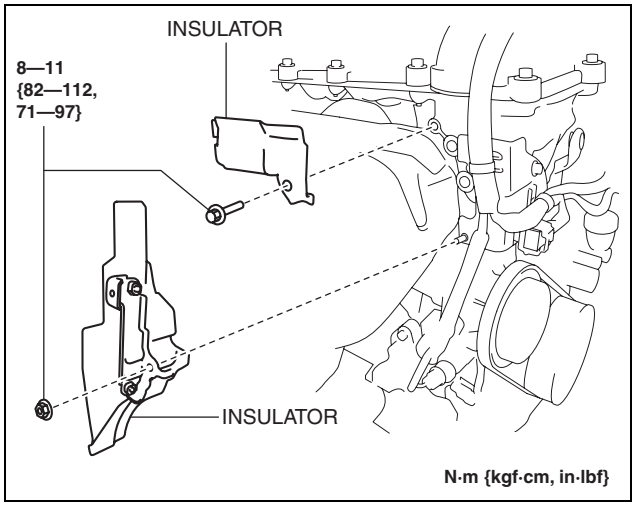

ac5uuw00000494

MTX

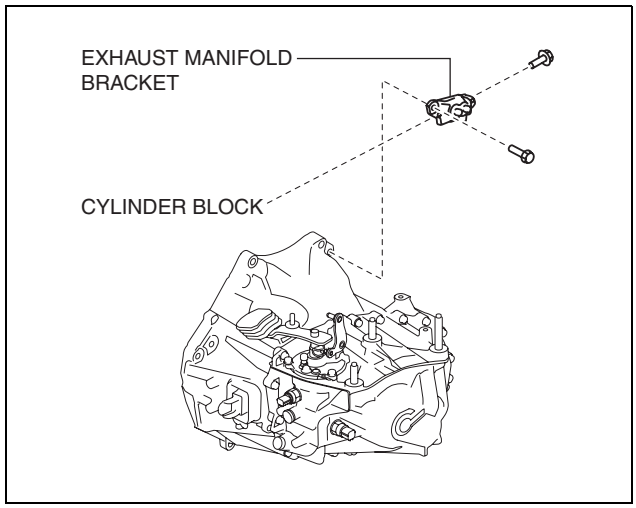

ac5wzw0000249

MECHANICAL [SKYACTIV-G 2.0]

ATX

8. Remove the bracket No.1 (drive shaft bracket). (See 03-13-3 FRONT DRIVE SHAFT REMOVAL/INSTALLATION.)
9. Remove the transfer bracket and transfer. (4WD) (See 03-16A-4 TRANSFER REMOVAL/INSTALLATION [C66MX-R] (MTX).) (See 03-16B-4 TRANSFER REMOVAL/INSTALLATION [FW6AX-EL] (ATX).)
10. Remove the starter. (See 01-19A-2 STARTER REMOVAL/INSTALLATION [SKYACTIV-G 2.0].)
11. Fix the drive plate using the crankshaft pulley lock bolt. (ATX)
12. Remove the torque converter installation nut from the starter installation hole. (See 05-17A-28 AUTOMATIC TRANSAXLE REMOVAL/INSTALLATION [FW6A-EL] (2WD).) (See 05-17A-43 AUTOMATIC TRANSAXLE REMOVAL/INSTALLATION [FW6AX-EL] (4WD).)

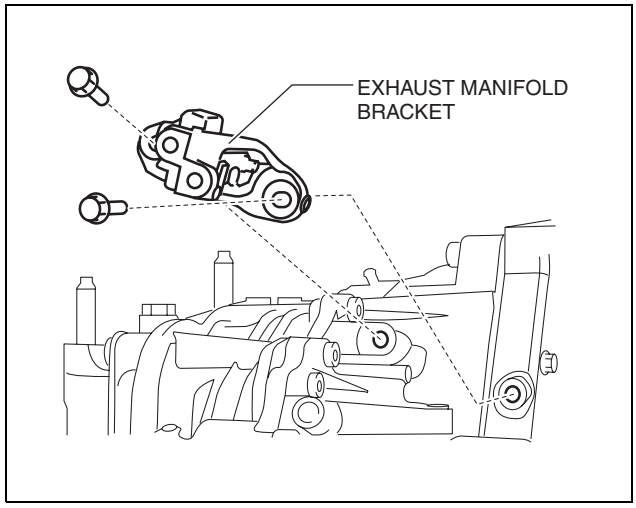

ac5wzw0000250

13. Disconnect the engine and transaxle, and lower only the engine from the engine lifter. (See 05-15A-4 MANUAL TRANSAXLE REMOVAL/INSTALLATION [C66M-R] (MTX, 2WD).) (See 05-15A-18 MANUAL TRANSAXLE REMOVAL/INSTALLATION [C66MX-R] (MTX, 4WD).) (See 05-17A-28 AUTOMATIC TRANSAXLE REMOVAL/INSTALLATION [FW6A-EL] (ATX, 2WD).) (See 05-17A-43 AUTOMATIC TRANSAXLE REMOVAL/INSTALLATION [FW6AX-EL] (ATX, 4WD).)
14. Remove the generator. (See 01-17A-17 GENERATOR REMOVAL/INSTALLATION [SKYACTIV-G 2.0].)
15. Remove the intake-air system. (See 01-13A-6 INTAKE-AIR SYSTEM REMOVAL/INSTALLATION [SKYACTIV-G 2.0].)
16. Remove the fuel injectors. (See 01-14A-51 FUEL INJECTOR REMOVAL/INSTALLATION [SKYACTIV-G 2.0].)
17. Remove the camshaft position (CMP) sensor. (See 01-40-61 CAMSHAFT POSITION (CMP) SENSOR REMOVAL/INSTALLATION [SKYACTIV-G 2.0].)
18. Remove the vacuum pump. (See 04-11-21 VACUUM PUMP REMOVAL/INSTALLATION [SKYACTIV-G 2.0].)
19. Remove the high pressure fuel pump and rear housing. (See 01-14A-44 HIGH PRESSURE FUEL PUMP REMOVAL/INSTALLATION [SKYACTIV-G 2.0].)
20. Remove the oil filter. (See 01-11A-5 OIL FILTER REPLACEMENT [SKYACTIV-G 2.0].)
21. Remove the oil cooler. (if equipped) (See 01-11A-8 OIL COOLER REMOVAL/INSTALLATION [SKYACTIV-G 2.0].)
22. Remove the engine oil solenoid valve. (See 01-11A-10 ENGINE OIL SOLENOID VALVE REMOVAL/INSTALLATION [SKYACTIV-G 2.0].)
23. Remove the crankshaft position (CKP) sensor. (See 01-40-59 CRANKSHAFT POSITION (CKP) SENSOR REMOVAL/INSTALLATION [SKYACTIV-G 2.0].)
24. Remove the ignition coil/ion sensors. (See 01-18-2 IGNITION COIL/ION SENSOR REMOVAL/INSTALLATION [SKYACTIV-G 2.0].)
25. Remove the wiring harness bracket shown in the figure.
26. Remove the emission harness.
27. Remove the water pump drive belt. (See 01-10A-10 DRIVE BELT REMOVAL/INSTALLATION [SKYACTIV-G 2.0].)
28. Remove the clutch cover and clutch disc. (MTX) (See 05-10A-25 CLUTCH UNIT REMOVAL/INSTALLATION [C66M-R, C66MX-R].)
29. Remove in the order indicated in the table
30. Assemble in the reverse order of disassembly.

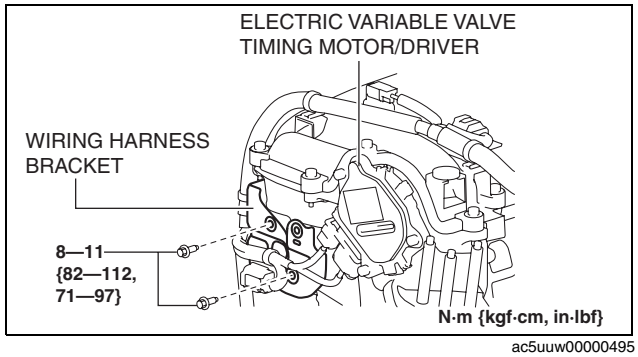

ac5uuw00000495

MECHANICAL [SKYACTIV-G 2.0]

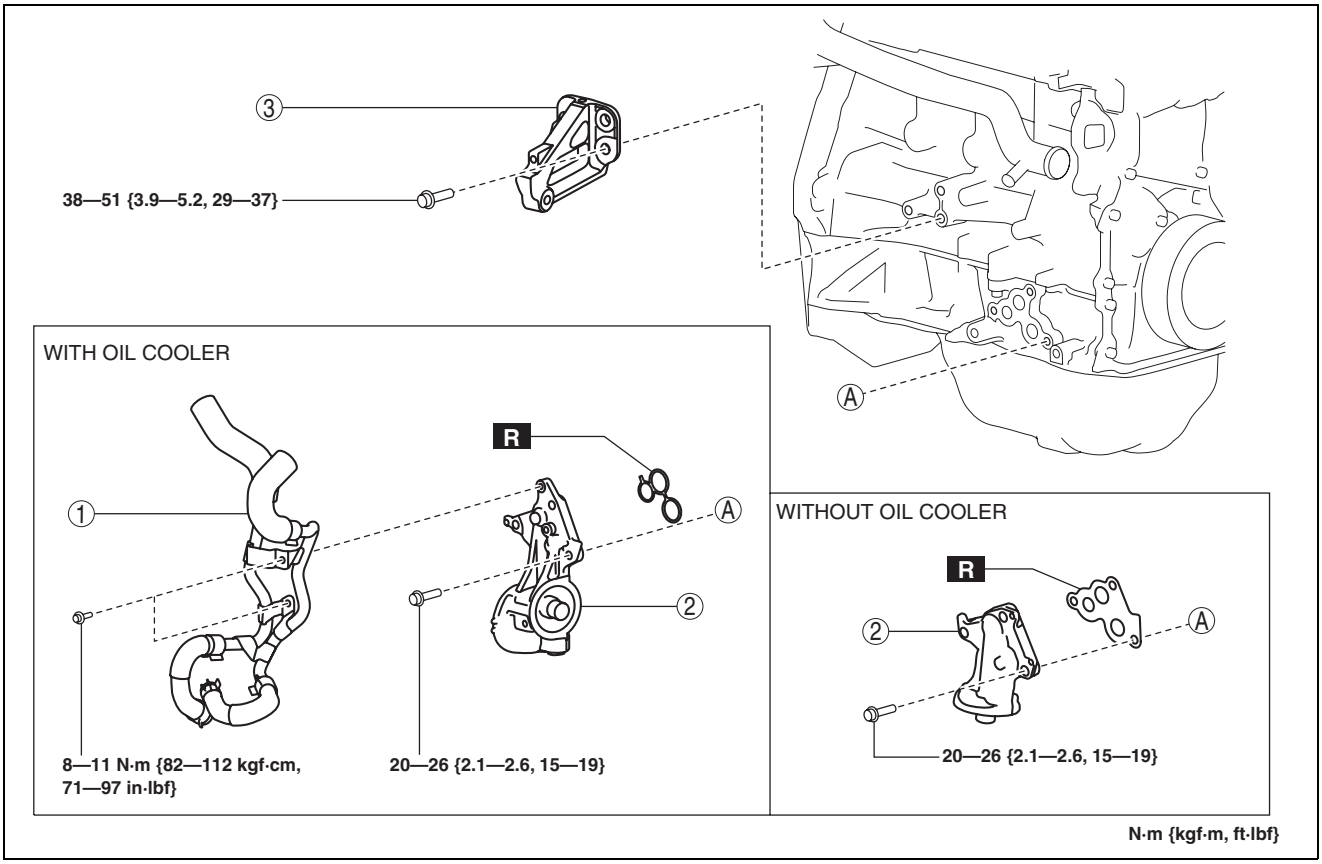

ac5uuw00001657

1	Oil cooler water pipe component (with oil cooler) (See 01-10A-119 Oil Cooler Water Pipe Component Installation Note.)
2	Oil filter body

3	Exhaust manifold bracket (2WD) (See 01-10A-118 Exhaust Manifold Bracket Installation Note.)

Exhaust Manifold Bracket Installation Note

1. Temporarily tighten the bolt (3) shown in the figure, insert the exhaust manifold bracket from the side, and temporarily install the exhaust manifold bracket.
2. Temporarily tighten the bolt (1) shown in the figure.
3. Temporarily tighten the bolt (2) shown in the figure.
4. Tighten the bolt in the order shown in the figure.

Tightening torque
38—51 N·m {3.9—5.2 kgf·m, 29—37 ft·lbf}

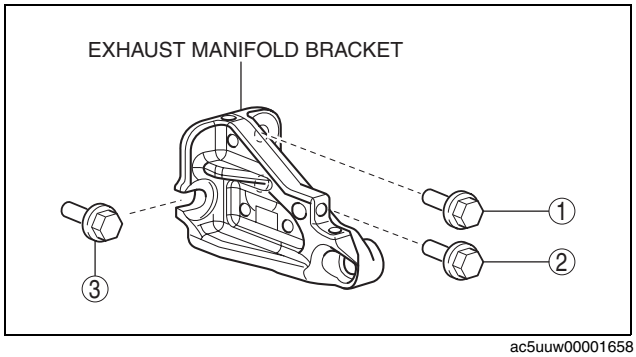

ac5uuw00001658

Oil Cooler Water Pipe Component Installation Note

1. Install the oil cooler water pipe component in the order shown in the figure.

   Tightening torque
   8—11 N·m {82—112 kgf·cm, 71—97 in·lbf}

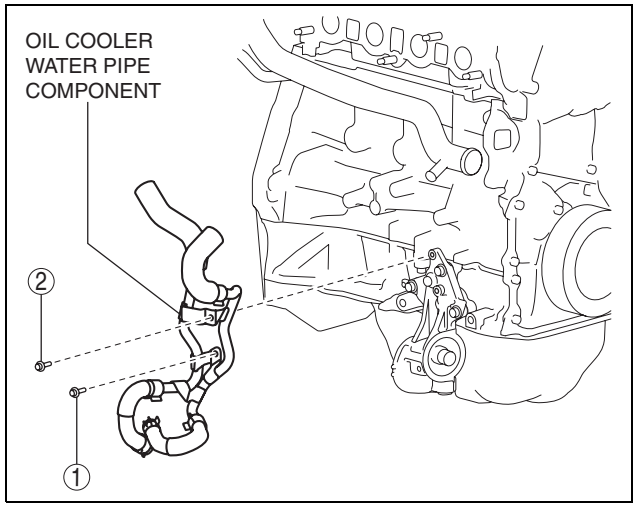

ac5wzw0000465

01-10B MECHANICAL [SKYACTIV-D 2.2]

ENGINE LOCATION INDEX [SKYACTIV-D 2.2] 01-10B–2
ENGINE TUNE-UP [SKYACTIV-D 2.2] 01-10B–3
Engine Tune-up Preparation 01-10B–3
Idle Speed Inspection 01-10B–3
ENGINE COVER REMOVAL/INSTALLATION [SKYACTIV-D 2.2] 01-10B–4
Removal 01-10B–5
Installation 01-10B–6
DRIVE BELT INSPECTION [SKYACTIV-D 2.2] 01-10B–7
DRIVE BELT REMOVAL/INSTALLATION [SKYACTIV-D 2.2] 01-10B–8
DRIVE BELT AUTO TENSIONER INSPECTION [SKYACTIV-D 2.2] 01-10B–9
Drive Belt Auto Tensioner Removal Note 01-10B–11
Drive Belt Auto Tensioner Installation Note 01-10B–11
COMPRESSION INSPECTION [SKYACTIV-D 2.2] 01-10B–12
OIL CONTROL VALVE (OCV) INSPECTION [SKYACTIV-D 2.2] 01-10B–13
Coil Resistance Inspection 01-10B–13
Spool Valve Operation Inspection 01-10B–14
OIL CONTROL VALVE (OCV) REMOVAL/INSTALLATION [SKYACTIV-D 2.2] 01-10B–15
OCV Connector Disconnection Note 01-10B–15
OCV Installation Note 01-10B–15
OCV Installation Bolt Installation Note 01-10B–15
TIMING CHAIN REMOVAL/INSTALLATION [SKYACTIV-D 2.2] 01-10B–16
Cylinder Head Cover Removal Note . . 01-10B–19
No.3 Engine Mount Removal Note 01-10B–21
Water Pipe Removal Note 01-10B–26
Noise Suppression Cover (No.1), Noise Suppression Cover (No.2), Seal Rubber Removal Note 01-10B–26
Engine Front Cover Removal Note 01-10B–29
Timing Chain Removal Note 01-10B–30
Oil Pump Chain Removal Note 01-10B–32
Oil Pump Chain Installation Note 01-10B–34
Timing Chain Installation Note 01-10B–36
Engine Front Cover Installation Note 01-10B–38
Noise Suppression Cover (No.1), Noise Suppression Cover (No.2), Seal Rubber Installation Note 01-10B–41
Water Pipe Installation Note 01-10B–42
Drive Belt Auto Tensioner Installation Note 01-10B–42
No.3 Engine Mount Installation Note 01-10B–43
Oil Shower Pipe Installation Note 01-10B–45
Cylinder Head Cover Installation Note 01-10B–46
Insulator Installation Note 01-10B–48
HYDRAULIC LASH ADJUSTER (HLA) INSPECTION [SKYACTIV-D 2.2] 01-10B–48
HLA Troubleshooting 01-10B–48
HLA Inspection 01-10B–49
HYDRAULIC LASH ADJUSTER (HLA) REMOVAL/INSTALLATION [SKYACTIV-D 2.2] 01-10B–49
Noise Suppression Cover (No.1), Seal Rubber Removal Note 01-10B–52
Timing Chain Removal Note 01-10B–53
Camshaft Removal Note 01-10B–56
Rocker Arm Removal Note 01-10B–56
HLA Removal Note 01-10B–56
HLA Installation Note 01-10B–57
Rocker Arm Installation Note 01-10B–57
Camshaft Installation Note 01-10B–58
Timing Chain Installation Note 01-10B–61
Noise Suppression Cover (No.1), Seal Rubber Installation Note 01-10B–63
Oil Shower Pipe Installation Note 01-10B–64
CYLINDER HEAD GASKET REPLACEMENT [SKYACTIV-D 2.2] . . 01-10B–65
Camshaft Removal Note 01-10B–67
Rocker Arm Removal Note 01-10B–67
Cylinder Head Removal Note 01-10B–67
Cylinder Head Installation Note 01-10B–68
Rocker Arm Installation Note 01-10B–69
Camshaft Installation Note 01-10B–69
FRONT OIL SEAL REPLACEMENT [SKYACTIV-D 2.2] 01-10B–72
Crankshaft Pulley Lock Bolt Removal Note 01-10B–73
Front Oil Seal Removal Note 01-10B–74
Front Oil Seal Installation Note 01-10B–75
Crankshaft Pulley Lock Bolt Installation Note 01-10B–76
REAR OIL SEAL REPLACEMENT [SKYACTIV-D 2.2] 01-10B–78
Rear Oil Seal Removal Note 01-10B–79
Rear Oil Seal Installation Note 01-10B–79
ENGINE MOUNT DISASSEMBLY/ASSEMBLY [SKYACTIV-D 2.2] 01-10B–80
No.1 Engine Mount (2WD) 01-10B–80
No.1 Engine Mount (4WD) 01-10B–82
No.3 Engine Mount 01-10B–86
No.4 Engine Mount 01-10B–93
ENGINE REMOVAL/INSTALLATION [SKYACTIV-D 2.2] 01-10B–98
No.1 Engine Mount Rubber, Front Crossmember Component Removal Note 01-10B–102
No.3 Engine Mount, No.4 Engine Mount Bracket Removal Note 01-10B–102
Engine Mount Installation Note 01-10B–104
ENGINE DISASSEMBLY/ASSEMBLY [SKYACTIV-D 2.2] 01-10B–110
Noise Suppression Cover (No.1), Noise Suppression Cover (No.2), Seal Rubber Removal Note 01-10B–115
Noise Suppression Cover (No.1), Noise Suppression Cover (No.2), Seal Rubber Installation Note 01-10B–116

MECHANICAL [SKYACTIV-D 2.2]

Water pump component installation note 01-10B–116
Drive Belt Auto Tensioner Installation Note 01-10B–117

MECHANICAL [SKYACTIV-D 2.2]

ENGINE LOCATION INDEX [SKYACTIV-D 2.2]

id0110s5800100

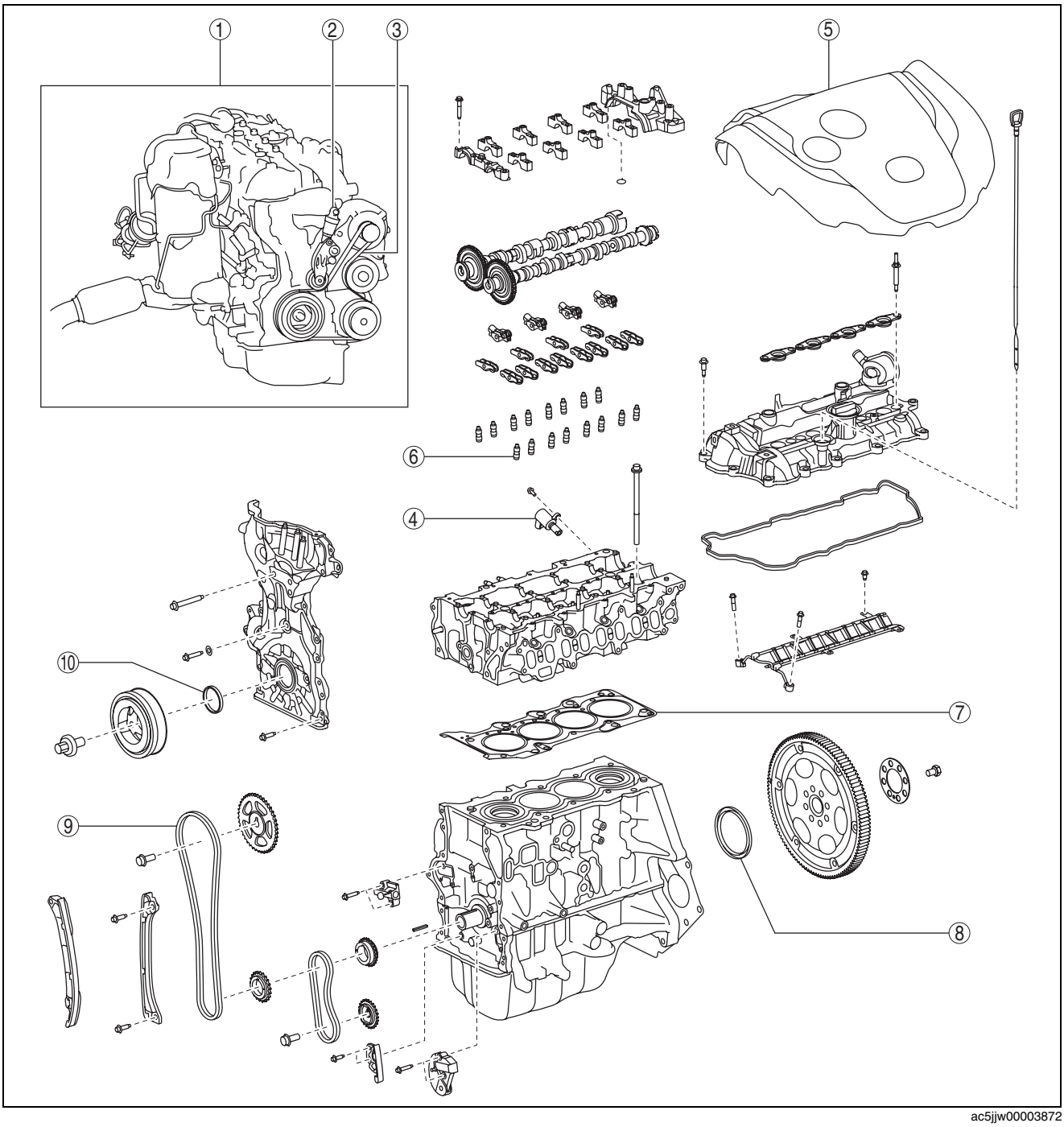

ac5jjw00003872

MECHANICAL [SKYACTIV-D 2.2]

1	Engine (See 01-10B-3 ENGINE TUNE-UP [SKYACTIV-D 2.2].) (See 01-10B-12 COMPRESSION INSPECTION [SKYACTIV-D 2.2].) (See 01-10B-80 ENGINE MOUNT DISASSEMBLY/ ASSEMBLY [SKYACTIV-D 2.2].) (See 01-10B-98 ENGINE REMOVAL/ INSTALLATION [SKYACTIV-D 2.2].) (See 01-10B-110 ENGINE DISASSEMBLY/ ASSEMBLY [SKYACTIV-D 2.2].)
2	Drive belt auto tensioner (See 01-10B-9 DRIVE BELT AUTO TENSIONER INSPECTION [SKYACTIV-D 2.2].)
3	Drive belt (See 01-10B-7 DRIVE BELT INSPECTION [SKYACTIV-D 2.2].) (See 01-10B-8 DRIVE BELT REMOVAL/ INSTALLATION [SKYACTIV-D 2.2].)
4	OCV (See 01-10B-13 OIL CONTROL VALVE (OCV) INSPECTION [SKYACTIV-D 2.2].) (See 01-10B-15 OIL CONTROL VALVE (OCV) REMOVAL/INSTALLATION [SKYACTIV-D 2.2].)
5	Engine cover (See 01-10B-4 ENGINE COVER REMOVAL/ INSTALLATION [SKYACTIV-D 2.2].)
6	Hydraulic lash adjuster (HLA) (See 01-10B-48 HYDRAULIC LASH ADJUSTER (HLA) INSPECTION [SKYACTIV-D 2.2].) (See 01-10B-49 HYDRAULIC LASH ADJUSTER (HLA) REMOVAL/INSTALLATION [SKYACTIV-D 2.2].)
7	Cylinder head gasket (See 01-10B-65 CYLINDER HEAD GASKET REPLACEMENT [SKYACTIV-D 2.2].)
8	Rear oil seal (See 01-10B-78 REAR OIL SEAL REPLACEMENT [SKYACTIV-D 2.2].)
9	Timing chain (See 01-10B-16 TIMING CHAIN REMOVAL/ INSTALLATION [SKYACTIV-D 2.2].)
10	Front oil seal (See 01-10B-72 FRONT OIL SEAL REPLACEMENT [SKYACTIV-D 2.2].)

ENGINE TUNE-UP [SKYACTIV-D 2.2]

id0110s5800600

Engine Tune-up Preparation

Note
- If the accelerator pedal is depressed continuously for a specified time, the engine speed may decrease to the idle speed. This is due to the fuel cut control operation, which prevents overheating, and it does not indicate a malfunction. The engine speed returns to normal control when the accelerator pedal is released.

1. Connect the M-MDS to the DLC-2.
2. Shift the selector lever (ATX) or shift lever (MTX) to the following position:
   - MTX: Shift lever is in neutral position.
   - ATX: Selector lever is in P or N position.

Note
- The engine coolant temperature and oil temperature can be verified by M-MDS PID “ECT” and “OIL_TEMP”.

3. Run the engine speed at a constant **2,500 to 3,000 rpm** and warm up the engine (engine coolant temperature: **80 °C {176 °F}** or more, oil temperature: **60 °C {140 °F}** or more).
4. Turn off all electrical loads with the engine idling.
5. If the cooling fan is operating, wait until is stops.

Idle Speed Inspection

Note
- The idle speed cannot be adjusted.
- The M-MDS is required to verify the idle speed.

1. Complete the engine tune-up preparation. (See 01-10B-3 Engine Tune-up Preparation.)
2. Verify that the difference between the target idle speed (PID: ARPMDES) and the engine speed (PID: RPM) is within **50 rpm** using the M-MDS data monitor function.
   - If there is a malfunction, refer to “ENGINE SYMPTOM TROUBLESHOOTING”.

Difference between target idle speed and the engine speed
Within 50 rpm

MECHANICAL [SKYACTIV-D 2.2]

Target idle speed (reference)
[MTX]
Normal: 750 rpm
DPF auto regeneration: 775 rpm
Injector learning: 775 rpm
[ATX]
Normal: 800 rpm
DPF auto regeneration: 800 rpm
Injector learning: 775 rpm

ENGINE COVER REMOVAL/INSTALLATION [SKYACTIV-D 2.2]

id0110s5804300

Caution
- **If the rubber on only one side of the engine cover front is lifted up, it could damage the adapter at the location shown in the figure. When removing the engine cover, lift up the rubbers at the same time.**

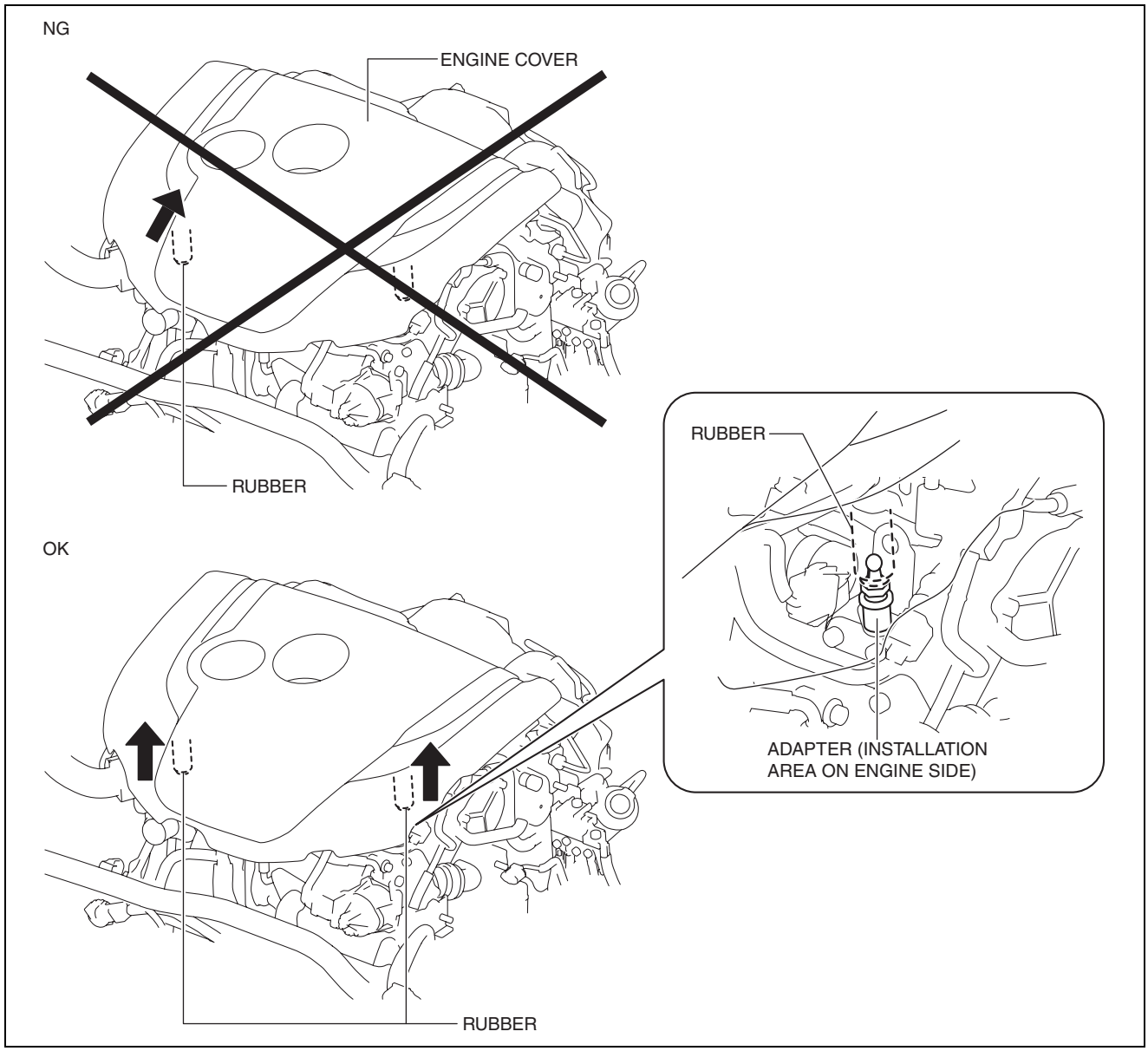

ac5wzw0000527

Removal

1. Pull up the front part of the engine cover at the same time and remove the rubber from the adapter on the engine side.

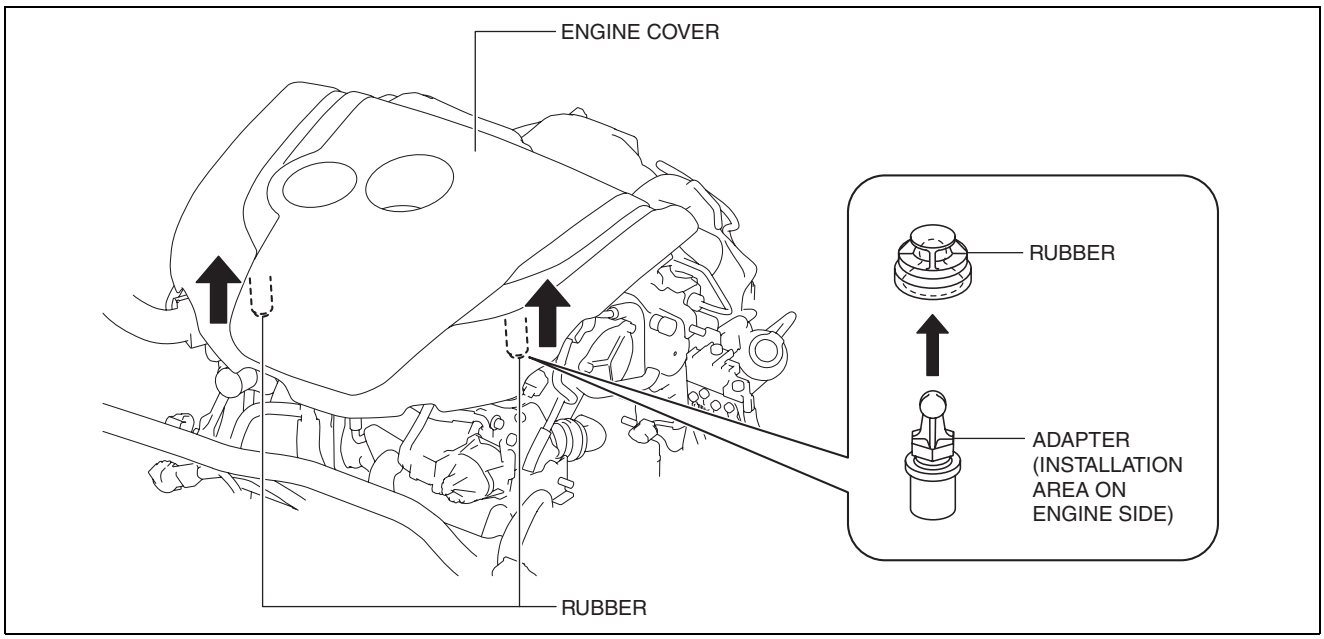

ac5wzw0000506

2. Pull up the engine cover in the order shown in the figure and remove the adapter from the rubber on the engine side.

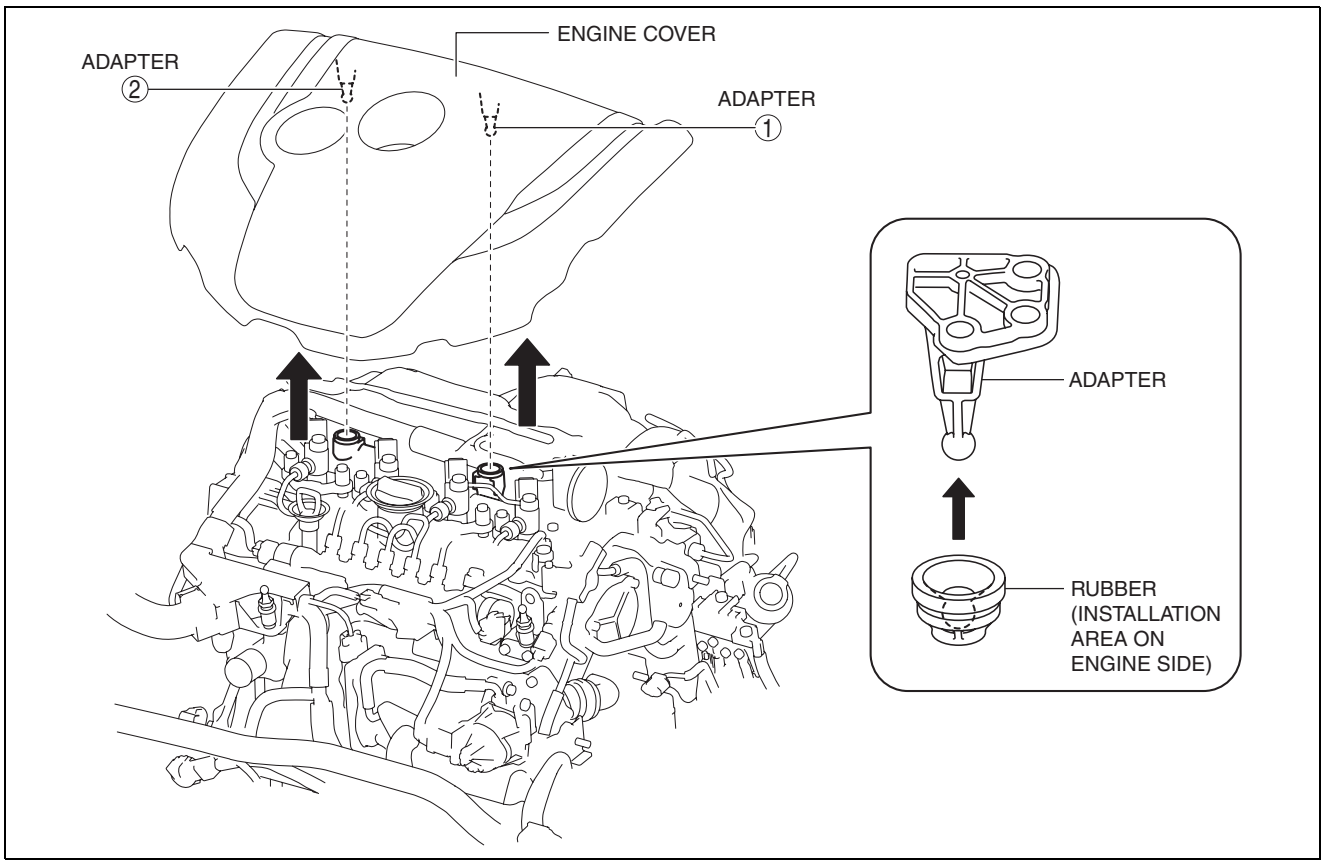

ac5wzw0000506

MECHANICAL [SKYACTIV-D 2.2]

Installation

1. Press the engine cover in the order shown in the figure to insert the adapter to the rubber on the engine side.

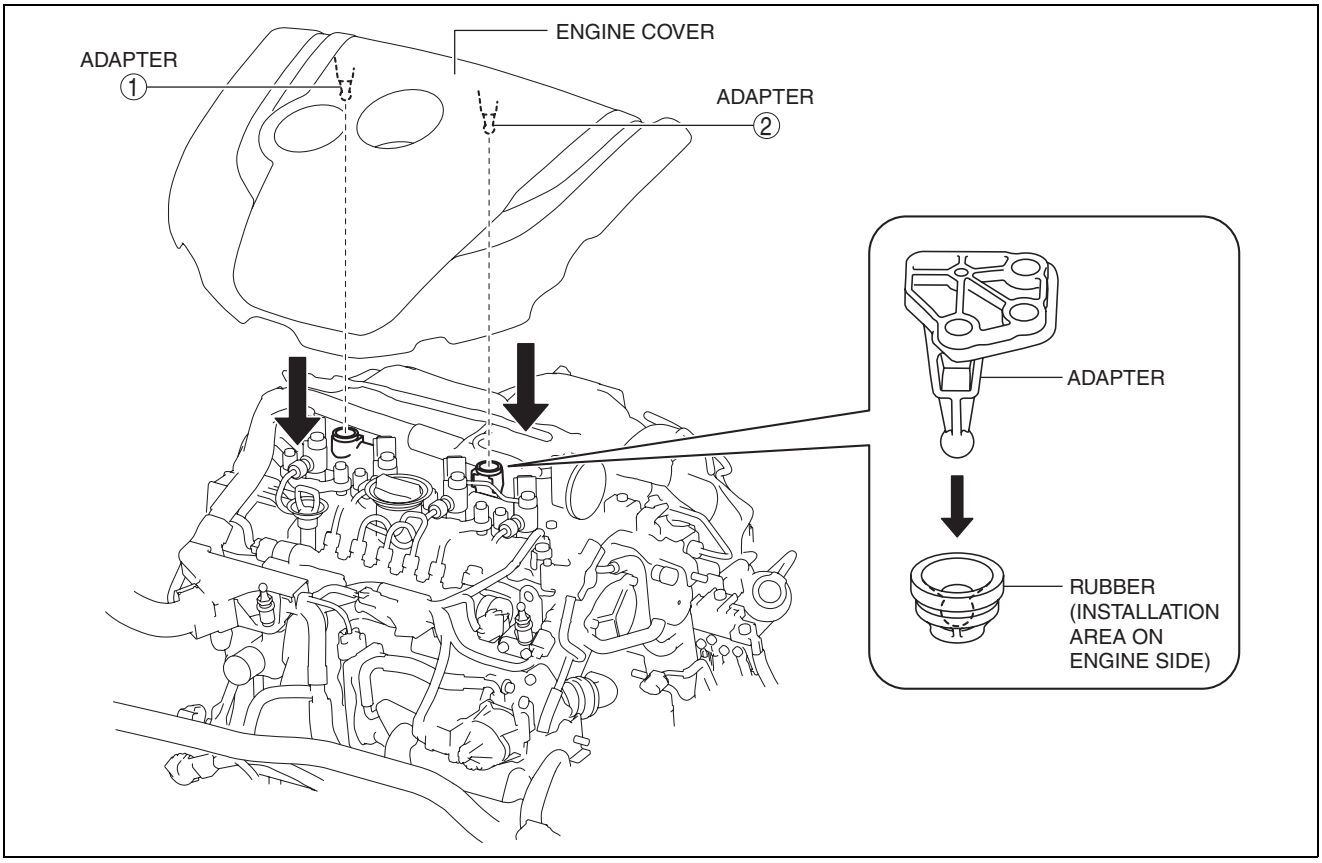

ac5wzw0000506

2. Press the front part of the engine cover at the same time to insert the rubber to the adapter on the engine side.

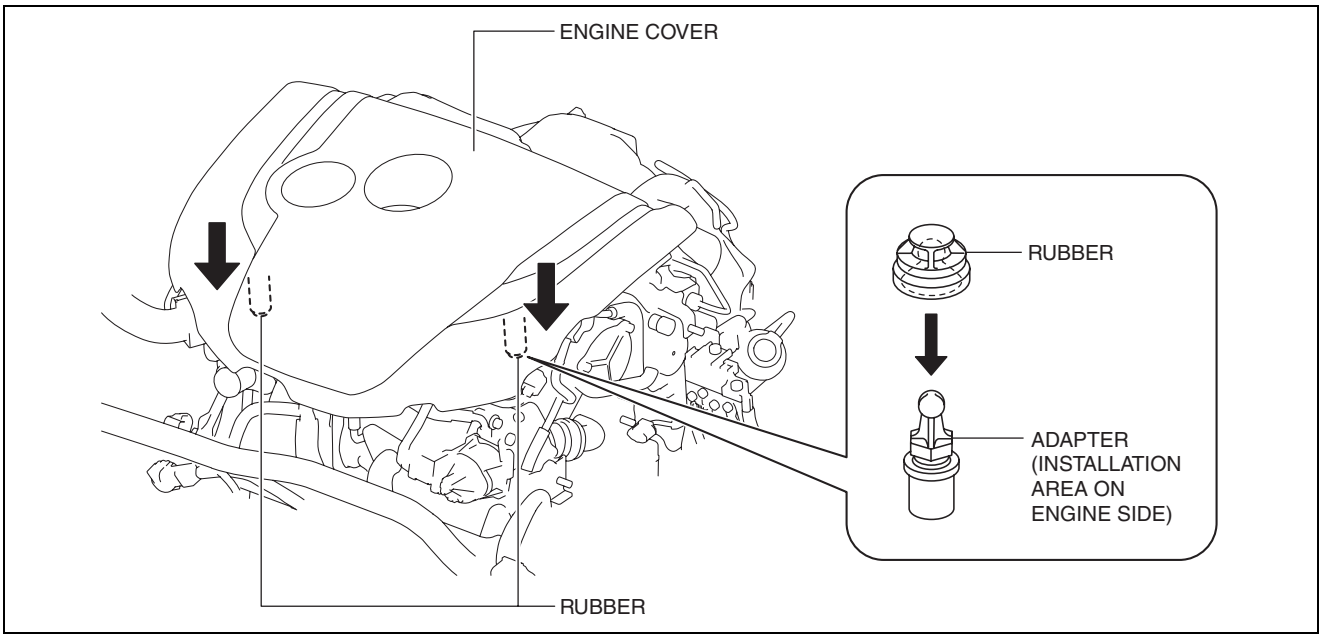

ac5wzw0000506

MECHANICAL [SKYACTIV-D 2.2]

DRIVE BELT INSPECTION [SKYACTIV-D 2.2]

id0110s5801500

Note
- The drive belt deflection/tension inspection is not necessary with the adoption of the drive belt auto tensioner.

1. Verify that the indicator part of the engine side is within the normal range of the drive belt auto tensioner indicator mark.

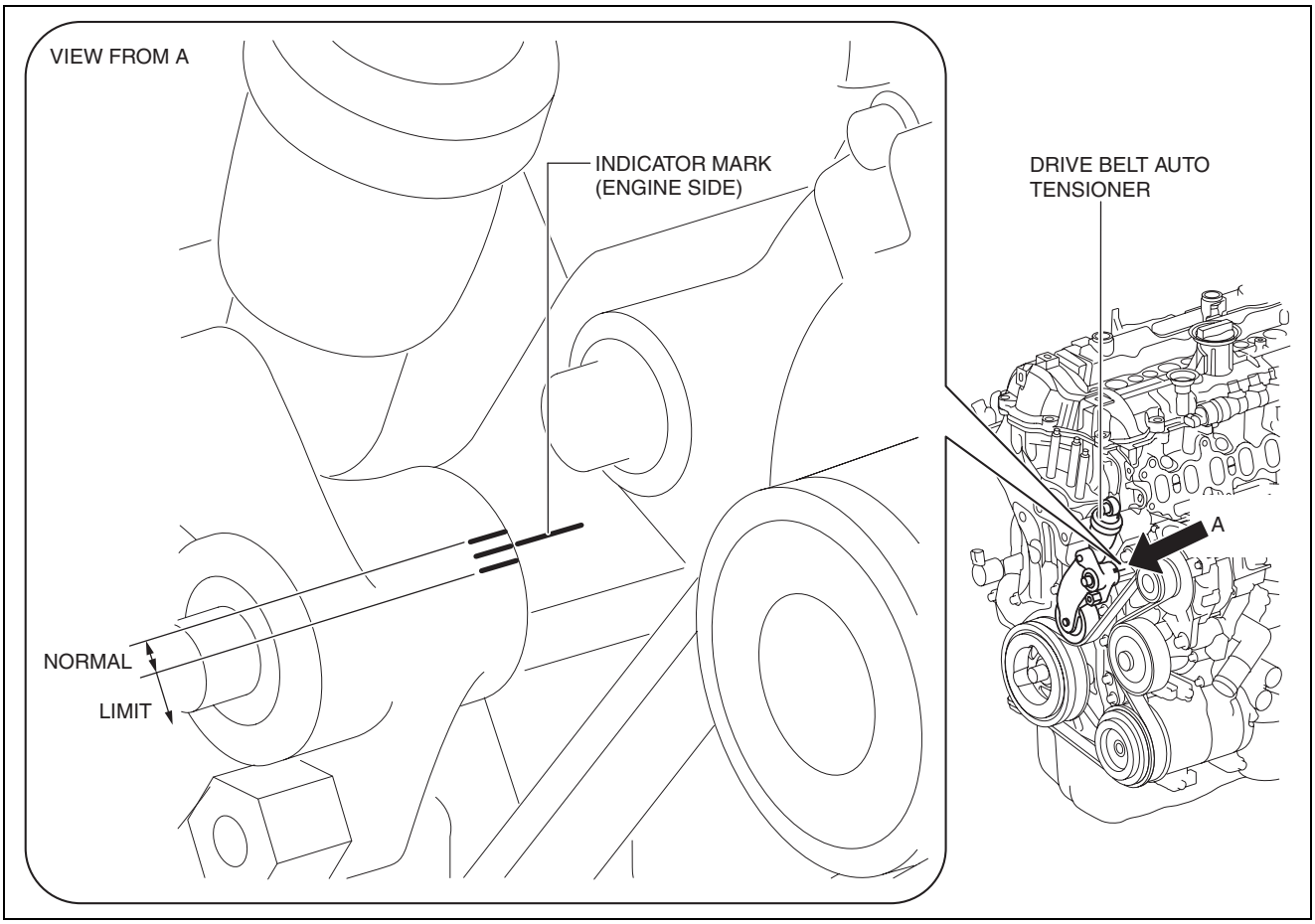

ac5wzw0000525

- If it exceeds the limit, replace the drive belt. (See 01-10B-8 DRIVE BELT REMOVAL/INSTALLATION [SKYACTIV-D 2.2].)

MECHANICAL [SKYACTIV-D 2.2]

DRIVE BELT REMOVAL/INSTALLATION [SKYACTIV-D 2.2]

id0110s5801600

Warning
- **A hot engine can cause severe burns. Turn off the engine and wait until it is cool before servicing.**

Caution
- **To prevent damage to the drive belt auto tensioner, do not apply excessive torque after the tensioner moves full-stroke.**

Note
- Remove/install the drive belt from the underside of the vehicle.

1. Remove the front under cover No.2. (See 09-16-41 FRONT UNDER COVER No.2 REMOVAL/INSTALLATION.)
2. Remove the splash shield. (RH) (See 09-16-49 SPLASH SHIELD REMOVAL/INSTALLATION.)
3. Insert a wrench onto the cast hexagon on the drive belt auto tensioner and release the tension by slowly turning in the direction shown in the figure.
4. Remove the drive belt.
5. Install the drive belt.
6. Rotate the crankshaft pulley clockwise approx. halfway and verify that the drive belt is installed correctly.
   - If the rib of the drive belt and the groove of each pulley are not aligned, remove the drive belt and re-install it.
7. Verify that the drive belt auto tensioner indicator mark does not exceeds the limit.(See 01-10B-7 DRIVE BELT INSPECTION [SKYACTIV-D 2.2].)
8. Install the splash shield. (RH) (See 09-16-49 SPLASH SHIELD REMOVAL/INSTALLATION.)
9. Install the front under cover No.2. (See 09-16-41 FRONT UNDER COVER No.2 REMOVAL/INSTALLATION.)

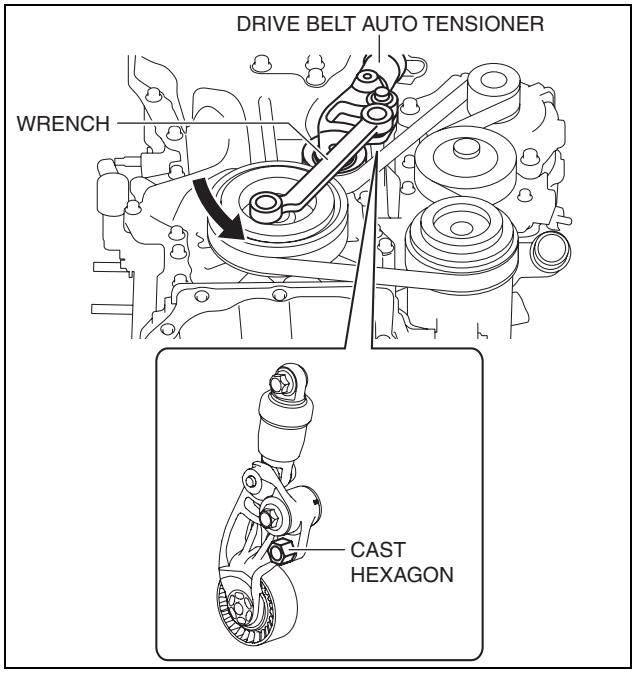

ac5wzw0000502

MECHANICAL [SKYACTIV-D 2.2]

DRIVE BELT AUTO TENSIONER INSPECTION [SKYACTIV-D 2.2]

id0110s5801700

Warning
- **A hot engine can cause severe burns. Turn off the engine and wait until it is cool before servicing.**

Caution
- **If the rubber part of the drive belt auto tensioner is damaged by a screwdriver or other tool, oil in the hydraulic pressure unit could leak and the tensioner may not operate normally. Be careful not to damage the rubber part of the drive belt auto tensioner.**

1. Remove the drive belt. (See 01-10B-8 DRIVE BELT REMOVAL/INSTALLATION [SKYACTIV-D 2.2].)

Caution
- **To prevent damage to the drive belt auto tensioner, do not apply excessive torque after the tensioner moves full-stroke.**

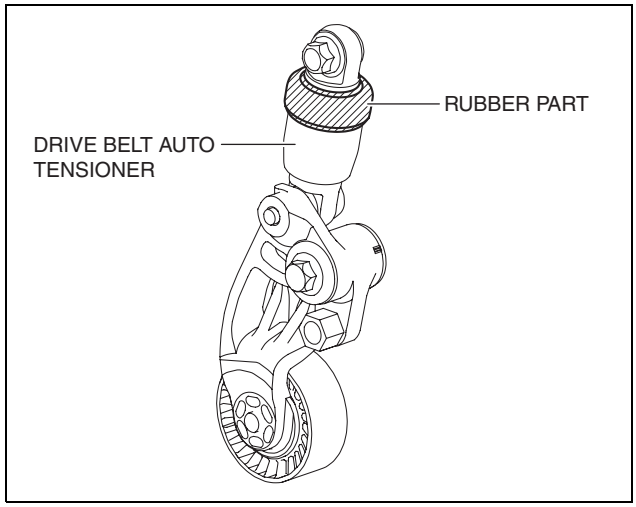

ac5wzw0000502

2. Insert the wrench onto the cast hexagon on the drive belt auto tensioner, slowly turn it in the direction of the arrow shown in the figure, and fully depress.

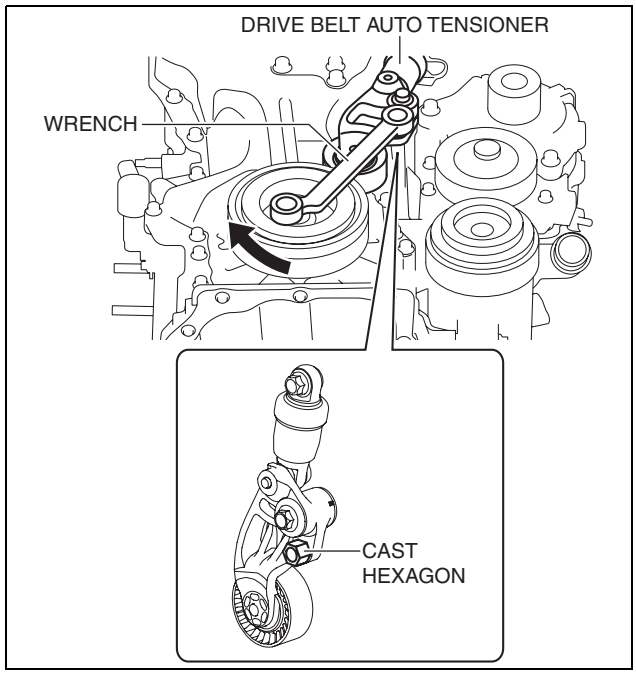

ac5wzw0000525

MECHANICAL [SKYACTIV-D 2.2]

Note
- The drive belt auto tensioner is operated in the direction of the arrow by turning the wrench.

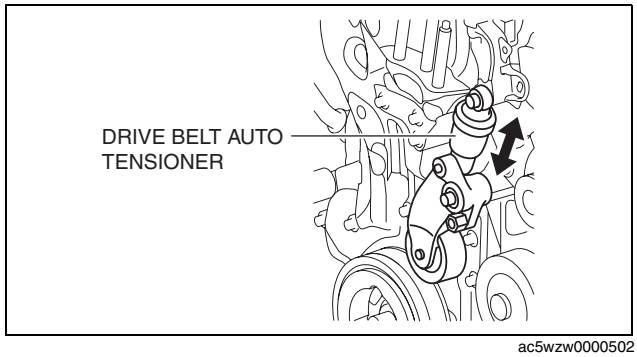

ac5wzw0000502

3. Verify that the drive belt auto tensioner moves smoothly in the operational direction.
   - If it does not move smoothly, air infiltration into the inner hydraulic pressure unit can be considered. Move the drive belt auto tensioner up and down at full stroke three times to bleed the air.
     — After bleeding the air, if the drive belt auto tensioner still does not move smoothly when re-inspecting, replace the drive belt auto tensioner. (See 01-10B-11 Drive Belt Auto Tensioner Removal Note.) (See 01-10B-11 Drive Belt Auto Tensioner Installation Note.)

Note
- By moving the drive belt auto tensioner up and down full-stroke three times, the piston inside the tensioner moves to bleed the air.

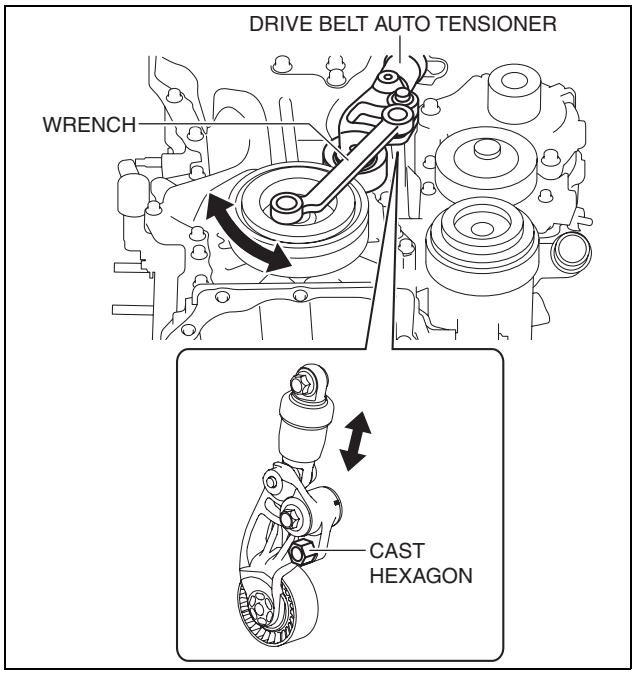

ac5wzw0000525

4. Turn the drive belt auto tensioner pulley by hand and verify that it rotates smoothly.
   - If it does not move smoothly, replace the drive belt auto tensioner. (See 01-10B-11 Drive Belt Auto Tensioner Removal Note.) (See 01-10B-11 Drive Belt Auto Tensioner Installation Note.)
5. Install the drive belt. (See 01-10B-8 DRIVE BELT REMOVAL/INSTALLATION [SKYACTIV-D 2.2].)

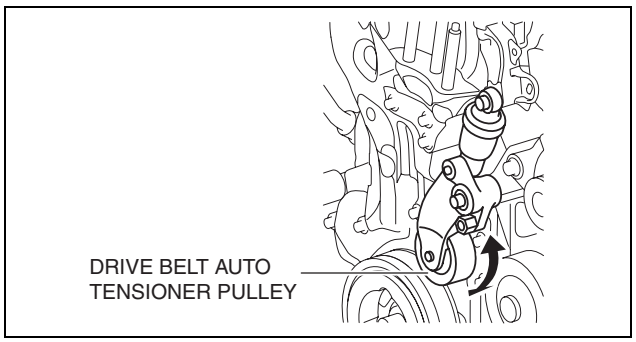

ac5wzw0000502

MECHANICAL [SKYACTIV-D 2.2]

Drive Belt Auto Tensioner Removal Note

1. Remove the engine cover. (See 01-10B-4 ENGINE COVER REMOVAL/INSTALLATION [SKYACTIV-D 2.2].)
2. Remove the wiring harness protector bolt and set the wiring harness aside.

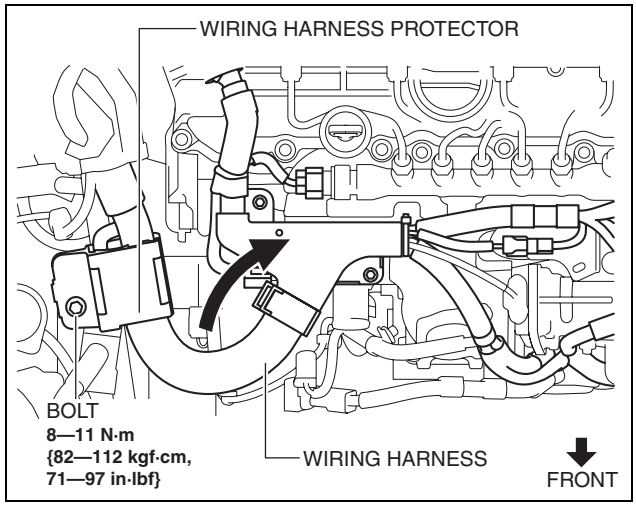

ac5wzw0000525

3. Remove the drive belt auto tensioner installation bolt.
4. Remove the drive belt auto tensioner.

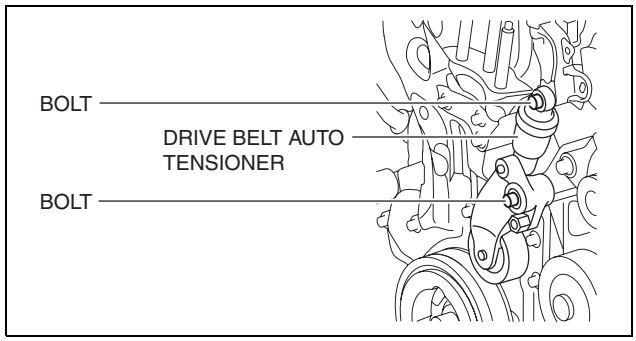

ac5wzw0000503

Drive Belt Auto Tensioner Installation Note

Caution

- **To allow the drive belt auto tensioner to function correctly, always bleed the air from the drive belt auto tensioner using the following procedure after assembling the drive belt auto tensioner.**

1. Install the drive belt auto tensioner to the engine.

Caution

- **To prevent damage to the drive belt auto tensioner, do not apply excessive torque after the tensioner moves full-stroke.**

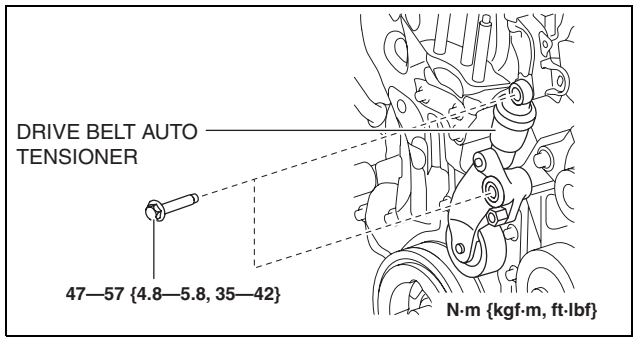

ac5wzw0000503

MECHANICAL [SKYACTIV-D 2.2]

2. Insert the wrench onto the cast hexagon on the drive belt auto tensioner, move the drive belt auto tensioner up and down at full-stroke three times to bleed the air.

   Note
   - By moving the drive belt auto tensioner up and down full-stroke three times, the piston inside the tensioner moves to bleed the air.

3. Install the wiring harness protector bolt.
4. Install the engine cover. (See 01-10B-4 ENGINE COVER REMOVAL/INSTALLATION [SKYACTIV-D 2.2].)

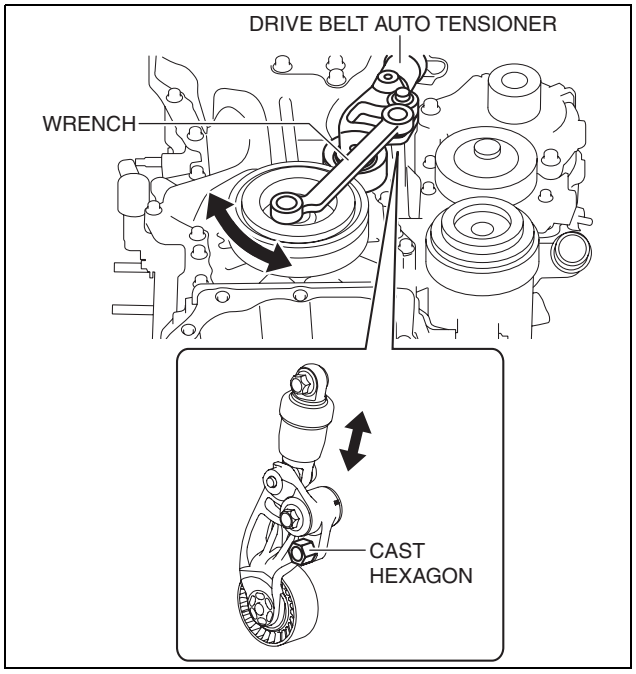

ac5wzw0000525

COMPRESSION INSPECTION [SKYACTIV-D 2.2]

id0110s5800300

Warning
- **Hot engines and oil can cause severe burns. Be careful not to burn yourself during removal/installation of each component.**
- **Fuel vapor is hazardous. It can very easily ignite, causing serious injury and damage. Always keep sparks and flames away from fuel.**
- **Fuel line spills and leakage from the pressurized fuel system are dangerous. Fuel can ignite and cause serious injury or death, and damage to property and facilities. If fuel comes into contact with the skin and eyes it will cause irritation. To prevent this, always complete the "Fuel Line Safety Procedure". (See 01-14B-6 BEFORE SERVICE PRECAUTION [SKYACTIV-D 2.2].)**

1. Verify that the battery is fully charged. (See 01-17B-6 BATTERY INSPECTION [SKYACTIV-D 2.2].)
   - Recharge it if necessary. (See 01-17B-8 BATTERY RECHARGING [SKYACTIV-D 2.2].)
2. Warm up the engine to the normal operating temperature.
3. Perform "Fuel Line Safety Procedures". (See 01-14B-6 BEFORE SERVICE PRECAUTION [SKYACTIV-D 2.2].)
4. Remove the engine cover. (See 01-10B-4 ENGINE COVER REMOVAL/INSTALLATION [SKYACTIV-D 2.2].)
5. Remove the glow plugs. (See 01-13B-28 GLOW PLUG REMOVAL/INSTALLATION [SKYACTIV-D 2.2].)
6. Install the SST using the following procedure.
   (1) Install the SST (49 S013 102A) to the glow plug installation hole.
   (2) Tighten the SST to the specified torque.

   Tightening torque
   15—20 N·m {1.6—2.0 kgf·m, 12—14 ft·lbf}

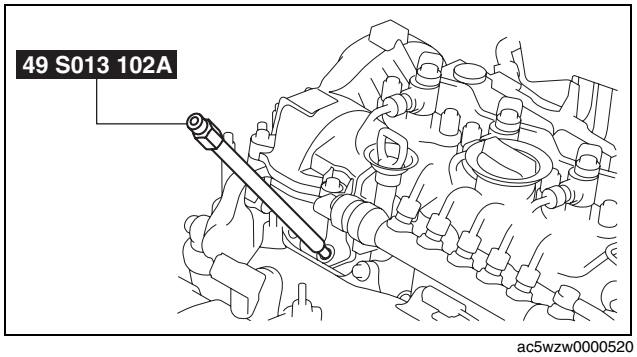

ac5wzw0000520

MECHANICAL [SKYACTIV-D 2.2]

(3) Connect the SST (49 S010 1A0A) to the SST (49 S013 102A).

7. Measure the compression pressure using the following procedure.
   (1) Fully depress the accelerator pedal.
   (2) Crank the engine and measure the compression pressure.

Compression

Standard: 2255 kPa {22.99 kgf/cm^2, 327.1 psi} [180 rpm]

Minimum: 1804 kPa {18.40 kgf/cm^2, 261.6 psi} [180 rpm]

Maximum difference between cylinders: 147 kPa {1.50 kgf/cm^2, 21.3 psi} [180 rpm]

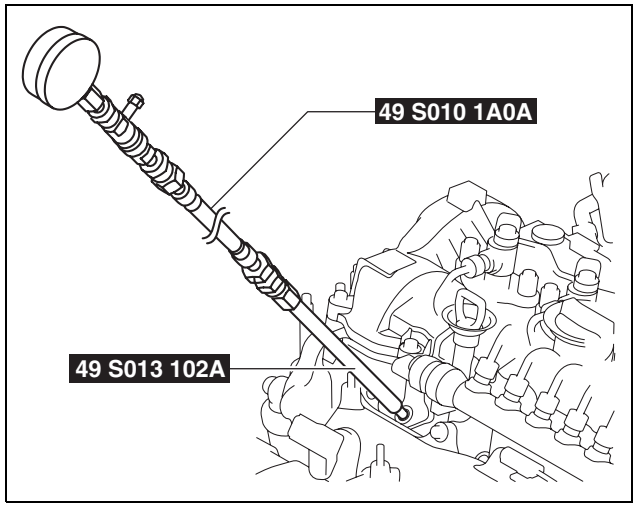

ac5wzw0000520

(3) Perform Steps (1) to (2) for all cylinders.
(4) If the measured value is less than the minimum value, or there is a cylinder whose compression value varies from that of other cylinders by **147 kPa {1.50 kgf/cm^2, 21.3 psi}** or more, add a small amount of engine oil through the glow plug installation hole and perform Steps (1) to (3).
   - If the pressure increases by adding the engine oil, the piston ring or the cylinder surface is worn, or they are damaged. Perform overhaul servicing.
   - If the pressure does not increase, valve seizure, valve attachment malfunction, or pressure leakage from the cylinder head gasket might be occurring. Perform overhaul servicing.

8. Remove the SSTs.
9. Install the glow plugs. (See 01-13B-28 GLOW PLUG REMOVAL/INSTALLATION [SKYACTIV-D 2.2].)
10. Install the engine cover. (See 01-10B-4 ENGINE COVER REMOVAL/INSTALLATION [SKYACTIV-D 2.2].)
11. Clear the DTC for the PCM using the M-MDS.

OIL CONTROL VALVE (OCV) INSPECTION [SKYACTIV-D 2.2]

id0110s5801400

Coil Resistance Inspection

1. Disconnect the negative battery cable. (See 01-17B-9 NEGATIVE BATTERY CABLE DISCONNECTION/CONNECTION [SKYACTIV-D 2.2].)
2. Remove the engine cover. (See 01-10B-4 ENGINE COVER REMOVAL/INSTALLATION [SKYACTIV-D 2.2].)
3. Remove the battery. (See 01-17B-3 BATTERY REMOVAL/INSTALLATION [SKYACTIV-D 2.2].)
4. Remove the air inlet pipe and turbocharger air inlet hose as a single unit. (See 01-13B-6 INTAKE-AIR SYSTEM REMOVAL/INSTALLATION [SKYACTIV-D 2.2].)
5. Disconnect the OCV connector.
6. Measure the resistance between terminals A and B using an ohmmeter.

OCV coil resistance
6.9—7.9 ohms [20°C {68°F}]

   - If not as specified, replace the OCV. (See 01-10B-15 OIL CONTROL VALVE (OCV) REMOVAL/INSTALLATION [SKYACTIV-D 2.2].)

7. Install in the reverse order of removal.

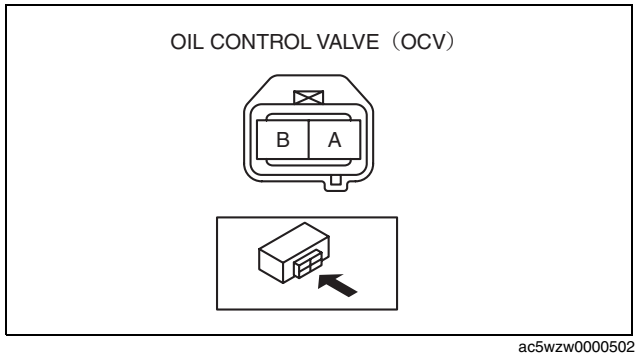

ac5wzw0000502

MECHANICAL [SKYACTIV-D 2.2]

Spool Valve Operation Inspection

1. Disconnect the negative battery cable. (See 01-17B-9 NEGATIVE BATTERY CABLE DISCONNECTION/CONNECTION [SKYACTIV-D 2.2].)
2. Remove the engine cover. (See 01-10B-4 ENGINE COVER REMOVAL/INSTALLATION [SKYACTIV-D 2.2].)
3. Remove the battery. (See 01-17B-3 BATTERY REMOVAL/INSTALLATION [SKYACTIV-D 2.2].)
4. Remove the air inlet pipe and turbocharger air inlet hose as a single unit. (See 01-13B-6 INTAKE-AIR SYSTEM REMOVAL/INSTALLATION [SKYACTIV-D 2.2].)
5. Remove the OCV. (See 01-10B-15 OIL CONTROL VALVE (OCV) REMOVAL/INSTALLATION [SKYACTIV-D 2.2].)
6. Verify that the spool valve inside the OCV is at the position shown in the figure from the hydraulic passage.
   - If there is any malfunction, replace the OCV. (See 01-10B-15 OIL CONTROL VALVE (OCV) REMOVAL/INSTALLATION [SKYACTIV-D 2.2].)
7. Verify that the battery is fully charged. (See 01-17B-6 BATTERY INSPECTION [SKYACTIV-D 2.2].)
   - If not as specified, recharge the battery. (See 01-17B-8 BATTERY RECHARGING [SKYACTIV-D 2.2].)

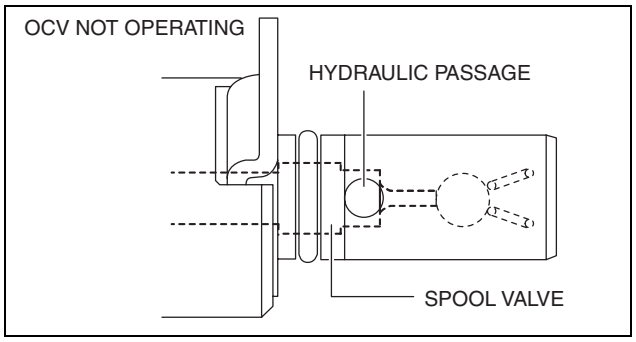

ac5wzw0000502

Note

- When applying battery positive voltage between the OCV terminals, the connection can be either of the following:
  - — Positive battery cable to terminal A, negative battery cable to terminal B
  - — Positive battery cable to terminal B, negative battery cable to terminal A

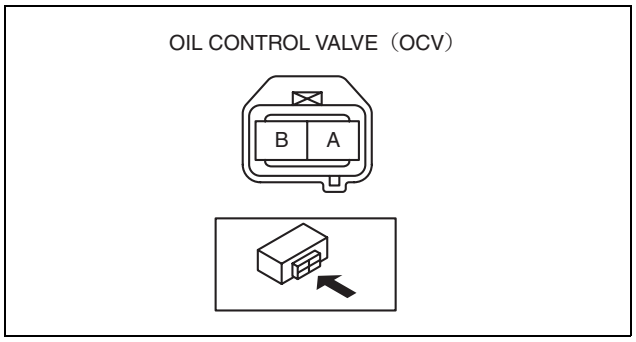

ac5wzw0000502

8. Verify that the spool valve operates and it moves to the position shown in the figure from the hydraulic passage when battery voltage is applied between OCV terminals A and B.
   - If there is any malfunction, replace the OCV. (See 01-10B-15 OIL CONTROL VALVE (OCV) REMOVAL/INSTALLATION [SKYACTIV-D 2.2].)
9. Stop applying battery positive voltage and verify that the spool valve returns to its original position.
   - If there is any malfunction, replace the OCV. (See 01-10B-15 OIL CONTROL VALVE (OCV) REMOVAL/INSTALLATION [SKYACTIV-D 2.2].)
10. Install the OCV. (See 01-10B-15 OIL CONTROL VALVE (OCV) REMOVAL/INSTALLATION [SKYACTIV-D 2.2].)
11. Install in the reverse order of removal.

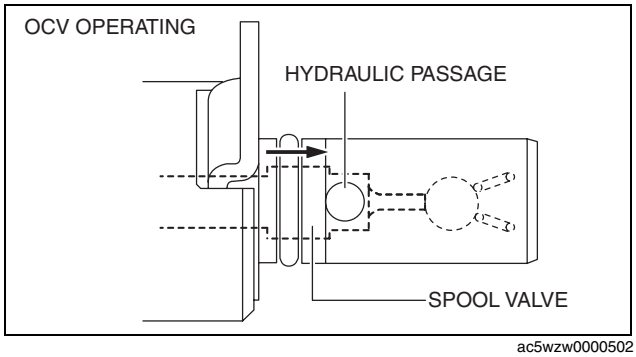

ac5wzw0000502

MECHANICAL [SKYACTIV-D 2.2]

OIL CONTROL VALVE (OCV) REMOVAL/INSTALLATION [SKYACTIV-D 2.2]

id0110s5801300

Warning
- **A hot engine can cause severe burns. Turn off the engine and wait until it is cool before servicing.**

1. Disconnect the negative battery cable. (See 01-17B-9 NEGATIVE BATTERY CABLE DISCONNECTION/ CONNECTION [SKYACTIV-D 2.2].)
2. Remove the engine cover. (See 01-10B-4 ENGINE COVER REMOVAL/INSTALLATION [SKYACTIV-D 2.2].)
3. Remove the battery. (See 01-17B-3 BATTERY REMOVAL/INSTALLATION [SKYACTIV-D 2.2].)
4. Remove the air inlet pipe and turbocharger air inlet hose as a single unit. (See 01-13B-6 INTAKE-AIR SYSTEM REMOVAL/INSTALLATION [SKYACTIV-D 2.2].)
5. Remove in the order indicated in the table.
6. Install in the reverse order of removal.

1	OCV installation bolt (See 01-10B-15 OCV Installation Bolt Installation Note.)
2	OCV connector (See 01-10B-15 OCV Connector Disconnection Note.)
2	OCV (See 01-10B-15 OCV Installation Note.)

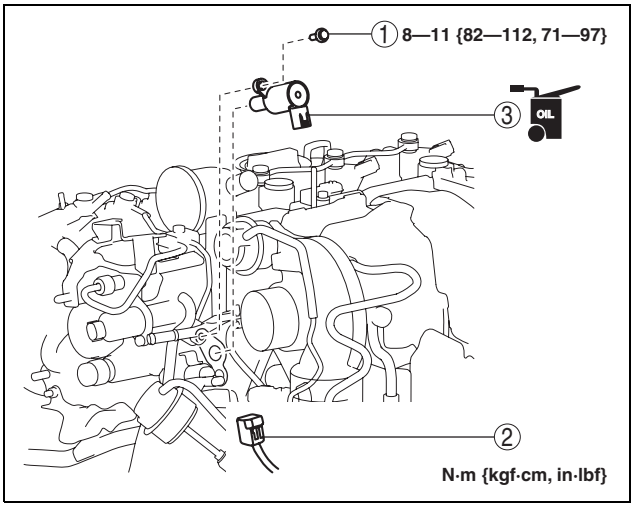

ac5wzw0000501

OCV Connector Disconnection Note
1. Pull out the OCV from the cylinder head with the OCV connector connected.
2. Disconnect the OCV connector.

OCV Installation Note

Caution
- **If the OCV is dropped accidentally, replace with a new one. Otherwise, the OCV may not operate normally.**
- **Do not allow foreign matter to get caught when installing. Otherwise, it could leak oil.**

OCV Installation Bolt Installation Note

Caution
- **If the installation bolt is tightened with oil adhering, the bolt could be twisted and cut. Always degrease the bolt.**

MECHANICAL [SKYACTIV-D 2.2]

TIMING CHAIN REMOVAL/INSTALLATION [SKYACTIV-D 2.2]

id0110s5801000

Warning

- **A hot engine can cause severe burns. Turn off the engine and wait until it is cool before servicing.**

Caution

- **When rotating the camshaft using a wrench on the cast hexagon, the wrench may contact the rocker arm and damage the rocker arm. To prevent damage to the rocker arm when holding the camshaft on the cast hexagon, use the wrench at engine rear side as shown in the figure to secure a clearance between the cam.**

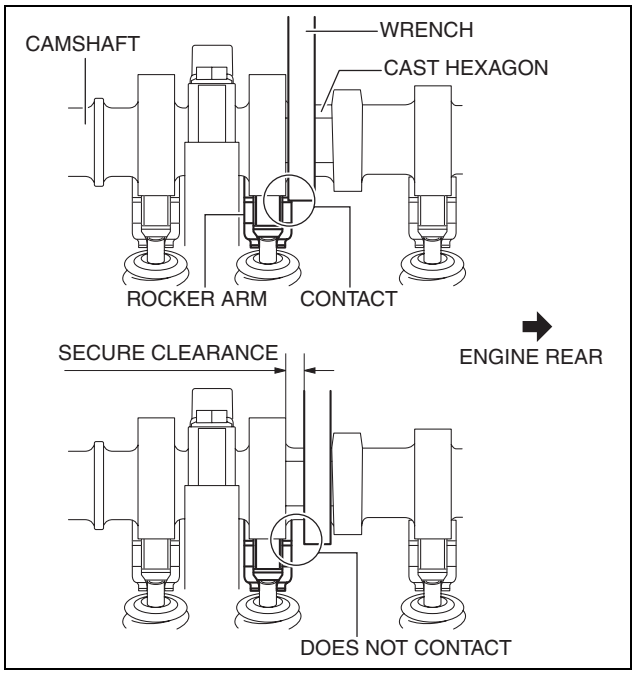

am3uuw0000883

Note

- Width at the cast hexagon of the camshaft is 22—24 mm {0.87—0.94 in}.

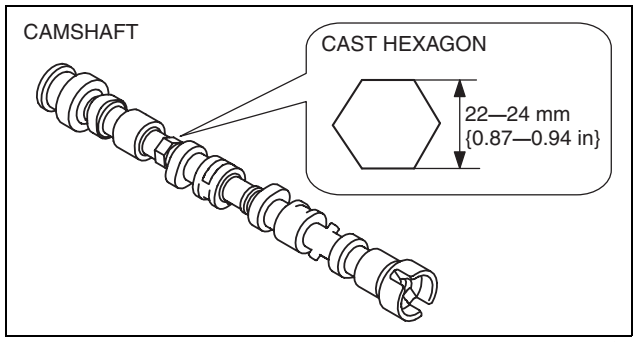

ac5wzw0000496

1. Disconnect the negative battery cable. (See 01-17B-9 NEGATIVE BATTERY CABLE DISCONNECTION/ CONNECTION [SKYACTIV-D 2.2].)
2. Remove the engine cover. (See 01-10B-4 ENGINE COVER REMOVAL/INSTALLATION [SKYACTIV-D 2.2].)
3. Remove the front under cover No.2. (See 09-16-41 FRONT UNDER COVER No.2 REMOVAL/INSTALLATION.)
4. Remove the splash shield. (See 09-16-49 SPLASH SHIELD REMOVAL/INSTALLATION.)
5. Remove the drive belt. (See 01-10B-8 DRIVE BELT REMOVAL/INSTALLATION [SKYACTIV-D 2.2].)
6. Drain the engine oil. (See 01-11B-4 ENGINE OIL REPLACEMENT [SKYACTIV-D 2.2].)
7. Remove the oil pan. (See 01-11B-15 OIL PAN REMOVAL/INSTALLATION [SKYACTIV-D 2.2].)
8. Remove the fuel injectors. (See 01-14B-35 FUEL INJECTOR REMOVAL/INSTALLATION [SKYACTIV-D 2.2].)
9. Drain the engine coolant. (See 01-12B-4 ENGINE COOLANT REPLACEMENT [SKYACTIV-D 2.2].)
10. Remove in the order indicated in the table.
11. Install in the reverse order of removal.
12. Refill with the specified type and amount of the engine oil. (See 01-11B-4 ENGINE OIL REPLACEMENT [SKYACTIV-D 2.2].)
13. Refill the engine coolant. (See 01-12B-4 ENGINE COOLANT REPLACEMENT [SKYACTIV-D 2.2].)
14. Inspect for engine coolant leakage. (See 01-12B-7 ENGINE COOLANT LEAKAGE INSPECTION [SKYACTIV-D 2.2].)
15. Start the engine and inspect the following:

MECHANICAL [SKYACTIV-D 2.2]

- Leakage of engine oil.
- Oil level (See 01-11B-3 ENGINE OIL LEVEL INSPECTION [SKYACTIV-D 2.2].)
- Runout and contact of pulley and belt.
- Idle speed (See 01-10B-3 ENGINE TUNE-UP [SKYACTIV-D 2.2].)

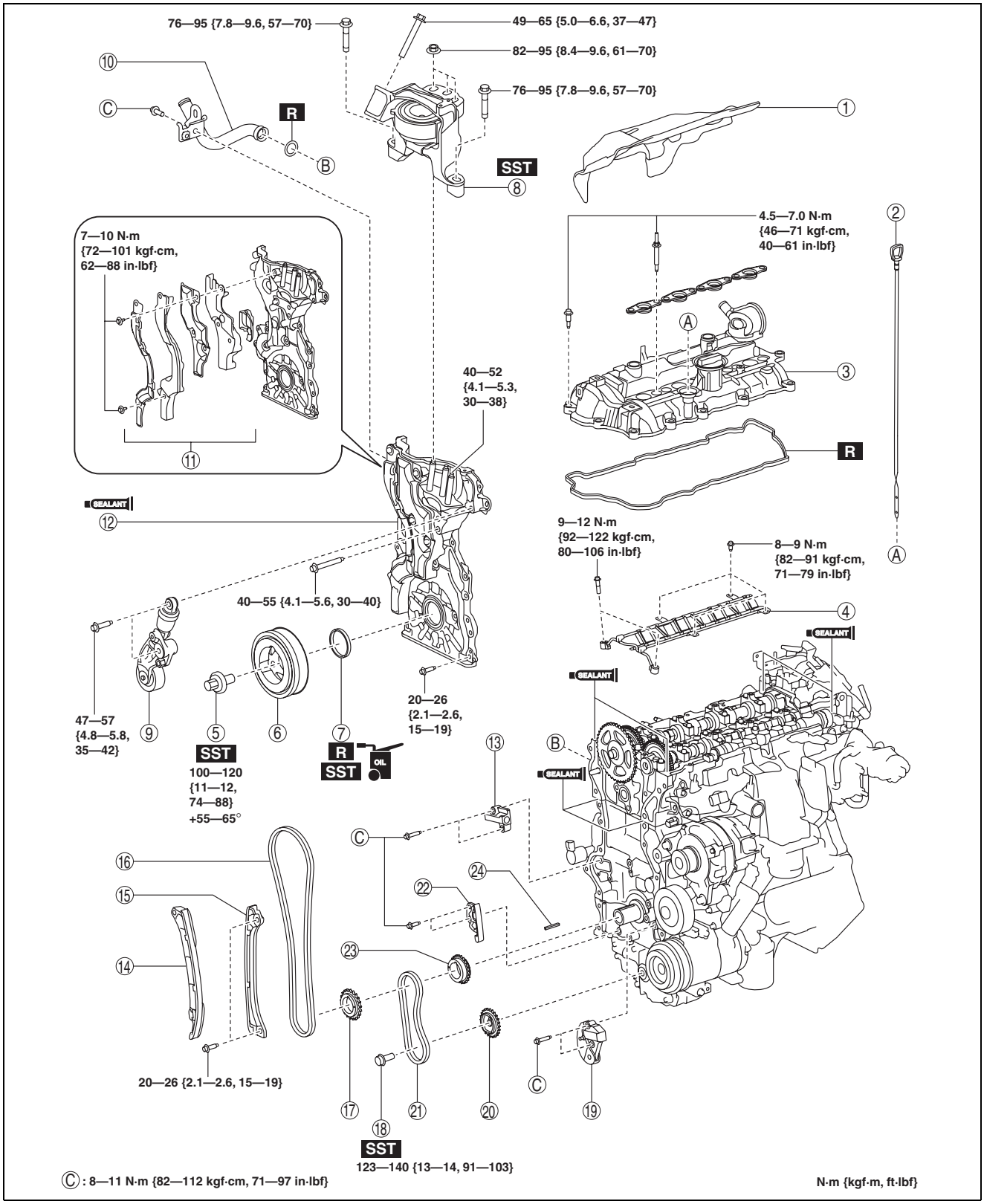

ac5wzw0000523

MECHANICAL [SKYACTIV-D 2.2]

1	Insulator (See 01-10B-48 Insulator Installation Note.)
2	Dipstick
3	Cylinder head cover (See 01-10B-19 Cylinder Head Cover Removal Note.) (See 01-10B-46 Cylinder Head Cover Installation Note.)
4	Oil shower pipe (See 01-10B-45 Oil Shower Pipe Installation Note.)
5	Crankshaft pulley lock bolt (See 01-10B-72 FRONT OIL SEAL REPLACEMENT [SKYACTIV-D 2.2].)
6	Crankshaft pulley (See 01-10B-72 FRONT OIL SEAL REPLACEMENT [SKYACTIV-D 2.2].)
7	Front oil seal (See 01-10B-72 FRONT OIL SEAL REPLACEMENT [SKYACTIV-D 2.2].)
8	No.3 engine mount (See 01-10B-21 No.3 Engine Mount Removal Note.) (See 01-10B-43 No.3 Engine Mount Installation Note.)
9	Drive belt auto tensioner (See 01-10B-42 Drive Belt Auto Tensioner Installation Note.)
10	Water pipe (See 01-10B-26 Water Pipe Removal Note.) (See 01-10B-42 Water Pipe Installation Note.)
11	Noise suppression cover (No.1), noise suppression cover (No.2), seal rubber (See 01-10B-26 Noise Suppression Cover (No.1), Noise Suppression Cover (No.2), Seal Rubber Removal Note.) (See 01-10B-41 Noise Suppression Cover (No.1), Noise Suppression Cover (No.2), Seal Rubber Installation Note.)
12	Engine front cover (See 01-10B-29 Engine Front Cover Removal Note.) (See 01-10B-38 Engine Front Cover Installation Note.)
13	Timing chain tensioner (See 01-10B-30 Timing Chain Removal Note.) (See 01-10B-36 Timing Chain Installation Note.)
14	Timing chain tensioner arm (See 01-10B-30 Timing Chain Removal Note.) (See 01-10B-36 Timing Chain Installation Note.)
15	Timing chain guide (See 01-10B-30 Timing Chain Removal Note.) (See 01-10B-36 Timing Chain Installation Note.)
16	Timing chain (See 01-10B-30 Timing Chain Removal Note.) (See 01-10B-36 Timing Chain Installation Note.)
17	Crankshaft sprocket
18	Oil pump driven sprocket installation bolt (See 01-10B-32 Oil Pump Chain Removal Note.) (See 01-10B-34 Oil Pump Chain Installation Note.)
19	Oil pump chain tensioner (See 01-10B-32 Oil Pump Chain Removal Note.) (See 01-10B-34 Oil Pump Chain Installation Note.)
20	Oil pump driven sprocket (See 01-10B-32 Oil Pump Chain Removal Note.) (See 01-10B-34 Oil Pump Chain Installation Note.)
21	Oil pump chain (See 01-10B-32 Oil Pump Chain Removal Note.) (See 01-10B-34 Oil Pump Chain Installation Note.)
22	Oil pump chain guide
23	Oil pump drive sprocket
24	Key

MECHANICAL [SKYACTIV-D 2.2]

Cylinder Head Cover Removal Note

1. Remove the fuel feed pipe. (See 01-14B-46 SUPPLY PUMP REMOVAL/INSTALLATION [SKYACTIV-D 2.2].)
2. Remove the injection pipe (supply pump side). (See 01-14B-33 INJECTION PIPE REMOVAL/INSTALLATION [SKYACTIV-D 2.2].)
3. Set the wiring harness and ground aside using the following procedure:
   (1) Remove the engine cover adapter and nuts shown in the figure.
   (2) Disconnect the connectors and clip shown in the figure.

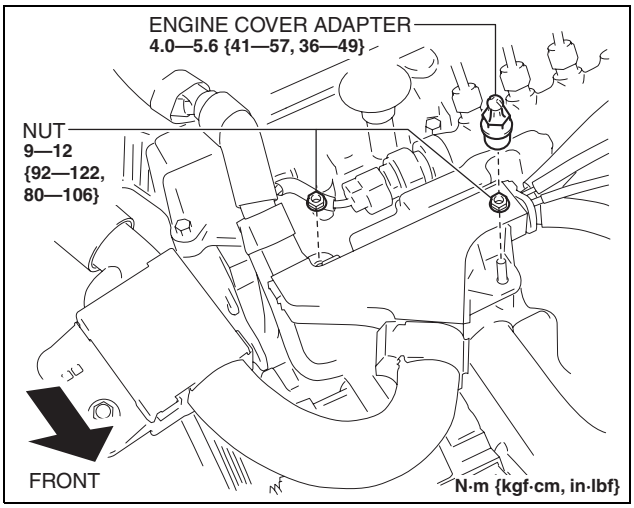

ac5wzw0000523

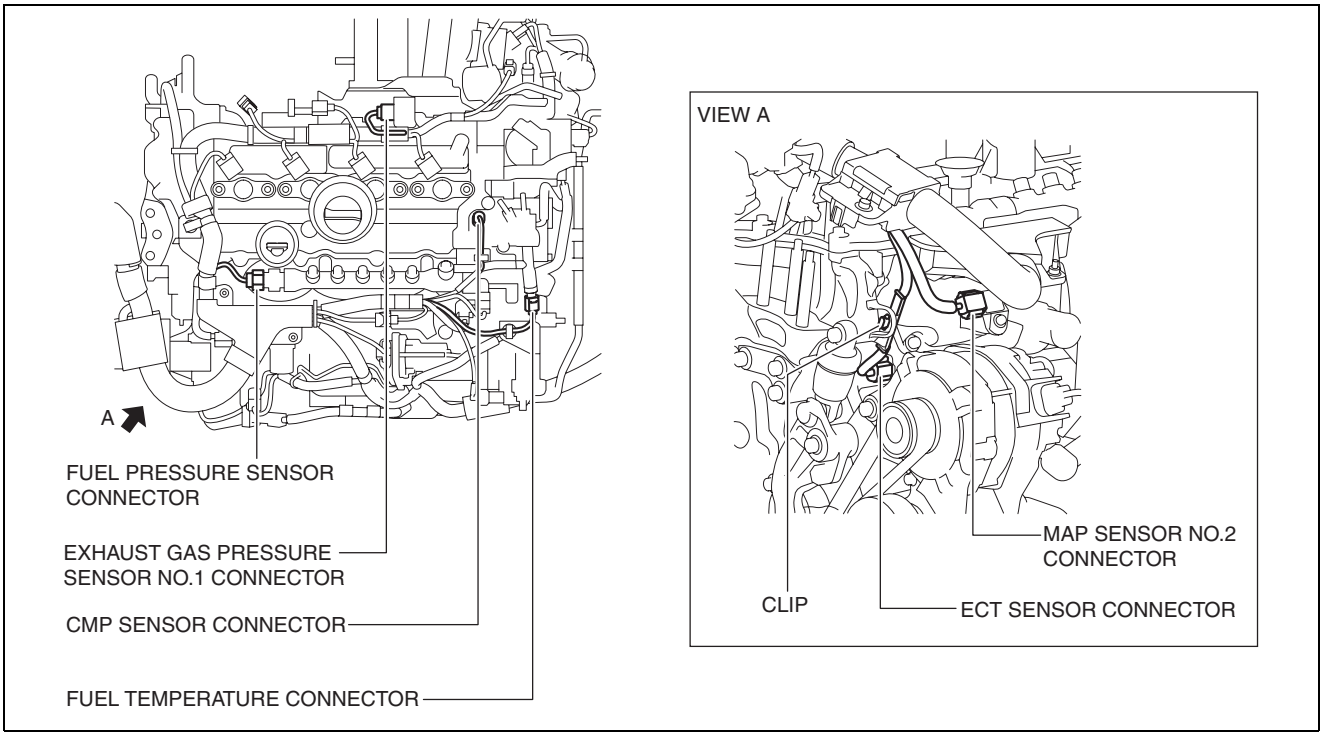

ac5wzw0000523

(3) Remove the clips shown in the figure and set the wiring harness aside.

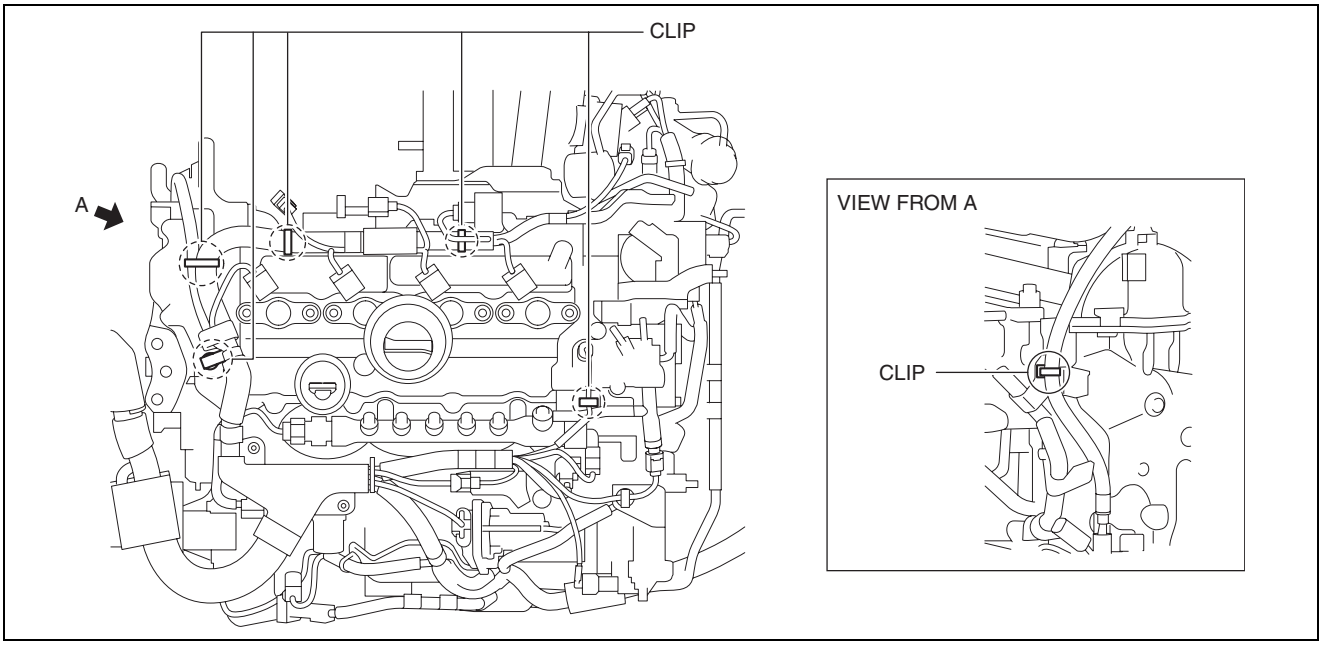

ac5wzw0000496

(4) Set the ground cable clip shown in the figure aside from the cylinder head cover.

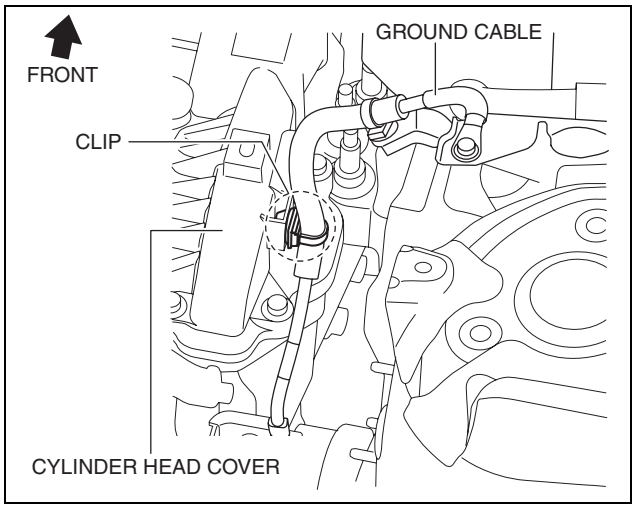

ac5wzw0000496

4. Set the lower case and fuel hose bracket aside using the following procedure:
   (1) Disconnect the vacuum hose from the vacuum pump.
   (2) Disconnect the fuel return hose No.4 from the common rail.
   (3) Remove the fuel hose bracket installation bolts and nut with the fuel main hose and return hose No.1 connected.
   (4) Remove the lower case with the fuel main hose and return hose No.1 and set it aside.

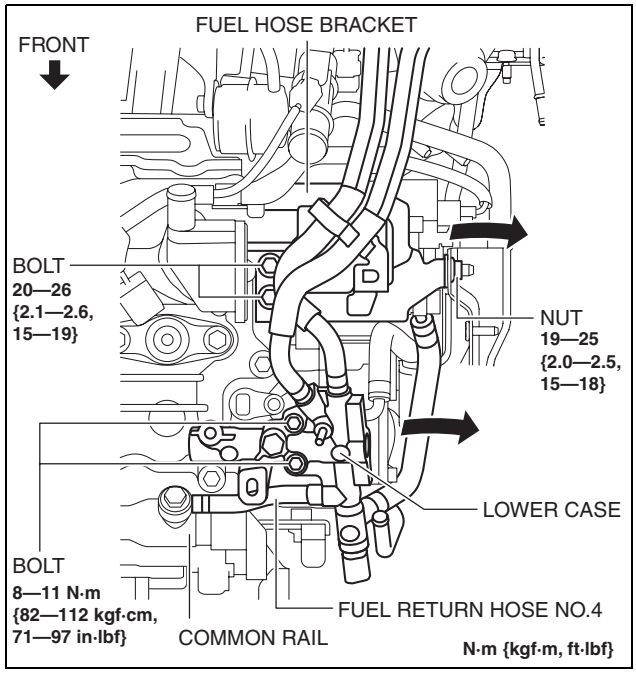

ac5wzw0000523

5. Remove the exhaust gas pressure sensor No.1 bracket.
6. Remove the cylinder head cover.

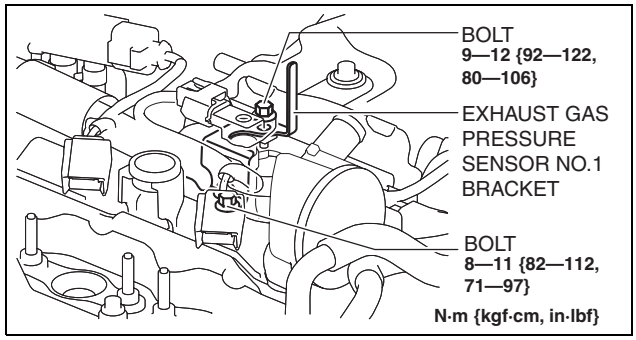

ac5wzw0000496

No.3 Engine Mount Removal Note

1. Remove the clip and bolt shown in the figure and set the ground cable aside.

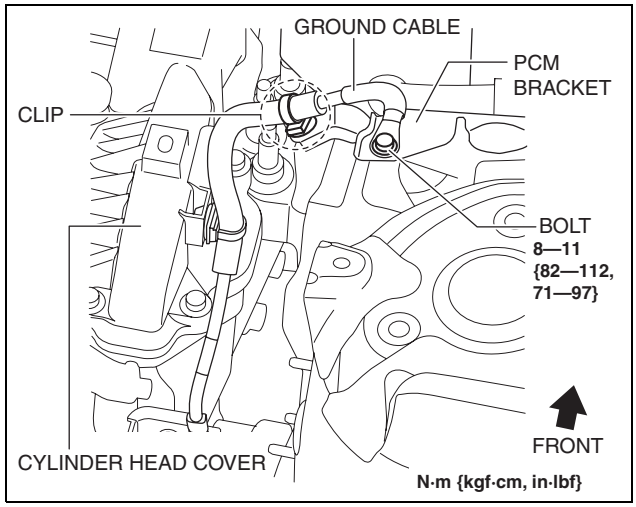

ac5wzw0000497

MECHANICAL [SKYACTIV-D 2.2]

2. Remove the bolts and connector shown in the figure and set the PCM component aside with the PCM connector connected.

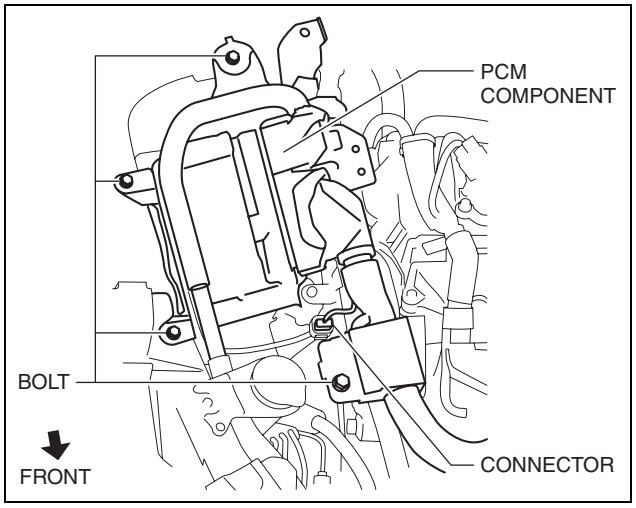

ac5wzw0000497

3. Set the connector and cooler hose shown in the figure aside and remove the wiring harness bracket.

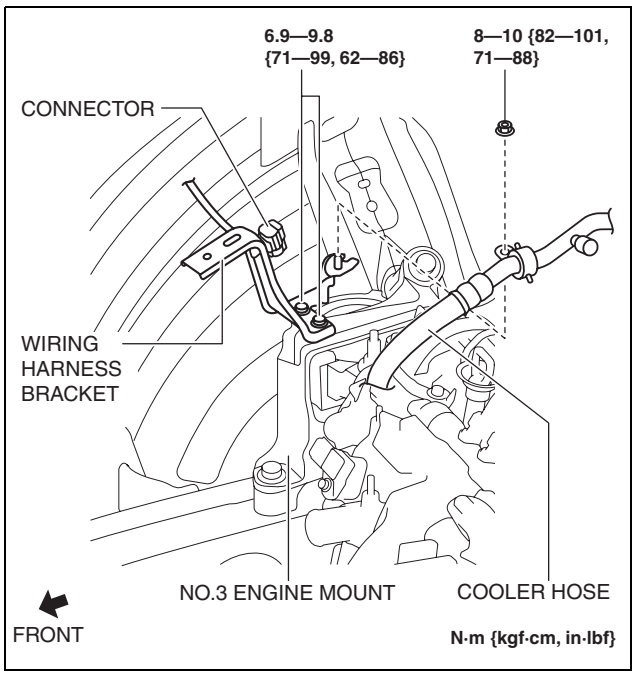

ac5wzw0000497

4. Remove the engine cover adapter shown in the figure.

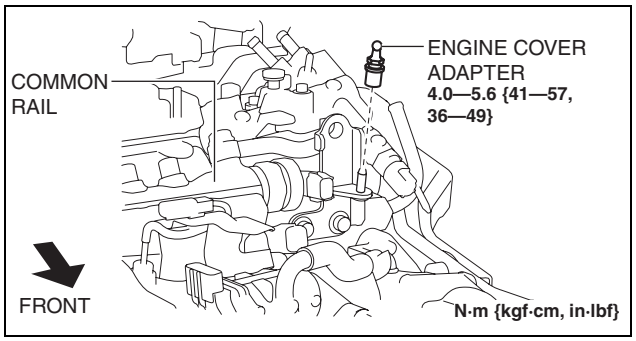

ac5wzw0000523

5. Install the SST to the position shown in the figure using the following bolt and washer.

   Bolt: part number 99794 1025 or an M10 x 1.25, length 25 mm {0.98 in}
   Washer: approx. 3 mm {0.1 in} thickness

   Tightening torque
   38—51 N·m {3.9—5.2 kgf·m, 29—37 ft·lbf}

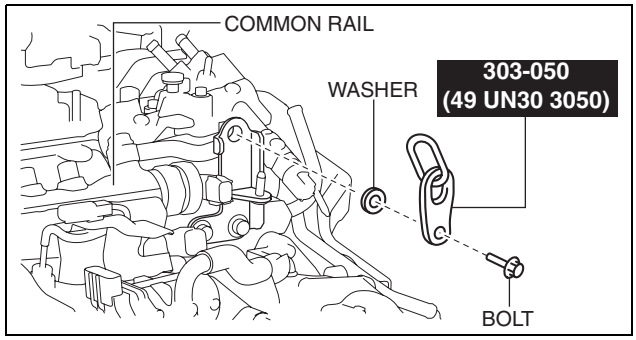

ac5wzw0000524

6. Install the SST to the position shown in the figure using the following bolt and washer.

   Bolt: part number 99794 1025 or an M10 x 1.25, length 25 mm {0.98 in}

   Tightening torque
   38—51 N·m {3.9—5.2 kgf·m, 29—37 ft·lbf}

   Caution
   - **Slots have been adopted for the No.3 engine mount installation holes. If the No.3 engine mount is deviated from the original position when installing the No.3 engine mount, engine noise or vibration could increase. Before removing the No.3 engine mount, place alignment marks on the No.3 engine mount and body so that they can be assembled to the same positions as before removal.**

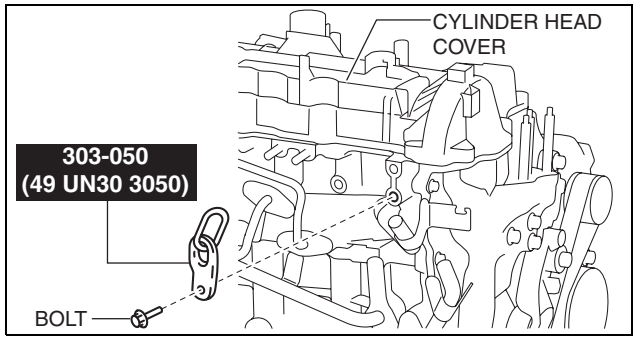

ac5wzw0000497

7. Place alignment marks on the locations shown in the figure so that they can be assembled to the same positions as before removal.

   Note
   - Paint so that the No.3 engine mount is framed on the body side and the outline of the nut is framed on the No.3 engine mount side.

8. Install the **SST** using the following procedures.

   Caution
   - **Refer to the SST instruction manual for the basic handing procedure.**

   Note
   - Install front feet No. 2 to the left and right front shafts of the **SST**.

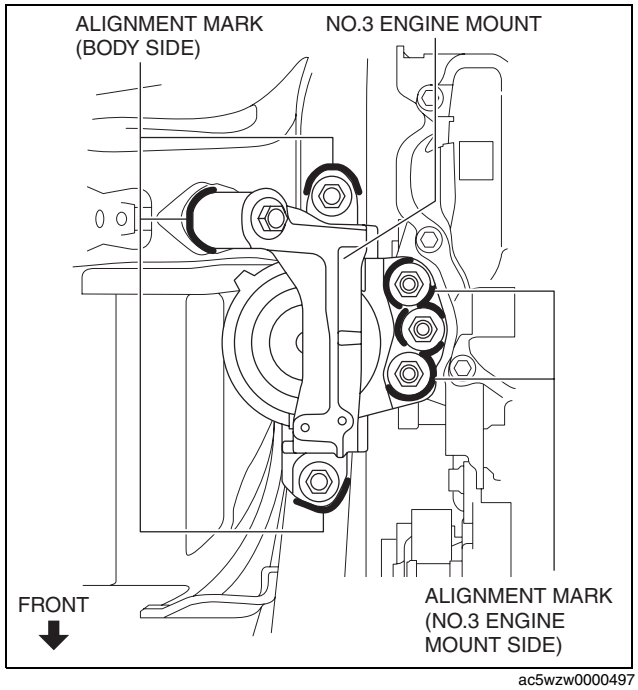

ac5wzw0000497

MECHANICAL [SKYACTIV-D 2.2]

(1) Protect the positions shown in the figure using tape.

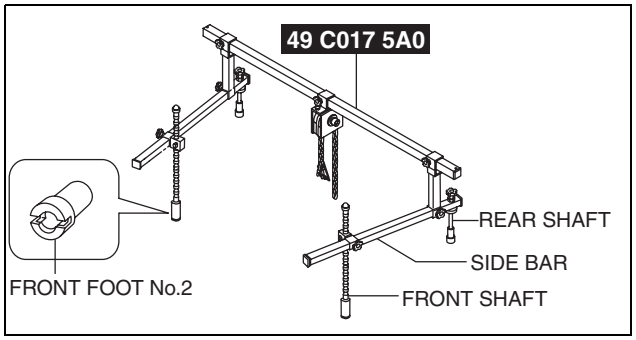

am3uuw0000884

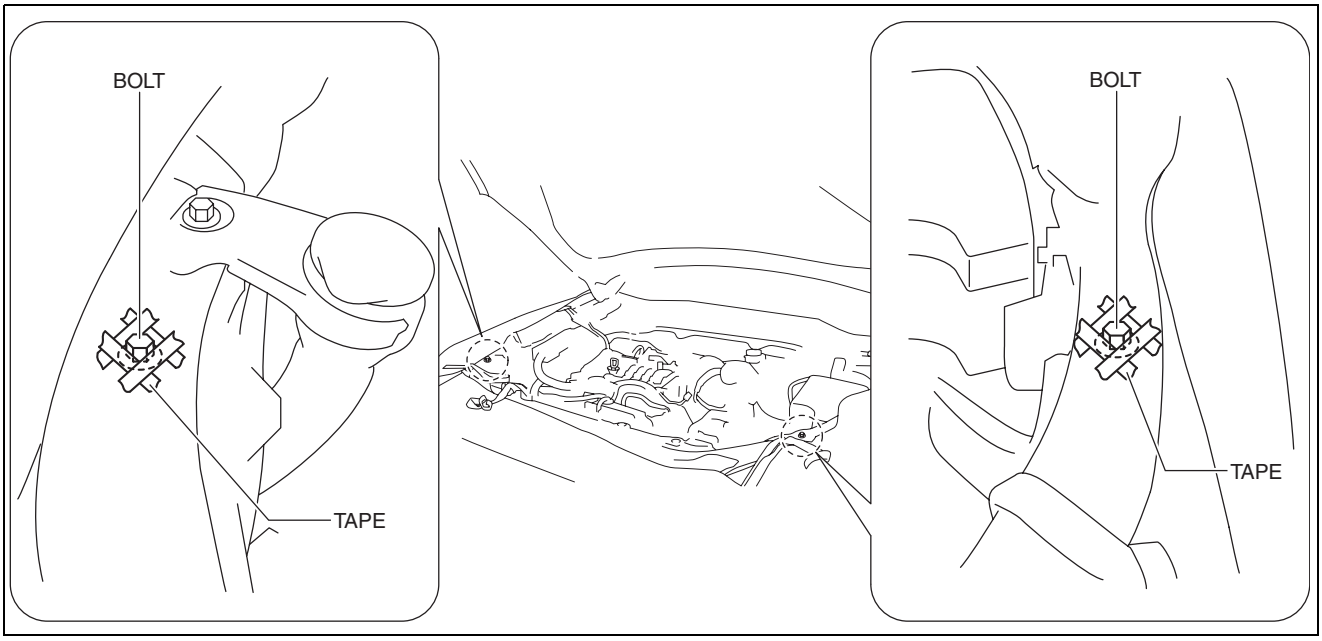

ac5wzw0000497

(2) As shown in the figure, set the rear shafts of the **SST** to the left and right shock absorber nuts.

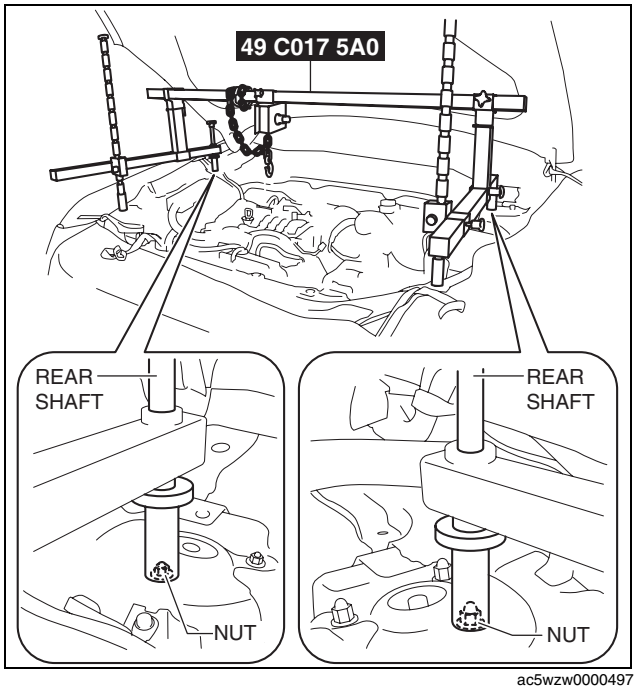

ac5wzw0000497

(3) As shown in the figure, set the front shafts of the SST to the left and right bolts.

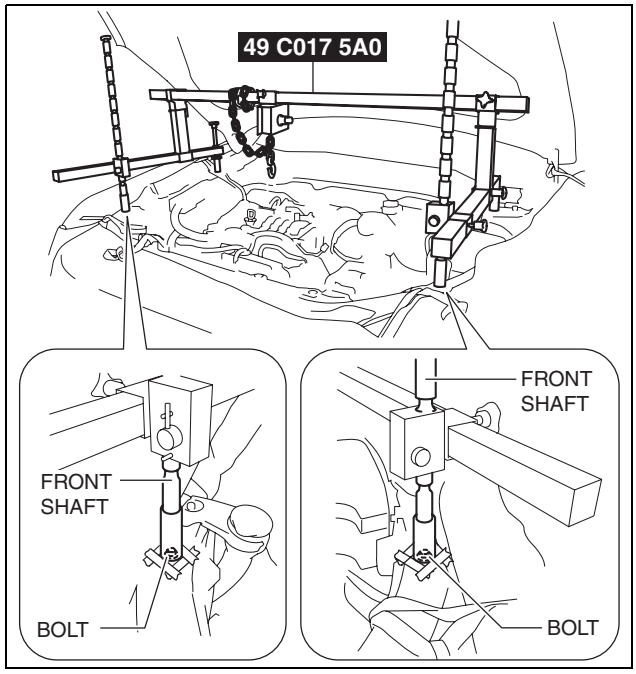

ac5wzw0000497

(4) Adjust the height of the left and right side bars of the **SST** so that they are leveled, then tighten each part.

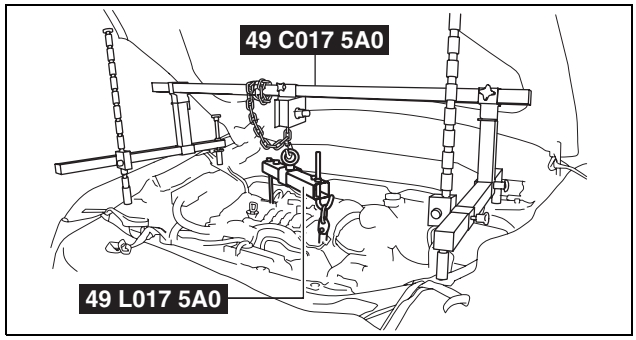

ac5jjw00004540

(5) Install the SST (49 L017 5A0) to the SST (49 UN30 3050) with the hook of the SST (49 L017 5A0) facing outward.
(6) Adjust the height of the left and right side bars so that they are leveled, then tighten each part of the SST.
(7) Apply tension to the chain to secure the engine.

9. Remove the No.3 engine mount.

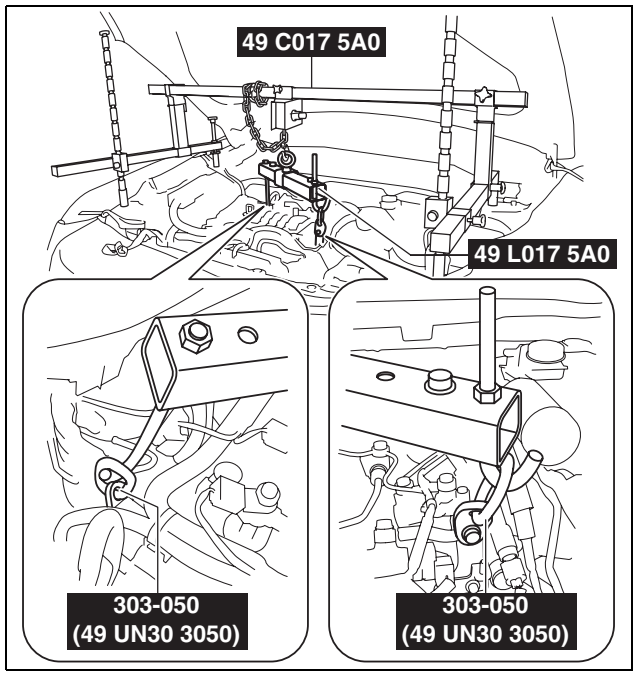

ac5jjw00004541

MECHANICAL [SKYACTIV-D 2.2]

Water Pipe Removal Note

1. Remove the water pipe with the water hose connected and set it aside out of the way.

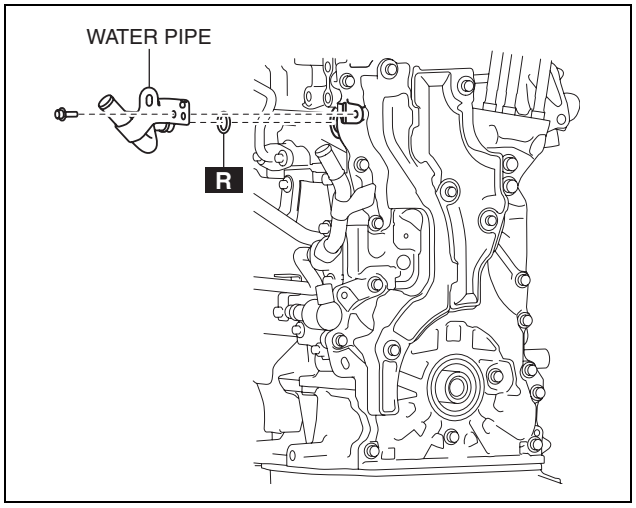

ac5wzw0000497

Noise Suppression Cover (No.1), Noise Suppression Cover (No.2), Seal Rubber Removal Note

1. Remove the noise suppression covers and seal rubbers in the order shown in the figure.

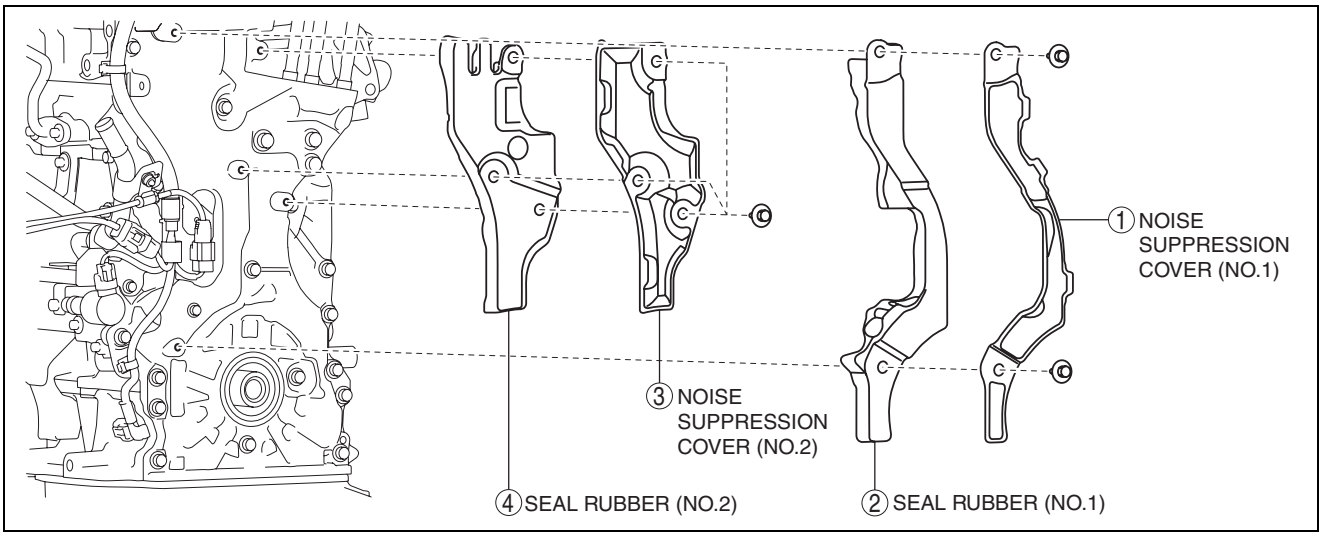

ac5wzw0000524

2. Remove the connectors shown in the figure and set the wiring harness aside.

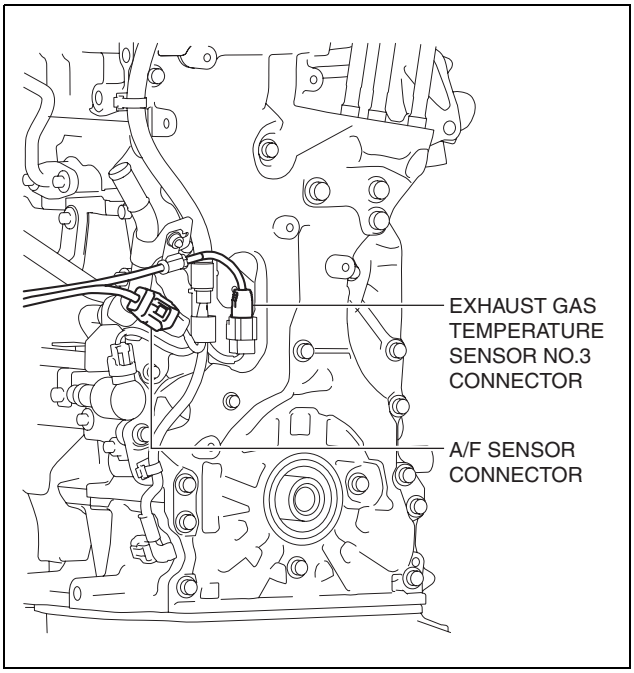

ac5wzw0000524

3. Remove the water pipe installation bolt shown in the figure.

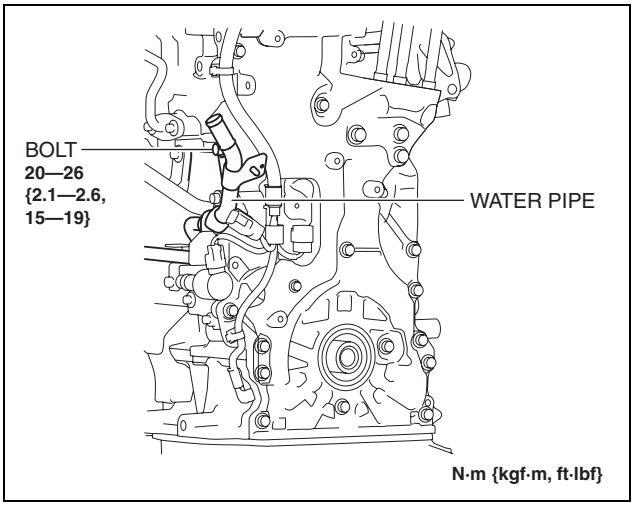

ac5wzw0000524

MECHANICAL [SKYACTIV-D 2.2]

4. Remove the connectors, clip, and bolts shown in the figure and set the wiring harness and wiring harness bracket aside.

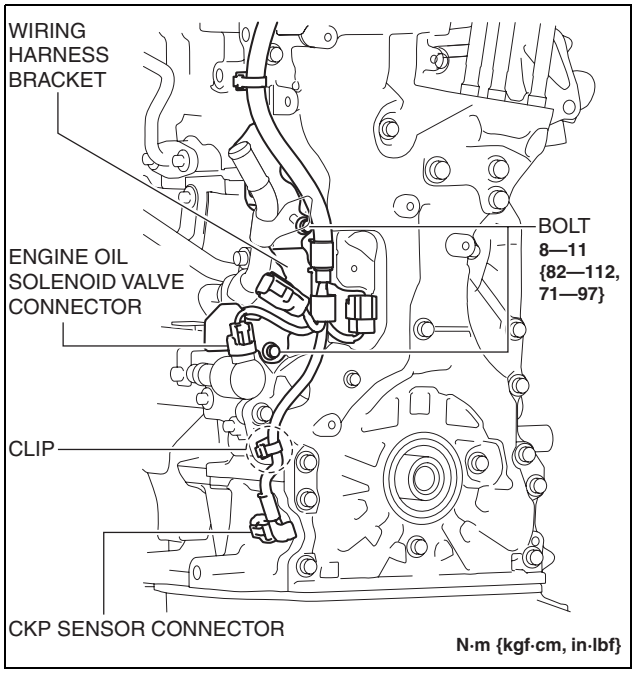

ac5wzw0000524

5. Remove the seal rubber (No.3) shown in the figure.

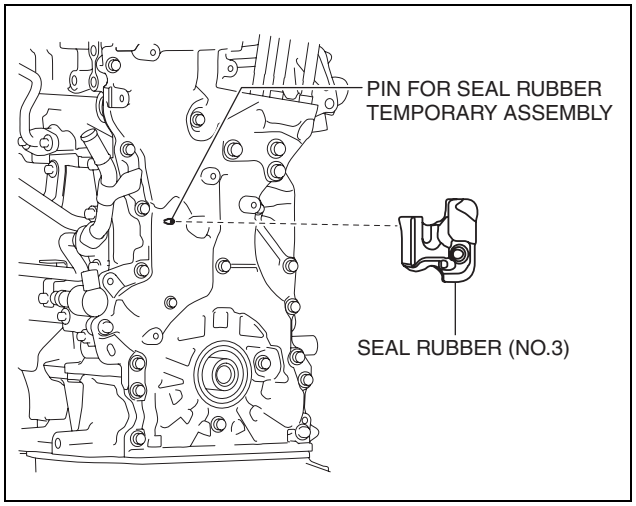

ac5wzw0000524

MECHANICAL [SKYACTIV-D 2.2]

Engine Front Cover Removal Note

1. Remove the engine front cover installation bolt.
2. Using a screwdriver wrapped in a rag, peel the sealant away a little at a time, and remove the engine front cover.

Caution

- **Do not apply excessive force to the screwdriver. Otherwise, the engine front cover could be damaged.**
- **Be careful not to scratch or damage the seal surface. Otherwise, it could cause oil leakage.**

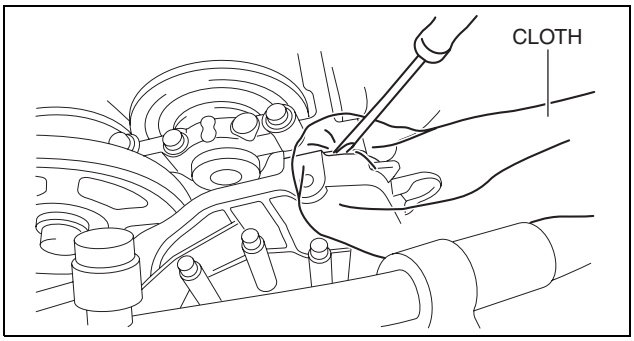

ac5wzw0000498

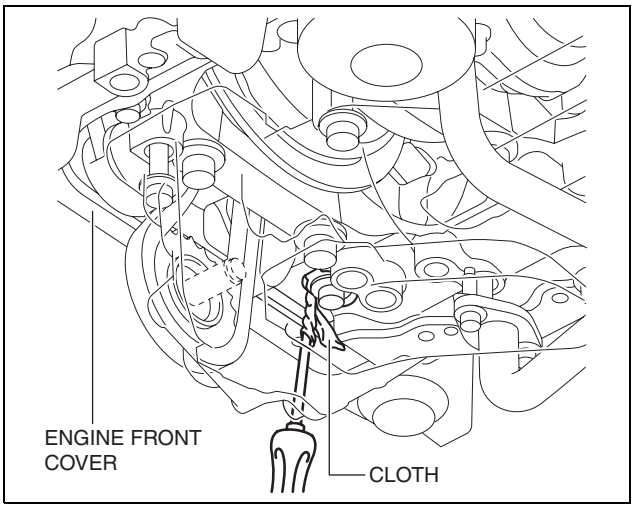

ac5wzw0000498

MECHANICAL [SKYACTIV-D 2.2]

Timing Chain Removal Note

1. Rotate the crankshaft clockwise to adjust the timing marks and the key position as shown in the figure, and set cylinder No.1 at top dead center (TDC).

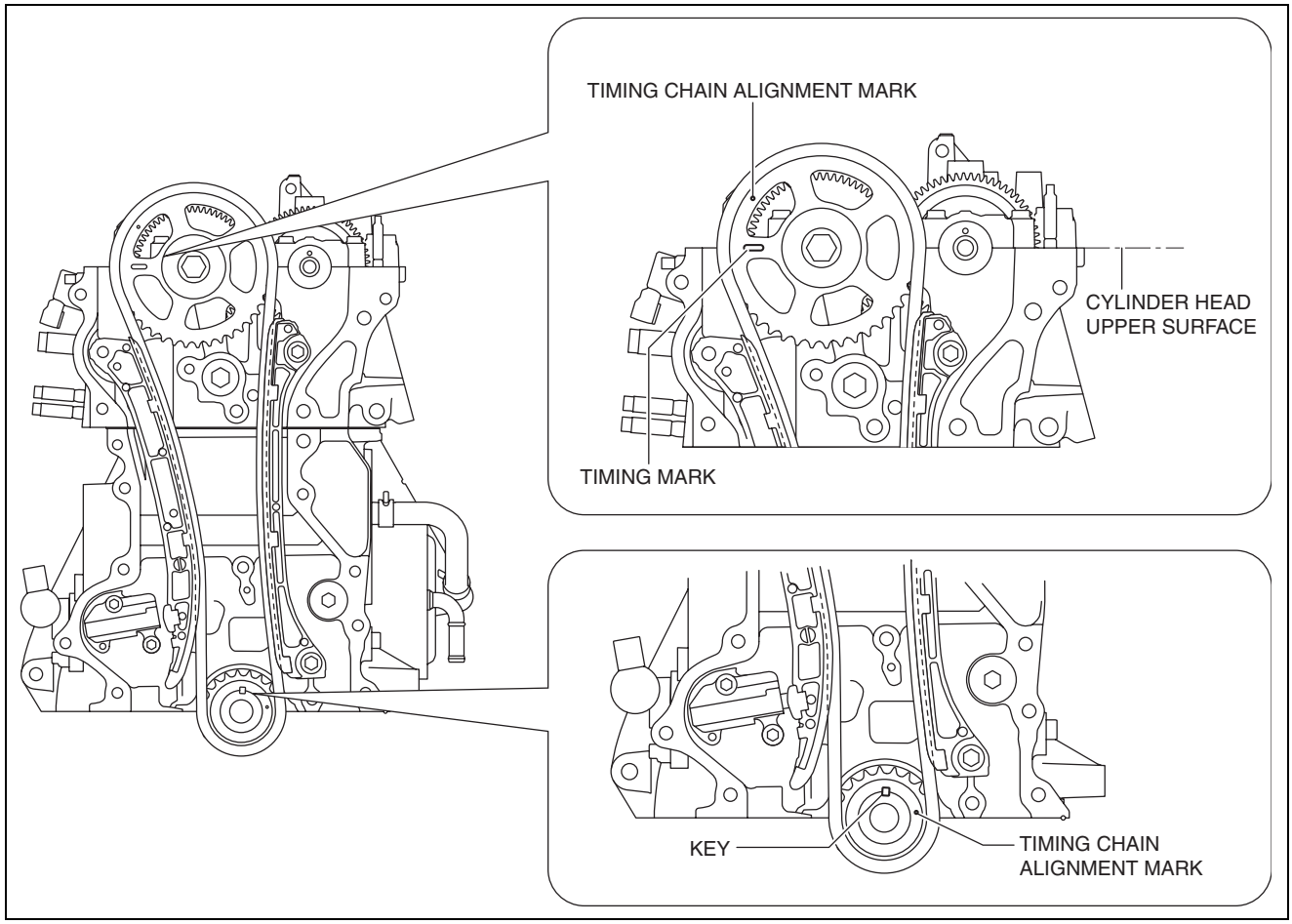

ac5wzw0000498

2. Loosen the timing chain tensioner using the following procedure:
   (1) Insert a wire with an approx. diameter of **1.4 mm {0.055 in}** or a paper clip into the body hole of the timing chain tensioner.

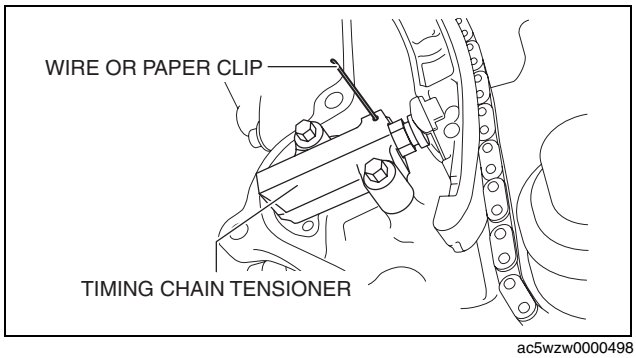

ac5wzw0000498

   (2) While moving the exhaust camshaft in the direction of the arrow using a wrench on the cast hexagon, press in the plunger of the timing chain tensioner.

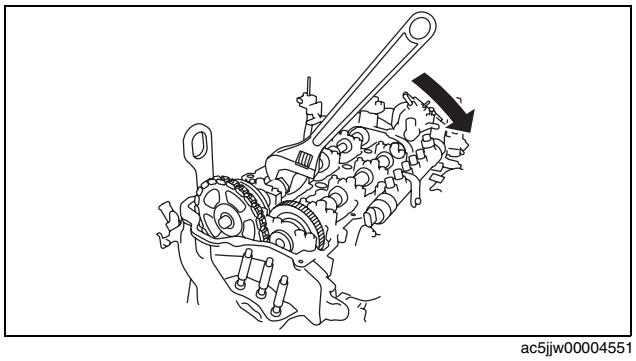

ac5jjw00004551

Note
- By rotating the exhaust camshaft clockwise, the timing chain can be pulled slightly and the timing chain presses in the tensioner plunger.

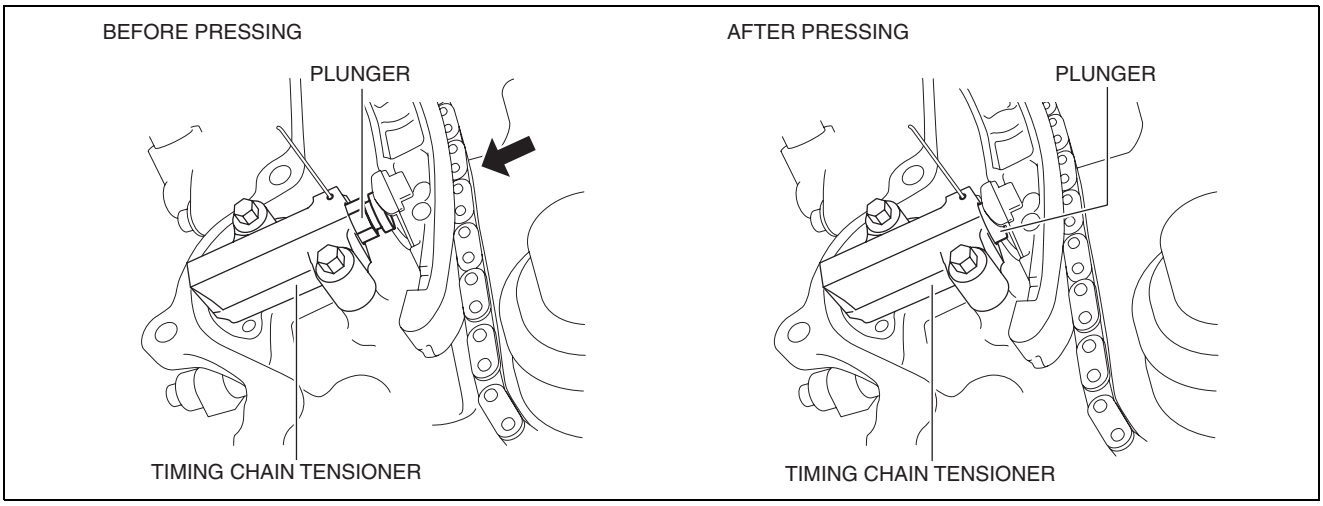

ac5wzw0000498

(3) Press the wire or paper clip set in Step 1 further with the plunger pressed.

Note
- The wire or paper clip secures the plunger, and the tension can be released.

(4) Remove the timing chain tensioner and timing chain tensioner arm.
(5) Remove the timing chain guide.
(6) Remove the timing chain.

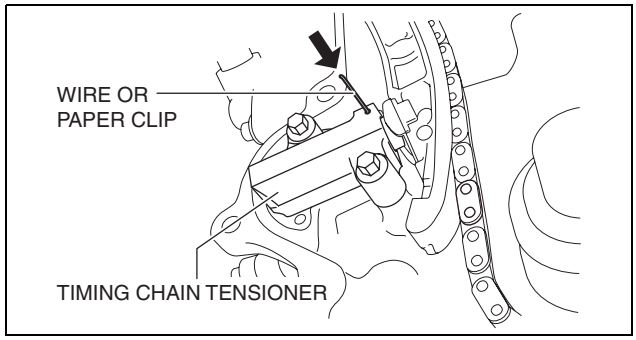

ac5wzw0000498

MECHANICAL [SKYACTIV-D 2.2]

Oil Pump Chain Removal Note

1. Verify that the oil pump driven sprocket alignment marks and key are aligned to the positions shown in the figure.

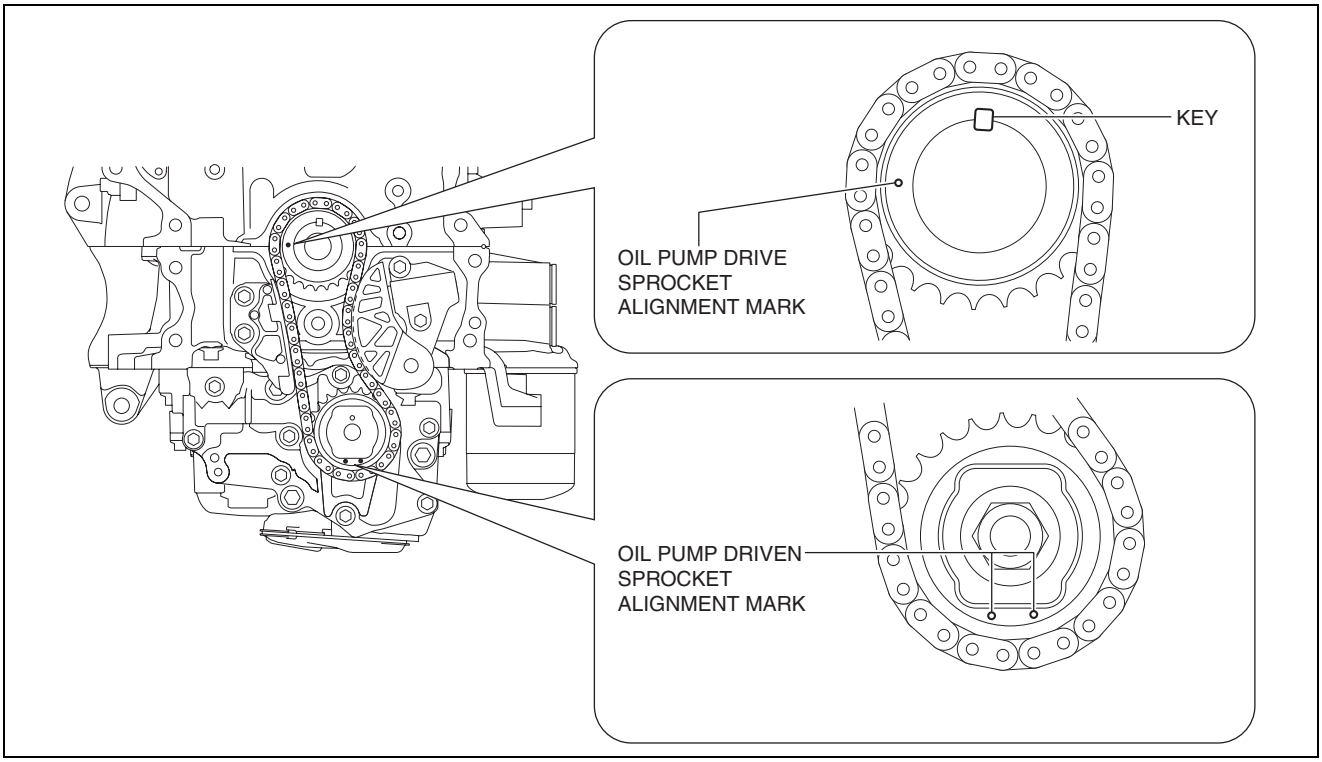

ac5wzw0000524

Note

- If they are not in the positions shown in the figure, rotate the crankshaft to set cylinder No.1 to top dead center (TDC).

2. Temporarily assemble the crankshaft pulley lock bolt, and lock the oil pump against rotation as shown in the figure.
3. Slightly loosen the oil pump driven sprocket installation bolt.

Note

- At this stage, only loosen the oil pump driven sprocket installation bolt, do not remove it. Remove the bolt after removing the oil pump chain tensioner.

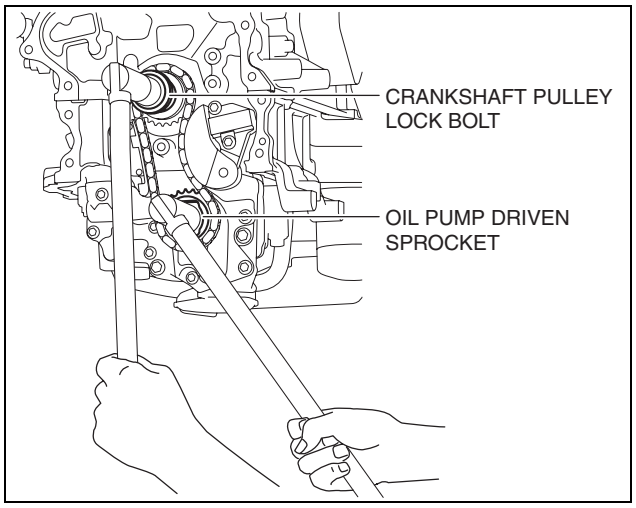

ac5wzw0000524

MECHANICAL [SKYACTIV-D 2.2]

4. Set a cloth wrapped flathead screwdriver in the gap between the lower cylinder block projection and the oil pump chain as shown in the figure.
5. Move the screwdriver in the direction of the arrow and press the oil pump chain, and then press in the plunger of the oil pump chain tensioner.

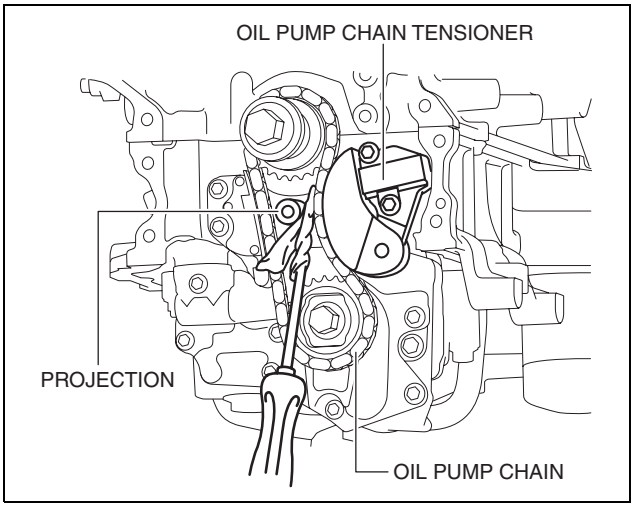

ac5wzw0000524

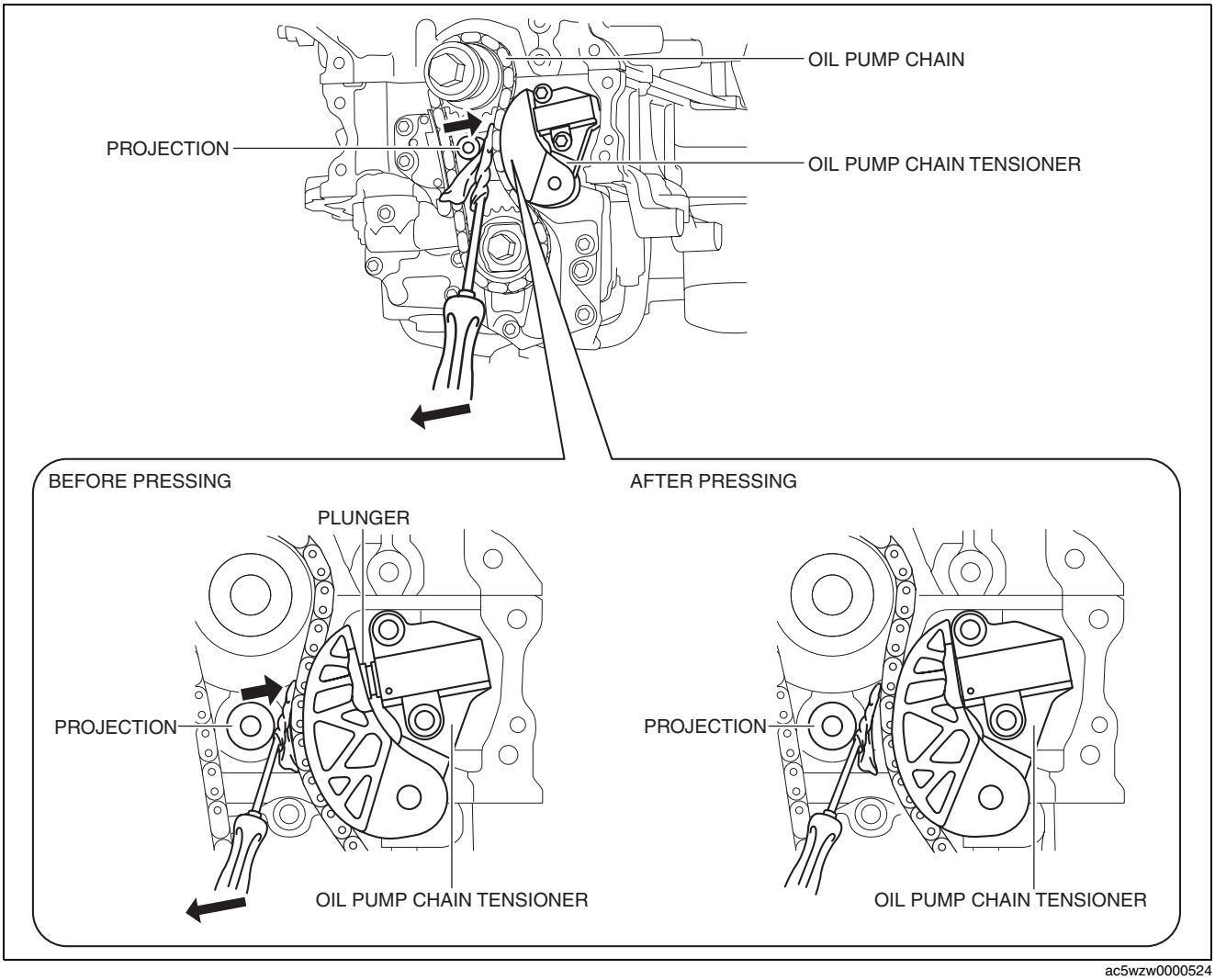

ac5wzw0000524

6. Insert a wire with an approx. diameter of **1.4 mm {0.055 in}** or a paper clip into the body hole of the oil pump chain tensioner with the plunger pressed.

Note
- The wire or paper clip secures the plunger, and the tension can be released.

7. Remove the oil pump chain tensioner.
8. Remove the oil pump chain and oil pump driven sprocket as a single unit.
9. Remove the temporarily assembled crankshaft pulley lock bolt.

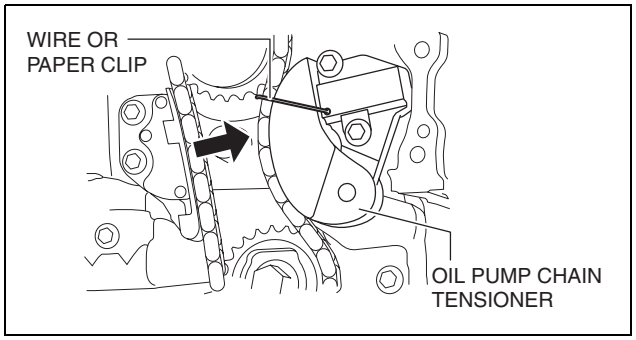

ac5wzw0000499

Oil Pump Chain Installation Note

1. Verify that the key and knock pin are aligned to the positions shown in the figure.
   - If they are not in the positions shown in the figure, rotate the crankshaft and balancer shaft (No.1) to set cylinder No.1 to top dead center (TDC).

Note
- When rotating the balancer shaft (No.1), temporarily assemble the oil pump driven sprocket and rotate while holding the sprocket with a hand.

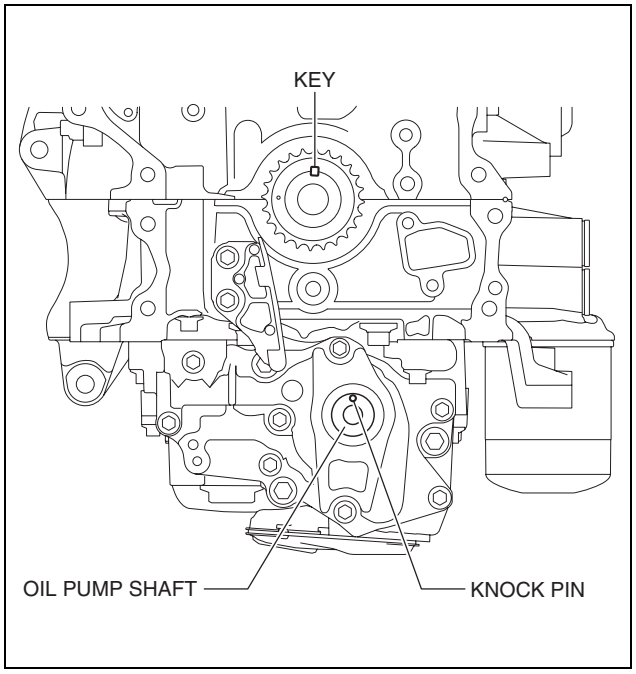

ac5wzw0000499

2. Align the oil pump chain alignment marks with the oil pump driven sprocket alignment marks.

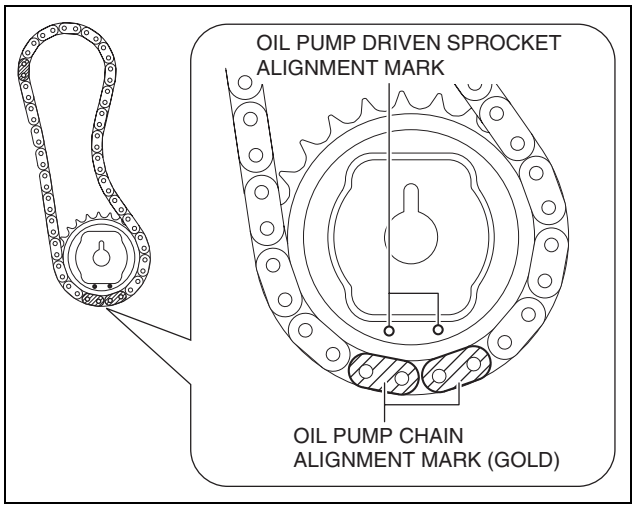

ac5wzw0000525

3. Install the oil pump chain and oil pump driven sprocket as a single unit while aligning the alignment marks on each sprocket and oil pump chain as shown in the figure.

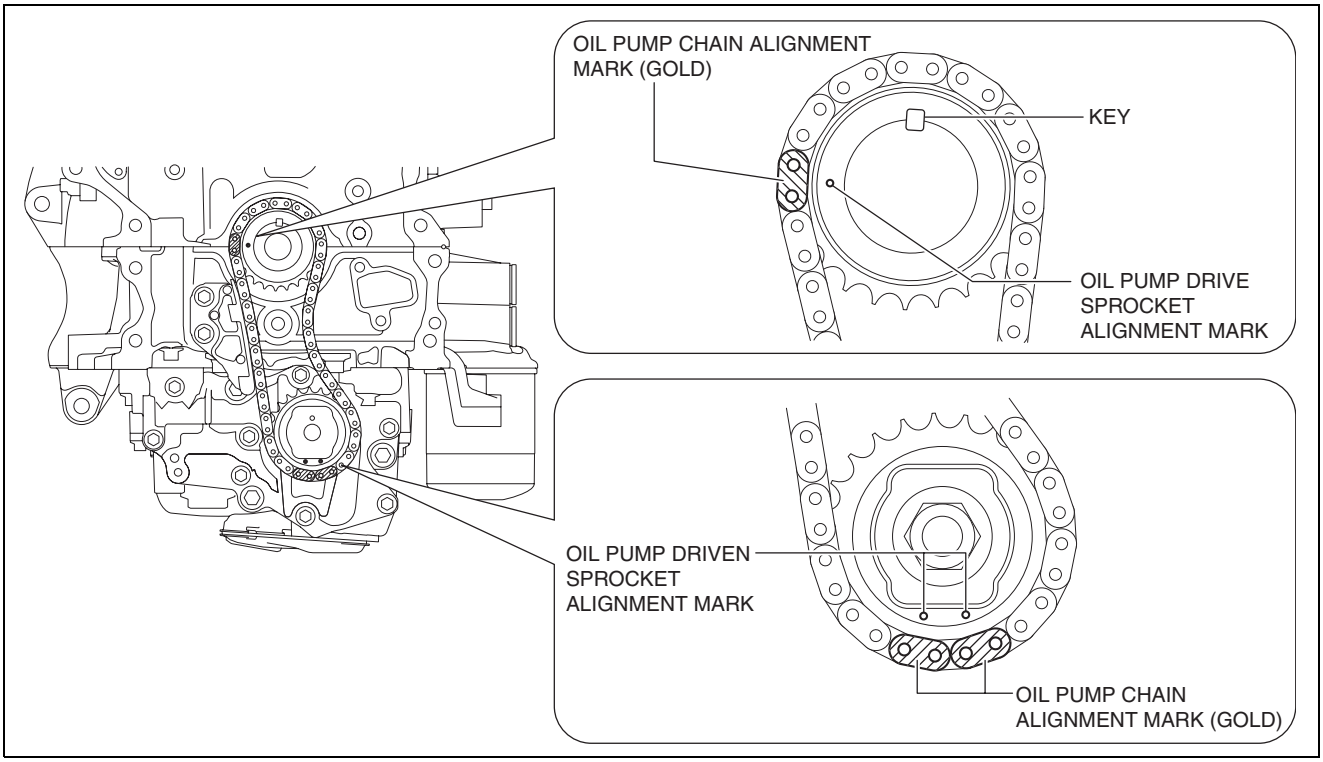

ac5wzw0000499

4. Temporarily tighten the oil pump driven sprocket installation bolt.
5. Install the oil pump chain tensioner.

Caution
- **At this stage, do not remove the wire or paper clip installed to the oil pump chain tensioner.**

6. Tighten the oil pump driven sprocket installation bolt using the following procedure:
   (1) Temporarily assemble the crankshaft pulley and crankshaft pulley lock bolt.
   (2) Install the SST shown in the figure and lock the oil pump against rotation. (See 01-10B-72 FRONT OIL SEAL REPLACEMENT [SKYACTIV-D 2.2].)
   (3) Tighten the oil pump driven sprocket installation bolt.

Tightening torque
123—140 N·m {13—14 kgf·m, 91—103 ft·lbf}

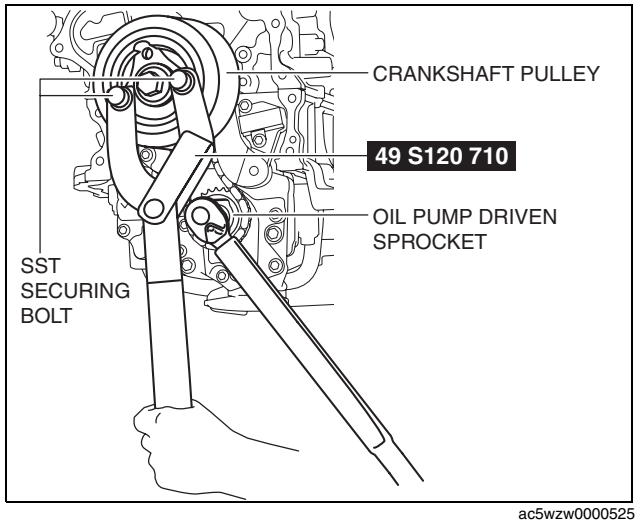

ac5wzw0000525

7. Remove the temporarily assembled crankshaft pulley and crankshaft pulley lock bolt.
8. Remove the wire or paper clip installed to the oil pump chain tensioner and apply tension to the oil pump chain.
   - If a new oil pump chain tensioner is used, remove the installed stopper.

MECHANICAL [SKYACTIV-D 2.2]

Timing Chain Installation Note

1. Verify that the timing marks and the key are aligned to the position shown in the figure.

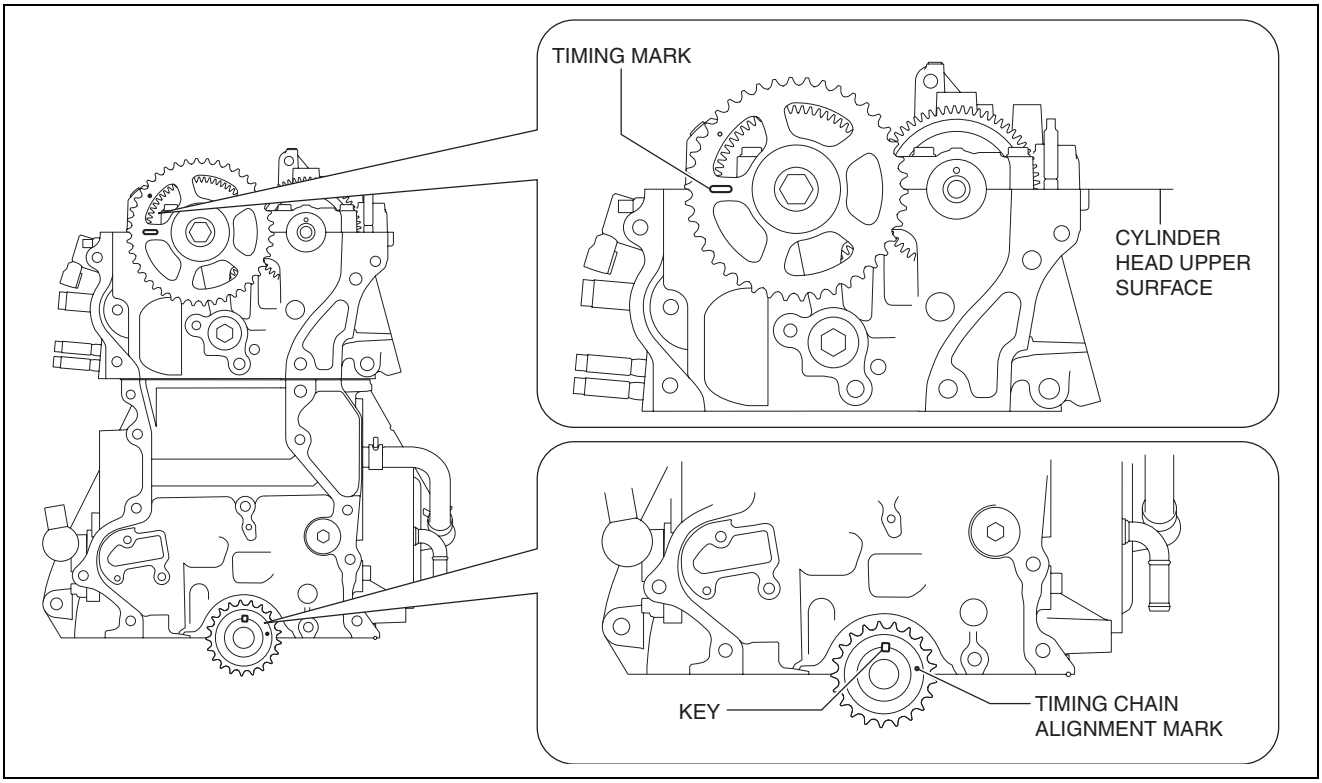

ac5wzw0000499

- If they are not in the positions shown in the figure, rotate the camshaft and crankshaft to set the cylinder No.1 top dead center (TDC).

2. Install the timing chain while aligning the marks on each sprocket and the timing chain as shown in the figure.

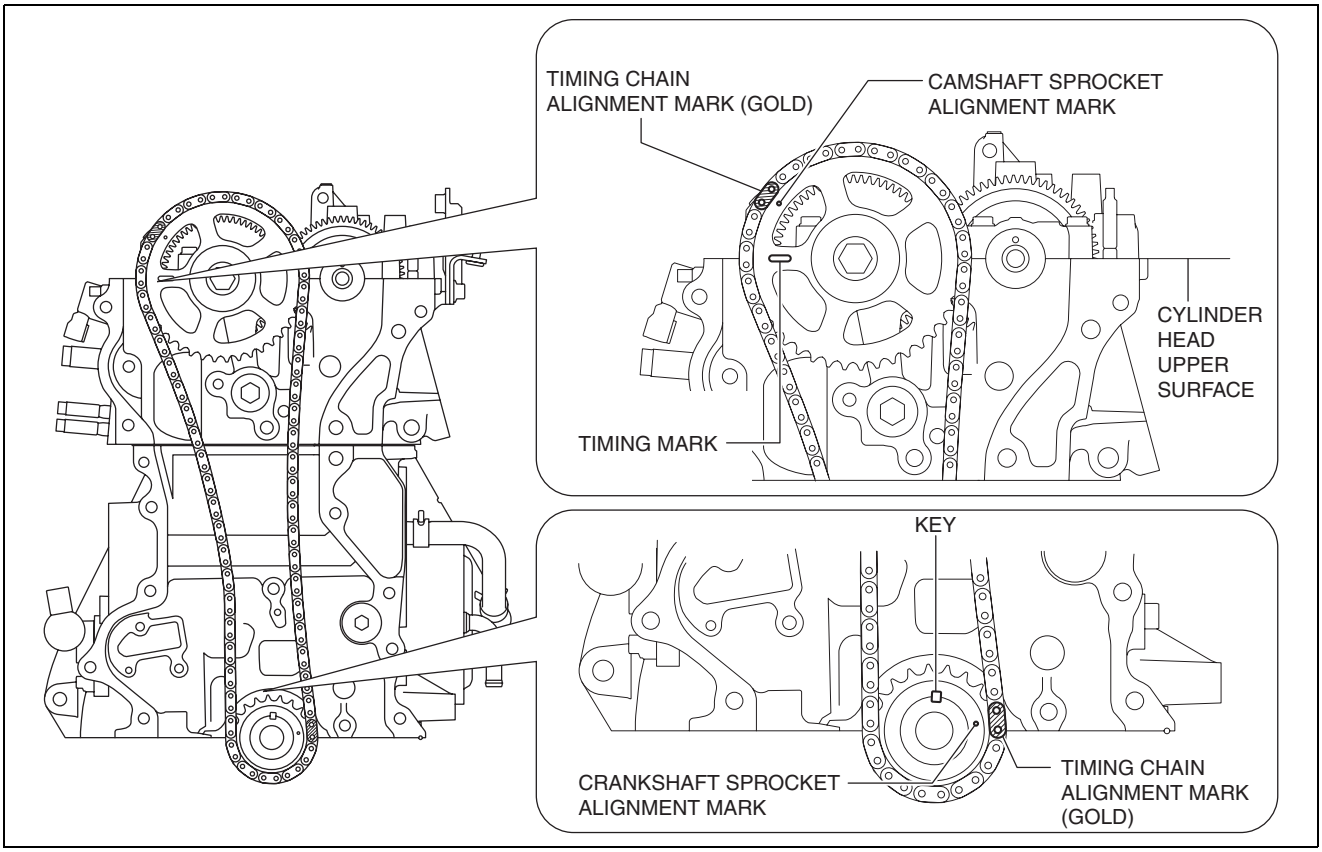

ac5wzw0000499

3. Install the timing chain guide.

MECHANICAL [SKYACTIV-D 2.2]

4. Install the timing chain tensioner arm.
5. Install the timing chain tensioner.
6. After installing the timing chain tensioner, remove the installed wire or paper clip, and then apply tension to the timing chain.
   - If a new chain tensioner is used, remove the installed stopper.
7. Verify that there is no looseness in the timing chain, and re-verify that each sprocket is in the specified location.
8. Rotate the crankshaft clockwise two turns and inspect the valve timing.

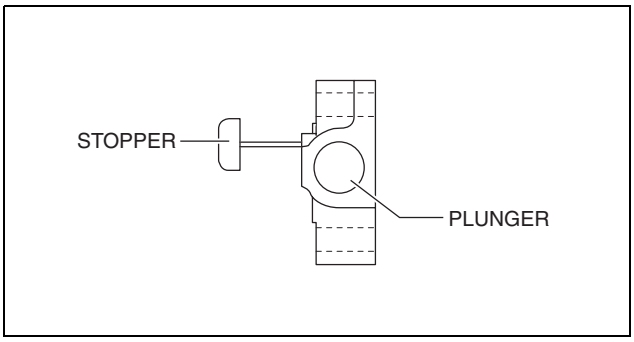

ac5wzw0000499

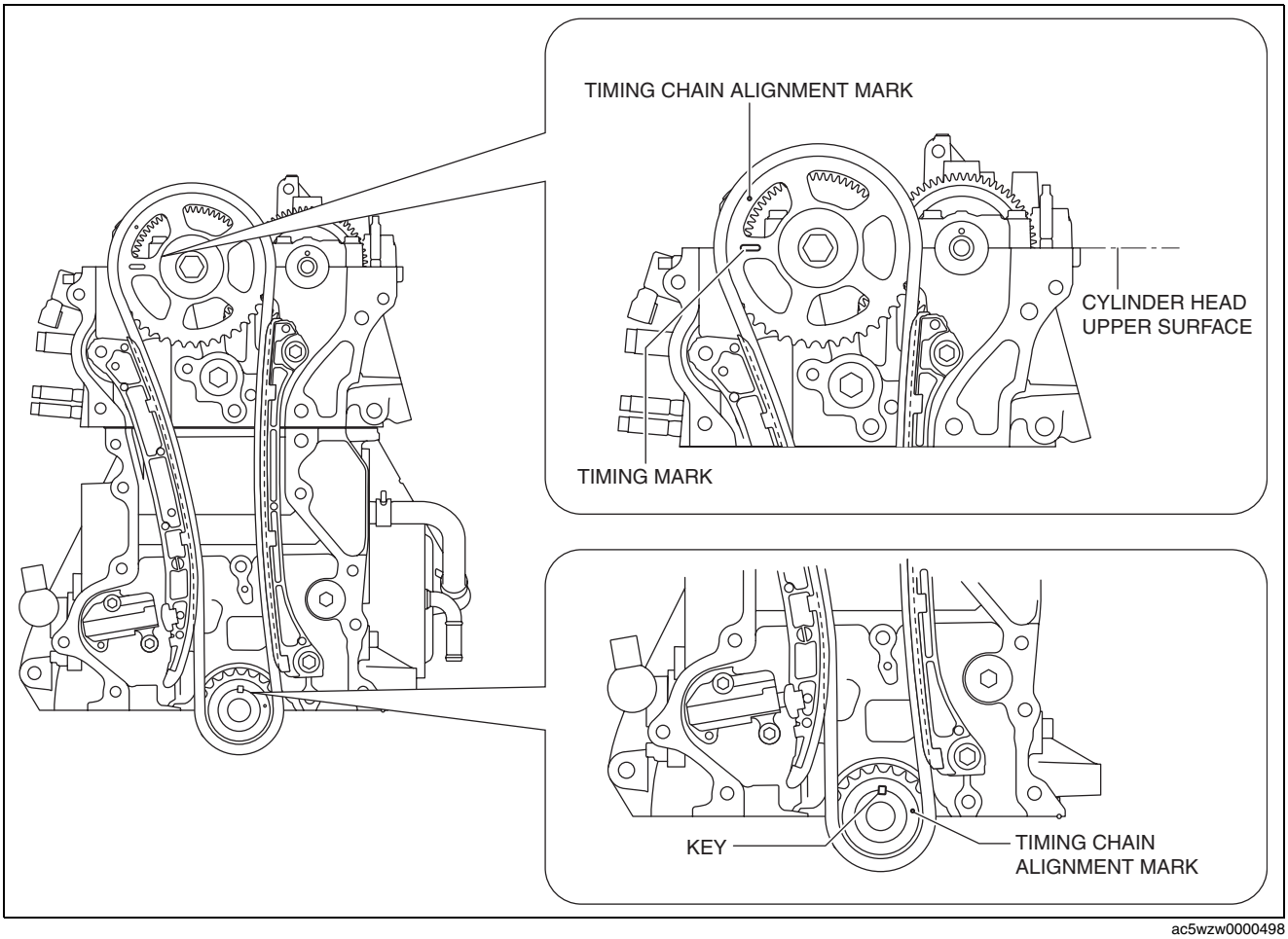

ac5wzw0000498

MECHANICAL [SKYACTIV-D 2.2]

Engine Front Cover Installation Note

Note

- For a new engine front cover, the positioning pins in the two locations shown in the figure project to the outside of the engine.

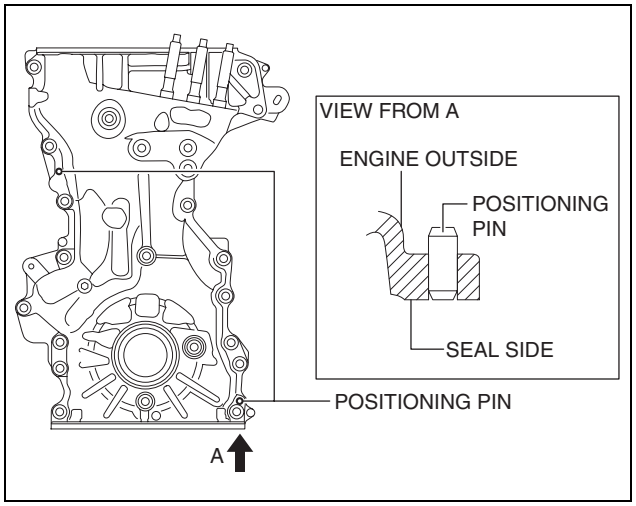

ac5wzw0000499

1. If the engine front cover is newly replaced, tap the positioning pins in the two locations to the seal surface side.
2. Remove oil, dirt, and sealant adhering to the engine front cover, cylinder head, and cylinder block.
3. When reusing an engine front cover installation bolts, remove sealant adhering to the bolts.

Caution

- **Apply the silicon sealant in a single, unbroken line.**
- **To prevent silicone sealant from hardening, adhere the engine front cover and the cylinder block firmly within 10 min. after applying silicone sealant. After adhering them, tighten the installation bolts immediately.**

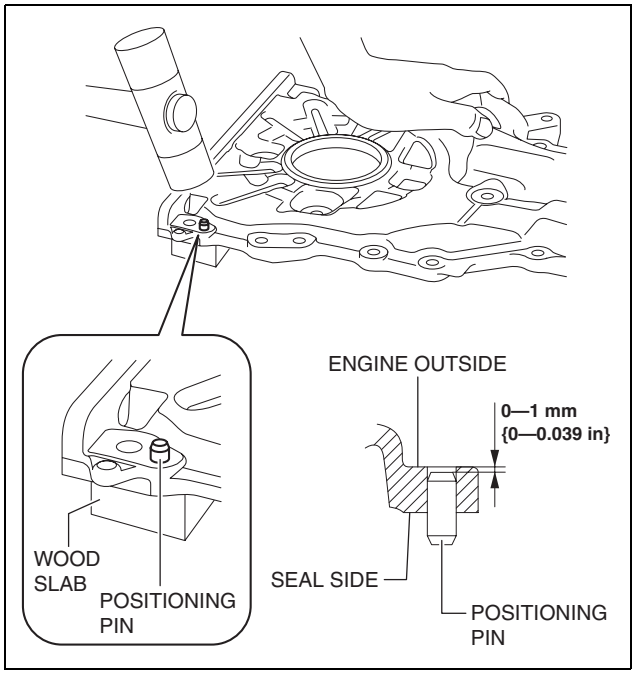

ac5wzw0000500

- **If a bolt with sealant adhering to it is used, it could result in cracks in the cylinder head and cylinder block.**

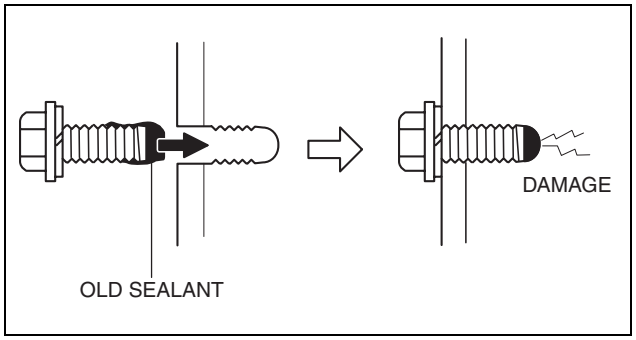

am3uuw0000886

4. Apply silicone sealant to the engine front cover as shown in the figure.

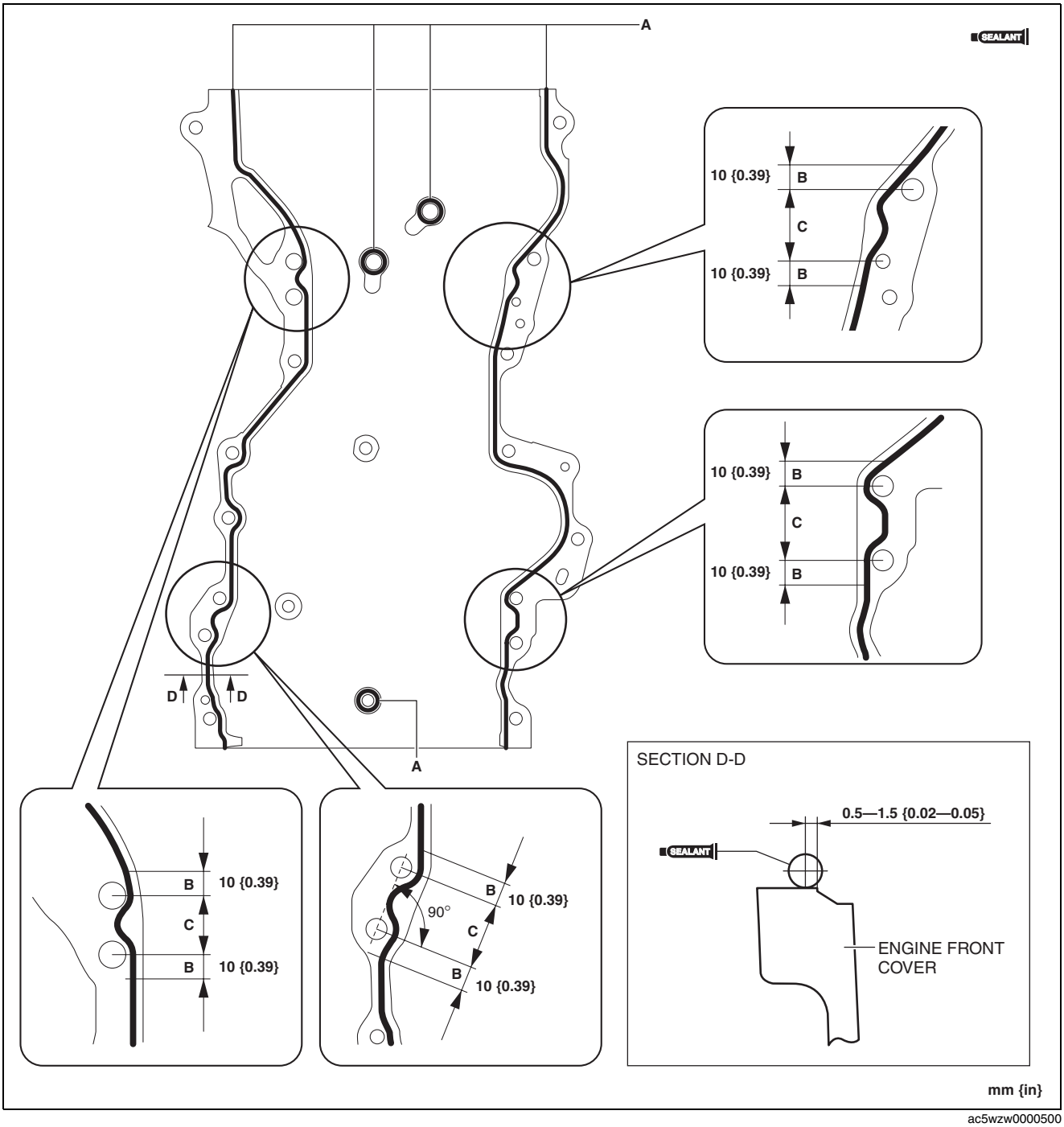

ac5wzw0000500

Bead thickness
A: 2—6 mm {0.1—0.2 in}
B: 4—6 mm {0.16—0.23 in}
C: 4—8 mm {0.2—0.3 in}

MECHANICAL [SKYACTIV-D 2.2]

5. Apply silicone sealant to the areas shown in the figure.

   Caution
   - **Apply the silicone sealant so that it goes into the cylinder head gasket.**

6. Install the engine front cover to the engine.

   Caution
   - **For the number 1 and 8 bolts of the tightening order, install the bolts with washers.**

7. Tighten the engine front cover installation bolts in the order shown in the figure.

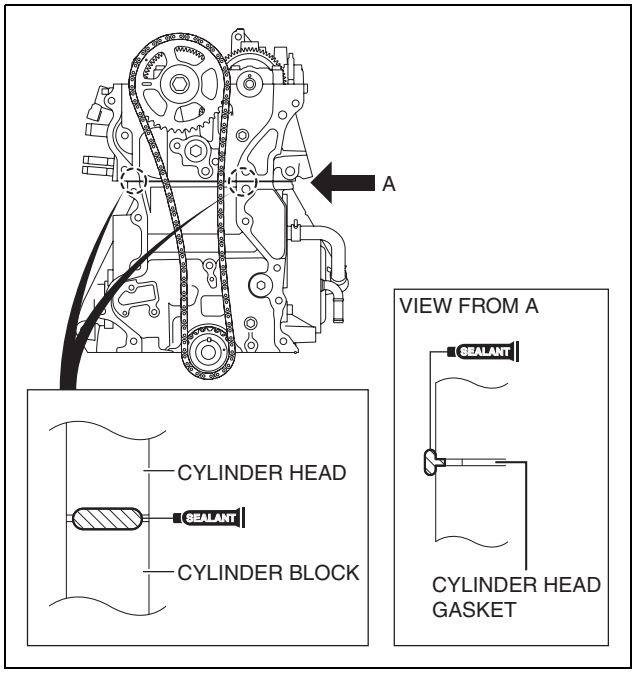

ac5wzw0000500

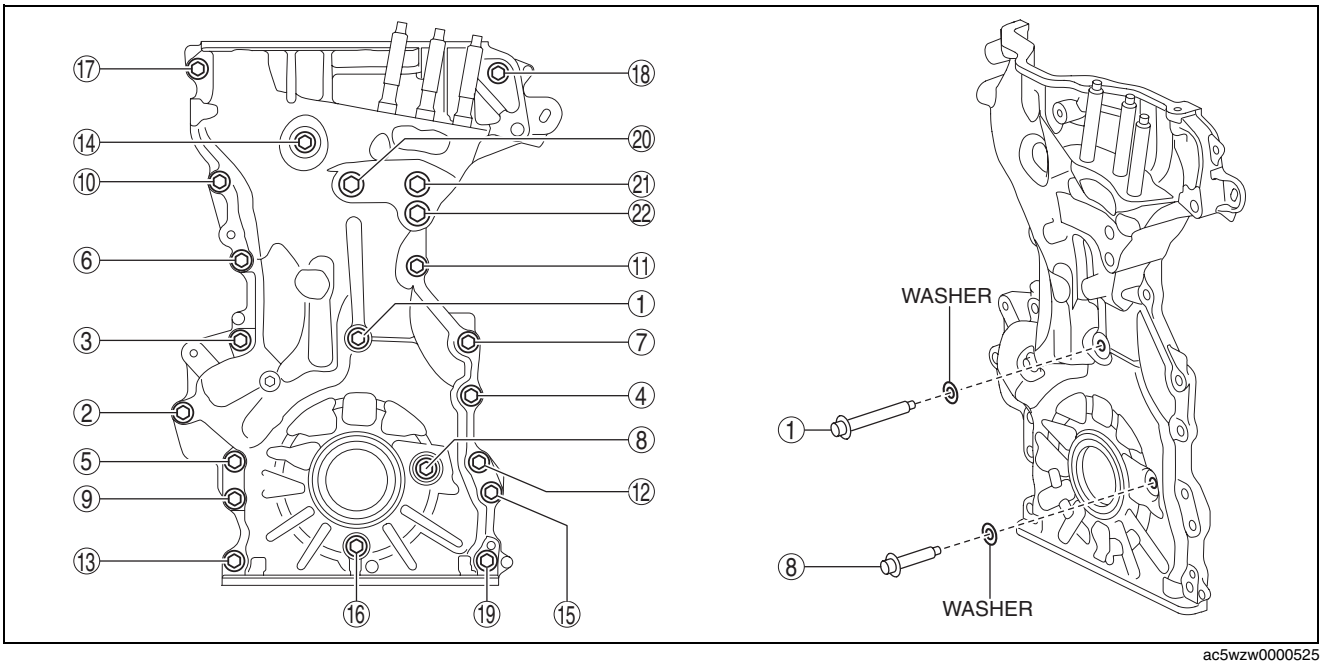

ac5wzw0000525

Installation position	Tightening torque
1—19	20—26 N·m {2.1—2.6 kgf·m, 15—19 ft·lbf}
20—22	40—55 N·m {4.1—5.6 kgf·m, 30—40 ft·lbf}

MECHANICAL [SKYACTIV-D 2.2]

Noise Suppression Cover (No.1), Noise Suppression Cover (No.2), Seal Rubber Installation Note

1. Temporarily put the seal rubber (No.3) on the engine front cover.
2. Install the wiring harness and wiring harness bracket.

Note
- The seal rubber (No.3) can be fixed by installing the wiring harness bracket.

3. Tighten the water pipe installation bolt.
4. Connect the exhaust gas temperature sensor No.3 connector and A/F sensor connector.

Caution
- **Be careful that the covers and seal rubbers do not get hung up on the noise suppression cover installation bolts.**

5. Install the noise suppression covers and seal rubbers in the order shown in the figure.

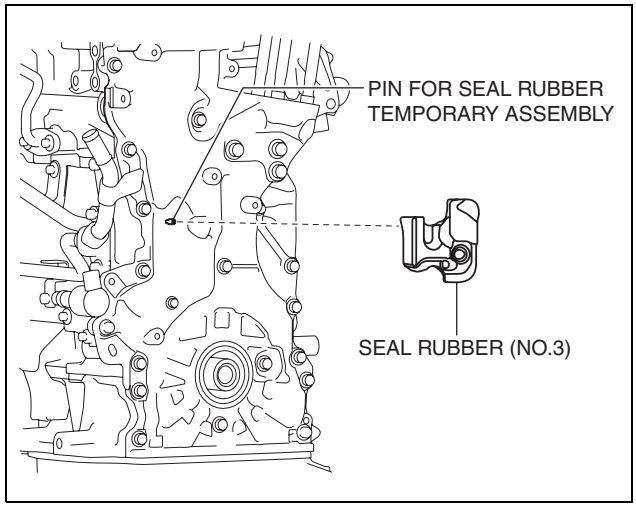

ac5wzw0000524

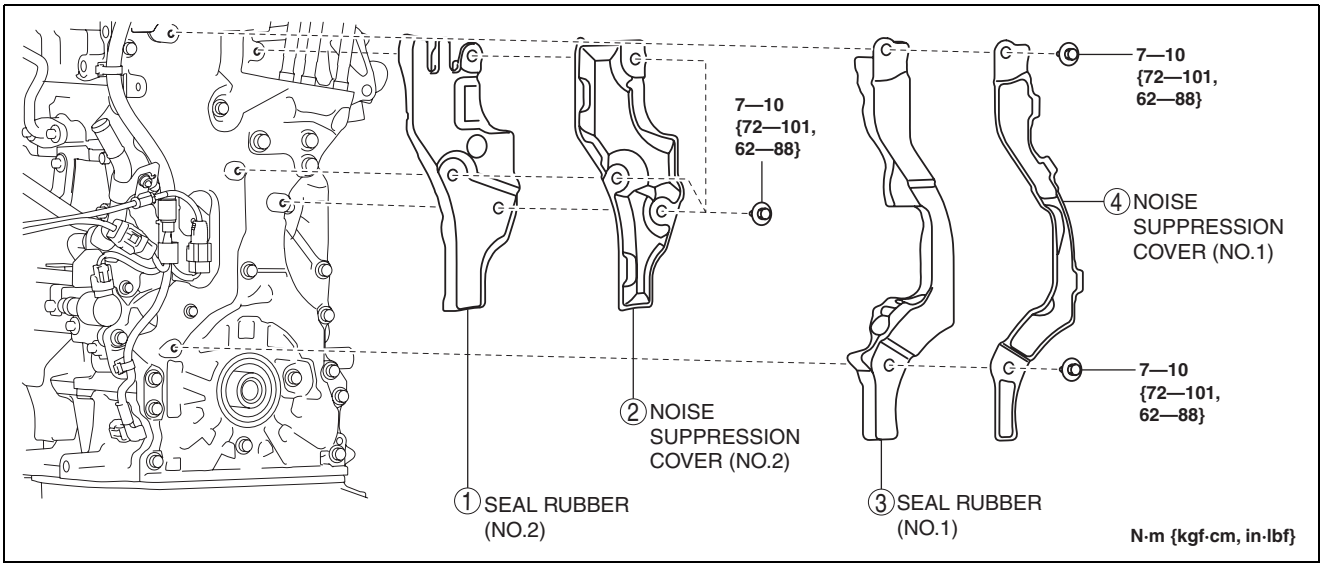

ac5wzw0000525

MECHANICAL [SKYACTIV-D 2.2]

Water Pipe Installation Note

Caution
- **Do not apply oil (such as engine oil, ATF) to the O-ring. Otherwise, the O-ring could swell causing a seal malfunction.**
- **Install the water pipe so as not to damage the O-ring. Otherwise, it could cause a seal malfunction.**

1. Install the water pipe following procedure:
   (1) Apply engine coolant to the O-ring.
   (2) Install the water pipe.

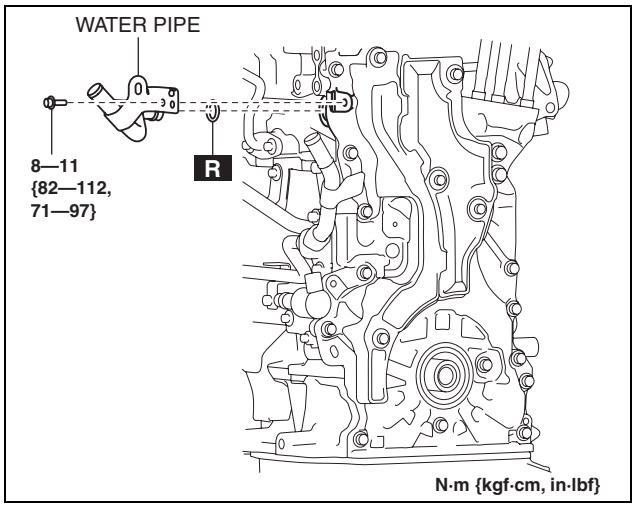

ac5wzw0000500

Drive Belt Auto Tensioner Installation Note

Caution
- **To allow the drive belt auto tensioner to function correctly, always bleed the air from the drive belt auto tensioner using the following procedure after assembling the drive belt auto tensioner.**

1. Install the drive belt auto tensioner to the engine.

Caution
- **To prevent damage to the drive belt auto tensioner, do not apply excessive torque after the tensioner moves full-stroke.**

2. Insert the wrench onto the cast hexagon on the drive belt auto tensioner, move the drive belt auto tensioner up and down at full-stroke three times to bleed the air.

Note
- By moving the drive belt auto tensioner up and down full-stroke three times, the piston inside the tensioner moves to bleed the air.

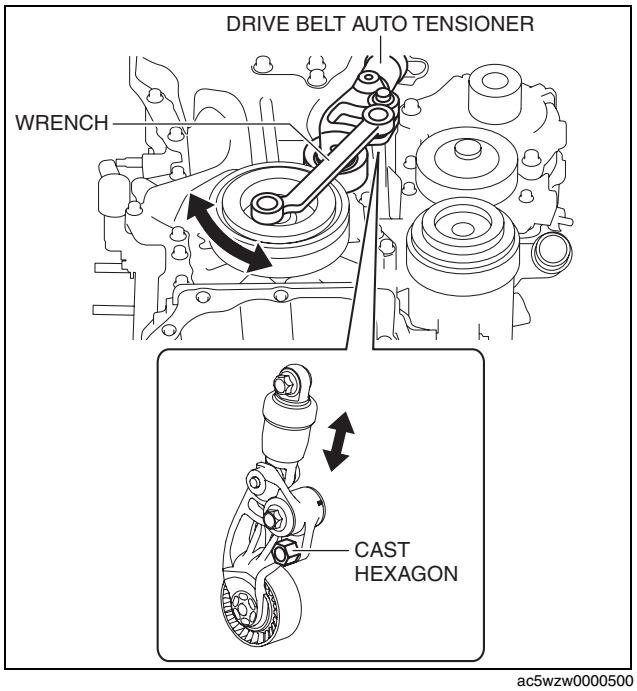

ac5wzw0000500

MECHANICAL [SKYACTIV-D 2.2]

No.3 Engine Mount Installation Note

Caution

- **If the No.3 engine mount is deviated from the original position when installing the No.3 engine mount, engine noise or vibration could increase. When installing the No.3 engine mount, align the alignment mark placed during removal and install it to the original position.**

Note

- When replacing the No.3 engine mount, place a mark at the same position as the one placed before removal.
- If the No.3 engine mount nut is loosened, tighten the engine front cover stud bolts because they may be loosened.

1. Tighten the engine front cover stud bolts.

   Tightening torque
   40—52 N·m {4.1—5.3 kgf·m, 30—38 ft·lbf}

2. Temporarily tighten the No.3 engine mount installation bolts and nuts using the following procedure:
   (1) Align the alignment marks on the body side and No.3 engine mount, and temporarily tighten the bolts shown in the figure.

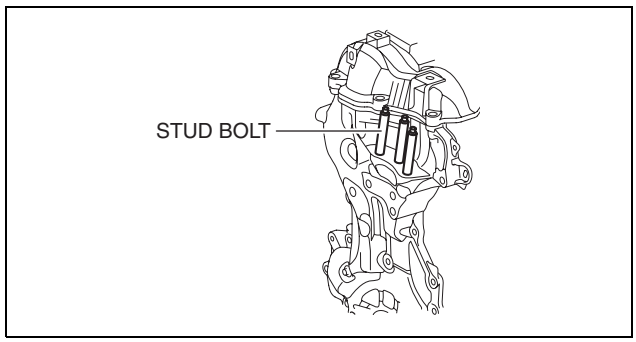

ac5wzw0000500

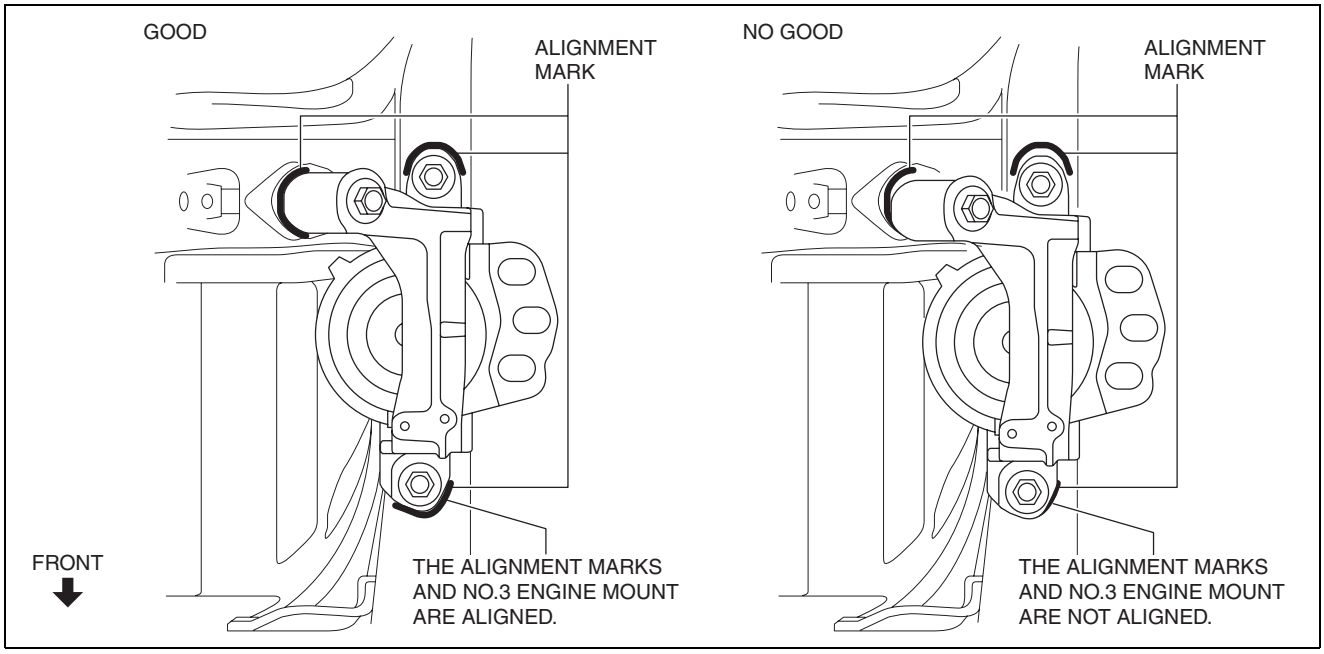

ac5wzw0000525

MECHANICAL [SKYACTIV-D 2.2]

(2) Temporarily tighten the nuts shown in the figure while aligning the alignment marks of the No.3 engine mount and nuts.

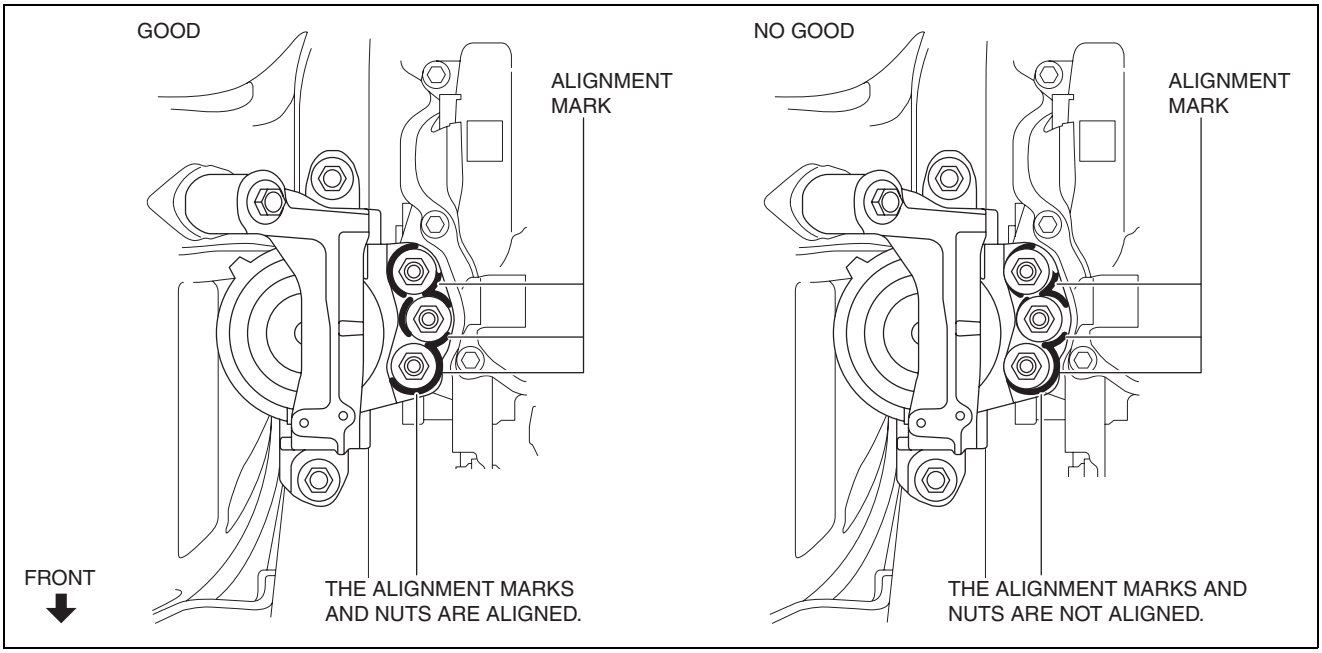

ac5wzw0000525

Note

- If the alignment marks are deviated, align the alignment marks while slightly moving the engine and temporarily tighten the nuts.

3. Tighten the No.3 engine mount installation bolts and nuts in the order as shown in the figure.

No.	Tightening torque
1	76—95 N·m {7.8—9.6 kgf·m, 57—70 ft·lbf}
2	82—95 N·m {8.4—9.6 kgf·m, 61—70 ft·lbf}
3	49—65 N·m {5.0—6.6 kgf·m, 37—47 ft·lbf}

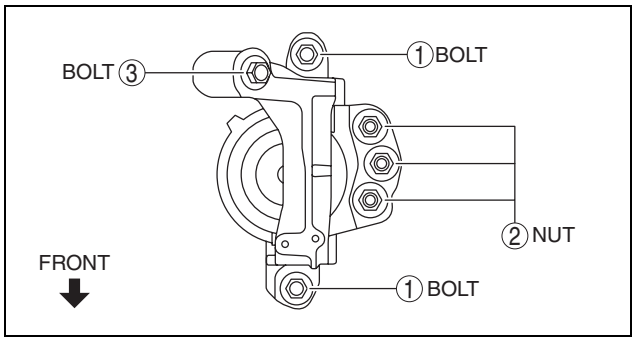

ac5wzw0000500

4. Remove the **SST**.
5. Install the wiring harness bracket, cooler hose and connector.
6. Install the PCM component using the following procedure:
   (1) Install the wiring harness protector and connector.

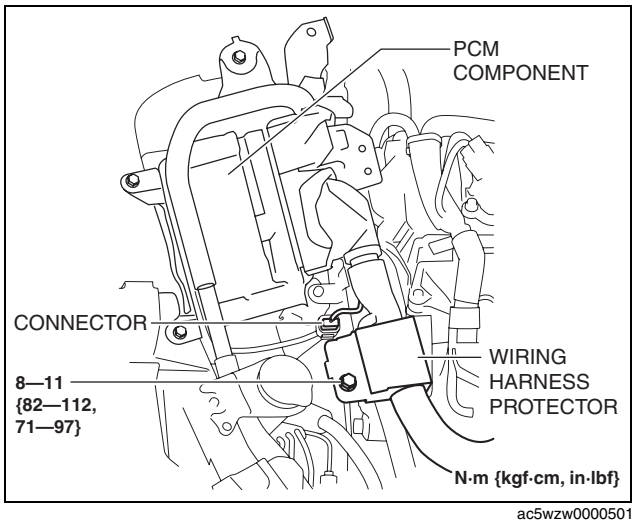

ac5wzw0000501

(2) Temporarily tighten the bolt shown in the figure.

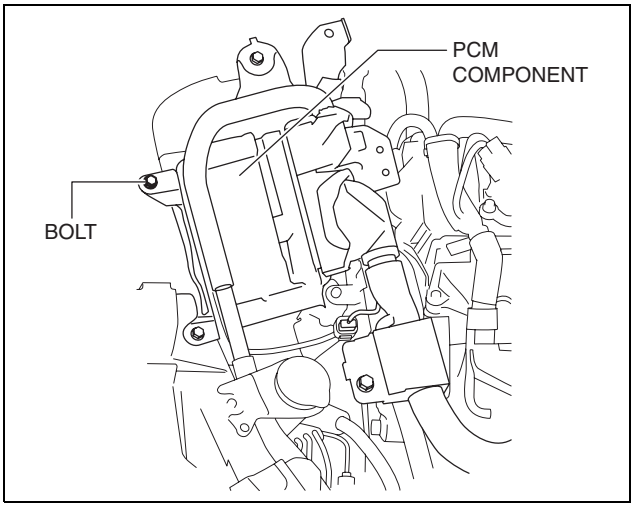

ac5wzw0000501

(3) Tighten the PCM component installation bolts in the order shown in the figure.

Tightening torque
9—10 N·m {92—101 kgf·cm, 80—88 in·lbf}

7. Install the ground cable to the PCM bracket.

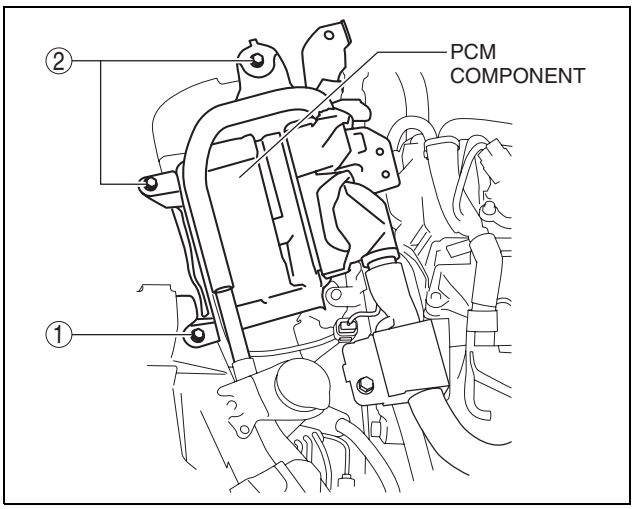

ac5wzw0000501

Oil Shower Pipe Installation Note

1. Install the oil shower pipe in the order shown in the figure.

Tightening torque

Installation position	Tightening torque
1	9—12 N·m {92—122 kgf·cm, 80—106 in·lbf}
2, 3	8.0—9.0 N·m {82—91 kgf·cm, 71—79 in·lbf}

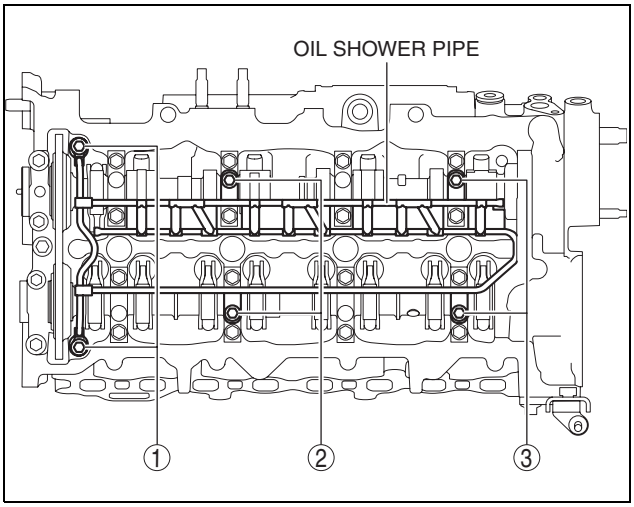

ac5wzw0000501

MECHANICAL [SKYACTIV-D 2.2]

Cylinder Head Cover Installation Note

Caution

- **To assure the sealing performance of the cylinder head cover, be careful of the following:**
  - **— Verify that the cylinder head cover gasket is inserted into the cylinder head cover groove and install the cylinder head cover.**
  - **— Remove oil, dirt, and sealant from the seal surface.**
- **To prevent silicone sealant from hardening, adhere the cylinder head cover and the cylinder head firmly within 10 min. after applying silicone sealant. After adhering them, tighten the installation bolts immediately.**

1. Insert a new cylinder head cover gasket into the cylinder head cover groove.
2. Apply silicone sealant to the areas shown in the figure.

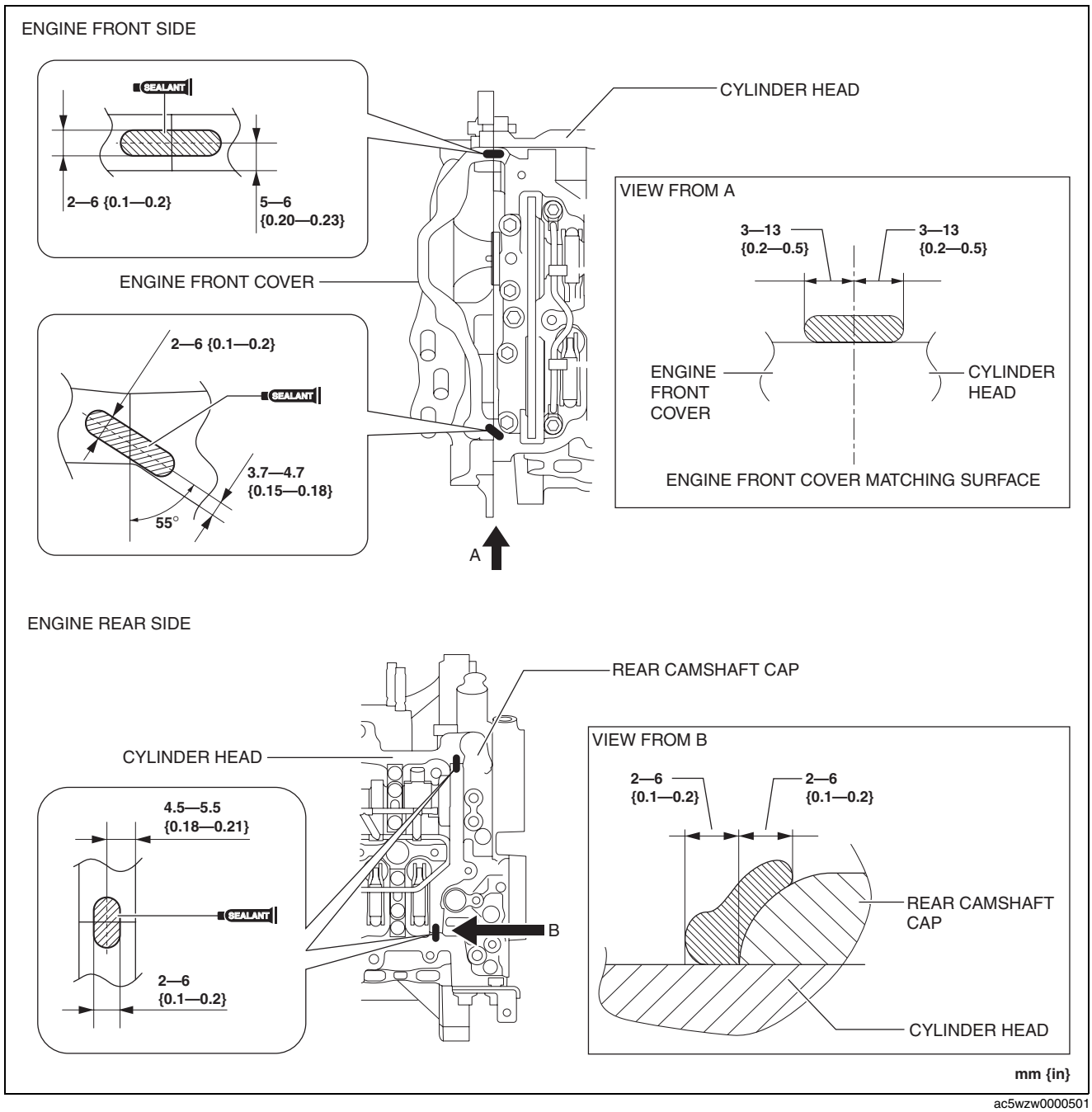

ac5wzw0000501

3. Tighten the cylinder head cover installation bolts using the following procedure:
   (1) Temporarily tighten the two bolts shown in the figure.

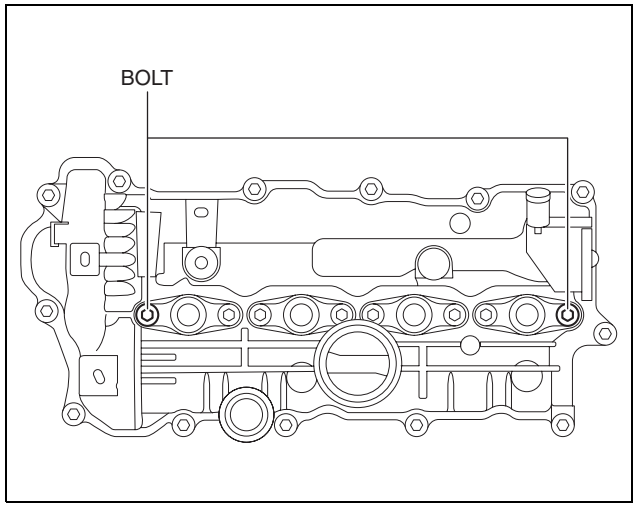

ac5wzw0000501

   (2) Tighten installation bolts A in the order shown in the figure.

Tightening torque
4.5—7.0 N·m {46—71 kgf·cm, 40—61 in·lbf}

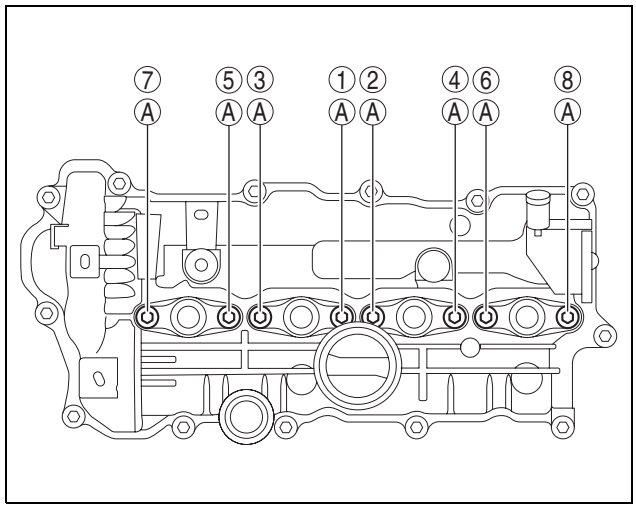

ac5jjw00004581

   (3) Tighten installation bolts B in the order shown in the figure.

Tightening torque
4.5—7.0 N·m {46—71 kgf·cm, 40—61 in·lbf}

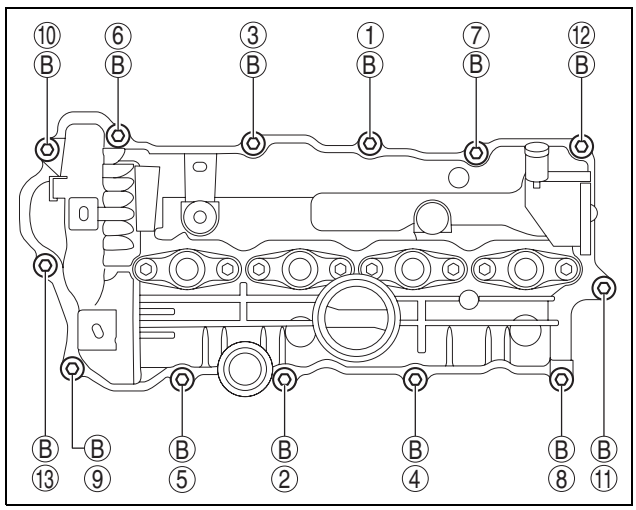

ac5jjw00004582

MECHANICAL [SKYACTIV-D 2.2]

Insulator Installation Note

1. Install the insulator using the following procedure.
   (1) Align the position so that the front end of the insulator is positioned at the front side of the vehicle from the exhaust insulator.
   (2) Insert the insulator until it contacts completely.

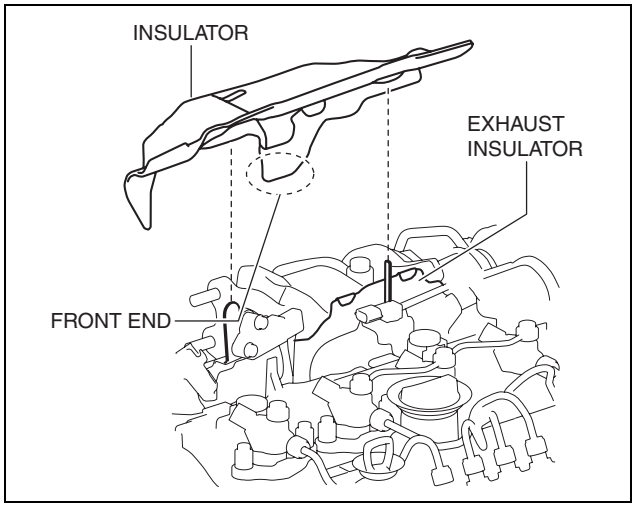

ac5wzw0000501

HYDRAULIC LASH ADJUSTER (HLA) INSPECTION [SKYACTIV-D 2.2]

id0110s5805000

HLA Troubleshooting

Item	Occurrence	Possible cause	Action
1	After replacing oil, sound occurs when starting engine	Oil shortage in oil passage	• Maintain the engine speed between 2,000 to 3,000 rpm for approx. 2 s and 10 min*, and verify that the sound disappears. — If the sound disappears, the HLA is normal. — If the sound does not disappear, go to item 5.
2	Sound occurs at instant when engine is started on vehicle left for 1 day		
3	Starter cranked for 3 s or more and sound occurs directly after engine is started	HLA oil shortage	
4	Sound occurs directly after engine is started with newly replaced HLA		
5	Sound occurs continuously for 10 min or more	Insufficient oil pressure	• Inspect the oil pressure. (See 01-11B-7 OIL PRESSURE INSPECTION [SKYACTIV-D 2.2].) — If less than the specification, inspect each part of the engine.
		HLA malfunction	• Inspect the HLA. (See 01-10B-49 HLA Inspection.)
6	Sound occurs during idling after high-speed driving	Incorrect engine oil level	• Inspect the engine oil level. (See 01-11B-3 ENGINE OIL LEVEL INSPECTION [SKYACTIV-D 2.2].)
		Engine oil deterioration	• Replace the engine oil. (See 01-11B-4 ENGINE OIL REPLACEMENT [SKYACTIV-D 2.2].)

* : Period of time engine oil flows to the HLA, this value includes tolerance caused by the ambient temperature and the oil used.

MECHANICAL [SKYACTIV-D 2.2]

HLA Inspection

1. Disconnect the negative battery cable. (See 01-17B-9 NEGATIVE BATTERY CABLE DISCONNECTION/ CONNECTION [SKYACTIV-D 2.2].)
2. Remove the engine cover. (See 01-10B-4 ENGINE COVER REMOVAL/INSTALLATION [SKYACTIV-D 2.2].)
3. Remove the fuel injectors. (See 01-14B-35 FUEL INJECTOR REMOVAL/INSTALLATION [SKYACTIV-D 2.2].)
4. Remove the cylinder head cover. (See 01-10B-16 TIMING CHAIN REMOVAL/INSTALLATION [SKYACTIV-D 2.2].)
5. Press the rocker arm from above and verify that the HLA does not drop.
   - If the HLA drops, replace the HLA. (See 01-10B-49 HYDRAULIC LASH ADJUSTER (HLA) REMOVAL/INSTALLATION [SKYACTIV-D 2.2].)
6. Install in the reverse order of removal.

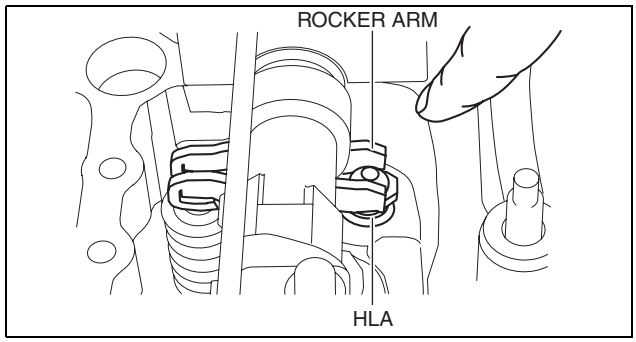

ac5wzw0000506

HYDRAULIC LASH ADJUSTER (HLA) REMOVAL/INSTALLATION [SKYACTIV-D 2.2]

id0110s5804100

Warning

- **A hot engine can cause severe burns. Turn off the engine and wait until it is cool before servicing.**

Caution

- **When rotating the camshaft using a wrench on the cast hexagon, the wrench may contact the rocker arm and damage the rocker arm. To prevent damage to the rocker arm when holding the camshaft on the cast hexagon, use the wrench at engine rear side as shown in the figure to secure a clearance between the cam.**

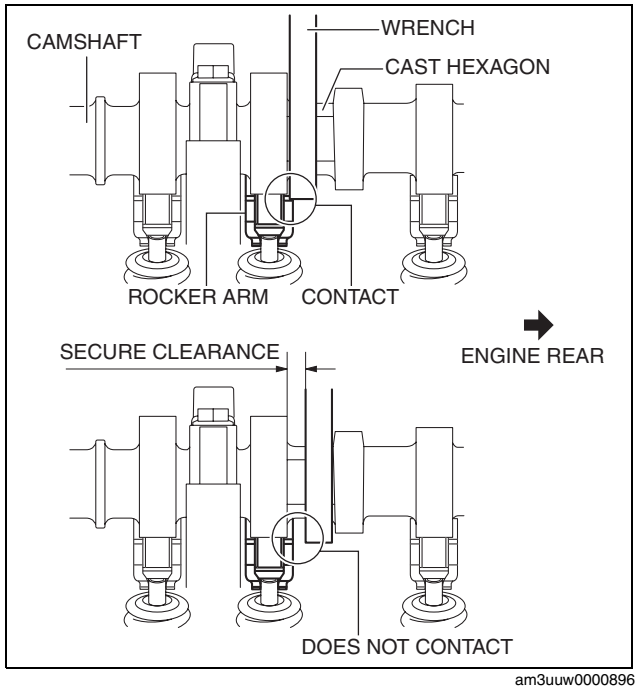

am3uuw0000896

MECHANICAL [SKYACTIV-D 2.2]

Note

- Width at the cast hexagon of the camshaft is 22—24 mm {0.87—0.94 in}.

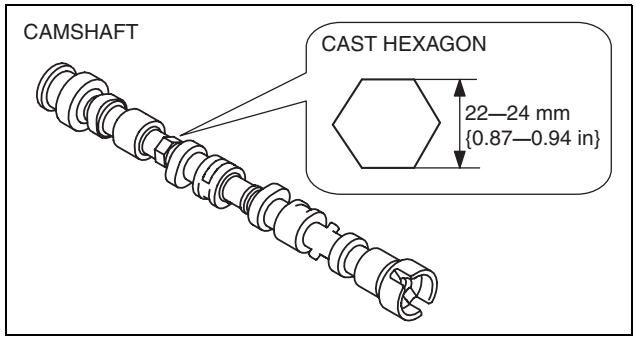

ac5wzw0000503

1. Disconnect the negative battery cable. (See 01-17B-9 NEGATIVE BATTERY CABLE DISCONNECTION/ CONNECTION [SKYACTIV-D 2.2].)
2. Remove the engine cover. (See 01-10B-4 ENGINE COVER REMOVAL/INSTALLATION [SKYACTIV-D 2.2].)
3. Remove the fuel injectors. (See 01-14B-35 FUEL INJECTOR REMOVAL/INSTALLATION [SKYACTIV-D 2.2].)
4. Remove the lower case. (See 01-14B-54 LOWER CASE REMOVAL/INSTALLATION [SKYACTIV-D 2.2].)
5. Remove the vacuum pump. (See 04-11-22 VACUUM PUMP REMOVAL/INSTALLATION [SKYACTIV-D 2.2].)
6. Remove the supply pump. (See 01-14B-46 SUPPLY PUMP REMOVAL/INSTALLATION [SKYACTIV-D 2.2].)
7. Remove the cylinder head cover. (See 01-10B-16 TIMING CHAIN REMOVAL/INSTALLATION [SKYACTIV-D 2.2].)
8. Remove the CMP sensor.
9. Remove the splash shield. (See 09-16-49 SPLASH SHIELD REMOVAL/INSTALLATION.)
10. Remove in the order indicated in the table.
11. Install in the reverse order of removal.
12. Start the engine and inspect the following:
    - Idle speed (See 01-10B-3 ENGINE TUNE-UP [SKYACTIV-D 2.2].)

MECHANICAL [SKYACTIV-D 2.2]

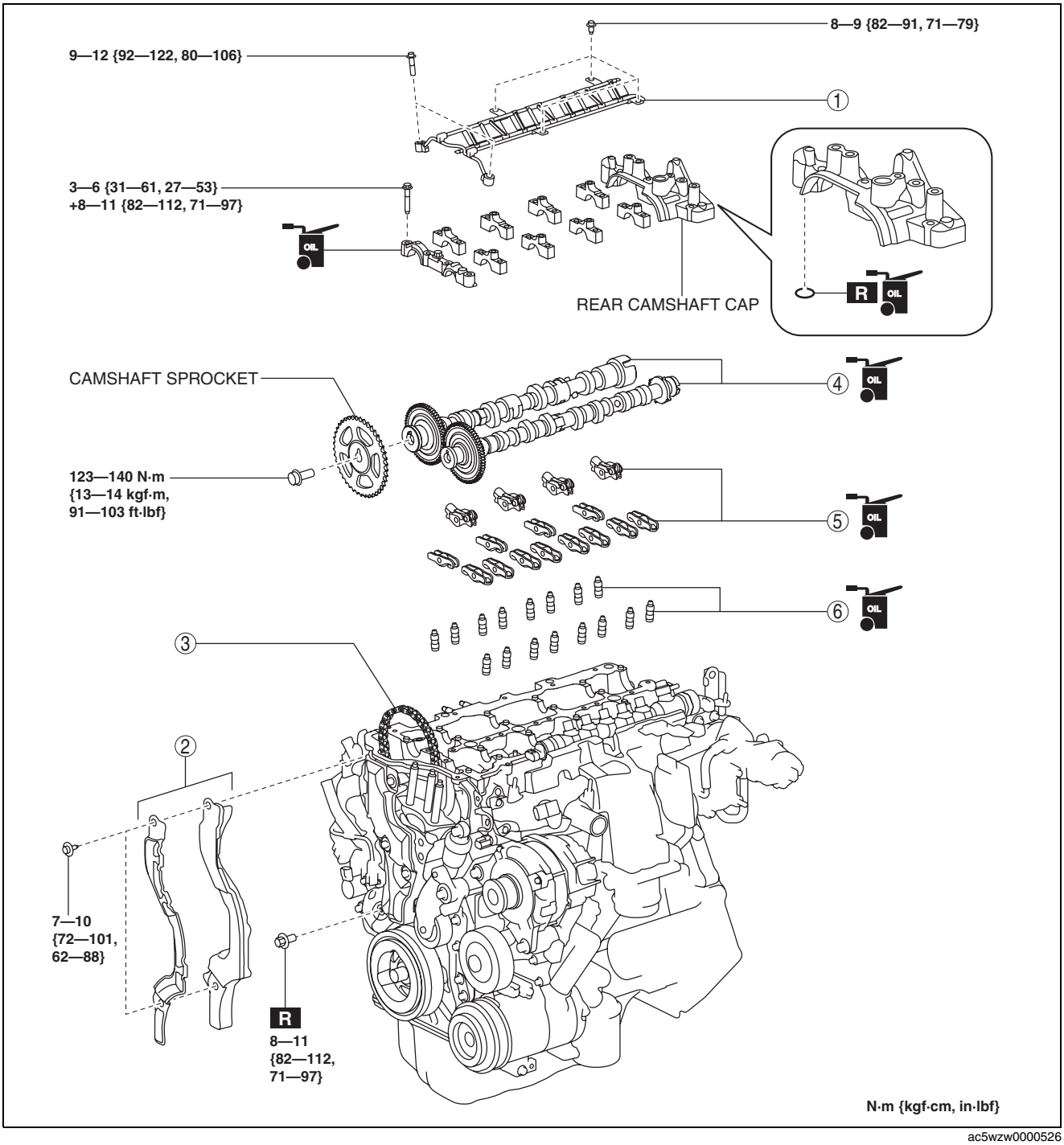

ac5wzw0000526

1	Oil shower pipe (See 01-10B-64 Oil Shower Pipe Installation Note.)
2	Noise suppression cover (No.1), seal rubber (See 01-10B-52 Noise Suppression Cover (No.1), Seal Rubber Removal Note.) (See 01-10B-63 Noise Suppression Cover (No.1), Seal Rubber Installation Note.)
3	Timing chain (See 01-10B-53 Timing Chain Removal Note.) (See 01-10B-61 Timing Chain Installation Note.)

4	Camshaft (See 01-10B-56 Camshaft Removal Note.) (See 01-10B-58 Camshaft Installation Note.)
5	Rocker arm (See 01-10B-56 Rocker Arm Removal Note.) (See 01-10B-57 Rocker Arm Installation Note.)
6	HLA (See 01-10B-56 HLA Removal Note.) (See 01-10B-57 HLA Installation Note.)

MECHANICAL [SKYACTIV-D 2.2]

Noise Suppression Cover (No.1), Seal Rubber Removal Note

1. Remove the clip and bolt shown in the figure and set the ground cable aside.

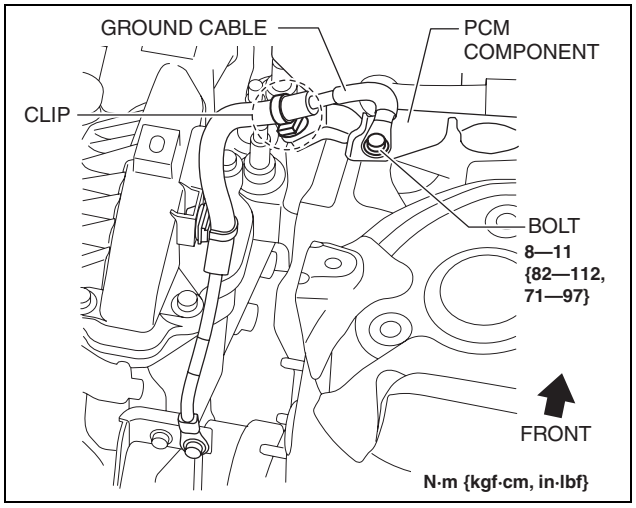

ac5wzw0000503

2. Remove the bolts and connector shown in the figure and set the PCM component aside with the PCM connector connected.

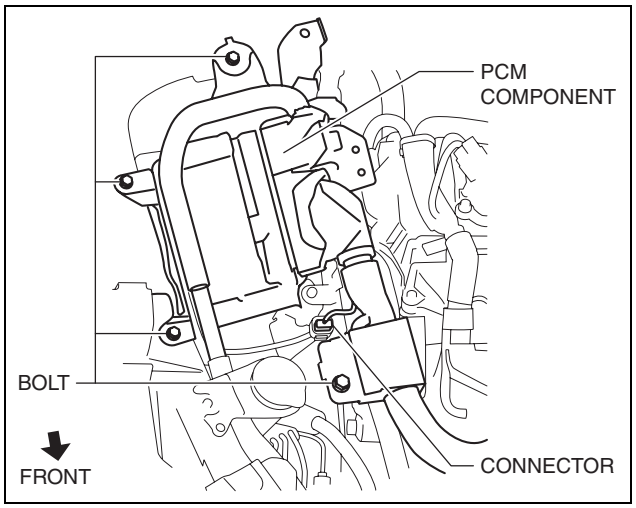

ac5wzw0000503

3. Remove the noise suppression cover and seal rubber in the order shown in the figure.

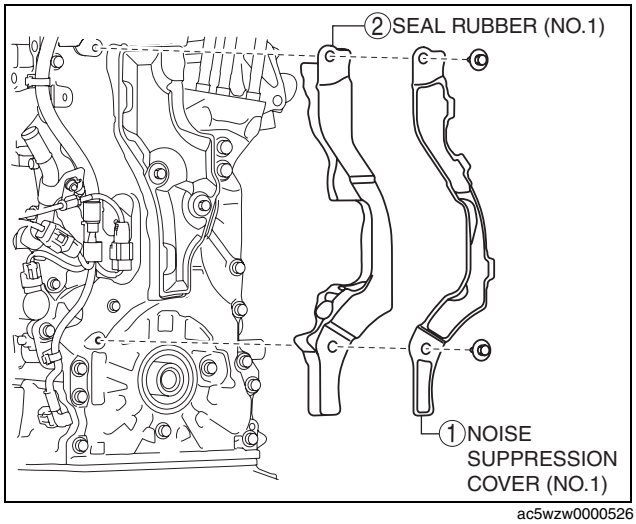

ac5wzw0000526

Timing Chain Removal Note

Caution
- **Keep the timing chain and camshaft sprocket pulled up during and after the work in which it has been set aside from the exhaust camshaft. If the chain falls down, it may disengage from the sprocket on the crankshaft side and deviate, leading to valve timing deviation.**
- **After servicing, always verify the valve timing.**

1. Release the tension on the timing chain using the following procedure:

Note
- Release the tension on the timing chain by securing the plunger of the timing chain tensioner through the service hole on the engine front cover.

(1) Remove the blind plug on the engine front cover service hole.

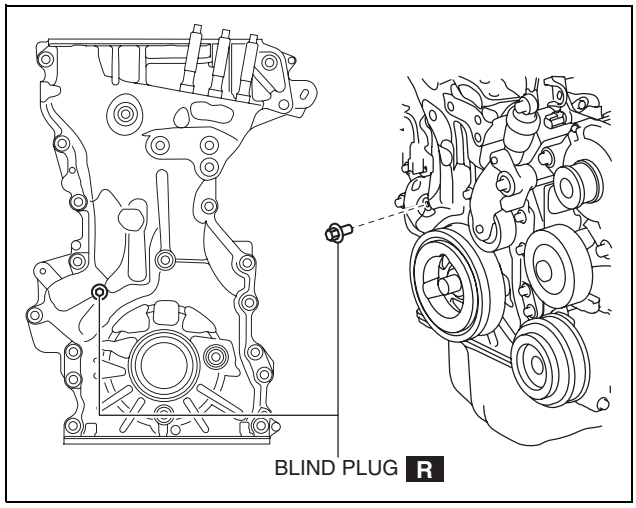

ac5wzw0000503

(2) Insert a wire with an approx. diameter of **1.4 mm {0.055 in}** or a paper clip into the body hole of the timing chain tensioner through the service hole.

Note
- Before pressing the plunger of the timing chain tensioner, insert the wire or paper clip **approx. 22.5 mm {0.886 in}** from the engine front cover.

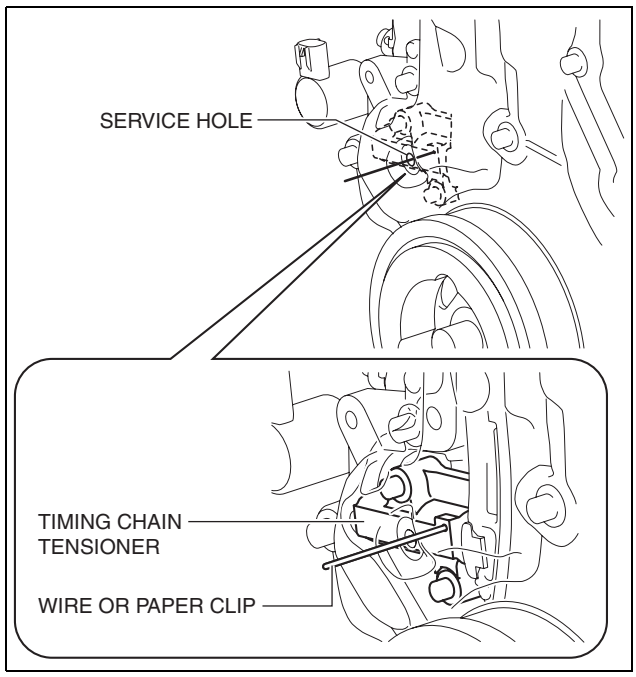

ac5wzw0000503

MECHANICAL [SKYACTIV-D 2.2]

(3) While moving the exhaust camshaft in the direction of the arrow using a wrench on the cast hexagon, press in the plunger of the timing chain tensioner.

Note
- By rotating the exhaust camshaft clockwise, the timing chain can be pulled slightly and the timing chain presses in the tensioner plunger.

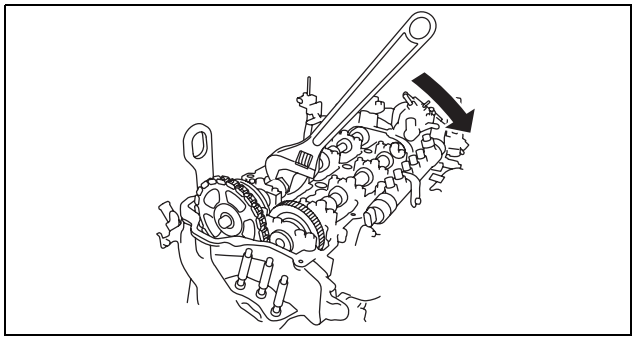
ac5jjw00004551

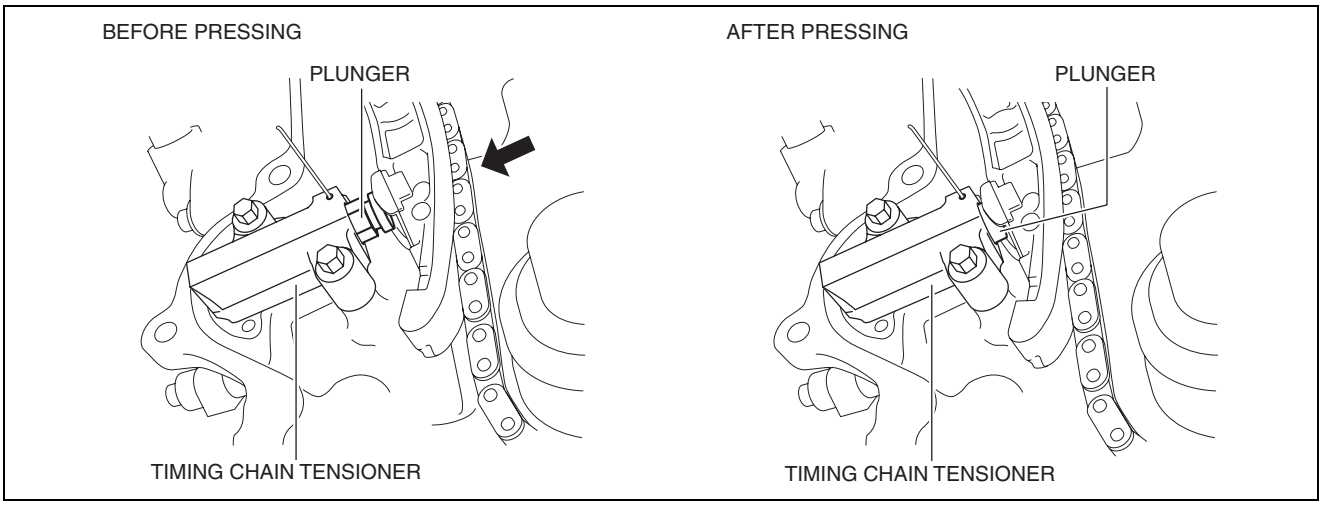

ac5wzw0000503

(4) Press in the wire set in Step 2 or paper clip further with the plunger pressed.

Note
- While the plunger of the timing chain tensioner is pressed, the wire or paper clip can be inserted further to **approx. 8 mm {0.3 in}**.
- The wire or paper clip secures the plunger, and the tension can be released.

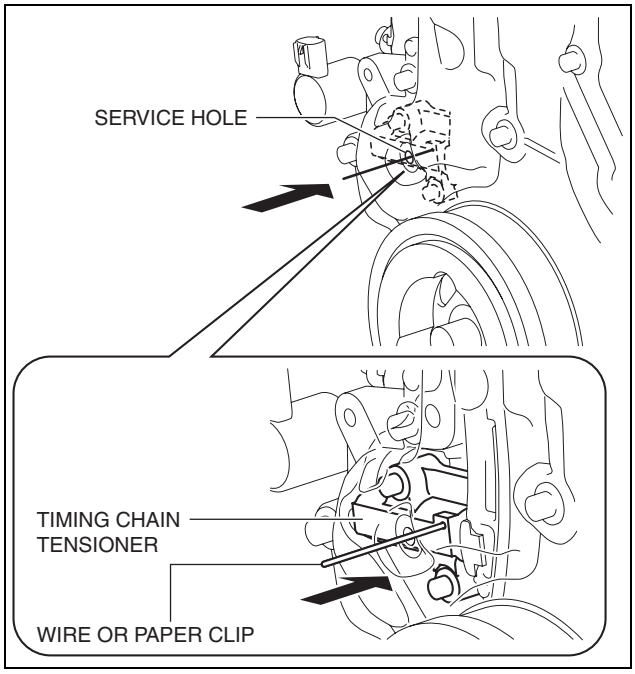

ac5wzw0000504

2. Rotate the crankshaft clockwise so that cylinder No.1 is positioned at top dead center (TDC) as shown in the figure.

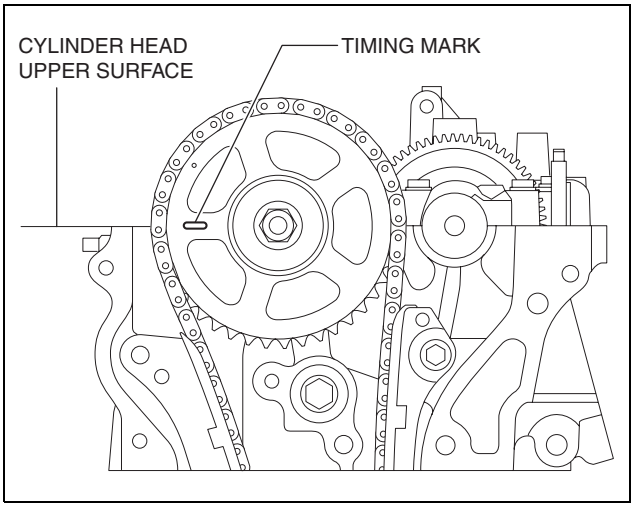

ac5wzw0000504

3. Place a paint mark on the engine front cover and crankshaft pulley so that the valve timing can be verified when assembling.

Note
- The position in while the paint mark is placed is not restricted. The marked position is fine as long as visual verification is possible after assembly.

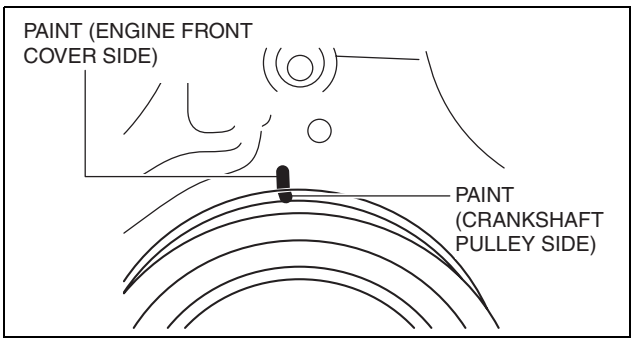

ac5wzw0000504

4. Temporarily install the cylinder head cover bolt to the position shown in the figure to use it for suspending the timing chain and camshaft sprocket.

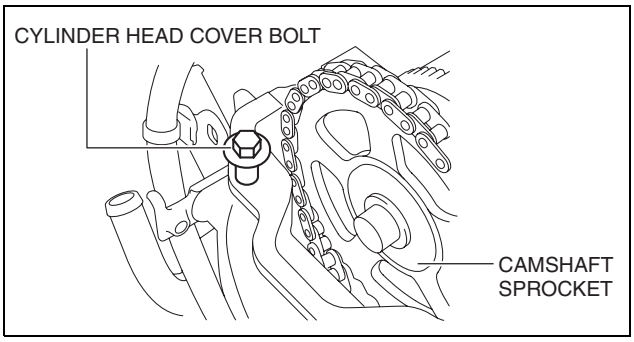

ac5wzw0000504

5. Hold the exhaust camshaft using a wrench on the cast hexagon and remove the camshaft sprocket installation bolt.

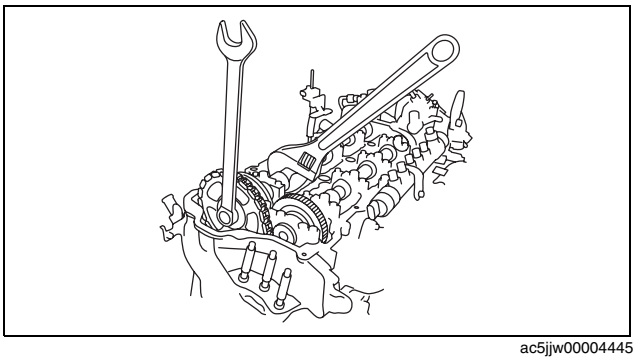

ac5jjw00004445

MECHANICAL [SKYACTIV-D 2.2]

6. Separate the camshaft sprocket and the exhaust camshaft while the timing chain is hung on the camshaft sprocket.

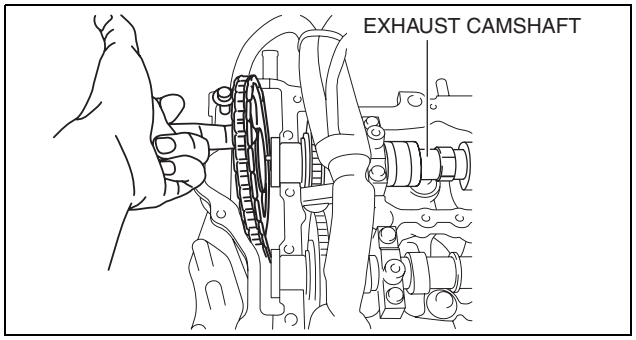

ac5wzw0000504

7. Pull up the camshaft sprocket using a rope while the timing chain is hung on the camshaft sprocket and pulled it up as shown in the figure.

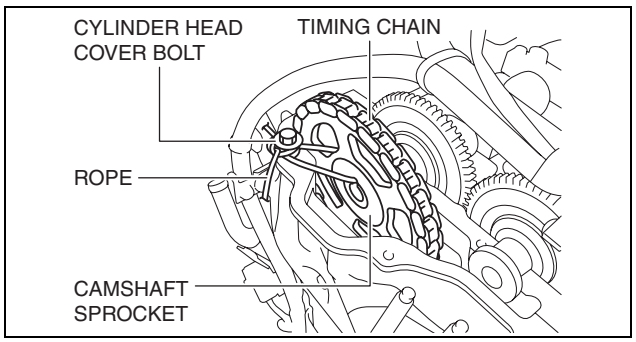

ac5wzw0000504

Camshaft Removal Note

1. Loosen the camshaft cap bolts in two or three passes in the order shown in the figure, and remove the camshaft cap.
2. Remove the camshaft.

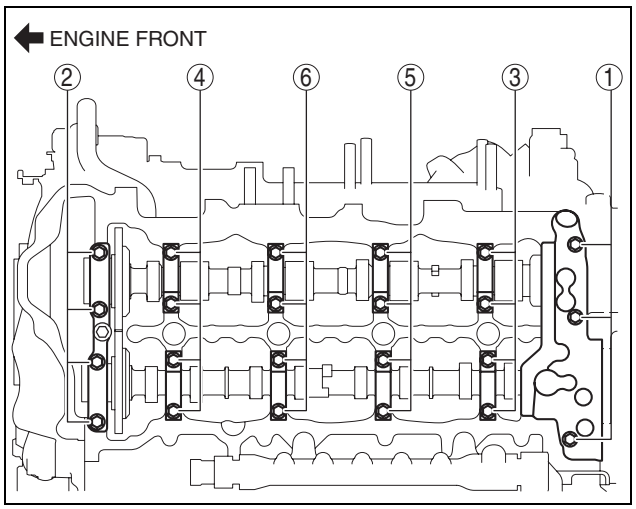

ac5wzw0000504

Rocker Arm Removal Note

1. Keep the rocker arms in the order of removal to enable reassembly in their original positions.

HLA Removal Note

1. Keep the HLAs in the order of removal to enable reassembly in their original positions.

MECHANICAL [SKYACTIV-D 2.2]

HLA Installation Note

1. Perform HLA air bleeding using the following procedure.
   (1) Put the HLA in a container filled with engine oil.

Caution

- **Do not insert the round bar firmly because the check ball spring force is extremely weak.**

   (2) While lightly pressing the check ball using a round bar (**approx. 1.0 mm {0.039 in}** diameter), bleed air by moving the plunger up and down.
   (3) Press the end of the plunger in the oil and verify that there is no rebounding feel.
      - If rebounding feel cannot be eliminated, replace the HLA.

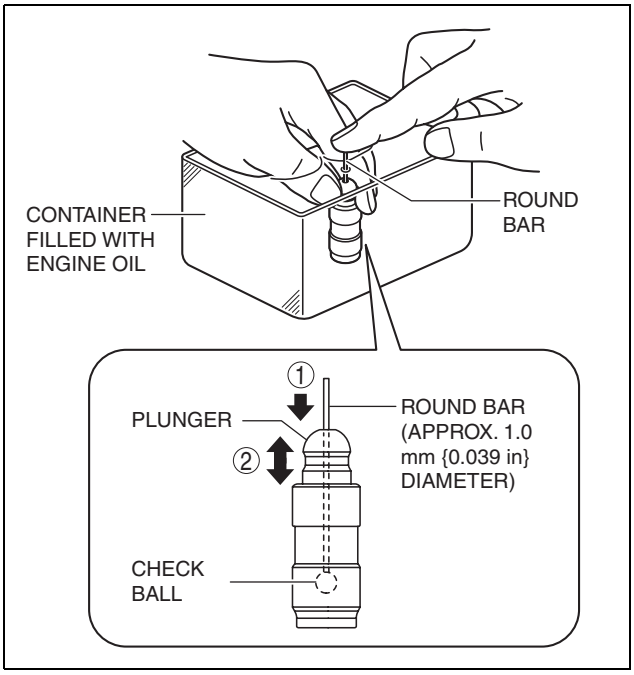

am3uuw0000898

2. Visually inspect the HLA surface where it contacts the rocker arm for wear or damage.
   - If there is any malfunction, replace the HLA.
3. Assemble the HLAs to their original positions.

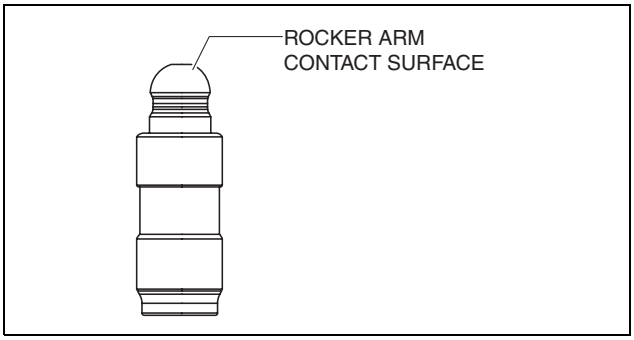

am3uuw0000898

Rocker Arm Installation Note

1. Apply engine oil to the HLAs and the end of the valve stems.
2. Install the rocker arms to the same positions as before removal.

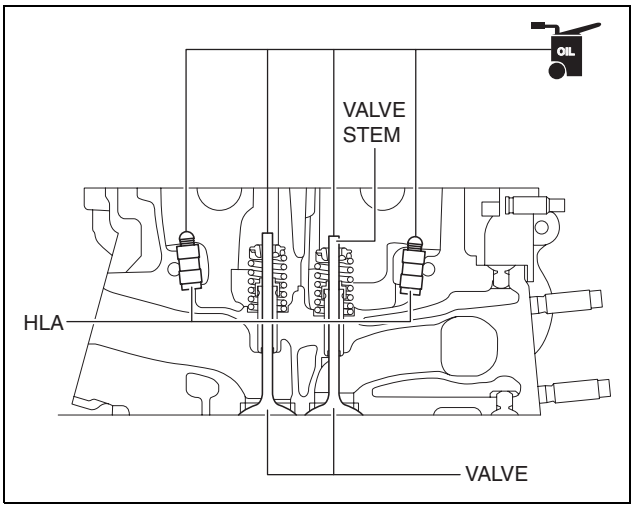

ac5wzw0000504

MECHANICAL [SKYACTIV-D 2.2]

Camshaft Installation Note

1. Apply gear oil (SAE No. 90 or equivalent) or engine oil to the following locations.
   - Each journal of the cylinder heads
   - Needle roller bearing and slipper area of the rocker arm

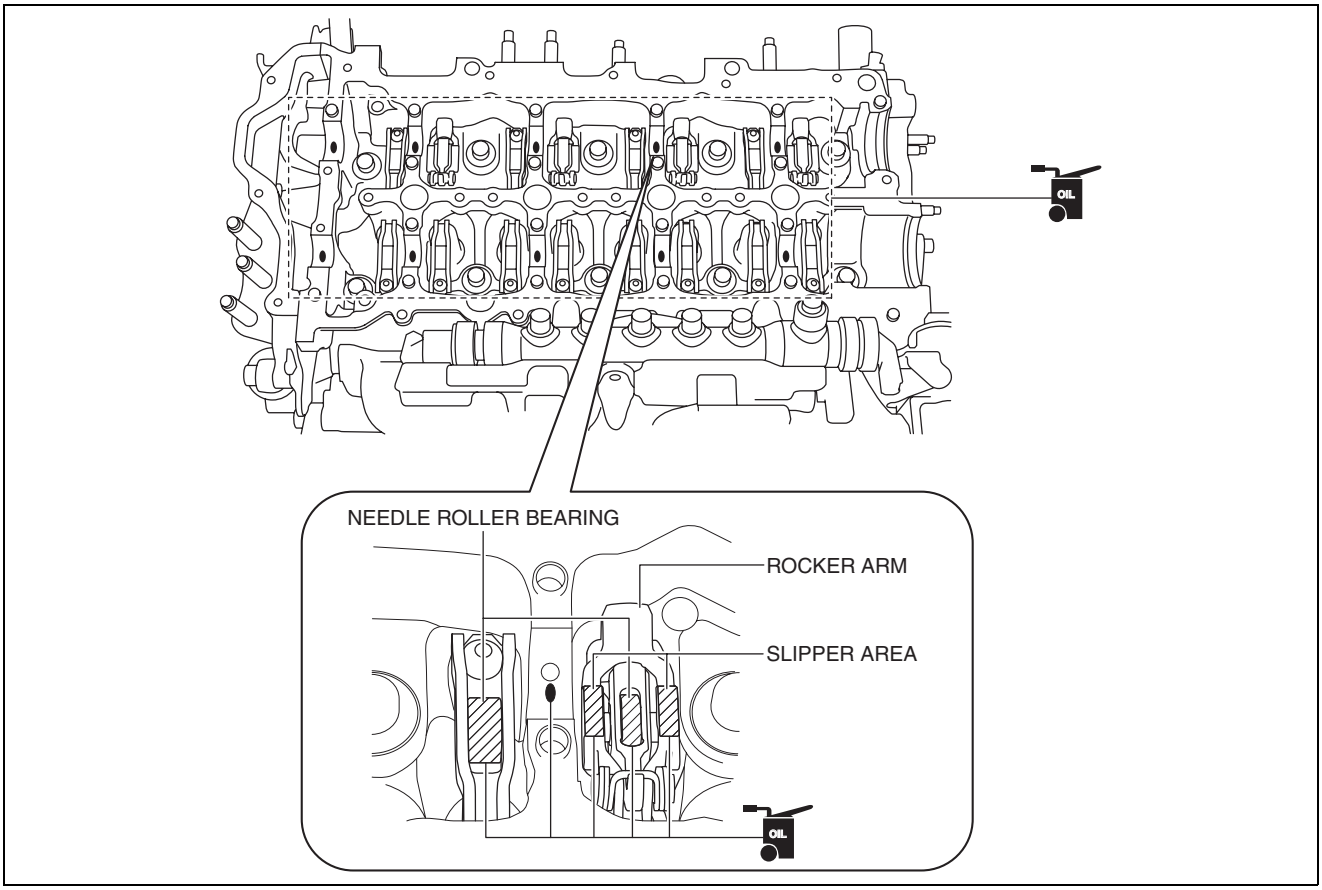

ac5wzw0000526

2. Apply gear oil (SAE 90 or equivalent) or engine oil to the following locations of each camshaft.
   - Gear sliding surfaces
   - Thrust surface of front journal

   Note
   - If oil is applied to the front camshaft cap, oil should not be applied to the thrust surface of the front journal.

3. Place the camshaft on the cylinder head and align the alignment marks for each gear as shown in the figure.
4. As shown in the figure, apply gear oil (SAE No. 90 or equivalent) or engine oil to the center area of each journal of the camshaft.

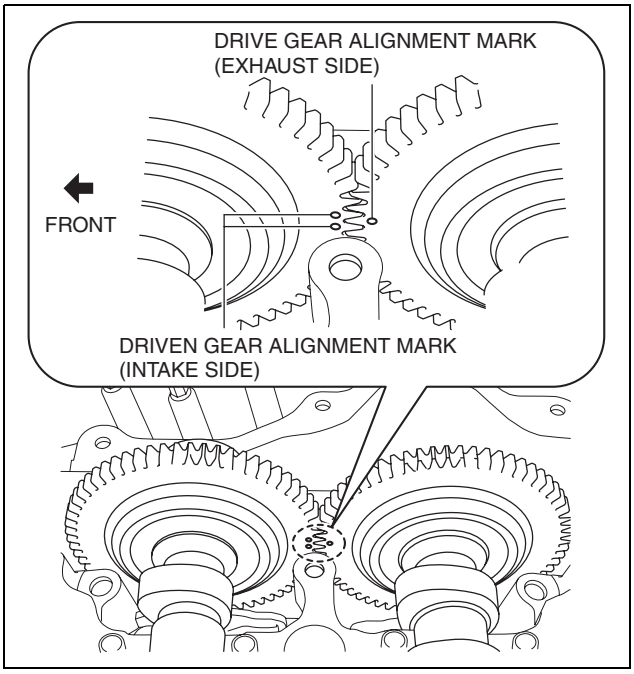

ac5wzw0000504

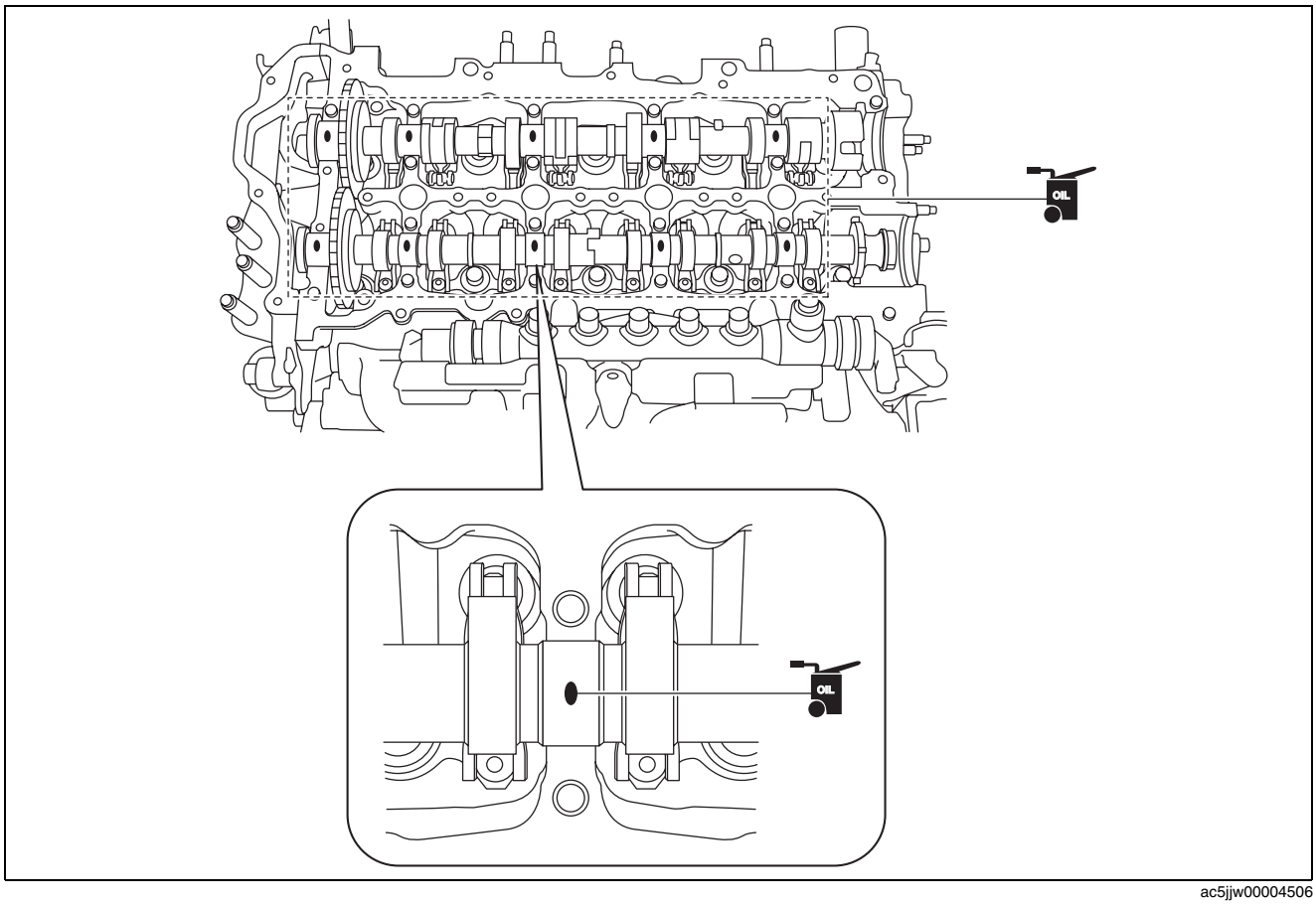

ac5jjw00004506

MECHANICAL [SKYACTIV-D 2.2]

5. Apply adhesive agent (Loctite#962T) to the rear side of the cylinder head or rear camshaft cap.

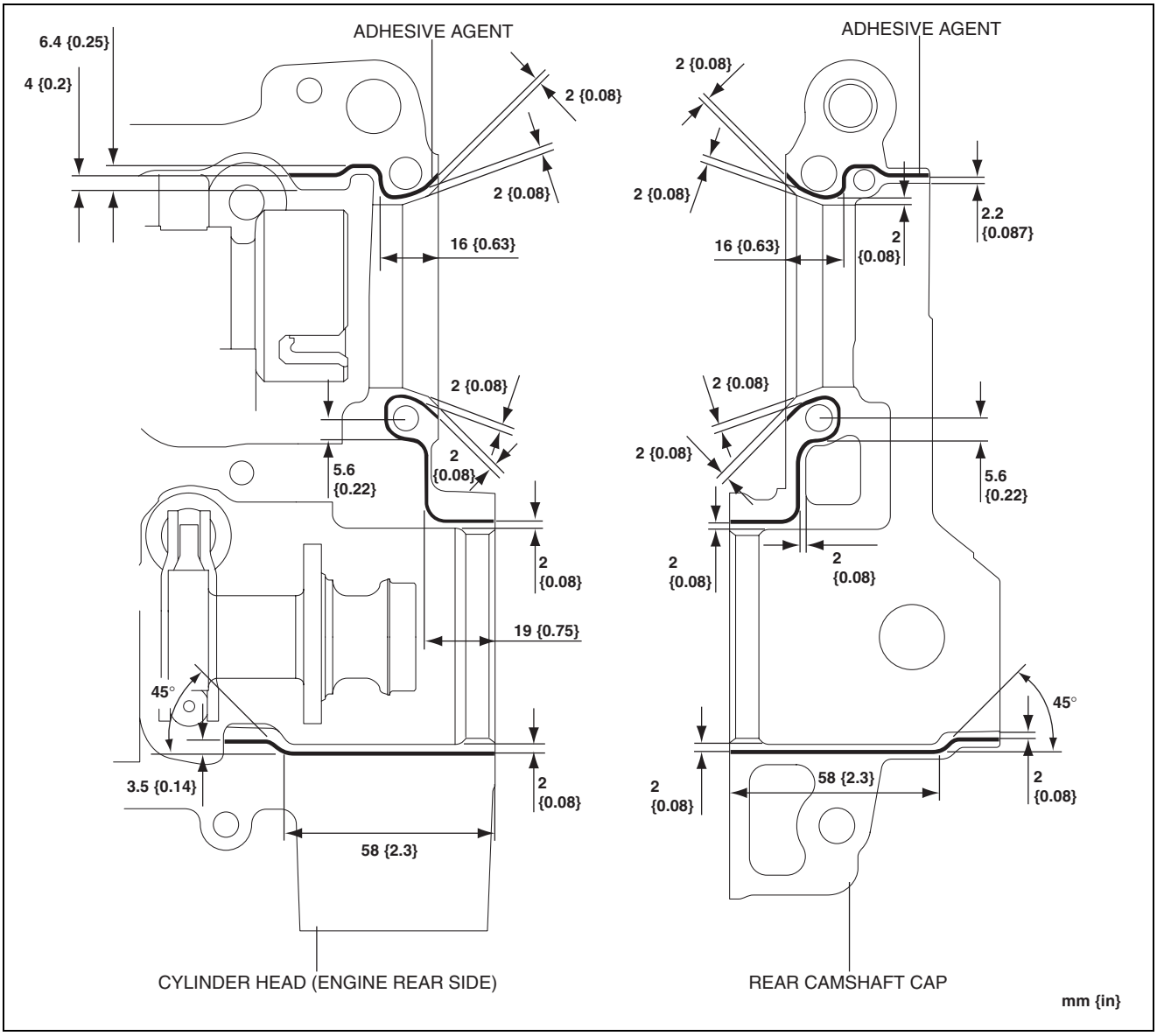

ac5wzw0000526

Caution
- **Do not spill adhesive agent on the journal.**
- **To prevent adhesive agent from hardening, adhere the rear camshaft cap to the cylinder head within 10 min after adhesive agent is applied. Tighten the installation bolts completely soon after adhering.**

Adhesive agent bead width
1—3 mm {0.04—0.11 in}

6. Apply engine oil to the new rear camshaft cap O-ring and install it to the rear camshaft cap.

Caution
- **Be careful not to damage or drop the O-ring when installing the rear camshaft cap.**

7. Apply gear oil (SAE 90 or equivalent) or engine oil to the thrust surface of the front camshaft cap.

Note
- If oil is applied to the front journal thrust surface of each camshaft, oil should not be applied to the front camshaft cap.

8. Install the camshaft caps in the marked number order, and temporarily tighten the camshaft cap installation bolts in two or three passes evenly.
9. Tighten the camshaft cap installation bolts in two steps in the order shown in the figure.

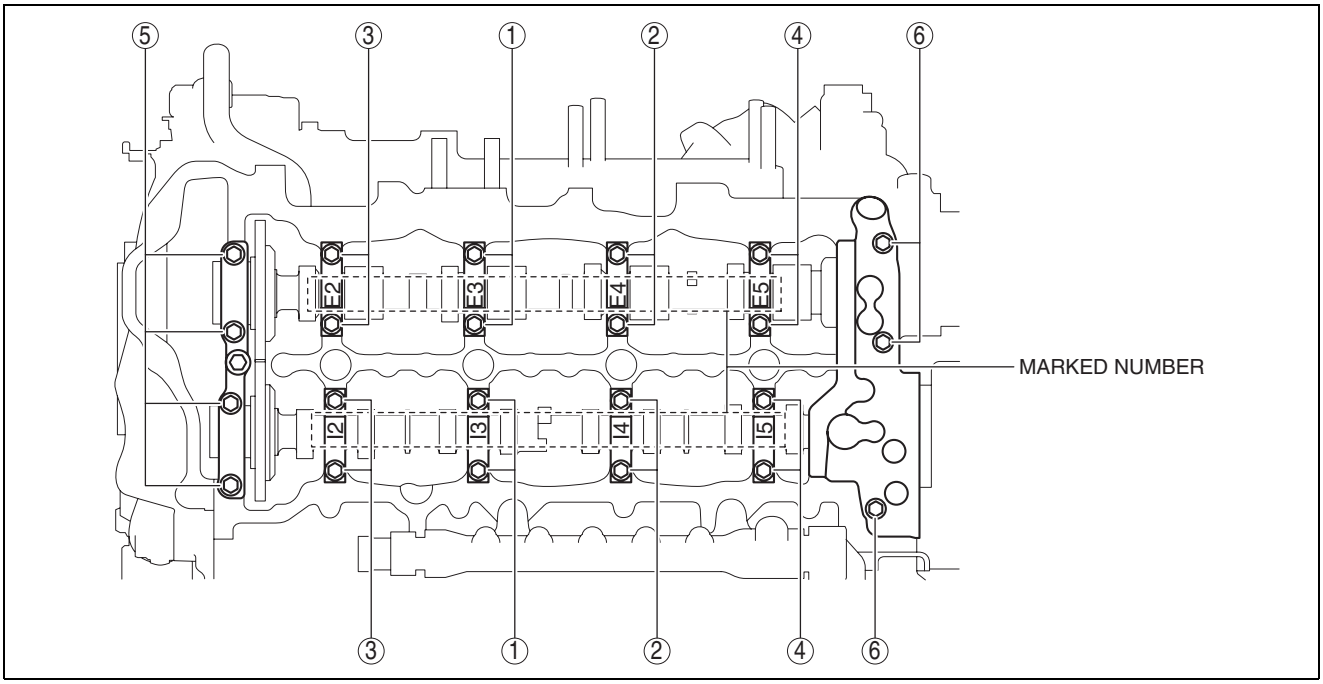

ac5wzw0000505

Timing Chain Installation Note

1. Pull the timing chain and the camshaft sprocket and remove the suspending rope.
2. Align the knock pin on the end of the exhaust camshaft with the notch on the camshaft sprocket side, then assemble the sprocket.

   Note
   - Align the knock pin and the notch while adjusting the knock pin position by rotating the camshaft.

3. Tighten the camshaft sprocket installation bolt using the following procedure:
   (1) Temporarily tighten the camshaft sprocket installation bolt.
   (2) Hold the exhaust camshaft using a wrench on the cast hexagon, and tighten the camshaft sprocket installation bolt.

   Tightening torque
   123—140 N·m {13—14 kgf·m, 91—103 ft·lbf}

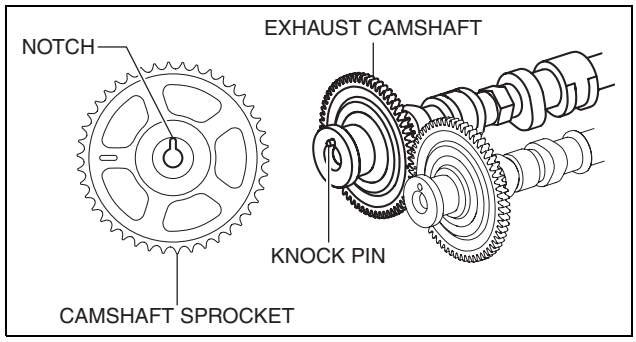

ac5wzw0000505

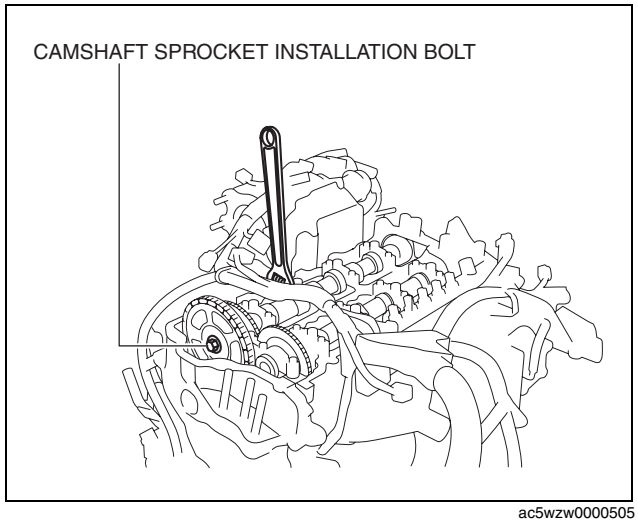

ac5wzw0000505

MECHANICAL [SKYACTIV-D 2.2]

Note

- If there is no appropriate tool which can be used to tighten the camshaft sprocket installation bolt to the specified tightening torque, tighten the bolt using the method as shown in the figure. For the specified tightening torque calculation method if the tool is elongated, refer to the “SERVICE CAUTIONS” in the general information. (See 00-00-13 SERVICE CAUTIONS.)

4. Remove the wire or paper clip securing the plunger of the timing chain tensioner and apply tension to the timing chain.
5. Rotate the crankshaft clockwise **twice** and verify that the valve timing is correct.

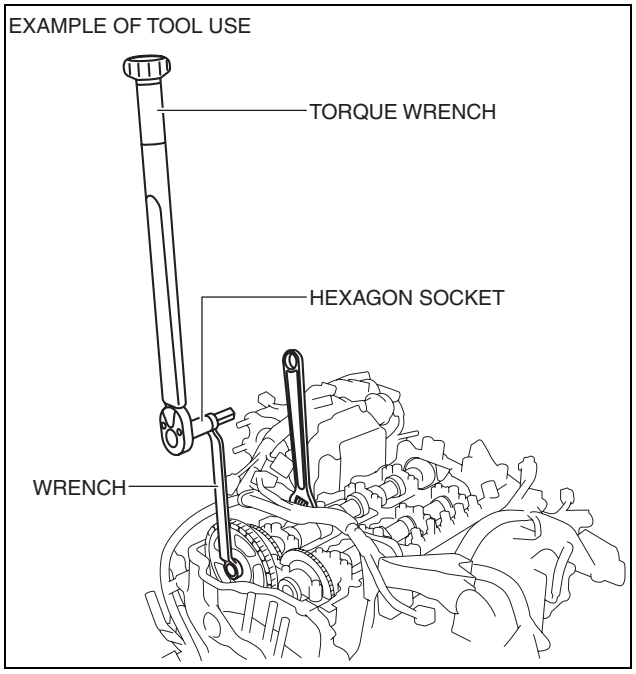

ac5wzw0000505

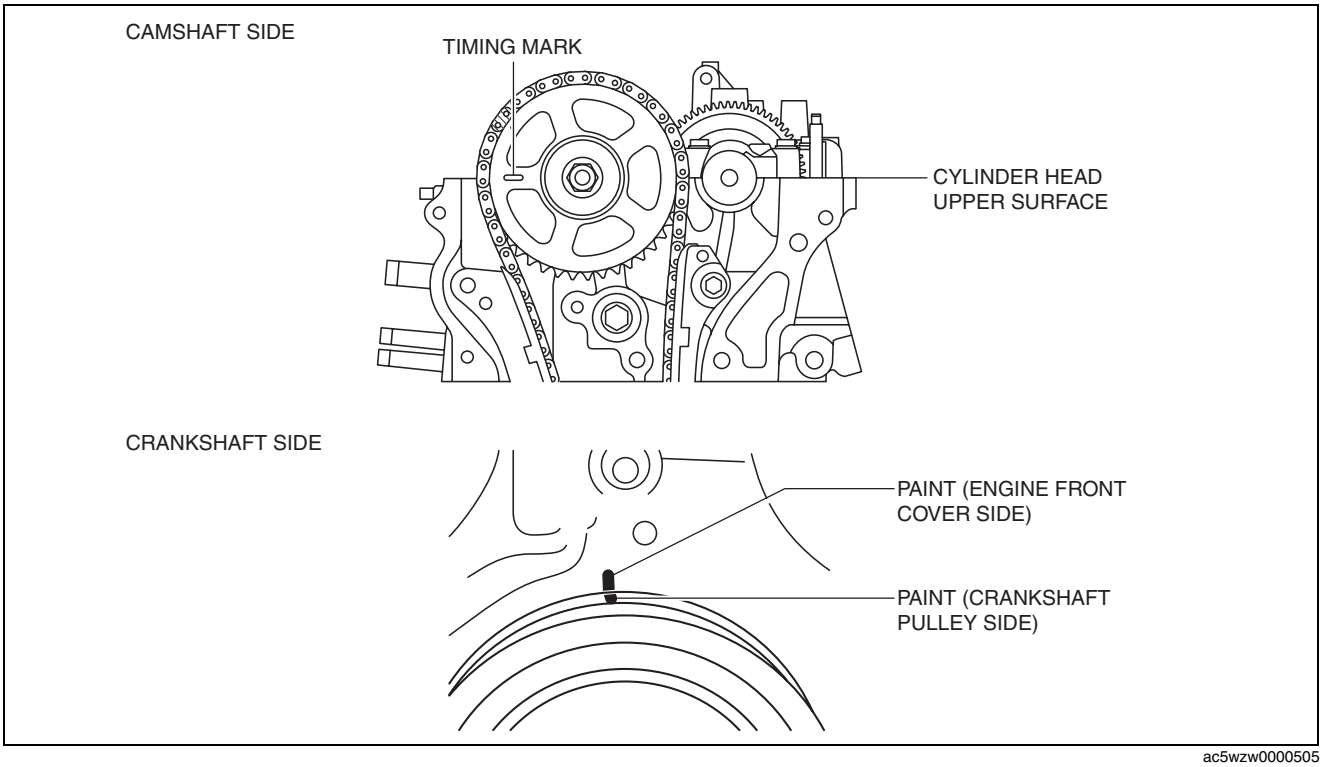

ac5wzw0000505

- If the valve timing is not correct, remove the engine front cover and reassemble the timing chain to each sprocket. (See 01-10B-16 TIMING CHAIN REMOVAL/INSTALLATION [SKYACTIV-D 2.2].)

6. Remove the temporarily assembled cylinder head cover bolt.

7. Install the new blind plug for the engine front cover service hole.

Tightening torque
8—11 N·m {82—112 kgf·cm, 71—97 in·lbf}

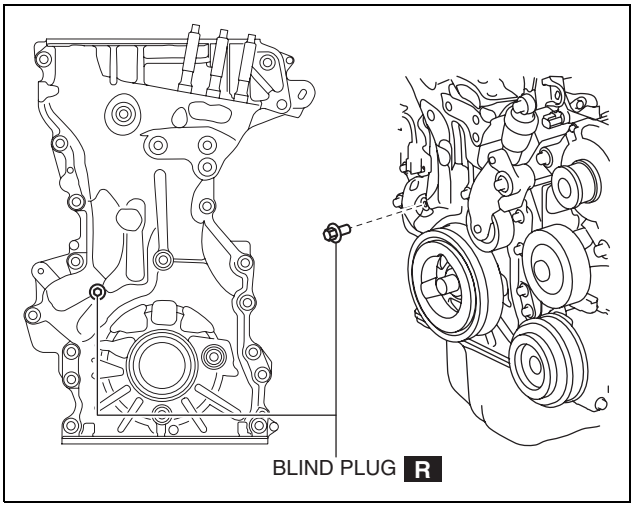

ac5wzw0000503

Noise Suppression Cover (No.1), Seal Rubber Installation Note

Caution
- **Be careful that the cover and seal rubber do not get hang up on the noise suppression cover installation bolts.**

1. Install the noise suppression cover and seal rubber in the order shown in the figure.
2. Install the PCM component using the following procedure:

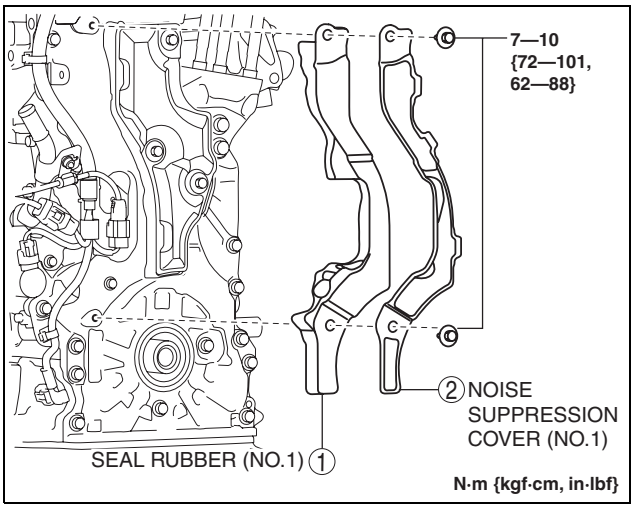

ac5wzw0000526

(1) Install the wiring harness protector and connector.

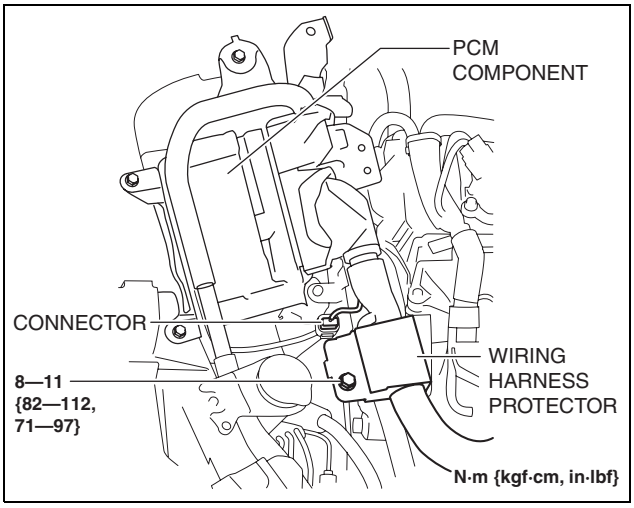

ac5wzw0000505

(2) Temporarily tighten the bolt shown in the figure.

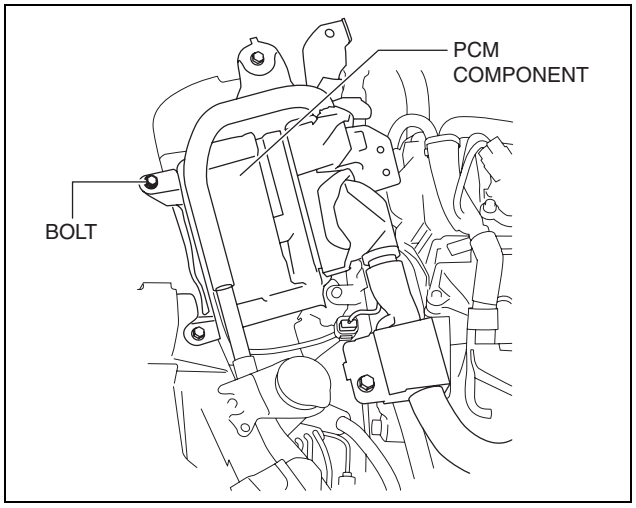

ac5wzw0000505

(3) Tighten the PCM component installation bolts in the order shown in the figure.

Tightening torque
9—10 N·m {92—101 kgf·cm, 80—88 in·lbf}

3. Install the ground cable to the PCM bracket.

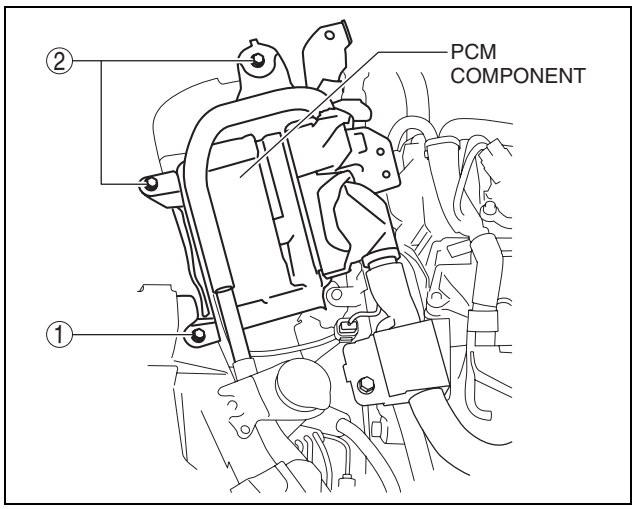

ac5wzw0000505

Oil Shower Pipe Installation Note

1. Install the oil shower pipe in the order shown in the figure.

Tightening torque

Installation position	Tightening torque
1	9—12 N·m {92—122 kgf·cm, 80—106 in·lbf}
2, 3	8.0—9.0 N·m {82—91 kgf·cm, 71—79 in·lbf}

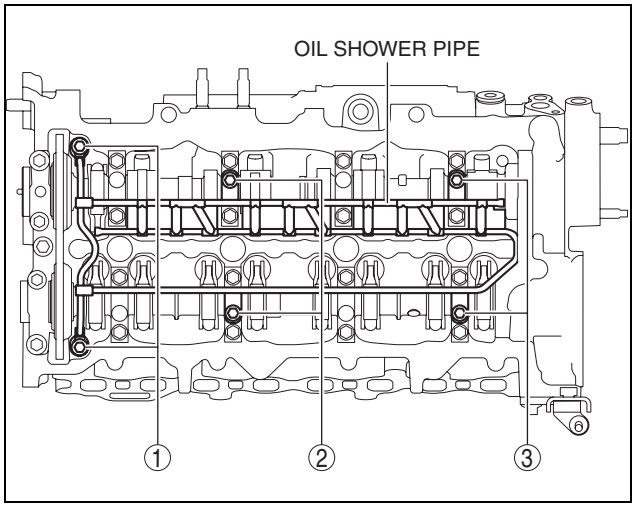

ac5wzw0000505

MECHANICAL [SKYACTIV-D 2.2]

CYLINDER HEAD GASKET REPLACEMENT [SKYACTIV-D 2.2]

id0110s5800700

Warning

- **A hot engine can cause severe burns. Turn off the engine and wait until it is cool before servicing.**
- **Fuel vapor is hazardous. It can very easily ignite, causing serious injury and damage. Always keep sparks and flames away from fuel.**
- **Fuel line spills and leakage are dangerous. Fuel can ignite and cause serious injuries or death and damage. Fuel can also irritate skin and eyes. To prevent this, always complete the "Fuel Line Safety Procedure". (See 01-14A-6 BEFORE SERVICE PRECAUTION [SKYACTIV-G 2.0].)**

1. Disconnect the negative battery cable. (See 01-17B-9 NEGATIVE BATTERY CABLE DISCONNECTION/ CONNECTION [SKYACTIV-D 2.2].)
2. Remove the engine cover. (See 01-10B-4 ENGINE COVER REMOVAL/INSTALLATION [SKYACTIV-D 2.2].)
3. Remove the fuel injectors. (See 01-14B-35 FUEL INJECTOR REMOVAL/INSTALLATION [SKYACTIV-D 2.2].)
4. Remove the front under cover No.2. (See 09-16-41 FRONT UNDER COVER No.2 REMOVAL/INSTALLATION.)
5. Remove the splash shield (RH). (See 09-16-49 SPLASH SHIELD REMOVAL/INSTALLATION.)
6. Remove the drive belt. (See 01-10B-8 DRIVE BELT REMOVAL/INSTALLATION [SKYACTIV-D 2.2].)
7. Drain the engine oil. (See 01-11B-4 ENGINE OIL REPLACEMENT [SKYACTIV-D 2.2].)
8. Drain the engine coolant. (See 01-12B-4 ENGINE COOLANT REPLACEMENT [SKYACTIV-D 2.2].)
9. Disconnect the upper radiator hose.
10. Remove the intake manifold. (See 01-13B-6 INTAKE-AIR SYSTEM REMOVAL/INSTALLATION [SKYACTIV-D 2.2].)
11. Disconnect the catalytic converter from the middle pipe, and remove the catalytic converter. (See 01-15B-1 EXHAUST SYSTEM REMOVAL/INSTALLATION [SKYACTIV-D 2.2].)
12. Remove the turbocharger. (See 01-13B-32 TURBOCHARGER REMOVAL/INSTALLATION [SKYACTIV-D 2.2].)
13. Remove the lower case. (See 01-14B-54 LOWER CASE REMOVAL/INSTALLATION [SKYACTIV-D 2.2].)
14. Remove the vacuum pump. (See 04-11-22 VACUUM PUMP REMOVAL/INSTALLATION [SKYACTIV-D 2.2].)
15. Remove the supply pump. (See 01-14B-46 SUPPLY PUMP REMOVAL/INSTALLATION [SKYACTIV-D 2.2].)
16. Remove the CMP sensor.
17. Disconnect the heater hose.
18. Remove the oil pan. (See 01-11B-15 OIL PAN REMOVAL/INSTALLATION [SKYACTIV-D 2.2].)
19. Remove the timing chain and chain guide. (See 01-10B-16 TIMING CHAIN REMOVAL/INSTALLATION [SKYACTIV-D 2.2].)
20. Remove in the order indicated in the table.
21. Install in the reverse order of removal.
22. Refill with the specified type and amount of the engine oil. (See 01-11B-4 ENGINE OIL REPLACEMENT [SKYACTIV-D 2.2].)
23. Refill the engine coolant. (See 01-12B-4 ENGINE COOLANT REPLACEMENT [SKYACTIV-D 2.2].)
24. Start the engine, and inspect and adjust the following:
    - Leakage of engine oil, engine coolant.
    - Engine oil amount.
    - Runout and contact of pulley and belt.
    - Idle speed. (See 01-10B-3 ENGINE TUNE-UP [SKYACTIV-D 2.2].)
    - Compression pressure (See 01-10B-12 COMPRESSION INSPECTION [SKYACTIV-D 2.2].)

MECHANICAL [SKYACTIV-D 2.2]

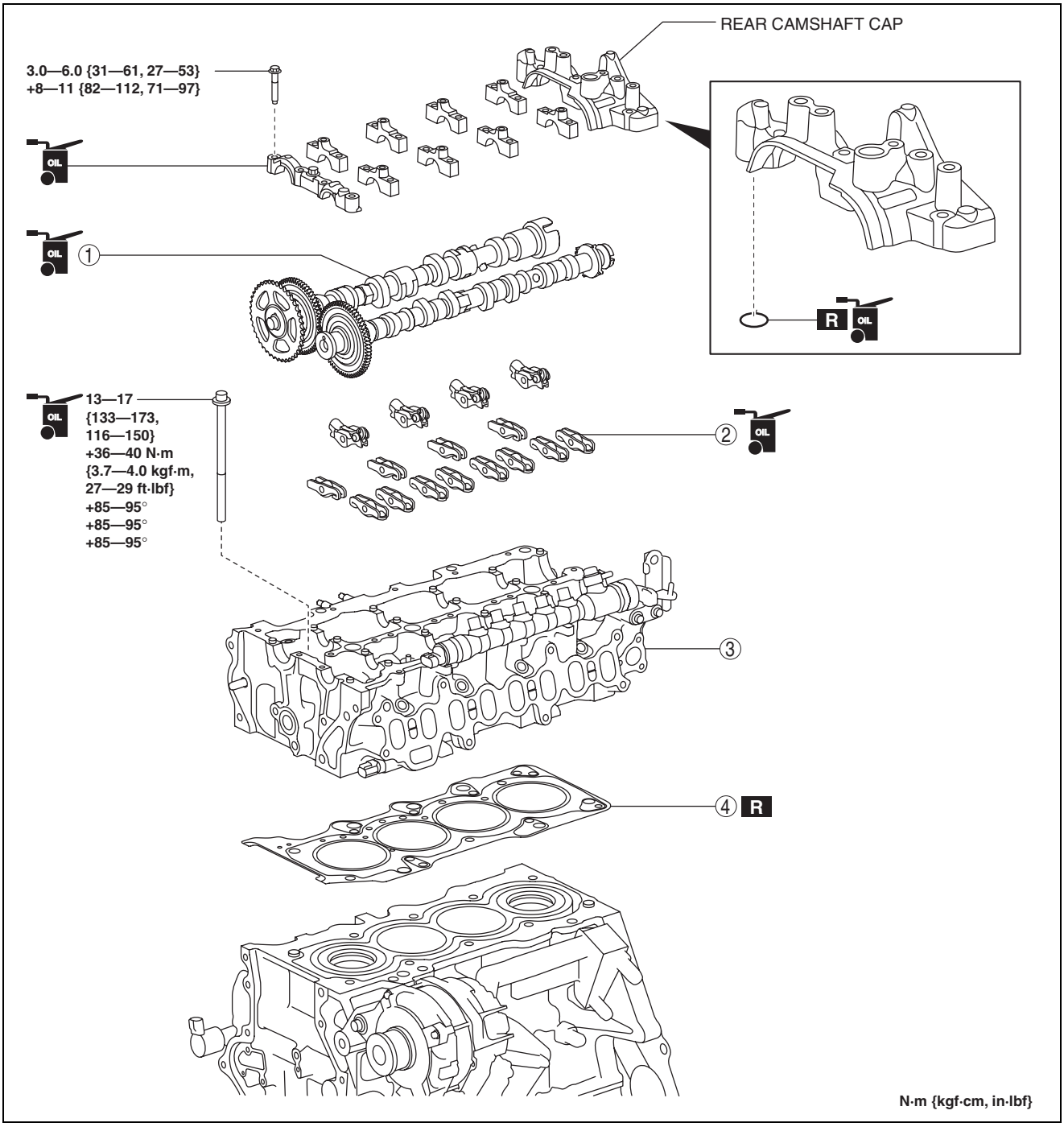

ac5wzw0000522

1	Camshaft (See 01-10B-67 Camshaft Removal Note.) (See 01-10B-69 Camshaft Installation Note.)
2	Rocker arm (See 01-10B-67 Rocker Arm Removal Note.) (See 01-10B-69 Rocker Arm Installation Note.)

3	Cylinder head (See 01-10B-67 Cylinder Head Removal Note.) (See 01-10B-68 Cylinder Head Installation Note.)
4	Cylinder head gasket

MECHANICAL [SKYACTIV-D 2.2]

Camshaft Removal Note

1. Loosen the camshaft cap installation bolts in a few passes in the order shown in the figure and remove the camshaft caps.
2. Remove the camshaft.

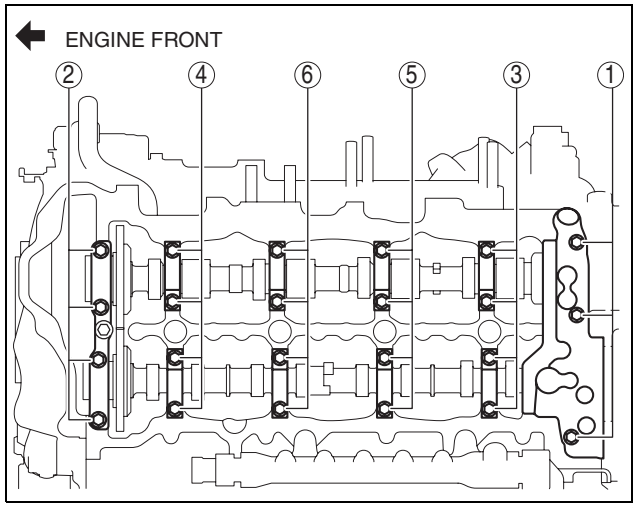

ac5wzw0000494

Rocker Arm Removal Note

1. Keep the rocker arms in the order of removal to enable reassembly in their original positions.

Cylinder Head Removal Note

1. Remove the water pipe as shown in the figure.
2. Temporarily install the oil pan to support the engine from under the vehicle.

Caution

- **To prevent deformation of the oil pan, support the engine using the following methods.**
  - **— When using an engine lifter, insert rubber of appropriate size (approx. 20 mm {0.79 in} thickness) between the engine lifter and the oil pan to support the oil pan.**
  - **— When using a garage jack, place rubber of appropriate size (approx. 20 mm {0.79 in} thickness) on a batten which is large enough to cover the oil pan to support the oil pan.**

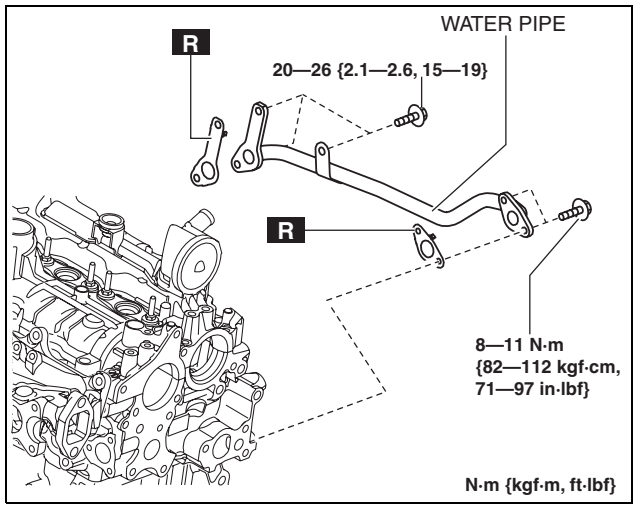

ac5wzw0000494

3. Support the engine (oil pan) using a commercially available engine lifter or garage jack.
4. Remove the **SST** (49 L017 5A0) that suspended the engine and set it aside.

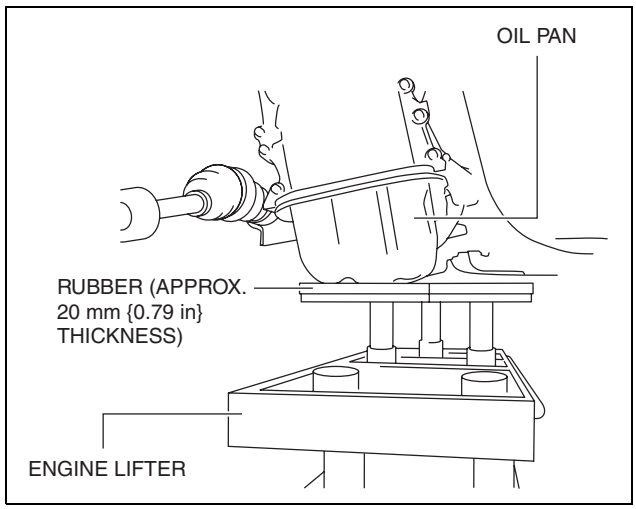

ac5wzw0000494

MECHANICAL [SKYACTIV-D 2.2]

5. Loosen the cylinder head installation bolts in two or three passes in the order shown in the figure and remove them.
6. Remove the cylinder head.

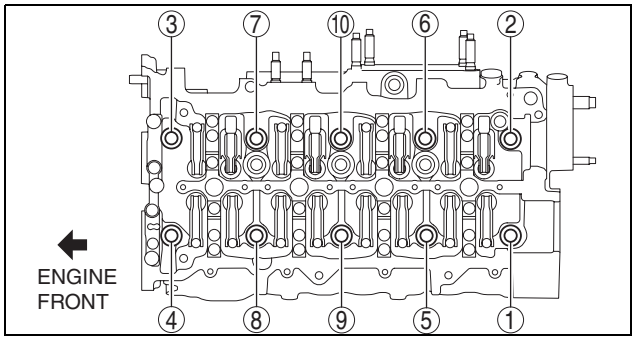

ac5wzw0000522

Cylinder Head Installation Note

Caution
- **If the following condition is met, replace the cylinder head bolts.**
  - **— Length exceeds maximum specification**

Cylinder head bolt length L
L: 169.2—169.8 mm {6.662—6.685 in}

Cylinder head bolt length L maximum
L: 170.5 mm {6.713 in}

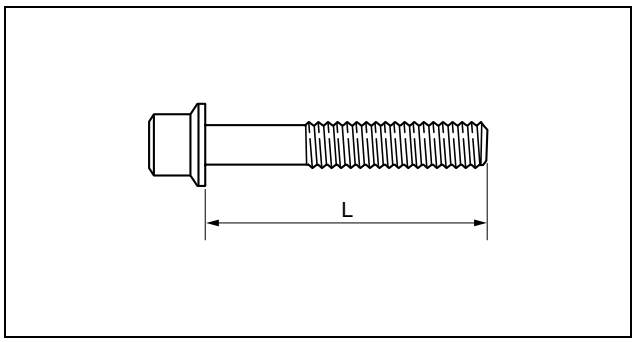

am3zzw0000245

1. When a cylinder head bolt is reused, apply engine oil to any part of the following:
   - Bolt seating surface
   - Cylinder head seating surface

2. Tighten the cylinder head bolts in the order shown in the following 5 steps.

Tightening torque
Step 1: 13—17 N·m {133—173 kgf·cm, 116—150 in·lbf}
Step 2: 36—40 N·m {3.7—4.0 kgf·m, 27—29 ft·lbf}
Step 3: 85—95°
Step 4: 85—95°
Step 5: 85—95°

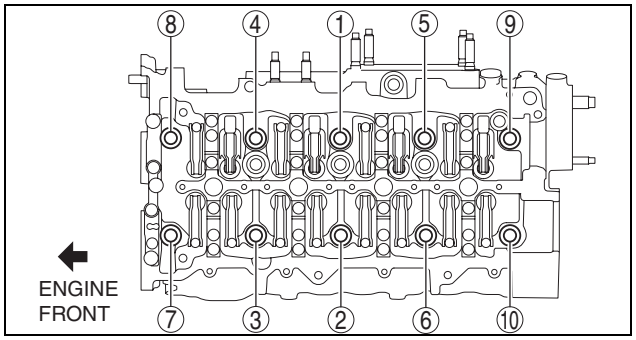

ac5wzw0000522

3. Install the **SST** which was set aside and secure the engine.
4. Remove the engine lifter or garage jack.
5. Remove the temporarily assembled oil pan.

Rocker Arm Installation Note

1. Apply engine oil to the HLAs and the end of the valve stems.
2. Install the rocker arms to the same positions as before removal.

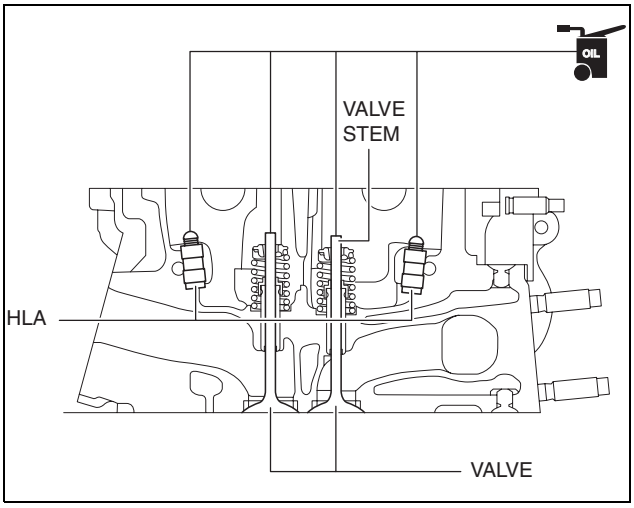

ac5wzw0000495

Camshaft Installation Note

1. Apply gear oil (SAE No. 90 or equivalent) or engine oil to the following locations.
   - Each journal of the cylinder heads
   - Needle roller bearing and slipper area of the rocker arm

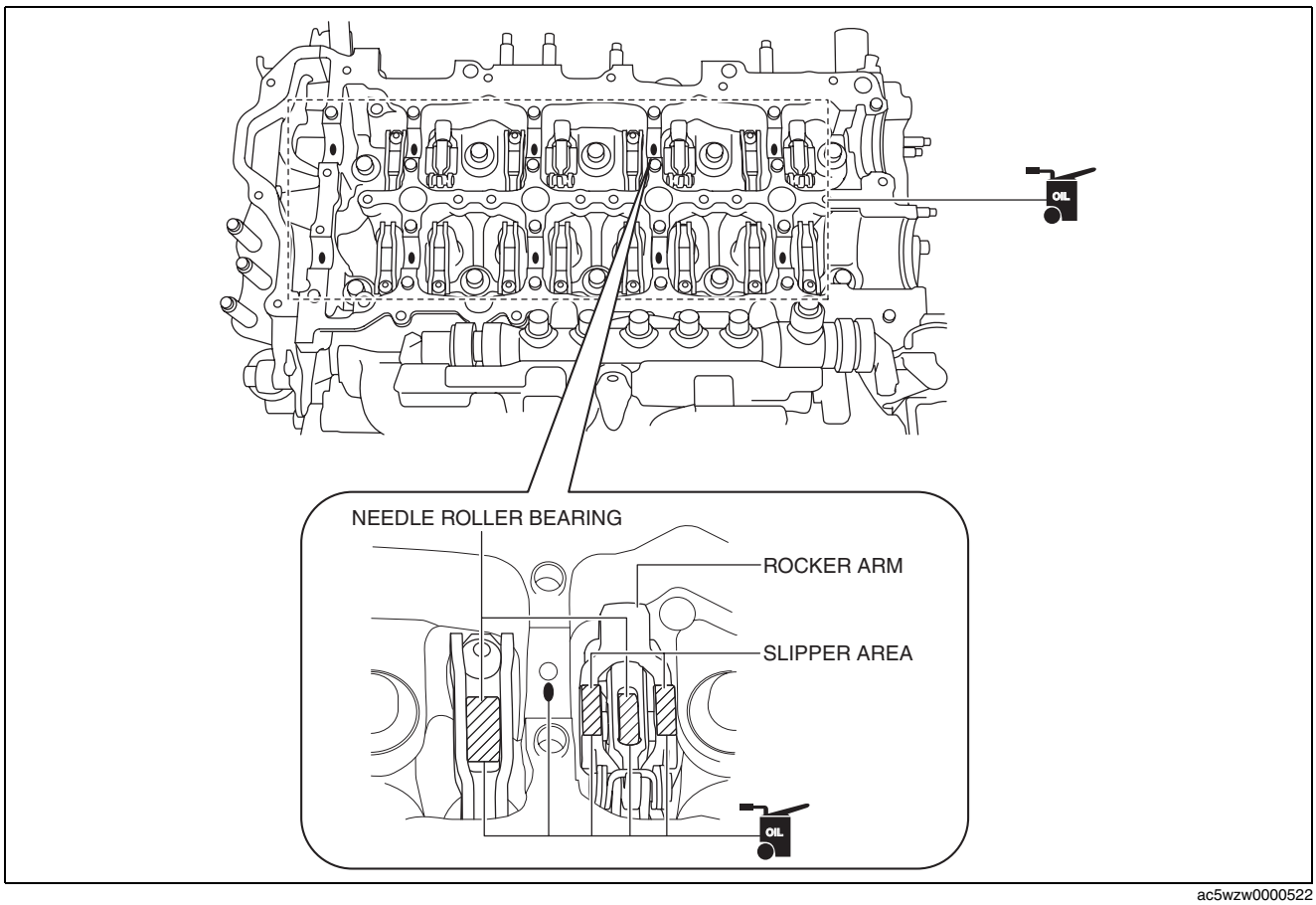

ac5wzw0000522

2. Apply gear oil (SAE 90 or equivalent) or engine oil to the following locations of each camshaft.
   - Gear sliding surfaces
   - Thrust surface of front journal

Note

- If oil is applied to the front camshaft cap, oil should not be applied to the thrust surface of the front journal.

MECHANICAL [SKYACTIV-D 2.2]

3. Place the camshaft on the cylinder head and align the alignment marks for each gear as shown in the figure.
4. As shown in the figure, apply gear oil (SAE No. 90 or equivalent) or engine oil to the center area of each journal of the camshaft.

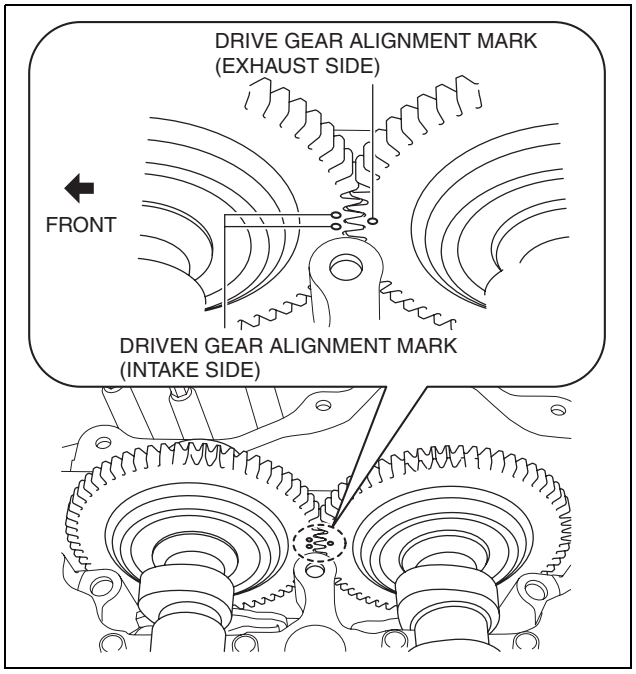

ac5wzw0000495

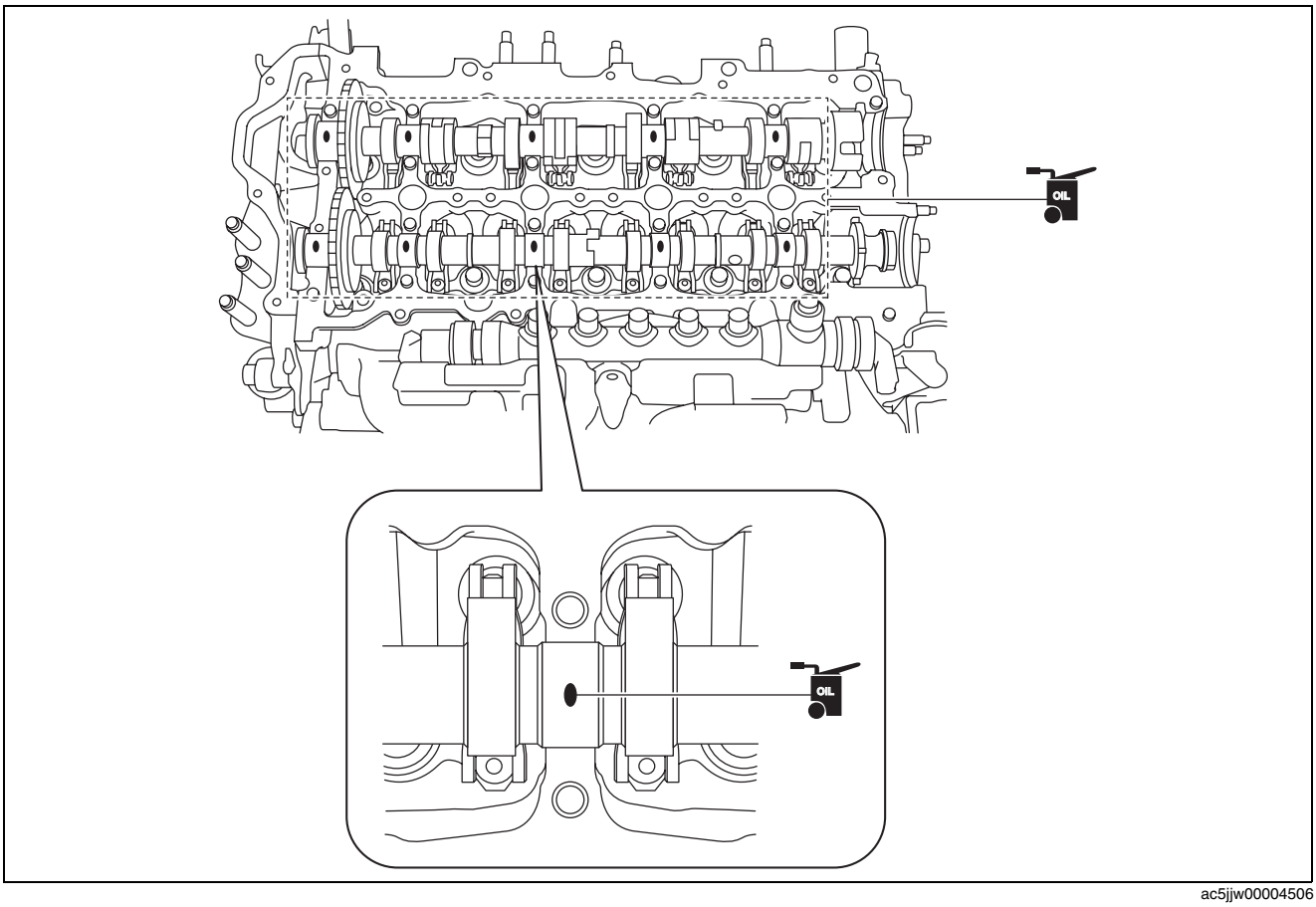

ac5jjw00004506

5. Apply adhesive agent (Loctite#962T) to the rear side of the cylinder head or rear camshaft cap.

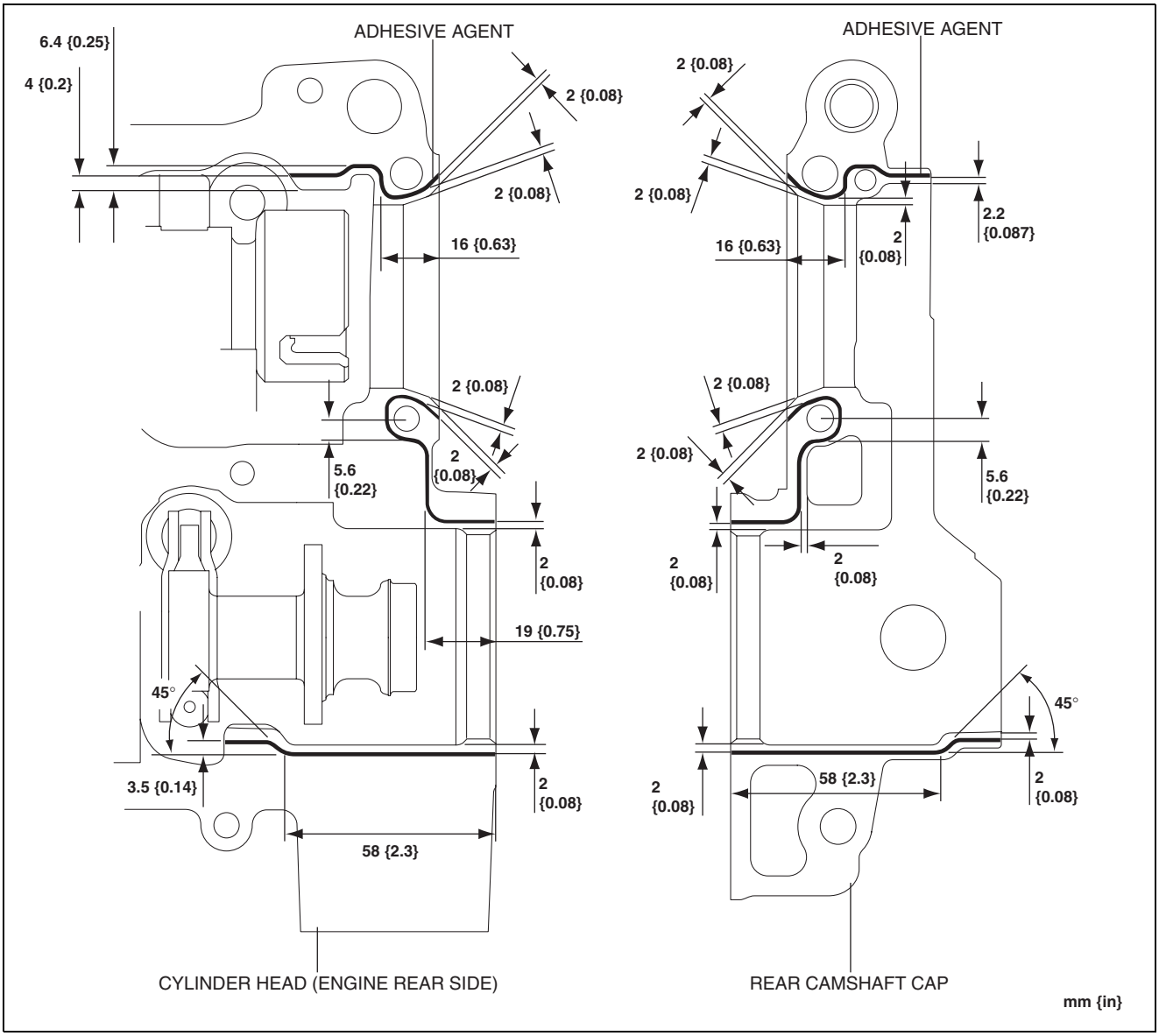

ac5wzw0000522

Caution
- **Do not spill adhesive agent on the journal.**
- **To prevent adhesive agent from hardening, adhere the rear camshaft cap to the cylinder head within 10 min after adhesive agent is applied. Tighten the installation bolts completely soon after adhering.**

Adhesive agent bead width
1—3 mm {0.04—0.11 in}

6. Apply engine oil to the new rear camshaft cap O-ring and install it to the rear camshaft cap.

Caution
- **Be careful not to damage or drop the O-ring when installing the rear camshaft cap.**

7. Apply gear oil (SAE 90 or equivalent) or engine oil to the thrust surface of the front camshaft cap.

Note
- If oil is applied to the front journal thrust surface of each camshaft, oil should not be applied to the front camshaft cap.

MECHANICAL [SKYACTIV-D 2.2]

8. Install the camshaft caps in the marked number order, and temporarily tighten the camshaft cap installation bolts in two or three passes evenly.
9. Tighten the camshaft cap installation bolts in two steps in the order shown in the figure.

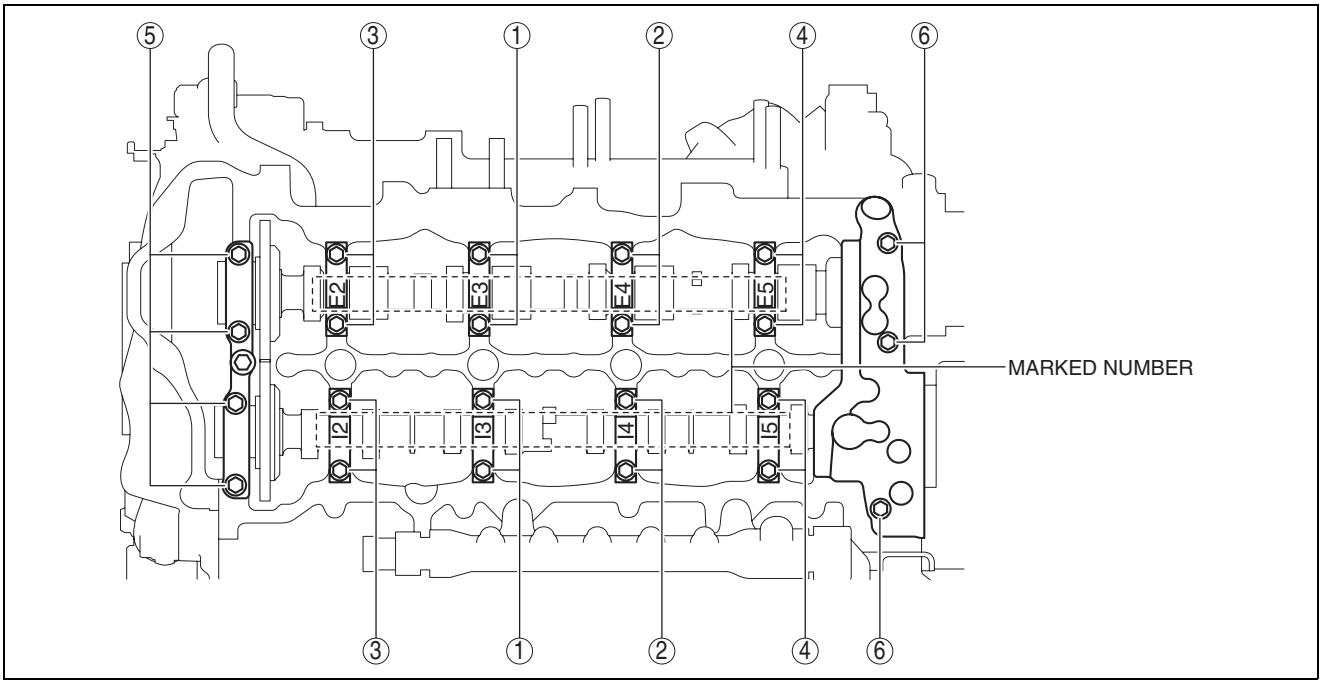

ac5wzw0000495

Tightening torque
First step: 3.0—6.0 N·m {31—61 kgf·cm, 27—53 in·lbf}
Second step: 8—11 N·m {82—112 kgf·cm, 71—97 in·lbf}

FRONT OIL SEAL REPLACEMENT [SKYACTIV-D 2.2]

id0110s5800800

Warning
- **A hot engine can cause severe burns. Turn off the engine and wait until it is cool before servicing.**

1. Remove the front under cover No.2. (See 09-16-41 FRONT UNDER COVER No.2 REMOVAL/INSTALLATION.)
2. Remove the splash shield. (See 09-16-49 SPLASH SHIELD REMOVAL/INSTALLATION.)
3. Remove the drive belt. (See 01-10B-8 DRIVE BELT REMOVAL/INSTALLATION [SKYACTIV-D 2.2].)
4. Remove in the order indicated in the table.
5. Install in the reverse order of removal.

1	Crankshaft pulley lock bolt (See 01-10B-73 Crankshaft Pulley Lock Bolt Removal Note.) (See 01-10B-76 Crankshaft Pulley Lock Bolt Installation Note.)
2	Crankshaft pulley
3	Front oil seal (See 01-10B-74 Front Oil Seal Removal Note.) (See 01-10B-75 Front Oil Seal Installation Note.)

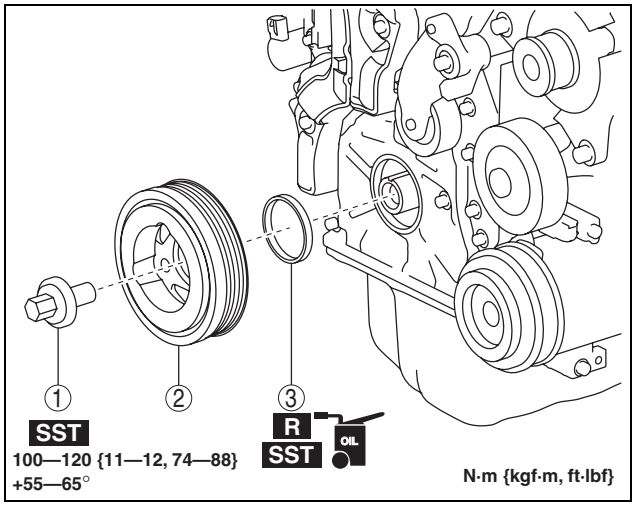

ac5wzw0000509

MECHANICAL [SKYACTIV-D 2.2]

Crankshaft Pulley Lock Bolt Removal Note

Note
- Perform the crankshaft pulley lock bolt removal with at least one other person.

1. Install the **SST** to the crankshaft pulley using the bolts of the following specification.

SST securing bolt specification
M12 x 1.75 strength classification of 8.8 or more, length 48—50 mm {1.89—1.96 in} (length can be adjusted by adding washer)

SST securing bolt tightening torque
15 N·m {1.5 kgf·m, 11 ft·lbf}

Caution
- **To prevent damage to the crankshaft pulley and engine front cover, always use a bolt and tightening torque of the specification above to install the SSTs to the crankshaft pulley.**
- **After installing the SSTs, verify that the SST securing bolts do not contact the engine front cover.**

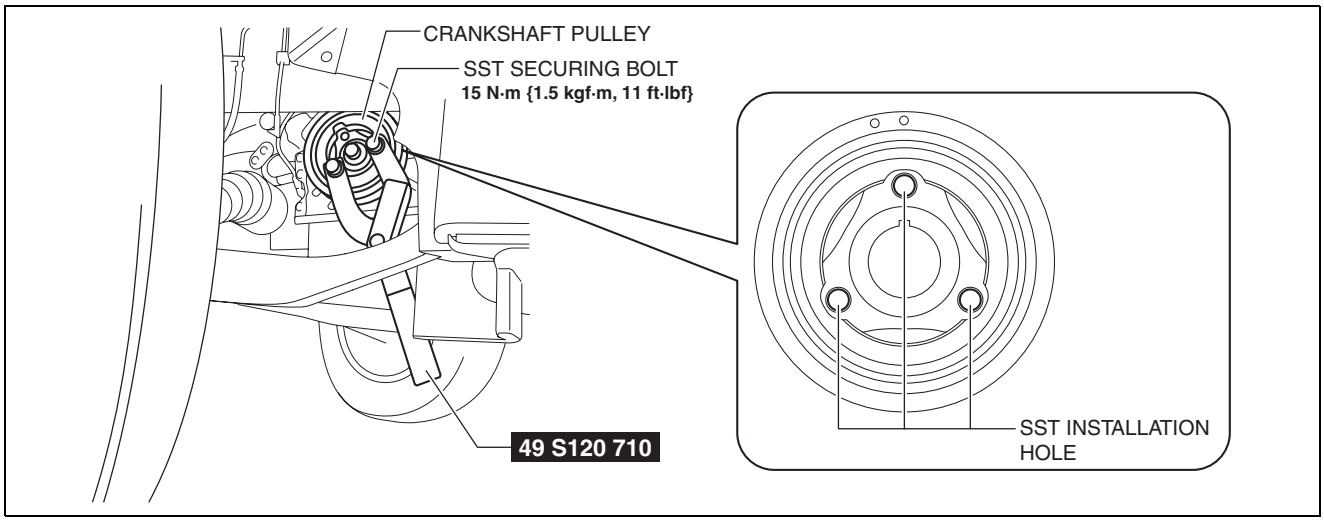

ac5wzw0000522

Note
- If a bolt with a length of **50 mm {2.0 in}** or more is used, add the appropriate washer and adjust the length to **48—50 mm {1.89—1.96 in}** to use.
  Example of use
  — Using the bolt (**M12 x 1.75 length 60 mm {2.4 in}**) supplied with the **SST 49 S011 102A** (crankshaft lock tool): Add a washer with a **10 mm {0.39 in}** thickness and adjust the length of the **SST** securing bolt to **50 mm {2.0 in}**.

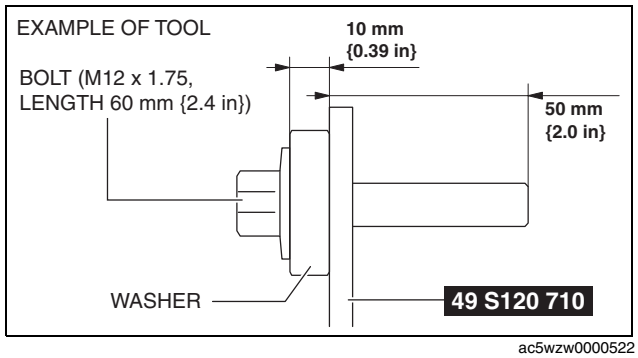

ac5wzw0000522

MECHANICAL [SKYACTIV-D 2.2]

2. One person connects an extension pipe of a suitable length with **100 mm {3.94 in}** or more to the **SST** to prevent the crankshaft pulley from rotating.

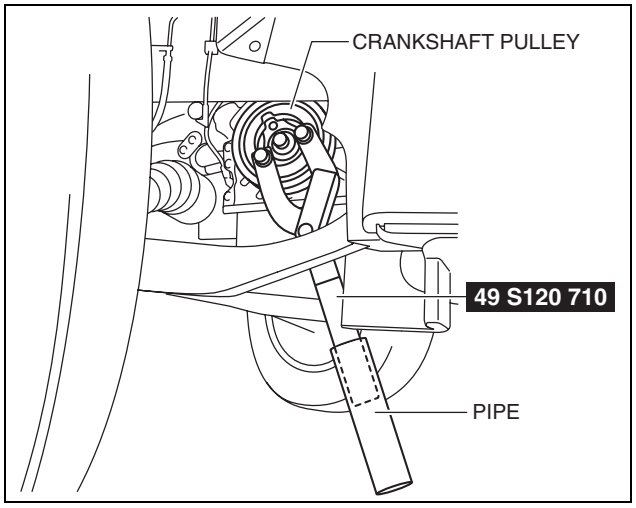

ac5wzw0000522

3. Another person loosens the crankshaft pulley lock bolt and removes it.
4. Remove the **SST**.

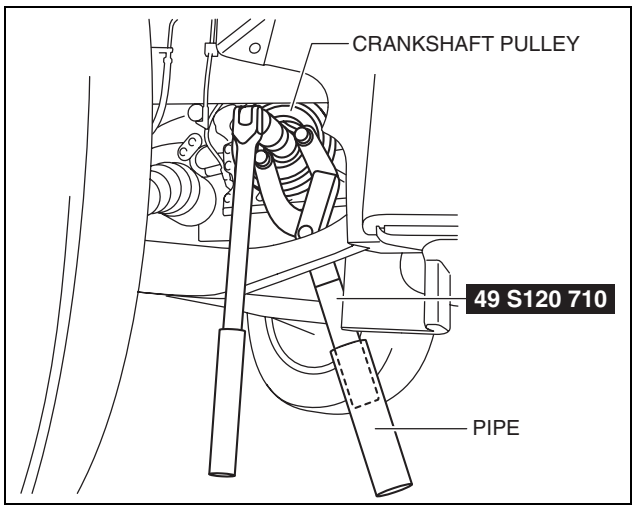

ac5wzw0000523

Front Oil Seal Removal Note

1. Cut the oil seal lip using a utility knife.
2. Remove the oil seal using a flathead screwdriver with the tip protected by a clean cloth to prevent damage to the oil seal sliding part of the crankshaft.

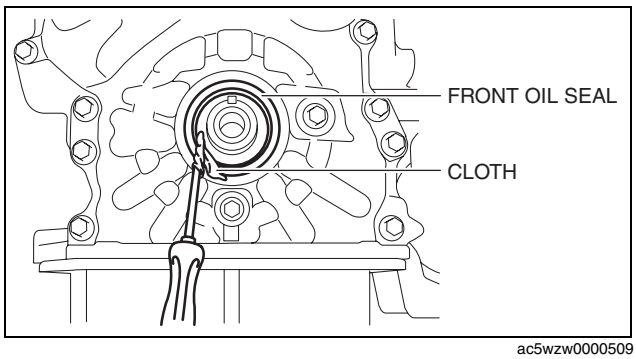

ac5wzw0000509

MECHANICAL [SKYACTIV-D 2.2]

Front Oil Seal Installation Note

1. Apply clean engine oil to the inner surface of a new front oil seal.
2. Insert the front oil seal into the engine front cover by hand.
3. Tap the oil seal in evenly using the **SST** and a hammer.

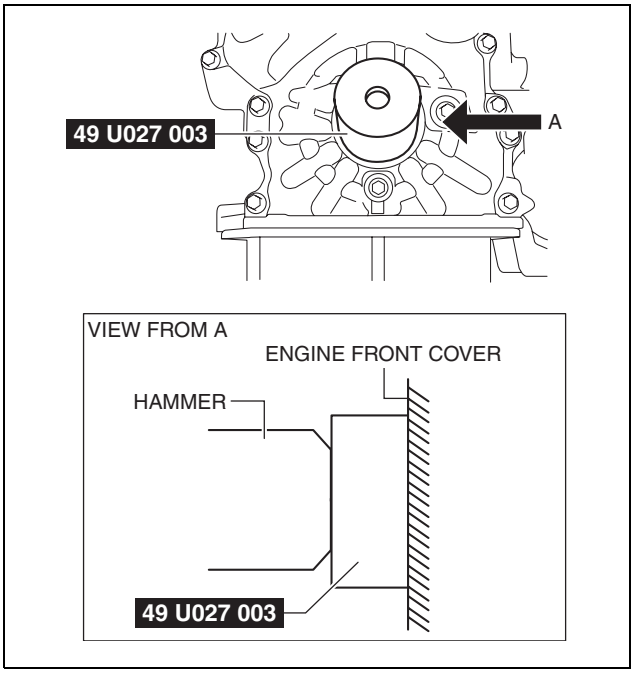

ac5wzw0000509

Front oil seal press-in amount
0—0.5 mm {0—0.019 in}

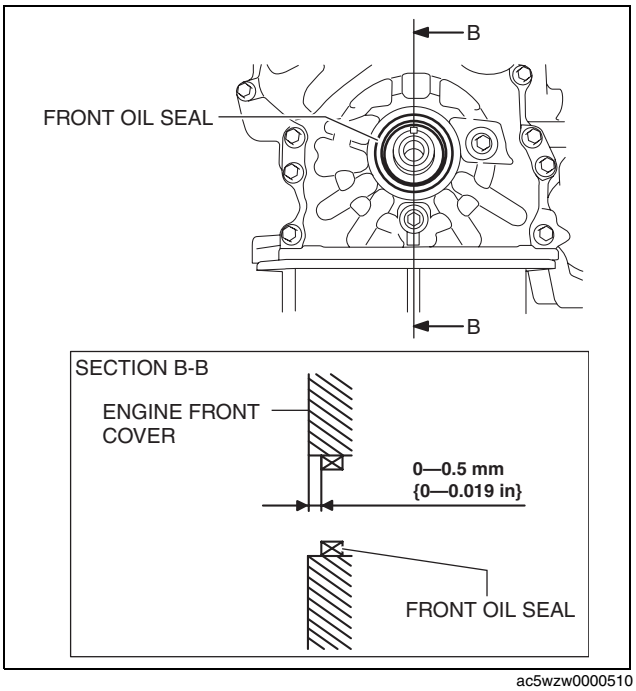

ac5wzw0000510

MECHANICAL [SKYACTIV-D 2.2]

Crankshaft Pulley Lock Bolt Installation Note

Note
- Tighten the crankshaft pulley lock bolt in two steps. Perform the second step for tightening to a specified angle using two people.

1. Install the crankshaft pulley.
2. Install the **SST** to the crankshaft pulley using the bolts of the following specification.

SST securing bolt specification
M12 x 1.75 strength classification of 8.8 or more, length 48—50 mm {1.89—1.96 in} (length can be adjusted by adding washer)

SST securing bolt tightening torque
15 N·m {1.5 kgf·m, 11 ft·lbf}

Caution
- **To prevent damage to the crankshaft pulley and engine front cover, always use a bolt and tightening torque of the specification above to install the SSTs to the crankshaft pulley.**
- **After installing the SSTs, verify that the SST securing bolts do not contact the engine front cover.**

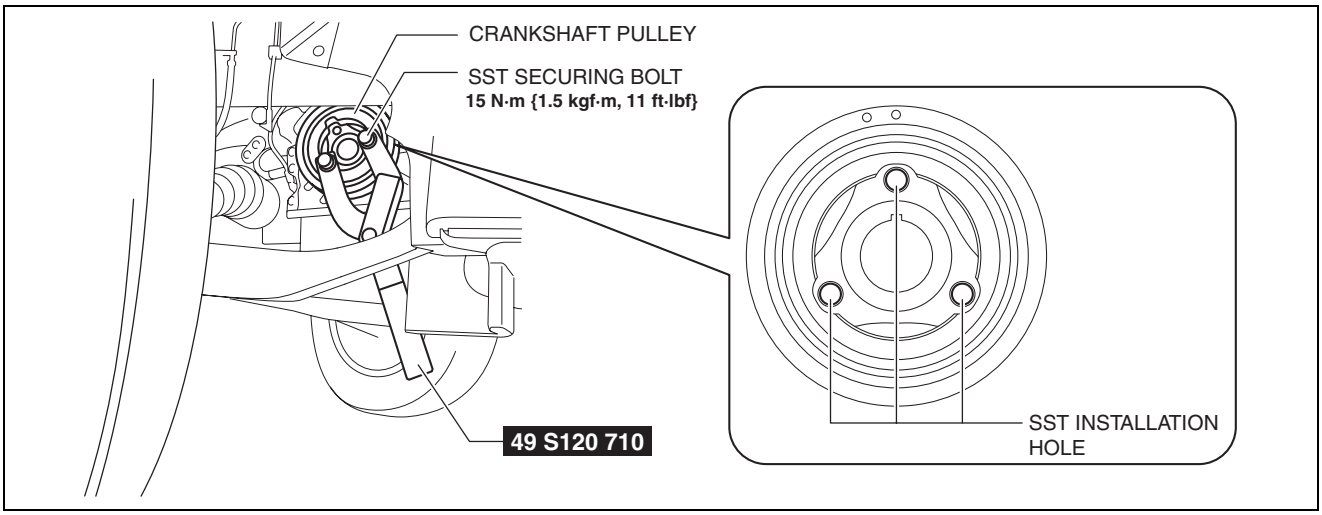

ac5wzw0000510

Note
- If a bolt with a length of **50 mm {2.0 in}** or more is used, add the appropriate washer and adjust the length to **48—50 mm {1.89—1.96 in}** to use.
  Example of use
  — Using the bolt (**M12 x 1.75 length 60 mm {2.4 in}**) supplied with the **SST 49 S011 102A** (crankshaft lock tool): Add a washer with a **10 mm {0.39 in}** thickness and adjust the length of the **SST** securing bolt to **50 mm {2.0 in}**.

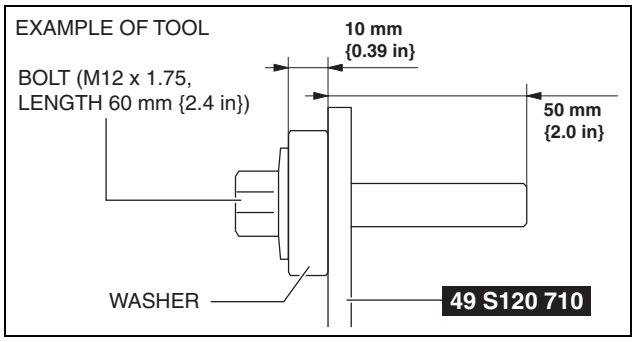

ac5wzw0000522

3. Connect an extension pipe of a suitable length of **100 mm {3.94 in}** or more to the **SST** to prevent the crankshaft pulley from rotating.

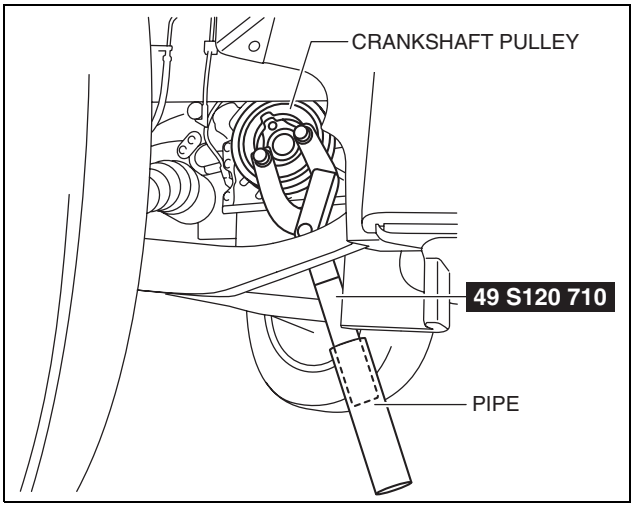

ac5wzw0000523

4. Tighten the crankshaft pulley lock bolt.

Tightening torque
First step: 100—120 N·m {11—12 kgf·m, 74—88 ft·lbf}

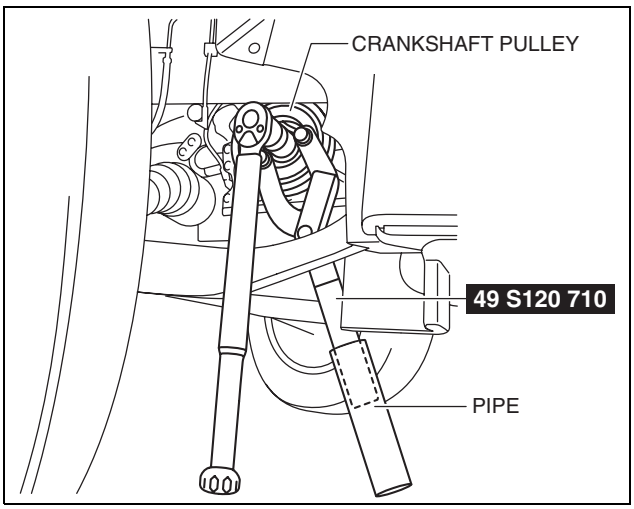

ac5wzw0000523

5. Place a paint mark on the crankshaft pulley lock bolt and crankshaft pulley as shown in the figure to tighten the bolt to the specified angle correctly.

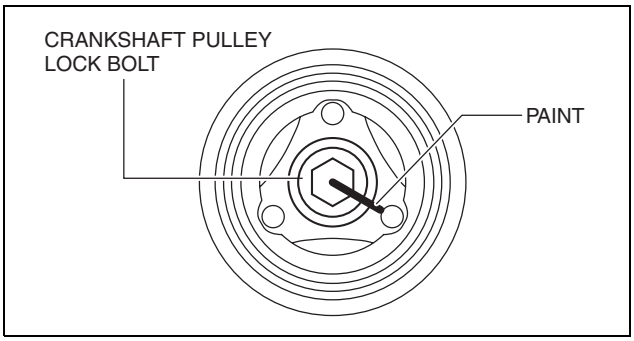

ac5wzw0000510

MECHANICAL [SKYACTIV-D 2.2]

6. One person holds the **SST** and the other person tightens the crankshaft pulley lock bolt to the specified angle.

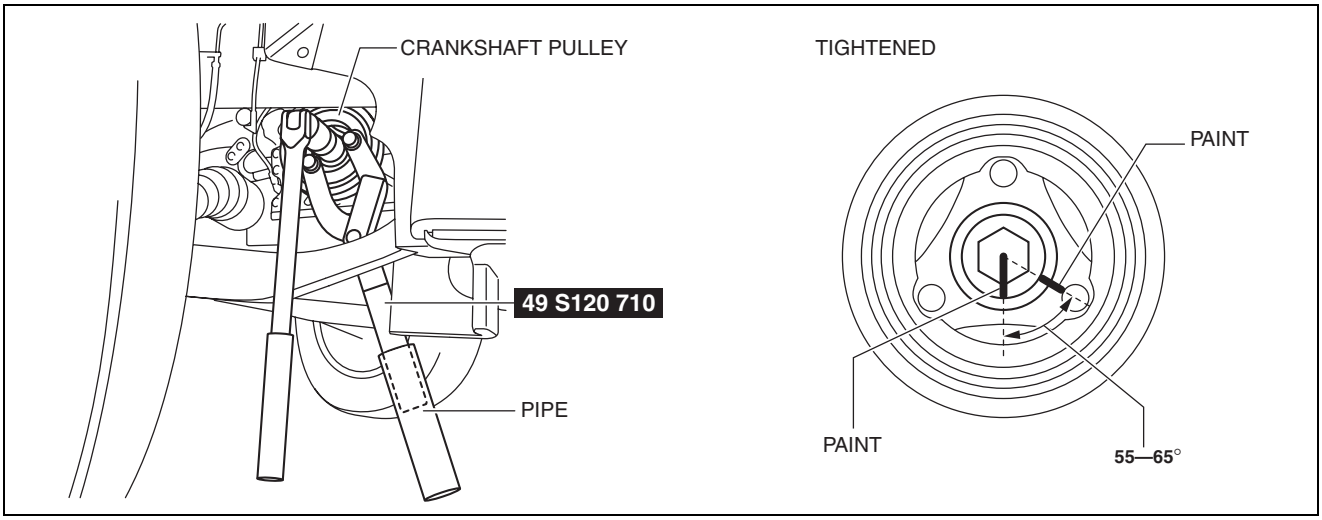

ac5wzw0000523

Tightening torque
Second: 55—65°

7. Remove the **SST**.

REAR OIL SEAL REPLACEMENT [SKYACTIV-D 2.2]

id0110s5800900

1. Remove the transaxle. (See 05-15B-4 MANUAL TRANSAXLE REMOVAL/INSTALLATION [D66M-R] (MTX, 2WD).) (See 05-15B-18 MANUAL TRANSAXLE REMOVAL/INSTALLATION [D66MX-R] (MTX, AWD).) (See 05-17B-29 AUTOMATIC TRANSAXLE REMOVAL/INSTALLATION [GW6A-EL] (ATX, 2WD).) (See 05-17B-47 AUTOMATIC TRANSAXLE REMOVAL/INSTALLATION [GW6AX-EL] (ATX, AWD).)
2. Remove the flywheel (MTX) or the drive plate (ATX). (See 05-17B-64 DRIVE PLATE REMOVAL/INSTALLATION [GW6A-EL, GW6AX-EL] (ATX).)
3. Remove in the order indicated in the table.
4. Install in the reverse order of removal.

1	Rear oil seal (See 01-10B-79 Rear Oil Seal Removal Note.) (See 01-10B-79 Rear Oil Seal Installation Note.)

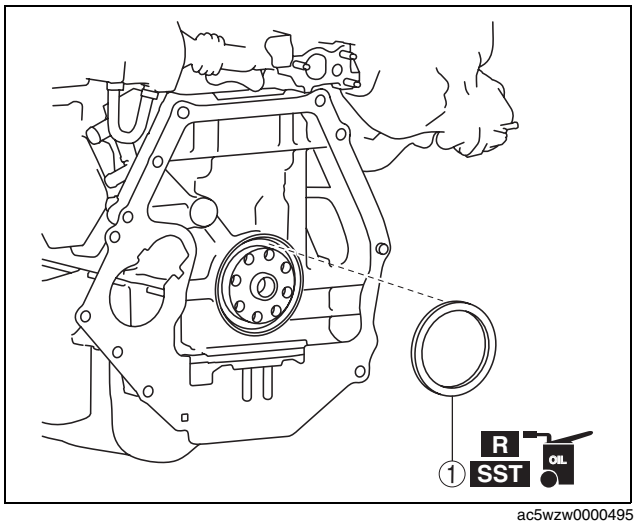

ac5wzw0000495

Rear Oil Seal Removal Note

1. Cut the oil seal lip using a utility knife.
2. Remove the oil seal using a flathead screwdriver with the tip protected by a clean cloth to prevent damage to the oil seal sliding part of the crankshaft.

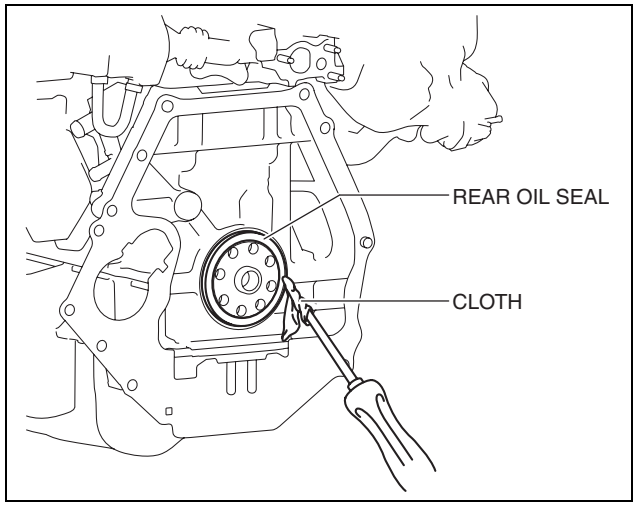

ac5wzw0000495

Rear Oil Seal Installation Note

1. Apply clean engine oil to the inner surface of a new rear oil seal.
2. Insert the rear oil seal into the cylinder block by hand.
3. Tap the oil seal in evenly using the **SST** and a hammer.

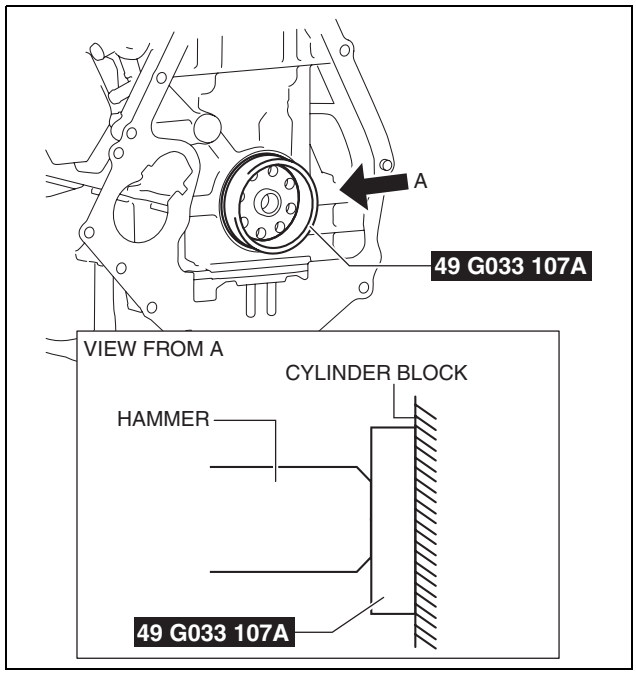

ac5wzw0000523

MECHANICAL [SKYACTIV-D 2.2]

Rear oil seal press-in amount
0—0.5 mm {0—0.019 in}

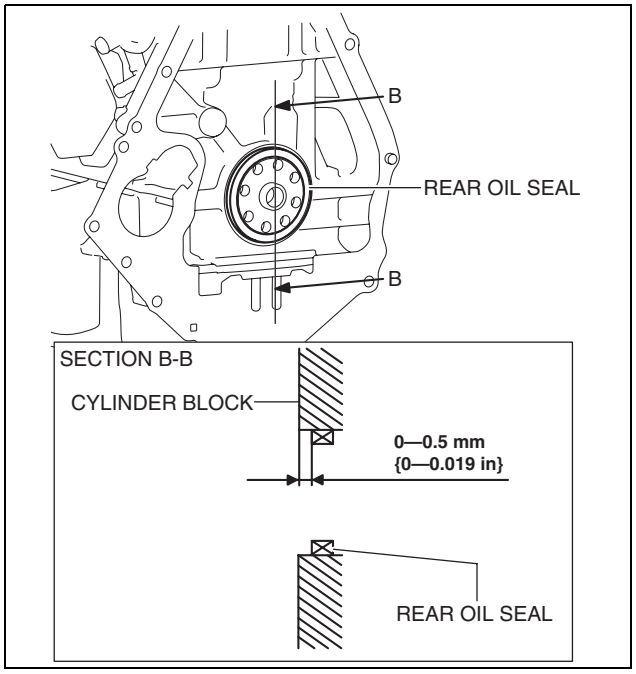

ac5wzw0000527

ENGINE MOUNT DISASSEMBLY/ASSEMBLY [SKYACTIV-D 2.2]

id0110s5806900

No.1 Engine Mount (2WD)

1. Remove the front under cover No.2. (See 09-16-41 FRONT UNDER COVER No.2 REMOVAL/INSTALLATION.)
2. Remove in the order indicated in the table.
3. Install in the reverse order of removal.

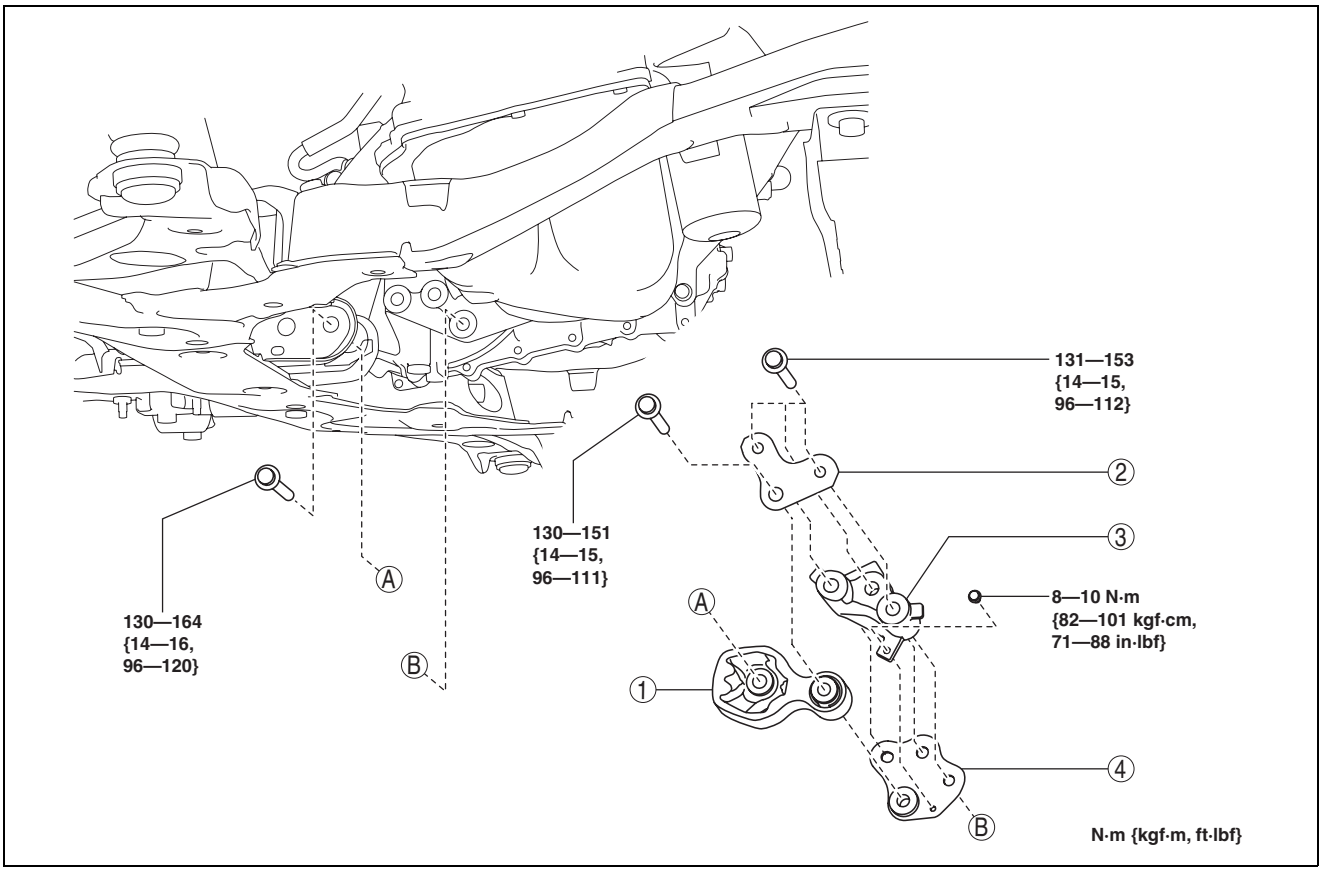

ac5wzw0000506

MECHANICAL [SKYACTIV-D 2.2]

1	No.1 engine mount rubber (See 01-10B-81 No.1 Engine Mount Rubber Removal Note (2WD).) (See 01-10B-81 No.1 Engine Mount Installation Note (2WD).)
2	Bracket plate (No.1) (See 01-10B-81 No.1 Engine Mount Installation Note (2WD).)
3	No.1 engine mount bracket (See 01-10B-81 No.1 Engine Mount Installation Note (2WD).)
4	Bracket plate (No.2) (See 01-10B-81 No.1 Engine Mount Installation Note (2WD).)

No.1 Engine Mount Rubber Removal Note (2WD)

1. Loosen the bolts shown in the figure.

   Note
   - The bracket plate (No.1) can move slightly by loosening the bolts shown in the figure and the No.1 engine mount rubber can be easily removed.

2. Remove the No.1 engine mount rubber.

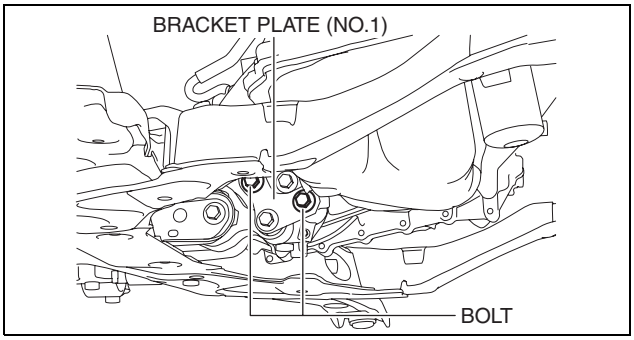

ac5wzw0000506

No.1 Engine Mount Installation Note (2WD)

1. Install the No.1 engine mount bracket, plate (No.1), and plate (No.2) and temporarily tighten the installation bolts.
2. Tighten the bolt shown in the figure.

   Tightening torque
   8—10 N·m {82—101 kgf·cm, 71—88 in·lbf}

3. Install the No.1 engine mount rubber and temporarily tighten the installation bolts.

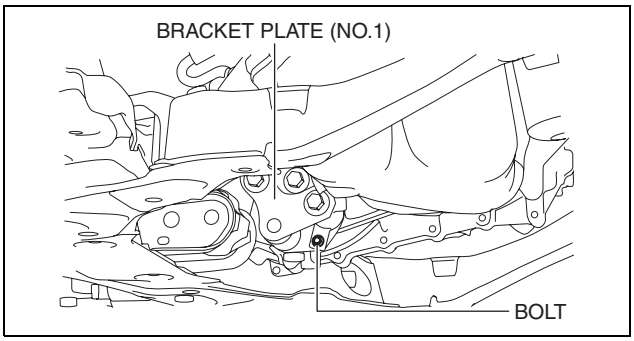

ac5wzw0000506

4. Tighten the No.1 engine mount bracket, plate (No.1) and plate (No.2) installation bolts in the order shown in the figure.

   Tightening torque
   131—153 N·m {14—15 kgf·m, 97—112 ft·lbf}

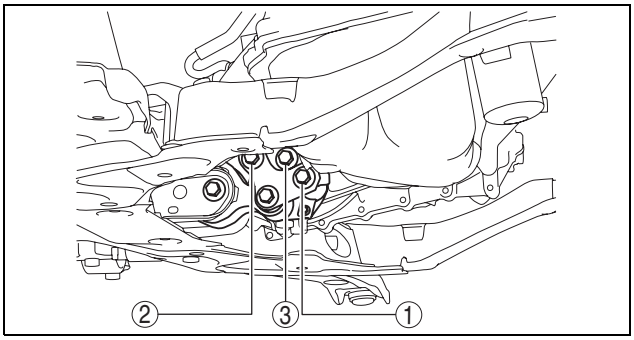

ac5jjw00003896

5. Tighten the No.1 engine mount rubber installation bolts.

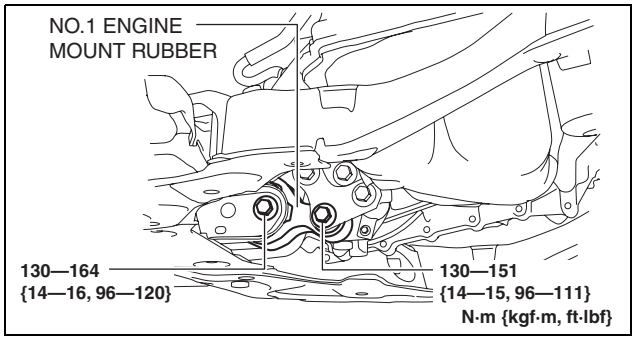

ac5wzw0000506

No.1 Engine Mount (4WD)

Note
- When removing the No.1 engine mount rubber for 4WD vehicles, loosen the front crossmember installation bolts and perform the procedure with the front crossmember component lowered to 15—20 mm {0.60—0.78 in}.
- When removing the No.1 engine mount bracket for 4WD vehicles, perform the procedure with the front crossmember component and transfer completely removed from the vehicle.

1. Remove the front under cover No.1 and No.2. (See 09-16-40 FRONT UNDER COVER No.1 REMOVAL/INSTALLATION.) (See 09-16-41 FRONT UNDER COVER No.2 REMOVAL/INSTALLATION.)
2. Set the front mudguard away from the front crossmember and front bumper. (See 09-16-47 MUDGUARD REMOVAL/INSTALLATION.)
3. Remove the splash shield. (See 09-16-49 SPLASH SHIELD REMOVAL/INSTALLATION.)
4. Remove in the order indicated in the table.
5. Install in the reverse order of removal.
6. Inspect the front wheel alignment. (See 02-11-1 FRONT WHEEL ALIGNMENT.)

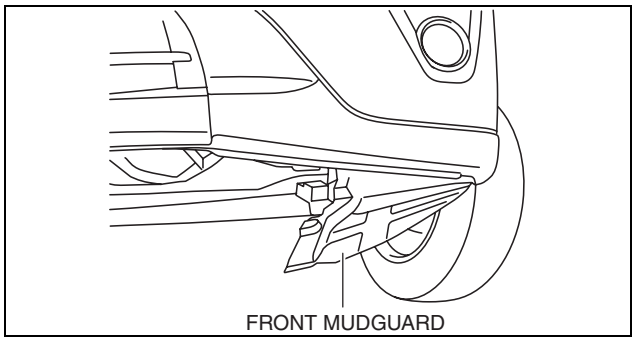

ac5uuw00000642

MECHANICAL [SKYACTIV-D 2.2]

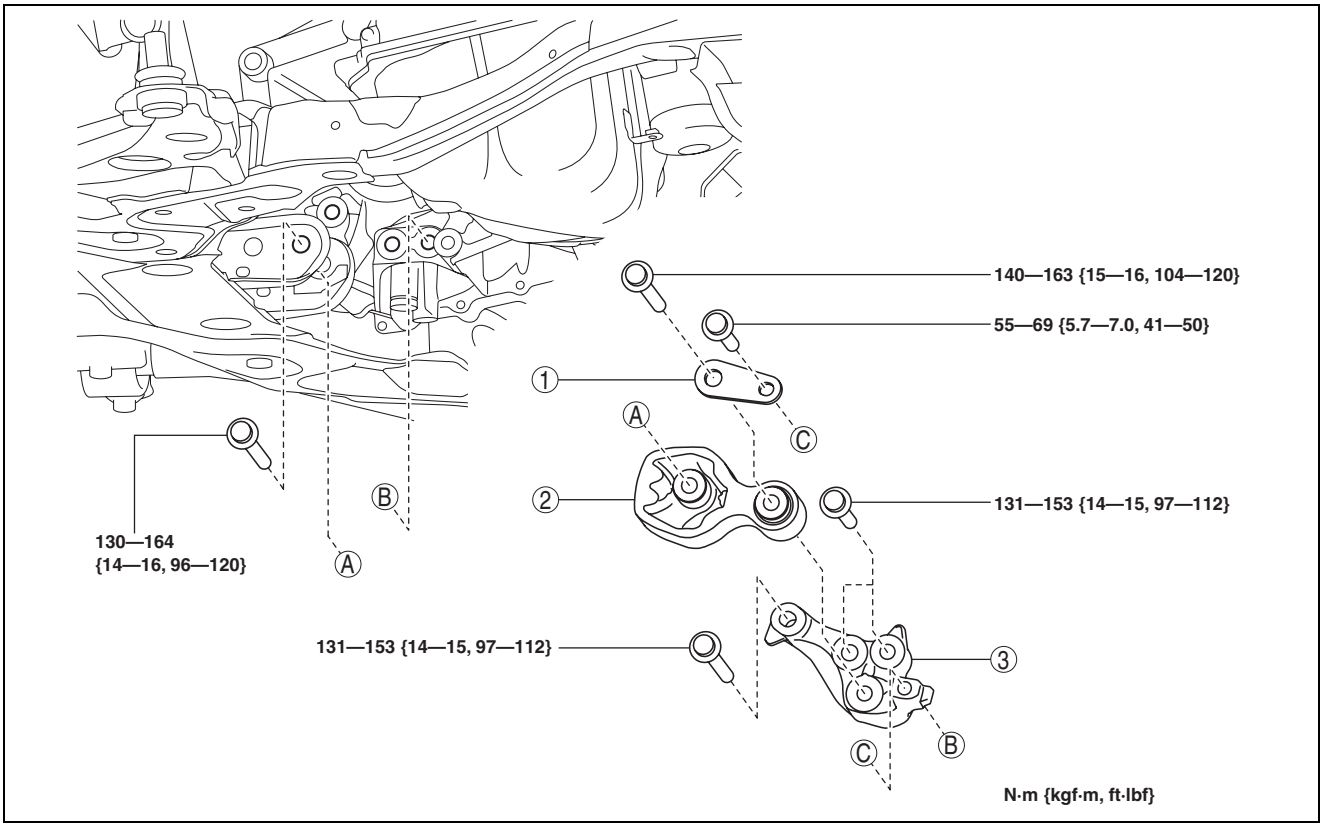

ac5wzw0000507

1	Bracket plate (See 01-10B-86 No.1 Engine Mount Rubber, Bracket Plate Installation Note (4WD).)
2	No.1 engine mount rubber (See 01-10B-83 No.1 Engine Mount Rubber Removal Note (4WD).) (See 01-10B-86 No.1 Engine Mount Rubber, Bracket Plate Installation Note (4WD).)
3	No.1 engine mount bracket (See 01-10B-85 No.1 Engine Mount Bracket Removal Note (4WD).) (See 01-10B-85 No.1 Engine Mount Bracket Installation Note (4WD).)

No.1 Engine Mount Rubber Removal Note (4WD)

1. Remove the joint bolt (steering gear side) and disconnect the steering shaft from the steering gear and linkage. (See 06-13-4 STEERING WHEEL AND COLUMN REMOVAL/INSTALLATION.)
2. Disconnect the front crossmember extension.

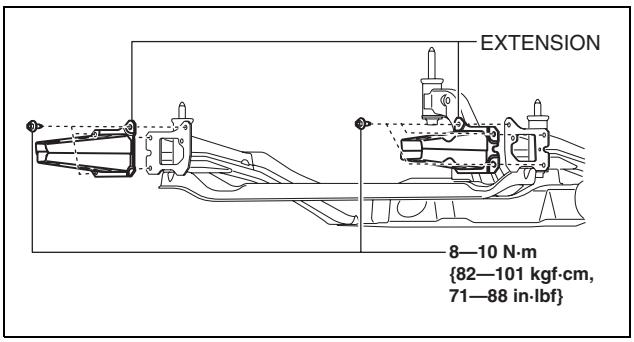

ac5uuw00000644

MECHANICAL [SKYACTIV-D 2.2]

3. Remove the insulator shown in the figure.

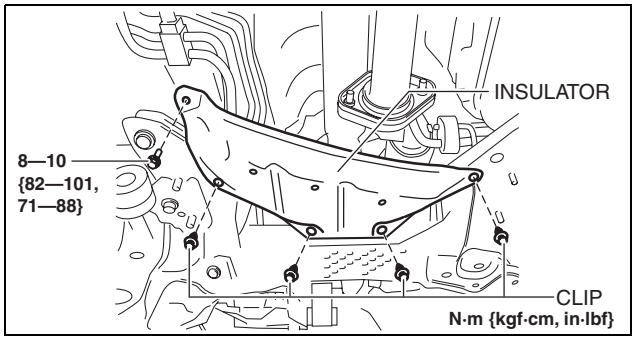

ac5uuw00000645

4. Disconnect the hanger rubber from the front crossmember and set it aside.
5. Disconnect the front stabilizer link (front stabilizer side). (See 02-13-10 FRONT STABILIZER REMOVAL/INSTALLATION.)

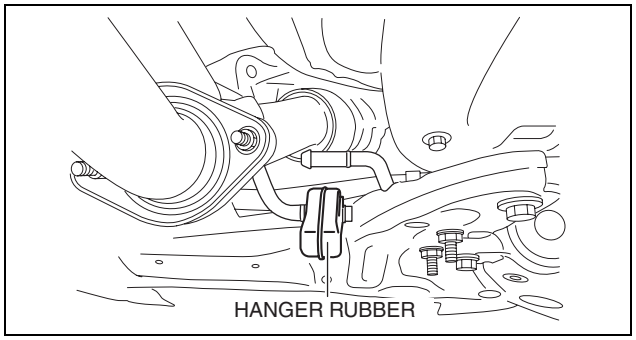

ac5wzw0000526

6. Remove the No.1 engine mount rubber installation bolt (front crossmember side).

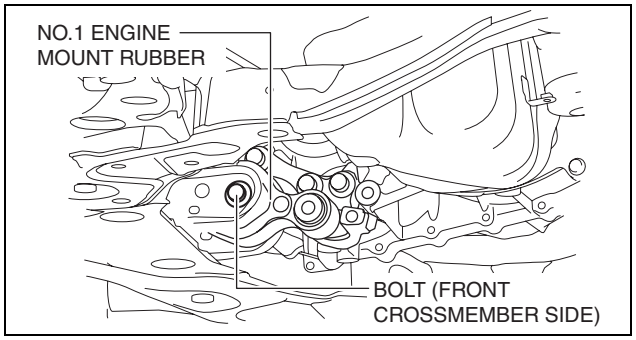

ac5wzw0000507

7. Support the front crossmember component using a jack.

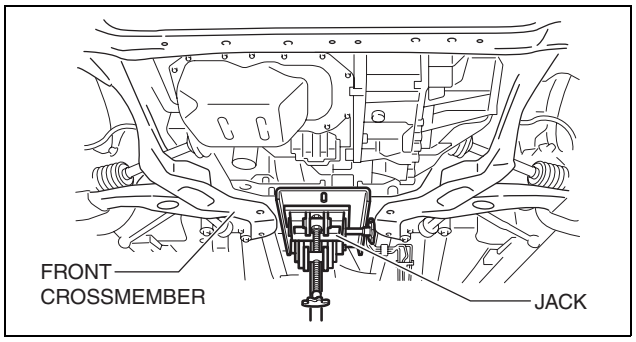

ac5wzw0000526

8. Loosen the front crossmember installation bolts (8) and lower the front crossmember component to 15—20 mm {0.60—0.78 in}.

Note
- To remove the No.1 engine mount, lower the front crossmember component to make clearance between the component and transfer.

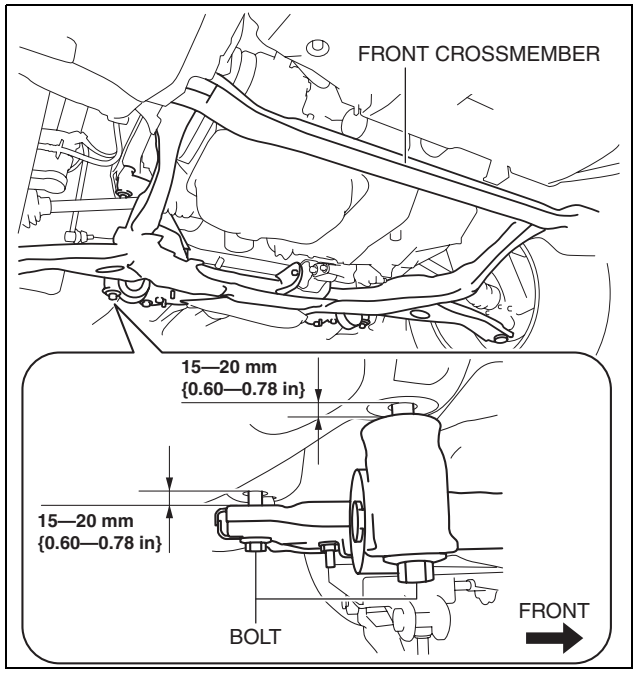

ac5uuw00000649

9. Remove the No.1 engine mount rubber.

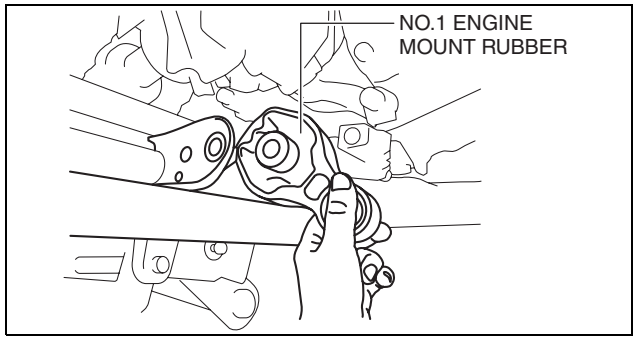

ac5uuw00000650

No.1 Engine Mount Bracket Removal Note (4WD)
1. Remove the front crossmember component and No.1 engine mount rubber as a single unit. (See 02-13-15 FRONT CROSSMEMBER REMOVAL/INSTALLATION.)
2. Remove the transfer. (See 03-16A-6 TRANSFER REMOVAL/INSTALLATION [D66MX-R] (MTX).) (See 03-16B-6 TRANSFER REMOVAL/INSTALLATION [GW6AX-EL] (ATX).)
3. Remove the No.1 engine mount bracket.

No.1 Engine Mount Bracket Installation Note (4WD)
1. Install the No.1 engine mount bracket and tighten the bolts in the order shown in the figure.

Tightening torque
131—153 N·m {14—15 kgf·m, 97—112 ft·lbf}

2. Install in the reverse order of removal.

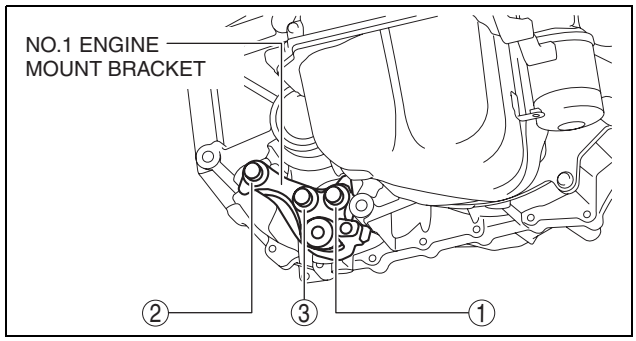

ac5wzw0000507

MECHANICAL [SKYACTIV-D 2.2]

No.1 Engine Mount Rubber, Bracket Plate Installation Note (4WD)

1. Install the No.1 engine mount rubber to the front crossmember.
2. Tighten the front crossmember installation bolts. (See 02-13-15 FRONT CROSSMEMBER REMOVAL/INSTALLATION.)
3. Remove the jack.
4. Tighten the No.1 engine mount rubber installation bolts.
5. Install in the reverse order of removal.

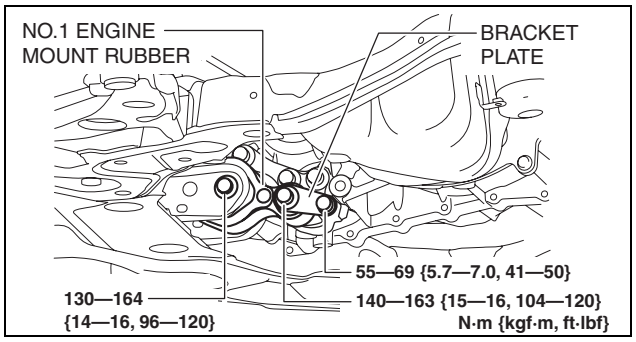

ac5wzw0000507

No.3 Engine Mount

Caution

- **Slots have been adopted for the No.3 engine mount installation holes. If the No.3 engine mount is deviated from the original position when installing the No.3 engine mount, engine noise or vibration could increase. Before removing the No.3 engine mount, place alignment marks on the No.3 engine mount and body so that they can be assembled to the same positions as before removal.**

1. Disconnect the negative battery cable. (See 01-17B-9 NEGATIVE BATTERY CABLE DISCONNECTION/CONNECTION [SKYACTIV-D 2.2].)
2. Remove the engine cover. (See 01-10B-4 ENGINE COVER REMOVAL/INSTALLATION [SKYACTIV-D 2.2].)
3. Remove in the order indicated in the table.
4. Install in the reverse order of removal.

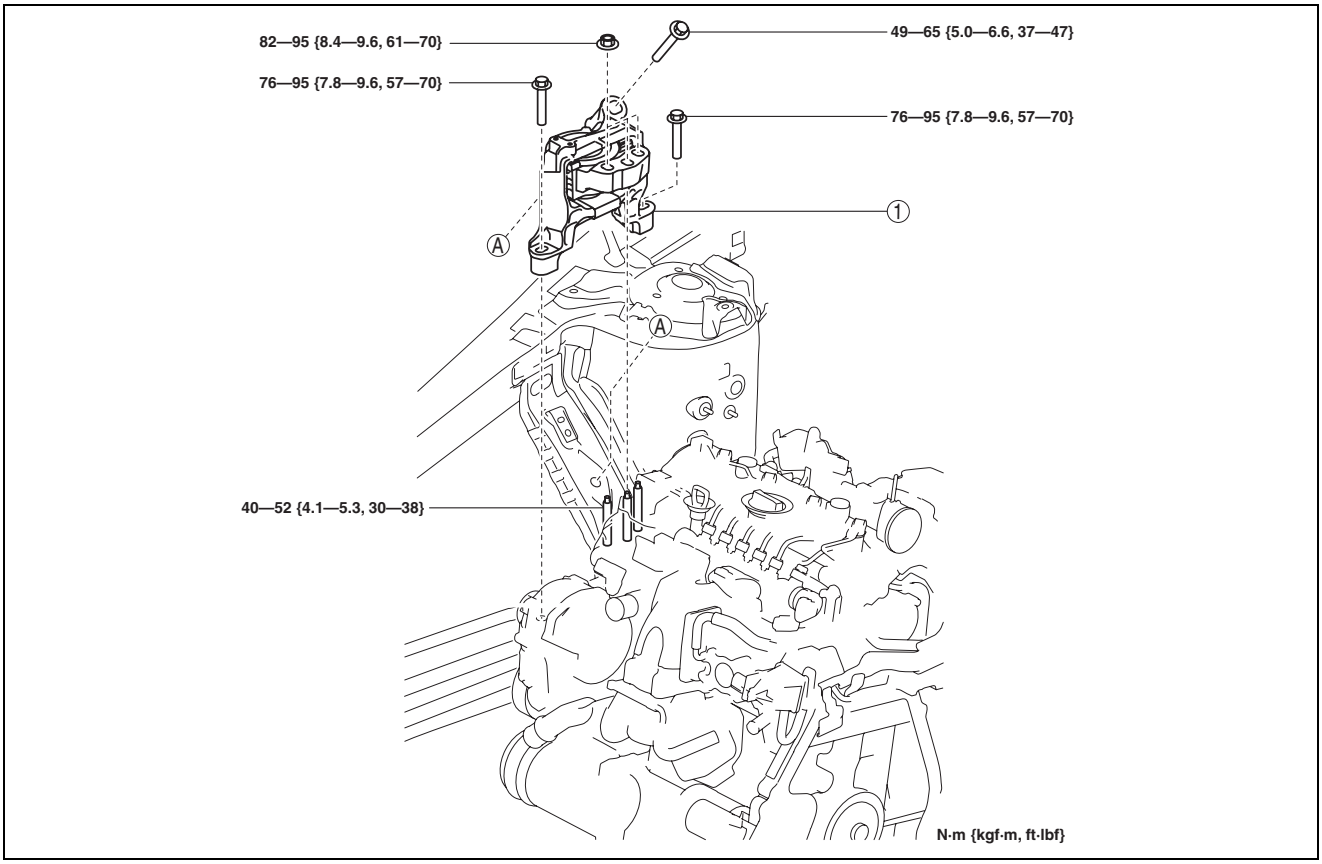

ac5wzw0000507

MECHANICAL [SKYACTIV-D 2.2]

1	No.3 engine mount (See 01-10B-87 No.3 Engine Mount Removal Note.) (See 01-10B-89 No.3 Engine Mount Installation Note.)

No.3 Engine Mount Removal Note

1. Remove the clip and bolt shown in the figure and set the ground cable aside.

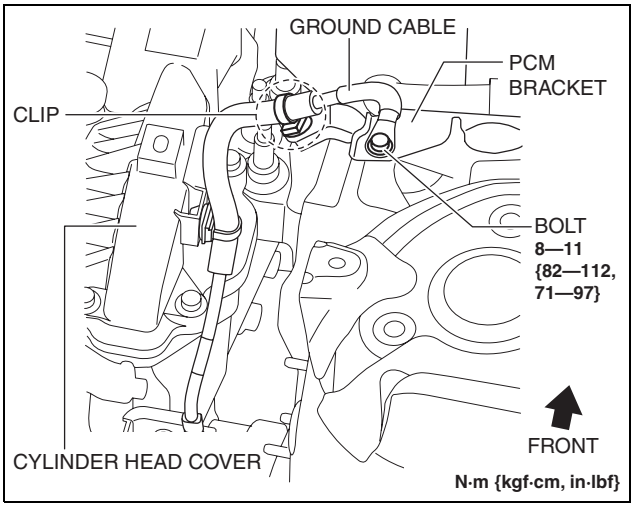

ac5wzw0000526

2. Remove the bolts and connector shown in the figure and set the PCM component aside with the PCM connector connected.

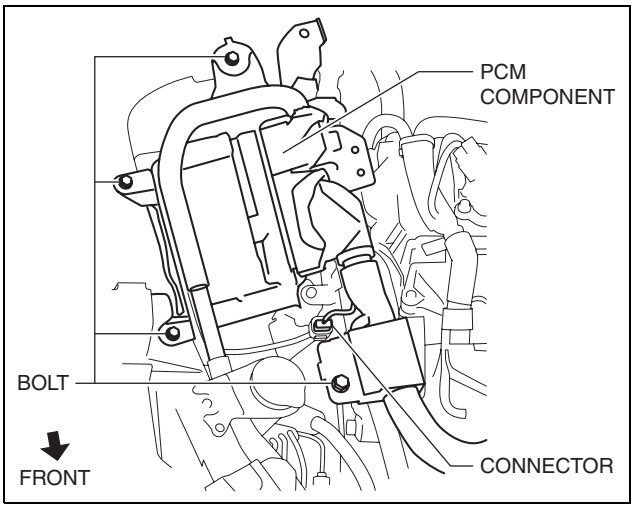

ac5wzw0000507

MECHANICAL [SKYACTIV-D 2.2]

3. Set the connector and cooler hose shown in the figure aside and remove the wiring harness bracket.
4. Remove the front under cover No.2. (See 09-16-41 FRONT UNDER COVER No.2 REMOVAL/INSTALLATION.)
5. Remove the seal plate installed to the underside of the oil pan. (See 01-11B-15 OIL PAN REMOVAL/INSTALLATION [SKYACTIV-D 2.2].)

Caution

- **To prevent deformation of the oil pan, support the engine using the following methods.**
  - **— When using an engine lifter, insert rubber of appropriate size (approx. 20 mm {0.79 in} thickness) between the engine lifter and the oil pan to support the oil pan.**
  - **— When using a garage jack, place rubber of appropriate size (approx. 20 mm {0.79 in} thickness) on a batten which is large enough to cover the oil pan to support the oil pan.**

6. Before removing the No.3 engine mount, support the engine (oil pan) using a commercially available engine lifter or garage jack.

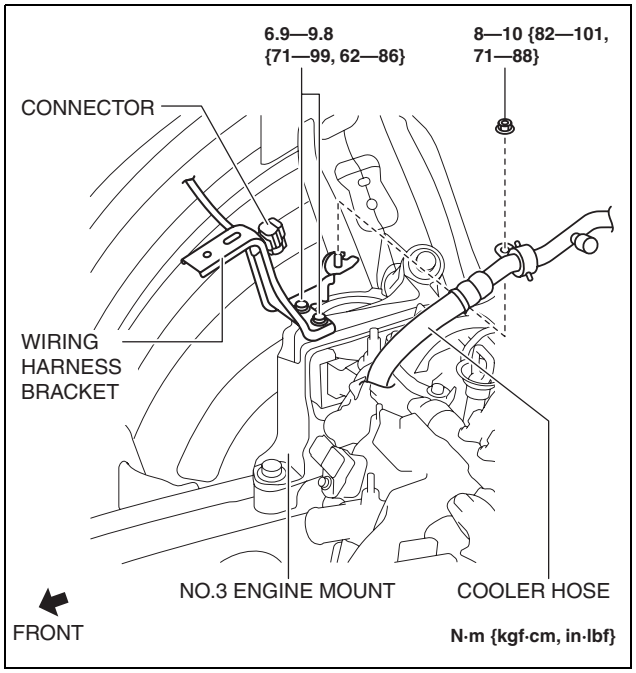

ac5wzw0000507

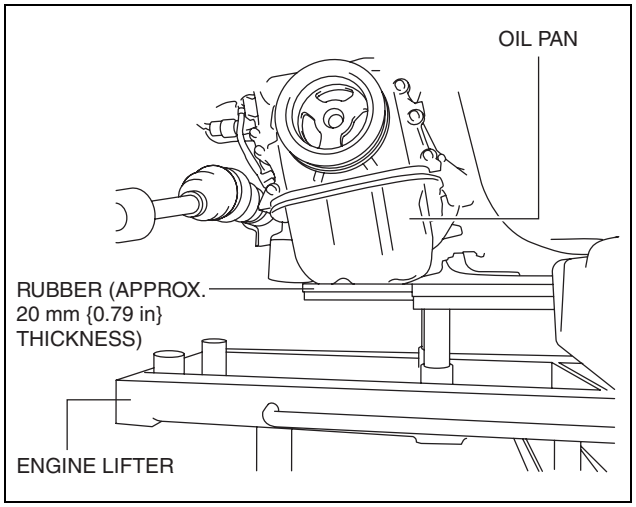

am3uuw0000890

7. Place alignment marks on the locations shown in the figure so that they can be assembled to the same positions as before removal.

   Note
   - Paint so that the No.3 engine mount is framed on the body side and the outline of the nut is framed on the No.3 engine mount side.

8. Remove the No.3 engine mount.

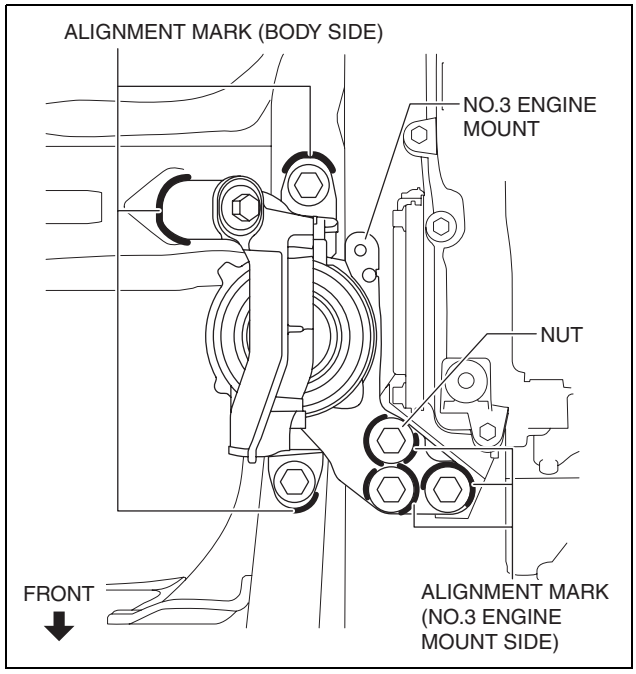

ac5uuw00000655

No.3 Engine Mount Installation Note

Note
- When replacing the No.3 engine mount, place a mark at the same position as the one placed before removal.
- If the No.3 engine mount nut is loosened, tighten the engine front cover stud bolts because they may be loosened.

1. Tighten the engine front cover stud bolts.

   Tightening torque
   40—52 N·m {4.1—5.3 kgf·m, 30—38 ft·lbf}

2. Temporarily tighten the No.3 engine mount installation bolts and nuts using the following procedure:

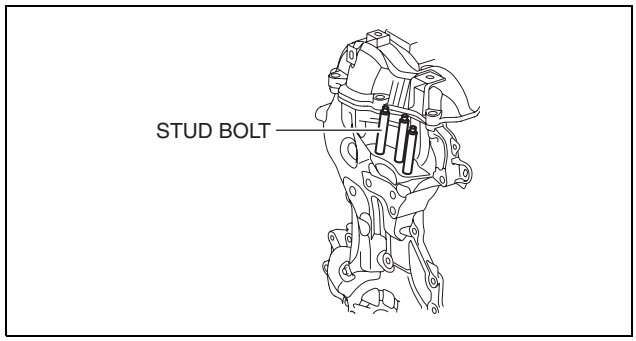

ac5wzw0000507

(1) Align the alignment marks on the body side and No.3 engine mount, and temporarily tighten the bolts shown in the figure.

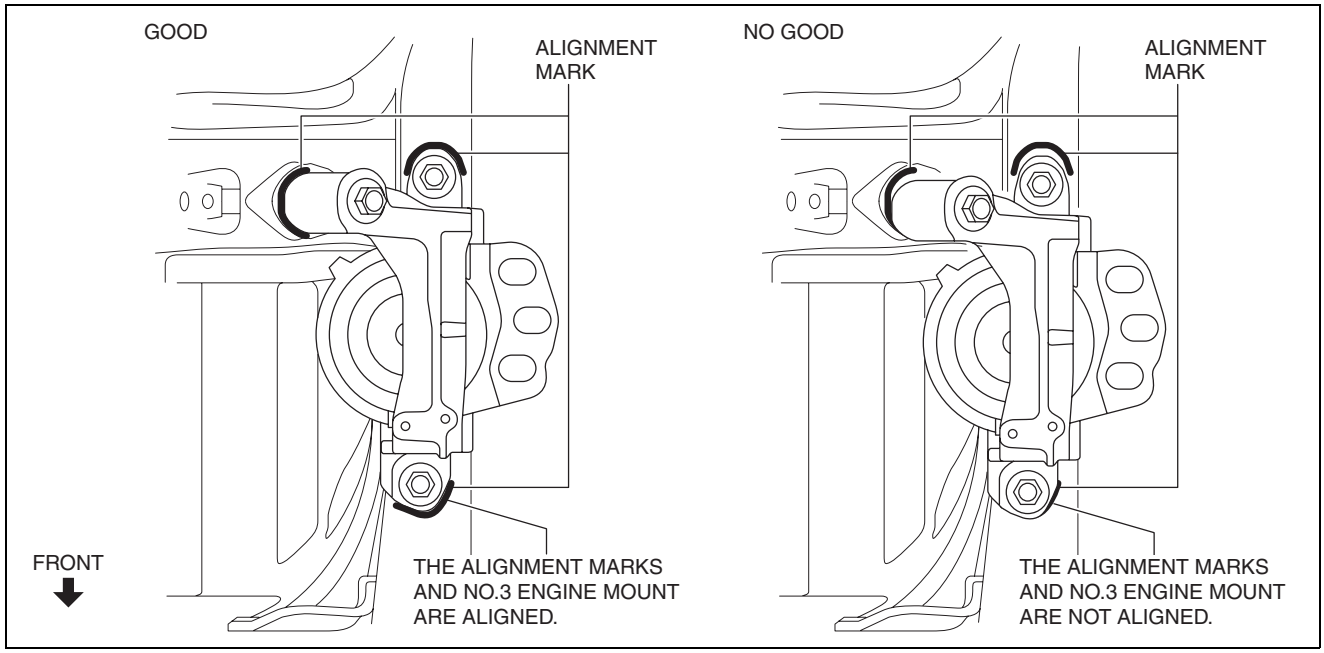

ac5wzw0000526

(2) Temporarily tighten the nuts shown in the figure while aligning the alignment marks of the No.3 engine mount and nuts.

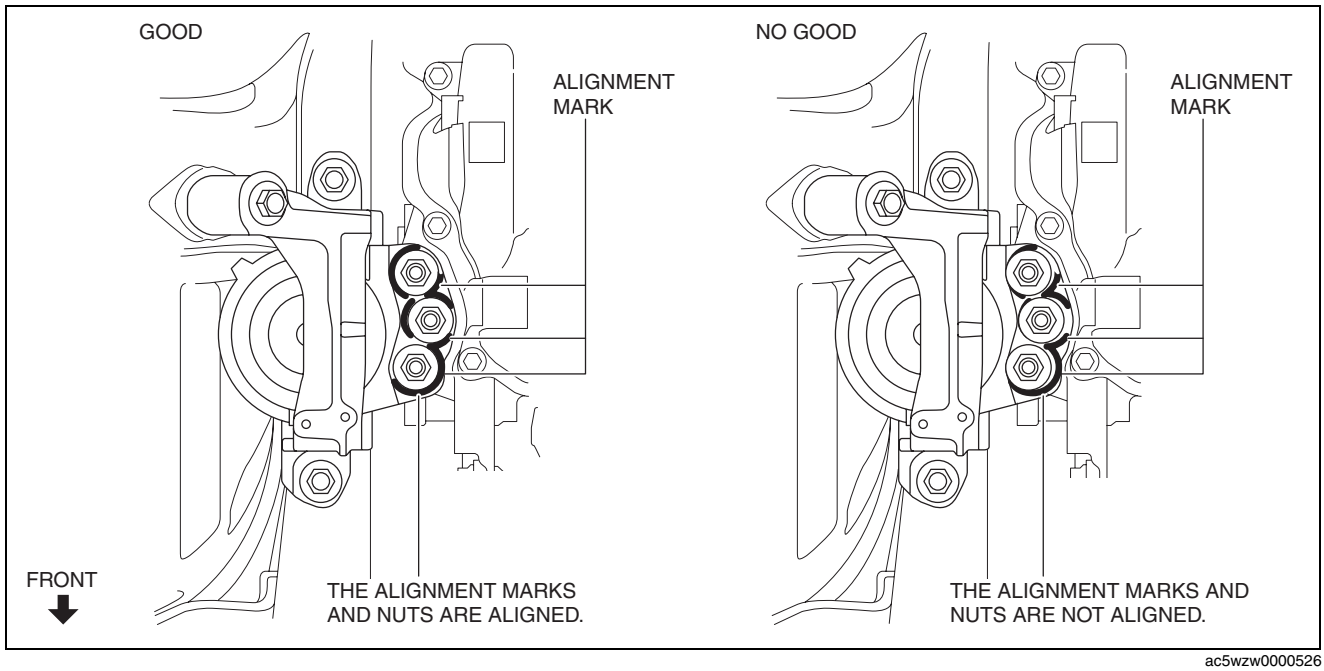

ac5wzw0000526

Note

- If the alignment marks are deviated, align the alignment marks while slightly moving the engine and temporarily tighten the nuts.

MECHANICAL [SKYACTIV-D 2.2]

3. Tighten the No.3 engine mount installation bolts and nuts in the order as shown in the figure.

No.	Tightening torque
1	76—95 N·m {7.8—9.6 kgf·m, 57—70 ft·lbf}
2	82—95 N·m {8.4—9.6 kgf·m, 61—70 ft·lbf}
3	49—65 N·m {5.0—6.6 kgf·m, 37—47 ft·lbf}

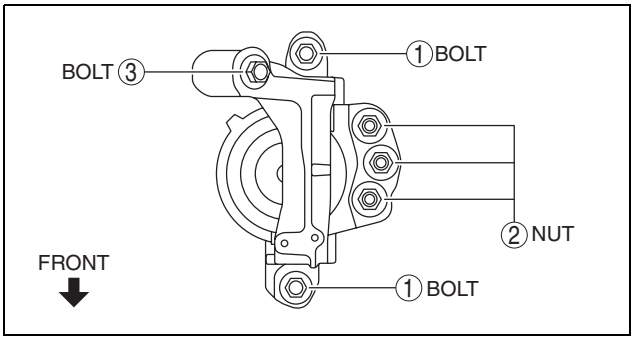

ac5wzw0000508

4. Remove the engine lifter or garage jack.
5. Install the seal plate. (See 01-11B-15 OIL PAN REMOVAL/INSTALLATION [SKYACTIV-D 2.2].)
6. Install the front under cover No.2. (See 09-16-41 FRONT UNDER COVER No.2 REMOVAL/INSTALLATION.)
7. Install the wiring harness bracket, cooler hose and connector.
8. Install the PCM component using the following procedure:
   (1) Install the wiring harness protector and connector.

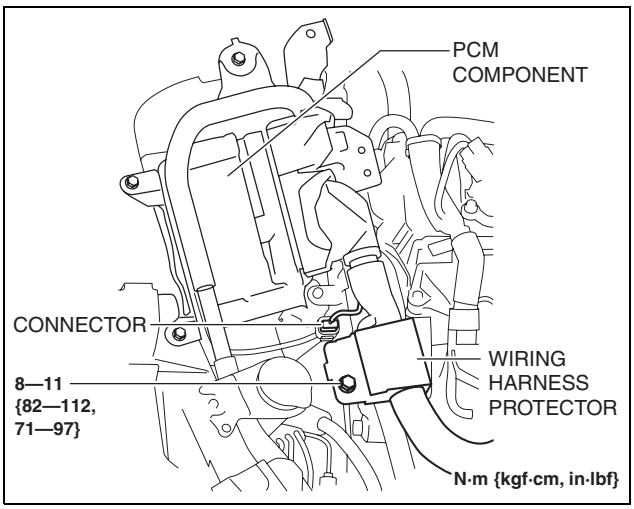

ac5wzw0000508

(2) Temporarily tighten the bolt shown in the figure.

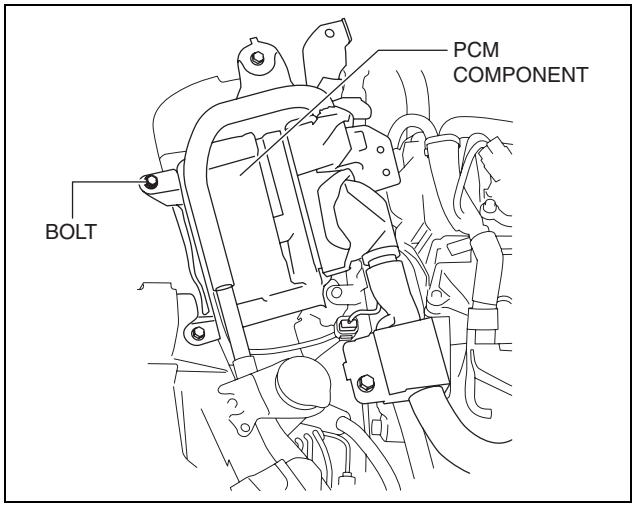

ac5wzw0000508

(3) Tighten the PCM component installation bolts in the order shown in the figure.

Tightening torque
9—10 N·m {92—101 kgf·cm, 80—88 in·lbf}

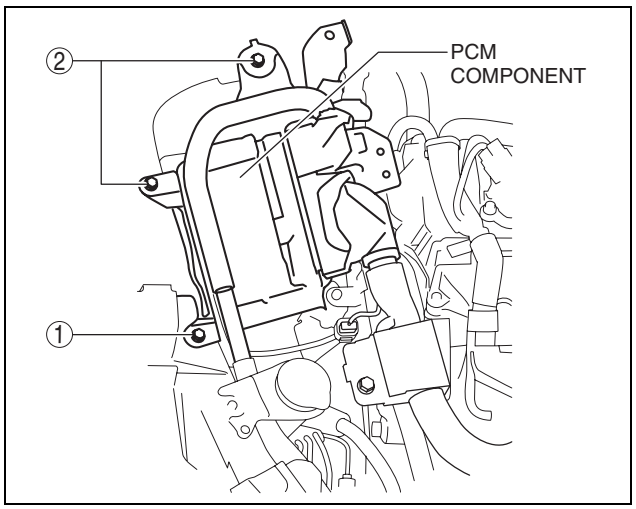

ac5wzw0000508

9. Install the ground cable to the PCM bracket.

MECHANICAL [SKYACTIV-D 2.2]

No.4 Engine Mount

Caution

- **Slots have been adopted for the No.4 engine mount bracket installation holes. If the No.4 engine mount bracket is deviated from the original position when installing the No.4 engine mount bracket, engine noise or vibration could increase. Before removing the No.4 engine mount bracket, place alignment marks on the No.4 engine mount bracket so that they can be assembled to the same positions as before removal.**

1. Disconnect the negative battery cable. (See 01-17B-9 NEGATIVE BATTERY CABLE DISCONNECTION/CONNECTION [SKYACTIV-D 2.2].)
2. Remove the air cleaner and air hose as a single unit. (See 01-13B-6 INTAKE-AIR SYSTEM REMOVAL/INSTALLATION [SKYACTIV-D 2.2].)
3. Remove the battery and battery tray. (See 01-17B-3 BATTERY REMOVAL/INSTALLATION [SKYACTIV-D 2.2].)
4. Remove in the order indicated in the table.
5. Install in the reverse order of removal.

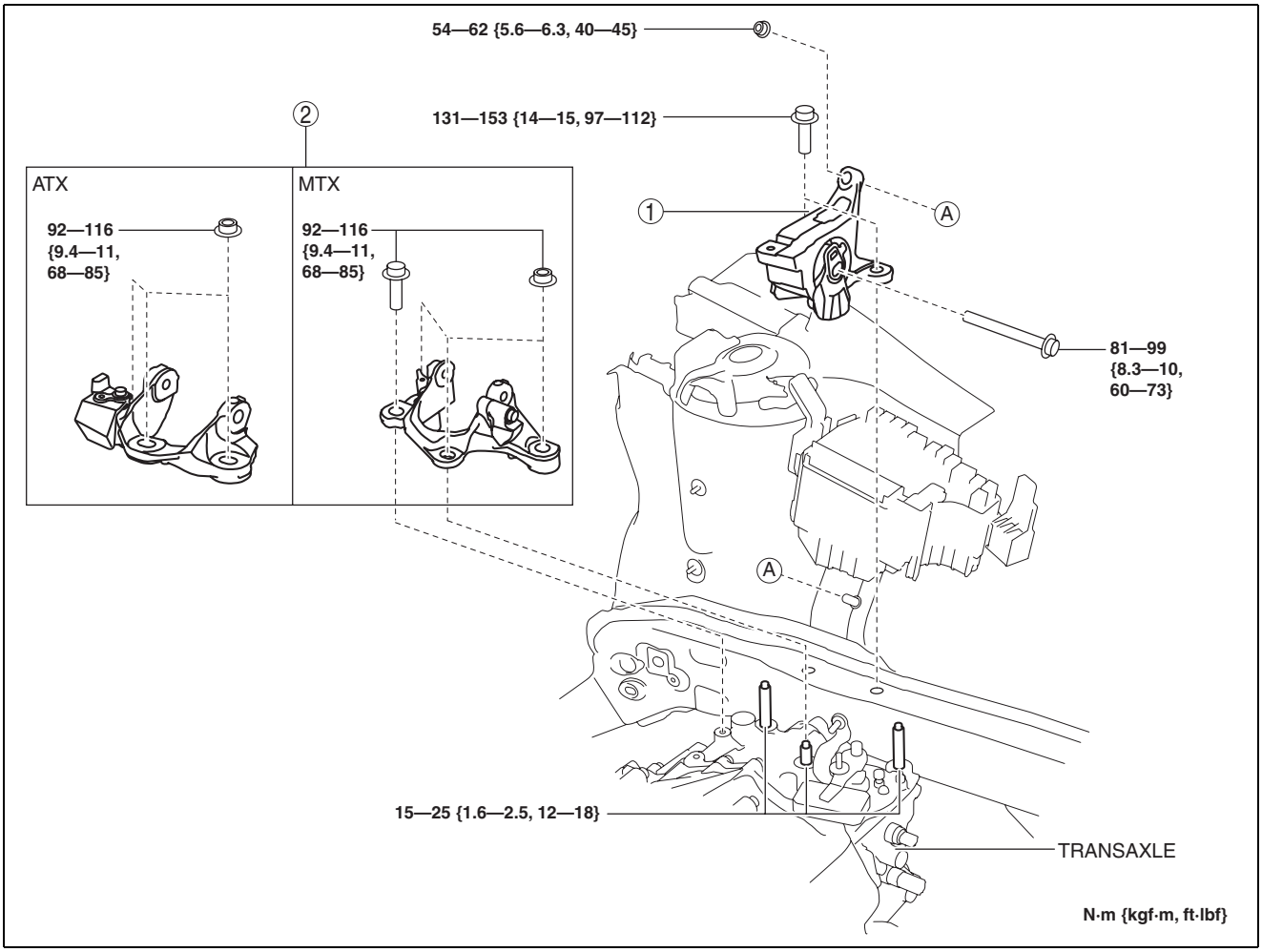

ac5wzw0000527

1	No.4 engine mount rubber (See 01-10B-94 No.4 Engine Mount Rubber Removal Note.) (See 01-10B-97 No.4 Engine Mount Rubber Installation Note.)
2	No.4 engine mount bracket (See 01-10B-95 No.4 Engine Mount Bracket Removal Note.) (See 01-10B-96 No.4 Engine Mount Bracket Installation Note.)

MECHANICAL [SKYACTIV-D 2.2]

No.4 Engine Mount Rubber Removal Note

1. Remove the clips shown in the figure and set the wiring harness protector aside.
2. Remove the front under cover No.2. (See 09-16-41 FRONT UNDER COVER No.2 REMOVAL/INSTALLATION.)

Caution

- **To prevent deformation of the transaxle, support the transaxle using the following methods.**

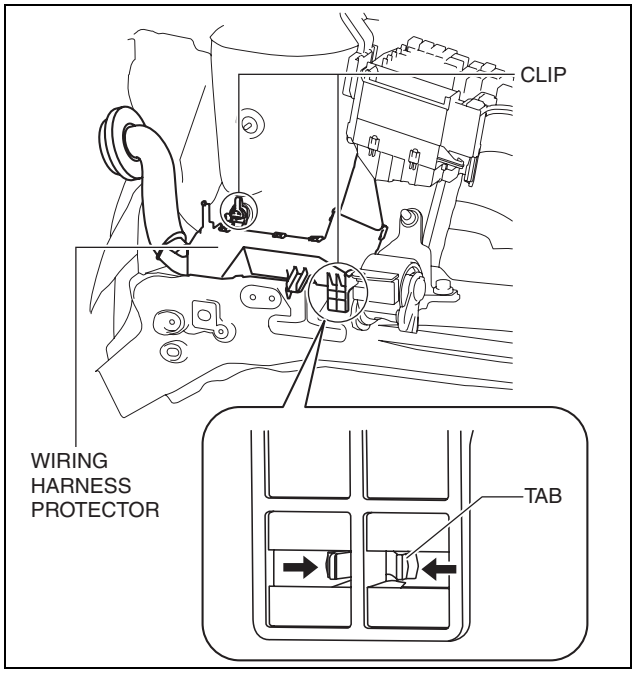

ac5uuw00000660

— **MTX: Support the clutch housing using a batten of appropriate size.**

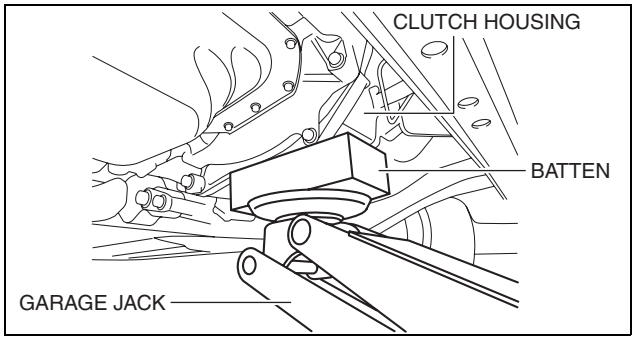

ac5uuw00000661

— **ATX: Place rubber of appropriate size (approx. 20 mm {0.79 in} thickness) on a batten which is large enough to cover the oil pan to support the oil pan.**

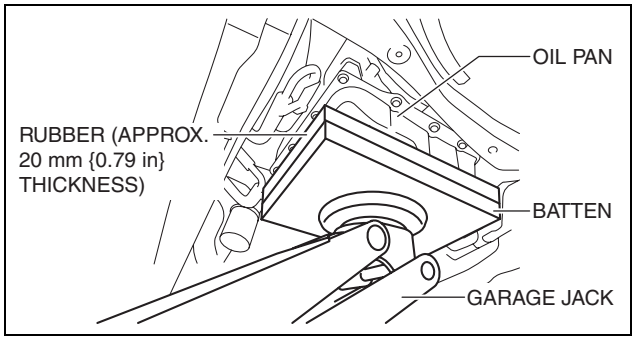

ac5uuw00000662

3. Before removing the No.4 engine mount rubber, support the transaxle using a commercially available engine lifter or garage jack.
4. Remove the No.4 engine mount rubber.

No.4 Engine Mount Bracket Removal Note

1. Remove the bolt shown in the figure and set the ground cable aside.
2. Place alignment marks on the locations shown in the figure so that they can be assembled to the same positions as before removal.

MTX

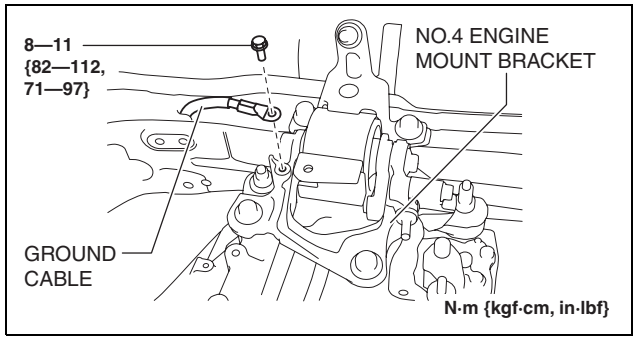

ac5wzw0000508

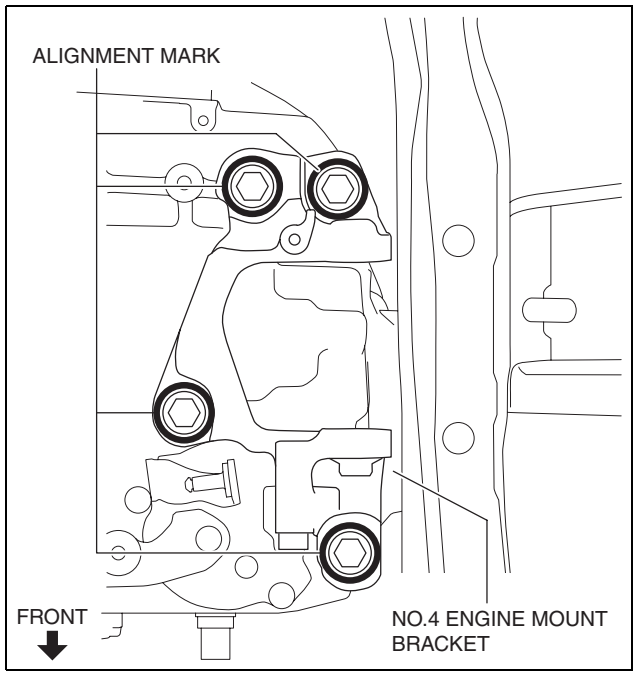

ac5wzw0000527

ATX

Note

- Paint so that the outline of the nut is framed on the bracket side.

3. Remove the No.4 engine mount bracket.

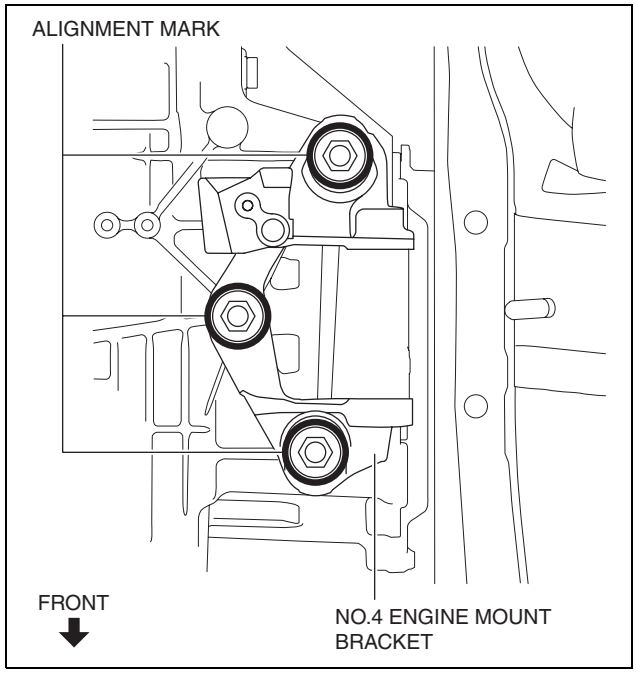

ac5wzw0000508

MECHANICAL [SKYACTIV-D 2.2]

No.4 Engine Mount Bracket Installation Note

Note

- When replacing the No.4 engine mount bracket, place a mark at the same position as the one placed before removal.
- If the No.4 engine mount bracket nut is loosened, tighten the transaxle stud bolts because they may be loosened.

1. Tighten the transaxle stud bolts.

   Tightening torque
   15—25 N·m {1.6—2.5 kgf·m, 12—18 ft·lbf}

2. Align the alignment marks on the No.4 engine mount bracket and nuts, and temporarily tighten the nuts shown in the figure.

MTX

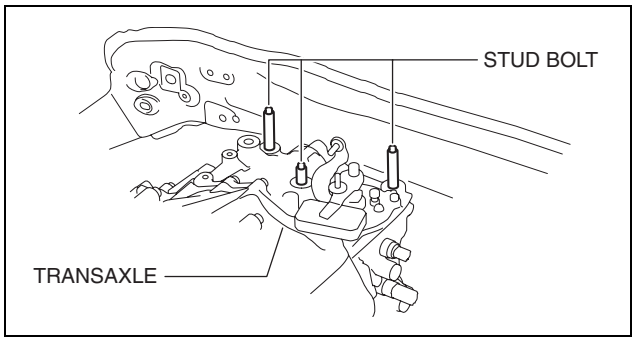

ac5wzw0000508

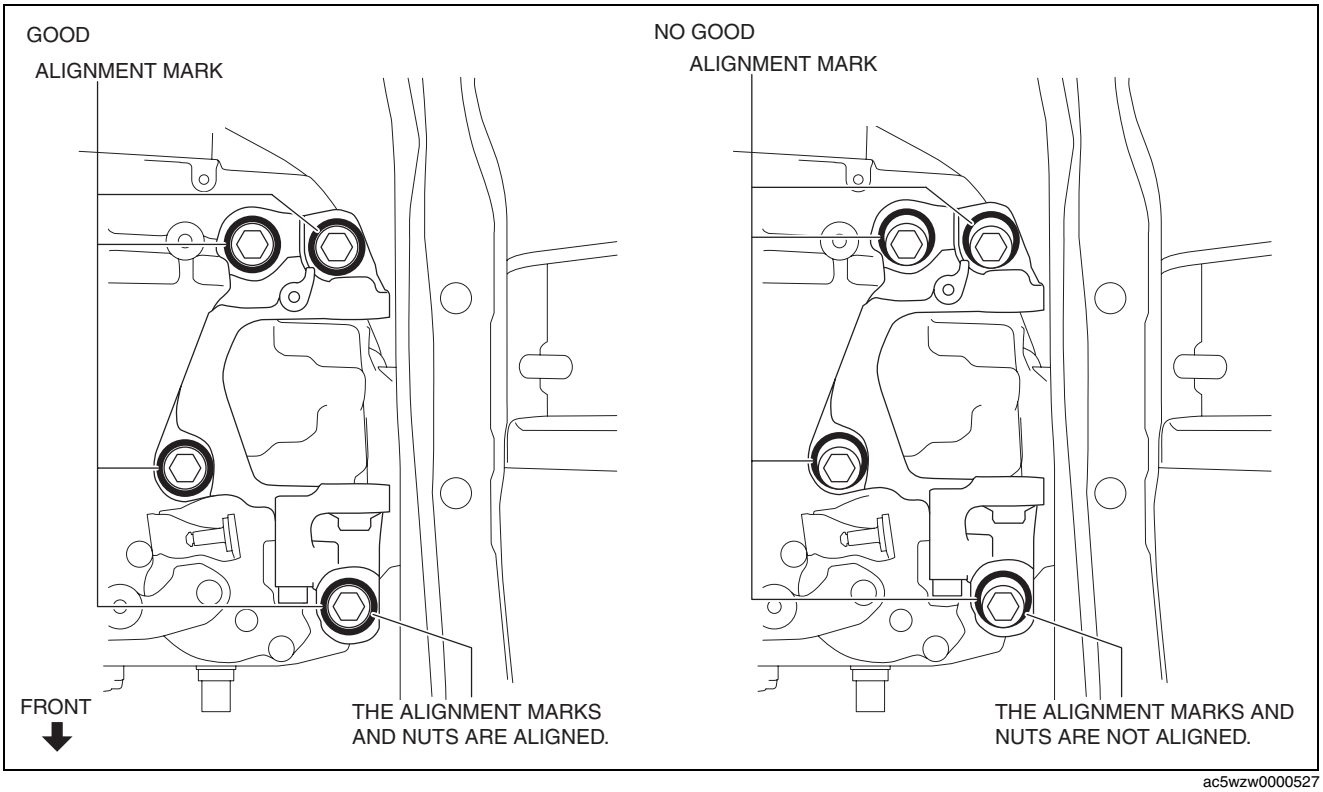

ac5wzw0000527

MECHANICAL [SKYACTIV-D 2.2]

ATX

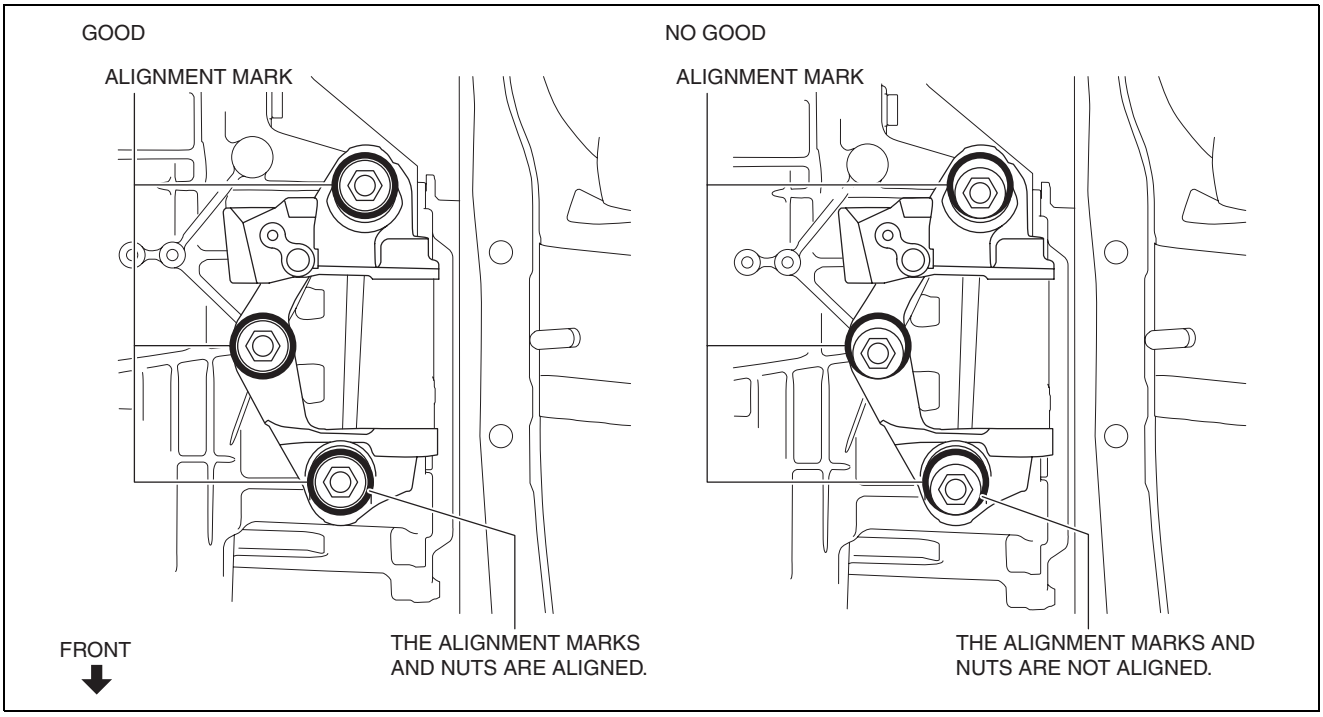

ac5wzw0000527

3. Tighten the No.4 engine mount bracket installation nuts and bolt.

Tightening torque
92—116 N·m {9.4—11 kgf·m, 68—85 ft·lbf}

No.4 Engine Mount Rubber Installation Note

1. Install the No.4 engine mount rubber and temporarily tighten the bolts and nut shown in the figure.

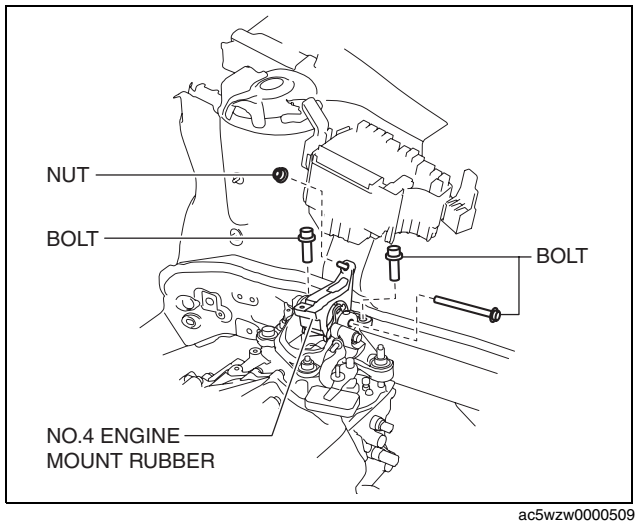

ac5wzw0000509

2. Tighten the No.4 engine mount rubber installation bolts and nut in the order shown in the figure.

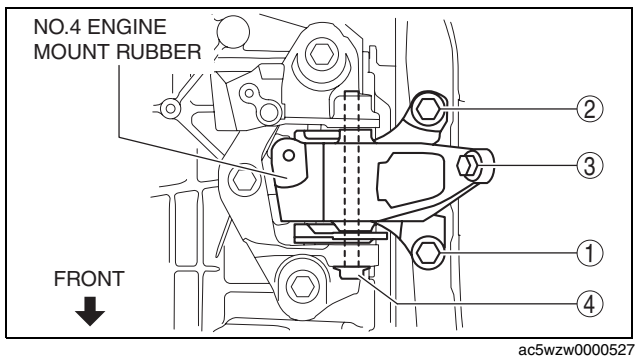

ac5wzw0000527

No.	Tightening torque
1, 2	131—153 N·m {14—15 kgf·m, 97—112 ft·lbf}
3	54—62 N·m {5.6—6.3 kgf·m, 40—45 ft·lbf}
4	81—99 N·m {8.3—10 kgf·m, 60—73 ft·lbf}

3. Remove the engine lifter or garage jack.
4. Install in the reverse order of removal.

MECHANICAL [SKYACTIV-D 2.2]

ENGINE REMOVAL/INSTALLATION [SKYACTIV-D 2.2]

id0110s5800400

Warning

- **A hot engine can cause severe burns. Turn off the engine and wait until it is cool before servicing.**
- **Fuel vapor is hazardous. It can very easily ignite, causing serious injury and damage. Always keep sparks and flames away from fuel.**
- **Fuel line spills and leakage are dangerous. Fuel can ignite and cause serious injuries or death and damage. Fuel can also irritate skin and eyes. To prevent this, always complete the "Fuel Line Safety Procedure". (See 01-14B-6 BEFORE SERVICE PRECAUTION [SKYACTIV-D 2.2].)**

Caution

- **Secure the steering wheel using tape or a cable to prevent the steering shaft from rotating after disconnecting the steering shaft. If the steering wheel rotates after the steering shaft and the steering gear and linkage are disconnected, the internal parts of the clock spring could be damaged.**

Note

- Perform the engine and transaxle component removal/installation from the lower side of the vehicle after removing the front crossmember component.

1. Disconnect the negative battery cable. (See 01-17B-9 NEGATIVE BATTERY CABLE DISCONNECTION/CONNECTION [SKYACTIV-D 2.2].)
2. Remove the engine cover. (See 01-10B-4 ENGINE COVER REMOVAL/INSTALLATION [SKYACTIV-D 2.2].)
3. Remove the air cleaner and air hose as a single unit. (See 01-13B-6 INTAKE-AIR SYSTEM REMOVAL/INSTALLATION [SKYACTIV-D 2.2].)
4. Remove the bolts, nut and connector shown in the figure, and set the wiring harness aside.
5. Remove the battery and battery tray. (See 01-17B-3 BATTERY REMOVAL/INSTALLATION [SKYACTIV-D 2.2].)
6. Disconnect the ground cable shown in the figure.

Right side

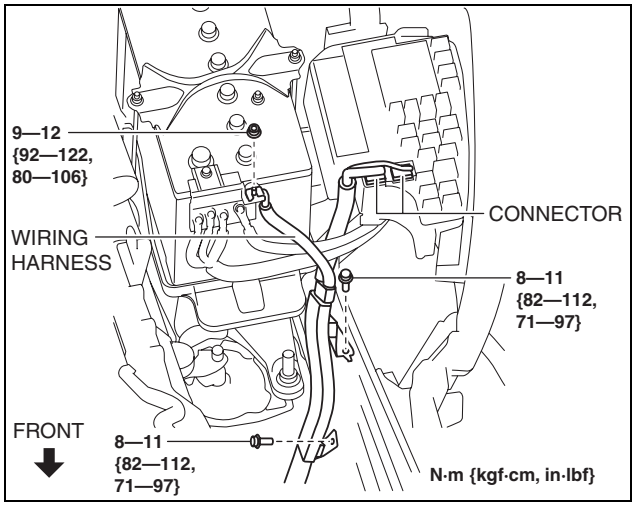

ac5wzw0000491

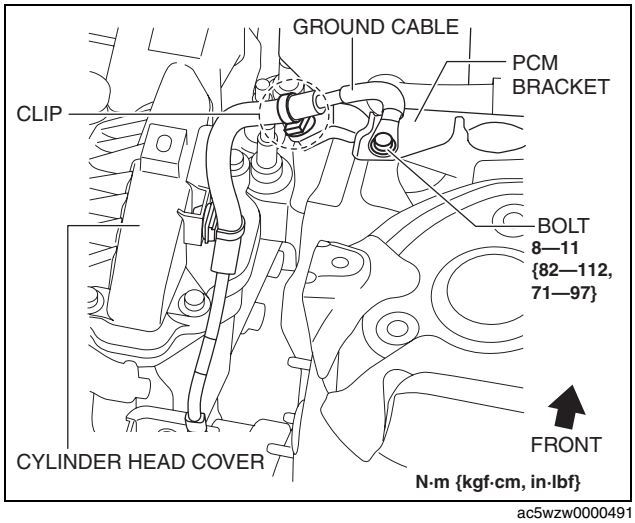

ac5wzw0000491

MECHANICAL [SKYACTIV-D 2.2]

Left side

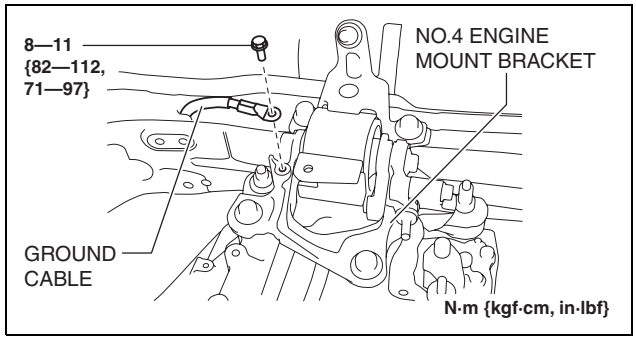

ac5wzw0000491

7. Remove the following parts as a single unit (See 01-13B-6 INTAKE-AIR SYSTEM REMOVAL/INSTALLATION [SKYACTIV-D 2.2].):
   - Turbocharger air outlet pipe
   - Turbocharger air outlet hose
   - Air intake pipe
   - Charge air cooler inlet hose
8. Drain the engine coolant. (See 01-12B-4 ENGINE COOLANT REPLACEMENT [SKYACTIV-D 2.2].)
9. Drain the transaxle oil (MTX) or ATF (ATX). (See 05-15B-2 MANUAL TRANSAXLE OIL REPLACEMENT [D66M-R, D66MX-R].) (See 05-17B-12 AUTOMATIC TRANSAXLE FLUID (ATF) REPLACEMENT [GW6A-EL, GW6AX-EL].)
10. Disconnect the selector cable. (ATX) (See 05-18-2 AUTOMATIC TRANSAXLE SHIFT MECHANISM REMOVAL/INSTALLATION.)
11. Disconnect the control cable. (MTX) (See 05-16B-1 MANUAL TRANSAXLE SHIFT MECHANISM REMOVAL/INSTALLATION [D66M-R, D66MX-R].)
12. Remove the clutch release cylinder with the pipe still connected. (MTX) (See 05-10B-24 CLUTCH RELEASE CYLINDER REMOVAL/INSTALLATION [D66M-R, D66MX-R].)
13. Disconnect the brake vacuum hose. (See 04-11-5 VACUUM HOSE REMOVAL/INSTALLATION.)
14. Disconnect the fuel main hose and fuel return hose No.1. (See 01-14B-54 LOWER CASE REMOVAL/INSTALLATION [SKYACTIV-D 2.2].)
15. Disconnect the upper radiator hose and water hose (upper side of radiator). (See 01-12B-9 RADIATOR REMOVAL/INSTALLATION [SKYACTIV-D 2.2].)
16. Disconnect the heater hose. (See 07-11-11 A/C UNIT REMOVAL/INSTALLATION.)
17. Remove the front wheels and tires. (See 02-10-1 GENERAL PROCEDURES (SUSPENSION).)
18. Remove the front under cover No.1 and No.2. (See 09-16-40 FRONT UNDER COVER No.1 REMOVAL/INSTALLATION.) (See 09-16-41 FRONT UNDER COVER No.2 REMOVAL/INSTALLATION.)
19. Remove the splash shield. (See 09-16-49 SPLASH SHIELD REMOVAL/INSTALLATION.)
20. Disconnect the ATF oil hose from the radiator. (if equipped) (See 05-17B-71 OIL COOLER REMOVAL/INSTALLATION [GW6A-EL, GW6AX-EL].)
21. Disconnect the lower radiator hose. (See 01-12B-12 THERMOSTAT REMOVAL/INSTALLATION [SKYACTIV-D 2.2].)
22. Remove the charge air cooler outlet hose. (See 01-13B-6 INTAKE-AIR SYSTEM REMOVAL/INSTALLATION [SKYACTIV-D 2.2].)
23. Set the front mudguard (RH) aside. (See 09-16-47 MUDGUARD REMOVAL/INSTALLATION.)
24. Remove the charge air cooler outlet pipe. (See 01-13B-17 CHARGE AIR COOLER REMOVAL/INSTALLATION [SKYACTIV-D 2.2].)
25. Remove the drive belt. (See 01-10B-8 DRIVE BELT REMOVAL/INSTALLATION [SKYACTIV-D 2.2].)
26. Remove the A/C compressor with the pipes connected and secure the A/C compressor using wire or rope so that it is out of the way. (See 07-11-25 A/C COMPRESSOR REMOVAL/INSTALLATION.)
27. Remove the middle pipe installation nut (catalytic converter side) and secure the middle pipe using wire or rope so that it is out of the way. (See 01-15B-1 EXHAUST SYSTEM REMOVAL/INSTALLATION [SKYACTIV-D 2.2].)
28. Remove the propeller shaft. (4WD) (See 03-15-2 PROPELLER SHAFT REMOVAL/INSTALLATION.)
29. Disconnect the front drive shaft (LH) from the transaxle side and set it aside. (See 03-13-3 FRONT DRIVE SHAFT REMOVAL/INSTALLATION.)
30. Disconnect the front drive shaft (RH) from the transaxle side and set it aside. (2WD) (See 03-13-3 FRONT DRIVE SHAFT REMOVAL/INSTALLATION.)
31. Remove the drive shaft (RH). (4WD) (See 03-13-3 FRONT DRIVE SHAFT REMOVAL/INSTALLATION.)
32. Remove in the order indicated in the table.
33. Install in the reverse order of removal.
34. Refill the transaxle oil (MTX) or ATF (ATX). (See 05-15B-2 MANUAL TRANSAXLE OIL REPLACEMENT [D66M-R, D66MX-R].) (See 05-17B-12 AUTOMATIC TRANSAXLE FLUID (ATF) REPLACEMENT [GW6A-EL, GW6AX-EL].)
35. Refill the engine coolant. (See 01-12B-4 ENGINE COOLANT REPLACEMENT [SKYACTIV-D 2.2].)
36. Start the engine, and inspect and adjust the following:
    - Front wheel alignment (See 02-11-1 FRONT WHEEL ALIGNMENT.)
    - Leakage of engine oil, engine coolant, transaxle oil (MTX), ATF (ATX), and fuel.
    - Runout and contact of pulley and belt.
    - Idle speed (See 01-10B-3 ENGINE TUNE-UP [SKYACTIV-D 2.2].)
    - Engine-driven accessories operation.

Note

MECHANICAL [SKYACTIV-D 2.2]

- If the engine is overhauled and assembled to the vehicle, perform a road test to verify that there is no abnormal vibration and noise.

2WD

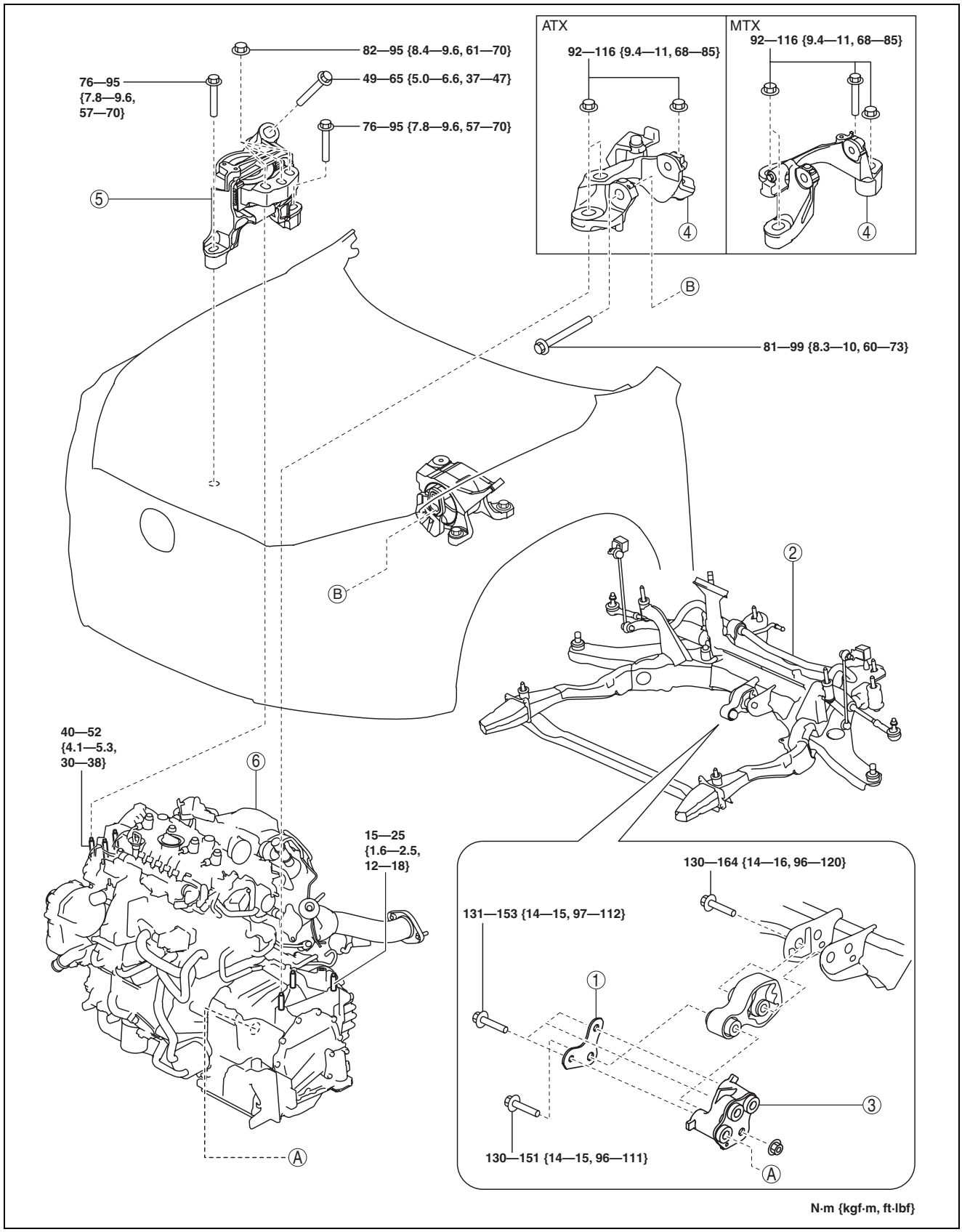

ac5wzw0000520

MECHANICAL [SKYACTIV-D 2.2]

1	Bracket plate (See 01-10B-104 Engine Mount Installation Note.)
2	No.1 engine mount rubber, front crossmember component (See 01-10B-102 No.1 Engine Mount Rubber, Front Crossmember Component Removal Note.) (See 01-10B-104 Engine Mount Installation Note.)
3	No.1 engine mount bracket (See 01-10B-104 Engine Mount Installation Note.)
4	No.4 engine mount bracket (See 01-10B-102 No.3 Engine Mount, No.4 Engine Mount Bracket Removal Note.) (See 01-10B-104 Engine Mount Installation Note.)
5	No.3 engine mount (See 01-10B-102 No.3 Engine Mount, No.4 Engine Mount Bracket Removal Note.) (See 01-10B-104 Engine Mount Installation Note.)
6	Engine, transaxle

4WD

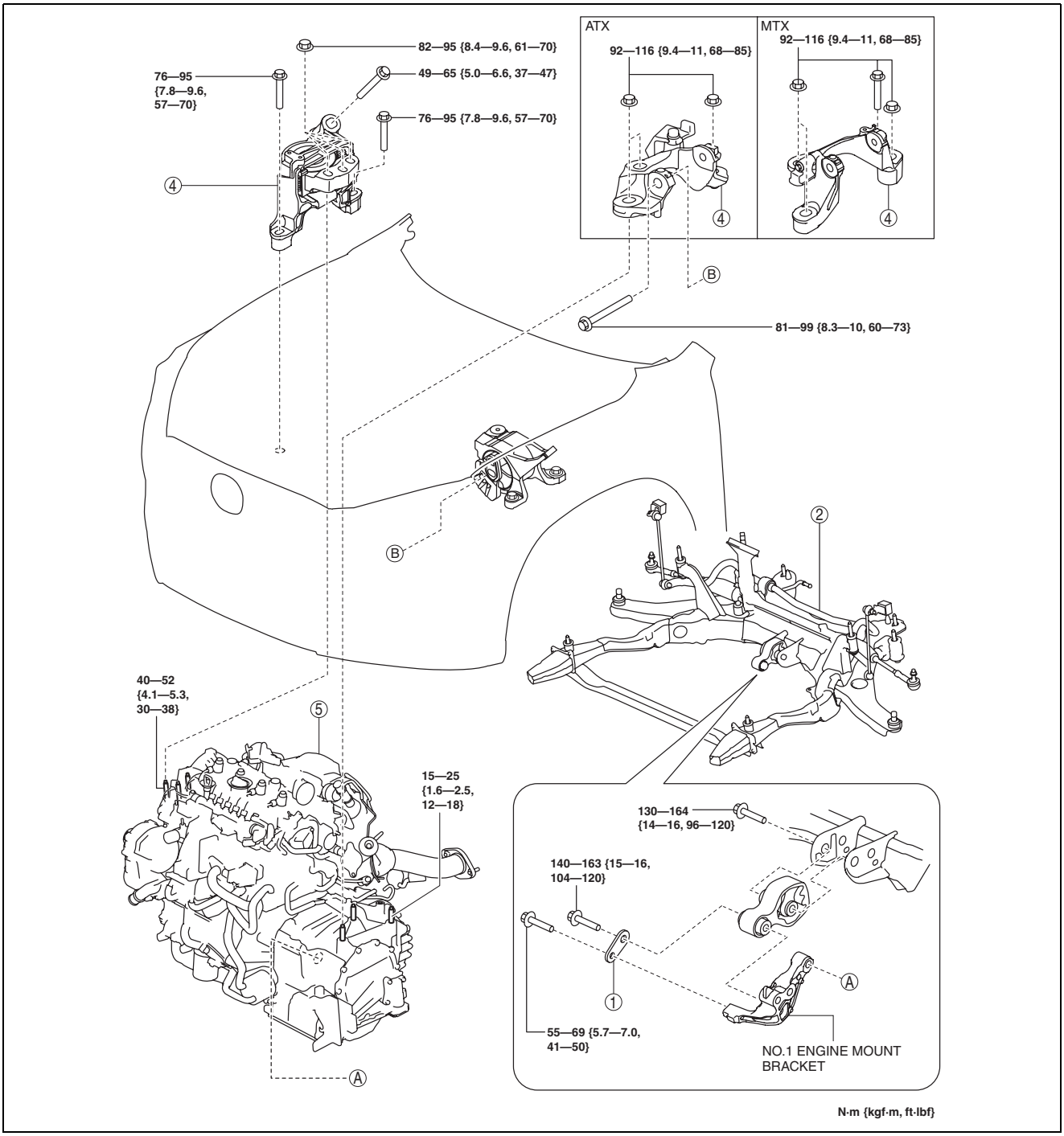

ac5wzw0000520

MECHANICAL [SKYACTIV-D 2.2]

1	Bracket plate (See 01-10B-104 Engine Mount Installation Note.)
2	No.1 engine mount rubber, front crossmember component (See 01-10B-102 No.1 Engine Mount Rubber, Front Crossmember Component Removal Note.) (See 01-10B-104 Engine Mount Installation Note.)
3	No.4 engine mount bracket (See 01-10B-102 No.3 Engine Mount, No.4 Engine Mount Bracket Removal Note.) (See 01-10B-104 Engine Mount Installation Note.)
4	No.3 engine mount (See 01-10B-102 No.3 Engine Mount, No.4 Engine Mount Bracket Removal Note.) (See 01-10B-104 Engine Mount Installation Note.)
5	Engine, transaxle

No.1 Engine Mount Rubber, Front Crossmember Component Removal Note

1. Loosen the No.1 engine mount rubber installation bolt (front crossmember side) shown in the figure.

2WD

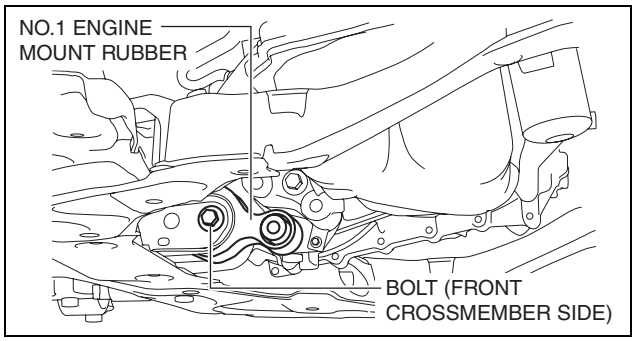

ac5wzw0000491

4WD

2. Remove the No.1 engine mount rubber and the front crossmember component as a single unit. (See 02-13-15 FRONT CROSSMEMBER REMOVAL/INSTALLATION.)

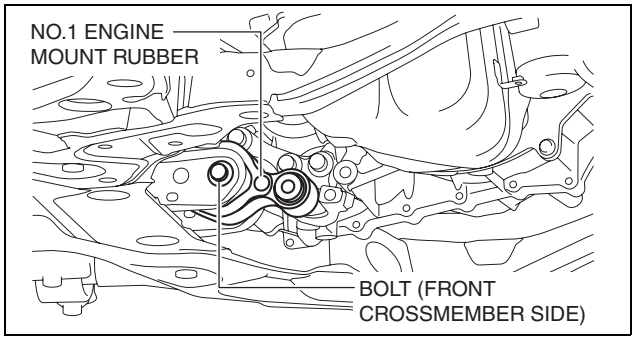

ac5wzw0000491

No.3 Engine Mount, No.4 Engine Mount Bracket Removal Note

1. Set the PCM wiring harness and PCM component aside using the following procedure:
   (1) Disconnect the PCM connector (140 pin side) from the PCM.
   (2) Remove the bolt and connector shown in the figure and set aside the PCM wiring harness to the engine upper side.

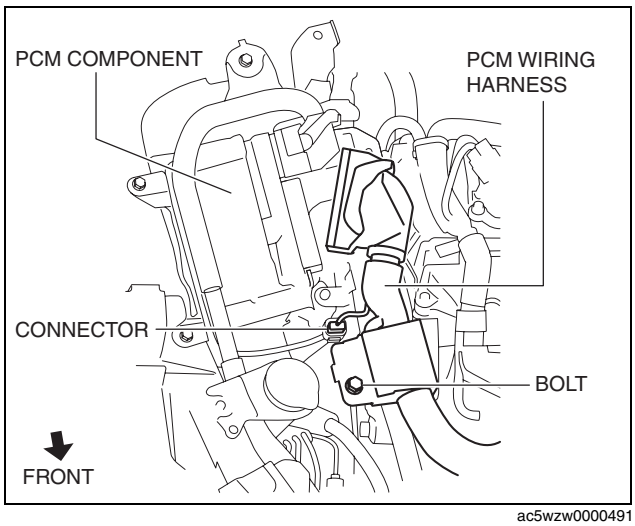

ac5wzw0000491

(3) Remove the bolt shown in the figure and set aside the PCM component with the PCM connector connected.

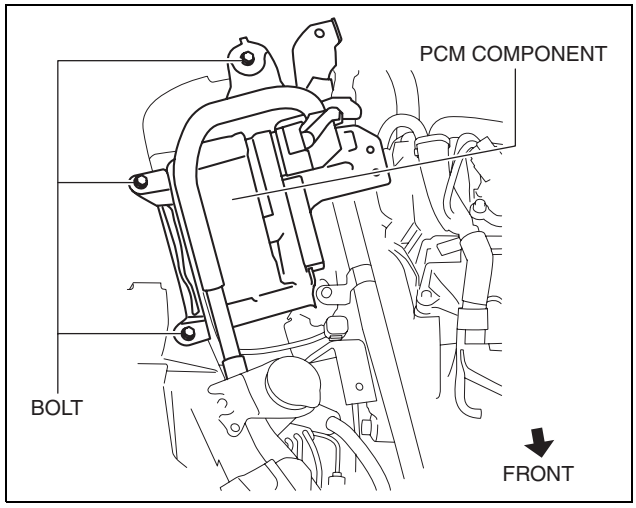

ac5wzw0000492

2. Remove the wiring harness bracket shown in the figure.
3. Remove the seal plate installed to the underside of the oil pan. (See 01-11B-15 OIL PAN REMOVAL/INSTALLATION [SKYACTIV-D 2.2].)

Caution

- **When supporting the engine and transaxle, insert rubber of appropriate size (approx. 20 mm {0.79 in} thickness) between the engine lifter and the oil pan, transaxle to prevent the deformation of the oil pan and damage of the transaxle.**

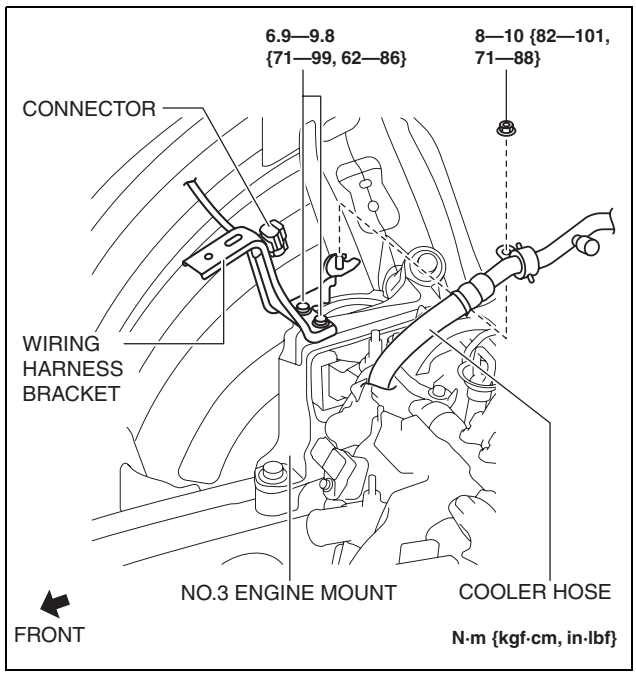

ac5wzw0000492

4. Secure the engine and transaxle using a commercially available engine lifter.
5. Remove the No.4 engine mount bracket.
6. Remove the No.3 engine mount.

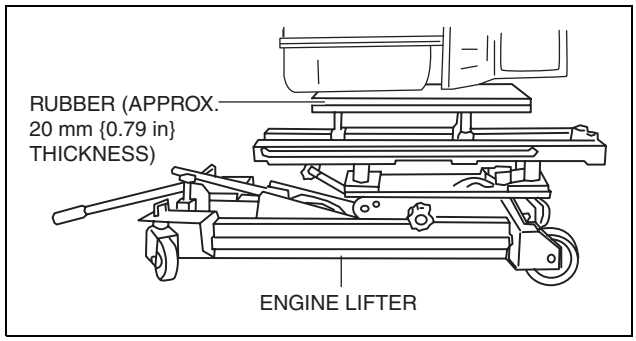

am3uuw0000880

MECHANICAL [SKYACTIV-D 2.2]

Engine Mount Installation Note

Caution
- **Slots have been adopted for the No.3 engine mount and No.4 engine mount bracket installation holes. Tighten the installation bolts and nuts so that they are centered on the slots. Otherwise, engine noise or vibration could increase.**

Note
- Retighten the engine front cover and transaxle stud bolts when the nuts of No.3 engine mount and No.4 engine mount bracket are loosened.

1. Tighten the engine front cover stud bolts.

   Tightening torque
   40—52 N·m {4.1—5.3 kgf·m, 30—38 ft·lbf}

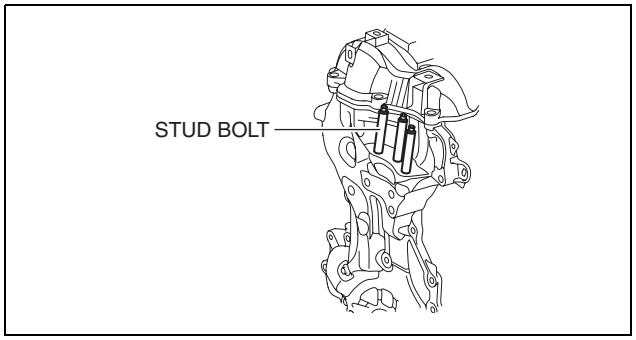

ac5wzw0000492

2. Tighten the transaxle stud bolts.

   Tightening torque
   15—25 N·m {1.6—2.5 kgf·m, 12—18 ft·lbf}

   Caution
   - **When supporting the engine and transaxle, insert rubber of appropriate size (approx. 20 mm {0.79 in} thickness) between the engine lifter and the oil pan, transaxle to prevent the deformation of the oil pan and damage of the transaxle.**

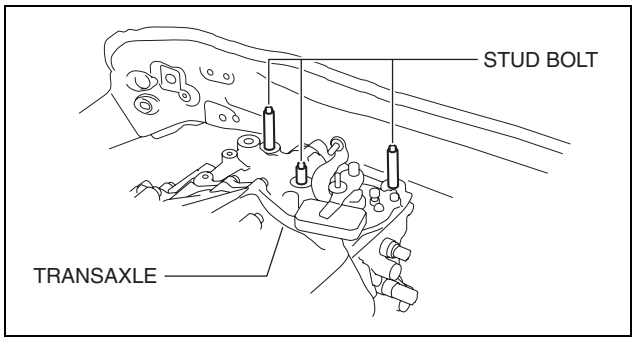

ac5wzw0000492

3. Secure the engine and transaxle using a commercially available engine lifter.

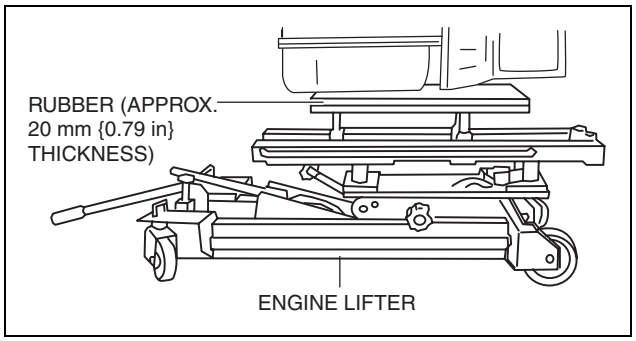

am3uuw0000880

4. Temporarily tighten the No.3 engine mount installation bolts and nuts using the following procedure:
   (1) Temporarily tighten the bolts shown in the figure so that they are centered on the No.3 engine mount slots.

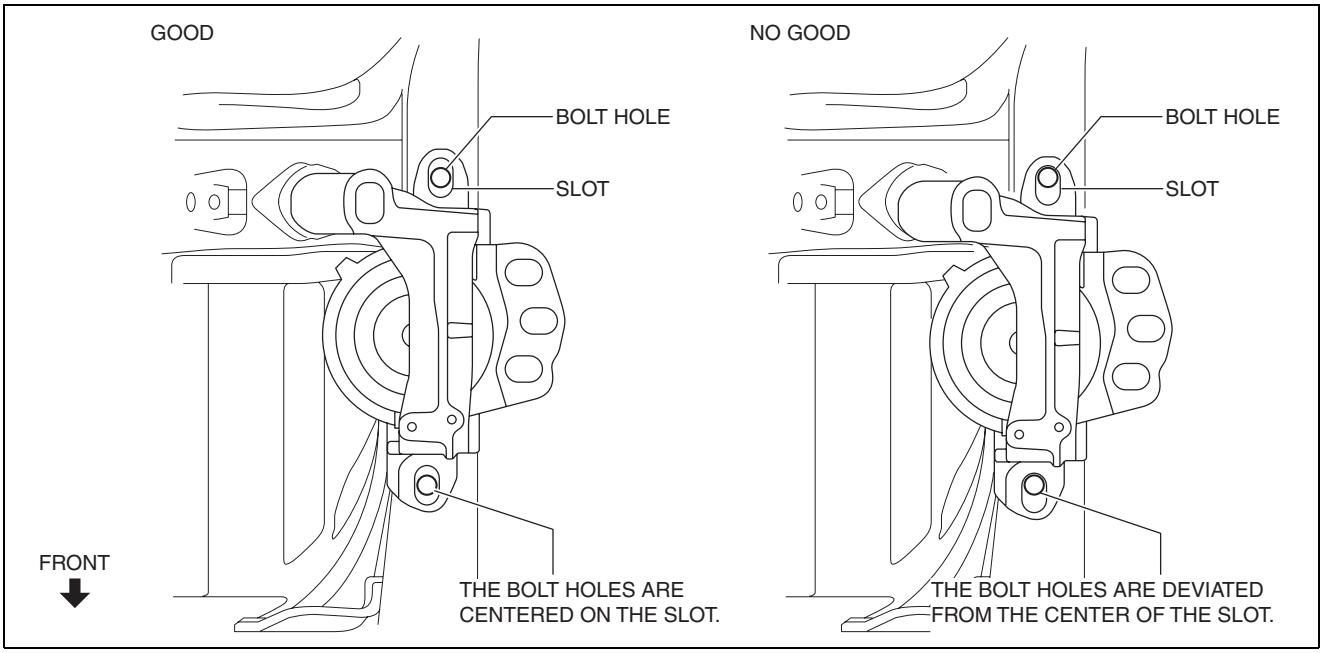

ac5wzw0000520

   (2) Temporarily tighten the nuts shown in the figure so that they are centered on the No.3 engine mount slots.

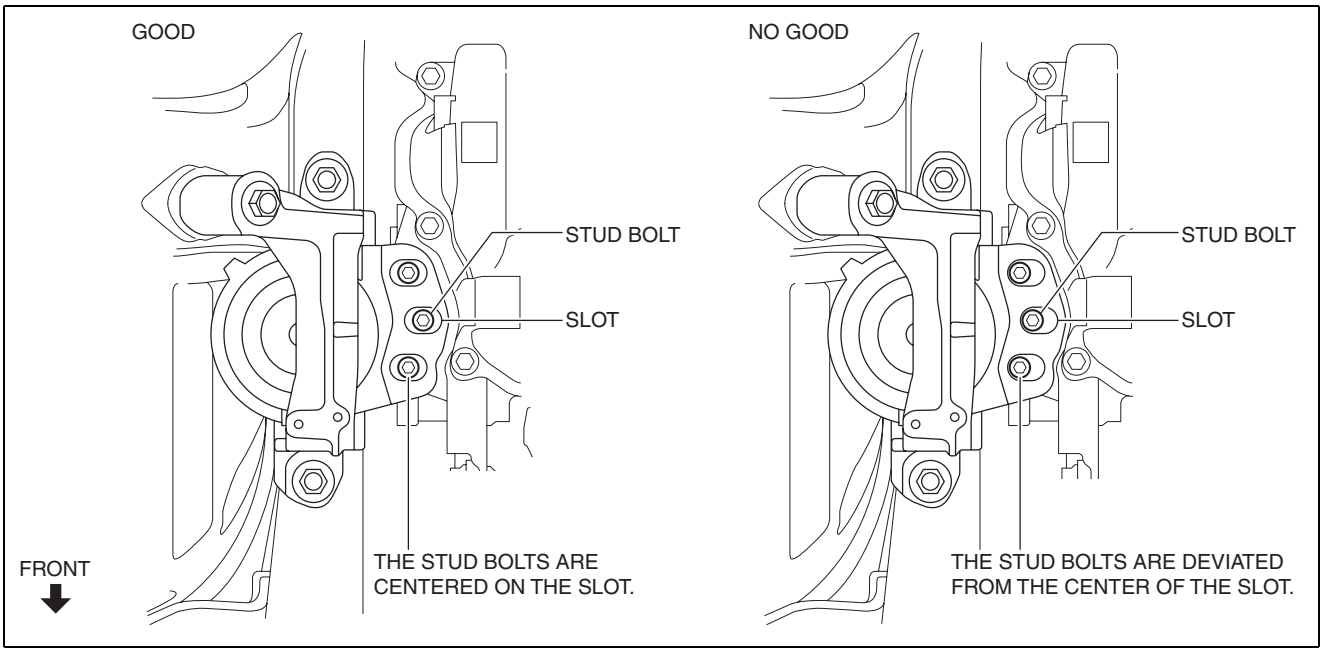

ac5wzw0000520

Note

- If the stud bolts are deviated from the center of the slot, align the stud bolts with the center of the slot while slightly moving the engine, and temporarily tighten the installation nuts.

MECHANICAL [SKYACTIV-D 2.2]

5. Temporarily tighten the No.4 engine mount bracket installation bolt and nuts using the following procedure:
   (1) Temporarily tighten the bolt shown in the figure.
   (2) Temporarily tighten the nuts shown in the figure so that they are centered on the No.4 engine mount bracket slots.

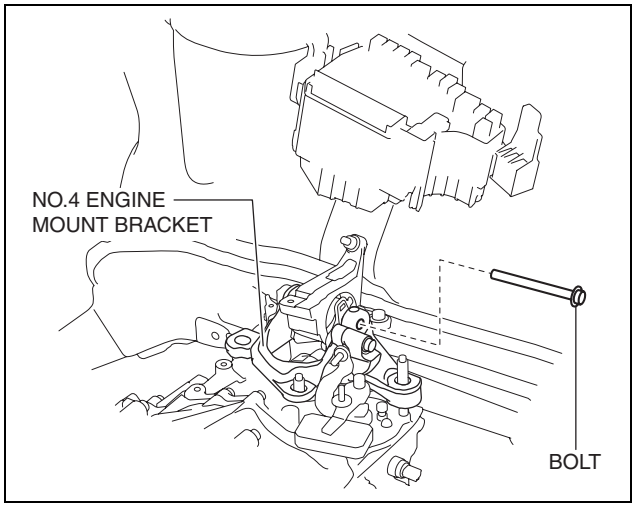

ac5wzw0000492

MTX

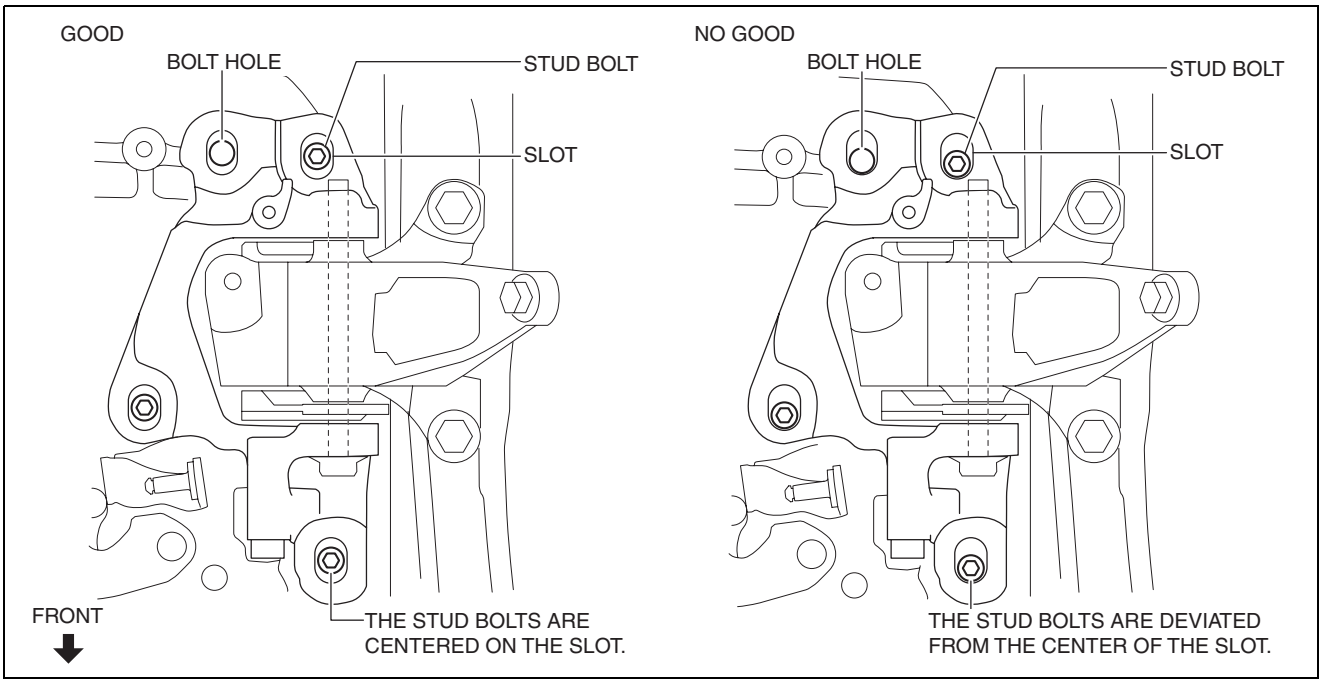

ac5wzw0000521

ATX

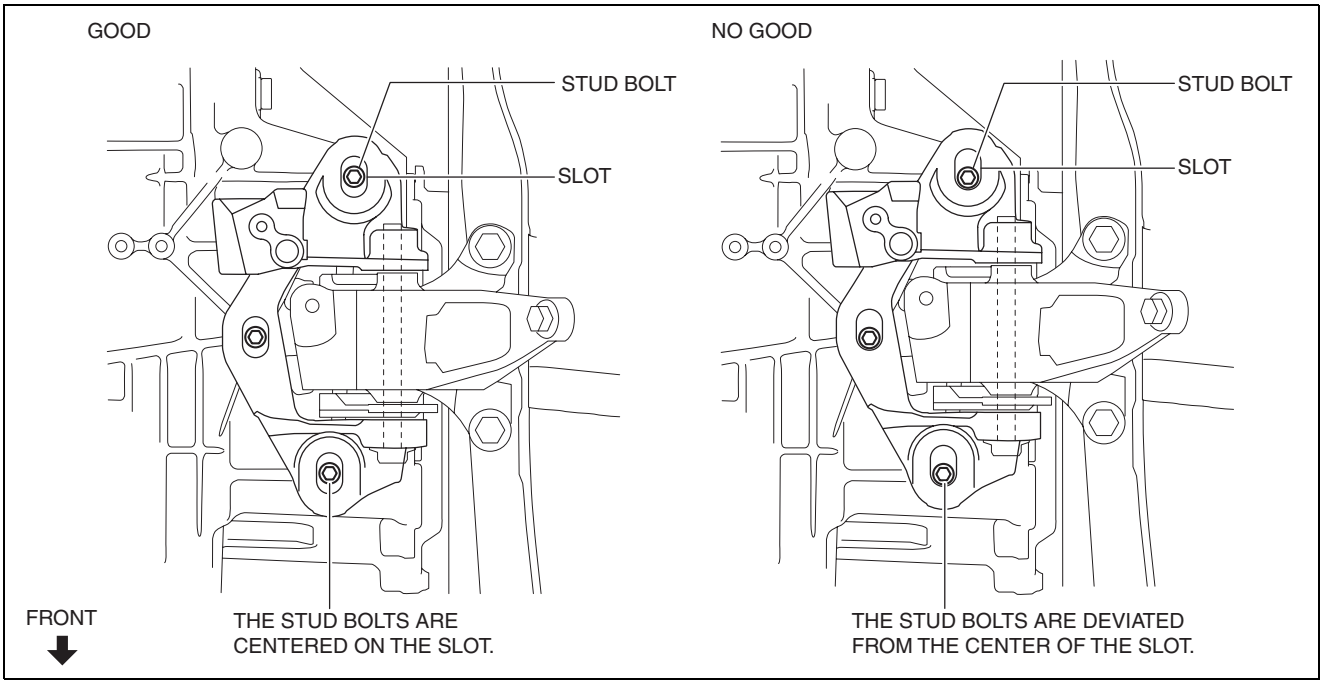

ac5wzw0000521

Note

- If the stud bolts are deviated from the center of the slot, align the stud bolts with the center of the slot while slightly moving the transaxle, and temporarily tighten the installation nuts.

6. Install the No.1 engine mount rubber and the front crossmember component as a single unit. (See 02-13-15 FRONT CROSSMEMBER REMOVAL/INSTALLATION.)
7. Temporarily tighten the following parts:

2WD

— No.1 engine mount bracket, No.1 engine mount rubber and bracket plate

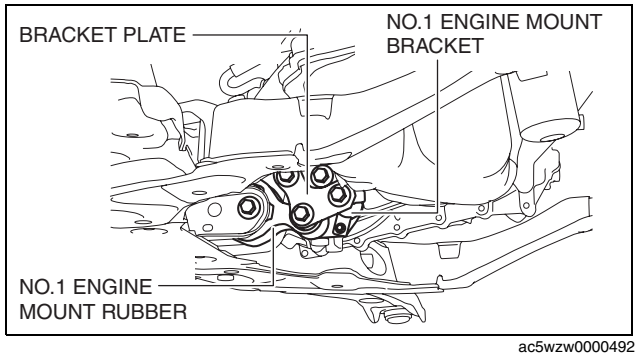

ac5wzw0000492

4WD

— No.1 engine mount rubber and bracket plate

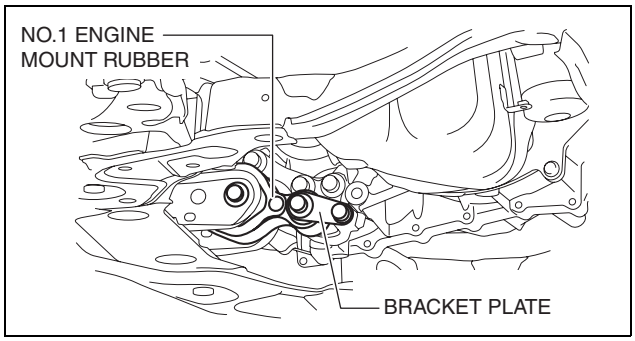

ac5wzw0000492

MECHANICAL [SKYACTIV-D 2.2]

8. Tighten the No.1 engine mount bracket and bracket plate installation bolts in the order shown in the figure. (2WD)

   Tightening torque
   131—153 N·m {14—15 kgf·m, 97—112 ft·lbf}

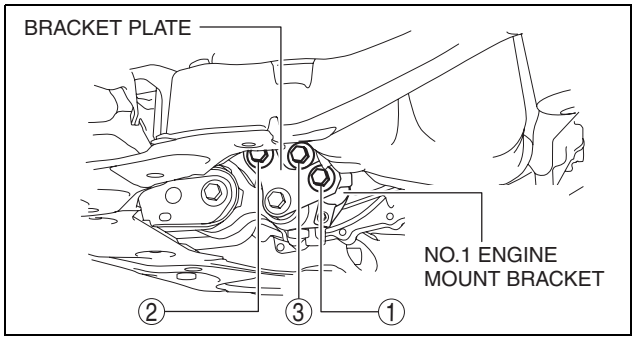

ac5wzw0000493

9. Tighten the No.3 engine mount installation bolts and nuts in the order shown in the figure.

No.	Tightening torque
1	76—95 N·m {7.8—9.6 kgf·m, 57—70 ft·lbf}
2	82—95 N·m {8.4—9.6 kgf·m, 61—70 ft·lbf}
3	49—65 N·m {5.0—6.6 kgf·m, 37—47 ft·lbf}

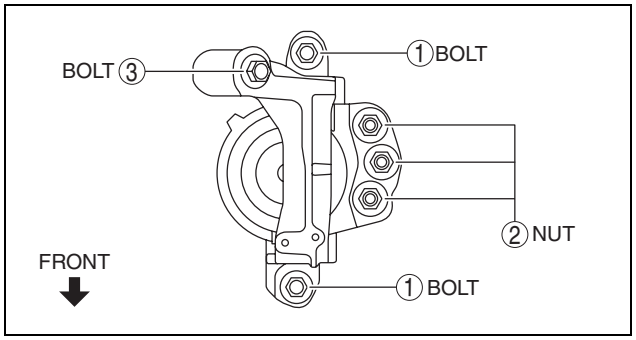

ac5wzw0000493

10. Tighten the No.4 engine mount bracket installation bolt and nuts in the order shown in the figure.

MTX

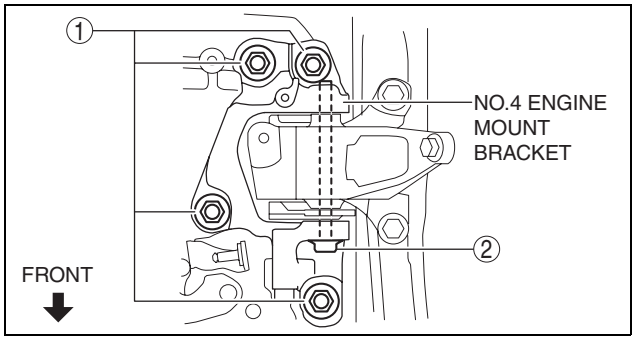

ac5wzw0000521

ATX

No.	Tightening torque
1	92—116 N·m {9.4—11 kgf·m, 68—85 ft·lbf}
2	81—99 N·m {8.3—10 kgf·m, 60—73 ft·lbf}

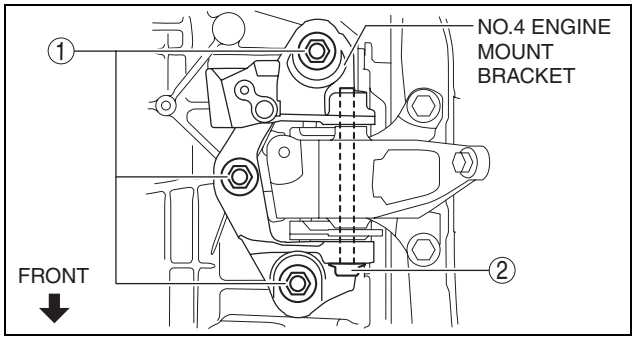

ac5wzw0000493

11. Tighten the No.1 engine mount rubber installation bolts.

MECHANICAL [SKYACTIV-D 2.2]

2WD

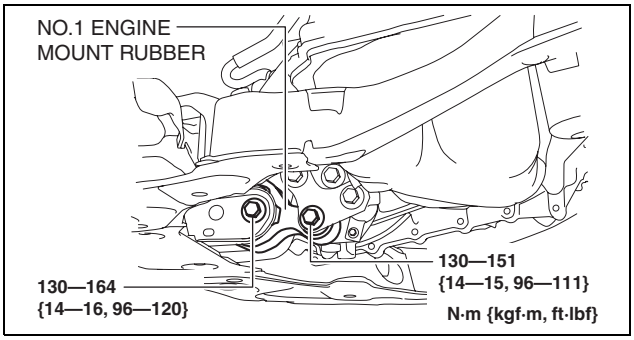

ac5wzw0000493

4WD

12. Install the seal plate. (See 01-11B-15 OIL PAN REMOVAL/INSTALLATION [SKYACTIV-D 2.2].)
13. Install the wiring harness bracket, cooler hose and connector.
14. Install the PCM component using the following procedure:

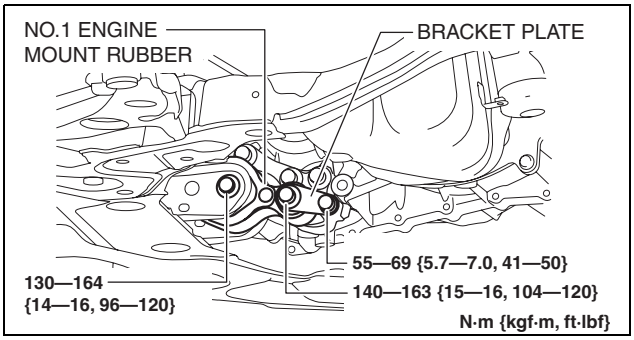

ac5wzw0000493

(1) Temporarily tighten the bolt as shown in the figure.

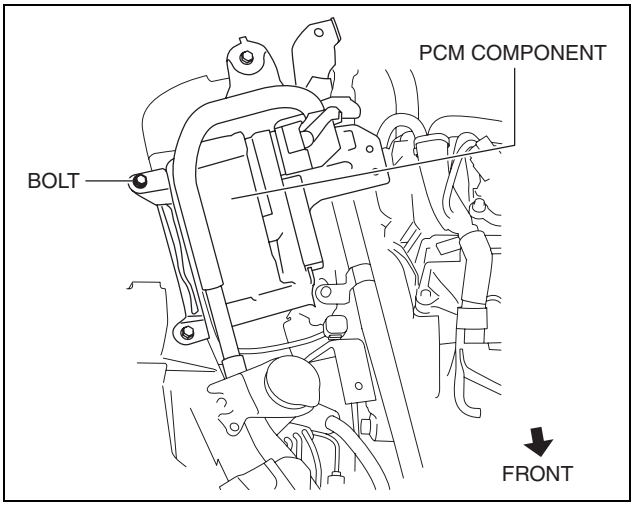

ac5wzw0000493

(2) Tighten the PCM component installation bolts in the order shown in the figure.

Tightening torque
9—10 N·m {92—101 kgf·cm, 80—88 in·lbf}

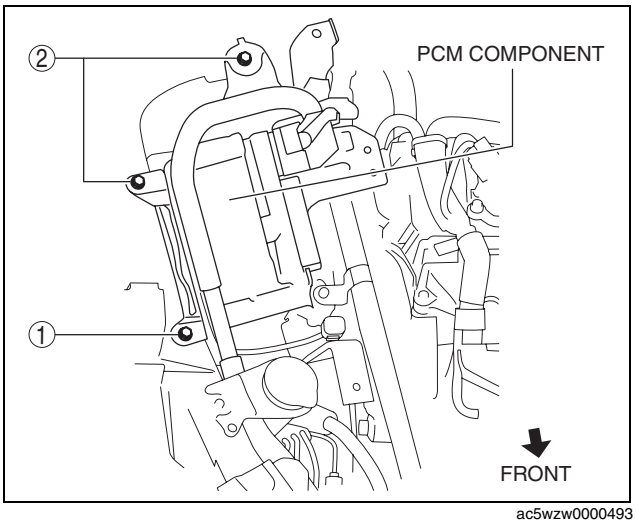

ac5wzw0000493

(3) Install the bolt and connector as shown in the figure.
(4) Connect the PCM connector (140 pin side) to the PCM.

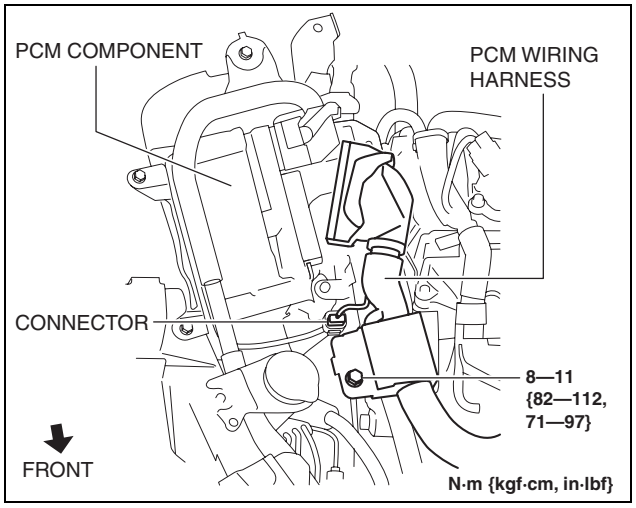

ac5wzw0000493

ENGINE DISASSEMBLY/ASSEMBLY [SKYACTIV-D 2.2]

id0110s5800500

Caution
- **When the transaxle is installed, do not suspend the engine. Otherwise, the SST installation area of the cylinder head may be damaged due to excess weight. Only suspend the engine after separating the engine and transaxle.**

1. Remove the engine cover adaptor.

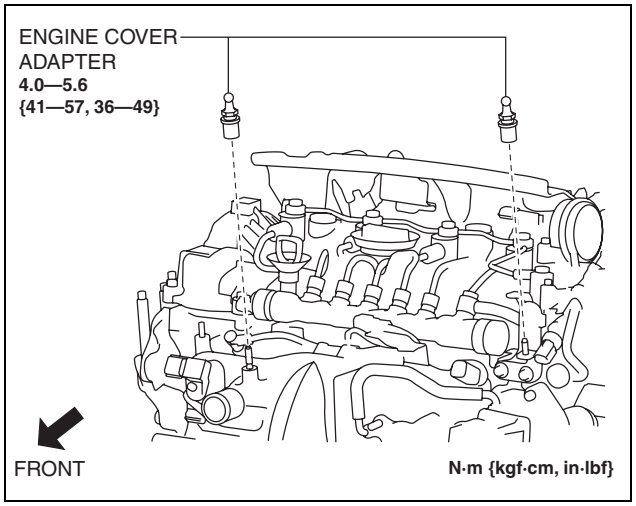

ac5wzw0000521

2. Install the SST to the position shown in the figure using the following bolt and washer.

Bolt: part number 99794 1025 or an M10 x 1.25, length 25 mm {0.98 in}
Washer: approx. 3 mm {0.1 in} thickness

Tightening torque
38—51 N·m {3.9—5.2 kgf·m, 29—37 ft·lbf}

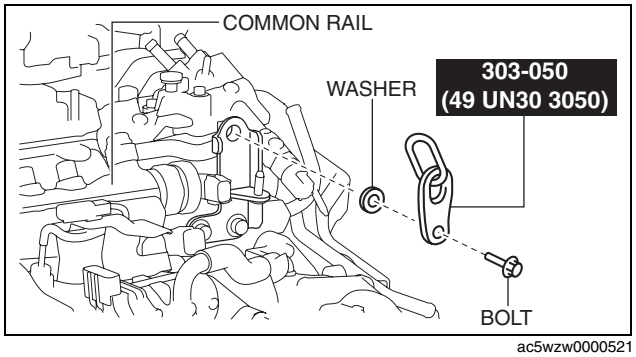

ac5wzw0000521

MECHANICAL [SKYACTIV-D 2.2]

3. Install the SST to the position shown in the figure using the following bolt and washer.

   Bolt: part number 99794 1025 or an M10 x 1.25, length 25 mm {0.98 in}

   Tightening torque
   38—51 N·m {3.9—5.2 kgf·m, 29—37 ft·lbf}

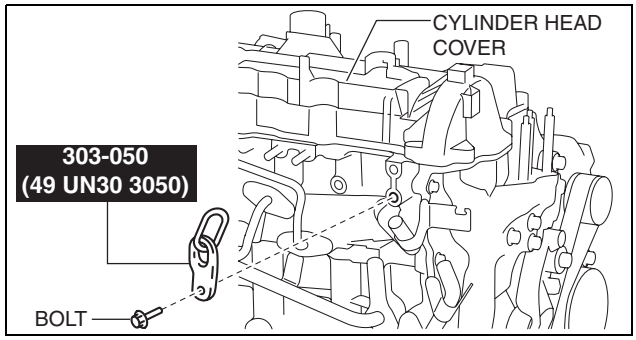

ac5wzw0000493

4. Engage the hook for the **SST (49 L017 5A0)** to the **SST (49 UN30 3050)**.

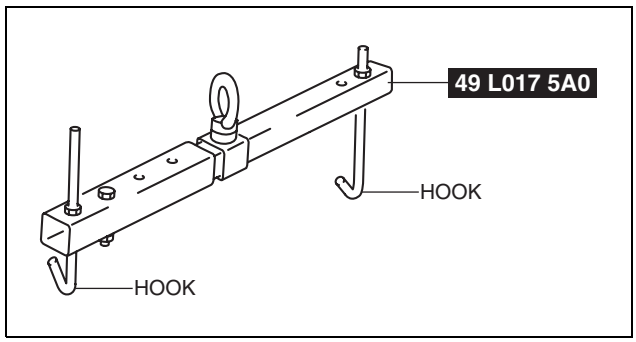

ac5wzw0000521

5. To ensure the safety of the work (control engine and transaxle sway), set a hoist as shown in the figure.

   Caution
   - **Do not lift up the engine.**

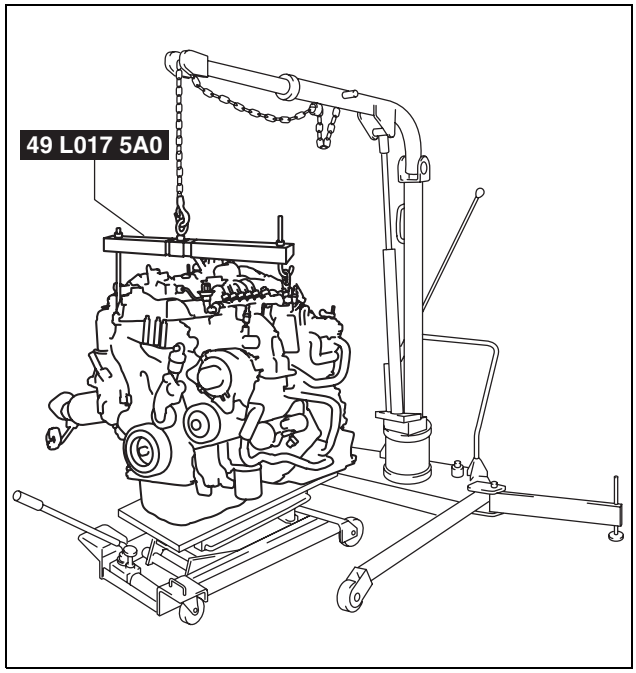

ac5jjw00005202

6. Remove the exhaust system. (See 01-15B-1 EXHAUST SYSTEM REMOVAL/INSTALLATION [SKYACTIV-D 2.2].)
7. Remove the turbocharger. (See 01-13B-32 TURBOCHARGER REMOVAL/INSTALLATION [SKYACTIV-D 2.2].)
8. Remove the vacuum chamber. (See 01-13B-37 VACUUM CHAMBER REMOVAL/INSTALLATION [SKYACTIV-D 2.2].)
9. Remove the following emission system related parts:
   - EGR cooler bypass valve (See 01-16B-17 EGR COOLER BYPASS VALVE REMOVAL/INSTALLATION [SKYACTIV-D 2.2].)
   - EGR pipe (See 01-16B-9 EGR PIPE REMOVAL/INSTALLATION [SKYACTIV-D 2.2].)
   - EGR valve (See 01-16B-7 EGR VALVE REMOVAL/INSTALLATION [SKYACTIV-D 2.2].)
   - EGR cooler (See 01-16B-12 EGR COOLER REMOVAL/INSTALLATION [SKYACTIV-D 2.2].)

MECHANICAL [SKYACTIV-D 2.2]

10. Remove the transfer bracket and transfer. (4WD) (See 03-16A-6 TRANSFER REMOVAL/INSTALLATION [D66MX-R] (MTX).) (See 03-16B-6 TRANSFER REMOVAL/INSTALLATION [GW6AX-EL] (ATX).)
11. Remove the bracket No.1. (See 03-13-3 FRONT DRIVE SHAFT REMOVAL/INSTALLATION.)
12. Remove the starter. (See 01-19B-2 STARTER REMOVAL/INSTALLATION [SKYACTIV-D 2.2].)
13. Remove the generator. (See 01-17B-14 GENERATOR REMOVAL/INSTALLATION [SKYACTIV-D 2.2].)
14. Lock the drive plate against rotation using the crankshaft pulley lock bolt. (ATX)
15. Remove the torque converter installation nut from the starter installation hole. (See 05-17B-29 AUTOMATIC TRANSAXLE REMOVAL/INSTALLATION [GW6A-EL] (2WD).) (See 05-17B-47 AUTOMATIC TRANSAXLE REMOVAL/INSTALLATION [GW6AX-EL] (4WD).)
16. Disconnect the engine and transaxle, and lower only the engine from the engine lifter. (See 05-15B-4 MANUAL TRANSAXLE REMOVAL/INSTALLATION [D66M-R] (MTX, 2WD).) (See 05-15B-18 MANUAL TRANSAXLE REMOVAL/INSTALLATION [D66MX-R] (MTX, AWD).) (See 05-17B-29 AUTOMATIC TRANSAXLE REMOVAL/INSTALLATION [GW6A-EL] (ATX, 2WD).) (See 05-17B-47 AUTOMATIC TRANSAXLE REMOVAL/INSTALLATION [GW6AX-EL] (ATX, AWD).)
17. Remove the intake-air system. (See 01-13B-6 INTAKE-AIR SYSTEM REMOVAL/INSTALLATION [SKYACTIV-D 2.2].)
18. Remove the following fuel system related parts:
    - Injection pipe (See 01-14B-33 INJECTION PIPE REMOVAL/INSTALLATION [SKYACTIV-D 2.2].)
    - Fuel injectors (See 01-14B-35 FUEL INJECTOR REMOVAL/INSTALLATION [SKYACTIV-D 2.2].)
    - Supply pump (See 01-14B-46 SUPPLY PUMP REMOVAL/INSTALLATION [SKYACTIV-D 2.2].)
    - Lower case (See 01-14B-54 LOWER CASE REMOVAL/INSTALLATION [SKYACTIV-D 2.2].)
    - Common rail (See 01-14B-52 COMMON RAIL REMOVAL/INSTALLATION [SKYACTIV-D 2.2].)
19. Remove the glow plugs. (See 01-13B-28 GLOW PLUG REMOVAL/INSTALLATION [SKYACTIV-D 2.2].)
20. Remove the vacuum pump. (See 04-11-22 VACUUM PUMP REMOVAL/INSTALLATION [SKYACTIV-D 2.2].)
21. Remove the oil cooler. (See 01-11B-10 OIL COOLER REMOVAL/INSTALLATION [SKYACTIV-D 2.2].)
22. Remove the oil filter. (See 01-11B-5 OIL FILTER REPLACEMENT [SKYACTIV-D 2.2].)
23. Remove the engine oil solenoid valve. (See 01-11B-11 ENGINE OIL SOLENOID VALVE REMOVAL/INSTALLATION [SKYACTIV-D 2.2].)
24. Remove the following control system related parts:
    - CMP sensor
    - Engine oil temperature sensor/engine oil pressure sensor
    - ECT sensor
    - CKP sensor
25. Remove in the order indicated in the table
26. Assemble in the reverse order of disassembly.

MECHANICAL [SKYACTIV-D 2.2]

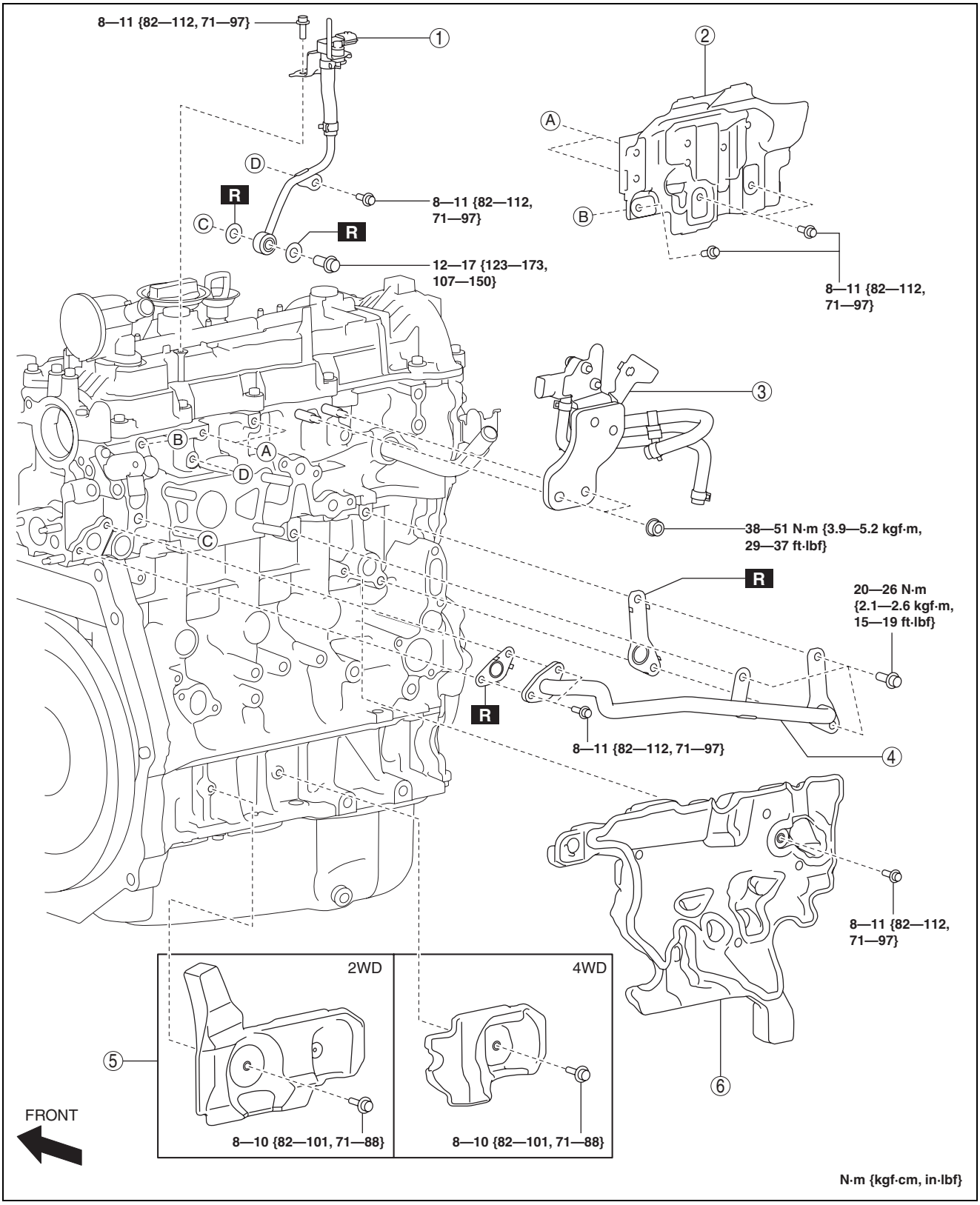

ac5wzw0000521

MECHANICAL [SKYACTIV-D 2.2]

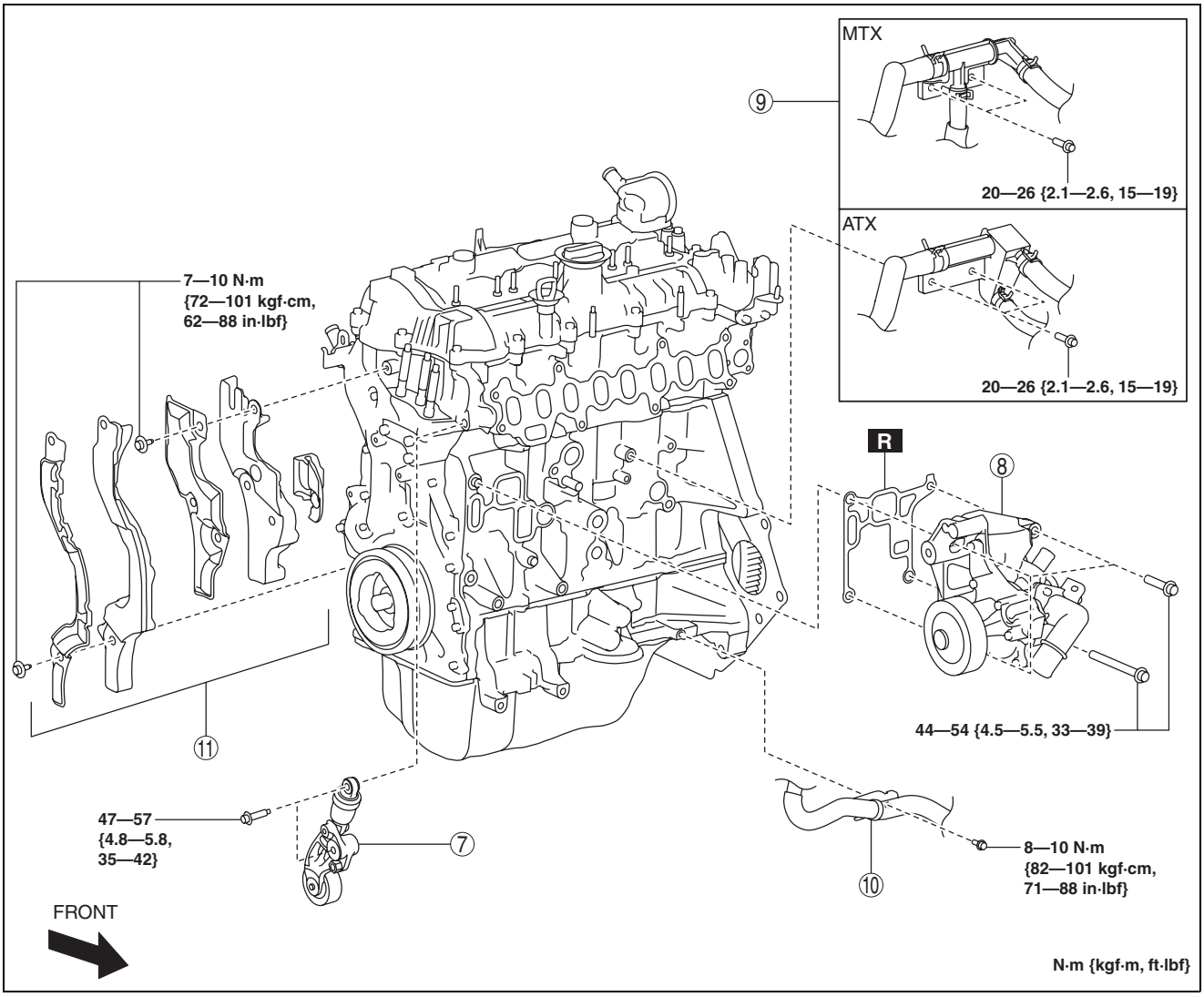

ac5wzw0000532

1	Exhaust gas pressure sensor No.1
2	Exhaust insulator
3	Exhaust gas pressure sensor No.2
4	Water pipe
5	Seal rubber
6	Noise suppression cover (No.3)
7	Drive belt auto tensioner (See 01-10B-117 Drive Belt Auto Tensioner Installation Note.)
8	Water pump component (See 01-10B-116 Water pump component installation note.)

9	Water pipe
10	Water hose and pipe (ATX)
11	Noise suppression cover (No.1), noise suppression cover (No.2), seal rubber (See 01-10B-115 Noise Suppression Cover (No.1), Noise Suppression Cover (No.2), Seal Rubber Removal Note.) (See 01-10B-116 Noise Suppression Cover (No.1), Noise Suppression Cover (No.2), Seal Rubber Installation Note.)

MECHANICAL [SKYACTIV-D 2.2]

Noise Suppression Cover (No.1), Noise Suppression Cover (No.2), Seal Rubber Removal Note

1. Remove the noise suppression covers and seal rubbers in the order shown in the figure.

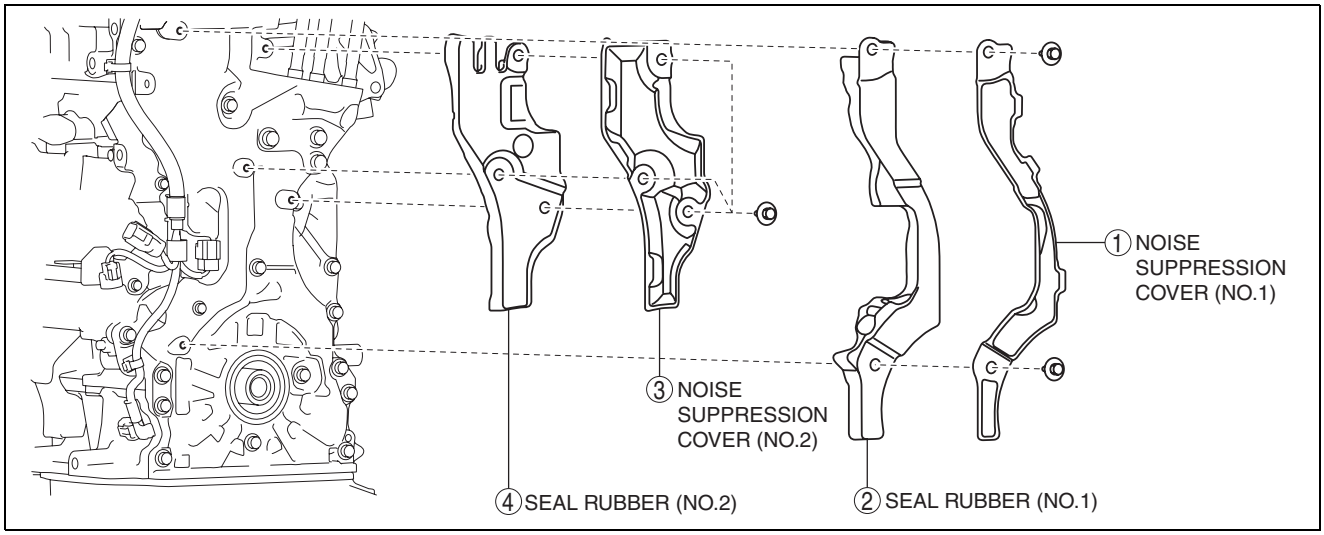

ac5wzw0000521

2. Remove the wiring harness using the following procedure:.
   (1) Remove the wiring harness bracket installation bolts shown in the figure.
   (2) Remove all of the related wiring harness clip.

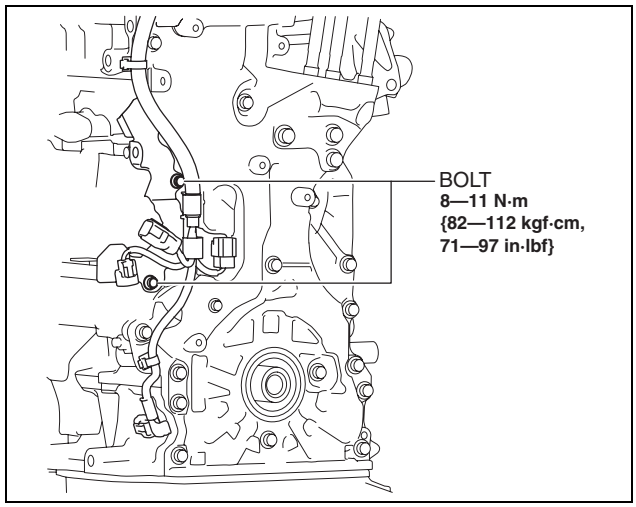

ac5wzw0000521

3. Remove the seal rubber (No.3) shown in the figure.

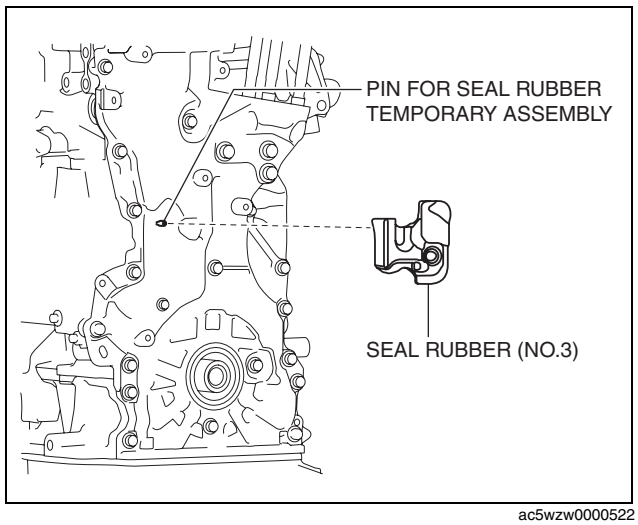

ac5wzw0000522

MECHANICAL [SKYACTIV-D 2.2]

Noise Suppression Cover (No.1), Noise Suppression Cover (No.2), Seal Rubber Installation Note

1. Temporarily put the seal rubber (No.3) on the engine front cover.
2. Install the wiring harness and wiring harness bracket.

Note
- The seal rubber (No.3) can be fixed by installing the wiring harness bracket.

Caution
- **Be careful that the covers and seal rubbers do not get hung up on the noise suppression cover installation bolts.**

3. Install the noise suppression covers and seal rubbers in the order shown in the figure.

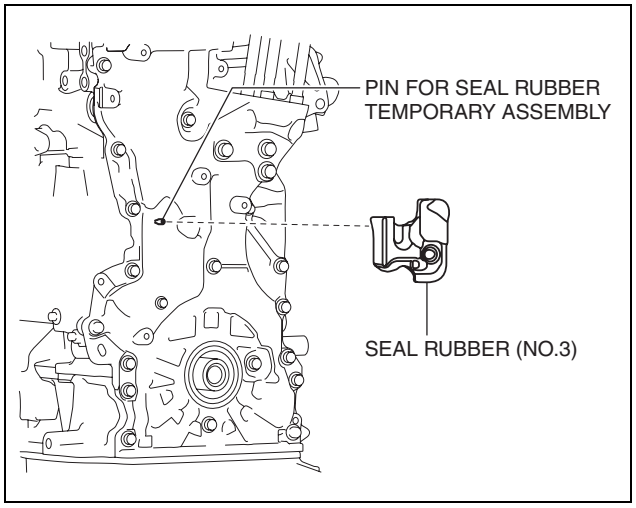

ac5wzw0000522

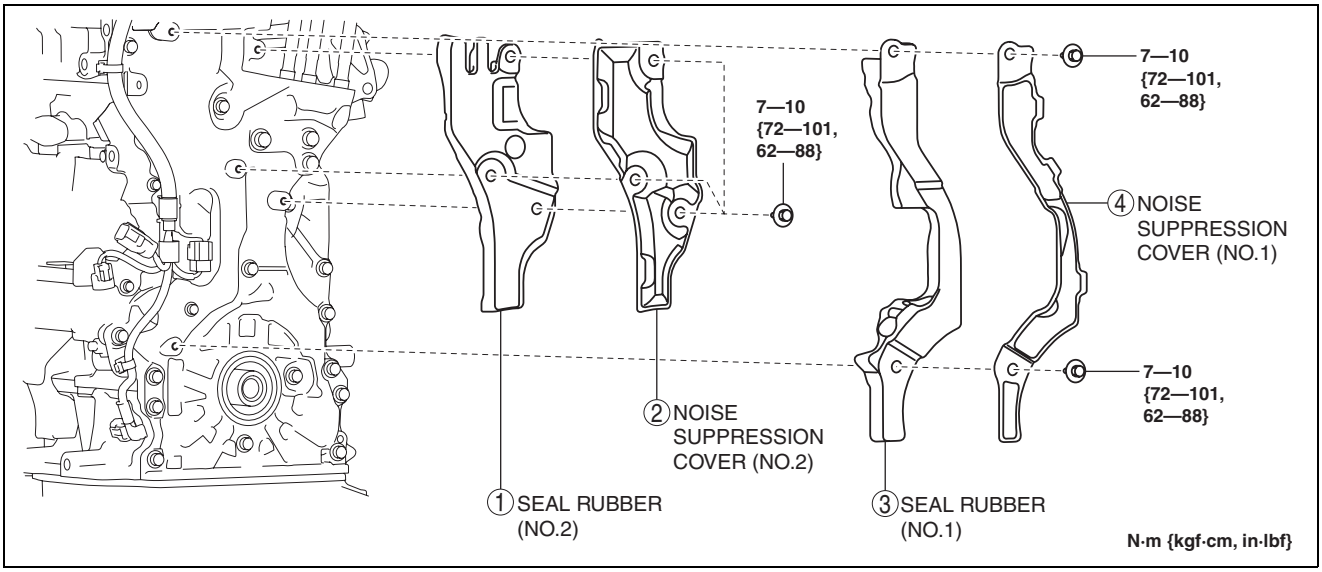

ac5wzw0000527

Water pump component installation note

1. Tighten the water pump component installation bolts in the order shown in the figure.

Tightening torque
44—54 N·m {4.5—5.5 kgf·m, 33—39 ft·lbf}

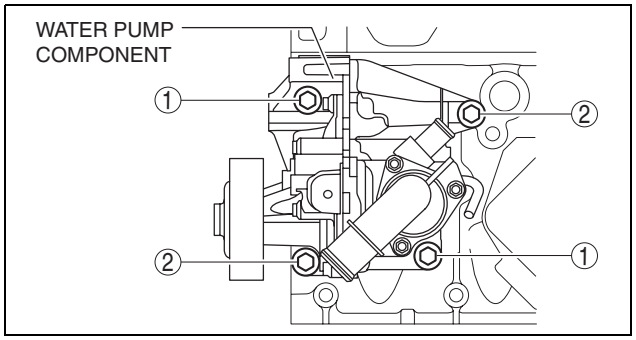

ac5wzw0000494

Drive Belt Auto Tensioner Installation Note

Caution
- **To allow the drive belt auto tensioner to function correctly, always bleed the air from the drive belt auto tensioner using the following procedure after assembling the drive belt auto tensioner.**

1. Install the drive belt auto tensioner to the engine.

Caution
- **To prevent damage to the drive belt auto tensioner, do not apply excessive torque after the tensioner moves full-stroke.**

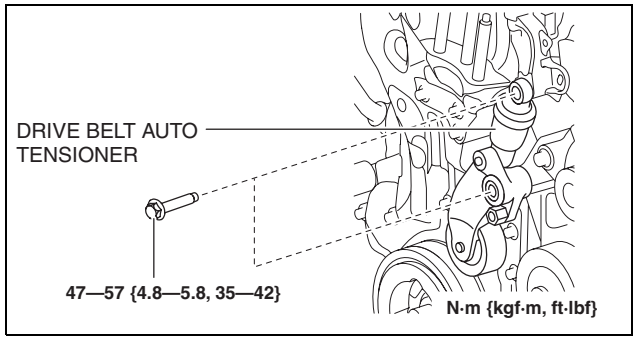

ac5wzw0000532

2. Insert the wrench onto the cast hexagon on the drive belt auto tensioner, move the drive belt auto tensioner up and down at full-stroke three times to bleed the air.

Note
- By moving the drive belt auto tensioner up and down full-stroke three times, the piston inside the tensioner moves to bleed the air.

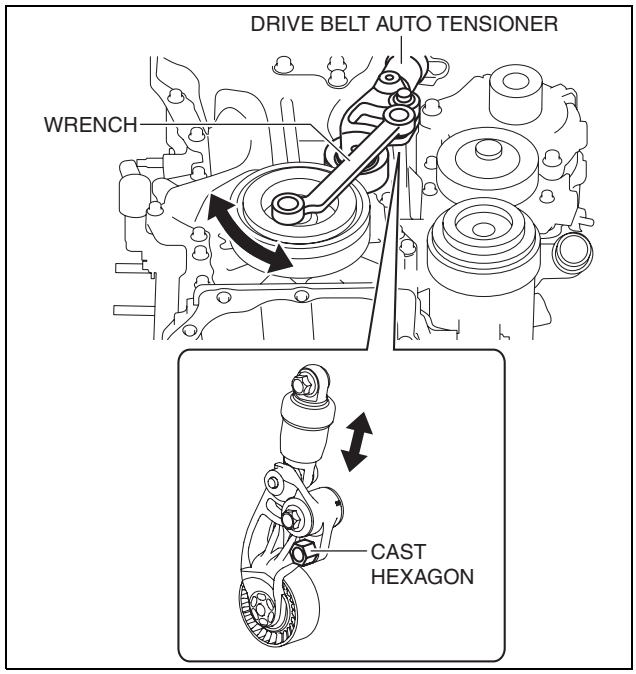

ac5wzw0000532

01-11A LUBRICATION [SKYACTIV-G 2.0]

LUBRICATION SYSTEM LOCATION INDEX [SKYACTIV-G 2.0] **01-11A–2**
ENGINE OIL LEVEL INSPECTION [SKYACTIV-G 2.0] **01-11A–3**
ENGINE OIL REPLACEMENT [SKYACTIV-G 2.0] **01-11A–3**
OIL FILTER REPLACEMENT [SKYACTIV-G 2.0] **01-11A–5**
OIL PRESSURE INSPECTION [SKYACTIV-G 2.0] **01-11A–7**
OIL COOLER REMOVAL/INSTALLATION [SKYACTIV-G 2.0] **01-11A–8**
Gasket Installation Note **01-11A–9**
Oil Cooler Installation Note **01-11A–9**
ENGINE OIL SOLENOID VALVE REMOVAL/INSTALLATION [SKYACTIV-G 2.0] **01-11A–10**
Engine Oil Solenoid Valve Removal Note **01-11A–11**
Engine Oil Solenoid Valve Installation Note **01-11A–11**
Oil Pressure Switch Installation Note **01-11A–11**
ENGINE OIL SOLENOID VALVE INSPECTION [SKYACTIV-G 2.0] **01-11A–12**
Engine Oil Solenoid Valve Operation Inspection **01-11A–12**
OIL PAN REMOVAL/INSTALLATION [SKYACTIV-G 2.0] **01-11A–12**
Oil Pan Removal Note **01-11A–13**
Oil Pan Installation Note **01-11A–14**
OIL PUMP REMOVAL/INSTALLATION [SKYACTIV-G 2.0] **01-11A–15**
Oil Pump Driven Sprocket Removal Note **01-11A–17**
Oil Pump Installation Note **01-11A–17**
Oil Pump Driven Sprocket Installation Note **01-11A–18**

LUBRICATION [SKYACTIV-G 2.0]

LUBRICATION SYSTEM LOCATION INDEX [SKYACTIV-G 2.0]

id0111h3800100

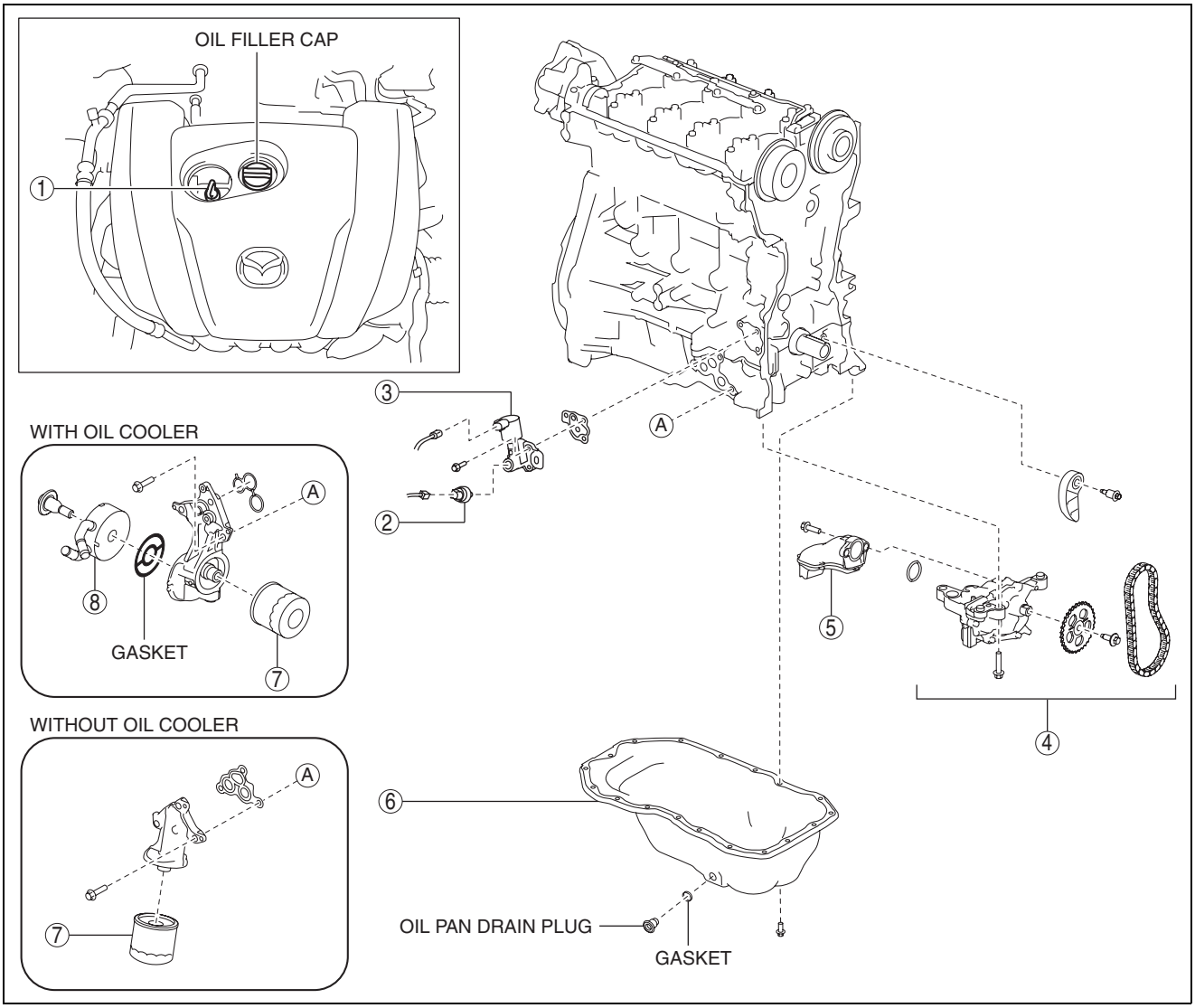

ac5uuw00002405

1	Dipstick (See 01-11A-3 ENGINE OIL LEVEL INSPECTION [SKYACTIV-G 2.0].) (See 01-11A-3 ENGINE OIL REPLACEMENT [SKYACTIV-G 2.0].)
2	Oil pressure switch (See 01-11A-7 OIL PRESSURE INSPECTION [SKYACTIV-G 2.0].)
3	Engine oil solenoid valve (See 01-11A-10 ENGINE OIL SOLENOID VALVE REMOVAL/INSTALLATION [SKYACTIV-G 2.0].) (See 01-11A-12 ENGINE OIL SOLENOID VALVE INSPECTION [SKYACTIV-G 2.0].)

4	Oil pump component (See 01-11A-15 OIL PUMP REMOVAL/INSTALLATION [SKYACTIV-G 2.0].)
5	Oil strainer (See 01-11A-15 OIL PUMP REMOVAL/INSTALLATION [SKYACTIV-G 2.0].)
6	Oil pan (See 01-11A-12 OIL PAN REMOVAL/INSTALLATION [SKYACTIV-G 2.0].)
7	Oil filter (See 01-11A-5 OIL FILTER REPLACEMENT [SKYACTIV-G 2.0].)
8	Oil cooler (See 01-11A-8 OIL COOLER REMOVAL/INSTALLATION [SKYACTIV-G 2.0].)

LUBRICATION [SKYACTIV-G 2.0]

ENGINE OIL LEVEL INSPECTION [SKYACTIV-G 2.0]

id0111h3800500

1. Position the vehicle on level ground.
2. Warm up the engine.
3. Stop the engine and allow **at least 5 min** before continuing.
4. Remove the dipstick, wipe it cleanly, and reinstall it fully.
5. Remove the dipstick and verify that the oil level is between the F and L marks on the dipstick.
   - If the oil level is below or near the L mark, add engine oil. (See 01-11A-3 ENGINE OIL REPLACEMENT [SKYACTIV-G 2.0].)
   - If the oil level is above the F mark, penetration of fuel into the engine oil can be considered. Replace the engine oil. (See 01-11A-3 ENGINE OIL REPLACEMENT [SKYACTIV-G 2.0].)
6. Insert the oil level gauge completely until it attaches to the cylinder head cover.

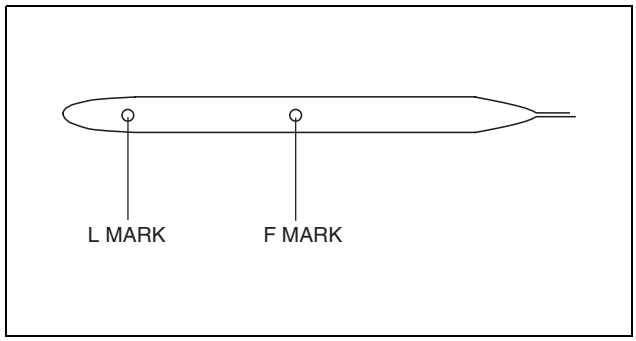

am3uuw0000892

ENGINE OIL REPLACEMENT [SKYACTIV-G 2.0]

id0111h3800400

Warning

- **Hot engines and engine oil can cause severe burns. Turn off the engine and wait until it and the engine oil have cooled.**
- **A vehicle that is lifted but not securely supported on safety stands is dangerous. It can slip or fall, causing death or serious injury. Never work around or under a lifted vehicle if it is not securely supported on safety stands.**
- **Continuous exposure to USED engine oil has caused skin cancer in laboratory mice. Protect your skin by washing with soap and water immediately after working with engine oil.**

Caution

- **If engine oil is spilled on the exhaust system, wipe it off completely. If you fail to wipe the spilled engine oil, it will produce fumes because of the heat.**

1. Position the vehicle on level ground.
2. Remove the oil filler cap.
3. Remove the service hole cover (installed to front under cover No.2) used to drain the engine oil.
4. Remove the oil pan drain plug.
5. Drain the engine oil into a container.
6. Install the oil pan drain plug with a new gasket.

Oil pan drain plug tightening torque
30—41 N·m {3.1—4.1 kgf·m, 23—30 ft·lbf}

Note

- The amount of residual oil in the engine can vary according to factors such as the replacement method and oil temperature. Verify the oil level after engine oil replacement.

7. Refill with the following type and amount of engine oil.

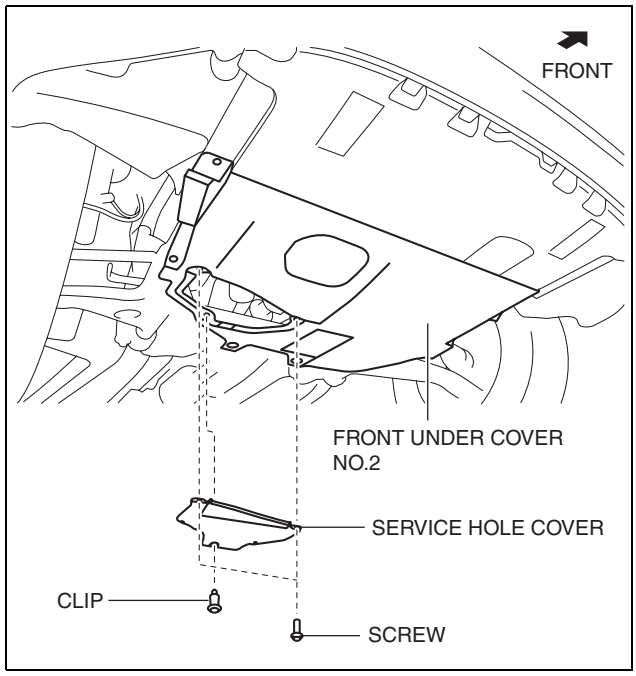

ac5uuw00000583

LUBRICATION [SKYACTIV-G 2.0]

Engine oil [Europe]

Recommended engine oil		Alternative engine oil	
Mazda Original Oil Supra 0W-20	Mazda Original Oil Ultra 5W-30	API SM/SN 0W-20	API SL/SM or ACEA A3/A5 5W-30

Engine oil [Except Europe]

Item	Specifications
Grade	API SG/SH/SJ/SL/SM/SN or ILSAC GF-2/GF-3/GF-4/GF-5
Viscosity (SAE)	10W-30, 10W-40, 10W-50, 5W-20, 5W-30, 5W-40, 0W-20, 0W-30*1

***1 : Except China**

Engine oil capacity [Without oil cooler] (approx. quantity)
Oil replacement: 4.0 L {4.2 US qt, 3.5 Imp qt}
Oil and oil filter replacement: 4.2 L {4.4 US qt, 3.7 Imp qt}
Total (dry engine): 4.9 L {5.2 US qt, 4.3 Imp qt}

Engine oil capacity [With oil cooler] (approx. quantity)
Oil replacement: 4.0 L {4.2 US qt, 3.5 Imp qt}
Oil and oil filter replacement: 4.2 L {4.4 US qt, 3.7 Imp qt}
Total (dry engine): 5.0 L {5.3 US qt, 4.4 Imp qt}

8. Install the oil filler cap.
9. Start the engine and confirm that there is no oil leakage.
   - If there is oil leakage, repair or replace the applicable part.
10. Inspect the oil level. (See 01-11A-3 ENGINE OIL LEVEL INSPECTION [SKYACTIV-G 2.0].)
11. Install the service hole cover.

LUBRICATION [SKYACTIV-G 2.0]

OIL FILTER REPLACEMENT [SKYACTIV-G 2.0]

id0111h3800700

Warning

- **Hot engines and engine oil can cause severe burns. Turn off the engine and wait until it and the engine oil have cooled.**
- **A vehicle that is lifted but not securely supported on safety stands is dangerous. It can slip or fall, causing death or serious injury. Never work around or under a lifted vehicle if it is not securely supported on safety stands.**
- **Continuous exposure to USED engine oil has caused skin cancer in laboratory mice. Protect your skin by washing with soap and water immediately after working with engine oil.**

Caution

- **If engine oil is spilled on the exhaust system, wipe it off completely. If you fail to wipe the spilled engine oil, it will produce fumes because of the heat.**

1. Remove the service hole cover (installed to front under cover No.2) used to remove the oil filter.

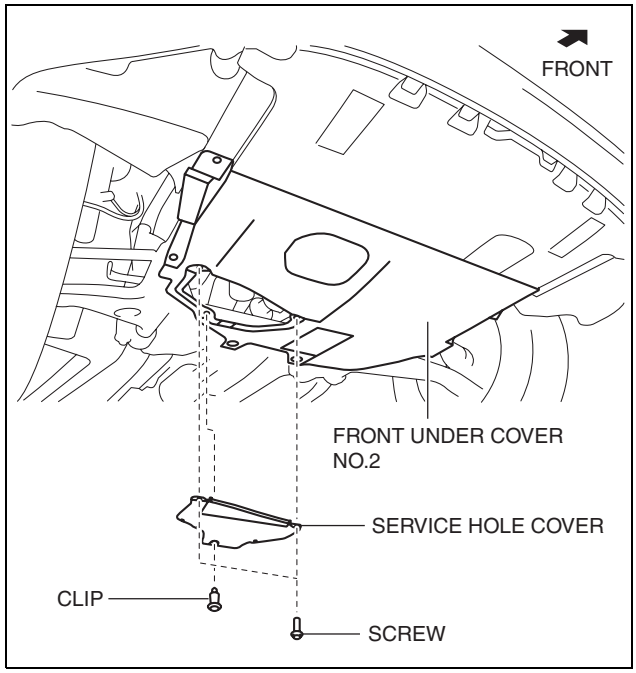

ac5uuw00000584

LUBRICATION [SKYACTIV-G 2.0]

2. Remove the oil filter using the commercially available, cup-type oil filter wrench (**67 mm {2.6 in} diameter, 14 sided**).

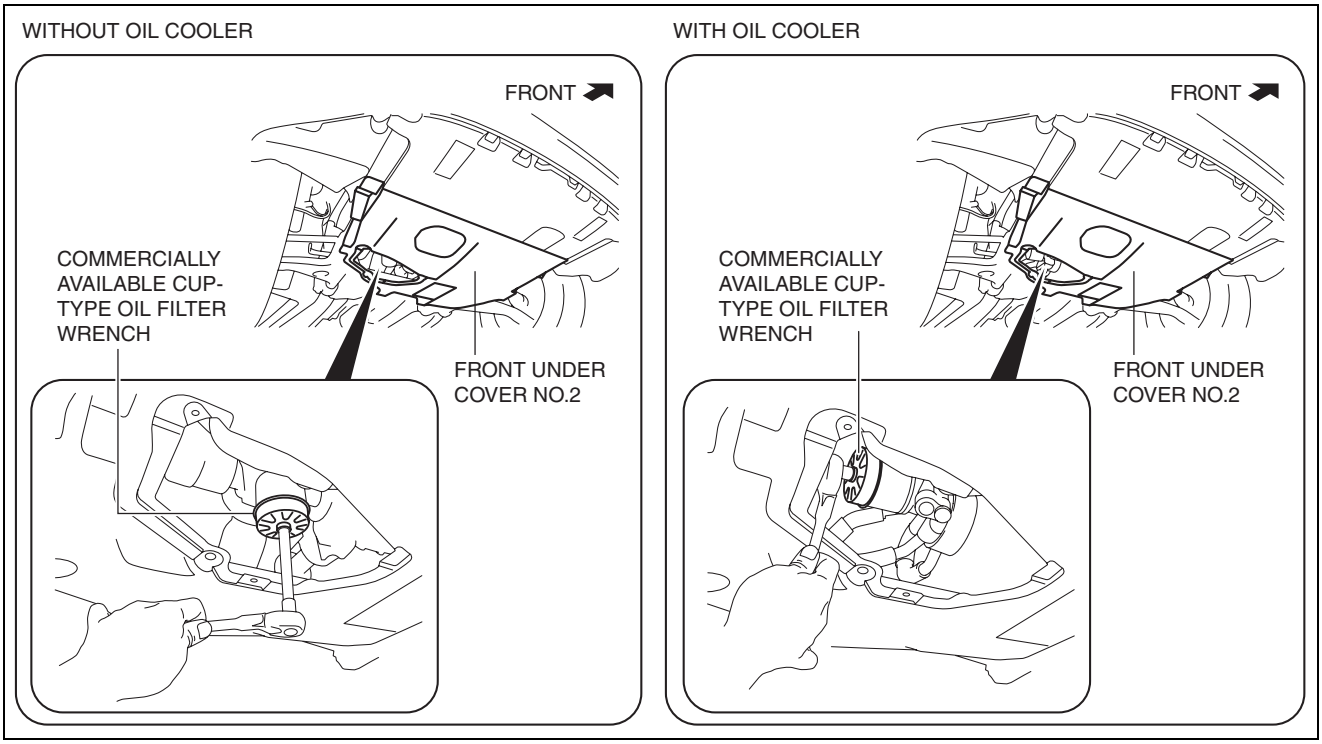

ac5uuw00002409

3. Use a clean rag to wipe off the mounting surface.
4. Apply clean engine oil to the O-ring of a new oil filter.
5. Tighten the oil filter according to the instructions on the package or side of the oil filter.

Tightening torque (reference value)
12—16 N·m {123—163 kgf·cm, 107—141 in·lbf}

6. Start the engine and confirm that there is no oil leakage.
   - If there is oil leakage, repair or replace the applicable part.
7. Inspect the oil level. (See 01-11A-3 ENGINE OIL LEVEL INSPECTION [SKYACTIV-G 2.0].)
8. Install the service hole cover.

LUBRICATION [SKYACTIV-G 2.0]

OIL PRESSURE INSPECTION [SKYACTIV-G 2.0]

id0111h3800300

Warning

- **Hot engines and engine oil can cause severe burns. Turn off the engine and wait until it and the engine oil have cooled.**
- **A vehicle that is lifted but not securely supported on safety stands is dangerous. It can slip or fall, causing death or serious injury. Never work around or under a lifted vehicle if it is not securely supported on safety stands.**
- **Continuous exposure to USED engine oil has caused skin cancer in laboratory mice. Protect your skin by washing with soap and water immediately after working with engine oil.**

1. Disconnect the negative battery cable.
2. Remove the front under cover No.2. (See 09-16-41 FRONT UNDER COVER No.2 REMOVAL/INSTALLATION.)
3. Remove the oil pressure switch. (See 01-11A-10 ENGINE OIL SOLENOID VALVE REMOVAL/INSTALLATION [SKYACTIV-G 2.0].)

Note

- This inspection can be performed using a combination of **SSTs 49 D019 908** (gauge), **49 D019 909** (hose), **49 D019 910** (adapter), and **49 D019 911** (adapter).

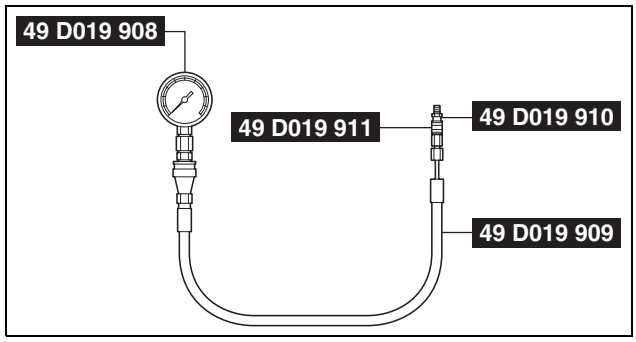

am6zzw0000438

4. Install the **SSTs** to the oil pressure switch installation hole using the following procedure.
   (1) Assemble **SSTs 49 D019 908**, **49 D019 909**, and **49 D019 911** outside of the engine compartment beforehand.
   (2) Install **SST 49 D019 910** to the oil pressure switch installation hole.
   (3) Install **SST 49 D019 911** to the **SST 49 D019 910**.
5. Connect the negative battery cable. (See 01-17A-11 NEGATIVE BATTERY CABLE DISCONNECTION/CONNECTION [SKYACTIV-G 2.0].) (See 01-17A-13 NEGATIVE BATTERY CABLE DISCONNECTION/CONNECTION [SKYACTIV-G 2.0 (WITHOUT i-stop)].)
6. Warm up the engine to normal operating temperature.
7. Run the engine at the specified speed, and note the gauge readings.
   - If not within the specification, inspect for the cause and repair or replace if necessary.

Note

- The oil pressure can vary with oil viscosity, temperature and engine speed.

Oil pressure (reference value) [coolant temperature: 80—90 °C {176—194 °F}]
Lo : 110—175 kPa {1.13—1.78 kgf/cm^2, 16.0—25.3 psi} [1,500 rpm]
Hi : 300—430 kPa {3.06—4.38 kgf/cm^2, 43.6—62.3 psi} [4,500 rpm]

8. Stop the engine and wait until it is cools.
9. Disconnect the negative battery cable.
10. Remove the **SSTs.**
11. Install the oil pressure switch. (See 01-11A-10 ENGINE OIL SOLENOID VALVE REMOVAL/INSTALLATION [SKYACTIV-G 2.0].)
12. Connect the negative battery cable. (See 01-17A-11 NEGATIVE BATTERY CABLE DISCONNECTION/CONNECTION [SKYACTIV-G 2.0].) (See 01-17A-13 NEGATIVE BATTERY CABLE DISCONNECTION/CONNECTION [SKYACTIV-G 2.0 (WITHOUT i-stop)].)
13. Start the engine and confirm that there is no oil leakage.
    - If there is oil leakage, repair or replace the applicable part.
14. Install the front under cover No.2. (See 09-16-41 FRONT UNDER COVER No.2 REMOVAL/INSTALLATION.)

LUBRICATION [SKYACTIV-G 2.0]

OIL COOLER REMOVAL/INSTALLATION [SKYACTIV-G 2.0]

id0111h3800800

Warning

- **Hot engines and engine oil can cause severe burns. Turn off the engine and wait until it and the engine oil have cooled.**
- **A vehicle that is lifted but not securely supported on safety stands is dangerous. It can slip or fall, causing death or serious injury. Never work around or under a lifted vehicle if it is not securely supported on safety stands.**
- **Continuous exposure to USED engine oil has caused skin cancer in laboratory mice. Protect your skin by washing with soap and water immediately after working with engine oil.**

1. Disconnect the negative battery cable. (See 01-17A-11 NEGATIVE BATTERY CABLE DISCONNECTION/CONNECTION [SKYACTIV-G 2.0].) (See 01-17A-13 NEGATIVE BATTERY CABLE DISCONNECTION/CONNECTION [SKYACTIV-G 2.0 (WITHOUT i-stop)].)
2. Remove the front under cover No.2. (See 09-16-41 FRONT UNDER COVER No.2 REMOVAL/INSTALLATION.)
3. Drain the engine coolant. (See 01-12A-4 ENGINE COOLANT REPLACEMENT [SKYACTIV-G 2.0].)
4. Remove in the order indicated in the table.
5. Use a clean rag to wipe off the mounting surface on the oil filter body and the oil cooler.
6. Install in the reverse order of the removal.
7. Refill the engine coolant. (See 01-12A-4 ENGINE COOLANT REPLACEMENT [SKYACTIV-G 2.0].)
8. Start the engine and confirm that there is no oil leakage.
   - If there is oil leakage, repair or replace the applicable part.
9. Inspect the oil level. (See 01-11A-3 ENGINE OIL LEVEL INSPECTION [SKYACTIV-G 2.0].)
10. Inspect for engine coolant leakage. (See 01-12A-7 ENGINE COOLANT LEAKAGE INSPECTION [SKYACTIV-G 2.0].)

1	Water hose
2	Oil cooler (See 01-11A-9 Oil Cooler Installation Note.)
3	Gasket (See 01-11A-9 Gasket Installation Note.)

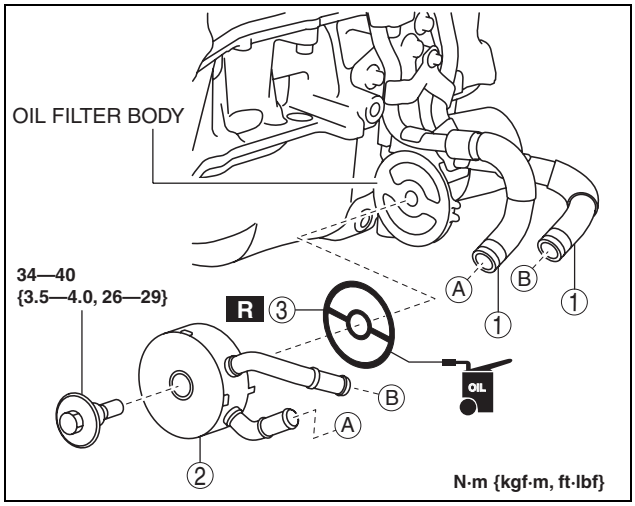

ac5uuw00000586

LUBRICATION [SKYACTIV-G 2.0]

Gasket Installation Note

1. Apply engine oil to a new gasket.

Caution

- **Assemble the gasket to the correct position using the following procedure so that the gasket lip does not overlap the oil passage for the oil cooler. Otherwise, it could leak engine oil and damage the engine.**

2. Align the gasket lip to the gasket positioning areas of the oil cooler and assemble the gasket to the oil cooler.

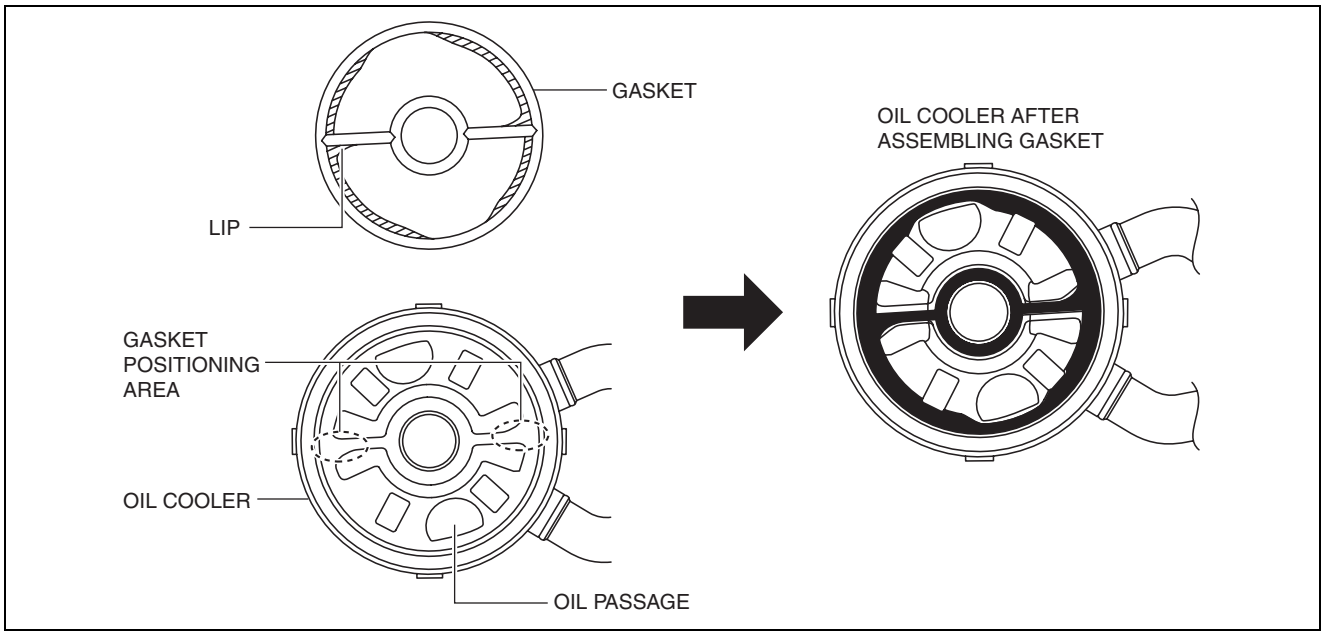

ac5uuw00000587

Oil Cooler Installation Note

1. Install the oil cooler with the tab aligned with the notch of the oil filter body.

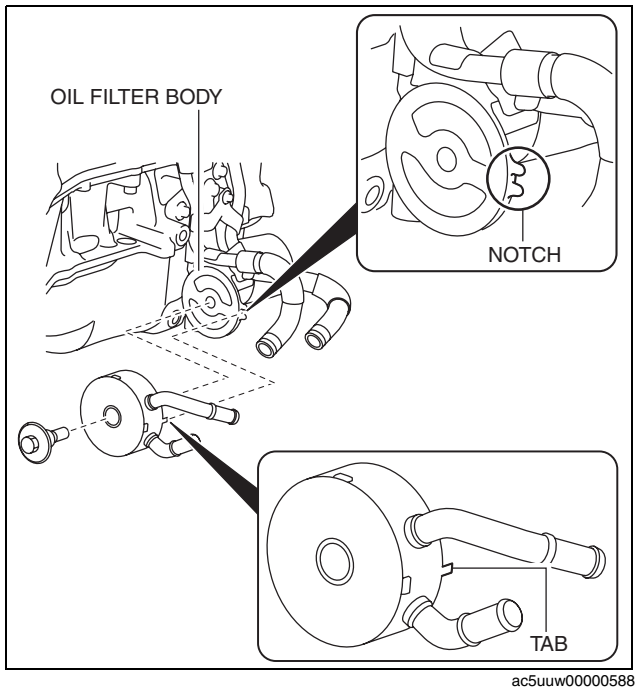

ac5uuw00000588

LUBRICATION [SKYACTIV-G 2.0]

ENGINE OIL SOLENOID VALVE REMOVAL/INSTALLATION [SKYACTIV-G 2.0]

id0111h3003000

Warning

- **Hot engines and engine oil can cause severe burns. Turn off the engine and wait until it and the engine oil have cooled.**
- **A vehicle that is lifted but not securely supported on safety stands is dangerous. It can slip or fall, causing death or serious injury. Never work around or under a lifted vehicle if it is not securely supported on safety stands.**
- **Continuous exposure to USED engine oil has caused skin cancer in laboratory mice. Protect your skin by washing with soap and water immediately after working with engine oil.**

1. Disconnect the negative battery cable. (See 01-17A-11 NEGATIVE BATTERY CABLE DISCONNECTION/CONNECTION [SKYACTIV-G 2.0].) (See 01-17A-13 NEGATIVE BATTERY CABLE DISCONNECTION/CONNECTION [SKYACTIV-G 2.0 (WITHOUT i-stop)].)
2. Remove the front under cover No.2. (See 09-16-41 FRONT UNDER COVER No.2 REMOVAL/INSTALLATION.)
3. Remove the splash shield (RH). (See 09-16-49 SPLASH SHIELD REMOVAL/INSTALLATION.)
4. Remove in the order indicated in the table.
5. Install in the reverse order of removal.
6. Start the engine and confirm that there is no oil leakage.
   - If there is oil leakage, repair or replace the applicable part.

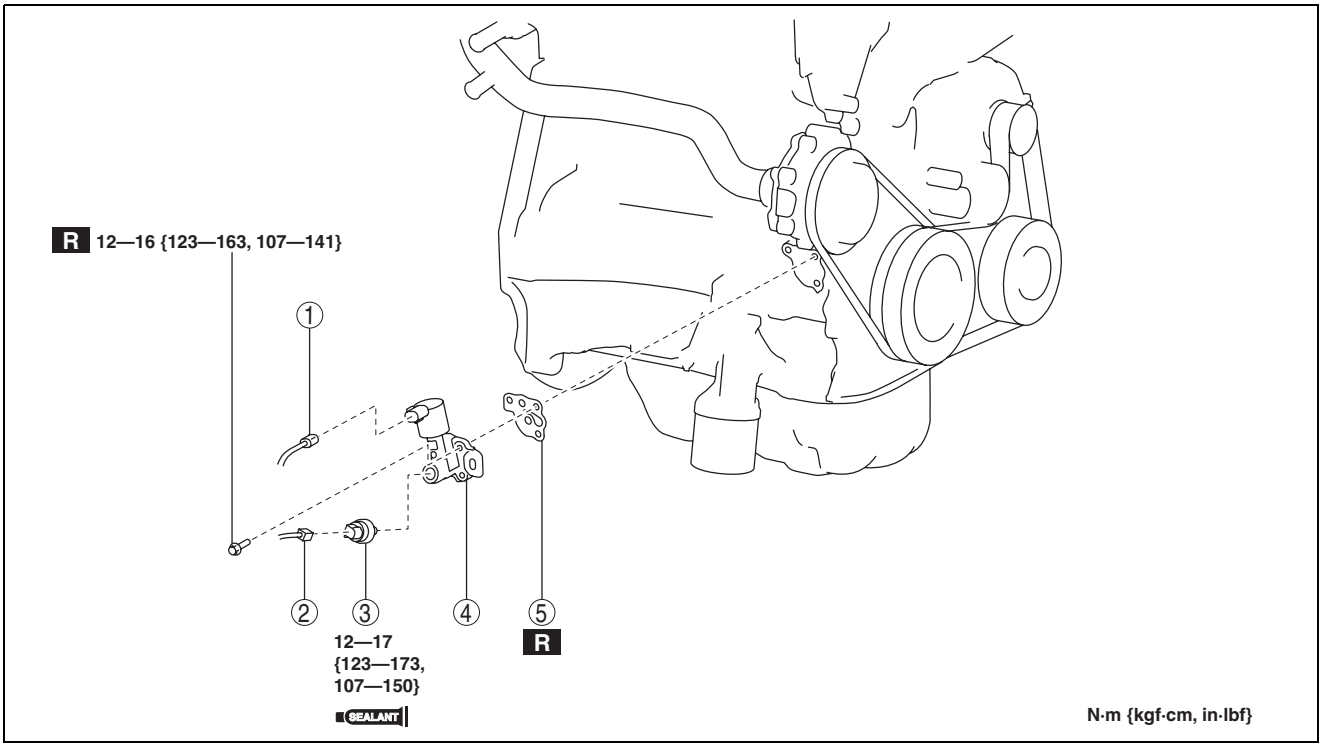

am3uuw0000891

1	Engine oil solenoid valve connector
2	Oil pressure switch connector
3	Oil pressure switch (See 01-11A-11 Oil Pressure Switch Installation Note.)

4	Engine oil solenoid valve (See 01-11A-11 Engine Oil Solenoid Valve Removal Note.) (See 01-11A-11 Engine Oil Solenoid Valve Installation Note.)
5	Gasket

LUBRICATION [SKYACTIV-G 2.0]

Engine Oil Solenoid Valve Removal Note

1. Cover the area around the engine oil solenoid valve with a rag because a small amount of engine oil will leak from the engine oil solenoid valve installation area.

Caution
- **Do not let any leaked engine oil to contact the adjacent water pump gasket and O-ring of the water inlet pipe. Otherwise, the gasket could swell causing a seal malfunction.**

Engine Oil Solenoid Valve Installation Note

1. After tightening the three bolts shown in the figure, tighten the first tightened bolt to the specified tightening torque again.

Note
- The tightening order for the three bolts is optional.

Tightening torque
12—16 N·m {123—163 kgf·cm, 107—141 in·lbf}

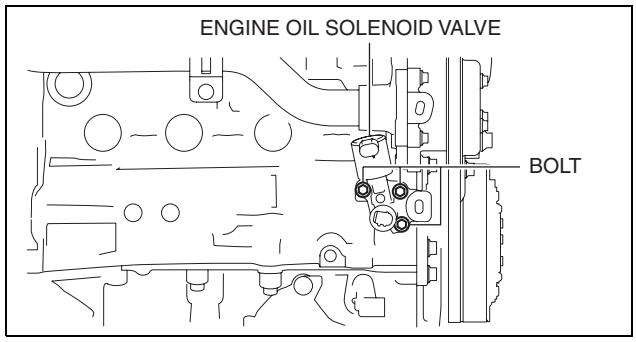

am3uuw0000891

Oil Pressure Switch Installation Note

Caution
- **Be sure there is no sealant between 1.7—2.7 mm {0.07—0.10 in} from the end of the oil pressure switch to prevent a possible operation malfunction.**

1. Apply silicone sealant to the oil pressure switch threads as shown in the figure.

Caution
- **Install the oil pressure switch before the applied sealant starts to harden.**

2. Install the oil pressure switch.

Tightening torque
12—17 N·m {123—173 kgf·cm, 107—150 in·lbf}

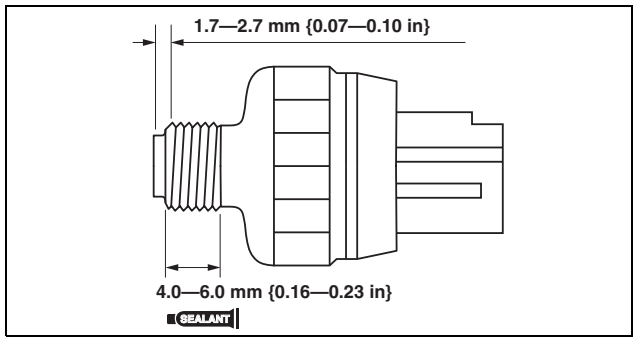

am3uuw0000891

LUBRICATION [SKYACTIV-G 2.0]

ENGINE OIL SOLENOID VALVE INSPECTION [SKYACTIV-G 2.0]

id0111h3002900

Engine Oil Solenoid Valve Operation Inspection

1. Remove the engine oil solenoid valve. (See 01-11A-10 ENGINE OIL SOLENOID VALVE REMOVAL/INSTALLATION [SKYACTIV-G 2.0].)
2. Verify that the battery is fully charged.
3. Connect the battery to the engine oil solenoid valve connector (2 terminals) as shown in the figure.
4. Verify that there is an operation sound from the engine oil solenoid valve when applying battery voltage between engine oil solenoid valve connector terminals A and B.

   Note
   - A click sound is heard when the engine oil solenoid valve operates normally.
   - If the operation sound cannot be heard, replace the engine oil solenoid valve.

5. Install the engine oil solenoid valve. (See 01-11A-10 ENGINE OIL SOLENOID VALVE REMOVAL/INSTALLATION [SKYACTIV-G 2.0].)

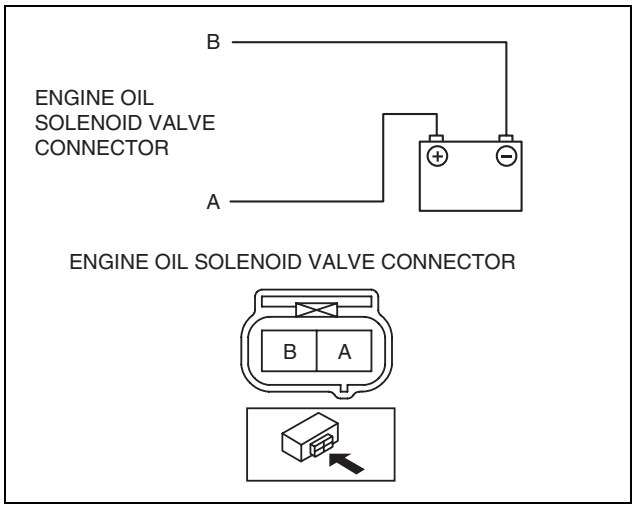

am3uuw0000891

OIL PAN REMOVAL/INSTALLATION [SKYACTIV-G 2.0]

id0111h3800200

Warning
- **Hot engines and engine oil can cause severe burns. Turn off the engine and wait until it and the engine oil have cooled.**
- **A vehicle that is lifted but not securely supported on safety stands is dangerous. It can slip or fall, causing death or serious injury. Never work around or under a lifted vehicle if it is not securely supported on safety stands.**
- **Continuous exposure to USED engine oil has caused skin cancer in laboratory mice. Protect your skin by washing with soap and water immediately after working with engine oil.**

1. Remove the front under cover No.2. (See 09-16-41 FRONT UNDER COVER No.2 REMOVAL/INSTALLATION.)
2. Drain the engine oil. (See 01-11A-3 ENGINE OIL REPLACEMENT [SKYACTIV-G 2.0].)
3. Remove in the order indicated in the table.
4. Install in the reverse order of removal.
5. Refill with the specified type and amount of the engine oil. (See 01-11A-3 ENGINE OIL REPLACEMENT [SKYACTIV-G 2.0].)
6. Start the engine and confirm that there is no oil leakage.
   - If there is oil leakage, repair or replace the applicable part.
7. Inspect the oil level. (See 01-11A-3 ENGINE OIL LEVEL INSPECTION [SKYACTIV-G 2.0].)

LUBRICATION [SKYACTIV-G 2.0]

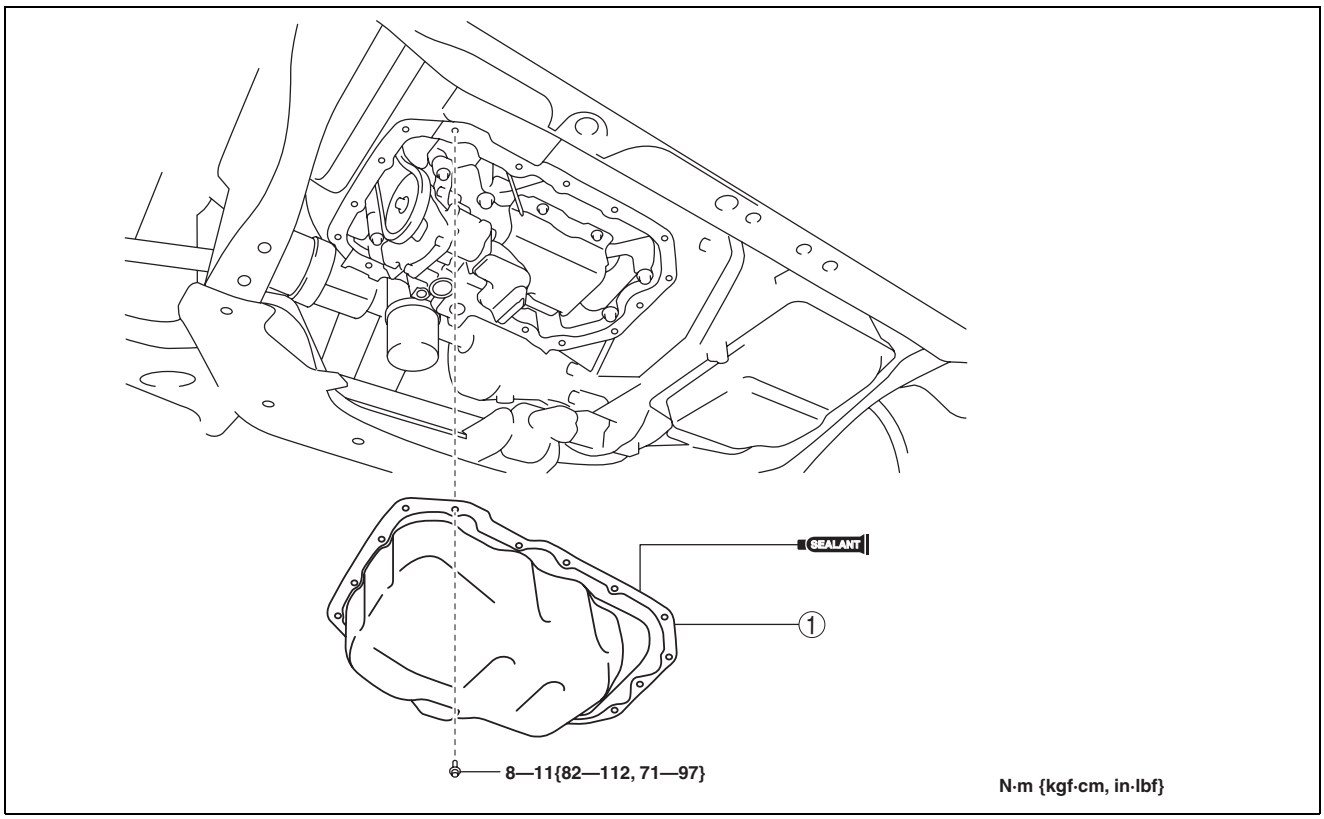

ac5uuw00000582

1	Oil pan (See 01-11A-13 Oil Pan Removal Note.) (See 01-11A-14 Oil Pan Installation Note.)

Oil Pan Removal Note

1. Remove the oil pan using a separator tool.

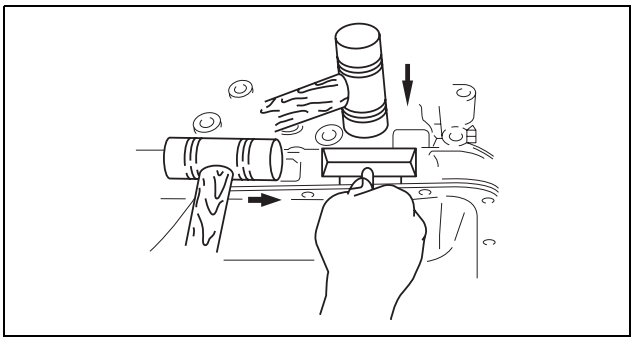

am6zzw0000230

LUBRICATION [SKYACTIV-G 2.0]

Oil Pan Installation Note

1. Completely clean and remove any oil, dirt, sealant or other foreign material that may be adhering to the cylinder block and oil pan.
2. When reusing the oil pan installation bolts, clean any old sealant from the bolts.

Caution

- **Apply the silicon sealant in a single, unbroken line around the whole perimeter.**
- **To prevent silicone sealant from hardening, adhere the oil pan to the cylinder block within 10 min after silicone sealant is applied. Tighten the installation bolts completely soon after adhering.**
- **Using bolts with the old seal adhering could cause cracks in the cylinder block.**

3. Apply silicone sealant to the oil pan along the inside of the bolt holes as shown in the figure.

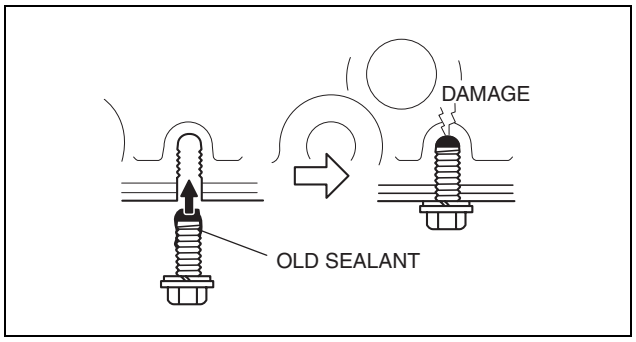

am6zzw0000230

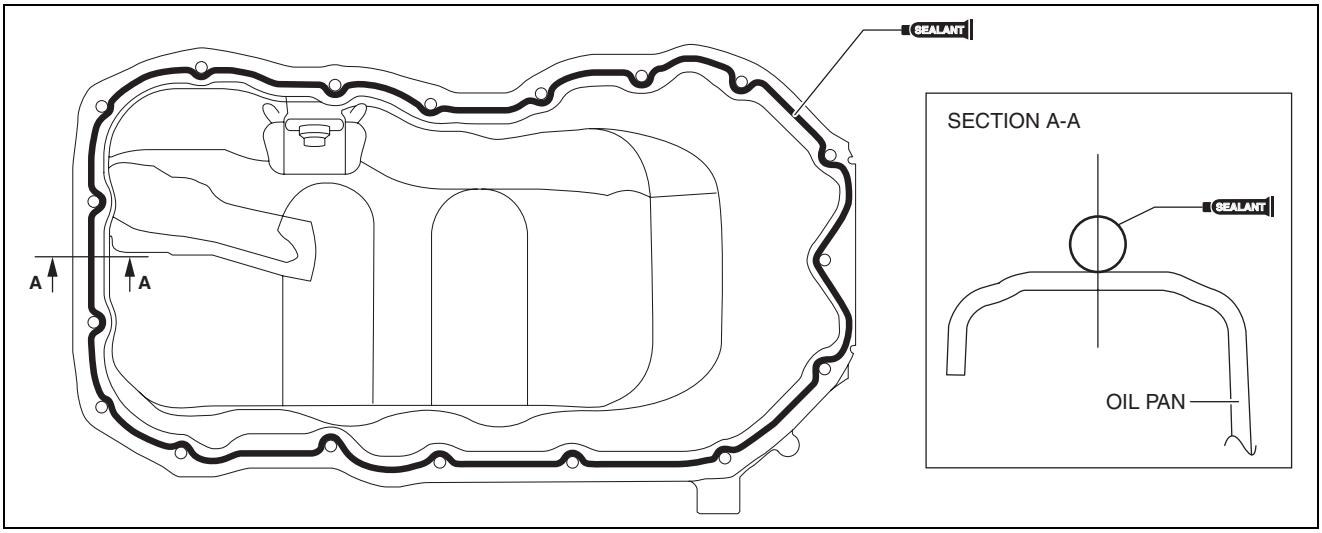

bpe2ue00000080

Thickness
2.0—6.0 mm {0.08—0.23 in}

4. Install the oil pan to the cylinder block.
5. Tighten the bolts in the order shown in the figure.

Tightening torque
8—11 N·m {82—112 kgf·cm, 71—97 in·lbf}

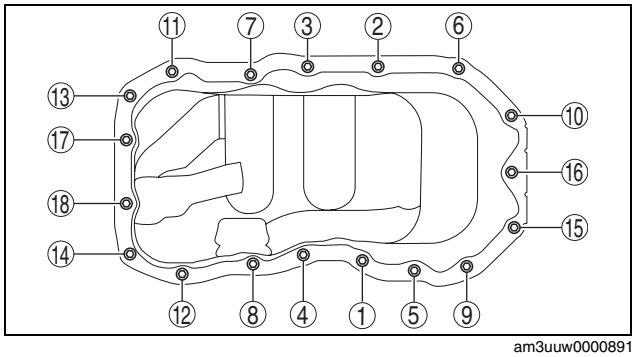

am3uuw0000891

LUBRICATION [SKYACTIV-G 2.0]

OIL PUMP REMOVAL/INSTALLATION [SKYACTIV-G 2.0]

id0111h3800600

Warning

- **Hot engines and engine oil can cause severe burns. Turn off the engine and wait until it and the engine oil have cooled.**
- **A vehicle that is lifted but not securely supported on safety stands is dangerous. It can slip or fall, causing death or serious injury. Never work around or under a lifted vehicle if it is not securely supported on safety stands.**
- **Continuous exposure to USED engine oil has caused skin cancer in laboratory mice. Protect your skin by washing with soap and water immediately after working with engine oil.**

Caution

- **If the camshaft is rotated with the timing chain removed and the piston at the top dead center position, the valve may contact the piston and the engine could be damaged. When rotating the camshaft with the timing chain removed, rotate it after lowering the piston from the top dead center position.**
- **When rotating the camshaft using a wrench on the cast hexagon, the wrench may contact the rocker arm and damage the rocker arm. To prevent damage to the rocker arm when holding the camshaft on the cast hexagon, use the wrench at engine rear side as shown in the figure to secure a clearance between the cam.**

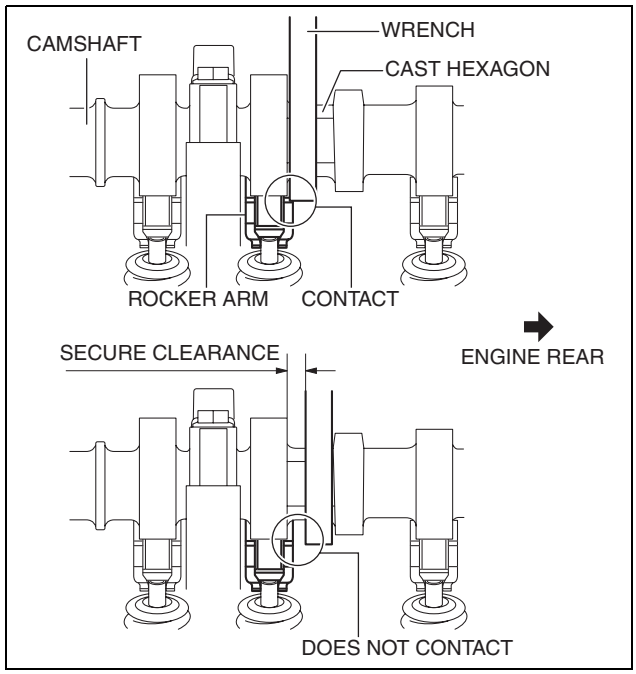

am3uuw0000883

Note

- Width at the cast hexagon of the camshaft is 22—24 mm {0.87—0.94 in}.

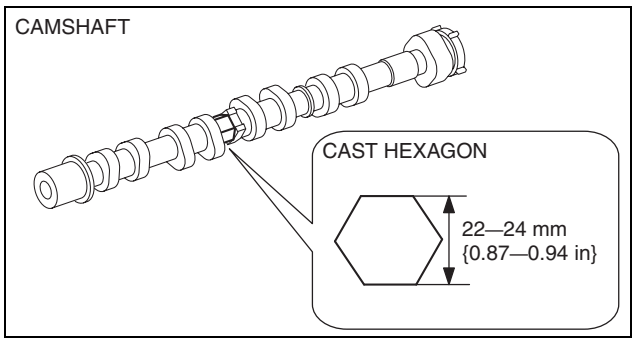

am3uuw0000902

1. Disconnect the negative battery cable. (See 01-17A-11 NEGATIVE BATTERY CABLE DISCONNECTION/CONNECTION [SKYACTIV-G 2.0].) (See 01-17A-13 NEGATIVE BATTERY CABLE DISCONNECTION/CONNECTION [SKYACTIV-G 2.0 (WITHOUT i-stop)].)
2. Remove the plug hole plate. (See 01-10A-6 PLUG HOLE PLATE REMOVAL/INSTALLATION [SKYACTIV-G 2.0].)
3. Remove the ignition coil/ion sensors. (See 01-18-2 IGNITION COIL/ION SENSOR REMOVAL/INSTALLATION [SKYACTIV-G 2.0].)

LUBRICATION [SKYACTIV-G 2.0]

4. Remove the front under cover No.2. (See 09-16-41 FRONT UNDER COVER No.2 REMOVAL/INSTALLATION.)
5. Remove the splash shield. (See 09-16-49 SPLASH SHIELD REMOVAL/INSTALLATION.)
6. Remove the drive belt. (See 01-10A-10 DRIVE BELT REMOVAL/INSTALLATION [SKYACTIV-G 2.0].)
7. Drain the engine oil. (See 01-11A-3 ENGINE OIL REPLACEMENT [SKYACTIV-G 2.0].)
8. Remove the oil pan. (See 01-11A-12 OIL PAN REMOVAL/INSTALLATION [SKYACTIV-G 2.0].)
9. Remove the engine front cover. (See 01-10A-39 TIMING CHAIN REMOVAL/INSTALLATION [SKYACTIV-G 2.0].)
10. Remove in the order indicated in the table.
11. Install in the reverse order of removal.
12. Refill with the specified type and amount of the engine oil. (See 01-11A-3 ENGINE OIL REPLACEMENT [SKYACTIV-G 2.0].)
13. Start the engine and confirm that there is no oil leakage.
    - If there is oil leakage, repair or replace the applicable part.
14. Inspect the oil level. (See 01-11A-3 ENGINE OIL LEVEL INSPECTION [SKYACTIV-G 2.0].)
15. Inspect for the ignition timing and idle speed. (See 01-10A-4 ENGINE TUNE-UP [SKYACTIV-G 2.0].)
16. Inspect the oil pressure. (See 01-11A-7 OIL PRESSURE INSPECTION [SKYACTIV-G 2.0].)

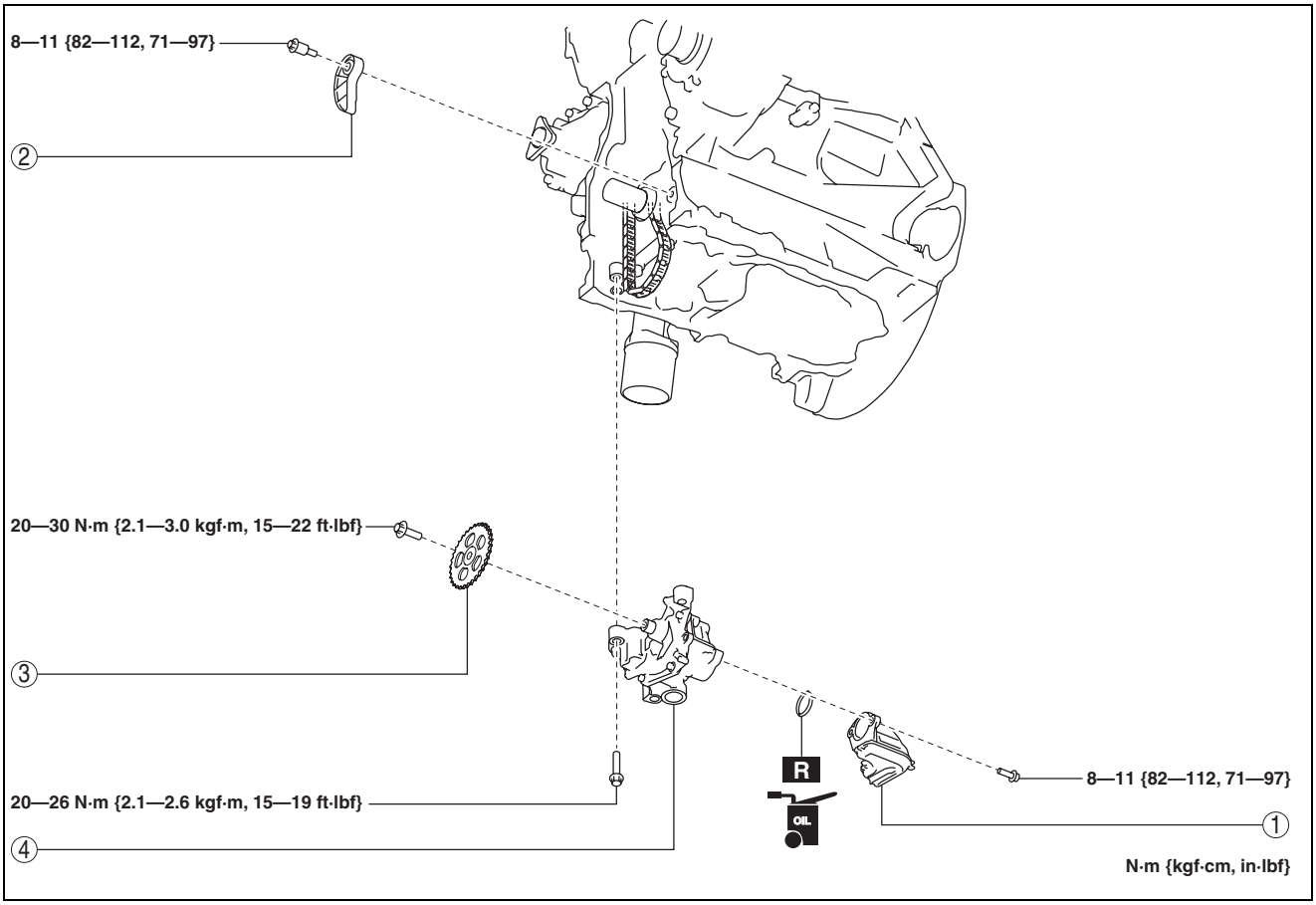

am3uuw0000892

1	Oil strainer
2	Oil pump chain tensioner

3	Oil pump driven sprocket (See 01-11A-17 Oil Pump Driven Sprocket Removal Note.) (See 01-11A-18 Oil Pump Driven Sprocket Installation Note.)
4	Oil pump (See 01-11A-17 Oil Pump Installation Note.)

LUBRICATION [SKYACTIV-G 2.0]

Oil Pump Driven Sprocket Removal Note

1. Temporarily assemble the crankshaft pulley lock bolt, and lock the oil pump against rotation as shown in the figure.
2. Remove the oil pump driven sprocket.

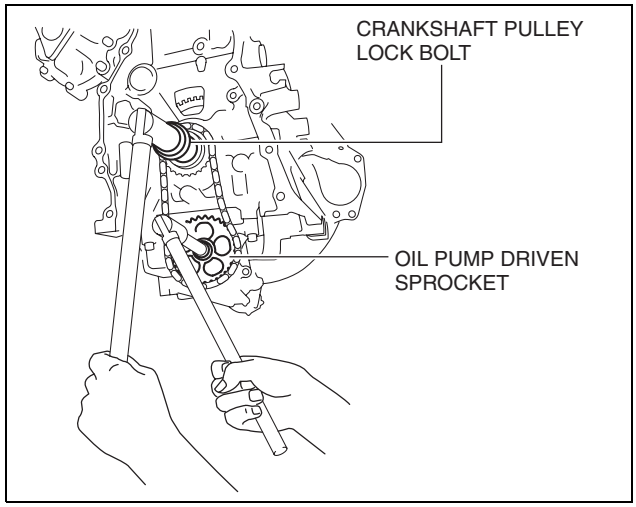

am3uuw0000892

Oil Pump Installation Note

1. Install the oil pump using the following procedure:
   (1) Temporarily tighten the **three bolts** shown in the figure.

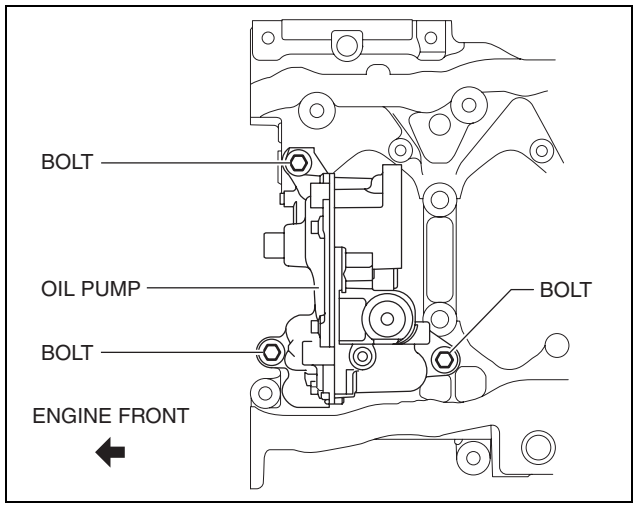

am3uuw0000892

   (2) Tighten the **two bolts** shown in the figure to the specified torque.

Note

- The tightening order for the two bolts is optional.

Tightening torque
20—26 N·m {2.1—2.6 kgf·m, 15—19 ft·lbf}

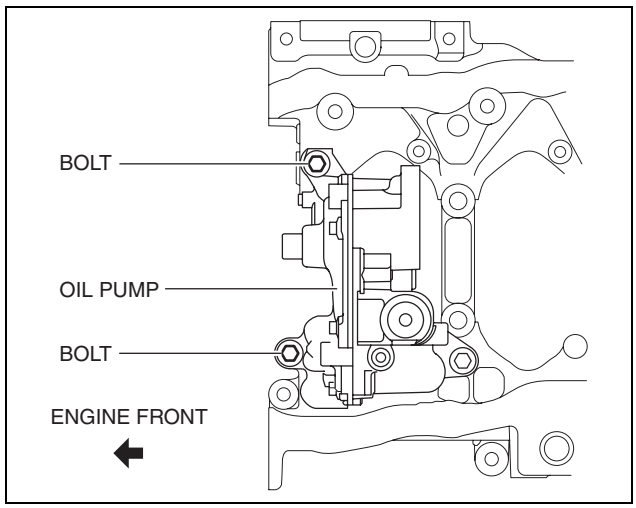

am3uuw0000892

LUBRICATION [SKYACTIV-G 2.0]

(3) Finally, tighten the bolt shown in the figure to the specified torque.

Tightening torque
20—26 N·m {2.1—2.6 kgf·m, 15—19 ft·lbf}

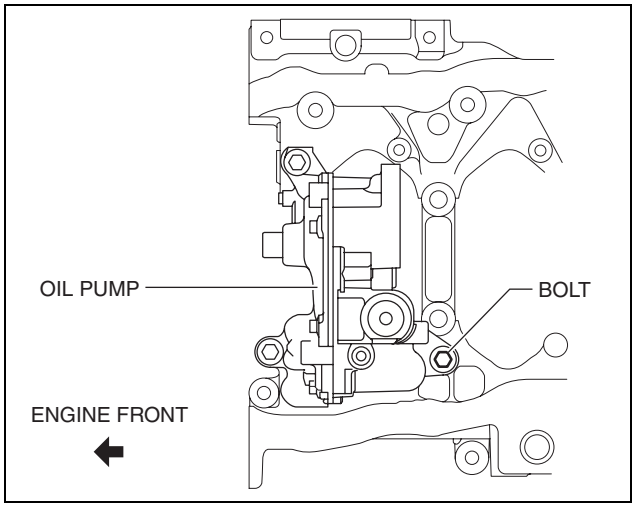

am3uuw0000892

Oil Pump Driven Sprocket Installation Note

1. Temporarily assemble the crankshaft pulley lock bolt, and lock the oil pump against rotation as shown in the figure.
2. Install the oil pump driven sprocket.

Tightening torque
20—30 N·m {2.1—3.0 kgf·m, 15—22 ft·lbf}

3. Remove the temporarily assembled crankshaft pulley lock bolt.

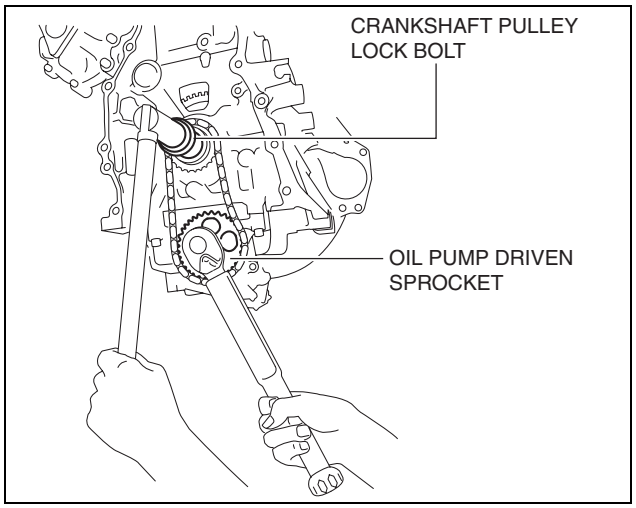

am3uuw0000892

01-11B LUBRICATION [SKYACTIV-D 2.2]

LUBRICATION SYSTEM LOCATION INDEX [SKYACTIV-D 2.2] **01-11B–2**
ENGINE OIL LEVEL INSPECTION [SKYACTIV-D 2.2] **01-11B–3**
ENGINE OIL REPLACEMENT [SKYACTIV-D 2.2] **01-11B–4**
OIL FILTER REPLACEMENT [SKYACTIV-D 2.2] **01-11B–5**
OIL PRESSURE INSPECTION [SKYACTIV-D 2.2] **01-11B–7**
OIL COOLER REMOVAL/INSTALLATION [SKYACTIV-D 2.2] **01-11B–10**
Oil Cooler Removal Note **01-11B–10**
Oil Cooler Installation Note **01-11B–11**
ENGINE OIL SOLENOID VALVE REMOVAL/INSTALLATION [SKYACTIV-D 2.2] **01-11B–11**
Engine Oil Solenoid Valve Removal Note **01-11B–12**
Spacer Component Removal Note **01-11B–12**
ENGINE OIL SOLENOID VALVE INSPECTION [SKYACTIV-D 2.2] **01-11B–14**
Engine Oil Solenoid Valve Operation Inspection **01-11B–14**
OIL PAN REMOVAL/INSTALLATION [SKYACTIV-D 2.2] **01-11B–15**
Oil Pan Removal Note **01-11B–16**
Oil Pan Installation Note **01-11B–16**
Seal Plate Installation Note **01-11B–18**
OIL PUMP REMOVAL/INSTALLATION [SKYACTIV-D 2.2] **01-11B–19**
Oil Pump Chain Removal Note **01-11B–22**
Oil Pump, Balancer Unit Installation Note **01-11B–24**
Oil Pump Chain Installation Note **01-11B–27**

LUBRICATION [SKYACTIV-D 2.2]

LUBRICATION SYSTEM LOCATION INDEX [SKYACTIV-D 2.2]

id0111s6800100

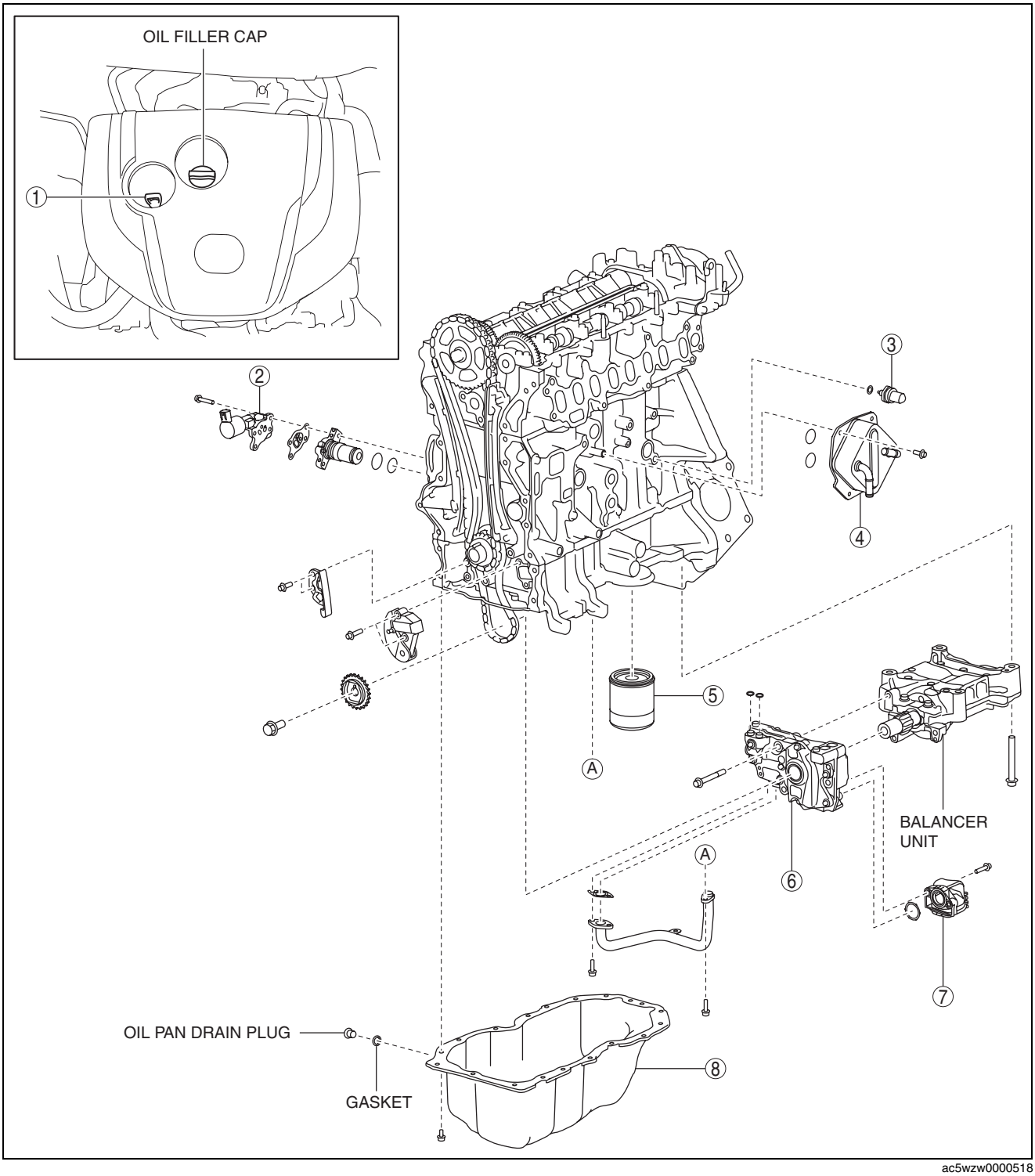

ac5wzw0000518

1	Dipstick (See 01-11B-3 ENGINE OIL LEVEL INSPECTION [SKYACTIV-D 2.2].) (See 01-11B-4 ENGINE OIL REPLACEMENT [SKYACTIV-D 2.2].)
2	Engine oil solenoid valve (See 01-11B-11 ENGINE OIL SOLENOID VALVE REMOVAL/INSTALLATION [SKYACTIV-D 2.2].) (See 01-11B-14 ENGINE OIL SOLENOID VALVE INSPECTION [SKYACTIV-D 2.2].)

3	Engine oil temperature sensor/engine oil pressure sensor (See 01-11B-7 OIL PRESSURE INSPECTION [SKYACTIV-D 2.2].)
4	Oil cooler (See 01-11B-10 OIL COOLER REMOVAL/ INSTALLATION [SKYACTIV-D 2.2].)
5	Oil filter (See 01-11B-5 OIL FILTER REPLACEMENT [SKYACTIV-D 2.2].)

LUBRICATION [SKYACTIV-D 2.2]

6	Oil pump (See 01-11B-19 OIL PUMP REMOVAL/ INSTALLATION [SKYACTIV-D 2.2].)
7	Oil strainer (See 01-11B-19 OIL PUMP REMOVAL/ INSTALLATION [SKYACTIV-D 2.2].)
8	Oil pan (See 01-11B-15 OIL PAN REMOVAL/ INSTALLATION [SKYACTIV-D 2.2].)

ENGINE OIL LEVEL INSPECTION [SKYACTIV-D 2.2]

id0111s6800500

1. Position the vehicle on level ground.
2. Warm up the engine.
3. Stop the engine and allow **at least 5 min** before continuing.
4. Remove the dipstick, wipe it cleanly, and reinstall it fully.
5. Remove the dipstick and verify that the oil level is between the X and L marks on the dipstick.
   - If the oil level is below or near the L mark, add engine oil. (See 01-11B-4 ENGINE OIL REPLACEMENT [SKYACTIV-D 2.2].)
   - If the oil level is close to or exceeds the X mark, replace the engine oil. (See 01-11B-4 ENGINE OIL REPLACEMENT [SKYACTIV-D 2.2].)
6. Insert the oil level gauge completely until it attaches to the cylinder head cover.

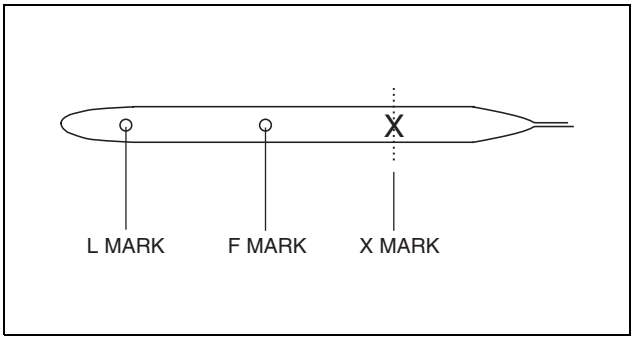

ac5wzw0000483

LUBRICATION [SKYACTIV-D 2.2]

ENGINE OIL REPLACEMENT [SKYACTIV-D 2.2]

id0111s6800400

Warning
- **Hot engines and engine oil can cause severe burns. Turn off the engine and wait until it and the engine oil have cooled.**
- **A vehicle that is lifted but not securely supported on safety stands is dangerous. It can slip or fall, causing death or serious injury. Never work around or under a lifted vehicle if it is not securely supported on safety stands.**
- **Continuous exposure to USED engine oil has caused skin cancer in laboratory mice. Protect your skin by washing with soap and water immediately after working with engine oil.**

Caution
- **If engine oil is spilled on the exhaust system, wipe it off completely. If you fail to wipe the spilled engine oil, it will produce fumes because of the heat.**

1. Position the vehicle on level ground.
2. Remove the oil filler cap.
3. Remove the service hole cover (installed to front under cover No.2) used to drain the engine oil.
4. Remove the oil pan drain plug.
5. Drain the engine oil into a container.
6. Install the oil pan drain plug with a new gasket.

Oil pan drain plug tightening torque
30—41 N·m {3.1—4.1 kgf·m, 23—30 ft·lbf}

Note
- The amount of residual oil in the engine can vary according to factors such as the replacement method and oil temperature. Verify the oil level after engine oil replacement.

7. Refill with the following type and amount of engine oil.

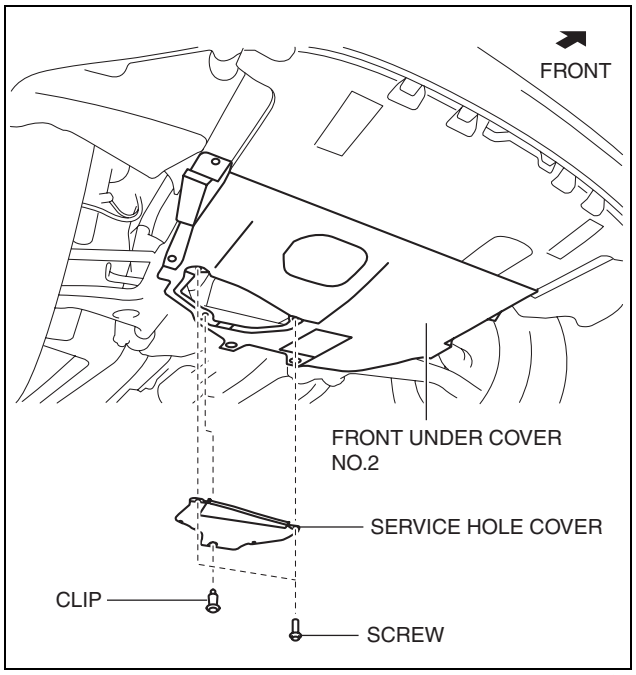

ac5wzw0000483

Engine oil [Europe]

Recommended engine oil		Alternative engine oil
Mazda Original Oil Supra DPF 0W-30	Mazda Original Oil Ultra DPF 5W-30	ACEA C3 0W-30, 5W-30

Engine oil [Except Europe]

Item	Specifications	
Grade	ACEA C3	ACEA C1 or JASO DL-1
Viscosity (SAE)	0W-30, 5W-30	5W-30

Engine oil capacity (approx. quantity)
Oil replacement: 4.8 L {5.1 US qt, 4.2 Imp qt}
Oil and oil filter replacement: 5.1 L {5.4 US qt, 4.5 Imp qt}
Total (dry engine): 6.0 L {6.3 US qt, 5.3 Imp qt}

8. Install the oil filler cap.
9. Start the engine and confirm that there is no oil leakage.
   - If there is oil leakage, repair or replace the applicable part.
10. Inspect the oil level.
    - Verify that the oil level is between the F and L marks on the dipstick.
11. Install the service hole cover.
12. Perform engine oil data reset procedure.

LUBRICATION [SKYACTIV-D 2.2]

OIL FILTER REPLACEMENT [SKYACTIV-D 2.2]

id0111s6800700

Warning

- **Hot engines and engine oil can cause severe burns. Turn off the engine and wait until it and the engine oil have cooled.**
- **A vehicle that is lifted but not securely supported on safety stands is dangerous. It can slip or fall, causing death or serious injury. Never work around or under a lifted vehicle if it is not securely supported on safety stands.**
- **Continuous exposure to USED engine oil has caused skin cancer in laboratory mice. Protect your skin by washing with soap and water immediately after working with engine oil.**

Caution

- **If engine oil is spilled on the exhaust system, wipe it off completely. If you fail to wipe the spilled engine oil, it will produce fumes because of the heat.**

1. Remove the service hole cover (installed to front under cover No.2) used to remove the oil filter.

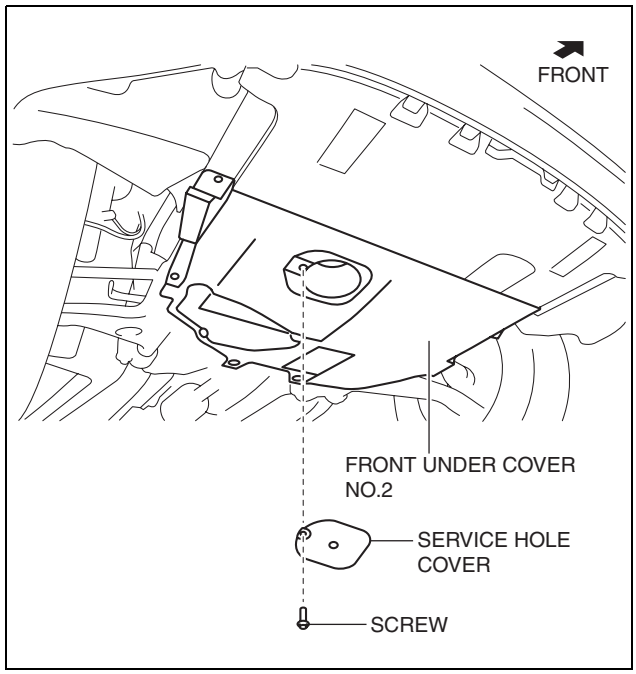

ac5wzw0000485

2. Remove the oil filter using the commercially available, cup-type oil filter wrench (**75 mm {3.0 in} diameter, 15 sided**).
3. If the oil filter joint is loose, tighten the oil filter joint using the following procedure:

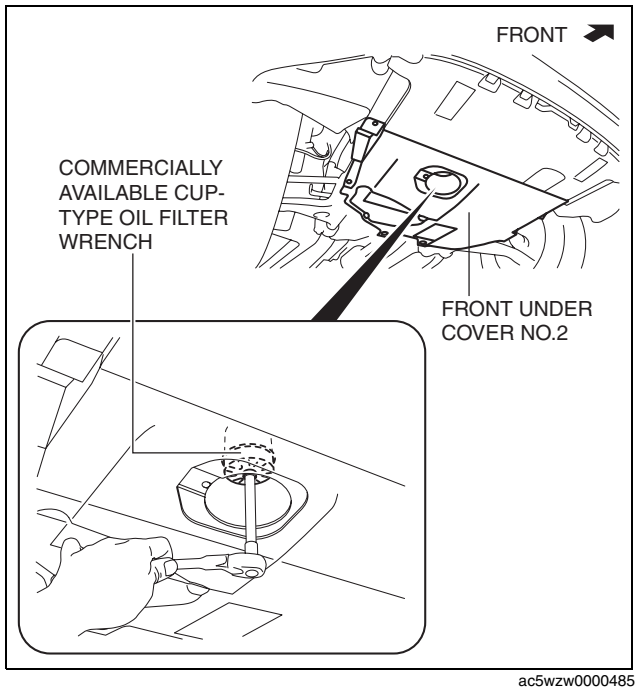

ac5wzw0000485

LUBRICATION [SKYACTIV-D 2.2]

(1) Install two nuts of appropriate size (parallel pipe thread 3/4 - 16 UNF screw) to the oil filter joint.

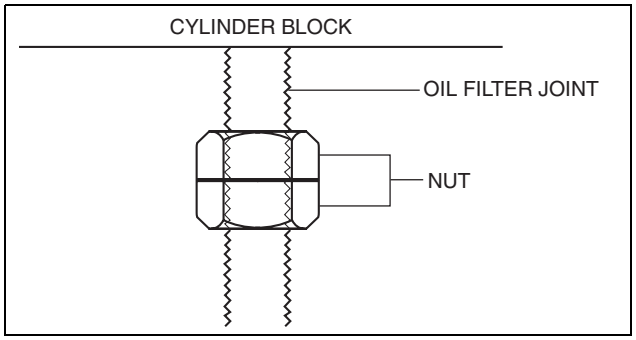

am2llw00000039

(2) Using a wrench, apply force in the directions of the arrows shown in the figure and lock the nuts.

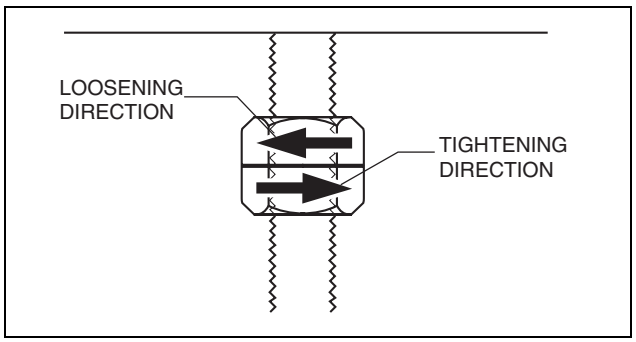

am2llw00000040

(3) Using a wrench, apply force in the tightening direction to the outside nut and install the oil filter joint. Verify the projection of the installed oil filter joint.

Tightening torque
30—40 N·m {3.1—4.0 kgf·m, 23—29 ft·lbf}

Oil filter joint projection
11.4—15.9 mm {0.449—0.625 in}

(4) Remove the 2 nuts installed in Step (1) of the procedure.

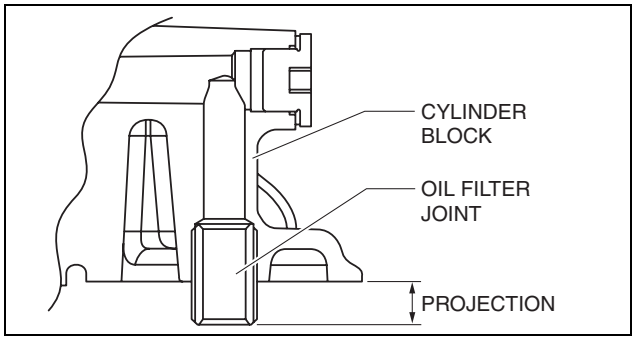

ac5wzw0000486

4. Use a clean rag to wipe off the mounting surface.
5. Apply clean engine oil to the O-ring of a new oil filter.
6. Tighten the oil filter according to the instructions on the package or side of the oil filter.

Tightening torque (reference value)
15—20 N·m {1.6—2.0 kgf·m, 12—14 ft·lbf}

7. Start the engine and confirm that there is no oil leakage.
   - If there is oil leakage, repair or replace the applicable part.
8. Inspect the oil level. (See 01-11B-3 ENGINE OIL LEVEL INSPECTION [SKYACTIV-D 2.2].)
9. Install the service hole cover.

LUBRICATION [SKYACTIV-D 2.2]

OIL PRESSURE INSPECTION [SKYACTIV-D 2.2]

id0111s6800300

Warning

- **Hot engines and engine oil can cause severe burns. Turn off the engine and wait until it and the engine oil have cooled.**
- **A vehicle that is lifted but not securely supported on safety stands is dangerous. It can slip or fall, causing death or serious injury. Never work around or under a lifted vehicle if it is not securely supported on safety stands.**
- **Continuous exposure to USED engine oil has caused skin cancer in laboratory mice. Protect your skin by washing with soap and water immediately after working with engine oil.**

1. Disconnect the negative battery cable.
2. Remove the coolant reserve tank. (See 01-12B-8 COOLANT RESERVE TANK REMOVAL/INSTALLATION [SKYACTIV-D 2.2].)
3. Disconnect the connector for the engine oil temperature sensor/engine oil pressure sensor using the following procedure:
   (1) Pull out the connector lock in the direction of the arrow.
   (2) Press the lock down in the direction of the arrow and disconnect the connector.
4. Disconnect starter terminal B and set the wiring harness aside. (See 01-19B-2 STARTER REMOVAL/INSTALLATION [SKYACTIV-D 2.2].)
5. Remove the engine oil temperature sensor/ engine oil pressure sensor.

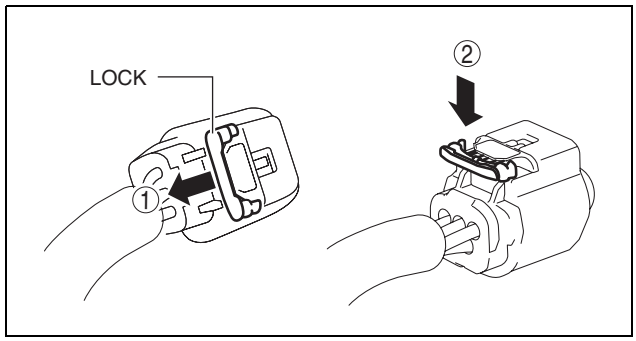

ac5wzw0000483

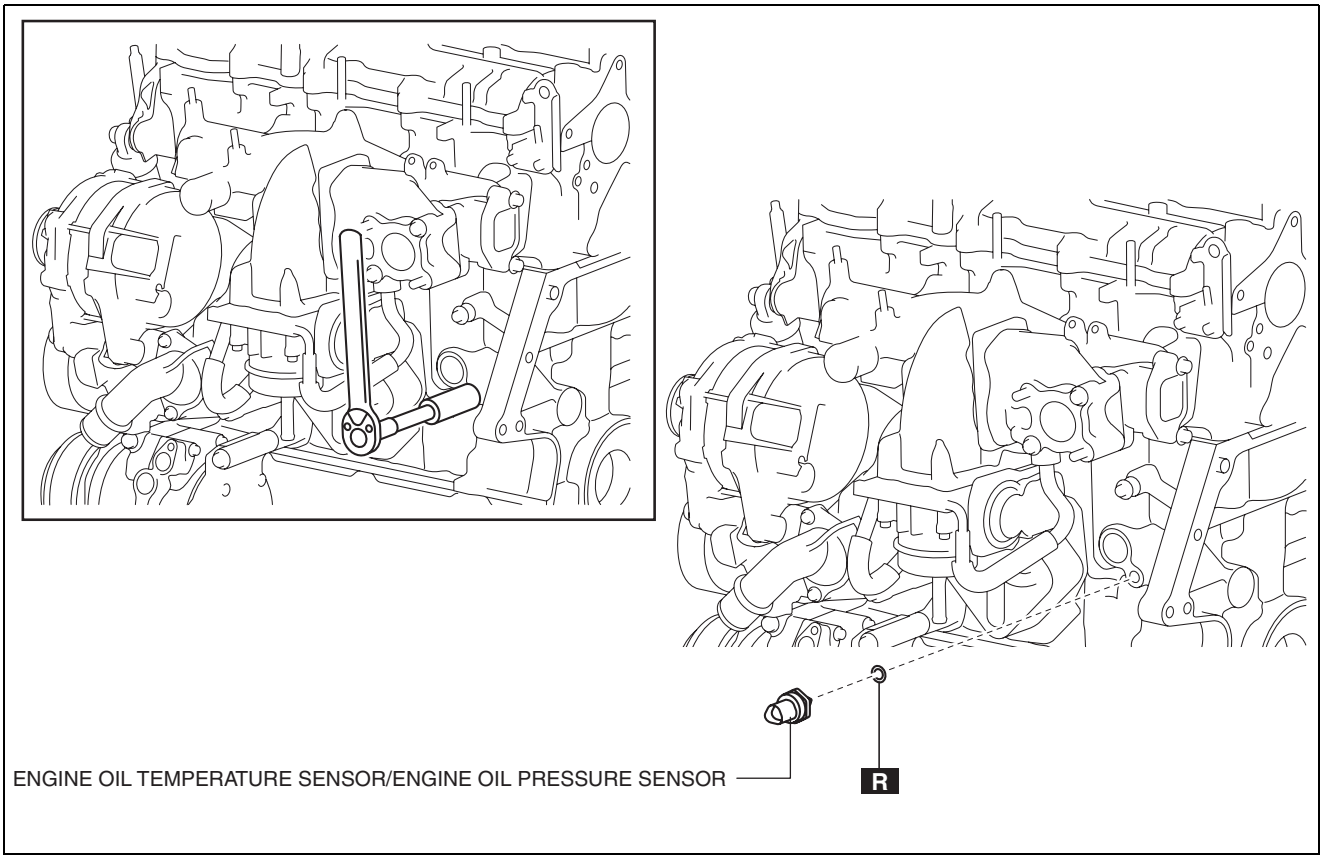

ac5wzw0000483

LUBRICATION [SKYACTIV-D 2.2]

Note
- This inspection can be performed using a combination of **SSTs 49 D019 908** (gauge), **49 D019 909** (hose), **49 D019 910** (adapter), and **49 D019 911** (adapter).

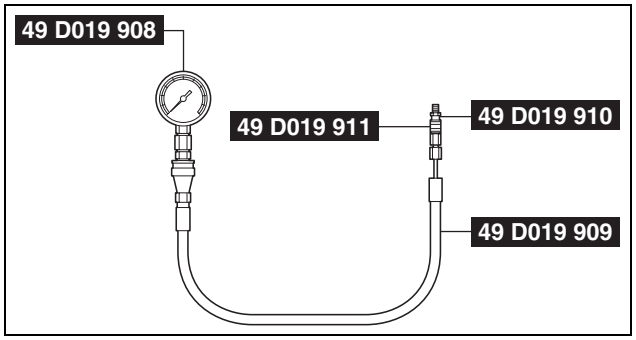

am6zzw0000438

6. Install the **SSTs** to the engine oil temperature sensor/engine oil pressure sensor installation hole using the following procedure.
   (1) Assemble **SSTs 49 D019 908**, **49 D019 909**, and **49 D019 911** outside of the engine compartment beforehand.
   (2) Install **SST 49 D019 910** to the engine oil temperature sensor/engine oil pressure sensor installation hole.
   (3) Install **SST 49 D019 911** to the **SST 49 D019 910**.
7. Connect starter terminal B. (See 01-19B-2 STARTER REMOVAL/INSTALLATION [SKYACTIV-D 2.2].)
8. Install the coolant reserve tank. (See 01-12B-8 COOLANT RESERVE TANK REMOVAL/INSTALLATION [SKYACTIV-D 2.2].)
9. Connect the negative battery cable. (See 01-17B-9 NEGATIVE BATTERY CABLE DISCONNECTION/CONNECTION [SKYACTIV-D 2.2].)
10. Warm up the engine to normal operating temperature.
11. Run the engine at the specified speed, and note the gauge readings.
    - If not within the specification, inspect for the cause and repair or replace if necessary.

Note
- The oil pressure can vary with oil viscosity, temperature and engine speed.

Oil pressure (reference value) [oil temperature: 80—90 °C {176—194 °F}, coolant temperature: 80—90 °C {176—194 °F}]
Lo: 140—190 kPa {1.43—1.93 kgf/cm^2, 20.4—27.5 psi} [1,500 rpm]
Hi: 300—440 kPa {3.06—4.48 kgf/cm^2, 43.6—63.8 psi} [3,500 rpm]

12. Stop the engine and wait until it is cools.
13. Disconnect the negative battery cable.
14. Remove the coolant reserve tank. (See 01-12B-8 COOLANT RESERVE TANK REMOVAL/INSTALLATION [SKYACTIV-D 2.2].)
15. Disconnect starter terminal B and set the wiring harness aside. (See 01-19B-2 STARTER REMOVAL/INSTALLATION [SKYACTIV-D 2.2].)
16. Remove the **SSTs.**

17. Install the engine oil temperature sensor/engine oil pressure sensor.

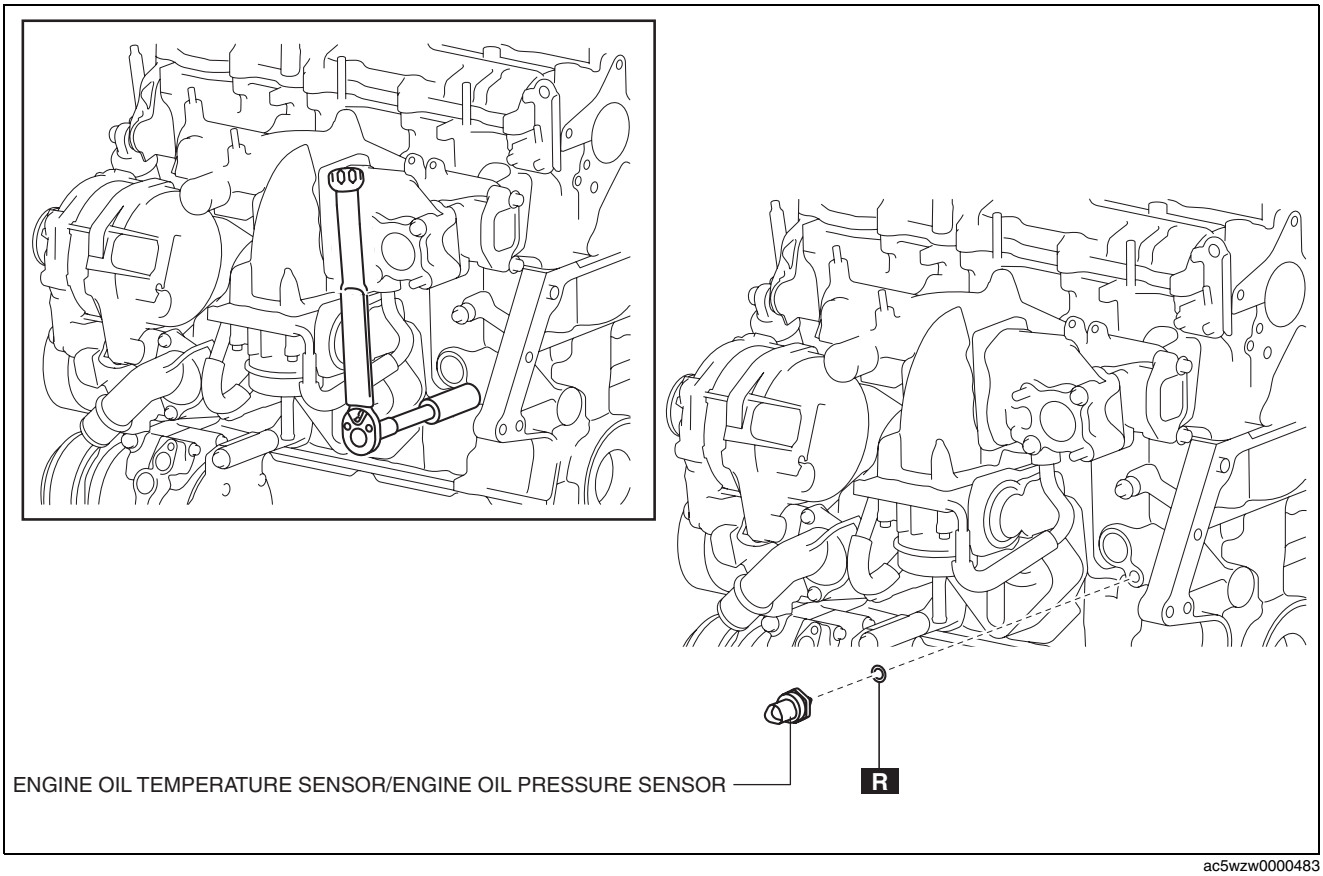

ac5wzw0000483

Tightening torque
14—18 N·m {1.5—1.8 kgf·m, 11—13 ft·lbf}

18. Connect the connector for the engine oil temperature sensor/engine oil pressure sensor and press it in the lock direction of the arrow.
19. Connect starter terminal B. (See 01-19B-2 STARTER REMOVAL/INSTALLATION [SKYACTIV-D 2.2].)
20. Install the coolant reserve tank. (See 01-12B-8 COOLANT RESERVE TANK REMOVAL/INSTALLATION [SKYACTIV-D 2.2].)
21. Connect the negative battery cable. (See 01-17B-9 NEGATIVE BATTERY CABLE DISCONNECTION/CONNECTION [SKYACTIV-D 2.2].)
22. Start the engine and confirm that there is no oil leakage.
    - If there is oil leakage, repair or replace the applicable part.

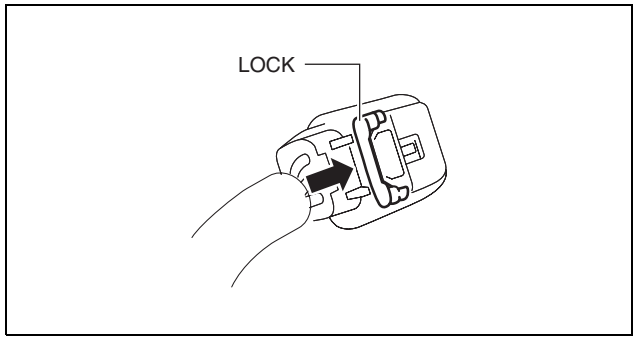

ac5wzw0000483

LUBRICATION [SKYACTIV-D 2.2]

OIL COOLER REMOVAL/INSTALLATION [SKYACTIV-D 2.2]

id0111s6800800

Warning

- **Hot engines and engine oil can cause severe burns. Turn off the engine and wait until it and the engine oil have cooled.**
- **A vehicle that is lifted but not securely supported on safety stands is dangerous. It can slip or fall, causing death or serious injury. Never work around or under a lifted vehicle if it is not securely supported on safety stands.**
- **Continuous exposure to USED engine oil has caused skin cancer in laboratory mice. Protect your skin by washing with soap and water immediately after working with engine oil.**

Caution

- **If engine oil is spilled on the exhaust system, wipe it off completely. If you fail to wipe the spilled engine oil, it will produce fumes because of the heat.**

1. Disconnect the negative battery cable. (See 01-17B-9 NEGATIVE BATTERY CABLE DISCONNECTION/CONNECTION [SKYACTIV-D 2.2].)
2. Remove the front under cover No.2. (See 09-16-41 FRONT UNDER COVER No.2 REMOVAL/INSTALLATION.)
3. Drain the engine coolant. (See 01-12B-4 ENGINE COOLANT REPLACEMENT [SKYACTIV-D 2.2].)
4. Remove the coolant reserve tank. (See 01-12B-8 COOLANT RESERVE TANK REMOVAL/INSTALLATION [SKYACTIV-D 2.2].)
5. Remove the intake shutter valve component. (See 01-13B-6 INTAKE-AIR SYSTEM REMOVAL/INSTALLATION [SKYACTIV-D 2.2].)
6. Remove in the order indicated in the table.
7. Use a clean rag to wipe off the mounting surface on the cylinder block and the oil cooler.
8. Install in the reverse order of the removal.
9. Refill the engine coolant. (See 01-12B-4 ENGINE COOLANT REPLACEMENT [SKYACTIV-D 2.2].)
10. Start the engine and confirm that there is no oil leakage.
    - If there is oil leakage, repair or replace the applicable part.
11. Inspect the oil level. (See 01-11B-3 ENGINE OIL LEVEL INSPECTION [SKYACTIV-D 2.2].)
12. Inspect for engine coolant leakage. (See 01-12B-7 ENGINE COOLANT LEAKAGE INSPECTION [SKYACTIV-D 2.2].)

1	Water hose
2	Oil cooler (See 01-11B-10 Oil Cooler Removal Note.) (See 01-11B-11 Oil Cooler Installation Note.)
3	O-ring

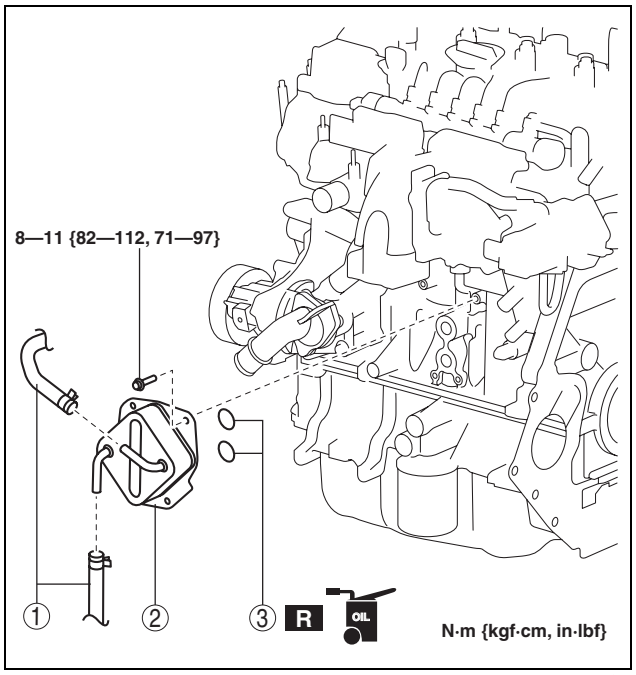

ac5wzw0000486

Oil Cooler Removal Note

1. Cover the area around the oil cooler with a rag because a small amount of engine oil will leak from the oil cooler installation area.

LUBRICATION [SKYACTIV-D 2.2]

Oil Cooler Installation Note

1. Tighten the bolts in the order shown in the figure.

Tightening torque
8—11 N·m {82—112 kgf·cm, 71—97 in·lbf}

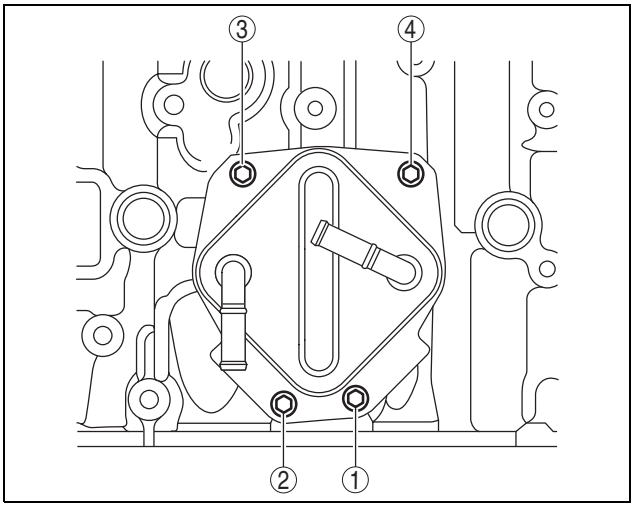

ac5jjw00004186

ENGINE OIL SOLENOID VALVE REMOVAL/INSTALLATION [SKYACTIV-D 2.2]

id0111s6003000

Warning

- **Hot engines and engine oil can cause severe burns. Turn off the engine and wait until it and the engine oil have cooled.**
- **A vehicle that is lifted but not securely supported on safety stands is dangerous. It can slip or fall, causing death or serious injury. Never work around or under a lifted vehicle if it is not securely supported on safety stands.**
- **Continuous exposure to USED engine oil has caused skin cancer in laboratory mice. Protect your skin by washing with soap and water immediately after working with engine oil.**

1. Disconnect the negative battery cable. (See 01-17B-9 NEGATIVE BATTERY CABLE DISCONNECTION/CONNECTION [SKYACTIV-D 2.2].)
2. Remove the front under cover No.2. (See 09-16-41 FRONT UNDER COVER No.2 REMOVAL/INSTALLATION.)
3. Remove the splash shield (RH). (See 09-16-49 SPLASH SHIELD REMOVAL/INSTALLATION.)
4. Remove the catalytic converter lower bracket. (See 01-15B-1 EXHAUST SYSTEM REMOVAL/INSTALLATION [SKYACTIV-D 2.2].)
5. Remove in the order indicated in the table.
6. Install in the reverse order of removal.
7. Start the engine and confirm that there is no oil leakage.
   - If there is oil leakage, repair or replace the applicable part.

LUBRICATION [SKYACTIV-D 2.2]

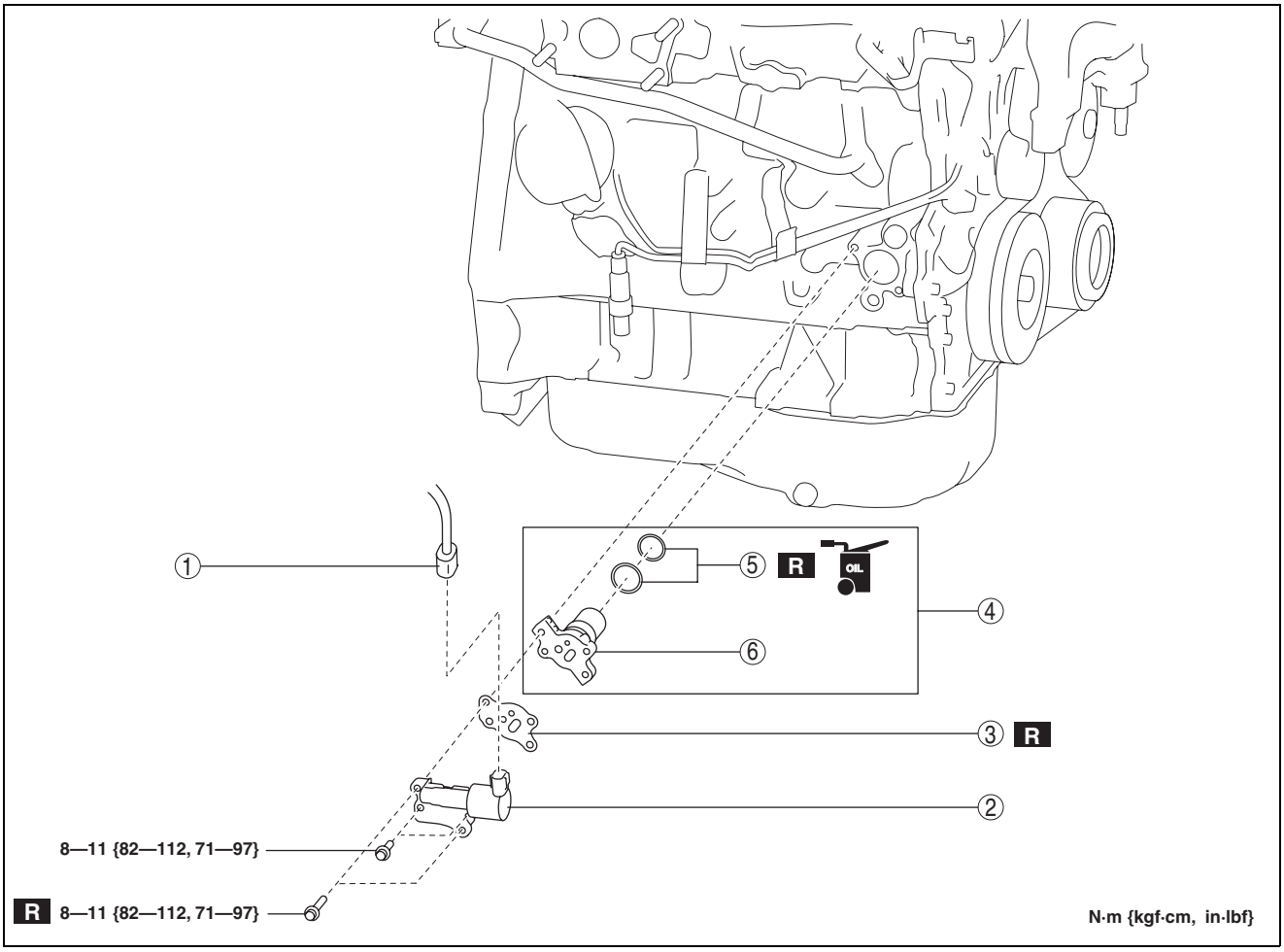

ac5wzw0000480

1	Engine oil solenoid valve connector
2	Engine oil solenoid valve (See 01-11B-12 Engine Oil Solenoid Valve Removal Note.)
3	Gasket

4	Spacer connector (See 01-11B-12 Spacer Component Removal Note.)
5	O-ring
6	Spacer

Engine Oil Solenoid Valve Removal Note

1. Cover the area around the engine oil solenoid valve with a rag because a small amount of engine oil will leak from the engine oil solenoid valve installation area.

Spacer Component Removal Note

1. Remove the spacer component using the following procedure.
   (1) Rotate the space component in the direction shown in the figure.

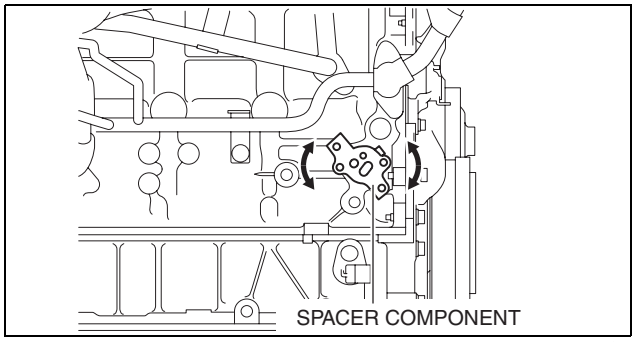

ac5wzw0000480

(2) Rotate the spacer component in the direction of the arrow shown in the figure and position it so that the spacer component screw hole overlaps the wall surface of the cylinder block.

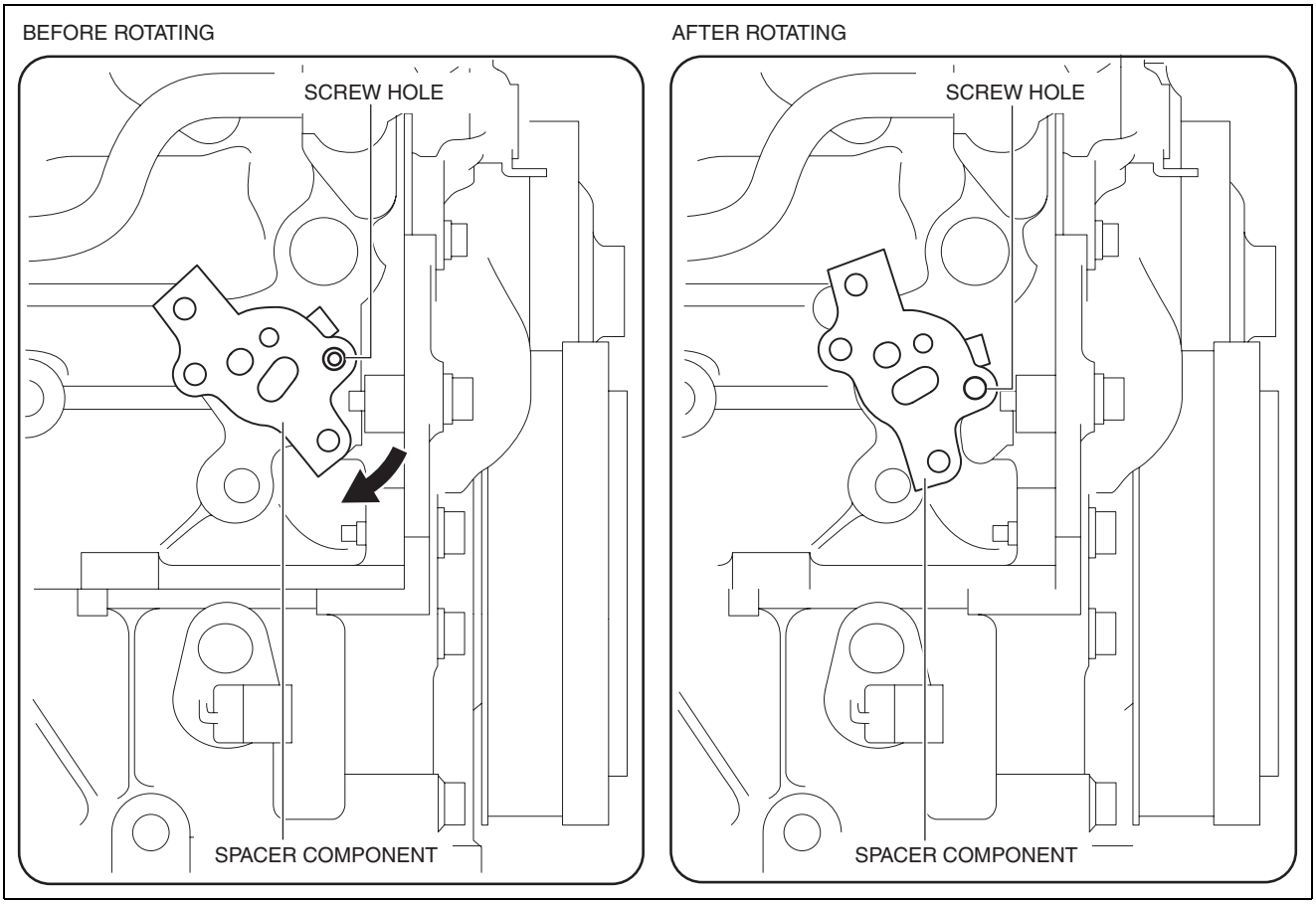

ac5wzw0000480

(3) Install the removed engine oil solenoid valve installation bolt into the screw hole of the spacer component shown in the figure.

Caution

- **Do not use the new bolts which are used during assembly.**

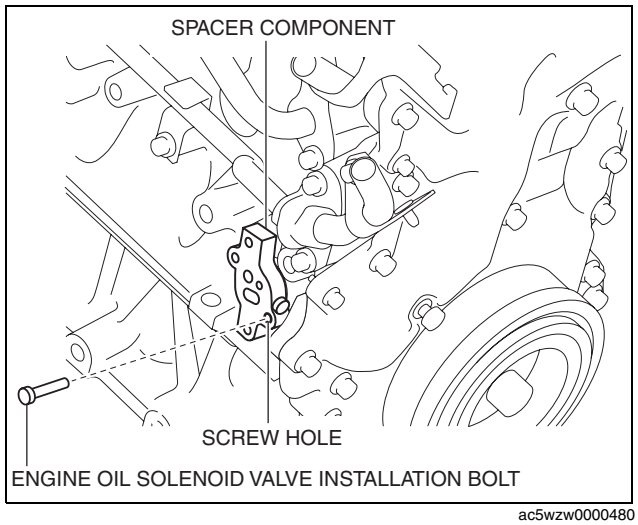

ac5wzw0000480

LUBRICATION [SKYACTIV-D 2.2]

(4) Tighten to the point that the engine oil solenoid valve installation bolt contacts the cylinder block and the spacer component comes up.

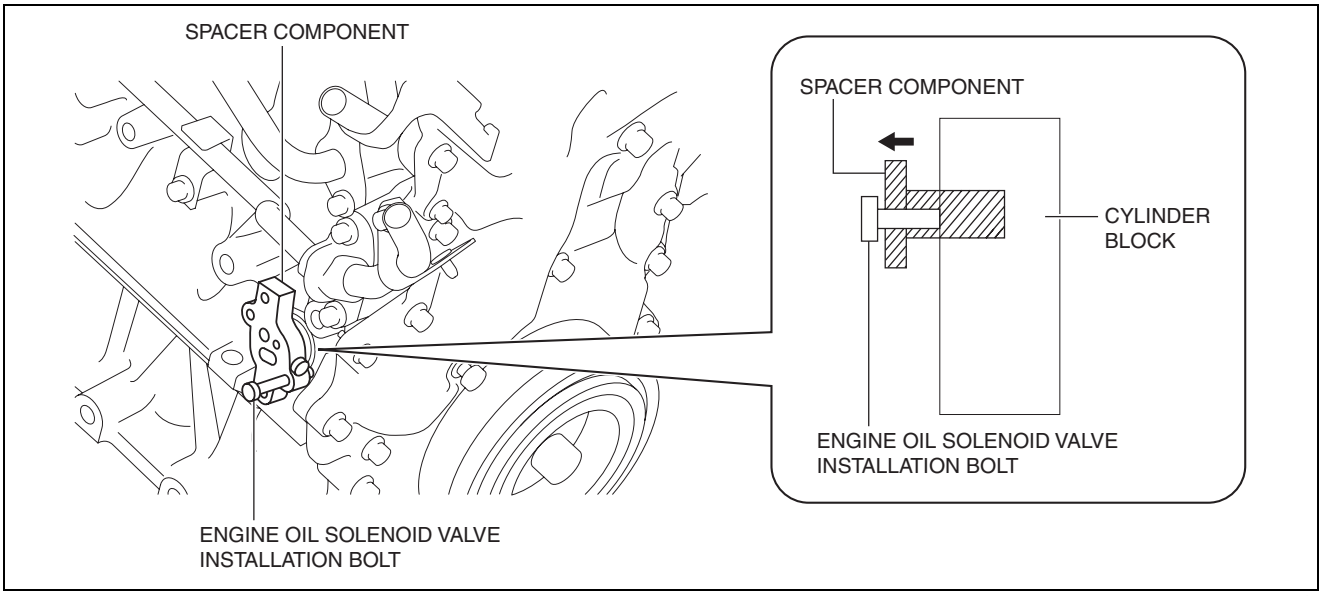

ac5wzw0000518

(5) When the spacer component comes up, pull it out by hand.

ENGINE OIL SOLENOID VALVE INSPECTION [SKYACTIV-D 2.2]

id0111s6002900

Engine Oil Solenoid Valve Operation Inspection

1. Remove the engine oil solenoid valve. (See 01-11B-11 ENGINE OIL SOLENOID VALVE REMOVAL/INSTALLATION [SKYACTIV-D 2.2].)
2. Verify that the battery is fully charged.
3. Connect the battery to the engine oil solenoid valve connector (2 terminals) as shown in the figure.
4. Verify that there is an operation sound from the engine oil solenoid valve when applying battery voltage between engine oil solenoid valve connector terminals A and B.

   Note
   - A click sound is heard when the engine oil solenoid valve operates normally.
   - If the operation sound cannot be heard, replace the engine oil solenoid valve.

5. Install the engine oil solenoid valve. (See 01-11B-11 ENGINE OIL SOLENOID VALVE REMOVAL/INSTALLATION [SKYACTIV-D 2.2].)

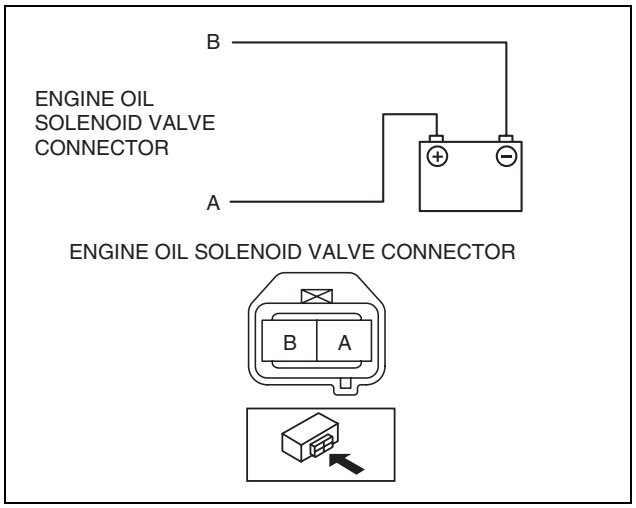

ac5wzw0000480

LUBRICATION [SKYACTIV-D 2.2]

OIL PAN REMOVAL/INSTALLATION [SKYACTIV-D 2.2]

id0111s6800200

Warning

- **Hot engines and engine oil can cause severe burns. Turn off the engine and wait until it and the engine oil have cooled.**
- **A vehicle that is lifted but not securely supported on safety stands is dangerous. It can slip or fall, causing death or serious injury. Never work around or under a lifted vehicle if it is not securely supported on safety stands.**
- **Continuous exposure to USED engine oil has caused skin cancer in laboratory mice. Protect your skin by washing with soap and water immediately after working with engine oil.**

1. Remove the front under cover No.2. (See 09-16-41 FRONT UNDER COVER No.2 REMOVAL/INSTALLATION.)
2. Drain the engine oil. (See 01-11B-4 ENGINE OIL REPLACEMENT [SKYACTIV-D 2.2].)
3. Remove in the order indicated in the table.
4. Install in the reverse order of removal.
5. Refill with the specified type and amount of the engine oil. (See 01-11B-4 ENGINE OIL REPLACEMENT [SKYACTIV-D 2.2].)
6. Start the engine and confirm that there is no oil leakage.
   - If there is oil leakage, repair or replace the applicable part.
7. Inspect the oil level. (See 01-11B-3 ENGINE OIL LEVEL INSPECTION [SKYACTIV-D 2.2].)

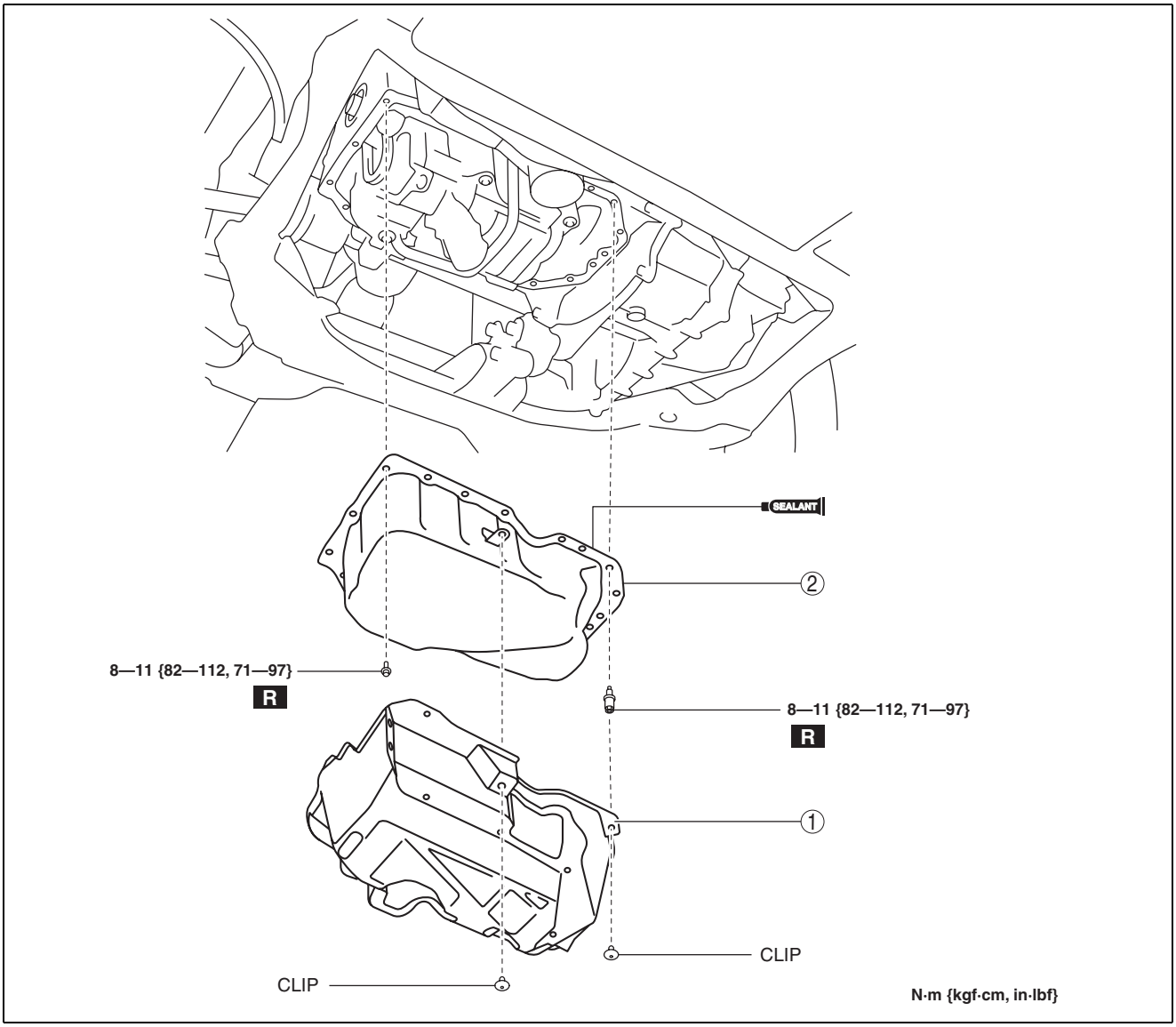

ac5wzw0000482

LUBRICATION [SKYACTIV-D 2.2]

1	Seal plate (See 01-11B-18 Seal Plate Installation Note.)

2	Oil pan (See 01-11B-16 Oil Pan Removal Note.) (See 01-11B-16 Oil Pan Installation Note.)

Oil Pan Removal Note

1. Remove the oil pan using a separator tool.

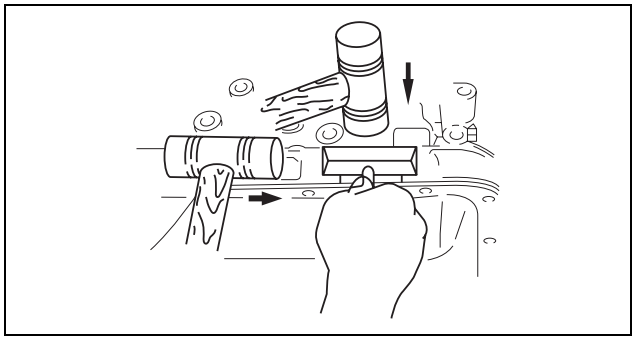

am6zzw0000230

Oil Pan Installation Note

1. Completely clean and remove any oil, dirt, sealant or other foreign material that may be adhering to the cylinder block and oil pan.

Caution

- **Apply the silicon sealant in a single, unbroken line around the whole perimeter.**
- **To prevent silicone sealant from hardening, adhere the oil pan to the cylinder block within 10 min after silicone sealant is applied. Tighten the installation bolts completely soon after adhering.**
- **Using bolts with the old seal adhering could cause cracks in the cylinder block.**

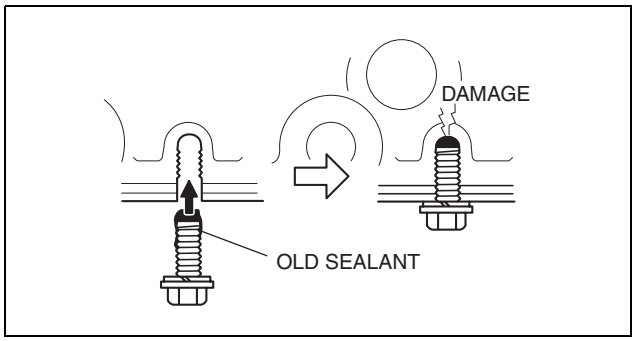

am6zzw0000230

LUBRICATION [SKYACTIV-D 2.2]

2. Apply silicone sealant to the oil pan along the inside of the bolt holes as shown in the figure.

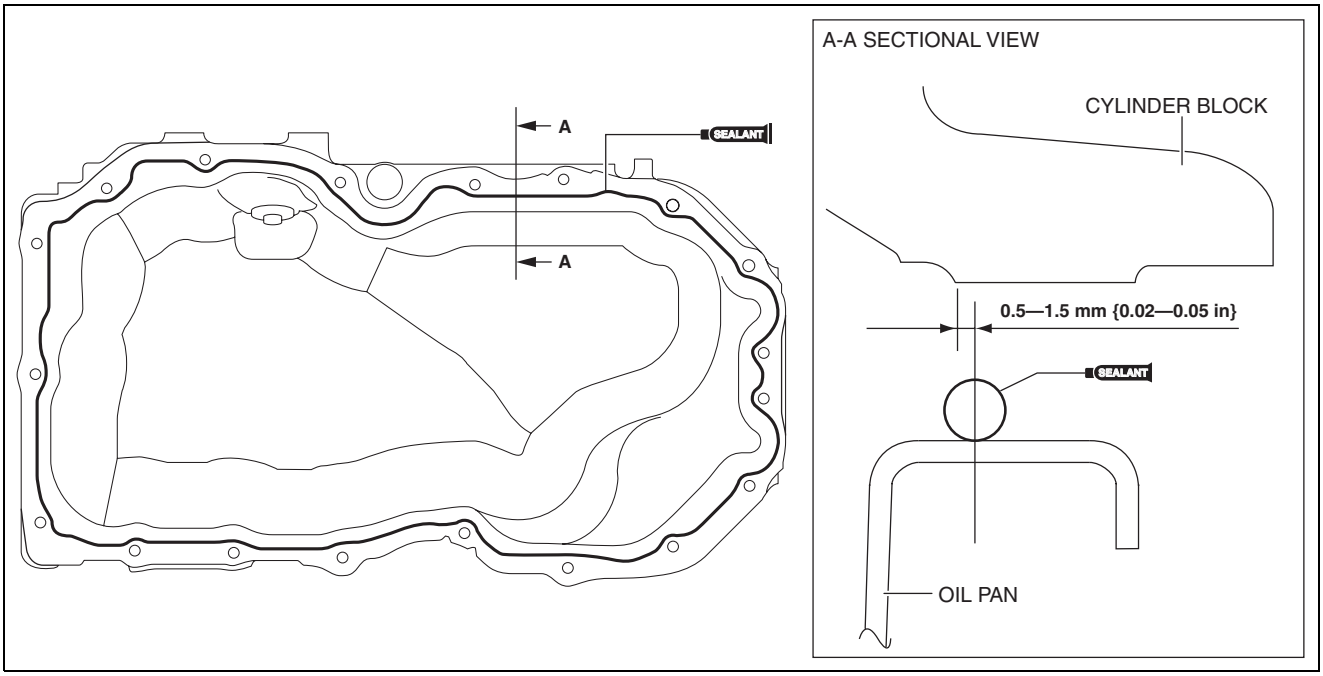

ac5wzw0000482

Thickness
3.0—7.0 mm {0.12—0.27 in}

3. Install the oil pan to the cylinder block.

Caution
- **There are two types of oil pan installation bolts of different lengths and shapes. Install each bolt to the specified position according to the following procedure. In addition, use new bolts because the oil pan installation bolts cannot be reused.**

4. Install the oil pan using the following procedure:
   (1) Install the oil pan installation bolts as shown in the figure.

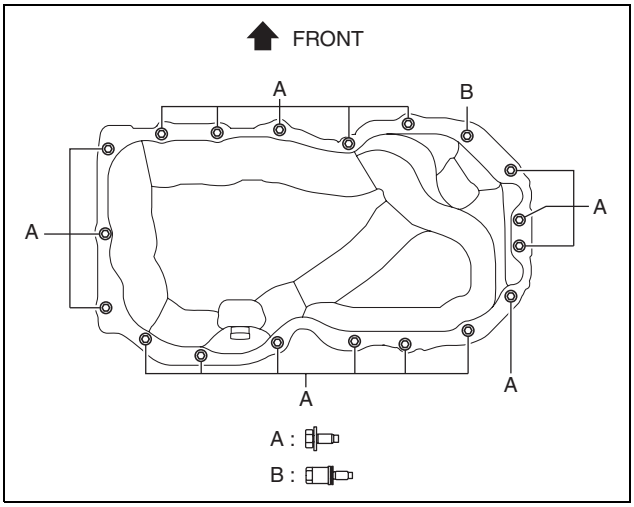

ac5wzw0000482

LUBRICATION [SKYACTIV-D 2.2]

(2) Temporarily tighten the two bolts shown in the figure.

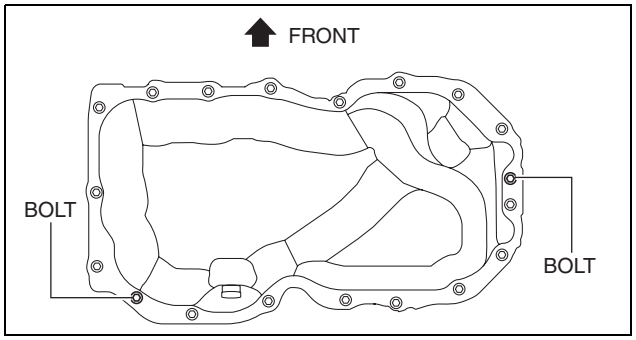

ac5wzw0000482

(3) Tighten the bolts in the order shown in the figure.

Tightening torque
8—11 N·m {82—112 kgf·cm, 71—97 in·lbf}

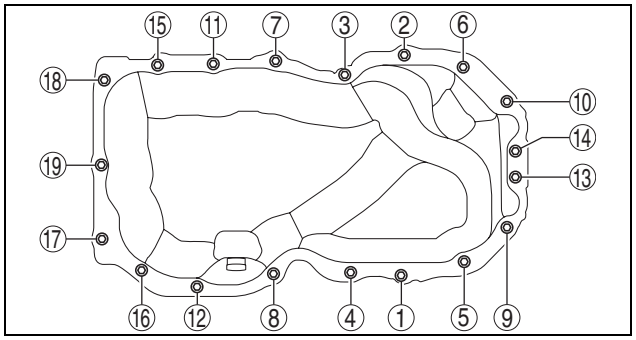

ac5jjw00004192

Seal Plate Installation Note

1. Install the seal plate using the following procedure:
   (1) Install the seal plate installation clips in the order shown in the figure.

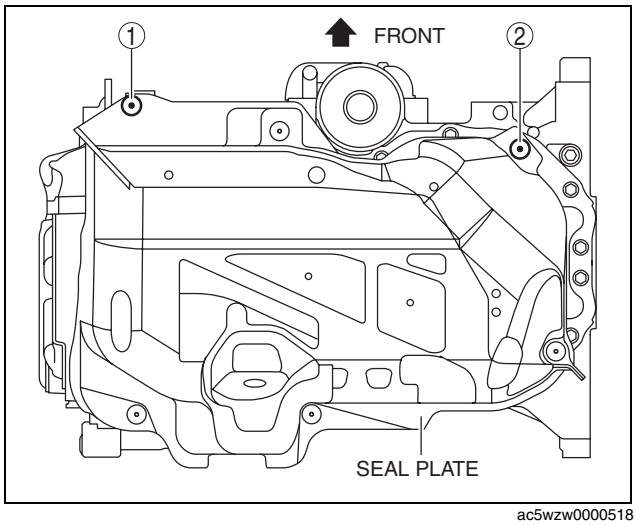

ac5wzw0000518

LUBRICATION [SKYACTIV-D 2.2]

(2) Install the seal plate installation clips as shown in the figure.

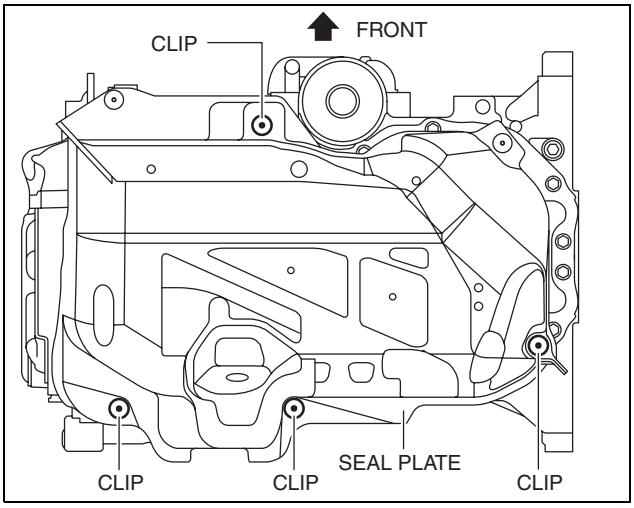

ac5wzw0000519

OIL PUMP REMOVAL/INSTALLATION [SKYACTIV-D 2.2]

id0111s6800600

Warning

- **Hot engines and engine oil can cause severe burns. Turn off the engine and wait until it and the engine oil have cooled.**
- **A vehicle that is lifted but not securely supported on safety stands is dangerous. It can slip or fall, causing death or serious injury. Never work around or under a lifted vehicle if it is not securely supported on safety stands.**
- **Continuous exposure to USED engine oil has caused skin cancer in laboratory mice. Protect your skin by washing with soap and water immediately after working with engine oil.**

Caution

- **If the camshaft is rotated with the timing chain removed and the piston at the top dead center position, the valve may contact the piston and the engine could be damaged. When rotating the camshaft with the timing chain removed, rotate it after lowering the piston from the top dead center position.**
- **When rotating the camshaft using a wrench on the cast hexagon, the wrench may contact the rocker arm and damage the rocker arm. To prevent damage to the rocker arm when holding the camshaft on the cast hexagon, use the wrench at engine rear side as shown in the figure to secure a clearance between the cam.**

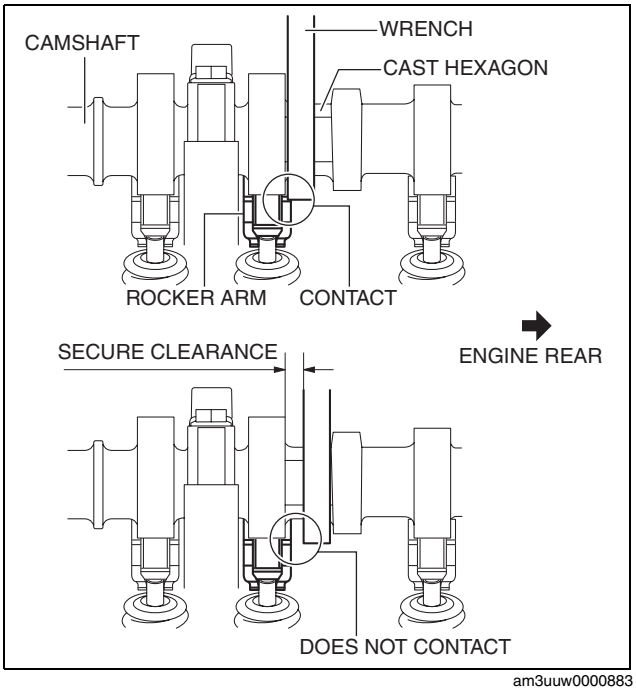

am3uuw0000883

LUBRICATION [SKYACTIV-D 2.2]

Note
- Width at the cast hexagon of the camshaft is 22—24 mm {0.87—0.94 in}.

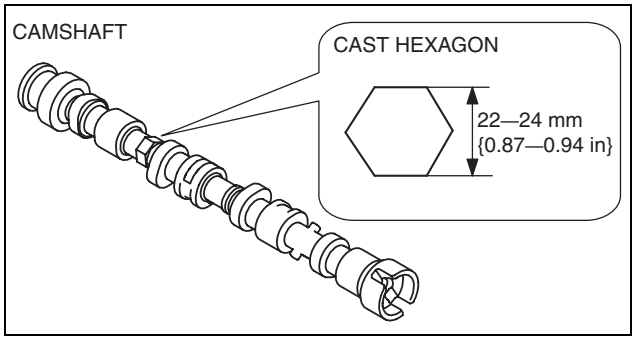

ac5wzw0000483

1. Disconnect the negative battery cable. (See 01-17B-9 NEGATIVE BATTERY CABLE DISCONNECTION/CONNECTION [SKYACTIV-D 2.2].)
2. Remove the engine cover. (See 01-10B-4 ENGINE COVER REMOVAL/INSTALLATION [SKYACTIV-D 2.2].)
3. Remove the front under cover No.2. (See 09-16-41 FRONT UNDER COVER No.2 REMOVAL/INSTALLATION.)
4. Remove the splash shield. (See 09-16-49 SPLASH SHIELD REMOVAL/INSTALLATION.)
5. Remove the drive belt. (See 01-10B-8 DRIVE BELT REMOVAL/INSTALLATION [SKYACTIV-D 2.2].)
6. Drain the engine oil. (See 01-11B-4 ENGINE OIL REPLACEMENT [SKYACTIV-D 2.2].)
7. Remove the oil pan. (See 01-11B-15 OIL PAN REMOVAL/INSTALLATION [SKYACTIV-D 2.2].)
8. Remove the fuel injectors. (See 01-14B-35 FUEL INJECTOR REMOVAL/INSTALLATION [SKYACTIV-D 2.2].)
9. Drain the engine coolant. (See 01-12B-4 ENGINE COOLANT REPLACEMENT [SKYACTIV-D 2.2].)
10. Remove the timing chain. (See 01-10B-16 TIMING CHAIN REMOVAL/INSTALLATION [SKYACTIV-D 2.2].)
11. Remove in the order indicated in the table.
12. Install in the reverse order of removal.
13. Refill with the specified type and amount of the engine oil. (See 01-11B-4 ENGINE OIL REPLACEMENT [SKYACTIV-D 2.2].)
14. Refill the engine coolant. (See 01-12B-4 ENGINE COOLANT REPLACEMENT [SKYACTIV-D 2.2].)
15. Inspect for engine coolant leakage. (See 01-12B-7 ENGINE COOLANT LEAKAGE INSPECTION [SKYACTIV-D 2.2].)
16. Start the engine and inspect and adjust the following:
    - Leakage of engine oil.
    - Oil level (See 01-11B-3 ENGINE OIL LEVEL INSPECTION [SKYACTIV-D 2.2].)
    - Runout and contact of pulley and belt.
    - Idling speed (See 01-10B-3 ENGINE TUNE-UP [SKYACTIV-D 2.2].)

LUBRICATION [SKYACTIV-D 2.2]

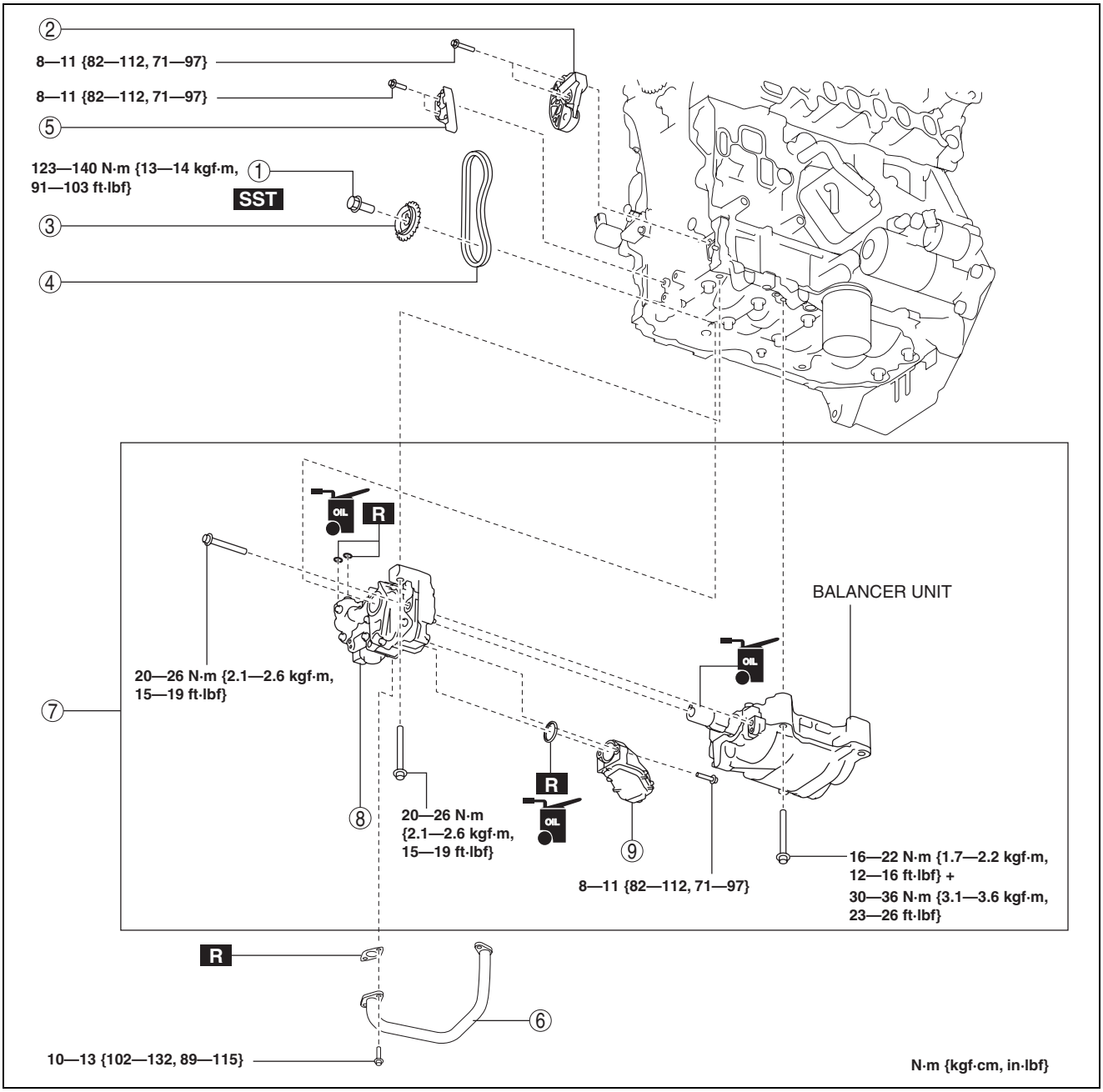

ac5wzw0000483

1	Oil pump driven sprocket installation bolt (See 01-11B-22 Oil Pump Chain Removal Note.) (See 01-11B-27 Oil Pump Chain Installation Note.)
2	Oil pump chain tensioner (See 01-11B-22 Oil Pump Chain Removal Note.) (See 01-11B-27 Oil Pump Chain Installation Note.)
3	Oil pump driven sprocket (See 01-11B-22 Oil Pump Chain Removal Note.) (See 01-11B-27 Oil Pump Chain Installation Note.)
4	Oil pump chain (See 01-11B-22 Oil Pump Chain Removal Note.) (See 01-11B-27 Oil Pump Chain Installation Note.)
5	Oil pump chain guide

6	Oil pipe
7	Balancer component (See 01-11B-24 Oil Pump, Balancer Unit Installation Note.)
8	Oil pump (See 01-11B-24 Oil Pump, Balancer Unit Installation Note.)
9	Oil strainer (See 01-11B-24 Oil Pump, Balancer Unit Installation Note.)

LUBRICATION [SKYACTIV-D 2.2]

Oil Pump Chain Removal Note

1. Verify that the oil pump driven sprocket alignment marks and key are aligned to the positions shown in the figure.

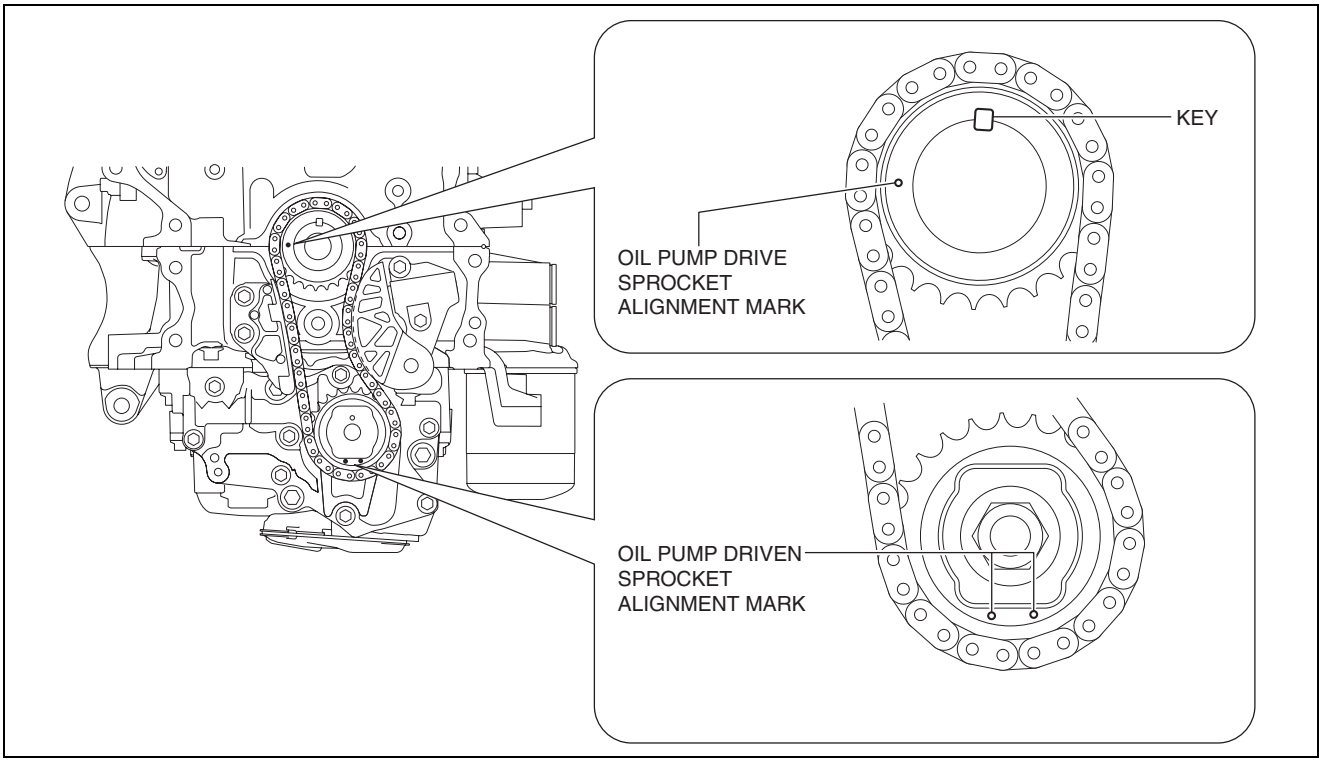

ac5wzw0000519

Note

- If they are not in the positions shown in the figure, rotate the crankshaft to set cylinder No.1 to top dead center (TDC).

2. Temporarily assemble the crankshaft pulley lock bolt, and lock the oil pump against rotation as shown in the figure.
3. Slightly loosen the oil pump driven sprocket installation bolt.

Note

- At this stage, only loosen the oil pump driven sprocket installation bolt, do not remove it. Remove the bolt after removing the oil pump chain tensioner.

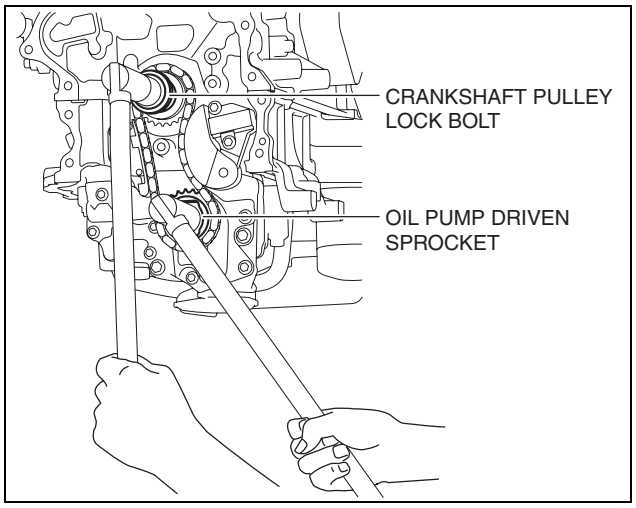

ac5wzw0000519

LUBRICATION [SKYACTIV-D 2.2]

4. Set a cloth wrapped flathead screwdriver in the gap between the lower cylinder block projection and the oil pump chain as shown in the figure.
5. Move the screwdriver in the direction of the arrow and press the oil pump chain, and then press in the plunger of the oil pump chain tensioner.

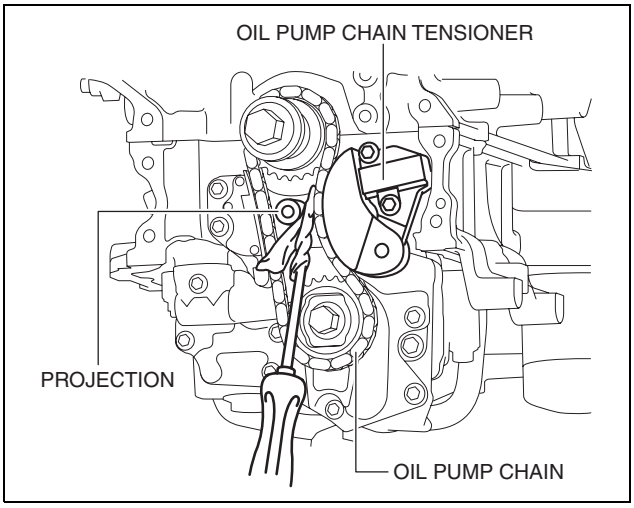

ac5wzw0000519

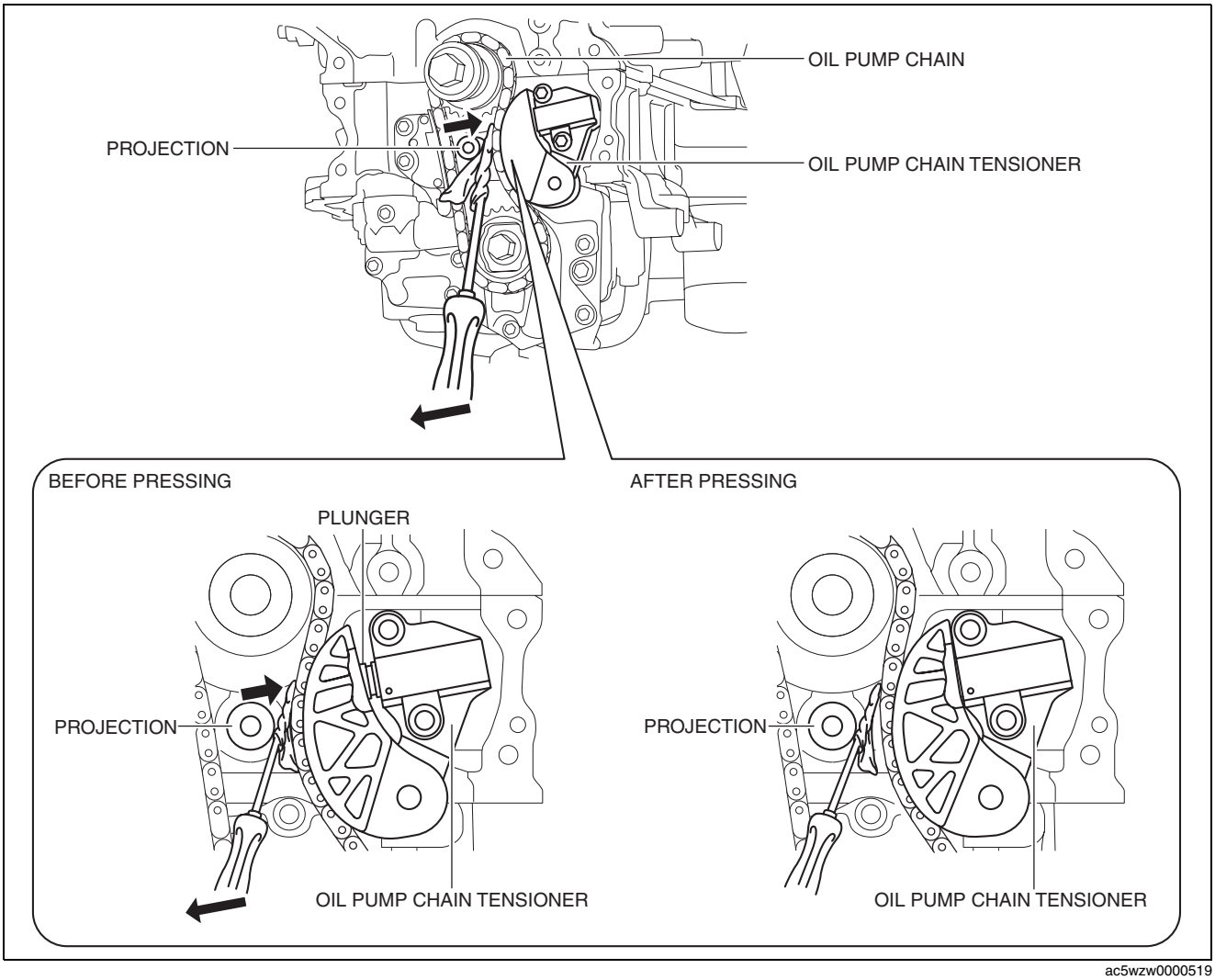

ac5wzw0000519

LUBRICATION [SKYACTIV-D 2.2]

6. Insert a wire with an approx. diameter of **1.4 mm {0.055 in}** or a paper clip into the body hole of the oil pump chain tensioner with the plunger pressed.

   Note
   - The wire or paper clip secures the plunger, and the tension can be released.

7. Remove the oil pump chain tensioner.
8. Remove the oil pump chain and oil pump driven sprocket as a single unit.
9. Remove the temporarily assembled crankshaft pulley lock bolt.

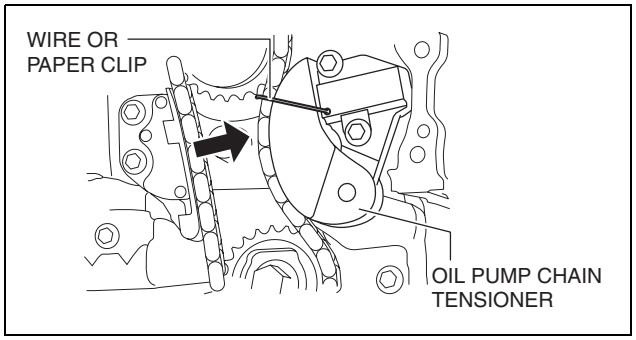

ac5wzw0000499

Oil Pump, Balancer Unit Installation Note

Caution
- **If the balancer shaft (No.1) spline is scratched or damaged, the engagement with the oil pump spline could worsen and it may not be possible to assemble the oil pump. Therefore, be careful not to scratch or damage the spline.**
- **Because the balancer shaft (No.1) journal slides with oil pump bearing, if the journal is scratched or damaged, the bearing could become damaged. Therefore, be careful not to scratch or damage the journal.**

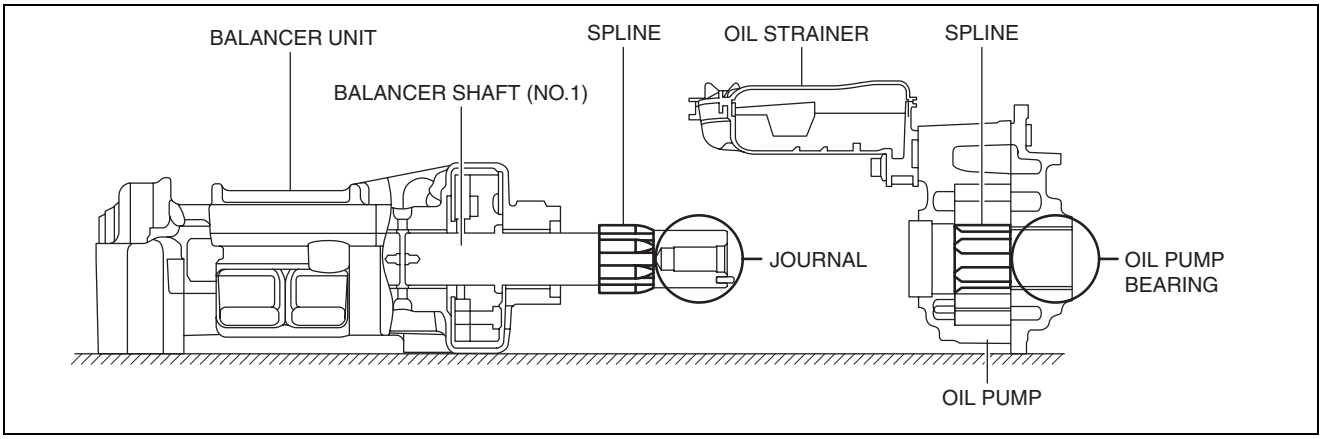

ac5wzw0000484

LUBRICATION [SKYACTIV-D 2.2]

1. Install the oil pump and balancer component using the following procedure:
   (1) Apply clean engine oil to a new oil strainer O-ring.
   (2) Assemble the oil strainer to the oil pump.
   (3) Verify that the balancer shaft (No.1) knock pin position is perpendicular to the cylinder block installation surface.
      - If the knock pin position has deviated, rotate the balancer shaft (No.1) and correct.
   (4) Apply engine oil to the balancer shaft (No.1) journal area.
   (5) Align the heights of the balancer shaft (No.1) spline and oil pump spline and install the oil pump to the balancer unit.

   Note
   - The balancer shaft (No.1) spline and oil pump spline timing does not need to be matched.

   (6) Temporarily tighten the bolts until the seating surfaces of the oil pump installation bolts are completely seated.
   (7) Install the oil pump and balancer unit to the cylinder block and temporarily tighten the seating face of the bolts shown in the figure until they are completely seated.

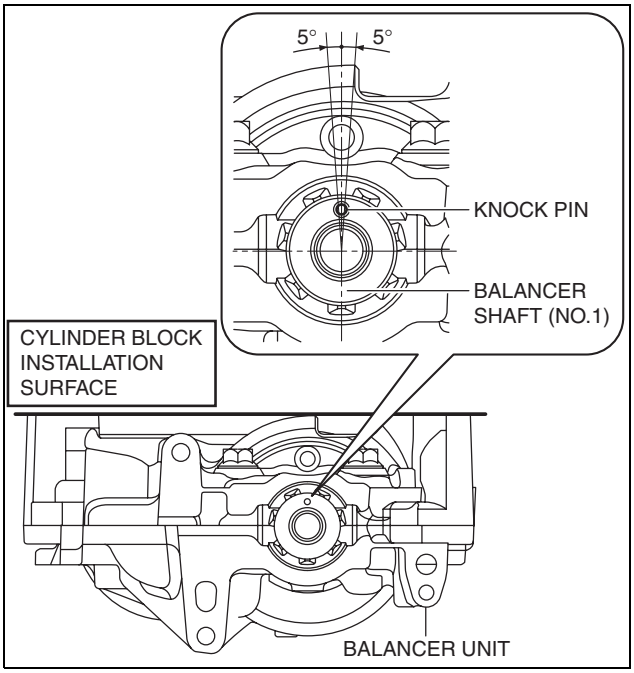

ac5wzw0000484

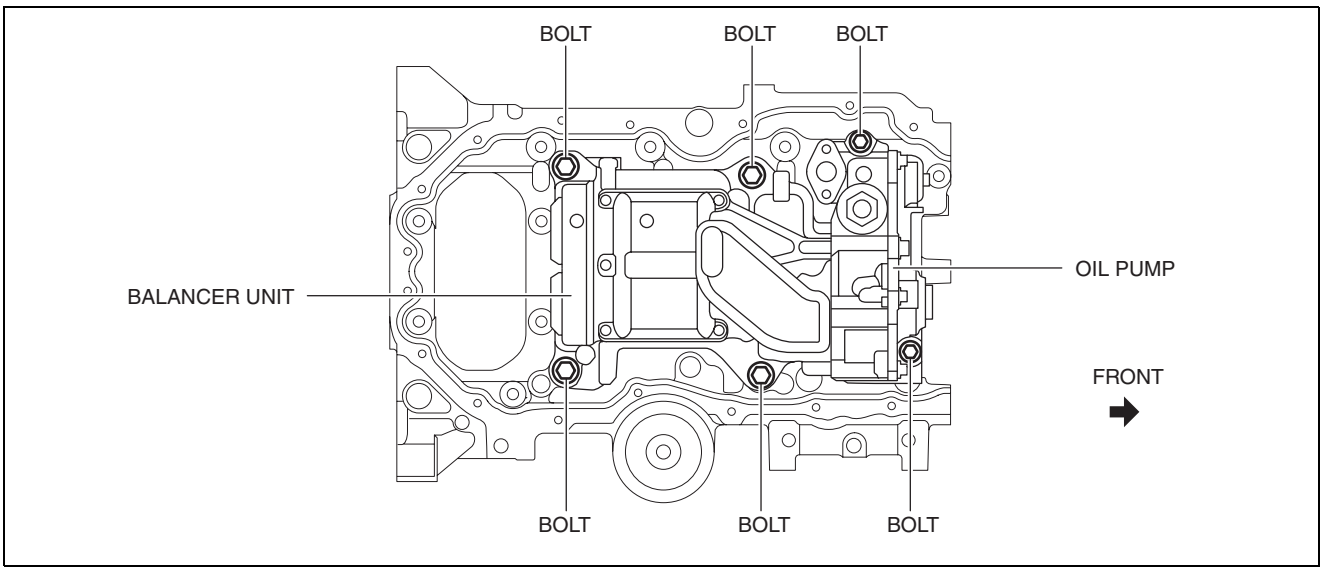

ac5wzw0000484

LUBRICATION [SKYACTIV-D 2.2]

(8) Tighten oil pump installation bolts in the order shown in the figure to the specified torque.

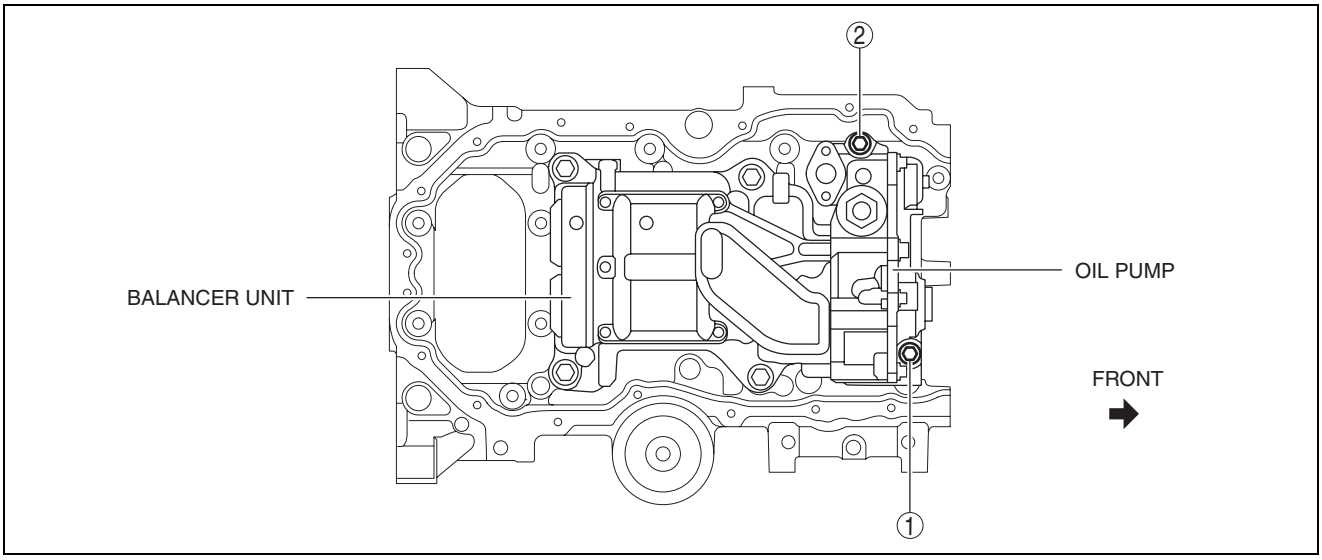

ac5wzw0000484

Tightening torque
20—26 N·m {2.1—2.6 kgf·m, 15—19 ft·lbf}

(9) Tighten the balancer unit installation bolts in two steps in the order shown in the figure to the specified torque.

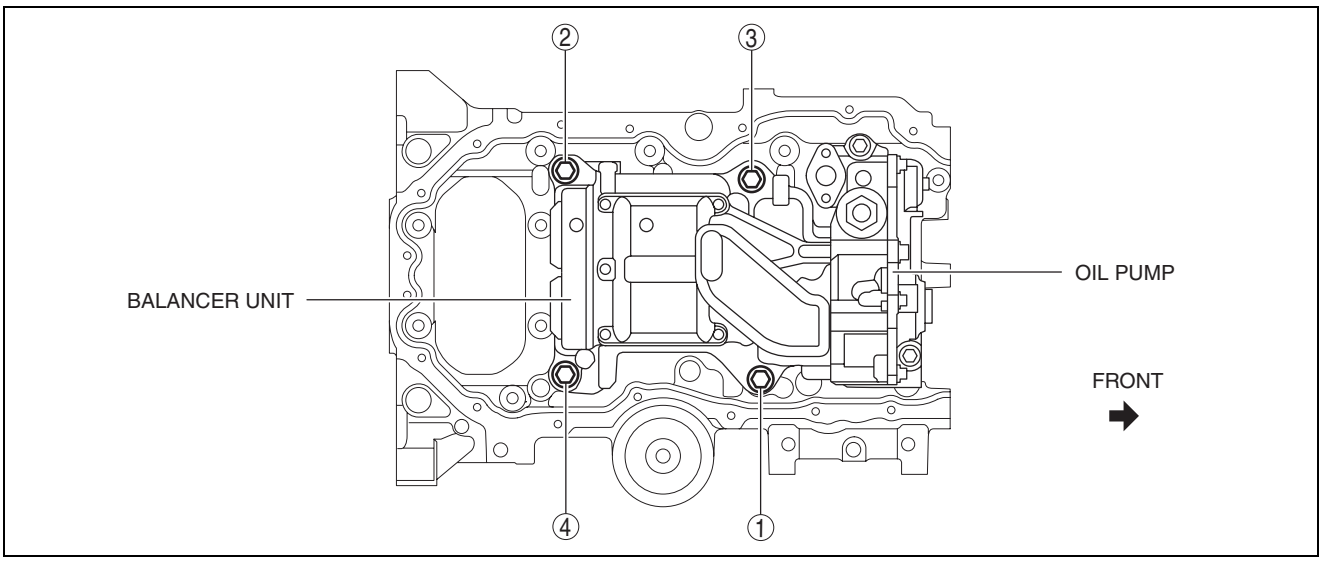

ac5wzw0000484

Tightening torque
First step: 16—22 N·m {1.7—2.2 kgf·m, 12—16 ft·lbf}
Second step: 30—36 N·m {3.1—3.6 kgf·m, 23—26 ft·lbf}

LUBRICATION [SKYACTIV-D 2.2]

(10)Tighten the oil pump installation bolts in the order shown in the figure.

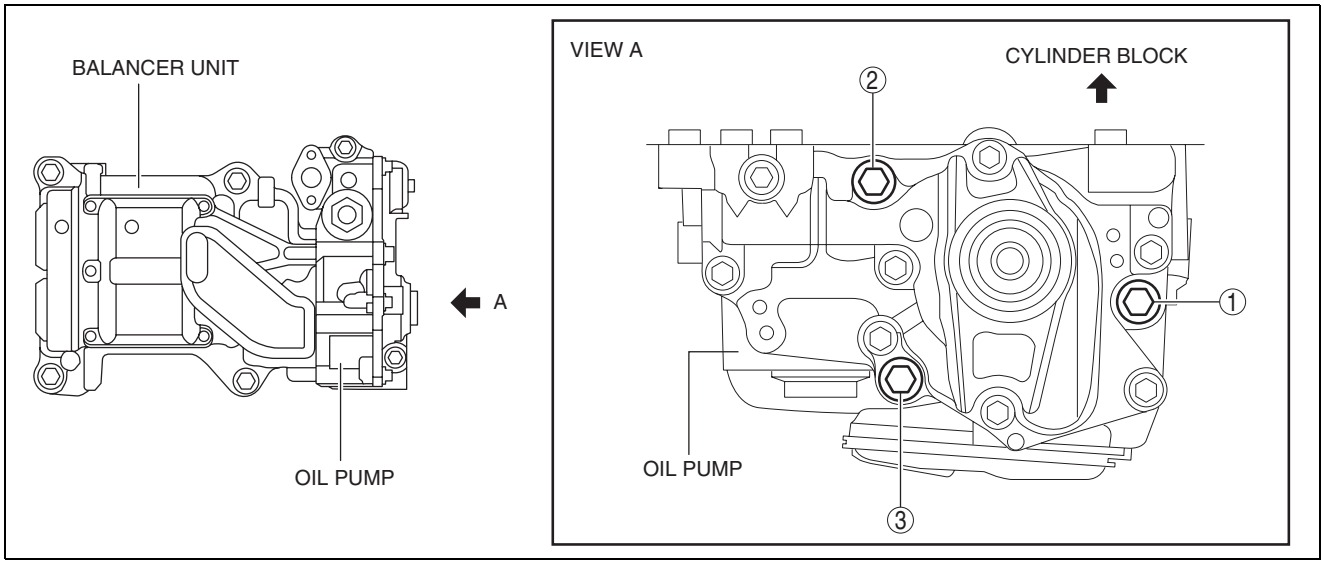

ac5wzw0000484

Tightening torque
20—26 N·m {2.1—2.6 kgf·m, 15—19 ft·lbf}

Oil Pump Chain Installation Note

1. Verify that the key and knock pin are aligned to the positions shown in the figure.
   - If they are not in the positions shown in the figure, rotate the crankshaft and balancer shaft (No.1) to set cylinder No.1 to top dead center (TDC).

   Note
   - When rotating the balancer shaft (No.1), temporarily assemble the oil pump driven sprocket and rotate while holding the sprocket with a hand.

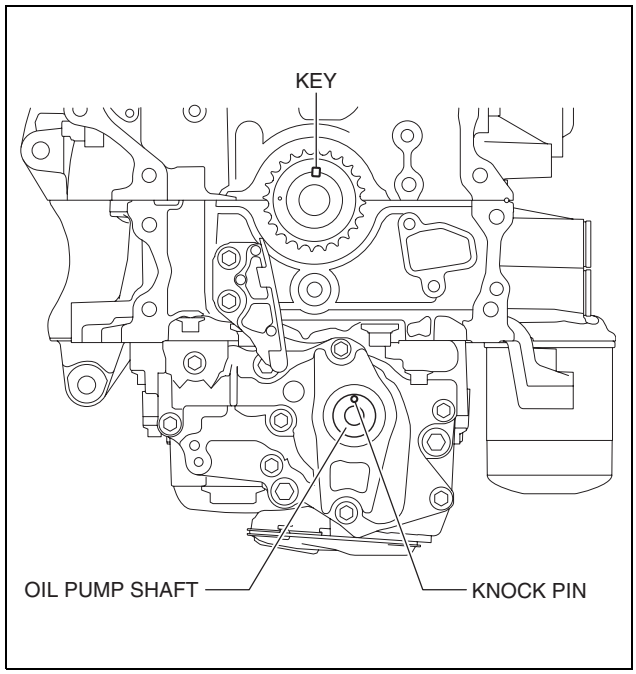

ac5wzw0000499

LUBRICATION [SKYACTIV-D 2.2]

2. Align the oil pump chain alignment marks with the oil pump driven sprocket alignment marks.
3. Install the oil pump chain and oil pump driven sprocket as a single unit while aligning the alignment marks on each sprocket and oil pump chain as shown in the figure.

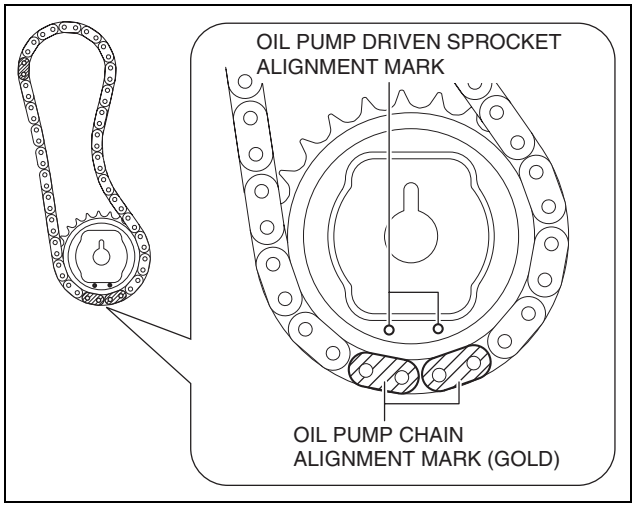

ac5wzw0000519

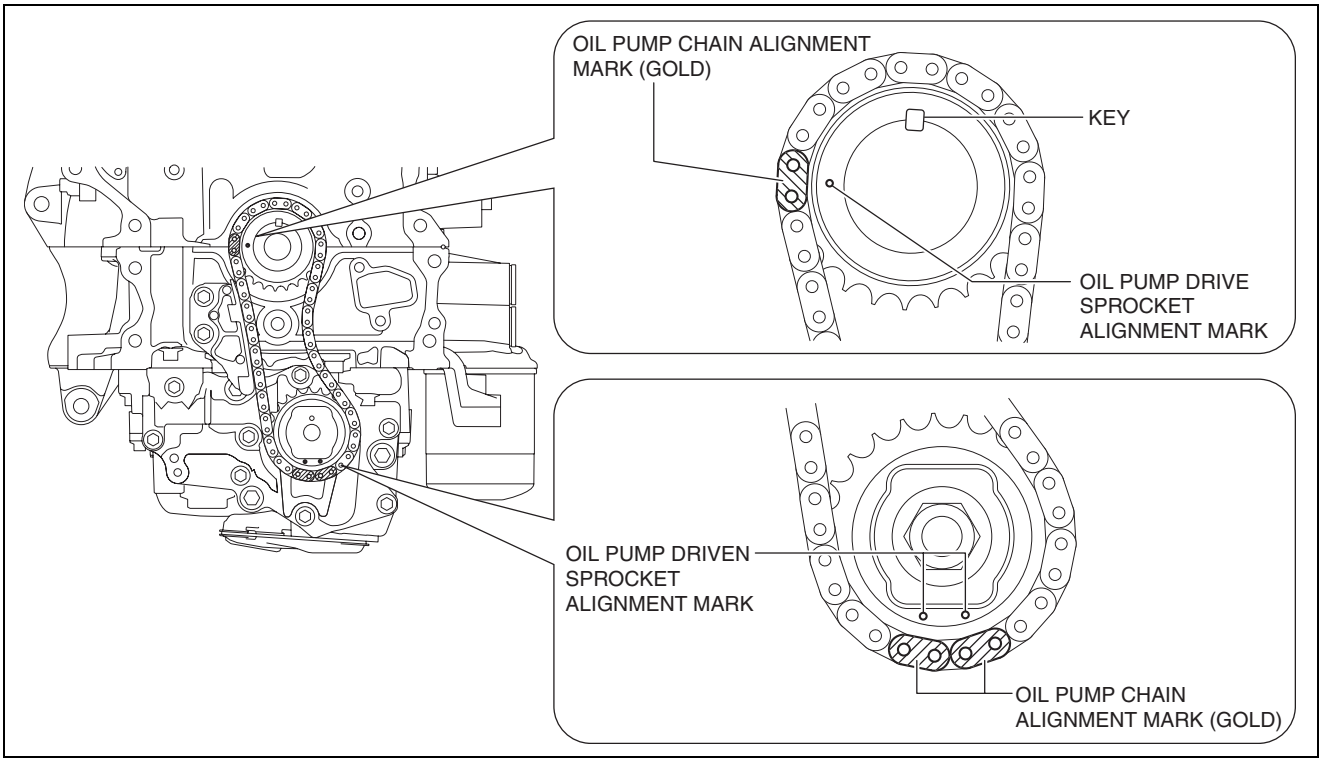

ac5wzw0000499

4. Temporarily tighten the oil pump driven sprocket installation bolt.
5. Install the oil pump chain tensioner.

Caution

- **At this stage, do not remove the wire or paper clip installed to the oil pump chain tensioner.**

LUBRICATION [SKYACTIV-D 2.2]

6. Tighten the oil pump driven sprocket installation bolt using the following procedure:
   (1) Temporarily assemble the crankshaft pulley and crankshaft pulley lock bolt.
   (2) Install the **SST** shown in the figure and lock the oil pump against rotation. (See 01-10B-72 FRONT OIL SEAL REPLACEMENT [SKYACTIV-D 2.2].)
   (3) Tighten the oil pump driven sprocket installation bolt.

   Tightening torque
   123—140 N·m {13—14 kgf·m, 91—103 ft·lbf}

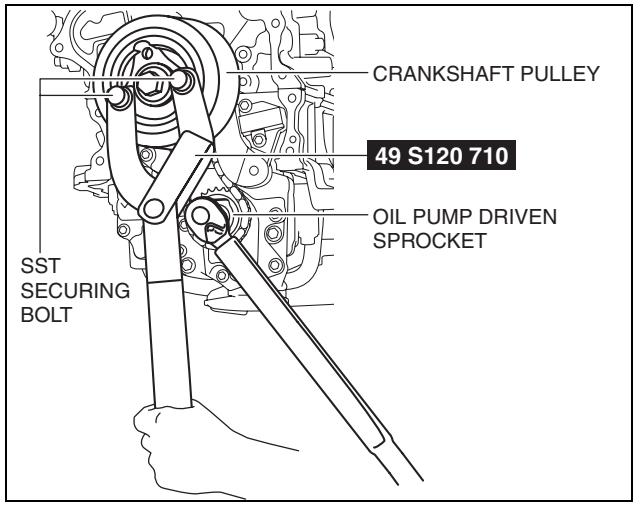

ac5wzw0000519

7. Remove the temporarily assembled crankshaft pulley and crankshaft pulley lock bolt.
8. Remove the wire or paper clip installed to the oil pump chain tensioner and apply tension to the oil pump chain.
   - If a new oil pump chain tensioner is used, remove the installed stopper.

01-12A COOLING SYSTEM [SKYACTIV-G 2.0]

COOLING SYSTEM LOCATION INDEX [SKYACTIV-G 2.0] 01-12A–2
COOLING SYSTEM SERVICE WARNINGS [SKYACTIV-G 2.0]. 01-12A–3
ENGINE COOLANT LEVEL INSPECTION [SKYACTIV-G 2.0] 01-12A–3
ENGINE COOLANT REPLACEMENT [SKYACTIV-G 2.0] 01-12A–4
ENGINE COOLANT PROTECTION INSPECTION [SKYACTIV-G 2.0] 01-12A–6
ENGINE COOLANT LEAKAGE INSPECTION [SKYACTIV-G 2.0] 01-12A–7
COOLING SYSTEM CAP INSPECTION [SKYACTIV-G 2.0] 01-12A–8
COOLANT RESERVE TANK REMOVAL/INSTALLATION [SKYACTIV-G 2.0] 01-12A–8
Coolant Reserve Tank Removal Note 01-12A–9
RADIATOR REMOVAL/INSTALLATION [SKYACTIV-G 2.0] 01-12A–9
Upper Mount Rubber Bracket Removal Note 01-12A–11
Radiator Removal Note 01-12A–11
THERMOSTAT REMOVAL/INSTALLATION [SKYACTIV-G 2.0] 01-12A–12
Thermostat Cover Removal Note 01-12A–13
Thermostat Installation Note 01-12A–13
THERMOSTAT INSPECTION [SKYACTIV-G 2.0] 01-12A–13
WATER PUMP REMOVAL/INSTALLATION [SKYACTIV-G 2.0] 01-12A–14
Water Pump Pulley Removal Note 01-12A–14
Water Pump Component Removal Note 01-12A–15
O-ring Installation Note 01-12A–16
Water Pump Component Installation Note 01-12A–16
Water Pump Pulley Installation Note. . . 01-12A–18
COOLING FAN MOTOR REMOVAL/INSTALLATION [SKYACTIV-G 2.0] 01-12A–19
Upper radiator hose Removal Note. . . . 01-12A–20
Cooling Fan Component Removal Note 01-12A–20
COOLING FAN MOTOR INSPECTION [SKYACTIV-G 2.0] 01-12A–21
Part Inspection 01-12A–21

COOLING SYSTEM [SKYACTIV-G 2.0]

COOLING SYSTEM LOCATION INDEX [SKYACTIV-G 2.0]

id0112h4800100

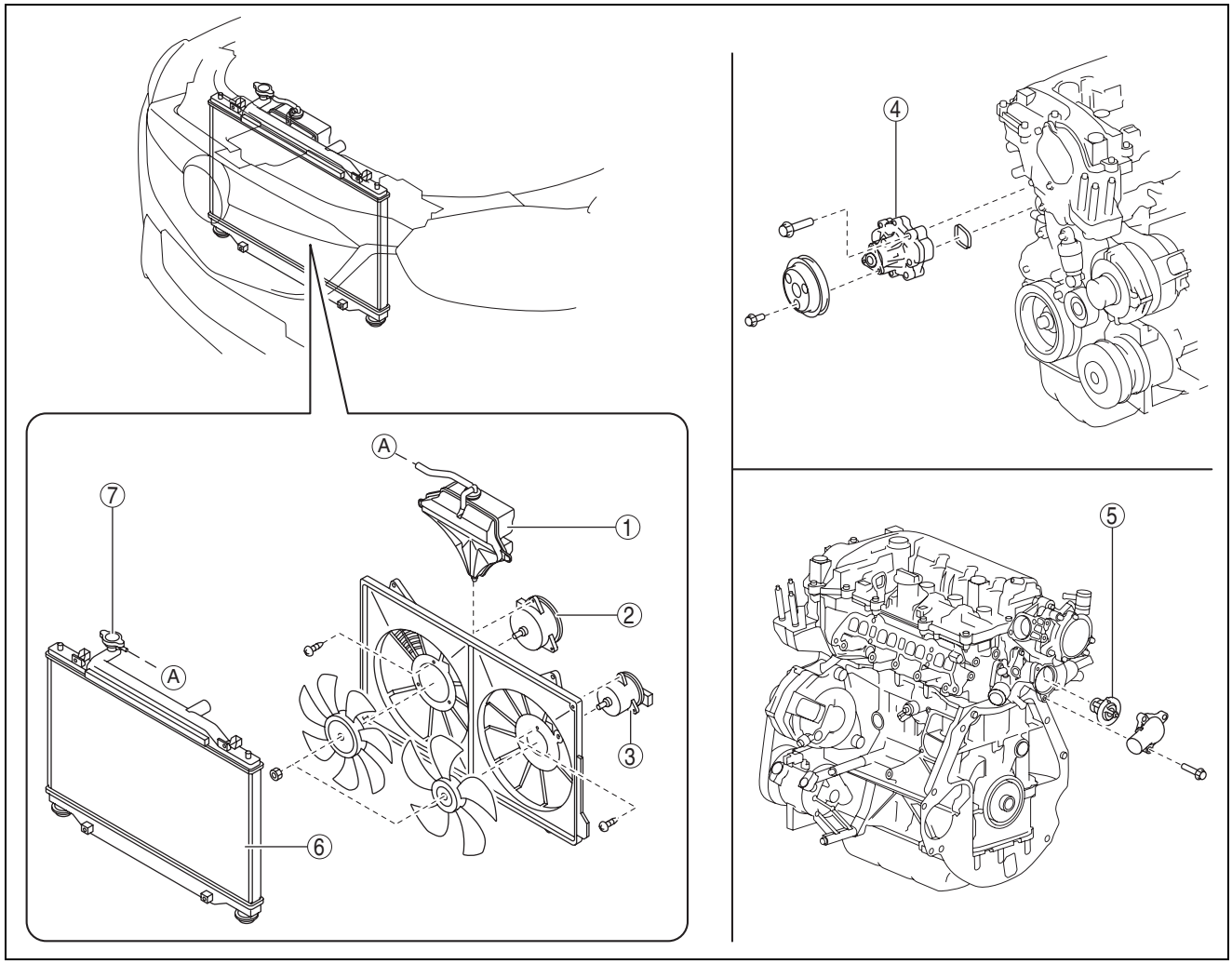

ac5wzw0000265

1	Coolant reserve tank (See 01-12A-3 ENGINE COOLANT LEVEL INSPECTION [SKYACTIV-G 2.0].) (See 01-12A-8 COOLANT RESERVE TANK REMOVAL/INSTALLATION [SKYACTIV-G 2.0].)
2	Cooling fan motor No.2 (See 01-12A-19 COOLING FAN MOTOR REMOVAL/INSTALLATION [SKYACTIV-G 2.0].) (See 01-12A-21 COOLING FAN MOTOR INSPECTION [SKYACTIV-G 2.0].)
3	Cooling fan motor No.1 (See 01-12A-19 COOLING FAN MOTOR REMOVAL/INSTALLATION [SKYACTIV-G 2.0].) (See 01-12A-21 COOLING FAN MOTOR INSPECTION [SKYACTIV-G 2.0].)
4	Water pump (See 01-12A-14 WATER PUMP REMOVAL/INSTALLATION [SKYACTIV-G 2.0].)

5	Thermostat (See 01-12A-12 THERMOSTAT REMOVAL/INSTALLATION [SKYACTIV-G 2.0].) (See 01-12A-13 THERMOSTAT INSPECTION [SKYACTIV-G 2.0].)
6	Radiator (See 01-12A-6 ENGINE COOLANT PROTECTION INSPECTION [SKYACTIV-G 2.0].) (See 01-12A-4 ENGINE COOLANT REPLACEMENT [SKYACTIV-G 2.0].) (See 01-12A-7 ENGINE COOLANT LEAKAGE INSPECTION [SKYACTIV-G 2.0].) (See 01-12A-9 RADIATOR REMOVAL/INSTALLATION [SKYACTIV-G 2.0].)
7	Cooling system cap (See 01-12A-8 COOLING SYSTEM CAP INSPECTION [SKYACTIV-G 2.0].)

COOLING SYSTEM [SKYACTIV-G 2.0]

COOLING SYSTEM SERVICE WARNINGS [SKYACTIV-G 2.0]

id0112h4800200

Warning

- **Never remove the cooling system cap or loosen the radiator drain plug while the engine is running, or when the engine and radiator are hot. Scalding engine coolant and steam may shoot out and cause serious injury. It may also damage the engine and cooling system.**
- **Turn off the engine and wait until it is cool. Even then, be very careful when removing the cap. Wrap a thick cloth around it and slowly turn it counterclockwise to the first stop. Step back while the pressure escapes.**
- **When you are sure all the pressure is gone, press down on the cap using the cloth, turn it, and remove it.**
- **Depending on the vehicle, the cooling fan may operate suddenly even when the ignition is off. Therefore, keep hands and tools away from the cooling fan even if the cooling fan is not operating to prevent injury to personnel or damage to the cooling fan. Always disconnect the negative battery cable when servicing the cooling fan or parts near the cooling fan.**

ENGINE COOLANT LEVEL INSPECTION [SKYACTIV-G 2.0]

id0112h4800300

Warning

- **Never remove the cooling system cap or loosen the radiator drain plug while the engine is running, or when the engine and radiator are hot. Scalding engine coolant and steam may shoot out and cause serious injury. It may also damage the engine and cooling system.**
- **Turn off the engine and wait until it is cool. Even then, be very careful when removing the cap. Wrap a thick cloth around it and slowly turn it counterclockwise to the first stop. Step back while the pressure escapes.**
- **When you are sure all the pressure is gone, press down on the cap using the cloth, turn it, and remove it.**

Note

- If the “FL22” mark is shown on or near the cooling system cap, use FL22 type engine coolant.
- FL22 type engine coolant is shipped as a diluted solution. Use the solution as is when replacing coolant.

1. Remove the cooling system cap.
2. Verify that the engine coolant is filled close to the top of the radiator filler neck.
   - If the engine coolant level is low, add engine coolant.
3. Verify that the engine coolant level in the coolant reserve tank is between the F and L marks.
   - If the engine coolant level is below the L mark, add engine coolant.

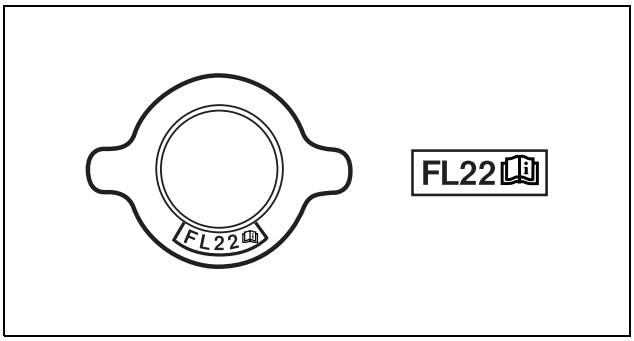

acxuuw00002056

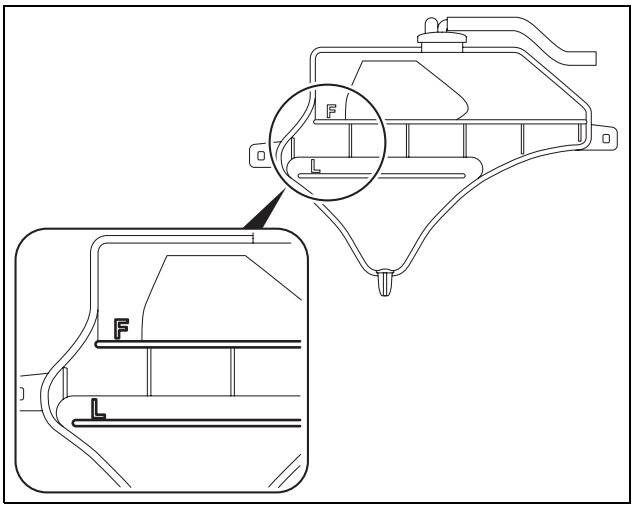

ac5uuw00000566

COOLING SYSTEM [SKYACTIV-G 2.0]

ENGINE COOLANT REPLACEMENT [SKYACTIV-G 2.0]

id0112h4800600

Warning

- **Never remove the cooling system cap or loosen the radiator drain plug while the engine is running, or when the engine and radiator are hot. Scalding engine coolant and steam may shoot out and cause serious injury. It may also damage the engine and cooling system.**
- **Turn off the engine and wait until it is cool. Even then, be very careful when removing the cap. Wrap a thick cloth around it and slowly turn it counterclockwise to the first stop. Step back while the pressure escapes.**
- **When you are sure all the pressure is gone, press down on the cap using the cloth, turn it, and remove it.**

Caution

- **Use engine coolant at a concentration that meets the environmental conditions in which the vehicle is driven, otherwise engine damage could occur.**
- **The engine has aluminum parts and must be protected by an ethylene-glycol-based coolant to prevent corrosion and freezing.**
- **Do not use coolants containing Alcohol, Methanol, Borate or Silicate. These coolants could damage the cooling system.**
- **Use only soft (demineralized) water in the coolant mixture. Water that contains minerals will cut down on the coolant's effectiveness.**
- **Engine coolant damages paint. If engine coolant does get on a painted surface, rinse it off quickly.**

Note

- If the “FL22” mark is shown on or near the cooling system cap, use FL22 type engine coolant.
- FL22 type engine coolant is shipped as a diluted solution. Use the solution as is when replacing coolant.

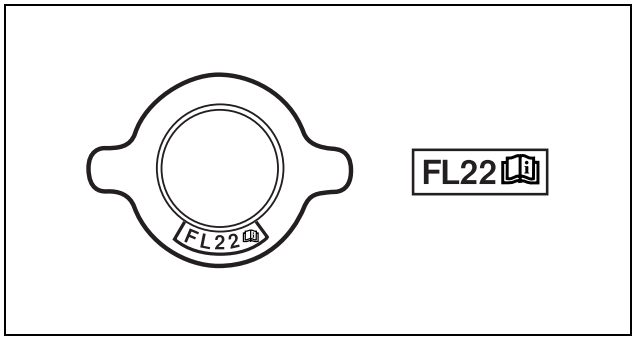

acxuuw00002061

Engine coolant capacity [European (L.H.D.) specs.] (approx. quantity)
ATX: 7.6 L {8.0 US qt, 6.7 Imp qt}
MTX: 7.4 L {7.8 US qt, 6.5 Imp qt}

Engine coolant capacity [European (U.K.) specs.] (approx. quantity)
7.4 L {7.8 US qt, 6.5 Imp qt}

Engine coolant capacity [General (R.H.D.) specs.] (approx. quantity)
ATX: 7.4 L {7.8 US qt, 6.5 Imp qt}
MTX: 7.1 L {7.5 US qt, 6.2 Imp qt}

Engine coolant capacity [Israel, China] (approx. quantity)
7.5 L {7.9 US qt, 6.6 Imp qt}

Engine coolant capacity [Saudi] (approx. quantity)
7.8 L {8.2 US qt, 6.9 Imp qt}

Engine coolant capacity [Except European (L.H.D. U.K.) specs., General (R.H.D.) specs., Israel, Saudi, China] (approx. quantity)
ATX: 7.5 L {7.9 US qt, 6.6 Imp qt}
MTX: 7.3 L {7.7 US qt, 6.4 Imp qt}

1. Remove the cooling system cap.

COOLING SYSTEM [SKYACTIV-G 2.0]

2. Remove the service hole cover (installed to front under cover No.1) used to drain the engine coolant.

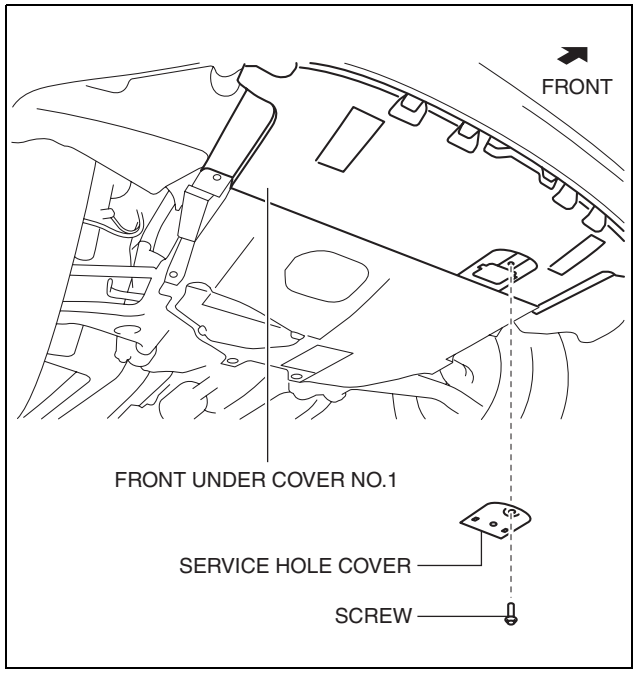

ac5uuw00000567

3. Loosen the radiator drain plug and drain the engine coolant into a container.
4. Flush the cooling system with water until all traces of color are gone.
5. Let the system drain completely.
6. Tighten the radiator drain plug.
7. Referring to the following chart, select the correct volume percentage of the water and engine coolant.

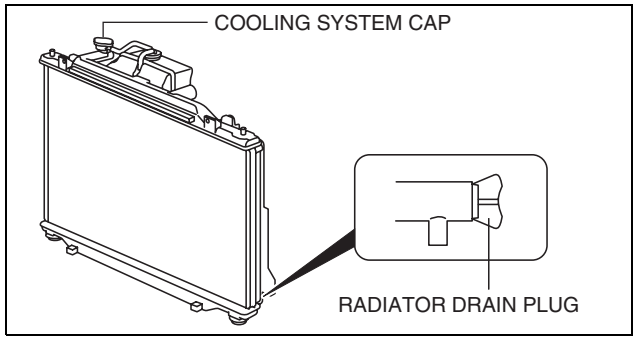

ac5uuw00000568

Antifreeze solution mixture percentage (Except FL22 type engine coolant)

Engine coolant protection	Volume percentage (%)		Gravity at 20 °C {68 °F}
	Water	Coolant	
Above -16 °C {3 °F}	65	35	1.057
Above -26 °C {-15 °F}	55	45	1.072
Above -40 °C {-40 °F}	45	55	1.086

8. Refill the engine coolant from the radiator filler neck until it is close to the top of the radiator filler neck.
9. Refill the engine coolant into the coolant reserve tank up to the F mark on the tank.
10. Install the cooling system cap.

Caution

- **If the high engine coolant temperature warning light flashes, stop the engine to lower the engine coolant temperature and prevent overheating. Then, verify the malfunctioning part and repair or replace it.**

11. Start the engine and warm up the engine by idling.

COOLING SYSTEM [SKYACTIV-G 2.0]

12. After the engine warms up, perform the following steps. At this time, be careful of the engine coolant temperature to prevent overheating.

    Note
    - If the accelerator pedal is depressed continuously for a specified time, the engine speed may decrease to the idle speed. This is due to the fuel cut control operation, which prevents overheating, and it does not indicate a malfunction.

    (1) Run the engine at **2,500 rpm** for **5 min**.
    (2) Maintain the engine speed at **3,000 rpm** for **5 s, and then idle**.
    (3) Repeat steps (1), (2) several times.
13. Stop the engine, and inspect the engine coolant level after the engine coolant temperature decreases. If it is low, repeat steps 8—12.
14. Inspect for engine coolant leakage. (See 01-12A-7 ENGINE COOLANT LEAKAGE INSPECTION [SKYACTIV-G 2.0].)
15. Install the service hole cover.

ENGINE COOLANT PROTECTION INSPECTION [SKYACTIV-G 2.0]

id0112h4800400

1. Measure the engine coolant temperature and specific gravity using a thermometer and a hydrometer.

    Caution
    - **Use engine coolant at a concentration that meets the environmental conditions in which the vehicle is driven, otherwise engine damage could occur.**
    - **The engine has aluminum parts and must be protected by an ethylene-glycol-based coolant to prevent corrosion and freezing.**
    - **Do not use coolants containing Alcohol, Methanol, Borate or Silicate. These coolants could damage the cooling system.**
    - **Use only soft (demineralized) water in the coolant mixture. Water that contains minerals will cut down on the coolant's effectiveness.**
    - **Engine coolant damages paint. If engine coolant does get on a painted surface, rinse it off quickly.**

    Note
    - If the "FL22" mark is shown on or near the cooling system cap, use FL22 type engine coolant.
    - FL22 type engine coolant is shipped as a diluted solution. Use the solution as is when replacing coolant.

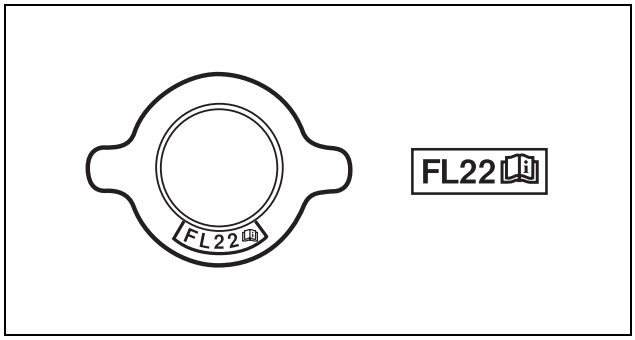

am2zzw0000169

COOLING SYSTEM [SKYACTIV-G 2.0]

2. Determine the engine coolant protection level by referring to the graph shown in the figure.
   - If the engine coolant protection level is not correct, add water or engine coolant.

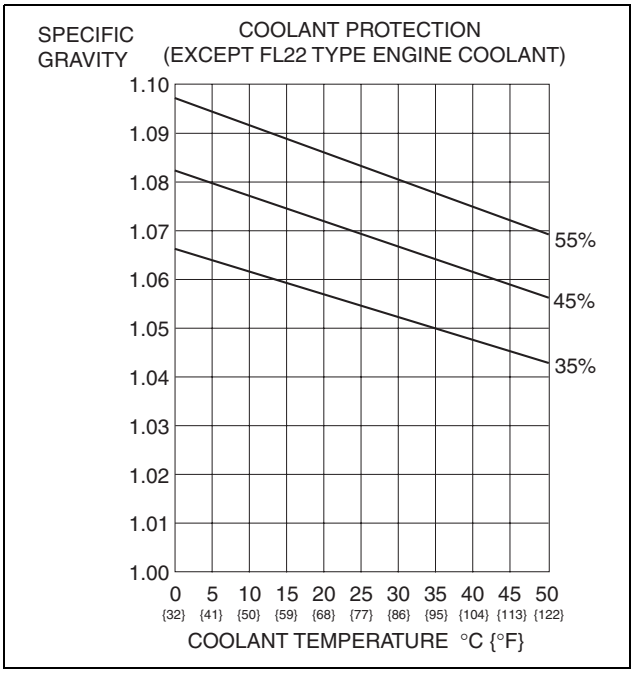

am2zzw0000169

ENGINE COOLANT LEAKAGE INSPECTION [SKYACTIV-G 2.0]

id0112h4800500

Warning

- **Never remove the cooling system cap or loosen the radiator drain plug while the engine is running, or when the engine and radiator are hot. Scalding engine coolant and steam may shoot out and cause serious injury. It may also damage the engine and cooling system.**
- **Turn off the engine and wait until it is cool. Even then, be very careful when removing the cap. Wrap a thick cloth around it and slowly turn it counterclockwise to the first stop. Step back while the pressure escapes.**
- **When you are sure all the pressure is gone, press down on the cap using the cloth, turn it, and remove it.**

1. Inspect the engine coolant level. (See 01-12A-3 ENGINE COOLANT LEVEL INSPECTION [SKYACTIV-G 2.0].)
2. Remove the cooling system cap.
3. Install the radiator cap tester to the radiator filler neck.
4. Apply pressure using the radiator cap tester.

Caution

- **Applying more than 122.6 kPa {1.250 kgf/cm^2, 17.78 psi} can damage the hoses, fittings, and other components, and cause leakage.**

Engine coolant leakage inspection pressure
122.6 kPa {1.250 kgf/cm^2, 17.78 psi} [1 min]

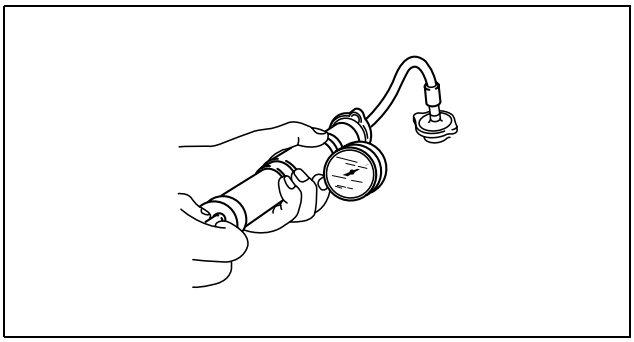

ampjjw00003132

5. When pressurizing the cooling system, verify that the pressure is maintained.
   - If the gauge needle drops, it may indicate water leakage. Repair or replace the applicable part.

COOLING SYSTEM [SKYACTIV-G 2.0]

COOLING SYSTEM CAP INSPECTION [SKYACTIV-G 2.0]

id0112h4801500

Warning

- **Never remove the cooling system cap or loosen the radiator drain plug while the engine is running, or when the engine and radiator are hot. Scalding engine coolant and steam may shoot out and cause serious injury. It may also damage the engine and cooling system.**
- **Turn off the engine and wait until it is cool. Even then, be very careful when removing the cap. Wrap a thick cloth around it and slowly turn it counterclockwise to the first stop. Step back while the pressure escapes.**
- **When you are sure all the pressure is gone, press down on the cap using the cloth, turn it, and remove it.**

1. Clean the cooling system cap and the sealed part.
2. Inspect the cooling system cap for cracks or everted seal.
   - If there is any malfunction, replace the cooling system cap.
3. Attach the cooling system cap to the radiator cap tester.
4. Hold the cooling system cap downward and apply pressure gradually. Verify that the pressure is held stable for **10 s.**
   - If the pressure is not held stable, replace the cooling system cap.

Cooling system cap valve opening pressure
93.2—122.6 kPa {0.951—1.250 kgf/cm^2, 13.6—17.7 psi}

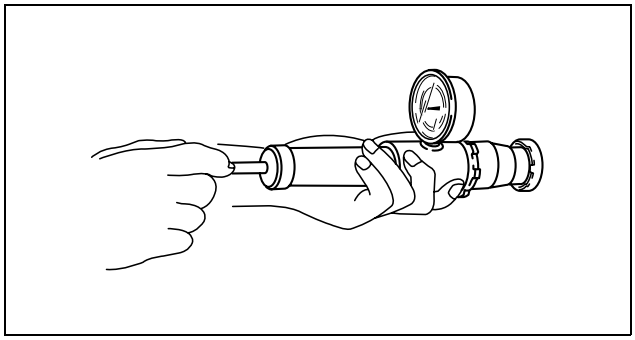

ampjjw00001686

COOLANT RESERVE TANK REMOVAL/INSTALLATION [SKYACTIV-G 2.0]

id0112h4801000

1. Remove in the order indicated in the table.
2. Install in the reverse order of removal.

1	Wiring harness
2	Hose
3	Coolant reserve tank (See 01-12A-9 Coolant Reserve Tank Removal Note.)

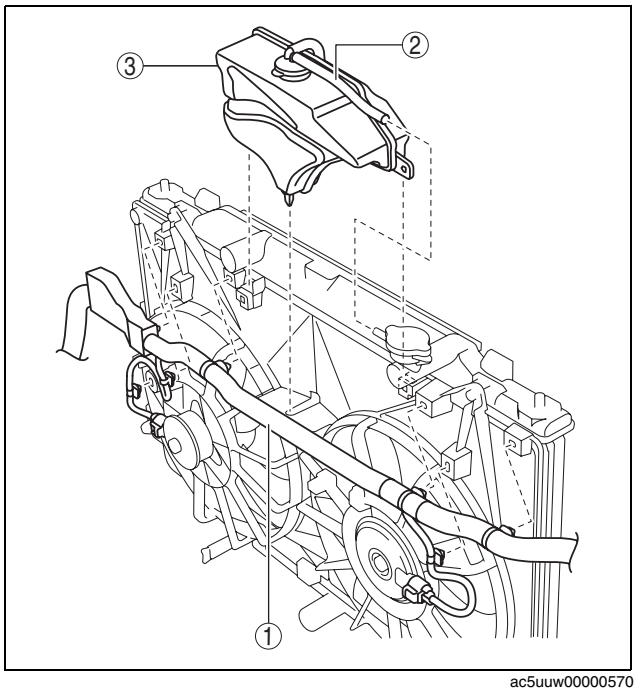

ac5uuw00000570

COOLING SYSTEM [SKYACTIV-G 2.0]

Coolant Reserve Tank Removal Note

1. Remove the coolant reserve tank from the radiator cowling tabs shown in the figure by lifting them with a flathead screwdriver.

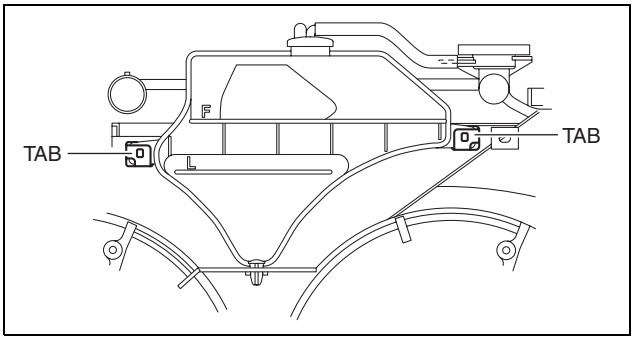

ac5uuw00000571

RADIATOR REMOVAL/INSTALLATION [SKYACTIV-G 2.0]

id0112h4801400

Warning

- **Never remove the cooling system cap or loosen the radiator drain plug while the engine is running, or when the engine and radiator are hot. Scalding engine coolant and steam may shoot out and cause serious injury. It may also damage the engine and cooling system.**
- **Turn off the engine and wait until it is cool. Even then, be very careful when removing the cap. Wrap a thick cloth around it and slowly turn it counterclockwise to the first stop. Step back while the pressure escapes.**
- **When you are sure all the pressure is gone, press down on the cap using the cloth, turn it, and remove it.**

1. Disconnect the negative battery cable. (See 01-17A-11 NEGATIVE BATTERY CABLE DISCONNECTION/ CONNECTION [SKYACTIV-G 2.0].) (See 01-17A-13 NEGATIVE BATTERY CABLE DISCONNECTION/ CONNECTION [SKYACTIV-G 2.0 (WITHOUT i-stop)].)
2. Remove the front under cover No.1. (See 09-16-40 FRONT UNDER COVER No.1 REMOVAL/INSTALLATION.)
3. Drain the engine coolant. (See 01-12A-4 ENGINE COOLANT REPLACEMENT [SKYACTIV-G 2.0].)
4. Remove the plug hole plate. (See 01-10A-6 PLUG HOLE PLATE REMOVAL/INSTALLATION [SKYACTIV-G 2.0].)
5. Remove the air cleaner, air hose and fresh air duct component. (See 01-13A-6 INTAKE-AIR SYSTEM REMOVAL/INSTALLATION [SKYACTIV-G 2.0].)
6. Remove the coolant reserve tank. (See 01-12A-8 COOLANT RESERVE TANK REMOVAL/INSTALLATION [SKYACTIV-G 2.0].)
7. Remove the cooling fan component. (See 01-12A-19 COOLING FAN MOTOR REMOVAL/INSTALLATION [SKYACTIV-G 2.0].)
8. Remove in the order indicated in the table.
9. Install in the reverse order of removal.
10. Refill the engine coolant. (See 01-12A-4 ENGINE COOLANT REPLACEMENT [SKYACTIV-G 2.0].)

COOLING SYSTEM [SKYACTIV-G 2.0]

11. Inspect for engine coolant leakage. (See 01-12A-7 ENGINE COOLANT LEAKAGE INSPECTION [SKYACTIV-G 2.0].)

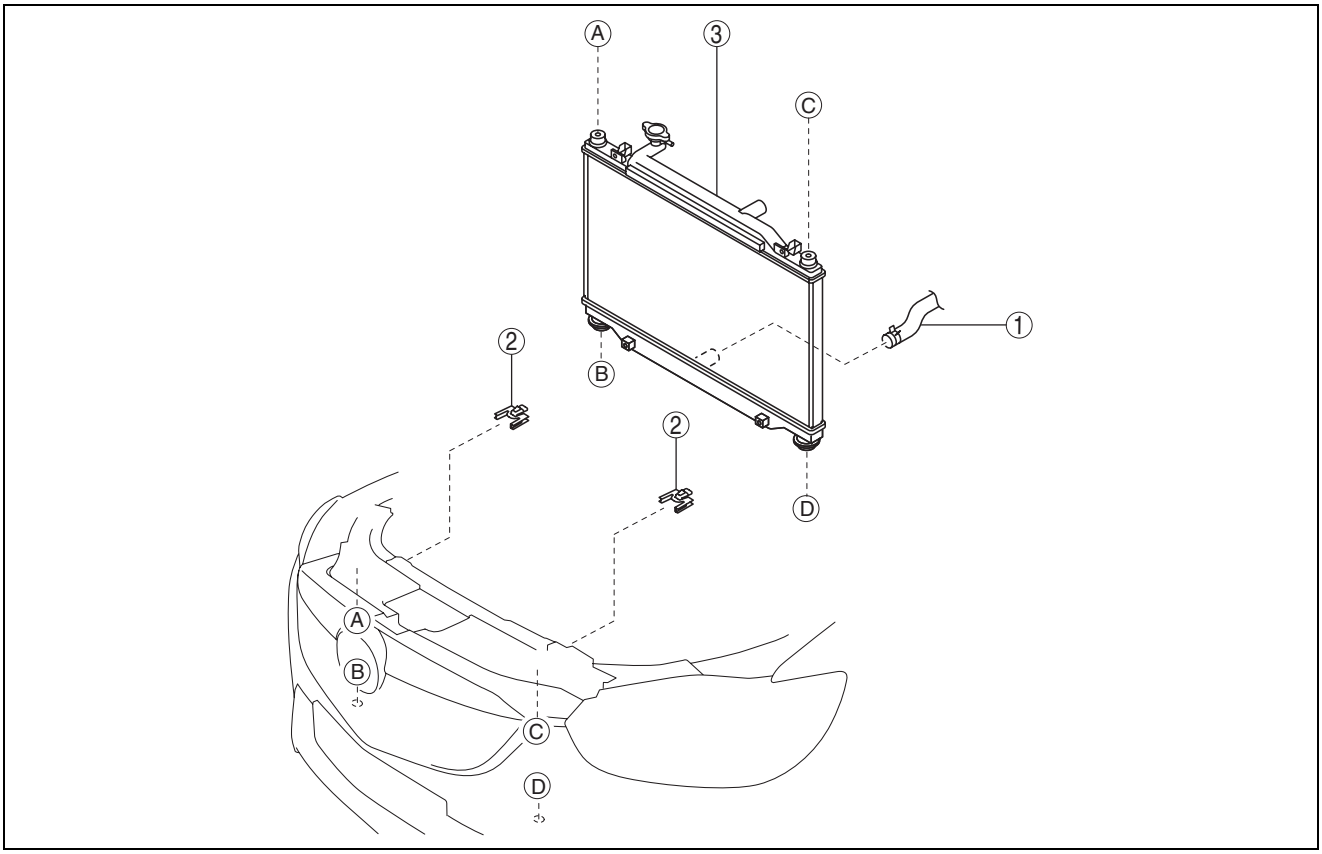

ac5uuw00000573

1	Lower radiator hose
2	Upper mount rubber bracket (See 01-12A-11 Upper Mount Rubber Bracket Removal Note.)

3	Radiator (See 01-12A-11 Radiator Removal Note.)

COOLING SYSTEM [SKYACTIV-G 2.0]

Upper Mount Rubber Bracket Removal Note

Caution
- **To prevent damage to the upper mount rubber bracket tab, do not apply excessive force.**

1. While pressing down the upper mount rubber bracket tab lightly in the direction of the arrow shown in the figure, pull out the upper mount rubber bracket toward the vehicle rear.
2. Remove the upper mount rubber bracket.

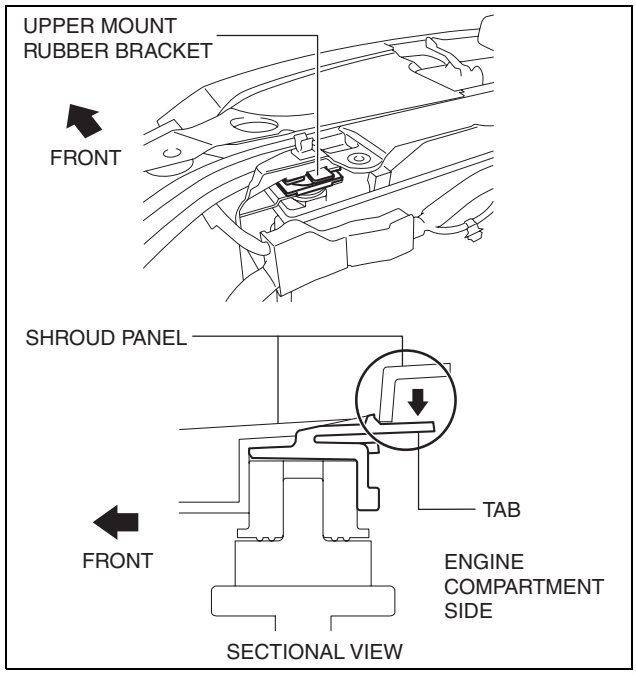

ac5uuw00000574

Radiator Removal Note

1. To prevent damage to the radiator core, protect it by covering the radiator surface with cardboard.
2. Lift the radiator and remove it from the radiator installation holes on the shroud panel.
3. Move the radiator and condenser to the engine side.
4. Remove the two bolts (lower side) which secure the condenser to the radiator.

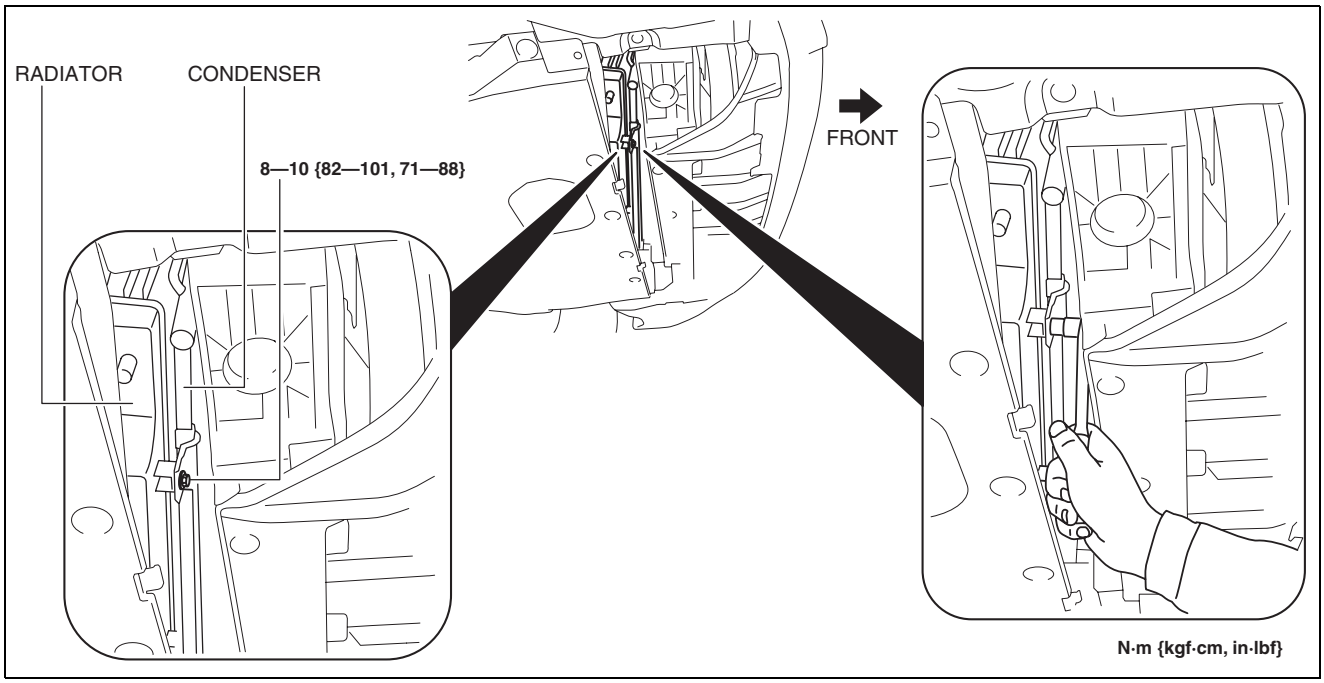

ac5wzw0000266

COOLING SYSTEM [SKYACTIV-G 2.0]

5. Remove the two bolts (upper side) which secure the condenser to the radiator.
6. Remove the radiator from above the engine compartment.

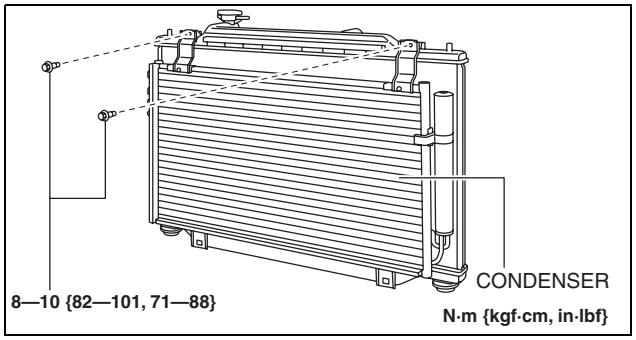

ac5wzw0000266

THERMOSTAT REMOVAL/INSTALLATION [SKYACTIV-G 2.0]

id0112h4801200

Warning

- **Never remove the cooling system cap or loosen the radiator drain plug while the engine is running, or when the engine and radiator are hot. Scalding engine coolant and steam may shoot out and cause serious injury. It may also damage the engine and cooling system.**
- **Turn off the engine and wait until it is cool. Even then, be very careful when removing the cap. Wrap a thick cloth around it and slowly turn it counterclockwise to the first stop. Step back while the pressure escapes.**
- **When you are sure all the pressure is gone, press down on the cap using the cloth, turn it, and remove it.**

1. Disconnect the negative battery cable. (See 01-17A-11 NEGATIVE BATTERY CABLE DISCONNECTION/CONNECTION [SKYACTIV-G 2.0].) (See 01-17A-13 NEGATIVE BATTERY CABLE DISCONNECTION/CONNECTION [SKYACTIV-G 2.0 (WITHOUT i-stop)].)
2. Drain the engine coolant. (See 01-12A-4 ENGINE COOLANT REPLACEMENT [SKYACTIV-G 2.0].)
3. Remove the plug hole plate. (See 01-10A-6 PLUG HOLE PLATE REMOVAL/INSTALLATION [SKYACTIV-G 2.0].)
4. Remove the air cleaner, air hose and fresh air duct component. (See 01-13A-6 INTAKE-AIR SYSTEM REMOVAL/INSTALLATION [SKYACTIV-G 2.0].)
5. Remove the battery, battery tray and PCM component. (See 01-17A-3 BATTERY REMOVAL/INSTALLATION [SKYACTIV-G 2.0].)
6. Remove in the order indicated in the table.
7. Install in the reverse order of removal.
8. Refill the engine coolant. (See 01-12A-4 ENGINE COOLANT REPLACEMENT [SKYACTIV-G 2.0].)
9. Inspect for engine coolant leakage. (See 01-12A-7 ENGINE COOLANT LEAKAGE INSPECTION [SKYACTIV-G 2.0].)

1	Lower radiator hose (Thermostat cover side)
2	Thermostat cover (See 01-12A-13 Thermostat Cover Removal Note.)
3	Thermostat (See 01-12A-13 Thermostat Installation Note.)

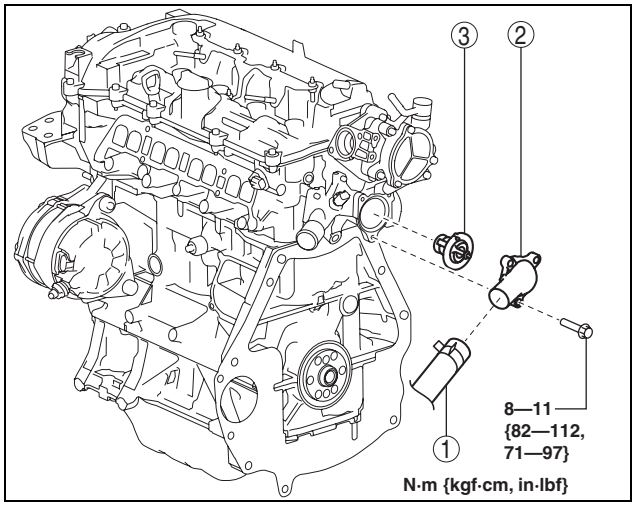

am3uuw0000894

COOLING SYSTEM [SKYACTIV-G 2.0]

Thermostat Cover Removal Note

1. Place rags on the transaxle case around the area under the thermostat cover.
2. Slightly loosen the **three** thermostat cover bolts and use the rags to absorb the draining engine coolant.

Caution

- **Do not remove the thermostat cover completely at this time because the engine coolant remaining in the engine will drain out.**

3. After the engine coolant stops draining, remove the thermostat cover.

Thermostat Installation Note

1. Install the thermostat with the jiggle pin aligned with the notch of the water outlet.

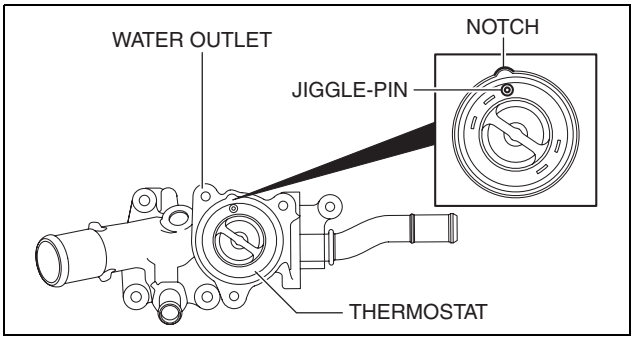

ac5uuw00000572

THERMOSTAT INSPECTION [SKYACTIV-G 2.0]

id0112h4801300

1. Remove the thermostat. (See 01-12A-12 THERMOSTAT REMOVAL/INSTALLATION [SKYACTIV-G 2.0].)
2. Visually check that the thermostat valve is closed.
3. Place the thermostat in water.

Warning

- **During inspection, the thermostat and water are extremely hot and can cause severe burns. Do not touch the thermostat and water.**

4. Heat the water and check the following.
   - Opening temperature and valve lift
     — If there is a malfunction, replace the thermostat.

Thermostat initial-opening temperature
80.5—83.5 °C {177—182 °F}

Thermostat full-open temperature
95 °C {203 °F}

Thermostat full-open lift
8.5 mm {0.33 in} or more

COOLING SYSTEM [SKYACTIV-G 2.0]

WATER PUMP REMOVAL/INSTALLATION [SKYACTIV-G 2.0]

id0112h4800700

Warning

- **Never remove the cooling system cap or loosen the radiator drain plug while the engine is running, or when the engine and radiator are hot. Scalding engine coolant and steam may shoot out and cause serious injury. It may also damage the engine and cooling system.**
- **Turn off the engine and wait until it is cool. Even then, be very careful when removing the cap. Wrap a thick cloth around it and slowly turn it counterclockwise to the first stop. Step back while the pressure escapes.**
- **When you are sure all the pressure is gone, press down on the cap using the cloth, turn it, and remove it.**

Note

- Do not disassemble the water pump because it is a precision unit.
- Remove/install the water pump pulley and water pump from the underside of the vehicle.

1. Disconnect the negative battery cable. (See 01-17A-11 NEGATIVE BATTERY CABLE DISCONNECTION/CONNECTION [SKYACTIV-G 2.0].) (See 01-17A-13 NEGATIVE BATTERY CABLE DISCONNECTION/CONNECTION [SKYACTIV-G 2.0 (WITHOUT i-stop)].)
2. Remove the front under cover No.2. (See 09-16-41 FRONT UNDER COVER No.2 REMOVAL/INSTALLATION.)
3. Remove the splash shield (RH). (See 09-16-49 SPLASH SHIELD REMOVAL/INSTALLATION.)
4. Drain the engine coolant. (See 01-12A-4 ENGINE COOLANT REPLACEMENT [SKYACTIV-G 2.0].)
5. Remove the water pump drive belt with the generator drive belt still installed and set it out of the way. (See 01-10A-10 DRIVE BELT REMOVAL/INSTALLATION [SKYACTIV-G 2.0].)
6. Remove in the order indicated in the table.
7. Install in the reverse order of removal.
8. Refill the engine coolant. (See 01-12A-4 ENGINE COOLANT REPLACEMENT [SKYACTIV-G 2.0].)
9. Inspect for engine coolant leakage. (See 01-12A-7 ENGINE COOLANT LEAKAGE INSPECTION [SKYACTIV-G 2.0].)

1	Water pump pulley (See 01-12A-14 Water Pump Pulley Removal Note.) (See 01-12A-18 Water Pump Pulley Installation Note.)
2	Water pump component (See 01-12A-15 Water Pump Component Removal Note.) (See 01-12A-16 Water Pump Component Installation Note.)
3	Gasket
4	O-ring (See 01-12A-16 O-ring Installation Note.)

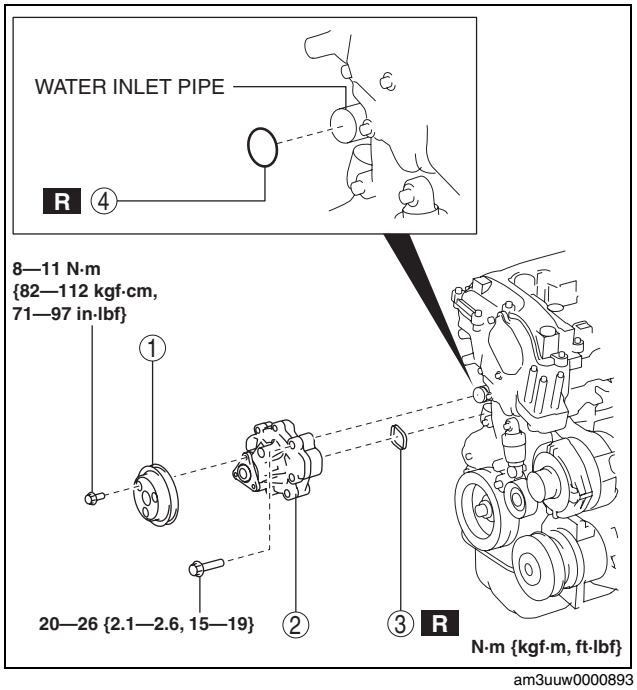

am3uuw0000893

Water Pump Pulley Removal Note

Caution

- **Be careful not to damage the belt groove and surface of the water pump pulley when using tools, otherwise it will cause wear, breakage, abnormal noise of the drive belt (stretch belt), damage to the pulley, and rust.**

COOLING SYSTEM [SKYACTIV-G 2.0]

1. Align the water pump pulley hole with the water pump hole as shown in the figure.

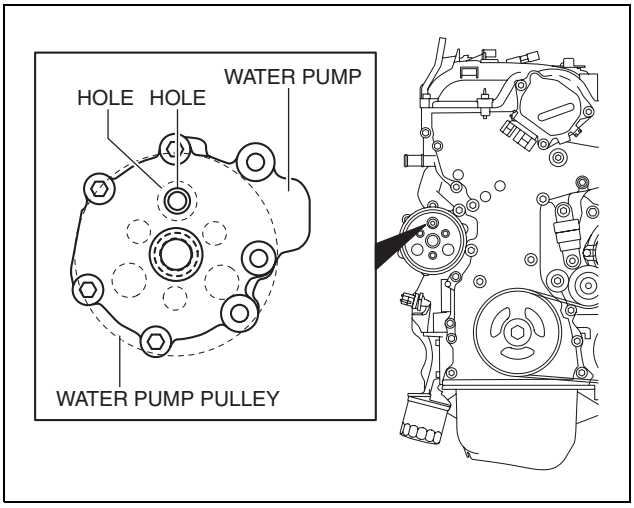

am3uuw0000893

2. Insert an appropriate bolt (length 70 mm {2.8 in}) into the water pump hole shown in the figure and lock the water pump pulley against rotation.
3. Remove the bolt used for locking the water pump pulley against rotation.

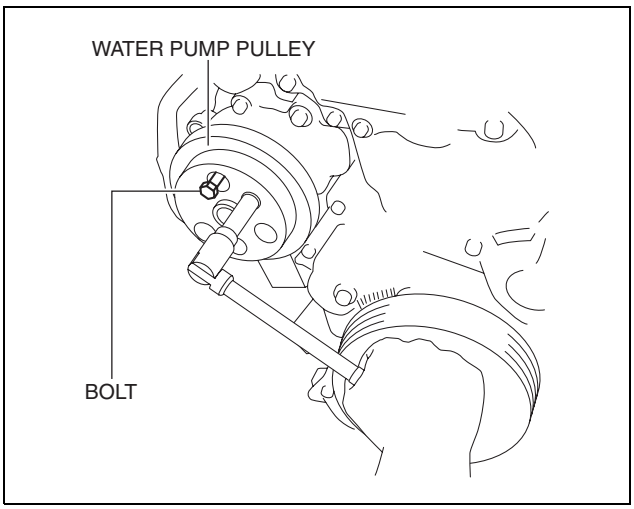

am3uuw0000893

Water Pump Component Removal Note

1. Remove the water inlet pipe stay bolt.
2. Place a container under the engine to collect the engine coolant remaining in the engine.

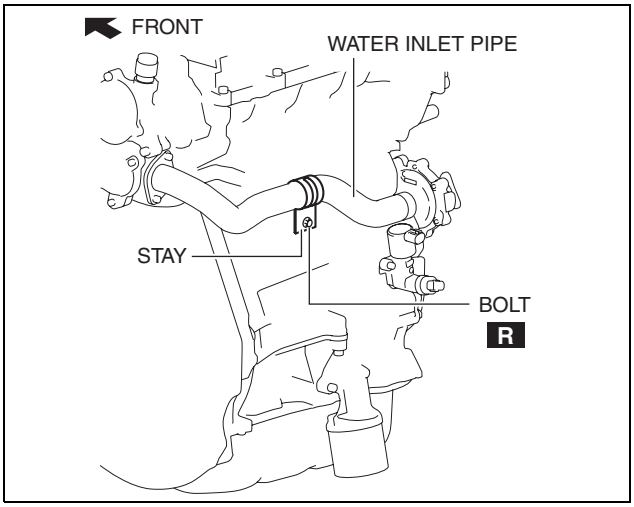

am3uuw0000893

COOLING SYSTEM [SKYACTIV-G 2.0]

3. Slightly loosen the three water pump component bolts shown in the figure and collect the draining engine coolant into a container.

Caution
- **Do not remove the water pump component completely at this time because the remaining approx. 2 L or less of engine coolant flowing in the engine will drain out.**

4. After the engine coolant stops draining, remove the water pump component.

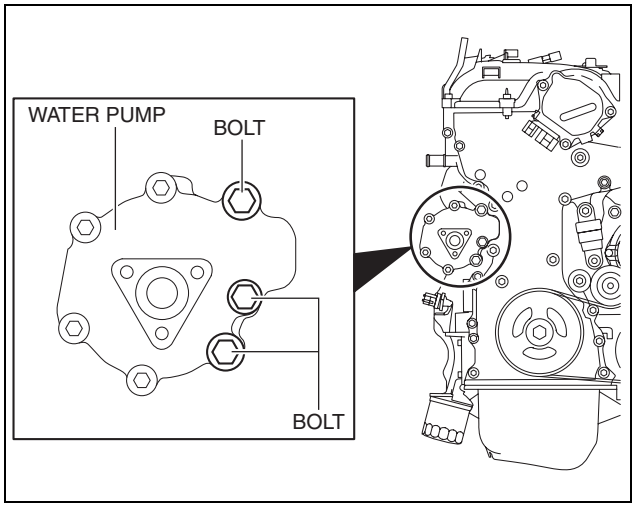

am3uuw0000893

O-ring Installation Note

Caution
- **Do not apply oil (engine oil, ATF etc.) to the O-ring of the water inlet pipe. Otherwise, the O-ring could swell causing a seal malfunction.**

1. Apply engine coolant to a new O-ring.
2. Install the O-ring to the water inlet pipe.

Water Pump Component Installation Note

Caution
- **Assemble the water pump gasket to the correct direction shown in the figure. Otherwise, it could leak engine coolant and damage the engine.**

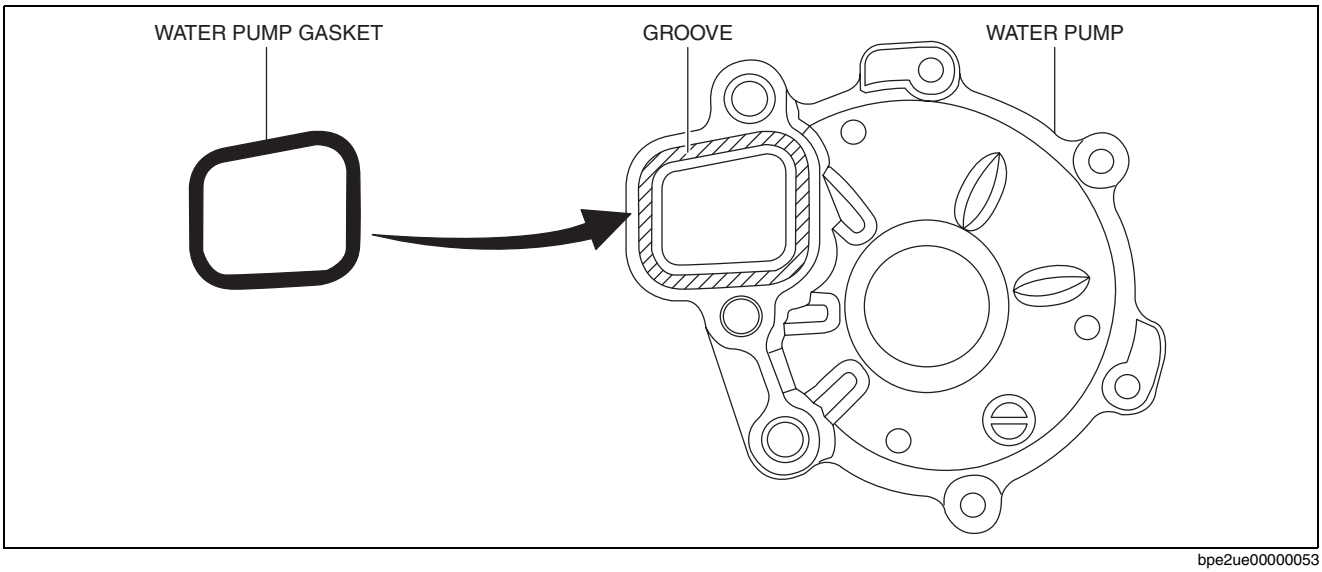

bpe2ue00000053

1. Insert a new water pump gasket into the water pump groove.
2. Install the water pump.

COOLING SYSTEM [SKYACTIV-G 2.0]

3. Tighten the bolts in the order shown in the figure.

   Tightening torque
   20—26 N·m {2.1—2.6 kgf·m, 15—19 ft·lbf}

4. Clean away the sealant adhering to the bolt hole on the cylinder block side of the water inlet pipe stay.
5. Remove the engine oil solenoid valve to secure a sufficient space for installing the water inlet pipe stay bolt. (See 01-11A-10 ENGINE OIL SOLENOID VALVE REMOVAL/INSTALLATION [SKYACTIV-G 2.0].)
6. Install a new water inlet pipe stay bolt.

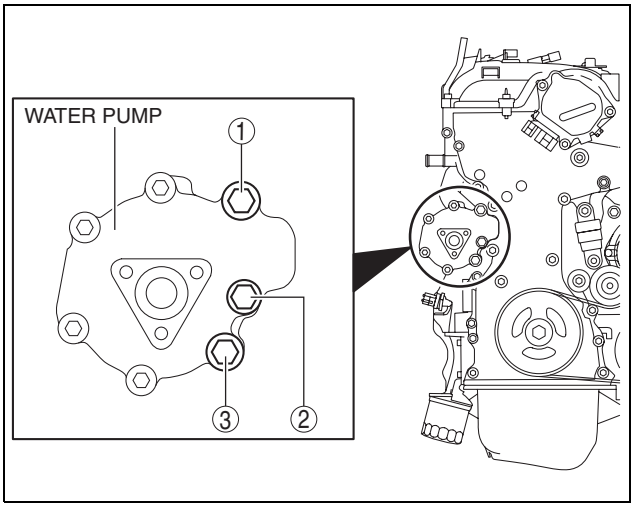

am3uuw0000894

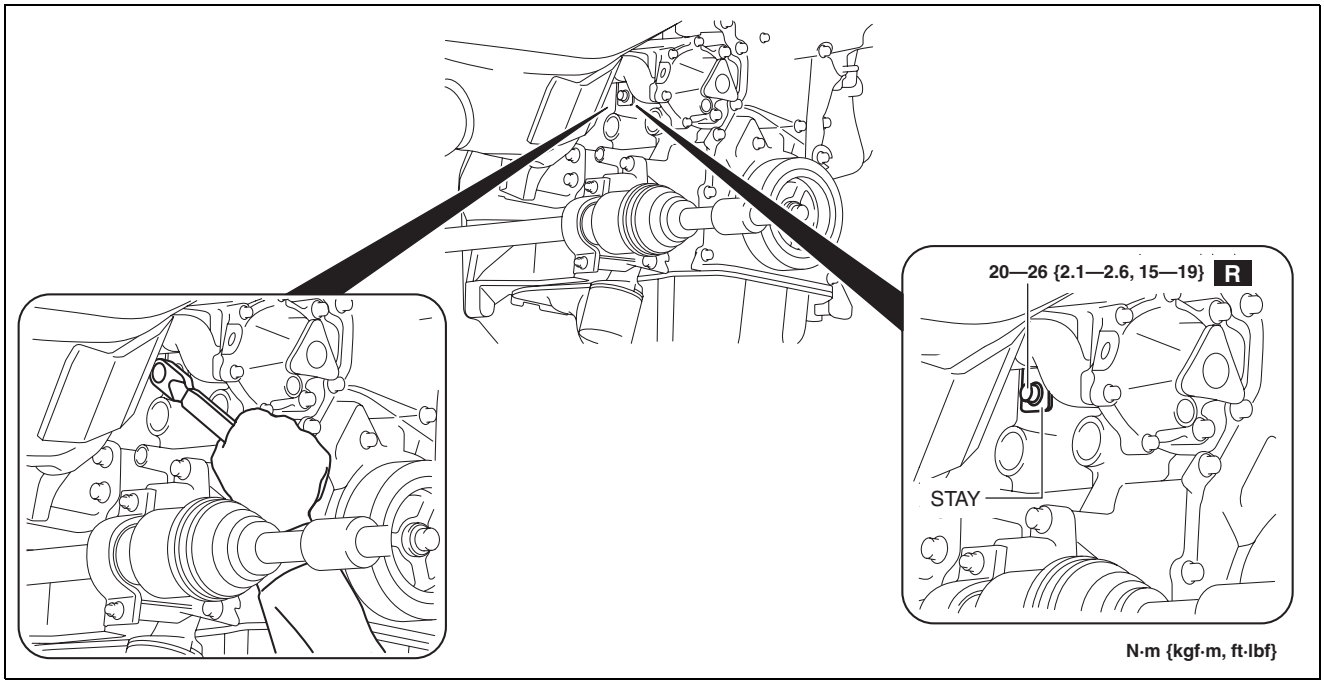

ac5uuw00000569

7. Install the engine oil solenoid valve. (See 01-11A-10 ENGINE OIL SOLENOID VALVE REMOVAL/INSTALLATION [SKYACTIV-G 2.0].)

COOLING SYSTEM [SKYACTIV-G 2.0]

Water Pump Pulley Installation Note

Caution

- **Be careful not to damage the belt groove and surface of the water pump pulley when using tools, otherwise it will cause wear, breakage, abnormal noise of the drive belt (stretch belt), damage to the pulley, and rust.**

1. Install the water pump pulley to the water pump and temporarily tighten the bolt
2. Align the water pump pulley hole with the water pump hole as shown in the figure.

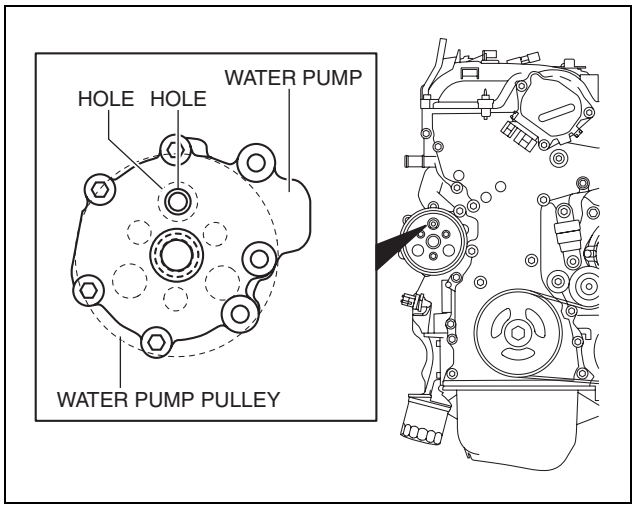

am3uuw0000893

3. Insert an appropriate bolt (length 70 mm {2.8 in}) into the water pump hole shown in the figure and lock the water pump pulley against rotation.
4. Completely tighten the water pump pulley bolt to the specified torque.

   Tightening torque
   8—11 N·m {82—112 kgf·cm, 71—97 in·lbf}

5. Remove the bolt used for locking the water pump pulley against rotation.

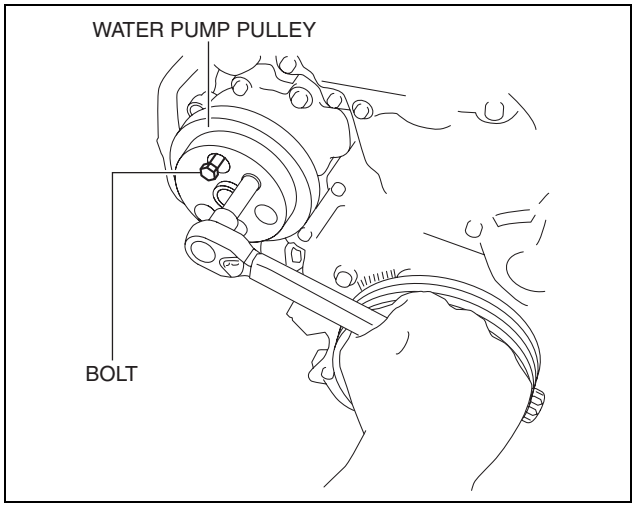

am3uuw0000894

COOLING SYSTEM [SKYACTIV-G 2.0]

COOLING FAN MOTOR REMOVAL/INSTALLATION [SKYACTIV-G 2.0]

id0112h4801900

Warning

- **Never remove the cooling system cap or loosen the radiator drain plug while the engine is running, or when the engine and radiator are hot. Scalding engine coolant and steam may shoot out and cause serious injury. It may also damage the engine and cooling system.**
- **Turn off the engine and wait until it is cool. Even then, be very careful when removing the cap. Wrap a thick cloth around it and slowly turn it counterclockwise to the first stop. Step back while the pressure escapes.**
- **When you are sure all the pressure is gone, press down on the cap using the cloth, turn it, and remove it.**

1. Disconnect the negative battery cable. (See 01-17A-11 NEGATIVE BATTERY CABLE DISCONNECTION/CONNECTION [SKYACTIV-G 2.0].) (See 01-17A-13 NEGATIVE BATTERY CABLE DISCONNECTION/CONNECTION [SKYACTIV-G 2.0 (WITHOUT i-stop)].)
2. Drain the engine coolant. (See 01-12A-4 ENGINE COOLANT REPLACEMENT [SKYACTIV-G 2.0].)
3. Remove the plug hole plate. (See 01-10A-6 PLUG HOLE PLATE REMOVAL/INSTALLATION [SKYACTIV-G 2.0].)
4. Remove the air cleaner, air hose and fresh air duct component. (See 01-13A-6 INTAKE-AIR SYSTEM REMOVAL/INSTALLATION [SKYACTIV-G 2.0].)
5. Remove the coolant reserve tank. (See 01-12A-8 COOLANT RESERVE TANK REMOVAL/INSTALLATION [SKYACTIV-G 2.0].)
6. Remove in the order indicated in the table.
7. Install in the reverse order of removal.
8. Refill the engine coolant. (See 01-12A-4 ENGINE COOLANT REPLACEMENT [SKYACTIV-G 2.0].)
9. IInspect for engine coolant leakage. (See 01-12A-7 ENGINE COOLANT LEAKAGE INSPECTION [SKYACTIV-G 2.0])

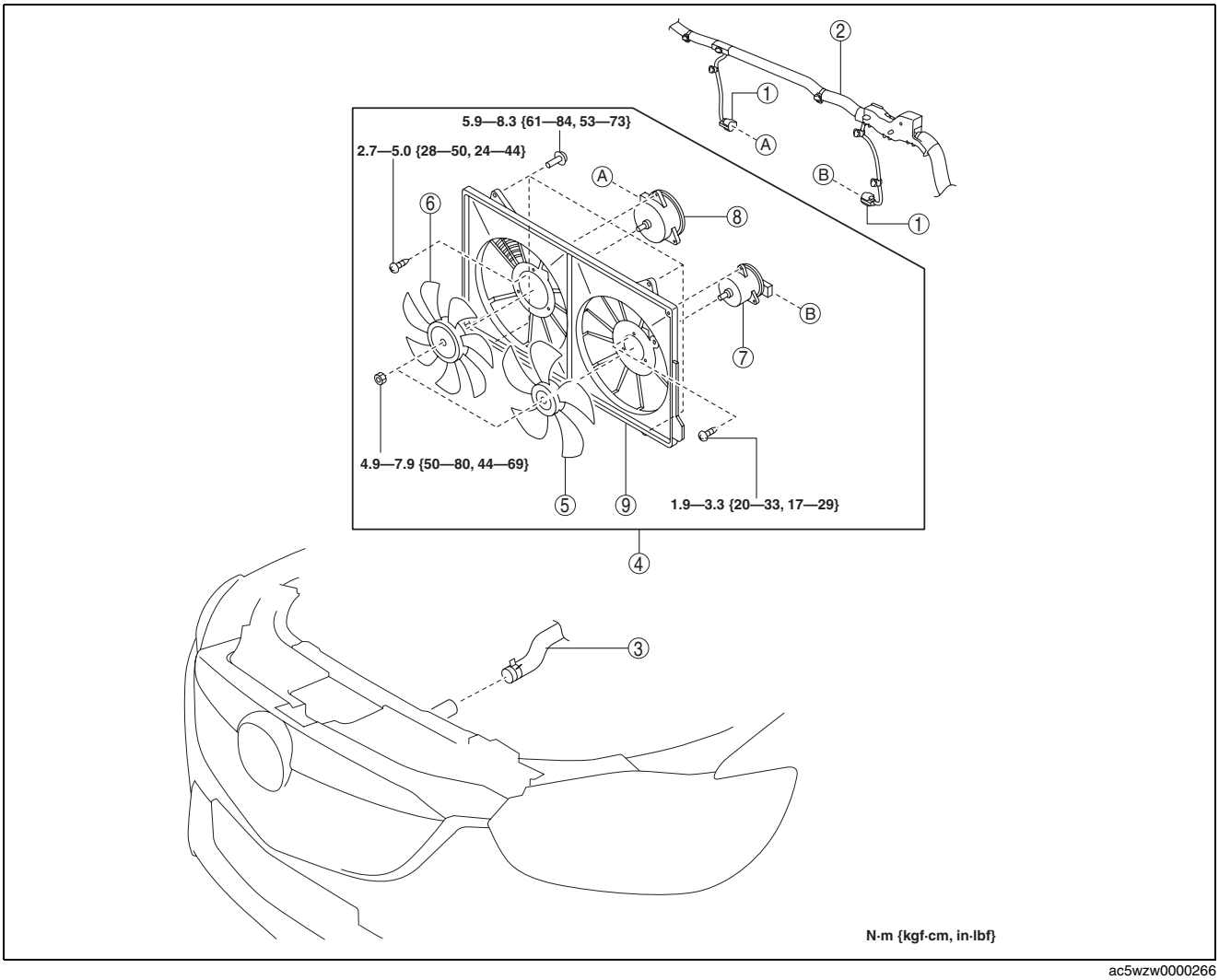

ac5wzw0000266

COOLING SYSTEM [SKYACTIV-G 2.0]

1	Cooling fan motor connector
2	Wiring harness
3	Upper radiator hose (See 01-12A-20 Upper radiator hose Removal Note.)
4	Cooling fan component (See 01-12A-20 Cooling Fan Component Removal Note.)
5	Cooling fan No.1
6	Cooling fan No.2
7	Cooling fan motor No.1
8	Cooling fan motor No.2
9	Radiator cowling

Upper radiator hose Removal Note

1. Remove the bracket shown in the figure from the throttle body and set the upper radiator hose aside.

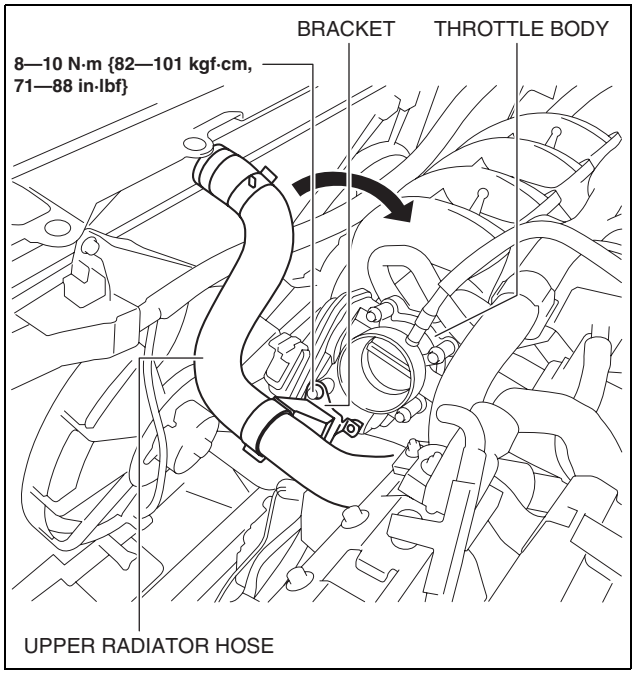

ac5uuw00000579

Cooling Fan Component Removal Note

1. Remove the cooling fan component from above the engine compartment.

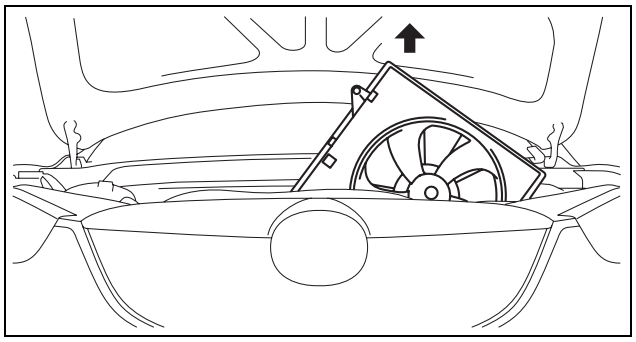

ac5uuw00000580

COOLING SYSTEM [SKYACTIV-G 2.0]

COOLING FAN MOTOR INSPECTION [SKYACTIV-G 2.0]

id0112h4801800

Part Inspection

1. Verify that the battery is fully charged. (See 01-17A-7 BATTERY INSPECTION [SKYACTIV-G 2.0].)
2. Disconnect the cooling fan motor connector (2 terminals).
3. Install a tester and battery to the cooling fan motor connector (2 terminals) as shown in the figure.
4. Verify that each cooling fan motors operate smoothly at the standard current.
   - If there is any malfunction, replace the applicable part.

Cooling fan motor No.1, No.2 standard current
4.5—8.5 A [12 V]

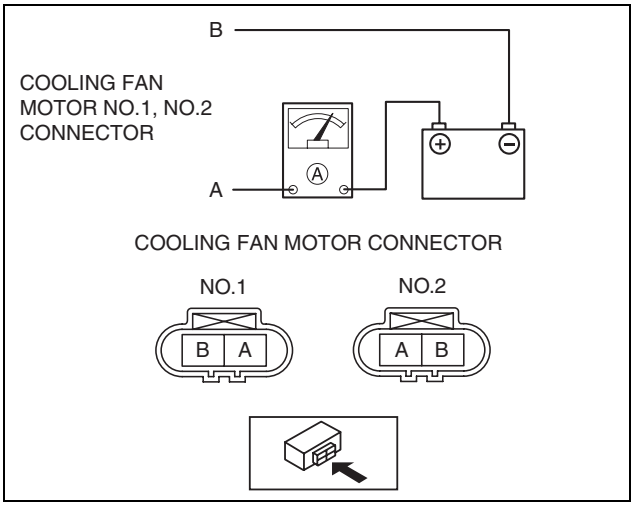

ac5uuw00000577

01-12B COOLING SYSTEM [SKYACTIV-D 2.2]

COOLING SYSTEM LOCATION INDEX [SKYACTIV-D 2.2] 01-12B–2
COOLING SYSTEM SERVICE WARNINGS [SKYACTIV-D 2.2]. 01-12B–3
ENGINE COOLANT LEVEL INSPECTION [SKYACTIV-D 2.2]. 01-12B–3
ENGINE COOLANT REPLACEMENT [SKYACTIV-D 2.2] 01-12B–4
ENGINE COOLANT PROTECTION INSPECTION [SKYACTIV-D 2.2]. 01-12B–6
ENGINE COOLANT LEAKAGE INSPECTION [SKYACTIV-D 2.2]. 01-12B–7
COOLING SYSTEM CAP INSPECTION [SKYACTIV-D 2.2] 01-12B–8
COOLANT RESERVE TANK REMOVAL/INSTALLATION [SKYACTIV-D 2.2] 01-12B–8
Coolant Reserve Tank Removal Note 01-12B–9
RADIATOR REMOVAL/INSTALLATION [SKYACTIV-D 2.2] 01-12B–9
Upper Mount Rubber Bracket Removal Note 01-12B–11
Radiator Removal Note 01-12B–11
THERMOSTAT REMOVAL/INSTALLATION [SKYACTIV-D 2.2] 01-12B–12
Thermostat Cover Removal Note 01-12B–13
Thermostat Installation Note 01-12B–13
Thermostat Cover Installation Note. . . . 01-12B–14
THERMOSTAT INSPECTION [SKYACTIV-D 2.2]. 01-12B–15
WATER PUMP REMOVAL/INSTALLATION [SKYACTIV-D 2.2]. 01-12B–15
Water Pump Component Removal Note 01-12B–16
Water Pump Component Installation Note 01-12B–17
COOLING FAN MOTOR REMOVAL/INSTALLATION [SKYACTIV-D 2.2]. 01-12B–18
Cooling Fan Component Removal Note 01-12B–19
COOLING FAN MOTOR INSPECTION [SKYACTIV-D 2.2]. 01-12B–19
Part Inspection 01-12B–19
FAN CONTROL MODULE INSPECTION [SKYACTIV-D 2.2] 01-12B–20

COOLING SYSTEM [SKYACTIV-D 2.2]

COOLING SYSTEM LOCATION INDEX [SKYACTIV-D 2.2]

id0112s6800100

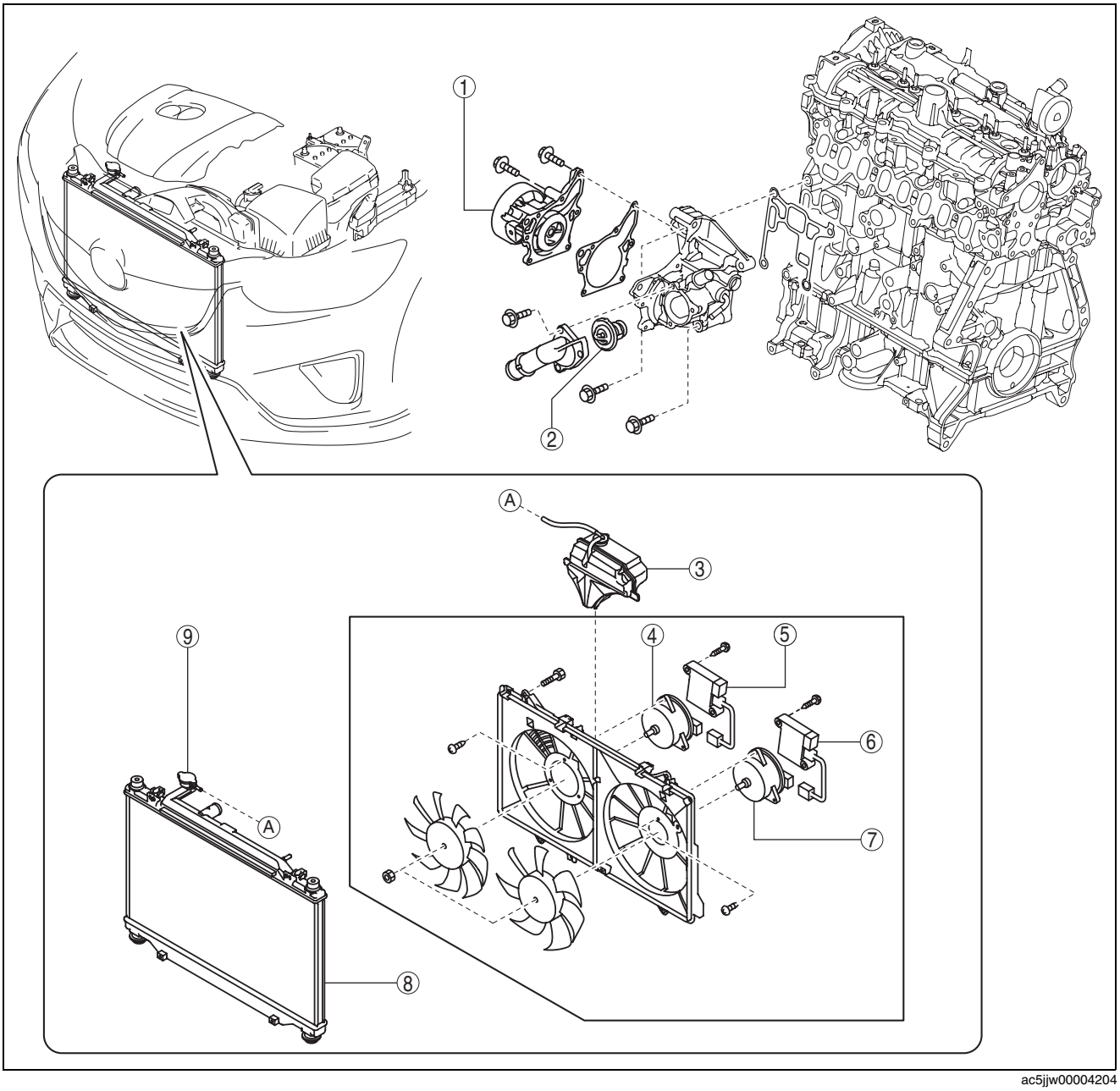

ac5jjw00004204

1	Water pump (See 01-12B-15 WATER PUMP REMOVAL/ INSTALLATION [SKYACTIV-D 2.2].)
2	Thermostat (See 01-12B-12 THERMOSTAT REMOVAL/ INSTALLATION [SKYACTIV-D 2.2].) (See 01-12B-15 THERMOSTAT INSPECTION [SKYACTIV-D 2.2].)
3	Coolant reserve tank (See 01-12B-3 ENGINE COOLANT LEVEL INSPECTION [SKYACTIV-D 2.2].) (See 01-12B-8 COOLANT RESERVE TANK REMOVAL/INSTALLATION [SKYACTIV-D 2.2].)
4	Cooling fan motor No.2 (See 01-12B-18 COOLING FAN MOTOR REMOVAL/INSTALLATION [SKYACTIV-D 2.2].) (See 01-12B-19 COOLING FAN MOTOR INSPECTION [SKYACTIV-D 2.2].)
5	Fan control module No.2 (See 01-12B-20 FAN CONTROL MODULE INSPECTION [SKYACTIV-D 2.2].)
6	Fan control module No.1 (See 01-12B-20 FAN CONTROL MODULE INSPECTION [SKYACTIV-D 2.2].)
7	Cooling fan motor No.1 (See 01-12B-18 COOLING FAN MOTOR REMOVAL/INSTALLATION [SKYACTIV-D 2.2].) (See 01-12B-19 COOLING FAN MOTOR INSPECTION [SKYACTIV-D 2.2].)

COOLING SYSTEM [SKYACTIV-D 2.2]

8	Radiator (See 01-12B-6 ENGINE COOLANT PROTECTION INSPECTION [SKYACTIV-D 2.2].) (See 01-12B-4 ENGINE COOLANT REPLACEMENT [SKYACTIV-D 2.2].) (See 01-12B-7 ENGINE COOLANT LEAKAGE INSPECTION [SKYACTIV-D 2.2].) (See 01-12B-9 RADIATOR REMOVAL/ INSTALLATION [SKYACTIV-D 2.2].)

9	Cooling system cap (See 01-12B-8 COOLING SYSTEM CAP INSPECTION [SKYACTIV-D 2.2].)

COOLING SYSTEM SERVICE WARNINGS [SKYACTIV-D 2.2]

id0112s6800200

Warning

- **Never remove the cooling system cap or loosen the radiator drain plug while the engine is running, or when the engine and radiator are hot. Scalding engine coolant and steam may shoot out and cause serious injury. It may also damage the engine and cooling system.**
- **Turn off the engine and wait until it is cool. Even then, be very careful when removing the cap. Wrap a thick cloth around it and slowly turn it counterclockwise to the first stop. Step back while the pressure escapes.**
- **When you are sure all the pressure is gone, press down on the cap using the cloth, turn it, and remove it.**
- **Depending on the vehicle, the cooling fan may operate suddenly even when the ignition is off. Therefore, keep hands and tools away from the cooling fan even if the cooling fan is not operating to prevent injury to personnel or damage to the cooling fan. Always disconnect the negative battery cable when servicing the cooling fan or parts near the cooling fan.**

ENGINE COOLANT LEVEL INSPECTION [SKYACTIV-D 2.2]

id0112s6800300

Warning

- **Never remove the cooling system cap or loosen the radiator drain plug while the engine is running, or when the engine and radiator are hot. Scalding engine coolant and steam may shoot out and cause serious injury. It may also damage the engine and cooling system.**
- **Turn off the engine and wait until it is cool. Even then, be very careful when removing the cap. Wrap a thick cloth around it and slowly turn it counterclockwise to the first stop. Step back while the pressure escapes.**
- **When you are sure all the pressure is gone, press down on the cap using the cloth, turn it, and remove it.**

Note

- If the “FL22” mark is shown on or near the cooling system cap, use FL22 type engine coolant.
- FL22 type engine coolant is shipped as a diluted solution. Use the solution as is when replacing coolant.

1. Remove the cooling system cap.
2. Verify that the engine coolant is filled close to the top of the radiator filler neck.
   - If the engine coolant level is low, add engine coolant.

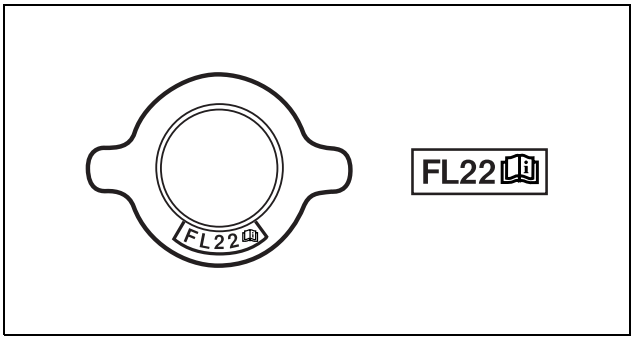

acxuuw00002056

COOLING SYSTEM [SKYACTIV-D 2.2]

3. Verify that the engine coolant level in the coolant reserve tank is between the F and L marks.
   - If the engine coolant level is below the L mark, add engine coolant.

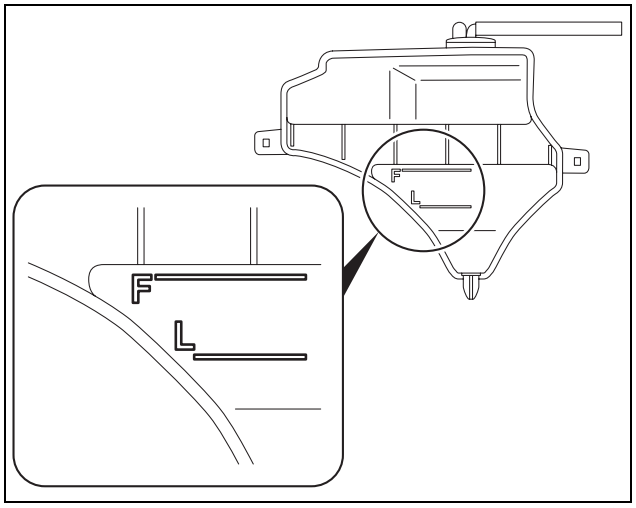

ac5wzw0000486

ENGINE COOLANT REPLACEMENT [SKYACTIV-D 2.2]

id0112s6800600

Warning

- **Never remove the cooling system cap or loosen the radiator drain plug while the engine is running, or when the engine and radiator are hot. Scalding engine coolant and steam may shoot out and cause serious injury. It may also damage the engine and cooling system.**
- **Turn off the engine and wait until it is cool. Even then, be very careful when removing the cap. Wrap a thick cloth around it and slowly turn it counterclockwise to the first stop. Step back while the pressure escapes.**
- **When you are sure all the pressure is gone, press down on the cap using the cloth, turn it, and remove it.**

Caution

- **Use engine coolant at a concentration that meets the environmental conditions in which the vehicle is driven, otherwise engine damage could occur.**
- **The engine has aluminum parts and must be protected by an ethylene-glycol-based coolant to prevent corrosion and freezing.**
- **Do not use coolants containing Alcohol, Methanol, Borate or Silicate. These coolants could damage the cooling system.**
- **Use only soft (demineralized) water in the coolant mixture. Water that contains minerals will cut down on the coolant's effectiveness.**
- **Engine coolant damages paint. If engine coolant does get on a painted surface, rinse it off quickly.**

Note

- If the “FL22” mark is shown on or near the cooling system cap, use FL22 type engine coolant.
- FL22 type engine coolant is shipped as a diluted solution. Use the solution as is when replacing coolant.

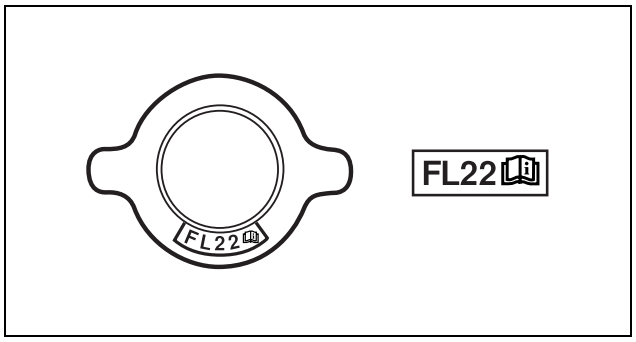

acxuuw00002061

Engine coolant capacity (approx. quantity)
European (L.H.D.) specs.: 8.9 L {9.4 US qt, 7.8 Imp qt}
European (R.H.D.) specs.: 9.1 L {9.6 US qt, 8.0 Imp qt}
Except European specs.: 9.2 L {9.7 US qt, 8.1 Imp qt}

1. Remove the cooling system cap.

COOLING SYSTEM [SKYACTIV-D 2.2]

2. Remove the service hole cover (installed to front under cover No.1) used to drain the engine coolant.

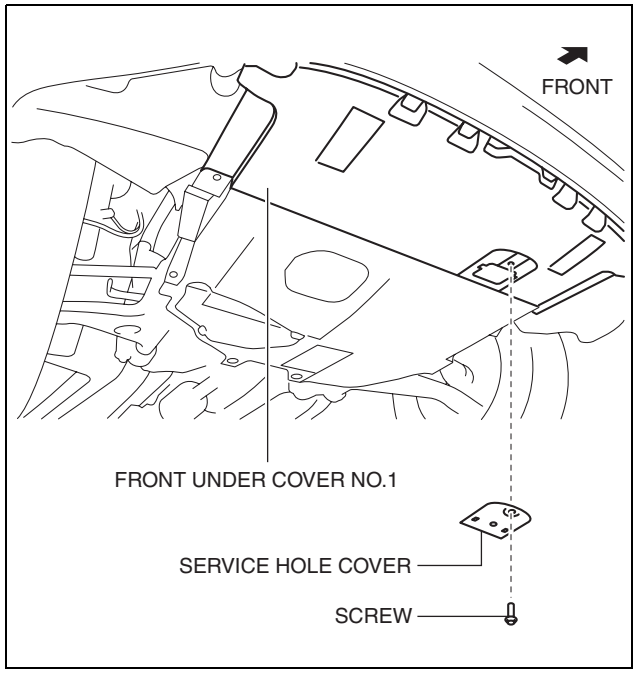

ac5uuw00000567

3. Loosen the radiator drain plug and drain the engine coolant into a container.
4. Flush the cooling system with water until all traces of color are gone.
5. Let the system drain completely.
6. Tighten the radiator drain plug.
7. Referring to the following chart, select the correct volume percentage of the water and engine coolant.

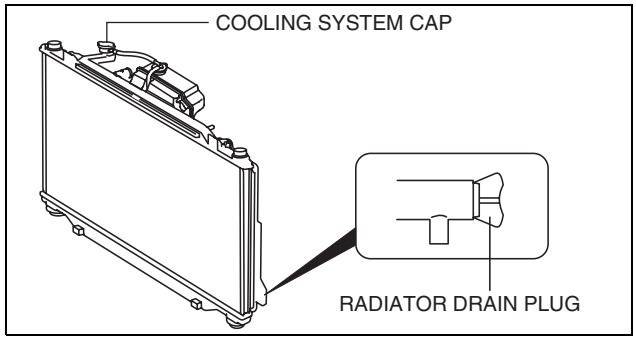

ac5wzw0000487

Antifreeze solution mixture percentage (Except FL22 type engine coolant)

Engine coolant protection	Volume percentage (%)		Gravity at 20 °C {68 °F}
	Water	Coolant	
Above -16 °C {3 °F}	65	35	1.057
Above -26 °C {-15 °F}	55	45	1.072
Above -40 °C {-40 °F}	45	55	1.086

8. Refill the engine coolant from the radiator filler neck until it is close to the top of the radiator filler neck.
9. Refill the engine coolant into the coolant reserve tank up to the F mark on the tank.
10. Install the cooling system cap.

Caution

- **If the high engine coolant temperature warning light flashes, stop the engine to lower the engine coolant temperature and prevent overheating. Then, verify the malfunctioning part and repair or replace it.**

11. Start the engine and warm up the engine by idling.

COOLING SYSTEM [SKYACTIV-D 2.2]

12. After the engine warms up, perform the following steps. At this time, be careful of the engine coolant temperature to prevent overheating.

    Note
    - If the accelerator pedal is depressed continuously for a specified time, the engine speed may decrease to the idle speed. This is due to the fuel cut control operation, which prevents overheating, and it does not indicate a malfunction.

    (1) Run the engine at **2,500 rpm** for **5 min**.
    (2) Maintain the engine speed at **3,000 rpm** for **5 s, and then idle**.
    (3) Repeat steps (1), (2) several times.
13. Stop the engine, and inspect the engine coolant level after the engine coolant temperature decreases. If it is low, repeat steps 8—12.
14. Inspect for engine coolant leakage. (See 01-12B-7 ENGINE COOLANT LEAKAGE INSPECTION [SKYACTIV-D 2.2].)
15. Install the service hole cover.

ENGINE COOLANT PROTECTION INSPECTION [SKYACTIV-D 2.2]

id0112s6800400

1. Measure the engine coolant temperature and specific gravity using a thermometer and a hydrometer.

    Caution
    - **Use engine coolant at a concentration that meets the environmental conditions in which the vehicle is driven, otherwise engine damage could occur.**
    - **The engine has aluminum parts and must be protected by an ethylene-glycol-based coolant to prevent corrosion and freezing.**
    - **Do not use coolants containing Alcohol, Methanol, Borate or Silicate. These coolants could damage the cooling system.**
    - **Use only soft (demineralized) water in the coolant mixture. Water that contains minerals will cut down on the coolant's effectiveness.**
    - **Engine coolant damages paint. If engine coolant does get on a painted surface, rinse it off quickly.**

    Note
    - If the "FL22" mark is shown on or near the cooling system cap, use FL22 type engine coolant.
    - FL22 type engine coolant is shipped as a diluted solution. Use the solution as is when replacing coolant.

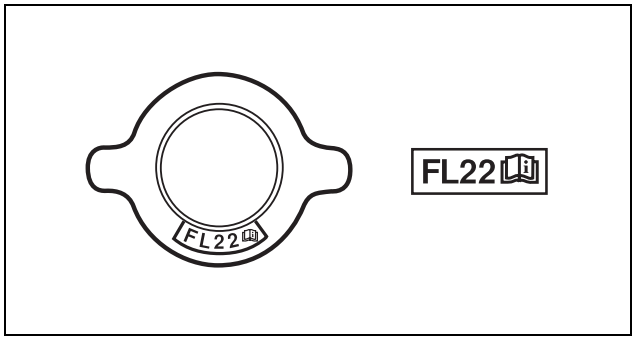

am2zzw0000169

COOLING SYSTEM [SKYACTIV-D 2.2]

2. Determine the engine coolant protection level by referring to the graph shown in the figure.
   - If the engine coolant protection level is not correct, add water or engine coolant.

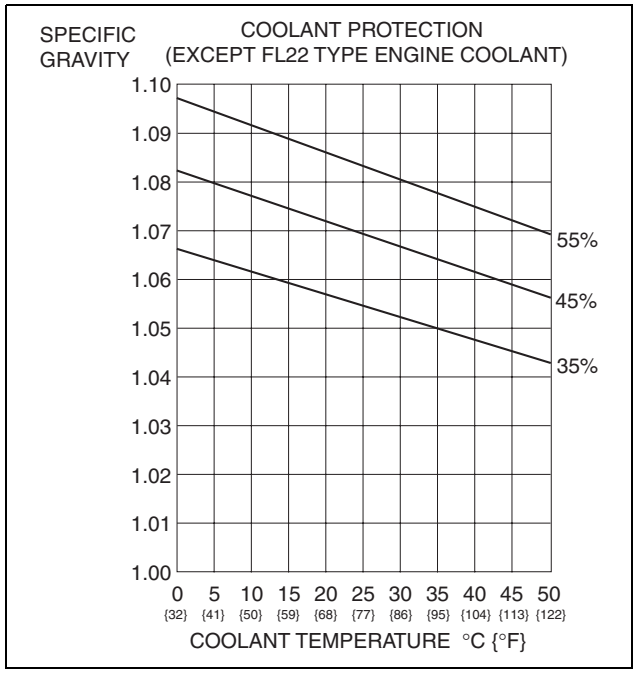

am2zzw0000169

ENGINE COOLANT LEAKAGE INSPECTION [SKYACTIV-D 2.2]

id0112s6800500

Warning

- **Never remove the cooling system cap or loosen the radiator drain plug while the engine is running, or when the engine and radiator are hot. Scalding engine coolant and steam may shoot out and cause serious injury. It may also damage the engine and cooling system.**
- **Turn off the engine and wait until it is cool. Even then, be very careful when removing the cap. Wrap a thick cloth around it and slowly turn it counterclockwise to the first stop. Step back while the pressure escapes.**
- **When you are sure all the pressure is gone, press down on the cap using the cloth, turn it, and remove it.**

1. Inspect the engine coolant level. (See 01-12B-3 ENGINE COOLANT LEVEL INSPECTION [SKYACTIV-D 2.2].)
2. Remove the cooling system cap.
3. Install the radiator cap tester to the radiator filler neck.
4. Apply pressure using the radiator cap tester.

Caution

- **Applying more than 122.6 kPa {1.250 kgf/cm^2, 17.78 psi} can damage the hoses, fittings, and other components, and cause leakage.**

Engine coolant leakage inspection pressure
122.6 kPa {1.250 kgf/cm^2, 17.78 psi} [1 min]

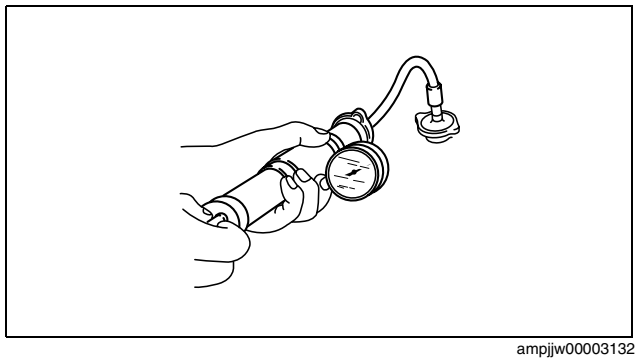

ampjjw00003132

5. When pressurizing the cooling system, verify that the pressure is maintained.
   - If the gauge needle drops, it may indicate water leakage. Repair or replace the applicable part.

COOLING SYSTEM [SKYACTIV-D 2.2]

COOLING SYSTEM CAP INSPECTION [SKYACTIV-D 2.2]

id0112s6801500

Warning

- **Never remove the cooling system cap or loosen the radiator drain plug while the engine is running, or when the engine and radiator are hot. Scalding engine coolant and steam may shoot out and cause serious injury. It may also damage the engine and cooling system.**
- **Turn off the engine and wait until it is cool. Even then, be very careful when removing the cap. Wrap a thick cloth around it and slowly turn it counterclockwise to the first stop. Step back while the pressure escapes.**
- **When you are sure all the pressure is gone, press down on the cap using the cloth, turn it, and remove it.**

1. Clean the cooling system cap and the sealed part.
2. Inspect the cooling system cap for cracks or everted seal.
   - If there is any malfunction, replace the cooling system cap.
3. Attach the cooling system cap to the radiator cap tester.
4. Hold the cooling system cap downward and apply pressure gradually. Verify that the pressure is held stable for **10 s.**
   - If the pressure is not held stable, replace the cooling system cap.

Cooling system cap valve opening pressure
93.2—122.6 kPa {0.951—1.250 kgf/cm^2, 13.6—17.7 psi}

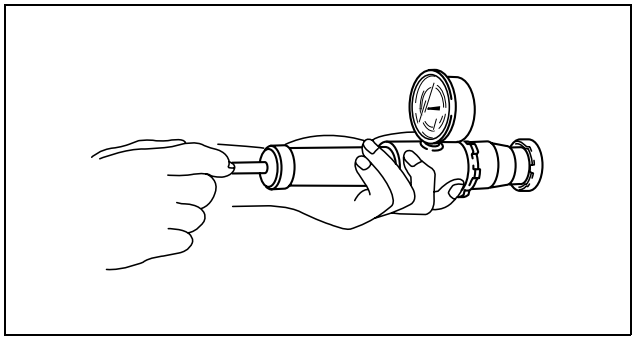

ampjjw00001686

COOLANT RESERVE TANK REMOVAL/INSTALLATION [SKYACTIV-D 2.2]

id0112s6801000

1. Remove in the order indicated in the table.
2. Install in the reverse order of removal.

1	Wiring harness
2	Hose
3	Coolant reserve tank (See 01-12B-9 Coolant Reserve Tank Removal Note.)

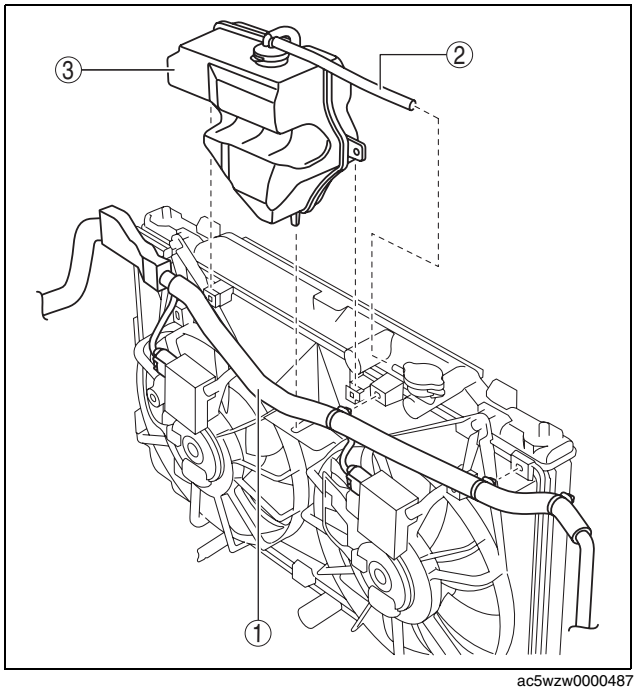

ac5wzw0000487

COOLING SYSTEM [SKYACTIV-D 2.2]

Coolant Reserve Tank Removal Note

1. Remove the coolant reserve tank from the radiator cowling tabs shown in the figure by lifting them with a flathead screwdriver.

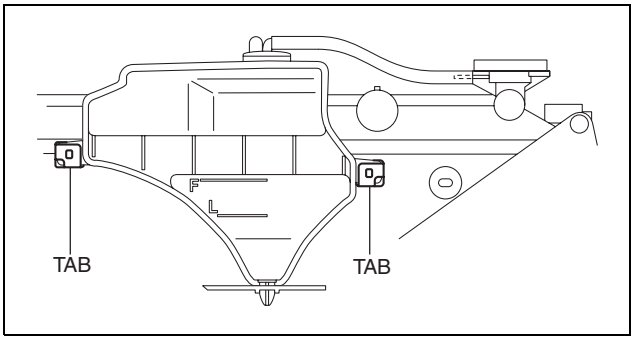

ac5wzw0000487

RADIATOR REMOVAL/INSTALLATION [SKYACTIV-D 2.2]

id0112s6801400

Warning

- **Never remove the cooling system cap or loosen the radiator drain plug while the engine is running, or when the engine and radiator are hot. Scalding engine coolant and steam may shoot out and cause serious injury. It may also damage the engine and cooling system.**
- **Turn off the engine and wait until it is cool. Even then, be very careful when removing the cap. Wrap a thick cloth around it and slowly turn it counterclockwise to the first stop. Step back while the pressure escapes.**
- **When you are sure all the pressure is gone, press down on the cap using the cloth, turn it, and remove it.**

1. Disconnect the negative battery cable. (See 01-17B-9 NEGATIVE BATTERY CABLE DISCONNECTION/ CONNECTION [SKYACTIV-D 2.2].)
2. Remove the front under cover No.1. (See 09-16-40 FRONT UNDER COVER No.1 REMOVAL/INSTALLATION.)
3. Drain the engine coolant. (See 01-12B-4 ENGINE COOLANT REPLACEMENT [SKYACTIV-D 2.2].)
4. Remove the engine cover. (See 01-10B-4 ENGINE COVER REMOVAL/INSTALLATION [SKYACTIV-D 2.2].)
5. Remove the air cleaner and fresh air duct component. (See 01-13B-6 INTAKE-AIR SYSTEM REMOVAL/ INSTALLATION [SKYACTIV-D 2.2].)
6. Remove the coolant reserve tank. (See 01-12B-8 COOLANT RESERVE TANK REMOVAL/INSTALLATION [SKYACTIV-D 2.2].)
7. Remove the cooling fan component. (See 01-12B-18 COOLING FAN MOTOR REMOVAL/INSTALLATION [SKYACTIV-D 2.2].)
8. Remove the charge air cooler inlet hose and charge air cooler outlet hose. (See 01-13B-6 INTAKE-AIR SYSTEM REMOVAL/INSTALLATION [SKYACTIV-D 2.2].)
9. Disconnect the ATF oil cooler hose from the radiator. (if equipped) (See 05-17B-71 OIL COOLER REMOVAL/ INSTALLATION [GW6A-EL, GW6AX-EL].)
10. Remove in the order indicated in the table.
11. Install in the reverse order of removal.
12. Refill the engine coolant. (See 01-12B-4 ENGINE COOLANT REPLACEMENT [SKYACTIV-D 2.2].)
13. Inspect for engine coolant leakage. (See 01-12B-7 ENGINE COOLANT LEAKAGE INSPECTION [SKYACTIV-D 2.2].)
14. Inspect the ATF level. (if equipped) (See 05-17B-11 AUTOMATIC TRANSAXLE FLUID (ATF) INSPECTION [GW6A-EL, GW6AX-EL].)

COOLING SYSTEM [SKYACTIV-D 2.2]

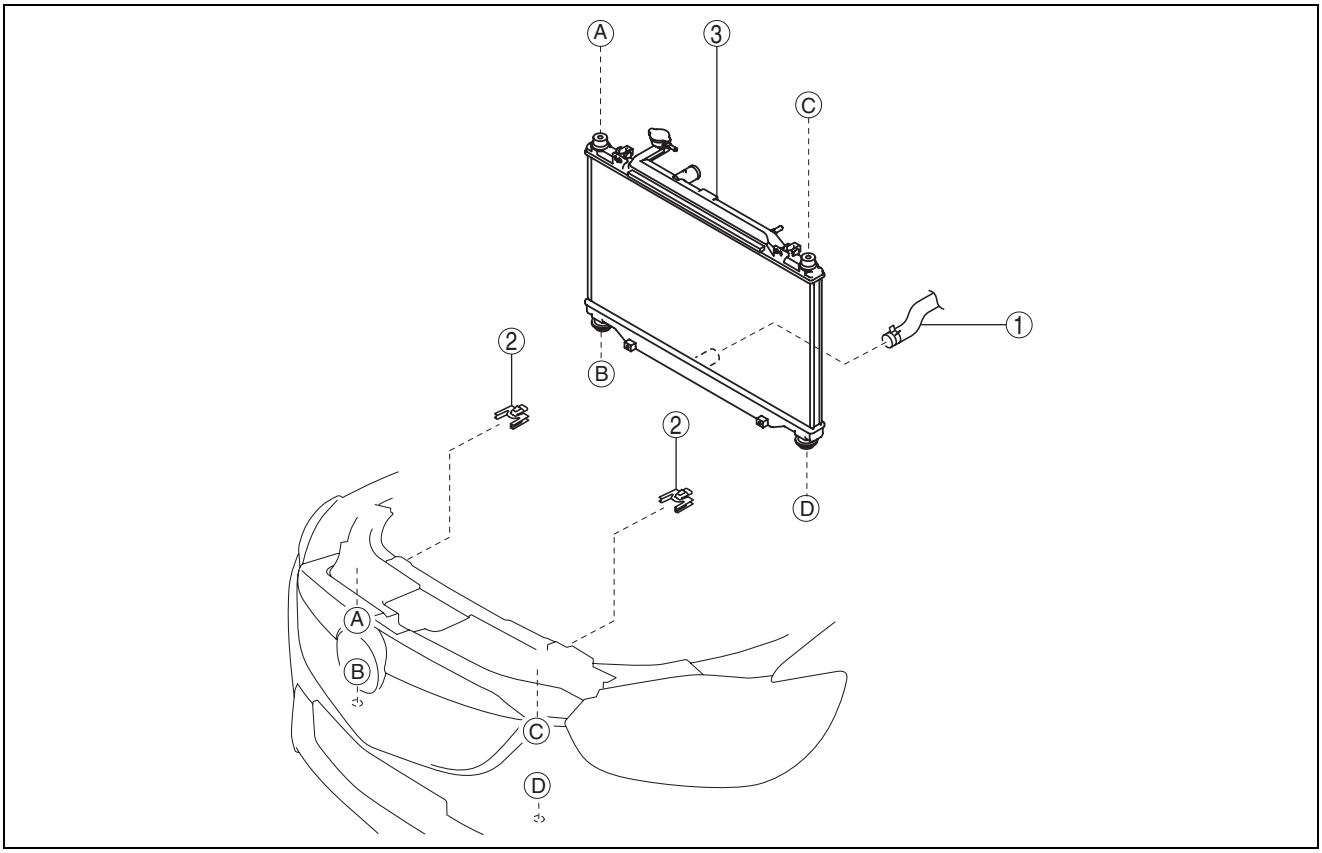

ac5jjw00004208

1	Lower radiator hose
2	Upper mount rubber bracket (See 01-12B-11 Upper Mount Rubber Bracket Removal Note.)

3	Radiator (See 01-12B-11 Radiator Removal Note.)

COOLING SYSTEM [SKYACTIV-D 2.2]

Upper Mount Rubber Bracket Removal Note

Caution
- **To prevent damage to the upper mount rubber bracket tab, do not apply excessive force.**

1. While pressing down the upper mount rubber bracket tab lightly in the direction of the arrow shown in the figure, pull out the upper mount rubber bracket toward the vehicle rear.
2. Remove the upper mount rubber bracket.

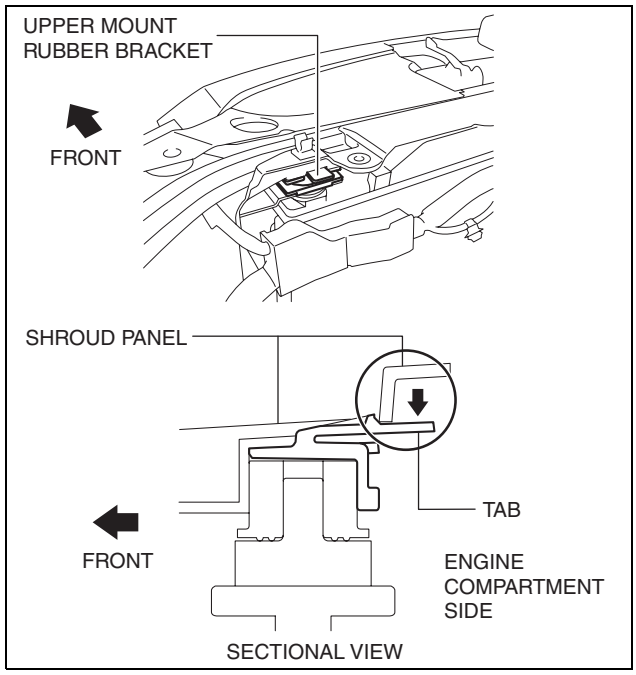

ac5uuw00000574

Radiator Removal Note

1. To prevent damage to the radiator core, protect it by covering the radiator surface with cardboard.
2. Lift the radiator and remove it from the radiator installation holes on the shroud panel.
3. Move the radiator and condenser to the engine side.
4. Remove the two bolts (lower side) which secure the condenser to the radiator.

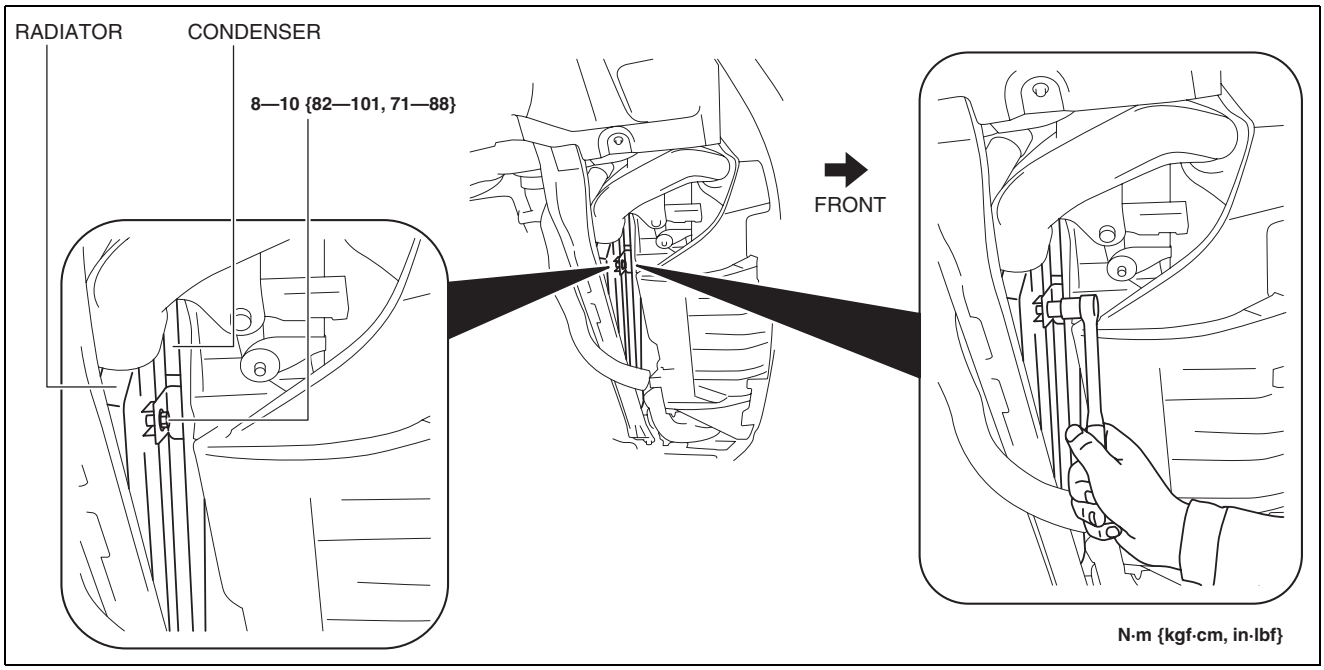

ac5wzw0000488

COOLING SYSTEM [SKYACTIV-D 2.2]

5. Remove the two bolts (upper side) which secure the condenser to the radiator.

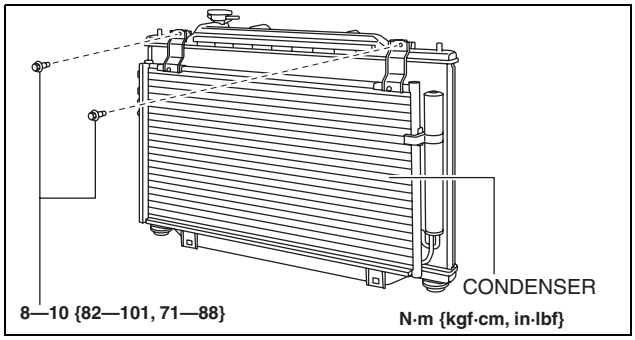

ac5wzw0000488

6. Remove the radiator from above the engine compartment.

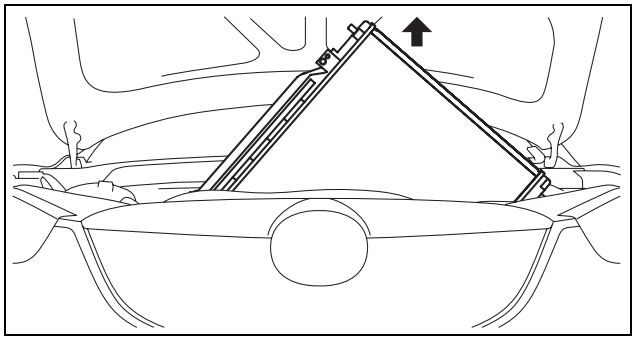

ac5jjw00004212

THERMOSTAT REMOVAL/INSTALLATION [SKYACTIV-D 2.2]

id0112s6801200

Warning

- **Never remove the cooling system cap or loosen the radiator drain plug while the engine is running, or when the engine and radiator are hot. Scalding engine coolant and steam may shoot out and cause serious injury. It may also damage the engine and cooling system.**
- **Turn off the engine and wait until it is cool. Even then, be very careful when removing the cap. Wrap a thick cloth around it and slowly turn it counterclockwise to the first stop. Step back while the pressure escapes.**
- **When you are sure all the pressure is gone, press down on the cap using the cloth, turn it, and remove it.**

1. Disconnect the negative battery cable. (See 01-17B-9 NEGATIVE BATTERY CABLE DISCONNECTION/ CONNECTION [SKYACTIV-D 2.2].)
2. Remove the engine cover. (See 01-10B-4 ENGINE COVER REMOVAL/INSTALLATION [SKYACTIV-D 2.2].)
3. Remove the front under cover No.2. (See 09-16-41 FRONT UNDER COVER No.2 REMOVAL/INSTALLATION.)
4. Drain the engine coolant. (See 01-12B-4 ENGINE COOLANT REPLACEMENT [SKYACTIV-D 2.2].)
5. Disconnect generator terminal B and set the wiring harness aside. (See 01-17B-14 GENERATOR REMOVAL/ INSTALLATION [SKYACTIV-D 2.2].)
6. Remove in the order indicated in the table.
7. Install in the reverse order of removal.
8. Refill the engine coolant. (See 01-12B-4 ENGINE COOLANT REPLACEMENT [SKYACTIV-D 2.2].)
9. Inspect for the engine coolant leakage. (See 01-12B-7 ENGINE COOLANT LEAKAGE INSPECTION [SKYACTIV-D 2.2].)

COOLING SYSTEM [SKYACTIV-D 2.2]

1	Lower radiator hose (Thermostat cover side)
2	Thermostat cover (See 01-12B-13 Thermostat Cover Removal Note.) (See 01-12B-14 Thermostat Cover Installation Note.)
3	Thermostat (See 01-12B-13 Thermostat Installation Note.)

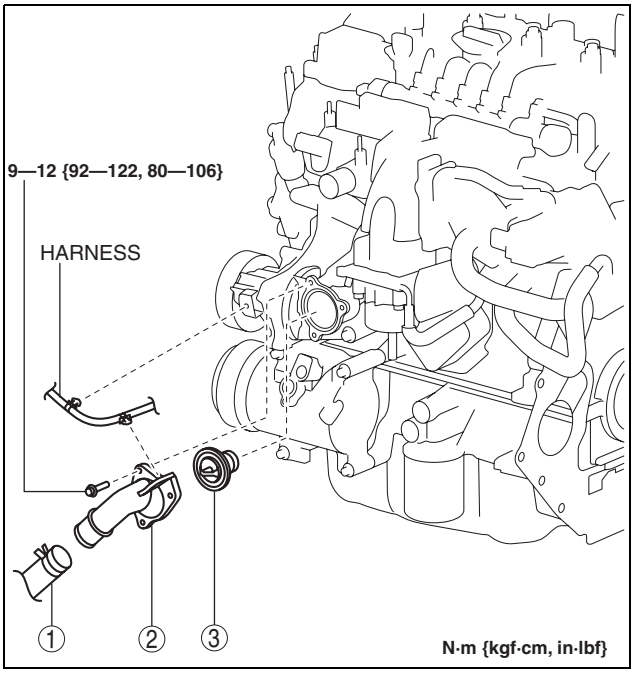

ac5wzw0000487

Thermostat Cover Removal Note

1. Slightly loosen the three thermostat bolts shown in the figure and collect the draining engine coolant into a container.

   Caution
   - **Do not remove the thermostat cover completely at this time because a small amount of the engine coolant remaining in the engine will drain out.**

2. After the engine coolant stops draining, remove the thermostat cover.

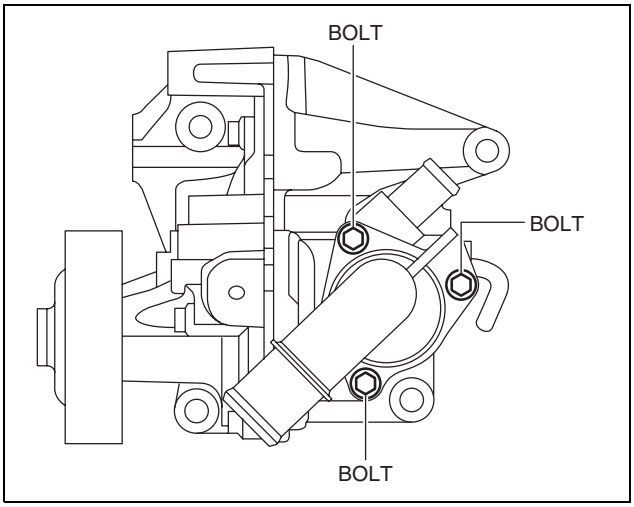

ac5wzw0000487

Thermostat Installation Note

Caution
- **Do not apply oil (engine oil, ATF etc.) to the rubber seal part of the thermostat. Otherwise, the O-ring could swell causing a seal malfunction.**

1. Install the thermostat with the jiggle pin aligned with the notch of the thermostat case.

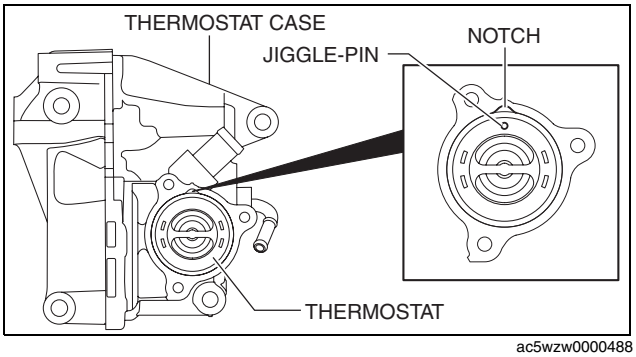

ac5wzw0000488

COOLING SYSTEM [SKYACTIV-D 2.2]

Thermostat Cover Installation Note

1. Install the thermostat cover using the following procedure:
   (1) Temporarily tighten the bolts shown in the figure.

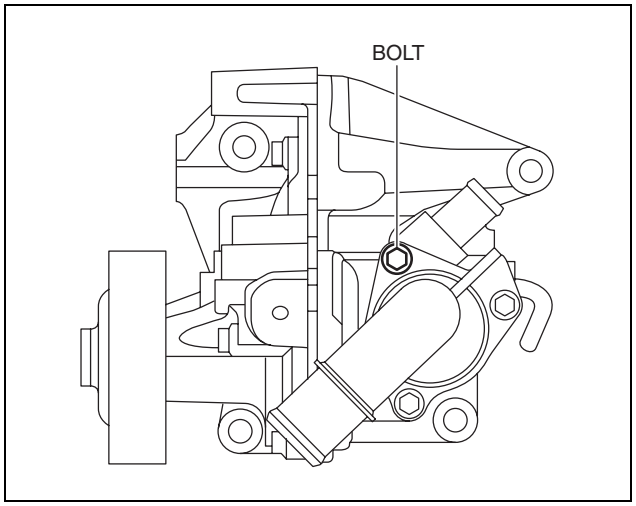

ac5wzw0000488

   (2) Tighten the two bolts shown in the figure to the specified torque.

Note
- The tightening order for the two bolts is optional.

Tightening torque
9—12 N·m {92—122 kgf·cm, 80—106 in·lbf}

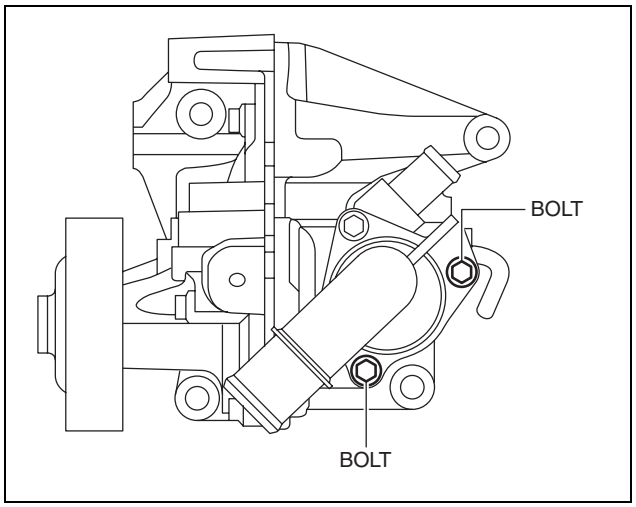

ac5wzw0000488

   (3) Finally, tighten the bolt shown in the figure to the specified torque.

Tightening torque
9—12 N·m {92—122 kgf·cm, 80—106 in·lbf}

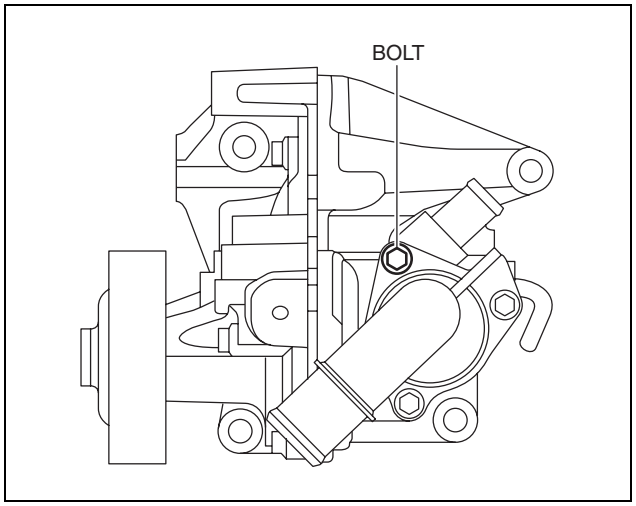

ac5wzw0000488

COOLING SYSTEM [SKYACTIV-D 2.2]

THERMOSTAT INSPECTION [SKYACTIV-D 2.2]

id0112s6801300

1. Remove the thermostat. (See 01-12B-12 THERMOSTAT REMOVAL/INSTALLATION [SKYACTIV-D 2.2].)
2. Visually check that the thermostat valve is closed.
3. Place the thermostat in water.

Warning
- **During inspection, the thermostat and water are extremely hot and can cause severe burns. Do not touch the thermostat and water.**

4. Heat the water and check the following.
   - Opening temperature and valve lift
     — If there is a malfunction, replace the thermostat.

Thermostat initial-opening temperature
80—84 °C {176—183 °F}

Thermostat full-open temperature
95 °C {203 °F}

Thermostat full-open lift
8.5 mm {0.33 in} or more

WATER PUMP REMOVAL/INSTALLATION [SKYACTIV-D 2.2]

id0112s6800700

Warning
- **Never remove the cooling system cap or loosen the radiator drain plug while the engine is running, or when the engine and radiator are hot. Scalding engine coolant and steam may shoot out and cause serious injury. It may also damage the engine and cooling system.**
- **Turn off the engine and wait until it is cool. Even then, be very careful when removing the cap. Wrap a thick cloth around it and slowly turn it counterclockwise to the first stop. Step back while the pressure escapes.**
- **When you are sure all the pressure is gone, press down on the cap using the cloth, turn it, and remove it.**

Caution
- **Be careful not to damage the exterior circumference surface of the water pump pulley when using tools, otherwise it will cause wear, breakage, abnormal noise of the drive belt, damage to the pulley, and rust.**

1. Disconnect the negative battery cable. (See 01-17B-9 NEGATIVE BATTERY CABLE DISCONNECTION/CONNECTION [SKYACTIV-D 2.2].)
2. Remove the front under cover No.2. (See 09-16-41 FRONT UNDER COVER No.2 REMOVAL/INSTALLATION.)
3. Remove the splash shield (RH). (See 09-16-49 SPLASH SHIELD REMOVAL/INSTALLATION.)
4. Remove the drive belt. (See 01-10B-8 DRIVE BELT REMOVAL/INSTALLATION [SKYACTIV-D 2.2].)
5. Remove the engine cover. (See 01-10B-4 ENGINE COVER REMOVAL/INSTALLATION [SKYACTIV-D 2.2].)
6. Remove the generator. (See 01-17B-14 GENERATOR REMOVAL/INSTALLATION [SKYACTIV-D 2.2].)
7. Drain the engine coolant. (See 01-12B-4 ENGINE COOLANT REPLACEMENT [SKYACTIV-D 2.2].)
8. Remove in the order indicated in the table.
9. Install in the reverse order of removal.
10. Refill the engine coolant. (See 01-12B-4 ENGINE COOLANT REPLACEMENT [SKYACTIV-D 2.2].)
11. Inspect for engine coolant leakage. (See 01-12B-7 ENGINE COOLANT LEAKAGE INSPECTION [SKYACTIV-D 2.2].)

COOLING SYSTEM [SKYACTIV-D 2.2]

1	Water pump component (See 01-12B-16 Water Pump Component Removal Note.) (See 01-12B-17 Water Pump Component Installation Note.)
2	Gasket

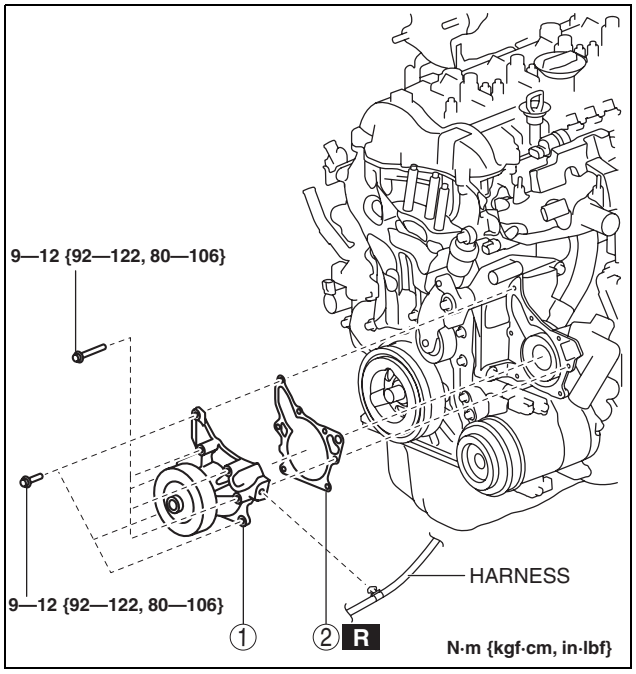

ac5wzw0000487

Water Pump Component Removal Note

Caution
- **Be careful not to damage the exterior circumference surface of the water pump pulley when using tools, otherwise it will cause wear, breakage, abnormal noise of the drive belt, damage to the pulley, and rust.**

1. Slightly loosen the seven water pump component bolts shown in the figure and collect the draining engine coolant into a container.

Caution
- **Do not remove the water pump component completely at this time because a small amount of the engine coolant remaining in the engine will drain out.**

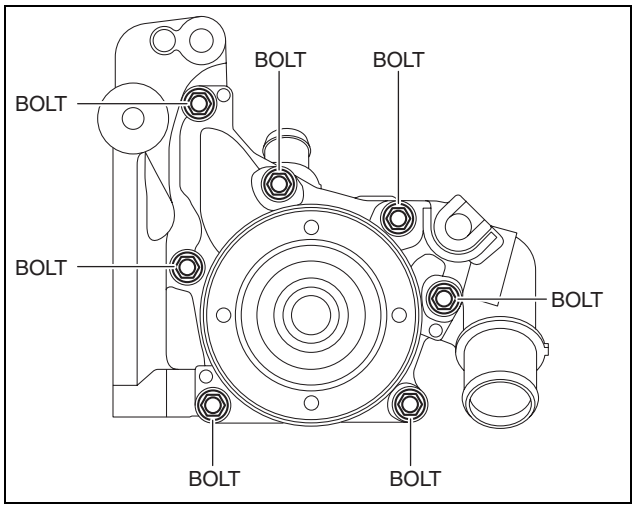

ac5wzw0000487

COOLING SYSTEM [SKYACTIV-D 2.2]

Water Pump Component Installation Note

Caution

- **Be careful not to damage the exterior circumference surface of the water pump pulley when using tools, otherwise it will cause wear, breakage, abnormal noise of the drive belt, damage to the pulley, and rust.**

1. Install the water pump using the following procedure:
   (1) Temporarily tighten the bolts shown in the figure.

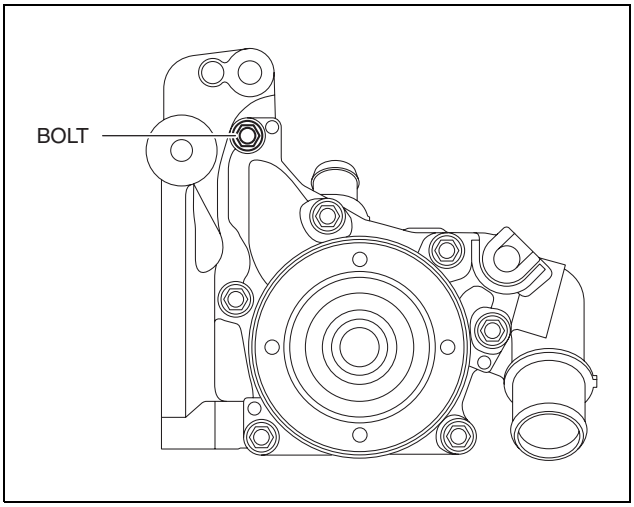

ac5wzw0000487

   (2) Tighten the bolts in the order shown in the figure.

Tightening torque
9—12 N·m {92—122 kgf·cm, 80—106 in·lbf}

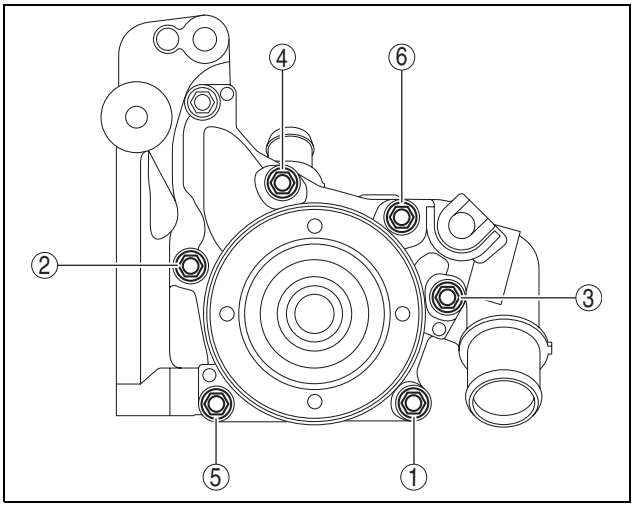

ac5jjw00004219

   (3) Finally, tighten the bolt shown in the figure to the specified torque.

Tightening torque
9—12 N·m {92—122 kgf·cm, 80—106 in·lbf}

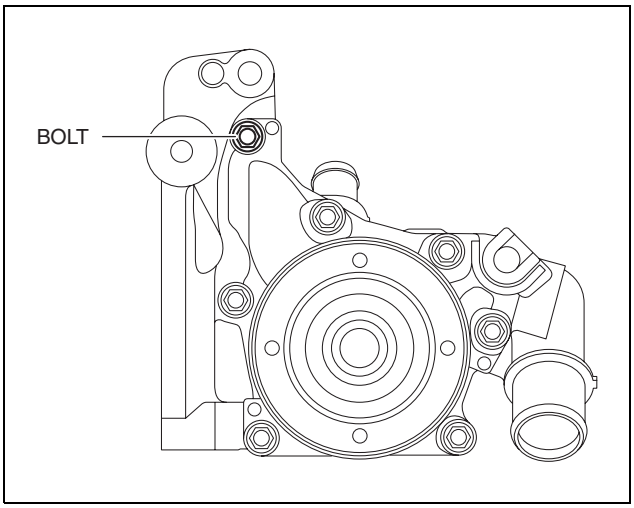

ac5wzw0000487

COOLING SYSTEM [SKYACTIV-D 2.2]

COOLING FAN MOTOR REMOVAL/INSTALLATION [SKYACTIV-D 2.2]

id0112s6801900

Warning

- **Never remove the cooling system cap or loosen the radiator drain plug while the engine is running, or when the engine and radiator are hot. Scalding engine coolant and steam may shoot out and cause serious injury. It may also damage the engine and cooling system.**
- **Turn off the engine and wait until it is cool. Even then, be very careful when removing the cap. Wrap a thick cloth around it and slowly turn it counterclockwise to the first stop. Step back while the pressure escapes.**
- **When you are sure all the pressure is gone, press down on the cap using the cloth, turn it, and remove it.**

1. Disconnect the negative battery cable. (See 01-17B-9 NEGATIVE BATTERY CABLE DISCONNECTION/CONNECTION [SKYACTIV-D 2.2].)
2. Drain the engine coolant. (See 01-12B-4 ENGINE COOLANT REPLACEMENT [SKYACTIV-D 2.2].)
3. Remove the engine cover. (See 01-10B-4 ENGINE COVER REMOVAL/INSTALLATION [SKYACTIV-D 2.2].)
4. Remove the air cleaner and fresh air duct component. (See 01-13B-6 INTAKE-AIR SYSTEM REMOVAL/INSTALLATION [SKYACTIV-D 2.2].)
5. Remove the coolant reserve tank. (See 01-12B-8 COOLANT RESERVE TANK REMOVAL/INSTALLATION [SKYACTIV-D 2.2].)
6. Remove in the order indicated in the table.
7. Install in the reverse order of removal.
8. Refill the engine coolant. (See 01-12B-4 ENGINE COOLANT REPLACEMENT [SKYACTIV-D 2.2].)
9. Inspect for engine coolant leakage. (See 01-12B-7 ENGINE COOLANT LEAKAGE INSPECTION [SKYACTIV-D 2.2].)

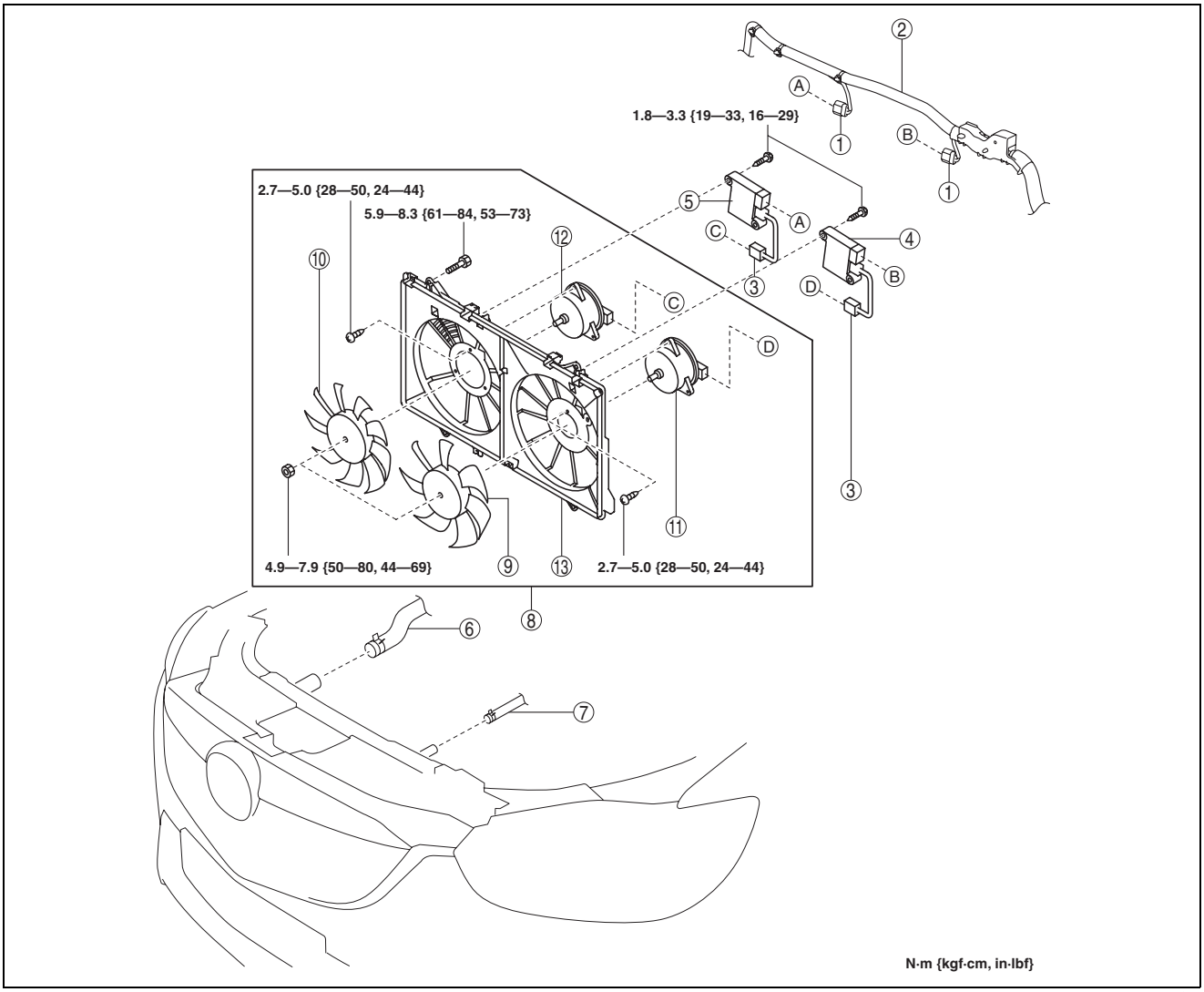

ac5wzw0000489

COOLING SYSTEM [SKYACTIV-D 2.2]

1	Fan control module connectors
2	Wiring harness
3	Cooling fan motor connector
4	Fan control module No.1
5	Fan control module No.2
6	Upper radiator hose
7	Water hose

8	Cooling fan component (See 01-12B-19 Cooling Fan Component Removal Note.)
9	Cooling fan No.1
10	Cooling fan No.2
11	Cooling fan motor No.1
12	Cooling fan motor No.2
13	Radiator cowling

Cooling Fan Component Removal Note

1. Remove the cooling fan component from above the engine compartment.

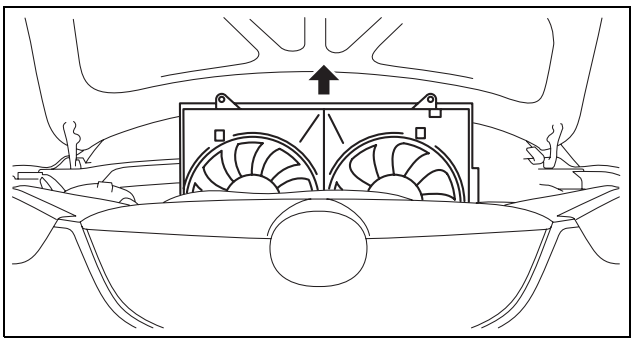

ac5jjw00004227

COOLING FAN MOTOR INSPECTION [SKYACTIV-D 2.2]

id0112s6801800

Part Inspection

1. Verify that the battery is fully charged. (See 01-17B-6 BATTERY INSPECTION [SKYACTIV-D 2.2].)
2. Disconnect the cooling fan motor connector (2 terminals).
3. Install a tester and battery to the cooling fan motor connector (2 terminals) as shown in the figure.
4. Verify that each cooling fan motors operate smoothly at the standard current.
   - If there is any malfunction, replace the applicable part.

Cooling fan motor No.1, No.2 standard current
15—21 A [12 V]

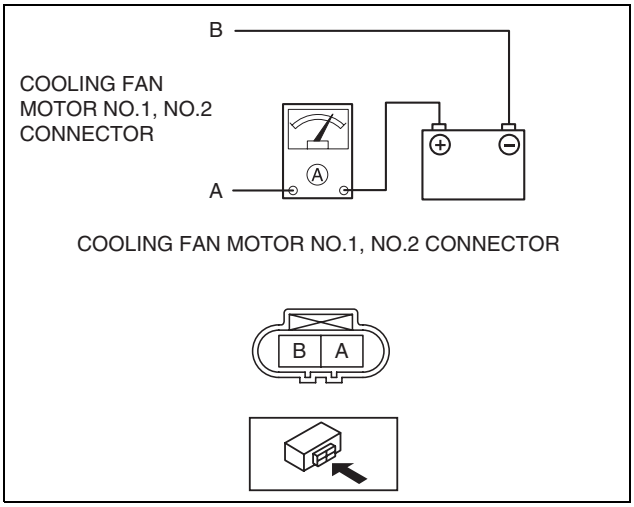

ac5wzw0000488

COOLING SYSTEM [SKYACTIV-D 2.2]

FAN CONTROL MODULE INSPECTION [SKYACTIV-D 2.2]

id0112s6801100

1. Connect the M-MDS to the DLC-2.
2. Start and warm up the engine.
3. Monitor the engine coolant temperature with the M-MDS.
4. Measure the voltage at terminal A of the fan control module connector (2 terminals) as shown in the table.
   - If not within the specification, inspect the input signals from the following parts.
     - — Engine Coolant Temperature (ECT) sensor
     - — Refrigerant pressure sensor
     - — Battery
     - — DSC (HU/CM)

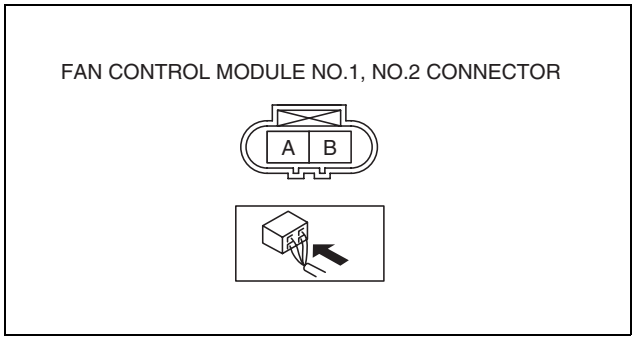

ac5wzw0000487

Fan control module No.1, No.2 [A/C OFF]

Inspection	Result	
Engine coolant temp. (°C {°F})	**PID FAN DUTY (%)**	**Voltage (V)**
100 {212}	30	3.6
100—106 {212—222}	30—75	3.6—9.0
106—108 {223—226}	75	9.0
more than 108 {226}	100	0.4 LOWER THAN BATTERY VOLTAGE

Fan control module No.1, No.2 [A/C ON (Engine coolant temp. less than 98 °C {208 °F} and idling)]

Inspection	Result	
Refrigerant pressure (MPa{kgf/cm^2, psi})	**PID FAN DUTY (%)**	**Voltage (V)**
less than 1.0 {10, 145}	30	3.6
1.0—1.7 {11—17, 146—246}	30—75	3.6—9.0
1.7—1.9 {18—19, 247—275}	75	9.0
more than 1.9 {19, 276}	100	0.4 LOWER THAN BATTERY VOLTAGE

5. If all the above parts are normal, replace the fan control module.

01-13A INTAKE-AIR SYSTEM [SKYACTIV-G 2.0]

INTAKE-AIR SYSTEM LOCATION INDEX [SKYACTIV-G 2.0] 01-13A–2
INTAKE-AIR SYSTEM VACUUM HOSE ROUTING DIAGRAM [SKYACTIV-G 2.0] 01-13A–4
INTAKE-AIR SYSTEM DIAGRAM [SKYACTIV-G 2.0] 01-13A–5
INTAKE MANIFOLD VACUUM INSPECTION [SKYACTIV-G 2.0] 01-13A–5
INTAKE-AIR SYSTEM REMOVAL/INSTALLATION [SKYACTIV-G 2.0] 01-13A–6
Resonance Chamber Removal Note . . 01-13A–7
Fresh-air Duct Removal Note. 01-13A–7
Vacuum Hose Removal Note. 01-13A–7
Intake Manifold Removal Note 01-13A–8
Evaporative Hose Installation Note . . . 01-13A–8
Vacuum Hose Installation Note 01-13A–9
Air Cleaner Case Installation Note 01-13A–9
Fresh-air Duct Installation Note. 01-13A–10
Air Hose Installation Note 01-13A–10
Ventilation Hose Installation Note 01-13A–11
AIR CLEANER ELEMENT REMOVAL/INSTALLATION [SKYACTIV-G 2.0] 01-13A–12
AIR CLEANER ELEMENT INSPECTION [SKYACTIV-G 2.0] 01-13A–12
THROTTLE BODY INSPECTION [SKYACTIV-G 2.0] 01-13A–13
Resistance Inspection. 01-13A–13
CHECK VALVE INSPECTION [SKYACTIV-G 2.0] 01-13A–13
Airflow Inspection 01-13A–13
ACCELERATOR PEDAL REMOVAL/INSTALLATION [SKYACTIV-G 2.0] 01-13A–14

INTAKE-AIR SYSTEM [SKYACTIV-G 2.0]

INTAKE-AIR SYSTEM LOCATION INDEX [SKYACTIV-G 2.0]

id0113z5801700

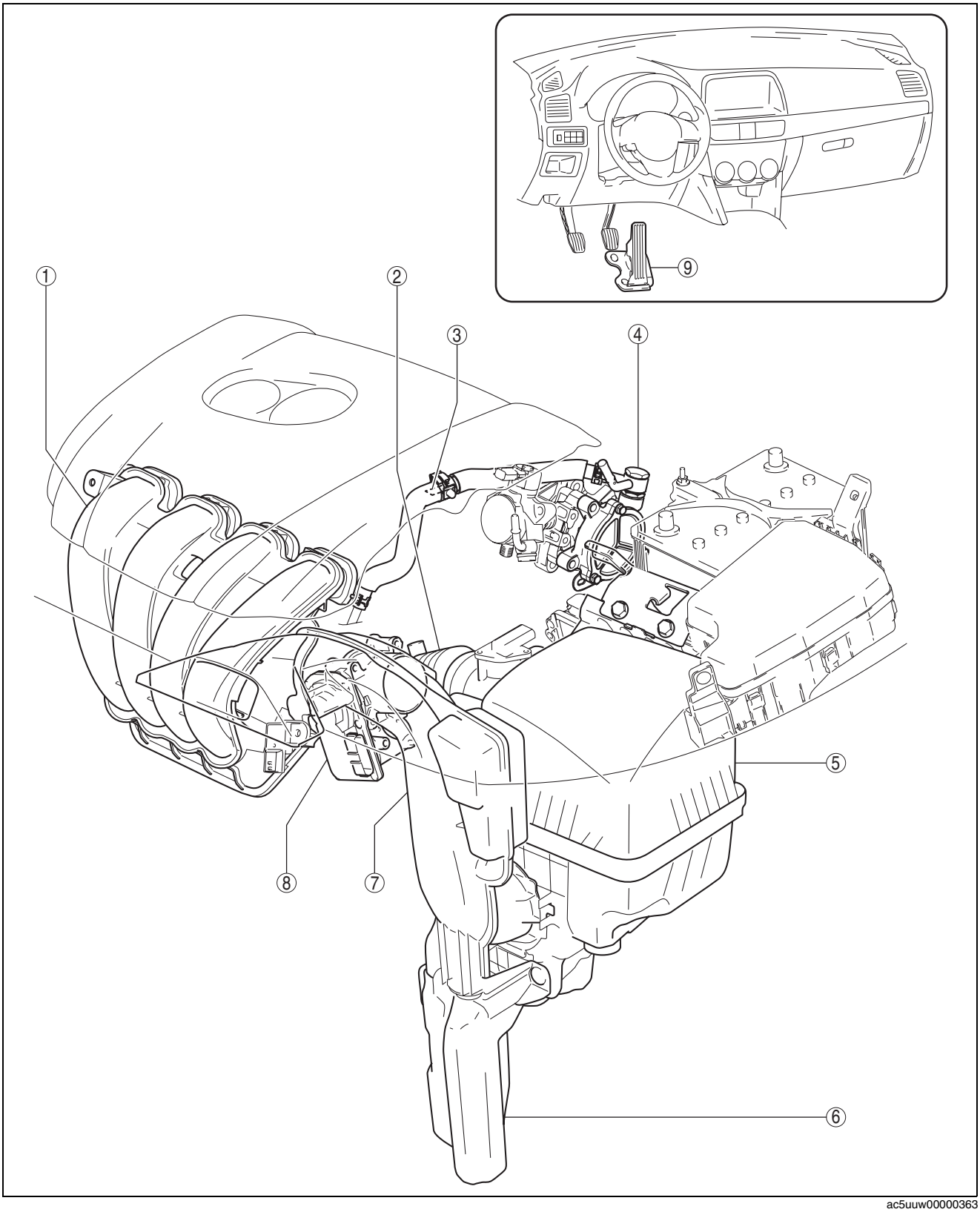

ac5uuw00000363

INTAKE-AIR SYSTEM [SKYACTIV-G 2.0]

1	Intake manifold (See 01-13A-6 INTAKE-AIR SYSTEM REMOVAL/INSTALLATION [SKYACTIV-G 2.0].) (See 01-13A-5 INTAKE MANIFOLD VACUUM INSPECTION [SKYACTIV-G 2.0].)
2	Air hose (See 01-13A-6 INTAKE-AIR SYSTEM REMOVAL/INSTALLATION [SKYACTIV-G 2.0].)
3	Check valve (See 01-13A-6 INTAKE-AIR SYSTEM REMOVAL/INSTALLATION [SKYACTIV-G 2.0].) (See 01-13A-13 CHECK VALVE INSPECTION [SKYACTIV-G 2.0].)
4	Vacuum pump (See 04-11-21 VACUUM PUMP REMOVAL/INSTALLATION [SKYACTIV-G 2.0].) (See 04-11-20 VACUUM PUMP INSPECTION.)
5	Air cleaner (See 01-13A-6 INTAKE-AIR SYSTEM REMOVAL/INSTALLATION [SKYACTIV-G 2.0].) (See 01-13A-12 AIR CLEANER ELEMENT REMOVAL/INSTALLATION [SKYACTIV-G 2.0].) (See 01-13A-12 AIR CLEANER ELEMENT INSPECTION [SKYACTIV-G 2.0].)
6	Resonance chamber (See 01-13A-6 INTAKE-AIR SYSTEM REMOVAL/INSTALLATION [SKYACTIV-G 2.0].)
7	Fresh-air duct (See 01-13A-6 INTAKE-AIR SYSTEM REMOVAL/INSTALLATION [SKYACTIV-G 2.0].)
8	Throttle body (See 01-13A-6 INTAKE-AIR SYSTEM REMOVAL/INSTALLATION [SKYACTIV-G 2.0].) (See 01-13A-13 THROTTLE BODY INSPECTION [SKYACTIV-G 2.0].)
9	Accelerator pedal (See 01-13A-14 ACCELERATOR PEDAL REMOVAL/INSTALLATION [SKYACTIV-G 2.0].)

INTAKE-AIR SYSTEM [SKYACTIV-G 2.0]

INTAKE-AIR SYSTEM VACUUM HOSE ROUTING DIAGRAM [SKYACTIV-G 2.0]

id0113z5804100

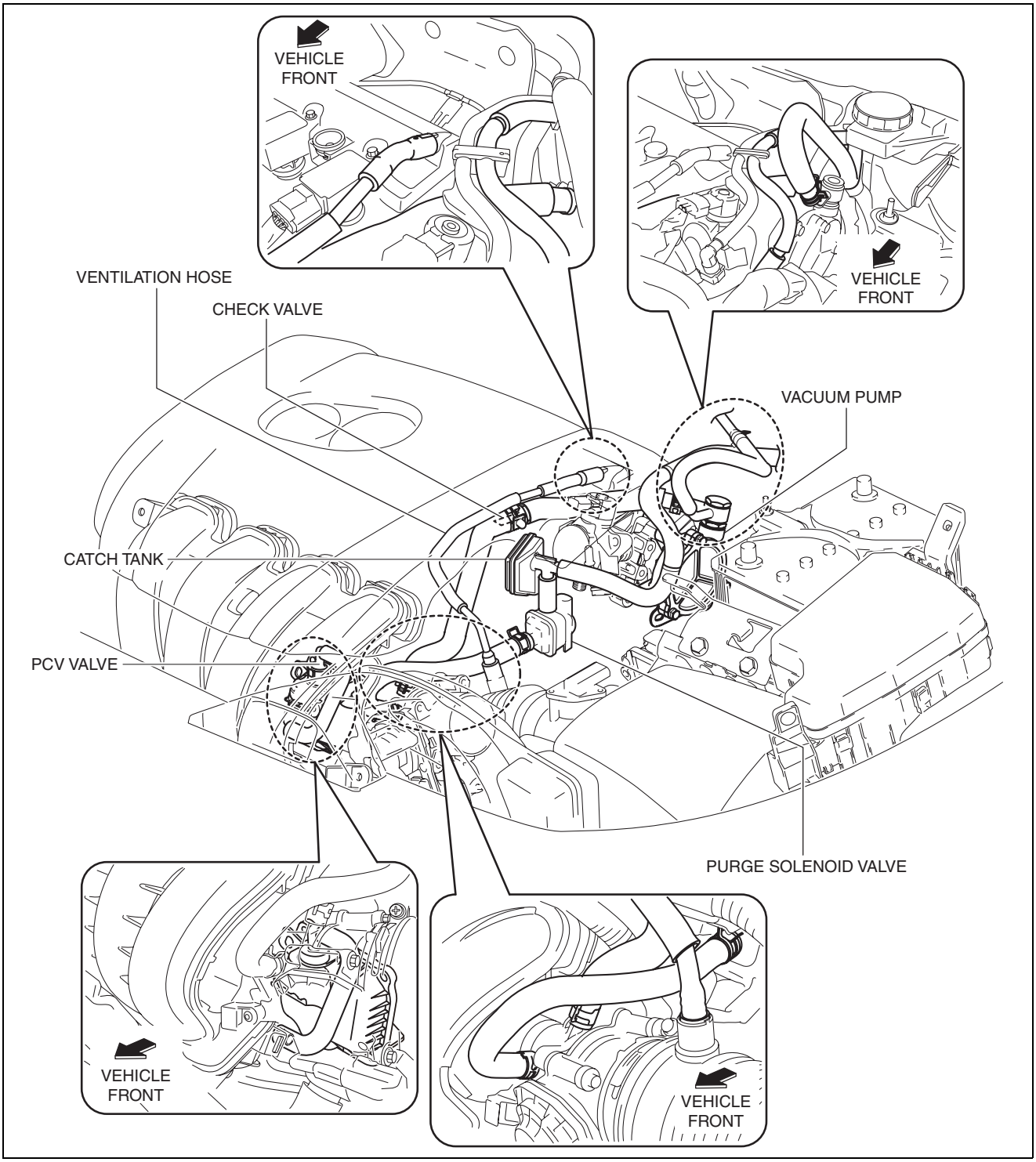

ac5wzw0000270

INTAKE-AIR SYSTEM [SKYACTIV-G 2.0]

INTAKE-AIR SYSTEM DIAGRAM [SKYACTIV-G 2.0]

id0113z5801600

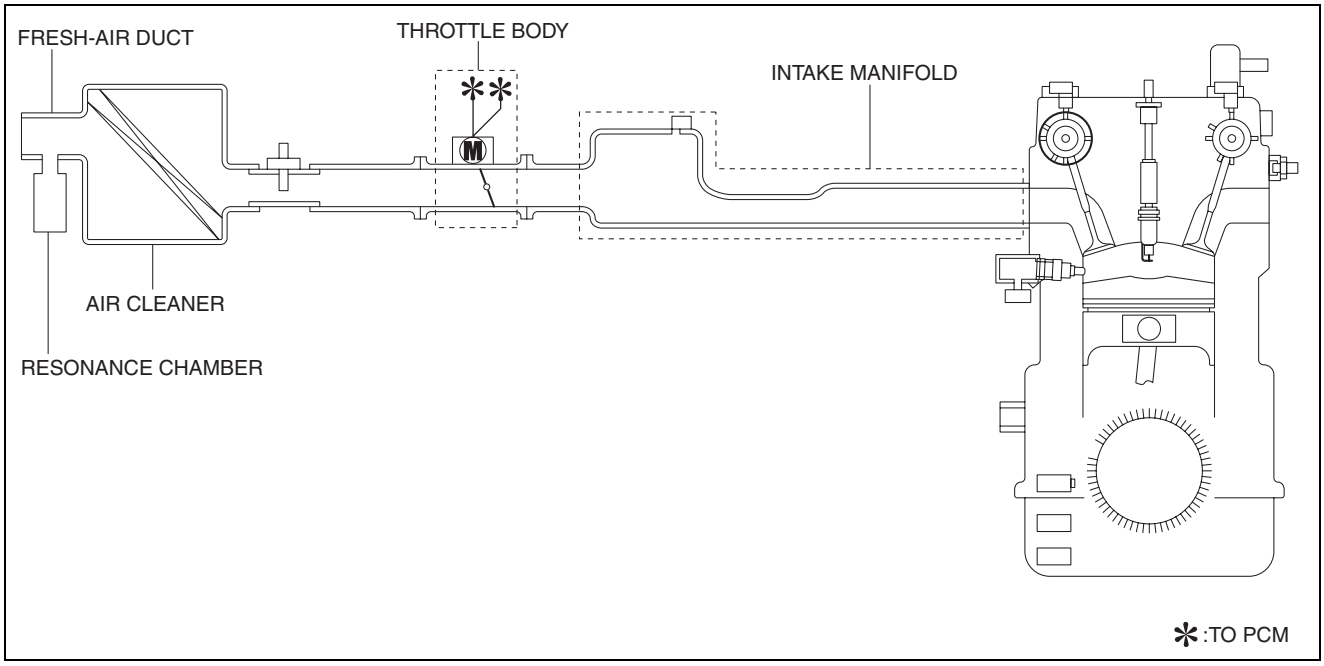

ac5uuw00000362

INTAKE MANIFOLD VACUUM INSPECTION [SKYACTIV-G 2.0]

id0113z5801500

1. Disconnect the evaporative hose No.3 (purge solenoid valve side) and install the vacuum gauge. (See 01-16A-10 PURGE SOLENOID VALVE REMOVAL/INSTALLATION [SKYACTIV-G 2.0].)
2. Verify that the intake air hoses are installed securely.
3. Warm up the engine.
4. Measure the intake manifold vacuum while idling (no load) using the vacuum gauge.
   - If not within the specification, perform the following inspections.
     - — Compression pressure (See 01-10A-14 COMPRESSION INSPECTION [SKYACTIV-G 2.0].)
     - — Check valve (See 01-13A-13 CHECK VALVE INSPECTION [SKYACTIV-G 2.0].)
     - — Air suction
       - Installation areas of each vacuum hose
       - Installation area of throttle body
       - Installation area of fuel injector
       - Installation area of PCV valve
       - Installation area of intake manifold

Standard
Approx. –60.0 kPa {–450.0 mmHg, –17.7 inHg}

INTAKE-AIR SYSTEM [SKYACTIV-G 2.0]

INTAKE-AIR SYSTEM REMOVAL/INSTALLATION [SKYACTIV-G 2.0]

id0113z5801900

Warning

- **A hot engine and intake air system can cause severe burns. Turn off the engine and wait until they are cool before removing the intake air system.**

1. Disconnect the negative battery cable. (See 01-17A-11 NEGATIVE BATTERY CABLE DISCONNECTION/CONNECTION [SKYACTIV-G 2.0].) (See 01-17A-13 NEGATIVE BATTERY CABLE DISCONNECTION/CONNECTION [SKYACTIV-G 2.0 (WITHOUT i-stop)].)
2. Remove in the order indicated in the table.
3. Install in the reverse order of removal.

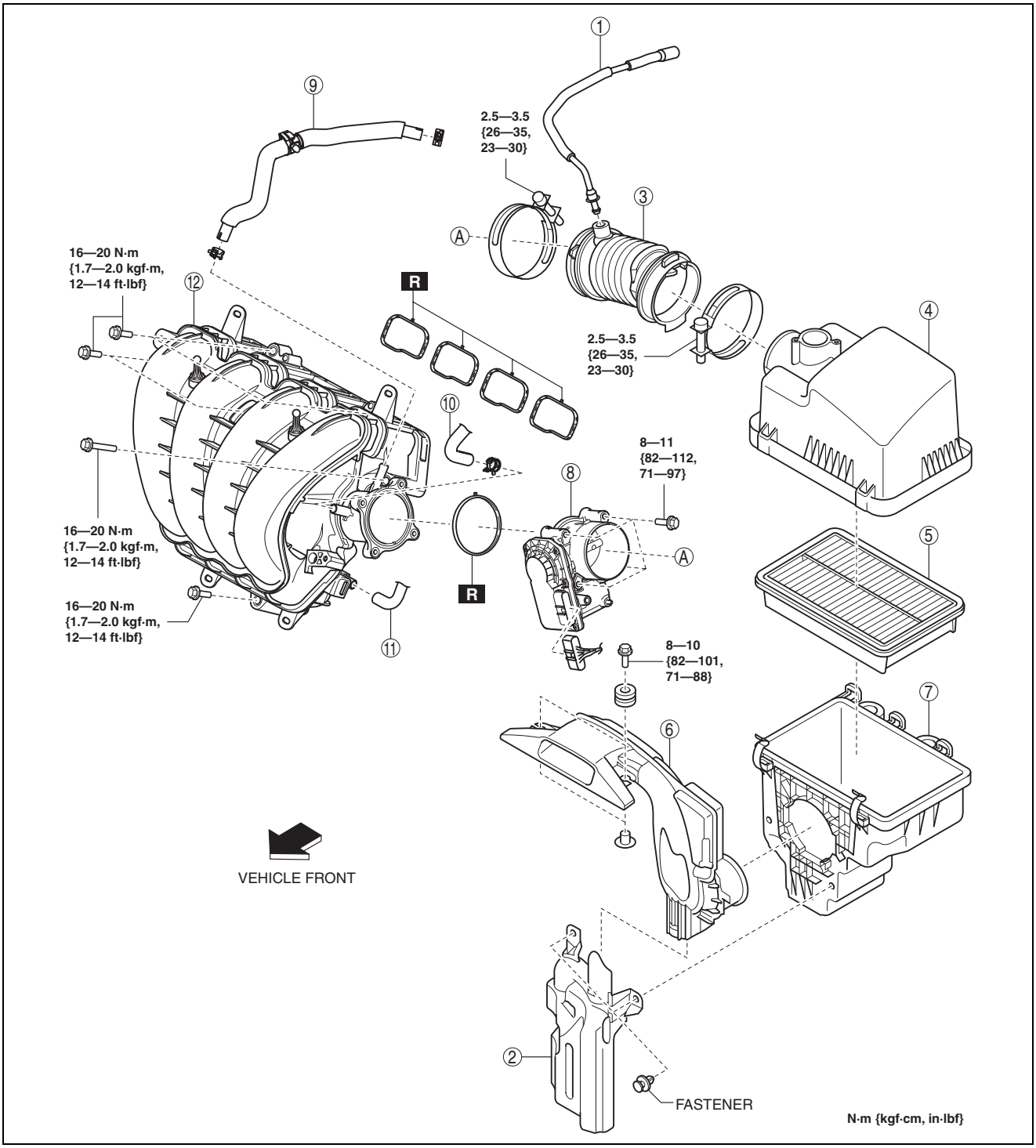

ac5wzw0000269

INTAKE-AIR SYSTEM [SKYACTIV-G 2.0]

1	Ventilation hose (See 01-13A-11 Ventilation Hose Installation Note.)
2	Resonance chamber (See 01-13A-7 Resonance Chamber Removal Note.)
3	Air hose (See 01-13A-10 Air Hose Installation Note)
4	Air cleaner cover
5	Air cleaner element
6	Fresh-air duct (See 01-13A-7 Fresh-air Duct Removal Note.) (See 01-13A-10 Fresh-air Duct Installation Note.)
7	Air cleaner case (See 01-13A-9 Air Cleaner Case Installation Note.)
8	Throttle body
9	Vacuum hose (See 01-13A-7 Vacuum Hose Removal Note.) (See 01-13A-9 Vacuum Hose Installation Note.)
10	Evaporative hose (See 01-13A-8 Evaporative Hose Installation Note)
11	PCV hose
12	Intake manifold (See 01-13A-8 Intake Manifold Removal Note)

Resonance Chamber Removal Note

1. Remove the MAF sensor/IAT sensor No.1. (See 01-40-45 MASS AIR FLOW (MAF) SENSOR/INTAKE AIR TEMPERATURE (IAT) SENSOR NO.1 REMOVAL/INSTALLATION [SKYACTIV-G 2.0].)
2. Remove the following parts as a single unit:
   - Air hose
   - Air cleaner cover
   - Air cleaner element
   - Air cleaner case
   - Fresh-air duct
   - Resonance chamber
3. Remove the resonance chamber.

Fresh-air Duct Removal Note

1. Pull out the fresh-air duct while pressing the tab shown in the figure.

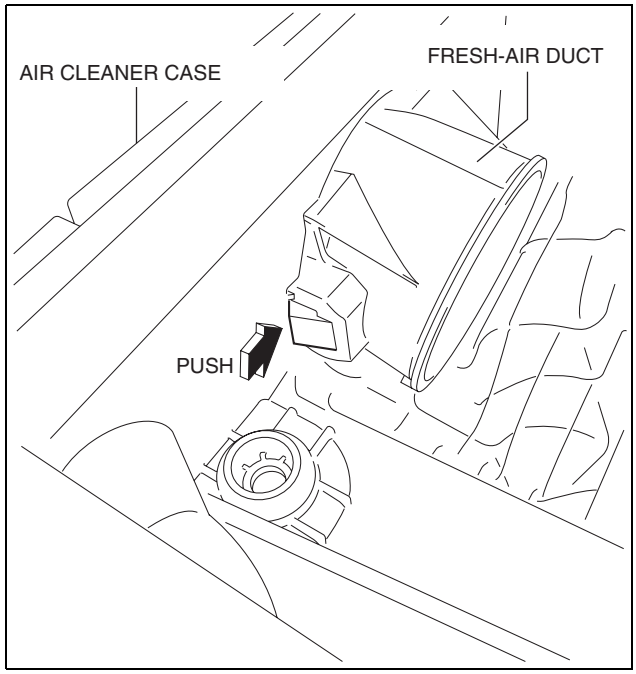

ac5uuw00000365

Vacuum Hose Removal Note

1. Remove the plug hole plate. (See 01-10A-6 PLUG HOLE PLATE REMOVAL/INSTALLATION [SKYACTIV-G 2.0].)
2. Remove the vacuum hose.

INTAKE-AIR SYSTEM [SKYACTIV-G 2.0]

Intake Manifold Removal Note

1. Remove the MAP sensor/IAT sensor No.2. (See 01-40-48 MANIFOLD ABSOLUTE PRESSURE (MAP) SENSOR/INTAKE AIR TEMPERATURE (IAT) SENSOR NO.2 REMOVAL/INSTALLATION [SKYACTIV-G 2.0].)
2. Disconnect the harness clip from the intake manifold as shown in the figure.

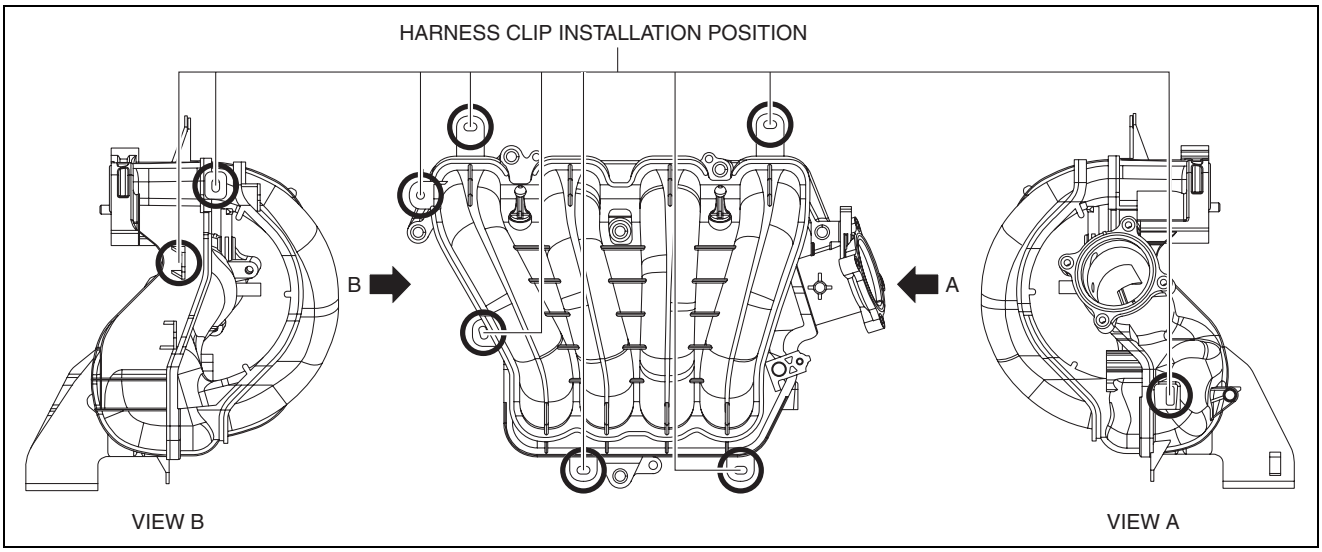

ac5uuw00000366

3. Remove the intake manifold.

Evaporative Hose Installation Note

1. Install the evaporative hose as shown in the figure.

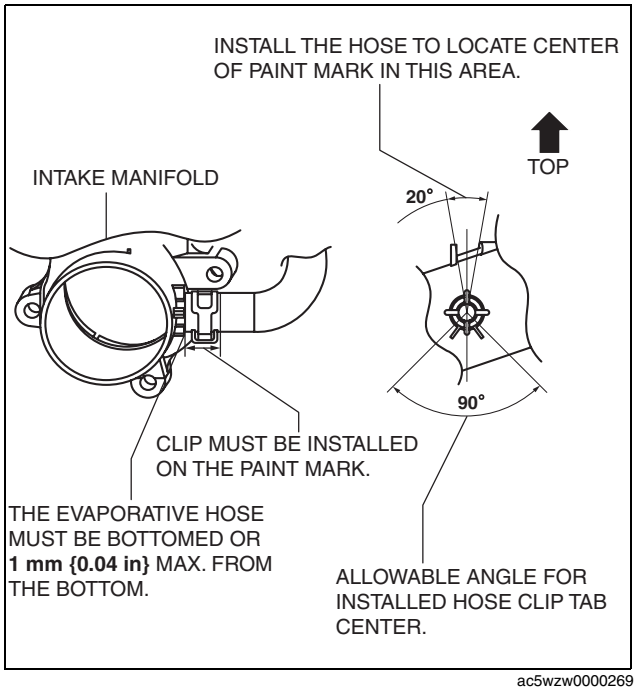

ac5wzw0000269

INTAKE-AIR SYSTEM [SKYACTIV-G 2.0]

Vacuum Hose Installation Note

1. Install the vacuum hose as shown in the figure.

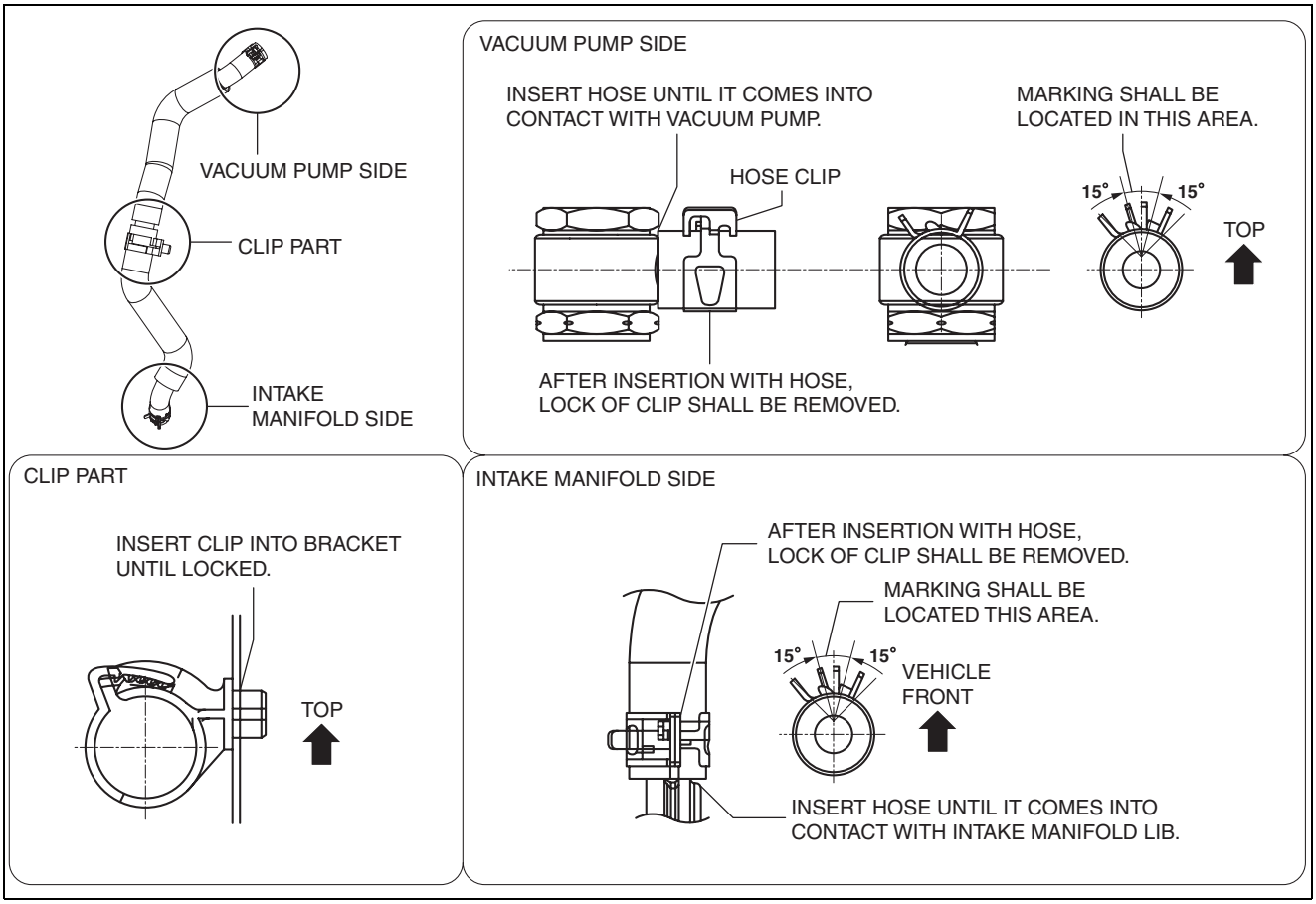

ac5wzw0000270

Air Cleaner Case Installation Note

1. Install the air cleaner case as shown in the figure.

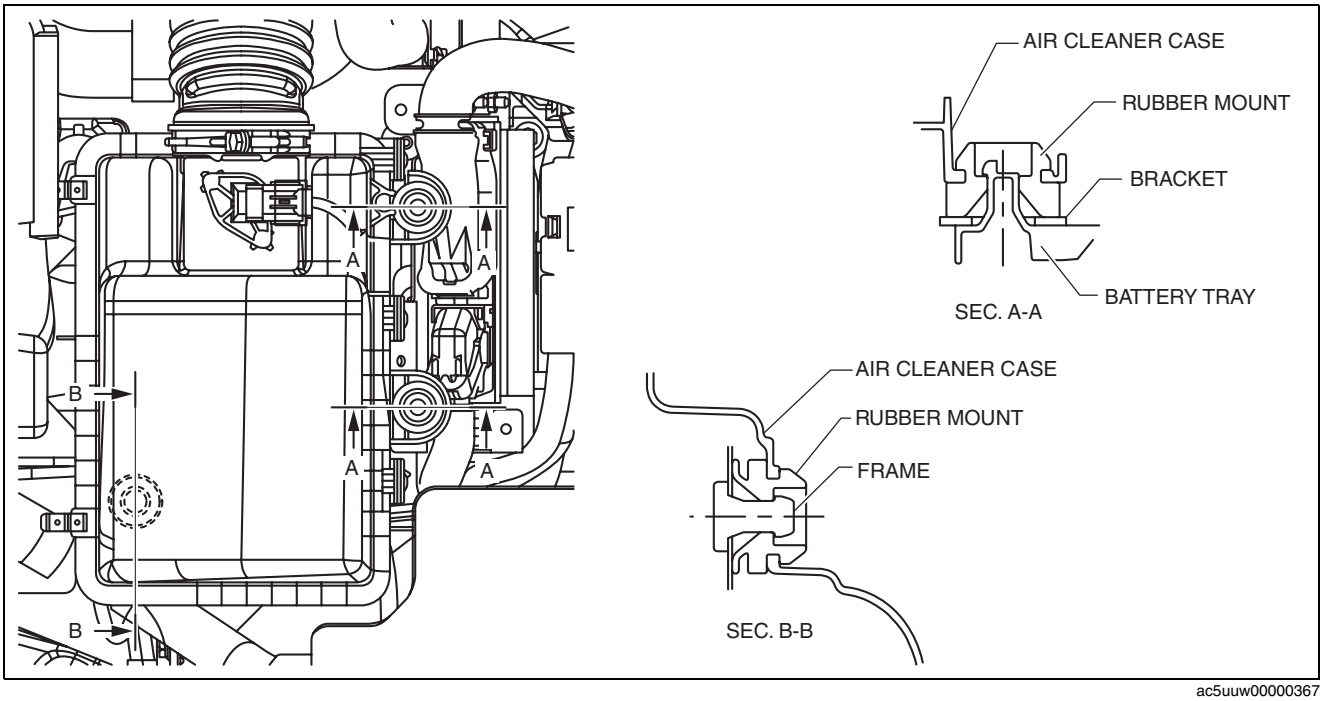

ac5uuw00000367

INTAKE-AIR SYSTEM [SKYACTIV-G 2.0]

Fresh-air Duct Installation Note

1. Install the fresh-air duct as shown in the figure.

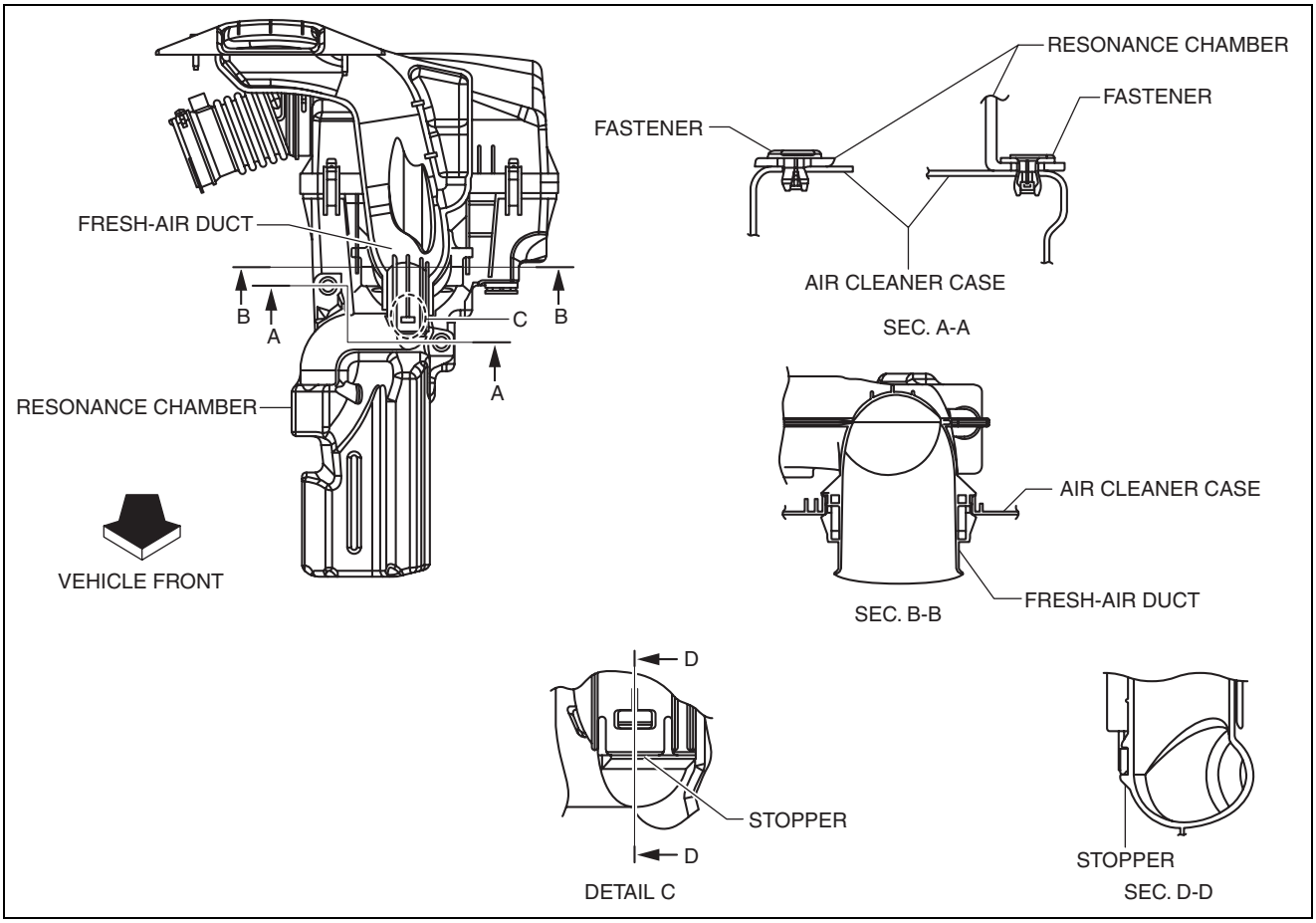

ac5uuw00000368

Air Hose Installation Note

1. Install the air hose as shown in the figure.

Throttle body side

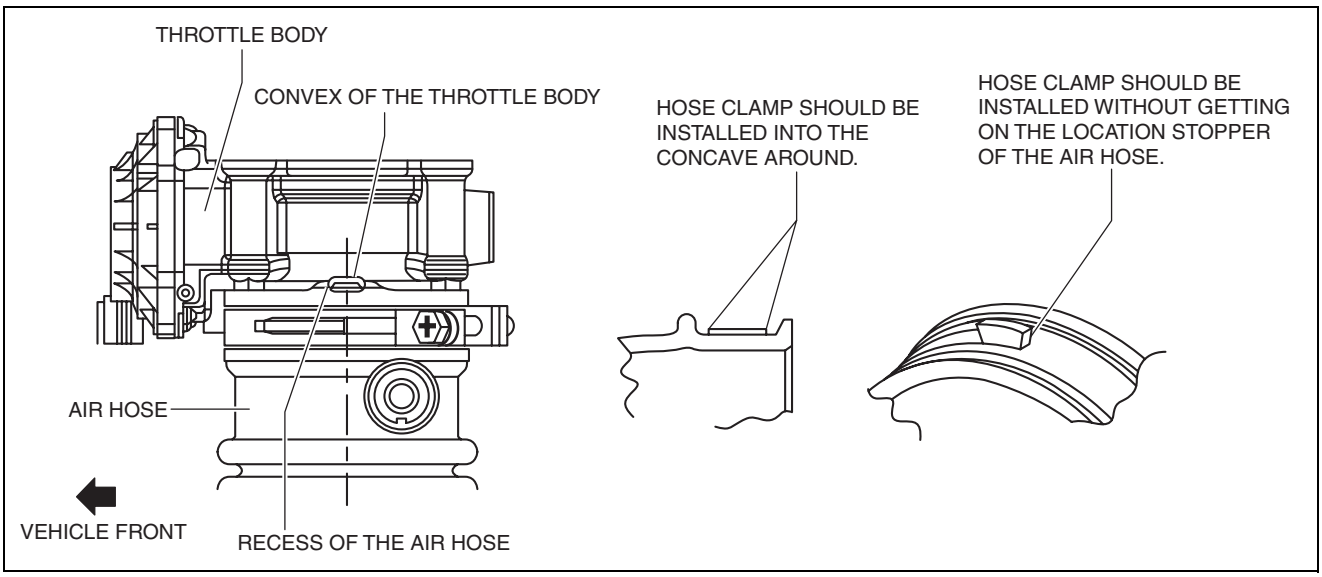

ac5wzw0000270

INTAKE-AIR SYSTEM [SKYACTIV-G 2.0]

Air cleaner side

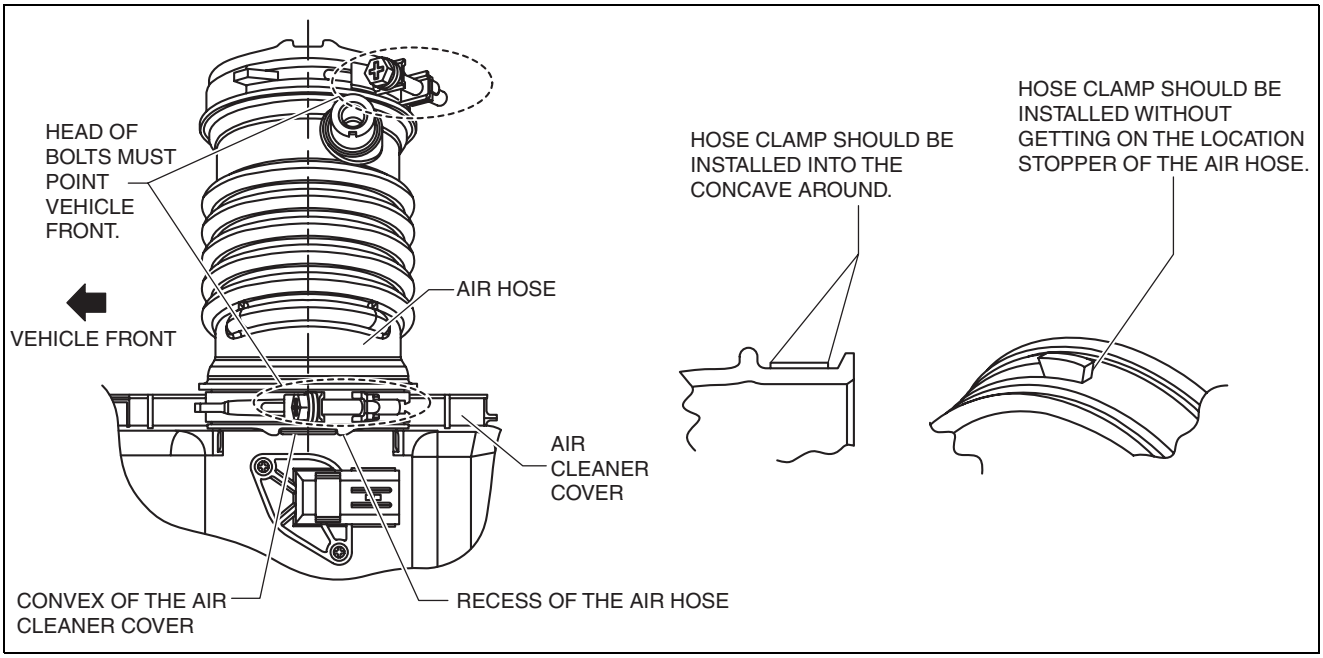

ac5wzw0000270

Ventilation Hose Installation Note

1. Install the ventilation hose as shown in the figure.

Cylinder head cover side

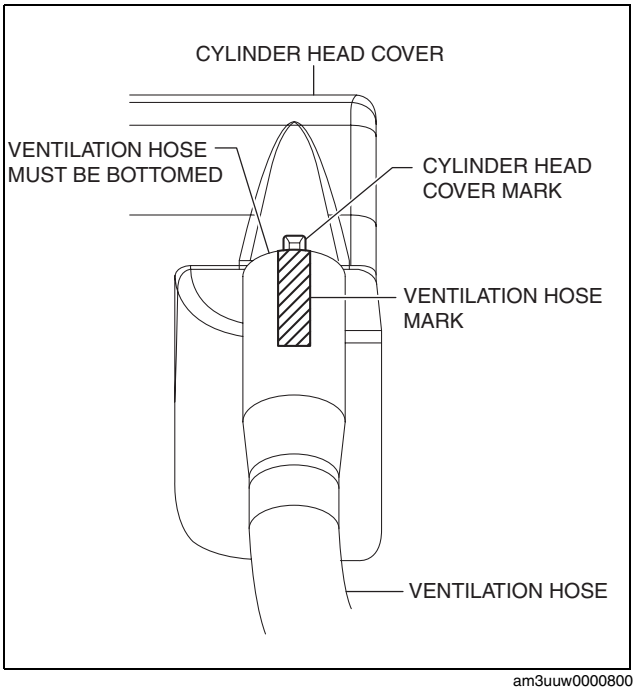

am3uuw0000800

INTAKE-AIR SYSTEM [SKYACTIV-G 2.0]

Air hose side

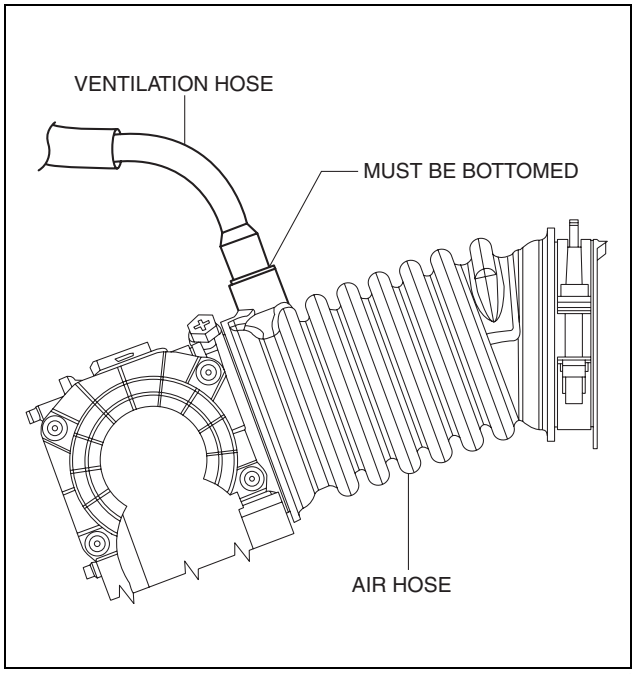

ac5uuw00000371

AIR CLEANER ELEMENT REMOVAL/INSTALLATION [SKYACTIV-G 2.0]

id0113z5800200

1. Remove the air cleaner element as shown in the figure.
2. Install in the reverse order of removal.

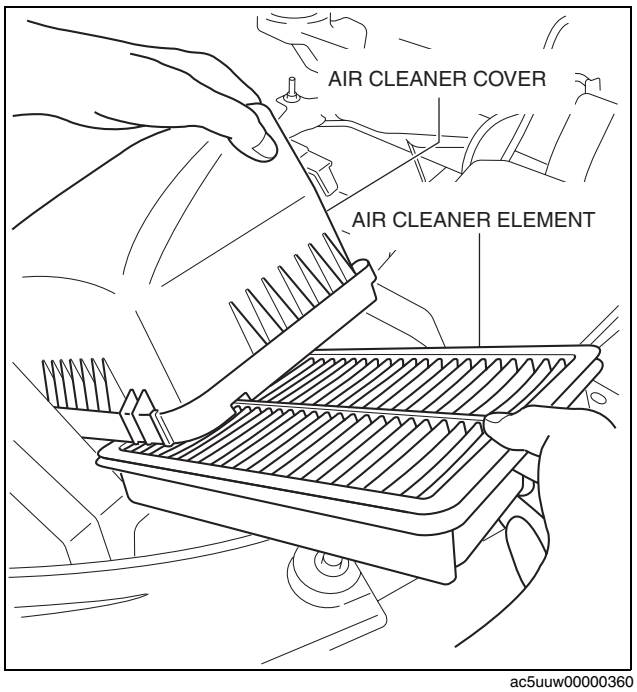

ac5uuw00000360

AIR CLEANER ELEMENT INSPECTION [SKYACTIV-G 2.0]

id0113z5800800

1. Remove the air cleaner element. (See 01-13A-12 AIR CLEANER ELEMENT REMOVAL/INSTALLATION [SKYACTIV-G 2.0].)
2. Inspect the following items:
   - Has the replacement interval past?
   - Is the air cleaner element soiled, damaged, or bent?
   - Are the air cleaner case and the air cleaner element correctly sealed?
   - Is the correct air cleaner element installed?
     — If there is any abnormality, clean or replace the air cleaner element. (See 01-13A-12 AIR CLEANER ELEMENT REMOVAL/INSTALLATION [SKYACTIV-G 2.0].)

INTAKE-AIR SYSTEM [SKYACTIV-G 2.0]

THROTTLE BODY INSPECTION [SKYACTIV-G 2.0]

id0113z5802600

Resistance Inspection

1. Disconnect the negative battery cable. (See 01-17A-11 NEGATIVE BATTERY CABLE DISCONNECTION/CONNECTION [SKYACTIV-G 2.0].) (See 01-17A-13 NEGATIVE BATTERY CABLE DISCONNECTION/CONNECTION [SKYACTIV-G 2.0 (WITHOUT i-stop)].)
2. Disconnect the throttle body connector.
3. Measure the resistance between throttle body terminals E and F.

   Throttle body resistance
   1.38 ohms [20°C {68 °F}]

   - If not as specified, replace the throttle body. (See 01-13A-6 INTAKE-AIR SYSTEM REMOVAL/INSTALLATION [SKYACTIV-G 2.0].)

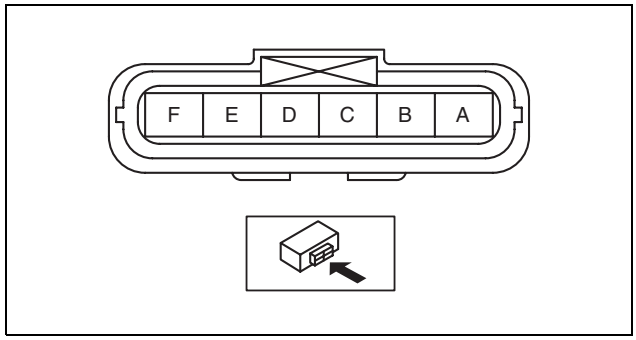

am3uuw0000847

CHECK VALVE INSPECTION [SKYACTIV-G 2.0]

id0113z5082800

Airflow Inspection

1. Remove the vacuum hose. (See 01-13A-6 INTAKE-AIR SYSTEM REMOVAL/INSTALLATION [SKYACTIV-G 2.0].)
2. Blow air into the vacuum hose using your mouth from the vacuum pump side and verify that the air flows to the intake manifold side, then blow air from the intake manifold side and verify that the air does not flow to the vacuum pump side.
   - If there is any malfunction in the check valve, replace it with the vacuum hose as a single unit. (See 01-13A-6 INTAKE-AIR SYSTEM REMOVAL/INSTALLATION [SKYACTIV-G 2.0].)

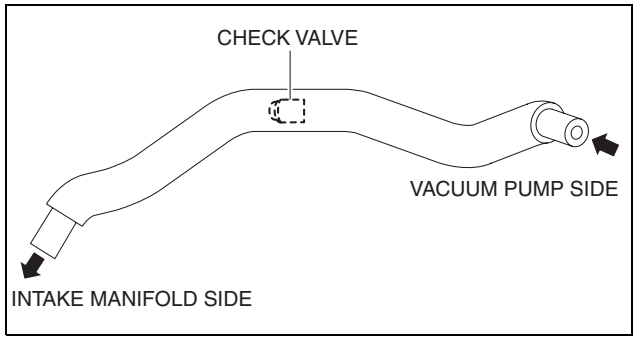

am3uuw0000870

INTAKE-AIR SYSTEM [SKYACTIV-G 2.0]

ACCELERATOR PEDAL REMOVAL/INSTALLATION [SKYACTIV-G 2.0]

id0113z5801400

1. Disconnect the negative battery cable. (See 01-17A-11 NEGATIVE BATTERY CABLE DISCONNECTION/CONNECTION [SKYACTIV-G 2.0].) (See 01-17A-13 NEGATIVE BATTERY CABLE DISCONNECTION/CONNECTION [SKYACTIV-G 2.0 (WITHOUT i-stop)].)
2. Remove in the order indicated in the table.

1	APP sensor connector
2	Accelerator pedal

3. Install in the reverse order of removal.

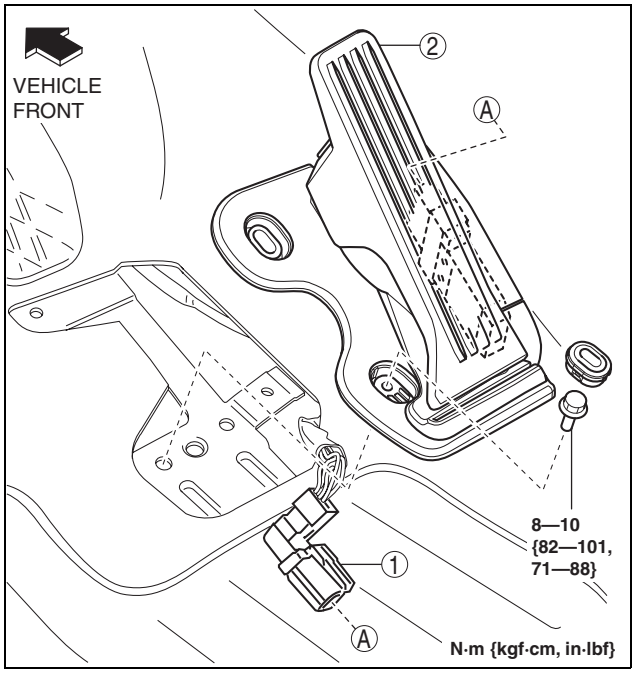

ac5uuw00000361

01-13B INTAKE-AIR SYSTEM [SKYACTIV-D 2.2]

INTAKE-AIR SYSTEM LOCATION INDEX [SKYACTIV-D 2.2] 01-13B–2
INTAKE-AIR SYSTEM VACUUM HOSE ROUTING DIAGRAM [SKYACTIV-D 2.2] 01-13B–4
INTAKE-AIR SYSTEM DIAGRAM [SKYACTIV-D 2.2] 01-13B–5
INTAKE-AIR SYSTEM REMOVAL/INSTALLATION [SKYACTIV-D 2.2] 01-13B–6
Air Cleaner Cover Removal Note 01-13B–7
Fresh-air Duct Removal Note 01-13B–7
Air Inlet Pipe Removal Note 01-13B–7
Turbocharger Air Outlet Pipe Removal Note 01-13B–7
Charge Air Cooler Inlet Hose Removal Note 01-13B–8
Charge Air Cooler Outlet Hose Removal Note 01-13B–9
Intake Manifold Insulator Removal Note 01-13B–9
Intake Manifold Removal Note 01-13B–10
Charge Air Cooler Outlet Hose Installation Note 01-13B–10
Breather Hose Installation Note 01-13B–11
Air Hose Installation Note 01-13B–12
Air Cleaner Case Installation Note 01-13B–13
Fresh-air Duct Installation Note 01-13B–13
Air Cleaner Cover Installation Note . . . 01-13B–14
Vacuum Hose Installation Note 01-13B–15
AIR CLEANER ELEMENT REMOVAL/INSTALLATION [SKYACTIV-D 2.2] 01-13B–15
Air Cleaner Cover Installation Note . . . 01-13B–16
AIR CLEANER ELEMENT INSPECTION [SKYACTIV-D 2.2] 01-13B–16
CHARGE AIR COOLER REMOVAL/INSTALLATION [SKYACTIV-D 2.2] 01-13B–17
Charge Air Cooler Installation Note . . . 01-13B–18
CHARGE AIR COOLER INSPECTION [SKYACTIV-D 2.2] 01-13B–19
CHECK VALVE INSPECTION [SKYACTIV-D 2.2] 01-13B–19
CHECK VALVE REMOVAL/INSTALLATION [SKYACTIV-D 2.2] 01-13B–20
Vacuum Hose No.2 Installation Note 01-13B–21
Vacuum Hose No.1 Installation Note 01-13B–22
Vacuum hose structural view 01-13B–23
GLOW PLUG INSPECTION [SKYACTIV-D 2.2] 01-13B–28
GLOW PLUG REMOVAL/INSTALLATION [SKYACTIV-D 2.2] 01-13B–28
Glow Plug Short-cord Removal Note . . 01-13B–29
Glow Plug Removal Note 01-13B–29
Cleaning Before Glow Plug Installation 01-13B–30
Glow Plug Installation Note 01-13B–30
GLOW PLUG CONTROL MODULE REMOVAL/INSTALLATION [SKYACTIV-D 2.2] 01-13B–31
GLOW PLUG CONTROL MODULE INSPECTION [SKYACTIV-D 2.2] 01-13B–31
TURBOCHARGER REMOVAL/INSTALLATION [SKYACTIV-D 2.2] 01-13B–32
Oil Pipe No.2 Removal Note 01-13B–35
Water Pipe No.2 Installation Note 01-13B–35
VACUUM CHAMBER INSPECTION [SKYACTIV-D 2.2] 01-13B–36
VACUUM CHAMBER REMOVAL/INSTALLATION [SKYACTIV-D 2.2] 01-13B–37
COMPRESSOR BYPASS SOLENOID VALVE INSPECTION [SKYACTIV-D 2.2] 01-13B–37
Resistance inspection 01-13B–37
COMPRESSOR BYPASS SOLENOID VALVE REMOVAL/INSTALLATION [SKYACTIV-D 2.2] 01-13B–38
Vacuum Hose No.3 Installation Note . . . 01-13B–39
Vacuum Hose No.2 Installation Note . . . 01-13B–41
Vacuum Hose No.1 Installation Note . . . 01-13B–42
Vacuum hose structural view 01-13B–44
REGULATING SOLENOID VALVE INSPECTION [SKYACTIV-D 2.2] 01-13B–50
Resistance inspection 01-13B–50
REGULATING SOLENOID VALVE REMOVAL/INSTALLATION [SKYACTIV-D 2.2] 01-13B–50
Vacuum Hose No.3 Installation Note . . . 01-13B–51
Vacuum Hose No.2 Installation Note . . . 01-13B–53
Vacuum Hose No.1 Installation Note . . . 01-13B–54
Vacuum hose structural view 01-13B–55
WASTEGATE SOLENOID VALVE INSPECTION [SKYACTIV-D 2.2] 01-13B–61
Resistance inspection 01-13B–61
WASTEGATE SOLENOID VALVE REMOVAL/INSTALLATION [SKYACTIV-D 2.2] 01-13B–61
Vacuum Hose No.3 Installation Note . . . 01-13B–62
Vacuum Hose No.2 Installation Note . . . 01-13B–63
Vacuum Hose No.1 Installation Note . . . 01-13B–64
Vacuum hose structural view 01-13B–65
ACCELERATOR PEDAL REMOVAL/INSTALLATION [SKYACTIV-D 2.2] 01-13B–71

INTAKE-AIR SYSTEM [SKYACTIV-D 2.2]

INTAKE-AIR SYSTEM LOCATION INDEX [SKYACTIV-D 2.2]

id0113z7801700

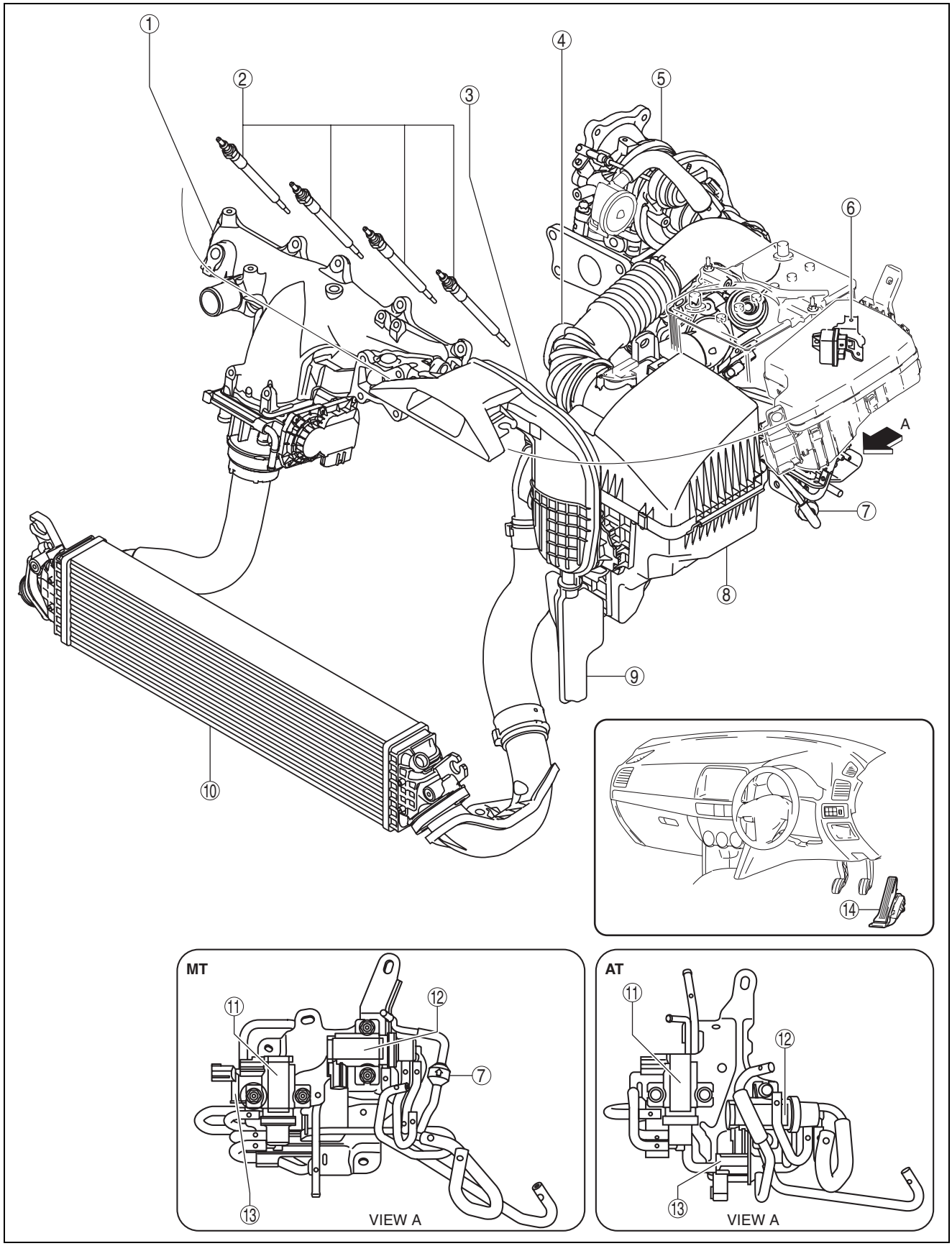

ac5wzw0000471

INTAKE-AIR SYSTEM [SKYACTIV-D 2.2]

1	Intake manifold (See 01-13B-6 INTAKE-AIR SYSTEM REMOVAL/INSTALLATION [SKYACTIV-D 2.2].)
2	Glow plug (See 01-13B-28 GLOW PLUG REMOVAL/INSTALLATION [SKYACTIV-D 2.2].) (See 01-13B-28 GLOW PLUG INSPECTION [SKYACTIV-D 2.2].)
3	Fresh-air duct (See 01-13B-6 INTAKE-AIR SYSTEM REMOVAL/INSTALLATION [SKYACTIV-D 2.2].)
4	Vacuum chamber (See 01-13B-37 VACUUM CHAMBER REMOVAL/INSTALLATION [SKYACTIV-D 2.2].) (See 01-13B-36 VACUUM CHAMBER INSPECTION [SKYACTIV-D 2.2].)
5	Turbocharger (See 01-13B-32 TURBOCHARGER REMOVAL/INSTALLATION [SKYACTIV-D 2.2].)
6	Glow control module (See 01-13B-31 GLOW PLUG CONTROL MODULE REMOVAL/INSTALLATION [SKYACTIV-D 2.2].) (See 01-13B-31 GLOW PLUG CONTROL MODULE INSPECTION [SKYACTIV-D 2.2].)
7	Check valve (See 01-13B-20 CHECK VALVE REMOVAL/INSTALLATION [SKYACTIV-D 2.2].) (See 01-13B-19 CHECK VALVE INSPECTION [SKYACTIV-D 2.2].)
8	Air cleaner (See 01-13B-6 INTAKE-AIR SYSTEM REMOVAL/INSTALLATION [SKYACTIV-D 2.2].) (See 01-13B-15 AIR CLEANER ELEMENT REMOVAL/INSTALLATION [SKYACTIV-D 2.2].) (See 01-13B-16 AIR CLEANER ELEMENT INSPECTION [SKYACTIV-D 2.2].)
9	Resonance chamber (See 01-13B-6 INTAKE-AIR SYSTEM REMOVAL/INSTALLATION [SKYACTIV-D 2.2].)
10	Charge air cooler (See 01-13B-17 CHARGE AIR COOLER REMOVAL/INSTALLATION [SKYACTIV-D 2.2].) (See 01-13B-19 CHARGE AIR COOLER INSPECTION [SKYACTIV-D 2.2].)
11	Regulating solenoid valve (See 01-13B-50 REGULATING SOLENOID VALVE REMOVAL/INSTALLATION [SKYACTIV-D 2.2].) (See 01-13B-50 REGULATING SOLENOID VALVE INSPECTION [SKYACTIV-D 2.2].)
12	Wastegate solenoid valve (See 01-13B-61 WASTEGATE SOLENOID VALVE REMOVAL/INSTALLATION [SKYACTIV-D 2.2].) (See 01-13B-61 WASTEGATE SOLENOID VALVE INSPECTION [SKYACTIV-D 2.2].)
13	Compressor bypass solenoid valve (See 01-13B-38 COMPRESSOR BYPASS SOLENOID VALVE REMOVAL/INSTALLATION [SKYACTIV-D 2.2].) (See 01-13B-37 COMPRESSOR BYPASS SOLENOID VALVE INSPECTION [SKYACTIV-D 2.2].)
14	Accelerator pedal (See 01-13B-71 ACCELERATOR PEDAL REMOVAL/INSTALLATION [SKYACTIV-D 2.2].)

INTAKE-AIR SYSTEM [SKYACTIV-D 2.2]

INTAKE-AIR SYSTEM VACUUM HOSE ROUTING DIAGRAM [SKYACTIV-D 2.2]

id0113z7804100

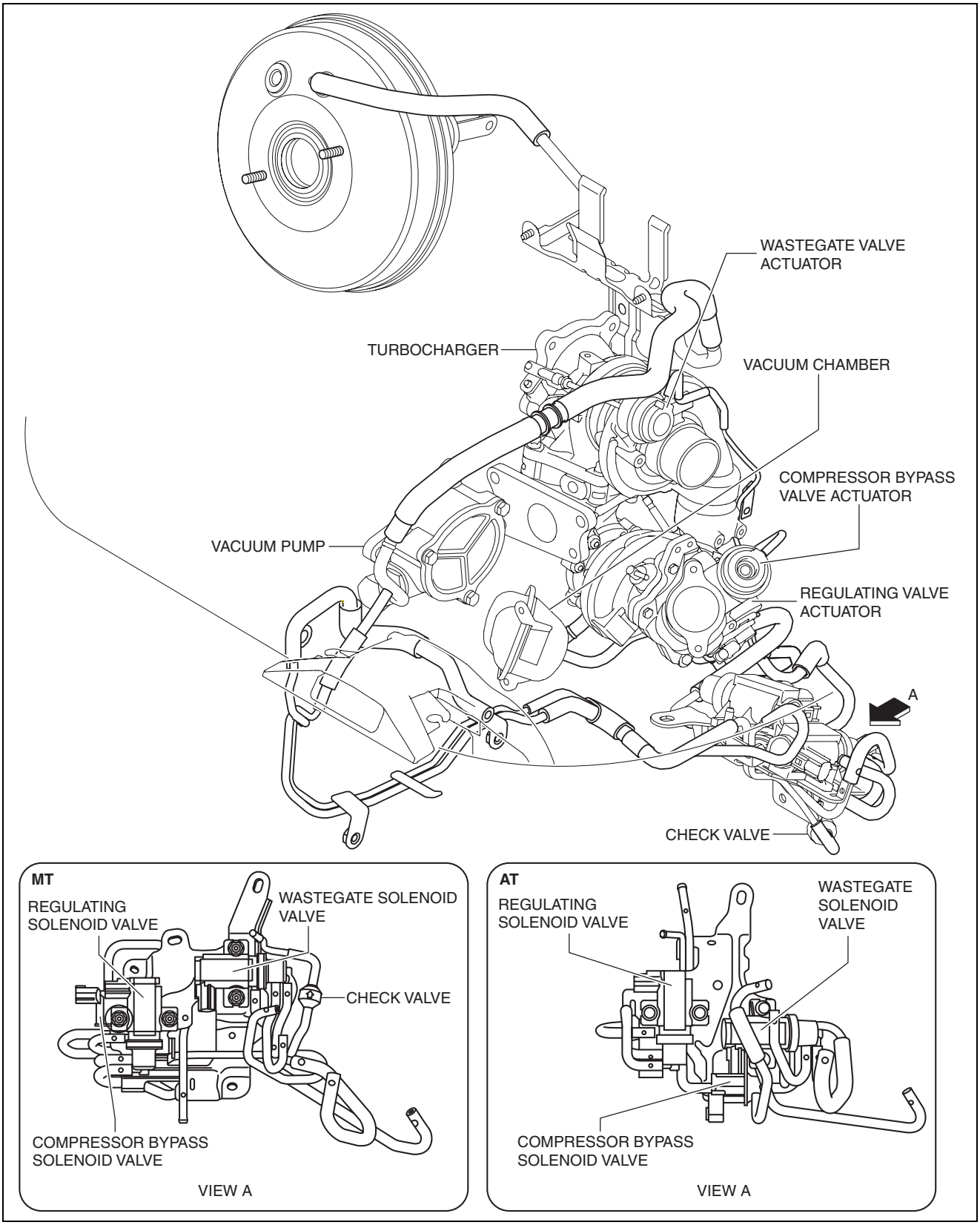

ac5wzw0000472

INTAKE-AIR SYSTEM [SKYACTIV-D 2.2]

INTAKE-AIR SYSTEM DIAGRAM [SKYACTIV-D 2.2]

id0113z7801600

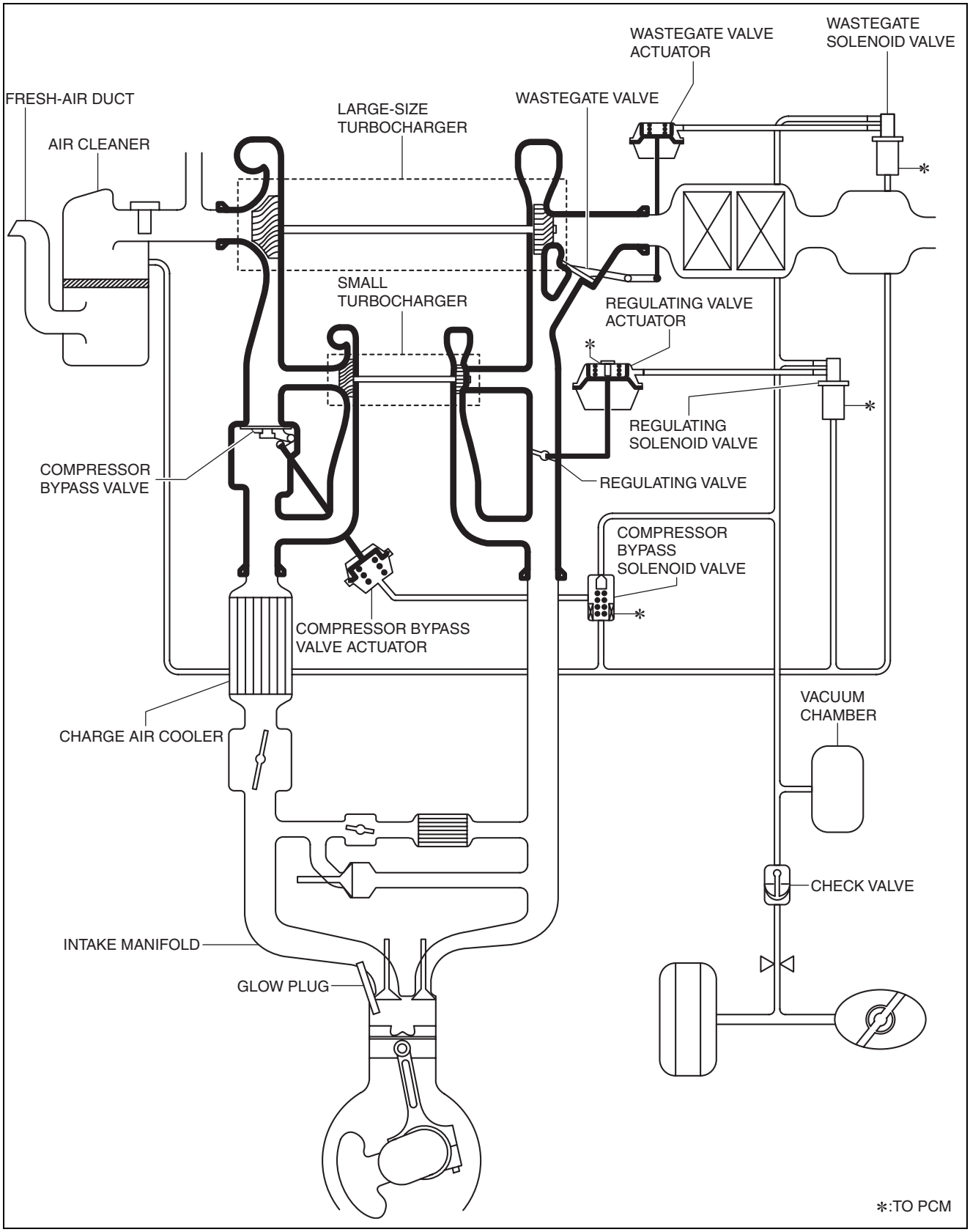

ac5wzw0000471

INTAKE-AIR SYSTEM [SKYACTIV-D 2.2]

INTAKE-AIR SYSTEM REMOVAL/INSTALLATION [SKYACTIV-D 2.2]

id0113z7801900

Warning

- **A hot engine and intake air system can cause severe burns. Turn off the engine and wait until they are cool before removing the intake-air system.**

1. Disconnect the negative battery cable. (See 01-17B-9 NEGATIVE BATTERY CABLE DISCONNECTION/ CONNECTION [SKYACTIV-D 2.2].)
2. Remove in the order shown in the figure.
3. Install in the reverse order of removal.

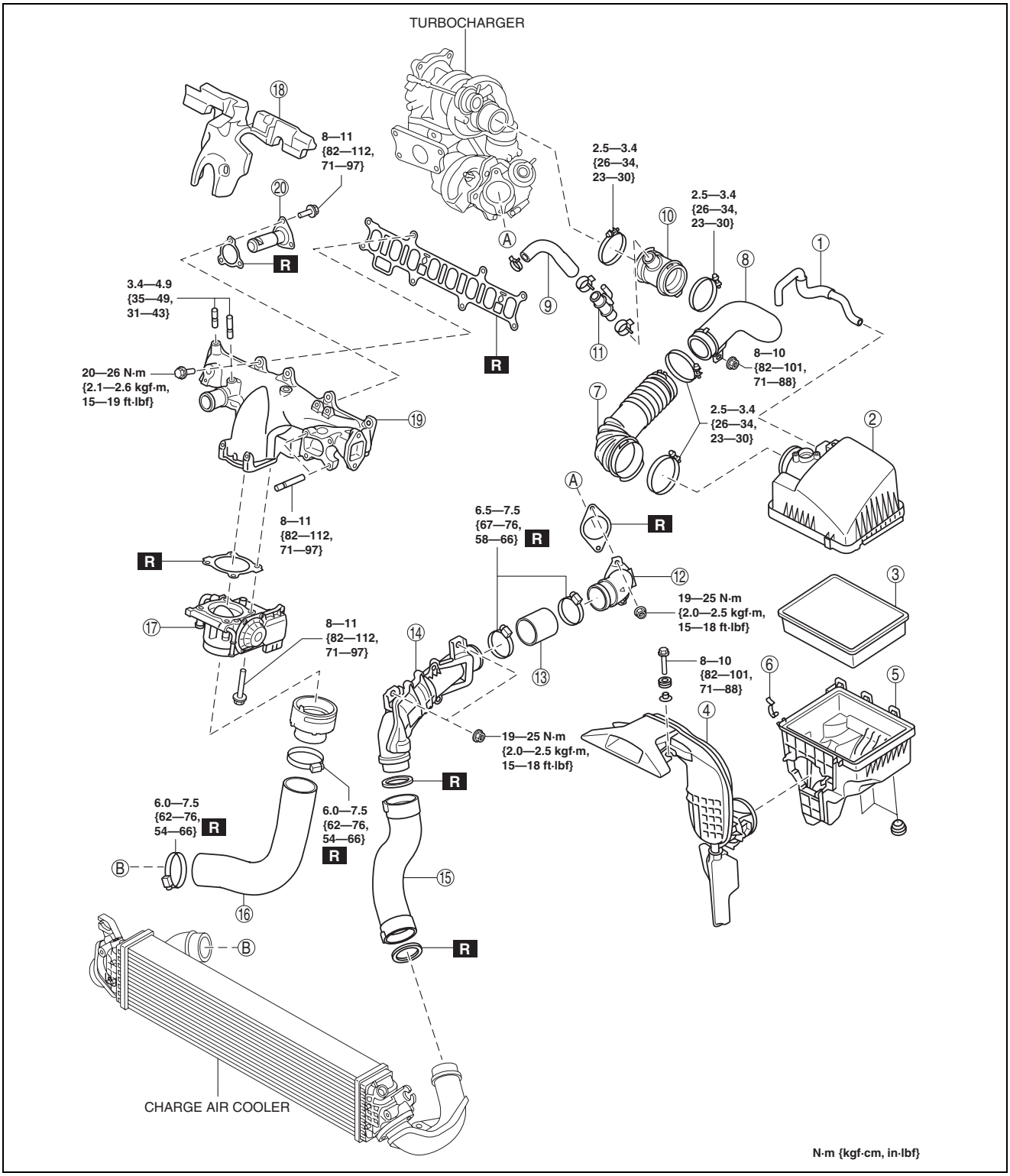

ac5wzw0000471

INTAKE-AIR SYSTEM [SKYACTIV-D 2.2]

1	Vacuum hose (See 01-13B-15 Vacuum Hose Installation Note.)
2	Air cleaner cover (See 01-13B-7 Air Cleaner Cover Removal Note.) (See 01-13B-14 Air Cleaner Cover Installation Note.)
3	Air cleaner element
4	Fresh-air duct (See 01-13B-7 Fresh-air Duct Removal Note.) (See 01-13B-13 Fresh-air Duct Installation Note.)
5	Air cleaner case (See 01-13B-13 Air Cleaner Case Installation Note.)
6	Clip
7	Air hose (See 01-13B-12 Air Hose Installation Note.)
8	Air inlet pipe (See 01-13B-7 Air Inlet Pipe Removal Note.)
9	Breather hose (See 01-13B-11 Breather Hose Installation Note.)
10	Turbocharger air inlet hose
11	PTC Heater
12	Turbocharger air outlet pipe (See 01-13B-7 Turbocharger Air Outlet Pipe Removal Note.)
13	Turbocharger air outlet hose
14	Air intake pipe
15	Charge air cooler inlet hose (See 01-13B-8 Charge Air Cooler Inlet Hose Removal Note.)
16	Charge air cooler outlet hose (See 01-13B-9 Charge Air Cooler Outlet Hose Removal Note.) (See 01-13B-10 Charge Air Cooler Outlet Hose Installation Note.)
17	Intake shutter valve (See 01-16B-21 INTAKE SHUTTER VALVE REMOVAL/INSTALLATION [SKYACTIV-D 2.2].)
18	Intake manifold insulator (See 01-13B-9 Intake Manifold Insulator Removal Note.)
19	Intake manifold (See 01-13B-10 Intake Manifold Removal Note.)
20	EGR pipe (Intake manifold side)

Air Cleaner Cover Removal Note

1. Remove the MAF sensor/IAT sensor No.1.
2. Remove the air cleaner cover.

Fresh-air Duct Removal Note

1. Pull out the fresh-air duct from the air cleaner case while pressing the tab shown in the figure.

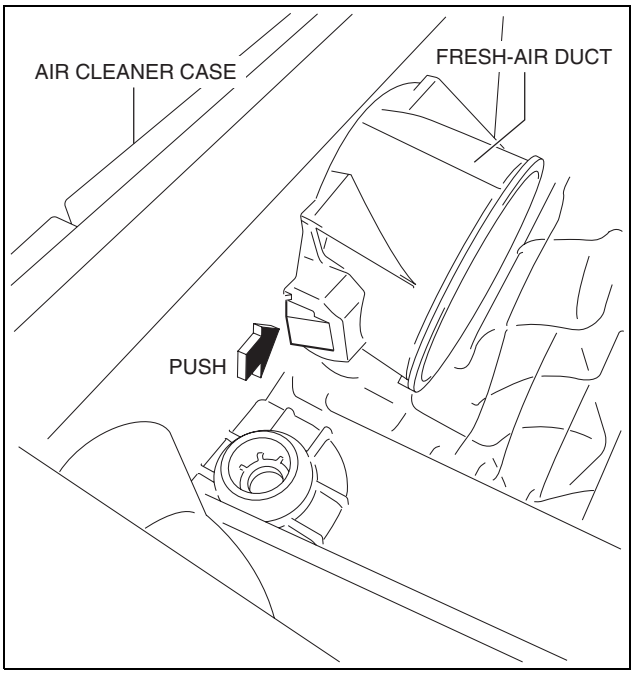

ac5wzw0000471

Air Inlet Pipe Removal Note

1. Remove the battery. (See 01-17B-3 BATTERY REMOVAL/INSTALLATION [SKYACTIV-D 2.2].)
2. Remove the air inlet pipe.

Turbocharger Air Outlet Pipe Removal Note

1. Remove the battery tray. (See 01-17B-3 BATTERY REMOVAL/INSTALLATION [SKYACTIV-D 2.2].)
2. Remove the turbocharger air outlet pipe.

INTAKE-AIR SYSTEM [SKYACTIV-D 2.2]

Charge Air Cooler Inlet Hose Removal Note

1. Release the lock and remove the charge air cooler inlet hose as shown in the figure.

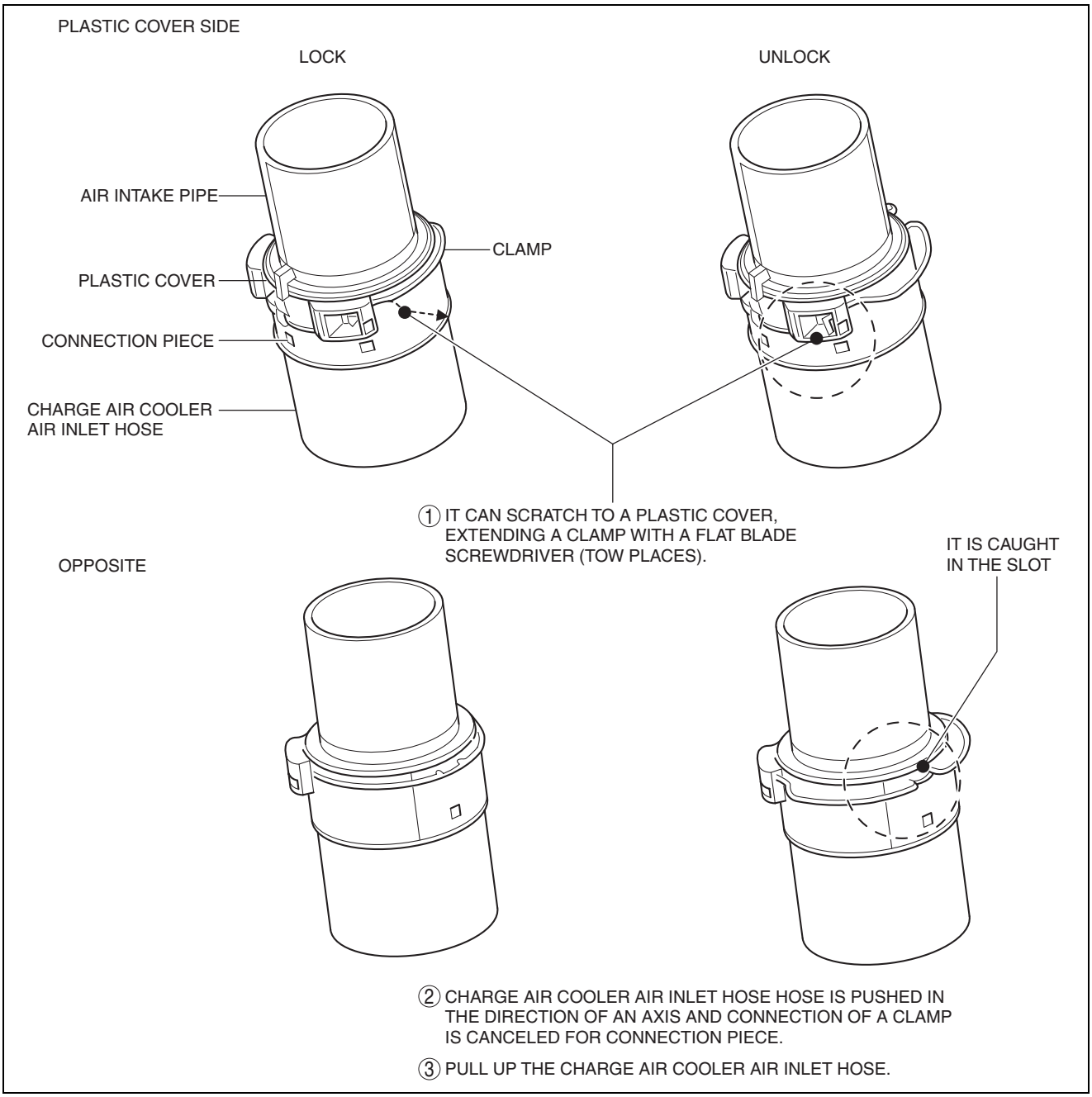

ac5wzw0000528

INTAKE-AIR SYSTEM [SKYACTIV-D 2.2]

Charge Air Cooler Outlet Hose Removal Note

1. Release the lock of connector and remove the charge air cooler air outlet hose.

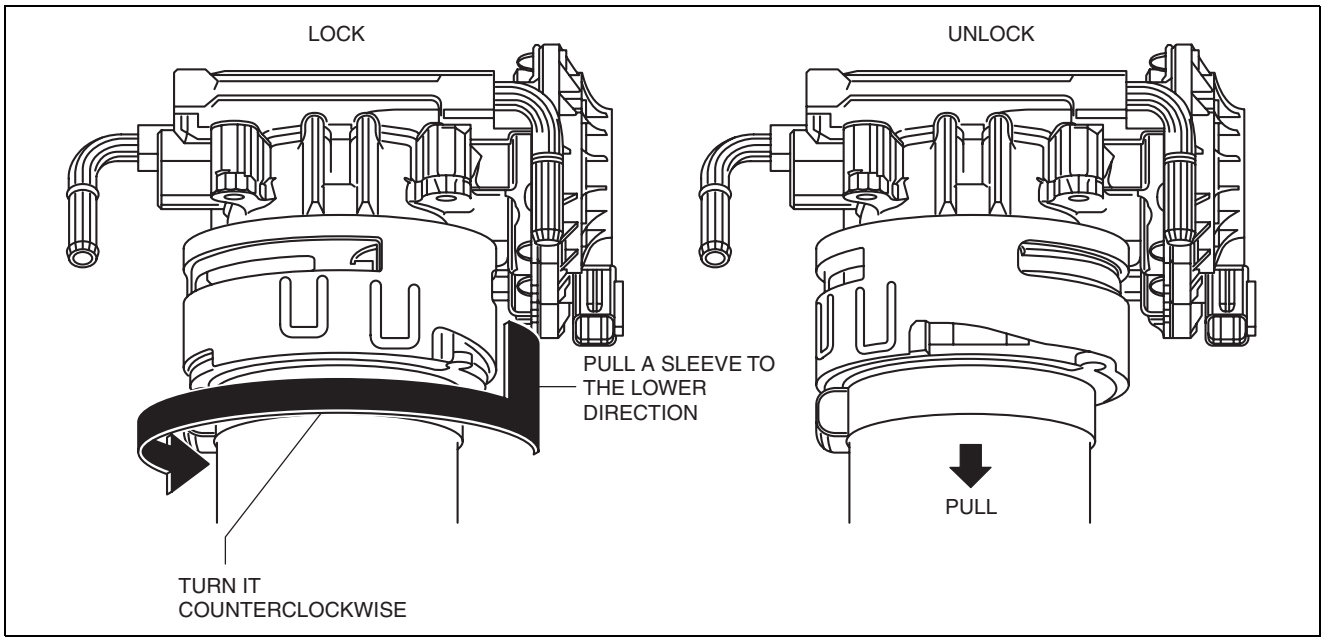

ac5wzw0000528

Intake Manifold Insulator Removal Note

1. Remove the bolts shown in the figure.
2. Remove the intake manifold insulator.

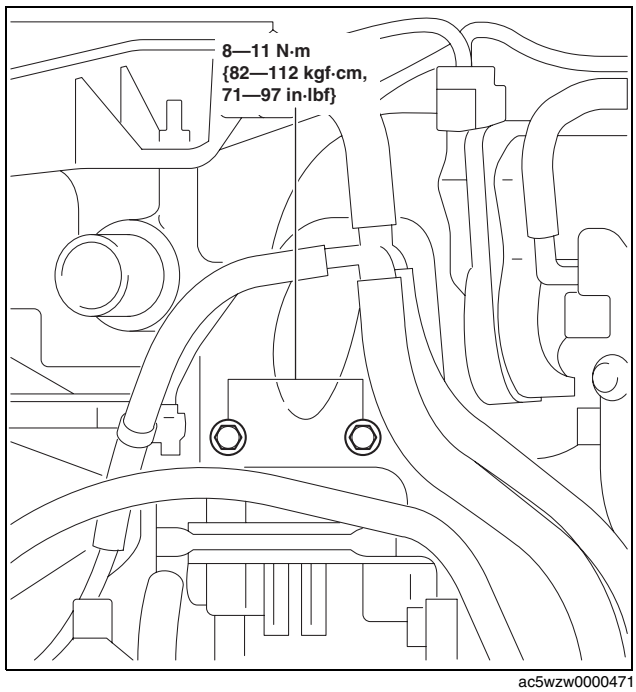

ac5wzw0000471

INTAKE-AIR SYSTEM [SKYACTIV-D 2.2]

Intake Manifold Removal Note

1. Disconnect the connectors of the following parts:
   - Engine oil temperature sensor/engine oil pressure sensor
   - ECT sensor
   - MAP sensor No.2
   - Fuel pressure sensor
   - Fuel temperature sensor
   - Fuel pressure limiter valve
   - Glow plug short-cord
   - IAT sensor No.2
   - Camshaft position sensor
   - EGR bypass valve
   - Starter
2. Remove the wiring harness clips, bolts, nuts and harness bracket shown in the figure.
3. Disconnect the upper radiator hose from the intake manifold side.
4. Remove the EGR valve. (See 01-16B-7 EGR VALVE REMOVAL/INSTALLATION [SKYACTIV-D 2.2].)
5. Set the EGR cooler out of the way. (See 01-16B-12 EGR COOLER REMOVAL/INSTALLATION [SKYACTIV-D 2.2].)
6. Set the EGR cooler bypass valve out of the way. (See 01-16B-17 EGR COOLER BYPASS VALVE REMOVAL/INSTALLATION [SKYACTIV-D 2.2].)
7. Remove the intake manifold.

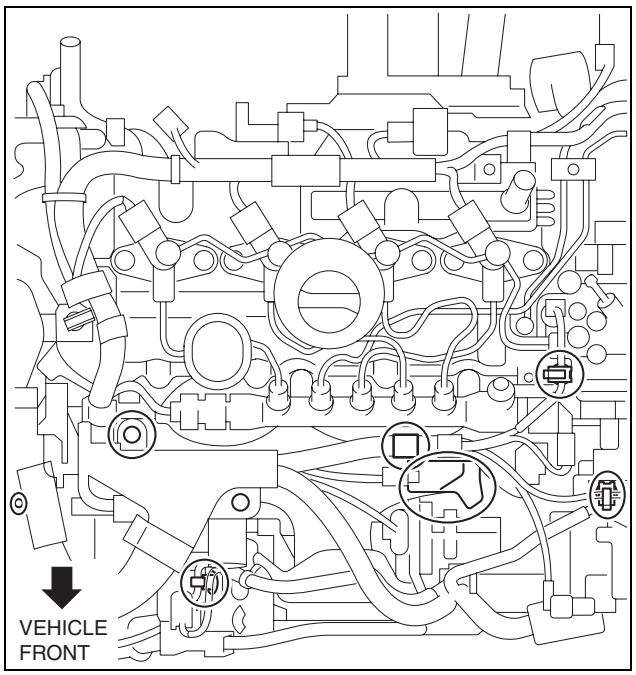

ac5wzw0000528

Charge Air Cooler Outlet Hose Installation Note

1. Install the charge air cooler outlet hose as shown in the figure.

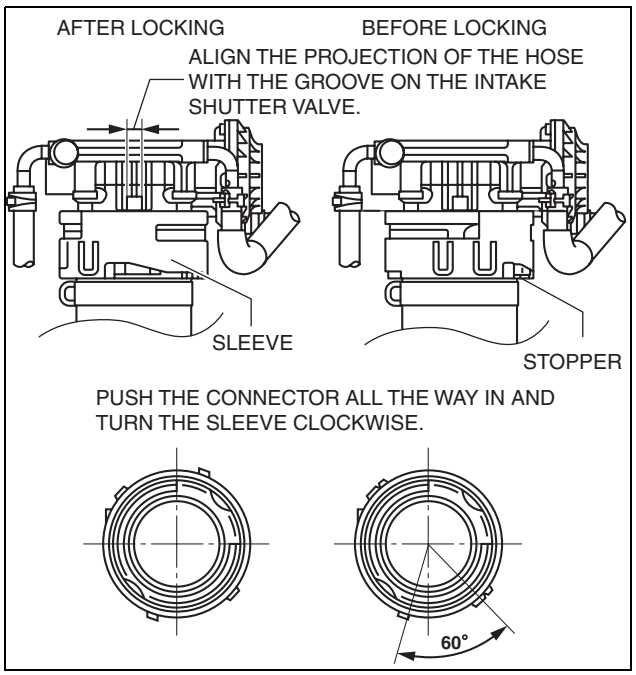

ac5wzw0000528

INTAKE-AIR SYSTEM [SKYACTIV-D 2.2]

Breather Hose Installation Note

1. Install the breather hose as shown in the figure.

Cylinder head cover side

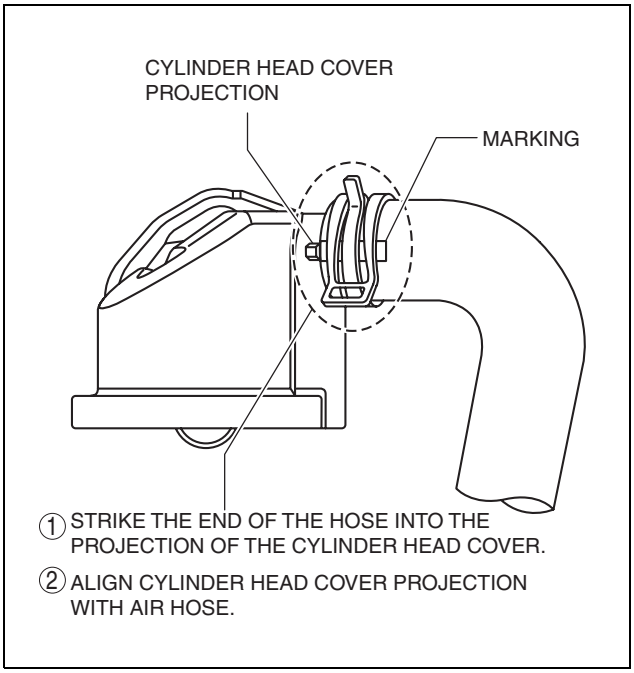

ac5wzw0000528

PTC heater side

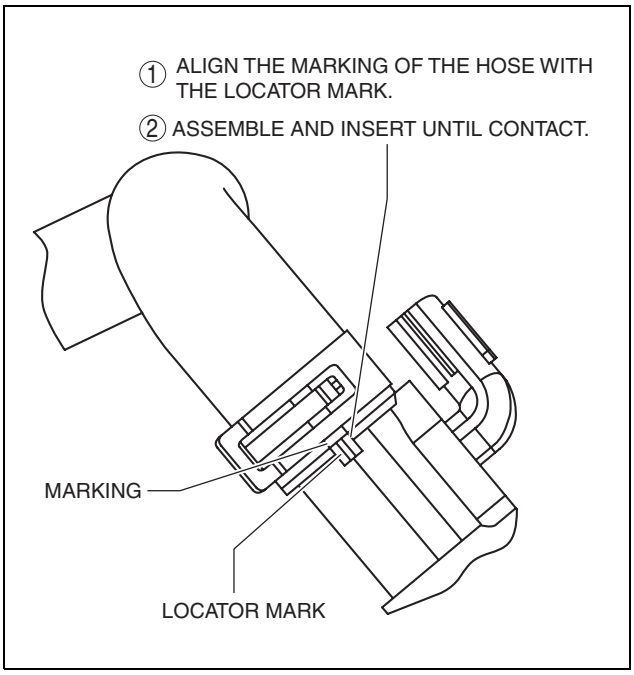

ac5wzw0000528

INTAKE-AIR SYSTEM [SKYACTIV-D 2.2]

Air Hose Installation Note

1. Install the air hose as shown in the figure.

Air cleaner cover side

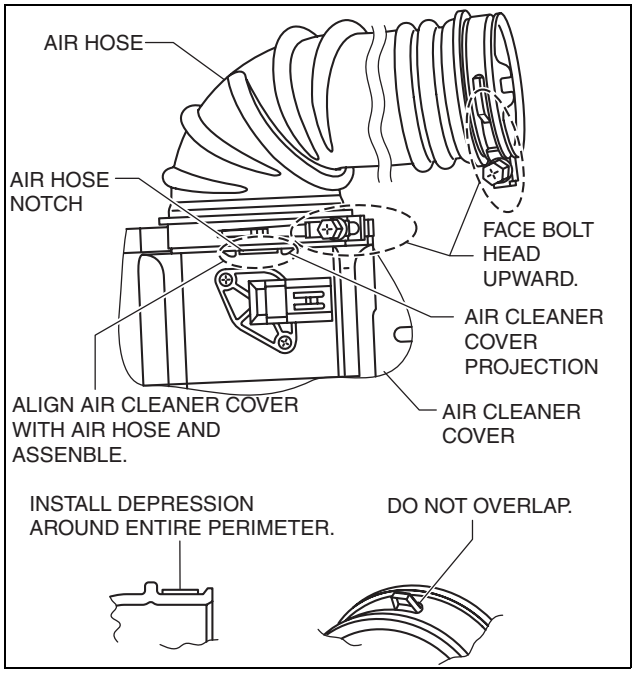

ac5wzw0000472

Air inlet pipe side

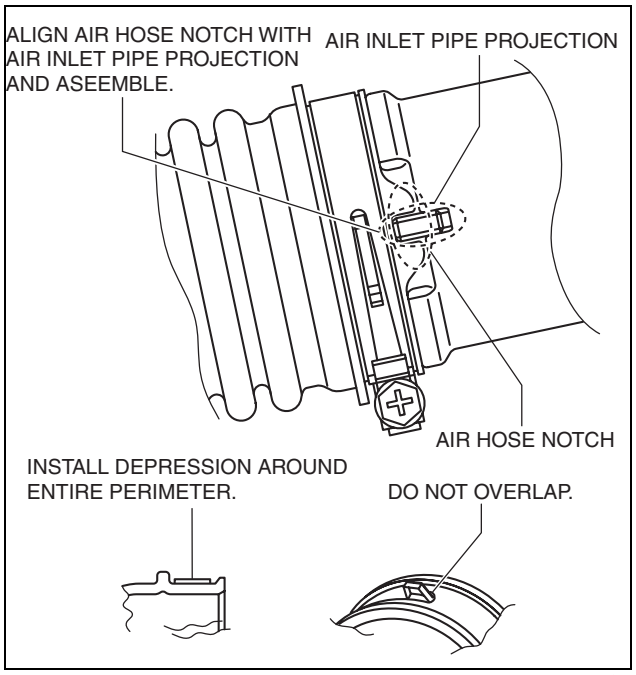

ac5wzw0000472

INTAKE-AIR SYSTEM [SKYACTIV-D 2.2]

Air Cleaner Case Installation Note

1. Install the air cleaner case as shown in the figure.

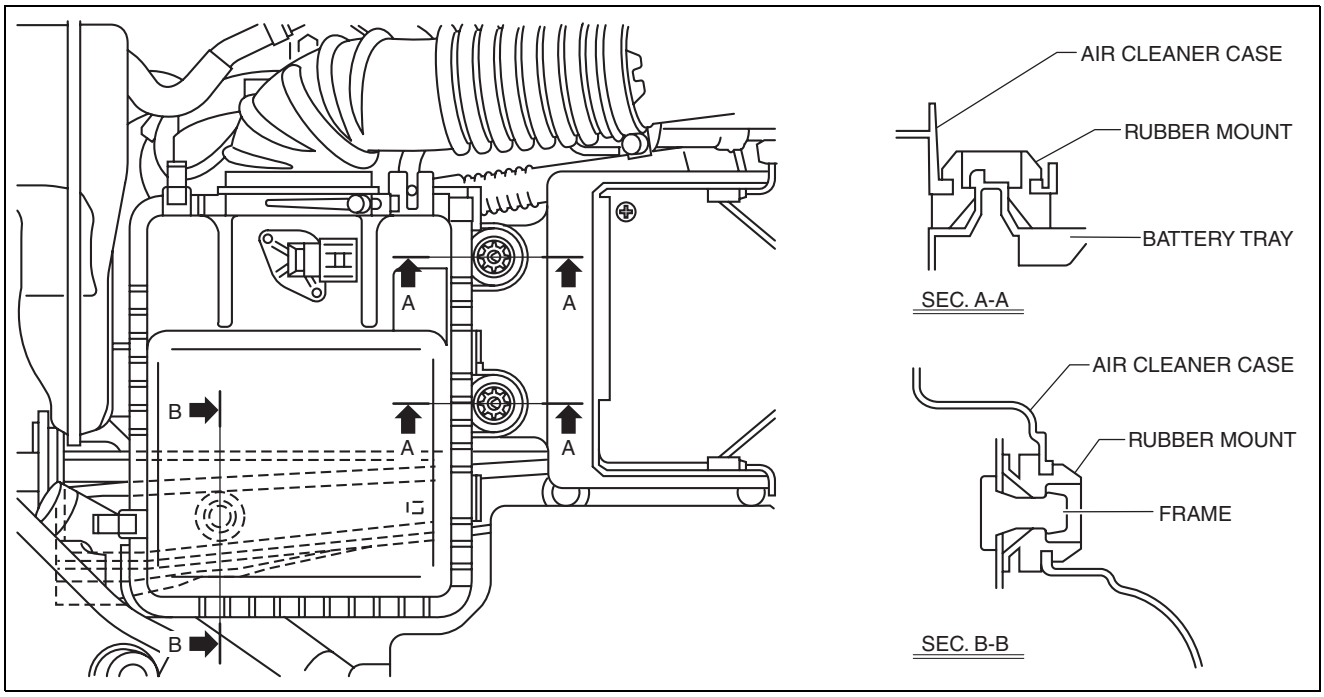

ac5wzw0000472

Fresh-air Duct Installation Note

1. Install the fresh-air duct as shown in the figure.

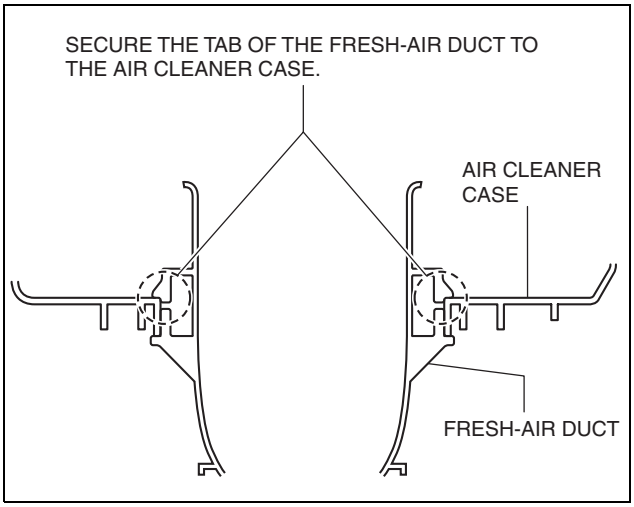

ac5wzw0000528

INTAKE-AIR SYSTEM [SKYACTIV-D 2.2]

Air Cleaner Cover Installation Note

1. Install the air cleaner cover as shown in the figure.

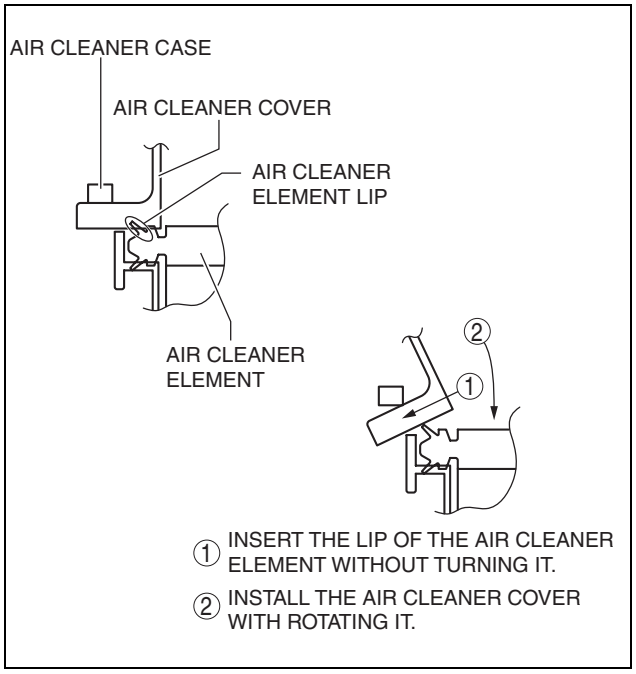

ac5wzw0000528

2. Secure the air cleaner cover and the air cleaner case with the clip.

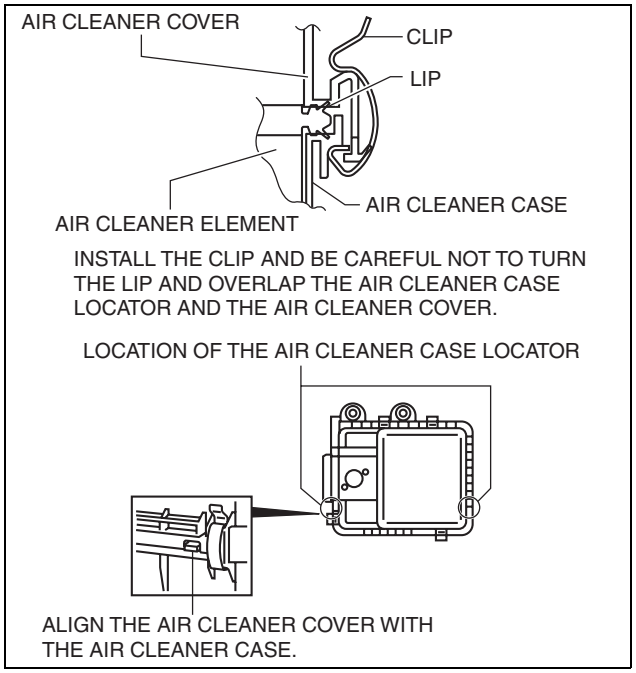

ac5wzw0000529

INTAKE-AIR SYSTEM [SKYACTIV-D 2.2]

Vacuum Hose Installation Note

1. Install the vacuum hose as shown in the figure.

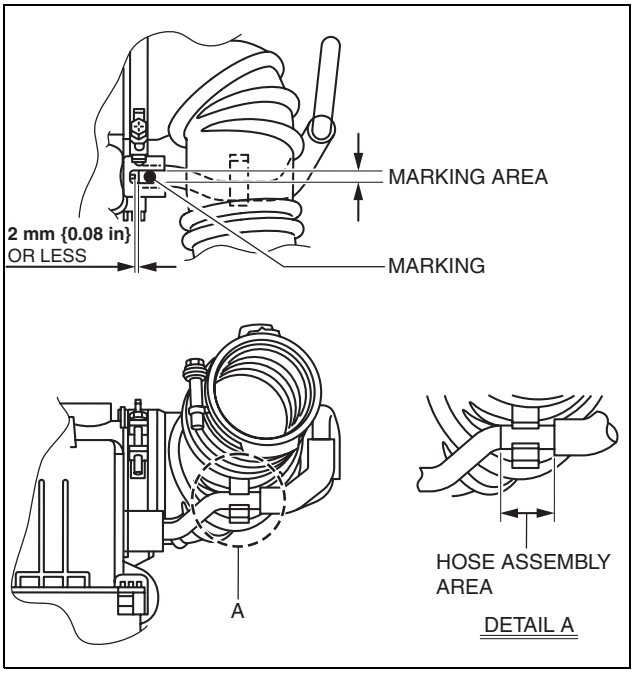

ac5wzw0000472

AIR CLEANER ELEMENT REMOVAL/INSTALLATION [SKYACTIV-D 2.2]

id0113z7800200

1. Remove the air cleaner element as shown in the figure.
2. Install in the reverse order of removal. (See 01-13B-16 Air Cleaner Cover Installation Note.)

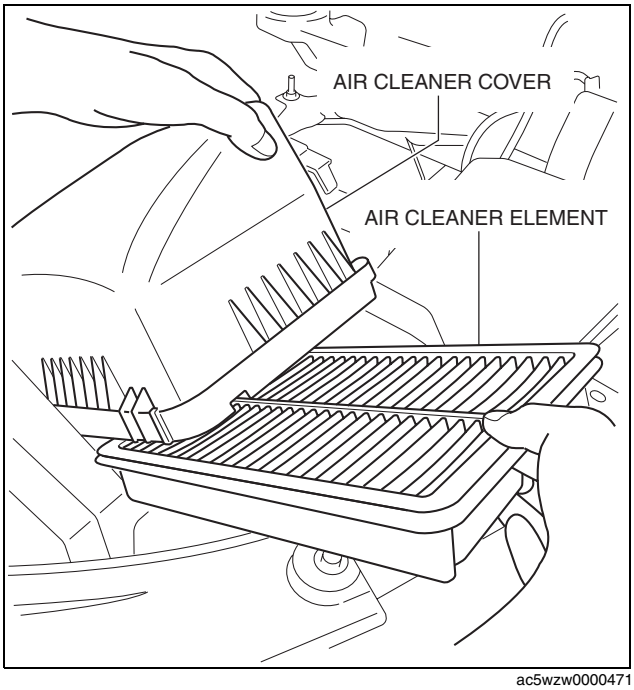

ac5wzw0000471

INTAKE-AIR SYSTEM [SKYACTIV-D 2.2]

Air Cleaner Cover Installation Note

1. Install the air cleaner cover as shown in the figure.

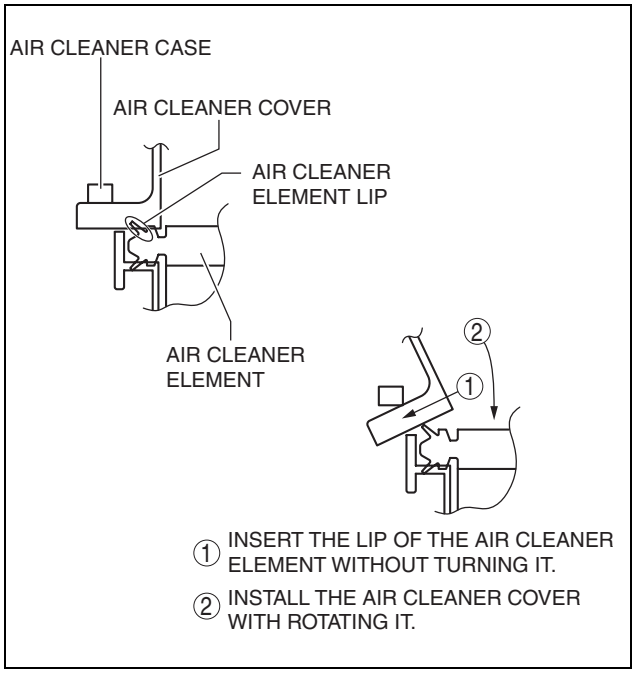

ac5wzw0000528

2. Secure the air cleaner cover and the air cleaner case with the clip.

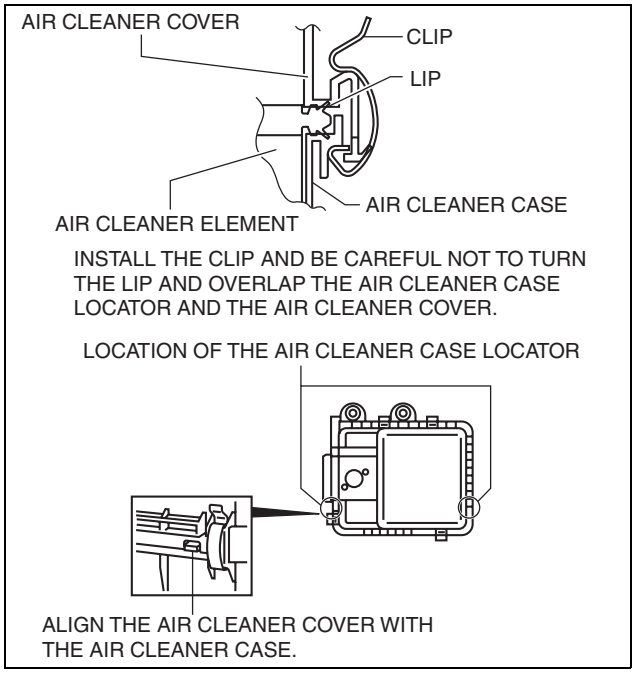

ac5wzw0000528

AIR CLEANER ELEMENT INSPECTION [SKYACTIV-D 2.2]

id0113z7800800

1. Remove the air cleaner element. (See 01-13B-15 AIR CLEANER ELEMENT REMOVAL/INSTALLATION [SKYACTIV-D 2.2].)
2. Inspect the following items:
   - Has the replacement date expired?
   - Is there dirt, damage, or deformity on the air cleaner element?
   - Is the sealing for the air cleaner case and air cleaner element in good condition?
   - Is the correct air cleaner element installed?
     — If there is any malfunction, clean or replace the air cleaner element. (See 01-13B-15 AIR CLEANER ELEMENT REMOVAL/INSTALLATION [SKYACTIV-D 2.2].)

INTAKE-AIR SYSTEM [SKYACTIV-D 2.2]

CHARGE AIR COOLER REMOVAL/INSTALLATION [SKYACTIV-D 2.2]

id0113z7705900

1. Disconnect the negative battery cable. (See 01-17B-9 NEGATIVE BATTERY CABLE DISCONNECTION/ CONNECTION [SKYACTIV-D 2.2].)
2. Remove the front bumper. (See 09-10-10 FRONT BUMPER REMOVAL/INSTALLATION.)
3. Remove in the order shown in the figure.

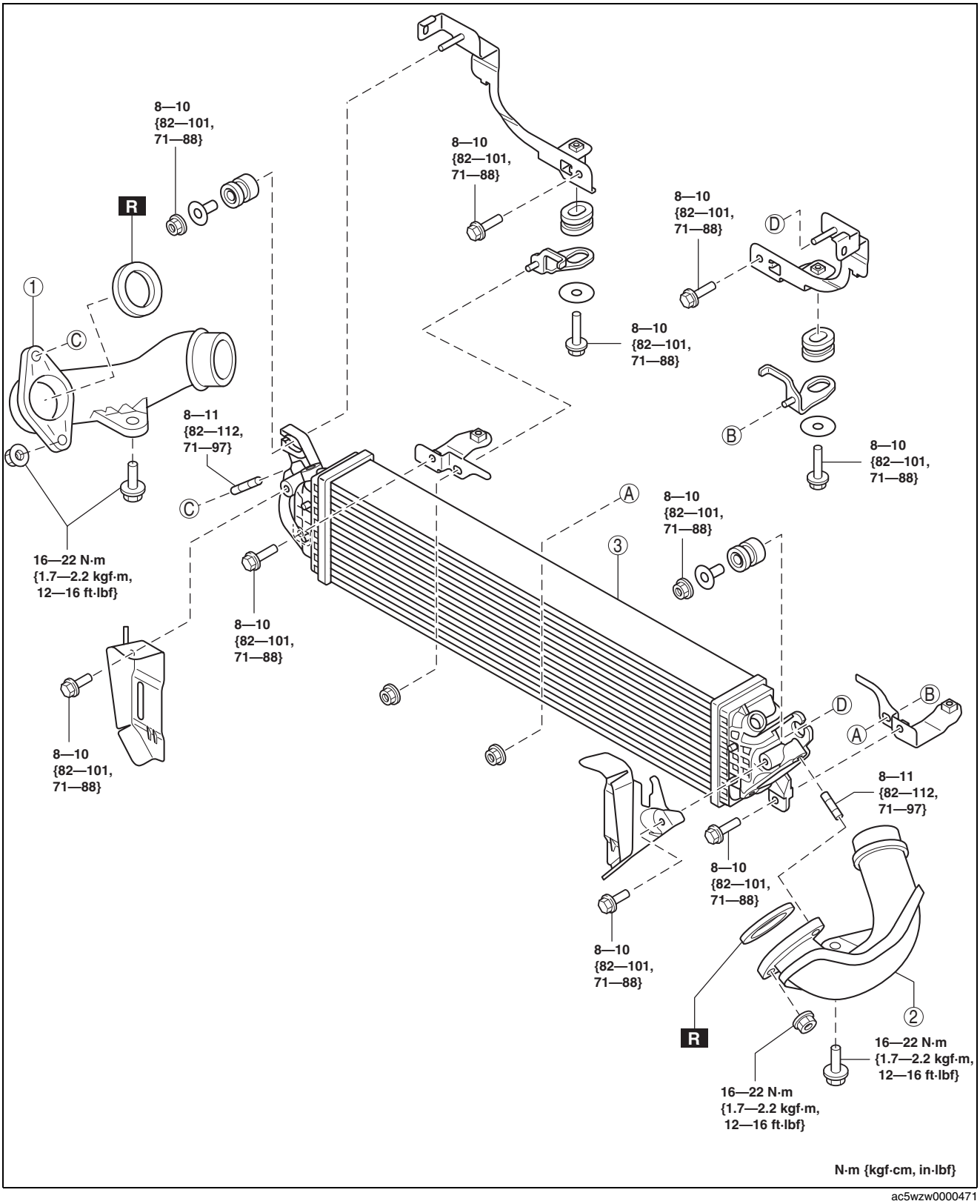

ac5wzw0000471

1	Charge air cooler outlet pipe
2	Charge air cooler inlet pipe

3	Charge air cooler (See 01-13B-18 Charge Air Cooler Installation Note.)

INTAKE-AIR SYSTEM [SKYACTIV-D 2.2]

4. Install in the reverse order of removal.

Charge Air Cooler Installation Note

1. Temporarily install the parts shown in the diagram.

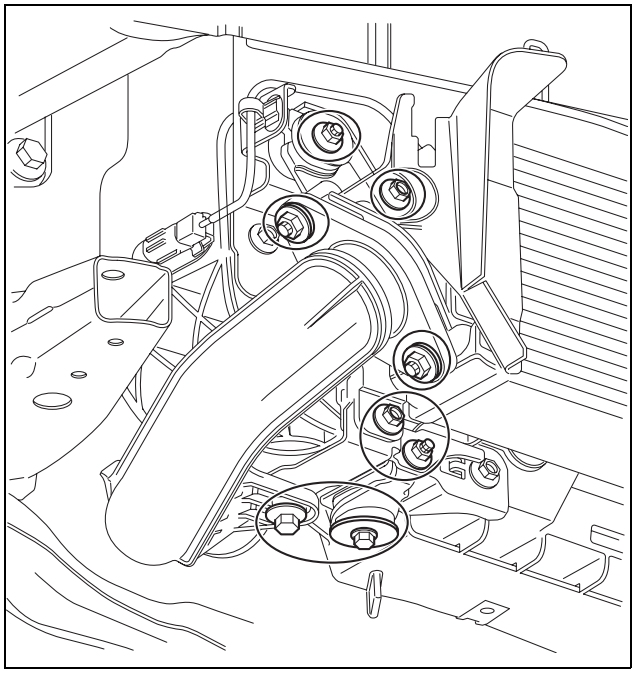

ac5wzw0000527

2. Tighten the charge air cooler in the order shown in the figure.

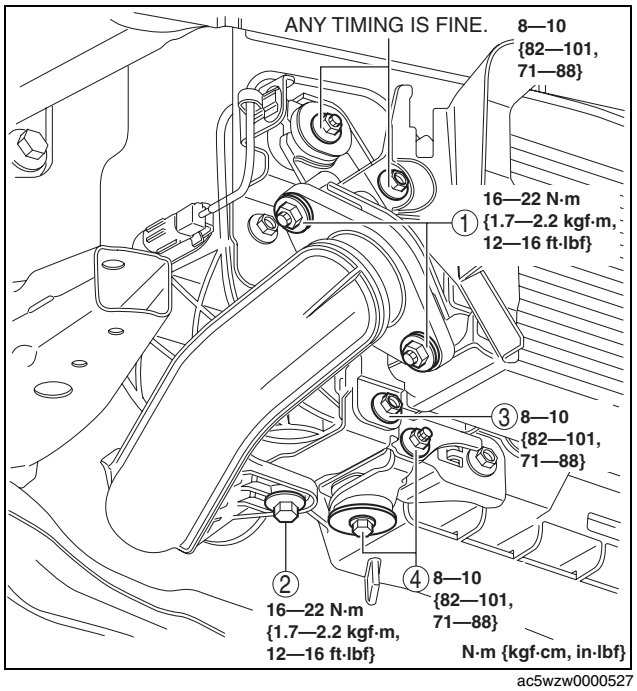

ac5wzw0000527

INTAKE-AIR SYSTEM [SKYACTIV-D 2.2]

CHARGE AIR COOLER INSPECTION [SKYACTIV-D 2.2]

id0113z7800900

1. Remove the charge air cooler. (See 01-13B-17 CHARGE AIR COOLER REMOVAL/INSTALLATION [SKYACTIV-D 2.2].)
2. Plug port A.
3. Apply pressure from port B and verity that there is no airflow.
   - If there is airflow, replace the charge air cooler. (See 01-13B-17 CHARGE AIR COOLER REMOVAL/INSTALLATION [SKYACTIV-D 2.2].)

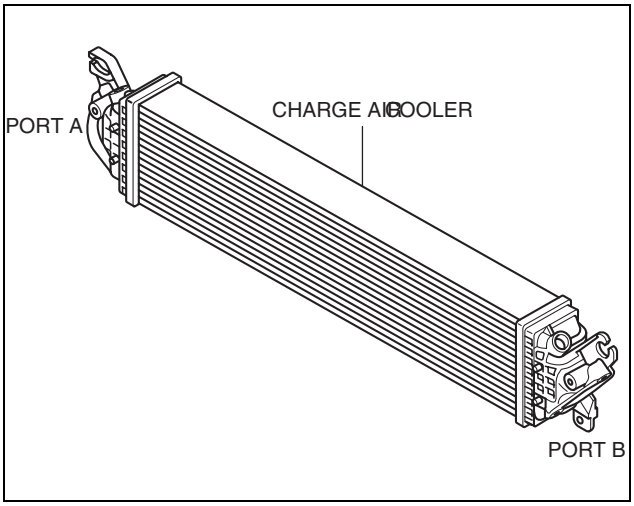

ac5wzw0000471

CHECK VALVE INSPECTION [SKYACTIV-D 2.2]

id0113z7082800

1. Remove the check valve. (See 01-13B-20 CHECK VALVE REMOVAL/INSTALLATION [SKYACTIV-D 2.2].)
2. Verify that there is airflow through port B when pressure is applied from port A.
   - If there is no airflow, replace the check valve. (See 01-13B-20 CHECK VALVE REMOVAL/INSTALLATION [SKYACTIV-D 2.2].)
3. Verify that there is no airflow through port A when pressure is applied from port B.
   - If there is airflow, replace the check valve. (See 01-13B-20 CHECK VALVE REMOVAL/INSTALLATION [SKYACTIV-D 2.2].)

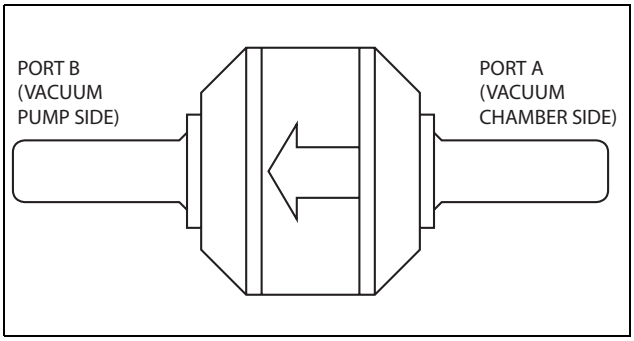

ac5wzw0000490

INTAKE-AIR SYSTEM [SKYACTIV-D 2.2]

CHECK VALVE REMOVAL/INSTALLATION [SKYACTIV-D 2.2]

id0113z7266000

Caution

- **If the vacuum hose is installed incorrectly, it could cause a vehicle malfunction. To prevent this, refer to "VACUUM HOSE STRUCTURAL VIEW" and install the vacuum hose correctly. (See 01-13B-23 Vacuum hose structural view.)**

1. Disconnect the negative battery cable. (See 01-17B-9 NEGATIVE BATTERY CABLE DISCONNECTION/CONNECTION [SKYACTIV-D 2.2].)
2. Remove the battery and the battery tray. (See 01-17B-3 BATTERY REMOVAL/INSTALLATION [SKYACTIV-D 2.2].)
3. Remove in the order shown in the figure.

AT

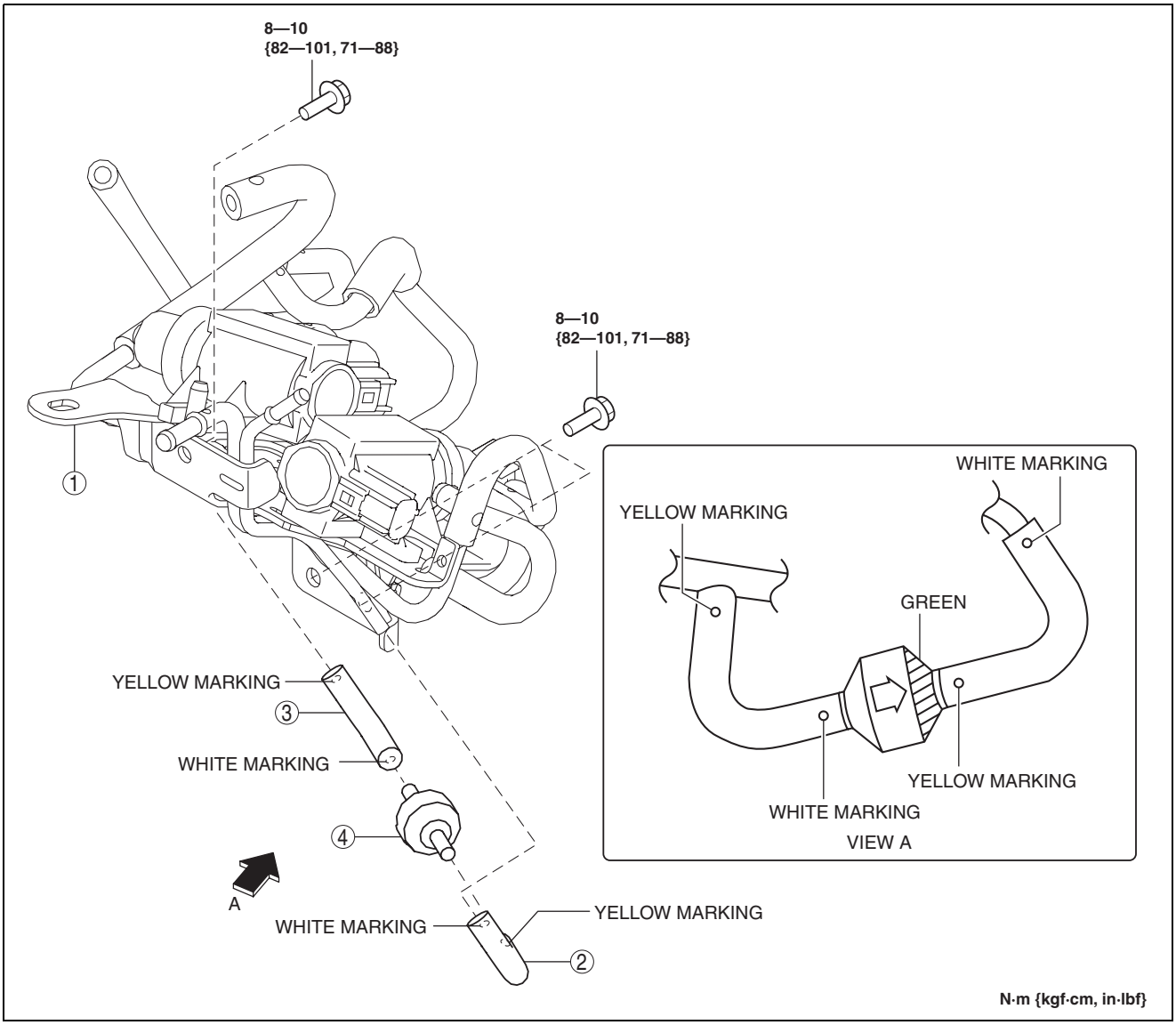

ac5wzw0000489

INTAKE-AIR SYSTEM [SKYACTIV-D 2.2]

MT

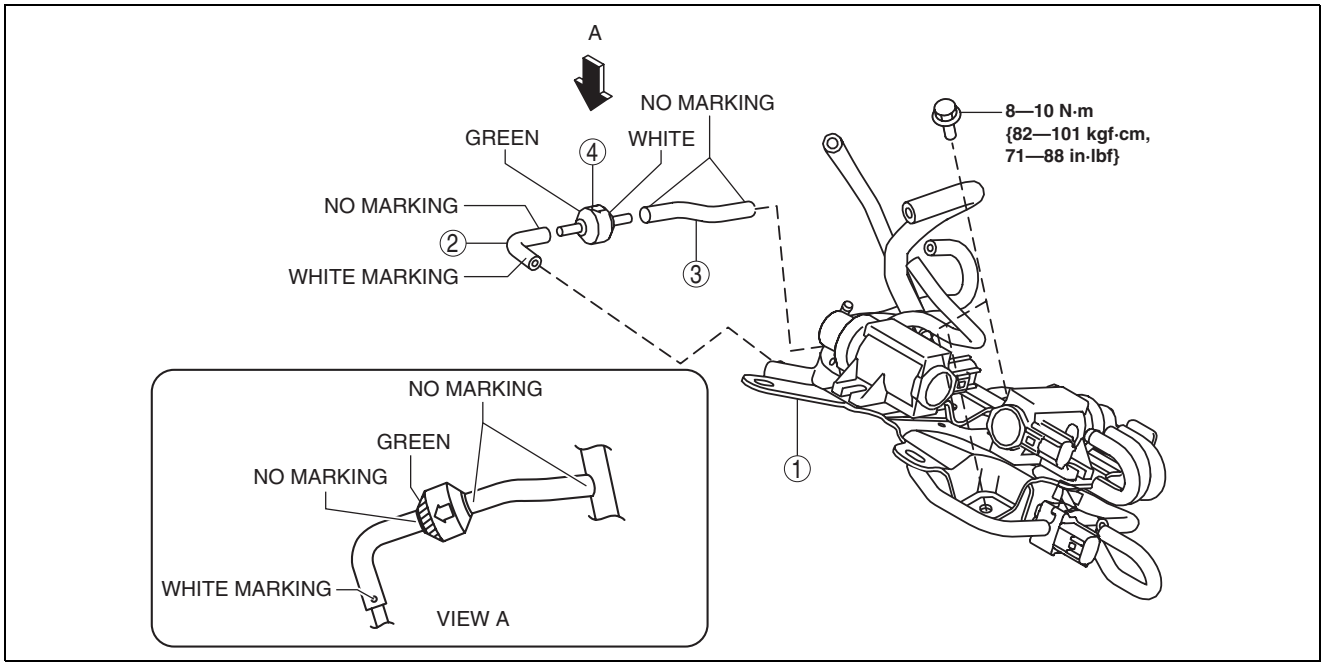

ac5wzw0000489

1	Vacuum pipe bracket
2	Vacuum hose No.1 (See 01-13B-22 Vacuum Hose No.1 Installation Note.)
3	Vacuum hose No.2 (See 01-13B-21 Vacuum Hose No.2 Installation Note.)
4	Check valve

4. Install in the reverse order of removal.

Vacuum Hose No.2 Installation Note

1. Install vacuum pump No.2 as shown in the figure.

Check valve side

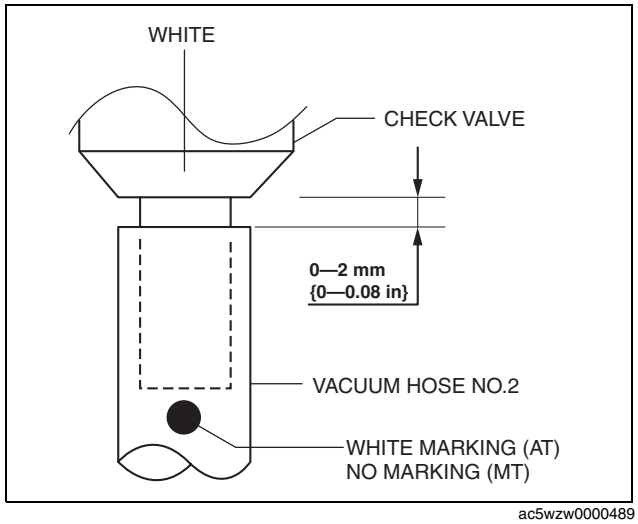

ac5wzw0000489

INTAKE-AIR SYSTEM [SKYACTIV-D 2.2]

Vacuum pipe bracket side

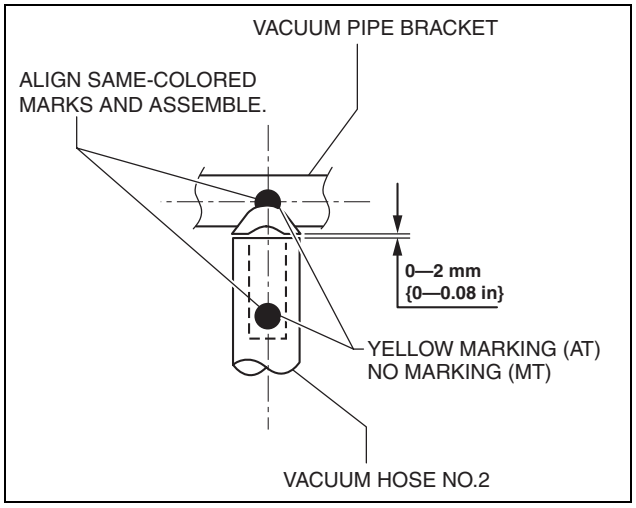

ac5wzw0000489

Vacuum Hose No.1 Installation Note

1. Install vacuum pump No.1 as shown in the figure.

Check valve side

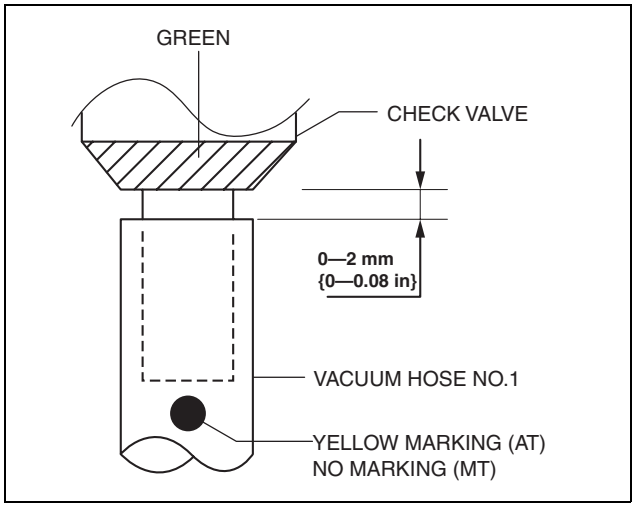

ac5wzw0000489

INTAKE-AIR SYSTEM [SKYACTIV-D 2.2]

Vacuum pipe bracket side

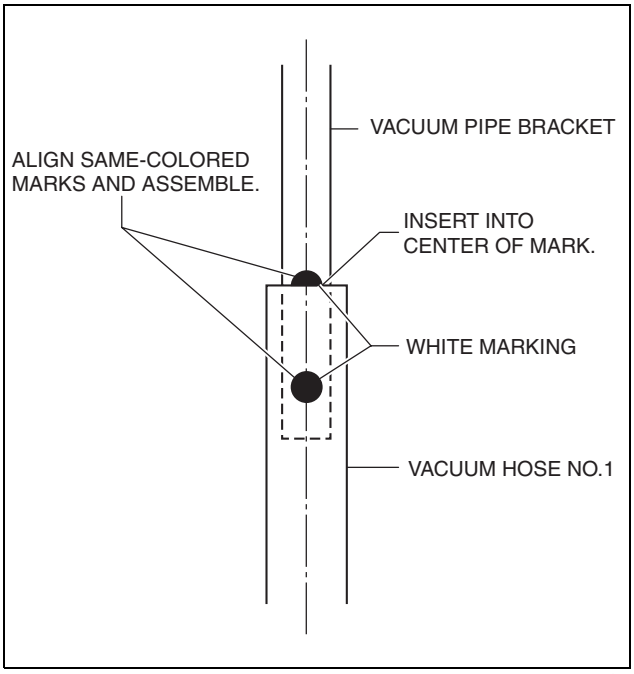

ac5wzw0000490

Vacuum hose structural view

1. Verify that the vacuum hose is installed correctly as shown in the figure.

Whole figure (AT)

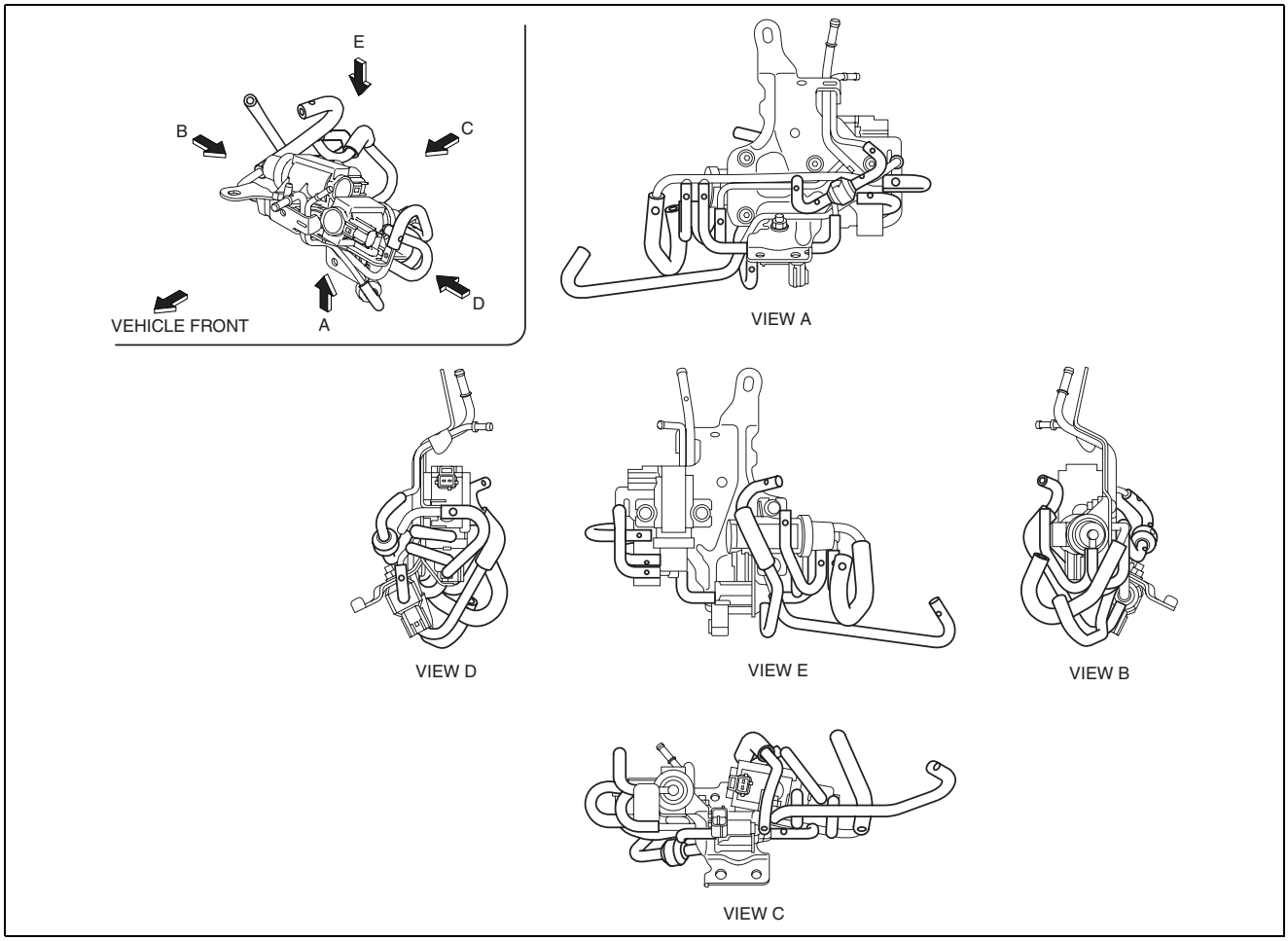

ac5wzw0000466

INTAKE-AIR SYSTEM [SKYACTIV-D 2.2]

Whole figure (MT)

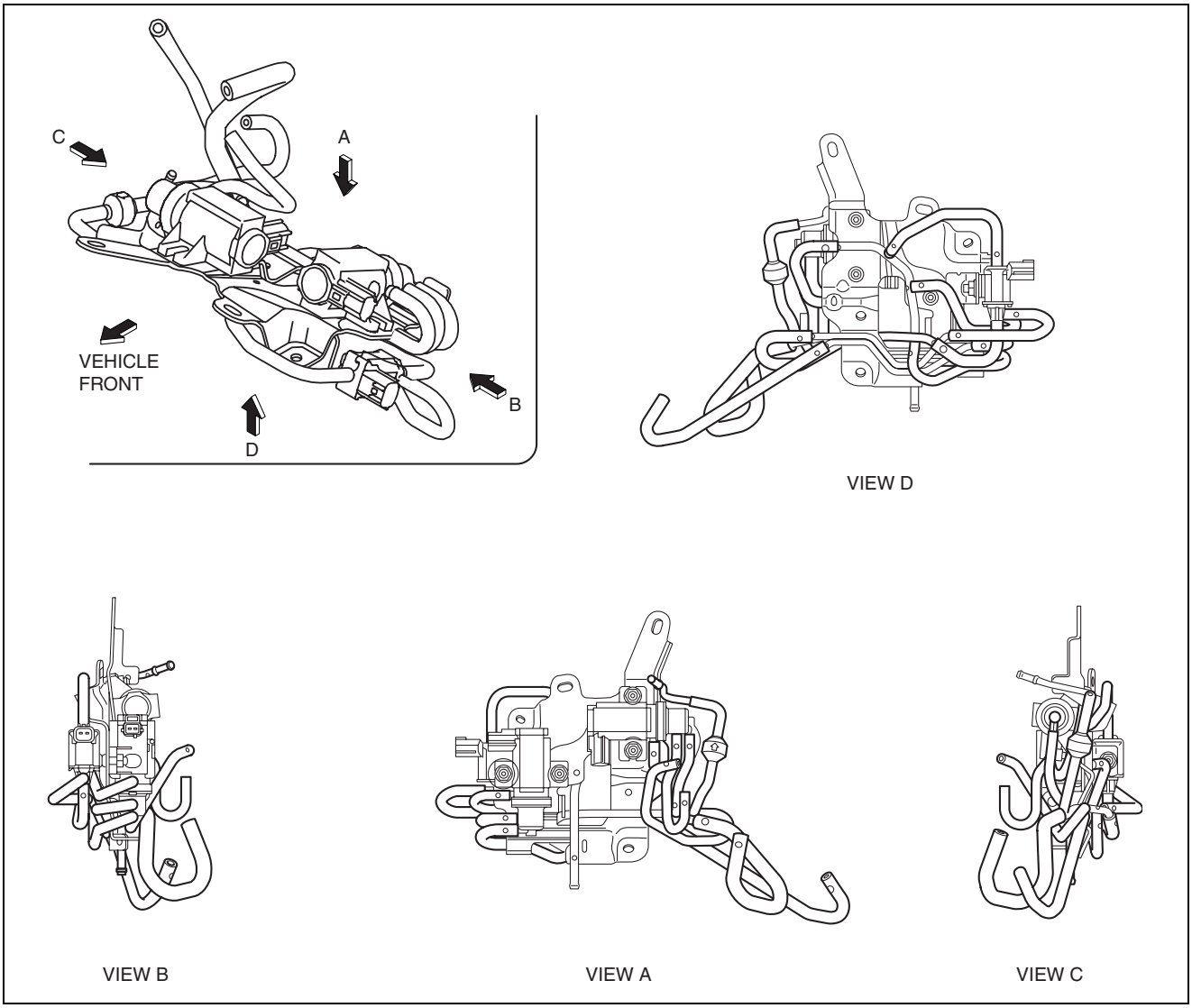

ac5wzw0000467

Check valve side (AT)

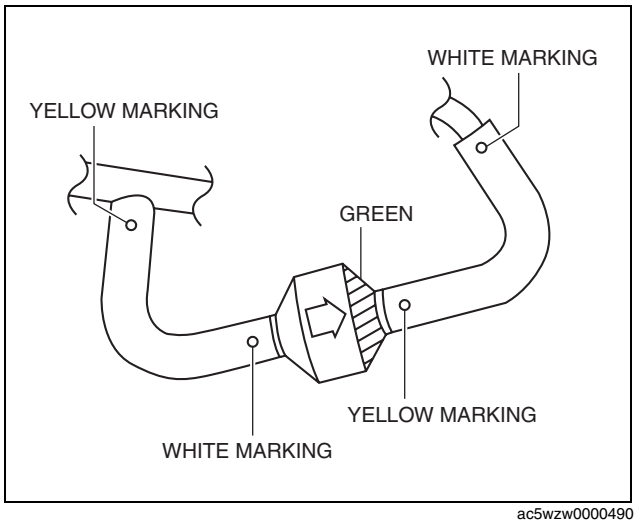

ac5wzw0000490

Check valve side (MT)

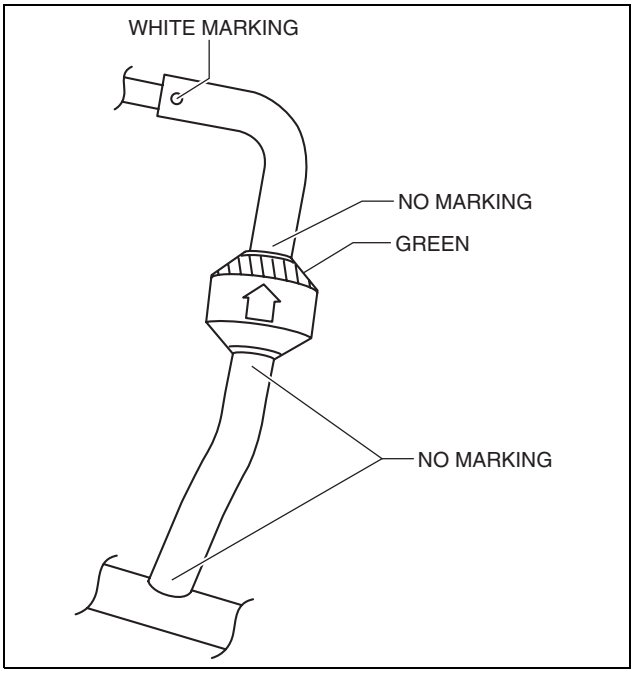

ac5wzw0000490

INTAKE-AIR SYSTEM [SKYACTIV-D 2.2]

Vacuum pipe bracket side (AT)

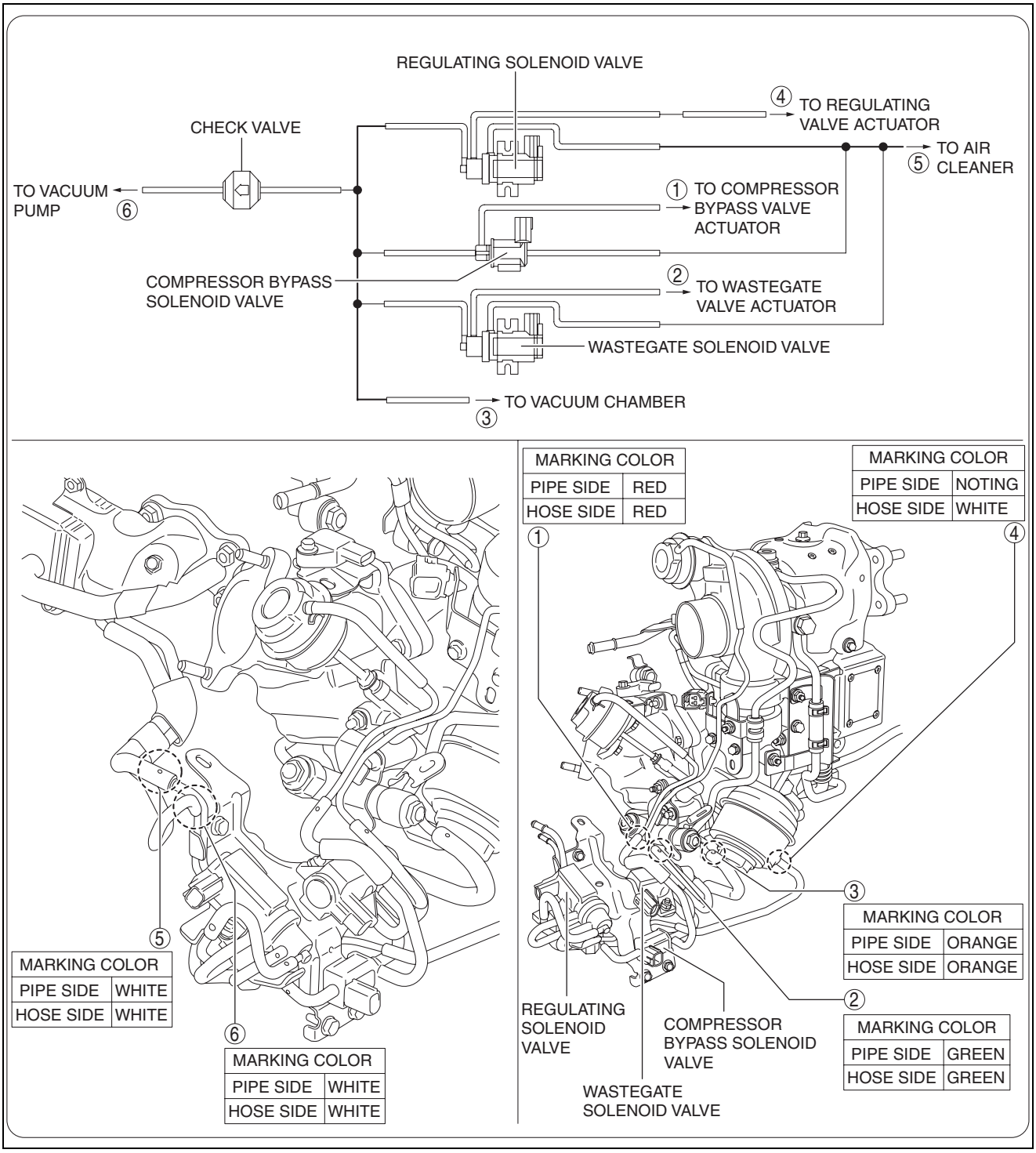

ac5wzw0000490

INTAKE-AIR SYSTEM [SKYACTIV-D 2.2]

Vacuum pipe bracket side (MT)

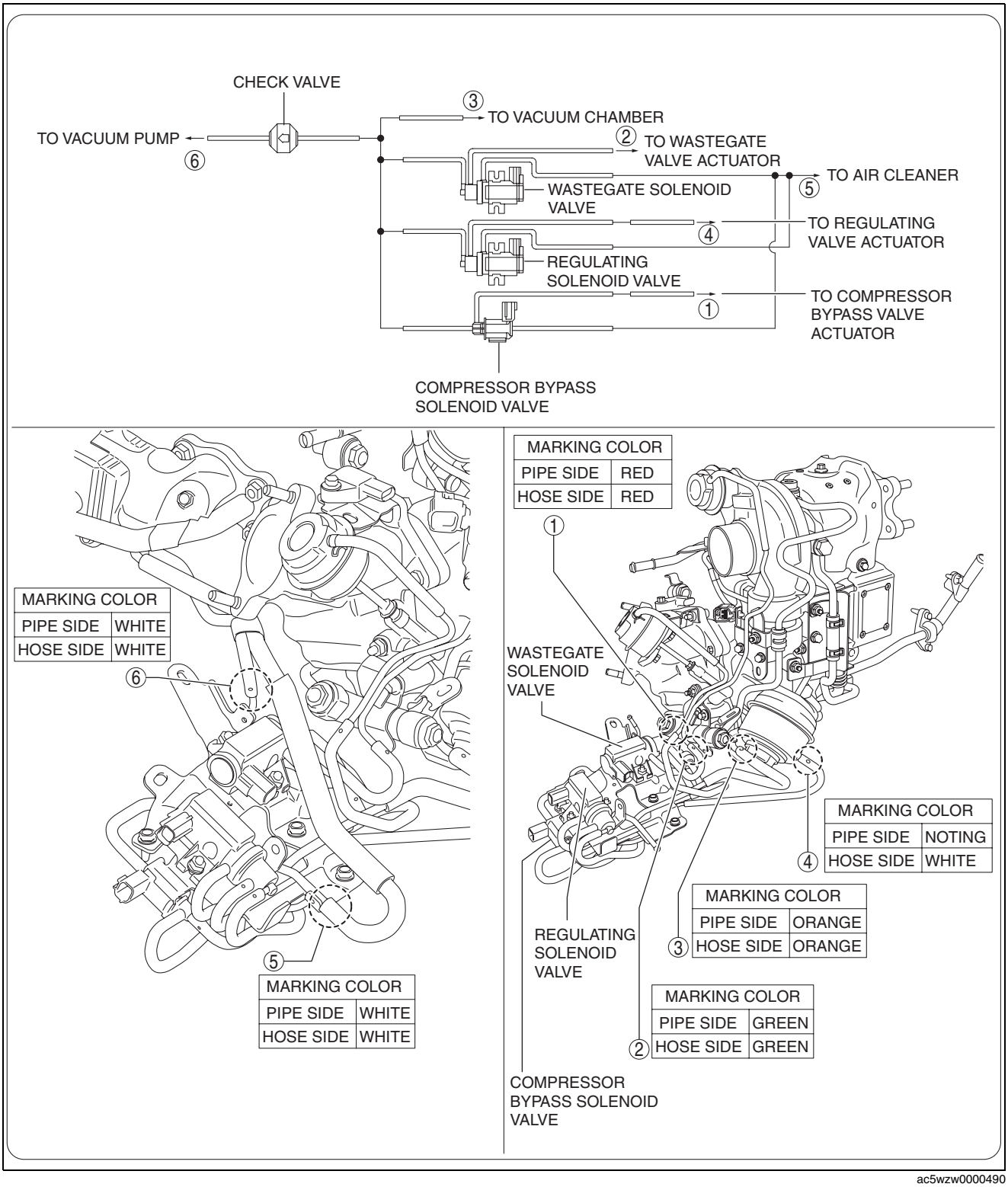

ac5wzw0000490

INTAKE-AIR SYSTEM [SKYACTIV-D 2.2]

GLOW PLUG INSPECTION [SKYACTIV-D 2.2]

id0113z7804300

1. Remove the glow plug short-cord. (See 01-13B-28 GLOW PLUG REMOVAL/INSTALLATION [SKYACTIV-D 2.2].)
2. Measure the resistance between the glow plug terminal and the body ground.

Glow plug resistance (specification)
Approx. 1.0 ohms [20 °C {68 °F}]

- If not within the specification, replace the glow plug. (See 01-13B-28 GLOW PLUG REMOVAL/INSTALLATION [SKYACTIV-D 2.2].)

GLOW PLUG REMOVAL/INSTALLATION [SKYACTIV-D 2.2]

id0113z7804400

Caution
- **Do not reuse a glow plug which has been dropped from a height exceeding 10 cm even though there is no damage and the resistance is normal.**

1. Disconnect the negative battery cable. (See 01-17B-9 NEGATIVE BATTERY CABLE DISCONNECTION/CONNECTION [SKYACTIV-D 2.2].)
2. Remove the engine cover. (See 01-10B-4 ENGINE COVER REMOVAL/INSTALLATION [SKYACTIV-D 2.2].)
3. Remove the components shown in the figure and set them aside.

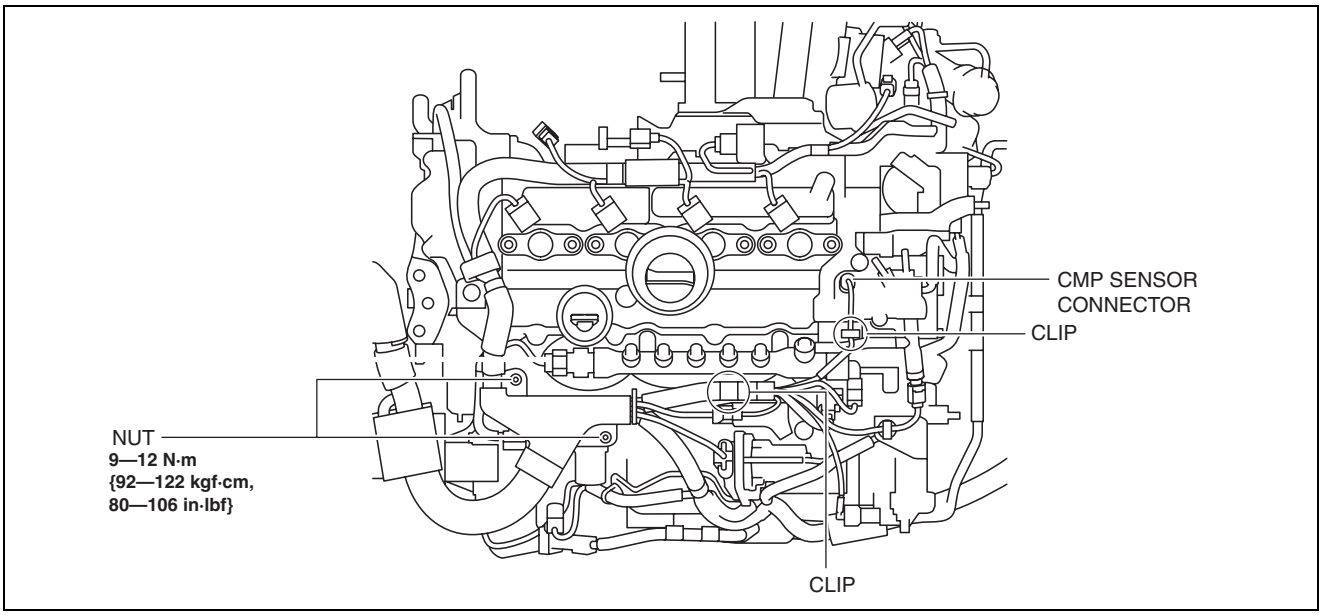

ac5wzw0000476

4. Remove the intake manifold insulator. (See 01-13B-6 INTAKE-AIR SYSTEM REMOVAL/INSTALLATION [SKYACTIV-D 2.2].)

INTAKE-AIR SYSTEM [SKYACTIV-D 2.2]

5. Remove in the order shown in the figure.

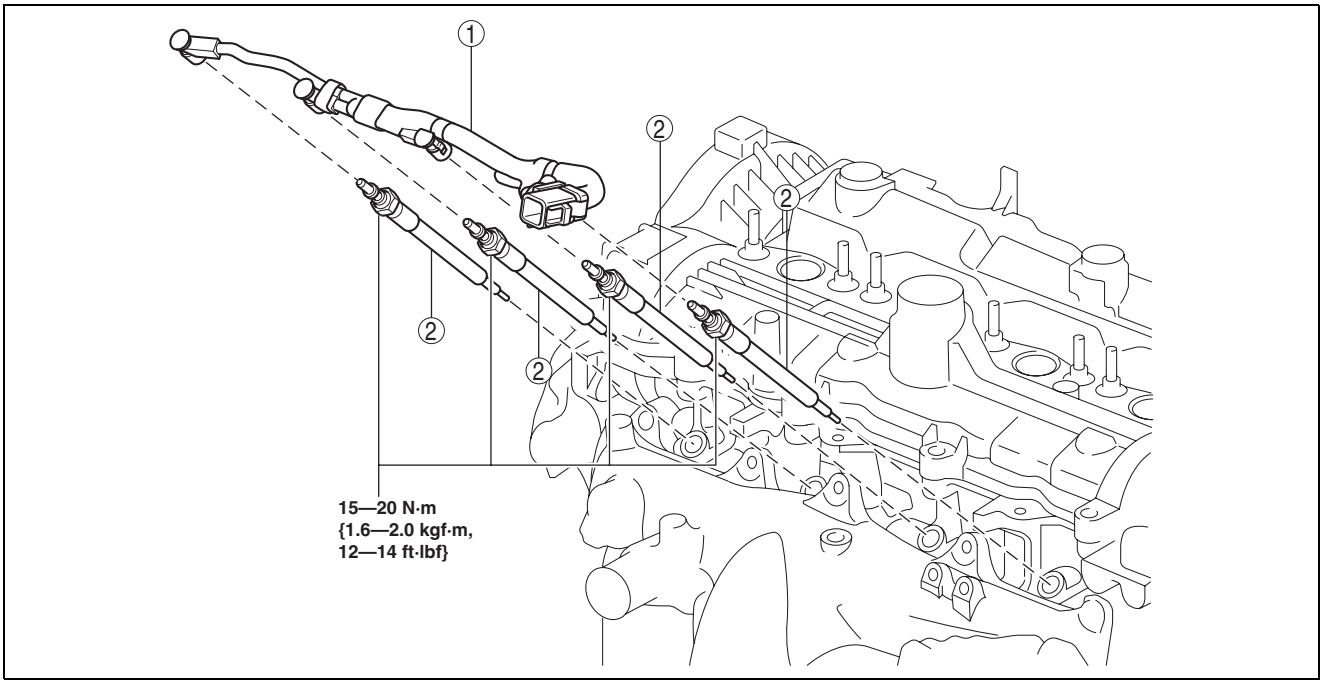

ac5wzw0000476

1	Glow plug short-cord (See 01-13B-29 Glow Plug Short-cord Removal Note.)

2	Glow plug (See 01-13B-29 Glow Plug Removal Note.) (See 01-13B-30 Cleaning Before Glow Plug Installation.) (See 01-13B-30 Glow Plug Installation Note.)

Glow Plug Short-cord Removal Note

1. Pull out the glow plug from the glow plug short-cord as shown in the figure.

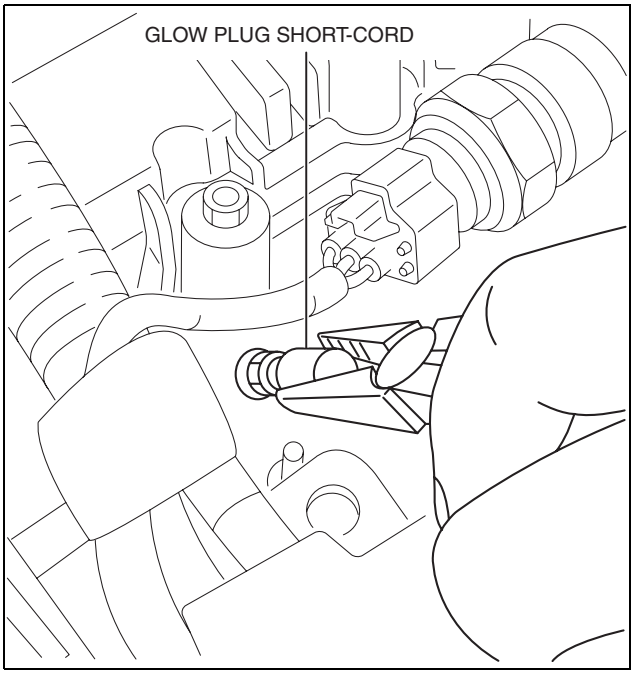

ac5wzw0000476

Glow Plug Removal Note

1. Loosen the glow plug using the tool until the thread is held by one thread, loosen it by hand, and then remove it.

INTAKE-AIR SYSTEM [SKYACTIV-D 2.2]

Cleaning Before Glow Plug Installation

Caution
- **If carbon adheres to the glow plug, it could damage the glow plug and the engine. Before installing the glow plug, remove the carbon adhering to the glow plug and the glow plug installation hole.**

1. Wrap the drill (**5.0—5.2 mm** {0.197—0.204 in} and **5.2—5.4 mm {0.205—0.212 in}** drill bit) from the end to the **119—121 mm {4.69—4.76 in}** position with tape.

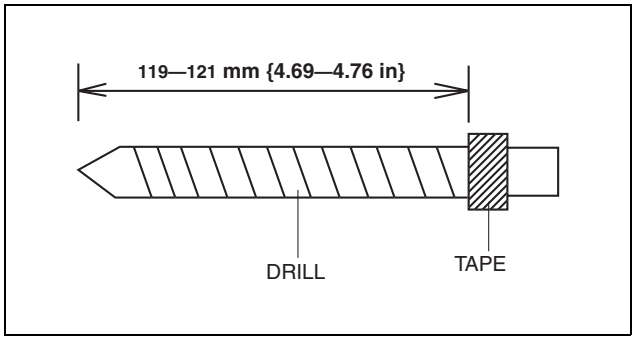

ac5wzw0000476

2. Press the drill (**5.0—5.2 mm {0.197—0.204 in}** drill bit) until the wrapped part is inserted completely.
3. Rotate the drill by hand and remove the carbon from the glow plug installation hole.
4. Perform Steps 2 and 3 using a drill (**5.2—5.4 mm {0.205—0.212 in}** drill bit).

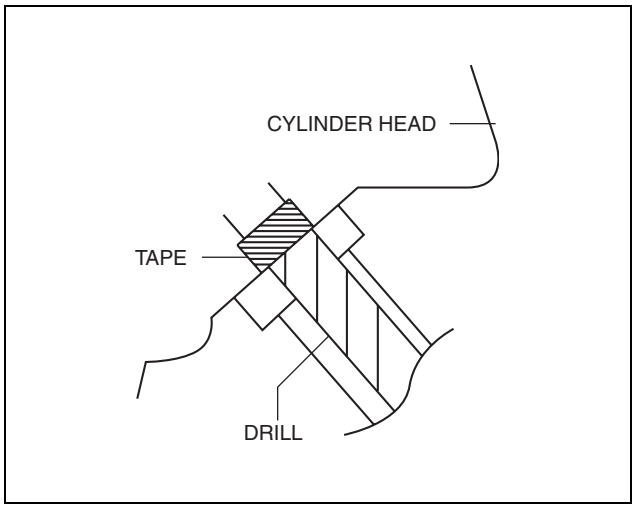

ac5wzw0000530

Glow Plug Installation Note

1. Tighten the glow plug by hand until the thread is installed to one thread and tighten it using the tool.

INTAKE-AIR SYSTEM [SKYACTIV-D 2.2]

GLOW PLUG CONTROL MODULE REMOVAL/INSTALLATION [SKYACTIV-D 2.2]

id0113z7705400

1. Disconnect the negative battery cable. (See 01-17B-9 NEGATIVE BATTERY CABLE DISCONNECTION/ CONNECTION [SKYACTIV-D 2.2].)
2. Remove the battery and the battery tray. (See 01-17B-3 BATTERY REMOVAL/INSTALLATION [SKYACTIV-D 2.2].)
3. Remove in the order shown in the figure.

1	Glow control module connector
2	Glow control module

4. Install in the reverse order of removal.

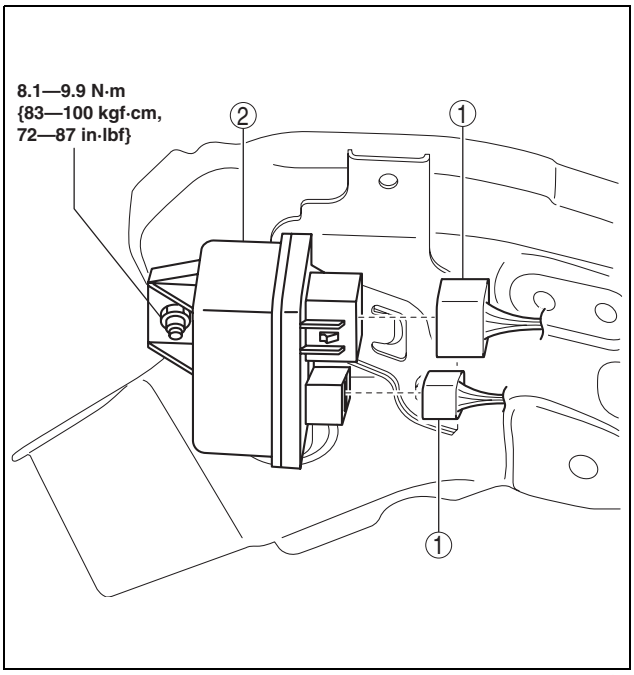

ac5wzw0000470

GLOW PLUG CONTROL MODULE INSPECTION [SKYACTIV-D 2.2]

id0113z7705500

1. Perform the KOEO self-test.
2. Verify that a glow control module related DTC is detected.
   - If DTCs are detected, repair the malfunctioning part according to the applicable DTC troubleshooting.
   - If a DTC is not detected, go to the next step.
3. Inspect the following items:
   - Glow control module damage
   - Glow control module connector damage or corrosion
     — If there is any malfunction, repair or replace the malfunctioning part.
     — If there is no malfunction, replace the glow control module. (See 01-13B-31 GLOW PLUG CONTROL MODULE REMOVAL/INSTALLATION [SKYACTIV-D 2.2].)

INTAKE-AIR SYSTEM [SKYACTIV-D 2.2]

TURBOCHARGER REMOVAL/INSTALLATION [SKYACTIV-D 2.2]

id0113z7705800

Warning
- **A hot engine and exhaust system can cause severe burns. Turn off the engine and wait until they are cool before removing the exhaust system.**

Caution
- **Perform exhaust gas temperature sensor removal/installation only when inspection or replacement is required, such as when DTCs for the sensor are displayed, because it may cause exhaust gas leakage. If the exhaust gas temperature sensor is removed once, always verify that there is no exhaust gas leakage after reinstallation.**

1. Disconnect the negative battery cable. (See 01-17B-9 NEGATIVE BATTERY CABLE DISCONNECTION/ CONNECTION [SKYACTIV-D 2.2].)
2. Remove the engine cover. (See 01-10B-4 ENGINE COVER REMOVAL/INSTALLATION [SKYACTIV-D 2.2].)
3. Drain the engine coolant. (See 01-12B-4 ENGINE COOLANT REPLACEMENT [SKYACTIV-D 2.2].)
4. Remove the air cleaner. (See 01-13B-6 INTAKE-AIR SYSTEM REMOVAL/INSTALLATION [SKYACTIV-D 2.2].)
5. Remove the battery and the battery tray. (See 01-17B-3 BATTERY REMOVAL/INSTALLATION [SKYACTIV-D 2.2].)
6. Remove the following parts as a single unit: (See 01-13B-6 INTAKE-AIR SYSTEM REMOVAL/INSTALLATION [SKYACTIV-D 2.2].)
   - Air hose
   - Air inlet pipe
   - Breather hose
   - Turbocharger air inlet hose
   - PTC Heater
7. Set the turbocharger air outlet pipe, turbocharger air outlet hose, and air intake pipe aside as a single unit as shown in the figure. (See 01-13B-6 INTAKE-AIR SYSTEM REMOVAL/ INSTALLATION [SKYACTIV-D 2.2].)

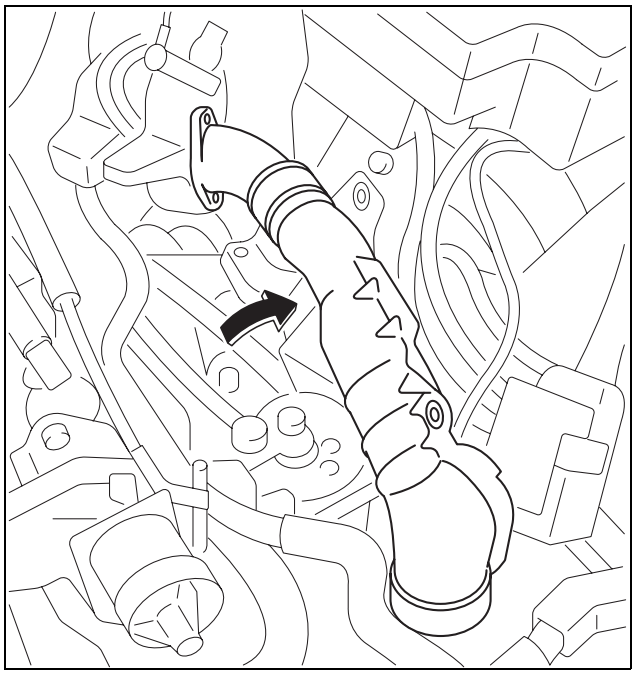

ac5jjw00003612

INTAKE-AIR SYSTEM [SKYACTIV-D 2.2]

8. Remove the wiring harness clip shown in the figure.
9. Disconnect the regulating valve position sensor connector.

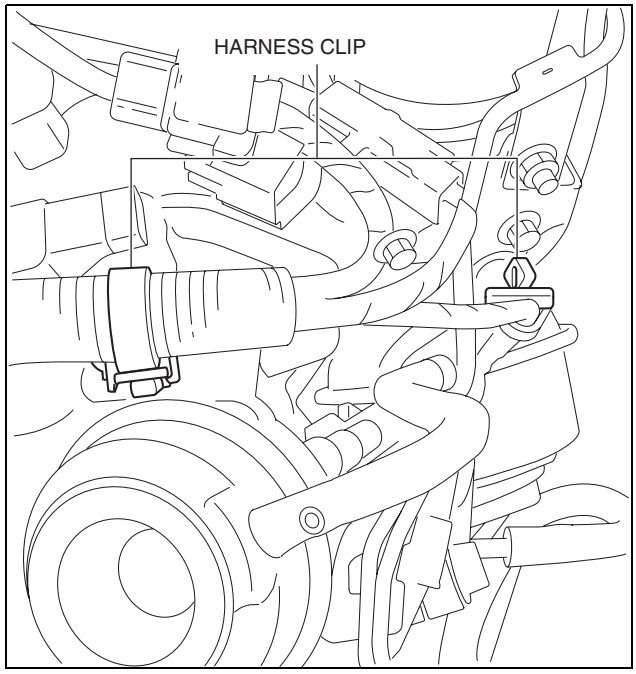

ac5wzw0000470

10. Detach the wiring harness clips shown in the figure.
11. Remove the front crossmember. (See 02-13-15 FRONT CROSSMEMBER REMOVAL/INSTALLATION.)
12. Remove the catalytic converter. (See 01-15B-1 EXHAUST SYSTEM REMOVAL/INSTALLATION [SKYACTIV-D 2.2].)
13. Remove the transfer. (See 03-16B-6 TRANSFER REMOVAL/INSTALLATION [GW6AX-EL].)
14. Remove in the order shown in the figure.
15. Install in the reverse order of removal.

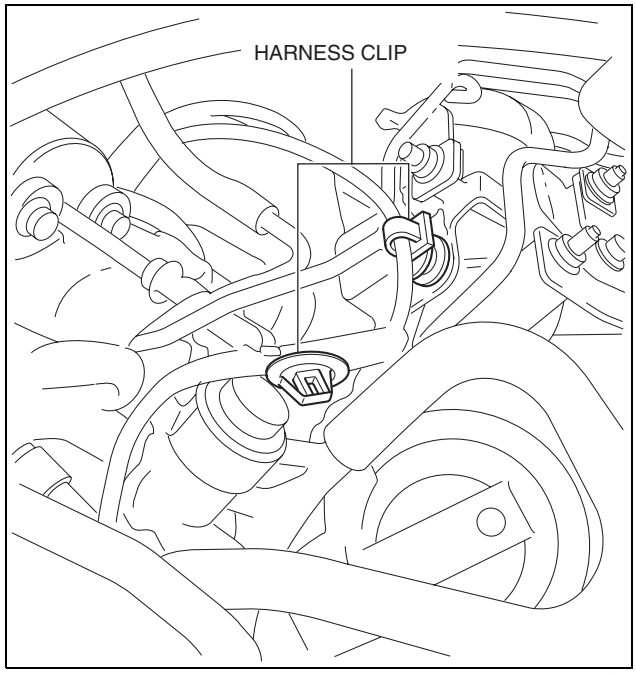

ac5wzw0000470

INTAKE-AIR SYSTEM [SKYACTIV-D 2.2]

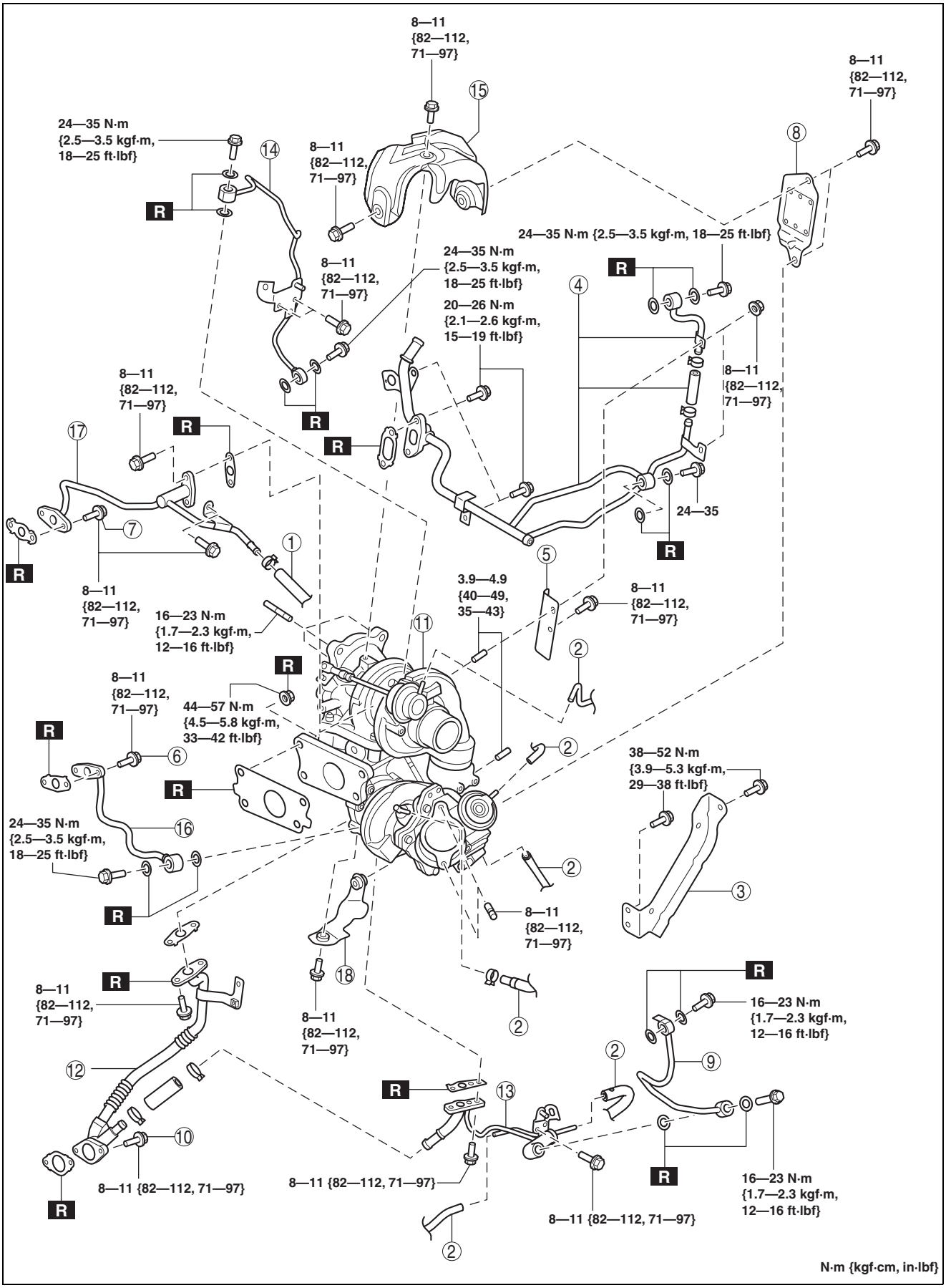

ac5wzw0000530

INTAKE-AIR SYSTEM [SKYACTIV-D 2.2]

1	Water hose
2	Vacuum hose
3	Turbocharger bracket (2WD)
4	Water pipe No.1
5	Turbocharger insulator No.1
6	Water pipe No.2 installation bolt
7	Water pipe No.3 installation bolt
8	Turbocharger insulator No.2
9	Oil pipe No.1
10	Oil pipe No.2 installation bolt

11	Turbocharger
12	Oil pipe No.2 (See 01-13B-35 Oil Pipe No.2 Removal Note.)
13	Oil pipe No.3
14	Oil pipe No.4
15	Turbocharger insulator No.3
16	Water pipe No.2 (See 01-13B-35 Water Pipe No.2 Installation Note.)
17	Water pipe No.3
18	Turbocharger insulator No.4

Oil Pipe No.2 Removal Note

1. Remove oil pipes No.2 and 3 as a single unit.
2. Remove oil pump No.2.

Water Pipe No.2 Installation Note

1. Insert a nut (**9 mm {0.4 in}**) between the position shown in the figure and tighten water pipe No.2 (turbocharger side).

   Water pipe No.2 (turbocharger side) tightening torque
   24—35 N·m {2.5—3.5 kgf·m, 18—25 ft·lbf}

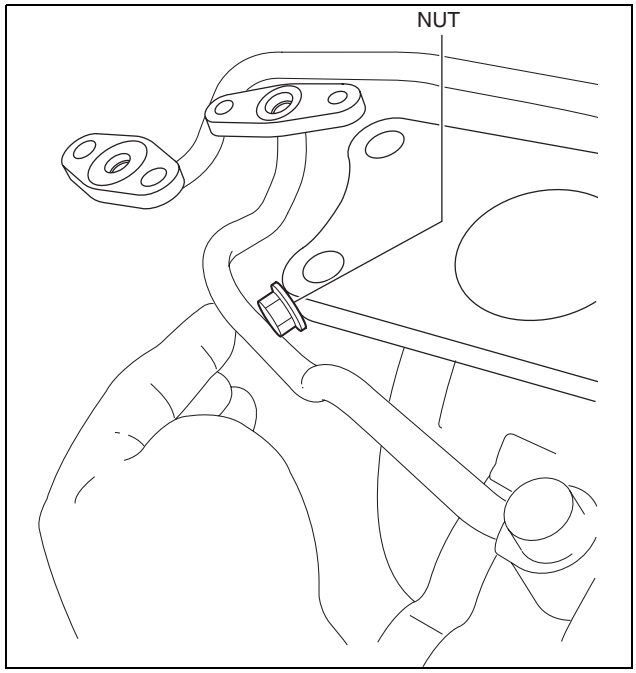

ac5wzw0000470

INTAKE-AIR SYSTEM [SKYACTIV-D 2.2]

2. Measure the distance shown in the figure and verify that water pipe No.2 is installed correctly.

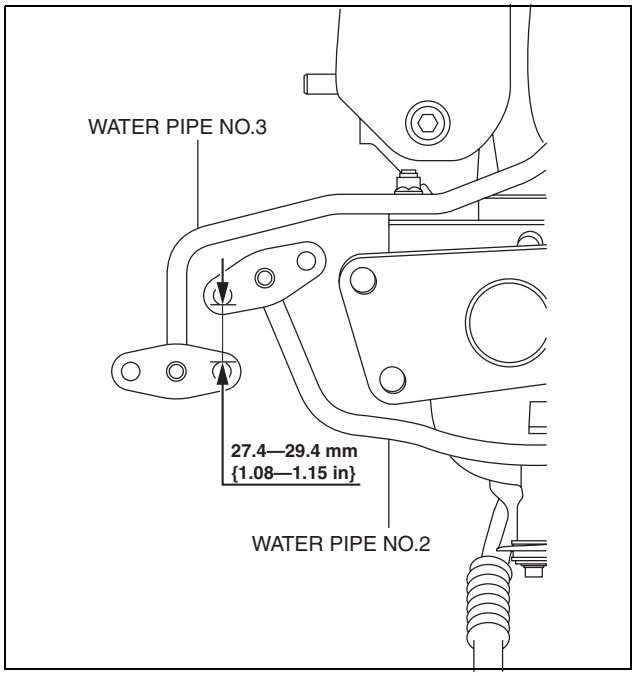

ac5wzw0000471

VACUUM CHAMBER INSPECTION [SKYACTIV-D 2.2]

id0113z7705700

1. Remove the vacuum chamber. (See 01-13B-37 VACUUM CHAMBER REMOVAL/INSTALLATION [SKYACTIV-D 2.2].)
2. Apply negative pressure (**-94 kPa {-705 mmHg, -28 inHg}**) on the port A for one minute to check for the leakage of negative pressure.
   - If there is air leakage, replace the vacuum chamber. (See 01-13B-37 VACUUM CHAMBER REMOVAL/INSTALLATION [SKYACTIV-D 2.2].)

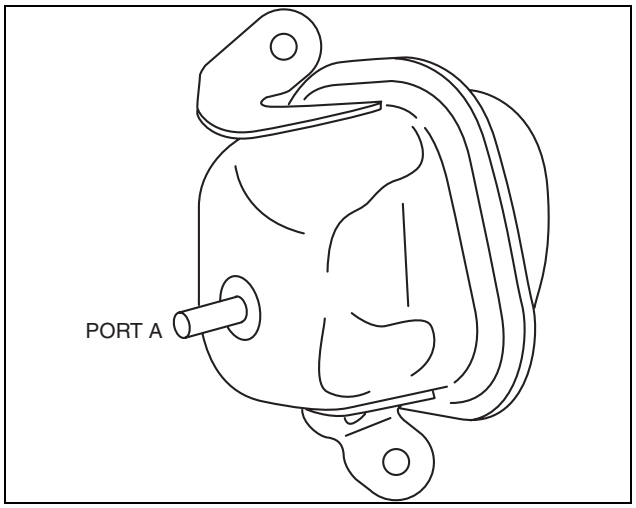

ac5wzw0000489

INTAKE-AIR SYSTEM [SKYACTIV-D 2.2]

VACUUM CHAMBER REMOVAL/INSTALLATION [SKYACTIV-D 2.2]

id0113z7265400

1. Disconnect the negative battery cable. (See 01-17B-9 NEGATIVE BATTERY CABLE DISCONNECTION/ CONNECTION [SKYACTIV-D 2.2].)
2. Remove the turbocharger. (See 01-13B-32 TURBOCHARGER REMOVAL/INSTALLATION [SKYACTIV-D 2.2].)
3. Remove in the order shown in the figure.

1	Vacuum hose
2	Vacuum chamber

4. Install in the reverse order of removal.

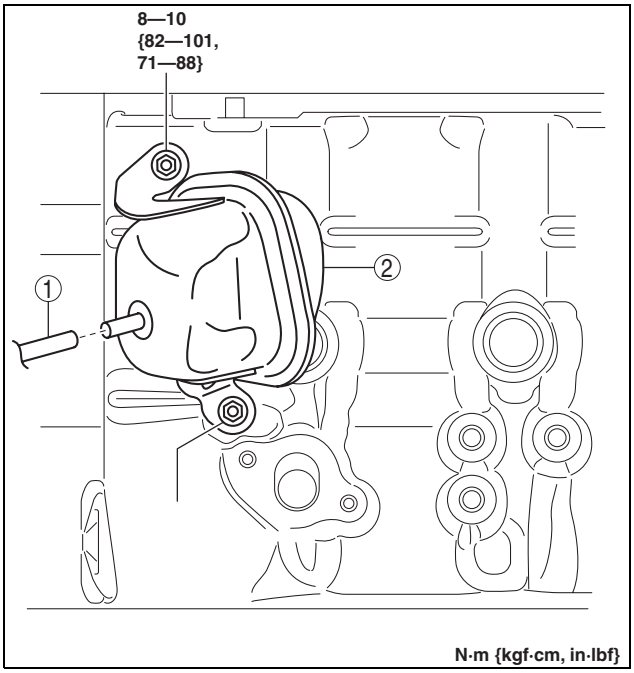

ac5wzw0000489

COMPRESSOR BYPASS SOLENOID VALVE INSPECTION [SKYACTIV-D 2.2]

id0113z7265500

Resistance inspection

1. Disconnect the negative battery cable. (See 01-17B-9 NEGATIVE BATTERY CABLE DISCONNECTION/ CONNECTION [SKYACTIV-D 2.2].)
2. Remove the compressor bypass solenoid valve. (See 01-13B-38 COMPRESSOR BYPASS SOLENOID VALVE REMOVAL/INSTALLATION [SKYACTIV-D 2.2].)
3. Measure the resistance between the compressor bypass solenoid valve terminals A and B.

   Compressor bypass solenoid valve resistance (specification)
   30—34 ohms [20 °C {68 °F}]

   - If not within the specification, replace the compressor bypass solenoid valve. (See 01-13B-38 COMPRESSOR BYPASS SOLENOID VALVE REMOVAL/ INSTALLATION [SKYACTIV-D 2.2].)

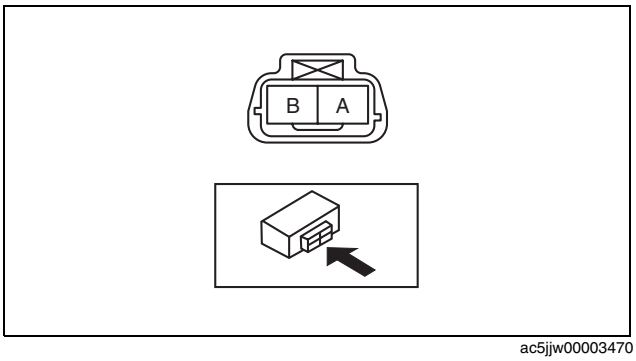

ac5jjw00003470

INTAKE-AIR SYSTEM [SKYACTIV-D 2.2]

COMPRESSOR BYPASS SOLENOID VALVE REMOVAL/INSTALLATION [SKYACTIV-D 2.2]

id0113z7265600

Caution

- **If the vacuum hose is installed incorrectly, it could cause a vehicle malfunction. To prevent this, refer to "VACUUM HOSE STRUCTURAL VIEW" and install the vacuum hose correctly. (See 01-13B-44 Vacuum hose structural view.)**

1. Disconnect the negative battery cable. (See 01-17B-9 NEGATIVE BATTERY CABLE DISCONNECTION/CONNECTION [SKYACTIV-D 2.2].)
2. Remove the battery and the battery tray. (See 01-17B-3 BATTERY REMOVAL/INSTALLATION [SKYACTIV-D 2.2].)
3. Remove in the order shown in the figure.

AT

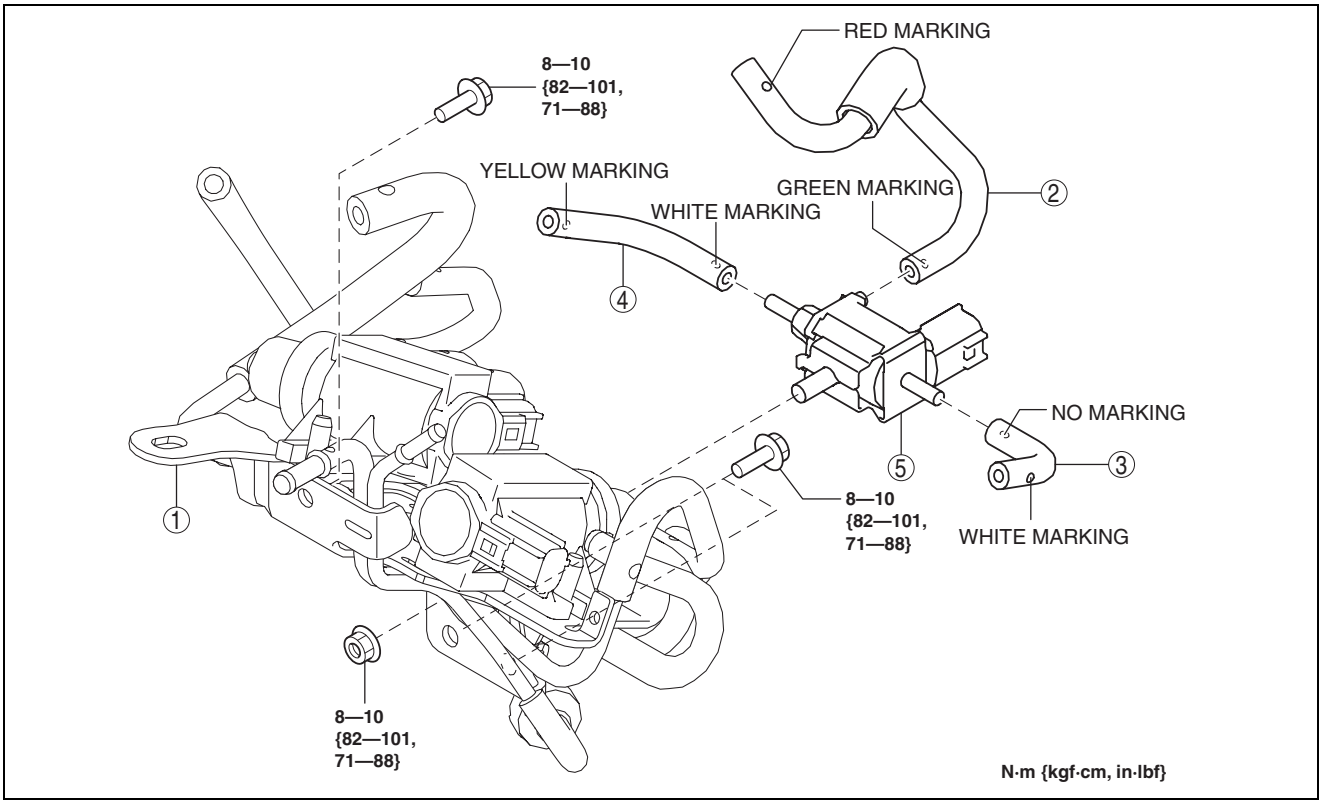

ac5wzw0000465

INTAKE-AIR SYSTEM [SKYACTIV-D 2.2]

MT

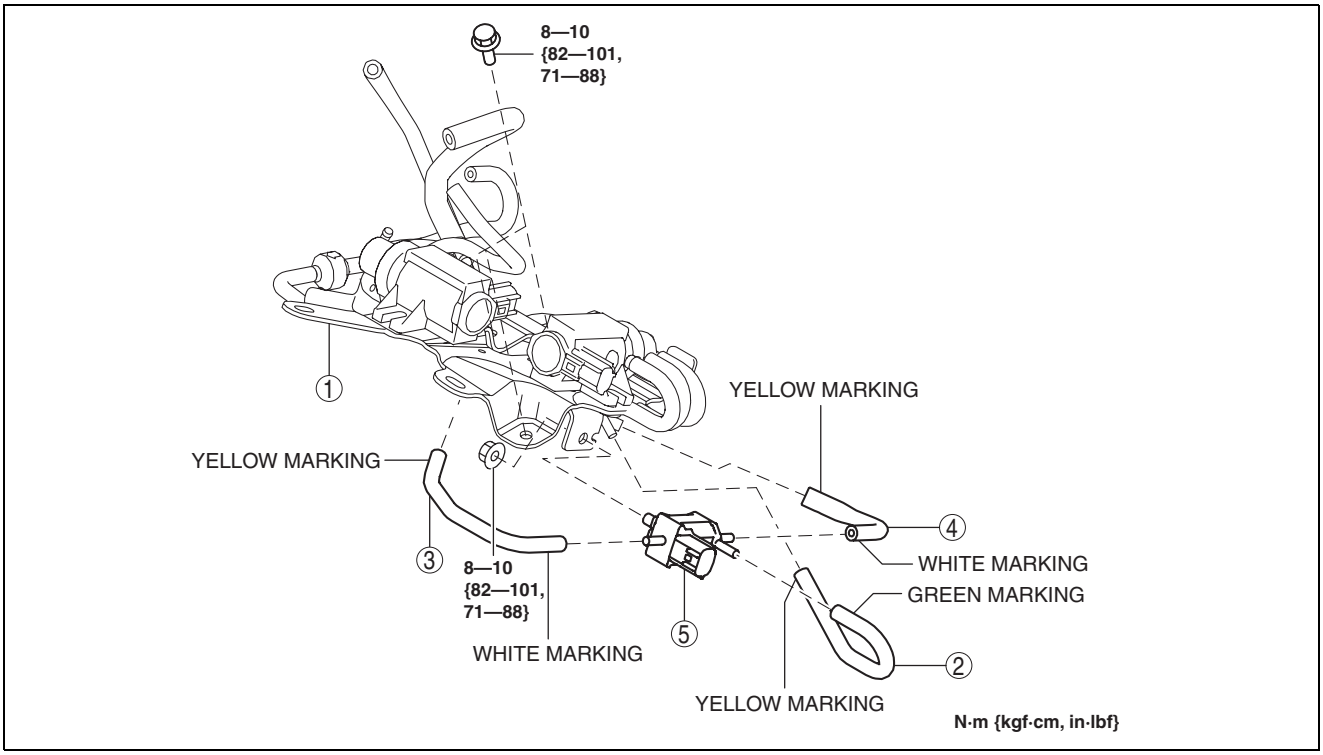

ac5wzw0000466

1	Vacuum pipe bracket
2	Vacuum hose No.1 (See 01-13B-42 Vacuum Hose No.1 Installation Note.)
3	Vacuum hose No.2 (See 01-13B-41 Vacuum Hose No.2 Installation Note.)
4	Vacuum hose No.3 (See 01-13B-39 Vacuum Hose No.3 Installation Note.)
5	Compressor bypass solenoid valve

4. Install in the reverse order of removal.

Vacuum Hose No.3 Installation Note

1. Install vacuum hose No.3 as shown in the figure.

Compressor bypass solenoid valve side

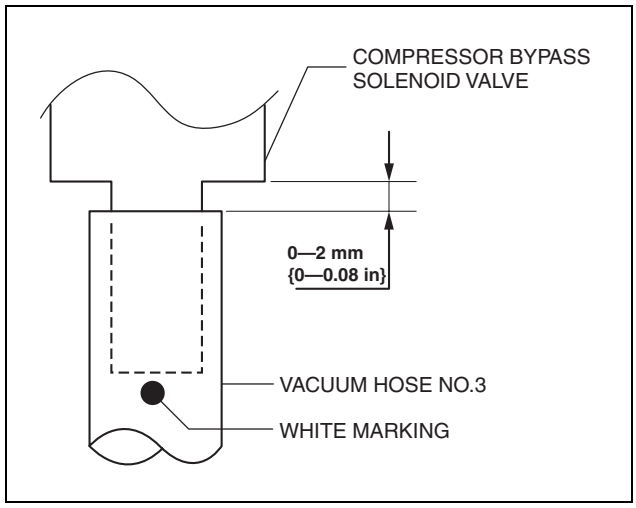

5866

INTAKE-AIR SYSTEM [SKYACTIV-D 2.2]

Vacuum pipe bracket side

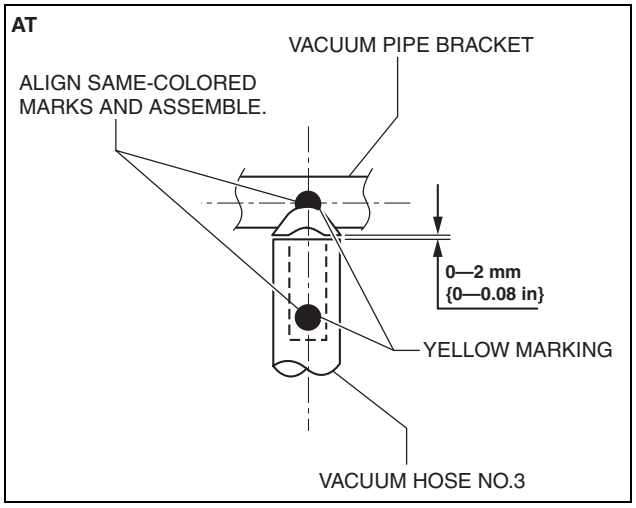

ac5wzw0000466

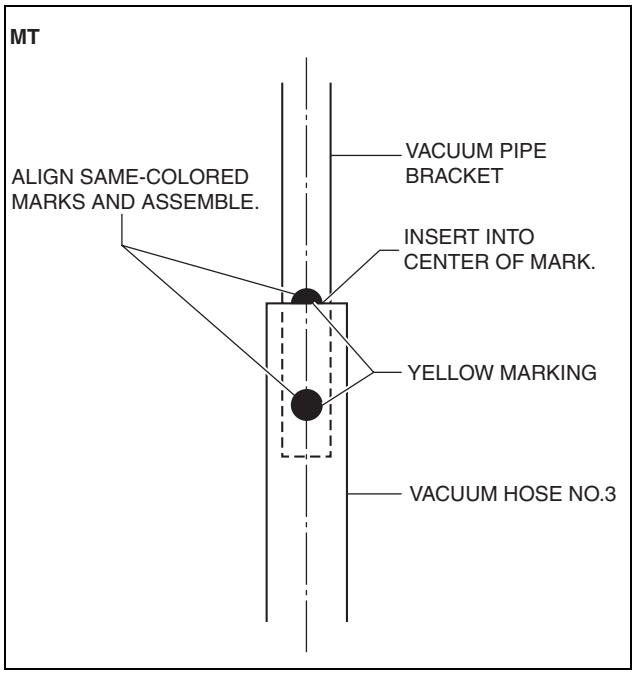

ac5wzw0000466

INTAKE-AIR SYSTEM [SKYACTIV-D 2.2]

Vacuum Hose No.2 Installation Note

1. Install vacuum hose No.2 as shown in the figure.

Compressor bypass solenoid valve side

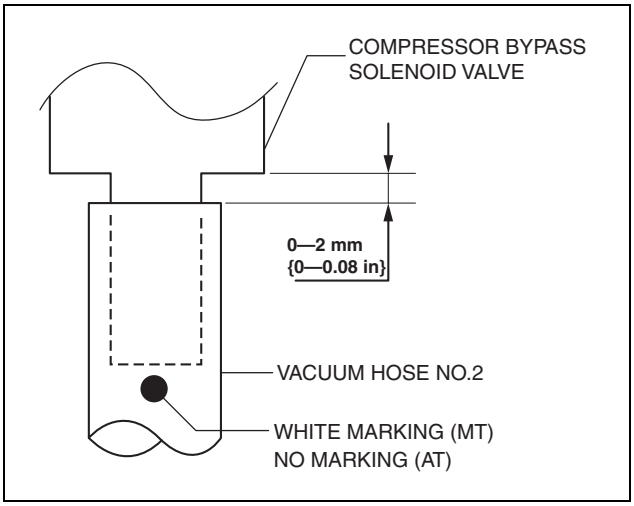

Vacuum pipe bracket side

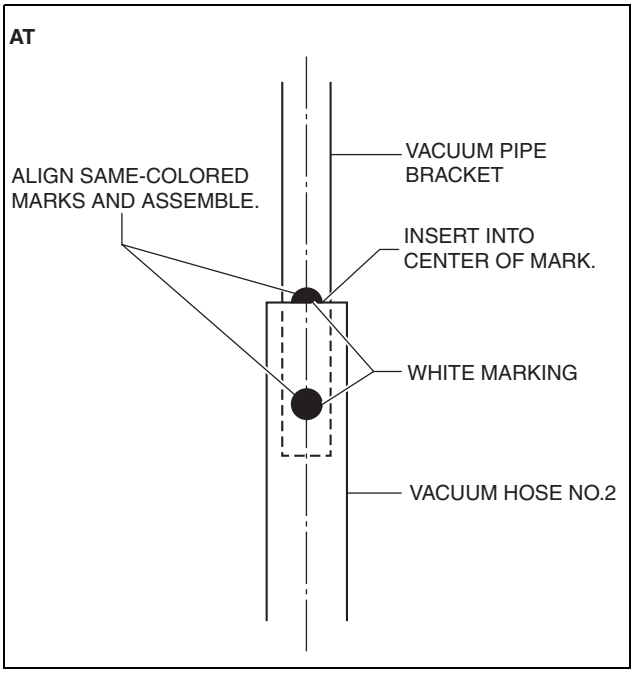

INTAKE-AIR SYSTEM [SKYACTIV-D 2.2]

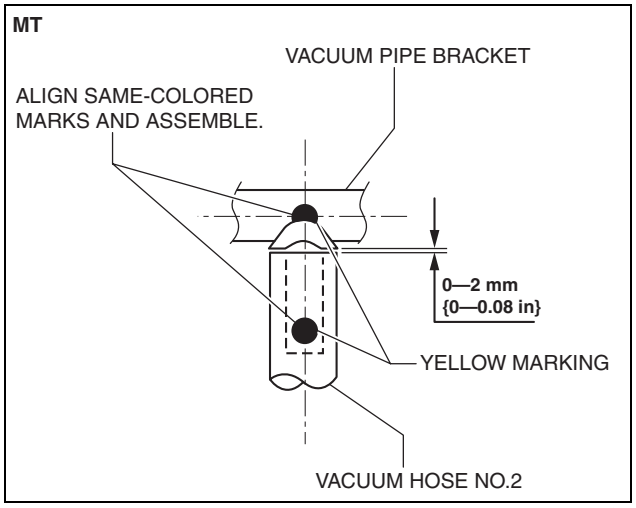

ac5wzw0000466

Vacuum Hose No.1 Installation Note

1. Install vacuum hose No.1 as shown in the figure.

Compressor bypass solenoid valve side

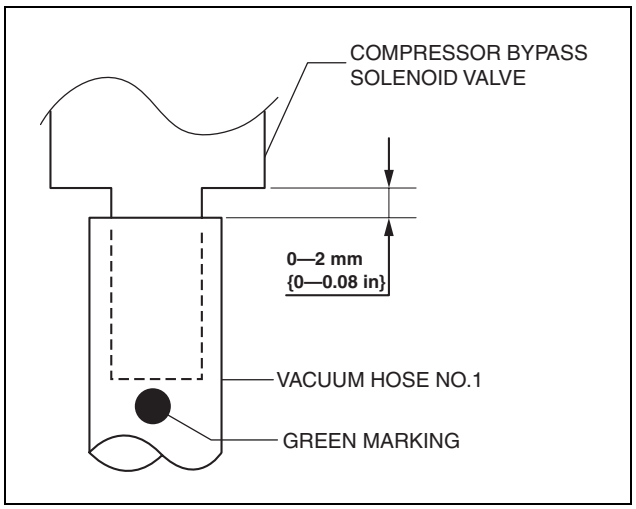

ac5wzw0000466

INTAKE-AIR SYSTEM [SKYACTIV-D 2.2]

Compressor bypass valve actuator side

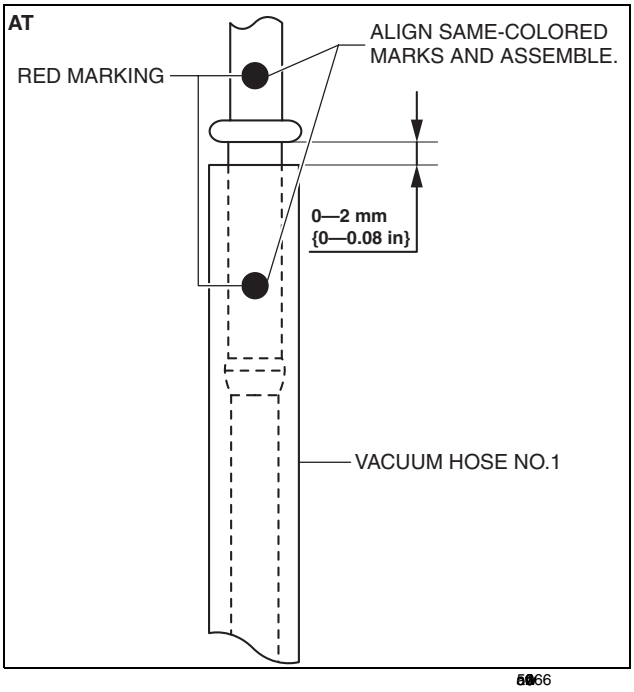

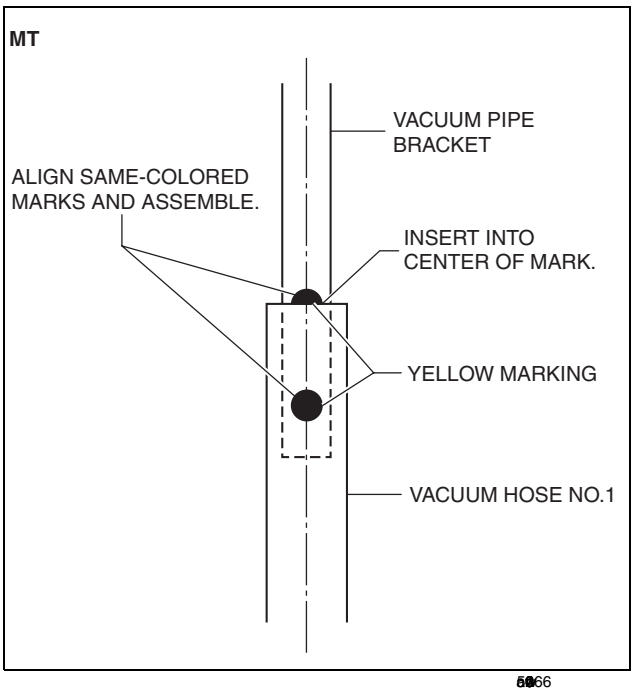

INTAKE-AIR SYSTEM [SKYACTIV-D 2.2]

Vacuum hose structural view

1. Verify that the vacuum hose is installed correctly as shown in the figure.

Whole figure (AT)

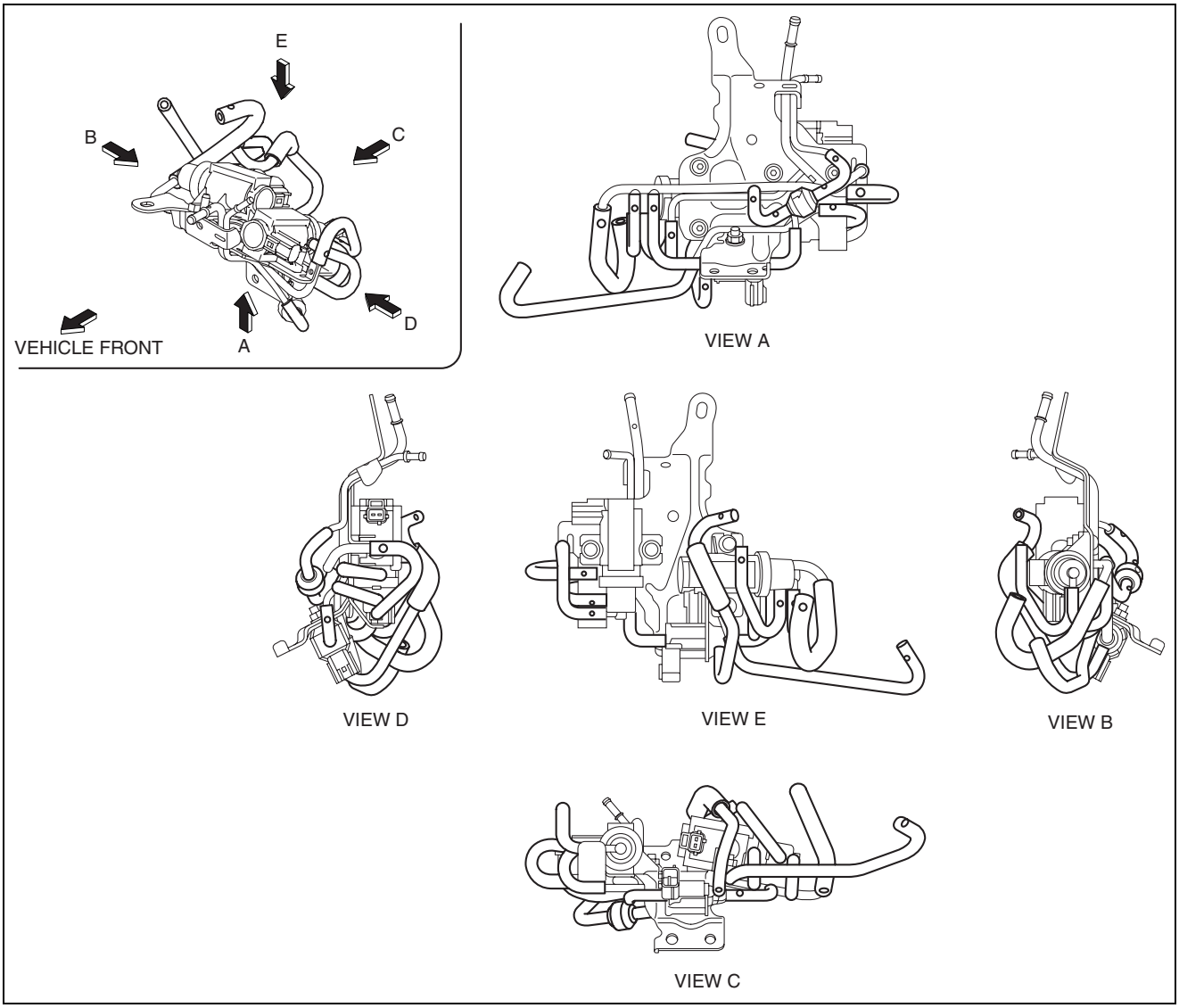

INTAKE-AIR SYSTEM [SKYACTIV-D 2.2]

Whole figure (MT)

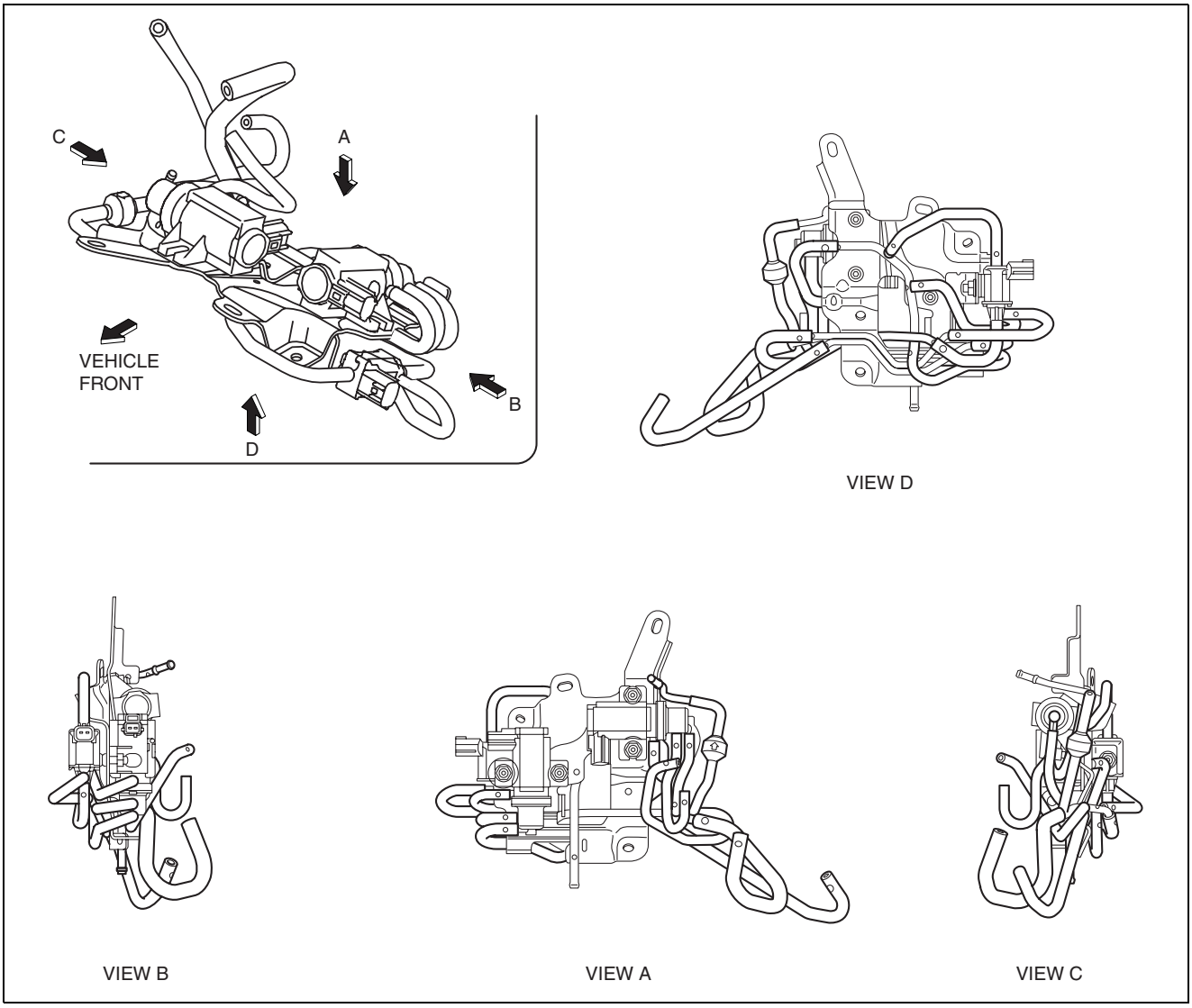

INTAKE-AIR SYSTEM [SKYACTIV-D 2.2]

Compressor bypass solenoid valve side (AT)

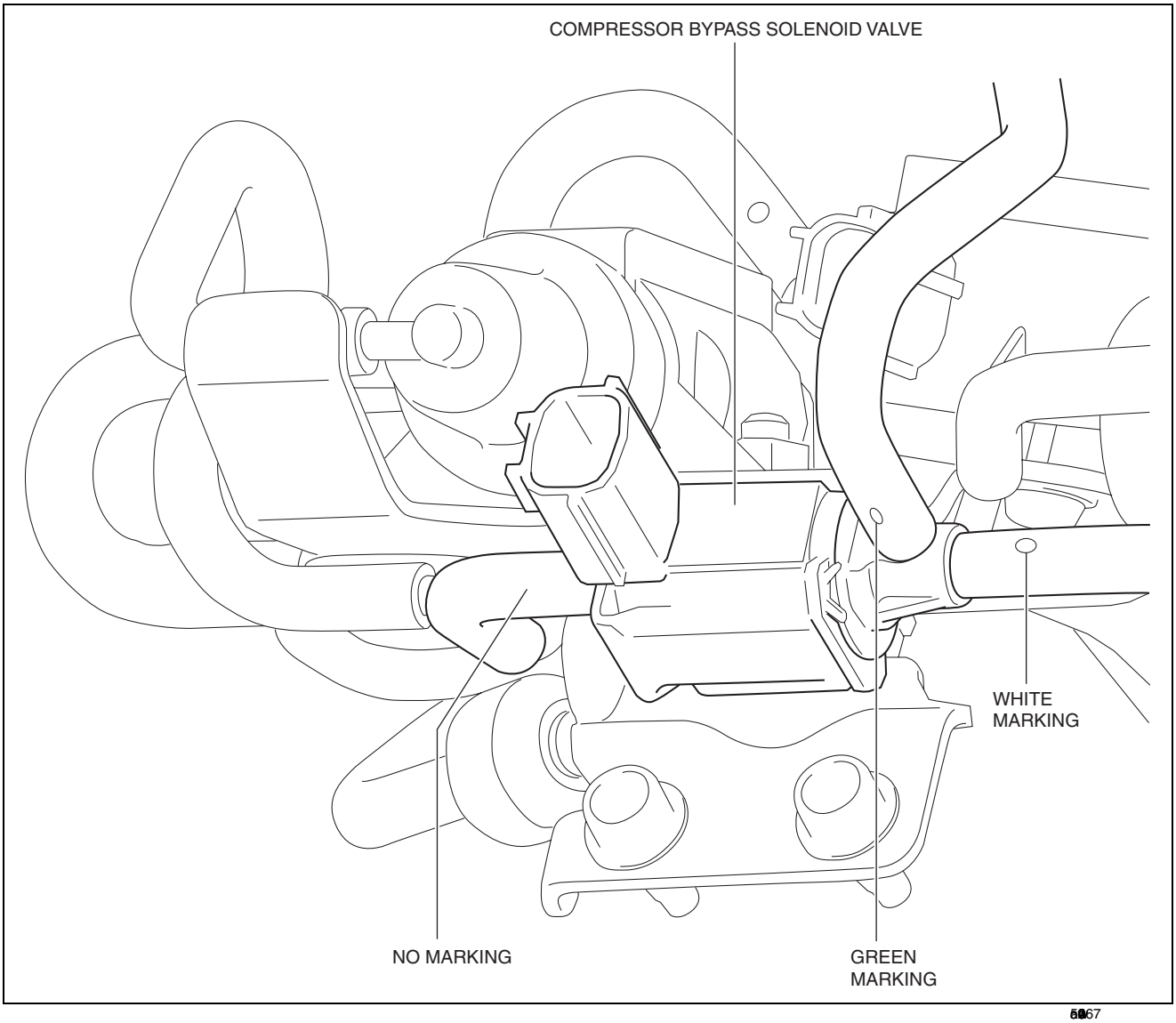

INTAKE-AIR SYSTEM [SKYACTIV-D 2.2]

Compressor bypass solenoid valve side (MT)

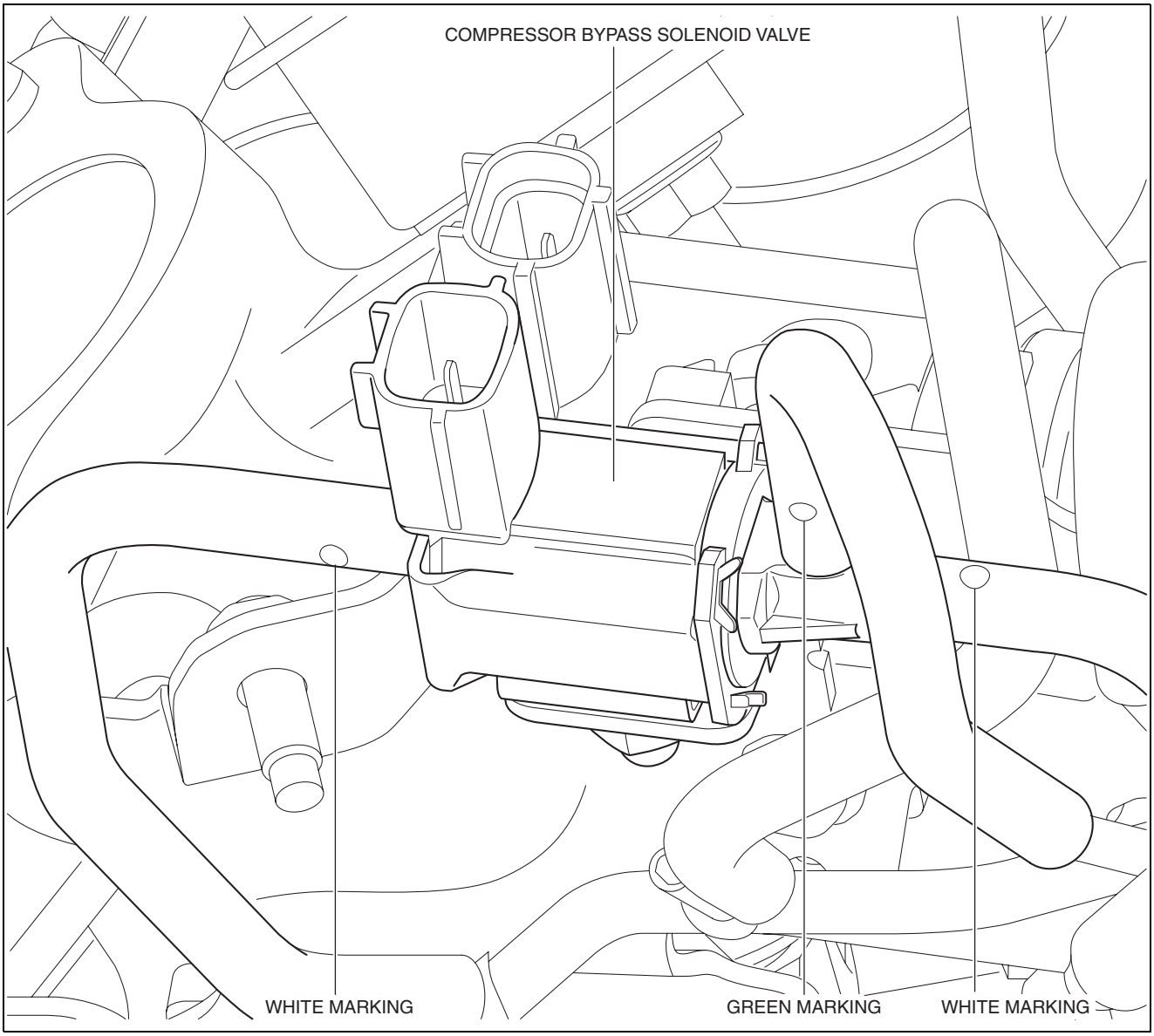

INTAKE-AIR SYSTEM [SKYACTIV-D 2.2]

Vacuum pipe bracket side (AT)

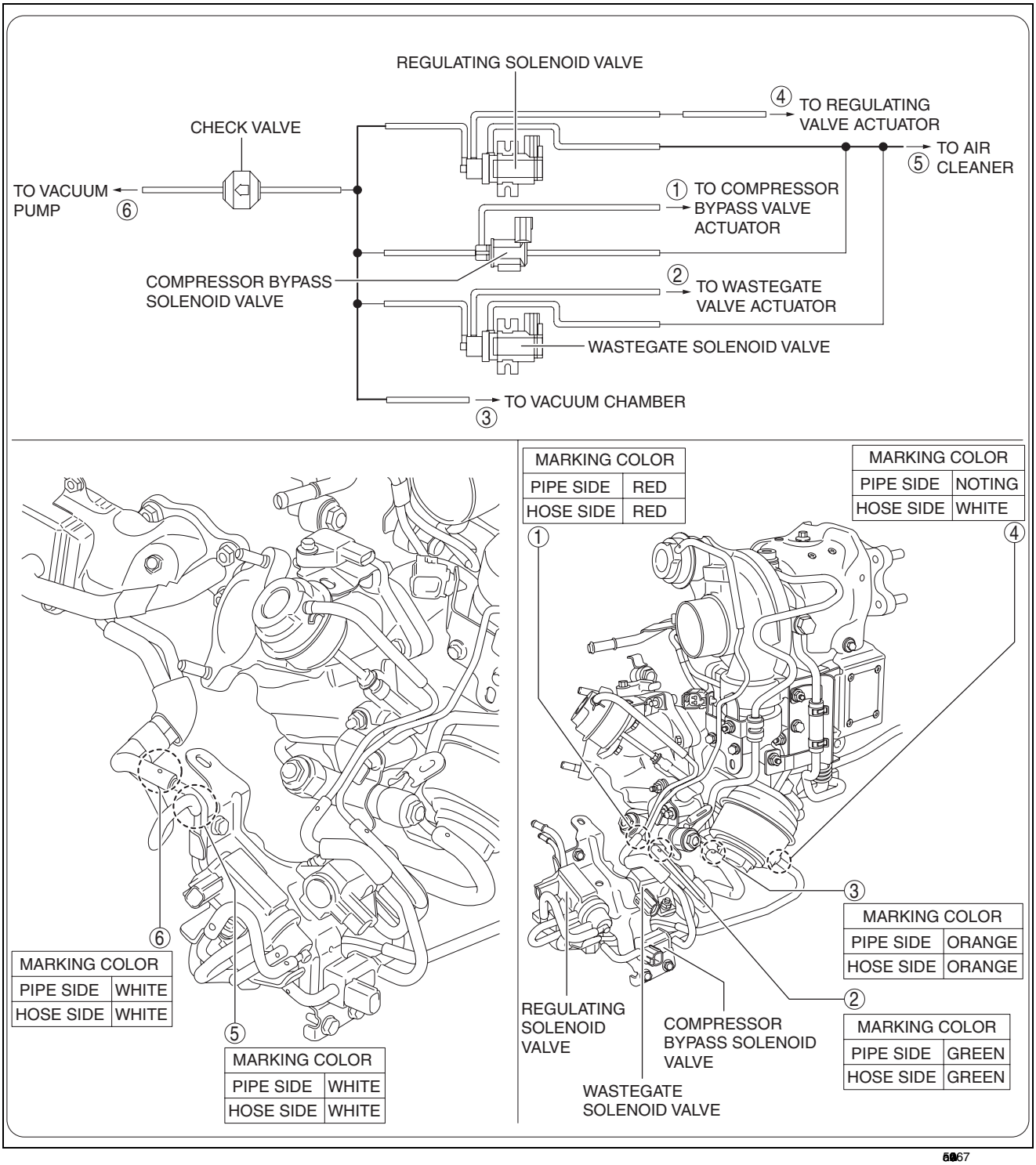

INTAKE-AIR SYSTEM [SKYACTIV-D 2.2]

Vacuum pipe bracket side (MT)

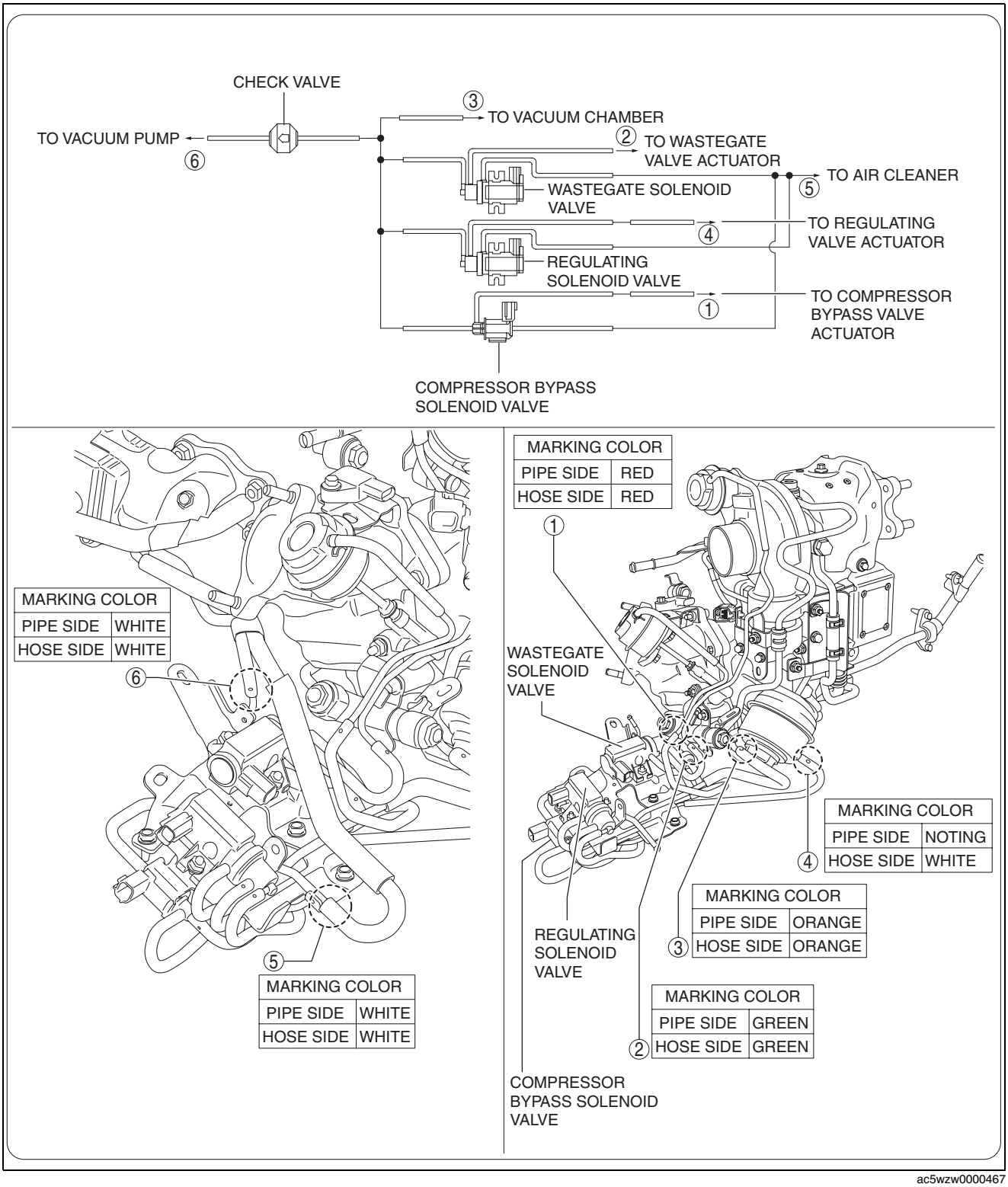

ac5wzw0000467

INTAKE-AIR SYSTEM [SKYACTIV-D 2.2]

REGULATING SOLENOID VALVE INSPECTION [SKYACTIV-D 2.2]

id0113z7265700

Resistance inspection

1. Disconnect the negative battery cable. (See 01-17B-9 NEGATIVE BATTERY CABLE DISCONNECTION/CONNECTION [SKYACTIV-D 2.2].)
2. Remove the regulating solenoid valve. (See 01-13B-50 REGULATING SOLENOID VALVE REMOVAL/INSTALLATION [SKYACTIV-D 2.2].)
3. Measure the resistance between the regulating solenoid valve terminals A and B.

   Regulating solenoid valve resistance (specification)
   9.8—11.2 ohms [20 °C {68 °F}]

   - If not within the specification, replace the regulating solenoid valve. (See 01-13B-50 REGULATING SOLENOID VALVE REMOVAL/INSTALLATION [SKYACTIV-D 2.2].)

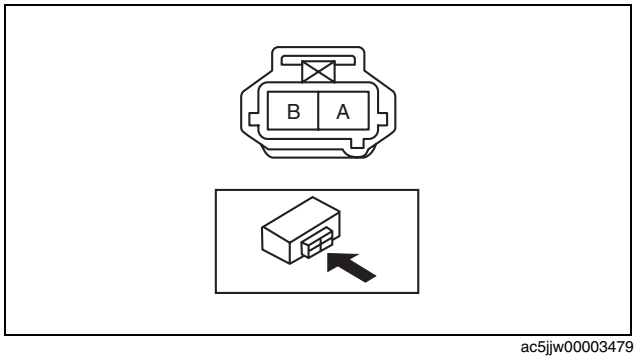

ac5jjw00003479

REGULATING SOLENOID VALVE REMOVAL/INSTALLATION [SKYACTIV-D 2.2]

id0113z7265800

Caution

- **If the vacuum hose is installed incorrectly, it could cause a vehicle malfunction. To prevent this, refer to "VACUUM HOSE STRUCTURAL VIEW" and install the vacuum hose correctly. (See 01-13B-55 Vacuum hose structural view.)**

1. Disconnect the negative battery cable. (See 01-17B-9 NEGATIVE BATTERY CABLE DISCONNECTION/CONNECTION [SKYACTIV-D 2.2].)
2. Remove the battery and the battery tray. (See 01-17B-3 BATTERY REMOVAL/INSTALLATION [SKYACTIV-D 2.2].)
3. Remove in the order shown in the figure.

AT

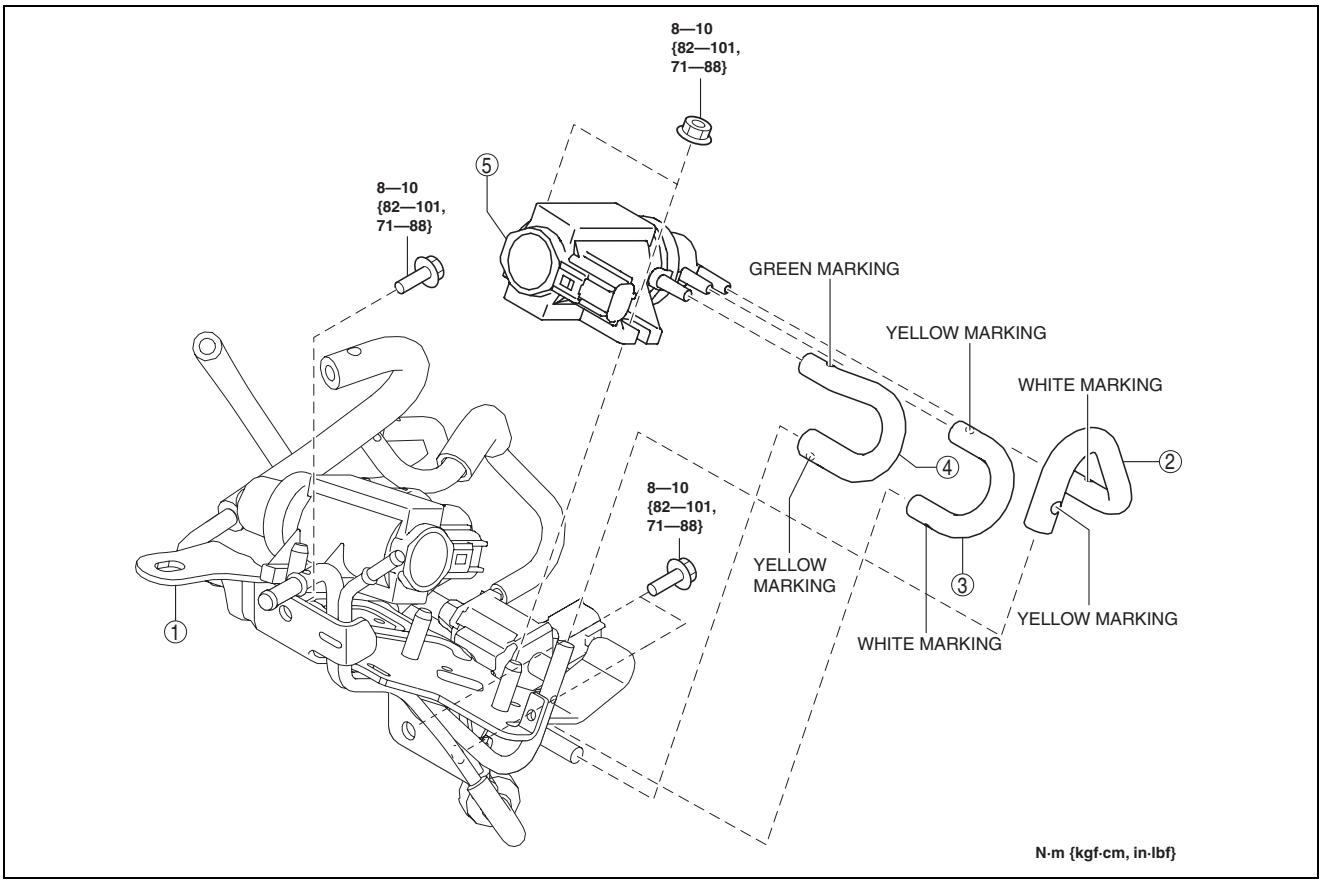

5067

INTAKE-AIR SYSTEM [SKYACTIV-D 2.2]

MT

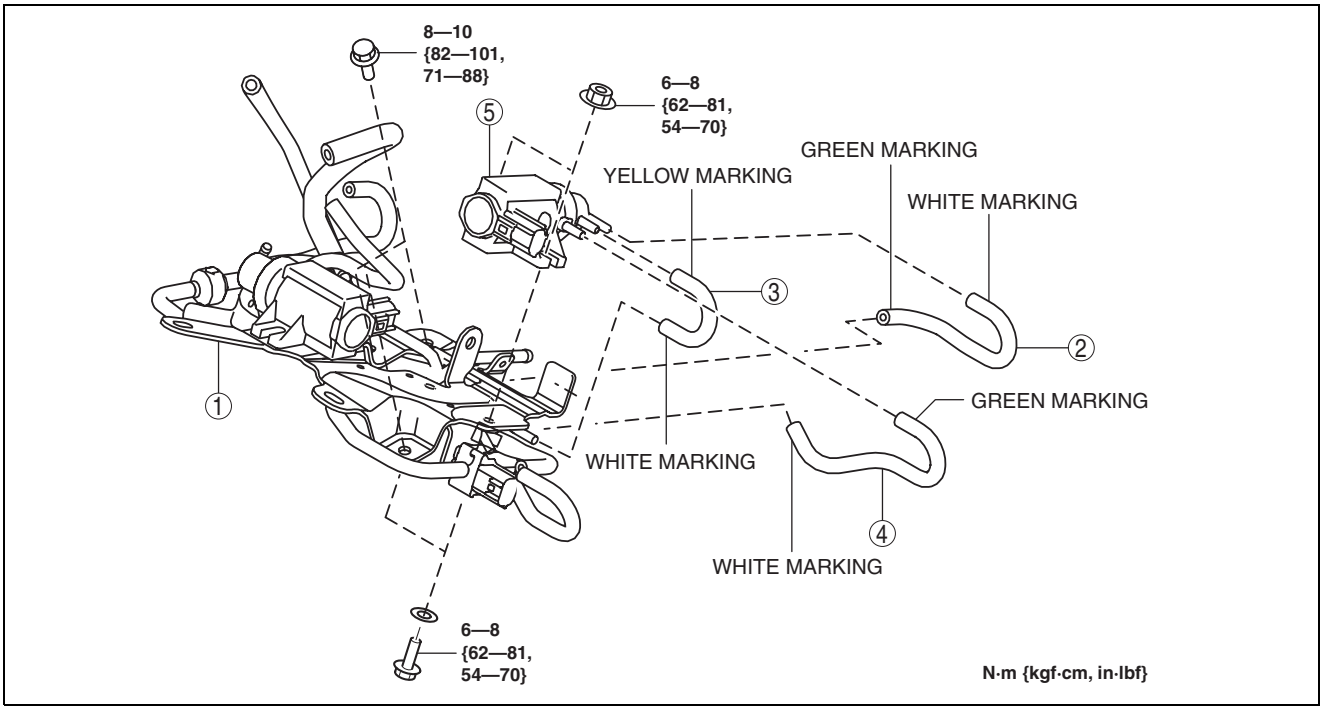

ac5wzw0000467

1	Vacuum pipe bracket
2	Vacuum hose No.1 (See 01-13B-54 Vacuum Hose No.1 Installation Note.)
3	Vacuum hose No.2 (See 01-13B-53 Vacuum Hose No.2 Installation Note.)
4	Vacuum hose No.3 (See 01-13B-51 Vacuum Hose No.3 Installation Note.)
5	Regulating solenoid valve

4. Install in the reverse order of removal.

Vacuum Hose No.3 Installation Note

1. Install vacuum hose No.3 as shown in the figure.

Regulating solenoid valve side

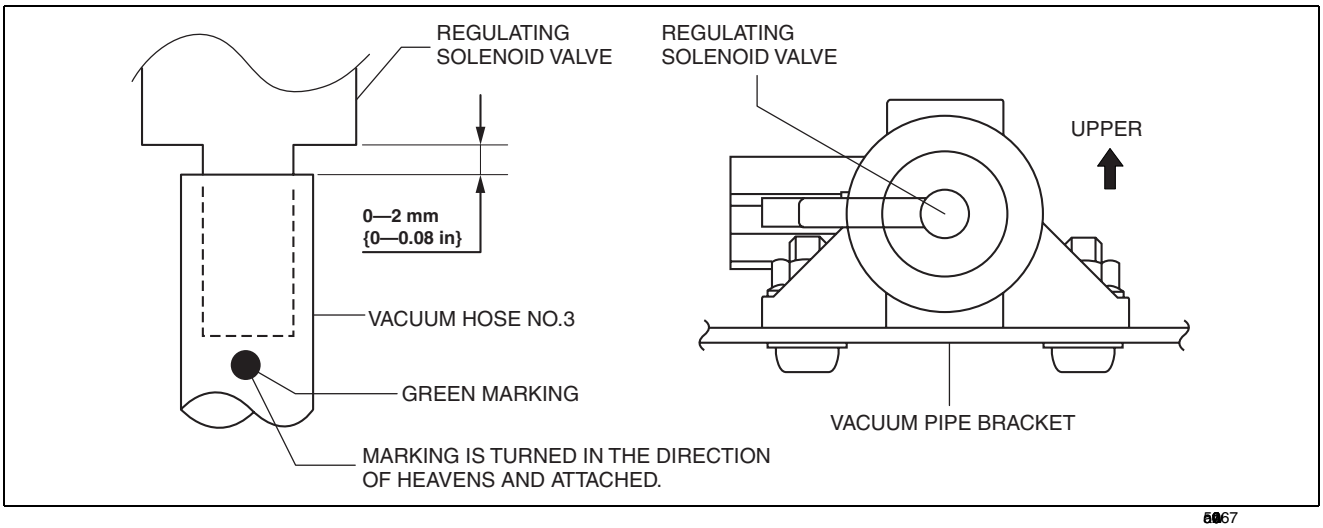

ac5wzw0000467

INTAKE-AIR SYSTEM [SKYACTIV-D 2.2]

Vacuum pipe bracket side

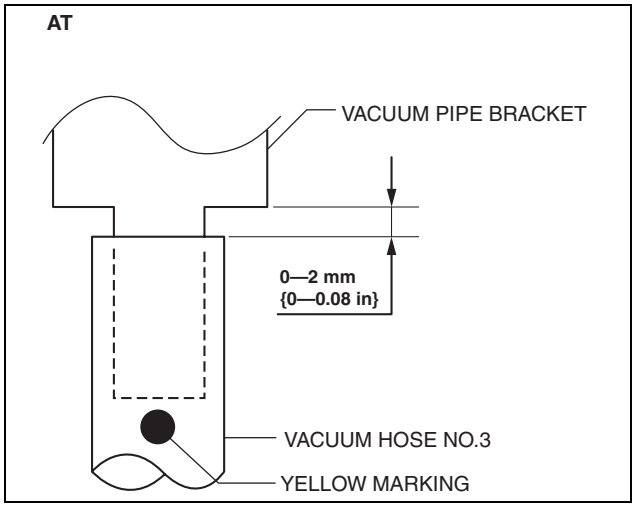

ac5wzw0000467

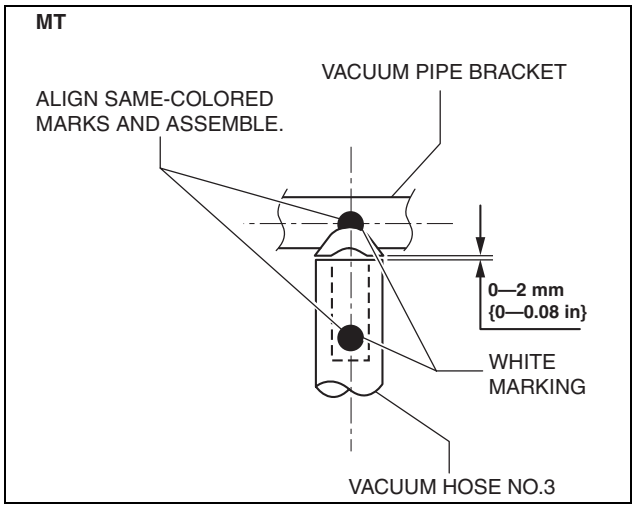

ac5wzw0000467

INTAKE-AIR SYSTEM [SKYACTIV-D 2.2]

Vacuum Hose No.2 Installation Note

1. Install vacuum hose No.2 as shown in the figure.

Regulating solenoid valve side

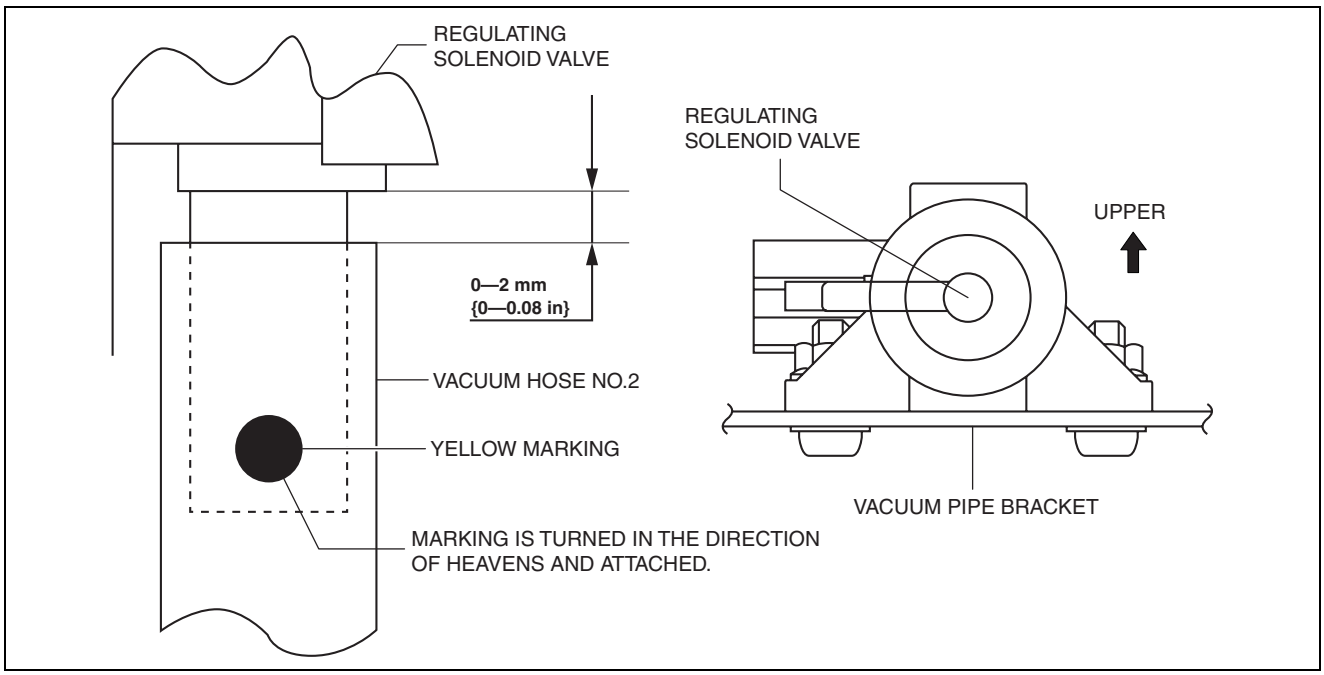

Vacuum pipe bracket side

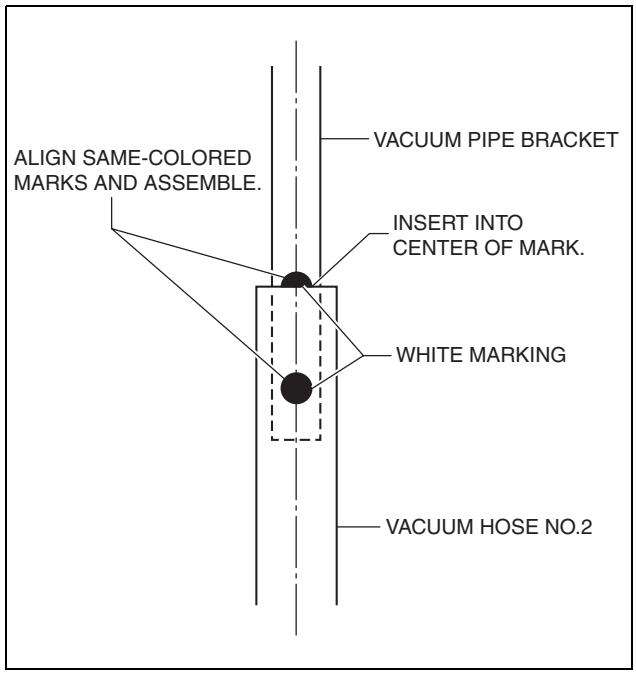

INTAKE-AIR SYSTEM [SKYACTIV-D 2.2]

Vacuum Hose No.1 Installation Note

1. Install vacuum hose No.1 as shown in the figure.

Regulating solenoid valve side

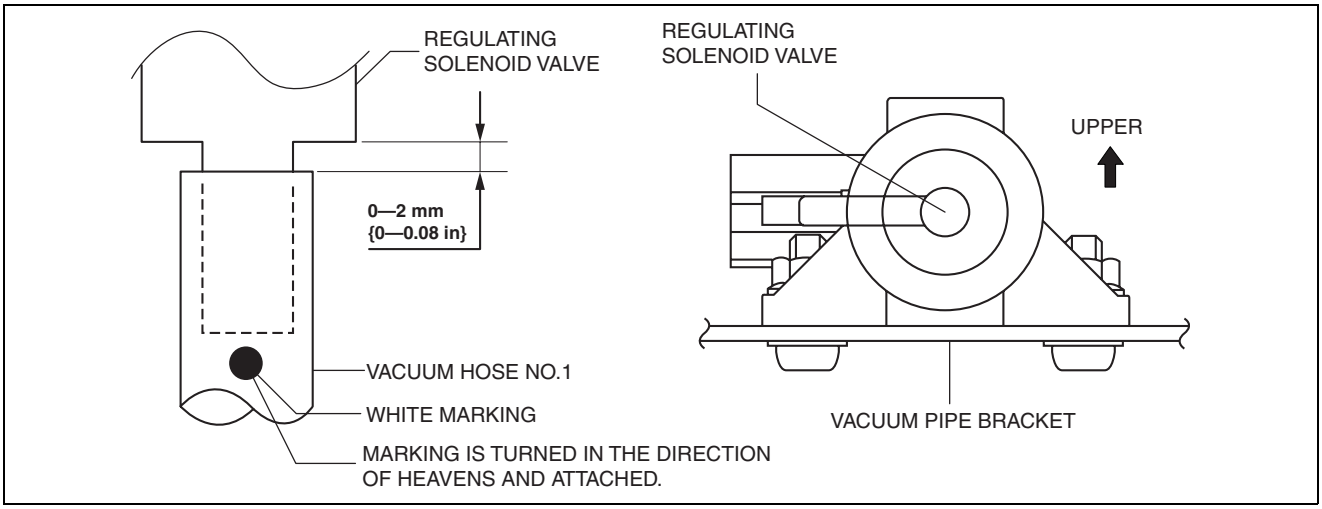

Vacuum pipe bracket side

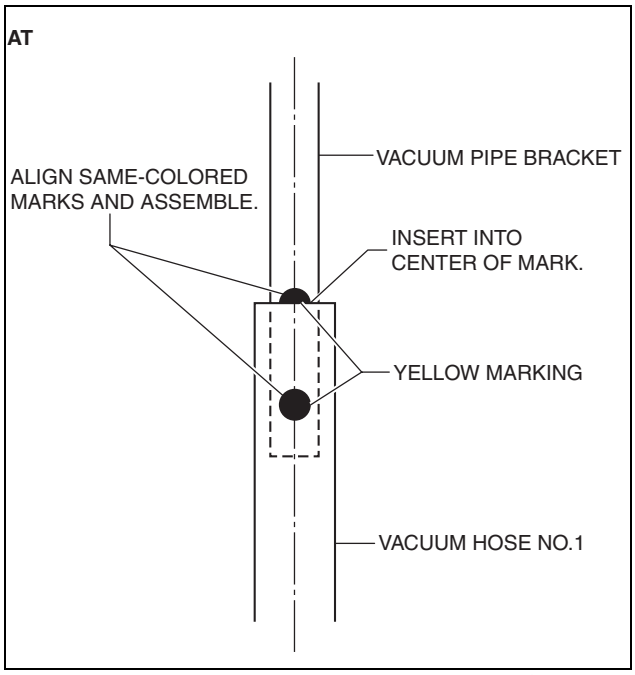

INTAKE-AIR SYSTEM [SKYACTIV-D 2.2]

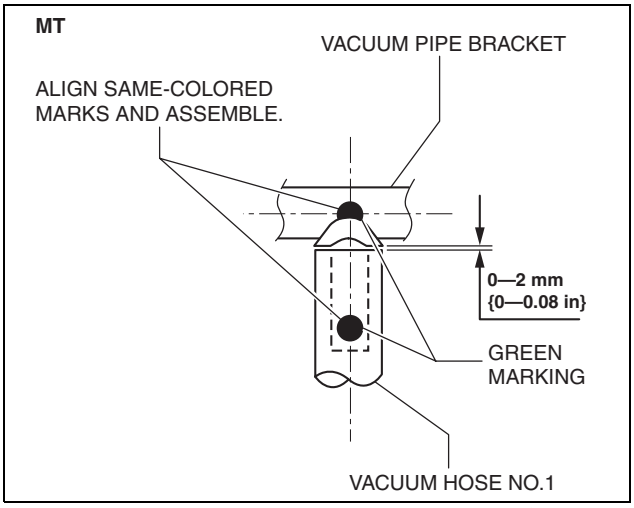

Vacuum hose structural view

1. Verify that the vacuum hose is installed correctly as shown in the figure.

Whole figure (AT)

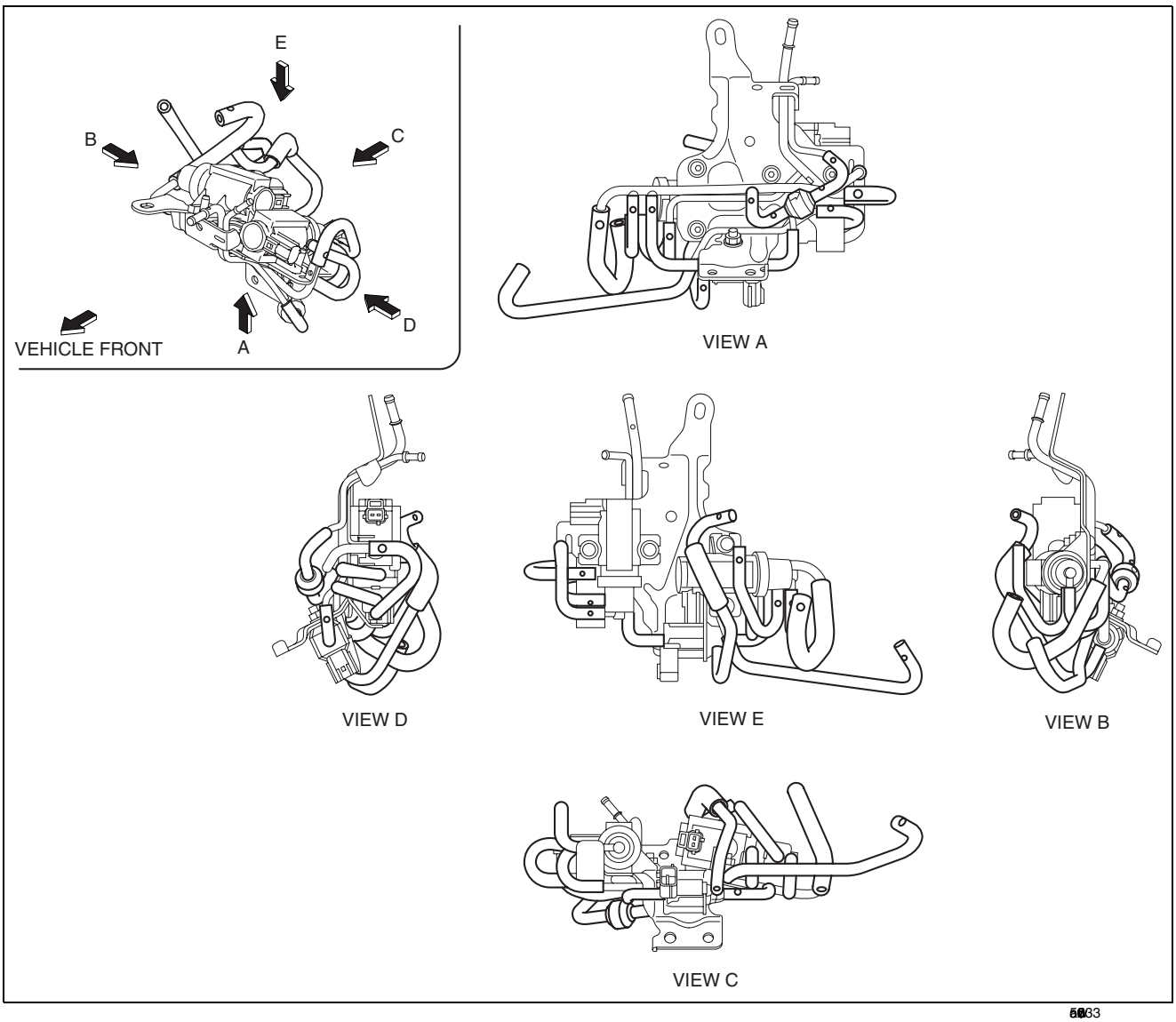

INTAKE-AIR SYSTEM [SKYACTIV-D 2.2]

Whole figure (MT)

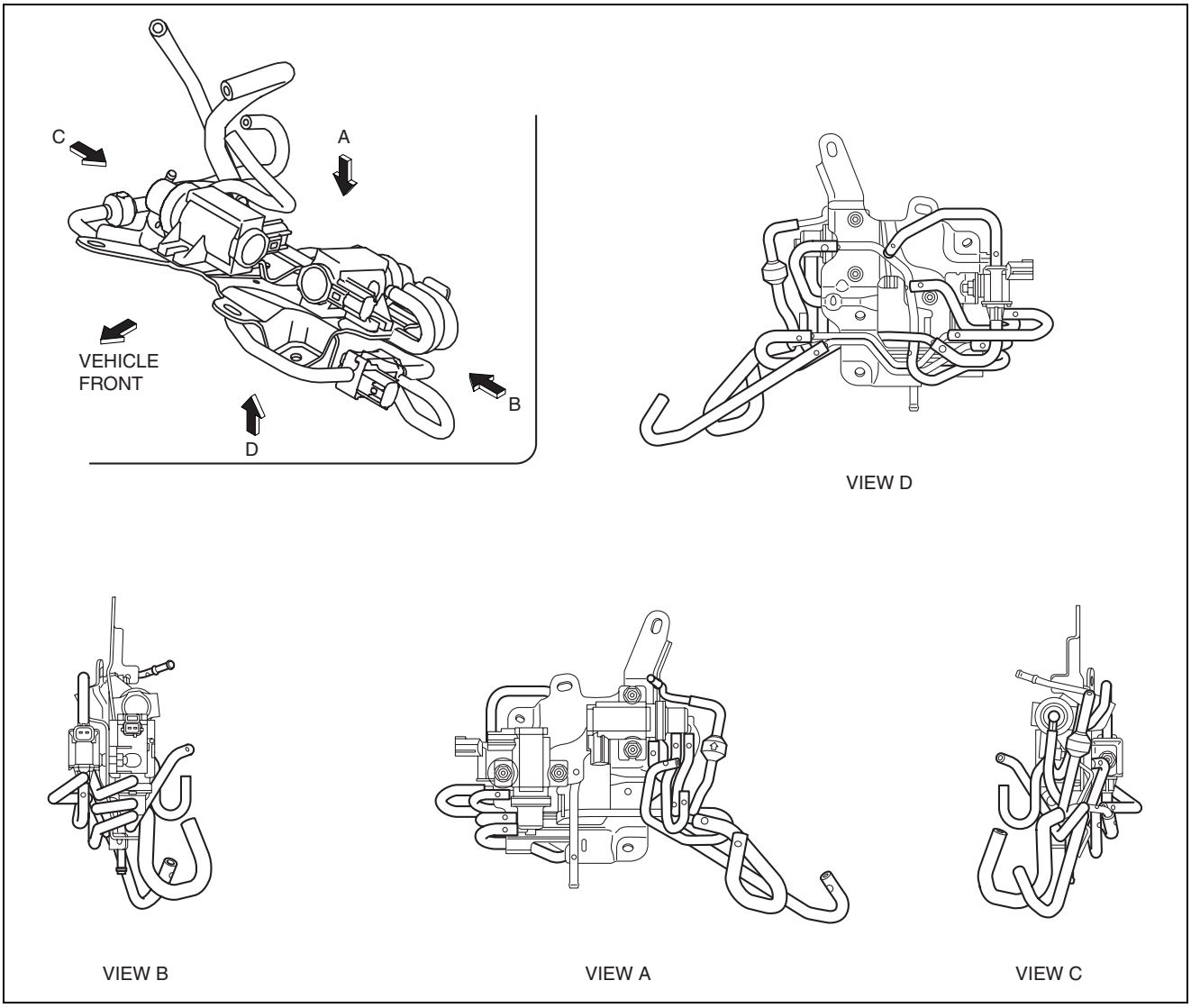

INTAKE-AIR SYSTEM [SKYACTIV-D 2.2]

Regulating solenoid valve side (AT)

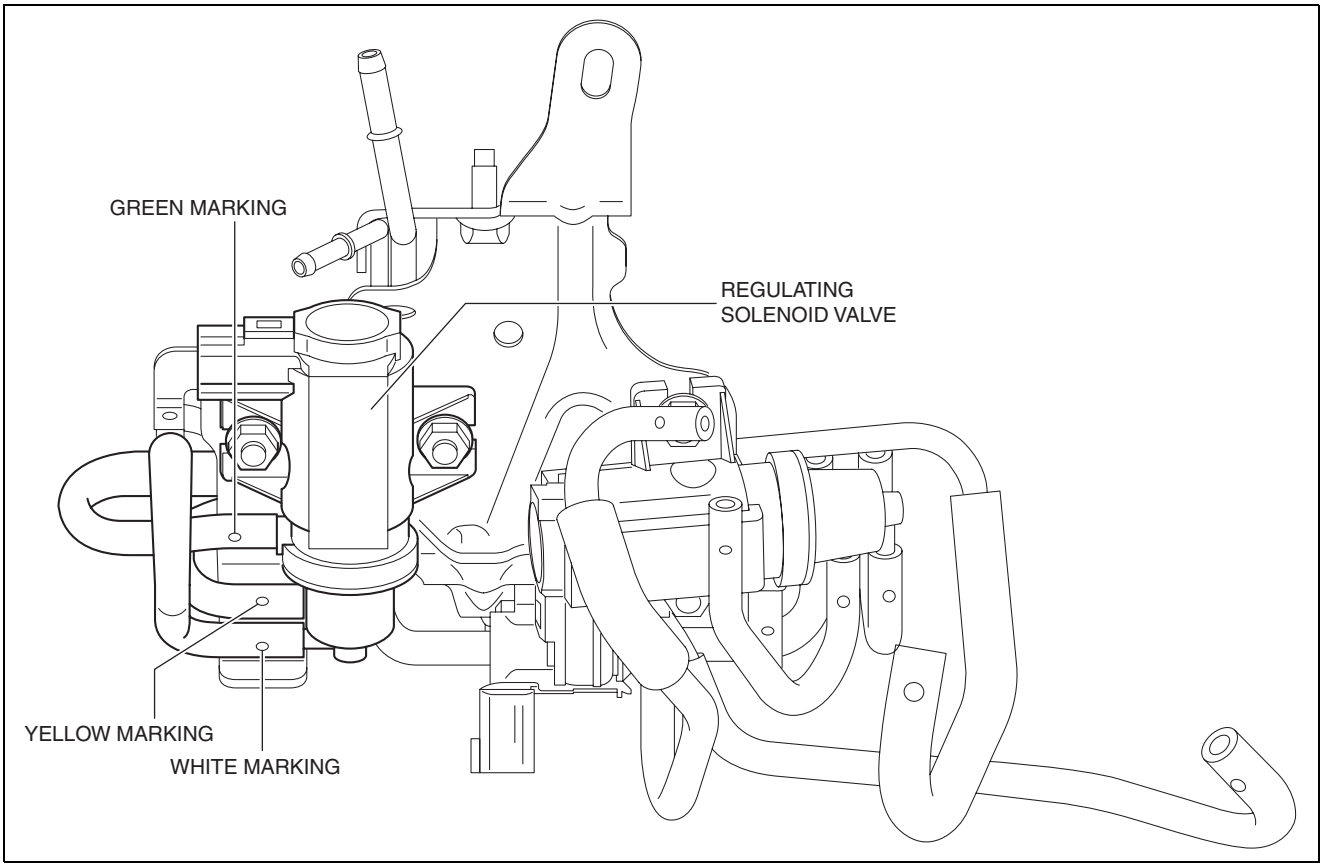

5068

INTAKE-AIR SYSTEM [SKYACTIV-D 2.2]

Regulating solenoid valve side (MT)

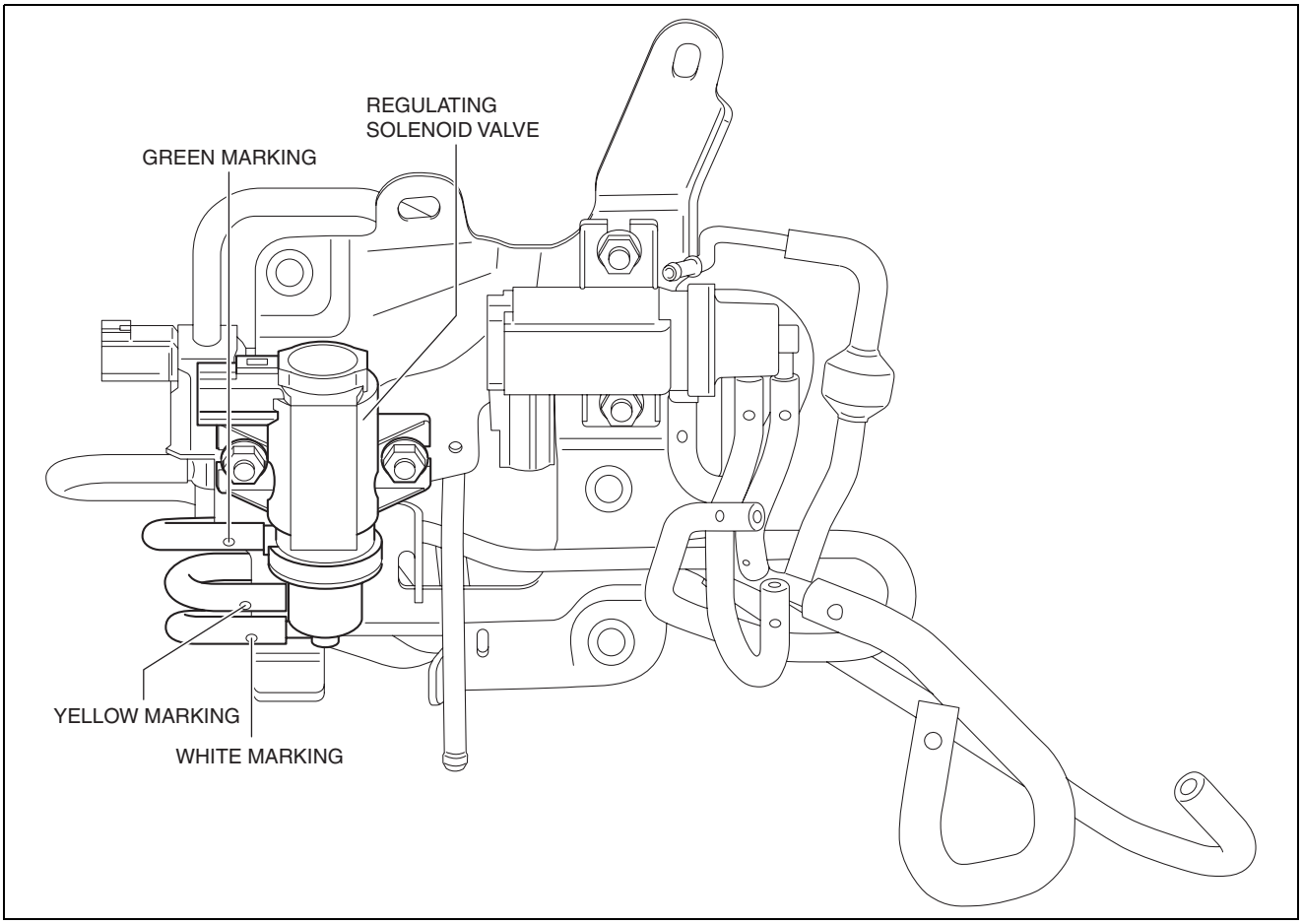

ac5wzw0000468

INTAKE-AIR SYSTEM [SKYACTIV-D 2.2]

Vacuum pipe bracket side (AT)

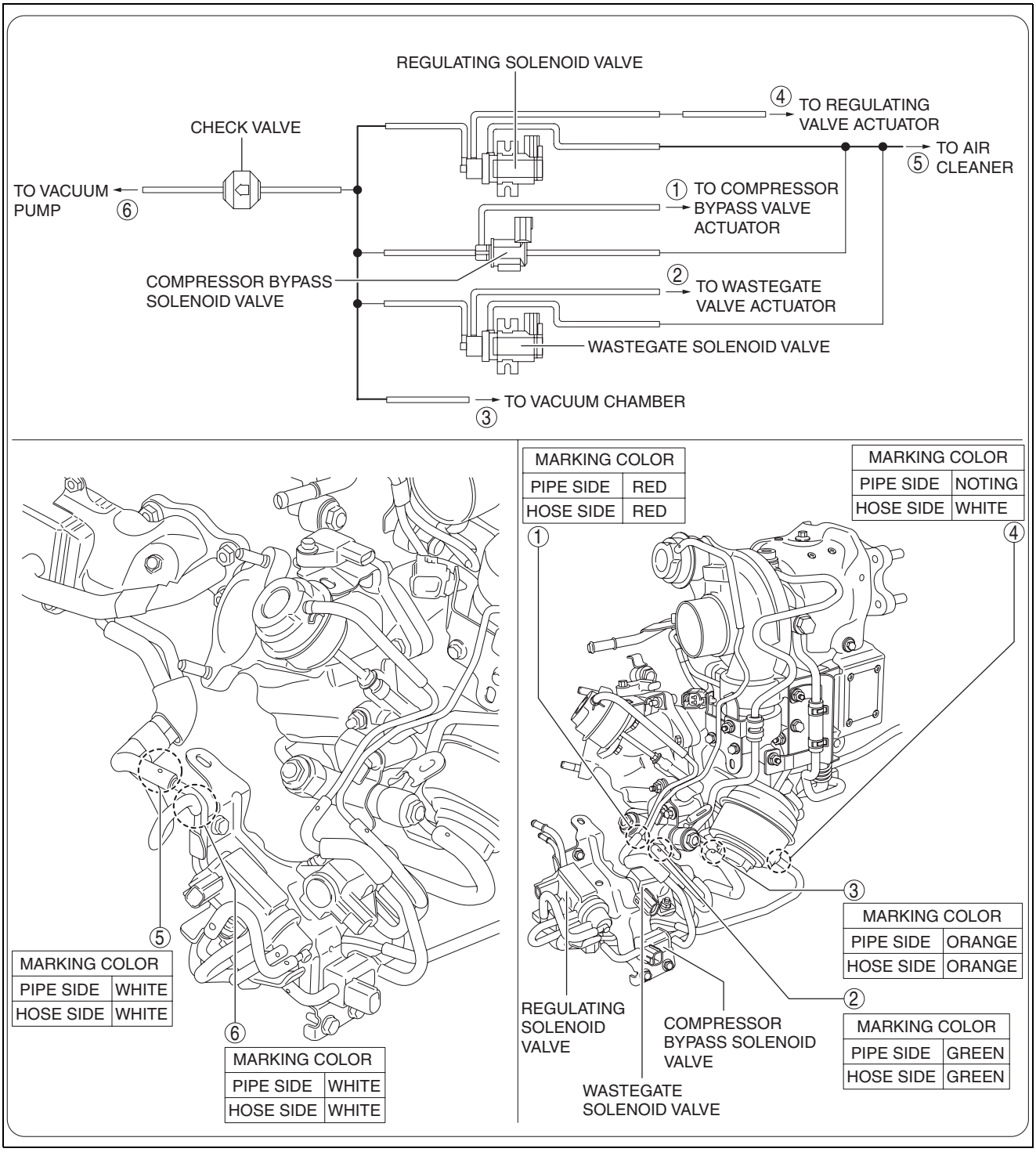

INTAKE-AIR SYSTEM [SKYACTIV-D 2.2]

Vacuum pipe bracket side (MT)

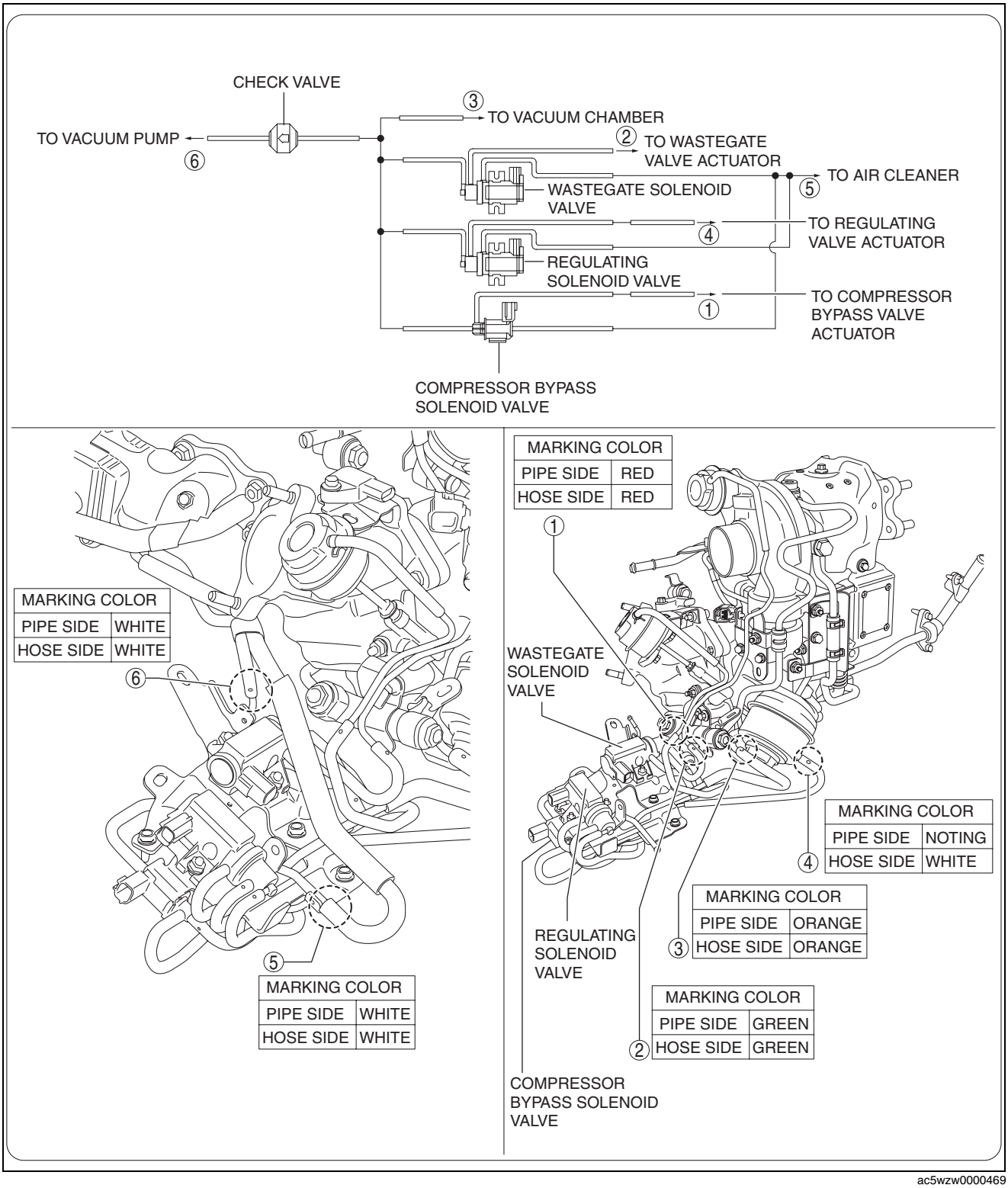

ac5wzw0000469

INTAKE-AIR SYSTEM [SKYACTIV-D 2.2]

WASTEGATE SOLENOID VALVE INSPECTION [SKYACTIV-D 2.2]

id0113z7265900

Resistance inspection

1. Disconnect the negative battery cable. (See 01-17B-9 NEGATIVE BATTERY CABLE DISCONNECTION/ CONNECTION [SKYACTIV-D 2.2].)
2. Remove the wastegate solenoid valve. (See 01-13B-61 WASTEGATE SOLENOID VALVE REMOVAL/ INSTALLATION [SKYACTIV-D 2.2].)
3. Measure resistance between wastegate solenoid valve terminals A and B.

   Wastegate solenoid valve resistance (specification)
   9.8—11.2 ohms [20 °C {68 °F}]

   - If not within the specification, replace the wastegate solenoid valve. (See 01-13B-61 WASTEGATE SOLENOID VALVE REMOVAL/ INSTALLATION [SKYACTIV-D 2.2].)

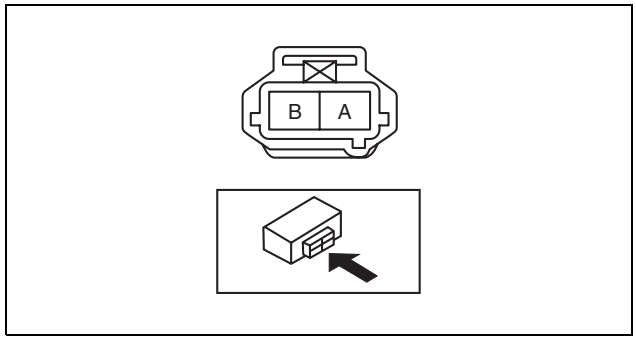

ac5jjw00003488

WASTEGATE SOLENOID VALVE REMOVAL/INSTALLATION [SKYACTIV-D 2.2]

id0113z7266100

Caution

- **If the vacuum hose is installed correctly, it could cause a vehicle malfunction. To prevent this, refer to "VACUUM HOSE STRUCTURAL VIEW" and install the vacuum hose correctly. (See 01-13B-65 Vacuum hose structural view.)**

1. Disconnect the negative battery cable. (See 01-17B-9 NEGATIVE BATTERY CABLE DISCONNECTION/ CONNECTION [SKYACTIV-D 2.2].)
2. Remove the battery and the battery tray. (See 01-17B-3 BATTERY REMOVAL/INSTALLATION [SKYACTIV-D 2.2].)
3. Remove in the order shown in the figure.

AT

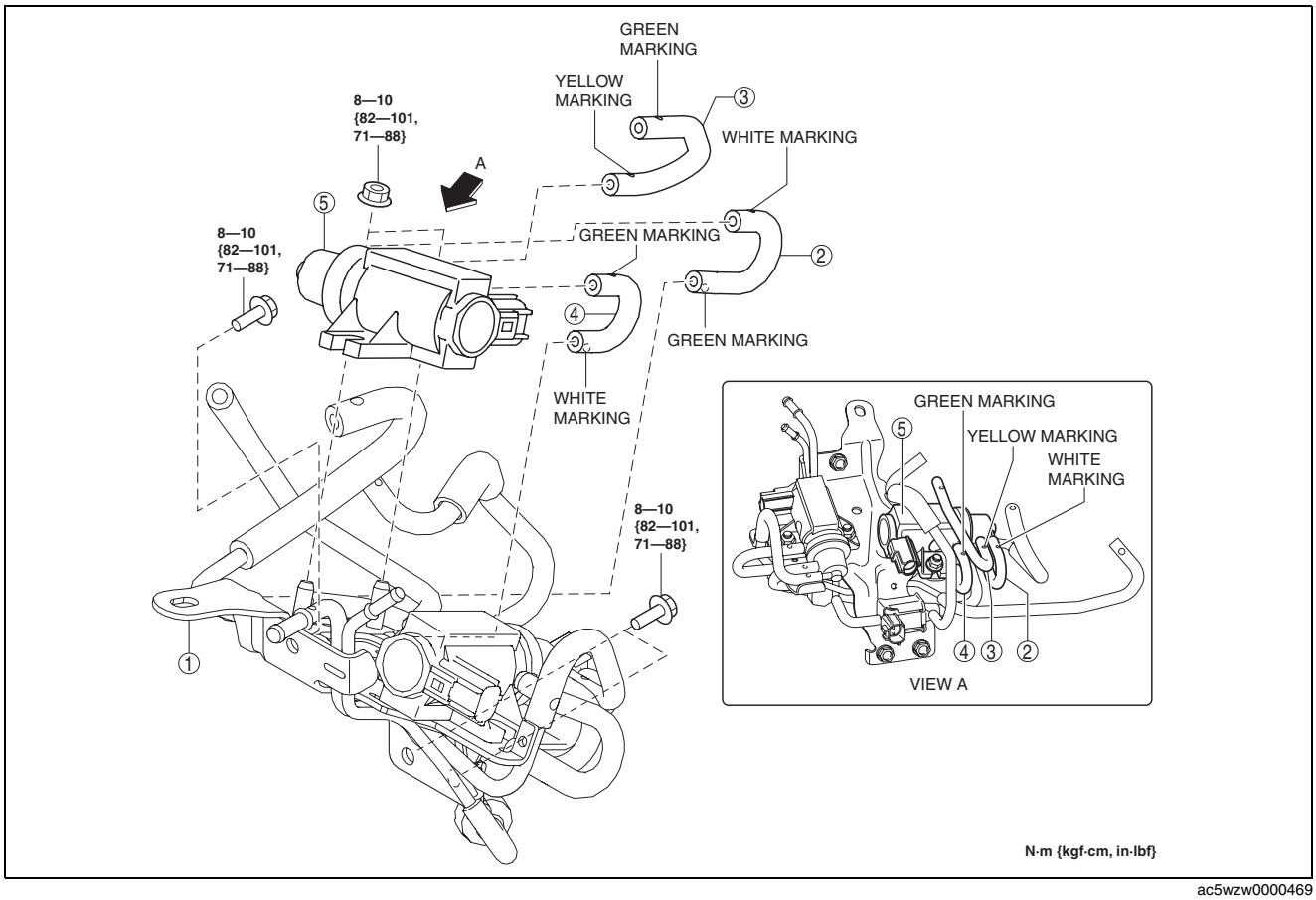

ac5wzw0000469

INTAKE-AIR SYSTEM [SKYACTIV-D 2.2]

MT

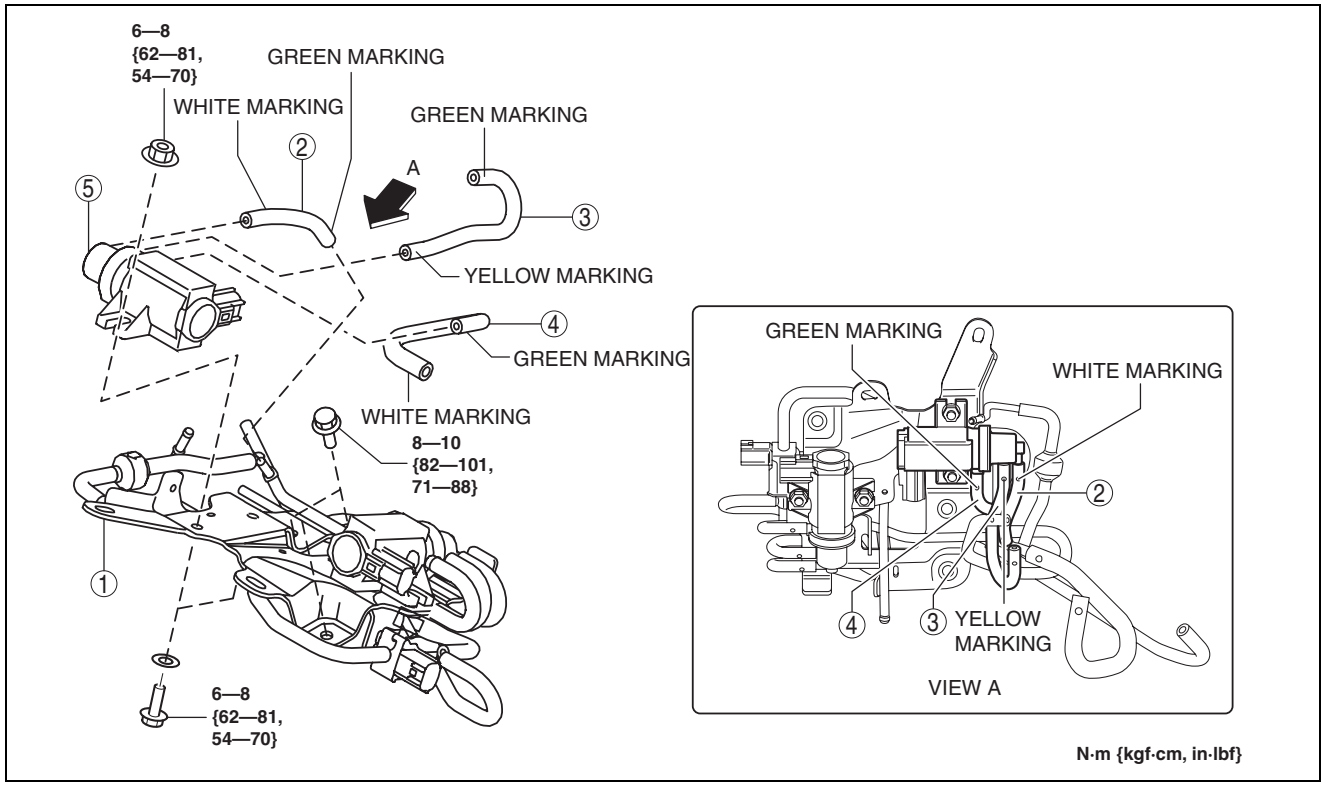

ac5wzw0000469

1	Vacuum pipe bracket
2	Vacuum hose No.1 (See 01-13B-64 Vacuum Hose No.1 Installation Note.)
3	Vacuum hose No.2 (See 01-13B-63 Vacuum Hose No.2 Installation Note.)
4	Vacuum hose No.3 (See 01-13B-62 Vacuum Hose No.3 Installation Note.)
5	Wastegate solenoid valve

4. Install in the reverse order of removal.

Vacuum Hose No.3 Installation Note

1. Install vacuum hose No.3 as shown in the figure.

Wastegate solenoid valve side

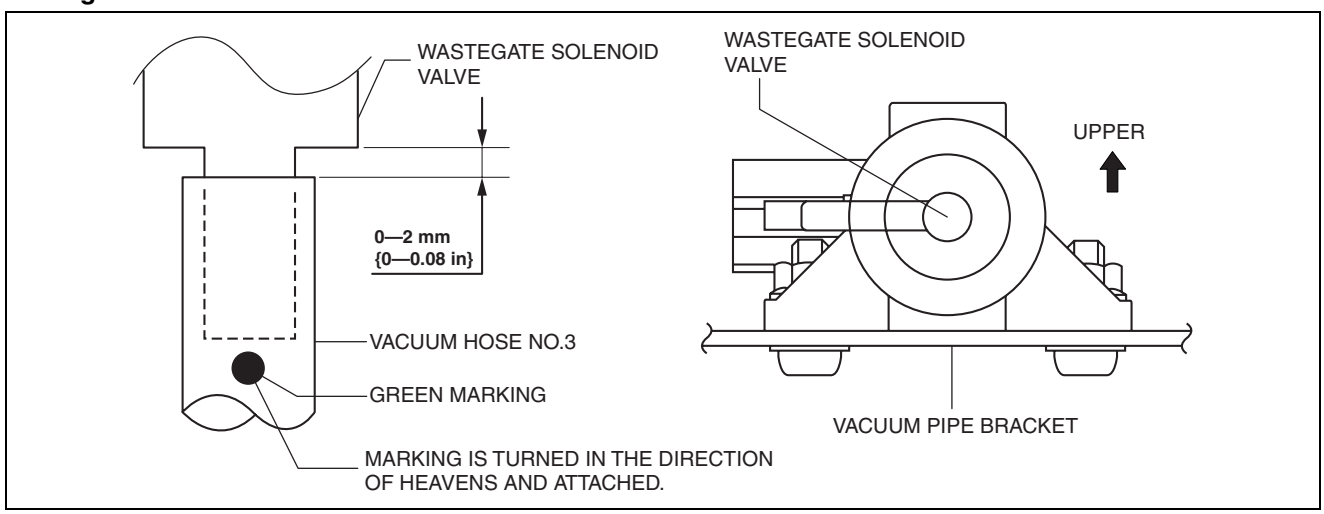

ac5wzw0000469

INTAKE-AIR SYSTEM [SKYACTIV-D 2.2]

Vacuum pipe bracket side

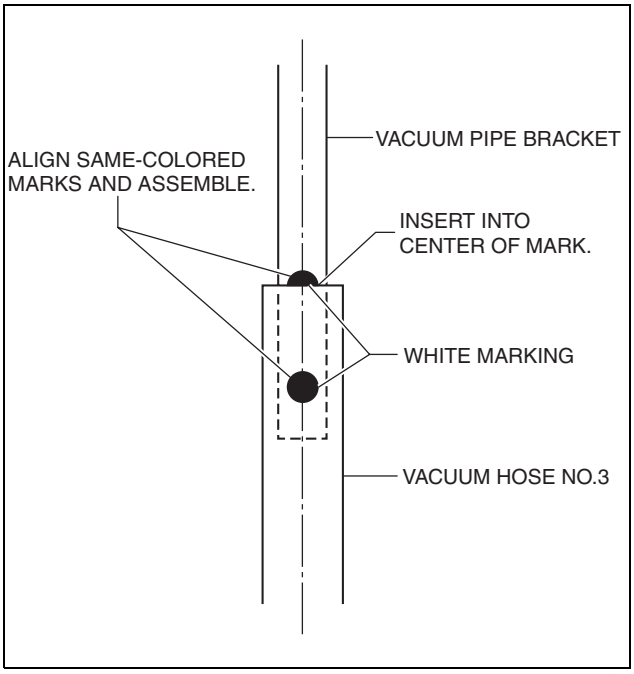

ac5wzw0000469

Vacuum Hose No.2 Installation Note

1. Install vacuum hose No.2 as shown in the figure.

Wastegate solenoid valve side

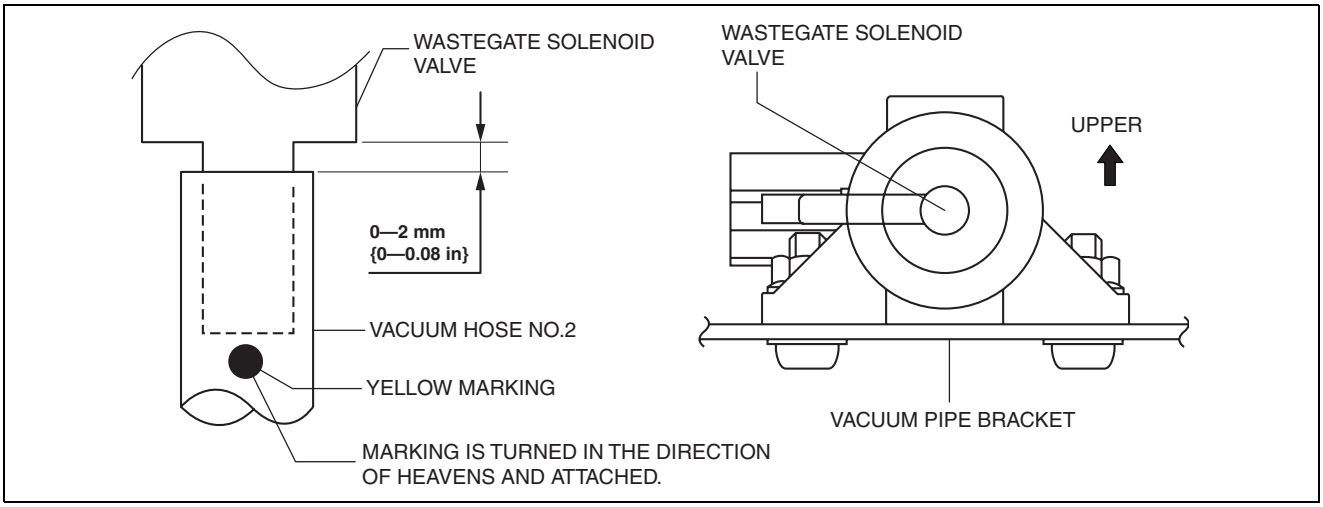

ac5wzw0000469

INTAKE-AIR SYSTEM [SKYACTIV-D 2.2]

Wastegate valve actuator side

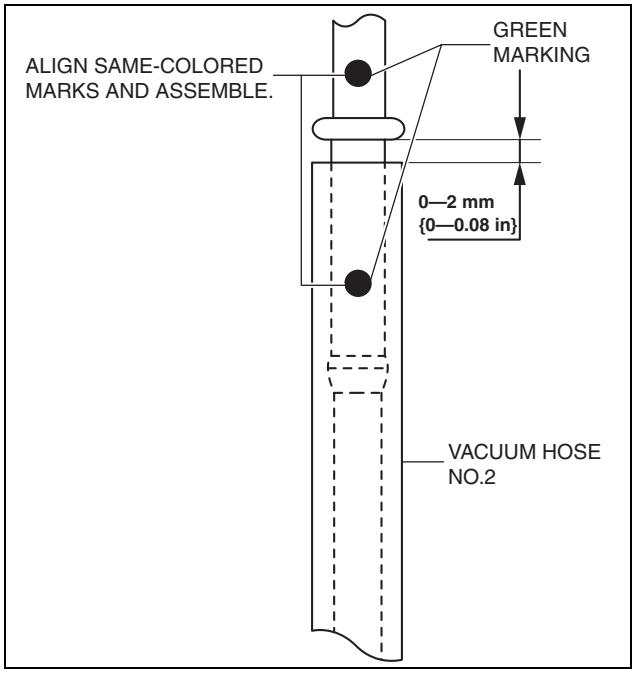

ac5wzw0000469

Vacuum Hose No.1 Installation Note

1. Install vacuum hose No.1 as shown in the figure.

Wastegate solenoid valve side

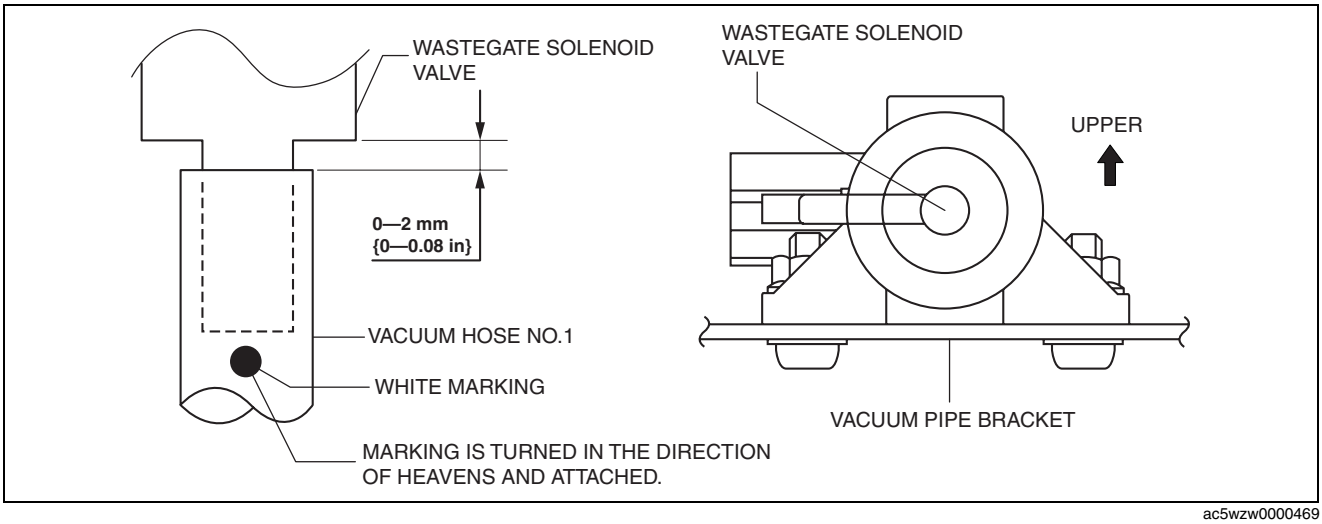

ac5wzw0000469

INTAKE-AIR SYSTEM [SKYACTIV-D 2.2]

Vacuum pipe bracket side

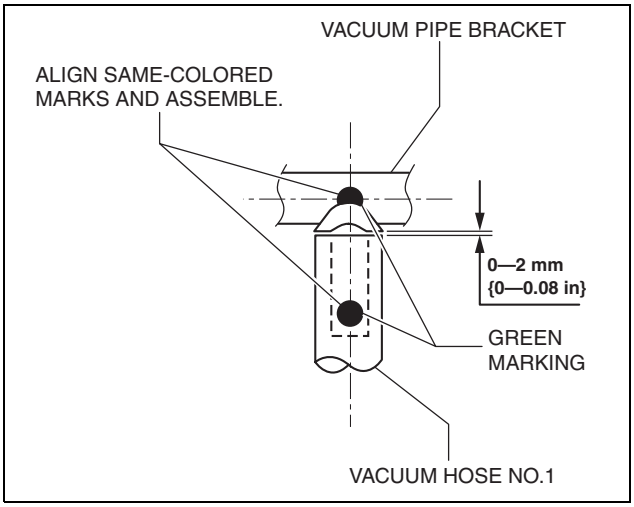

ac5wzw0000469

Vacuum hose structural view

1. Verify that the vacuum hose is installed correctly as shown in the figure.

Whole figure (AT)

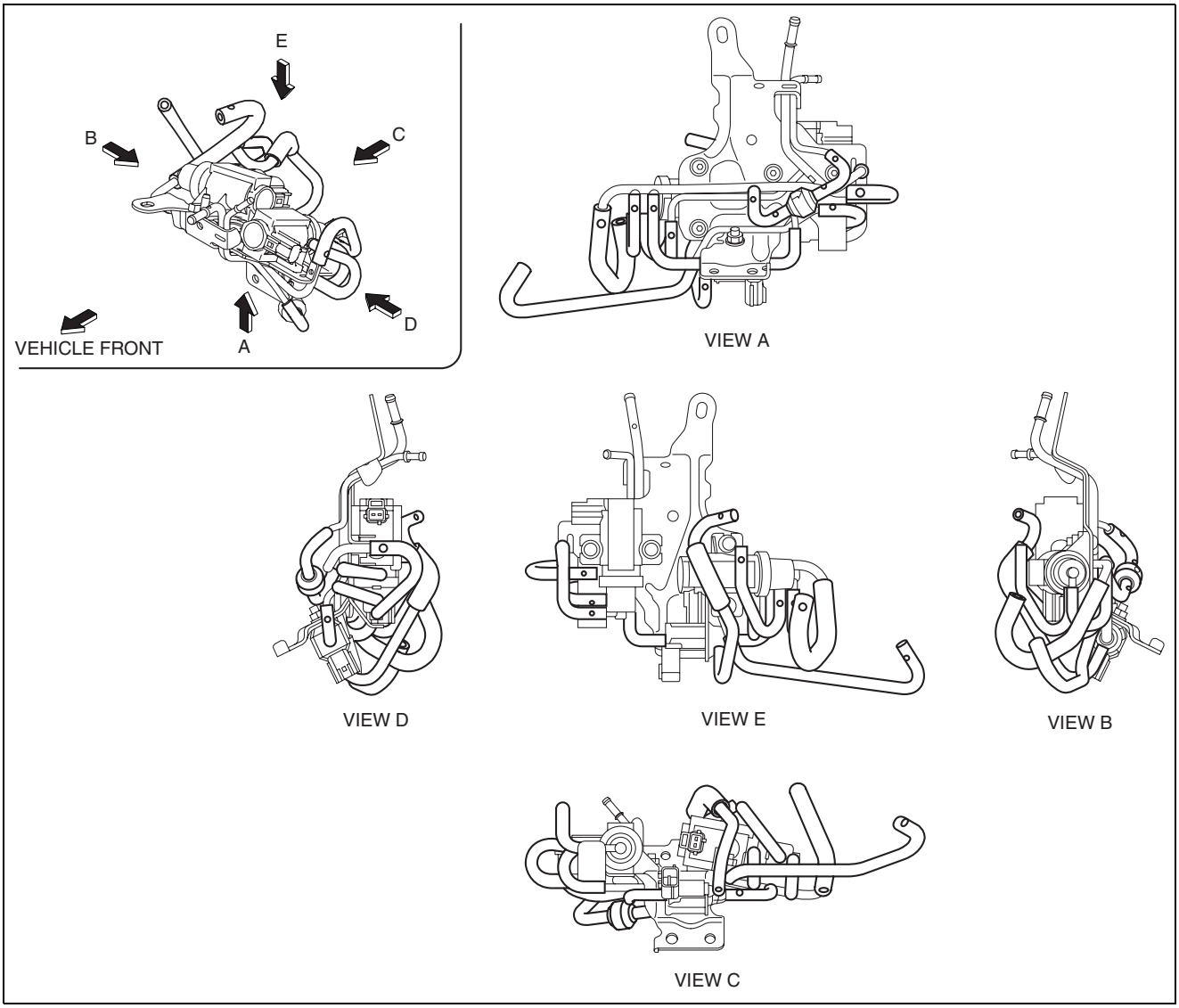

ac5wzw0000466

INTAKE-AIR SYSTEM [SKYACTIV-D 2.2]

Whole figure (MT)

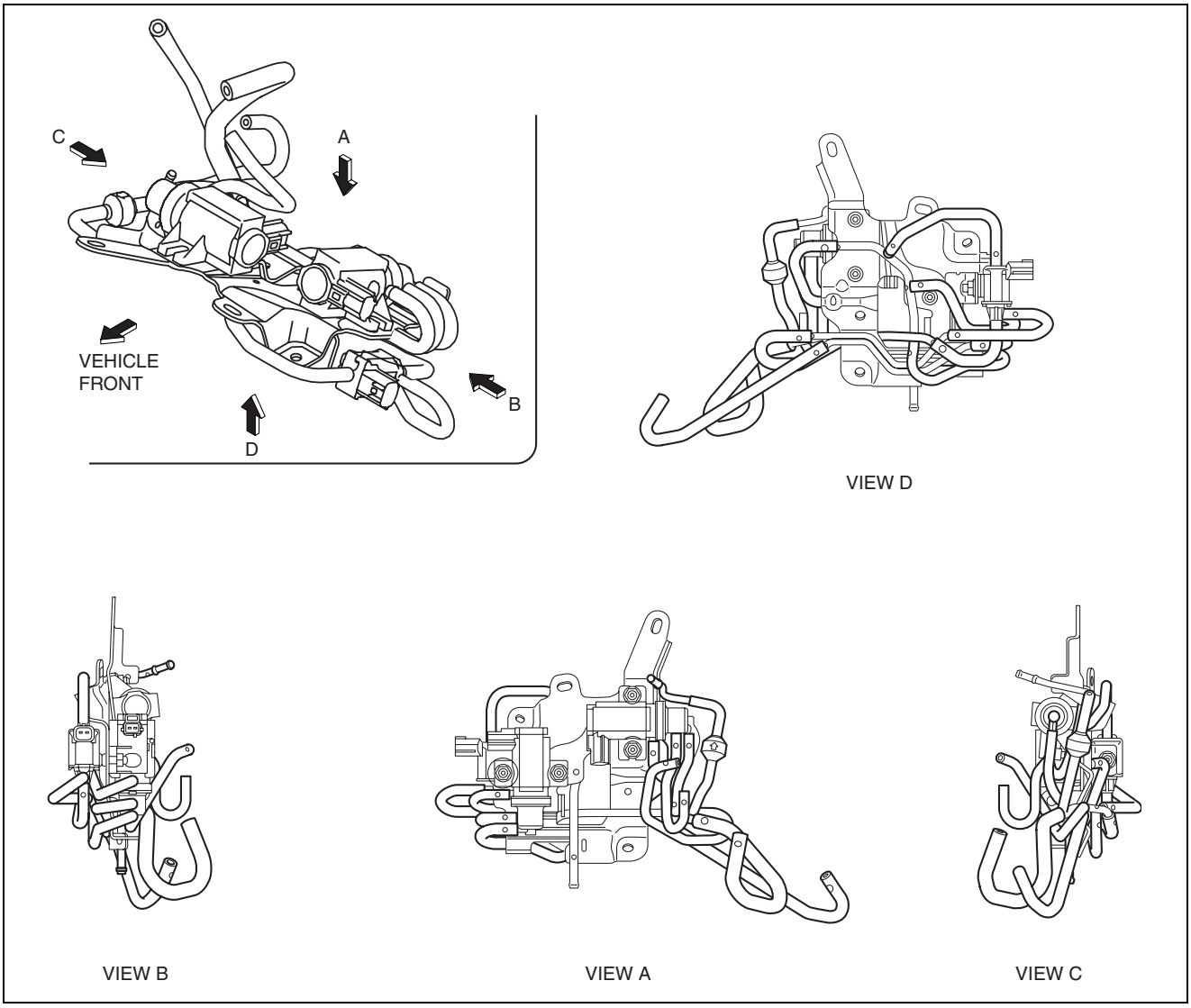

ac5wzw0000467

INTAKE-AIR SYSTEM [SKYACTIV-D 2.2]

Wastegate solenoid valve side (AT)

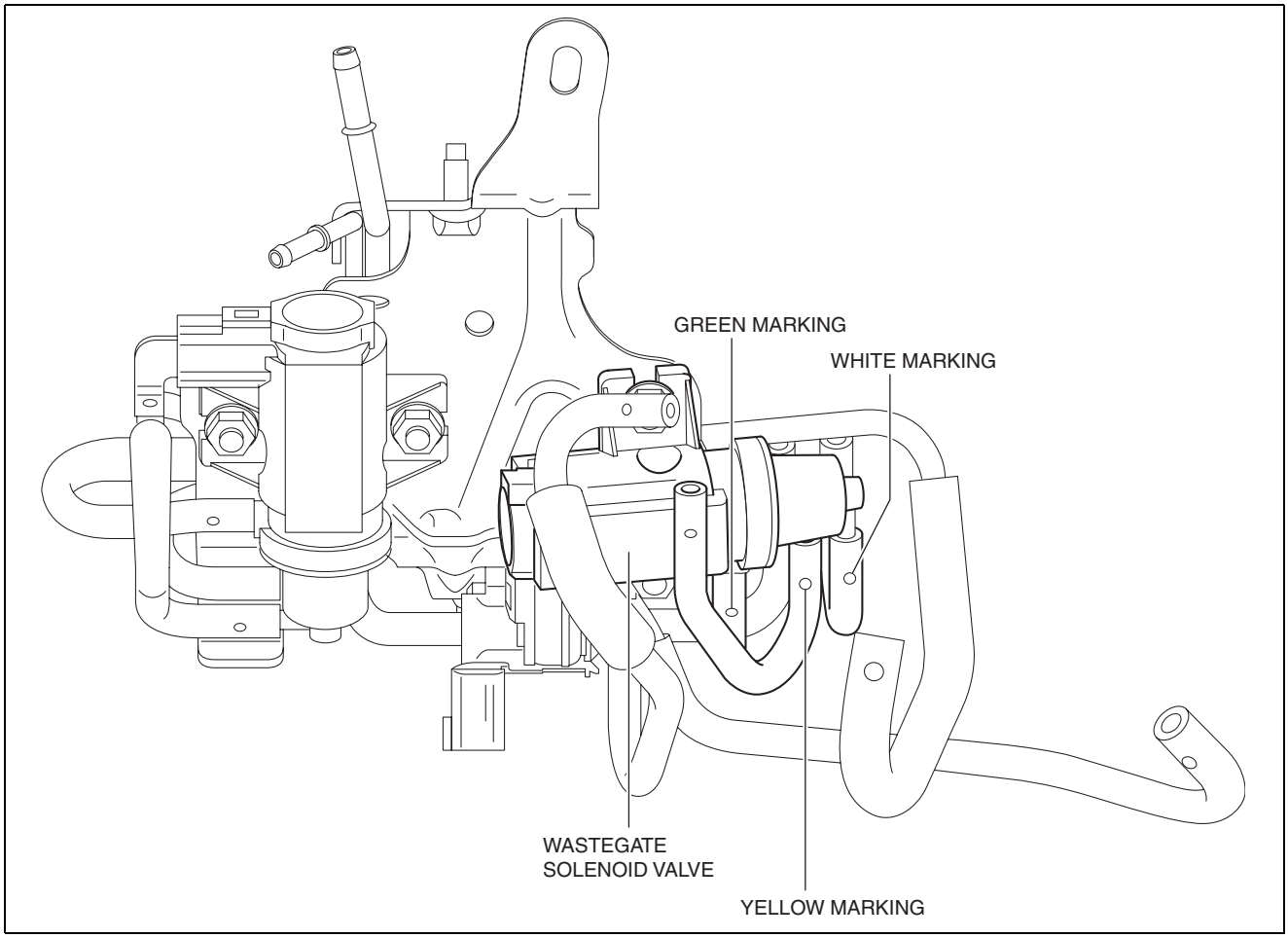

ac5wzw0000470

INTAKE-AIR SYSTEM [SKYACTIV-D 2.2]

Wastegate solenoid valve side (MT)

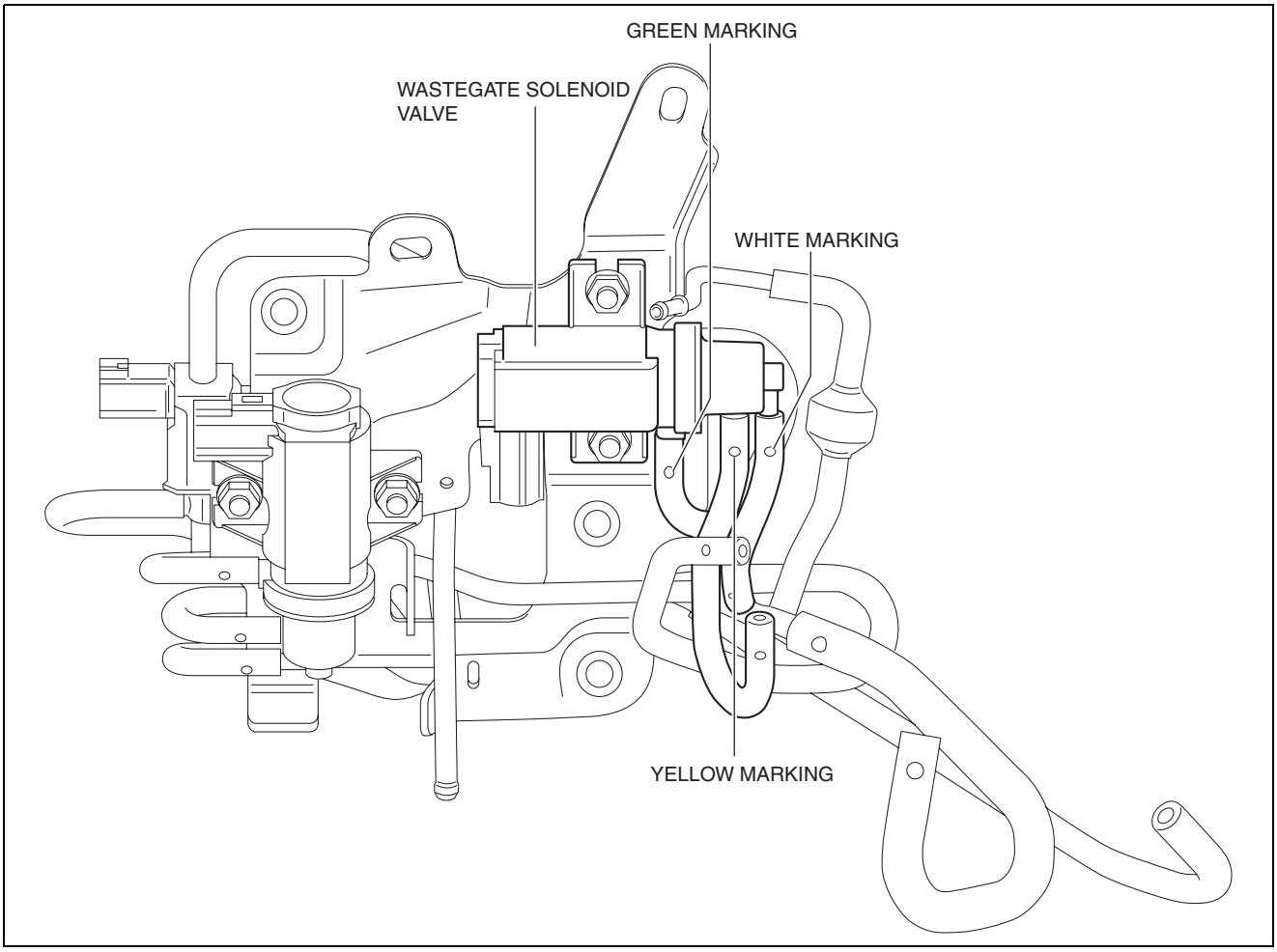

ac5wzw0000470

INTAKE-AIR SYSTEM [SKYACTIV-D 2.2]

Vacuum pipe bracket side (AT)

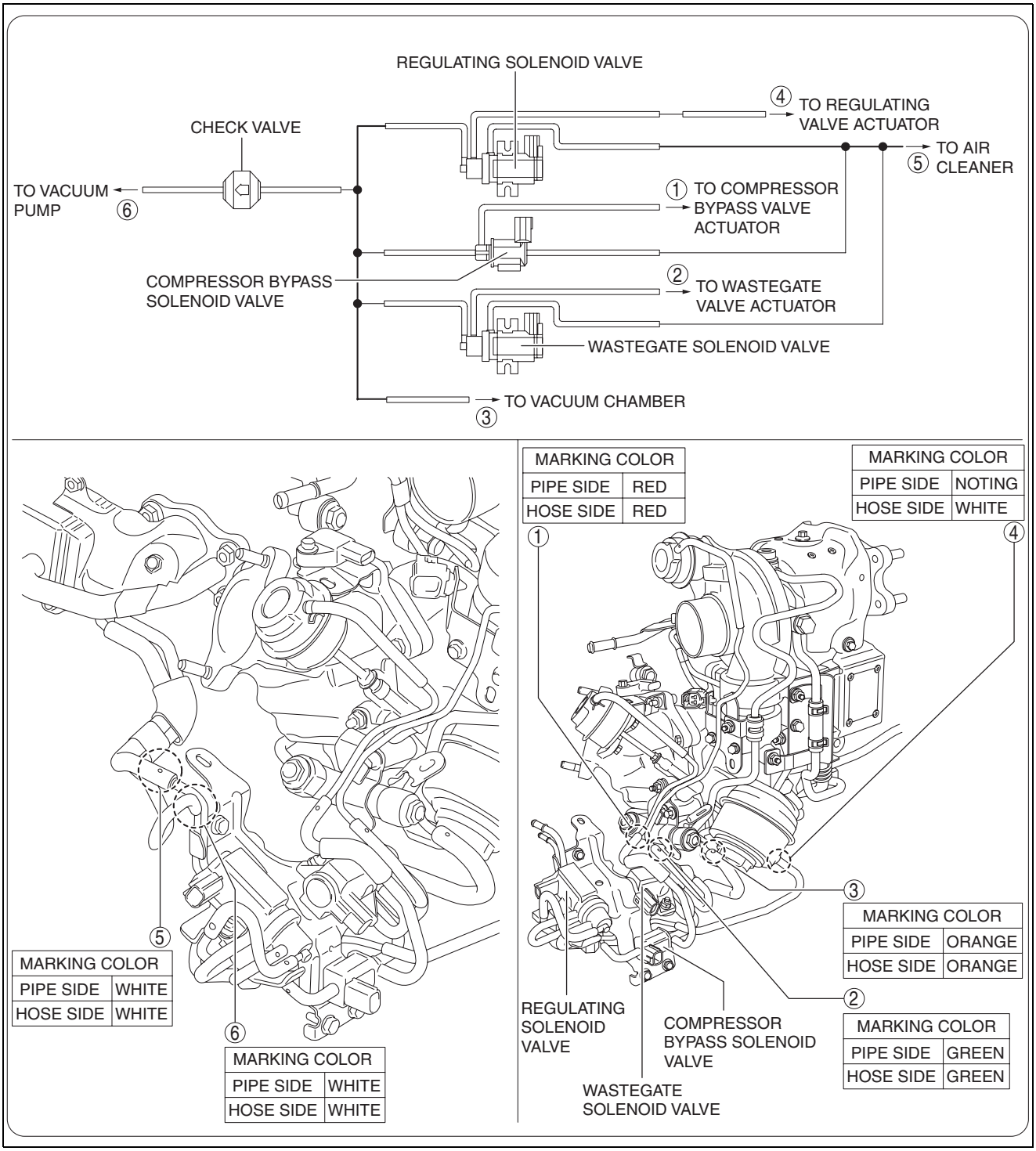

ac5wzw0000470

INTAKE-AIR SYSTEM [SKYACTIV-D 2.2]

Vacuum pipe bracket side (MT)

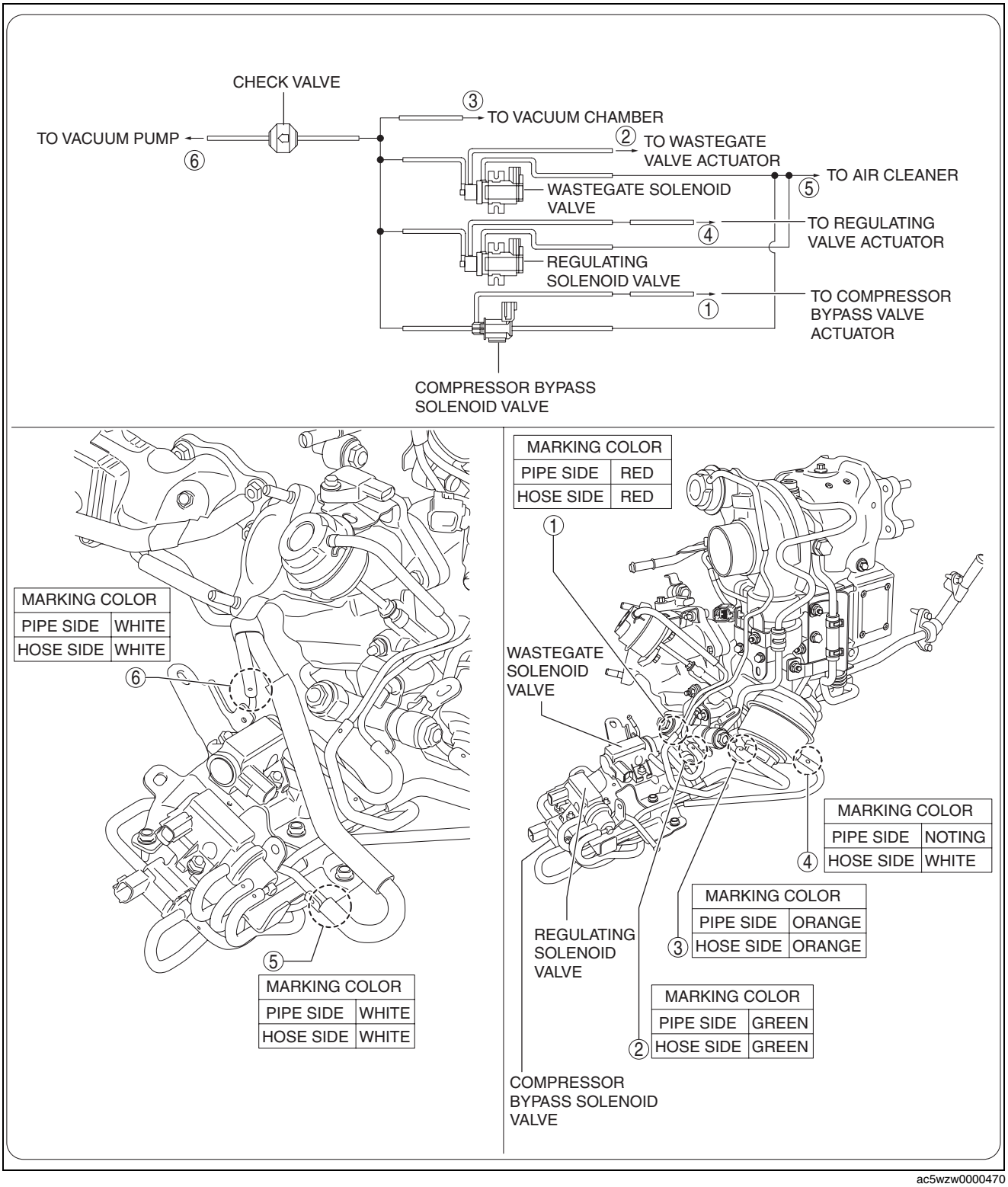

ac5wzw0000470

INTAKE-AIR SYSTEM [SKYACTIV-D 2.2]

ACCELERATOR PEDAL REMOVAL/INSTALLATION [SKYACTIV-D 2.2]

id0113z7801400

1. Disconnect the negative battery cable. (See 01-17B-9 NEGATIVE BATTERY CABLE DISCONNECTION/ CONNECTION [SKYACTIV-D 2.2].)
2. Remove in the order indicated in the table.

1	APP sensor connector
2	Accelerator pedal

3. Install in the reverse order of removal.

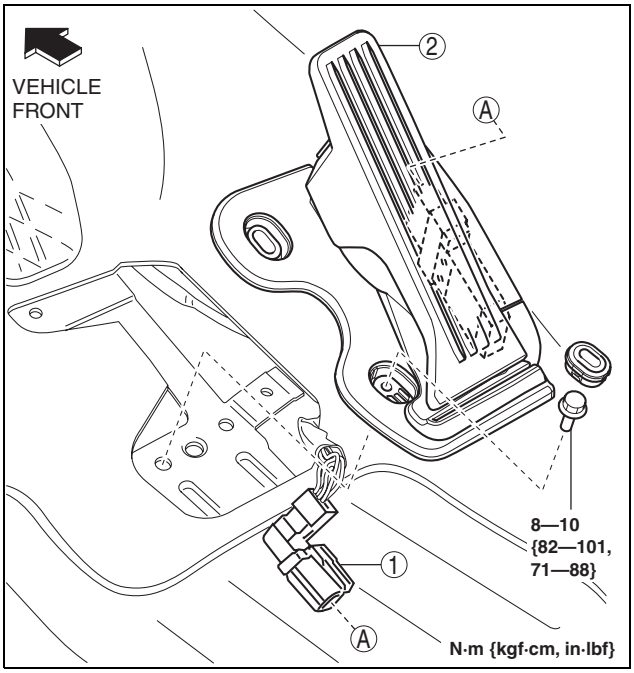

ac5uuw00000361

01-14A FUEL SYSTEM [SKYACTIV-G 2.0]

FUEL SYSTEM LOCATION INDEX [SKYACTIV-G 2.0] 01-14A–2
Engine Compartment Side 01-14A–2
Fuel Tank Side 01-14A–3
FUEL SYSTEM FLOW DIAGRAM [SKYACTIV-G 2.0] 01-14A–5
BEFORE SERVICE PRECAUTION [SKYACTIV-G 2.0] 01-14A–6
Fuel Line Safety Procedure 01-14A–6
AFTER SERVICE PRECAUTION [SKYACTIV-G 2.0] 01-14A–7
Fuel Leakage Inspection 01-14A–7
FUEL LINE PRESSURE INSPECTION [SKYACTIV-G 2.0] 01-14A–8
FUEL DRAINING PROCEDURE [SKYACTIV-G 2.0] 01-14A–11
FUEL TANK REMOVAL/INSTALLATION [SKYACTIV-G 2.0] 01-14A–13
2WD 01-14A–13
4WD 01-14A–19
FUEL TANK INSPECTION [SKYACTIV-G 2.0] 01-14A–26
2WD 01-14A–26
4WD 01-14A–29
FUEL-FILLER PIPE REMOVAL/INSTALLATION [SKYACTIV-G 2.0] 01-14A–33
Dust Cover Removal Note 01-14A–35
Fuel-filler Pipe Removal Note 01-14A–35
Evaporative Hose No.1 Installation Note 01-14A–35
Breather Hose Installation Note 01-14A–36
Joint Hose Installation Note 01-14A–36
NON-RETURN VALVE INSPECTION [SKYACTIV-G 2.0] 01-14A–37
FUEL PUMP UNIT REMOVAL/INSTALLATION [SKYACTIV-G 2.0] 01-14A–38
FUEL PUMP UNIT DISASSEMBLY/ASSEMBLY [SKYACTIV-G 2.0] 01-14A–41
FUEL PUMP UNIT INSPECTION [SKYACTIV-G 2.0] 01-14A–44
Continuity Inspection 01-14A–44
HIGH PRESSURE FUEL PUMP REMOVAL/INSTALLATION [SKYACTIV-G 2.0] 01-14A–44
High Pressure Fuel Pipe Removal Note 01-14A–47
Rear Housing Removal Note 01-14A–47
Rear Housing Installation Note 01-14A–47
High Pressure Fuel Pump Installation Note 01-14A–48
High Pressure Fuel Pipe Installation Note 01-14A–48
Fuel Leakage Inspection After High Pressure Fuel Pump Installation 01-14A–48
HIGH PRESSURE FUEL PUMP INSPECTION [SKYACTIV-G 2.0] 01-14A–49
QUICK RELEASE CONNECTOR REMOVAL/INSTALLATION [SKYACTIV-G 2.0] 01-14A–49
Quick Release Connector Position 01-14A–50
Removal 01-14A–50
Installation 01-14A–51
FUEL INJECTOR REMOVAL/INSTALLATION [SKYACTIV-G 2.0] 01-14A–51
Fuel Distributor Removal Note 01-14A–52
Stopper Ring Removal Note 01-14A–53
Teflon Seal Removal Note 01-14A–53
Teflon Seal Installation Note 01-14A–54
Back-up Ring Installation Note 01-14A–59
Stopper Ring Installation Note 01-14A–60
Fuel Injector Installation Note 01-14A–60
Fuel Distributor Installation Note 01-14A–61
FUEL INJECTOR INSPECTION [SKYACTIV-G 2.0] 01-14A–62
Resistance Inspection 01-14A–62
FUEL FILTER (HIGH-PRESSURE) REMOVAL/INSTALLATION [SKYACTIV-G 2.0] 01-14A–62
FUEL PUMP CONTROL MODULE REMOVAL/INSTALLATION [SKYACTIV-G 2.0] 01-14A–63
FUEL PUMP CONTROL MODULE INSPECTION [SKYACTIV-G 2.0] 01-14A–64

FUEL SYSTEM [SKYACTIV-G 2.0]

FUEL SYSTEM LOCATION INDEX [SKYACTIV-G 2.0]

id0114z5800100

Engine Compartment Side

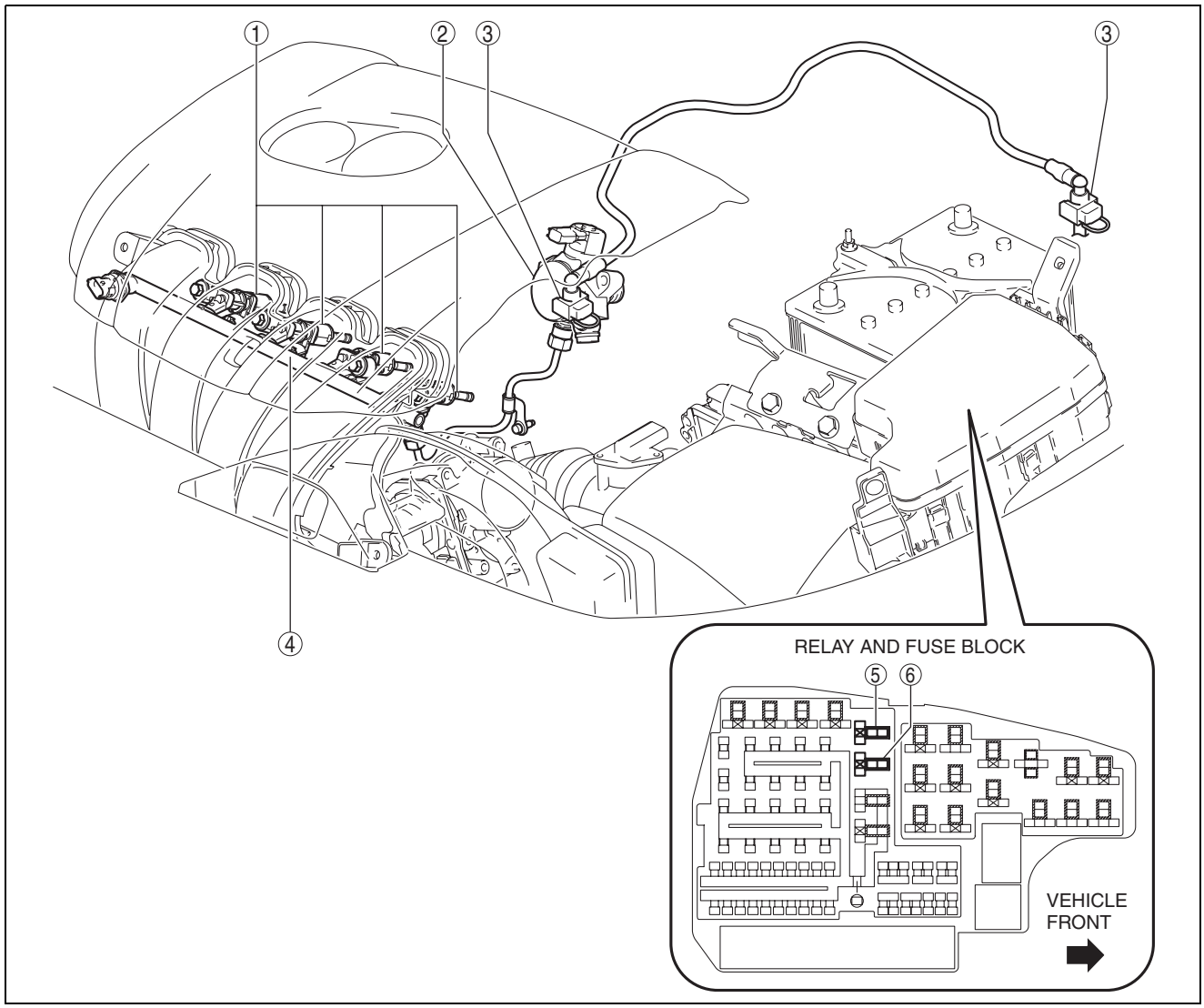

ac5uuw00000374

1	Fuel injector (See 01-14A-51 FUEL INJECTOR REMOVAL/INSTALLATION [SKYACTIV-G 2.0].) (See 01-14A-62 FUEL INJECTOR INSPECTION [SKYACTIV-G 2.0].)
2	High pressure fuel pump (See 01-14A-44 HIGH PRESSURE FUEL PUMP REMOVAL/INSTALLATION [SKYACTIV-G 2.0].) (See 01-14A-49 HIGH PRESSURE FUEL PUMP INSPECTION [SKYACTIV-G 2.0].)

3	Quick release connector (See 01-14A-49 QUICK RELEASE CONNECTOR REMOVAL/INSTALLATION [SKYACTIV-G 2.0].)
4	Fuel distributor (See 01-14A-51 FUEL INJECTOR REMOVAL/INSTALLATION [SKYACTIV-G 2.0].)
5	Fuel injector relay (See 09-21-29 RELAY INSPECTION.)
6	Fuel pump relay (See 09-21-29 RELAY INSPECTION.)

FUEL SYSTEM [SKYACTIV-G 2.0]

Fuel Tank Side
2WD

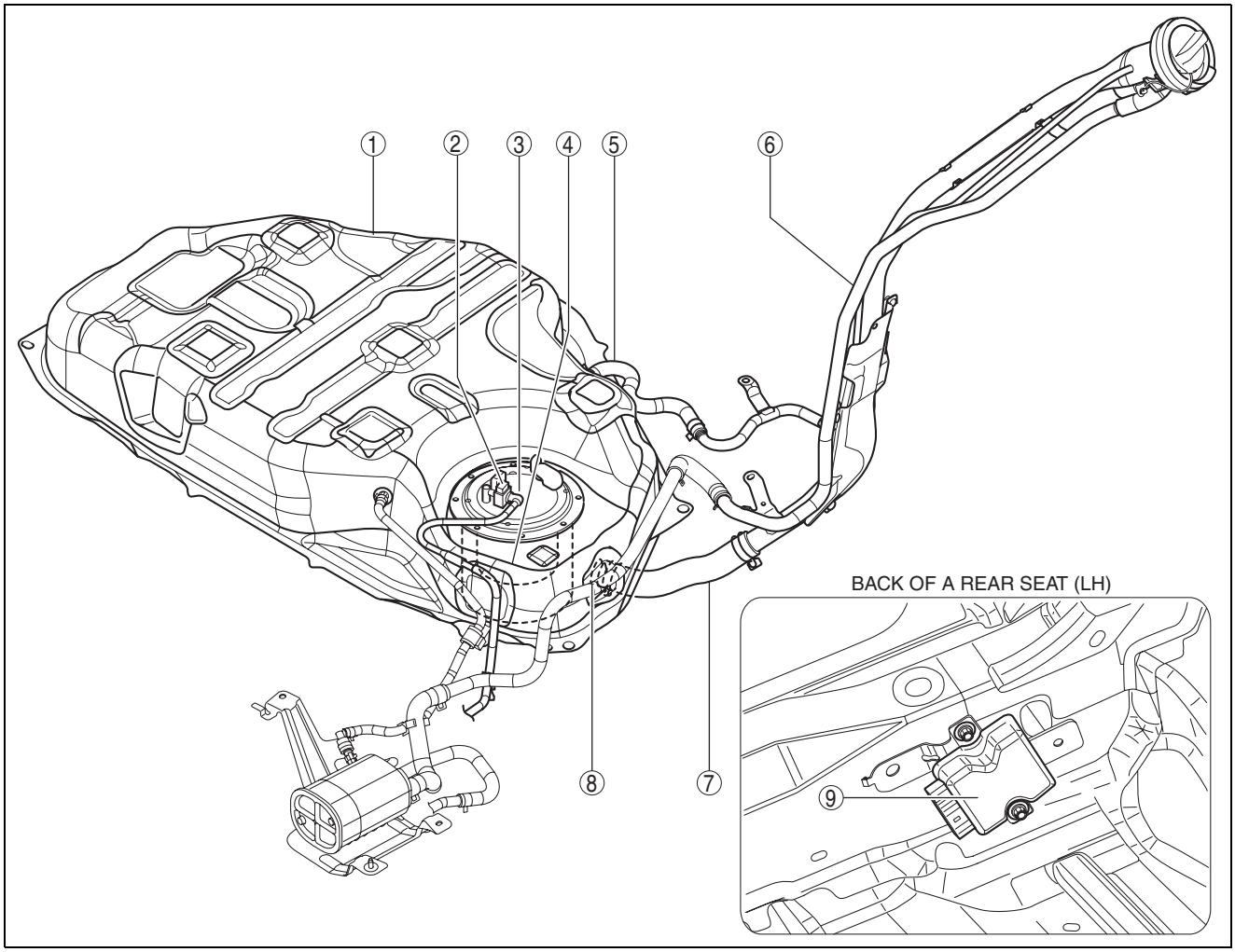

ac5wzw0000137

1	Fuel tank (See 01-14A-13 FUEL TANK REMOVAL/INSTALLATION [SKYACTIV-G 2.0].) (See 01-14A-26 FUEL TANK INSPECTION [SKYACTIV-G 2.0].)
2	Quick release connector (See 01-14A-49 QUICK RELEASE CONNECTOR REMOVAL/INSTALLATION [SKYACTIV-G 2.0].)
3	Fuel pump unit (See 01-14A-38 FUEL PUMP UNIT REMOVAL/INSTALLATION [SKYACTIV-G 2.0].) (See 01-14A-41 FUEL PUMP UNIT DISASSEMBLY/ASSEMBLY [SKYACTIV-G 2.0].) (See 01-14A-44 FUEL PUMP UNIT INSPECTION [SKYACTIV-G 2.0].)
4	Fuel filter (high-pressure) (See 01-14A-62 FUEL FILTER (HIGH-PRESSURE) REMOVAL/INSTALLATION [SKYACTIV-G 2.0].)

5	Breather hose (See 01-14A-13 FUEL TANK REMOVAL/INSTALLATION [SKYACTIV-G 2.0].)
6	Fuel-filler pipe (See 01-14A-33 FUEL-FILLER PIPE REMOVAL/INSTALLATION [SKYACTIV-G 2.0].)
7	Joint hose (See 01-14A-13 FUEL TANK REMOVAL/INSTALLATION [SKYACTIV-G 2.0].)
8	Non-return valve (See 01-14A-37 NON-RETURN VALVE INSPECTION [SKYACTIV-G 2.0].)
9	Fuel pump control module (See 01-14A-63 FUEL PUMP CONTROL MODULE REMOVAL/INSTALLATION [SKYACTIV-G 2.0].) (See 01-14A-64 FUEL PUMP CONTROL MODULE INSPECTION [SKYACTIV-G 2.0].)

FUEL SYSTEM [SKYACTIV-G 2.0]

4WD

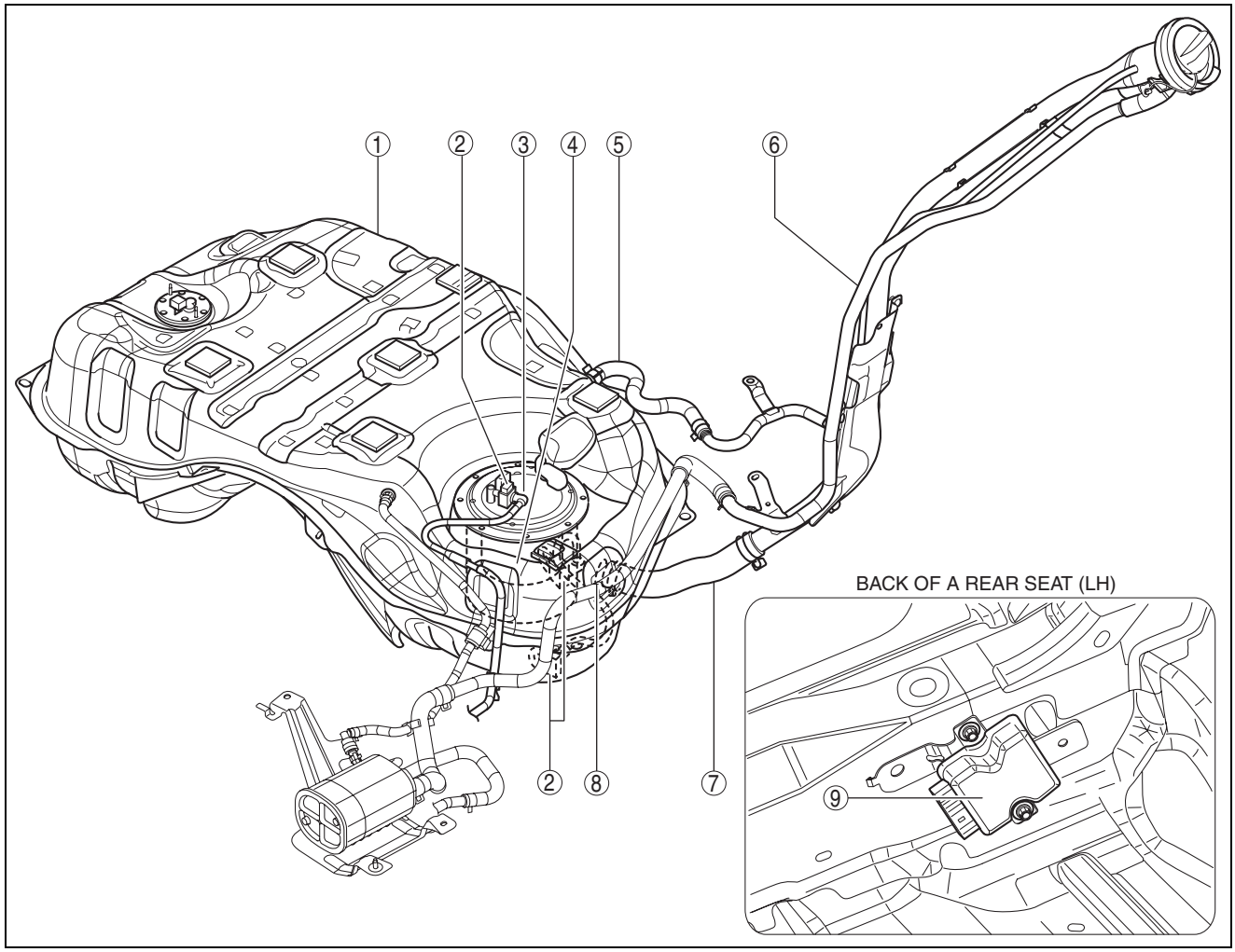

ac5wzw0000137

1	Fuel tank (See 01-14A-13 FUEL TANK REMOVAL/INSTALLATION [SKYACTIV-G 2.0].) (See 01-14A-26 FUEL TANK INSPECTION [SKYACTIV-G 2.0].)
2	Quick release connector (See 01-14A-49 QUICK RELEASE CONNECTOR REMOVAL/INSTALLATION [SKYACTIV-G 2.0].)
3	Fuel pump unit (See 01-14A-38 FUEL PUMP UNIT REMOVAL/INSTALLATION [SKYACTIV-G 2.0].) (See 01-14A-41 FUEL PUMP UNIT DISASSEMBLY/ASSEMBLY [SKYACTIV-G 2.0].) (See 01-14A-44 FUEL PUMP UNIT INSPECTION [SKYACTIV-G 2.0].)
4	Fuel filter (high-pressure) (See 01-14A-62 FUEL FILTER (HIGH-PRESSURE) REMOVAL/INSTALLATION [SKYACTIV-G 2.0].)

5	Breather hose (See 01-14A-13 FUEL TANK REMOVAL/INSTALLATION [SKYACTIV-G 2.0].)
6	Fuel-filler pipe (See 01-14A-33 FUEL-FILLER PIPE REMOVAL/INSTALLATION [SKYACTIV-G 2.0].)
7	Joint hose (See 01-14A-13 FUEL TANK REMOVAL/INSTALLATION [SKYACTIV-G 2.0].)
8	Non-return valve (See 01-14A-37 NON-RETURN VALVE INSPECTION [SKYACTIV-G 2.0].)
9	Fuel pump control module (See 01-14A-63 FUEL PUMP CONTROL MODULE REMOVAL/INSTALLATION [SKYACTIV-G 2.0].) (See 01-14A-64 FUEL PUMP CONTROL MODULE INSPECTION [SKYACTIV-G 2.0].)

FUEL SYSTEM [SKYACTIV-G 2.0]

FUEL SYSTEM FLOW DIAGRAM [SKYACTIV-G 2.0]

id0114z5818400

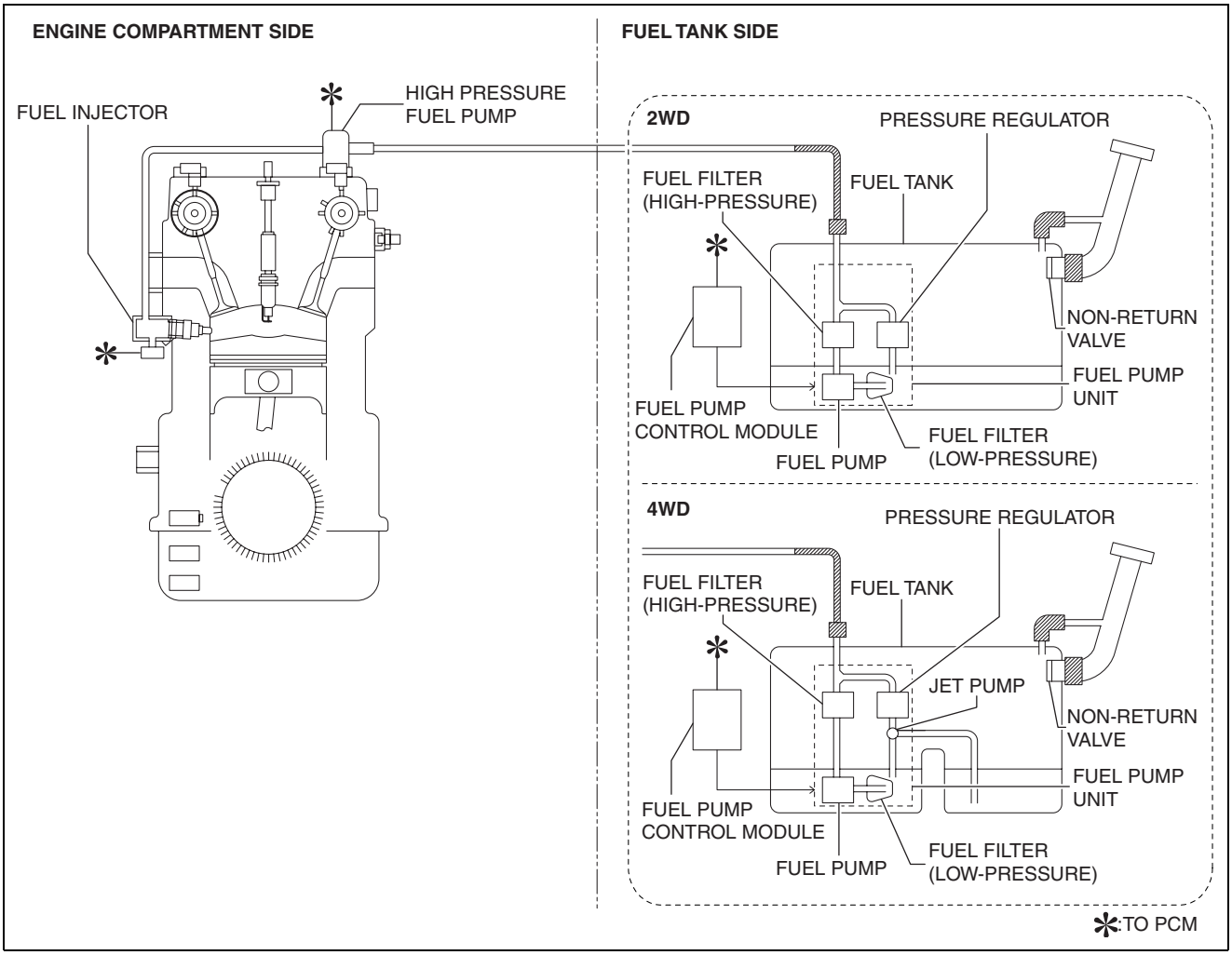

ac5wzw0000137

FUEL SYSTEM [SKYACTIV-G 2.0]

BEFORE SERVICE PRECAUTION [SKYACTIV-G 2.0]

id0114z5802000

Warning

- **Fuel vapor is hazardous. It can very easily ignite, causing serious injury and damage. Always keep sparks and flames away from fuel.**
- **Fuel line spills and leakage from the pressurized fuel system are dangerous. Fuel can ignite and cause serious injury or death and damage. Fuel can also irritate skin and eyes. To prevent this, always complete the "Fuel Line Safety Procedure".**
- **A person charged with static electricity could cause a fire or explosion, resulting in death or serious injury. Before performing work on the fuel system, discharge static electricity by touching the vehicle body.**

Fuel Line Safety Procedure

1. Disconnect the negative battery cable. (See 01-17A-11 NEGATIVE BATTERY CABLE DISCONNECTION/CONNECTION [SKYACTIV-G 2.0].) (See 01-17A-13 NEGATIVE BATTERY CABLE DISCONNECTION/CONNECTION [SKYACTIV-G 2.0 (WITHOUT i-stop)].)
2. Remove the fuel-filler cap to release the pressure inside the fuel tank.
3. Remove the fuel pump relay.
4. Disconnect the high pressure fuel pump connector.
5. Connect the negative battery cable. (See 01-17A-11 NEGATIVE BATTERY CABLE DISCONNECTION/CONNECTION [SKYACTIV-G 2.0].) (See 01-17A-13 NEGATIVE BATTERY CABLE DISCONNECTION/CONNECTION [SKYACTIV-G 2.0 (WITHOUT i-stop)].)
6. Start the engine.
7. After the engine stalls, crank the engine 2—3 times.
8. Switch the ignition to off.
9. Disconnect the negative battery cable. (See 01-17A-11 NEGATIVE BATTERY CABLE DISCONNECTION/CONNECTION [SKYACTIV-G 2.0].) (See 01-17A-13 NEGATIVE BATTERY CABLE DISCONNECTION/CONNECTION [SKYACTIV-G 2.0 (WITHOUT i-stop)].)
10. Install the fuel pump relay.
11. Connect the high pressure fuel pump connector.

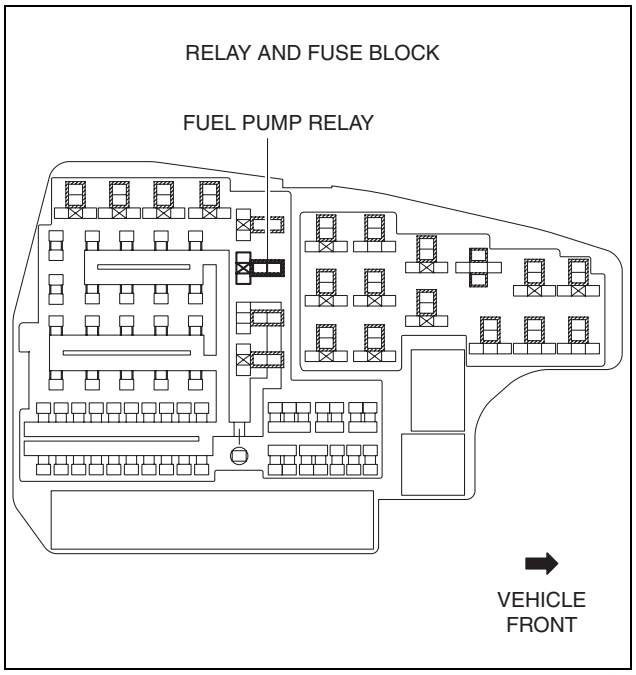

ac5uuw00000408

FUEL SYSTEM [SKYACTIV-G 2.0]

AFTER SERVICE PRECAUTION [SKYACTIV-G 2.0]

id0114z5801900

Warning

- **Fuel line spills and leakage are dangerous. Fuel can ignite and cause serious injuries or death and damage. When installing the fuel hose, perform "Fuel Leakage Inspection" described below.**
- **A person charged with static electricity could cause a fire or explosion, resulting in death or serious injury. Before performing work on the fuel system, discharge static electricity by touching the vehicle body.**

Fuel Leakage Inspection
Using M-MDS

1. Connect the M-MDS to the DLC-2.
2. Switch the ignition to ON (engine off).
3. Using the simulation function "FP", start the fuel pump. (See 01-02-8 ON-BOARD DIAGNOSTIC TEST [SKYACTIV-G 2.0].)
4. Verify that there is no fuel leakage from the pressurized parts.

Standard
There shall be no leakage after 5 min.

5. In the case of fuel leakage, replace the following components and then recheck using the fuel leakage checking procedure.
   - If there is leakage, replace the fuel hoses and clips.
   - If there is damage on the seal on the fuel pipe side, replace the fuel pipe.

Without using M-MDS

1. Disconnect the negative battery cable. (See 01-17A-11 NEGATIVE BATTERY CABLE DISCONNECTION/CONNECTION [SKYACTIV-G 2.0].) (See 01-17A-13 NEGATIVE BATTERY CABLE DISCONNECTION/CONNECTION [SKYACTIV-G 2.0 (WITHOUT i-stop)].)
2. Remove the fuel pump relay.

Caution

- **Short the specified terminals because shorting the wrong terminal of the relay and fuse block may cause malfunctions.**

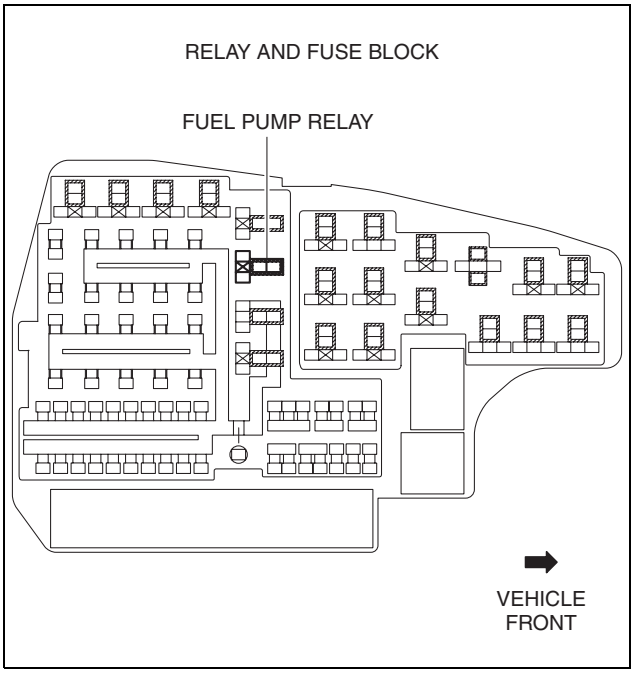

ac5uuw00000407

FUEL SYSTEM [SKYACTIV-G 2.0]

3. Using a jumper wire, short fuel pump relay terminals C and D in the relay and fuse block.
4. Connect the negative battery cable and operate the fuel pump. (See 01-17A-11 NEGATIVE BATTERY CABLE DISCONNECTION/CONNECTION [SKYACTIV-G 2.0].) (See 01-17A-13 NEGATIVE BATTERY CABLE DISCONNECTION/CONNECTION [SKYACTIV-G 2.0 (WITHOUT i-stop)].)
5. Verify that there is no fuel leakage from the pressurized parts.

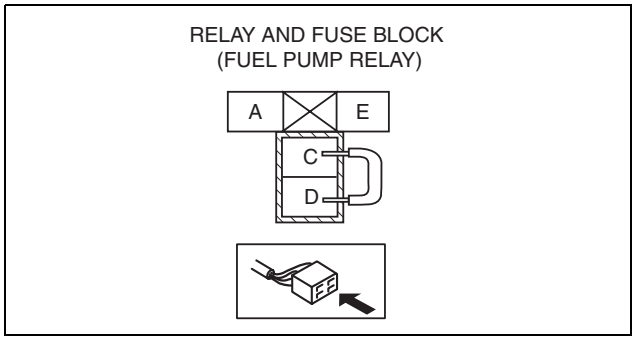

am6zzw0000028

Standard
There shall be no leakage after 5 min.

6. In the case of fuel leakage, replace the following components and then recheck using the fuel leakage checking procedure.
   - If there is leakage, replace the fuel hoses and clips.
   - If there is damage on the seal on the fuel pipe side, replace the fuel pipe.

FUEL LINE PRESSURE INSPECTION [SKYACTIV-G 2.0]

id0114z5800500

Warning
- **Fuel line spills and leakage from the pressurized fuel system are dangerous. Fuel can ignite and cause serious injury or death and damage. To prevent this, complete the following inspection with the engine stopped.**
- **Fuel is very flammable liquid. If fuel spills or leaks from the pressurized fuel system, it will cause serious injury or death and facility breakage. Fuel can also irritate skin and eyes. To prevent this, always complete the "Fuel Line Safety Procedure", while referring to the "BEFORE SERVICE PRECAUTION".**
- **A person charged with static electricity could cause a fire or explosion, resulting in death or serious injury. Before performing work on the fuel system, discharge static electricity by touching the vehicle body.**

Caution
- **Disconnecting/connecting the quick release connector without cleaning it may possibly cause damage to the fuel pipe and quick release connector. Always clean the quick release connector joint area before disconnecting/connecting using cloth or soft brush, and make sure that it is free of foreign material.**

1. Complete the "BEFORE SERVICE PRECAUTION". (See 01-14A-6 BEFORE SERVICE PRECAUTION [SKYACTIV-G 2.0].)
2. Disconnect the negative battery cable. (See 01-17A-11 NEGATIVE BATTERY CABLE DISCONNECTION/CONNECTION [SKYACTIV-G 2.0].) (See 01-17A-13 NEGATIVE BATTERY CABLE DISCONNECTION/CONNECTION [SKYACTIV-G 2.0 (WITHOUT i-stop)].)

FUEL SYSTEM [SKYACTIV-G 2.0]

3. Disconnect the quick release connector as shown in the figure. (See 01-14A-49 QUICK RELEASE CONNECTOR REMOVAL/INSTALLATION [SKYACTIV-G 2.0].)

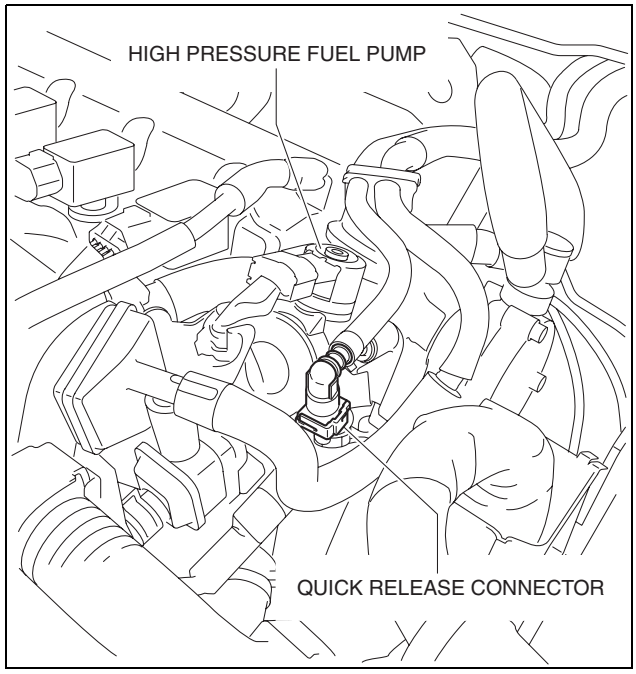

ac5uuw00000377

4. Turn the lever of the **SST** parallel to the hose as shown in the figure.
5. Insert the **SST** quick release connector into the fuel pipe until a click is heard.
6. Verify that the quick release connector is firmly connected by pulling it by hand.
7. Start the fuel pump using the following procedure.
   Using M-MDS
   1. Connect the negative battery cable. (See 01-17A-11 NEGATIVE BATTERY CABLE DISCONNECTION/CONNECTION [SKYACTIV-G 2.0].) (See 01-17A-13 NEGATIVE BATTERY CABLE DISCONNECTION/CONNECTION [SKYACTIV-G 2.0 (WITHOUT i-stop)].)
   2. Connect the M-MDS to the DLC-2.
   3. Using the simulation function “FP”, start the fuel pump. (See 01-02-8 ON-BOARD DIAGNOSTIC TEST [SKYACTIV-G 2.0].)

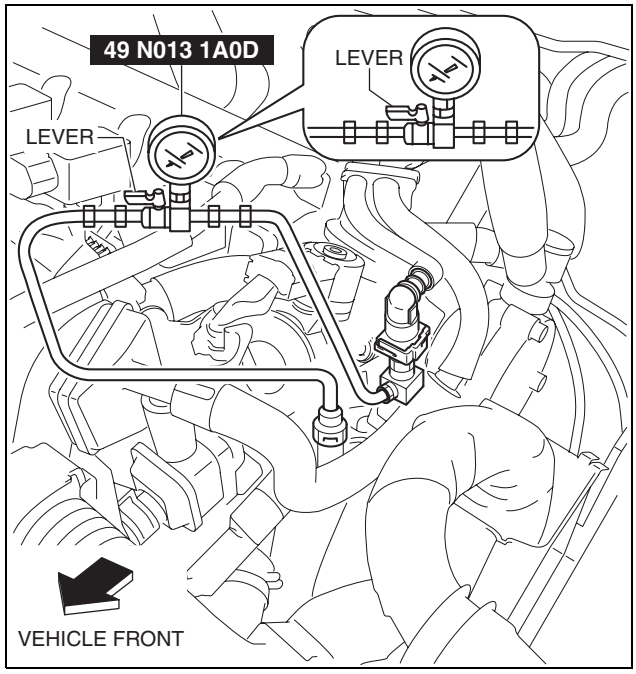

ac5uuw00000378

FUEL SYSTEM [SKYACTIV-G 2.0]

Without using M-MDS

1. Remove the fuel pump relay.

Caution

- **Short the specified terminals because shorting the wrong terminal of the relay and fuse block may cause malfunctions.**

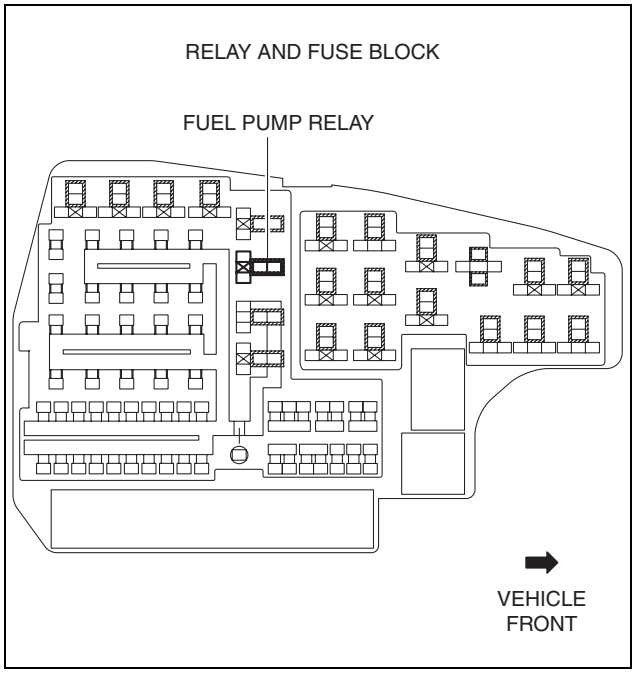

ac5uuw00000379

2. Using a jumper wire, short fuel pump relay terminals C and D in the relay and fuse block.
3. Connect the negative battery cable and operate the fuel pump. (See 01-17A-11 NEGATIVE BATTERY CABLE DISCONNECTION/CONNECTION [SKYACTIV-G 2.0].) (See 01-17A-13 NEGATIVE BATTERY CABLE DISCONNECTION/CONNECTION [SKYACTIV-G 2.0 (WITHOUT i-stop)].)

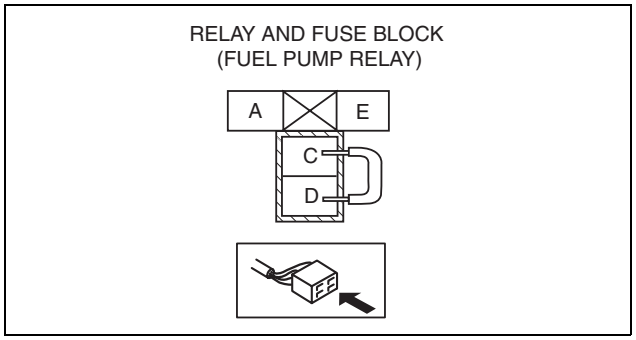

am6zzw0000028

8. Operate the fuel pump for **10 s**.
9. Measure the fuel line pressure.
   - If not within the specification, inspect the following:
     If it less than the specification:
     — Fuel pump unit
     — Fuel line for restriction or leakage
     If it exceeds the specification:
     — Fuel line restriction

Fuel pressure

405—485 kPa {4.13—4.94 kgf/cm^2, 58.8—70.3 psi}

10. Stop the fuel pump using the following procedure.
    Using M-MDS
    1. Using the simulation function “FP”, stop the fuel pump. (See 01-02-8 ON-BOARD DIAGNOSTIC TEST [SKYACTIV-G 2.0].)

    Without using M-MDS
    1. Disconnect the negative battery cable to stop the fuel pump. (See 01-17A-11 NEGATIVE BATTERY CABLE DISCONNECTION/CONNECTION [SKYACTIV-G 2.0].) (See 01-17A-13 NEGATIVE BATTERY CABLE DISCONNECTION/CONNECTION [SKYACTIV-G 2.0 (WITHOUT i-stop)].)
11. Measure the fuel hold pressure **after 5 min**.
    - If not within the specification, inspect the following:
      — Fuel line leakage

Fuel hold pressure

230 kPa {2.35 kgf/cm^2, 33.4 psi} or more

FUEL SYSTEM [SKYACTIV-G 2.0]

12. Complete the “BEFORE SERVICE PRECAUTION”. (See 01-14A-6 BEFORE SERVICE PRECAUTION [SKYACTIV-G 2.0].)
13. Disconnect the **SST**.
14. Connect the quick release connector. (See 01-14A-49 QUICK RELEASE CONNECTOR REMOVAL/INSTALLATION [SKYACTIV-G 2.0].)
15. Complete the “AFTER SERVICE PRECAUTION”. (See 01-14A-7 AFTER SERVICE PRECAUTION [SKYACTIV-G 2.0].)

FUEL DRAINING PROCEDURE [SKYACTIV-G 2.0]

id0114z5853500

Warning

- **Fuel line spills and leakage from the pressurized fuel system are dangerous. Fuel can ignite and cause serious injury or death and damage. To prevent this, complete the following inspection with the engine stopped.**
- **Fuel is very flammable liquid. If fuel spills or leaks from the pressurized fuel system, it will cause serious injury or death and facility breakage. Fuel can also irritate skin and eyes. To prevent this, always complete the “Fuel Line Safety Procedure”, while referring to the “BEFORE SERVICE PRECAUTION”.**
- **A person charged with static electricity could cause a fire or explosion, resulting in death or serious injury. Before performing work on the fuel system, discharge static electricity by touching the vehicle body.**

Caution

- **Disconnecting/connecting the quick release connector without cleaning it may possibly cause damage to the fuel pipe and quick release connector. Always clean the quick release connector joint area before disconnecting/connecting using cloth or soft brush, and make sure that it is free of foreign material.**

1. Complete the “BEFORE SERVICE PRECAUTION”. (See 01-14A-6 BEFORE SERVICE PRECAUTION [SKYACTIV-G 2.0].)
2. Disconnect the negative battery cable. (See 01-17A-11 NEGATIVE BATTERY CABLE DISCONNECTION/CONNECTION [SKYACTIV-G 2.0].) (See 01-17A-13 NEGATIVE BATTERY CABLE DISCONNECTION/CONNECTION [SKYACTIV-G 2.0 (WITHOUT i-stop)].)
3. Disconnect the quick release connector as shown in the figure. (See 01-14A-49 QUICK RELEASE CONNECTOR REMOVAL/INSTALLATION [SKYACTIV-G 2.0].)
4. Connect a long hose to the disconnected quick release connector and drain the fuel into a container used for collecting gasoline.
5. Drain the fuel from the fuel tank using the following procedure:
   Using M-MDS
   1. Connect the negative battery cable. (See 01-17A-11 NEGATIVE BATTERY CABLE DISCONNECTION/CONNECTION [SKYACTIV-G 2.0].) (See 01-17A-13 NEGATIVE BATTERY CABLE DISCONNECTION/CONNECTION [SKYACTIV-G 2.0 (WITHOUT i-stop)].)
   2. Connect the M-MDS to the DLC-2.
   3. Using the simulation function “FP”, start the fuel pump. (See 01-02-8 ON-BOARD DIAGNOSTIC TEST [SKYACTIV-G 2.0].)

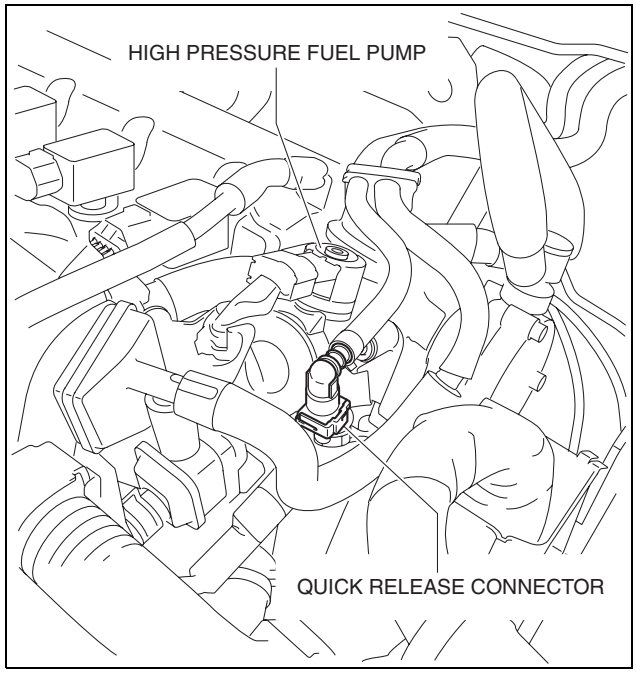

ac5uuw00000404

FUEL SYSTEM [SKYACTIV-G 2.0]

Without using M-MDS

1. Remove the fuel pump relay.

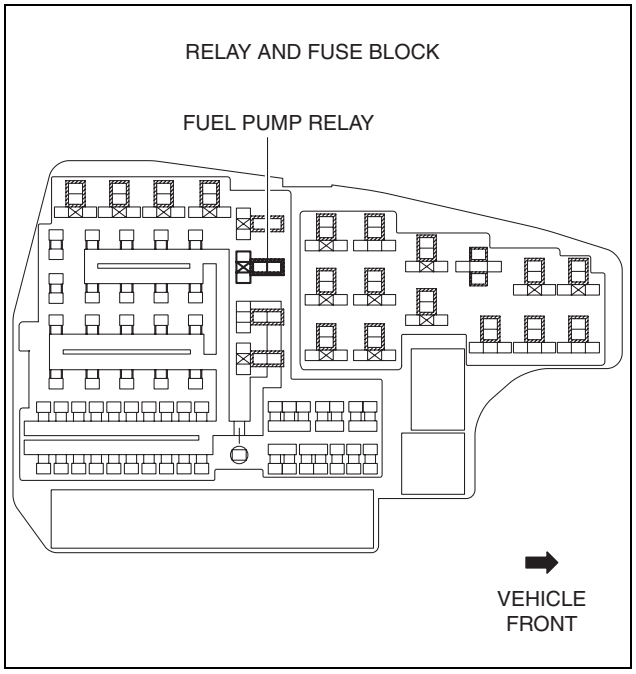

ac5uuw00000405

Caution

- **Short the specified terminals because shorting the wrong terminal of the relay and fuse block may cause malfunctions.**

2. Using a jumper wire, short fuel pump relay terminals C and D in the relay and fuse block.
3. Connect the negative battery cable and operate the fuel pump. (See 01-17A-11 NEGATIVE BATTERY CABLE DISCONNECTION/CONNECTION [SKYACTIV-G 2.0].) (See 01-17A-13 NEGATIVE BATTERY CABLE DISCONNECTION/CONNECTION [SKYACTIV-G 2.0 (WITHOUT i-stop)].)

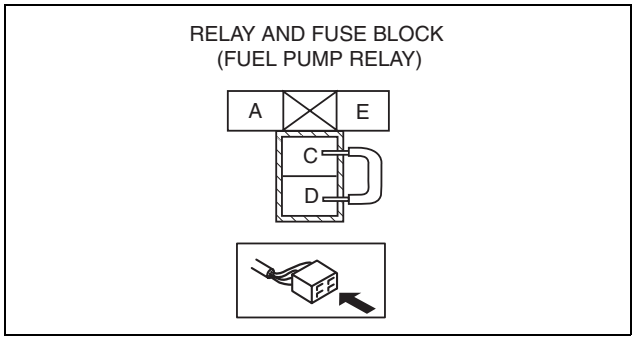

am6zzw0000026

Caution

- **The fuel pump could be damaged if it is operated while there is no fuel in the fuel tank. Verify the amount of fuel being discharged from the hose and stop operation of the fuel pump when essentially no fuel is being discharged.**

6. Stop the fuel pump using the following procedure.

Using M-MDS

1. Using the simulation function “FP”, stop the fuel pump. (See 01-02-8 ON-BOARD DIAGNOSTIC TEST [SKYACTIV-G 2.0].)
2. Disconnect the negative battery cable. (See 01-17A-11 NEGATIVE BATTERY CABLE DISCONNECTION/CONNECTION [SKYACTIV-G 2.0].) (See 01-17A-13 NEGATIVE BATTERY CABLE DISCONNECTION/CONNECTION [SKYACTIV-G 2.0 (WITHOUT i-stop)].)

Without using M-MDS

1. Remove the jumper wire to stop the fuel pump.
2. Disconnect the negative battery cable. (See 01-17A-11 NEGATIVE BATTERY CABLE DISCONNECTION/CONNECTION [SKYACTIV-G 2.0].) (See 01-17A-13 NEGATIVE BATTERY CABLE DISCONNECTION/CONNECTION [SKYACTIV-G 2.0 (WITHOUT i-stop)].)

FUEL SYSTEM [SKYACTIV-G 2.0]

FUEL TANK REMOVAL/INSTALLATION [SKYACTIV-G 2.0]

id0114z5801600

Warning

- **Fuel is very flammable liquid. If fuel spills or leaks from the pressurized fuel system, it will cause serious injury or death and facility breakage. Fuel can also irritate skin and eyes. To prevent this, always complete the "Fuel Line Safety Procedure", while referring to the "BEFORE SERVICE PRECAUTION".**
- **A person charged with static electricity could cause a fire or explosion, resulting in death or serious injury. Before draining fuel, make sure to discharge static electricity by touching the vehicle body.**

Caution

- **Disconnecting/connecting the quick release connector without cleaning it may cause damage to the fuel pipe and quick release connector. Always clean the quick release connector joint area before disconnecting/connecting using a cloth or soft brush, and make sure that it is free of foreign material.**

2WD

1. Level the vehicle.
2. Complete the "BEFORE SERVICE PRECAUTION". (See 01-14A-6 BEFORE SERVICE PRECAUTION [SKYACTIV-G 2.0].)
3. Drain the fuel. (See 01-14A-11 FUEL DRAINING PROCEDURE [SKYACTIV-G 2.0].)
4. Using the following procedure:

   6:4 split type

   1. Remove the rear seat cushion. (See 09-13-76 REAR SEAT CUSHION REMOVAL/INSTALLATION.)

   4:2:4 split type

   1. Set the rear seat aside as shown in the figure. (See 09-13-56 REAR SEAT REMOVAL/INSTALLATION.)

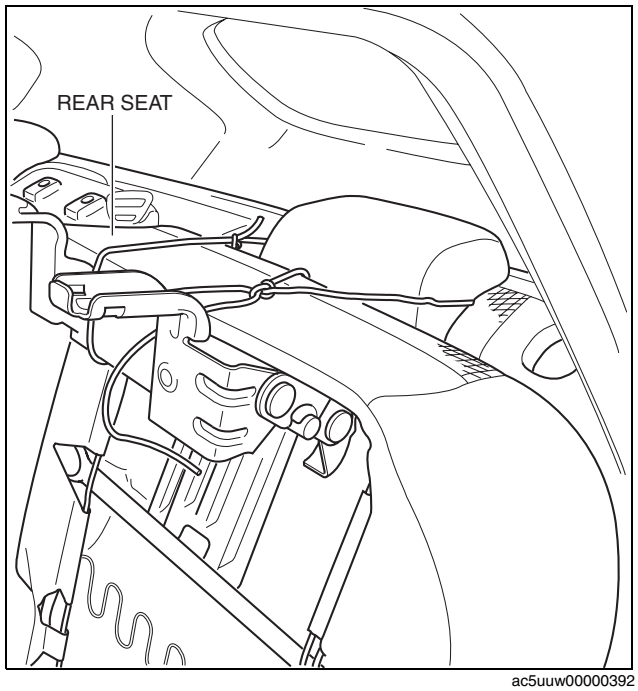

ac5uuw00000392

FUEL SYSTEM [SKYACTIV-G 2.0]

5. Partially peel back the floor mat as shown in the figure.

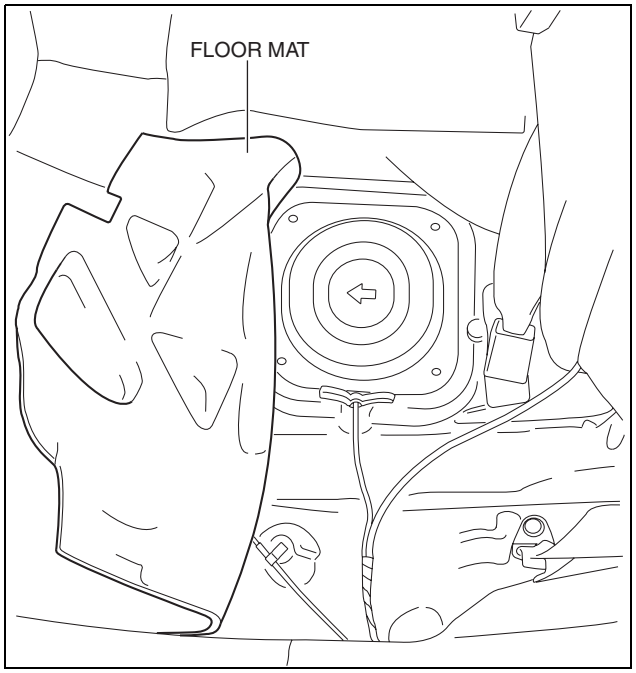

ac5uuw00000393

6. Remove the service hole cover.
7. Disconnect the following parts:
   - Fuel pump unit connector
   - Quick release connector (See 01-14A-49 QUICK RELEASE CONNECTOR REMOVAL/ INSTALLATION [SKYACTIV-G 2.0].)
8. Remove the floor under cover. (See 09-16-44 FLOOR UNDER COVER REMOVAL/ INSTALLATION.)
9. Disconnect the HO2S connector.
10. Remove the TWC and HO2S as a single unit. (See 01-15A-2 EXHAUST SYSTEM REMOVAL/ INSTALLATION [SKYACTIV-G 2.0].)
11. Remove in the order indicated in the table.
12. Install in the reverse order of removal.
13. Complete the “AFTER SERVICE PRECAUTION”. (See 01-14A-7 AFTER SERVICE PRECAUTION [SKYACTIV-G 2.0].)

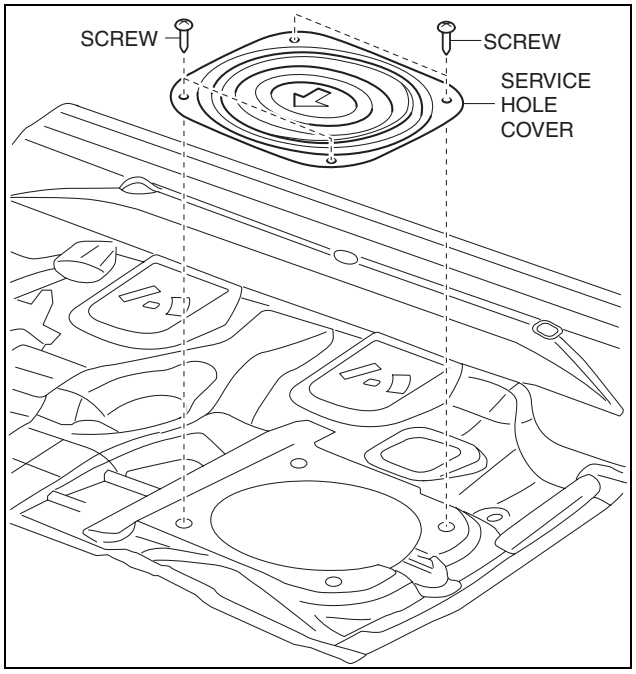

ac5uuw00000394

FUEL SYSTEM [SKYACTIV-G 2.0]

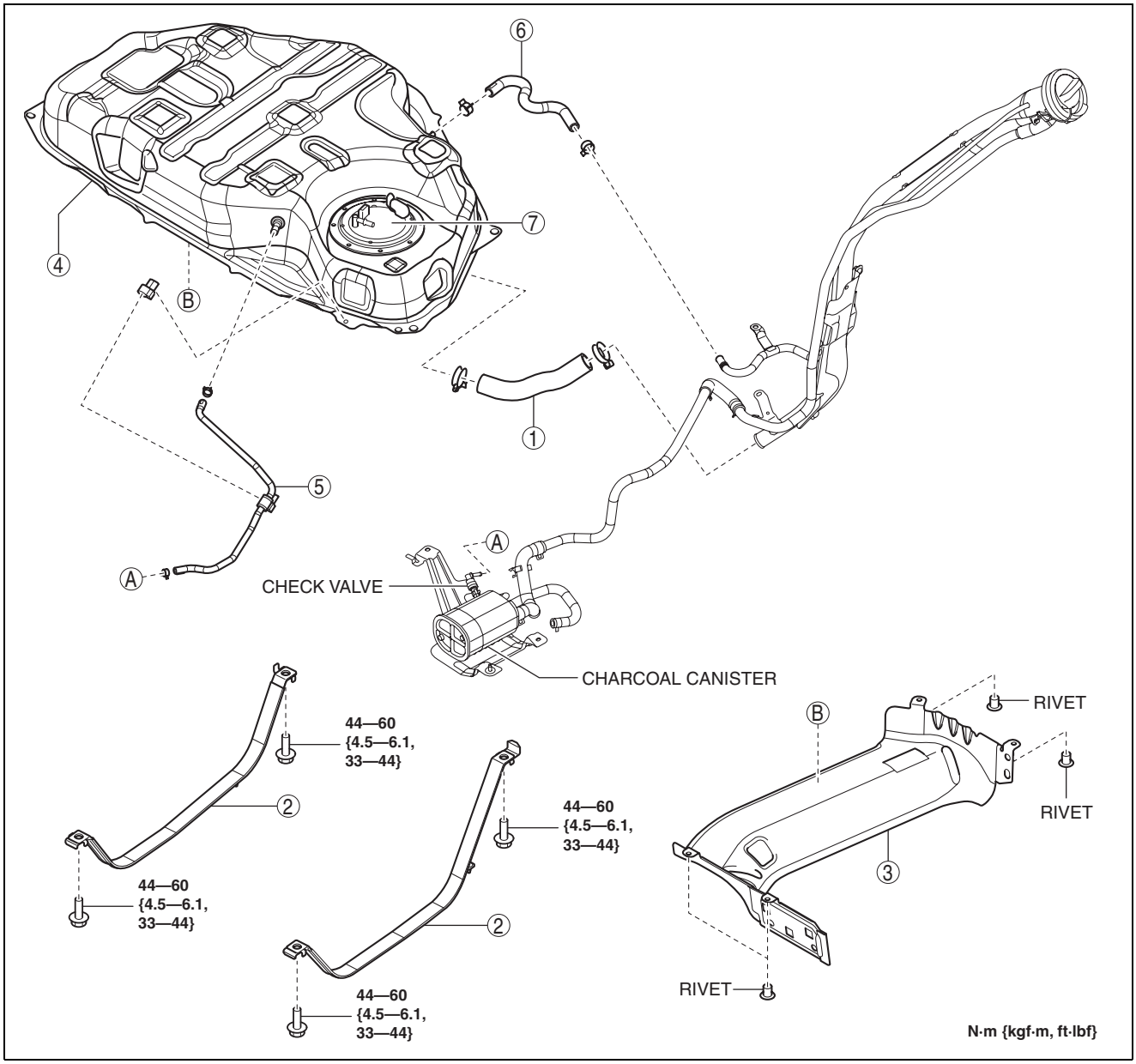

ac5wzw0000138

1	Joint hose (See 01-14A-18 Joint hose installation note.)
2	Fuel tank strap
3	Fuel tank insulator (See 01-14A-16 Fuel tank insulator removal note.)
4	Fuel tank (See 01-14A-16 Fuel tank removal note.)

5	Evaporative hose (See 01-14A-17 Evaporative hose installation note.)
6	Breather hose (See 01-14A-17 Breather hose installation note.)
7	Fuel pump unit (See 01-14A-38 FUEL PUMP UNIT REMOVAL/ INSTALLATION [SKYACTIV-G 2.0].)

FUEL SYSTEM [SKYACTIV-G 2.0]

Fuel tank insulator removal note

Note
- The fuel tank insulator are installed using rivets.

1. Push out the mandrel using a hammer and punch (**2—2.8 mm {0.08—0.11 in}** diameter).
2. Remove the flange using a drill (**5 mm {0.20 in}** drill bit).

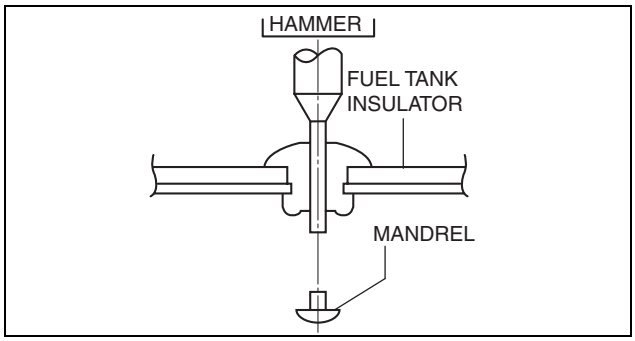

ac5wzw0000271

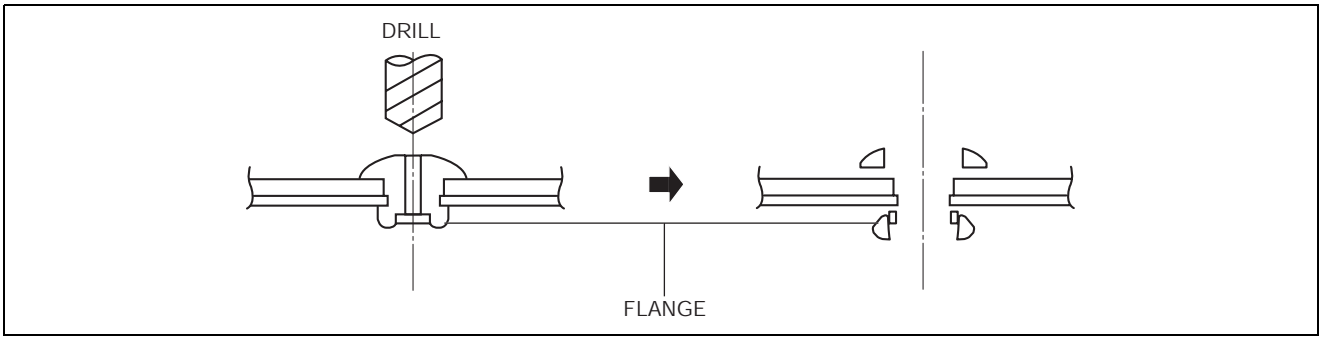

ar8uuw00001479

Fuel tank removal note
1. Remove the parking brake cable bracket installation bolts.
2. Disconnect the breather hose from the fuel-filler pipe.
3. Disconnect the evaporative hose from the check valve.
4. Remove the following parts as single unit.
   - Breather hose
   - Evaporative hose
   - Fuel pump unit
   - Fuel tank
5. Remove the fuel tank.

FUEL SYSTEM [SKYACTIV-G 2.0]

Evaporative hose installation note

1. Install the evaporative hose as shown in the figure.

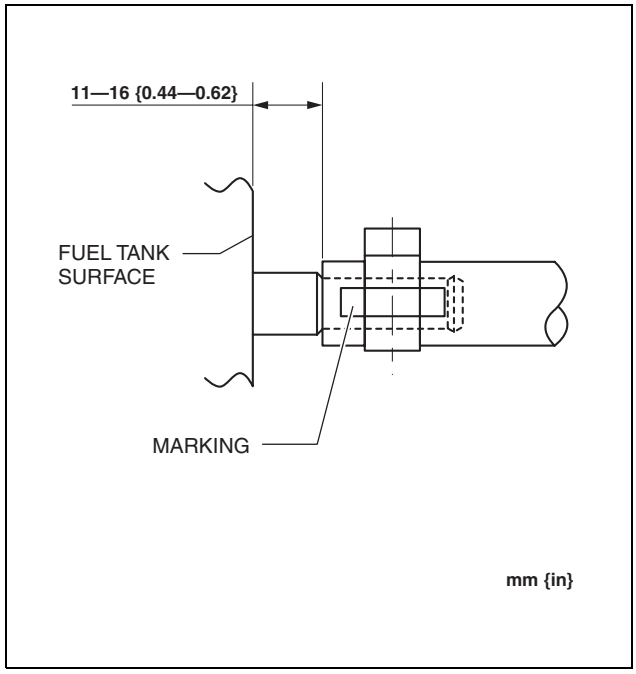

ac5wzw0000138

Breather hose installation note

1. Install the breather hose as shown in the figure.

Fuel tank side

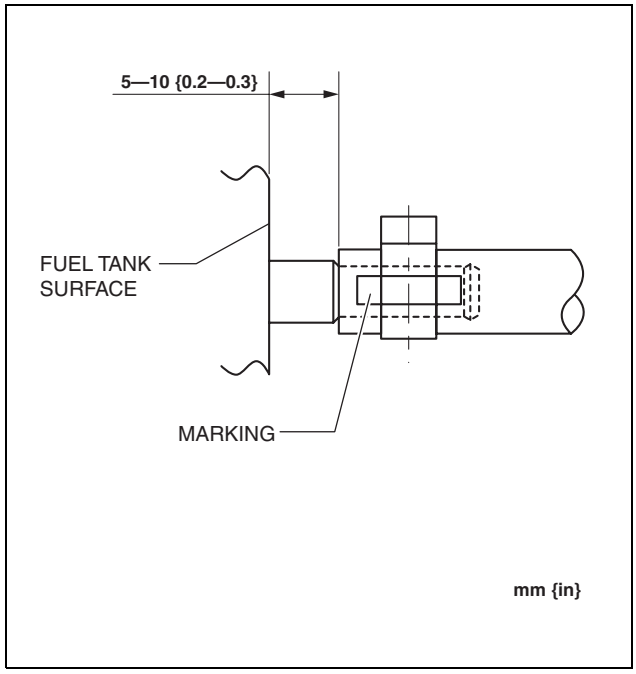

ac5uuw00000396

FUEL SYSTEM [SKYACTIV-G 2.0]

Fuel-filler pipe side

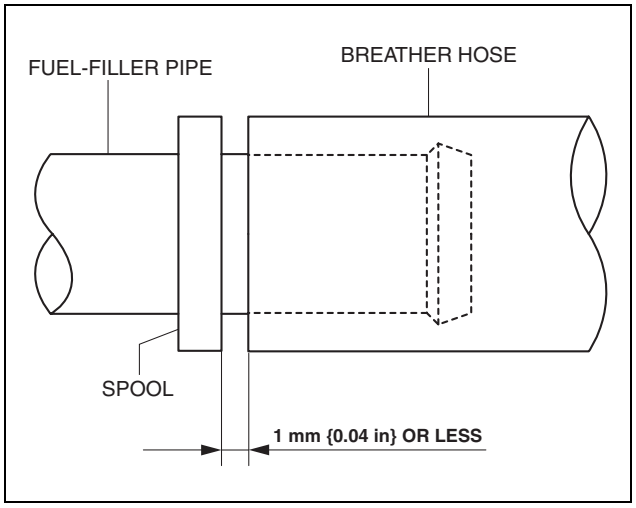

ac5wzw0000139

Joint hose installation note

1. Install the joint hose as shown in the figure.

Fuel tank side

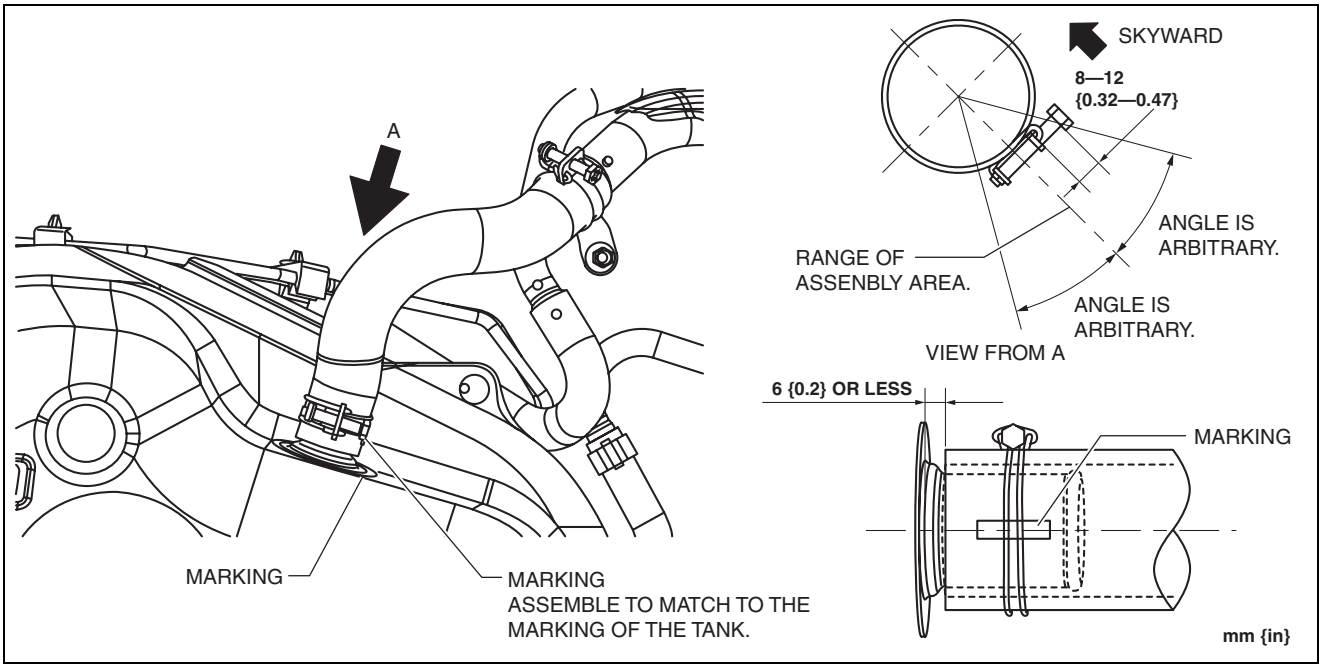

ac5uuw00000398

FUEL SYSTEM [SKYACTIV-G 2.0]

Fuel-filler pipe side

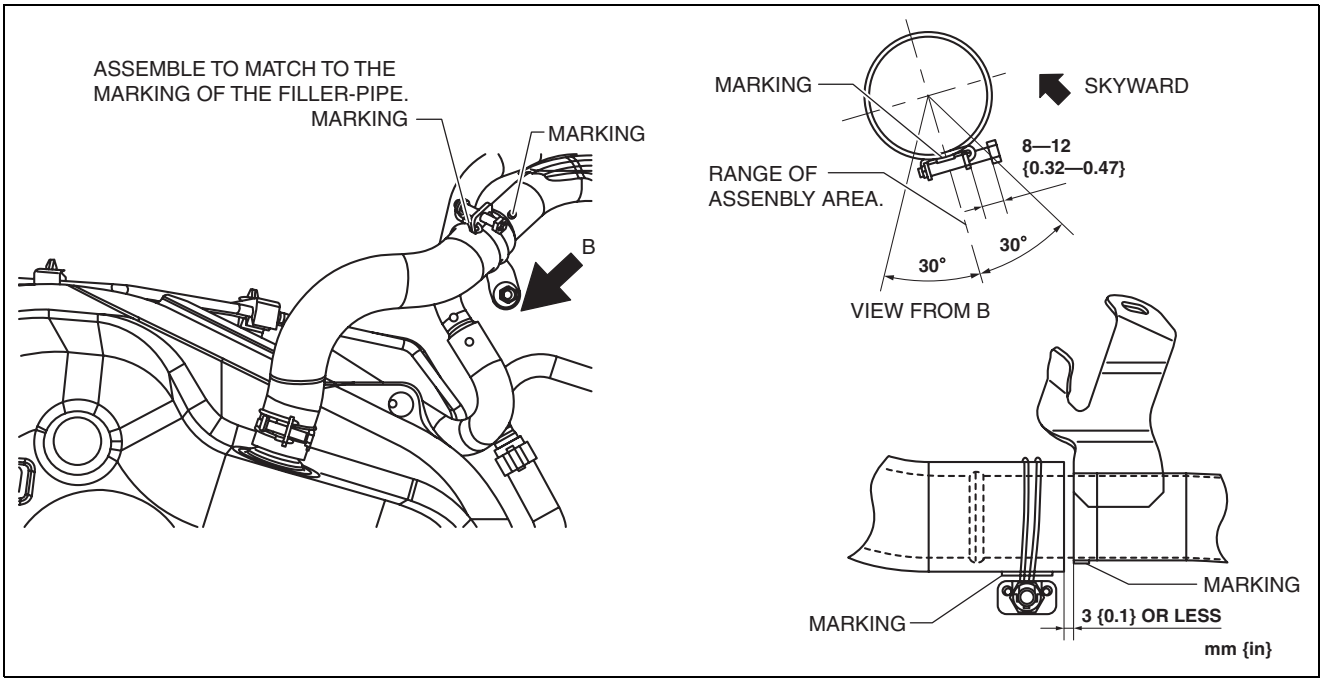

ac5uuw00000399

4WD

1. Level the vehicle.
2. Complete the “BEFORE SERVICE PRECAUTION”. (See 01-14A-6 BEFORE SERVICE PRECAUTION [SKYACTIV-G 2.0].)
3. Drain the fuel. (See 01-14A-11 FUEL DRAINING PROCEDURE [SKYACTIV-G 2.0].)
4. Using the following procedure:
   6:4 split type
   1. Remove the rear seat cushion. (See 09-13-76 REAR SEAT CUSHION REMOVAL/INSTALLATION.)
   4:2:4 split type
   1. Set the rear seat aside as shown in the figure. (See 09-13-56 REAR SEAT REMOVAL/INSTALLATION.)

Main side

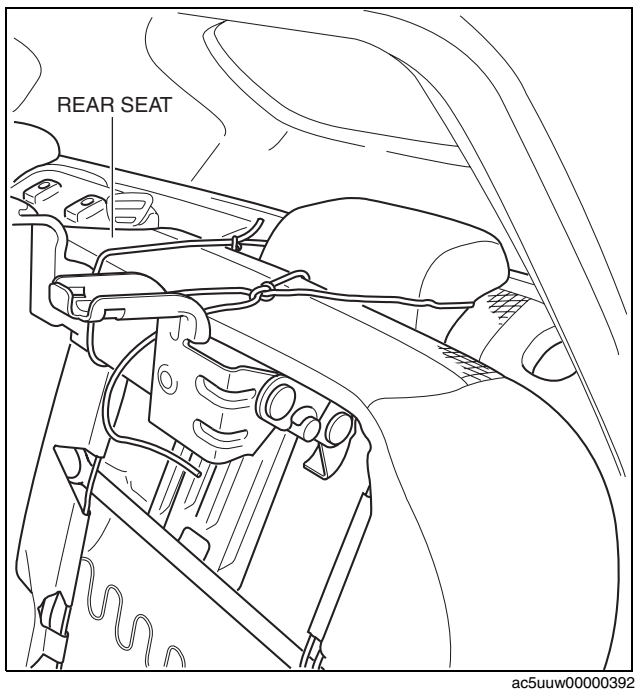

ac5uuw00000392

FUEL SYSTEM [SKYACTIV-G 2.0]

Sub side

5. Partially peel back the floor mat as shown in the figure.

Main side

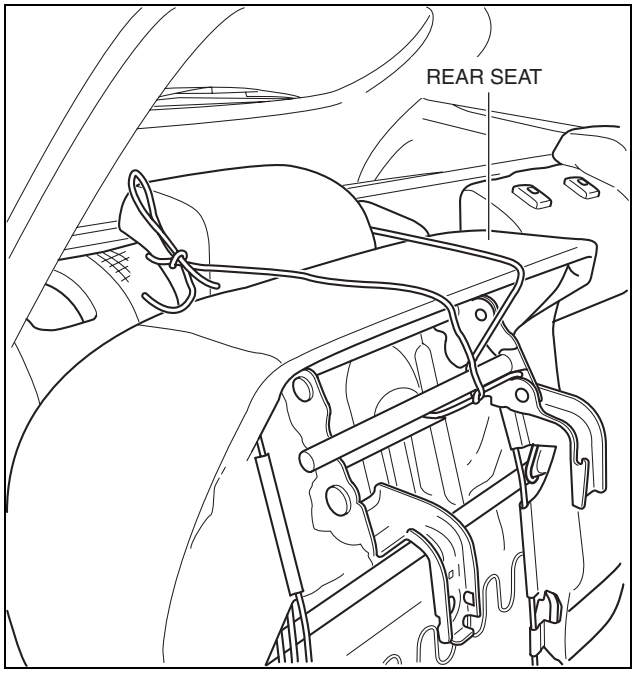

ac5uuw00000400

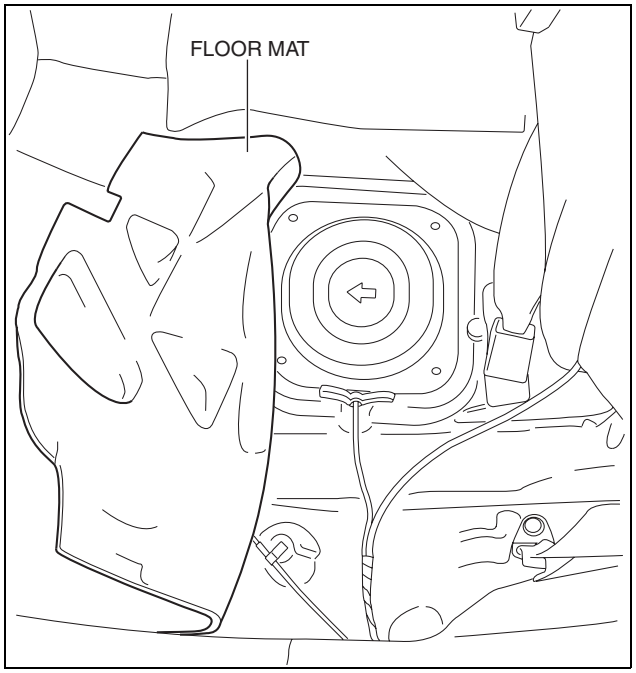

ac5uuw00000393

FUEL SYSTEM [SKYACTIV-G 2.0]

Sub side

6. Remove the service hole cover.

Main side

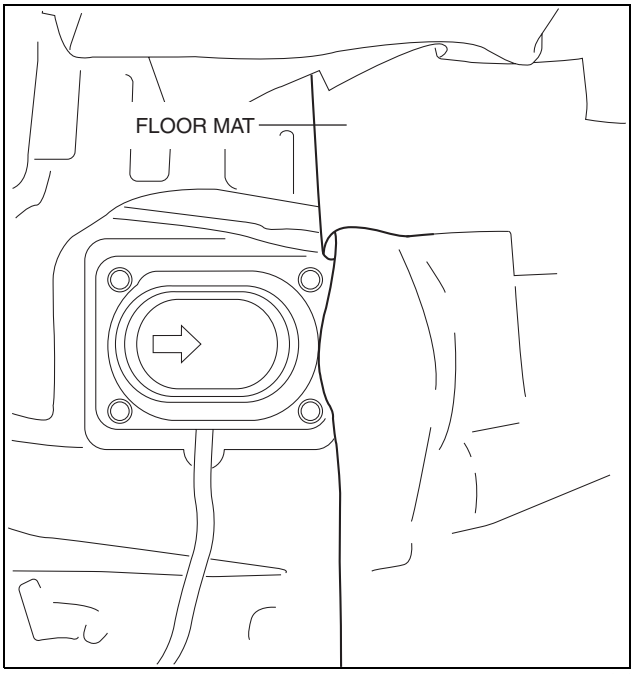

ac5uuw00000401

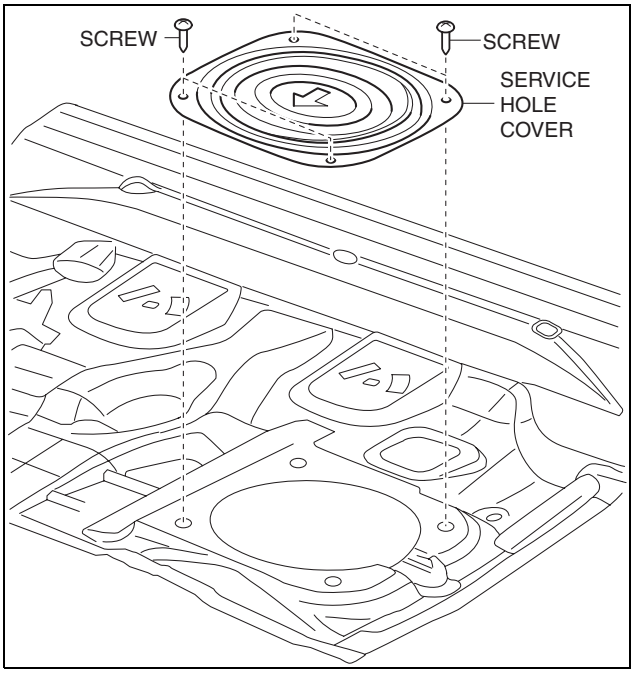

ac5uuw00000394

FUEL SYSTEM [SKYACTIV-G 2.0]

Sub side

7. Disconnect the following parts:
   Main side
   - Fuel pump unit connector
   - Quick release connector (See 01-14A-49 QUICK RELEASE CONNECTOR REMOVAL/ INSTALLATION [SKYACTIV-G 2.0].)

   Sub side
   - Fuel gauge sender unit (sub) connector
8. Remove the floor under cover. (See 09-16-44 FLOOR UNDER COVER REMOVAL/ INSTALLATION.)
9. Disconnect the HO2S connector.
10. Remove the TWC and HO2S as a single unit. (See 01-15A-2 EXHAUST SYSTEM REMOVAL/ INSTALLATION [SKYACTIV-G 2.0].)
11. Remove the propeller shaft. (See 03-15-2 PROPELLER SHAFT REMOVAL/ INSTALLATION.)
12. Remove in the order indicated in the table.
13. Install in the reverse order of removal.
14. Complete the “AFTER SERVICE PRECAUTION”. (See 01-14A-7 AFTER SERVICE PRECAUTION [SKYACTIV-G 2.0].)

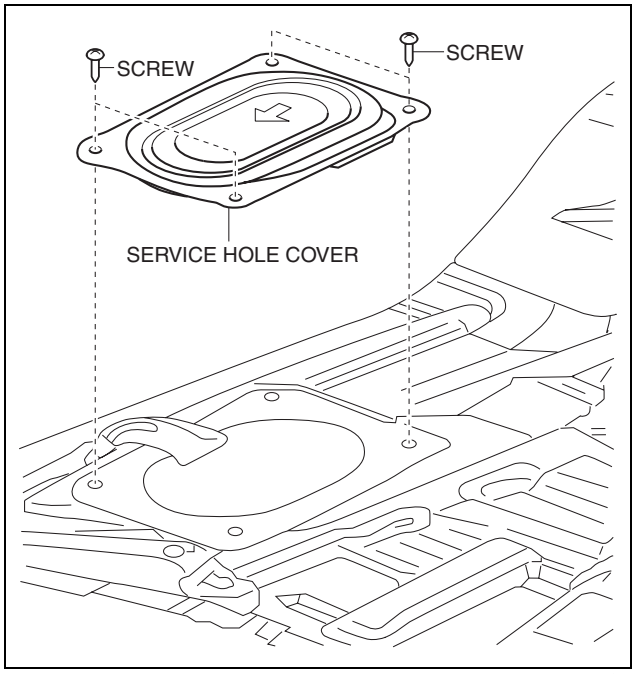

ac5uuw00000402

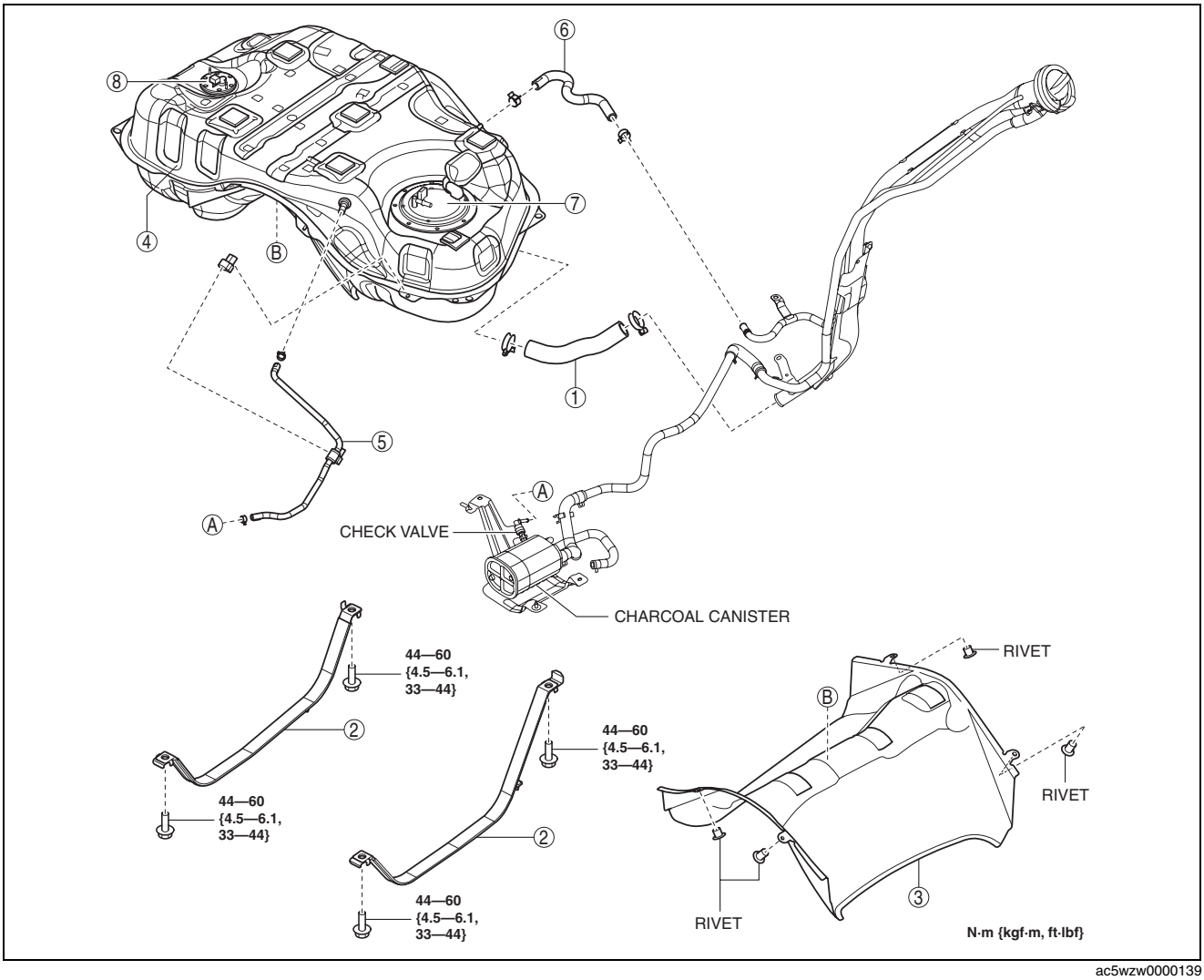

ac5wzw0000139

FUEL SYSTEM [SKYACTIV-G 2.0]

1	Joint hose (See 01-14A-25 Joint hose installation note.)
2	Fuel tank strap
3	Fuel tank insulator (See 01-14A-23 Fuel tank insulator removal note.)
4	Fuel tank (See 01-14A-23 Fuel tank removal note.)
5	Evaporative hose (See 01-14A-24 Evaporative hose installation note.)
6	Breather hose (See 01-14A-24 Breather hose installation note.)
7	Fuel pump unit (See 01-14A-38 FUEL PUMP UNIT REMOVAL/INSTALLATION [SKYACTIV-G 2.0].)
8	Fuel gauge sender unit (sub) (See 09-22-27 FUEL GAUGE SENDER UNIT REMOVAL/INSTALLATION [4WD].)

Fuel tank insulator removal note

Note
- The fuel tank insulator are installed using rivets.

1. Push out the mandrel using a hammer and punch (**2—2.8 mm {0.08—0.11 in}** diameter).
2. Remove the flange using a drill (**5 mm {0.20 in}** drill bit).

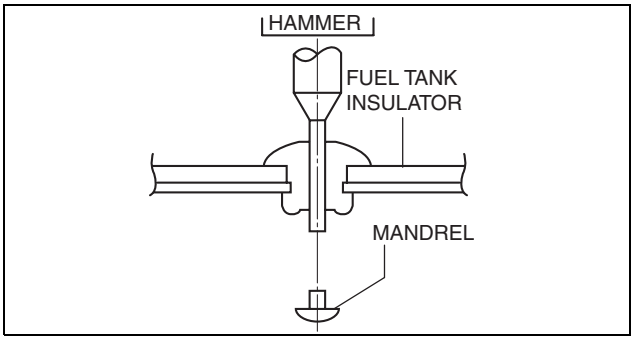

ac5wzw0000271

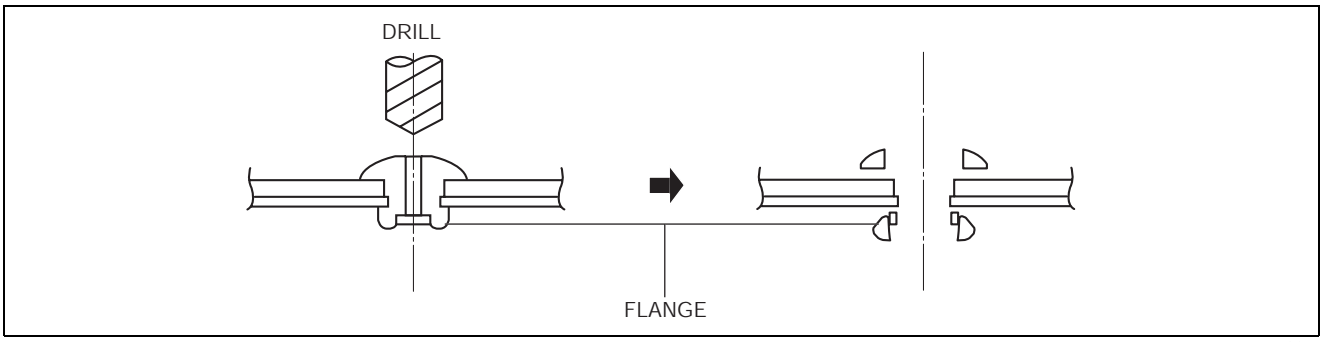

ar8uuw00001479

Fuel tank removal note

1. Remove the parking brake cable bracket installation bolts.
2. Disconnect the breather hose from the fuel-filler pipe.
3. Disconnect the evaporative hose from the check valve.
4. Remove the following parts as single unit.
   - Breather hose
   - Evaporative hose
   - Fuel pump unit
   - Fuel gauge sender unit (sub)
   - Fuel tank
5. Remove the fuel tank.

FUEL SYSTEM [SKYACTIV-G 2.0]

Evaporative hose installation note

1. Install the evaporative hose as shown in the figure.

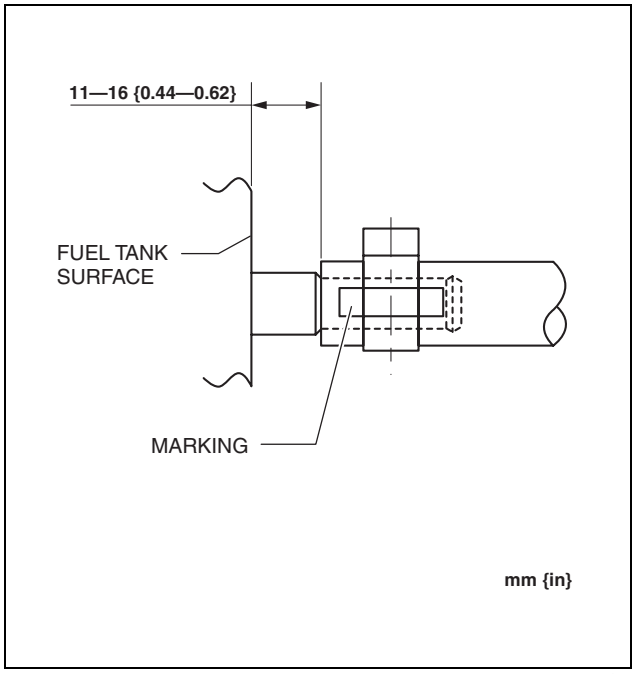

ac5wzw0000138

Breather hose installation note

1. Install the breather hose as shown in the figure.

Fuel tank side

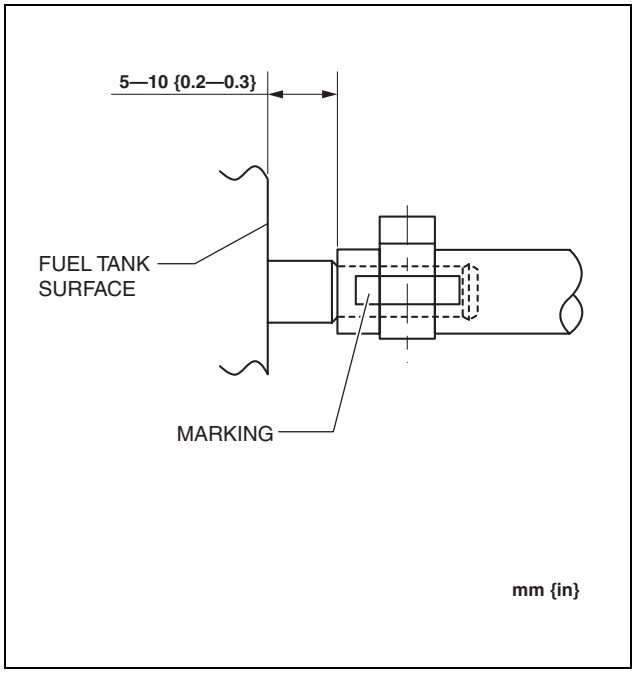

ac5uuw00000396

FUEL SYSTEM [SKYACTIV-G 2.0]

Fuel-filler pipe side

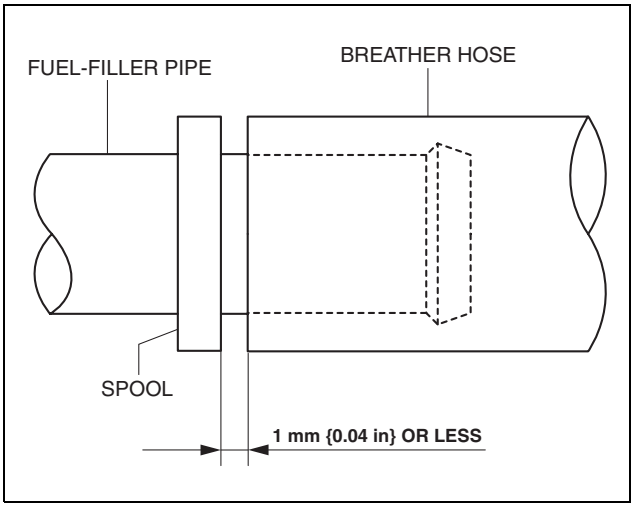

ac5wzw0000139

Joint hose installation note

1. Install the joint hose as shown in the figure.

Fuel tank side

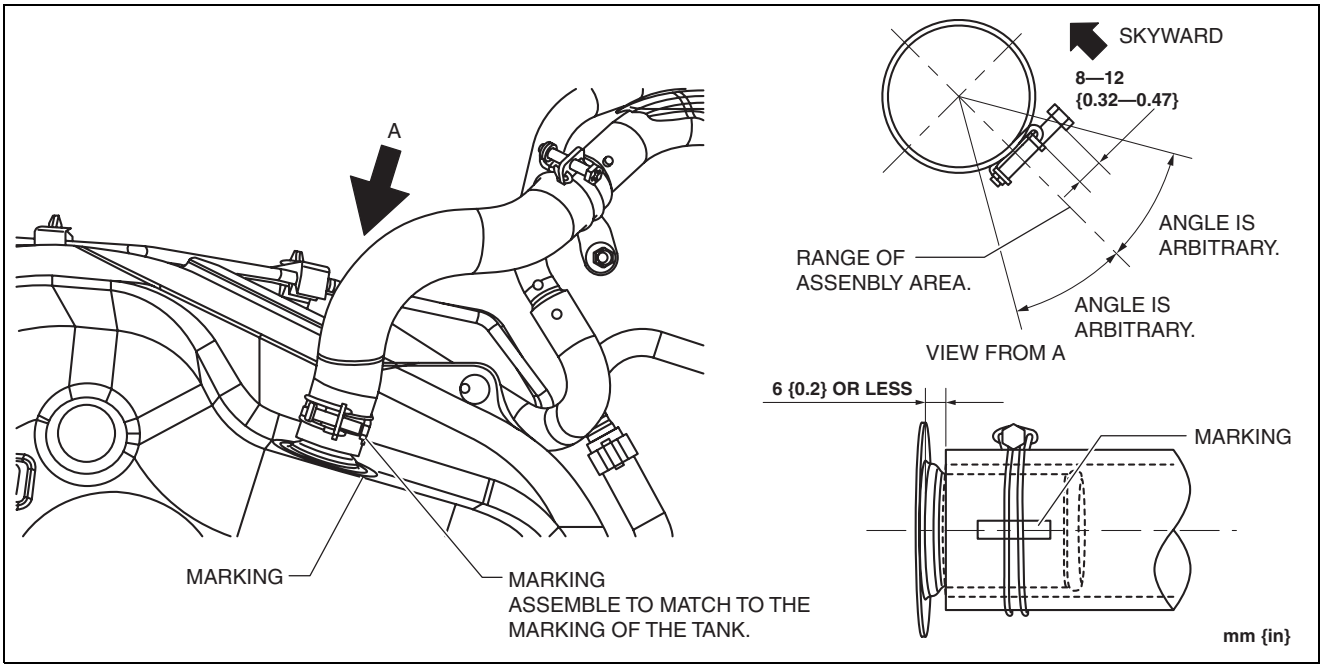

ac5uuw00000398

FUEL SYSTEM [SKYACTIV-G 2.0]

Fuel-filler pipe side

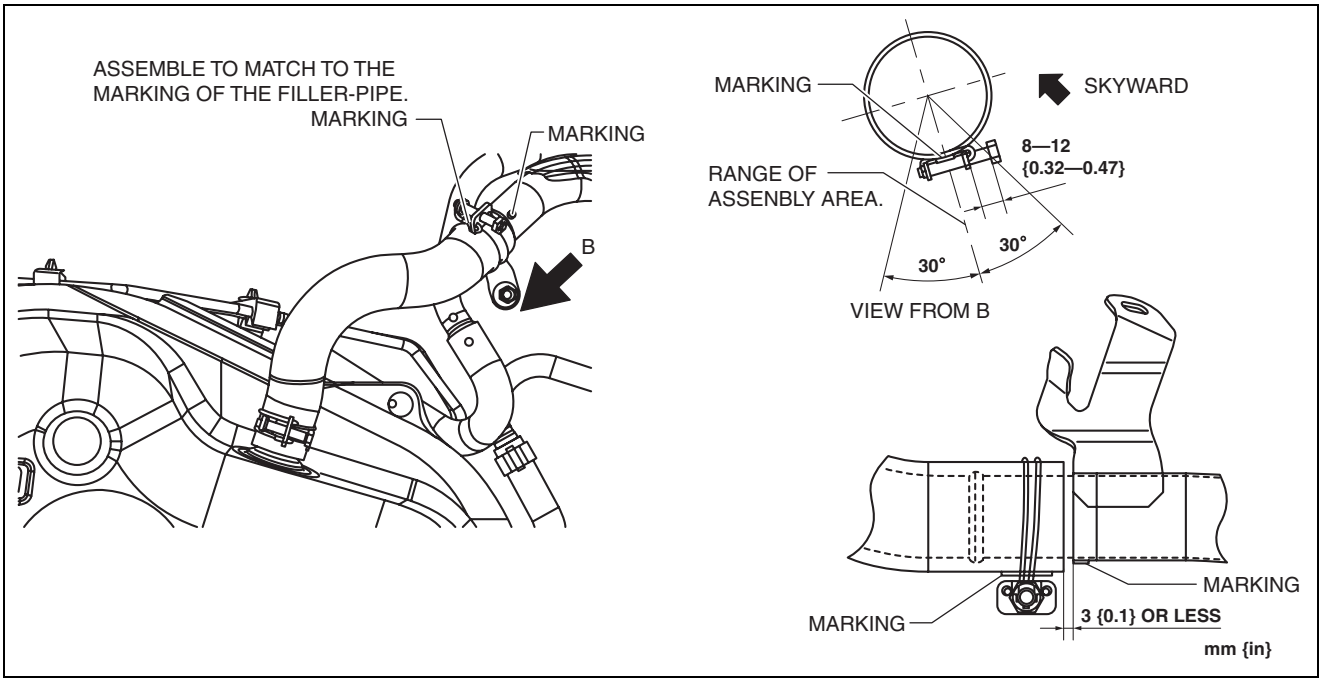

ac5uuw00000399

FUEL TANK INSPECTION [SKYACTIV-G 2.0]

id0114z5803200

Warning

- **Fuel is very flammable liquid. If fuel spills or leaks from the pressurized fuel system, it will cause serious injury or death and facility breakage. Fuel can also irritate skin and eyes. To prevent this, always complete the "Fuel Line Safety Procedure", while referring to the "BEFORE SERVICE PRECAUTION".**
- **A person charged with static electricity could cause a fire or explosion, resulting in death or serious injury. Before draining fuel, make sure to discharge static electricity by touching the vehicle body.**

Note

- The rollover valve and the fuel shut-off valve (built into the fuel tank) and also fuel tank leakage are inspected in this inspection.

2WD

1. Level the vehicle.
2. Complete the "BEFORE SERVICE PRECAUTION". (See 01-14A-6 BEFORE SERVICE PRECAUTION [SKYACTIV-G 2.0].)
3. Drain the fuel. (See 01-14A-11 FUEL DRAINING PROCEDURE [SKYACTIV-G 2.0].)
4. Using the following procedure:

   6:4 split type

   1. Remove the rear seat cushion. (See 09-13-76 REAR SEAT CUSHION REMOVAL/INSTALLATION.)

4:2:4 split type

1. Set the rear seat aside as shown in the figure. (See 09-13-56 REAR SEAT REMOVAL/ INSTALLATION.)

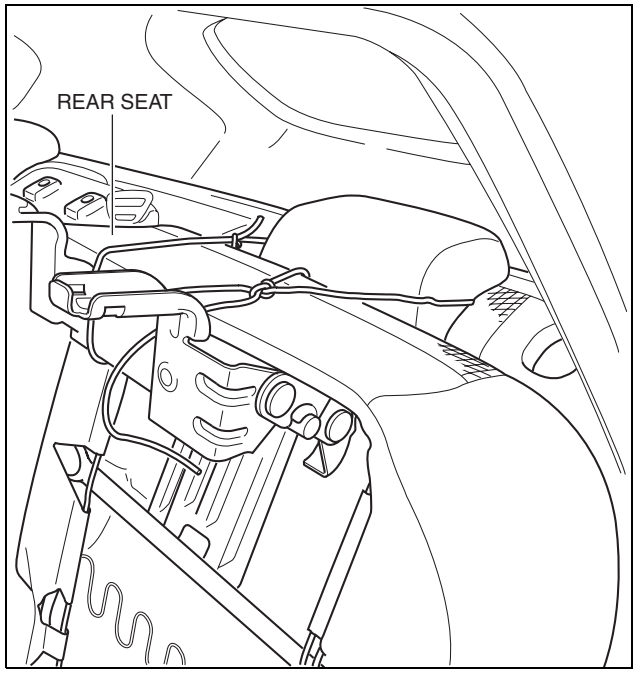

ac5uuw00000410

5. Partially peel back the floor mat as shown in the figure.

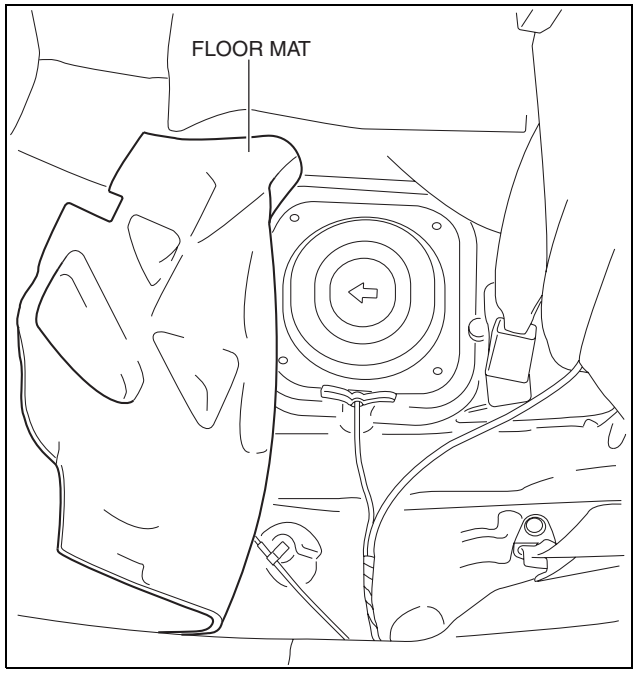

ac5uuw00000411

FUEL SYSTEM [SKYACTIV-G 2.0]

6. Remove the service hole cover.
7. Disconnect the following parts:
   - Fuel pump unit connector
   - Quick release connector (See 01-14A-49 QUICK RELEASE CONNECTOR REMOVAL/ INSTALLATION [SKYACTIV-G 2.0])
8. Remove the floor under cover. (See 09-16-44 FLOOR UNDER COVER REMOVAL/ INSTALLATION.)
9. Disconnect the HO2S connector.
10. Remove the TWC and HO2S as a single unit. (See 01-15A-2 EXHAUST SYSTEM REMOVAL/ INSTALLATION [SKYACTIV-G 2.0])
11. Remove the fuel tank and fuel pump unit as a single unit. (See 01-14A-13 FUEL TANK REMOVAL/INSTALLATION [SKYACTIV-G 2.0])
12. Perform the following procedure to verify the fuel tank airtightness.

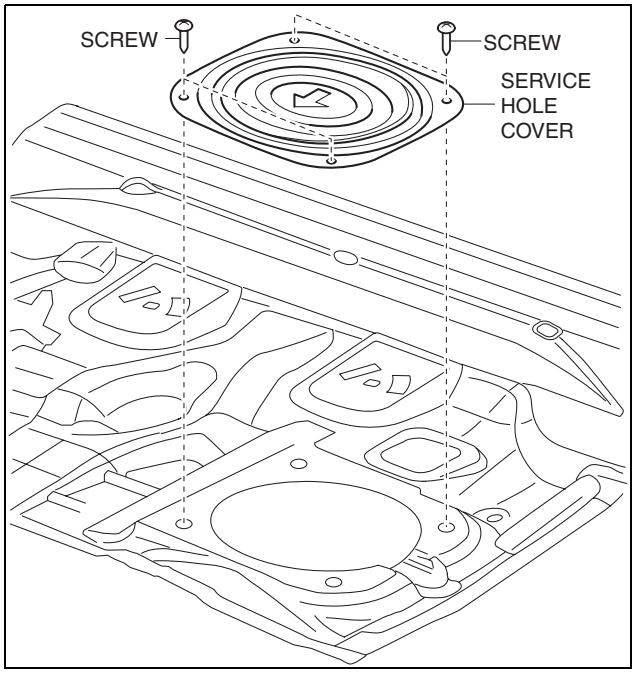

ac5uuw00000412

(1) Plug the fuel pump unit pipe, ports B and C.
(2) Apply a pressure of **3 kPa {23 mmHg, 0.9 inHg}** to port A and wait for a while.
(3) Verify that there is no air flow leakage from the fuel tank.
   - If there is air flow, replace the fuel tank. (See 01-14A-13 FUEL TANK REMOVAL/ INSTALLATION [SKYACTIV-G 2.0].)

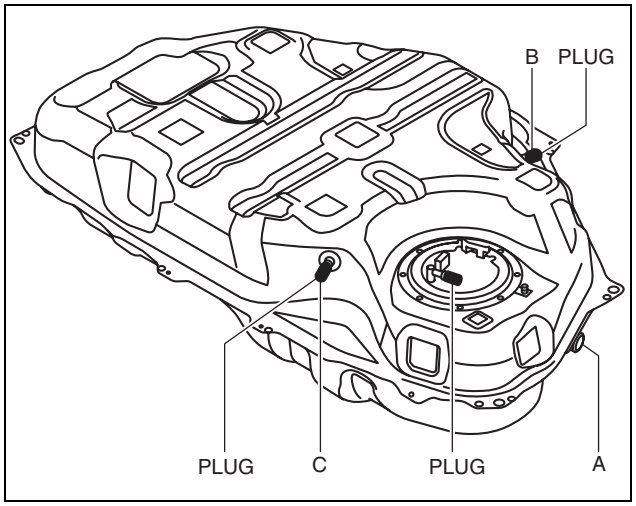

ac5uuw00000413

13. Plug the fuel pump unit pipe and port B.
14. Level the fuel tank.
15. Apply a pressure of **3 kPa {23 mmHg, 0.9 inHg}** to port A and wait for a while.
16. With the pressure still applied, verify that there is air flow from port C and the pressure is **0—3 kPa {0—23 mmHg, 0—0.9 inHg}**.
    - If there is no air flow, replace the fuel tank. (See 01-14A-13 FUEL TANK REMOVAL/ INSTALLATION [SKYACTIV-G 2.0].)
17. Apply a pressure of **-0.5 kPa {-3.8 mmHg, -0.1 inHg}** to port A and wait for a while.
18. With the pressure still applied, verify that there is air flow from port C and the pressure is **-0.5—0 kPa {-3.8—0 mmHg, -0.1—0 inHg}**.
    - If there is no air flow, replace the fuel tank. (See 01-14A-13 FUEL TANK REMOVAL/ INSTALLATION [SKYACTIV-G 2.0].)
    - If there is air flow, place the fuel tank upside down.

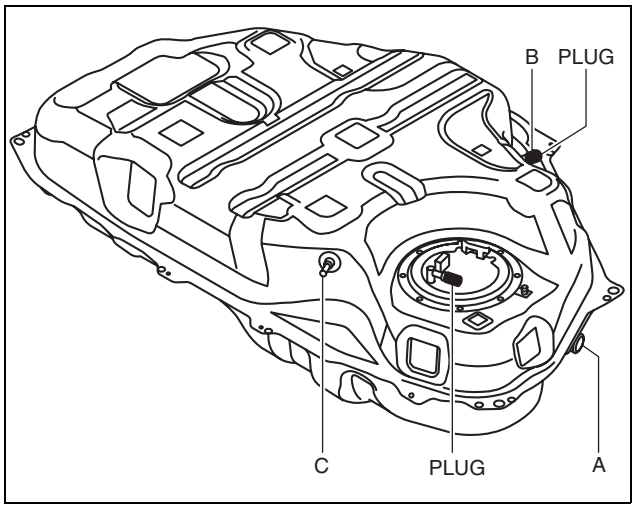

ac5uuw00000414

FUEL SYSTEM [SKYACTIV-G 2.0]

19. Apply a pressure to port A and wait for a while.
20. With the pressure still applied, verify that there is no air flow from port C.
    - If there is air flow, replace the fuel tank. (See 01-14A-13 FUEL TANK REMOVAL/INSTALLATION [SKYACTIV-G 2.0].)

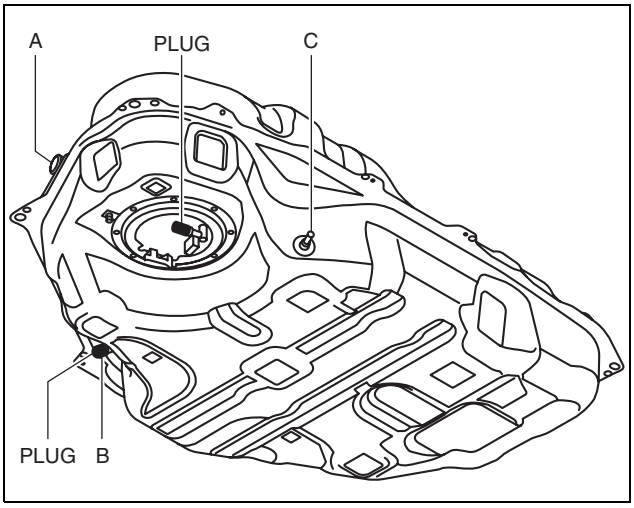

ac5uuw00000415

4WD

1. Level the vehicle.
2. Complete the “BEFORE SERVICE PRECAUTION”. (See 01-14A-6 BEFORE SERVICE PRECAUTION [SKYACTIV-G 2.0].)
3. Drain the fuel. (See 01-14A-11 FUEL DRAINING PROCEDURE [SKYACTIV-G 2.0].)
4. Using the following procedure:
   6:4 split type
   1. Remove the rear seat cushion. (See 09-13-76 REAR SEAT CUSHION REMOVAL/INSTALLATION.)
   4:2:4 split type
   1. Set the rear seat aside as shown in the figure. (See 09-13-56 REAR SEAT REMOVAL/INSTALLATION.)

Main side

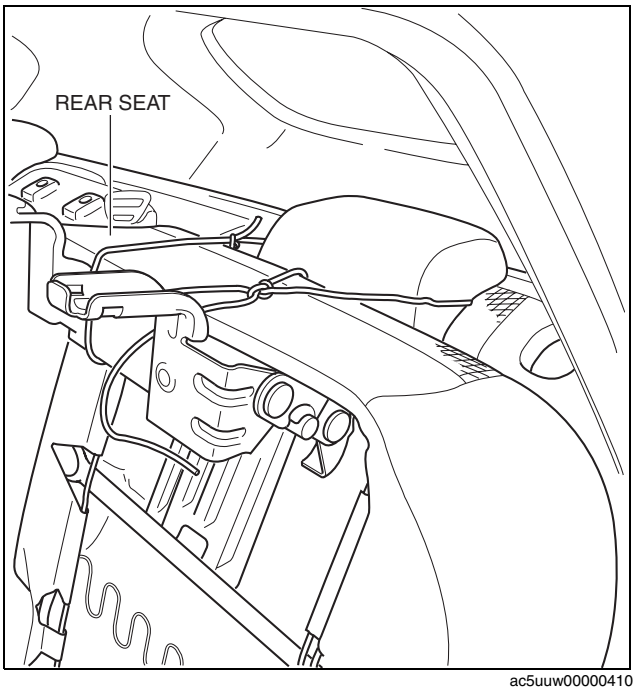

ac5uuw00000410

FUEL SYSTEM [SKYACTIV-G 2.0]

Sub side

5. Partially peel back the floor mat as shown in the figure.

Main side

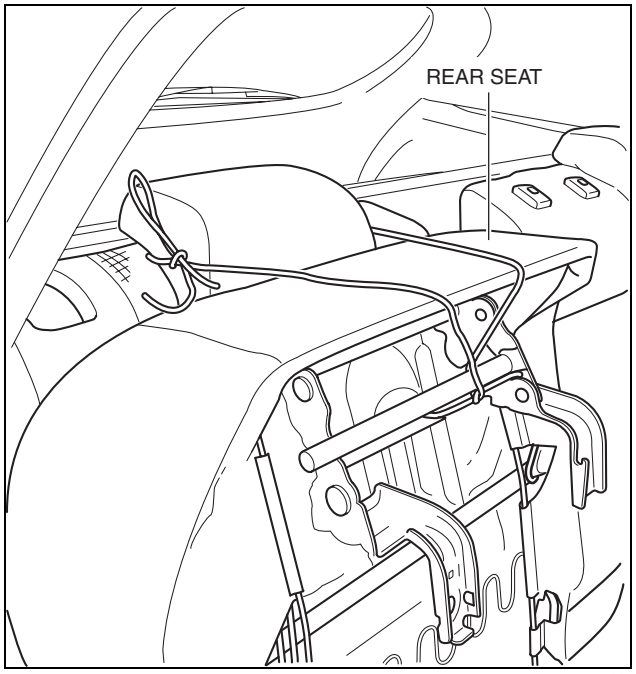

ac5uuw00000416

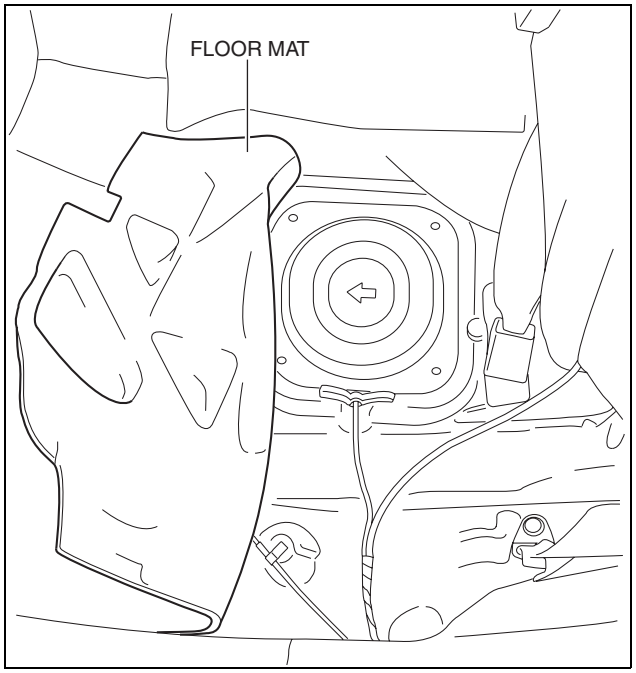

ac5uuw00000411

FUEL SYSTEM [SKYACTIV-G 2.0]

Sub side

6. Remove the service hole cover.

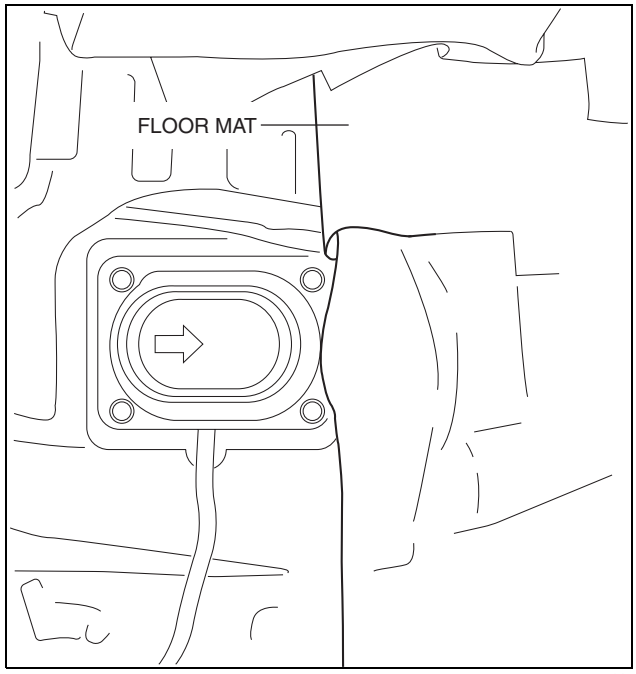

ac5uuw00000417

Main side

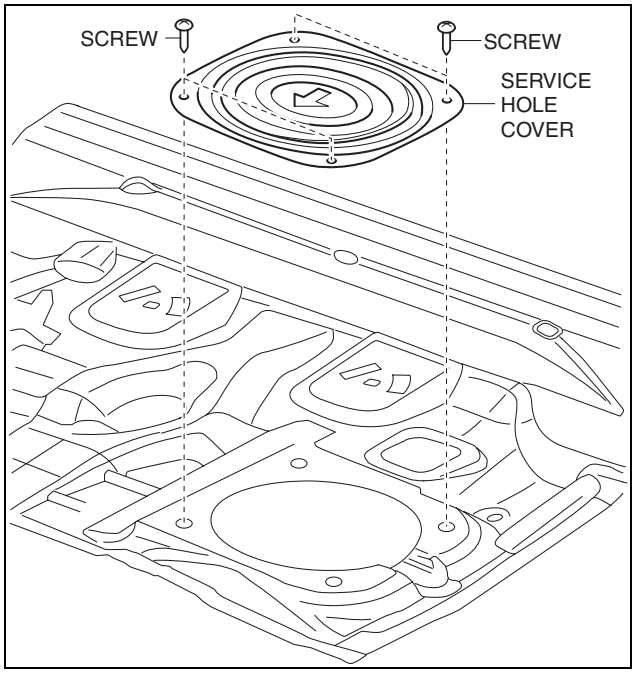

ac5uuw00000412

FUEL SYSTEM [SKYACTIV-G 2.0]

Sub side

7. Disconnect the following parts:
   Main side
   - Fuel pump unit connector
   - Quick release connector (See 01-14A-49 QUICK RELEASE CONNECTOR REMOVAL/ INSTALLATION [SKYACTIV-G 2.0])

   Sub side
   - Fuel gauge sender unit (sub) connector
8. Remove the floor under cover. (See 09-16-44 FLOOR UNDER COVER REMOVAL/ INSTALLATION.)
9. Disconnect the HO2S connector.
10. Remove the TWC and HO2S as a single unit. (See 01-15A-2 EXHAUST SYSTEM REMOVAL/ INSTALLATION [SKYACTIV-G 2.0])
11. Remove the propeller shaft. (See 03-15-2 PROPELLER SHAFT REMOVAL/ INSTALLATION.)
12. Remove the fuel tank, fuel pump unit and fuel gauge sender unit (sub) as a single unit. (See 01-14A-13 FUEL TANK REMOVAL/INSTALLATION [SKYACTIV-G 2.0])
13. Perform the following procedure to verify the fuel tank airtightness.
    (1) Plug the fuel pump unit pipe, ports B and C.
    (2) Apply a pressure of **3 kPa {23 mmHg, 0.9 inHg}** to port A and wait for a while.
    (3) Verify that there is no air flow leakage from the fuel tank.
    - If there is air flow, replace the fuel tank. (See 01-14A-13 FUEL TANK REMOVAL/ INSTALLATION [SKYACTIV-G 2.0].)

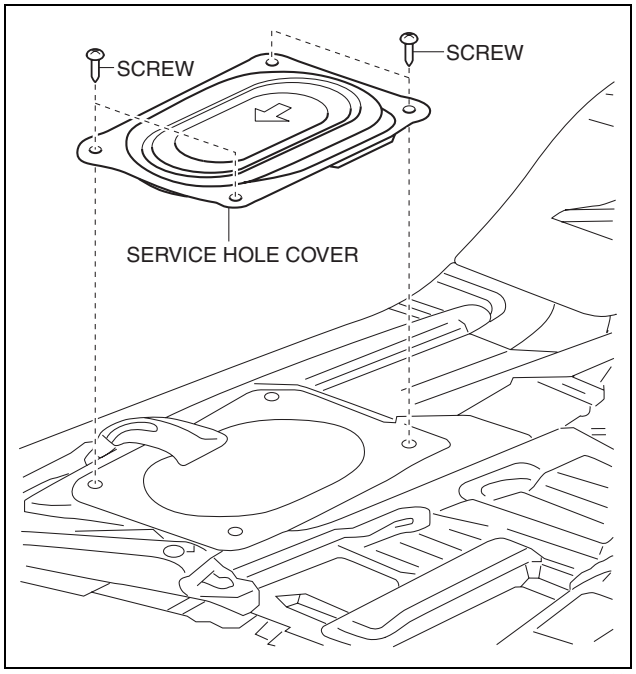

ac5uuw00000418

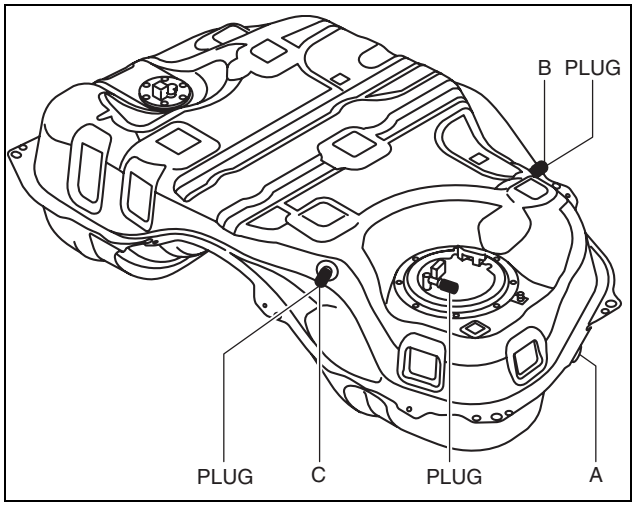

ac5uuw00000419

14. Plug the fuel pump unit pipe and port B.
15. Level the fuel tank.
16. Apply a pressure of **3 kPa {23 mmHg, 0.9 inHg}** to port A and wait for a while.
17. With the pressure still applied, verify that there is air flow from port C and the pressure is **0—3 kPa {0—23 mmHg, 0—0.9 inHg}**.
    - If there is no air flow, replace the fuel tank. (See 01-14A-13 FUEL TANK REMOVAL/ INSTALLATION [SKYACTIV-G 2.0].)
18. Apply a pressure of **-0.5 kPa {-3.8 mmHg, -0.1 inHg}** to port A and wait for a while.
19. With the pressure still applied, verify that there is air flow from port C and the pressure is **-0.5—0 kPa {-3.8—0 mmHg, -0.1—0 inHg}**.
    - If there is no air flow, replace the fuel tank. (See 01-14A-13 FUEL TANK REMOVAL/ INSTALLATION [SKYACTIV-G 2.0].)
    - If there is air flow, place the fuel tank upside down.

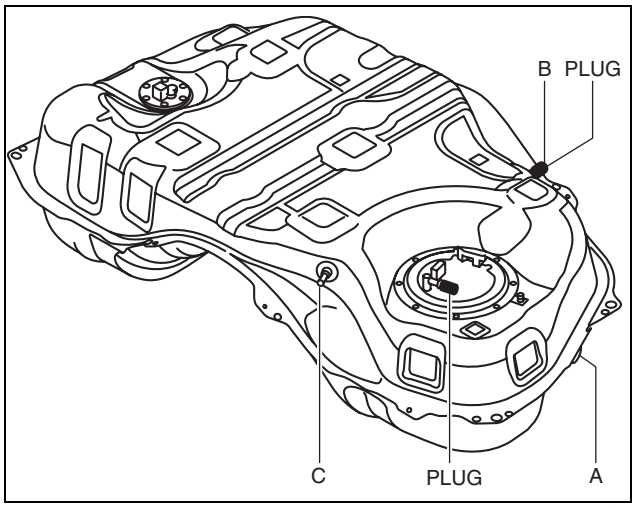

ac5uuw00000420

20. Apply a pressure to port A and wait for a while.
21. With the pressure still applied, verify that there is no air flow from port C.
    - If there is air flow, replace the fuel tank. (See 01-14A-13 FUEL TANK REMOVAL/ INSTALLATION [SKYACTIV-G 2.0].)

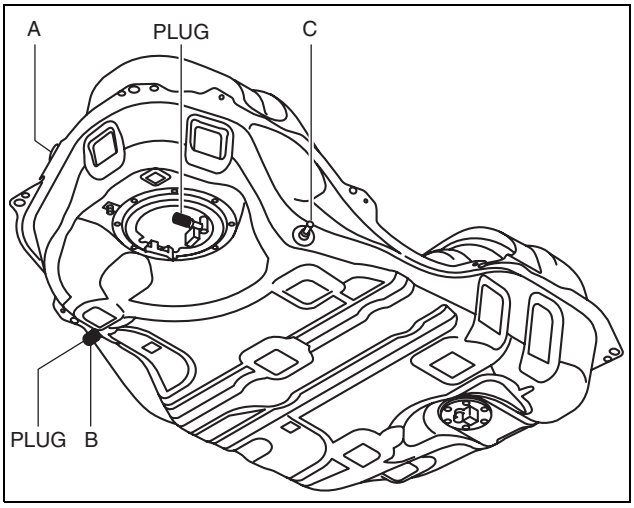

ac5uuw00000421

FUEL-FILLER PIPE REMOVAL/INSTALLATION [SKYACTIV-G 2.0]

id0114z5806900

Warning

- **Fuel is very flammable liquid. If fuel spills or leaks from the pressurized fuel system, it will cause serious injury or death and facility breakage. Fuel can also irritate skin and eyes. To prevent this, always complete the "Fuel Line Safety Procedure", while referring to the "BEFORE SERVICE PRECAUTION".**
- **A person charged with static electricity could cause a fire or explosion, resulting in death or serious injury. Before draining fuel, make sure to discharge static electricity by touching the vehicle body.**

Caution

- **Disconnecting/connecting the quick release connector without cleaning it may cause damage to the fuel pipe and quick release connector. Always clean the quick release connector joint area before disconnecting/connecting using a cloth or soft brush, and make sure that it is free of foreign material.**

1. Level the vehicle.
2. Complete the "BEFORE SERVICE PRECAUTION". (See 01-14A-6 BEFORE SERVICE PRECAUTION [SKYACTIV-G 2.0].)
3. Drain the fuel. (See 01-14A-11 FUEL DRAINING PROCEDURE [SKYACTIV-G 2.0].)
4. Open the fuel-filler lid.

FUEL SYSTEM [SKYACTIV-G 2.0]

5. Remove in the order indicated in the table.

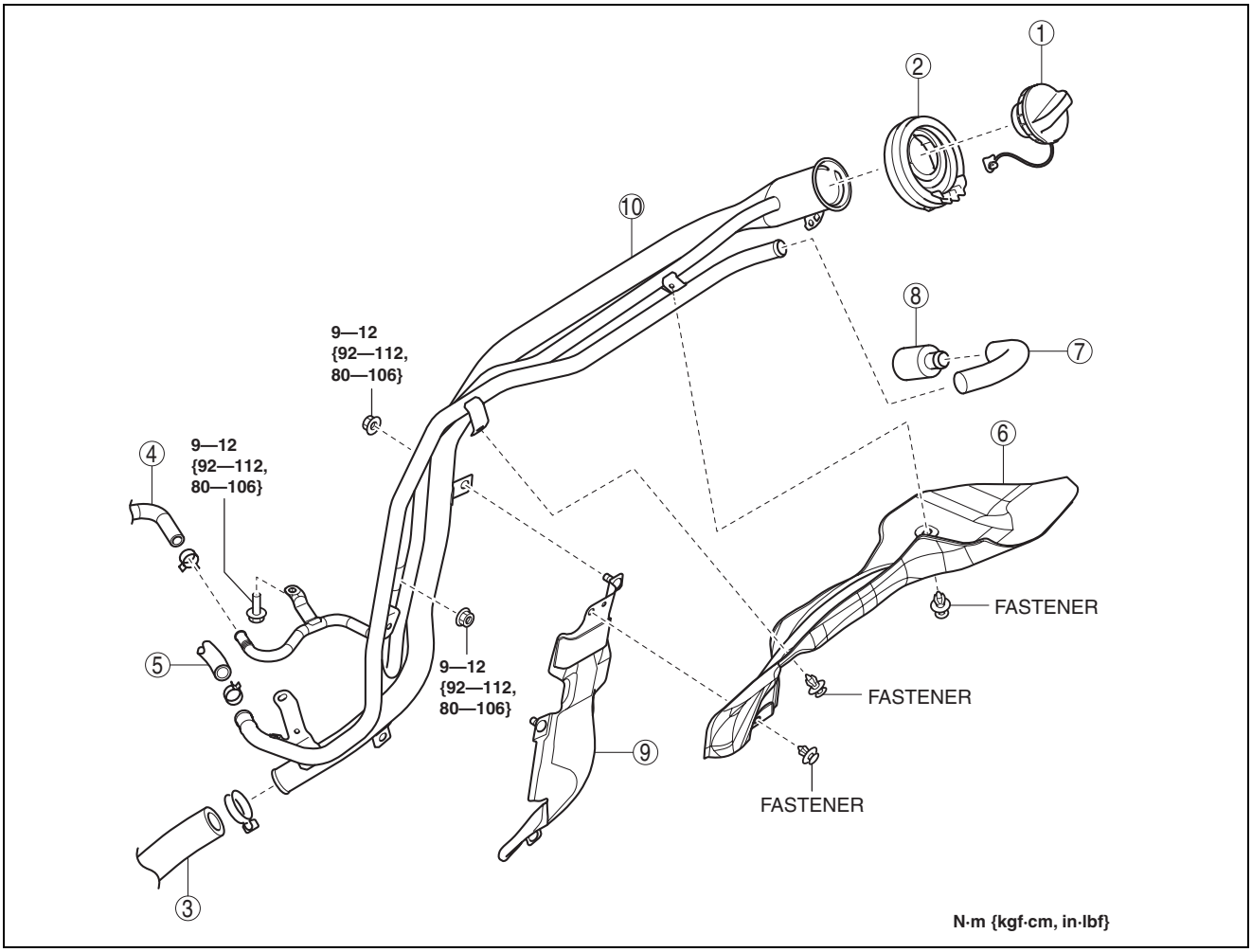

ac5wzw0000139

1	Fuel-filler cap
2	Dust cover (See 01-14A-35 Dust Cover Removal Note.)
3	Joint hose (See 01-14A-36 Joint Hose Installation Note.)
4	Breather hose (See 01-14A-36 Breather Hose Installation Note.)

5	Evaporative hose No.1 (See 01-14A-35 Evaporative Hose No.1 Installation Note.)
6	Protector (if equipped)
7	Evaporative hose No.2
8	Plug
9	Fuel-filler pipe protector
10	Fuel-filler pipe (See 01-14A-35 Fuel-filler Pipe Removal Note.)

6. Install in the reverse order of removal.
7. Complete the “AFTER SERVICE PRECAUTION”. (See 01-14A-7 AFTER SERVICE PRECAUTION [SKYACTIV-G 2.0].)

FUEL SYSTEM [SKYACTIV-G 2.0]

Dust Cover Removal Note

1. Remove the rear mudguard (LH). (See 09-16-47 MUDGUARD REMOVAL/INSTALLATION.)
2. Release the dust cover tab using a flathead screwdriver as shown in the figure.
3. Remove the dust cover.

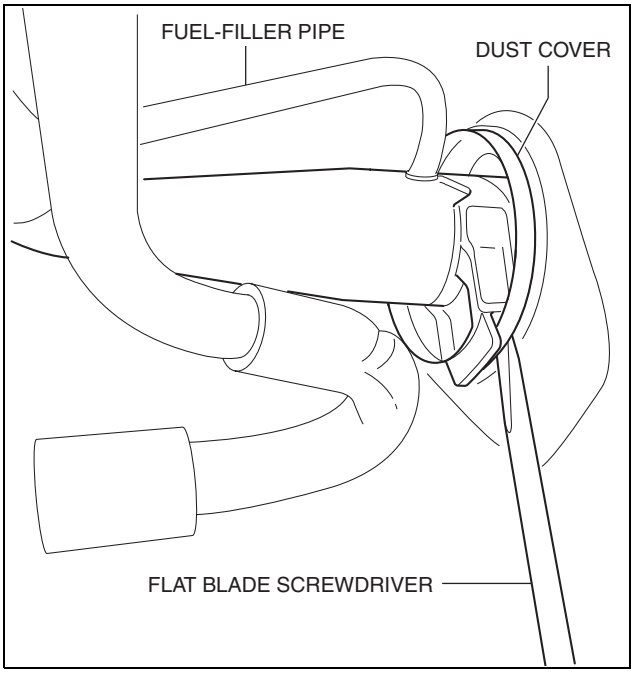

ac5uuw00000427

Fuel-filler Pipe Removal Note

1. Remove the rear tire (LH). (See 02-12-1 WHEEL AND TIRE SPECIFICATION.)
2. Remove the rear parking brake cable installation nut (LH). (See 04-12-7 REAR PARKING BRAKE CABLE REMOVAL/INSTALLATION.)
3. Remove the rear crossmember. (See 02-14-40 REAR CROSSMEMBER REMOVAL/INSTALLATION [2WD].) (See 02-14-44 REAR CROSSMEMBER REMOVAL/INSTALLATION [4WD].)
4. Remove the fuel-filler pipe.

Evaporative Hose No.1 Installation Note

1. Install the evaporative hose No.1 as shown in the figure.

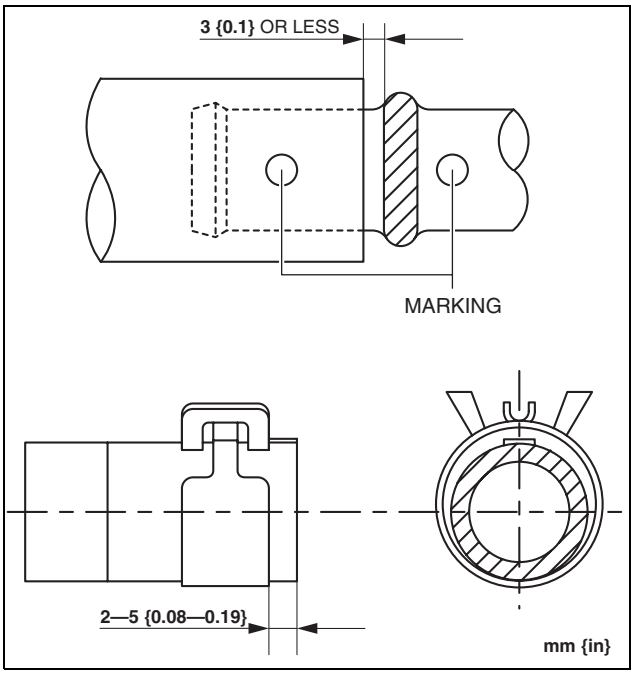

ac5wzw0000269

FUEL SYSTEM [SKYACTIV-G 2.0]

Breather Hose Installation Note

1. Install the breather hose as shown in the figure.

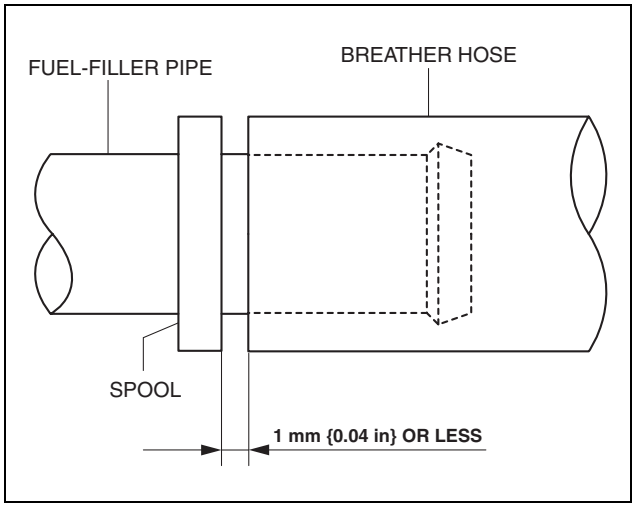

ac5wzw0000139

Joint Hose Installation Note

1. Install the joint hose as shown in the figure.

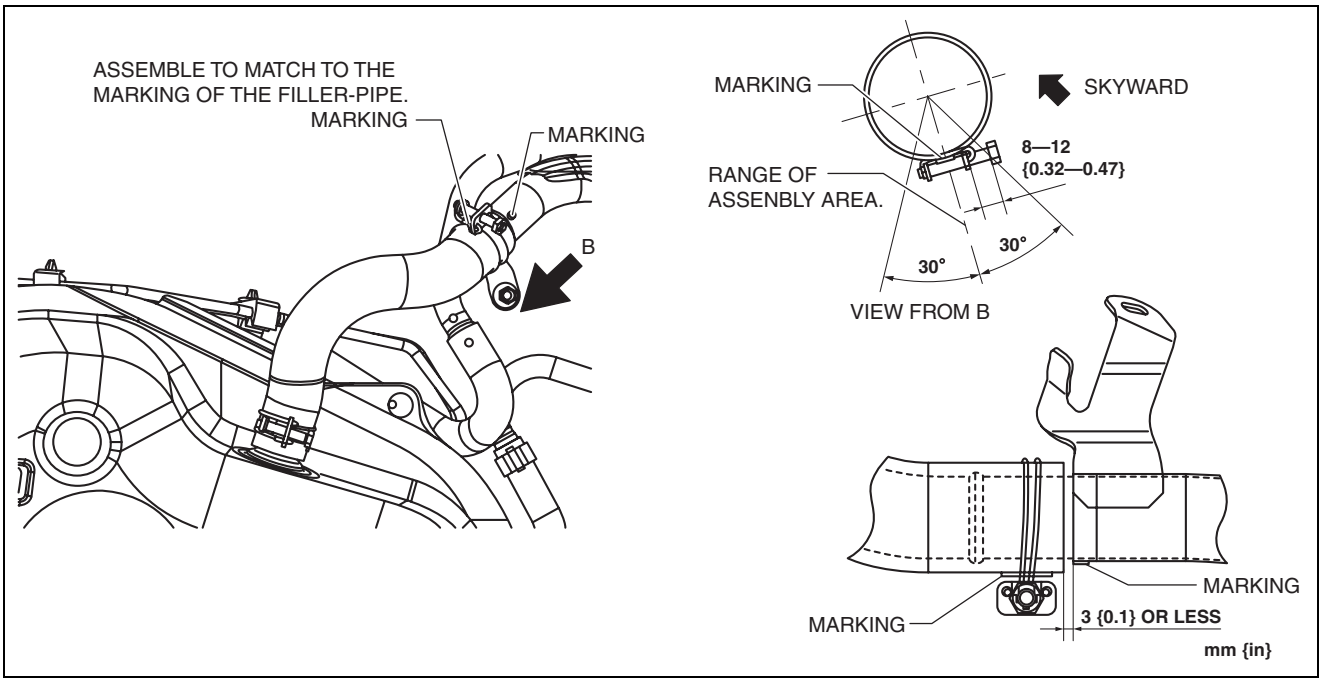

ac5uuw00000428

FUEL SYSTEM [SKYACTIV-G 2.0]

NON-RETURN VALVE INSPECTION [SKYACTIV-G 2.0]

id0114z5815300

Warning

- **Fuel is very flammable liquid. If fuel spills or leaks from the pressurized fuel system, it will cause serious injury or death and facility breakage. Fuel can also irritate skin and eyes. To prevent this, always complete the "Fuel Line Safety Procedure", while referring to the "BEFORE SERVICE PRECAUTION".**
- **A person charged with static electricity could cause a fire or explosion, resulting in death or serious injury. Before draining fuel, make sure to discharge static electricity by touching the vehicle body.**

1. Complete the "BEFORE SERVICE PRECAUTION". (See 01-14A-6 BEFORE SERVICE PRECAUTION [SKYACTIV-G 2.0].)
2. Disconnect the negative battery cable. (See 01-17A-11 NEGATIVE BATTERY CABLE DISCONNECTION/CONNECTION [SKYACTIV-G 2.0].) (See 01-17A-13 NEGATIVE BATTERY CABLE DISCONNECTION/CONNECTION [SKYACTIV-G 2.0 (WITHOUT i-stop)].)
3. Using the following procedure:
   6:4 split type
   1. Remove the rear seat cushion. (See 09-13-76 REAR SEAT CUSHION REMOVAL/INSTALLATION.)

   4:2:4 split type
   1. Set the rear seat aside as shown in the figure.
4. Remove the fuel pump unit. (See 01-14A-38 FUEL PUMP UNIT REMOVAL/INSTALLATION [SKYACTIV-G 2.0].)
5. Drain the fuel from the fuel tank to the position where the non-return valve is visible. (See 01-14A-11 FUEL DRAINING PROCEDURE [SKYACTIV-G 2.0].)

   Note
   - Non-return valve is integrated in the fuel tank.
   - The non-return valve is normally closed by the spring force.

6. Verify that the non-return valve is closed.
   - If the non-return valve is stuck open and does not open even when pulled up by a finger, replace the fuel tank. (See 01-14A-13 FUEL TANK REMOVAL/INSTALLATION [SKYACTIV-G 2.0].)

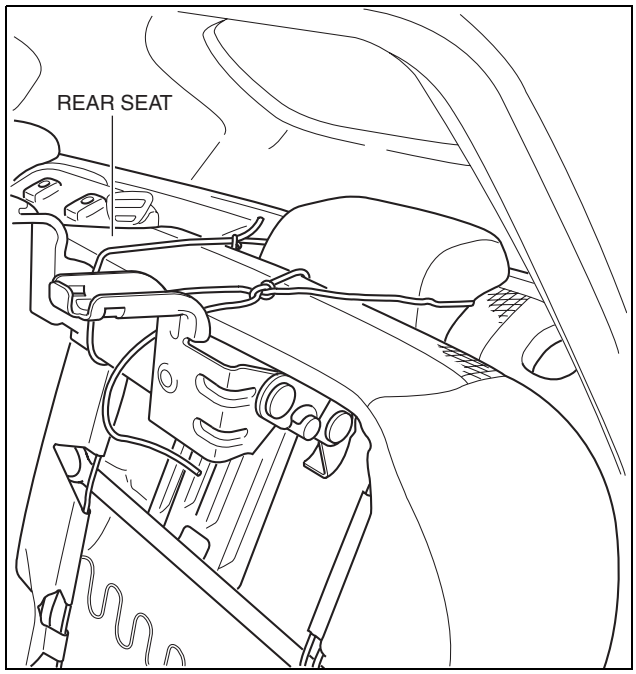

ac5uuw00000429

FUEL SYSTEM [SKYACTIV-G 2.0]

FUEL PUMP UNIT REMOVAL/INSTALLATION [SKYACTIV-G 2.0]

id0114z5800900

Warning

- **Fuel is very flammable liquid. If fuel spills or leaks from the pressurized fuel system, it will cause serious injury or death and facility breakage. Fuel can also irritate skin and eyes. To prevent this, always complete the "Fuel Line Safety Procedure", while referring to "BEFORE SERVICE PRECAUTION".**
- **A person charged with static electricity could cause a fire or explosion, resulting in death or serious injury. Before draining fuel, make sure to discharge static electricity by touching the vehicle body.**

Caution

- **Disconnecting/connecting the quick release connector without cleaning it may cause damage to the fuel pipe and quick release connector. Always clean the quick release connector joint area before disconnecting/connecting using a cloth or soft brush, and make sure that it is free of foreign material.**

1. Complete the "BEFORE SERVICE PRECAUTION". (See 01-14A-6 BEFORE SERVICE PRECAUTION [SKYACTIV-G 2.0].)
2. Using the following procedure:

Caution

- **Because the fuel surface is higher than the fuel pump unit installation surface, if the set plate is removed, it may result in fuel leakage. If the fuel gauge level indicates 1/2 or more, refer to the fuel draining procedure and drain 20 liters of fuel.**

Fuel gauge indicates 1/2 or more

1. Drain the fuel. (See 01-14A-11 FUEL DRAINING PROCEDURE [SKYACTIV-G 2.0].)

Fuel gauge indicates less than 1/2

1. Disconnect the negative battery cable. (See 01-17A-11 NEGATIVE BATTERY CABLE DISCONNECTION/CONNECTION [SKYACTIV-G 2.0].) (See 01-17A-13 NEGATIVE BATTERY CABLE DISCONNECTION/CONNECTION [SKYACTIV-G 2.0 (WITHOUT i-stop)].)

3. Remove the following part:

6:4 split type

1. Remove the rear seat cushion. (See 09-13-76 REAR SEAT CUSHION REMOVAL/INSTALLATION.)

4:2:4 split type

1. Set the rear seat aside as shown in the figure. (See 09-13-56 REAR SEAT REMOVAL/INSTALLATION.)

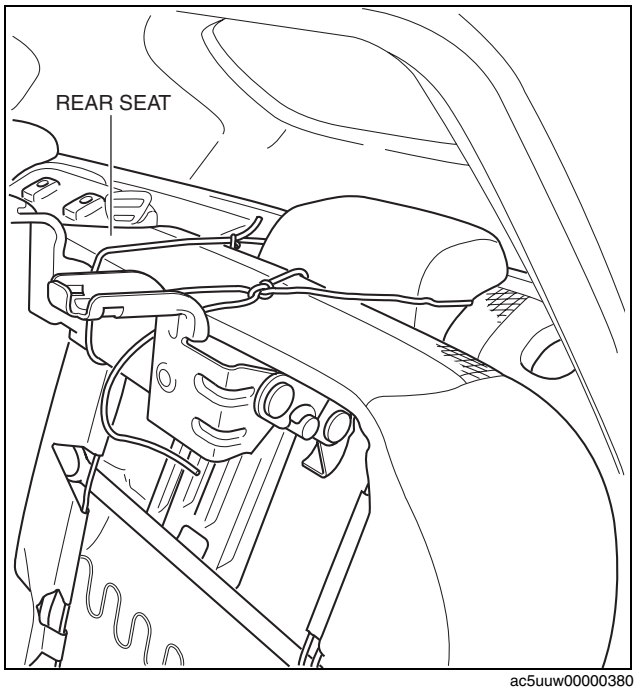

ac5uuw00000380

4. Partially peel back the floor mat as shown in the figure.

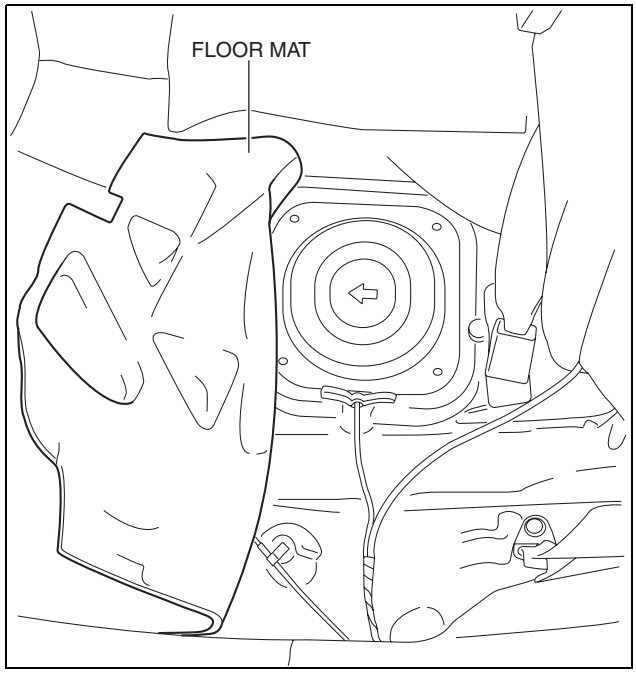

ac5uuw00000381

5. Remove the service hole cover.
6. Remove in the order indicated in the table.

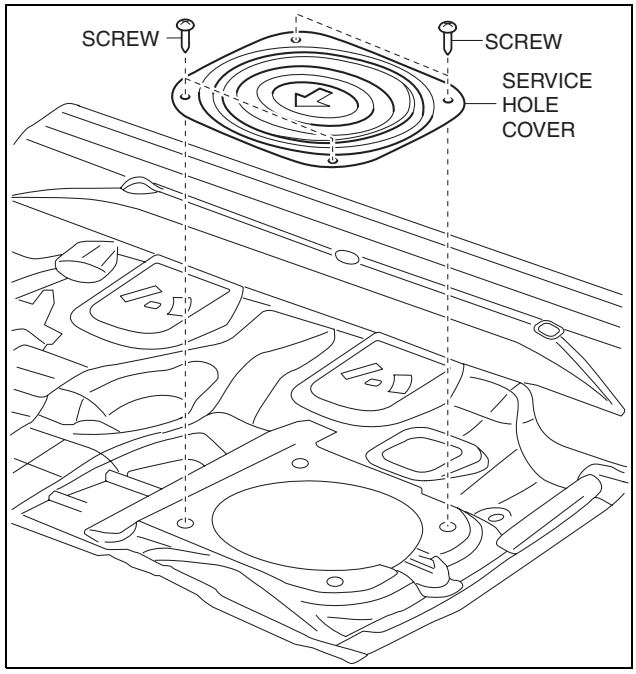

ac5uuw00000382

FUEL SYSTEM [SKYACTIV-G 2.0]

2WD

1	Fuel pump unit connector
2	Quick release connector (See 01-14A-49 QUICK RELEASE CONNECTOR REMOVAL/INSTALLATION [SKYACTIV-G 2.0].)
3	Set plate
4	Fuel pump unit
5	Packing

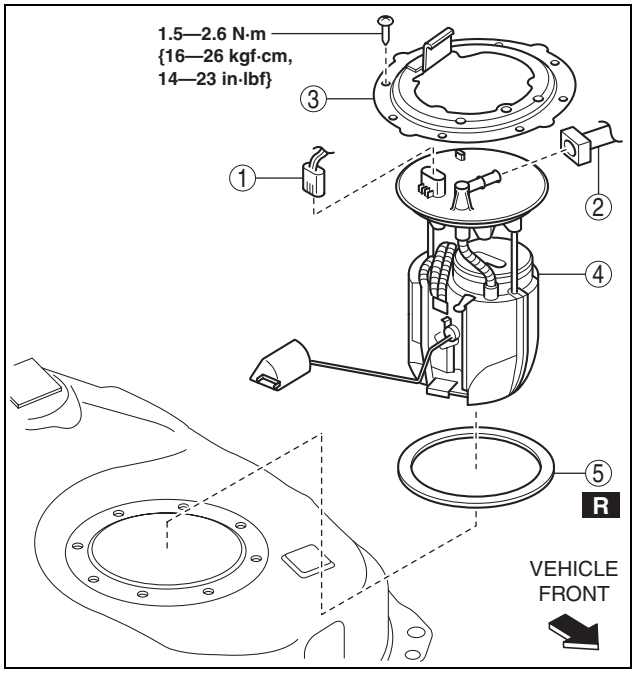

ac5uuw00000383

4WD

1	Fuel pump unit connector
2	Quick release connector (See 01-14A-49 QUICK RELEASE CONNECTOR REMOVAL/INSTALLATION [SKYACTIV-G 2.0].)
3	Set plate
4	Quick release connector (See 01-14A-49 QUICK RELEASE CONNECTOR REMOVAL/INSTALLATION [SKYACTIV-G 2.0].)
5	Fuel pump unit
6	Packing

7. Install in the reverse order of removal.
8. Complete the “AFTER SERVICE PRECAUTION”. (See 01-14A-7 AFTER SERVICE PRECAUTION [SKYACTIV-G 2.0].)

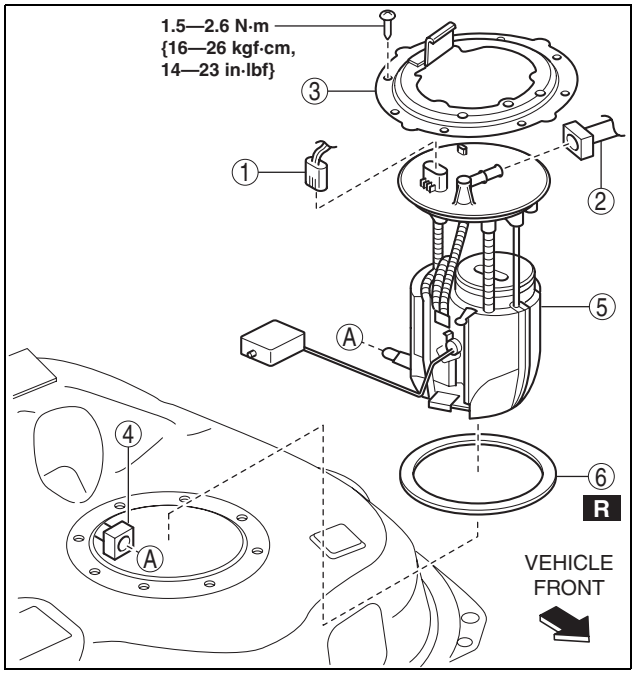

ac5uuw00000384

FUEL SYSTEM [SKYACTIV-G 2.0]

FUEL PUMP UNIT DISASSEMBLY/ASSEMBLY [SKYACTIV-G 2.0]

id0114z5801000

Warning

- **Fuel is very flammable liquid. If fuel spills or leaks from the pressurized fuel system, it will cause serious injury or death and facility breakage. Fuel can also irritate skin and eyes. To prevent this, always complete the "Fuel Line Safety Procedure", while referring to "BEFORE SERVICE PRECAUTION".**
- **A person charged with static electricity could cause a fire or explosion, resulting in death or serious injury. Before draining fuel, make sure to discharge static electricity by touching the vehicle body.**

Caution

- **Disconnecting/connecting the quick release connector without cleaning it may cause damage to the fuel pipe and quick release connector. Always clean the quick release connector joint area before disconnecting/connecting using a cloth or soft brush, and make sure that it is free of foreign material.**

1. Complete the "BEFORE SERVICE PRECAUTION". (See 01-14A-6 BEFORE SERVICE PRECAUTION [SKYACTIV-G 2.0].)
2. Using the following procedure:

Caution

- **Because the fuel surface is higher than the fuel pump unit installation surface, if the set plate is removed, it may result in fuel leakage. If the fuel gauge level indicates 1/2 or more, refer to the fuel draining procedure and drain 20 liters of fuel.**

Fuel gauge indicates 1/2 or more

1. Drain the fuel. (See 01-14A-11 FUEL DRAINING PROCEDURE [SKYACTIV-G 2.0].)

Fuel gauge indicates less than 1/2

1. Disconnect the negative battery cable. (See 01-17A-11 NEGATIVE BATTERY CABLE DISCONNECTION/CONNECTION [SKYACTIV-G 2.0].) (See 01-17A-13 NEGATIVE BATTERY CABLE DISCONNECTION/CONNECTION [SKYACTIV-G 2.0 (WITHOUT i-stop)].)

3. Remove the following part:

6:4 split type

1. Remove the rear seat cushion. (See 09-13-76 REAR SEAT CUSHION REMOVAL/INSTALLATION.)

4:2:4 split type

1. Set the rear seat aside as shown in the figure. (See 09-13-56 REAR SEAT REMOVAL/INSTALLATION.)

4. Remove the fuel pump unit. (See 01-14A-38 FUEL PUMP UNIT REMOVAL/INSTALLATION [SKYACTIV-G 2.0].)
5. Disassemble in the order indicated in the table.
6. Assemble in the reverse order of disassembly.
7. Install in the reverse order of removal.
8. Complete the "AFTER SERVICE PRECAUTION". (See 01-14A-7 AFTER SERVICE PRECAUTION [SKYACTIV-G 2.0].)

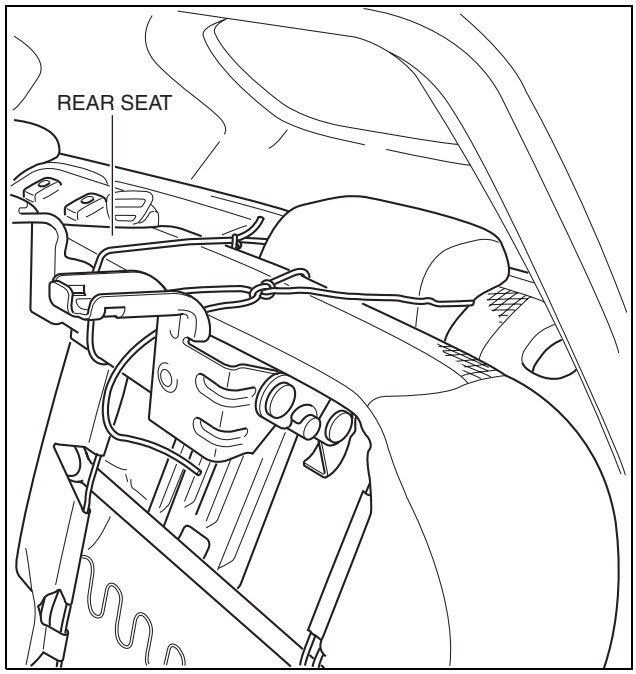

ac5uuw00000387

FUEL SYSTEM [SKYACTIV-G 2.0]

2WD

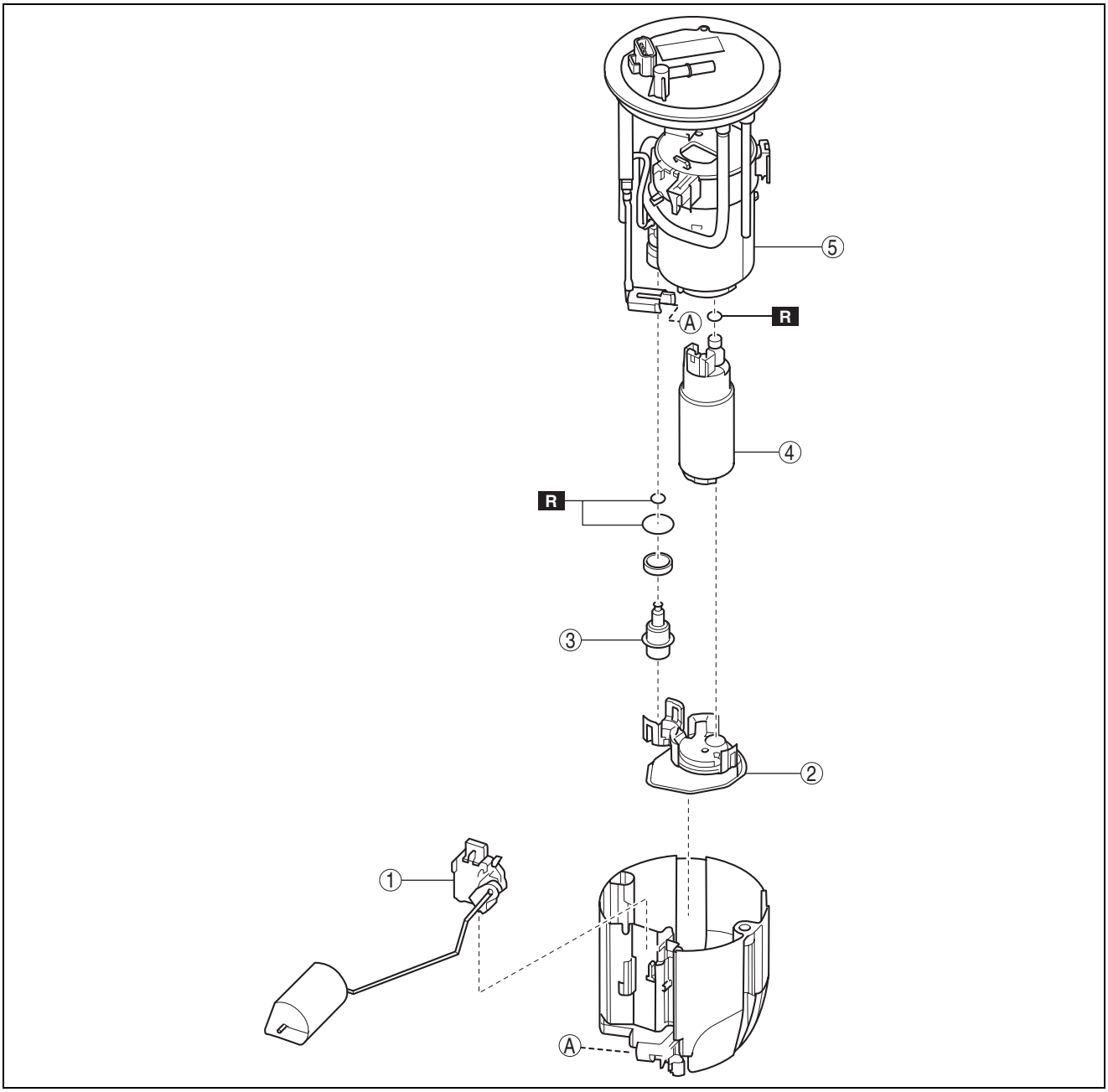

ac5uuw00000388

1	Fuel gauge sender unit
2	Fuel filter (low-pressure)
3	Pressure regulator

4	Fuel pump
5	Fuel filter (high-pressure)

FUEL SYSTEM [SKYACTIV-G 2.0]

4WD

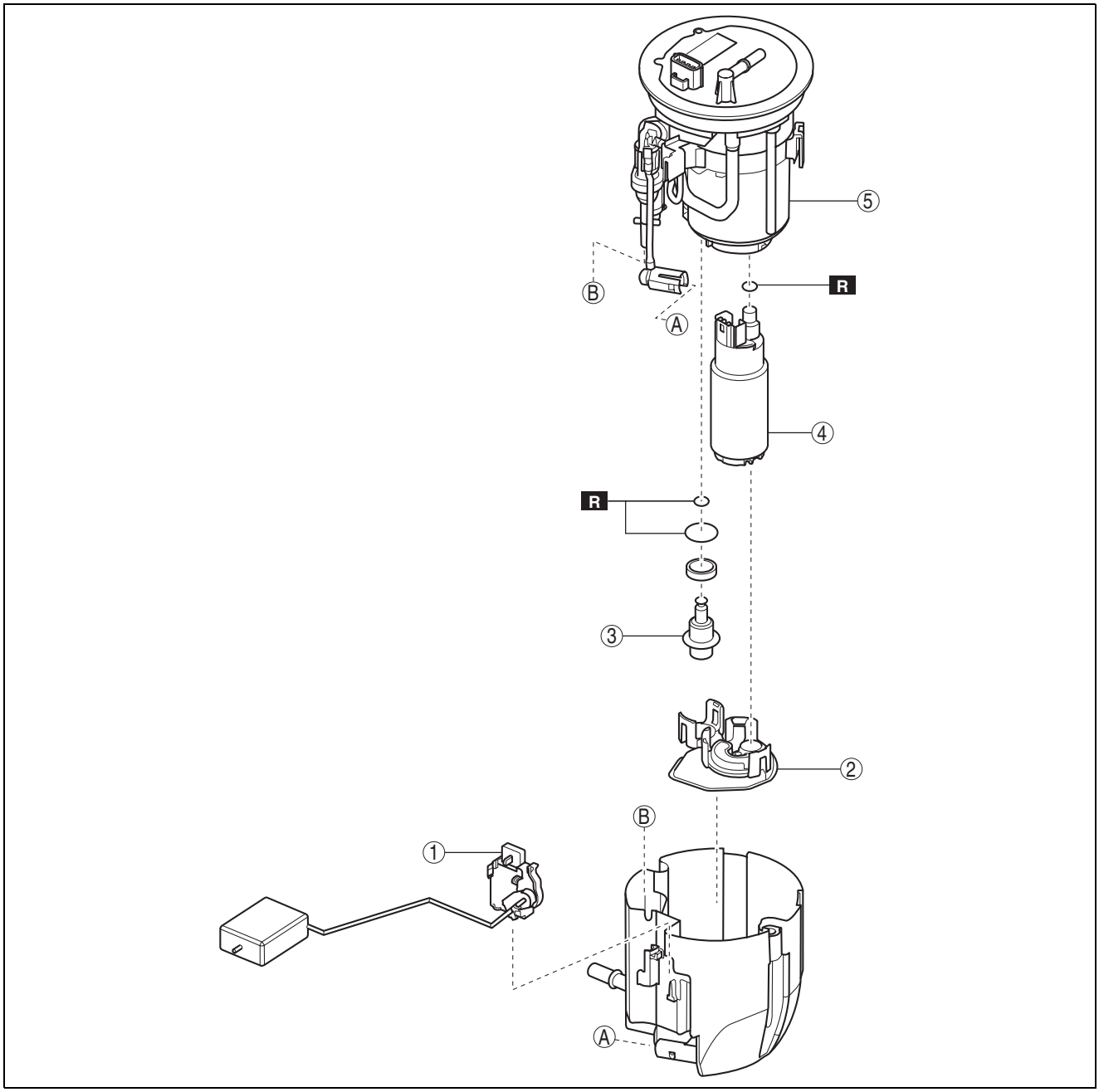

ac5uuw00000389

1	Fuel gauge sender unit
2	Fuel filter (low-pressure)
3	Pressure regulator

4	Fuel pump
5	Fuel filter (high-pressure)

FUEL SYSTEM [SKYACTIV-G 2.0]

FUEL PUMP UNIT INSPECTION [SKYACTIV-G 2.0]

id0114z5801100

Continuity Inspection

1. Disconnect the negative battery cable. (See 01-17A-11 NEGATIVE BATTERY CABLE DISCONNECTION/CONNECTION [SKYACTIV-G 2.0].) (See 01-17A-13 NEGATIVE BATTERY CABLE DISCONNECTION/CONNECTION [SKYACTIV-G 2.0 (WITHOUT i-stop)].)
2. Disconnect the fuel pump unit connector.
3. Inspect for continuity between fuel pump unit terminals B—D.
   - If there is no continuity, replace the fuel pump unit. (See 01-14A-38 FUEL PUMP UNIT REMOVAL/INSTALLATION [SKYACTIV-G 2.0].)

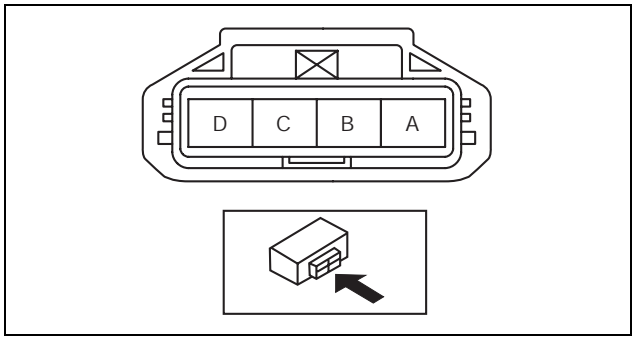

ac5wzw0000270

HIGH PRESSURE FUEL PUMP REMOVAL/INSTALLATION [SKYACTIV-G 2.0]

id0114z5801400

Warning

- **Fuel is very flammable liquid. If fuel spills or leaks from the pressurized fuel system, it will cause serious injury or death and facility breakage. Fuel can also irritate skin and eyes. To prevent this, always complete the "Fuel Line Safety Procedure", while referring to "BEFORE SERVICE PRECAUTION".**
- **A person charged with static electricity could cause a fire or explosion, resulting in death or serious injury. Before draining fuel, make sure to discharge static electricity by touching the vehicle body.**

Caution

- **Do not disassemble the high pressure fuel pump.**
- **Do not damage the sealing surface or the lock part of the fuel pipe.**
- **Damage or deformation to the end of the high pressure line pipe may cause fuel leakage.**
- **Disconnecting/connecting the quick release connector without cleaning it may cause damage to the fuel pipe and quick release connector. Always clean the quick release connector joint area before disconnecting/connecting using a cloth or soft brush, and make sure that it is free of foreign material.**

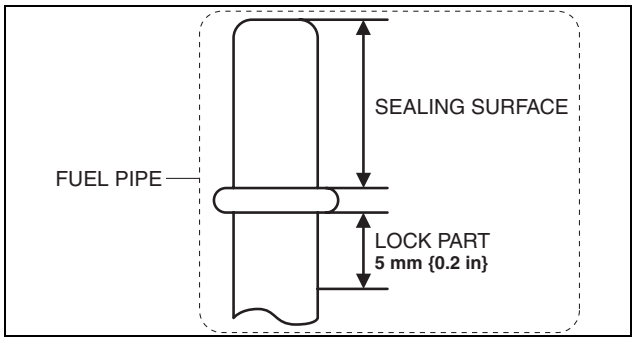

am3uuw0000804

1. Complete the "BEFORE SERVICE PRECAUTION". (See 01-14A-6 BEFORE SERVICE PRECAUTION [SKYACTIV-G 2.0].)
2. Disconnect the negative battery cable. (See 01-17A-11 NEGATIVE BATTERY CABLE DISCONNECTION/CONNECTION [SKYACTIV-G 2.0].) (See 01-17A-13 NEGATIVE BATTERY CABLE DISCONNECTION/CONNECTION [SKYACTIV-G 2.0 (WITHOUT i-stop)].)
3. Remove the plug hole plate. (See 01-10A-6 PLUG HOLE PLATE REMOVAL/INSTALLATION [SKYACTIV-G 2.0].)
4. Remove the air cleaner and air hose as a single unit. (See 01-13A-6 INTAKE-AIR SYSTEM REMOVAL/INSTALLATION [SKYACTIV-G 2.0].)

FUEL SYSTEM [SKYACTIV-G 2.0]

5. Disconnect the harness clip as shown in the figure.

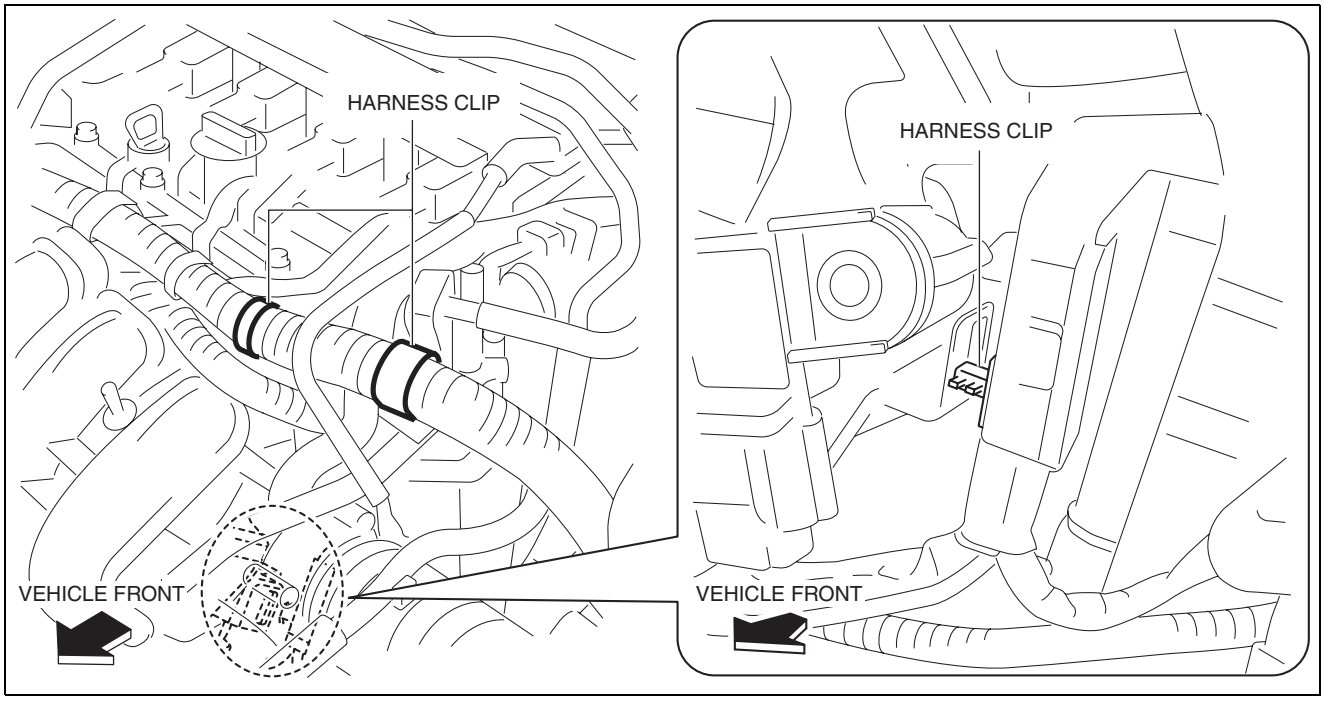

am3uuw0000860

6. Disconnect the hoses as shown in the figure.
7. Disconnect the following parts connectors.
   - Purge solenoid valve
   - High pressure fuel pump
   - Intake CMP sensor
8. Remove the purge solenoid valve and catch tank and purge solenoid valve bracket as a single unit. (See 01-16A-10 PURGE SOLENOID VALVE REMOVAL/INSTALLATION [SKYACTIV-G 2.0].)
9. Remove in the order indicated in the table.

Note
- Only when the high pressure fuel pump (figure (4)) is removed, the rear housing (figure (8)) does not have to be removed.

10. Install in the reverse order of removal.
11. Complete the “AFTER SERVICE PRECAUTION”. (See 01-14A-7 AFTER SERVICE PRECAUTION [SKYACTIV-G 2.0].)
12. Complete the “Fuel Leakage Inspection After High Pressure Fuel Pump Installation”. (See 01-14A-48 Fuel Leakage Inspection After High Pressure Fuel Pump Installation.)

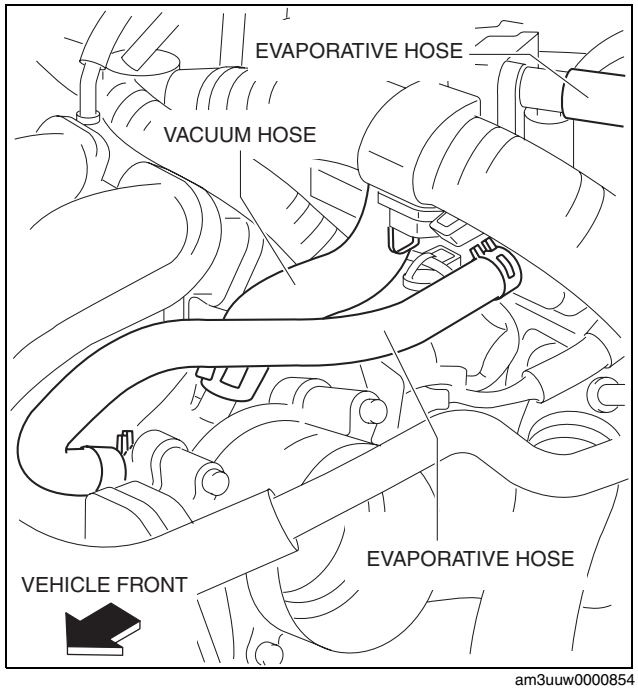

am3uuw0000854

FUEL SYSTEM [SKYACTIV-G 2.0]

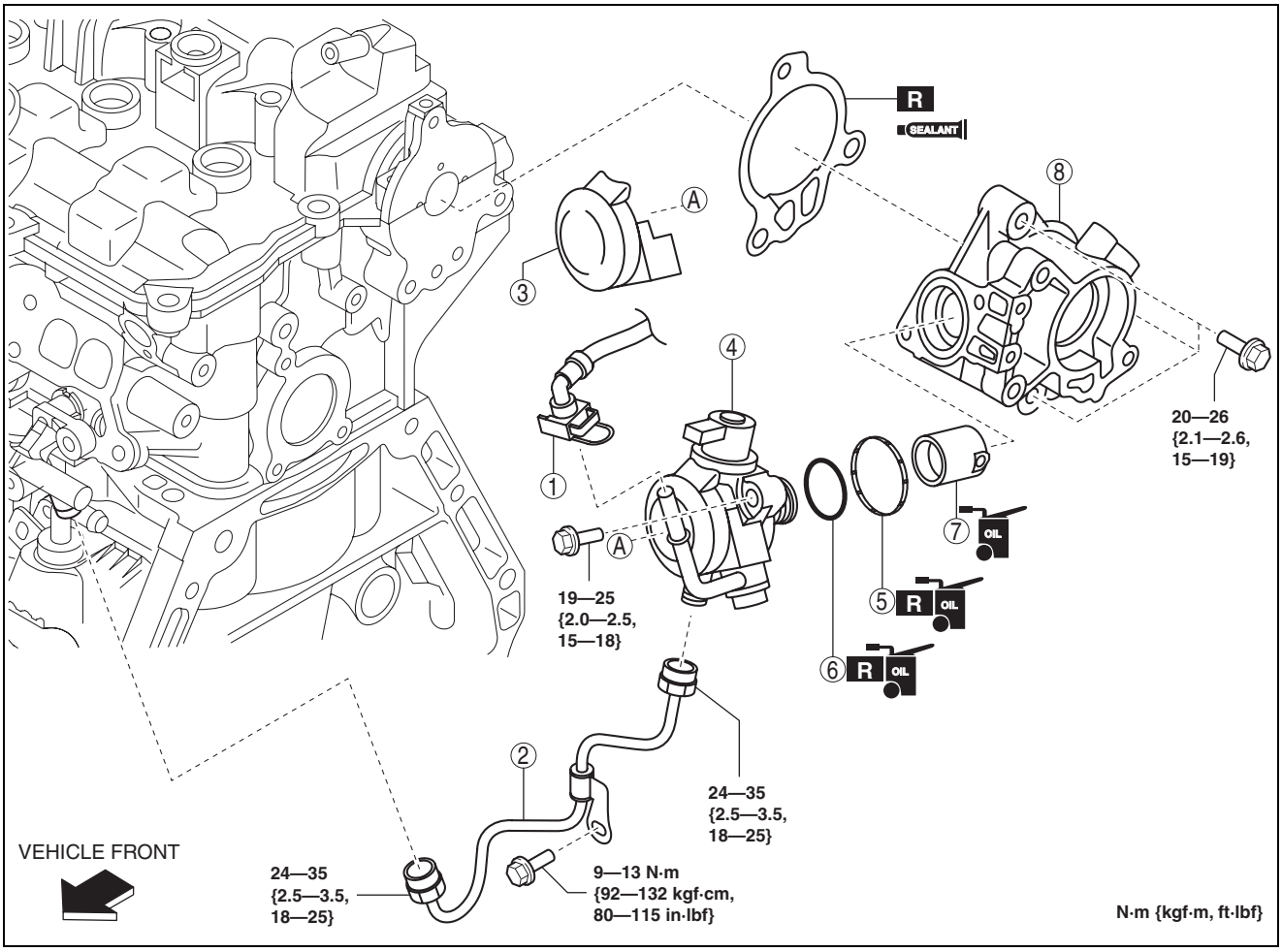

ac5wzw0000270

1	Quick release connector (See 01-14A-49 QUICK RELEASE CONNECTOR REMOVAL/INSTALLATION [SKYACTIV-G 2.0].)
2	High pressure fuel pipe (See 01-14A-47 High Pressure Fuel Pipe Removal Note.) (See 01-14A-48 High Pressure Fuel Pipe Installation Note.)
3	High pressure fuel pump cover

4	High pressure fuel pump (See 01-14A-48 High Pressure Fuel Pump Installation Note.)
5	Seal rubber
6	O-ring
7	Tension collar
8	Rear housing (See 01-14A-47 Rear Housing Removal Note.) (See 01-14A-47 Rear Housing Installation Note.)

FUEL SYSTEM [SKYACTIV-G 2.0]

High Pressure Fuel Pipe Removal Note

Caution

- **When removing the high pressure fuel pipe, the end of the high pressure fuel pipe may be damaged because the clearance between the high pressure fuel pump and the high pressure fuel pipe is small. Be very careful when handling the end of the high pressure fuel pipe so as not to damage it.**
- **If the high pressure fuel pump is removed with the high pressure fuel pipe installed, the high pressure fuel pipe and fuel distributor may be damaged because of the excessive force caused by the spring force of the high pressure fuel pump. The high pressure fuel pipe and fuel distributor must be replaced if they are damaged. Always remove the high pressure fuel pipe before removing the high pressure fuel pump.**

1. Remove the high pressure fuel pipe.

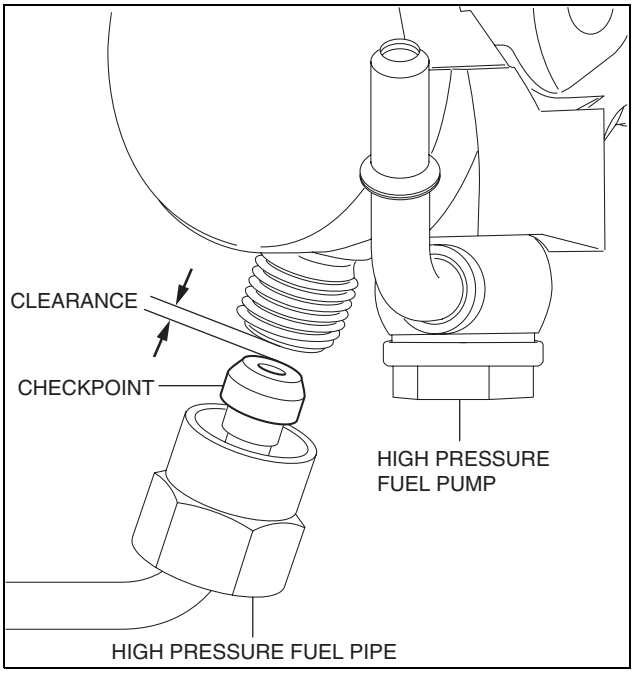

am3uuw0000804

Rear Housing Removal Note

1. Remove the vacuum pump. (See 04-11-21 VACUUM PUMP REMOVAL/INSTALLATION [SKYACTIV-G 2.0].)
2. Remove the rear housing.

Rear Housing Installation Note

Note

- After applying silicone sealant, install the rear housing within 10 min. and then tighten all bolts within 5 min.

1. Apply silicone sealant to the areas shown in the figure.

   Thickness
   3.0—7.0 mm {0.12—0.27 in}

2. Install the rear housing.

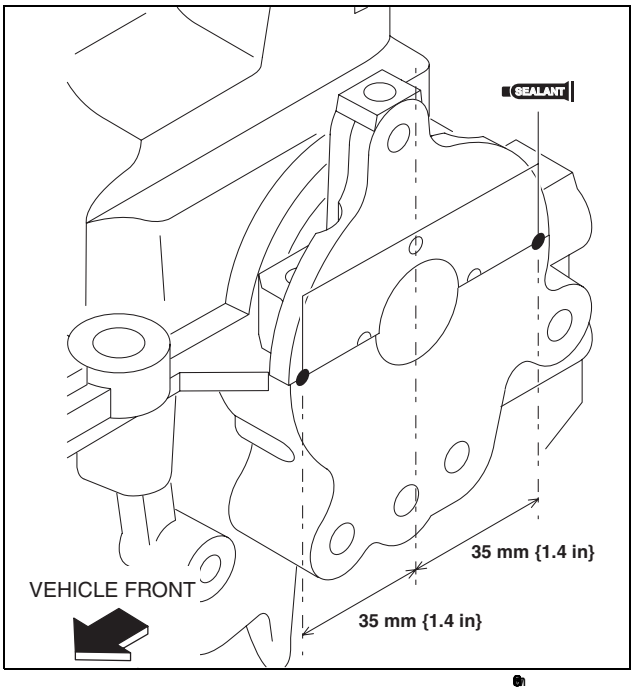

FUEL SYSTEM [SKYACTIV-G 2.0]

High Pressure Fuel Pump Installation Note

1. Rotate the crankshaft approx. 90 degrees from TDC of cylinder No.1.

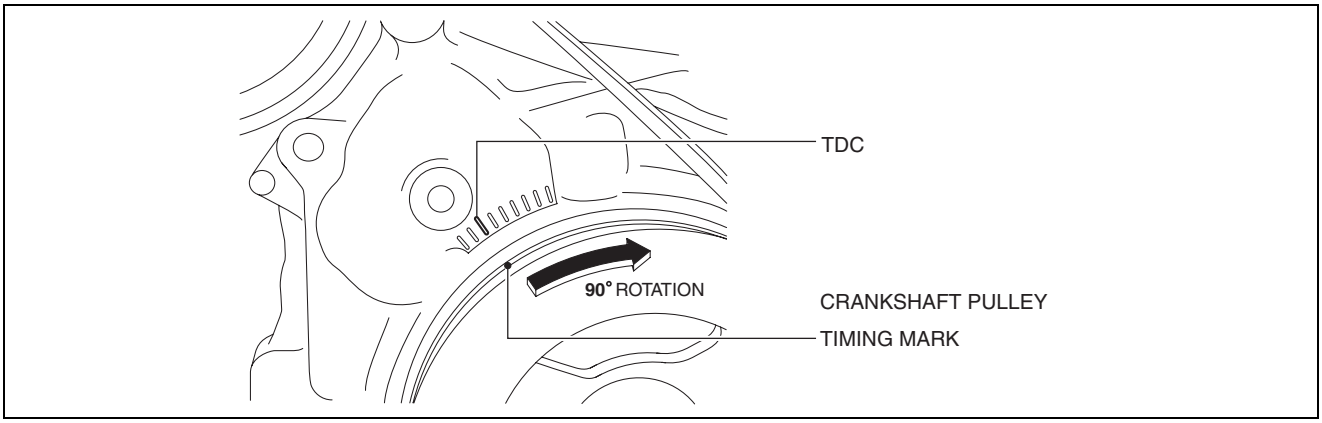

ac5wzw0000299

2. Insert the high pressure fuel pump into the rear housing.
3. Press in the high pressure fuel pump until the O-ring cannot be seen.
4. Temporarily tighten the high pressure fuel pump installation bolt on one side until its head contacts the high pressure fuel pump.
5. Tighten the high pressure fuel pump installation bolt which is not tightened in Step 5.

   High pressure fuel pump installation bolt tightening torque
   19—25 N·m {2.0—2.5 kgf·m, 15—18 ft·lbf}

6. Tighten the high pressure fuel pump installation bolt which was tightened in Step 5.

   High pressure fuel pump installation bolt tightening torque
   19—25 N·m {2.0—2.5 kgf·m, 15—18 ft·lbf}

High Pressure Fuel Pipe Installation Note

Caution

- **Damage or deformation to the end of the high pressure fuel pipe may cause fuel leakage. When installing the high pressure fuel pipe to the high pressure fuel pump, be very careful while handling the end of the high pressure fuel pipe.**
- **If parts are exposed to fuel, their function may be decreased or a fire may occur. Always wipe off any leaked fuel using a clean rag.**
- **Do not let foreign materials enter into the high pressure fuel pipe.**
- **The high pressure fuel pipe can be used up to 5 times in a row. When removing/installing the high pressure fuel pipe, always record the number of times in the service records. When removal of the high pressure fuel pipe reaches the 6th time, replace it with a new one.**

1. Temporarily tighten the nuts on both ends.
2. Temprarily tighten the high pressure fue pipe bracket installation bolt.
3. Tighten the nuts on both ends.

   High pressure fuel pipe tightening torque
   24—35 N·m {2.5—3.5 kgf·m, 18—25 ft·lbf}

4. Tighten the high pressure fuel pipe bracket installation bolt.

   High pressure fuel pipe bracket installation bolt tightening torque
   9—13 N·m {92—132 kgf·cm, 80—115 in·lbf}

Fuel Leakage Inspection After High Pressure Fuel Pump Installation

1. Verify that the high pressure fuel pump is assembled securely.
2. Verify that there is no fuel leakage around the high pressure fuel pump.

FUEL SYSTEM [SKYACTIV-G 2.0]

HIGH PRESSURE FUEL PUMP INSPECTION [SKYACTIV-G 2.0]

id0114z5801500

Note
- The following vacuum values are indicated by relative pressure from the fuel pressure sensor.

1. Verify that the fuel pressure sensor is normal. (See 01-40-52 FUEL PRESSURE SENSOR INSPECTION [SKYACTIV-G 2.0].)
2. Connect the M-MDS to the DLC-2.
3. Switch the ignition ON (engine off).
4. Select the “FUEL_PRES”, “LOAD” and “RPM” PIDs on the M-MDS. (See 01-02-8 ON-BOARD DIAGNOSTIC TEST [SKYACTIV-G 2.0].)

Caution
- **If the engine is run at a high speed, it could be damaged. When racing the engine, be careful not to increase the engine speed suddenly.**

5. After the “LOAD” PID is **60% or more** while the engine is raced with the accelerator pedal fully depressed, verify that the “FUEL_PRES” PID is **approx. 15.0 MPa {153 kgf/cm^2, 2176 psi}**.
   — If not as specified, replace the high pressure fuel pump. (See 01-14A-44 HIGH PRESSURE FUEL PUMP REMOVAL/INSTALLATION [SKYACTIV-G 2.0].)

QUICK RELEASE CONNECTOR REMOVAL/INSTALLATION [SKYACTIV-G 2.0]

id0114z5801700

Warning
- **Fuel is very flammable liquid. If fuel spills or leaks from the pressurized fuel system, it will cause serious injury or death and facility breakage. Fuel can also irritate skin and eyes. To prevent this, always complete the “Fuel Line Safety Procedure”, while referring to the “BEFORE SERVICE PRECAUTION”.**
- **A person charged with static electricity could cause a fire or explosion, resulting in death or serious injury. Before draining fuel, make sure to discharge static electricity by touching the vehicle body.**

Caution
- **Disconnecting/connecting the quick release connector without cleaning it may cause damage to the fuel pipe and quick release connector. Always clean the quick release connector joint area before disconnecting/connecting using a cloth or soft brush, and make sure that it is free of foreign material.**

FUEL SYSTEM [SKYACTIV-G 2.0]

Quick Release Connector Position

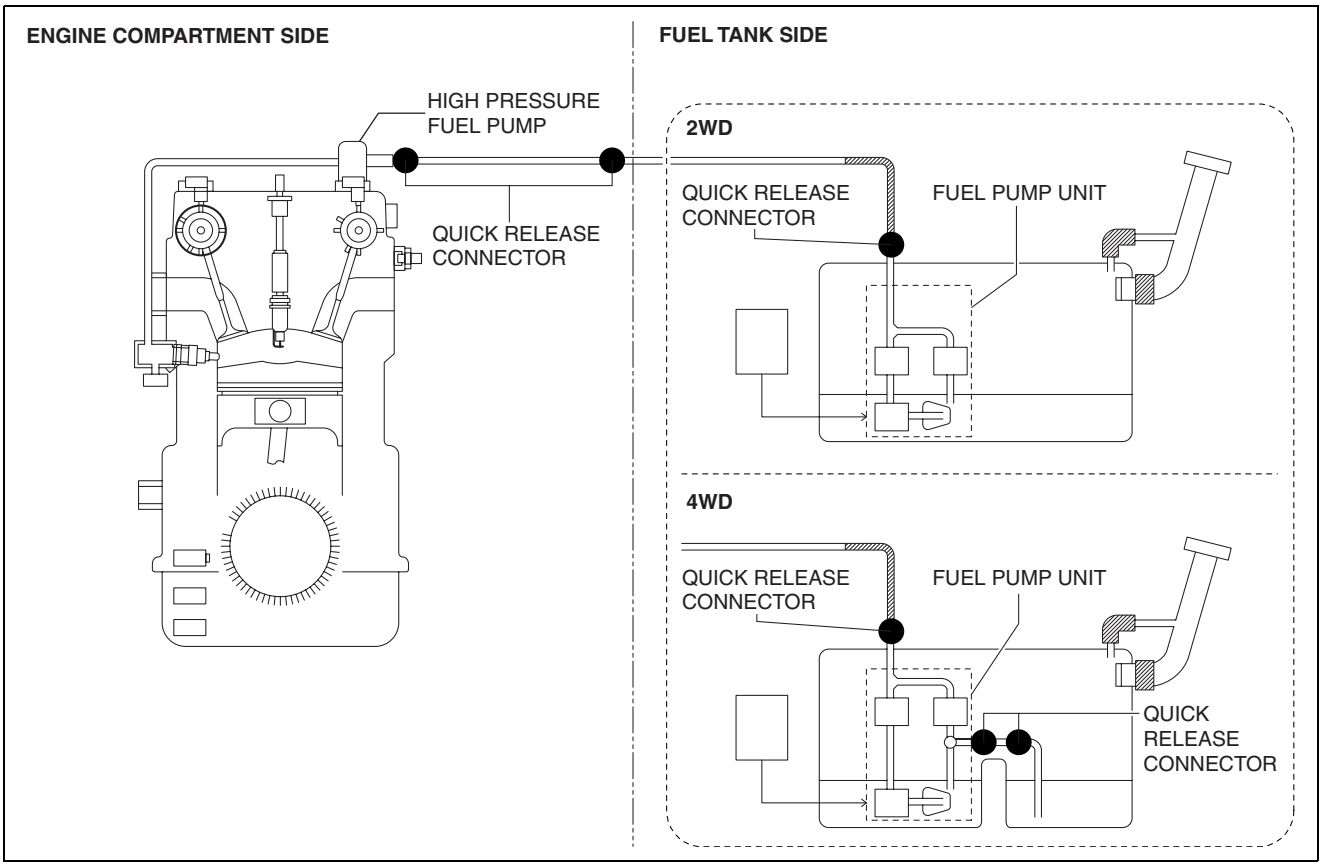

ac5wzw0000137

Removal

1. Complete the “BEFORE SERVICE PRECAUTION”. (See 01-14A-6 BEFORE SERVICE PRECAUTION [SKYACTIV-G 2.0].)
2. Move the retainer upward using a small flathead screwdriver or a similar tool.
3. Pull out the fuel hose straight from the fuel pipe and disconnect it.
4. Cover the disconnected quick release connector and fuel pipe with vinyl sheeting or a similar material to prevent it from getting scratched or dirty.

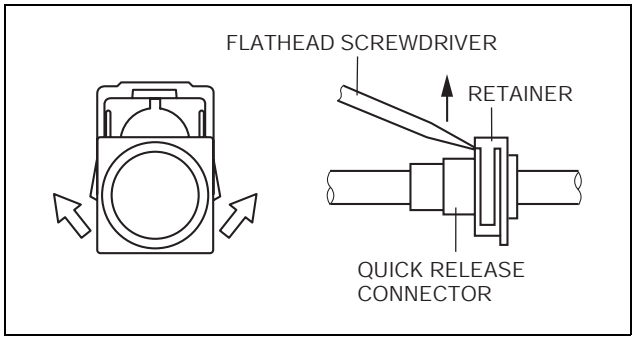

am6xuw0000138

FUEL SYSTEM [SKYACTIV-G 2.0]

Installation

Note
- If the quick release connector O-ring is damaged or has slipped, replace the fuel hose.
- A checker tab is integrated with the quick release connector for new fuel hoses. Remove the checker tab from the quick release connector after the connector is completely engaged with the fuel pipe.

1. Inspect the fuel hose and fuel pipe sealing surface for damage and deformation.
   - If there is any malfunction, replace it with a new one.
2. Apply a small amount of clean engine oil to the sealing surface of the fuel pipe.
3. Install the quick release connector.
   - Insert the fuel pipe straight to the end of the quick release connector.
   - Push down the retainer using a finger.
     - — If the retainer cannot be pushed down, push the fuel pipe further to the quick release connector.
4. Lightly pull and push the quick release connector a few times by hand, and then verify that it is connected securely.
5. Complete the “AFTER SERVICE PRECAUTION”. (See 01-14A-7 AFTER SERVICE PRECAUTION [SKYACTIV-G 2.0].)

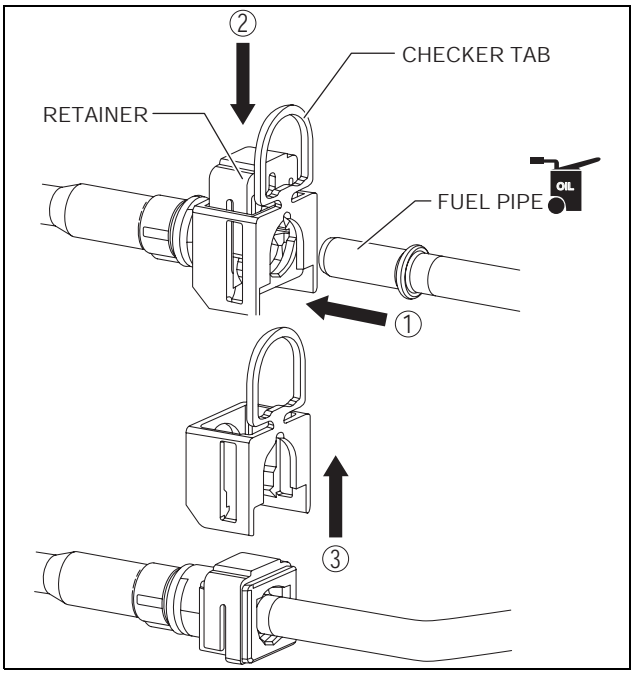

am3uuw0000456

FUEL INJECTOR REMOVAL/INSTALLATION [SKYACTIV-G 2.0]

id0114z5800600

Warning
- **Fuel is very flammable liquid. If fuel spills or leaks from the pressurized fuel system, it will cause serious injury or death and facility breakage. Fuel can also irritate skin and eyes. To prevent this, always complete the “Fuel Line Safety Procedure”, while referring to the “BEFORE SERVICE PRECAUTION”.**
- **A person charged with static electricity could cause a fire or explosion, resulting in death or serious injury. Before draining fuel, make sure to discharge static electricity by touching the vehicle body.**

Caution
- **Touching the end of the fuel injector by hand or pressing it to an object may cause a malfunction. Be very careful when handling the end of the fuel injector.**
- **When the fuel distributor is removed, air tightness of the fuel injector will be lost. Always replace the stopper ring, O-ring, back-up ring, and teflon seal of the fuel injector with new ones.**
- **Do not remove the fuel pressure sensor from the fuel distributor.**

1. Complete the “BEFORE SERVICE PRECAUTION”. (See 01-14A-6 BEFORE SERVICE PRECAUTION [SKYACTIV-G 2.0].)
2. Disconnect the negative battery cable. (See 01-17A-11 NEGATIVE BATTERY CABLE DISCONNECTION/CONNECTION [SKYACTIV-G 2.0].) (See 01-17A-13 NEGATIVE BATTERY CABLE DISCONNECTION/CONNECTION [SKYACTIV-G 2.0 (WITHOUT i-stop)].)
3. Remove the plug hole plate. (See 01-10A-6 PLUG HOLE PLATE REMOVAL/INSTALLATION [SKYACTIV-G 2.0].)
4. Remove the intake manifold. (See 01-13A-6 INTAKE-AIR SYSTEM REMOVAL/INSTALLATION [SKYACTIV-G 2.0].)
5. Remove in the order indicated in the table.
6. Install in the reverse order of removal.

FUEL SYSTEM [SKYACTIV-G 2.0]

7. Complete the “AFTER SERVICE PRECAUTION”. (See 01-14A-7 AFTER SERVICE PRECAUTION [SKYACTIV-G 2.0].)

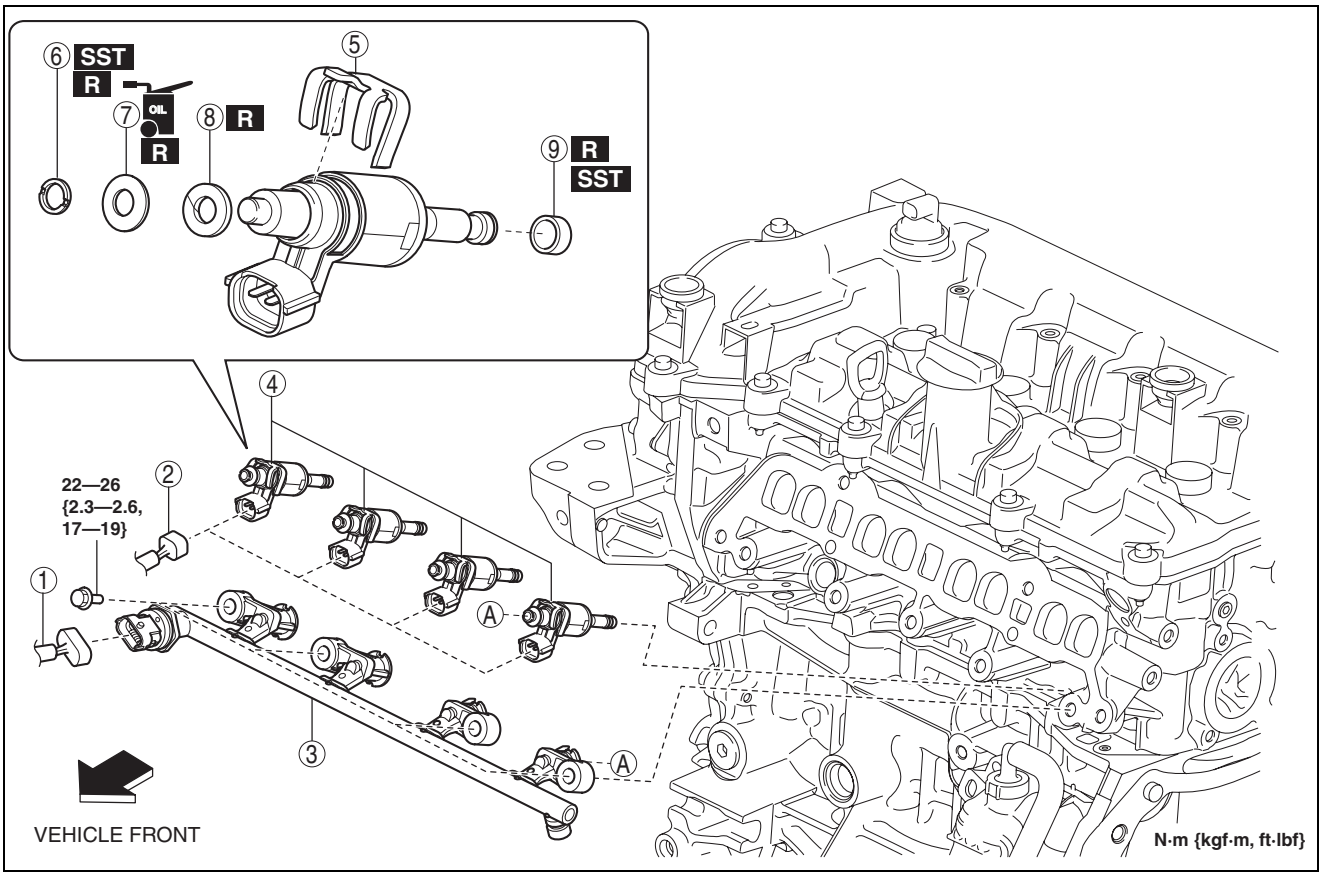

am3uuw0000859

1	Fuel pressure sensor connector
2	Fuel injector connector
3	Fuel distributor (See 01-14A-52 Fuel Distributor Removal Note.) (See 01-14A-61 Fuel Distributor Installation Note.)
4	Fuel injector (See 01-14A-60 Fuel Injector Installation Note.)
5	Spacer

6	Stopper ring (See 01-14A-53 Stopper Ring Removal Note.) (See 01-14A-60 Stopper Ring Installation Note.)
7	O-ring
8	Back-up ring (See 01-14A-59 Back-up Ring Installation Note.)
9	Teflon seal (See 01-14A-53 Teflon Seal Removal Note.) (See 01-14A-54 Teflon Seal Installation Note.)

Fuel Distributor Removal Note

1. Remove the high pressure fuel pipe. (See 01-14A-44 HIGH PRESSURE FUEL PUMP REMOVAL/INSTALLATION [SKYACTIV-G 2.0].)
2. Remove the fuel distributor.

FUEL SYSTEM [SKYACTIV-G 2.0]

Stopper Ring Removal Note

Note
- When removing the stopper ring, do not damage the fuel injector with the tool.

1. Remove the stopper ring as shown in the figure.

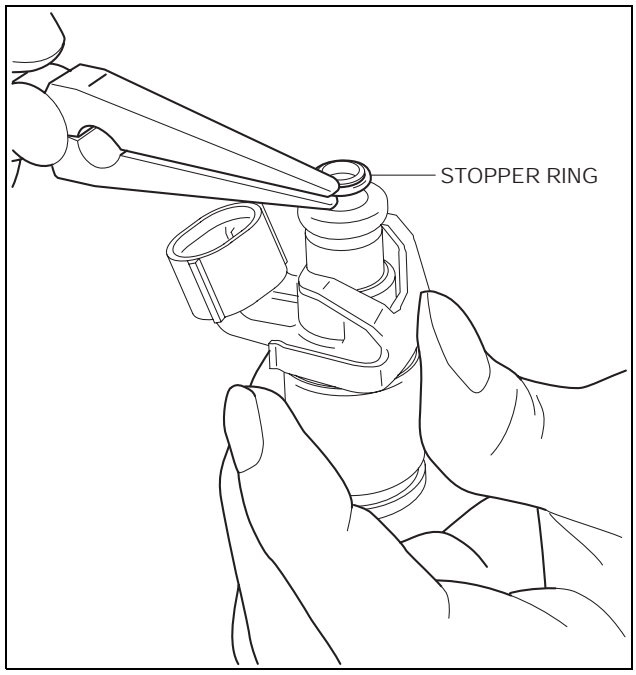

am3uuw0000727

Teflon Seal Removal Note

Note
- When stretching the teflon seal, do not damage the fuel injector with the tool.

1. Stretch the teflon seal as shown in the figure.

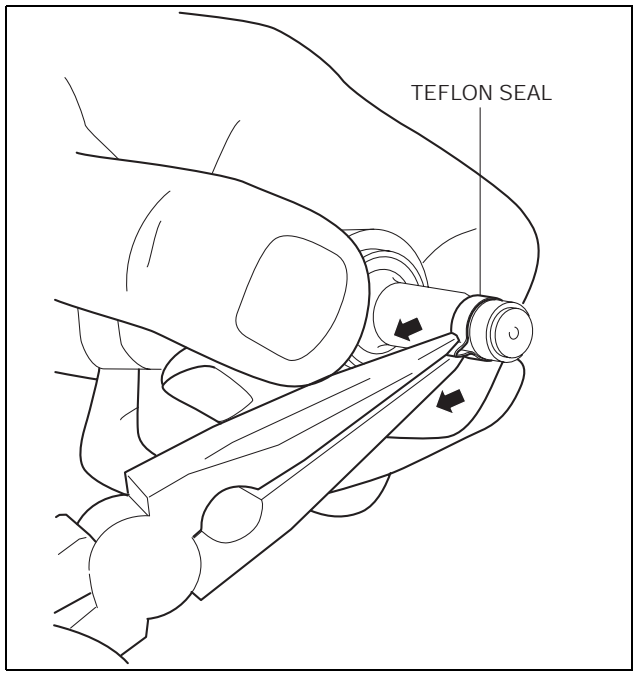

am3uuw0000727

FUEL SYSTEM [SKYACTIV-G 2.0]

2. Remove the teflon seal as shown in the figure.

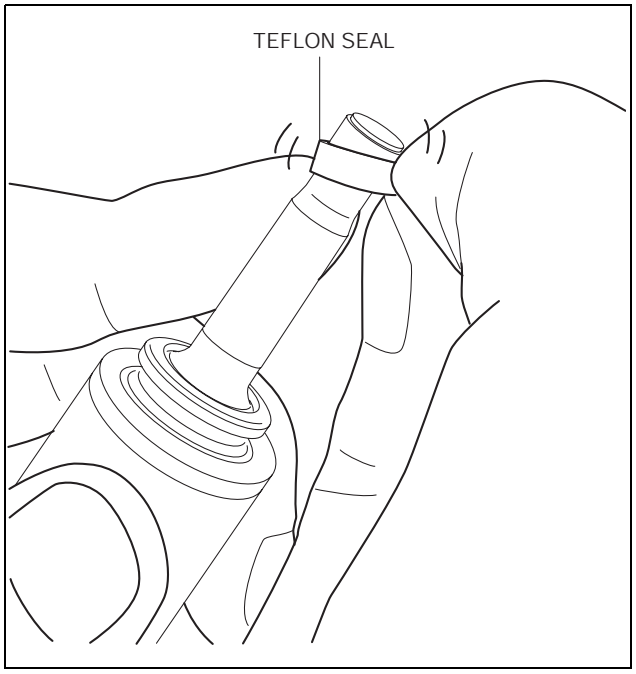

am3uuw0000727

Teflon Seal Installation Note

Note
- 49 D013 102, 49 D013 103, and 49 D013 104 are component parts for 49 D013 1A0.

1. Apply engine oil to the **SST**.

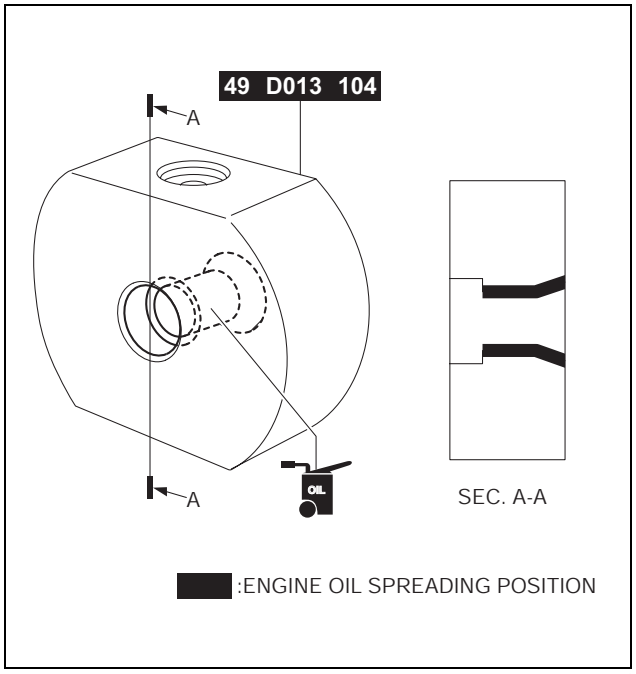

am3uuw0000801

2. Install the **SST** with the mark on the **SST** facing the fuel injector.

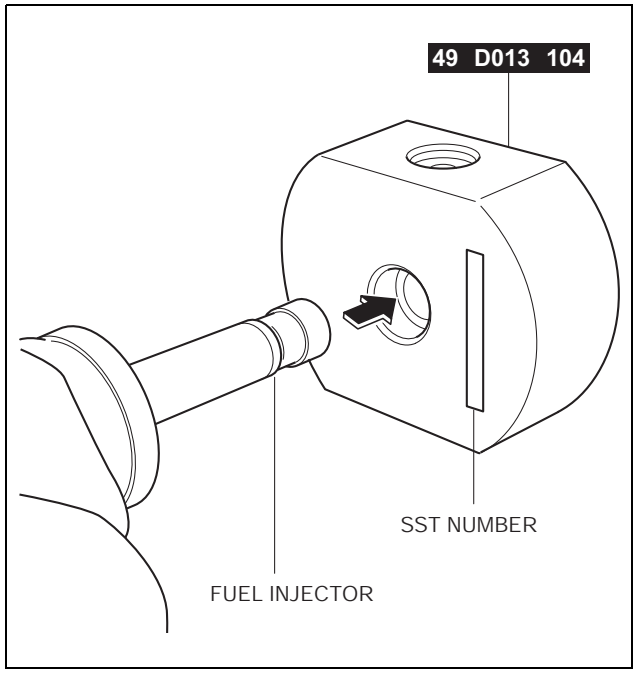

am3uuw0000727

3. Insert a new teflon seal onto the **SST**.

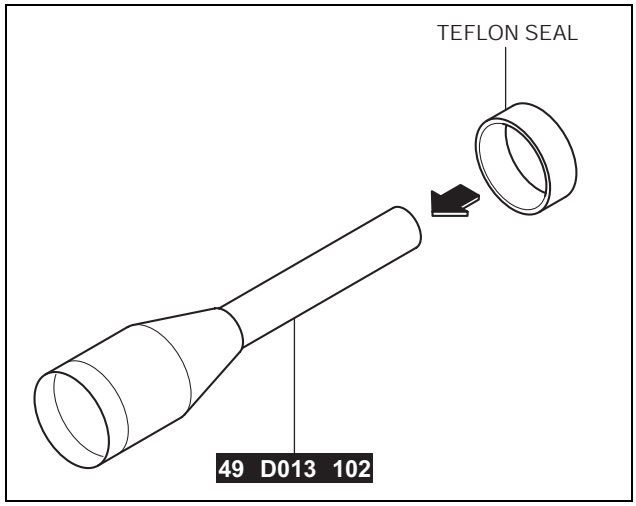

am3uuw0000727

FUEL SYSTEM [SKYACTIV-G 2.0]

4. Install the **SST** equipped with the teflon seal to the end of the fuel injector.

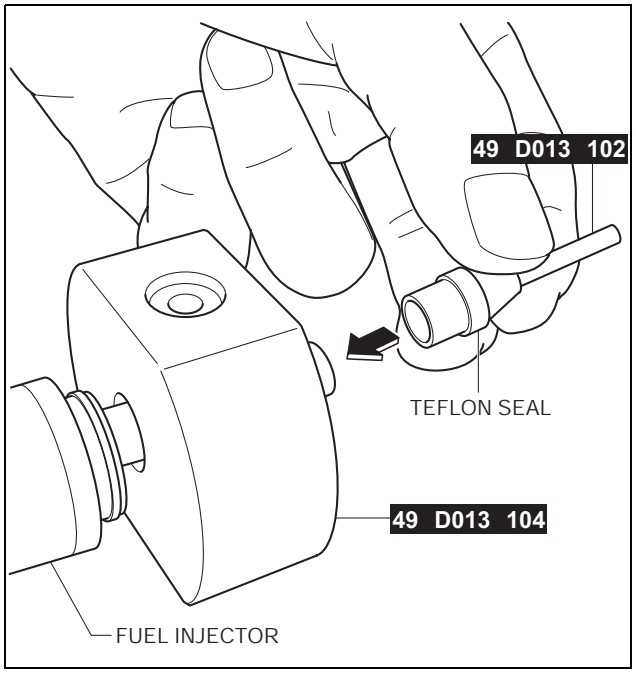

am3uuw0000727

5. Using the **SST**, press on the teflon seal to the fuel injector side.

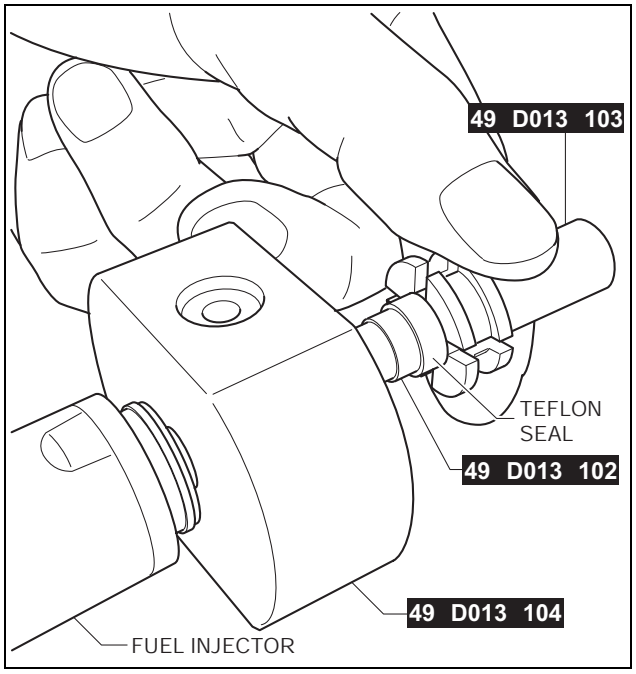

am3uuw0000727

6. Press on the teflon seal to the position indicated in the figure, then remove the **SST**.

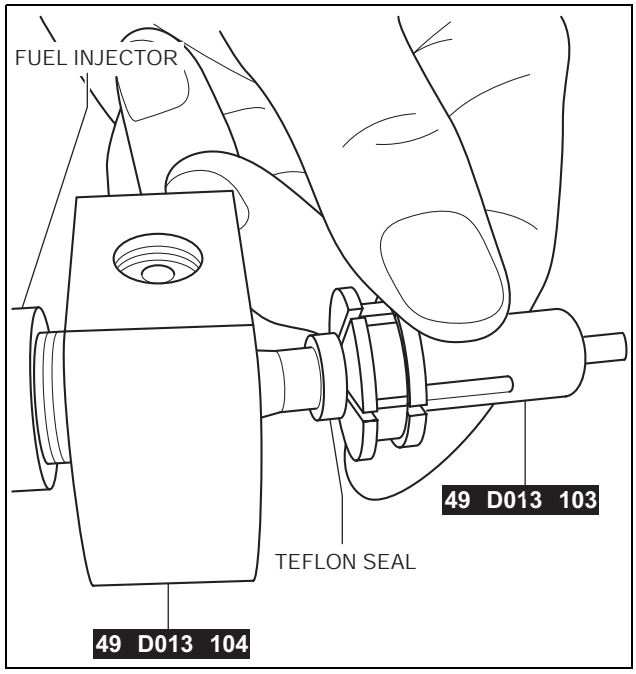

am3uuw0000728

7. Install the teflon seal to the fuel injector by hand and remove the **SST**.

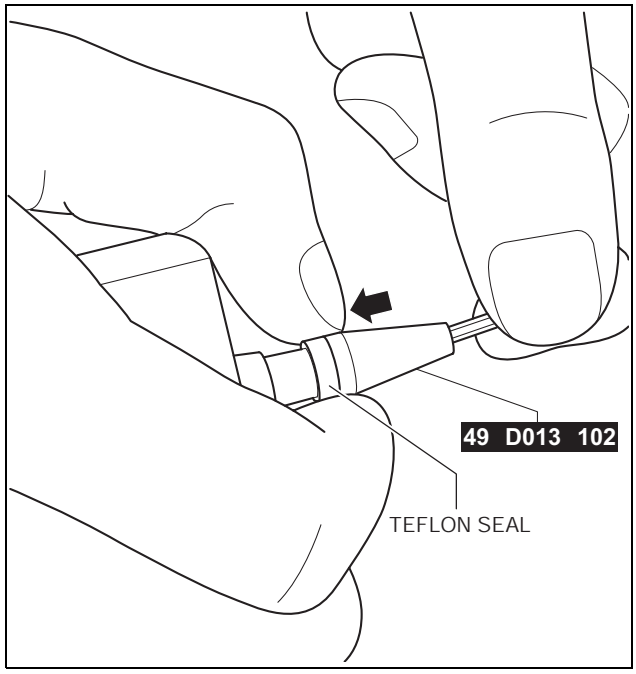

am3uuw0000728

FUEL SYSTEM [SKYACTIV-G 2.0]

8. Slide the **SST** to the end of the fuel injector.
9. Hold the **SST** at the position shown in the figure and correctly position the teflon seal for more than 30 sec.

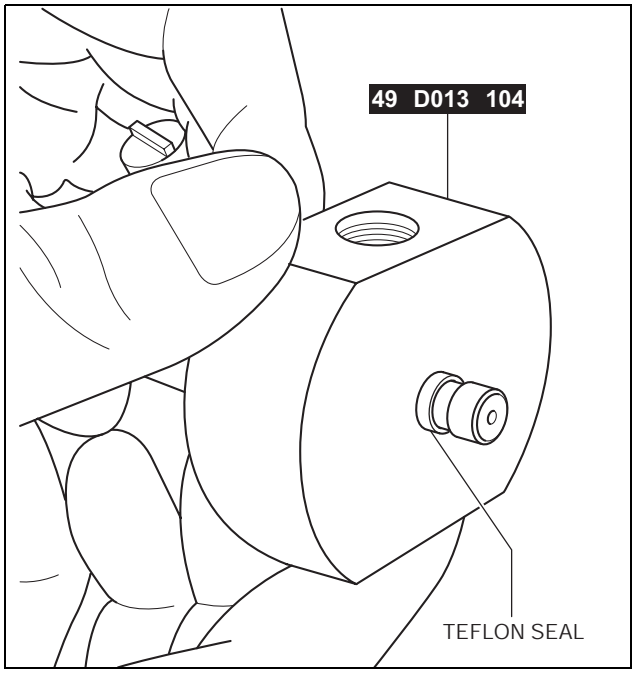

am3uuw0000728

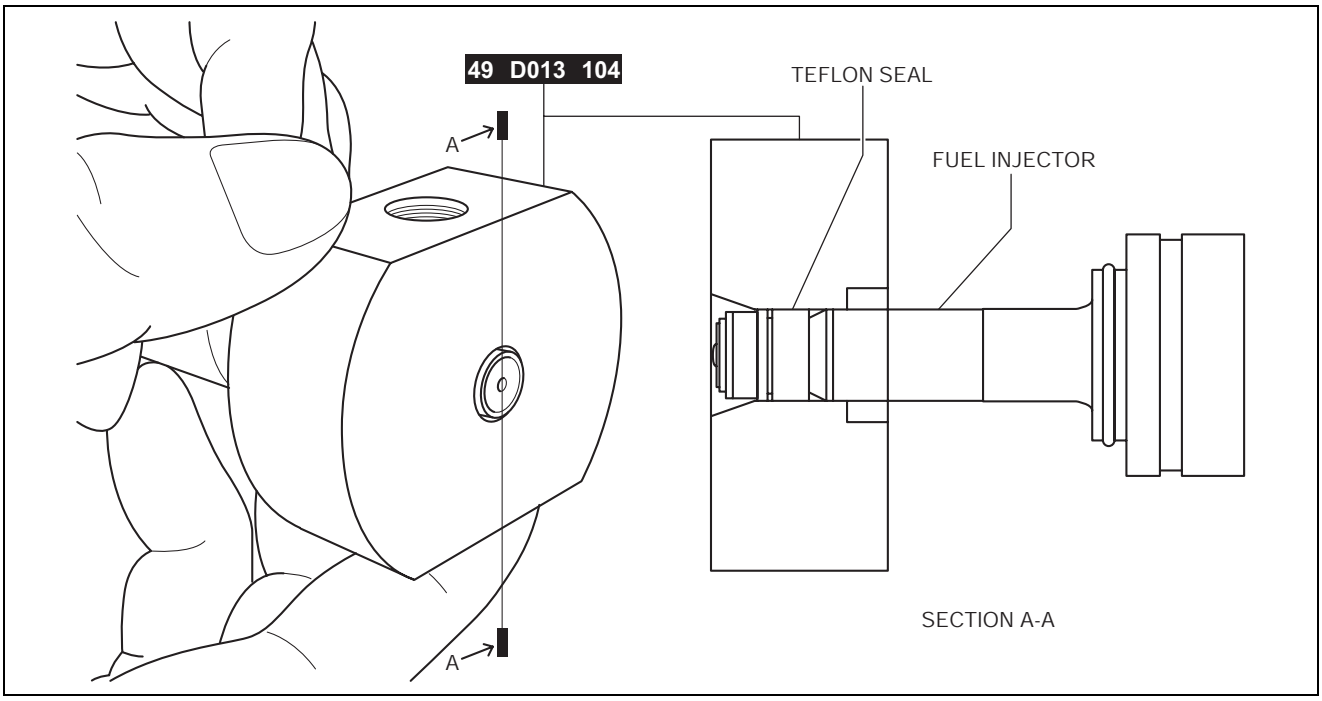

am3uuw0000728

FUEL SYSTEM [SKYACTIV-G 2.0]

Back-up Ring Installation Note

1. Install the back-up ring, making sure it is installed in the right direction.

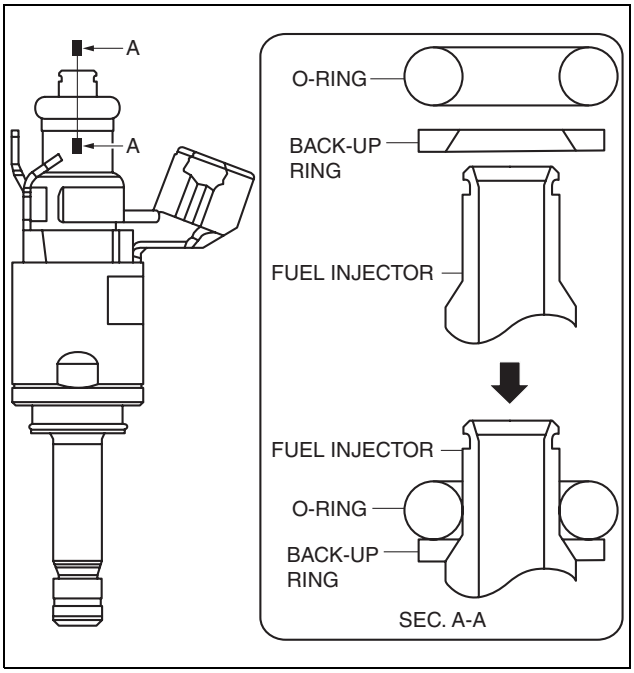

am3uuw0000859

2. After installing the back-up ring, verify that it is installed correctly.

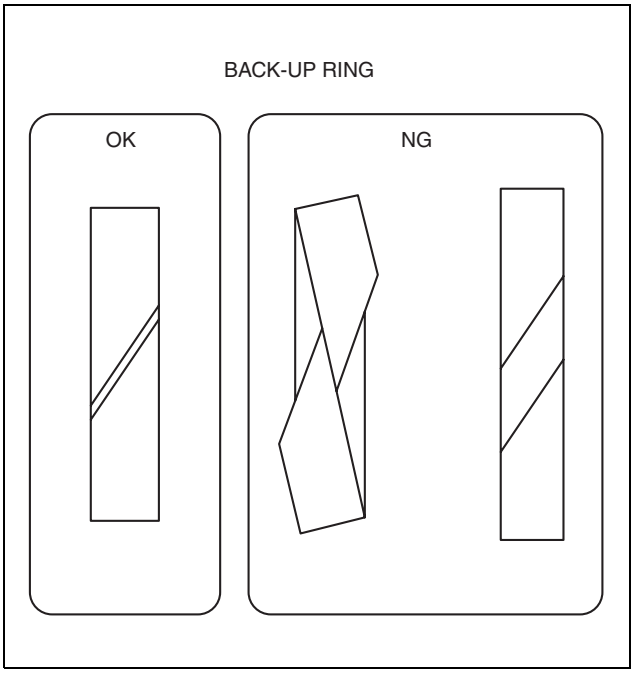

am3uuw0000859

FUEL SYSTEM [SKYACTIV-G 2.0]

Stopper Ring Installation Note

Note
- Do not insert the stopper ring at an angle, and always press it on straight to the SST.

1. Set a new stopper ring on the **SST** as shown in the figure being careful of the stopper ring orientation, and press down the fuel injector until a click sound is heard.

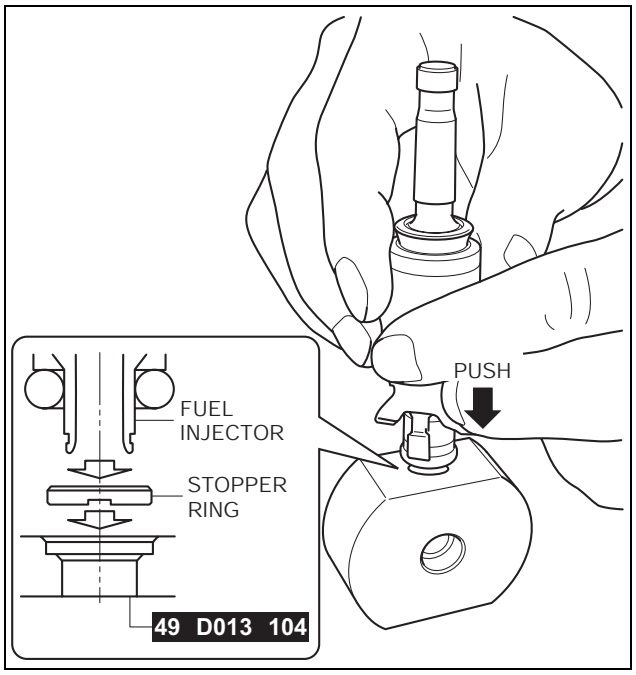

am3uuw0000728

Fuel Injector Installation Note

Caution
- **If engine oil is applied to the fuel injector, it could adhere to the injection holes and inhibit the fuel injector function. To prevent this, apply engine oil to the cylinder head side.**

1. Apply engine oil to the fuel injector installation holes.
2. Insert the fuel injectors to the installation holes one by one, being careful of the direction the fuel injectors are pointed.

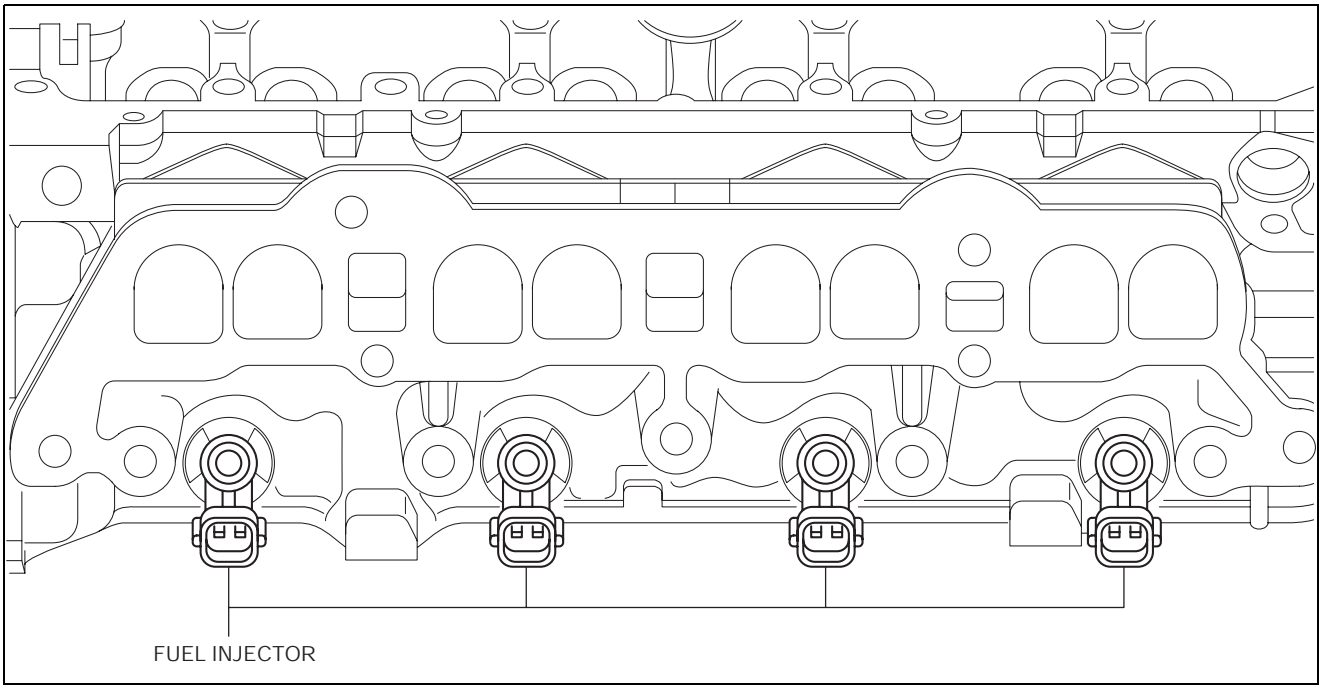

am3uuw0000728

FUEL SYSTEM [SKYACTIV-G 2.0]

Fuel Distributor Installation Note

1. Install the fuel distributor to the fuel injectors while aligning the projection of the spacer to the notch of the fuel distributor.
2. Temporarily tighten the fuel distributor installation bolts until their heads contact the fuel distributors.
3. Turn the fuel distributor installation bolts a half a turn in the order shown in the figure.

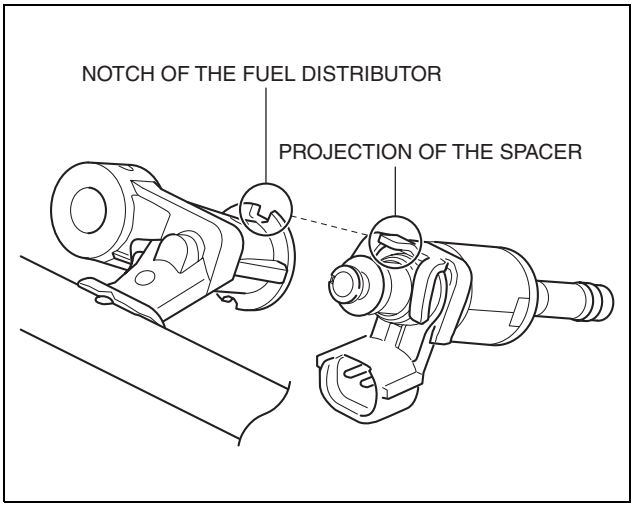

ac5wzw0000270

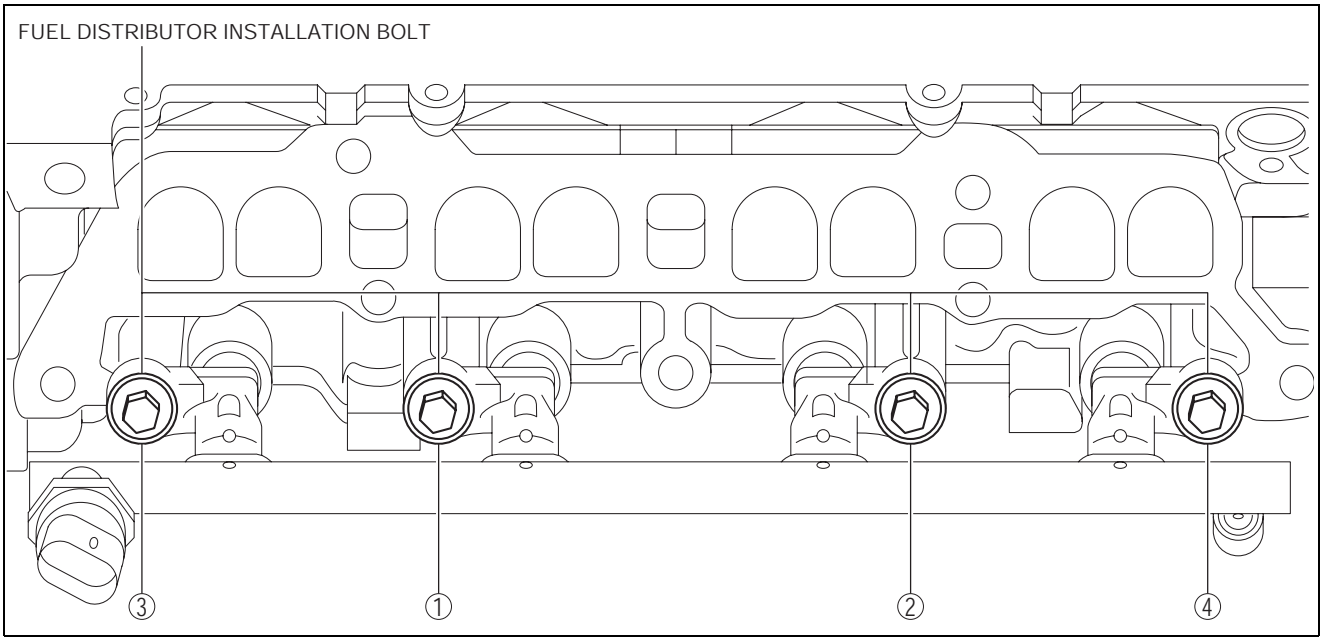

am3uuw0000728

4. Turn the fuel distributor installation bolts another half a turn in the order shown in the figure (one turn including the half turn in Step 3).
5. Tighten the fuel distributor installation bolts in the order shown in the figure.

Fuel distributor installation bolt tightening torque
22—26 N·m {2.3—2.6 kgf·m, 17—19 ft·lbf}

FUEL SYSTEM [SKYACTIV-G 2.0]

FUEL INJECTOR INSPECTION [SKYACTIV-G 2.0]

id0114z5800700

Resistance Inspection

1. Disconnect the negative battery cable. (See 01-17A-11 NEGATIVE BATTERY CABLE DISCONNECTION/ CONNECTION [SKYACTIV-G 2.0].) (See 01-17A-13 NEGATIVE BATTERY CABLE DISCONNECTION/ CONNECTION [SKYACTIV-G 2.0 (WITHOUT i-stop)].)
2. Remove the plug hole plate. (See 01-10A-6 PLUG HOLE PLATE REMOVAL/INSTALLATION [SKYACTIV-G 2.0].)
3. Disconnect the fuel injector connector.
4. Inspect the resistance between fuel injector terminals A and B.

   Fuel injector resistance
   1.74—2.04 ohms [20 °C {68 °F}]

   - If not within the specification, replace the fuel injector. (See 01-14A-51 FUEL INJECTOR REMOVAL/INSTALLATION [SKYACTIV-G 2.0].)

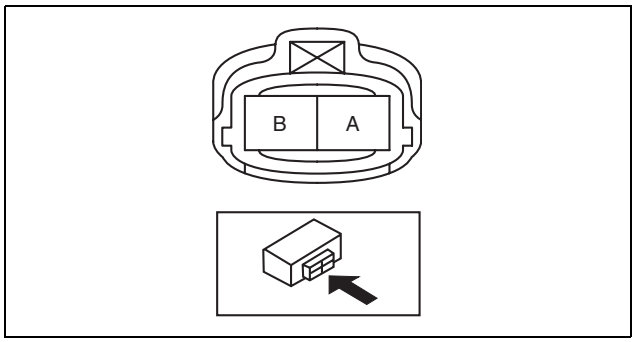

am3uuw0000849

FUEL FILTER (HIGH-PRESSURE) REMOVAL/INSTALLATION [SKYACTIV-G 2.0]

id0114z5803000

Warning

- **Fuel is very flammable liquid. If fuel spills or leaks from the pressurized fuel system, it will cause serious injury or death and facility breakage. Fuel can also irritate skin and eyes. To prevent this, always complete the "Fuel Line Safety Procedure", while referring to the "BEFORE SERVICE PRECAUTION".**
- **A person charged with static electricity could cause a fire or explosion, resulting in death or serious injury. Before draining fuel, make sure to discharge static electricity by touching the vehicle body.**

1. Complete the "BEFORE SERVICE PRECAUTION". (See 01-14A-6 BEFORE SERVICE PRECAUTION [SKYACTIV-G 2.0].)
2. Disconnect the negative battery cable. (See 01-17A-11 NEGATIVE BATTERY CABLE DISCONNECTION/ CONNECTION [SKYACTIV-G 2.0].) (See 01-17A-13 NEGATIVE BATTERY CABLE DISCONNECTION/ CONNECTION [SKYACTIV-G 2.0 (WITHOUT i-stop)].)
3. Using the following procedure:
   6:4 split type
   1. Remove the rear seat cushion. (See 09-13-76 REAR SEAT CUSHION REMOVAL/INSTALLATION.)

FUEL SYSTEM [SKYACTIV-G 2.0]

4:2:4 split type

1. Set the rear seat aside as shown in the figure. (See 09-13-56 REAR SEAT REMOVAL/INSTALLATION.)

4. Remove the fuel pump unit. (See 01-14A-38 FUEL PUMP UNIT REMOVAL/INSTALLATION [SKYACTIV-G 2.0].)
5. Remove the fuel filter (high-pressure). (See 01-14A-41 FUEL PUMP UNIT DISASSEMBLY/ASSEMBLY [SKYACTIV-G 2.0].)
6. Install in the reverse order of removal.
7. Complete the “AFTER SERVICE PRECAUTION”. (See 01-14A-7 AFTER SERVICE PRECAUTION [SKYACTIV-G 2.0].)

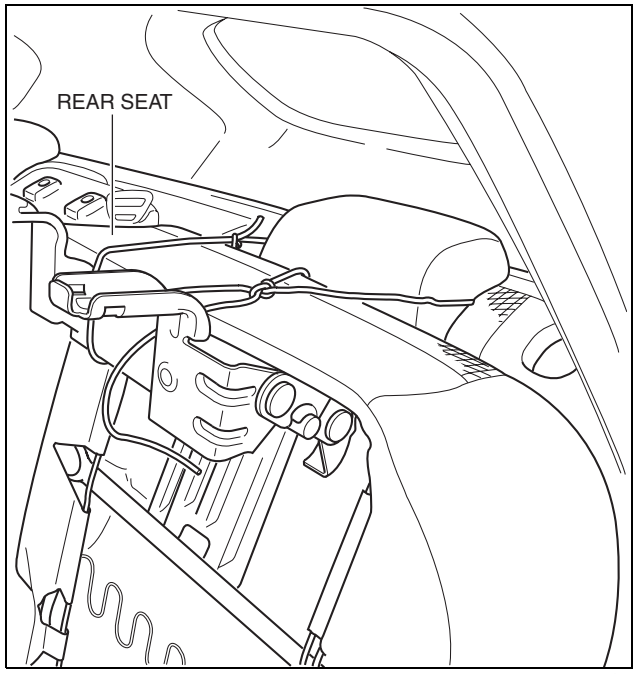

ac5uuw00000409

FUEL PUMP CONTROL MODULE REMOVAL/INSTALLATION [SKYACTIV-G 2.0]

id0114z5175000

1. Disconnect the negative battery cable. (See 01-17A-11 NEGATIVE BATTERY CABLE DISCONNECTION/CONNECTION [SKYACTIV-G 2.0].) (See 01-17A-13 NEGATIVE BATTERY CABLE DISCONNECTION/CONNECTION [SKYACTIV-G 2.0 (WITHOUT i-stop)].)
2. Tip the rear seat (LH).
3. Disconnect the clip connected to trunk board.
4. Disconnect the fuel pump control module connector.
5. Remove the fuel pump control module.
6. Install in the reverse order of removal.

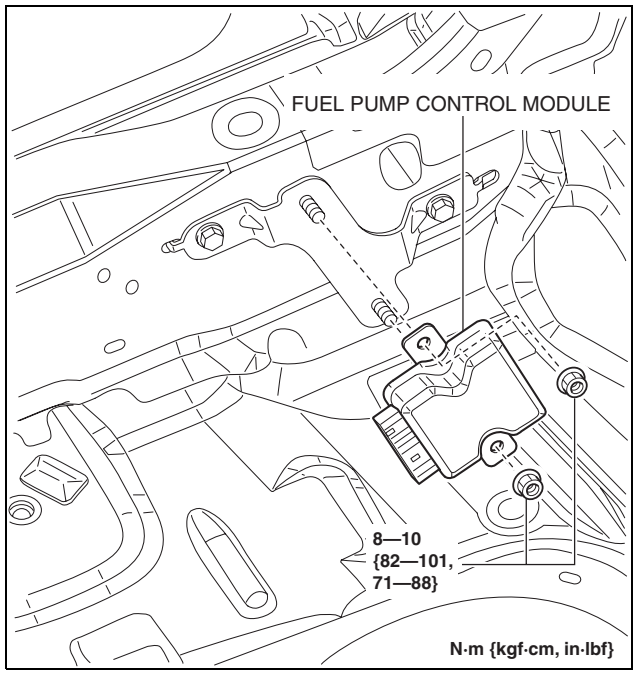

ac5wzw0000269

FUEL SYSTEM [SKYACTIV-G 2.0]

FUEL PUMP CONTROL MODULE INSPECTION [SKYACTIV-G 2.0]

id0114z5175100

1. Perform the KOEO self-test. (See 01-02-12 KOEO/KOER SELF TEST [SKYACTIV-G 2.0].)
2. Verify that a fuel pump control module related DTC is detected. (See 01-02-8 ON-BOARD DIAGNOSTIC TEST [SKYACTIV-G 2.0].)
   - If DTCs are detected, repair the malfunctioning part according to the applicable DTC troubleshooting. (See 01-02-14 DTC TABLE [SKYACTIV-G 2.0].)
   - If a DTC is not detected, go to the next step.
3. Inspect the following:
   - Fuel pump control module damage
   - Fuel pump control module connector damage or corrosion
     — If there is any malfunction, repair or replace the malfunctioning part.

01-14B FUEL SYSTEM [SKYACTIV-D 2.2]

FUEL SYSTEM LOCATION INDEX [SKYACTIV-D 2.2] 01-14B–2
Engine compartment side 01-14B–2
Fuel tank side. 01-14B–4
FUEL SYSTEM FLOW DIAGRAM [SKYACTIV-D 2.2] 01-14B–6
BEFORE SERVICE PRECAUTION [SKYACTIV-D 2.2] 01-14B–6
Fuel line safety procedure 01-14B–6
AFTER SERVICE PRECAUTION [SKYACTIV-D 2.2] 01-14B–7
Fuel line air bleeding 01-14B–7
Fuel Hose Installation Procedure. 01-14B–9
FUEL DRAINING PROCEDURE [SKYACTIV-D 2.2] 01-14B–9
2WD. 01-14B–9
4WD. 01-14B–9
FUEL TANK REMOVAL/INSTALLATION [SKYACTIV-D 2.2] 01-14B–10
2WD. 01-14B–10
4WD. 01-14B–15
FUEL TANK INSPECTION [SKYACTIV-D 2.2] 01-14B–21
2WD. 01-14B–21
4WD. 01-14B–24
FUEL-FILLER PIPE REMOVAL/INSTALLATION [SKYACTIV-D 2.2] 01-14B–29
Dust Cover Removal Note 01-14B–30
Fuel-filler Pipe Removal Note 01-14B–30
Evaporative Hose No.1 Installation Note 01-14B–30
Breather Hose Installation Note. 01-14B–31
Joint Hose Installation Note 01-14B–31
NON-RETURN VALVE INSPECTION [SKYACTIV-D 2.2] 01-14B–32
INJECTION PIPE REMOVAL/INSTALLATION [SKYACTIV-D 2.2] 01-14B–33
Injection Pipe (Supply Pump Side) Removal Note 01-14B–34
Injector Pipe Installation Note 01-14B–34
FUEL INJECTOR REMOVAL/INSTALLATION [SKYACTIV-D 2.2] 01-14B–35
Fuel Injector Installation Note 01-14B–37
FUEL INJECTOR INSPECTION [SKYACTIV-D 2.2] 01-14B–39
Resistance inspection 01-14B–39
FUEL FILTER REMOVAL/INSTALLATION [SKYACTIV-D 2.2] 01-14B–39
Fuel Main Hose No.1 Installation Note 01-14B–41
FUEL FILTER INSPECTION [SKYACTIV-D 2.2] 01-14B–41
FUEL FILTER WATER DRAINING [SKYACTIV-D 2.2] 01-14B–41
FUEL WARMER INSPECTION [SKYACTIV-D 2.2]. 01-14B–42
FUEL CHECK VALVE REMOVAL/INSTALLATION [SKYACTIV-D 2.2]. 01-14B–42
FUEL CHECK VALVE INSPECTION [SKYACTIV-D 2.2]. 01-14B–42
FUEL FEED VALVE REMOVAL/INSTALLATION [SKYACTIV-D 2.2]. 01-14B–42
FUEL FEED VALVE INSPECTION [SKYACTIV-D 2.2]. 01-14B–42
FUEL PRESSURE LIMITER VALVE REMOVAL/INSTALLATION [SKYACTIV-D 2.2]. 01-14B–42
FUEL PRESSURE LIMITER VALVE INSPECTION [SKYACTIV-D 2.2] 01-14B–43
Resistance inspection 01-14B–43
SUCTION CONTROL VALVE REMOVAL/INSTALLATION [SKYACTIV-D 2.2]. 01-14B–43
SUCTION CONTROL VALVE INSPECTION [SKYACTIV-D 2.2] 01-14B–45
Resistance inspection 01-14B–45
SEDIMENTOR SWITCH INSPECTION [SKYACTIV-D 2.2]. 01-14B–46
SUPPLY PUMP REMOVAL/INSTALLATION [SKYACTIV-D 2.2]. 01-14B–46
Fuel Feed Pipe Removal Note 01-14B–49
Clip Removal Note 01-14B–50
Supply Pump Removal Note 01-14B–50
Fuel Main Hose Installation Note 01-14B–50
Fuel Return Hose Installation Note. . . . 01-14B–51
SUPPLY PUMP INSPECTION [SKYACTIV-D 2.2]. 01-14B–51
COMMON RAIL REMOVAL/INSTALLATION [SKYACTIV-D 2.2]. 01-14B–52
Common Rail Installation Note 01-14B–53
Fuel Return Hose Installation Note. . . . 01-14B–54
COMMON RAIL INSPECTION [SKYACTIV-D 2.2]. 01-14B–54
LOWER CASE REMOVAL/INSTALLATION [SKYACTIV-D 2.2]. 01-14B–54
Plug Installation Note 01-14B–55
Fuel Return Hose No.4 Installation Note 01-14B–56
Fuel Return Hose No.3 Installation Note 01-14B–56
Fuel Return Hose No.2 Installation Note 01-14B–56
Fuel Main Hose and Fuel Return Hose No.1 Installation Note. 01-14B–57

FUEL SYSTEM [SKYACTIV-D 2.2]

FUEL SYSTEM LOCATION INDEX [SKYACTIV-D 2.2]

Engine compartment side

R.H.D.

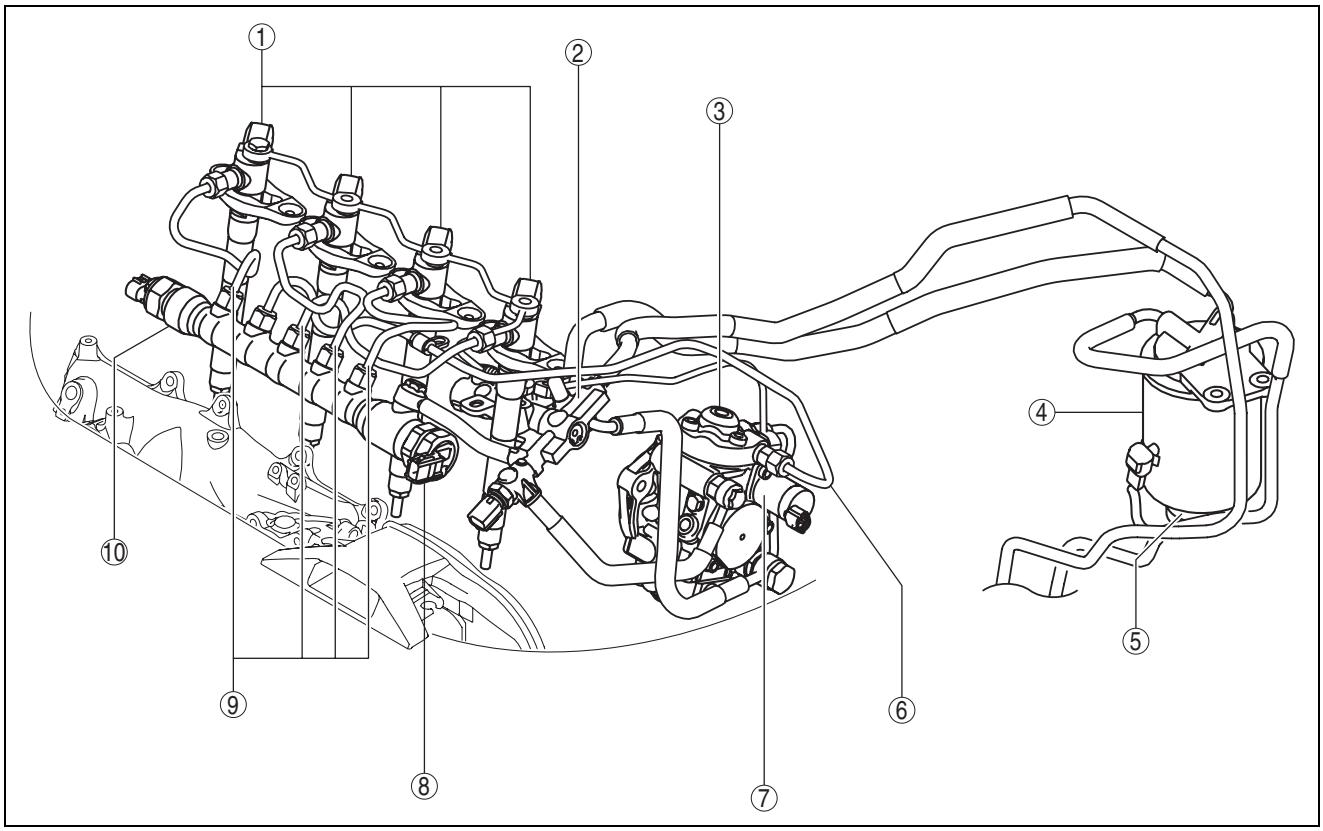

ac5wzw0000473

1	Fuel injector (See 01-14B-35 FUEL INJECTOR REMOVAL/INSTALLATION [SKYACTIV-D 2.2].) (See 01-14B-39 FUEL INJECTOR INSPECTION [SKYACTIV-D 2.2].)
2	Lower case (See 01-14B-54 LOWER CASE REMOVAL/INSTALLATION [SKYACTIV-D 2.2].) (See 01-14B-42 FUEL CHECK VALVE REMOVAL/INSTALLATION [SKYACTIV-D 2.2].) (See 01-14B-42 FUEL CHECK VALVE INSPECTION [SKYACTIV-D 2.2].) (See 01-14B-42 FUEL FEED VALVE REMOVAL/INSTALLATION [SKYACTIV-D 2.2].) (See 01-14B-42 FUEL FEED VALVE INSPECTION [SKYACTIV-D 2.2].)
3	Supply pump (See 01-14B-46 SUPPLY PUMP REMOVAL/INSTALLATION [SKYACTIV-D 2.2].) (See 01-14B-51 SUPPLY PUMP INSPECTION [SKYACTIV-D 2.2].)
4	Fuel filter (See 01-14B-39 FUEL FILTER REMOVAL/INSTALLATION [SKYACTIV-D 2.2].) (See 01-14B-41 FUEL FILTER INSPECTION [SKYACTIV-D 2.2].)
5	Sedimentor switch (See 01-14B-46 SEDIMENTOR SWITCH INSPECTION [SKYACTIV-D 2.2].)

6	Injection pipe (supply pump side) (See 01-14B-33 INJECTION PIPE REMOVAL/INSTALLATION [SKYACTIV-D 2.2].)
7	Suction control valve (See 01-14B-43 SUCTION CONTROL VALVE REMOVAL/INSTALLATION [SKYACTIV-D 2.2].) (See 01-14B-45 SUCTION CONTROL VALVE INSPECTION [SKYACTIV-D 2.2].)
8	Fuel pressure limiter valve (See 01-14B-42 FUEL PRESSURE LIMITER VALVE REMOVAL/INSTALLATION [SKYACTIV-D 2.2].) (See 01-14B-43 FUEL PRESSURE LIMITER VALVE INSPECTION [SKYACTIV-D 2.2].)
9	Injection pipe (fuel injector side) (See 01-14B-33 INJECTION PIPE REMOVAL/INSTALLATION [SKYACTIV-D 2.2].)
10	Common rail (See 01-14B-52 COMMON RAIL REMOVAL/INSTALLATION [SKYACTIV-D 2.2].) (See 01-14B-54 COMMON RAIL INSPECTION [SKYACTIV-D 2.2].)
11	Fuel warmer (See 01-14B-39 FUEL FILTER REMOVAL/INSTALLATION [SKYACTIV-D 2.2].) (See 01-14B-42 FUEL WARMER INSPECTION [SKYACTIV-D 2.2].)

FUEL SYSTEM [SKYACTIV-D 2.2]

Fuel tank side
2WD

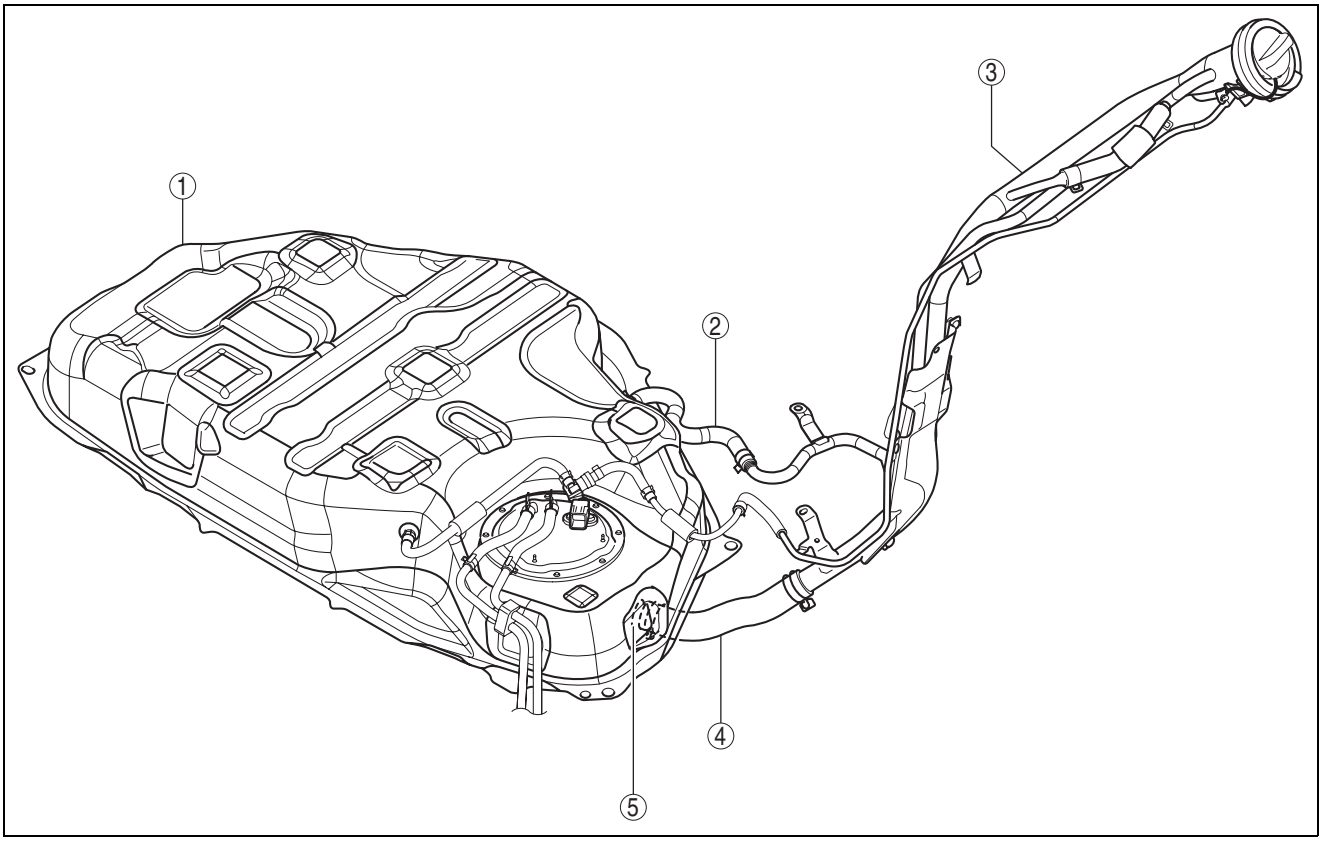

ac5jjw00003515

1	Fuel tank (See 01-14B-10 FUEL TANK REMOVAL/ INSTALLATION [SKYACTIV-D 2.2].) (See 01-14B-21 FUEL TANK INSPECTION [SKYACTIV-D 2.2].)
2	Breather hose (See 01-14B-10 FUEL TANK REMOVAL/ INSTALLATION [SKYACTIV-D 2.2].)

3	Fuel-filler pipe (See 01-14B-29 FUEL-FILLER PIPE REMOVAL/ INSTALLATION [SKYACTIV-D 2.2].)
4	Joint hose (See 01-14B-10 FUEL TANK REMOVAL/ INSTALLATION [SKYACTIV-D 2.2].)
5	Non-return valve (See 01-14B-32 NON-RETURN VALVE INSPECTION [SKYACTIV-D 2.2].)

FUEL SYSTEM [SKYACTIV-D 2.2]

4WD

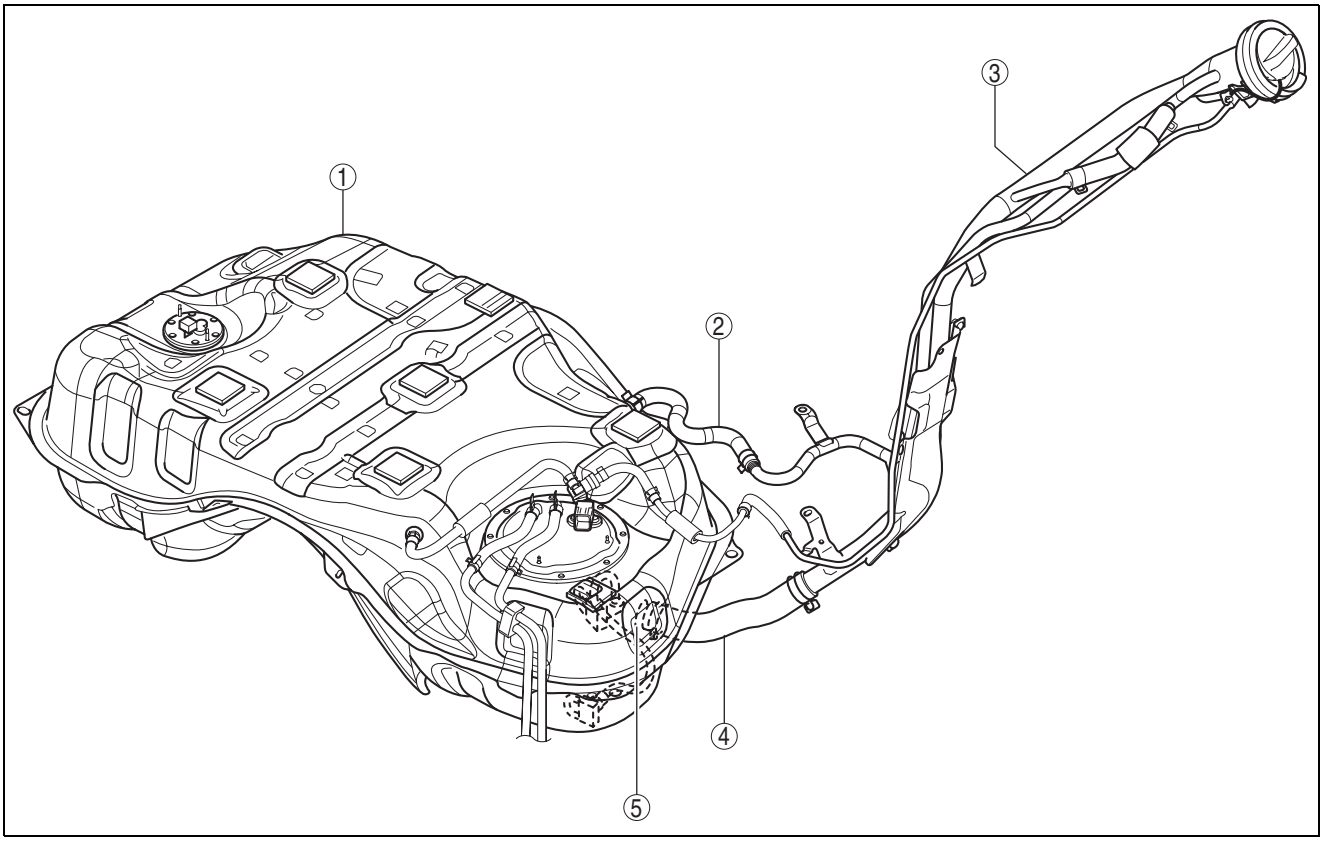

ac5jjw00003516

1	Fuel tank (See 01-14B-10 FUEL TANK REMOVAL/ INSTALLATION [SKYACTIV-D 2.2].) (See 01-14B-21 FUEL TANK INSPECTION [SKYACTIV-D 2.2].)
2	Breather hose (See 01-14B-10 FUEL TANK REMOVAL/ INSTALLATION [SKYACTIV-D 2.2].)

3	Fuel-filler pipe (See 01-14B-29 FUEL-FILLER PIPE REMOVAL/ INSTALLATION [SKYACTIV-D 2.2].)
4	Joint hose (See 01-14B-10 FUEL TANK REMOVAL/ INSTALLATION [SKYACTIV-D 2.2].)
5	Non-return valve (See 01-14B-32 NON-RETURN VALVE INSPECTION [SKYACTIV-D 2.2].)

FUEL SYSTEM [SKYACTIV-D 2.2]

FUEL SYSTEM FLOW DIAGRAM [SKYACTIV-D 2.2]

id0114z7818400

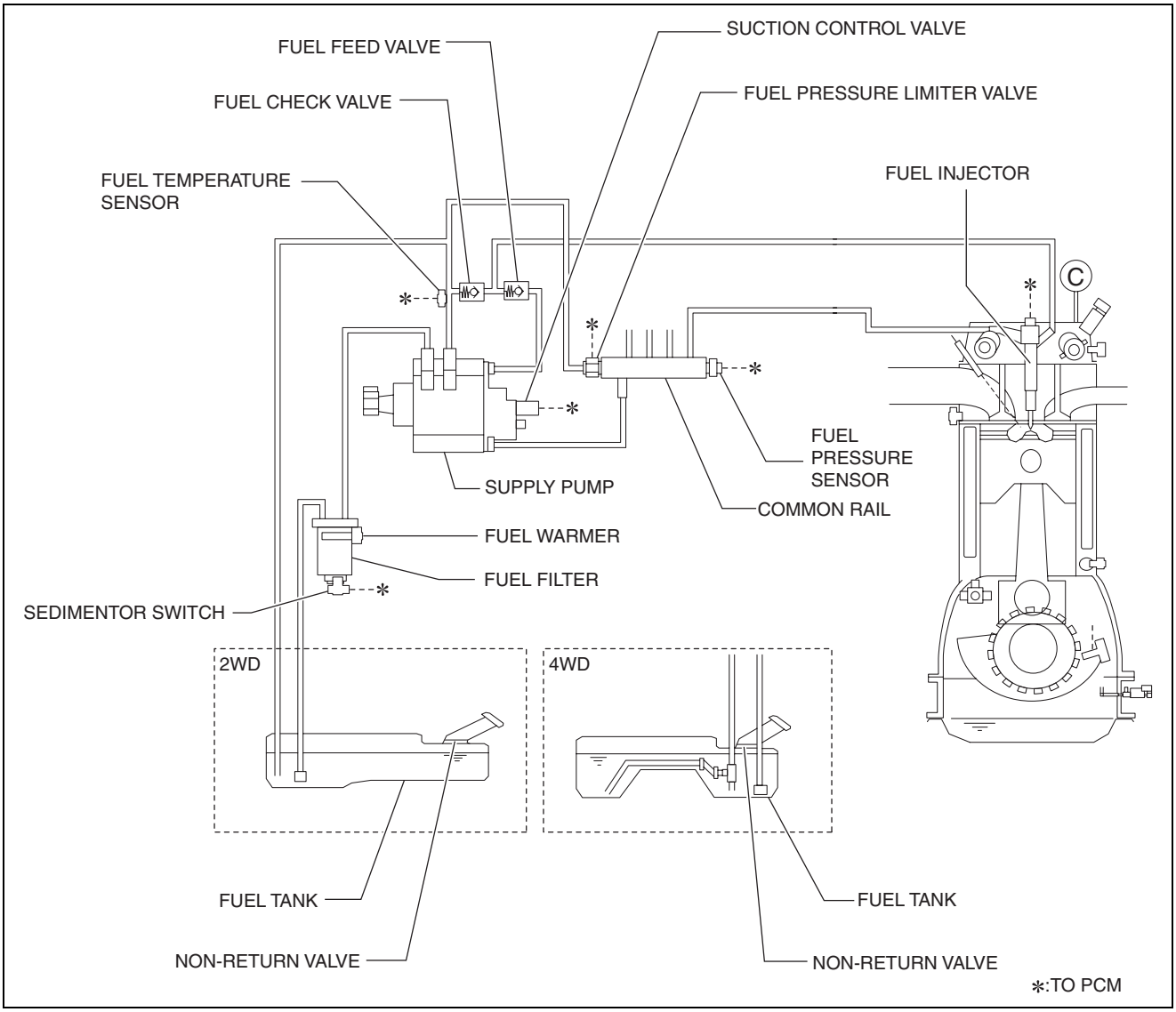

ac5wzw0000475

BEFORE SERVICE PRECAUTION [SKYACTIV-D 2.2]

id0114z7802000

Warning

- **Always keep sparks and flames away from fuel. Fuel can be easily ignited which could cause serious injury or death, and damage to equipment**
- **Fuel line spills and leakage from the pressurized fuel system are dangerous. Fuel can ignite and cause serious injury or death, and damage to property and facilities. Fuel can also irritate the skin and eyes. To prevent this, always execute the following line safety procedure.**
- **A person charged with static electricity could cause a fire or explosion, resulting in death or serious injury. Before servicing the fuel system, make sure to discharge static electricity by touching a vehicle.**

Note

- When the engine is stopped, fuel in the fuel system is pressurized.

Fuel line safety procedure

1. To prevent fuel spatter and leakage of the fuel system, perform the following procedure:
   (1) Remove the fuel-filler cap to release the pressure inside the fuel tank.
   (2) Cover the fuel hose with a rag when disconnecting it.
   (3) Plug the hose after disconnection.

FUEL SYSTEM [SKYACTIV-D 2.2]

AFTER SERVICE PRECAUTION [SKYACTIV-D 2.2]

id0114z7801900

Warning

- **Fuel is highly flammable and dangerous. Fuel line spills and leakage can cause serious injury or death, and damage to equipment. If fuel comes into contact with the skin and eyes it will cause irritation. Always complete the "Fuel Hose Installation Procedure" when installing the fuel hose. (See 01-14B-9 Fuel Hose Installation Procedure.)**
- **A person charged with static electricity could cause a fire or explosion, resulting in death or serious injury. Before servicing the fuel system, make sure to discharge static electricity by touching a vehicle.**

Fuel line air bleeding

1. Verify that the fuel hose which has been serviced is connected securely.

Caution

- **Prolonged clanking causes breakage of a battery and a starter. In order to prevent these, continuation clanking is carried out for a maximum of 10 s.**

2. Crank the engine until it starts.
   - If the engine starts, the procedure is completed.
   - If the engine does not start, go to the next step.
3. Wait **for 20 s**.

Caution

- **Prolonged clanking causes breakage of a battery and a starter. In order to prevent these, continuation clanking is carried out for a maximum of 10 s.**

4. Crank the engine until it starts.
   - If the engine starts, the procedure is completed.
   - If the engine does not start, go to the next step.
5. Perform the following procedure:
   EC and U.K. Specs.
   1. Disconnect the fuel return hose.

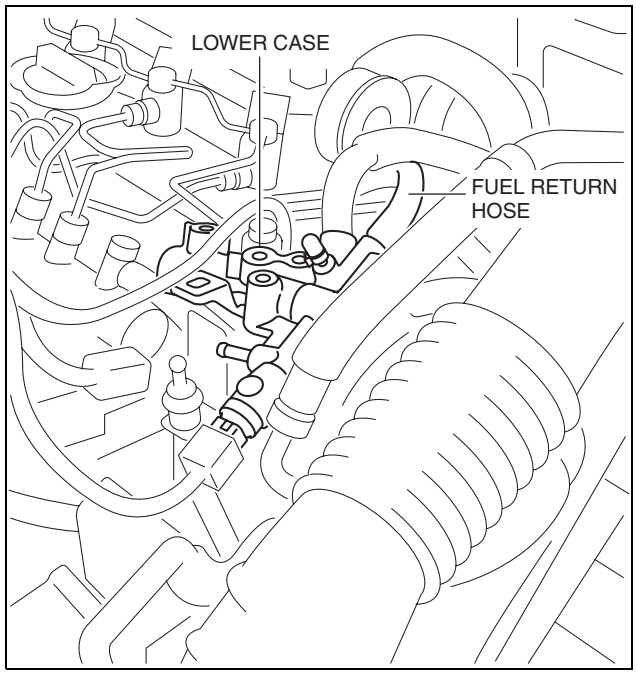

ac5wzw0000532

FUEL SYSTEM [SKYACTIV-D 2.2]

2. Connect the SST.
3. Operate the SST several times.
4. Disconnect the SST.
5. Connect the fuel return hose.
6. Crank the engine until it starts.
   - If the engine starts, the procedure is completed.
   - If the engine does not start, return to Step 5.

Except EC and U.K. Specs.

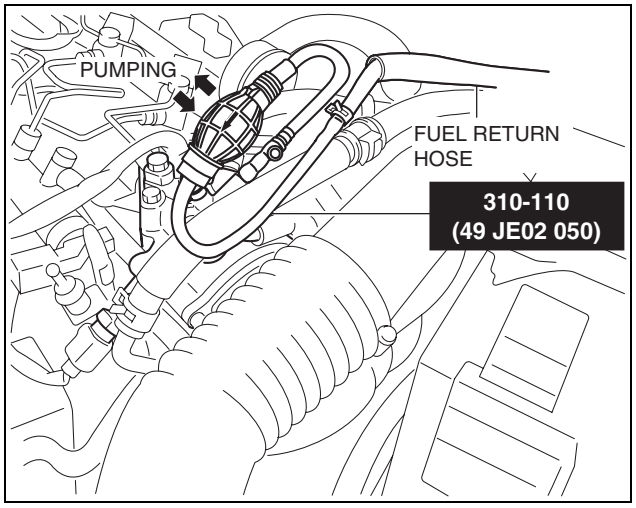

ac5wzw0000533

1. Remove the plug.

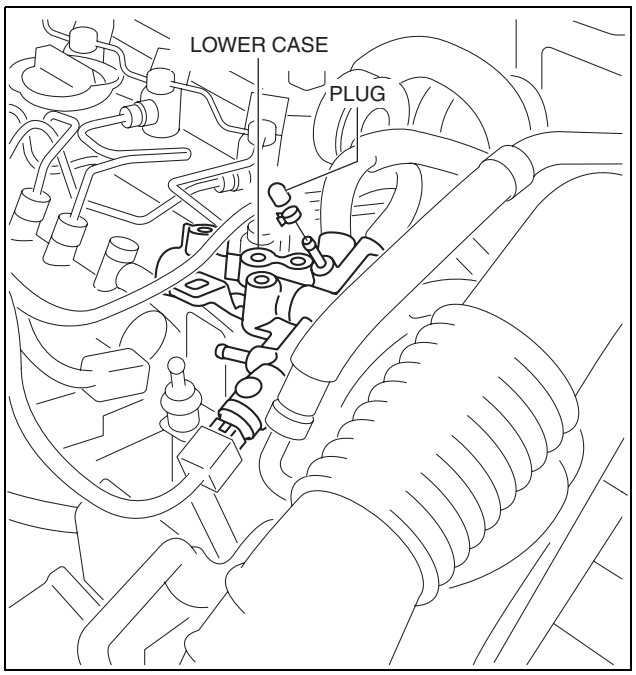

ac5wzw0000474

2. Install the vacuum pump as shown in the figure.
3. Drain fuel until the air is bled out.
4. Remove the vacuum pump and install the plug.
5. Crank the engine until it starts.
   - If the engine starts, the procedure is completed.
   - If the engine does not start, return to Step 5.

Caution
- **Prolonged clanking causes breakage of a battery and a starter. In order to prevent these, continuation clanking is carried out for a maximum of 10 s.**

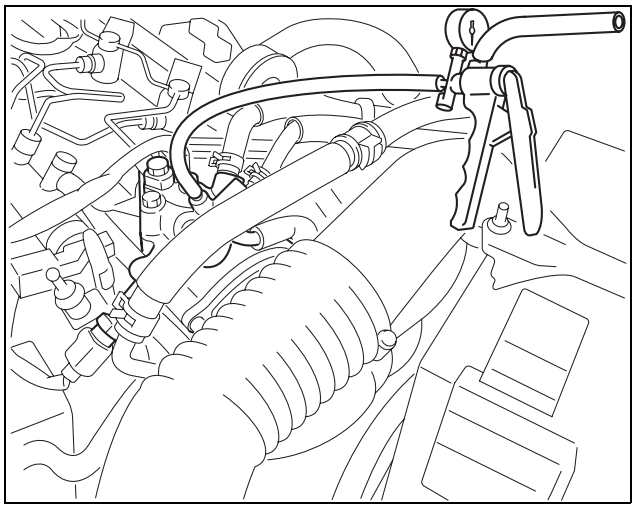
ac5wzw0000474

6. Crank the engine until it starts.
   - If the engine starts, the procedure is completed.
   - If the engine does not start, return to Step 5.

FUEL SYSTEM [SKYACTIV-D 2.2]

Fuel Hose Installation Procedure

1. When connecting the fuel hose and fuel pipe, verify that there is no damage or deformity on the fuel pipe and no cracking on the fuel hose.
2. When installing the fuel hose, verify the main and return sides and install it to the specified position.

FUEL DRAINING PROCEDURE [SKYACTIV-D 2.2]

id0114z7853500

Warning

- **Fuel is very flammable liquid. If fuel spills or leaks from the pressurized fuel system, it will cause serious injury or death and facility breakage. Fuel can also irritate skin and eyes. To prevent this, always complete the "Fuel Line Safety Procedure", while referring to the "BEFORE SERVICE PRECAUTION".**
- **A person charged with static electricity could cause a fire or explosion, resulting in death or serious injury. Before draining fuel, make sure to discharge static electricity by touching the vehicle body.**

2WD

1. Perform the "Fuel Line Safety Procedure" referring to the "BEFORE SERVICE PRECAUTION". (See 01-14B-6 BEFORE SERVICE PRECAUTION [SKYACTIV-D 2.2].)
2. The container for light oil is placed under a joint hose.
3. Disconnect the joint hose from the fuel-filler pipe side, drain the fuel. (See 01-14B-10 FUEL TANK REMOVAL/INSTALLATION [SKYACTIV-D 2.2].)

4WD

1. Perform the "Fuel Line Safety Procedure" referring to the "BEFORE SERVICE PRECAUTION". (See 01-14B-6 BEFORE SERVICE PRECAUTION [SKYACTIV-D 2.2].)
2. The container for light oil is placed under a joint hose.
3. Disconnect the joint hose from the fuel-filler pipe side, drain the fuel. (See 01-14B-10 FUEL TANK REMOVAL/INSTALLATION [SKYACTIV-D 2.2].)
4. Remove the fuel gauge sender unit (sub). (See 09-22-27 FUEL GAUGE SENDER UNIT REMOVAL/INSTALLATION [4WD].)
5. Drain the fuel.

FUEL SYSTEM [SKYACTIV-D 2.2]

FUEL TANK REMOVAL/INSTALLATION [SKYACTIV-D 2.2]

id0114z7801600

Warning

- **Fuel is highly flammable and dangerous. Fuel line spills and leakage can cause serious injury or death, and damage to equipment. If fuel comes into contact with the skin and eyes it will cause irritation. To prevent this, always perform the "Fuel Line Safety Procedure" referring to the "BEFORE REPAIR PROCEDURE".**
- **A person charged with static electricity could cause a fire or explosion, resulting in death or serious injury. Before draining fuel, make sure to discharge static electricity by touching a vehicle.**

2WD

1. Park the vehicle on a level surface.
2. Perform the "Fuel Line Safety Procedure" referring to the "BEFORE SERVICE PRECAUTION". (See 01-14B-6 BEFORE SERVICE PRECAUTION [SKYACTIV-D 2.2].)
3. Drain the fuel. (See 01-14B-9 FUEL DRAINING PROCEDURE [SKYACTIV-D 2.2].)
4. Perform the following procedure:

   6:4 split seat

   1. Remove the rear seat cushion. (See 09-13-76 REAR SEAT CUSHION REMOVAL/INSTALLATION.)

   4:2:4 split seat

   1. Set the rear seat aside as shown in the figure. (See 09-13-56 REAR SEAT REMOVAL/INSTALLATION.)

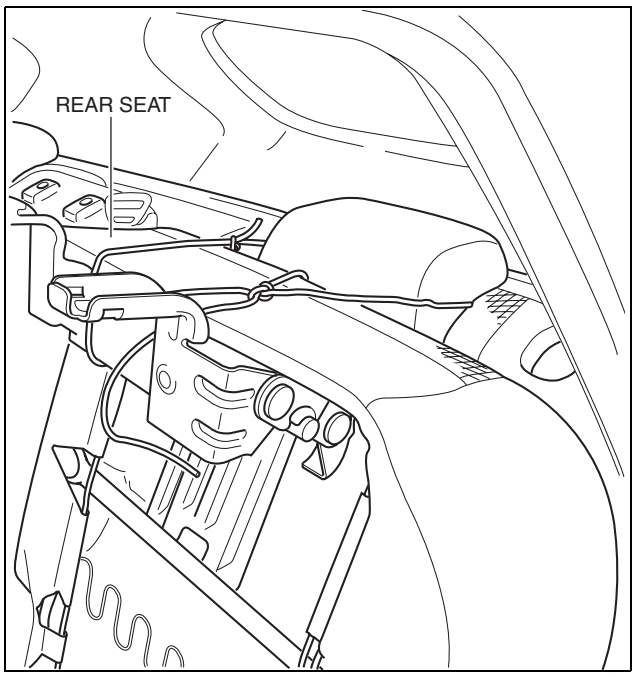

ac5wzw0000477

FUEL SYSTEM [SKYACTIV-D 2.2]

5. Partially peel back the floor mat as shown in the figure.

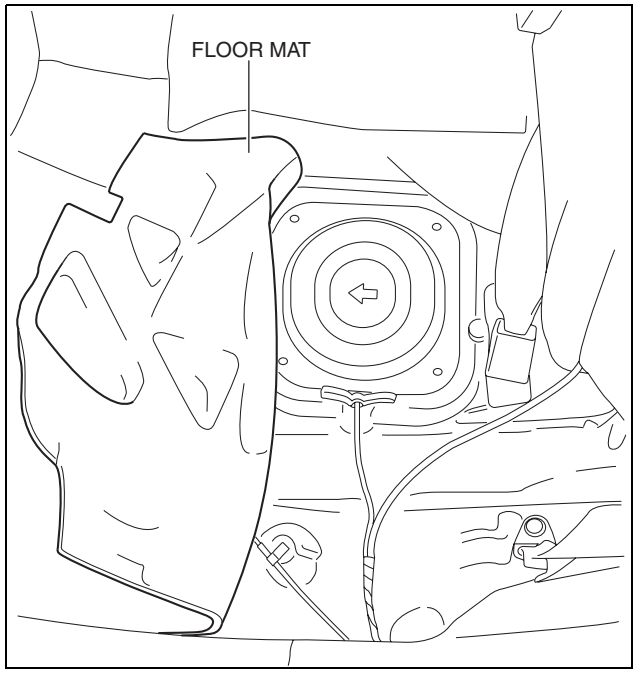

ac5wzw0000477

6. Remove the service hole cover.
7. Disconnect the following parts:
   - Fuel gauge sender unit (main) connector
   - Fuel hose (main side)
   - Fuel hose (return side)
8. Remove the floor under cover. (See 09-16-44 FLOOR UNDER COVER REMOVAL/ INSTALLATION.)
9. Remove the middle pipe. (See 01-15B-1 EXHAUST SYSTEM REMOVAL/INSTALLATION [SKYACTIV-D 2.2].)
10. Remove in the order shown in the figure.
11. Install in the reverse order of removal.
12. Perform the fuel leakage inspection referring to “AFTER SERVICE PRECAUTION”. (See 01-14B-7 AFTER SERVICE PRECAUTION [SKYACTIV-D 2.2].)

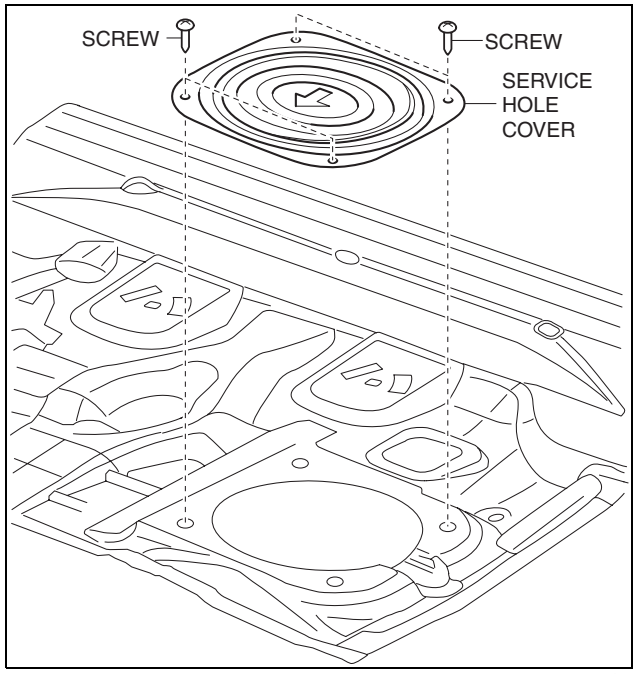

ac5wzw0000477

FUEL SYSTEM [SKYACTIV-D 2.2]

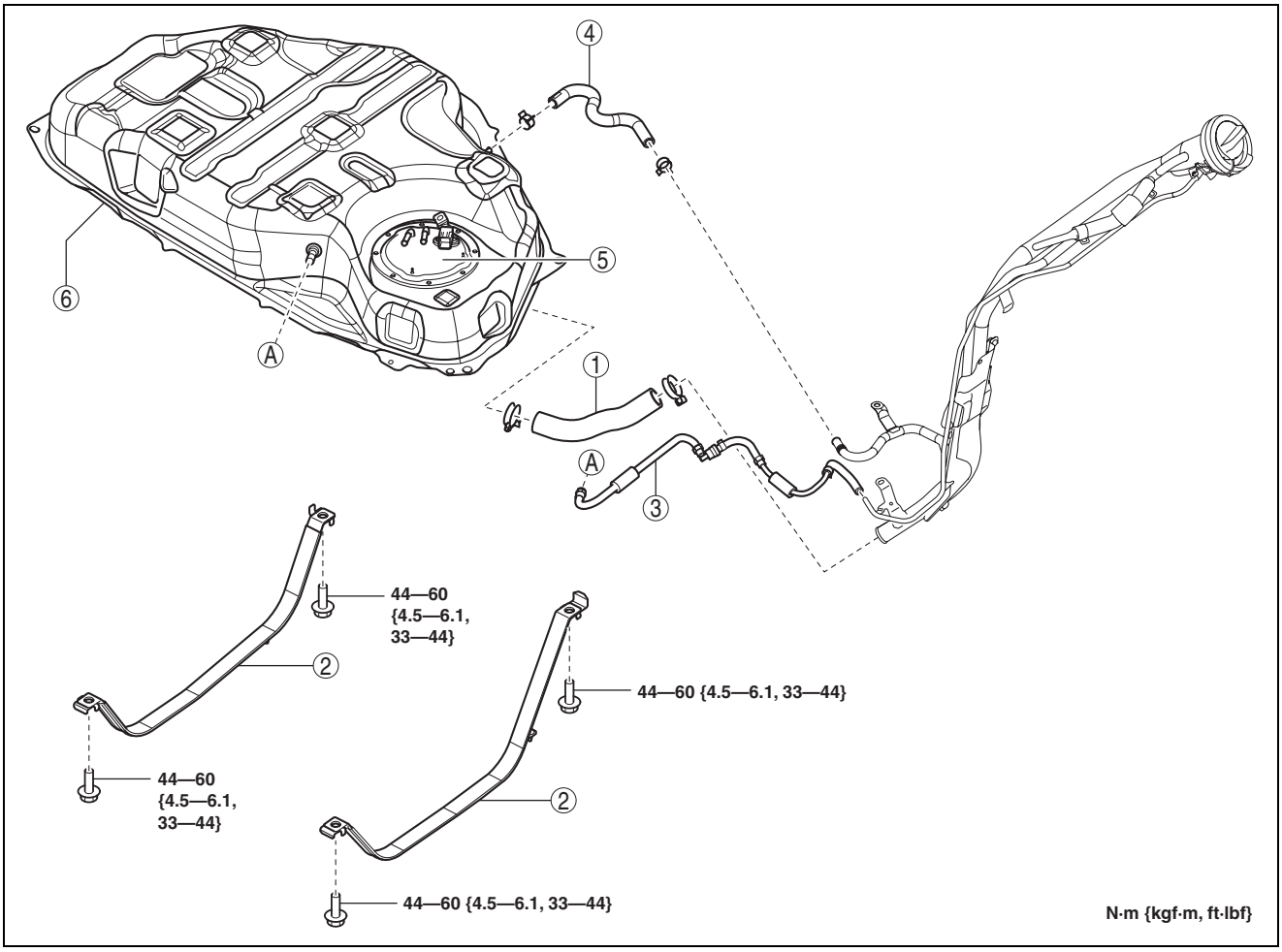

ac5wzw0000477

1	Joint hose (See 01-14B-14 Joint Hose Installation Note.)
2	Fuel tank strap
3	Evaporative hose (See 01-14B-12 Evaporative Hose Removal Note.)

4	Breather hose (See 01-14B-13 Breather Hose Installation Note.)
5	Fuel gauge sender unit (See 09-22-23 FUEL GAUGE SENDER UNIT REMOVAL/INSTALLATION [2WD].)
6	Fuel tank

Evaporative Hose Removal Note

1. Remove the parking brake cable bracket installation bolt. (See 04-12-7 REAR PARKING BRAKE CABLE REMOVAL/INSTALLATION.)
2. Disconnect the evaporative hose on the fuel-filler pipe side.
3. Remove the following parts as a single unit:
   - Evaporative hose
   - Breather hose
   - Fuel gauge sender unit
   - Fuel tank
4. Remove the evaporative hose from the fuel tank.

FUEL SYSTEM [SKYACTIV-D 2.2]

Breather Hose Installation Note

1. Align the marking and install the breather hose as shown in the figure.

Fuel tank side

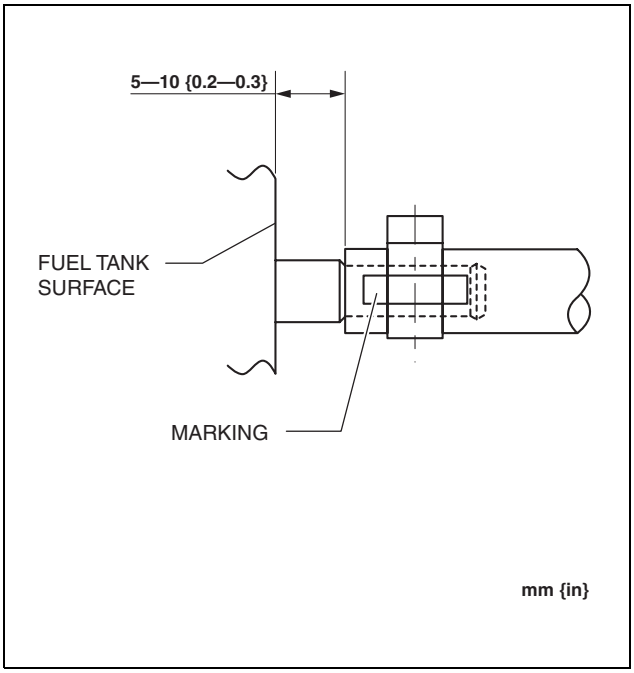

ac5wzw0000477

Fuel-filler pipe side

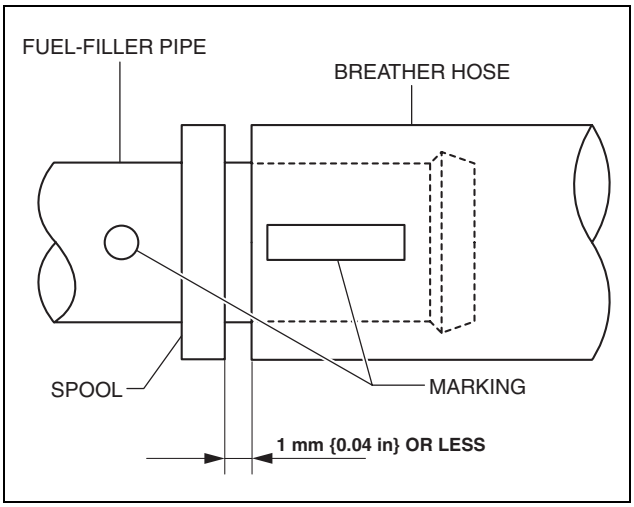

ac5wzw0000477

FUEL SYSTEM [SKYACTIV-D 2.2]

Joint Hose Installation Note

1. Install the joint hose as shown in the figure.

Fuel tank side

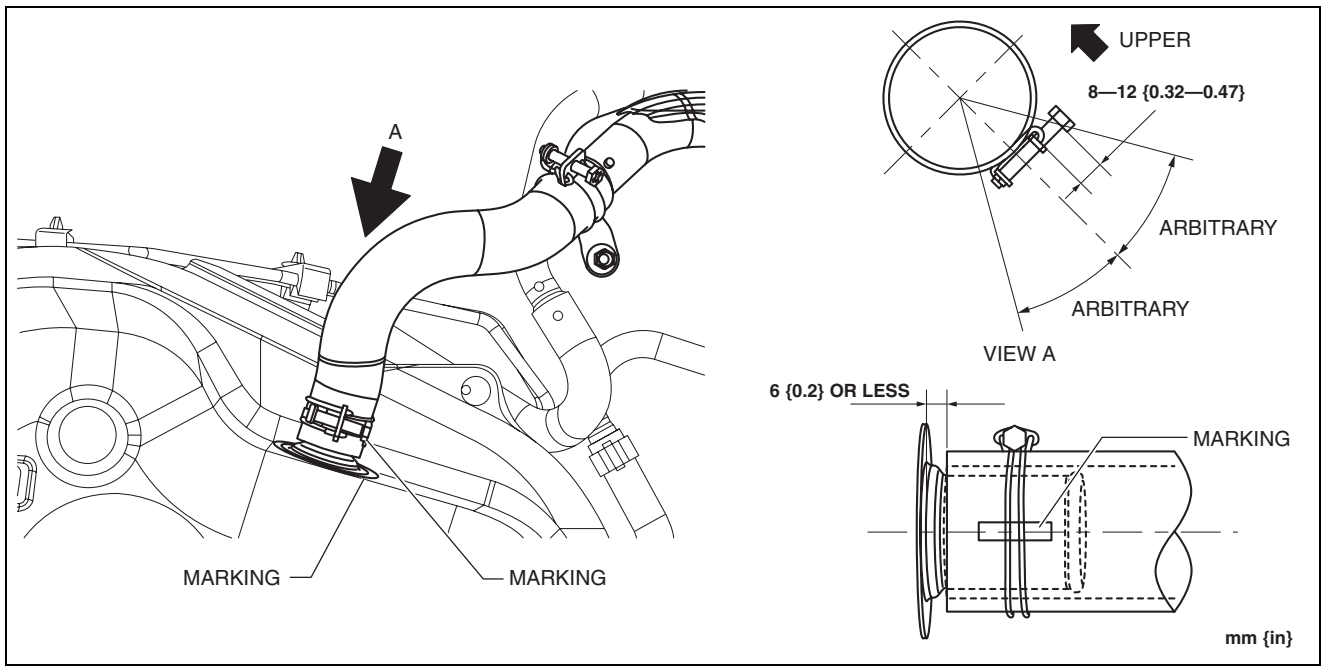

ac5wzw0000477

Fuel-filler pipe side

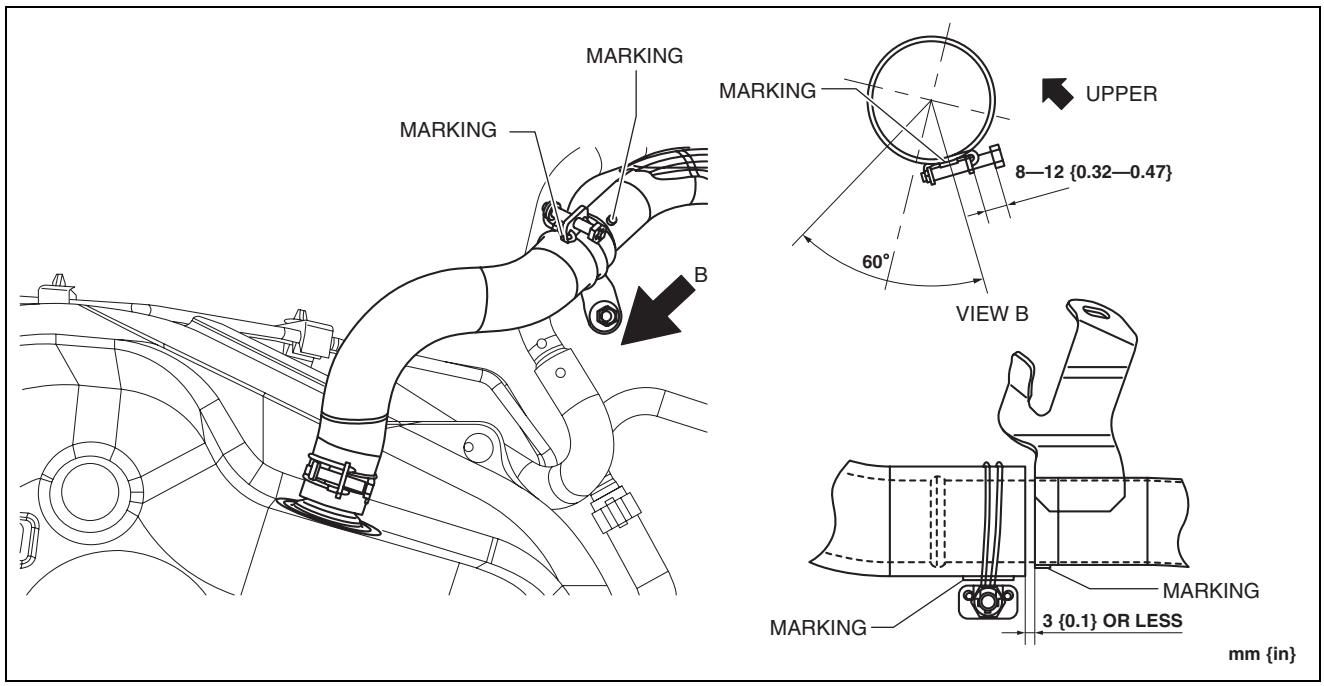

ac5wzw0000477

FUEL SYSTEM [SKYACTIV-D 2.2]

4WD

1. Park the vehicle on a level surface.
2. Perform the “Fuel Line Safety Procedure” referring to the “BEFORE SERVICE PRECAUTION”. (See 01-14B-6 BEFORE SERVICE PRECAUTION [SKYACTIV-D 2.2].)
3. Drain the fuel. (See 01-14B-9 FUEL DRAINING PROCEDURE [SKYACTIV-D 2.2].)
4. Perform the following procedure:
   6:4 split seat
   1. Remove the rear seat cushion. (See 09-13-76 REAR SEAT CUSHION REMOVAL/INSTALLATION.)
   4:2:4 split seat
   1. Set the rear seat aside as shown in the figure. (See 09-13-56 REAR SEAT REMOVAL/INSTALLATION.)

Main side

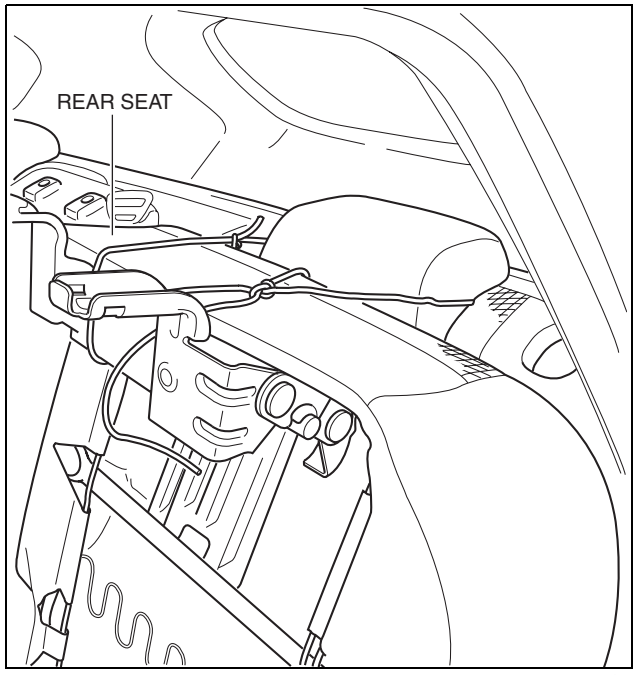

ac5wzw0000477

Sub side

5. Partially peel back the floor mat as shown in the figure.

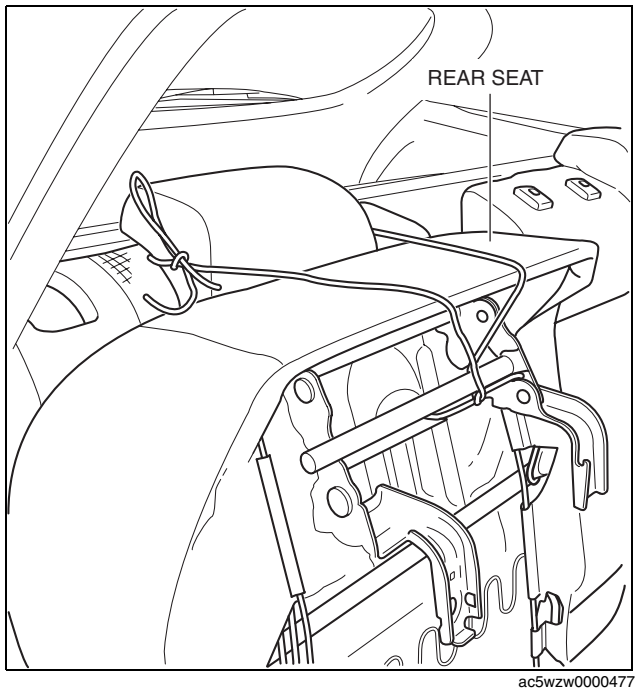

ac5wzw0000477

FUEL SYSTEM [SKYACTIV-D 2.2]

Main side

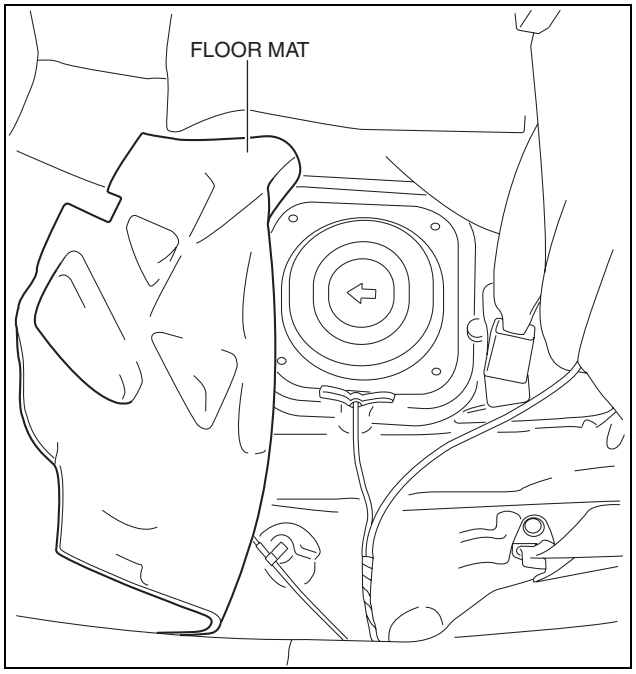

ac5wzw0000477

Sub side

6. Remove the service hole cover.

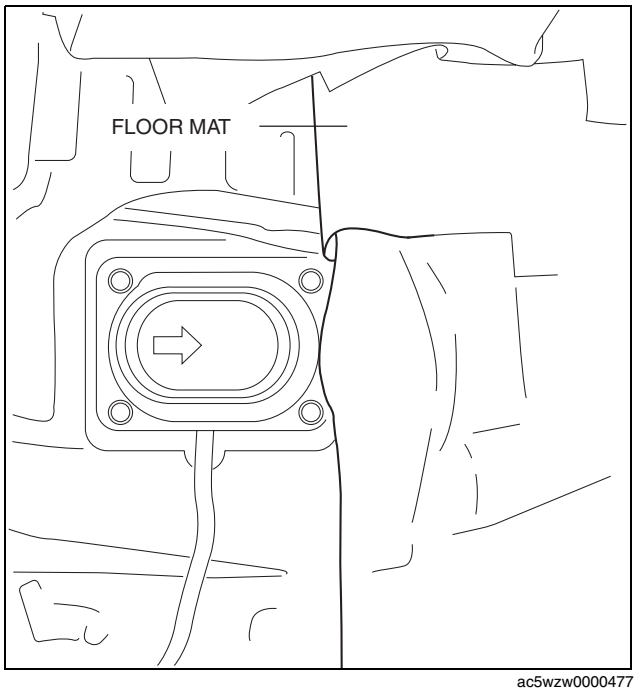

ac5wzw0000477

FUEL SYSTEM [SKYACTIV-D 2.2]

Main side

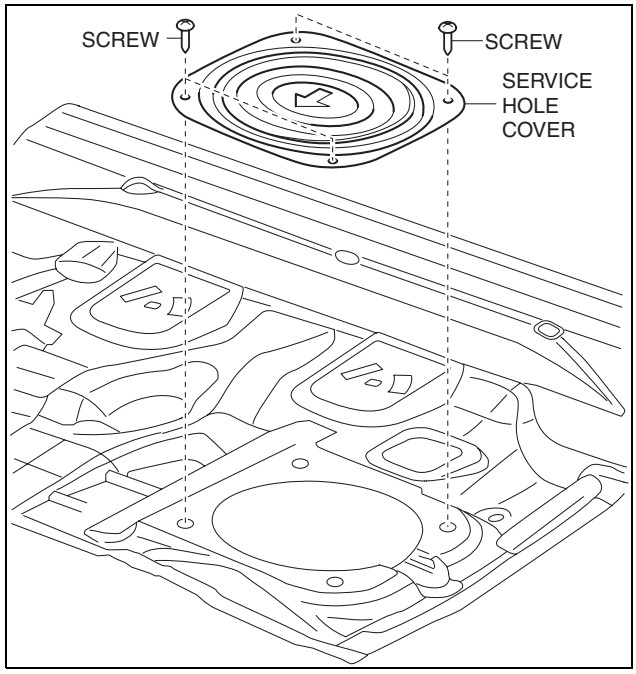

ac5wzw0000477

Sub side

7. Disconnect the following parts:
   Main side
   - Fuel gauge sender unit (main) connector
   - Fuel hose (main side)
   - Fuel hose (return side)

   Sub side
   - Fuel gauge sender unit (sub) connector
8. Remove the floor under cover. (See 09-16-44 FLOOR UNDER COVER REMOVAL/INSTALLATION.)
9. Remove the middle pipe. (See 01-15B-1 EXHAUST SYSTEM REMOVAL/INSTALLATION [SKYACTIV-D 2.2].)
10. Remove the propeller shaft. (See 03-15-2 PROPELLER SHAFT REMOVAL/INSTALLATION.)
11. Remove in the order shown in the figure.
12. Install in the reverse order of removal.
13. Perform the fuel leakage inspection referring to “AFTER SERVICE PRECAUTION”. (See 01-14B-7 AFTER SERVICE PRECAUTION [SKYACTIV-D 2.2].)

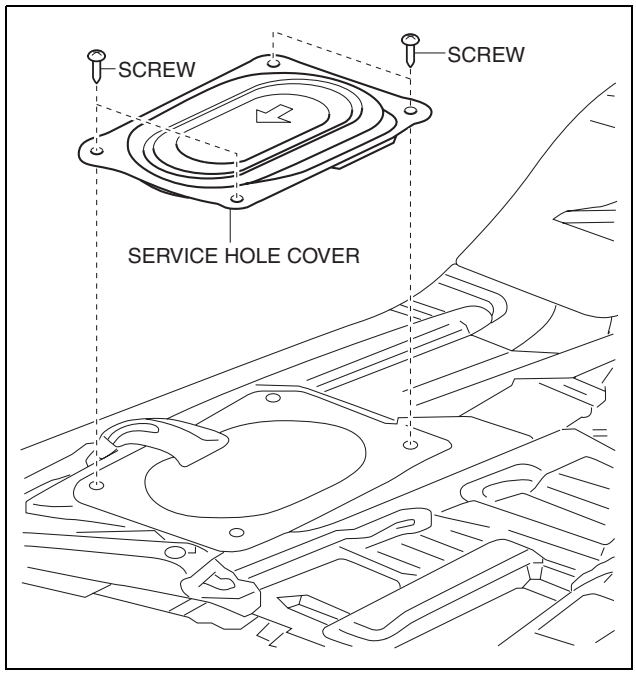

ac5wzw0000478

FUEL SYSTEM [SKYACTIV-D 2.2]

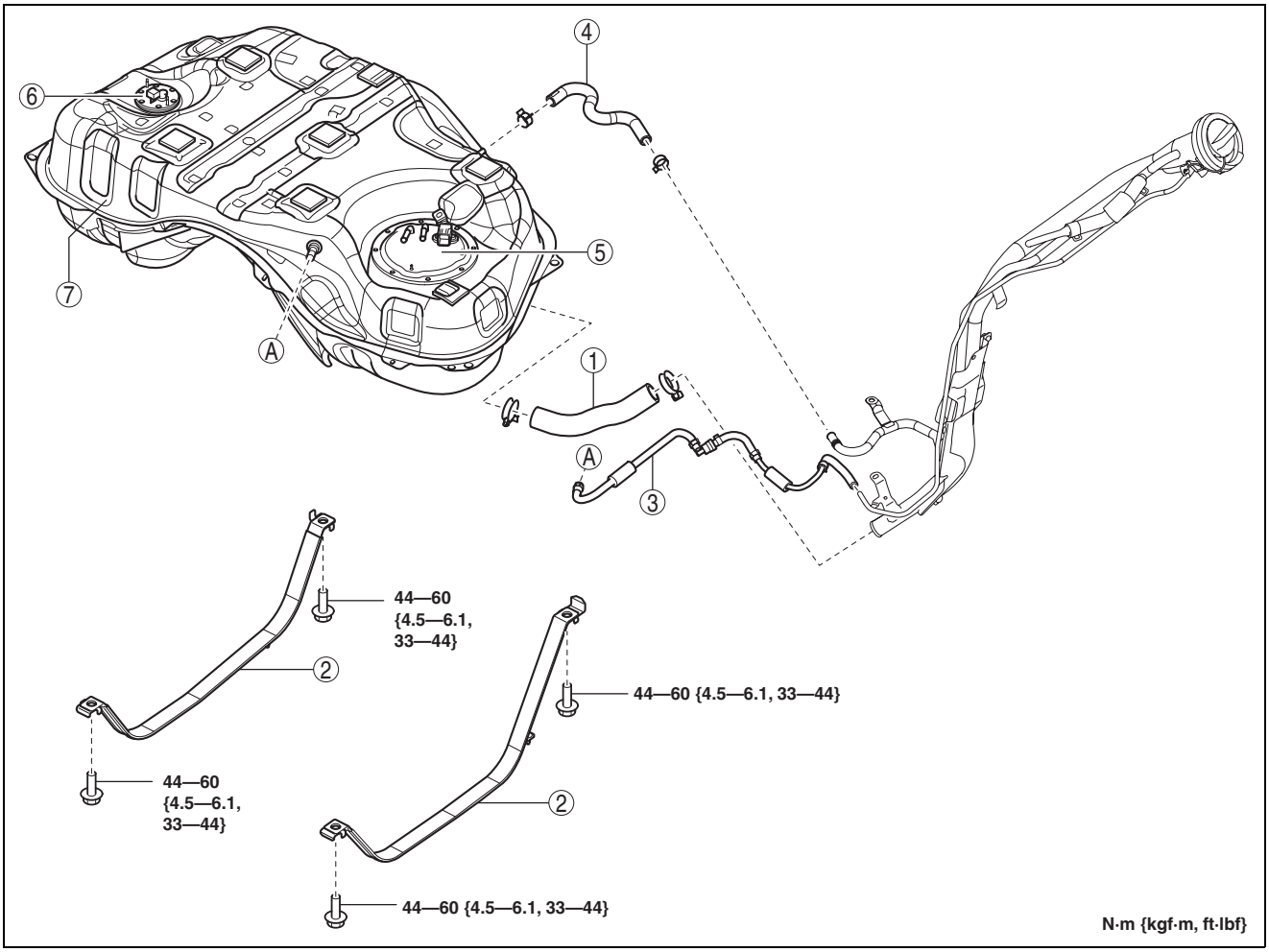

ac5wzw0000478

1	Joint hose (See 01-14B-20 Joint Hose Installation Note.)
2	Fuel tank strap
3	Evaporative hose (See 01-14B-18 Evaporative Hose Removal Note.)
4	Breather hose (See 01-14B-19 Breather Hose Installation Note.)

5	Fuel gauge sender unit (main) (See 09-22-27 FUEL GAUGE SENDER UNIT REMOVAL/INSTALLATION [4WD].)
6	Fuel gauge sender unit (sub) (See 09-22-27 FUEL GAUGE SENDER UNIT REMOVAL/INSTALLATION [4WD].)
7	Fuel tank

Evaporative Hose Removal Note

1. Remove the parking brake cable bracket installation bolt. (See 04-12-7 REAR PARKING BRAKE CABLE REMOVAL/INSTALLATION.)
2. Disconnect the evaporative hose on the fuel-filler pipe side.
3. Remove the following parts as a single unit:
   - Evaporative hose
   - Breather hose
   - Fuel gauge sender unit (main)
   - Fuel gauge sender unit (sub)
   - Fuel tank
4. Remove the evaporative hose from the fuel tank.

FUEL SYSTEM [SKYACTIV-D 2.2]

Breather Hose Installation Note

1. Align the marking and install the breather hose as shown in the figure.

Fuel tank side

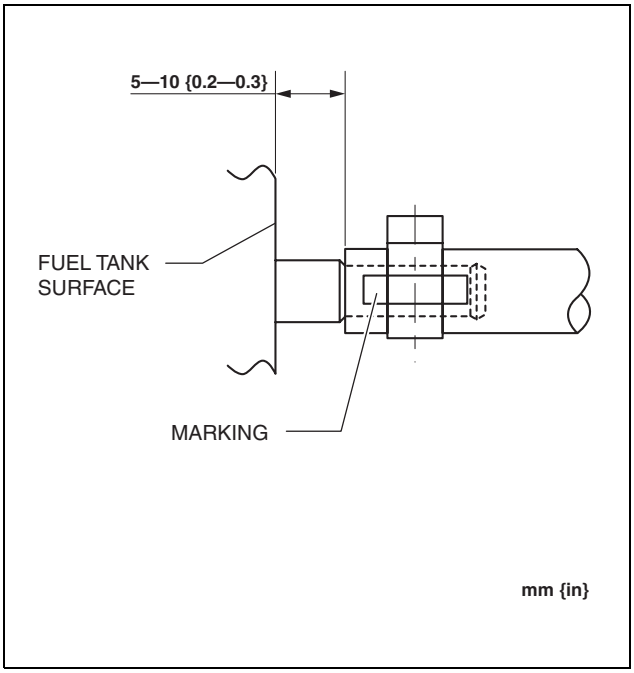

ac5wzw0000477

Fuel-filler pipe side

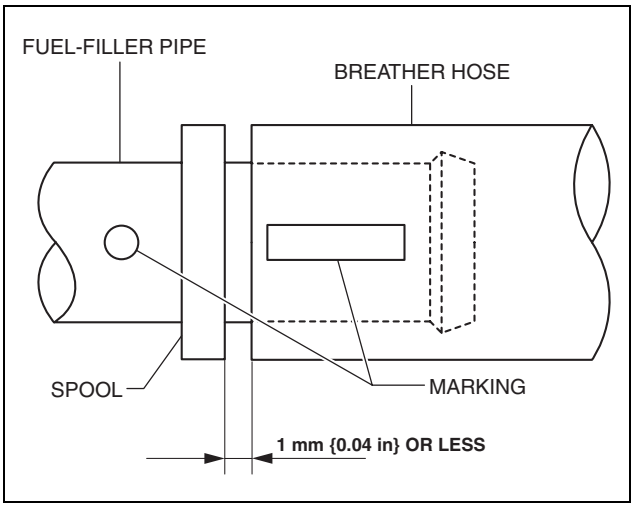

ac5wzw0000477

FUEL SYSTEM [SKYACTIV-D 2.2]

Joint Hose Installation Note

1. Install the joint hose as shown in the figure.

Fuel tank side

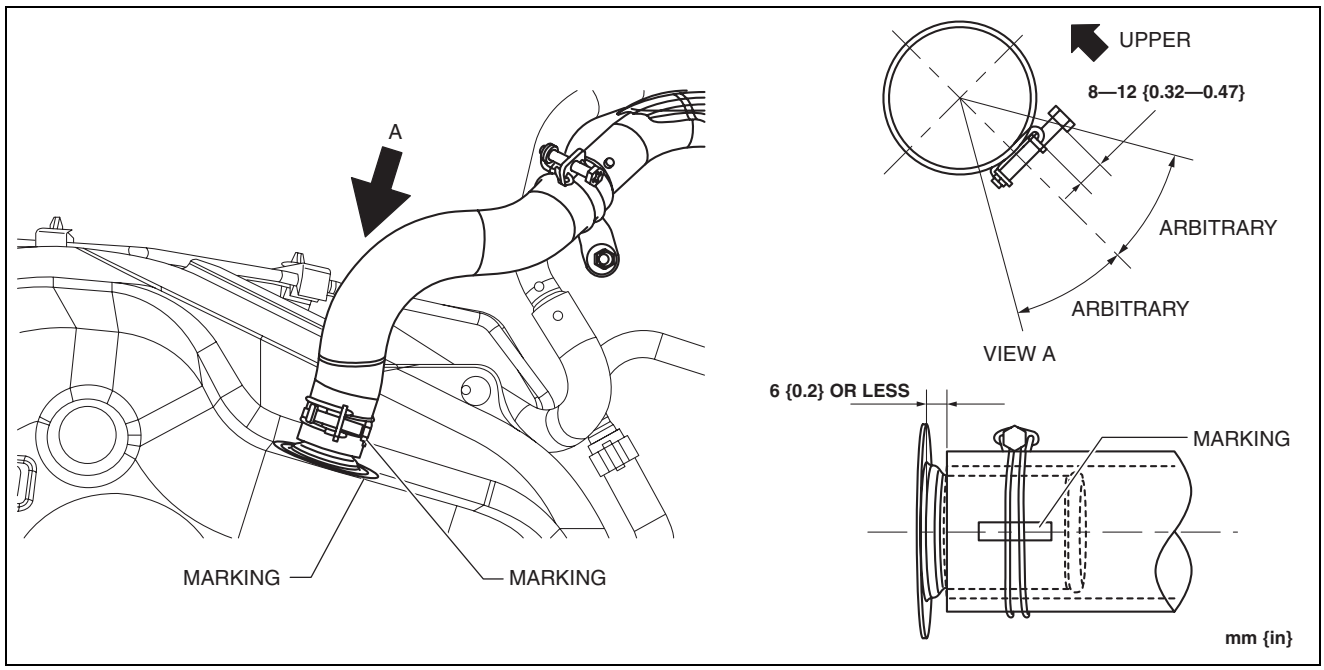

ac5wzw0000477

Fuel-filler pipe side

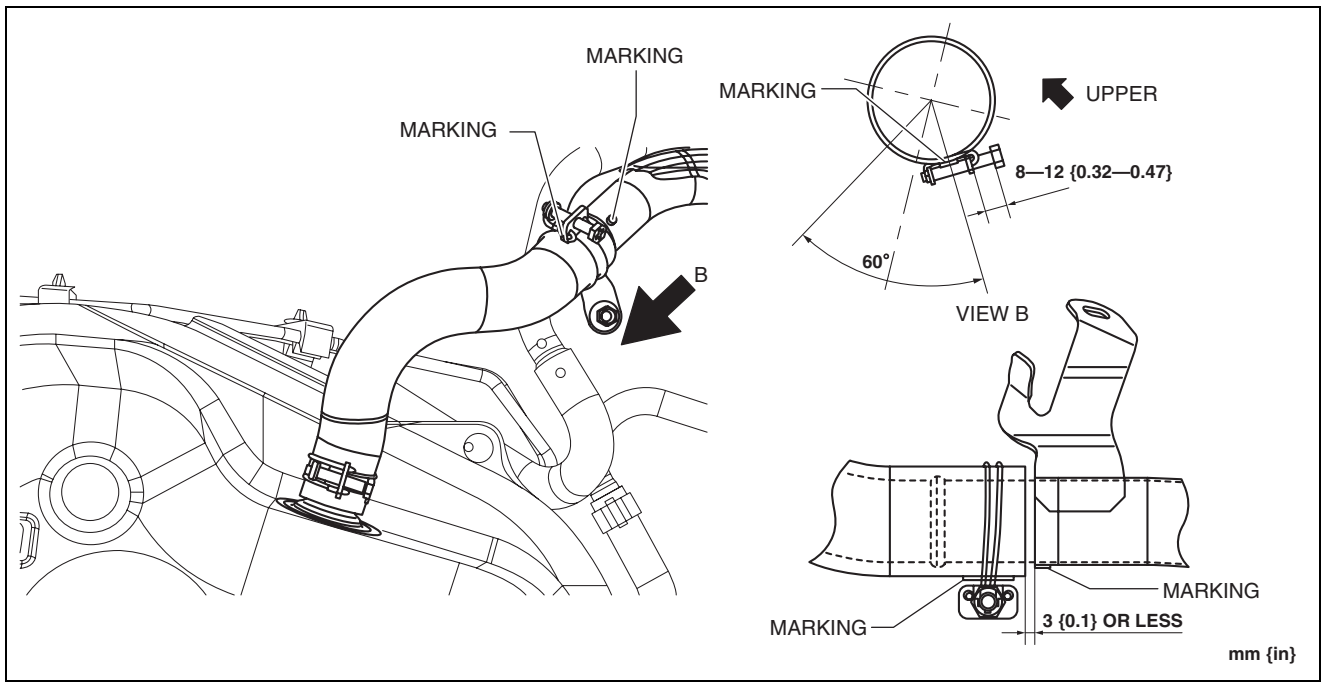

ac5wzw0000477

FUEL SYSTEM [SKYACTIV-D 2.2]

FUEL TANK INSPECTION [SKYACTIV-D 2.2]

id0114z7803200

Warning

- **Fuel is highly flammable and dangerous. Fuel line spills and leakage can cause serious injury or death, and damage to equipment. If fuel comes into contact with the skin and eyes it will cause irritation. To prevent this, always perform the "Fuel Line Safety Procedure" referring to the "BEFORE REPAIR PROCEDURE".**
- **A person charged with static electricity could cause a fire or explosion, resulting in death or serious injury. Before draining fuel, make sure to discharge static electricity by touching a vehicle.**

Note

- The rollover valve built into the fuel tank, and fuel tank leakage are inspected in this inspection.

2WD

1. Park the vehicle on a level surface.
2. Perform the "Fuel Line Safety Procedure" referring to the "BEFORE SERVICE PRECAUTION". (See 01-14B-6 BEFORE SERVICE PRECAUTION [SKYACTIV-D 2.2].)
3. Drain the fuel. (See 01-14B-9 FUEL DRAINING PROCEDURE [SKYACTIV-D 2.2].)
4. Perform the following procedure:

   6:4 split seat

   1. Remove the rear seat cushion. (See 09-13-76 REAR SEAT CUSHION REMOVAL/INSTALLATION.)

   4:2:4 split seat

   1. Set the rear seat aside as shown in the figure. (See 09-13-56 REAR SEAT REMOVAL/INSTALLATION.)

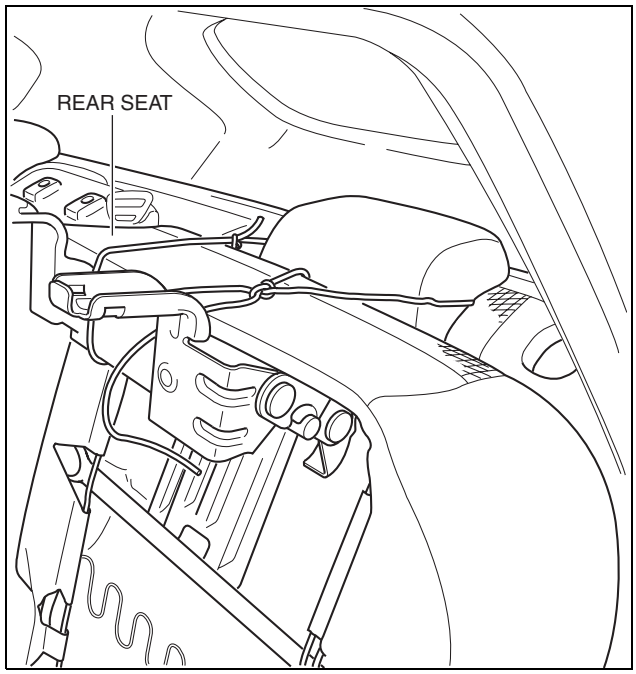

ac5wzw0000478

FUEL SYSTEM [SKYACTIV-D 2.2]

5. Set the floor mat aside as shown in the figure.

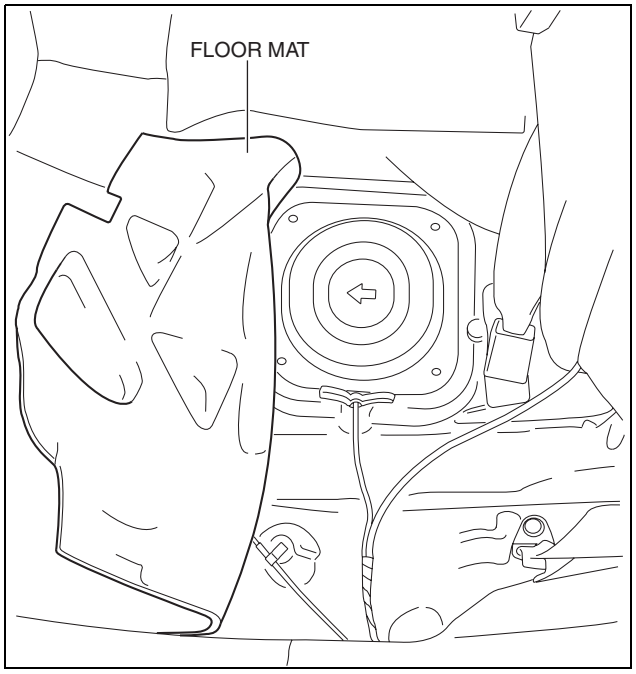

ac5wzw0000478

6. Remove the service hole cover.
7. Disconnect the following parts:
   - Fuel gauge sender unit connector
   - Fuel hose (main side)
   - Fuel hose (return side)
8. Remove the floor under cover. (See 09-16-44 FLOOR UNDER COVER REMOVAL/INSTALLATION.)
9. Remove the middle pipe. (See 01-15B-1 EXHAUST SYSTEM REMOVAL/INSTALLATION [SKYACTIV-D 2.2].)
10. Remove the fuel tank and the fuel gauge sender unit as a single unit. (See 01-14B-10 FUEL TANK REMOVAL/INSTALLATION [SKYACTIV-D 2.2].)
11. Perform the following procedure to verify fuel tank airtightness.

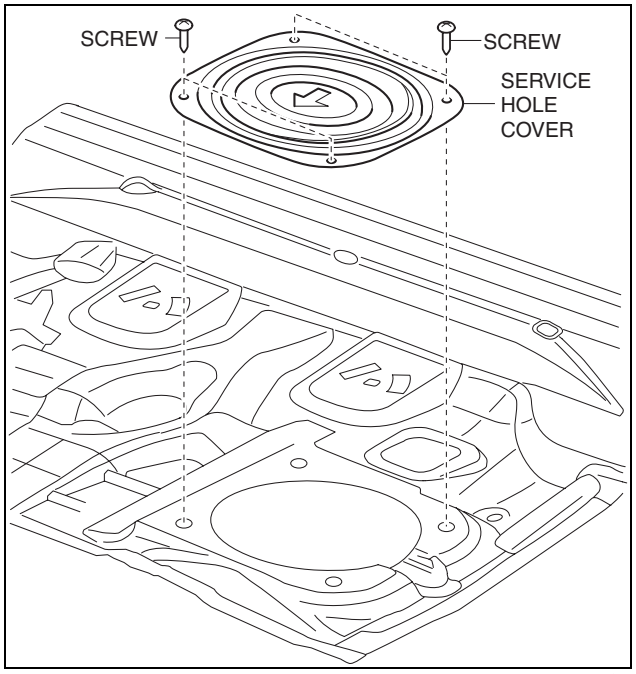

ac5wzw0000478

FUEL SYSTEM [SKYACTIV-D 2.2]

(1) Plug the fuel gauge sender unit pipe, and ports B and C.
(2) Apply pressure of **5.9 kPa {44 mmHg, 1.7 inHg}** to port A and wait for a while.
(3) Verify that there is no change in the pressure and no air leakage from the fuel tank.
- If there is air leakage, replace the fuel tank. (See 01-14B-10 FUEL TANK REMOVAL/INSTALLATION [SKYACTIV-D 2.2].)

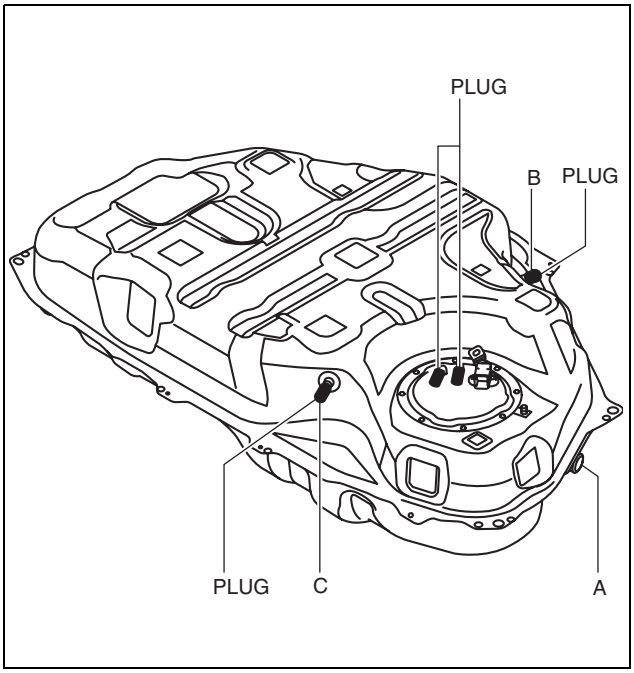

ac5wzw0000478

12. Remove the port C plug
13. Place the fuel tank in a level position.
14. Close port A and apply **5.9 kPa {44 mmHg, 1.7 inHg}** of pressure to port C, and leave it in this condition momentarily.
15. Open port A and verify that the pressure decreases from **5.9 kPa {44 mmHg, 1.7 inHg}**.
- If it cannot be verified, replace the fuel tank. (See 01-14B-10 FUEL TANK REMOVAL/INSTALLATION [SKYACTIV-D 2.2].)
16. Close port A and apply **-2.0 kPa {-15 mmHg, -0.59 inHg}** vacuum to port C, and leave it in this condition momentarily.
17. Open port A and verify that the **-2.0 kPa {-15 mmHg, -0.59 inHg}** negative pressure condition restores to near positive pressure.
- If it cannot be verified, replace the fuel tank. (See 01-14B-10 FUEL TANK REMOVAL/INSTALLATION [SKYACTIV-D 2.2].)
18. Turn the fuel tank upside down.

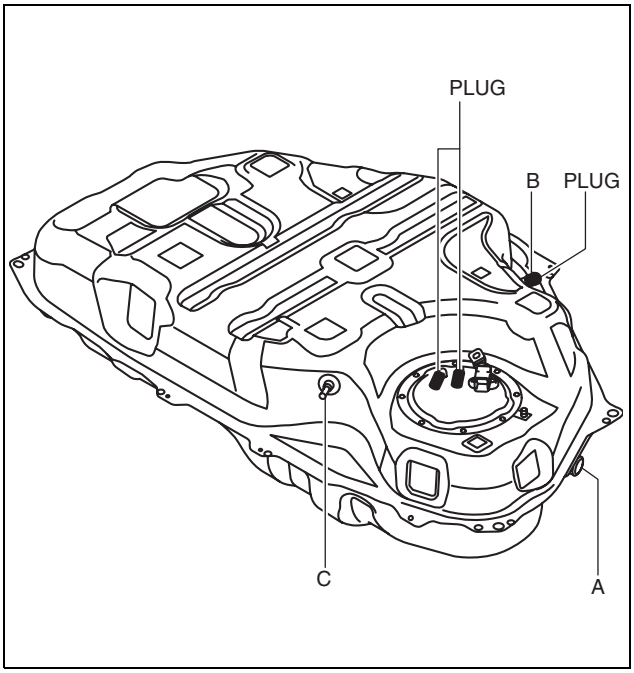

ac5wzw0000478

FUEL SYSTEM [SKYACTIV-D 2.2]

19. Apply pressure of **5.9 kPa {44 mmHg, 1.7 inHg}** to port C and wait for a while.
20. Verify that there is no change in the pressure and no air leakage from the fuel tank.
    - If there is air leakage, replace the fuel tank. (See 01-14B-10 FUEL TANK REMOVAL/INSTALLATION [SKYACTIV-D 2.2].)

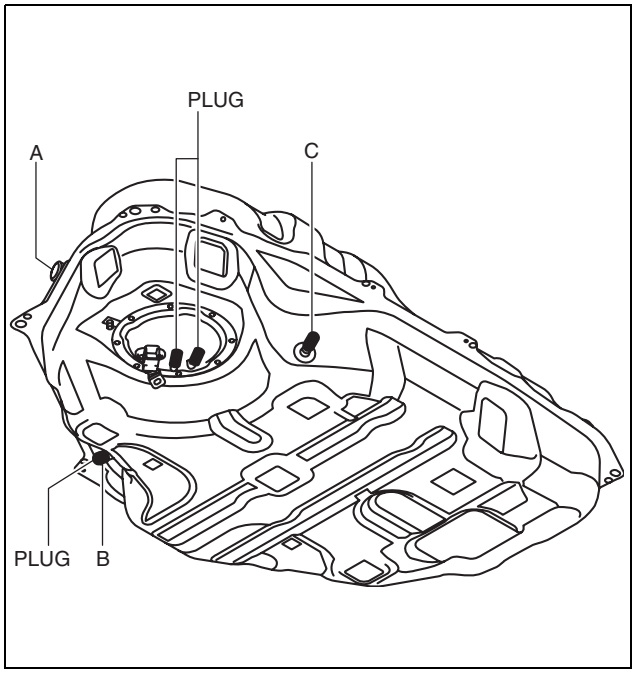

ac5wzw0000478

4WD

1. Park the vehicle on a level surface.
2. Perform the “Fuel Line Safety Procedure” referring to the “BEFORE SERVICE PRECAUTION”. (See 01-14B-6 BEFORE SERVICE PRECAUTION [SKYACTIV-D 2.2].)
3. Drain the fuel. (See 01-14B-9 FUEL DRAINING PROCEDURE [SKYACTIV-D 2.2].)
4. Perform the following procedure:

6:4 split seat

1. Remove the rear seat cushion. (See 09-13-76 REAR SEAT CUSHION REMOVAL/INSTALLATION.)

4:2:4 split seat

1. Set the rear seat aside as shown in the figure. (See 09-13-56 REAR SEAT REMOVAL/INSTALLATION.)

Main side

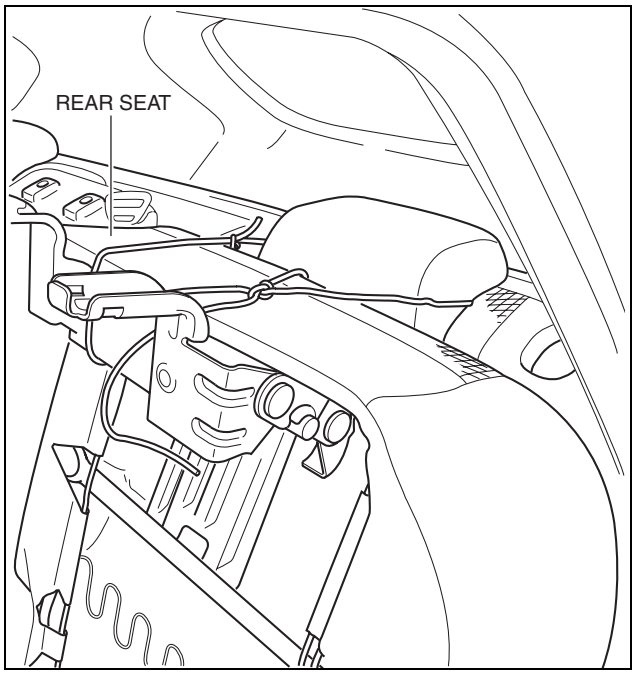

ac5wzw0000478

FUEL SYSTEM [SKYACTIV-D 2.2]

Sub side

5. Set the floor mat aside as shown in the figure.

Main side

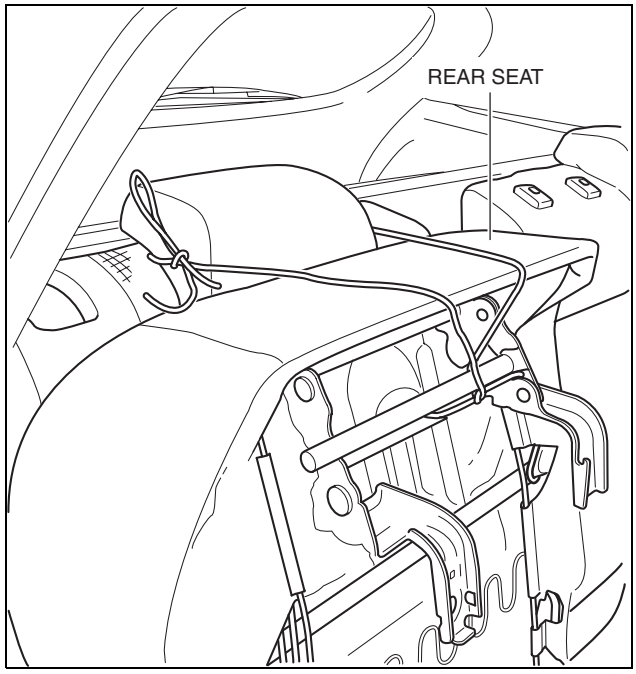

ac5wzw0000478

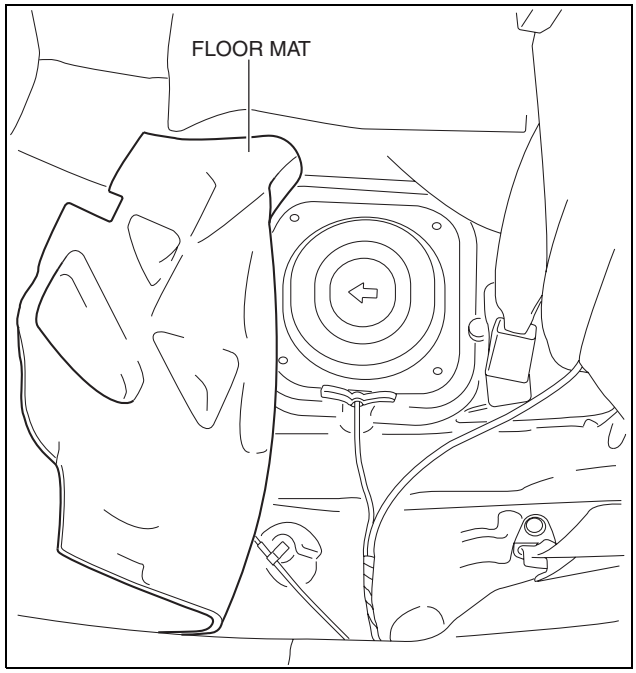

ac5wzw0000478

FUEL SYSTEM [SKYACTIV-D 2.2]

Sub side

6. Remove the service hole cover.

Main side

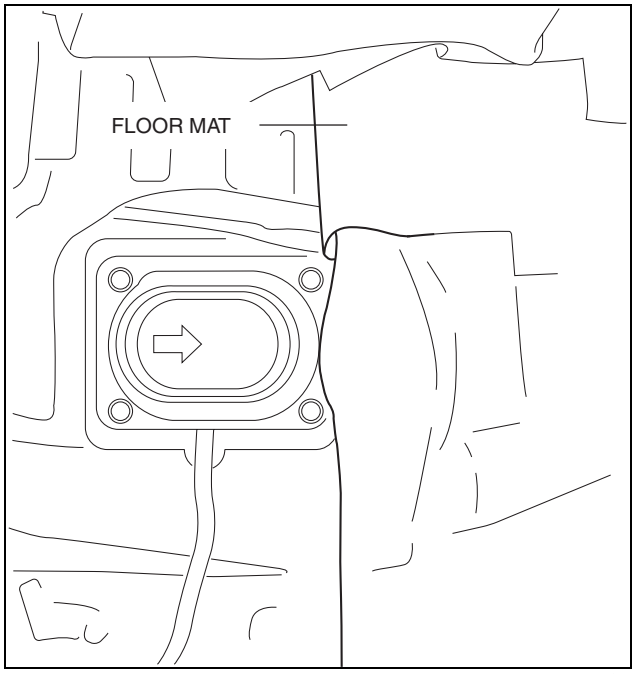

ac5wzw0000478

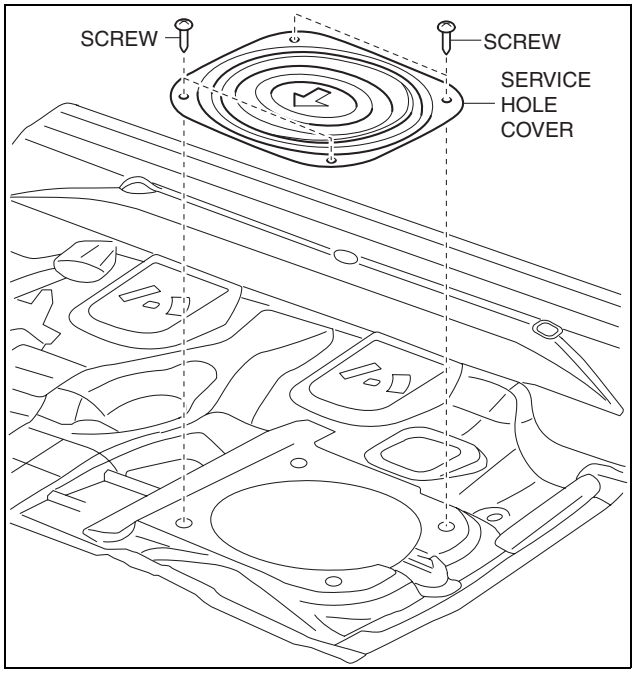

ac5wzw0000478

FUEL SYSTEM [SKYACTIV-D 2.2]

Sub side

7. Disconnect the following parts:
   Main side
   - Fuel gauge sender unit (main) connector
   - Fuel hose (main side)
   - Fuel hose (return side)

   Sub side
   - Fuel gauge sender unit (sub) connector
8. Remove the floor under cover. (See 09-16-44 FLOOR UNDER COVER REMOVAL/INSTALLATION.)
9. Remove the middle pipe. (See 01-15B-1 EXHAUST SYSTEM REMOVAL/INSTALLATION [SKYACTIV-D 2.2].)
10. Remove the propeller shaft. (See 03-15-2 PROPELLER SHAFT REMOVAL/INSTALLATION.)
11. Remove the fuel tank, fuel gauge sender unit (main), and fuel gauge sender unit (sub) as a single unit. (See 01-14B-10 FUEL TANK REMOVAL/INSTALLATION [SKYACTIV-D 2.2].)
12. Perform the following procedure to verify fuel tank airtightness.

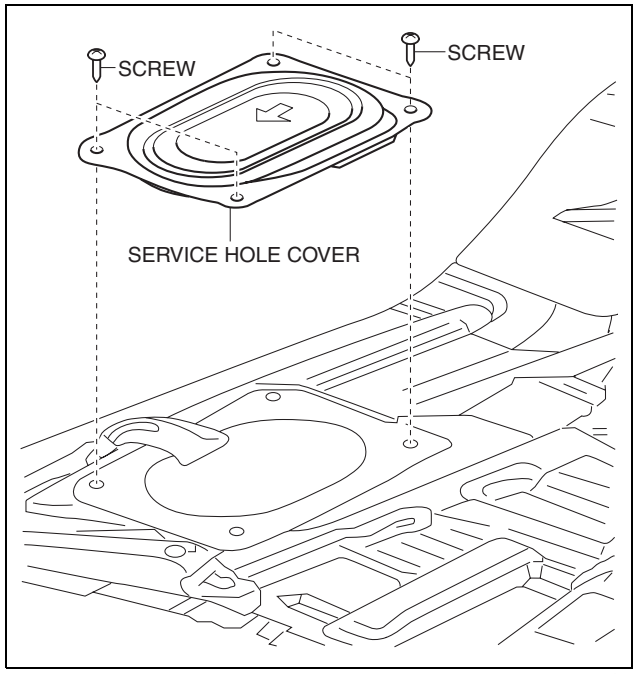

ac5wzw0000479

(1) Plug the fuel gauge sender unit pipe, and ports B and C.
(2) Apply pressure of **5.9 kPa {44 mmHg, 1.7 inHg}** to port A and wait for a while.
(3) Verify that there is no change in the pressure and no air leakage from the fuel tank.
   - If there is air leakage, replace the fuel tank. (See 01-14B-10 FUEL TANK REMOVAL/INSTALLATION [SKYACTIV-D 2.2].)

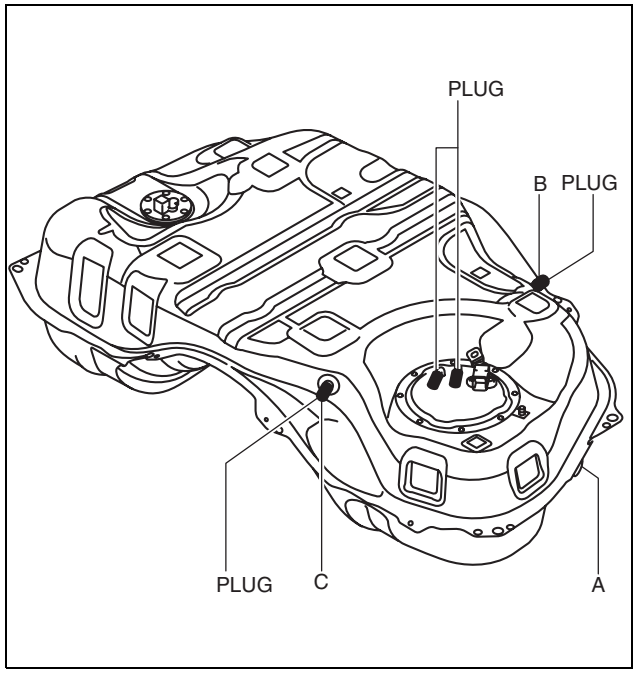

ac5wzw0000479

FUEL SYSTEM [SKYACTIV-D 2.2]

13. Remove the port C plug
14. Place the fuel tank in a level position.
15. Close port A and apply **5.9 kPa {44 mmHg, 1.7 inHg}** of pressure to port C, and leave it in this condition momentarily.
16. Open port A and verify that the pressure decreases from **5.9 kPa {44 mmHg, 1.7 inHg}**.
    - If it cannot be verified, replace the fuel tank. (See 01-14B-10 FUEL TANK REMOVAL/ INSTALLATION [SKYACTIV-D 2.2].)
17. Close port A and apply **-2.0 kPa {-15 mmHg, -0.59 inHg}** vacuum to port C, and leave it in this condition momentarily.
18. Open port A and verify that the **-2.0 kPa {-15 mmHg, -0.59 inHg}** negative pressure condition restores to near positive pressure.
    - If it cannot be verified, replace the fuel tank. (See 01-14B-10 FUEL TANK REMOVAL/ INSTALLATION [SKYACTIV-D 2.2].)
19. Turn the fuel tank upside down.

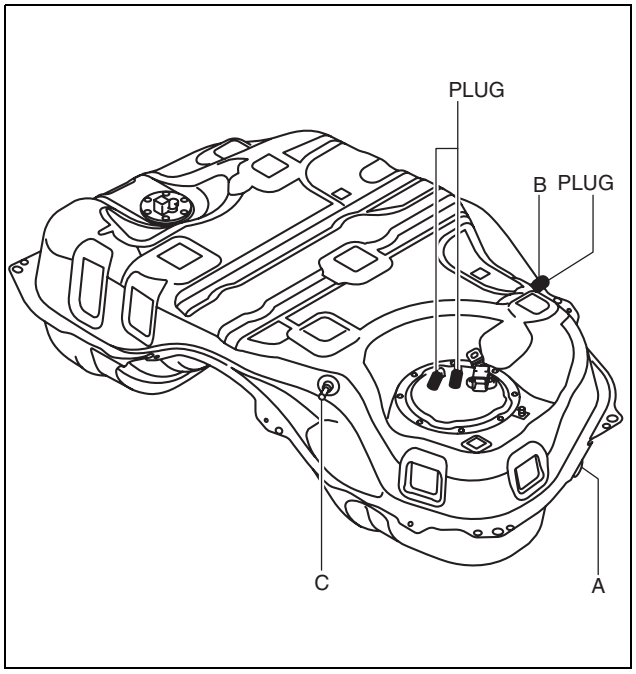

ac5wzw0000479

20. Apply pressure of **5.9 kPa {44 mmHg, 1.7 inHg}** to port C and wait for a while.
21. Verify that there is no change in the pressure and no air leakage from the fuel tank.
    - If there is air leakage, replace the fuel tank. (See 01-14B-10 FUEL TANK REMOVAL/ INSTALLATION [SKYACTIV-D 2.2].)

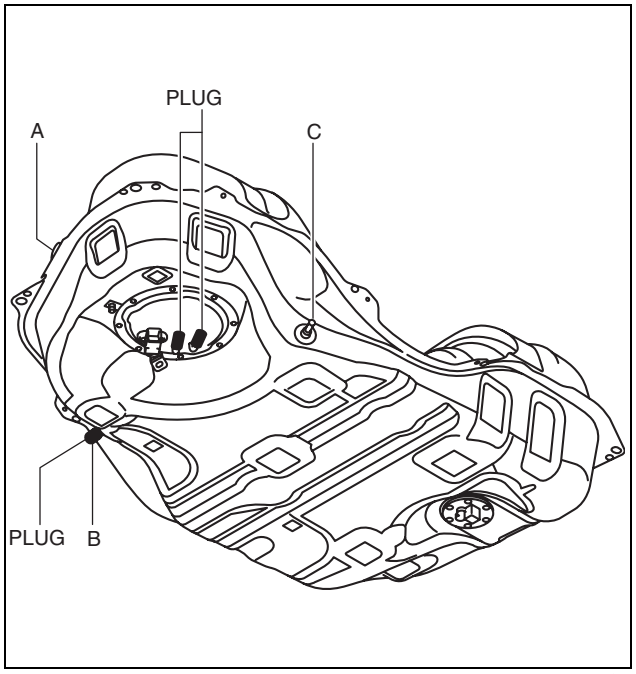

ac5wzw0000479

FUEL SYSTEM [SKYACTIV-D 2.2]

FUEL-FILLER PIPE REMOVAL/INSTALLATION [SKYACTIV-D 2.2]

id0114z7806900

Warning

- **Fuel is highly flammable and dangerous. Fuel line spills and leakage can cause serious injury or death, and damage to equipment. If fuel comes into contact with the skin and eyes it will cause irritation. To prevent this, always perform the "Fuel Line Safety Procedure" referring to the "BEFORE REPAIR PROCEDURE".**
- **A person charged with static electricity could cause a fire or explosion, resulting in death or serious injury. Before draining fuel, make sure to discharge static electricity by touching a vehicle.**

1. Park the vehicle on a level surface.
2. Perform the "Fuel Line Safety Procedure" referring to the "BEFORE SERVICE PRECAUTION". (See 01-14B-6 BEFORE SERVICE PRECAUTION [SKYACTIV-D 2.2].)
3. Drain the fuel. (See 01-14B-9 FUEL DRAINING PROCEDURE [SKYACTIV-D 2.2].)
4. Open the fuel-filler lid.
5. Remove in the order shown in the figure.

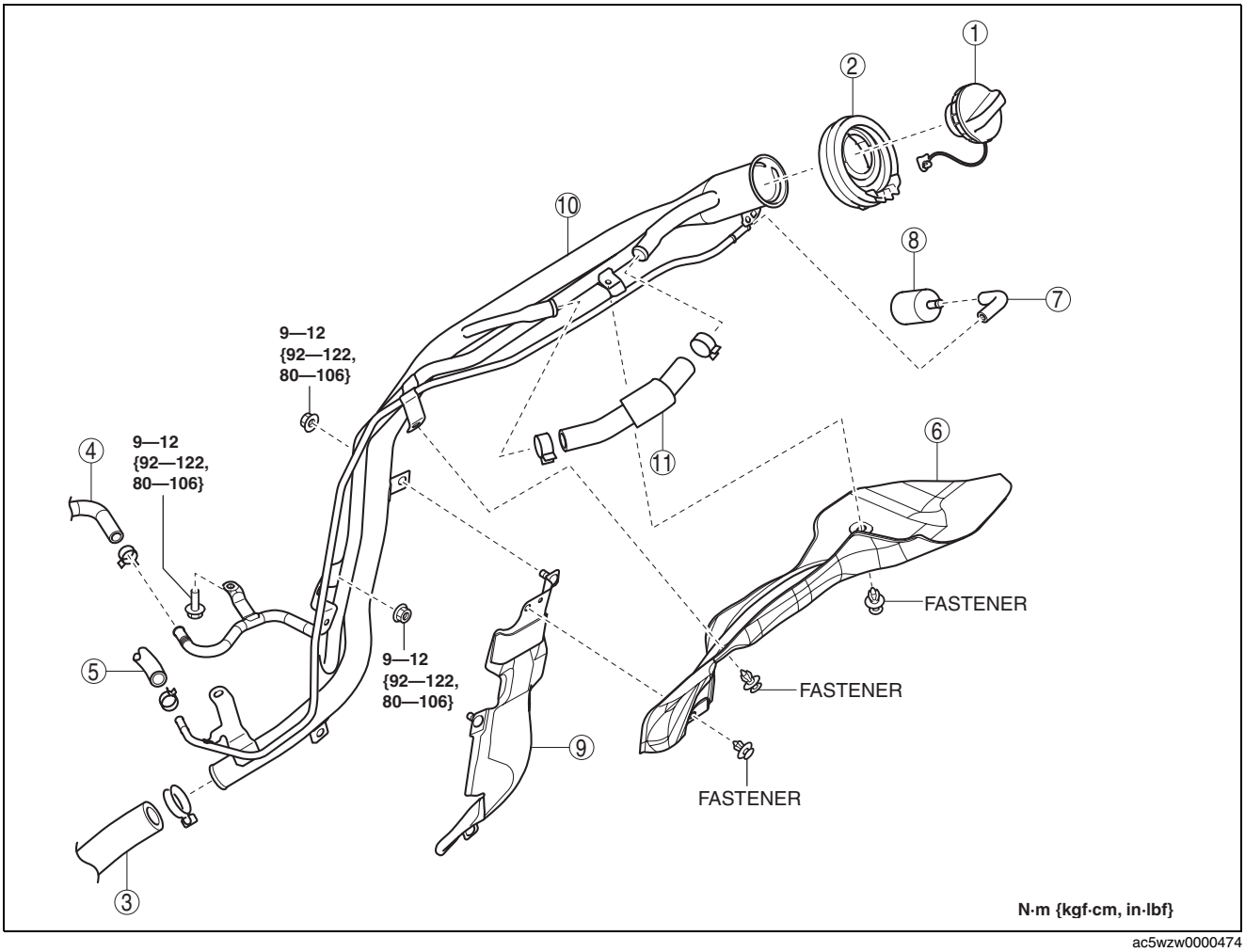

ac5wzw0000474

1	Fuel-filler cap
2	Dust cover (See 01-14B-30 Dust Cover Removal Note.)
3	Joint hose (See 01-14B-31 Joint Hose Installation Note.)
4	Breather hose (See 01-14B-31 Breather Hose Installation Note.)
5	Evaporative hose No.1 (See 01-14B-30 Evaporative Hose No.1 Installation Note.)

6	Protector
7	Evaporative hose No.2
8	Plug
9	Fuel-filler pipe protector
10	Fuel-filler pipe (See 01-14B-30 Fuel-filler Pipe Removal Note.)
11	Evaporative hose No.3

FUEL SYSTEM [SKYACTIV-D 2.2]

6. Install in the reverse order of removal.
7. Perform the fuel leakage inspection referring to “AFTER SERVICE PRECAUTION”. (See 01-14B-7 AFTER SERVICE PRECAUTION [SKYACTIV-D 2.2].)

Dust Cover Removal Note

1. Release the dust cover tab using a flathead screwdriver as shown in the figure.
2. Remove the dust cover.

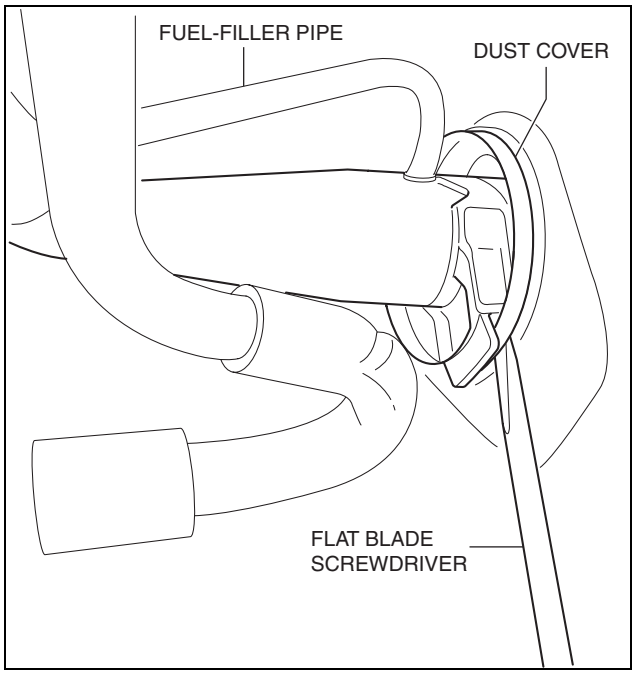

ac5wzw0000530

Fuel-filler Pipe Removal Note

1. Remove the rear tire (LH). (See 02-12-1 WHEEL AND TIRE SPECIFICATION.)
2. Remove the rear parking brake cable installation nuts (LH). (See 04-12-7 REAR PARKING BRAKE CABLE REMOVAL/INSTALLATION.)
3. Remove the rear crossmember. (See 02-14-40 REAR CROSSMEMBER REMOVAL/INSTALLATION [2WD].) (See 02-14-44 REAR CROSSMEMBER REMOVAL/INSTALLATION [4WD].)
4. Remove the fuel-filler pipe.

Evaporative Hose No.1 Installation Note

1. Align the marking and connect evaporative hose No.1 to the fuel-filler pipe as shown in the figure.

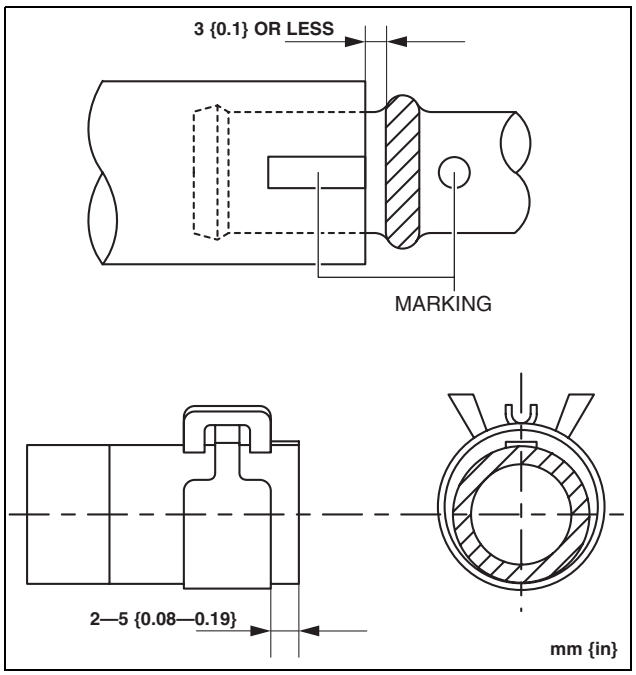

ac5wzw0000530

FUEL SYSTEM [SKYACTIV-D 2.2]

Breather Hose Installation Note

1. Align the marking and connect the breather hose to the fuel-filler pipe as shown in the figure.

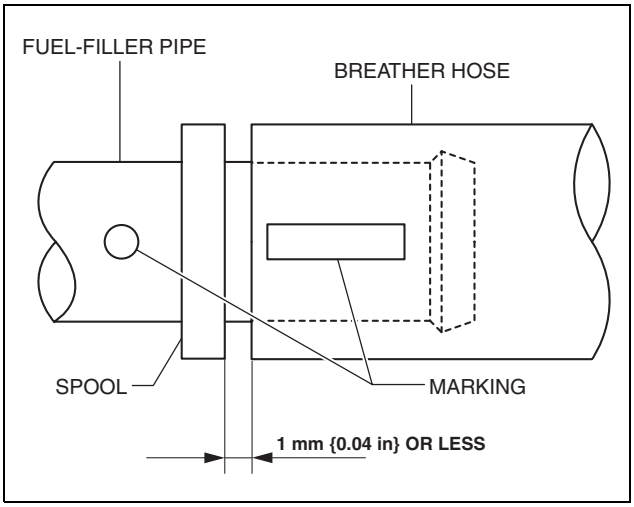

ac5wzw0000530

Joint Hose Installation Note

1. Connect the joint hose to the fuel-filler pipe as shown in the figure.

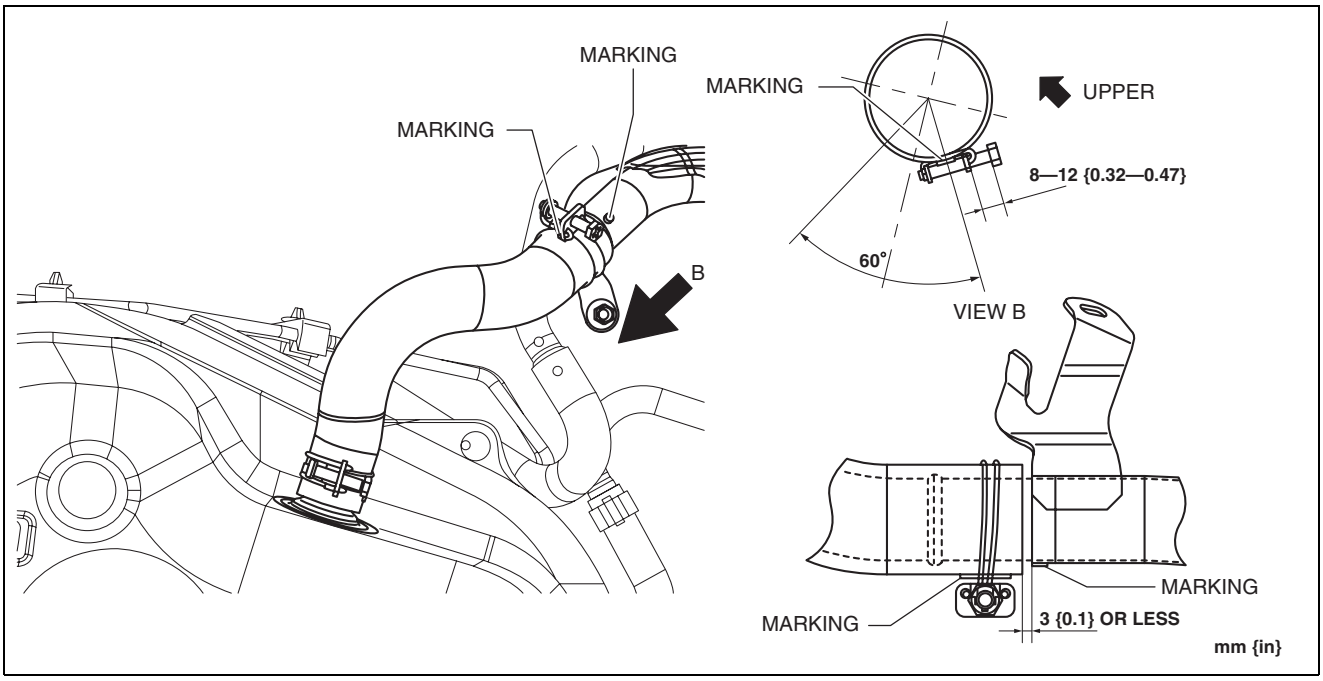

ac5wzw0000530

FUEL SYSTEM [SKYACTIV-D 2.2]

NON-RETURN VALVE INSPECTION [SKYACTIV-D 2.2]

id0114z7815300

Warning

- **Fuel is highly flammable and dangerous. Fuel line spills and leakage can cause serious injury or death, and damage to equipment. If fuel comes into contact with the skin and eyes it will cause irritation. To prevent this, always perform the "Fuel Line Safety Procedure" referring to the "BEFORE REPAIR PROCEDURE".**
- **A person charged with static electricity could cause a fire or explosion, resulting in death or serious injury. Before draining fuel, make sure to discharge static electricity by touching a vehicle.**

1. Perform the "Fuel Line Safety Procedure" referring to the "BEFORE SERVICE PRECAUTION". (See 01-14B-6 BEFORE SERVICE PRECAUTION [SKYACTIV-D 2.2].)
2. Remove the negative battery cable. (See 01-17B-9 NEGATIVE BATTERY CABLE DISCONNECTION/CONNECTION [SKYACTIV-D 2.2].)
3. Perform the following procedure:
   6:4 split seat
   1. Remove the rear seat cushion. (See 09-13-76 REAR SEAT CUSHION REMOVAL/INSTALLATION.)

   4:2:4 split seat
   1. Set the rear seat aside as shown in the figure. (See 09-13-56 REAR SEAT REMOVAL/INSTALLATION.)
4. Remove the fuel gauge sender unit. (See 09-22-23 FUEL GAUGE SENDER UNIT REMOVAL/INSTALLATION [2WD].) (See 09-22-27 FUEL GAUGE SENDER UNIT REMOVAL/INSTALLATION [4WD].)
5. Drain the fuel from the fuel tank to the position where the non-return valve is visible. (See 01-14B-9 FUEL DRAINING PROCEDURE [SKYACTIV-D 2.2].)

   Note
   - The non-return valve is built into the fuel tank.
   - The non-return valve is normally closed by spring force.

6. Verify that the non-return valve is closed.
   - If the non-return valve is left open or cannot open even though the non-return valve is pulled up with your finger, replace the fuel tank. (See 01-14B-10 FUEL TANK REMOVAL/INSTALLATION [SKYACTIV-D 2.2].)

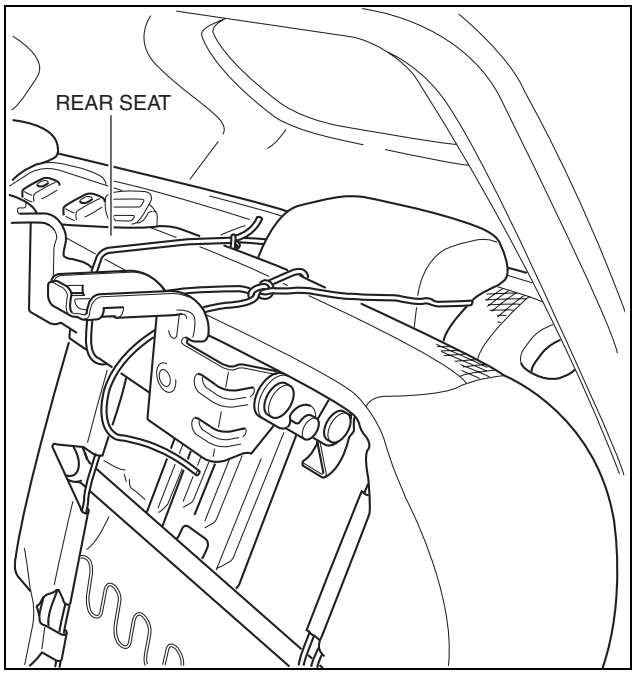

ac5wzw0000480

FUEL SYSTEM [SKYACTIV-D 2.2]

INJECTION PIPE REMOVAL/INSTALLATION [SKYACTIV-D 2.2]

id0114z7850200

Warning

- **Fuel is highly flammable and dangerous. Fuel line spills and leakage can cause serious injury or death, and damage to equipment. If fuel comes into contact with the skin and eyes it will cause irritation. To prevent this, always perform the "Fuel Line Safety Procedure" referring to the "BEFORE REPAIR PROCEDURE".**
- **A person charged with static electricity could cause a fire or explosion, resulting in death or serious injury. Before servicing the fuel system, make sure to discharge static electricity by touching a vehicle.**

Caution

- **If parts are exposed to the fuel, their function may be decreased or a fire may occur. Spread a rag to absorb any leaked fuel.**
- **Do not let foreign matter get into the injection pipe to prevent clogging. In addition, always tighten the injection pipe to the specified torque.**

1. Disconnect the negative battery cable. (See 01-17B-9 NEGATIVE BATTERY CABLE DISCONNECTION/CONNECTION [SKYACTIV-D 2.2].)
2. Perform the "Fuel Line Safety Procedure" referring to the "BEFORE SERVICE PRECAUTION". (See 01-14B-6 BEFORE SERVICE PRECAUTION [SKYACTIV-D 2.2].)
3. Remove the engine cover. (See 01-10B-4 ENGINE COVER REMOVAL/INSTALLATION [SKYACTIV-D 2.2].)
4. Remove in the order shown in the figure.
5. Install in the reverse order of removal.
6. Perform the "Fuel Hose Installation Procedure" and "Fuel Line Air Bleeding" referring to the "AFTER SERVICE PRECAUTION". (See 01-14B-7 AFTER SERVICE PRECAUTION [SKYACTIV-D 2.2].)

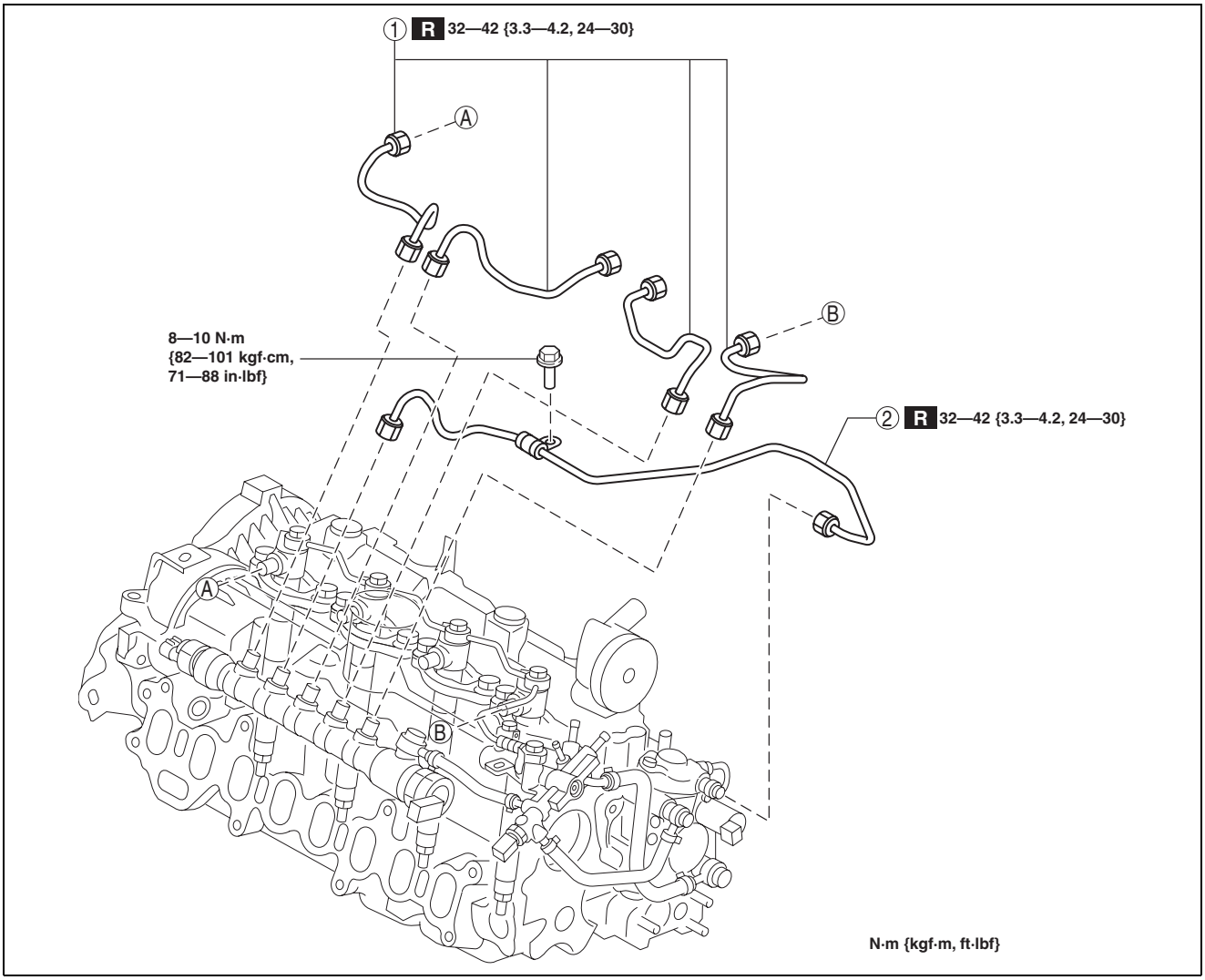

ac5wzw0000486

FUEL SYSTEM [SKYACTIV-D 2.2]

1	Injection pipe (fuel injector side) (See 01-14B-34 Injector Pipe Installation Note.)
2	Injection pipe (supply pump side) (See 01-14B-34 Injection Pipe (Supply Pump Side) Removal Note.) (See 01-14B-34 Injector Pipe Installation Note.)

Injection Pipe (Supply Pump Side) Removal Note

1. Remove the fuel return pipe (supply pump side). (See 01-14B-46 SUPPLY PUMP REMOVAL/INSTALLATION [SKYACTIV-D 2.2].)
2. Remove the injection pipe (supply pump side).

Injector Pipe Installation Note

1. Loosen the common rail.

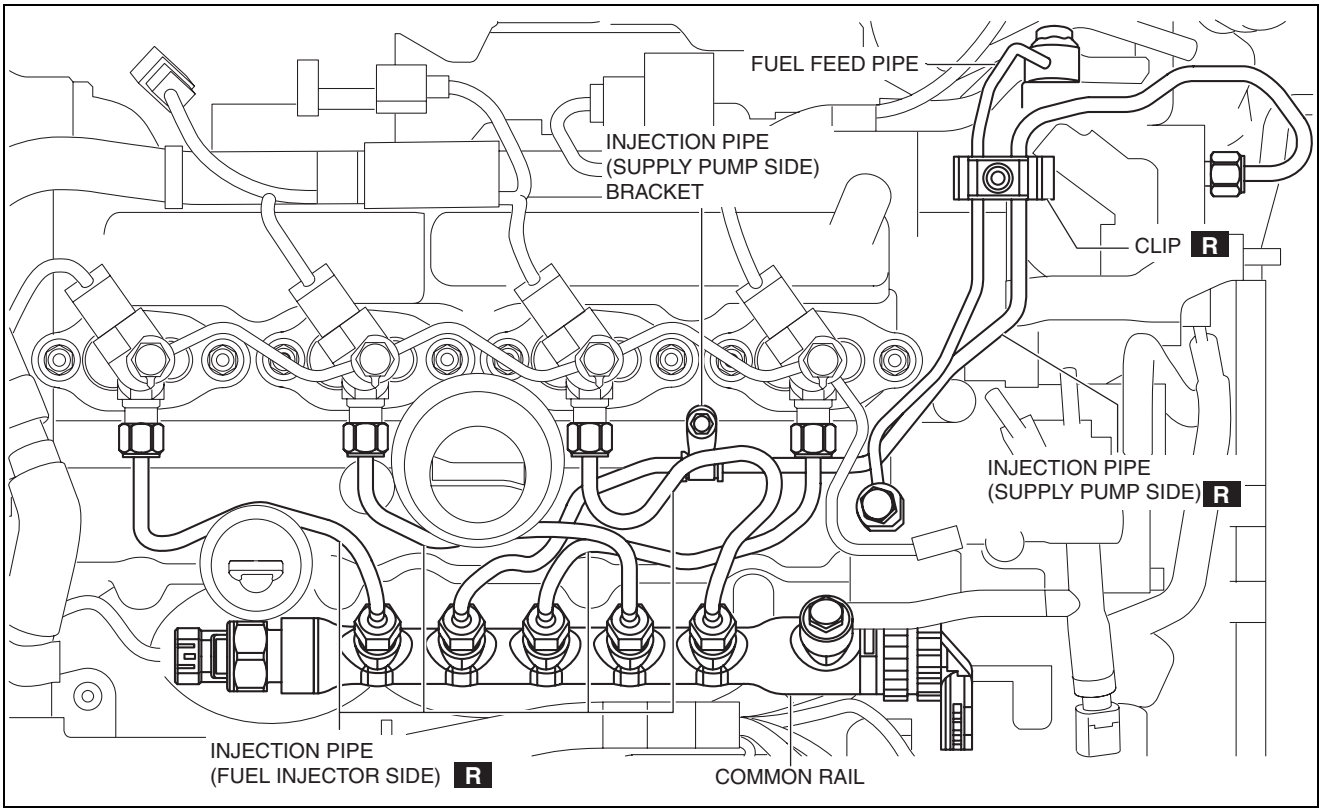

ac5wzw0000530

2. Temporarily tighten the new injection pipe (supply pump side).
3. Temporarily tighten the new injection pipes (fuel injector side).
4. Temporarily install the fuel return pipe (supply pump side).
5. Tighten the new clip.

Clip tightening torque
4.2—5.2 N·m {43—53 kgf·cm, 38—46 in·lbf}

6. Tighten the injection pipe (supply pump side) bracket.

Injection pipe (supply pump side) bracket tightening torque
8—11 N·m {82—112 kgf·cm, 71—97 in·lbf}

7. Tighten the injection pipe (supply pump side) and the injection pipes (fuel injector side) on the common rail side.

Tightening torque for injection pipe (supply pump side) and injection pipe (fuel injector side)
32—42 N·m {3.3—4.2 kgf·m, 24—30 ft·lbf}

8. Tighten the injection pipe (supply pump side) and the injection pipes (fuel injector side) on the fuel injector side.

   Tightening torque for injection pipe (supply pump side) and injection pipe (fuel injector side)
   32—42 N·m {3.3—4.2 kgf·m, 24—30 ft·lbf}

9. Tighten the common rail.

   Common rail tightening torque
   20—26 N·m {2.1—2.6 kgf·m, 15—19 ft·lbf}

10. Tighten the fuel return pipe (supply pump side).

    Fuel return pipe (supply pump side) tightening torque
    Supply pump side: 18—26 N·m {1.9—2.6 kgf·m, 14—19 ft·lbf}
    Lower case side: 20—26 N·m {2.1—2.6 kgf·m, 15—19 ft·lbf}

FUEL INJECTOR REMOVAL/INSTALLATION [SKYACTIV-D 2.2]

id0114z7800600

Warning
- **Fuel is highly flammable and dangerous. Fuel line spills and leakage can cause serious injury or death, and damage to equipment. If fuel comes into contact with the skin and eyes it will cause irritation. To prevent this, always perform the "Fuel Line Safety Procedure" referring to the "BEFORE REPAIR PROCEDURE".**
- **A person charged with static electricity could cause a fire or explosion, resulting in death or serious injury. Before servicing the fuel system, make sure to discharge static electricity by touching a vehicle.**

Caution
- **If parts are exposed to the fuel, their function may be decreased or a fire may occur. Spread a rag to absorb any leaked fuel.**
- **Do not let foreign matter get into the injection pipe to prevent clogging. In addition, always install the injection pipe to the specified tightening torque.**

Note
- If the fuel injector is replaced, perform the "Fuel Injector Initial Setting".

1. Disconnect the negative battery cable. (See 01-17B-9 NEGATIVE BATTERY CABLE DISCONNECTION/CONNECTION [SKYACTIV-D 2.2].)
2. Perform the "Fuel Line Safety Procedure" referring to the "BEFORE SERVICE PRECAUTION". (See 01-14B-6 BEFORE SERVICE PRECAUTION [SKYACTIV-D 2.2].)
3. Remove the engine cover. (See 01-10B-4 ENGINE COVER REMOVAL/INSTALLATION [SKYACTIV-D 2.2].)
4. Disconnect the CMP sensor connector.
5. Remove the injection pipe (fuel injector side). (See 01-14B-33 INJECTION PIPE REMOVAL/INSTALLATION [SKYACTIV-D 2.2].)
6. Remove in the order shown in the figure.
7. Install in the reverse order of removal.
8. Refer to the "AFTER SERVICE PRECAUTION" and perform the fuel hose installation procedure and fuel line air bleeding. (See 01-14B-7 AFTER SERVICE PRECAUTION [SKYACTIV-D 2.2].)

FUEL SYSTEM [SKYACTIV-D 2.2]

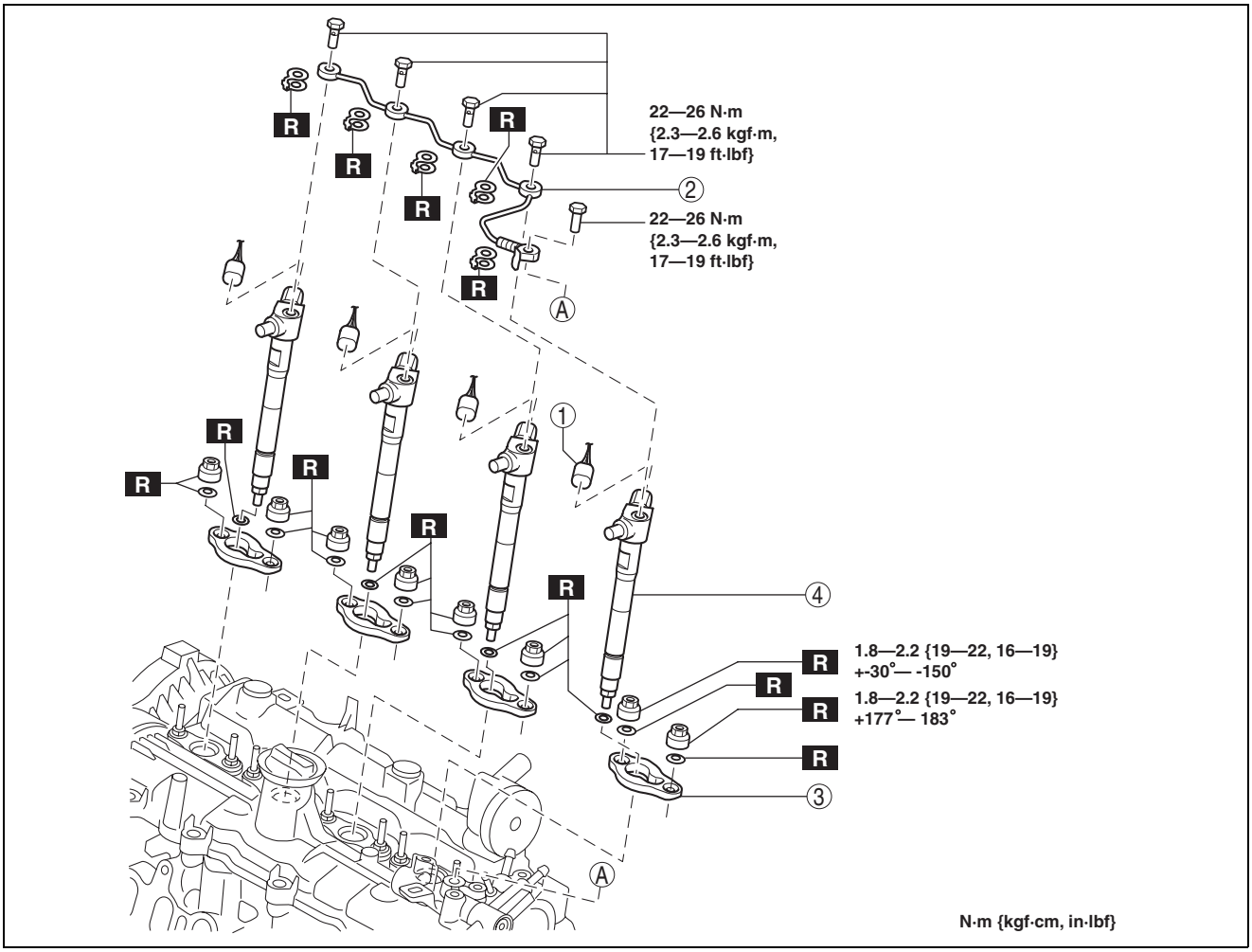

ac5wzw0000529

1	Fuel injector connector
2	Fuel return pipe (fuel injector side)

3	Fuel injector bracket
4	Fuel injector (See 01-14B-37 Fuel Injector Installation Note.)

FUEL SYSTEM [SKYACTIV-D 2.2]

Fuel Injector Installation Note

1. Temporarily install the fuel injector and the fuel injector bracket.

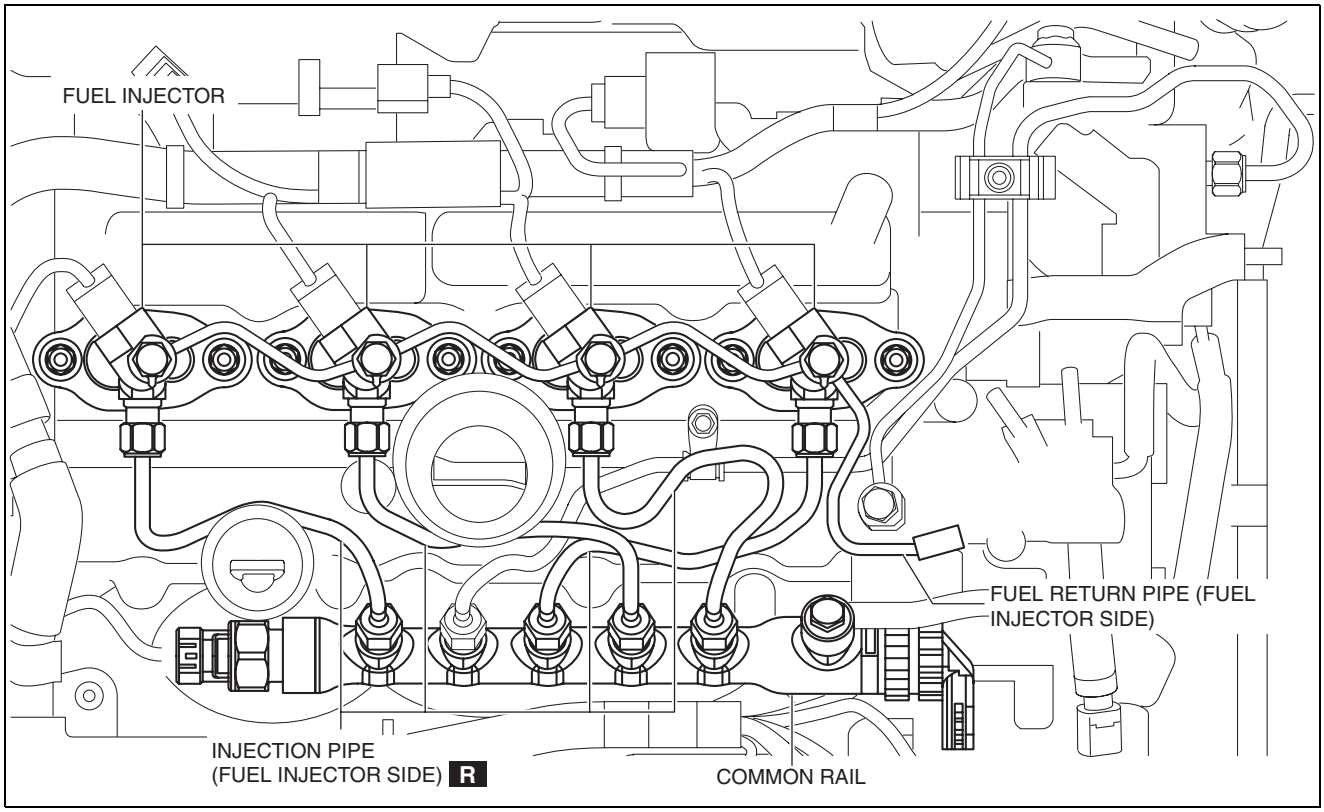

ac5wzw0000529

2. Loosen the common rail.
3. Temporarily tighten the new injection pipe (fuel injector side).

Caution

- **Do not tighten the nut on the opposite side when processing the step 4 and 5.**

4. Tighten the new nut shown in the figure (1).

Fuel injector bracket installation nut tightening torque
1.8—2.2 N·m {19—22 kgf·cm, 16—19 in·lbf}

5. Loosen the nut shown in the figure (1).

Angle of loosening the nut for installing the fuel injector bracket
-30°— -150°

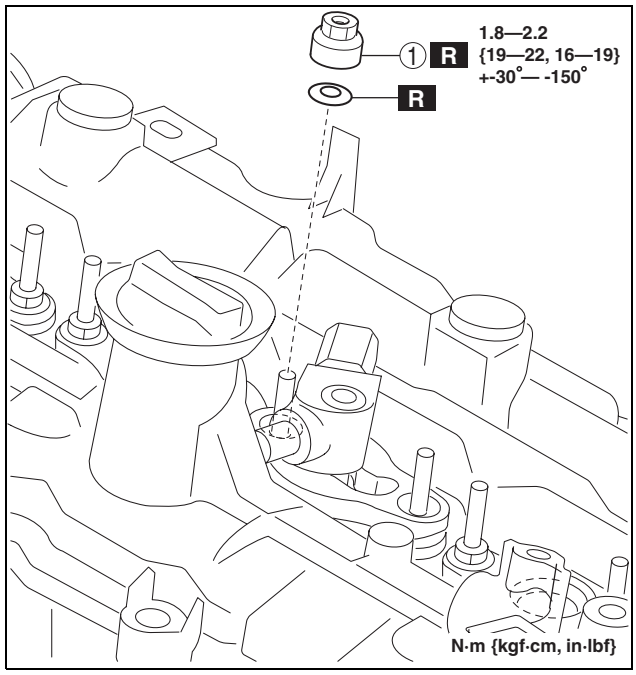

ac5wzw0000529

FUEL SYSTEM [SKYACTIV-D 2.2]

6. Tighten the new nut shown in the figure (2).

   Fuel injector bracket installation nut tightening torque
   First time: 1.8—2.2 N·m {19—22 kgf·cm, 16—19 in·lbf}
   Second time: 177°—183°

7. Tighten the injection pipes (fuel injector side) on the common rail side.

   Tightening torque for injection pipe (fuel injector side)
   32—42 N·m {3.3—4.2 kgf·m, 24—30 ft·lbf}

8. Tighten the injection pipes (fuel injector side) on the fuel injector side.

   Tightening torque for injection pipe (fuel injector side)
   32—42 N·m {3.3—4.2 kgf·m, 24—30 ft·lbf}

9. Tighten the common rail.

   Common rail tightening torque
   20—26 N·m {2.1—2.6 kgf·m, 15—19 ft·lbf}

10. Tighten the fuel return pipe (fuel injector side) in the order shown in the figure.

    Fuel return pipe (fuel injector side) tightening torque
    22—26 N·m {2.3—2.6 kgf·m, 17—19 ft·lbf}

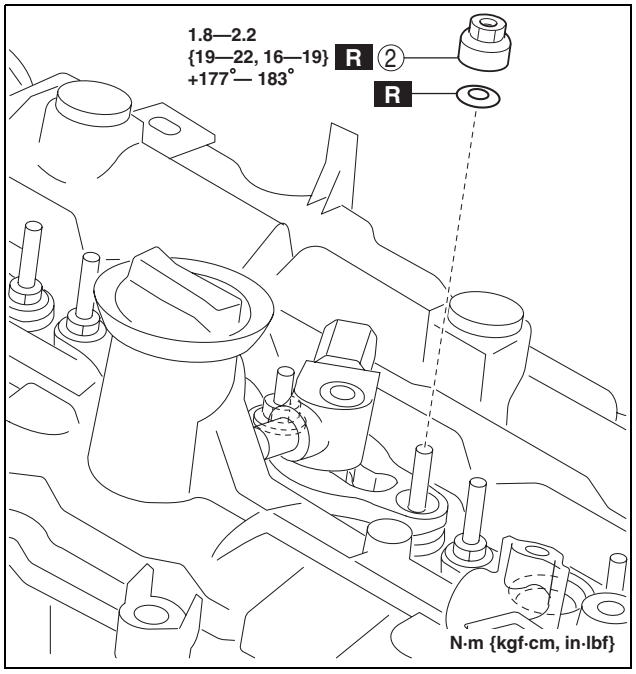

ac5wzw0000529

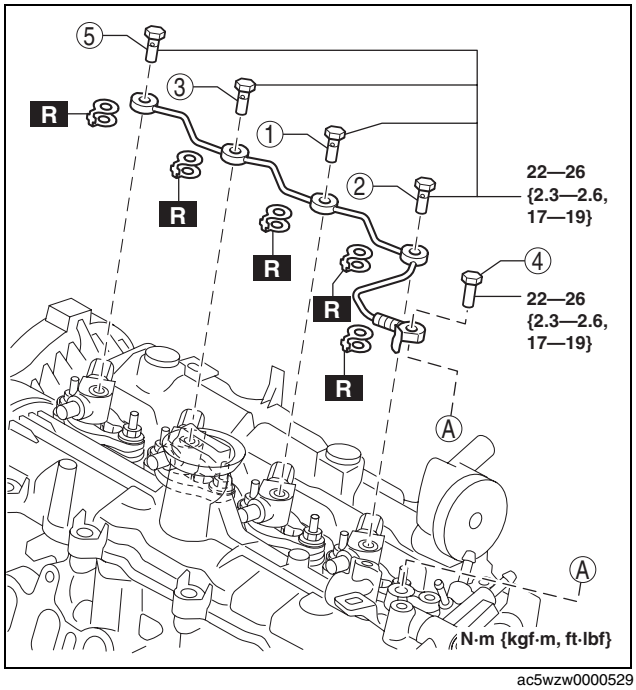

ac5wzw0000529

FUEL SYSTEM [SKYACTIV-D 2.2]

FUEL INJECTOR INSPECTION [SKYACTIV-D 2.2]

id0114z7800700

Resistance inspection

1. Disconnect the negative battery cable. (See 01-17B-9 NEGATIVE BATTERY CABLE DISCONNECTION/ CONNECTION [SKYACTIV-D 2.2].)
2. Remove the engine cover. (See 01-10B-4 ENGINE COVER REMOVAL/INSTALLATION [SKYACTIV-D 2.2].)
3. Disconnect the fuel injector connector.
4. Measure the resistance between fuel injector terminals A and B.

   Fuel injector resistance (specification)
   0.9—1.1 Megohms [20 °C {68 °F}]

   - If not within the specification, replace the fuel injector. (See 01-14B-35 FUEL INJECTOR REMOVAL/INSTALLATION [SKYACTIV-D 2.2].)

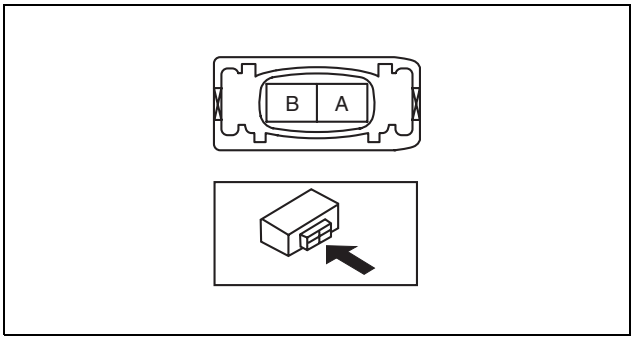

ac5jjw00003524

FUEL FILTER REMOVAL/INSTALLATION [SKYACTIV-D 2.2]

id0114z7800000

Warning

- **Fuel is highly flammable and dangerous. Fuel line spills and leakage can cause serious injury or death, and damage to equipment. If fuel comes into contact with the skin and eyes it will cause irritation. To prevent this, always perform the "Fuel Line Safety Procedure" referring to the "BEFORE REPAIR PROCEDURE".**
- **A person charged with static electricity could cause a fire or explosion, resulting in death or serious injury. Before servicing the fuel system, make sure to discharge static electricity by touching a vehicle.**

Caution

- **If parts are exposed to the fuel, their function may be decreased or a fire may occur. Spread a rag to absorb any leaked fuel.**
- **If fuel does not pass through the fuel filter, it could cause a fuel system malfunction. Therefore, do not install the fuel hoses (main and return side) in reverse. Always refer to the "AFTER SERVICE PRECAUTION" before installing the fuel hose, and execute the "Fuel Hose Installation Procedure".**

1. Disconnect the negative battery cable. (See 01-17B-9 NEGATIVE BATTERY CABLE DISCONNECTION/ CONNECTION [SKYACTIV-D 2.2].)
2. Perform the "Fuel Line Safety Procedure" referring to the "BEFORE SERVICE PRECAUTION". (See 01-14B-6 BEFORE SERVICE PRECAUTION [SKYACTIV-D 2.2].)
3. Remove the engine cover. (See 01-10B-4 ENGINE COVER REMOVAL/INSTALLATION [SKYACTIV-D 2.2].)
4. Remove the battery. (See 01-17B-3 BATTERY REMOVAL/INSTALLATION [SKYACTIV-D 2.2].)
5. Remove in the order shown in the figure.

FUEL SYSTEM [SKYACTIV-D 2.2]

L.H.D.

1	Sedimentor switch connector
2	Fuel warmer connector (with fuel warmer)
3	Fuel main hose No.1
4	Fuel main hose No.2
5	Fuel filter
6	Drain plug
7	Sedimentor switch
8	Fuel warmer (with fuel warmer)

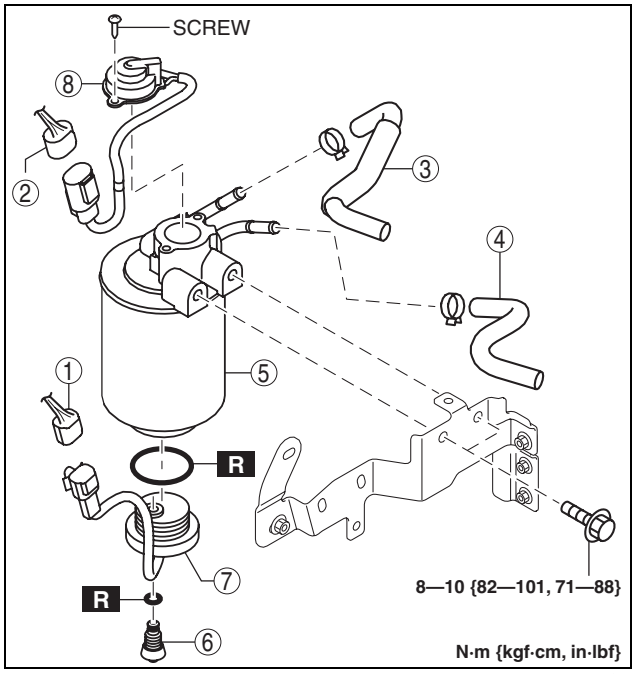

ac5wzw0000473

R.H.D.

1	Sedimentor switch connector
2	Fuel filter installation nut
3	Fuel filter bracket installation nut
4	Fuel main hose No.1 (See 01-14B-41 Fuel Main Hose No.1 Installation Note.)
5	Fuel main hose No.2
6	Fuel filter
7	Fuel filter bracket

6. Install in the reverse order of removal.
7. Perform the fuel hose installation procedure and fuel line air bleeding referring to the “AFTER SERVICE PRECAUTION”. (See 01-14B-7 AFTER SERVICE PRECAUTION [SKYACTIV-D 2.2].)

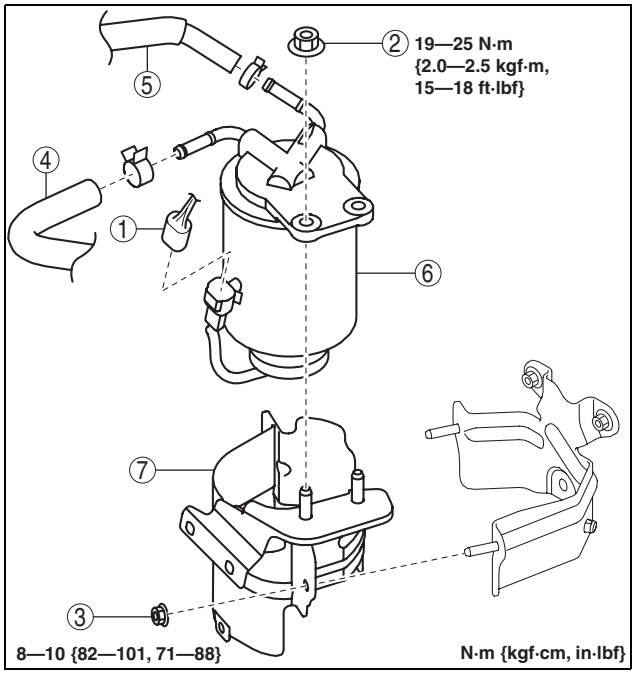

ac5wzw0000473

FUEL SYSTEM [SKYACTIV-D 2.2]

Fuel Main Hose No.1 Installation Note

1. Install fuel main hose No.1 as shown in the figure.

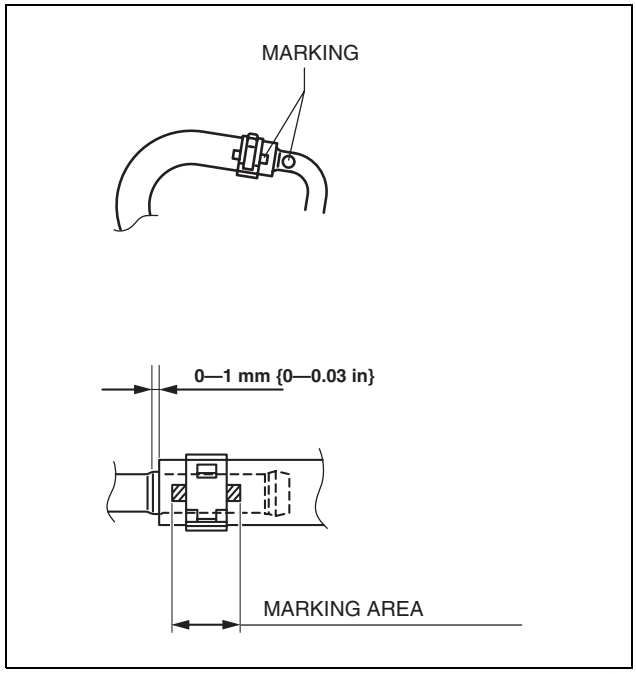

ac5wzw0000473

FUEL FILTER INSPECTION [SKYACTIV-D 2.2]

id0114z7089200

Warning

- **Fuel is highly flammable and dangerous. Fuel line spills and leakage can cause serious injury or death, and damage to equipment. If fuel comes into contact with the skin and eyes it will cause irritation. To prevent this, always perform the "Fuel Line Safety Procedure" referring to the "BEFORE REPAIR PROCEDURE".**
- **A person charged with static electricity could cause a fire or explosion, resulting in death or serious injury. Before servicing the fuel system, make sure to discharge static electricity by touching a vehicle.**

1. Visually verify that there is no cracking, damage, or rust in the fuel filter.

Note

- If there is cracking, damage, or rust in the fuel filter, it could cause fuel leakage.

- If a malfunction is verified, replace the fuel filter. (See 01-14B-39 FUEL FILTER REMOVAL/INSTALLATION [SKYACTIV-D 2.2].)

FUEL FILTER WATER DRAINING [SKYACTIV-D 2.2]

id0114z7777600

1. Remove the fuel filter. (See 01-14B-39 FUEL FILTER REMOVAL/INSTALLATION [SKYACTIV-D 2.2].)
2. Loosen the drain plug for the lower part of the fuel filter.
3. Drain the water.
4. After draining the water, tighten the drain plug by hand sufficiently.

FUEL SYSTEM [SKYACTIV-D 2.2]

FUEL WARMER INSPECTION [SKYACTIV-D 2.2]

id0114z7089300

1. Disconnect the negative battery cable. (See 01-17B-9 NEGATIVE BATTERY CABLE DISCONNECTION/ CONNECTION [SKYACTIV-D 2.2].)
2. Perform the “Fuel Line Safety Procedure” referring to the “BEFORE SERVICE PRECAUTION”. (See 01-14B-6 BEFORE SERVICE PRECAUTION [SKYACTIV-D 2.2].)
3. Remove the fuel warmer.
4. Connect the vacuum pump to the fuel warmer.
5. When a fuel warmer vacuum is within **26.7—40.0 kPa**, measure the resistance between the fuel warmer and terminal B

   Fuel warmer resistance (specification)
   Approx. 0.5—2.0 ohms

   - If not within the specification, replace the fuel warmer. (See 01-14B-39 FUEL FILTER REMOVAL/INSTALLATION [SKYACTIV-D 2.2].)

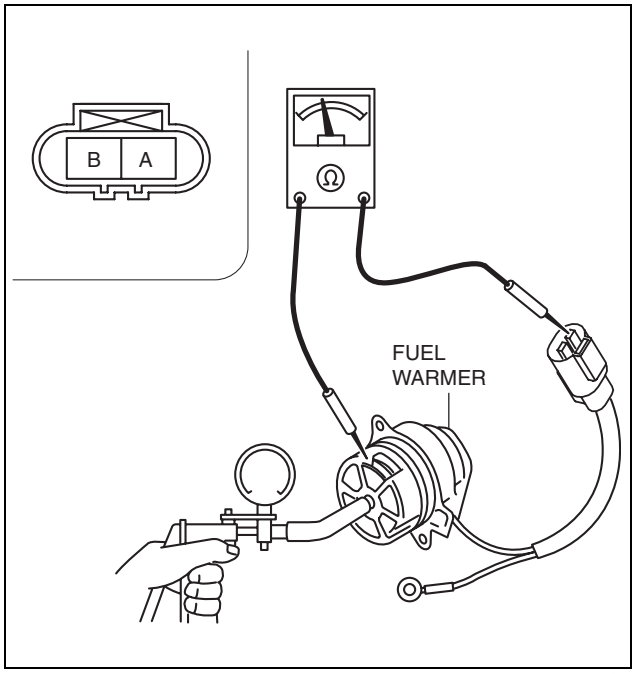

ac5wzw0000473

FUEL CHECK VALVE REMOVAL/INSTALLATION [SKYACTIV-D 2.2]

id0114z7706100

Note
- The fuel check valve cannot be removed as it is integrated with the lower case.

1. Remove the lower case. (See 01-14B-54 LOWER CASE REMOVAL/INSTALLATION [SKYACTIV-D 2.2].)

FUEL CHECK VALVE INSPECTION [SKYACTIV-D 2.2]

id0114z7706000

- Fuel check valve cannot perform inspecting with a single article.

FUEL FEED VALVE REMOVAL/INSTALLATION [SKYACTIV-D 2.2]

id0114z7706300

Note
- The fuel feed valve cannot be removed as it is integrated with the lower case.

1. Remove the lower case. (See 01-14B-54 LOWER CASE REMOVAL/INSTALLATION [SKYACTIV-D 2.2].)

FUEL FEED VALVE INSPECTION [SKYACTIV-D 2.2]

id0114z7706200

- Fuel feed valve cannot perform inspecting with a single article.

FUEL PRESSURE LIMITER VALVE REMOVAL/INSTALLATION [SKYACTIV-D 2.2]

id0114z7706500

Note
- The fuel pressure limiter valve cannot be removed as it is integrated with the common rail.

1. Remove the common rail. (See 01-14B-52 COMMON RAIL REMOVAL/INSTALLATION [SKYACTIV-D 2.2].)

FUEL SYSTEM [SKYACTIV-D 2.2]

FUEL PRESSURE LIMITER VALVE INSPECTION [SKYACTIV-D 2.2]

id0114z7706400

Resistance inspection

1. Disconnect the negative battery cable. (See 01-17B-9 NEGATIVE BATTERY CABLE DISCONNECTION/ CONNECTION [SKYACTIV-D 2.2].)
2. Remove the engine cover. (See 01-10B-4 ENGINE COVER REMOVAL/INSTALLATION [SKYACTIV-D 2.2].)
3. Disconnect the fuel pressure limiter valve connector.
4. Inspect the resistance between fuel pressure limiter valve terminals A and B.

   Fuel pressure limiter valve resistance (specification)
   0.96—1.16 ohms [20 °C {68 °F}]

   - If not within the specification, replace the common rail. (See 01-14B-52 COMMON RAIL REMOVAL/INSTALLATION [SKYACTIV-D 2.2].)

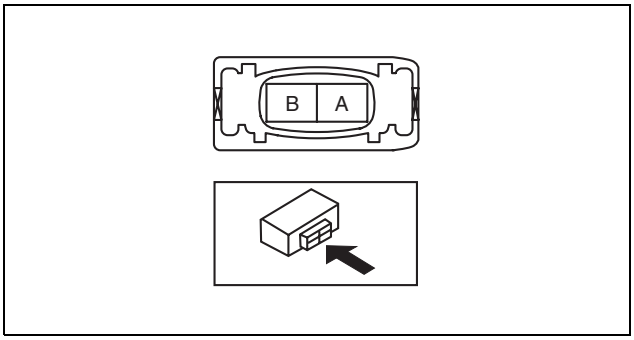

ac5jjw00003532

SUCTION CONTROL VALVE REMOVAL/INSTALLATION [SKYACTIV-D 2.2]

id0114z7087900

Warning

- **Fuel is very flammable liquid. If fuel spills or leaks from the pressurized fuel system, it will cause serious injury or death and facility breakage. Fuel can also irritate skin and eyes. To prevent this, always complete the "Fuel Line Safety Procedure", while referring to the "BEFORE SERVICE PRECAUTION".**
- **A person charged with static electricity could cause a fire or explosion, resulting in death or serious injury. Before draining fuel, make sure to discharge static electricity by touching the vehicle body.**

Caution

- **If parts are exposed to the fuel, their function may be decreased or a fire may occur. Spread a rag to absorb any leaked fuel.**
- **Do not let foreign matter get into the injection pipe to prevent clogging. In addition, always tighten the injection pipe to the specified torque.**

1. Disconnect the negative battery cable. (See 01-17B-9 NEGATIVE BATTERY CABLE DISCONNECTION/ CONNECTION [SKYACTIV-D 2.2].)
2. Perform the "Fuel Line Safety Procedure" referring to the "BEFORE SERVICE PRECAUTION". (See 01-14B-6 BEFORE SERVICE PRECAUTION [SKYACTIV-D 2.2].)
3. Remove the engine cover. (See 01-10B-4 ENGINE COVER REMOVAL/INSTALLATION [SKYACTIV-D 2.2].)
4. Remove the air cleaner. (See 01-13B-6 INTAKE-AIR SYSTEM REMOVAL/INSTALLATION [SKYACTIV-D 2.2].)
5. Remove the following parts as a single unit: (See 01-13B-6 INTAKE-AIR SYSTEM REMOVAL/INSTALLATION [SKYACTIV-D 2.2].)
   - Air hose
   - Air inlet pipe
   - Breather hose
   - Turbocharger air inlet hose
   - PTC Heater

FUEL SYSTEM [SKYACTIV-D 2.2]

6. Set the turbocharger air outlet pipe, turbocharger air outlet hose, and air intake pipe aside as a single unit as shown in the figure. (See 01-13B-6 INTAKE-AIR SYSTEM REMOVAL/ INSTALLATION [SKYACTIV-D 2.2].)

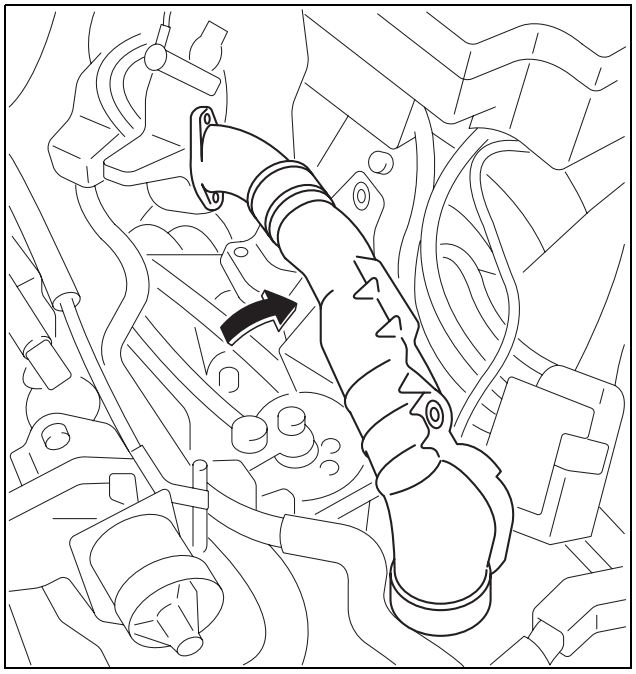

ac5wzw0000530

7. Set the water pipe assy aside as shown in the figure.
8. Disconnect the suction control valve connector.

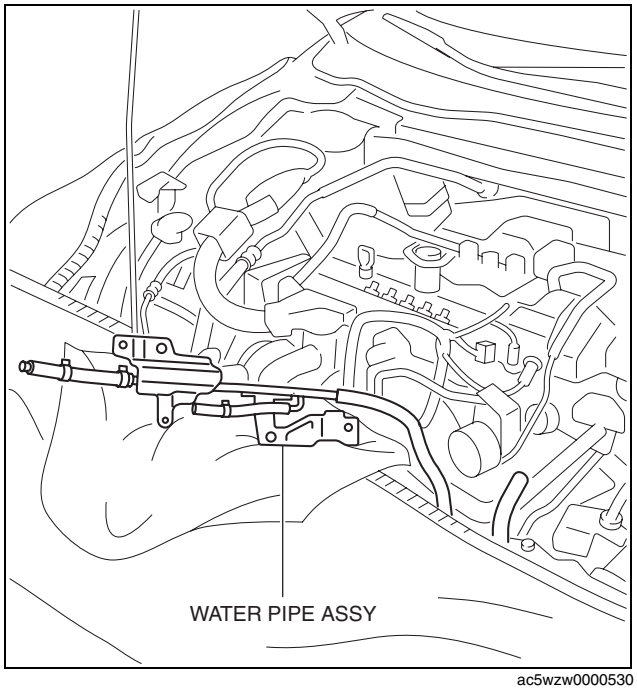

ac5wzw0000530

9. Remove the suction control valve.
10. Install in the reverse order of removal.
11. Perform the fuel hose installation procedure and fuel line air bleeding referring to the “AFTER SERVICE PRECAUTION”. (See 01-14B-7 AFTER SERVICE PRECAUTION [SKYACTIV-D 2.2].)

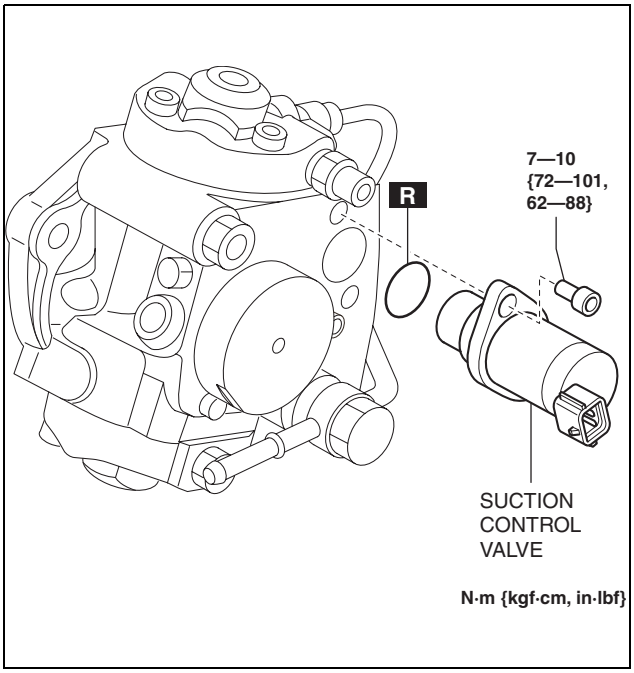

ac5wzw0000473

SUCTION CONTROL VALVE INSPECTION [SKYACTIV-D 2.2]

id0114z7087800

Caution

- **The supply pump is sealed to maintain the function. Therefore, SSTs and tester are required to disassemble the supply pump securely.**
- **If a malfunction in the supply pump is verified, place a repair order with the DENSO, Ltd. services network (supply pump manufacturer), and do not disassemble the supply pump yourself.**

Resistance inspection

1. Disconnect the negative battery cable. (See 01-17B-9 NEGATIVE BATTERY CABLE DISCONNECTION/ CONNECTION [SKYACTIV-D 2.2].)
2. Disconnect suction control valve connector.
3. Measure the resistance between the suction control valve terminals.

Suction control valve resistance (specification)
Approx. 2.1 ohms [20 °C {68 °F}]

- **If not within the specification, place a repair order with the DENSO, Ltd. services network.**

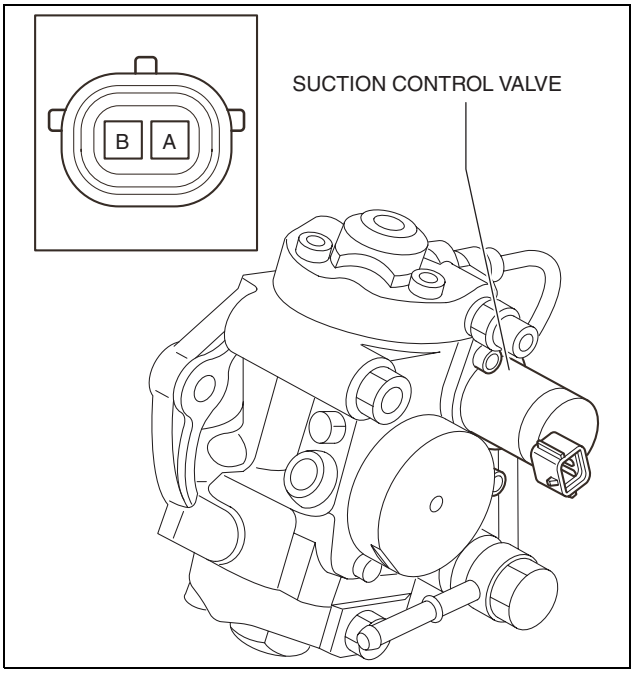

ac5wzw0000533

FUEL SYSTEM [SKYACTIV-D 2.2]

SEDIMENTOR SWITCH INSPECTION [SKYACTIV-D 2.2]

id0114z7085700

1. Disconnect the negative battery cable. (See 01-17B-9 NEGATIVE BATTERY CABLE DISCONNECTION/CONNECTION [SKYACTIV-D 2.2].)
2. Perform the “Fuel Line Safety Procedure” referring to the “BEFORE SERVICE PRECAUTION”. (See 01-14B-6 BEFORE SERVICE PRECAUTION [SKYACTIV-D 2.2].)
3. Drain the fuel from the fuel filter.
4. Remove the sedimentor switch.
5. Verify that there is continuity when pulling up the float as shown in the figure.
   - If there is no continuity, replace the sedimentor switch. (See 01-14B-39 FUEL FILTER REMOVAL/INSTALLATION [SKYACTIV-D 2.2].)

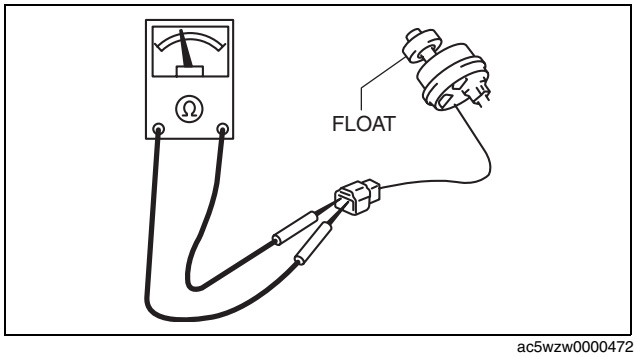

ac5wzw0000472

SUPPLY PUMP REMOVAL/INSTALLATION [SKYACTIV-D 2.2]

id0114z7805700

Warning

- **Fuel is highly flammable and dangerous. Fuel line spills and leakage can cause serious injury or death, and damage to equipment. If fuel comes into contact with the skin and eyes it will cause irritation. To prevent this, always perform the “Fuel Line Safety Procedure” referring to the “BEFORE REPAIR PROCEDURE”.**
- **A person charged with static electricity could cause a fire or explosion, resulting in death or serious injury. Before servicing the fuel system, make sure to discharge static electricity by touching a vehicle.**

Caution

- **If parts are exposed to the fuel, their function may be decreased or a fire may occur. Spread a rag to absorb any leaked fuel.**
- **Do not let foreign matter get into the injection pipe to prevent clogging. Always tighten the injection pipe to the specified torque.**
- **To prevent fuel leakage, when removing/installing the supply pump, always follow the procedure in the Workshop Manual and perform the procedure.**

Note

- If the supply pump is replaced, perform the “Supply Pump Initialization Procedure”.

1. Disconnect the negative battery cable. (See 01-17B-9 NEGATIVE BATTERY CABLE DISCONNECTION/CONNECTION [SKYACTIV-D 2.2].)
2. Perform the “Fuel Line Safety Procedure” referring to the “BEFORE SERVICE PRECAUTION”. (See 01-14B-6 BEFORE SERVICE PRECAUTION [SKYACTIV-D 2.2].)
3. Remove the engine cover. (See 01-10B-4 ENGINE COVER REMOVAL/INSTALLATION [SKYACTIV-D 2.2].)
4. Remove the air cleaner. (See 01-13B-6 INTAKE-AIR SYSTEM REMOVAL/INSTALLATION [SKYACTIV-D 2.2].)
5. Remove the battery and the battery tray. (See 01-17B-3 BATTERY REMOVAL/INSTALLATION [SKYACTIV-D 2.2].)
6. Remove the following parts as a single unit: (See 01-13B-6 INTAKE-AIR SYSTEM REMOVAL/INSTALLATION [SKYACTIV-D 2.2].)
   - Air hose
   - Air inlet pipe
   - Breather hose
   - Turbocharger air inlet hose
   - PTC Heater

FUEL SYSTEM [SKYACTIV-D 2.2]

7. Set the turbocharger air outlet pipe, turbocharger air outlet hose, and air intake pipe aside as a single unit as shown in the figure. (See 01-13B-6 INTAKE-AIR SYSTEM REMOVAL/ INSTALLATION [SKYACTIV-D 2.2].)
8. Drain the engine coolant. (See 01-12B-4 ENGINE COOLANT REPLACEMENT [SKYACTIV-D 2.2].)

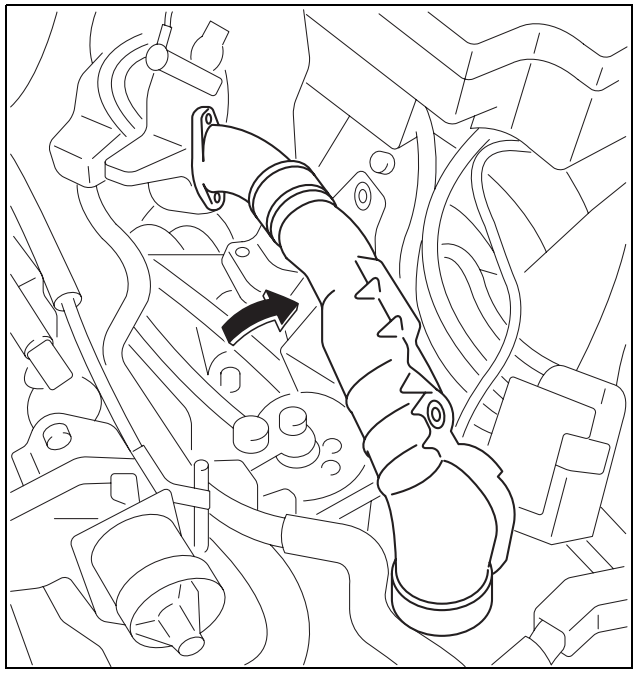
ac5wzw0000530

9. Set the water pipe assy aside as shown in the figure.

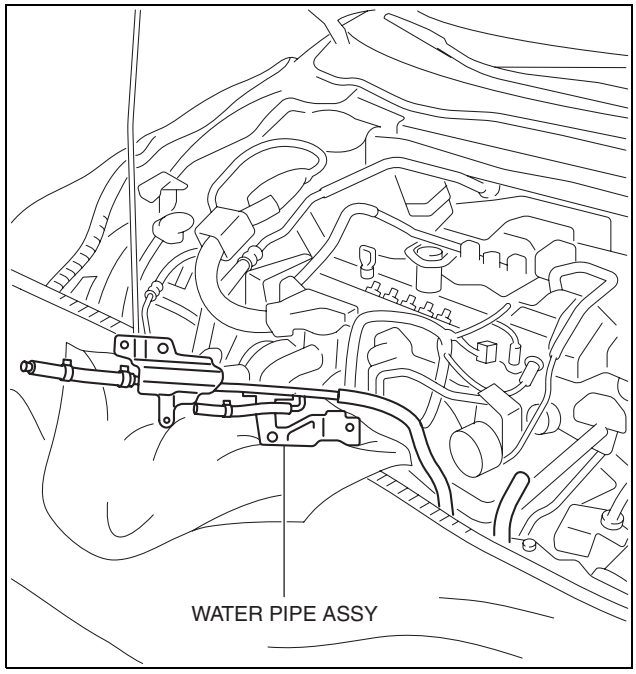

ac5wzw0000531

FUEL SYSTEM [SKYACTIV-D 2.2]

10. Detach the hose clip shown in the figure.

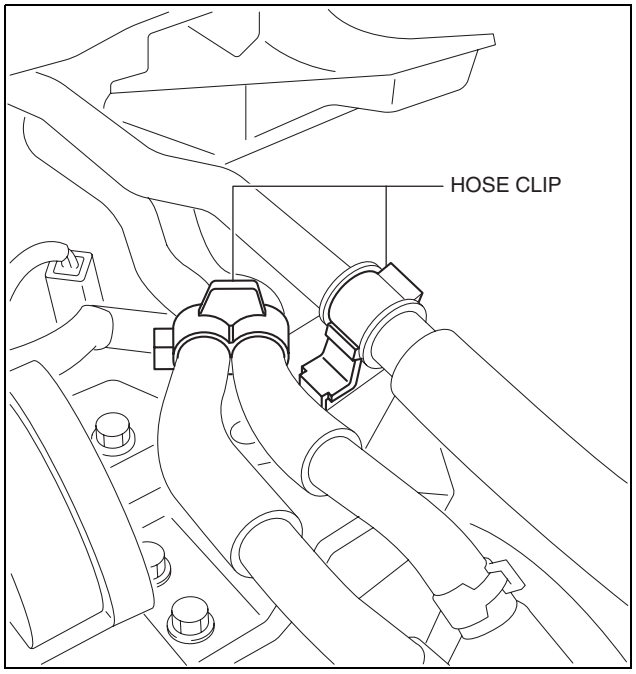

ac5wzw0000479

11. Detach the wiring harness clips shown in the figure.
12. Remove in the order shown in the figure.
13. Install in the reverse order of removal.
14. Perform the fuel hose installation procedure and fuel line air bleeding referring to the “AFTER SERVICE PRECAUTION”. (See 01-14B-7 AFTER SERVICE PRECAUTION [SKYACTIV-D 2.2].)

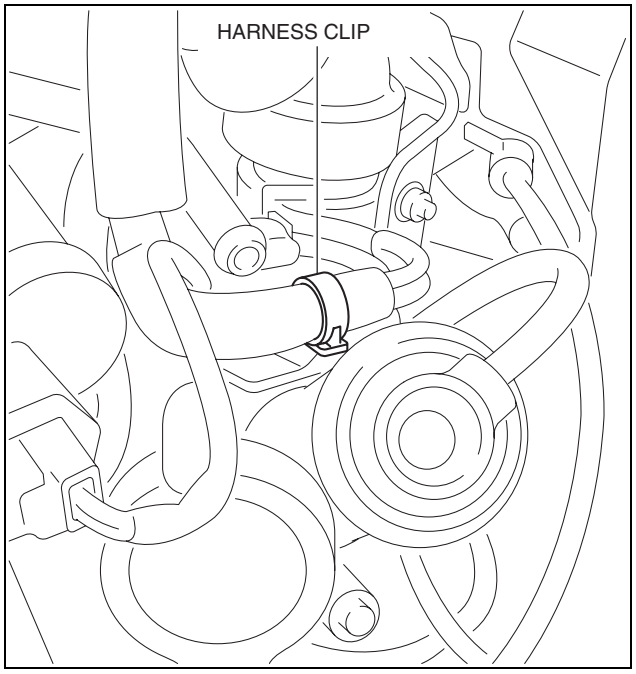

ac5wzw0000479

FUEL SYSTEM [SKYACTIV-D 2.2]

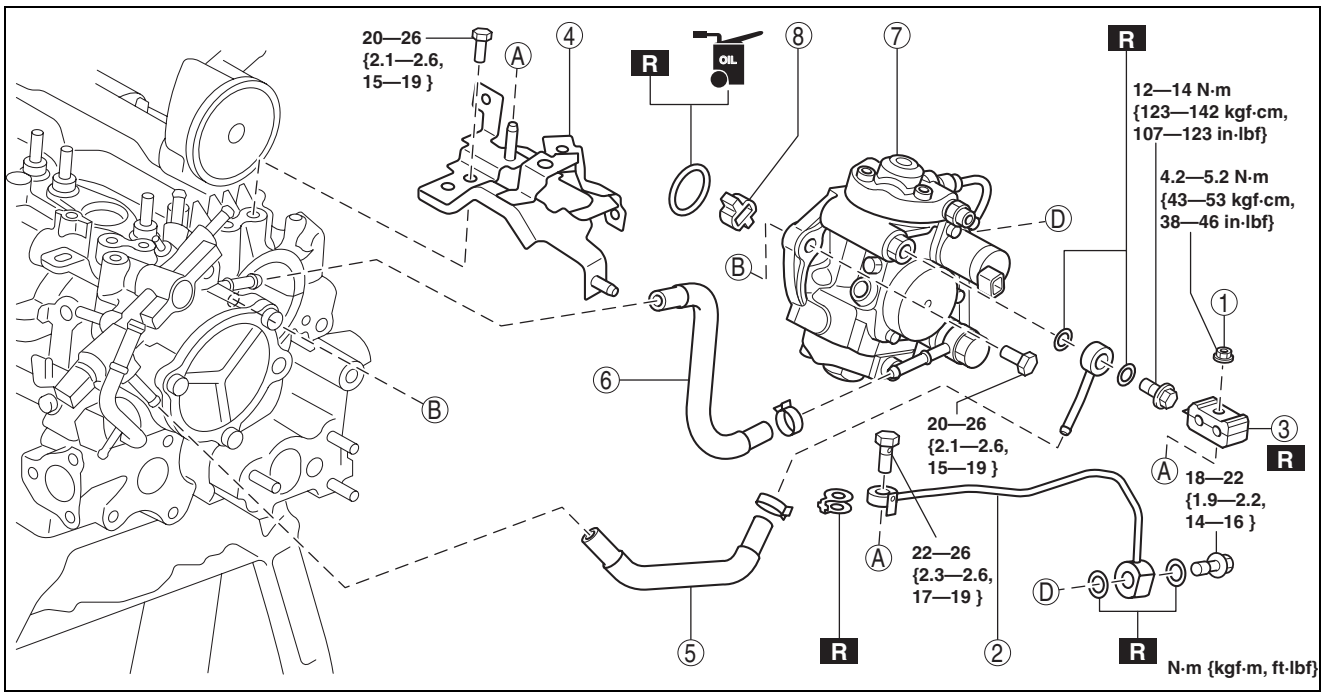

ac5wzw0000479

1	Clip installation nut
2	Fuel feed pipe (See 01-14B-49 Fuel Feed Pipe Removal Note.)
3	Clip (See 01-14B-50 Clip Removal Note.)
4	Bracket

5	Fuel return hose (See 01-14B-51 Fuel Return Hose Installation Note.)
6	Fuel main hose (See 01-14B-50 Fuel Main Hose Installation Note.)
7	Supply pump (See 01-14B-50 Supply Pump Removal Note.)
8	Spacer

Fuel Feed Pipe Removal Note

1. Set the harness protector connected to a bracket.
2. Remove the fuel feed pipe.

FUEL SYSTEM [SKYACTIV-D 2.2]

Clip Removal Note

1. Remove the injection pipe (supply pump side) as shown in the figure. (See 01-14B-33 INJECTION PIPE REMOVAL/INSTALLATION [SKYACTIV-D 2.2].)
   (1) Move the flared section.
   (2) Pull out the injection pipe (supply pump side).
2. Remove the clip.

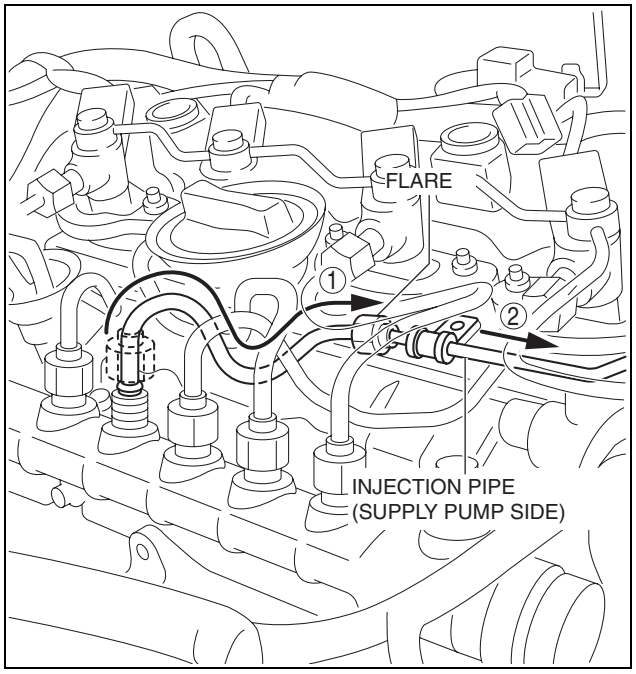

ac5wzw0000479

Supply Pump Removal Note

1. Remove the supply pump and the suction control valve as a single unit.
2. Remove the suction control valve from a supply pump.

Fuel Main Hose Installation Note

1. Install fuel main hose as shown in the figure.

Supply pump side

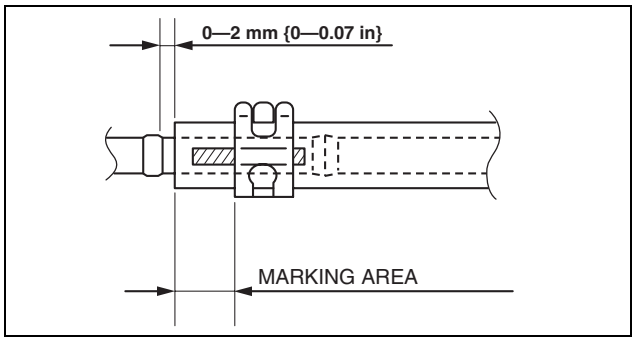

ac5wzw0000479

Lower case side

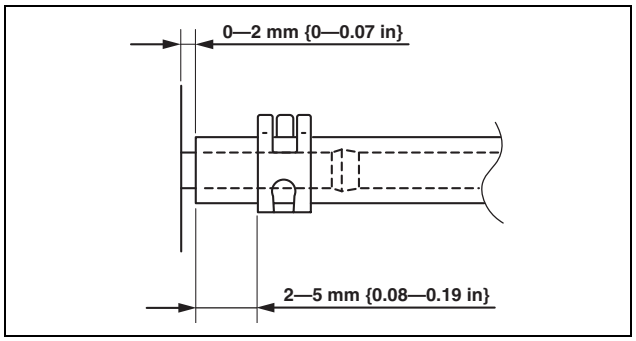

ac5wzw0000480

FUEL SYSTEM [SKYACTIV-D 2.2]

Fuel Return Hose Installation Note

1. Install fuel return hose as shown in the figure.

Supply pump side

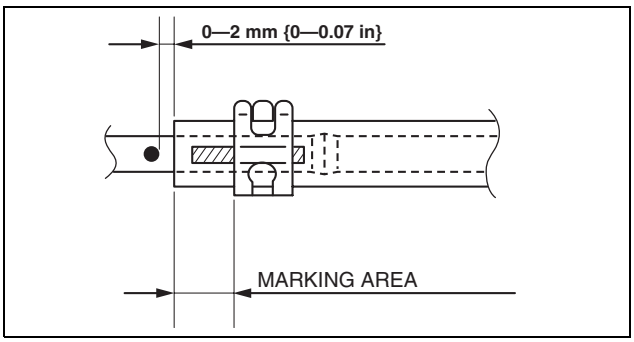

ac5wzw0000480

Lower case side

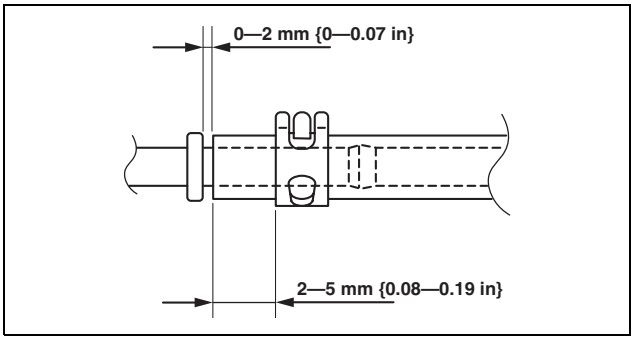

ac5wzw0000480

SUPPLY PUMP INSPECTION [SKYACTIV-D 2.2]

id0114z7805800

Caution

- **If a malfunction in the supply pump is verified, place a repair order with the DENSO, Ltd. services network (supply pump manufacturer), and do not disassemble the supply pump yourself.**

1. Verify that there is no malfunction in the following parts:
   - Supply pump
   - Suction control valve
     - — If there is a malfunction, ask the DENSO, Ltd services network or replace the supply pump. (See 01-14B-46 SUPPLY PUMP REMOVAL/INSTALLATION [SKYACTIV-D 2.2].)

FUEL SYSTEM [SKYACTIV-D 2.2]

COMMON RAIL REMOVAL/INSTALLATION [SKYACTIV-D 2.2]

id0114z7803900

Warning

- **Fuel is highly flammable and dangerous. Fuel line spills and leakage can cause serious injury or death, and damage to equipment. If fuel comes into contact with the skin and eyes it will cause irritation. To prevent this, always perform the "Fuel Line Safety Procedure" referring to the "BEFORE REPAIR PROCEDURE".**
- **A person charged with static electricity could cause a fire or explosion, resulting in death or serious injury. Before servicing the fuel system, make sure to discharge static electricity by touching a vehicle.**

Caution

- **If parts are exposed to the fuel, their function may be decreased or a fire may occur. Spread a rag to absorb any leaked fuel.**
- **Do not let foreign matter get into the injection pipe to prevent clogging. In addition, always tighten the injection pipe to the specified torque.**

Note

- If the common rail is replaced, perform the "Fuel Injection Amount Learning".

1. Disconnect the negative battery cable. (See 01-17B-9 NEGATIVE BATTERY CABLE DISCONNECTION/CONNECTION [SKYACTIV-D 2.2].)
2. Perform the "Fuel Line Safety Procedure" referring to the "BEFORE SERVICE PRECAUTION". (See 01-14B-6 BEFORE SERVICE PRECAUTION [SKYACTIV-D 2.2].)
3. Remove the engine cover. (See 01-10B-4 ENGINE COVER REMOVAL/INSTALLATION [SKYACTIV-D 2.2].)
4. Remove the injection pipes (fuel injector side) and the injection pipe (supply pump side). (See 01-14B-33 INJECTION PIPE REMOVAL/INSTALLATION [SKYACTIV-D 2.2].)
5. Remove in the order shown in the figure.
6. Install in the reverse order of removal.
7. Perform the "Fuel Hose Installation Procedure" and "Fuel Line Air Bleeding" referring to the "AFTER SERVICE PRECAUTION". (See 01-14B-7 AFTER SERVICE PRECAUTION [SKYACTIV-D 2.2].)

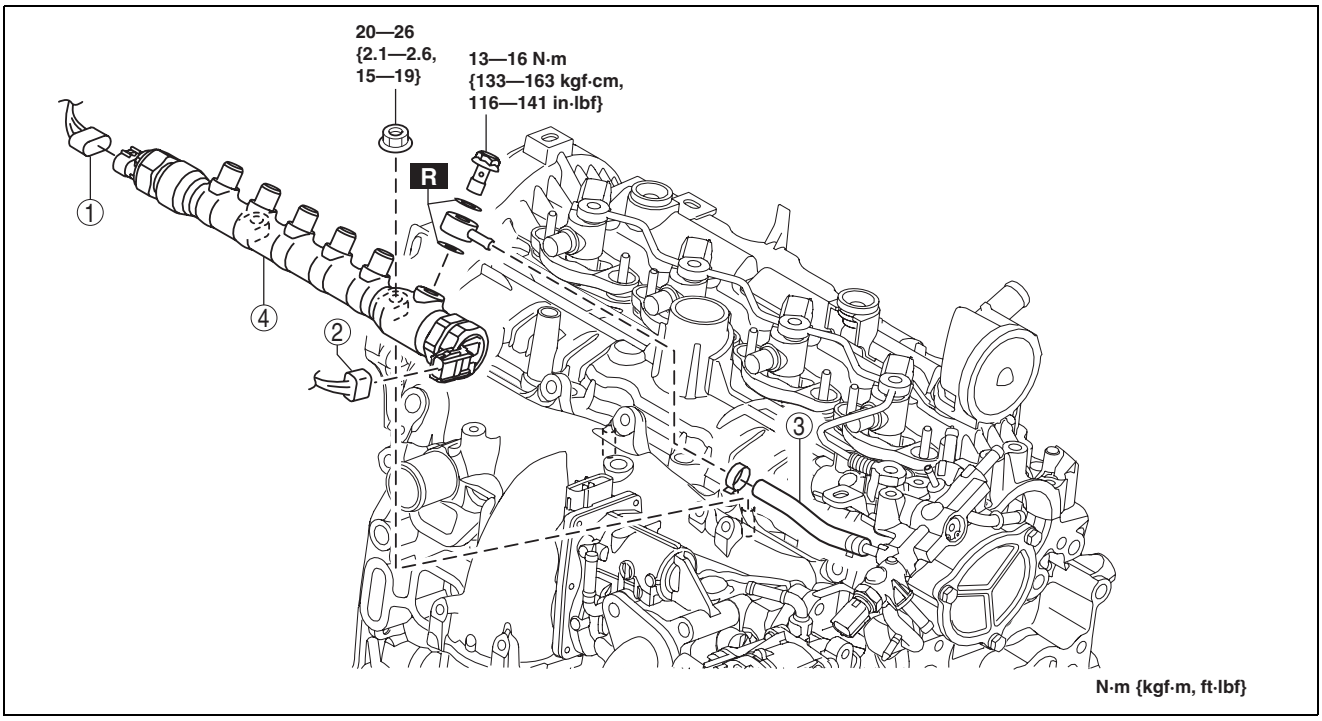

ac5wzw0000529

1	Fuel pressure sensor connector
2	Fuel pressure limiter valve connector

3	Fuel return hose (See 01-14B-54 Fuel Return Hose Installation Note.)
4	Common rail (See 01-14B-53 Common Rail Installation Note.)

FUEL SYSTEM [SKYACTIV-D 2.2]

Common Rail Installation Note

1. Temporarily tighten the common rail.

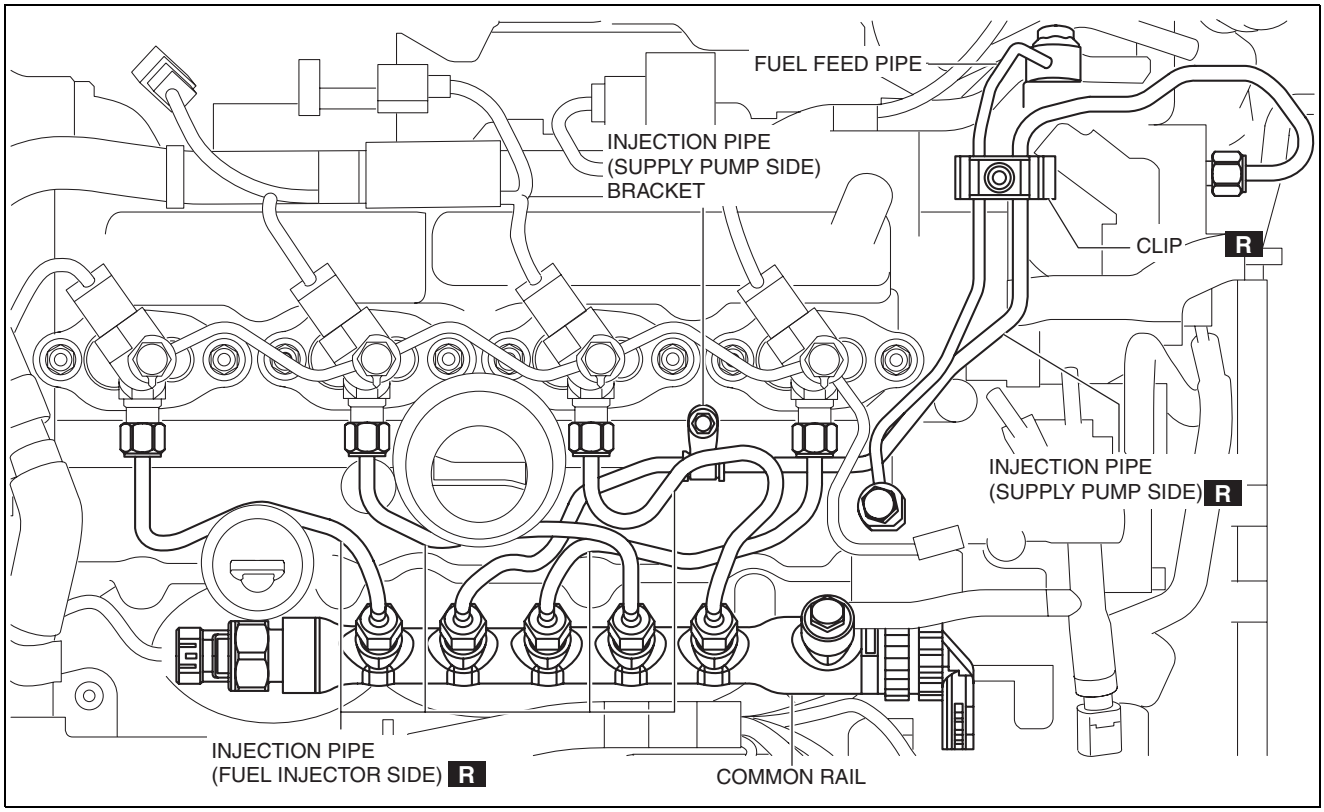

ac5wzw0000529

2. Temporarily tighten the new injection pipe (supply pump side).
3. Temporarily tighten the new injection pipes (fuel injector side).
4. Temporarily tighten the fuel return pipe (supply pump side).
5. Tighten the new clip.

   Clip tightening torque
   4.2—5.2 N·m {43—53 kgf·cm, 38—46 in·lbf}

6. Tighten the injection pipe (supply pump side) bracket.

   Injection pipe (supply pump side) bracket tightening torque
   8—11 N·m {82—112 kgf·cm, 71—97 in·lbf}

7. Tighten the injection pipe (supply pump side) and the injection pipes (fuel injector side) on the common rail side.

   Tightening torque for injection pipe (supply pump side) and injection pipe (fuel injector side)
   32—42 N·m {3.3—4.2 kgf·m, 24—30 ft·lbf}

8. Tighten the injection pipe (supply pump side) and the injection pipes (fuel injector side) on the fuel injector side.

   Tightening torque for injection pipe (supply pump side) and injection pipe (fuel injector side)
   32—42 N·m {3.3—4.2 kgf·m, 24—30 ft·lbf}

9. Tighten the common rail.

   Common rail tightening torque
   20—26 N·m {2.1—2.6 kgf·m, 15—19 ft·lbf}

10. Tighten the fuel return pipe (supply pump side).

    Fuel return pipe (supply pump side) tightening torque
    Supply pump side: 18—22 N·m {1.9—2.2 kgf·m, 14—16 ft·lbf}
    Lower case side: 20—26 N·m {2.1—2.6 kgf·m, 15—19 ft·lbf}

FUEL SYSTEM [SKYACTIV-D 2.2]

Fuel Return Hose Installation Note

1. Install the fuel return hose as shown in the figure.

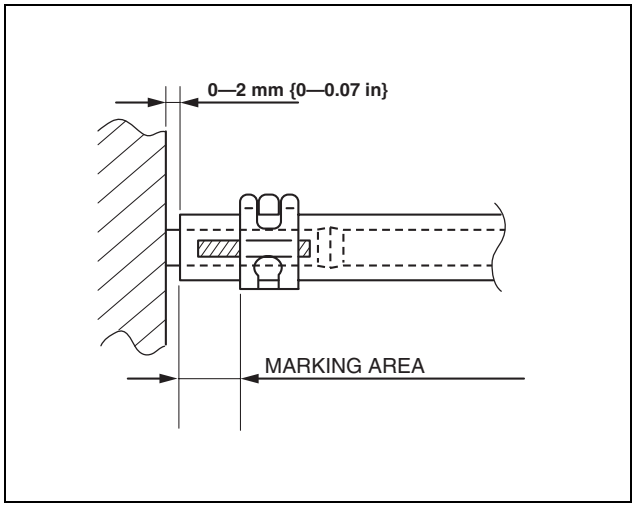

ac5wzw0000474

COMMON RAIL INSPECTION [SKYACTIV-D 2.2]

id0114z7803800

Caution

- **It is extremely dangerous to remove the fuel pressure sensor and fuel pressure limiter valve from the common rail as it could cause fuel leakage because the common rail is highly pressurized with fuel. Therefore, do not remove the fuel pressure sensor and the fuel pressure limiter valve installed to the common rail.**

1. Visually verify that there is no cracking, damage, or rust on the common rail.

Note

- If there is cracking , damage, or rust on the common rail, it could cause fuel leakage.

- If a malfunction is verified, replace the common rail. (See 01-14B-52 COMMON RAIL REMOVAL/INSTALLATION [SKYACTIV-D 2.2].)

LOWER CASE REMOVAL/INSTALLATION [SKYACTIV-D 2.2]

id0114z7266300

Warning

- **Fuel is highly flammable and dangerous. Fuel line spills and leakage can cause serious injury or death, and damage to equipment. If fuel comes into contact with the skin and eyes it will cause irritation. To prevent this, always perform the "Fuel Line Safety Procedure" referring to the "BEFORE REPAIR PROCEDURE".**
- **A person charged with static electricity could cause a fire or explosion, resulting in death or serious injury. Before servicing the fuel system, make sure to discharge static electricity by touching a vehicle.**

Caution

- **If parts are exposed to the fuel, their function may be decreased or a fire may occur. Spread a rag to absorb any leaked fuel.**
- **If fuel does not pass through the fuel filter, it could cause a fuel system malfunction. Therefore, do not install the fuel hoses (main and return side) in reverse. When installing the fuel hose, always refer to the "AFTER SERVICE PRECAUTION" and perform the "Fuel Hose Installation Procedure".**

1. Disconnect the negative battery cable. (See 01-17B-9 NEGATIVE BATTERY CABLE DISCONNECTION/CONNECTION [SKYACTIV-D 2.2].)
2. Perform the "Fuel Line Safety Procedure" referring to the "BEFORE SERVICE PRECAUTION". (See 01-14B-6 BEFORE SERVICE PRECAUTION [SKYACTIV-D 2.2].)
3. Remove the engine cover. (See 01-10B-4 ENGINE COVER REMOVAL/INSTALLATION [SKYACTIV-D 2.2].)
4. Remove the fuel return pipe (supply pump side). (See 01-14B-46 SUPPLY PUMP REMOVAL/INSTALLATION [SKYACTIV-D 2.2].)
5. Remove the fuel return pipe (fuel injector side). (See 01-14B-35 FUEL INJECTOR REMOVAL/INSTALLATION [SKYACTIV-D 2.2].)

FUEL SYSTEM [SKYACTIV-D 2.2]

6. Remove in the order shown in the figure.

1	Fuel main hose
2	Fuel return hose No.1 (See 01-14B-57 Fuel Main Hose and Fuel Return Hose No.1 Installation Note.)
3	Fuel return hose No.2 (See 01-14B-56 Fuel Return Hose No.2 Installation Note.)
4	Fuel return hose No.3 (See 01-14B-56 Fuel Return Hose No.3 Installation Note.)
5	Fuel return hose No.4 (See 01-14B-56 Fuel Return Hose No.4 Installation Note.)
6	Plug (See 01-14B-55 Plug Installation Note.)
7	Lower case

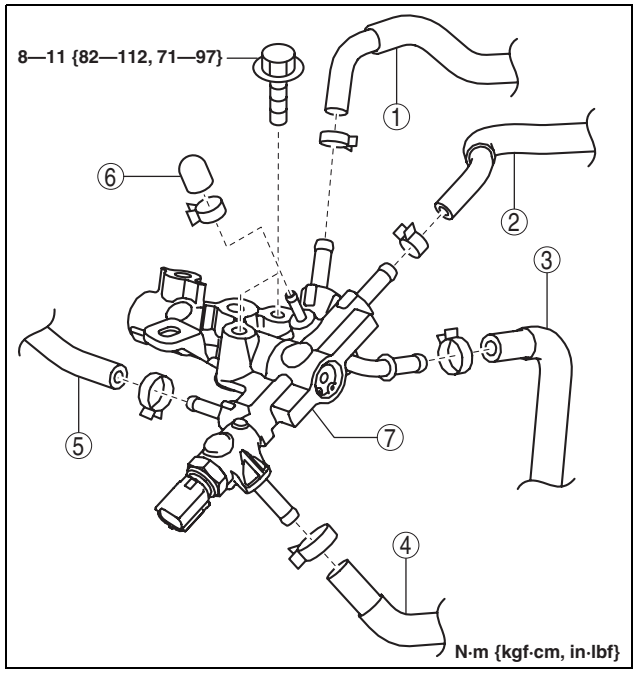

ac5wzw0000488

7. Install in the reverse order of removal.
8. Perform the Fuel Hose Installation and Fuel Line Air Bleeding referring to the “AFTER SERVICE PRECAUTION”. (See 01-14B-7 AFTER SERVICE PRECAUTION [SKYACTIV-D 2.2].)

Plug Installation Note

1. Install plug as shown in the figure.

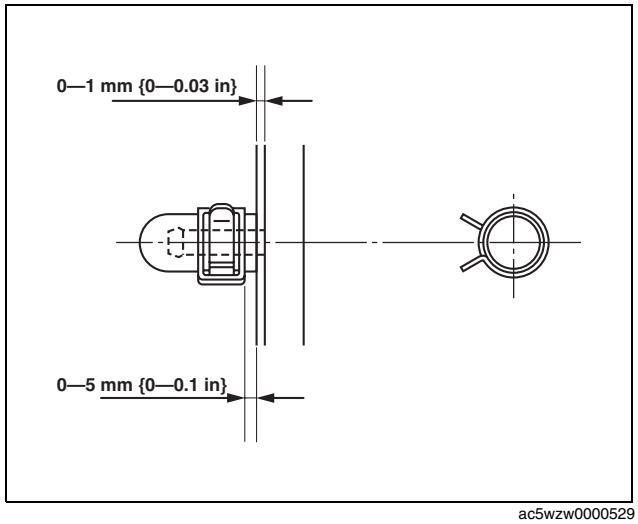

ac5wzw0000529

FUEL SYSTEM [SKYACTIV-D 2.2]

Fuel Return Hose No.4 Installation Note

1. Install fuel return hose No.4 as shown in the figure.

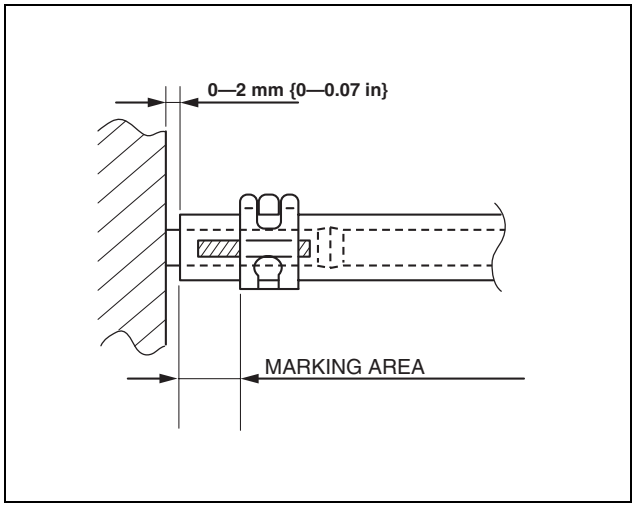

ac5wzw0000488

Fuel Return Hose No.3 Installation Note

1. Install fuel return hose No.3 as shown in the figure.

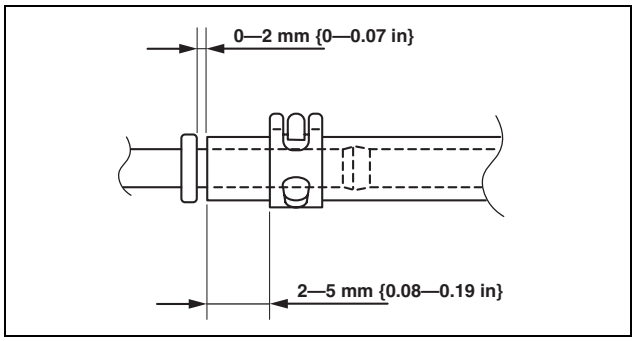

ac5wzw0000488

Fuel Return Hose No.2 Installation Note

1. Install fuel return hose No.2 as shown in the figure.

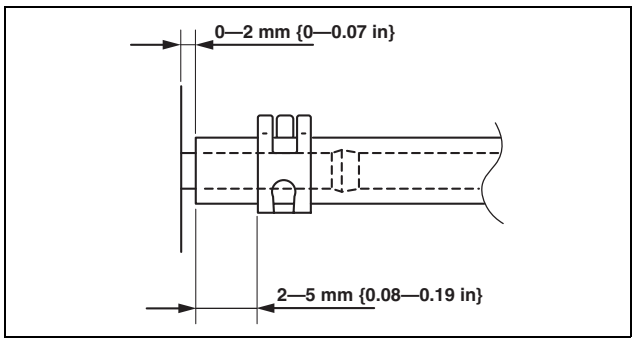

ac5wzw0000488

FUEL SYSTEM [SKYACTIV-D 2.2]

Fuel Main Hose and Fuel Return Hose No.1 Installation Note

1. Install the fuel main hose and fuel return hose No.1 as shown in the figure.

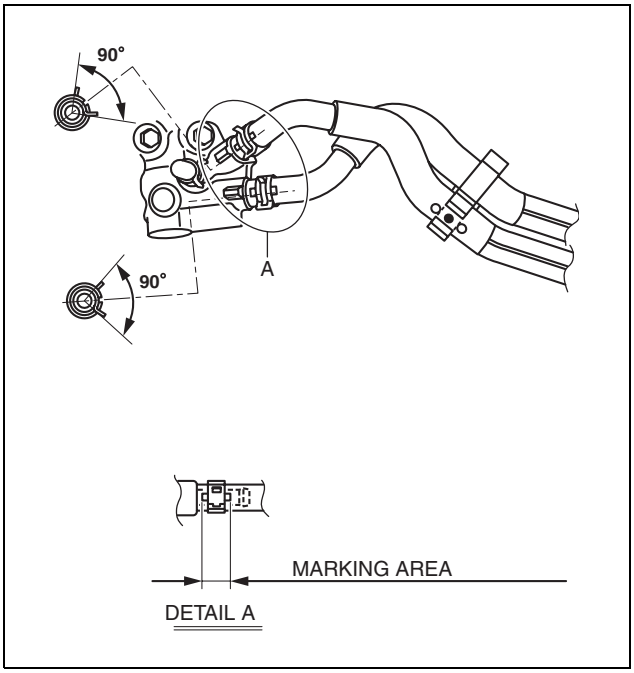

ac5wzw0000489

01-15A EXHAUST SYSTEM [SKYACTIV-G 2.0]

EXHAUST SYSTEM INSPECTION [SKYACTIV-G 2.0] **01-15A–1**
EXHAUST SYSTEM REMOVAL/INSTALLATION [SKYACTIV-G 2.0] **01-15A–2**
2WD **01-15A–2**
4WD **01-15A–7**

EXHAUST SYSTEM [SKYACTIV-G 2.0]

EXHAUST SYSTEM INSPECTION [SKYACTIV-G 2.0]

id0115z5800100

1. Start the engine and inspect each exhaust system component for exhaust gas leakage.
   - If there is leakage, repair or replace the appropriate component. (See 01-15A-2 EXHAUST SYSTEM REMOVAL/INSTALLATION [SKYACTIV-G 2.0].)

EXHAUST SYSTEM [SKYACTIV-G 2.0]

EXHAUST SYSTEM REMOVAL/INSTALLATION [SKYACTIV-G 2.0]

id0115z5800200

Warning

- **A hot engine and exhaust system can cause severe burns. Turn off the engine and wait until they are cool before removing the exhaust system.**

2WD

1. Disconnect the negative battery cable. (See 01-17A-11 NEGATIVE BATTERY CABLE DISCONNECTION/CONNECTION [SKYACTIV-G 2.0].) (See 01-17A-13 NEGATIVE BATTERY CABLE DISCONNECTION/CONNECTION [SKYACTIV-G 2.0 (WITHOUT i-stop)].)
2. Remove in the order indicated in the table.
3. Remove the insulator. (See 01-15A-4 Exhaust system insulator removal/installation.)
4. Install in the reverse order of removal.

Step 1

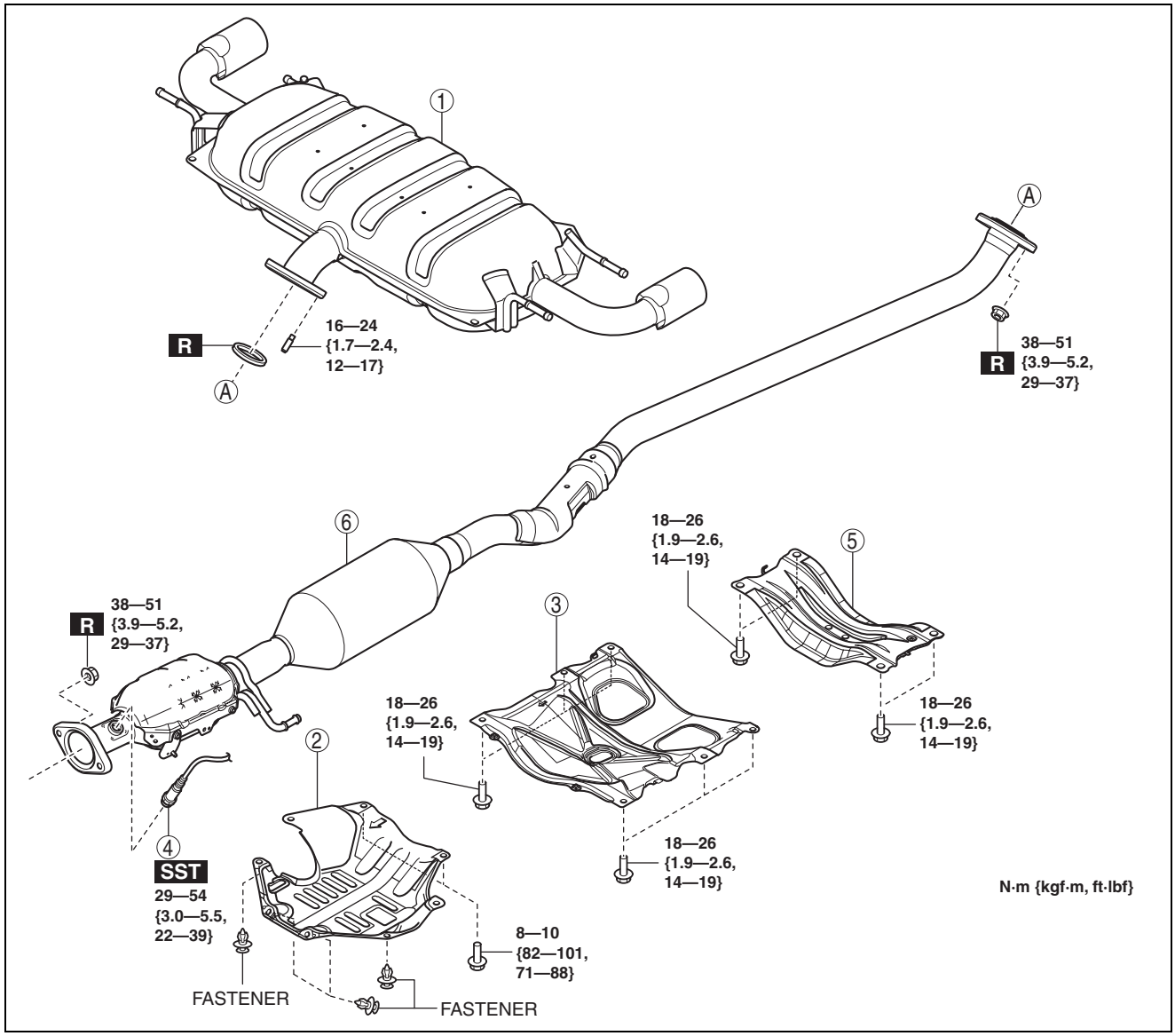

ac5wzw0000271

1	Main silencer
2	Insulator
3	Brace bar (See 01-15A-5 Brace bar removal note.)

4	HO2S (See 01-40-56 HEATED OXYGEN SENSOR (HO2S) REMOVAL/INSTALLATION [SKYACTIV-G 2.0].)
5	Tunnel member
6	TWC

EXHAUST SYSTEM [SKYACTIV-G 2.0]

Step 2

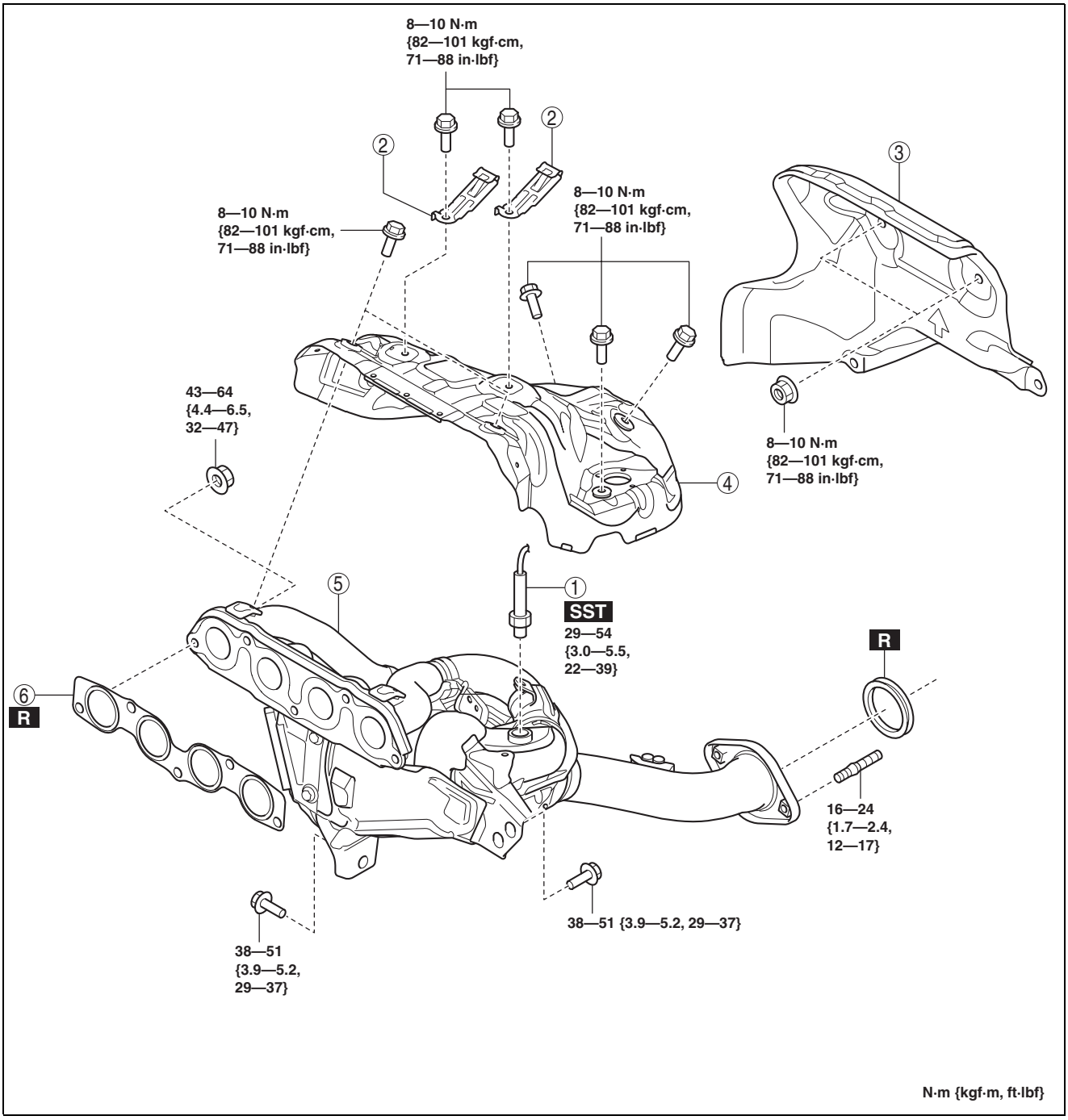

ac5wzw0000271

1	A/F sensor (See 01-40-52 AIR FUEL RATIO (A/F) SENSOR REMOVAL/INSTALLATION [SKYACTIV-G 2.0].)
2	Clip
3	Insulator

4	Exhaust manifold insulator (See 01-15A-5 Exhaust manifold insulator removal note.) (See 01-15A-7 Exhaust manifold insulator installation note.)
5	Exhaust manifold (WU-TWC) (See 01-15A-5 Exhaust manifold removal note.) (See 01-15A-5 Exhaust manifold installation note.)
6	Exhaust manifold gasket

EXHAUST SYSTEM [SKYACTIV-G 2.0]

Exhaust system insulator removal/installation

1. Remove the exhaust system insulator in the order shown in the figure.
2. Install in the reverse order of removal.

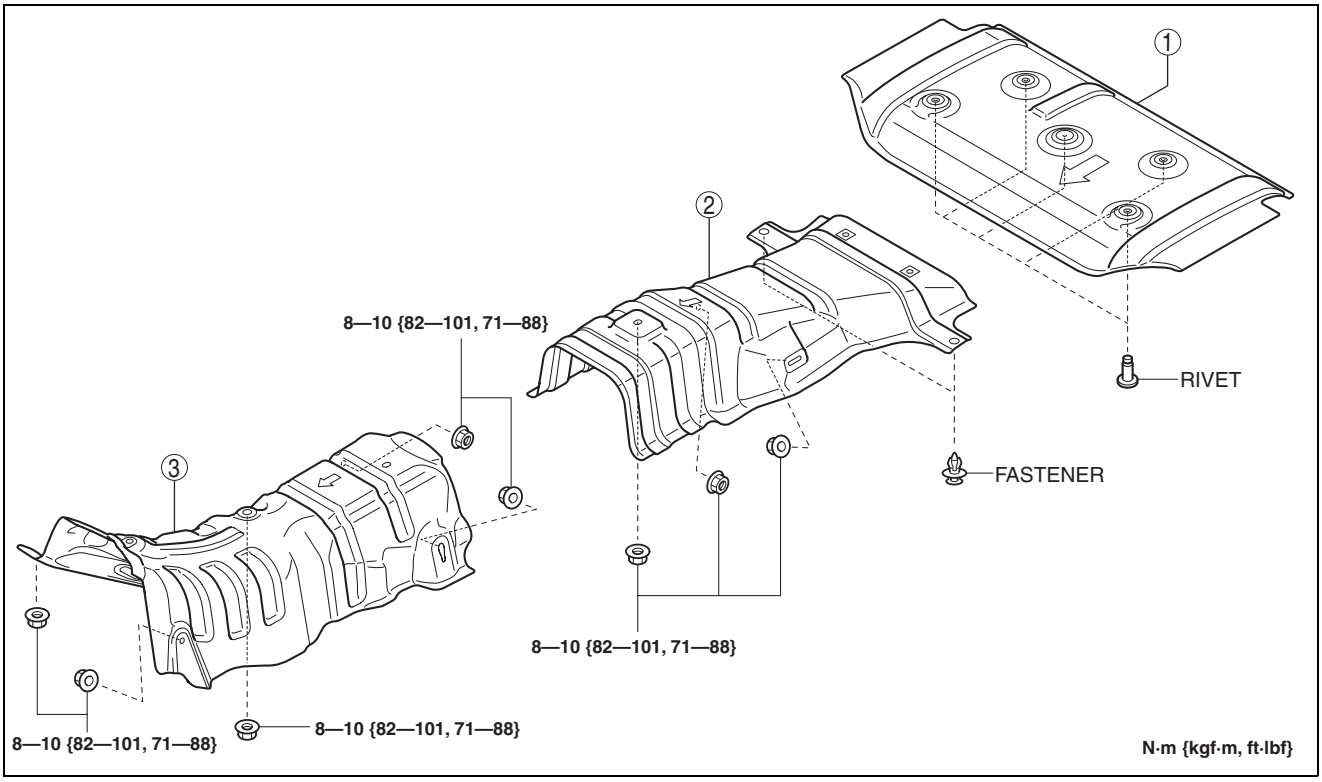

ac5wzw0000298

1	Insulator (rear) (See 01-15A-4 Insulator (rear) removal note.)

2	Insulator (middle)
3	Insulator (front)

Insulator (rear) removal note

Note

- The insulator (rear) are installed using rivets.

1. Push out the mandrel using a hammer and punch (**2—2.8 mm {0.08—0.11 in}** diameter).

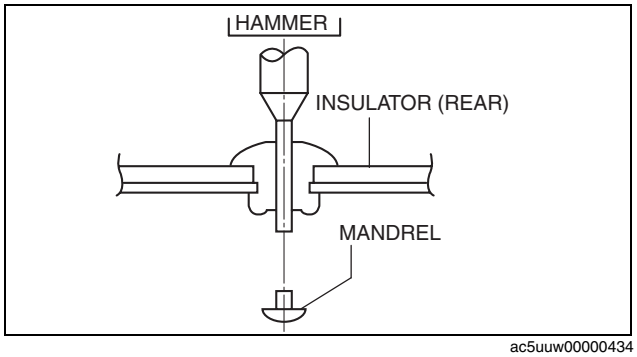

ac5uuw00000434

EXHAUST SYSTEM [SKYACTIV-G 2.0]

2. Remove the flange using a drill (**5 mm {0.20 in}** drill bit).

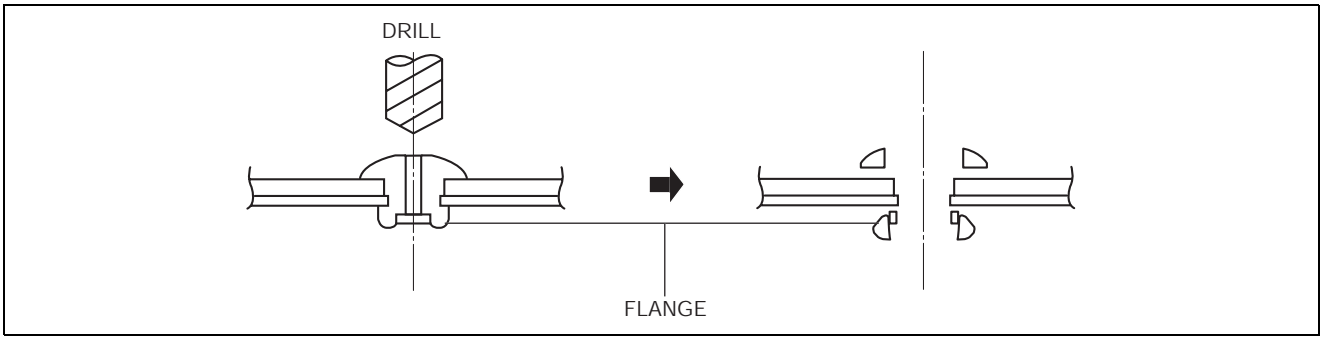

ar8uuw00001479

Brace bar removal note

1. Remove the floor under cover. (See 09-16-44 FLOOR UNDER COVER REMOVAL/INSTALLATION.)
2. Remove the brace bar.

Exhaust manifold insulator removal note

1. Remove the insulator as shown in the figure.
2. Remove the No.1 engine mount rubber. (See 01-10A-105 ENGINE REMOVAL/INSTALLATION [SKYACTIV-G 2.0].)
3. Move the engine.
4. Remove the exhaust manifold insulator.

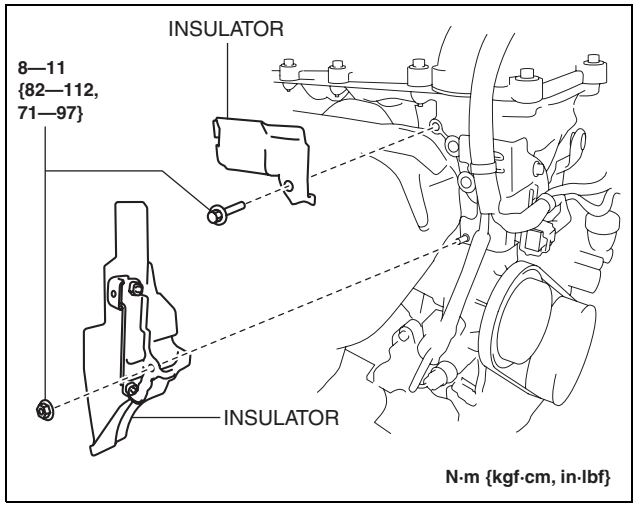

ac5wzw0000271

Exhaust manifold removal note

Note

- When removing the exhaust manifold, the bracket installed under the exhaust manifold does not have to be removed. Remove the exhaust manifold with the bracket installed.

1. Remove the front crossmember. (See 02-13-15 FRONT CROSSMEMBER REMOVAL/INSTALLATION.)
2. Remove the exhaust manifold.

Exhaust manifold installation note

1. Temporarily tighten the exhaust manifold installation nuts (1) and (2) shown in the figure by hand.
2. Tighten the exhaust manifold installation nuts (1) and (2) shown in the figure to **33—53 N·m {3.4—5.4 kgf·m, 25—39 ft·lbf}**.

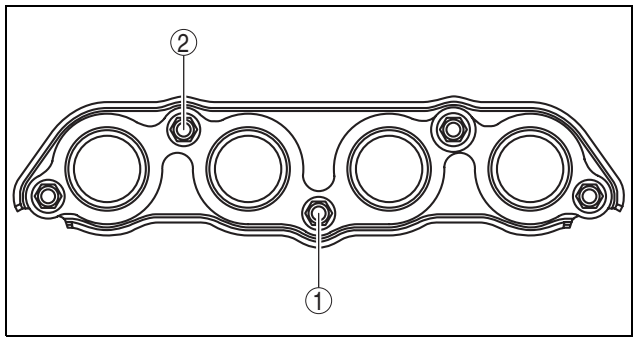

ac5wzw0000271

EXHAUST SYSTEM [SKYACTIV-G 2.0]

3. Temporarily tighten the exhaust manifold installation nuts (3) to (5) shown in the figure by hand.
4. Tighten the exhaust manifold installation nuts (3) to (5) shown in the figure.

   Exhaust manifold installation nut tightening torque
   43—64 N·m {4.4—6.5 kgf·m, 32—47 ft·lbf}

5. Tighten the exhaust manifold installation nuts (1) and (2) shown in the figure.

   Exhaust manifold installation nut tightening torque
   43—64 N·m {4.4—6.5 kgf·m, 32—47 ft·lbf}

6. Temporarily tighten the bolts (6) and (7) shown in the figure.
7. Tighten the bolt (6) shown in the figure.

   Exhaust manifold installation bolt tightening torque
   38—51 N·m {3.9—5.2 kgf·m, 29—37 ft·lbf}

8. Tighten the bolt (7) shown in the figure.

   Exhaust manifold installation bolt tightening torque
   38—51 N·m {3.9—5.2 kgf·m, 29—37 ft·lbf}

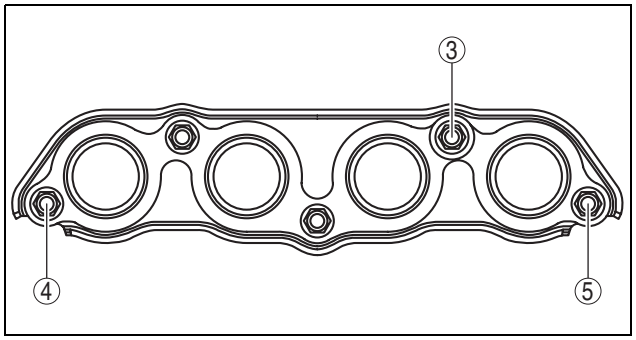

ac5wzw0000271

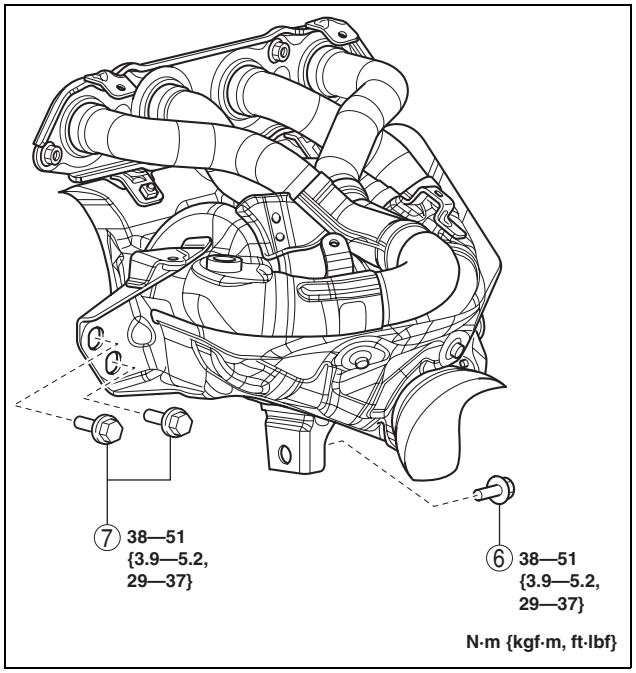

ac5wzw0000271

EXHAUST SYSTEM [SKYACTIV-G 2.0]

Exhaust manifold insulator installation note

1. Temporarily tighten the exhaust manifold insulator.
2. Tighten the exhaust manifold insulator in the order shown in the figure.

Exhaust manifold insulator (upper) tightening torque
8—10 N·m {82—101 kgf·cm, 71—88 in·lbf}

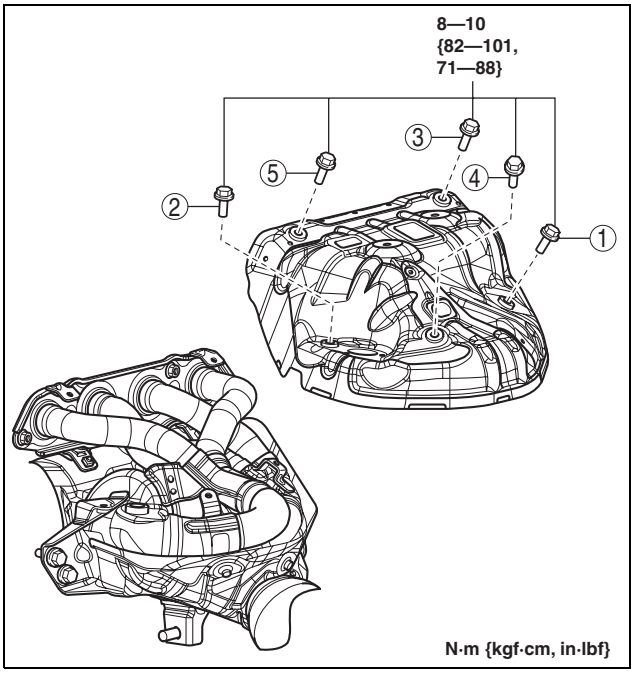

ac5wzw0000271

4WD

1. Disconnect the negative battery cable. (See 01-17A-11 NEGATIVE BATTERY CABLE DISCONNECTION/CONNECTION [SKYACTIV-G 2.0].) (See 01-17A-13 NEGATIVE BATTERY CABLE DISCONNECTION/CONNECTION [SKYACTIV-G 2.0 (WITHOUT i-stop)].)
2. Remove in the order indicated in the table.
3. Remove the insulator. (See 01-15A-9 Exhaust system insulator removal/installation.)
4. Install in the reverse order of removal.

Step 1

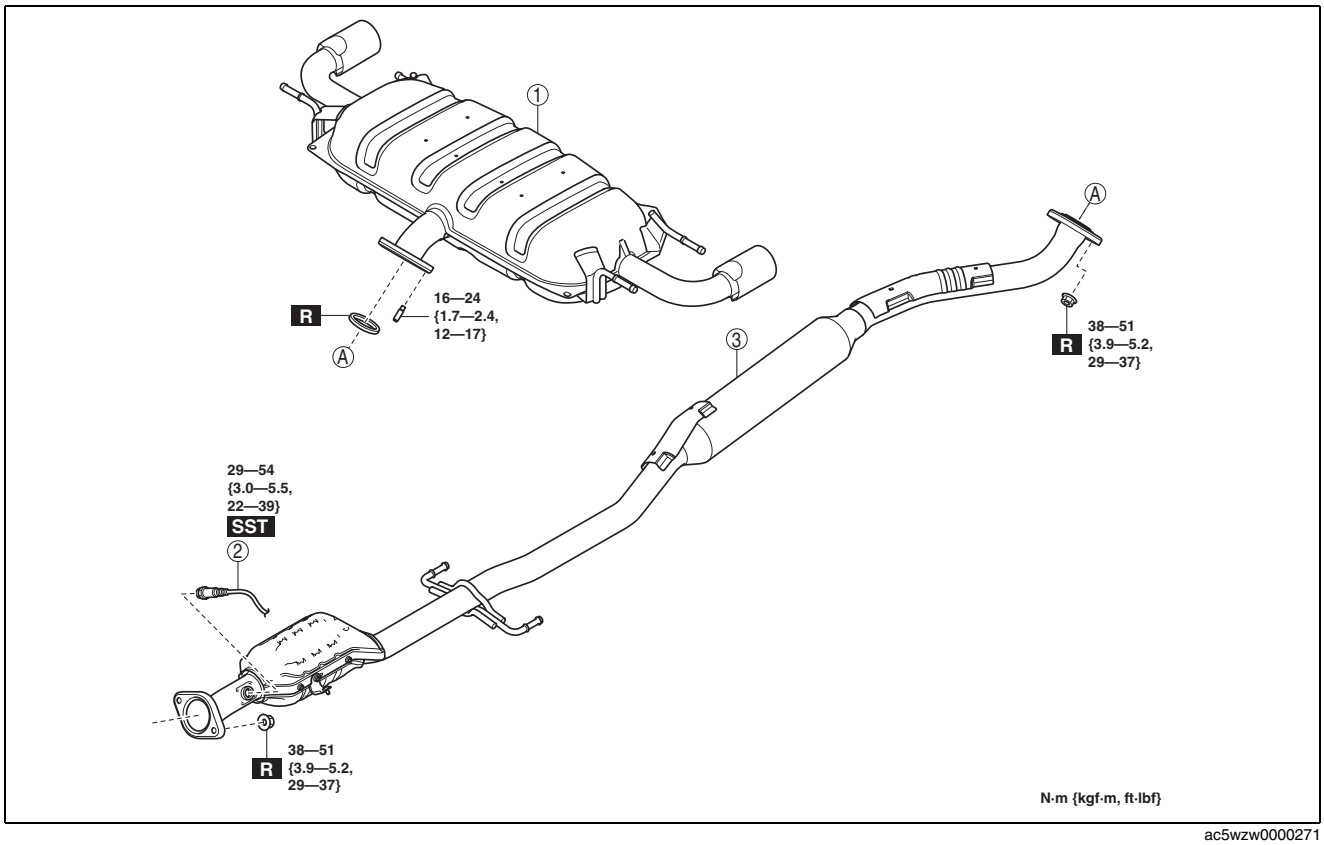

ac5wzw0000271

EXHAUST SYSTEM [SKYACTIV-G 2.0]

1	Main silencer
2	HO2S (See 01-40-56 HEATED OXYGEN SENSOR (HO2S) REMOVAL/INSTALLATION [SKYACTIV-G 2.0].)

3	TWC

Step 2

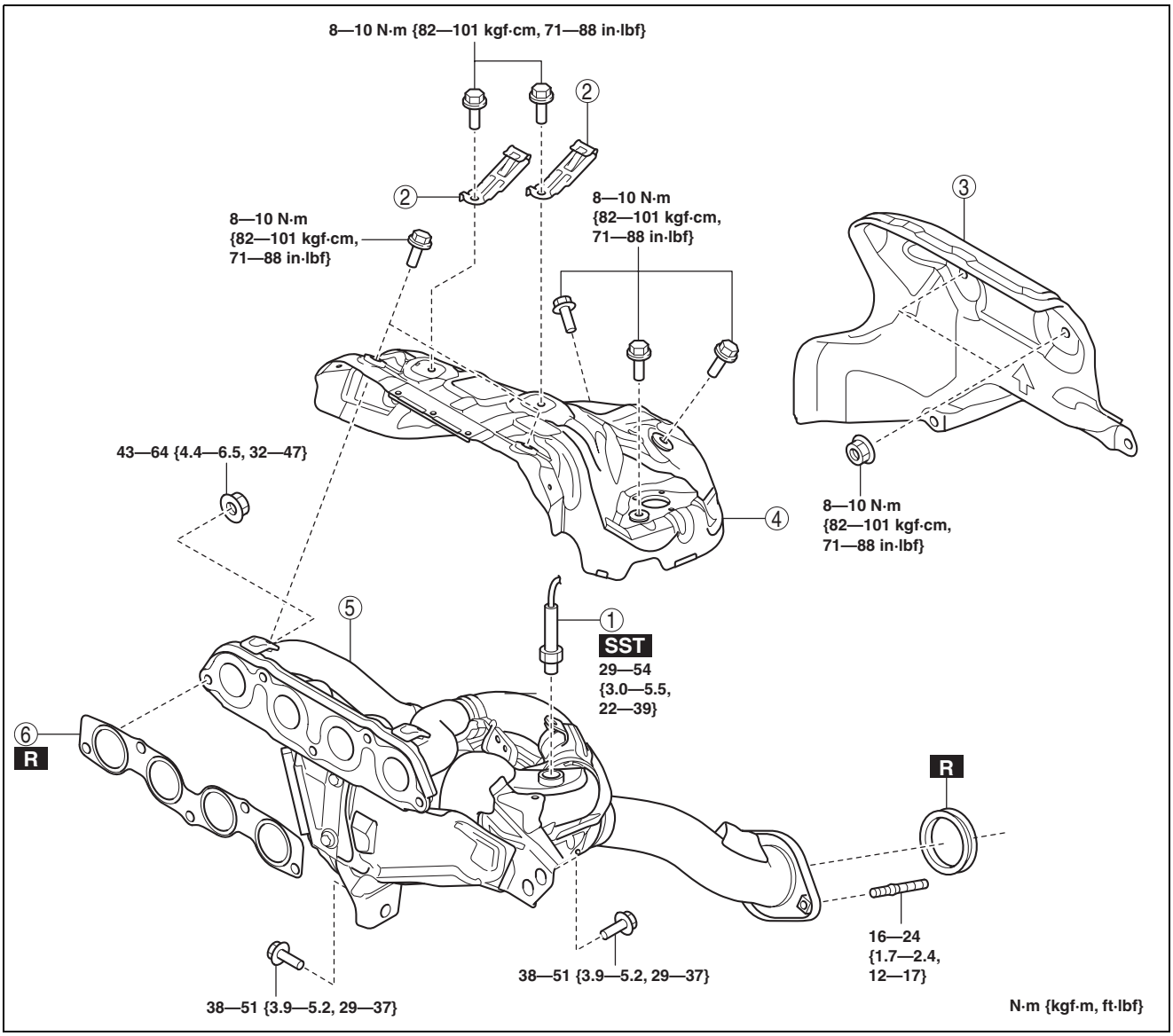

ac5wzw0000271

1	A/F sensor (See 01-40-52 AIR FUEL RATIO (A/F) SENSOR REMOVAL/INSTALLATION [SKYACTIV-G 2.0].)
2	Clip
3	Insulator

4	Exhaust manifold insulator (See 01-15A-10 Exhaust manifold insulator removal note.) (See 01-15A-12 Exhaust manifold insulator installation note.)
5	Exhaust manifold (WU-TWC) (See 01-15A-10 Exhaust manifold removal note.) (See 01-15A-10 Exhaust manifold installation note.)
6	Exhaust manifold gasket

EXHAUST SYSTEM [SKYACTIV-G 2.0]

Exhaust system insulator removal/installation

1. Remove the propeller shaft. (See 03-15-2 PROPELLER SHAFT REMOVAL/INSTALLATION.)
2. Remove in the order indicated in the table.
3. Install in the reverse order of removal.

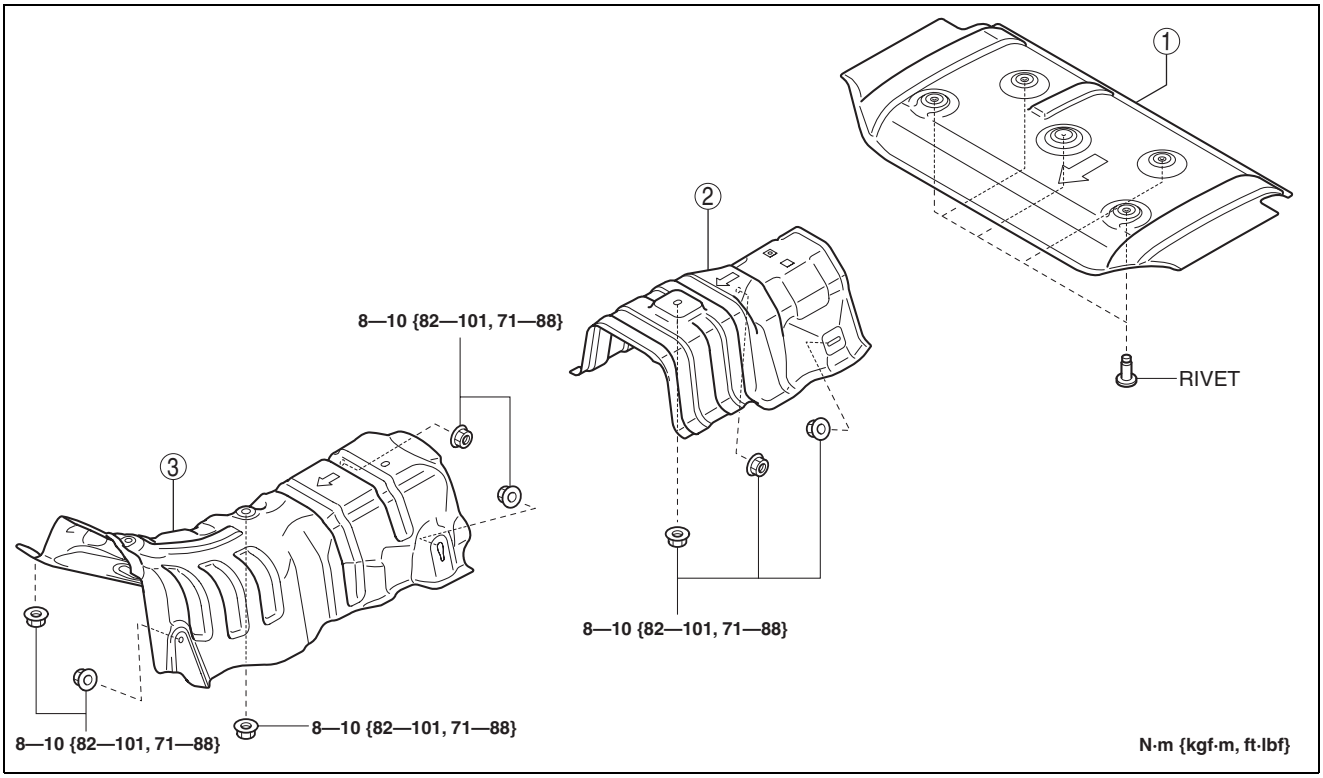

ac5wzw0000298

1	Insulator (rear) (See 01-15A-9 Insulator (rear) removal note.)
2	Insulator (middle)
3	Insulator (front)

Insulator (rear) removal note

Note
- The insulator (rear) are installed using rivets.

1. Push out the mandrel using a hammer and punch (**2—2.8 mm {0.08—0.11 in}** diameter).

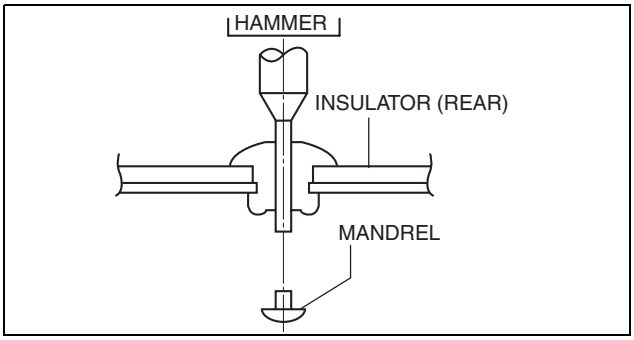

ac5uuw00000434

EXHAUST SYSTEM [SKYACTIV-G 2.0]

2. Remove the flange using a drill (**5 mm {0.20 in}** drill bit).

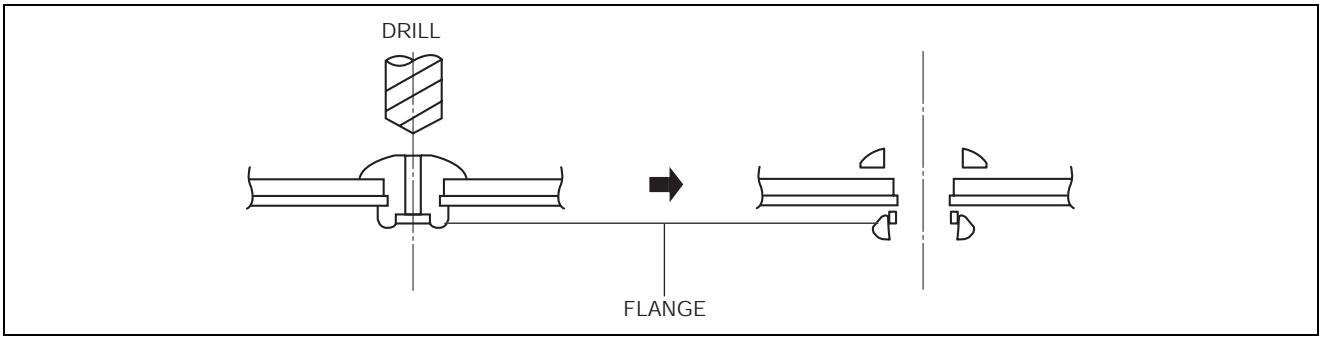

ar8uuw00001479

Exhaust manifold insulator removal note

1. Remove the insulator as shown in the figure.
2. Remove the exhaust manifold insulator.

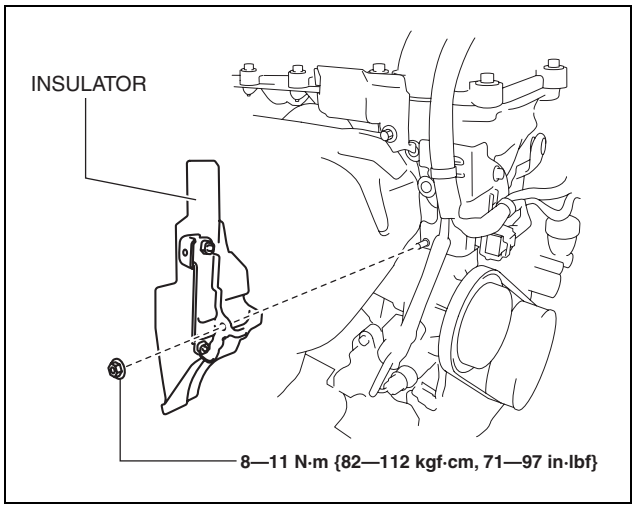

ac5uuw00000435

Exhaust manifold removal note

Note

- When removing the exhaust manifold, the bracket installed under the exhaust manifold does not have to be removed. Remove the exhaust manifold with the bracket installed.

1. Remove the front crossmember. (See 02-13-15 FRONT CROSSMEMBER REMOVAL/INSTALLATION.)
2. Remove the exhaust manifold.

Exhaust manifold installation note

1. Temporarily tighten the exhaust manifold installation nuts (1) and (2) shown in the figure by hand.
2. Tighten the exhaust manifold installation nuts (1) and (2) shown in the figure to **33—53 N·m {3.4—5.4 kgf·m, 25—39 ft·lbf}**.

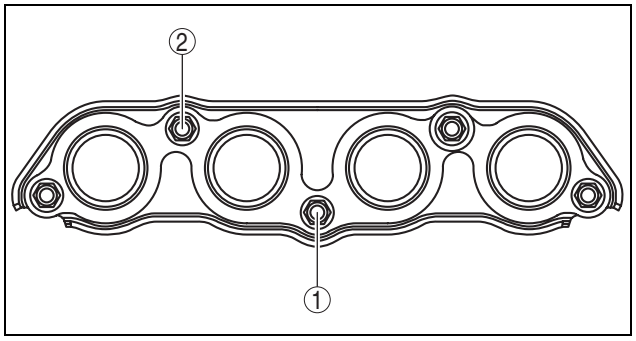

ac5wzw0000271

EXHAUST SYSTEM [SKYACTIV-G 2.0]

3. Temporarily tighten the exhaust manifold installation nuts (3) to (5) shown in the figure by hand.
4. Tighten the exhaust manifold installation nuts (3) to (5) shown in the figure.

   Exhaust manifold installation nut tightening torque
   43—64 N·m {4.4—6.5 kgf·m, 32—47 ft·lbf}

5. Tighten the exhaust manifold installation nuts (1) and (2) shown in the figure.

   Exhaust manifold installation nut tightening torque
   43—64 N·m {4.4—6.5 kgf·m, 32—47 ft·lbf}

6. Temporarily tighten the bolts (6) and (7) shown in the figure.
7. Tighten the bolt (6) shown in the figure.

   Exhaust manifold installation bolt tightening torque
   38—51 N·m {3.9—5.2 kgf·m, 29—37 ft·lbf}

8. Tighten the bolt (7) shown in the figure.

   Exhaust manifold installation bolt tightening torque
   38—51 N·m {3.9—5.2 kgf·m, 29—37 ft·lbf}

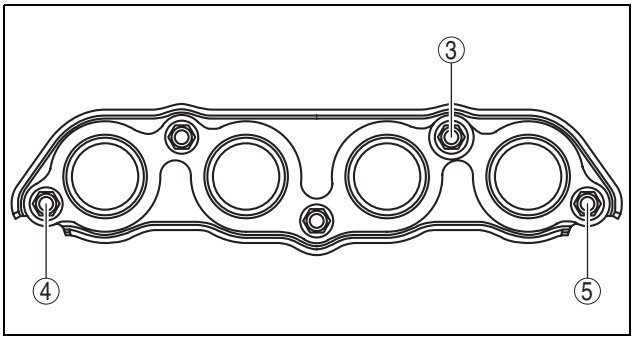

ac5wzw0000271

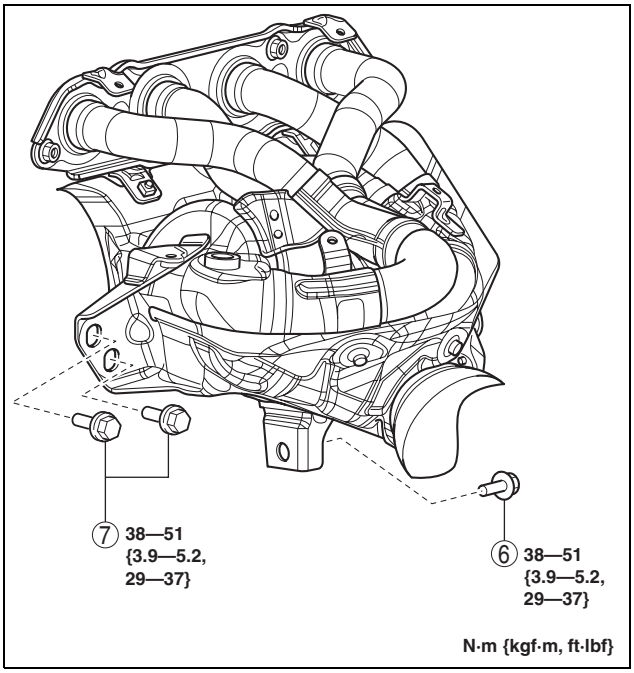

ac5wzw0000272

EXHAUST SYSTEM [SKYACTIV-G 2.0]

Exhaust manifold insulator installation note

1. Temporarily tighten the exhaust manifold insulator.
2. Tighten the exhaust manifold insulator in the order shown in the figure.

Exhaust manifold insulator (upper) tightening torque
8—10 N·m {82—101 kgf·cm, 71—88 in·lbf}

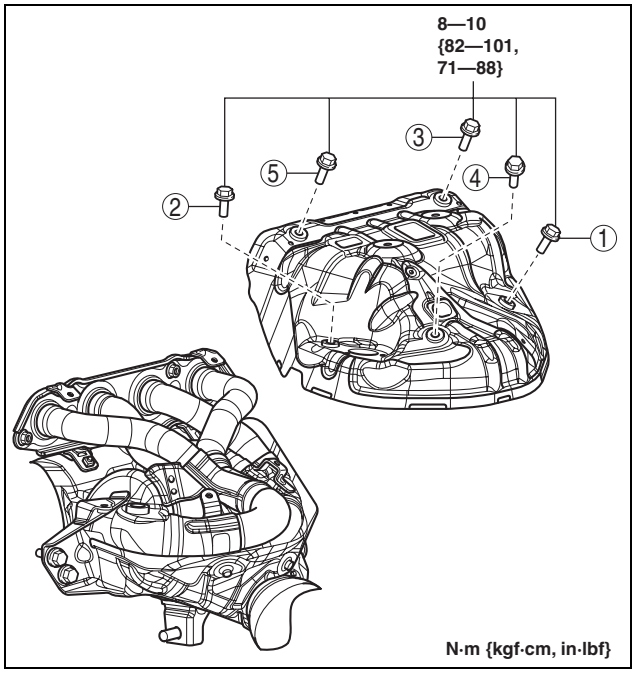

ac5wzw0000271

01-15B EXHAUST SYSTEM [SKYACTIV-D 2.2]

EXHAUST SYSTEM INSPECTION [SKYACTIV-D 2.2] 01-15B–1
EXHAUST SYSTEM REMOVAL/INSTALLATION [SKYACTIV-D 2.2] 01-15B–1
2WD 01-15B–1
4WD 01-15B–9

EXHAUST SYSTEM [SKYACTIV-D 2.2]

EXHAUST SYSTEM INSPECTION [SKYACTIV-D 2.2]

id0115z7800100

1. Start the engine and inspect each exhaust system component for exhaust gas leakage.
   - If there is leakage, repair or replace the appropriate component. (See 01-15B-1 EXHAUST SYSTEM REMOVAL/INSTALLATION [SKYACTIV-D 2.2].)

EXHAUST SYSTEM REMOVAL/INSTALLATION [SKYACTIV-D 2.2]

id0115z7800200

Warning
- **A hot engine and exhaust system can cause severe burns. Turn off the engine and wait until they are cool before removing the exhaust system.**

Caution
- **Perform exhaust gas temperature sensor removal/installation only when inspection or replacement is required, such as when DTCs for the sensor are displayed, because it may cause exhaust gas leakage. If the exhaust gas temperature sensor is removed/installed once, always verify that there is no exhaust gas leakage after reinstallation.**

Note
- When the DPF indicator light illuminates, refer to the adjustment procedure prior to part removal, and perform the DPF manual regeneration.
- When the DPF indicator light flashes, inspect according to the symptom troubleshooting “DPF lamp flashes” prior to part removal.
- If the catalytic converter is replaced, perform the DPF initialization procedure.

2WD
1. Disconnect the negative battery cable. (See 01-17B-9 NEGATIVE BATTERY CABLE DISCONNECTION/CONNECTION [SKYACTIV-D 2.2].)
2. Remove in the order shown in the figure.
3. Remove the exhaust system insulator. (See 01-15B-4 Exhaust System Insulator Removal/Installation.)
4. Install in the reverse order of removal.

EXHAUST SYSTEM [SKYACTIV-D 2.2]

Step 1

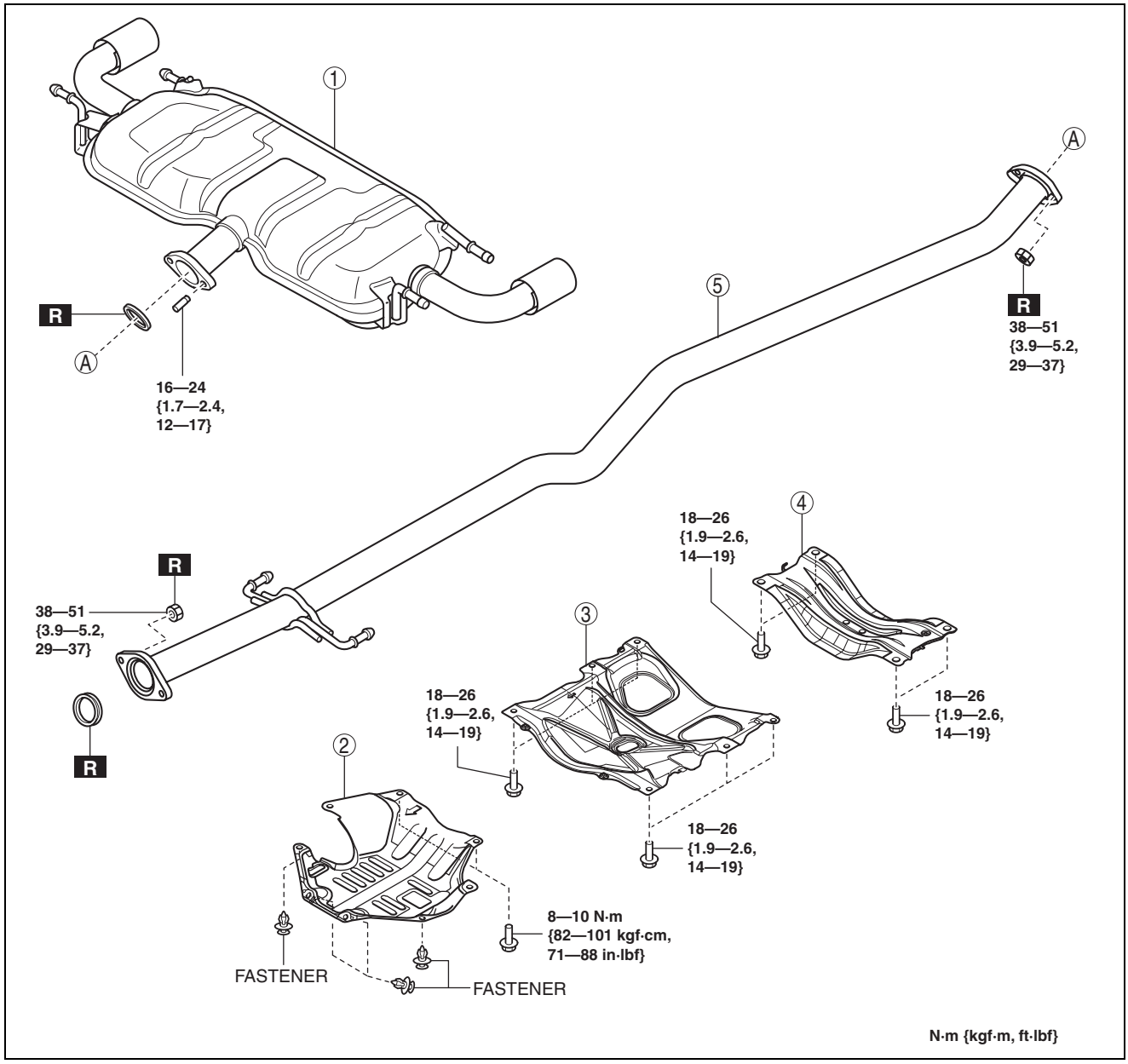

ac5wzw0000531

1	Main silencer
2	Plate
3	Brace bar (See 01-15B-5 Brace Bar Removal Note.)

4	Tunnel member
5	Middle pipe

EXHAUST SYSTEM [SKYACTIV-D 2.2]

Step 2

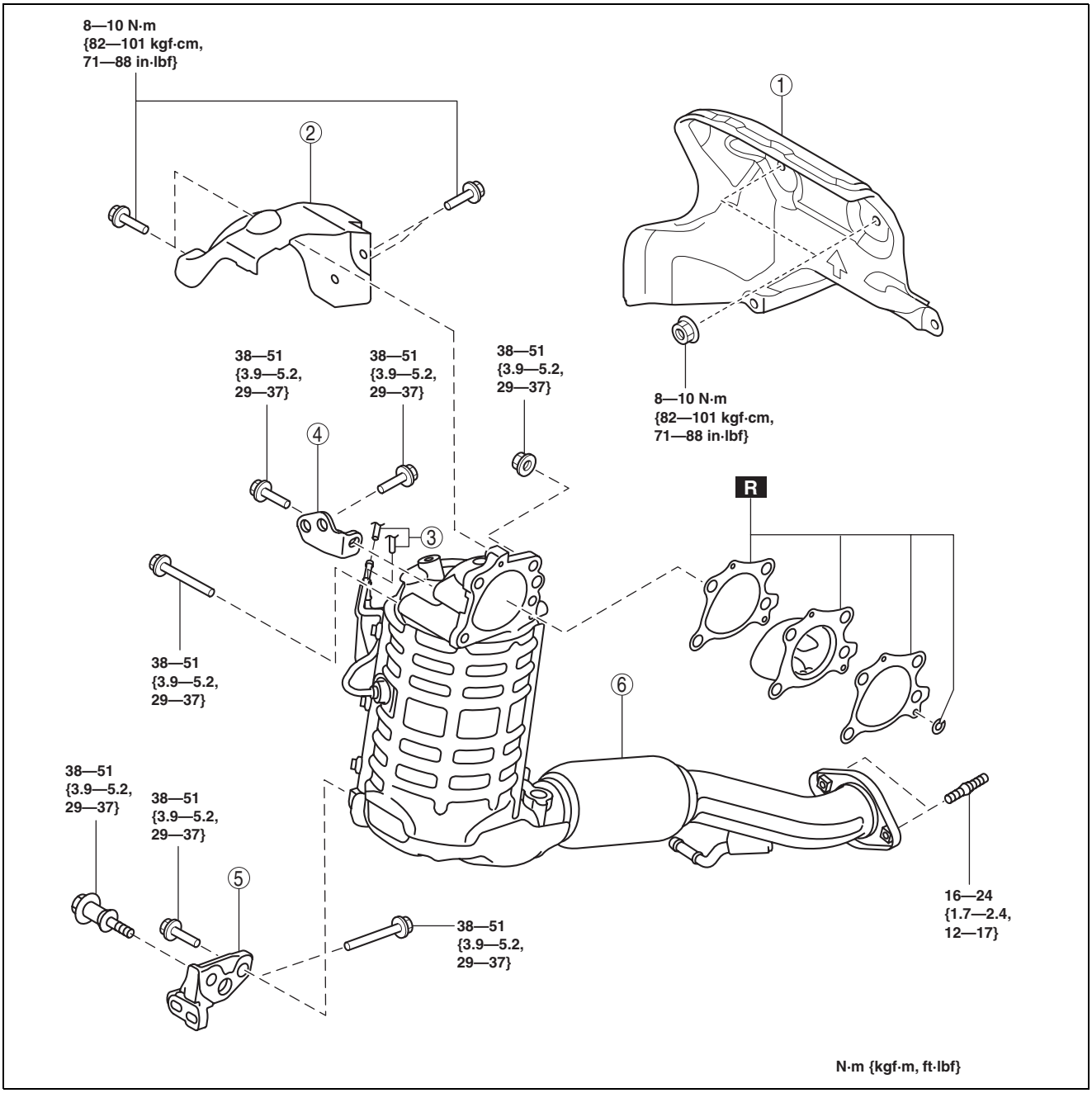

ac5wzw0000531

1	Insulator (See 01-15B-5 Insulator Removal Note.)
2	Catalytic converter insulator (See 01-15B-8 Catalytic Converter Insulator Installation Note.)
3	Exhaust hose
4	Catalytic converter upper bracket

5	Catalytic converter lower bracket (See 01-15B-5 Catalytic Converter Lower Bracket Removal Note.) (See 01-15B-6 Catalytic Converter Bracket Installation Note.)
6	Catalytic converter (See 01-15B-5 Catalytic Converter Removal Note.) (See 01-15B-5 Catalytic Converter Installation Note.)

EXHAUST SYSTEM [SKYACTIV-D 2.2]

Exhaust System Insulator Removal/Installation

1. Remove in the order shown in the figure.
2. Install in the reverse order of removal.

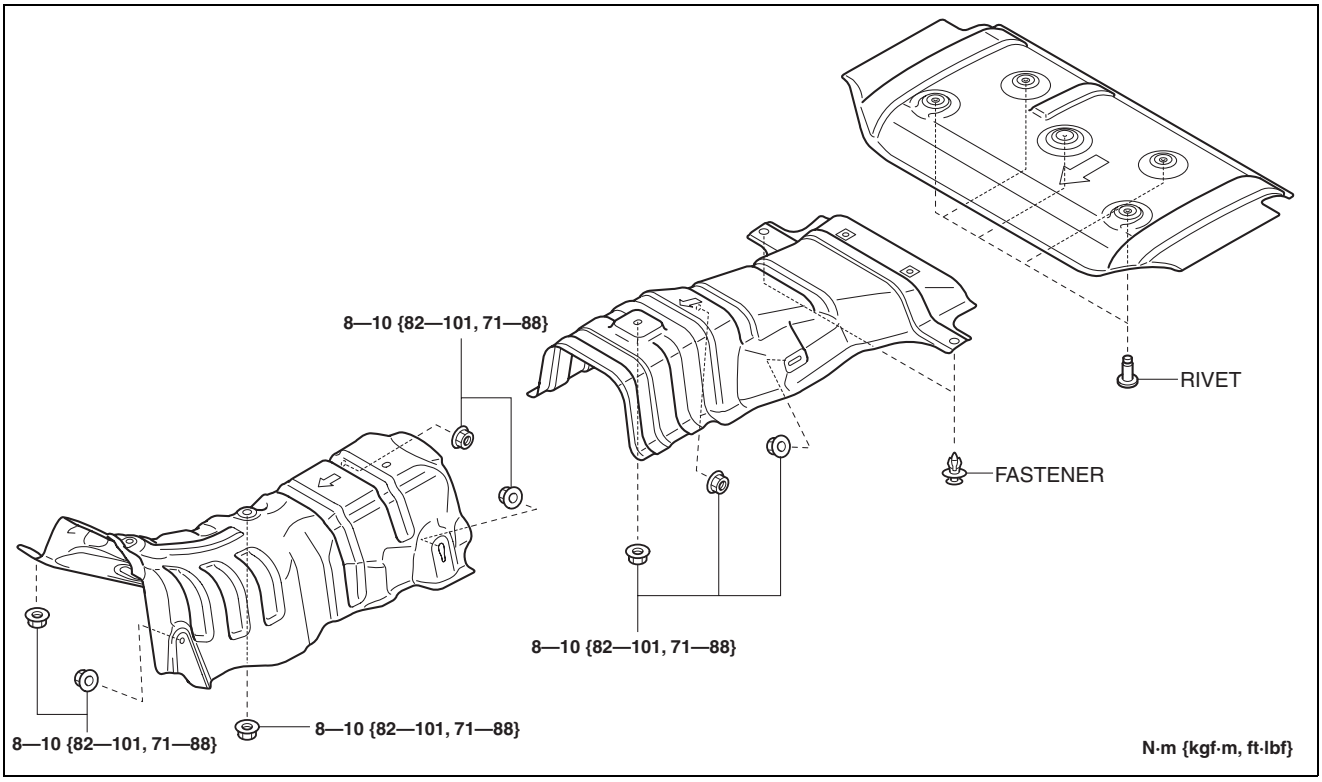

ac5uuw00000433

1	Insulator (rear) (See 01-15B-4 Insulator (Rear) Removal Note.)
2	Insulator (middle)
3	Insulator (front)

Insulator (Rear) Removal Note

Note

- If re-installed, use the same rivets.

1. Using a hammer and punch (diam. **2—2.8 mm {0.08—0.11 in}**), punch out the mandrel.

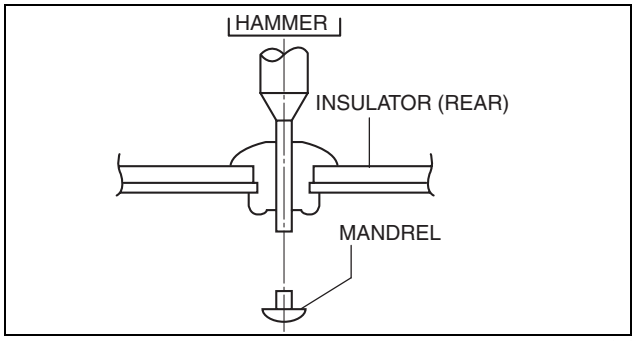

ac5uuw00000434

EXHAUST SYSTEM [SKYACTIV-D 2.2]

2. Pull out and remove the flange using a drill (diam. **5 mm** {**0.2 in**}).

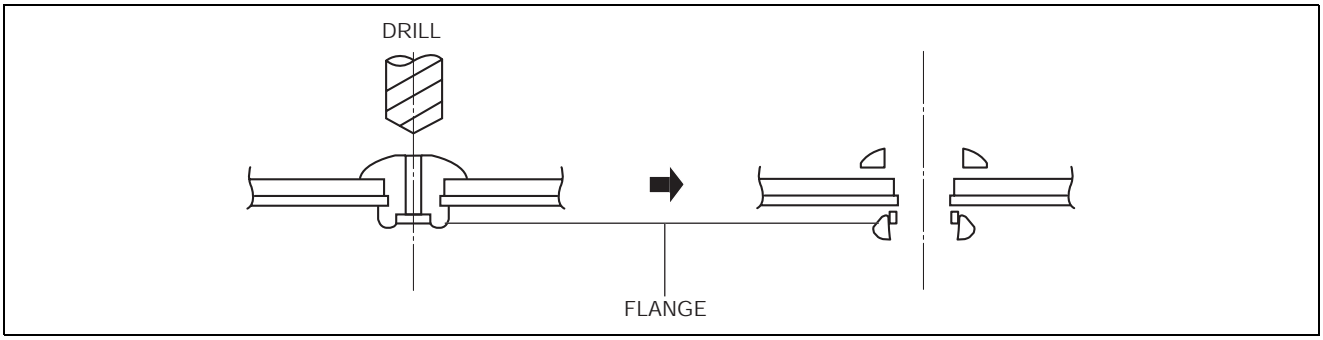

ar8uuw00001479

Brace Bar Removal Note
1. Remove the floor and cover. (See 09-16-44 FLOOR UNDER COVER REMOVAL/INSTALLATION.)
2. Remove the brace bar.

Insulator Removal Note
1. Remove the windshield wiper arm and blade. (See 09-19-3 WINDSHIELD WIPER ARM AND BLADE REMOVAL/INSTALLATION.)
2. Remove the cowl grille (See 09-16-3 COWL GRILLE REMOVAL/INSTALLATION.).
3. Remove the windshield wiper motor and link. (See 09-19-9 WINDSHIELD WIPER MOTOR AND LINK REMOVAL/INSTALLATION.)
4. Remove the cowl panel. (See 09-10-41 COWL PANEL REMOVAL/INSTALLATION.)
5. Remove the insulator.

Catalytic Converter Lower Bracket Removal Note
1. Remove the front crossmember. (See 02-13-15 FRONT CROSSMEMBER REMOVAL/INSTALLATION.)
2. Remove the catalytic converter lower bracket.

Catalytic Converter Removal Note
1. Disconnect the exhaust gas temperature sensor No.1 connector.
2. Disconnect the exhaust gas sensor No.2 connector.
3. Remove the exhaust gas sensor No.2 wiring harness installation nuts.
4. Disconnect the A/F sensor connector.
5. Remove the catalytic converter.

Catalytic Converter Installation Note
1. Temporarily tighten bolt and nuts shown in the figure.

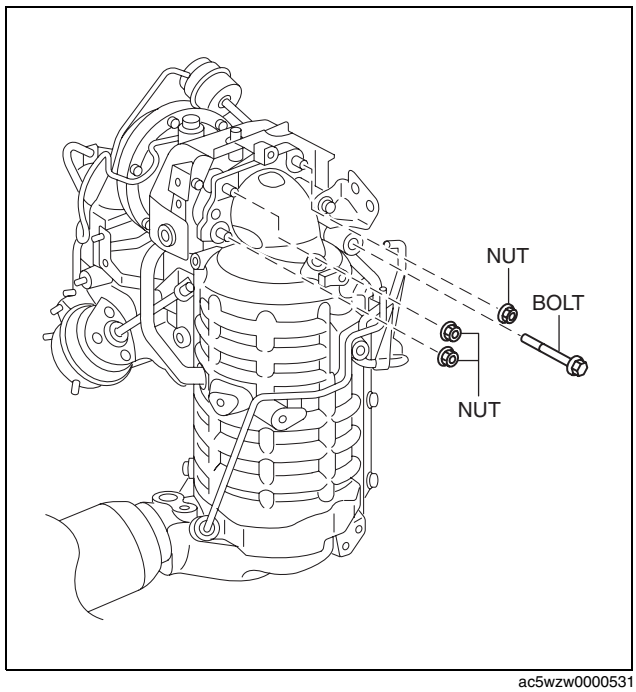

ac5wzw0000531

EXHAUST SYSTEM [SKYACTIV-D 2.2]

2. Tighten the bolt and nuts in the other shown in the figure.

   Catalytic converter installation bolt and nuts tightening torque
   38—51 N·m {3.9—5.2 kgf·m, 29—37 ft·lbf}

3. All the conclusions check after attachment whether it is the right torque.

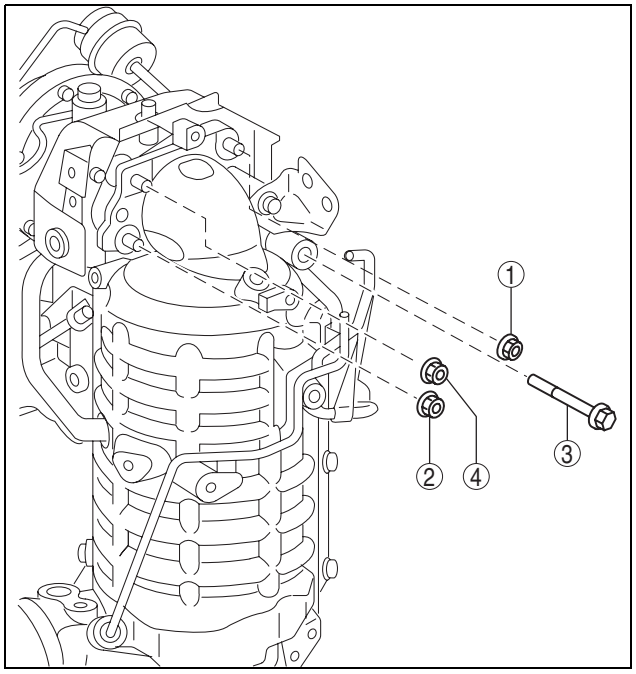

ac5wzw0000531

Catalytic Converter Bracket Installation Note

1. Temporarily tighten bolts 1 and bolt 2 shown in the figure.
2. Tighten bolts 1 shown in the figure.

   Catalytic converter upper bracket installation bolt (engine side) tightening torque
   38—51 N·m {3.9—5.2 kgf·m, 29—37 ft·lbf}

3. Tighten bolts 2 shown in the figure.

   Catalytic converter upper bracket installation bolt (catalytic converter side) tightening torque
   38—51 N·m {3.9—5.2 kgf·m, 29—37 ft·lbf}

4. All the conclusions check after attachment whether it is the right torque.

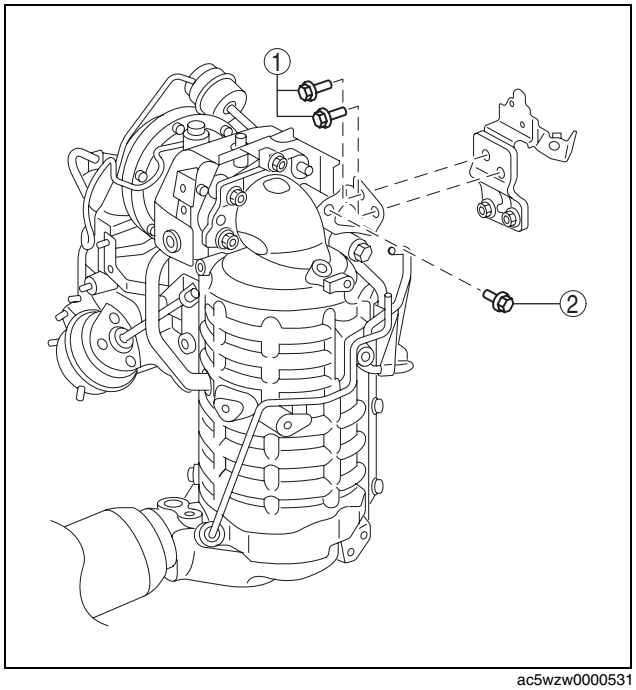

ac5wzw0000531

5. Temporarily tighten bolts 3 and bolt 4 shown in the figure.
6. Tighten the bolts in the order shown in the figure.

Catalytic converter lower bracket installation bolt tightening torque
38—51 N·m {3.9—5.2 kgf·m, 29—37 ft·lbf}

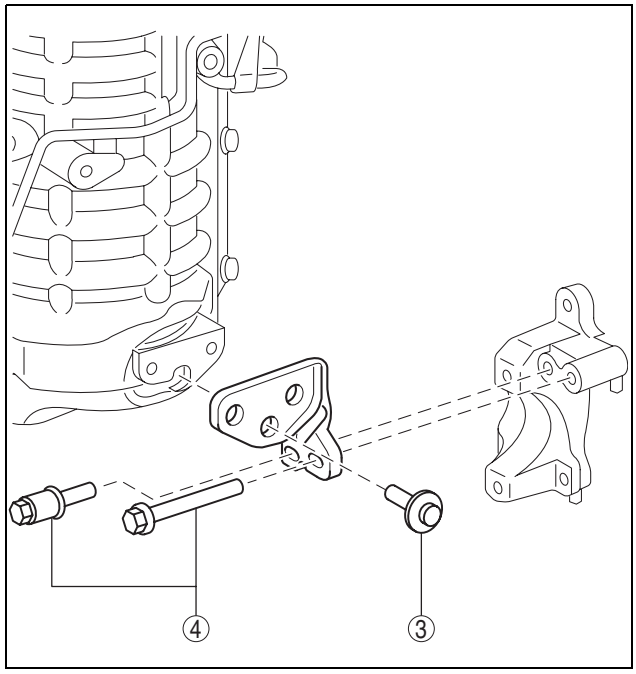

ac5wzw0000531

7. Temporarily tighten bolts 5 and bolt 6 shown in the figure.
8. Tighten the bolts in the order shown in the figure.

Catalytic converter lower bracket installation bolt tightening torque
38—51 N·m {3.9—5.2 kgf·m, 29—37 ft·lbf}

9. All the conclusions check after attachment whether it is the right torque.

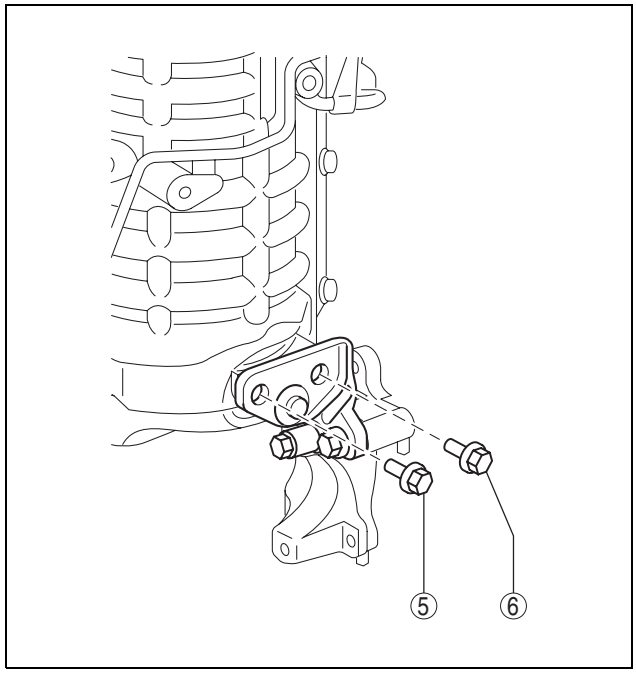

ac5wzw0000531

EXHAUST SYSTEM [SKYACTIV-D 2.2]

Catalytic Converter Insulator Installation Note

1. Temporarily tighten the catalytic converter insulator installation bolts.
2. Tighten the bolts in the order shown in the figure.

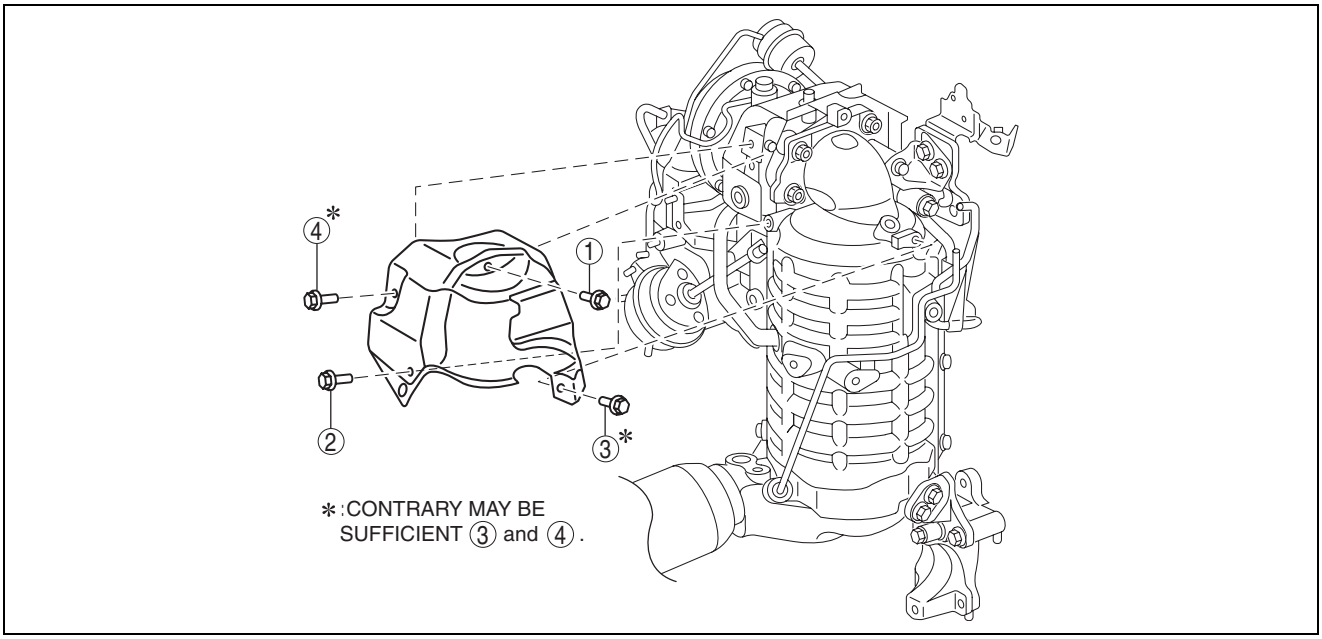

ac5wzw0000531

Catalytic converter insulator installation bolt tightening torque
8—10 N·m {82—101 kgf·cm, 71—88 in·lbf}

EXHAUST SYSTEM [SKYACTIV-D 2.2]

4WD

1. Disconnect the negative battery cable. (See 01-17B-9 NEGATIVE BATTERY CABLE DISCONNECTION/ CONNECTION [SKYACTIV-D 2.2].)
2. Remove in the order shown in the figure.
3. Remove the exhaust system insulator. (See 01-15B-11 Exhaust system insulator removal/installation.)
4. Install in the reverse order of removal.

Step 1

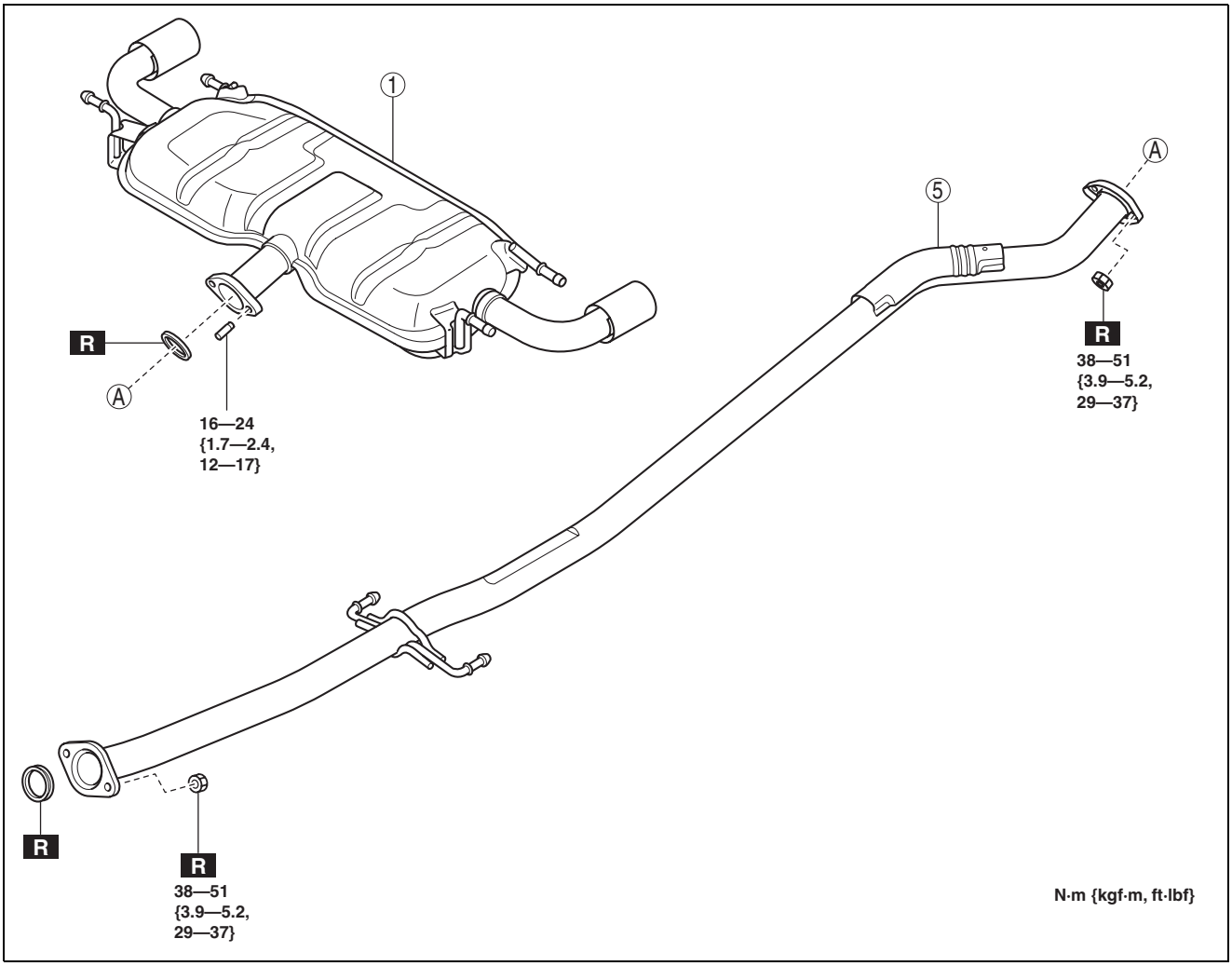

ac5wzw0000531

1	Main silencer	2	Middle pipe

EXHAUST SYSTEM [SKYACTIV-D 2.2]

Step 2

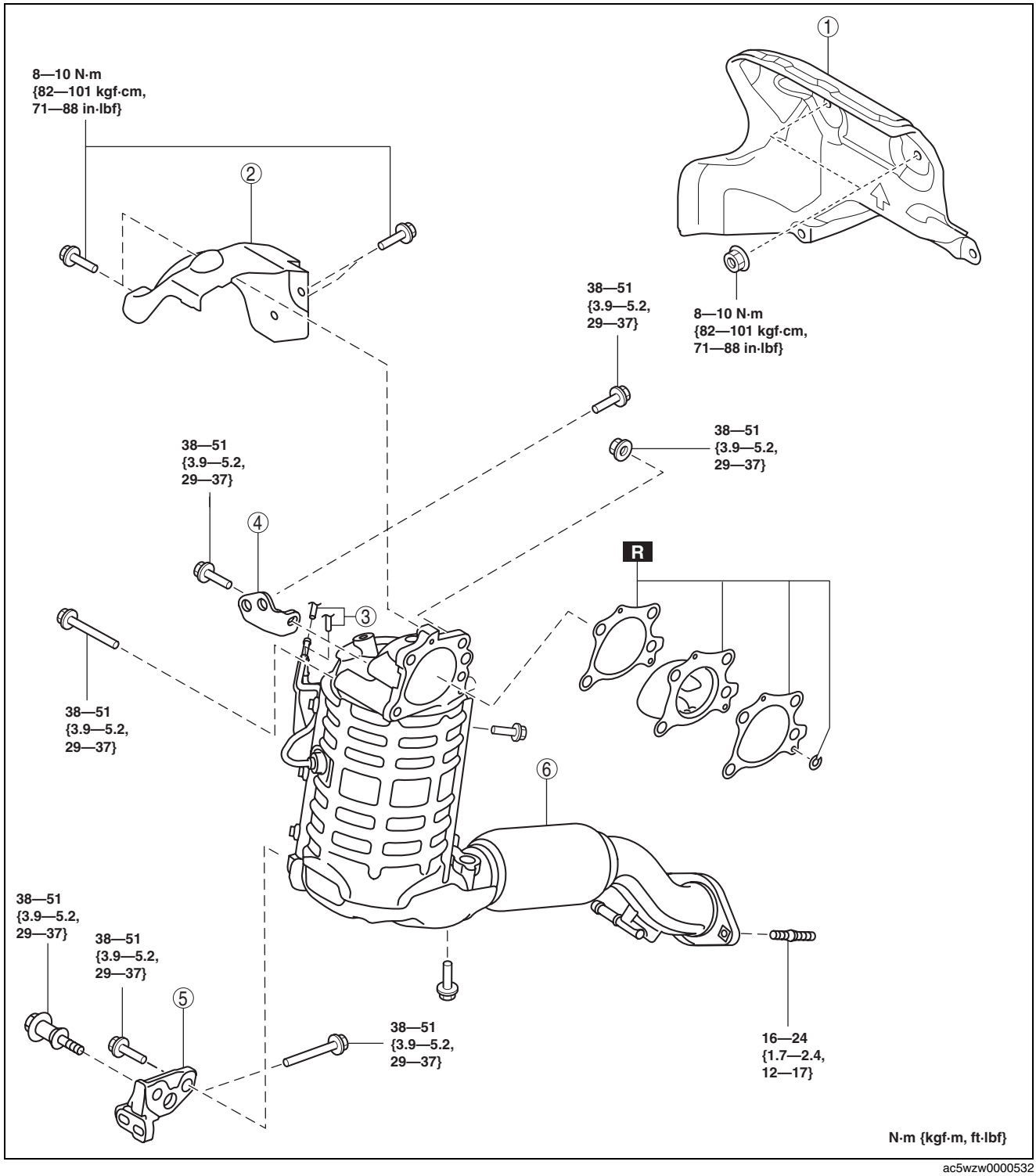

ac5wzw0000532

1	Insulator (See 01-15B-12 Insulator Removal Note.)
2	Catalytic converter insulator (See 01-15B-15 Catalytic Converter Insulator Installation Note.)
3	Exhaust hose
4	Catalytic converter upper bracket

5	Catalytic converter lower bracket (See 01-15B-12 Catalytic Converter Lower Bracket Removal Note.) (See 01-15B-13 Catalytic Converter Bracket Installation Note.)
6	Catalytic converter (See 01-15B-12 Catalytic Converter Removal Note.) (See 01-15B-12 Catalytic Converter Installation Note.)

EXHAUST SYSTEM [SKYACTIV-D 2.2]

Exhaust system insulator removal/installation

1. Remove the propeller shaft. (See 03-15-2 PROPELLER SHAFT REMOVAL/INSTALLATION.)
2. Remove in the order shown in the figure.
3. Install in the reverse order of removal.

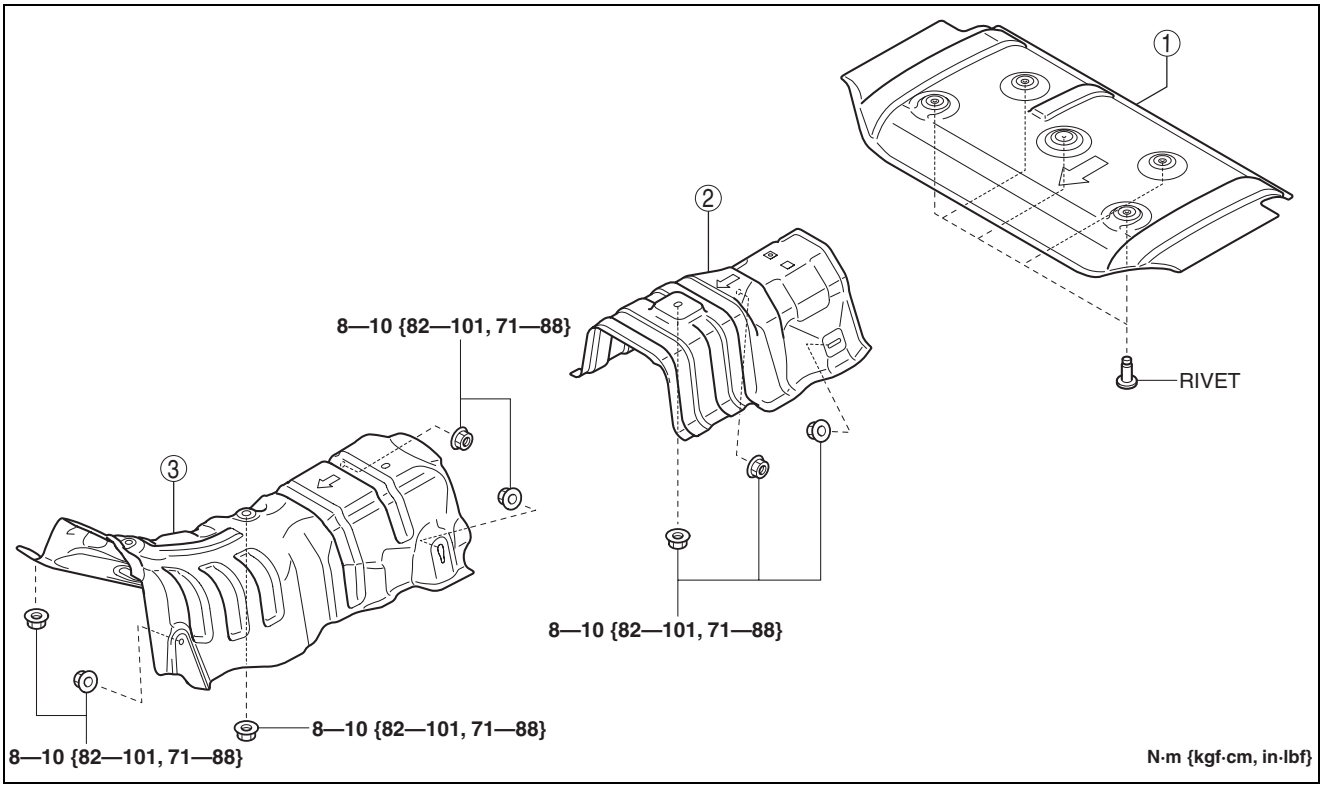

ac5wzw0000481

1	Insulator (rear) (See 01-15B-11 Insulator (Rear) Removal Note.)

2	Insulator (middle)
3	Insulator (front)

Insulator (Rear) Removal Note

Note

- If re-installed, use the same rivets.

1. Using a hammer and punch (diam. **2—2.8 mm {0.08—0.11}**), punch out the mandrel.

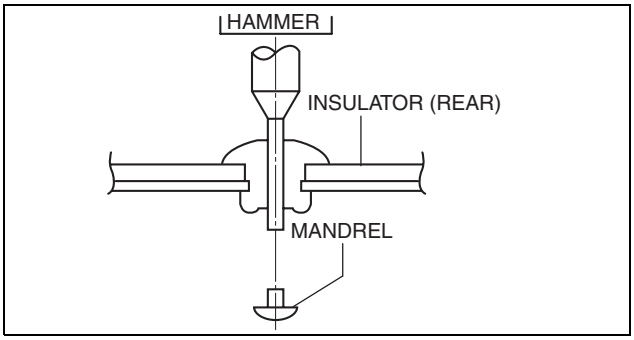

ac5wzw0000481

EXHAUST SYSTEM [SKYACTIV-D 2.2]

2. Pull out and remove the flange using a drill (diam. **5 mm {0.2 in}**)

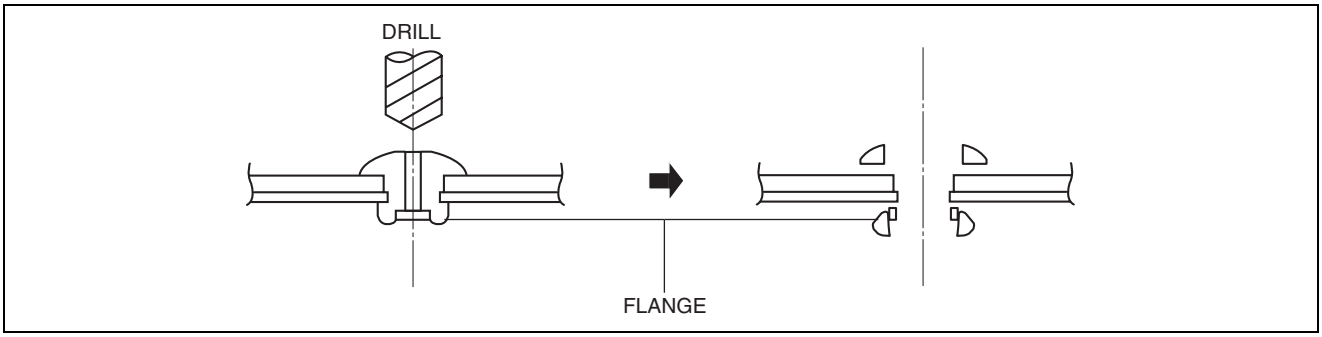

ac5wzw0000481

Insulator Removal Note

1. Remove the windshield wiper arm and blade. (See 09-19-3 WINDSHIELD WIPER ARM AND BLADE REMOVAL/INSTALLATION.)
2. Remove the cowl grille (See 09-16-3 COWL GRILLE REMOVAL/INSTALLATION.).
3. Remove the windshield wiper motor and link. (See 09-19-9 WINDSHIELD WIPER MOTOR AND LINK REMOVAL/INSTALLATION.)
4. Remove the cowl panel. (See 09-10-41 COWL PANEL REMOVAL/INSTALLATION.)
5. Remove the insulator.

Catalytic Converter Lower Bracket Removal Note

1. Remove the front crossmember. (See 02-13-15 FRONT CROSSMEMBER REMOVAL/INSTALLATION.)
2. Remove the catalytic converter lower bracket.

Catalytic Converter Removal Note

1. Disconnect the exhaust temperature sensor No.1 connector.
2. Disconnect the exhaust temperature sensor No.2 connector.
3. Remove the exhaust temperature sensor No.2 wiring harness bracket installation nuts.
4. Disconnect the A/F sensor connector.
5. Remove the catalytic converter.

Catalytic Converter Installation Note

1. Temporarily tighten bolt and nuts shown in the figure.

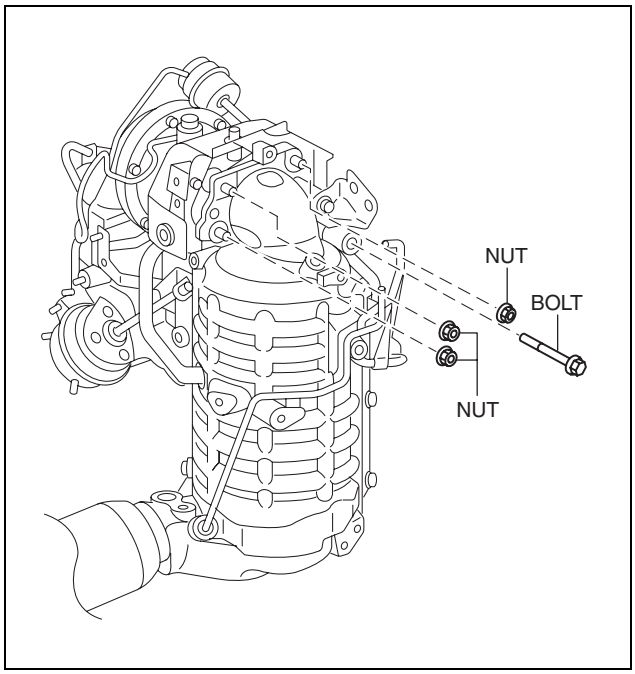

ac5wzw0000531

EXHAUST SYSTEM [SKYACTIV-D 2.2]

2. Tighten the bolt and nuts in the other shown in the figure.

   Catalytic converter installation bolt and nuts tightening torque
   38—51 N·m {3.9—5.2 kgf·m, 29—37 ft·lbf}

3. All the conclusions check after attachment whether it is the right torque.

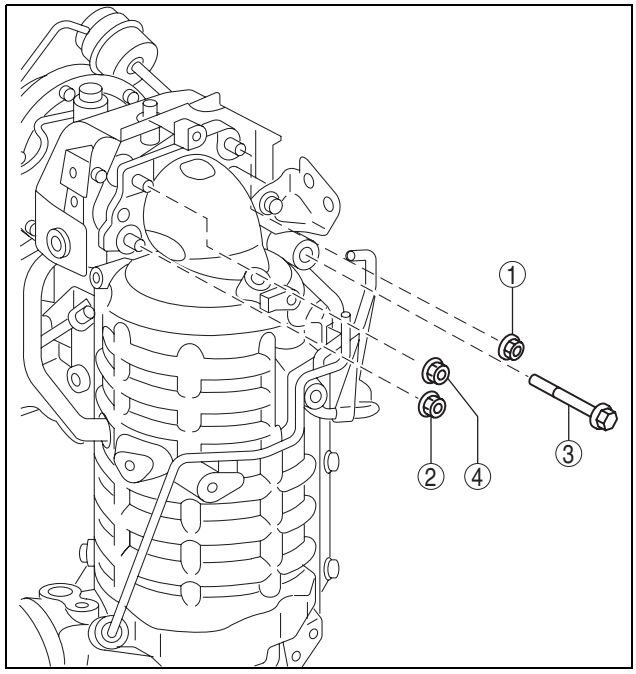

ac5wzw0000531

Catalytic Converter Bracket Installation Note

1. Temporarily tighten bolts 1 and bolt 2 shown in the figure.
2. Tighten bolts 1 shown in the figure.

   Catalytic converter upper bracket installation bolt (engine side) tightening torque
   38—51 N·m {3.9—5.2 kgf·m, 29—37 ft·lbf}

3. Tighten bolts 2 shown in the figure.

   Catalytic converter upper bracket installation bolt (catalytic converter side) tightening torque
   38—51 N·m {3.9—5.2 kgf·m, 29—37 ft·lbf}

4. All the conclusions check after attachment whether it is the right torque.

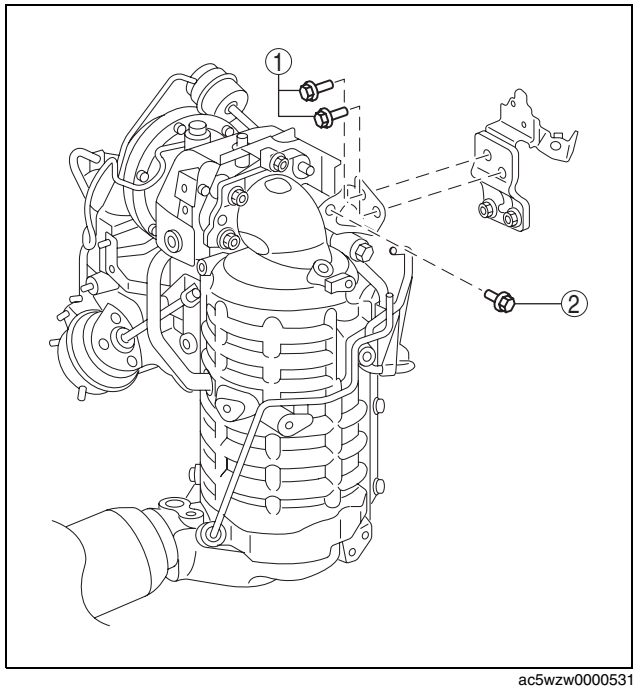

ac5wzw0000531

EXHAUST SYSTEM [SKYACTIV-D 2.2]

5. Temporarily tighten bolts 3 and bolt 4 shown in the figure.
6. Tighten the bolts in the order shown in the figure.

Catalytic converter lower bracket installation bolt tightening torque
38—51 N·m {3.9—5.2 kgf·m, 29—37 ft·lbf}

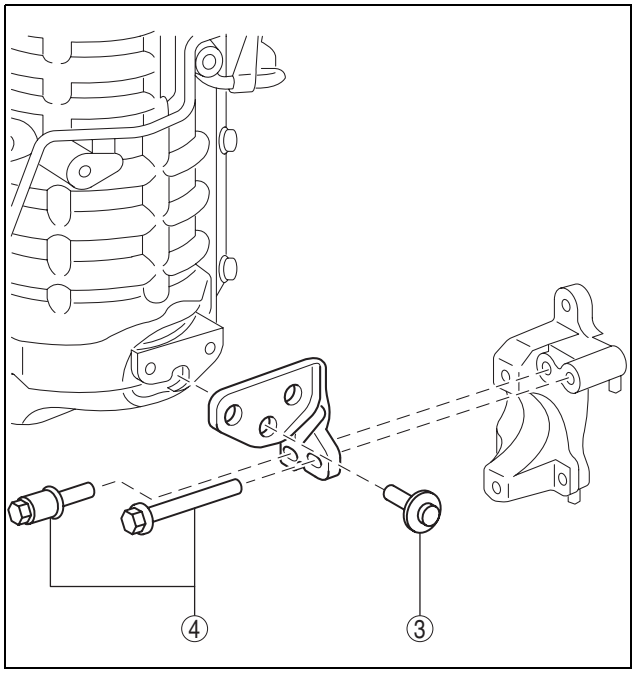

ac5wzw0000531

7. Temporarily tighten bolts 5 and bolt 6 shown in the figure.
8. Tighten the bolts in the order shown in the figure.

Catalytic converter lower bracket installation bolt tightening torque
38—51 N·m {3.9—5.2 kgf·m, 29—37 ft·lbf}

9. All the conclusions check after attachment whether it is the right torque.

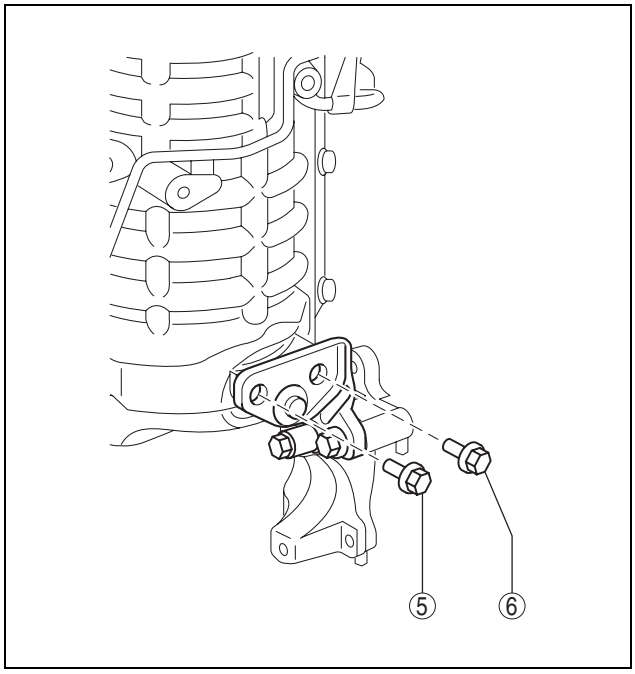

ac5wzw0000531

EXHAUST SYSTEM [SKYACTIV-D 2.2]

Catalytic Converter Insulator Installation Note

1. Temporarily tighten the catalytic converter insulator installation bolts.
2. Tighten the bolts in the order shown in the figure.

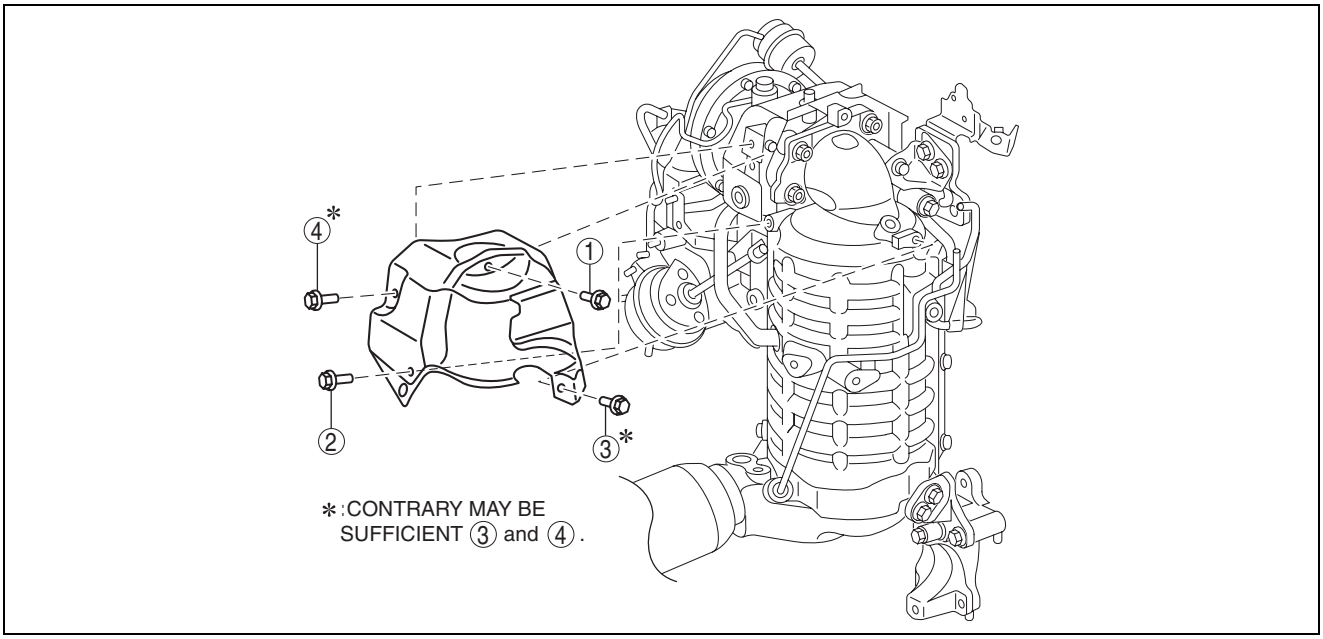

ac5wzw0000531

Catalytic converter insulator installation bolt tightening torque
8—10 N·m {82—101 kgf·cm, 71—88 in·lbf}

01-16A EMISSION SYSTEM [SKYACTIV-G 2.0]

EMISSION SYSTEM LOCATION INDEX [SKYACTIV-G 2.0] 01-16A–2
Engine Compartment Side 01-16A–2
Exhaust System Side 01-16A–3
Fuel Tank Side 01-16A–4
EMISSION SYSTEM DIAGRAM [SKYACTIV-G 2.0] 01-16A–6
CHARCOAL CANISTER REMOVAL/INSTALLATION [SKYACTIV-G 2.0] 01-16A–6
Charcoal Canister Removal Note 01-16A–7
Evaporative Hose Installation Note . . . 01-16A–7
CHARCOAL CANISTER INSPECTION [SKYACTIV-G 2.0] 01-16A–8
Leakage Inspection 01-16A–8
Airflow Inspection 01-16A–9
PURGE SOLENOID VALVE REMOVAL/INSTALLATION [SKYACTIV-G 2.0] 01-16A–10
Purge Solenoid Valve Installation Note 01-16A–11
Evaporative Hose No.3 Installation Note 01-16A–11
Evaporative Hose No.1 Installation Note 01-16A–12
PURGE SOLENOID VALVE INSPECTION [SKYACTIV-G 2.0] 01-16A–12
Airflow Inspection 01-16A–12
CATCH TANK INSPECTION [SKYACTIV-G 2.0] 01-16A–13
POSITIVE CRANKCASE VENTILATION (PCV) VALVE REMOVAL/INSTALLATION [SKYACTIV-G 2.0] 01-16A–13
Retainer Removal Note 01-16A–14
Retainer Installation Note 01-16A–14
POSITIVE CRANKCASE VENTILATION (PCV) VALVE INSPECTION [SKYACTIV-G 2.0] 01-16A–15
Airflow Inspection 01-16A–15
ROLLOVER VALVE REMOVAL/INSTALLATION [SKYACTIV-G 2.0] 01-16A–15
ROLLOVER VALVE INSPECTION [SKYACTIV-G 2.0] 01-16A–16
CHECK VALVE REMOVAL/INSTALLATION [SKYACTIV-G 2.0] 01-16A–16
CHECK VALVE INSPECTION [SKYACTIV-G 2.0] 01-16A–16
QUICK RELEASE CONNECTOR (EMISSION SYSTEM) REMOVAL/INSTALLATION [SKYACTIV-G 2.0] 01-16A–17
Quick Release Connector Position 01-16A–17
Removal 01-16A–17
Installation 01-16A–18

EMISSION SYSTEM [SKYACTIV-G 2.0]

EMISSION SYSTEM LOCATION INDEX [SKYACTIV-G 2.0]

id0116z8803700

Engine Compartment Side

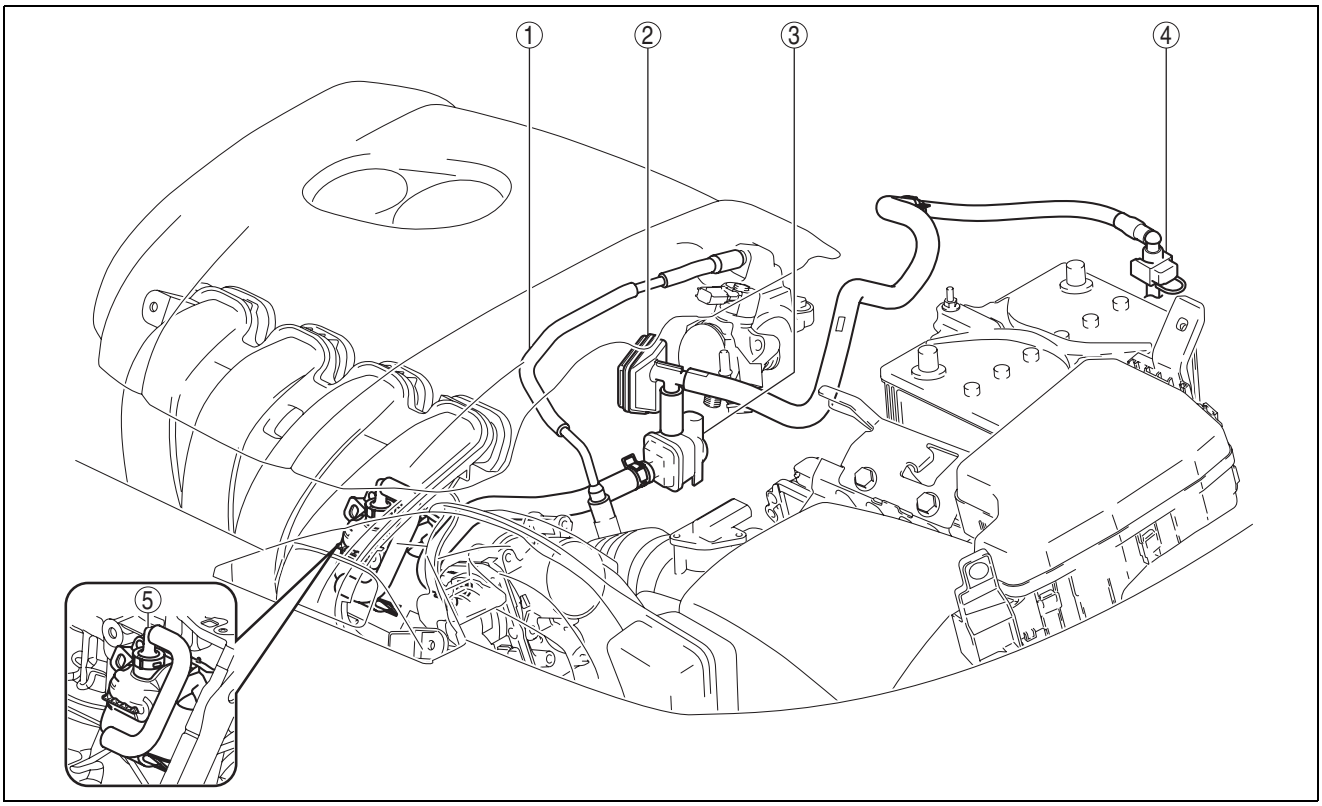

ac5wzw0000138

1	Ventilation hose (See 01-13A-6 INTAKE-AIR SYSTEM REMOVAL/INSTALLATION [SKYACTIV-G 2.0].)
2	Catch tank (See 01-16A-10 PURGE SOLENOID VALVE REMOVAL/INSTALLATION [SKYACTIV-G 2.0].) (See 01-16A-13 CATCH TANK INSPECTION [SKYACTIV-G 2.0].)
3	Purge solenoid valve (See 01-16A-10 PURGE SOLENOID VALVE REMOVAL/INSTALLATION [SKYACTIV-G 2.0].) (See 01-16A-12 PURGE SOLENOID VALVE INSPECTION [SKYACTIV-G 2.0].)

4	Quick release connector (See 01-16A-17 QUICK RELEASE CONNECTOR (EMISSION SYSTEM) REMOVAL/INSTALLATION [SKYACTIV-G 2.0].)
5	PCV valve (See 01-16A-13 POSITIVE CRANKCASE VENTILATION (PCV) VALVE REMOVAL/INSTALLATION [SKYACTIV-G 2.0].) (See 01-16A-15 POSITIVE CRANKCASE VENTILATION (PCV) VALVE INSPECTION [SKYACTIV-G 2.0].)

EMISSION SYSTEM [SKYACTIV-G 2.0]

Exhaust System Side
2WD

1	WU-TWC (See 01-15A-2 EXHAUST SYSTEM REMOVAL/ INSTALLATION [SKYACTIV-G 2.0].)
2	TWC (See 01-15A-2 EXHAUST SYSTEM REMOVAL/ INSTALLATION [SKYACTIV-G 2.0].)

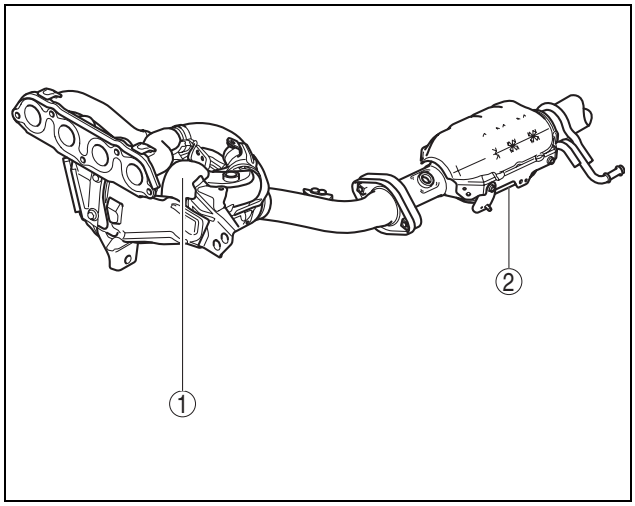

ac5uuw00000456

4WD

1	WU-TWC (See 01-15A-2 EXHAUST SYSTEM REMOVAL/ INSTALLATION [SKYACTIV-G 2.0].)
2	TWC (See 01-15A-2 EXHAUST SYSTEM REMOVAL/ INSTALLATION [SKYACTIV-G 2.0].)

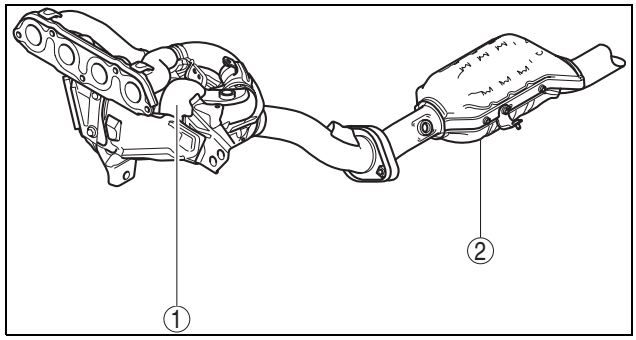

ac5uuw00000457

EMISSION SYSTEM [SKYACTIV-G 2.0]

Fuel Tank Side
2WD

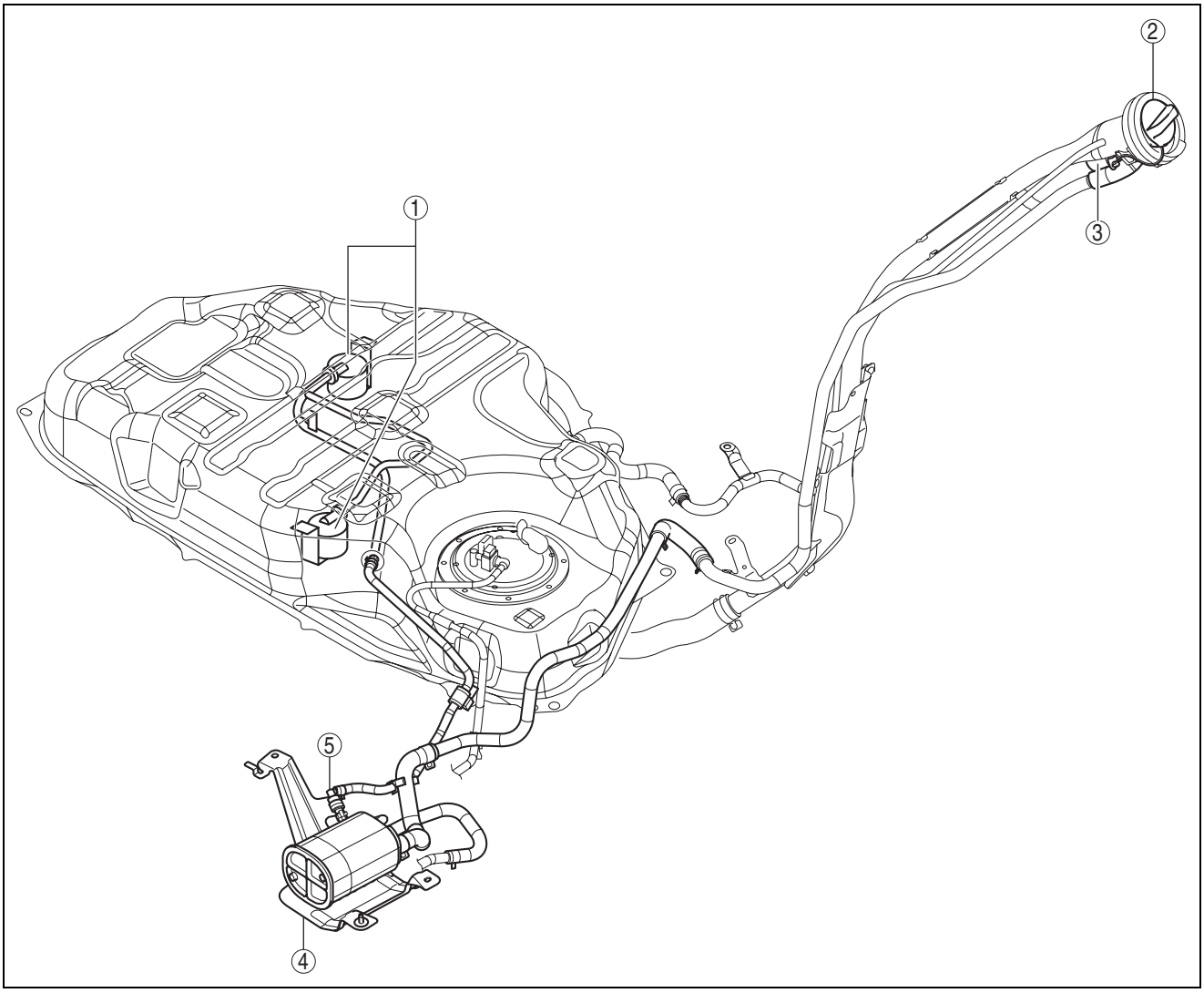

ac5wzw0000270

1	Rollover valve (See 01-16A-15 ROLLOVER VALVE REMOVAL/ INSTALLATION [SKYACTIV-G 2.0].) (See 01-16A-16 ROLLOVER VALVE INSPECTION [SKYACTIV-G 2.0].)
2	Fuel-filler cap (See 01-14A-33 FUEL-FILLER PIPE REMOVAL/ INSTALLATION [SKYACTIV-G 2.0].)
3	Plug (See 01-14A-33 FUEL-FILLER PIPE REMOVAL/ INSTALLATION [SKYACTIV-G 2.0].)

4	Charcoal canister (See 01-16A-6 CHARCOAL CANISTER REMOVAL/ INSTALLATION [SKYACTIV-G 2.0].) (See 01-16A-8 CHARCOAL CANISTER INSPECTION [SKYACTIV-G 2.0].)
5	Check valve (See 01-16A-16 CHECK VALVE REMOVAL/ INSTALLATION [SKYACTIV-G 2.0].) (See 01-16A-16 CHECK VALVE INSPECTION [SKYACTIV-G 2.0].)

EMISSION SYSTEM [SKYACTIV-G 2.0]

4WD

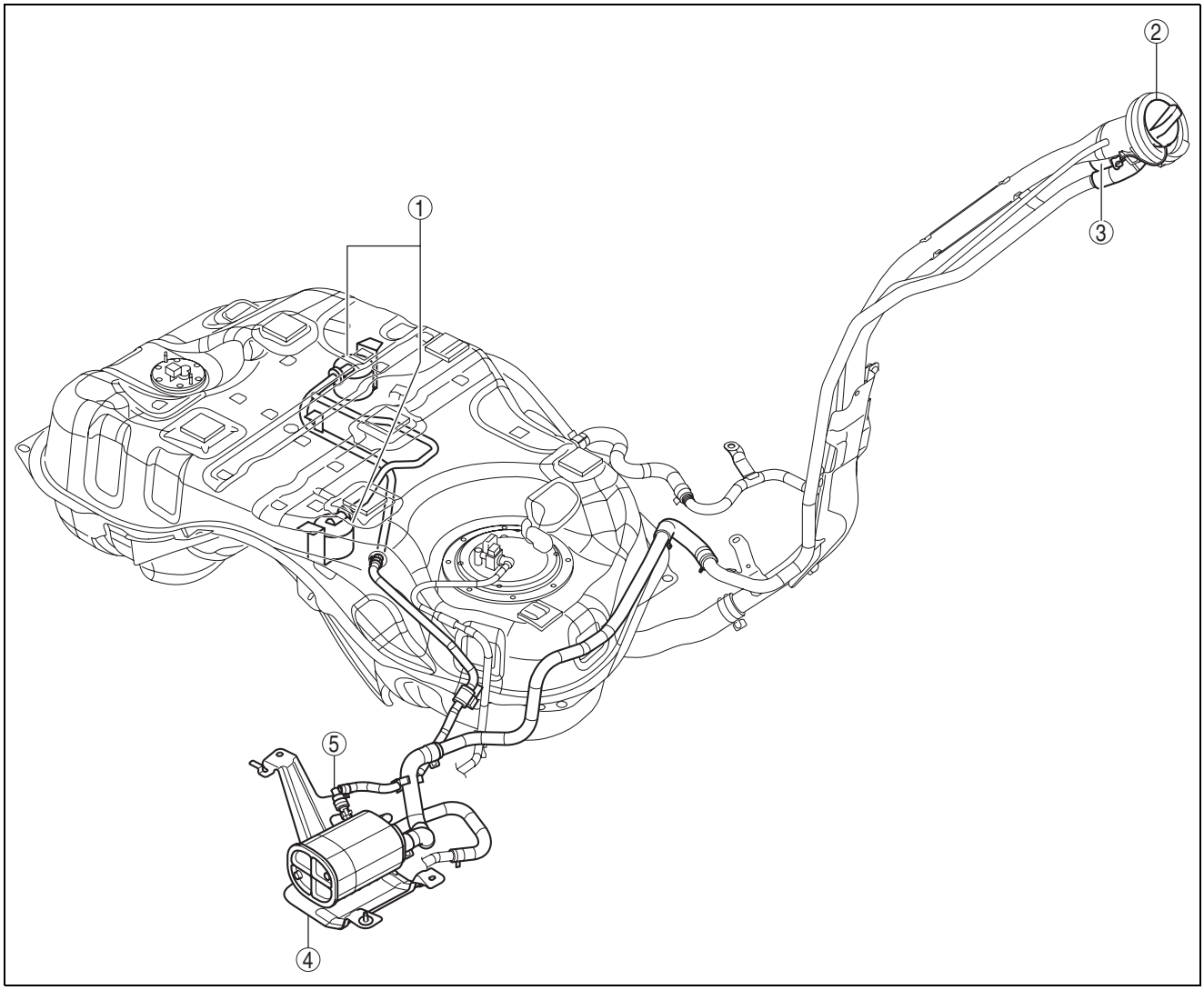

ac5wzw0000270

1	Rollover valve (See 01-16A-15 ROLLOVER VALVE REMOVAL/ INSTALLATION [SKYACTIV-G 2.0].) (See 01-16A-16 ROLLOVER VALVE INSPECTION [SKYACTIV-G 2.0].)
2	Fuel-filler cap (See 01-14A-33 FUEL-FILLER PIPE REMOVAL/ INSTALLATION [SKYACTIV-G 2.0].)
3	Plug (See 01-14A-33 FUEL-FILLER PIPE REMOVAL/ INSTALLATION [SKYACTIV-G 2.0].)

4	Charcoal canister (See 01-16A-6 CHARCOAL CANISTER REMOVAL/ INSTALLATION [SKYACTIV-G 2.0].) (See 01-16A-8 CHARCOAL CANISTER INSPECTION [SKYACTIV-G 2.0].)
5	Check valve (See 01-16A-16 CHECK VALVE REMOVAL/ INSTALLATION [SKYACTIV-G 2.0].) (See 01-16A-16 CHECK VALVE INSPECTION [SKYACTIV-G 2.0].)

EMISSION SYSTEM [SKYACTIV-G 2.0]

EMISSION SYSTEM DIAGRAM [SKYACTIV-G 2.0]

id0116z8803600

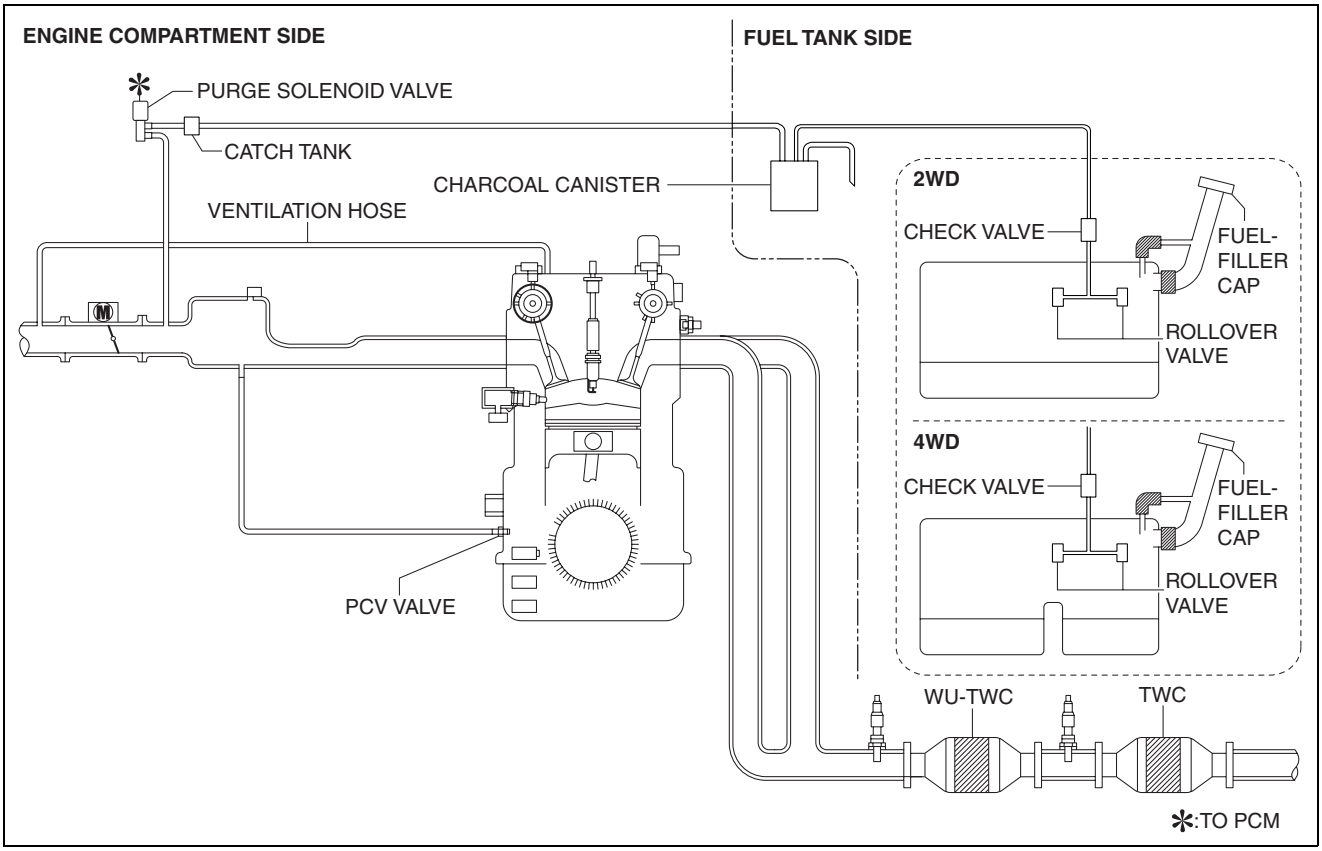

ac5wzw0000138

CHARCOAL CANISTER REMOVAL/INSTALLATION [SKYACTIV-G 2.0]

id0116z8096400

1. Remove the floor under cover. (See 09-16-44 FLOOR UNDER COVER REMOVAL/INSTALLATION.)
2. Remove in the order indicated in the table.

1	Evaporative hose (See 01-16A-7 Evaporative Hose Installation Note.)
2	Charcoal canister (See 01-16A-7 Charcoal Canister Removal Note.)

3. Install in the reverse order of removal.

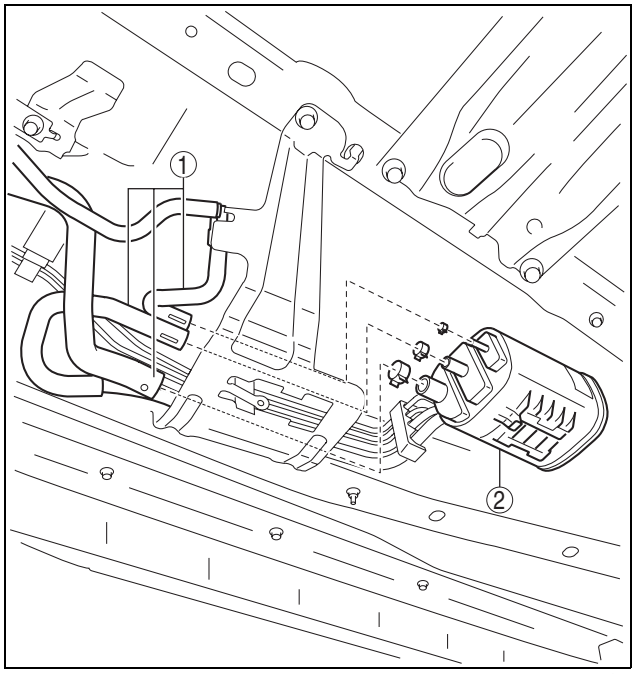

ac5wzw0000137

EMISSION SYSTEM [SKYACTIV-G 2.0]

Charcoal Canister Removal Note

1. Release the lock as shown in the figure.
2. Remove the charcoal canister.

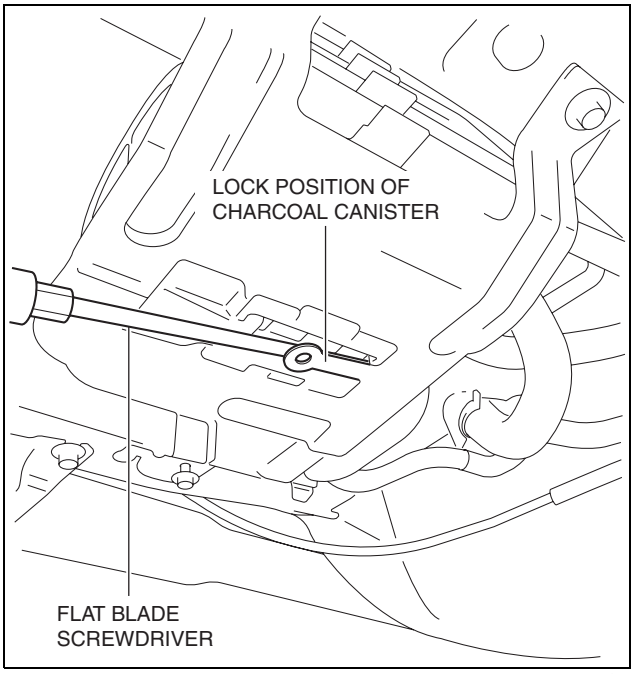

ac5wzw0000137

Evaporative Hose Installation Note

1. Connect the evaporative hose as shown in the figure.

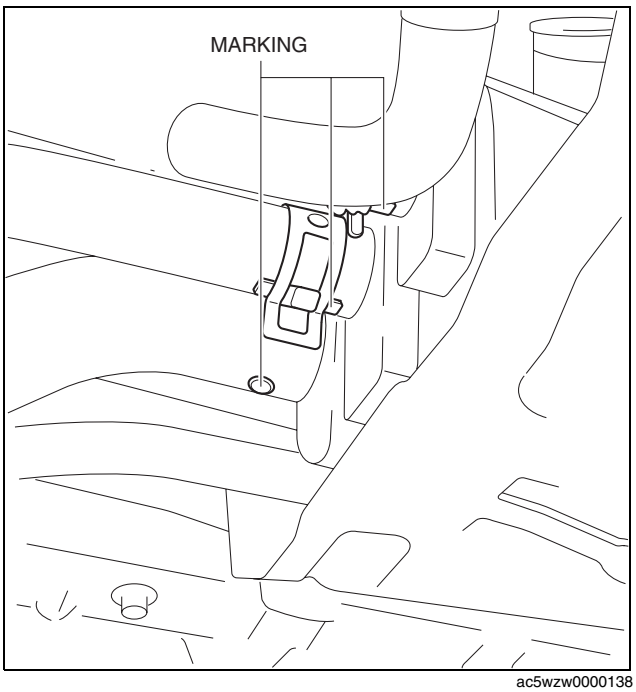

ac5wzw0000138

EMISSION SYSTEM [SKYACTIV-G 2.0]

CHARCOAL CANISTER INSPECTION [SKYACTIV-G 2.0]

id0116z8800500

Leakage Inspection

1. Perform the following procedures:
   - Assemble the hose used for inspection to port A.
   - Cover ports B and C with the caps.

Caution

- **Do not apply a pressure 20 kPa {150 mmHg, 5.91 inHg} or more to the charcoal canister for 1 min. or more. Doing so will damage the charcoal canister.**

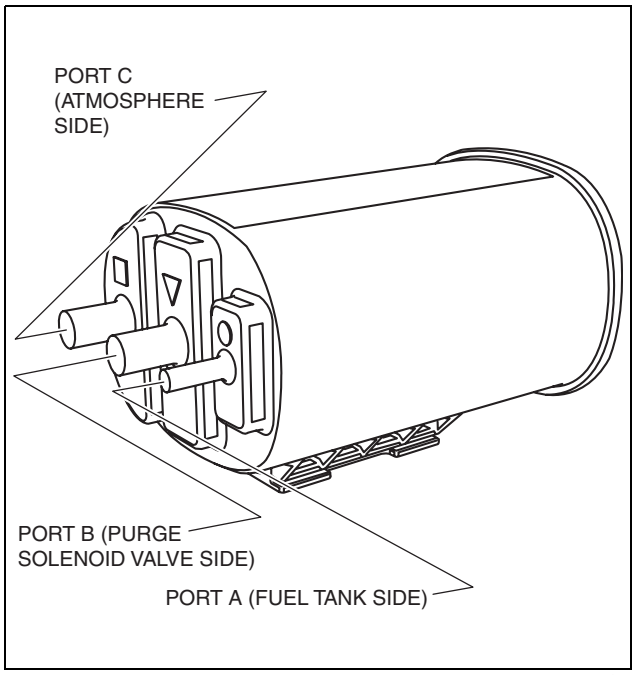

ac5wzw0000139

2. Apply pressure (**19.6 kPa {147 mmHg, 5.79 inHg}**) through the hose, and verify that air does not leak from the charcoal canister.
   - If there is airflow, replace the charcoal canister. (See 01-16A-6 CHARCOAL CANISTER REMOVAL/INSTALLATION [SKYACTIV-G 2.0].)
   - If there is no airflow, perform the following “Airflow Inspection”. (See 01-16A-9 Airflow Inspection.)

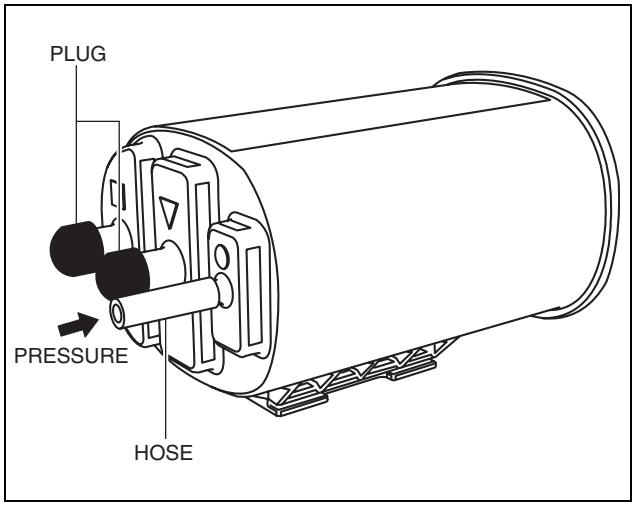

ac5wzw0000139

EMISSION SYSTEM [SKYACTIV-G 2.0]

Airflow Inspection

1. Perform the following procedure to verify the charcoal canister airflow.

Between port A and port C

1. Plug the port B.
2. Apply a pressure of **0.98 kPa {7.4 mmHg, 0.29 inHg}** to port A.
3. Verify that there is airflow from port C.
   - If there is no airflow, replace the charcoal canister. (See 01-16A-6 CHARCOAL CANISTER REMOVAL/INSTALLATION [SKYACTIV-G 2.0].)

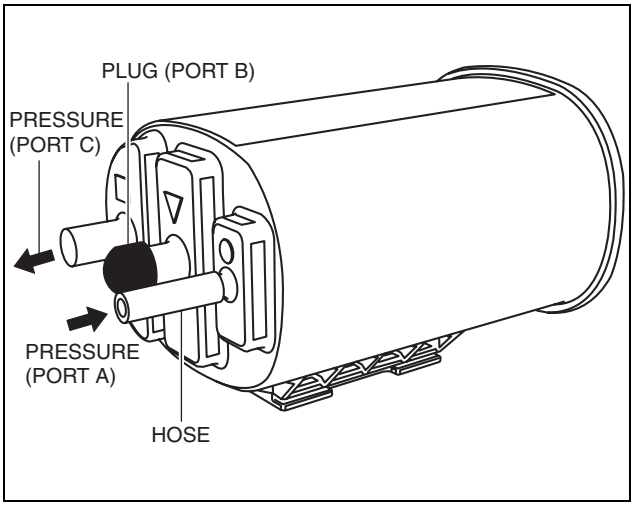

ac5wzw0000140

Between port B and port C

1. Plug the port A.
2. Apply a pressure of **0.98 kPa {7.4 mmHg, 0.29 inHg}** to port C.
3. Verify that there is airflow from port B.
   - If there is no airflow, replace the charcoal canister. (See 01-16A-6 CHARCOAL CANISTER REMOVAL/INSTALLATION [SKYACTIV-G 2.0].)

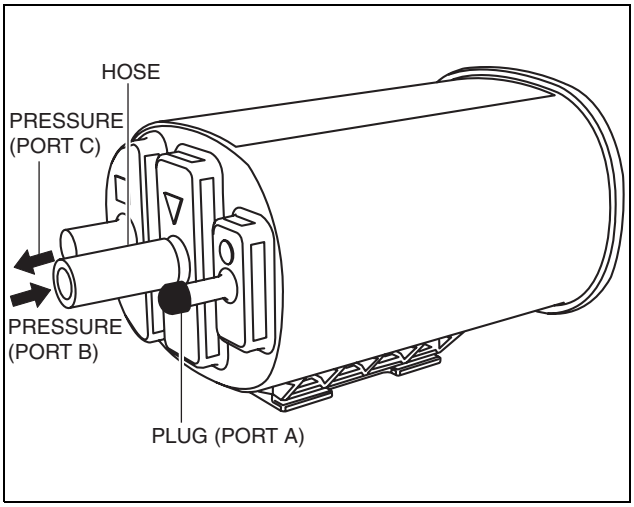

ac5wzw0000140

EMISSION SYSTEM [SKYACTIV-G 2.0]

PURGE SOLENOID VALVE REMOVAL/INSTALLATION [SKYACTIV-G 2.0]

id0116z8804300

1. Disconnect the negative battery cable. (See 01-17A-11 NEGATIVE BATTERY CABLE DISCONNECTION/CONNECTION [SKYACTIV-G 2.0].) (See 01-17A-13 NEGATIVE BATTERY CABLE DISCONNECTION/CONNECTION [SKYACTIV-G 2.0 (WITHOUT i-stop)].)
2. Remove the plug hole plate. (See 01-10A-6 PLUG HOLE PLATE REMOVAL/INSTALLATION [SKYACTIV-G 2.0].)
3. Remove the air cleaner and air hose as a single unit. (See 01-13A-6 INTAKE-AIR SYSTEM REMOVAL/INSTALLATION [SKYACTIV-G 2.0].)
4. Disconnect the high pressure fuel pump connector.
5. Disconnect the harness clip as shown in the figure.

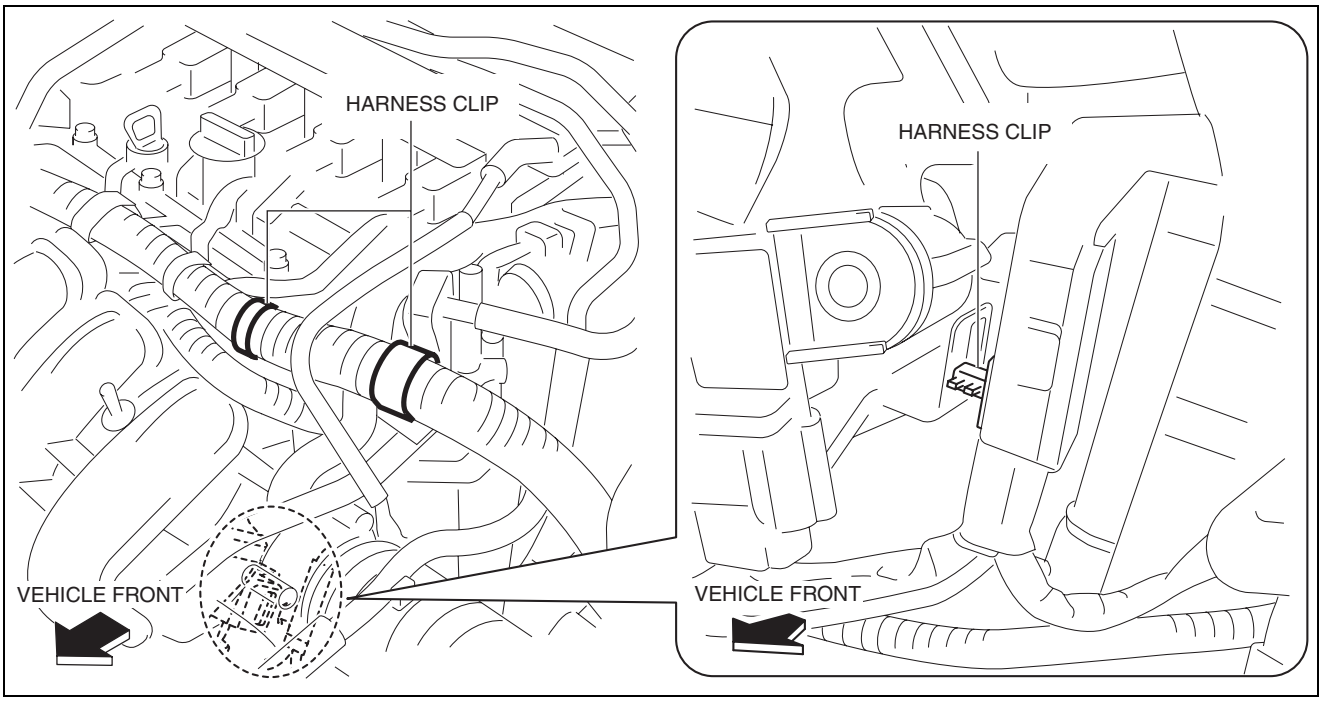

am3uuw0000859

6. Remove in the order indicated in the table.

1	Evaporative hose No.1 (See 01-16A-12 Evaporative Hose No.1 Installation Note.)
2	Catch tank
3	Evaporative hose No.2
4	Purge solenoid valve connector
5	Evaporative hose No.3 (See 01-16A-11 Evaporative Hose No.3 Installation Note.)
6	Purge solenoid valve bracket installation bolt
7	Purge solenoid valve (See 01-16A-11 Purge Solenoid Valve Installation Note.)

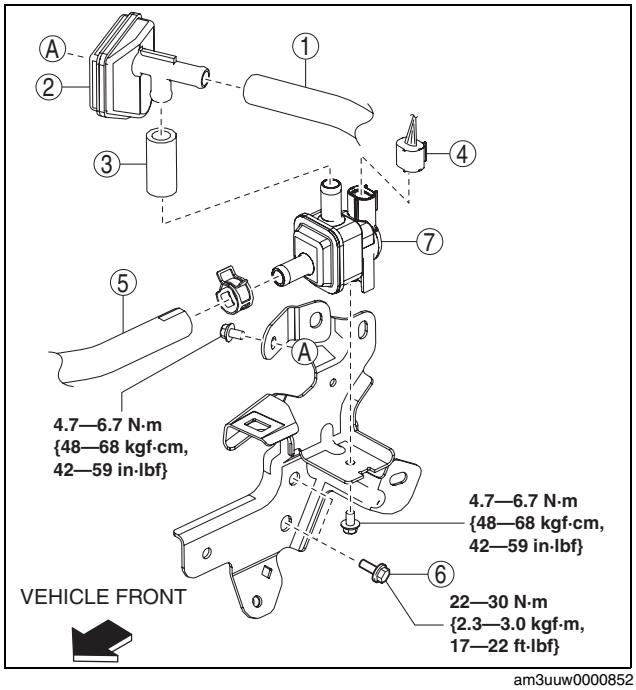

am3uuw0000852

7. Install in the reverse order of removal.

EMISSION SYSTEM [SKYACTIV-G 2.0]

Purge Solenoid Valve Installation Note

1. Temporarily install the purge solenoid valve to the bracket.
2. Lift up and tighten the purge solenoid valve as shown in the figure.

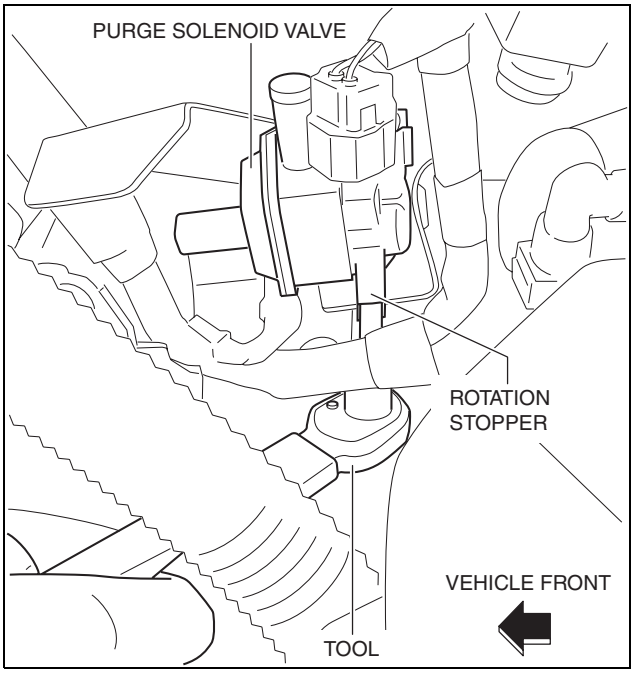

am3uuw0000859

Evaporative Hose No.3 Installation Note

1. Install the evaporative hose No.3 as shown in the figure.

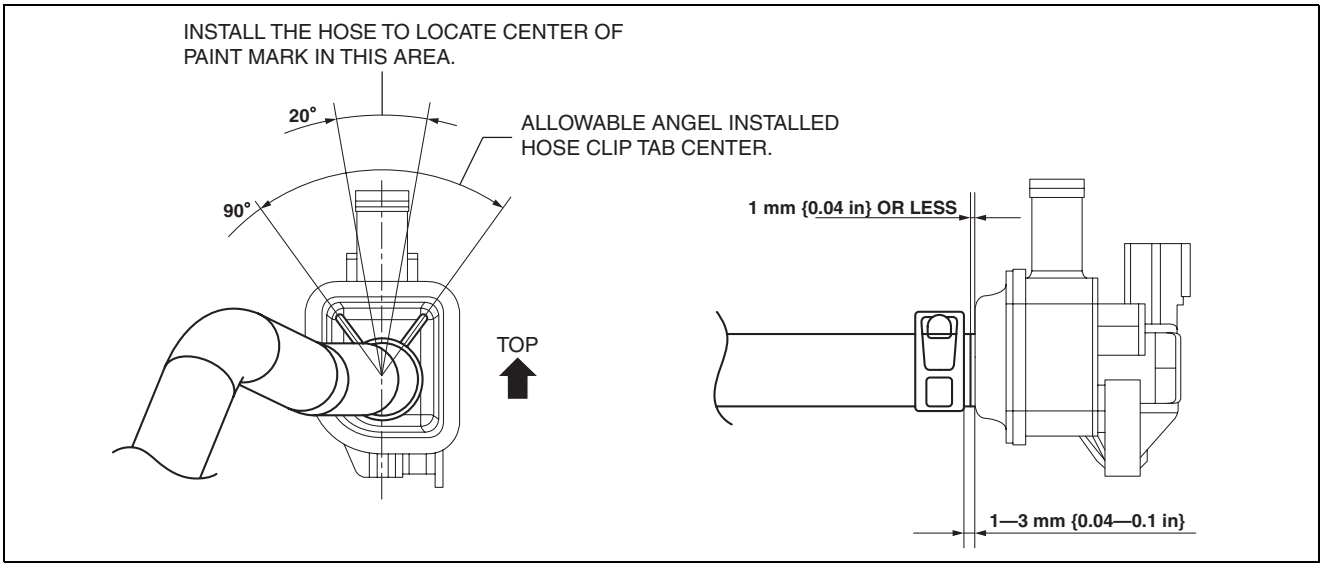

am3uuw0000852

EMISSION SYSTEM [SKYACTIV-G 2.0]

Evaporative Hose No.1 Installation Note

1. Install the evaporative hose No.1 as shown in the figure.

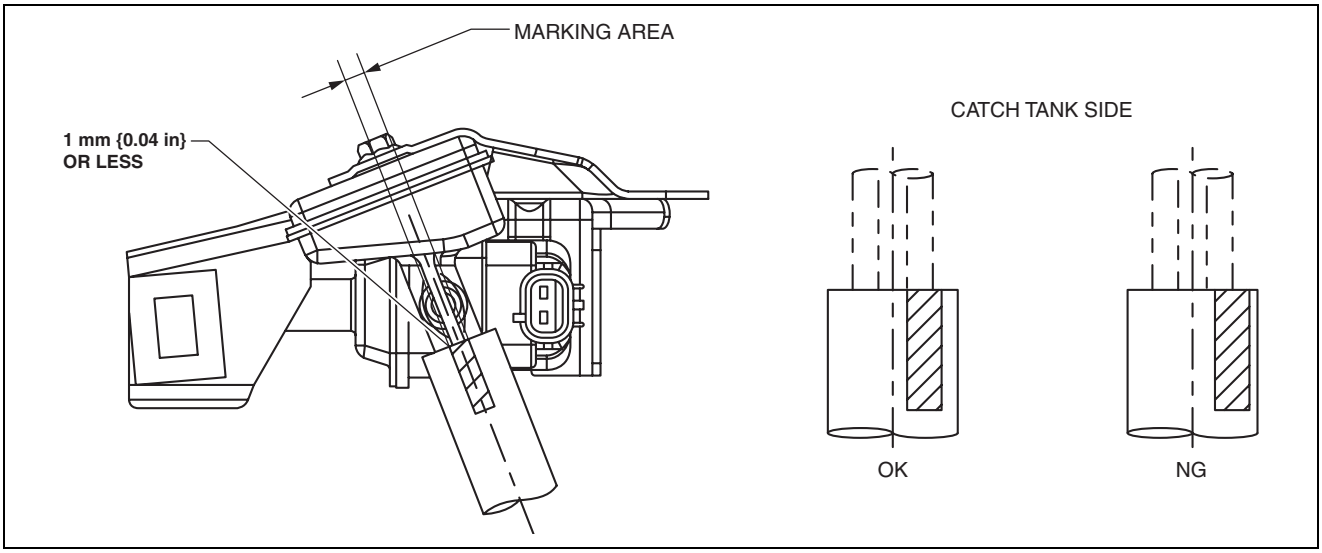

ac5wzw0000138

PURGE SOLENOID VALVE INSPECTION [SKYACTIV-G 2.0]

id0116z8800900

Airflow Inspection

1. Disconnect the negative battery cable. (See 01-17A-11 NEGATIVE BATTERY CABLE DISCONNECTION/CONNECTION [SKYACTIV-G 2.0].) (See 01-17A-13 NEGATIVE BATTERY CABLE DISCONNECTION/CONNECTION [SKYACTIV-G 2.0 (WITHOUT i-stop)].)
2. Remove the purge solenoid valve. (See 01-16A-10 PURGE SOLENOID VALVE REMOVAL/INSTALLATION [SKYACTIV-G 2.0].)
3. Inspect airflow between the ports under the following conditions.

Measured condition	Continuity between ports A—B
When voltage is not applied between terminals A and B	No airflow
When voltage is applied between terminals A and B	Airflow detected

- If not as specified, replace the purge solenoid valve. (See 01-16A-10 PURGE SOLENOID VALVE REMOVAL/INSTALLATION [SKYACTIV-G 2.0].)

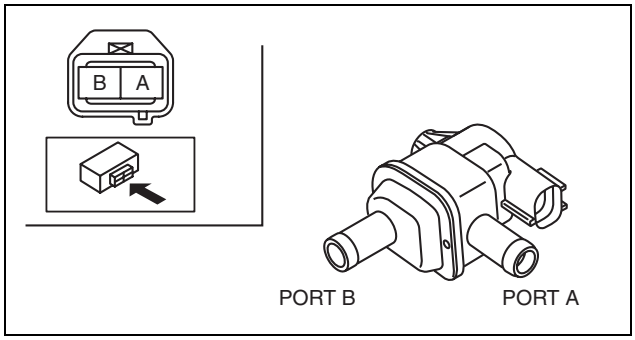

ac5wzw0000282

EMISSION SYSTEM [SKYACTIV-G 2.0]

CATCH TANK INSPECTION [SKYACTIV-G 2.0]

id0116z8804000

1. Remove the catch tank. (See 01-16A-10 PURGE SOLENOID VALVE REMOVAL/INSTALLATION [SKYACTIV-G 2.0].)
2. Plug the purge solenoid valve side into the catch tank.
3. Inspect for air leakage when blowing air using your mouth into the charcoal canister side.
   - If there is air leakage, replace the catch tank. (See 01-16A-10 PURGE SOLENOID VALVE REMOVAL/INSTALLATION [SKYACTIV-G 2.0].)

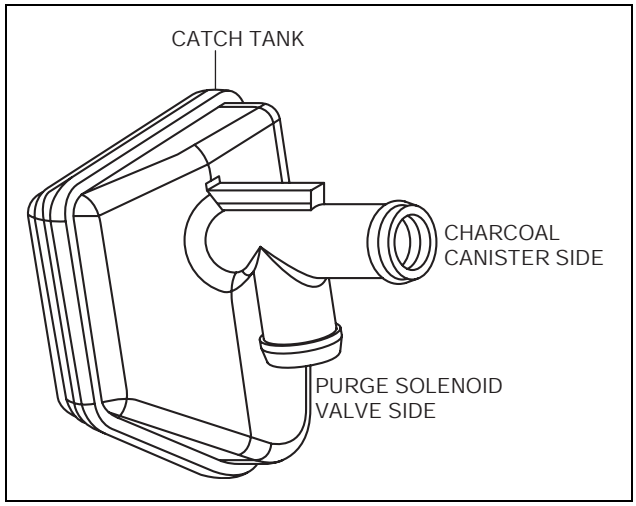

am3uuw0000730

POSITIVE CRANKCASE VENTILATION (PCV) VALVE REMOVAL/INSTALLATION [SKYACTIV-G 2.0]

id0116z8819800

1. Disconnect the negative battery cable. (See 01-17A-11 NEGATIVE BATTERY CABLE DISCONNECTION/CONNECTION [SKYACTIV-G 2.0]) (See 01-17A-13 NEGATIVE BATTERY CABLE DISCONNECTION/CONNECTION [SKYACTIV-G 2.0 (WITHOUT i-stop)].)
2. Remove the intake manifold. (See 01-13A-6 INTAKE-AIR SYSTEM REMOVAL/INSTALLATION [SKYACTIV-G 2.0].)
3. Remove in the order indicated in the table.
4. Install in the reverse order of removal.

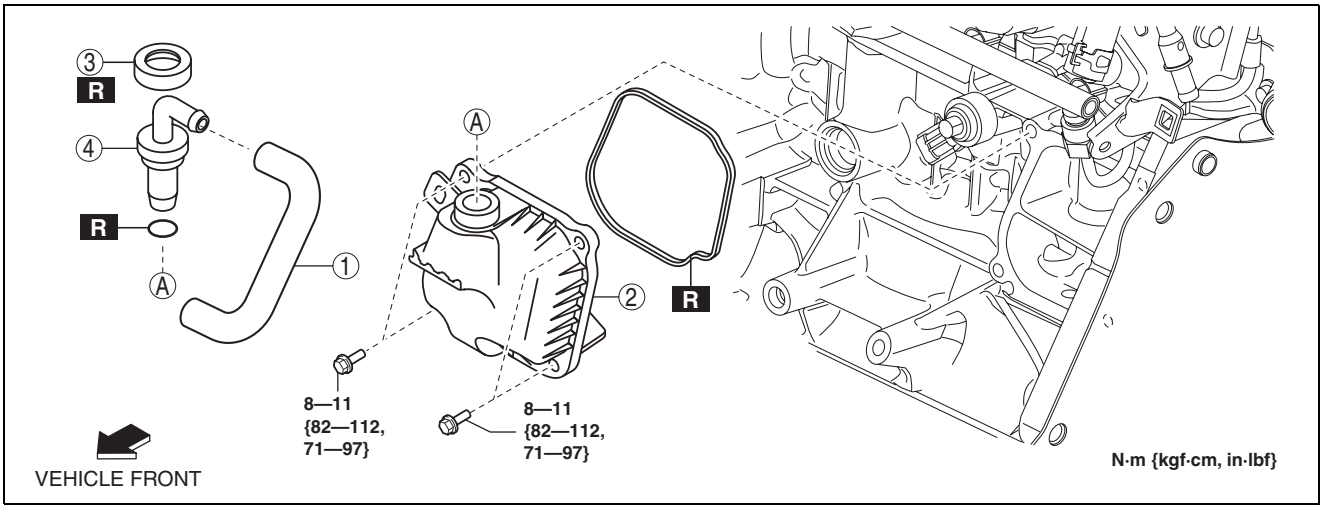

am3uuw0000870

1	PCV hose
2	Oil separator

3	Retainer (See 01-16A-14 Retainer Removal Note.) (See 01-16A-14 Retainer Installation Note.)
4	PCV valve

EMISSION SYSTEM [SKYACTIV-G 2.0]

Retainer Removal Note

Caution

- **Be sure to follow the removal procedures below to prevent the leakage of blow-by gas caused by the damage to the tab of the oil separator or the oil separator itself.**

1. Insert a flat blade screwdriver with its tip wrapped in a shop rag into the gap between the retainer and the oil separator as shown in the figure.
2. Spread the side surface of the retainer outward to dismount it with attention to the tab.

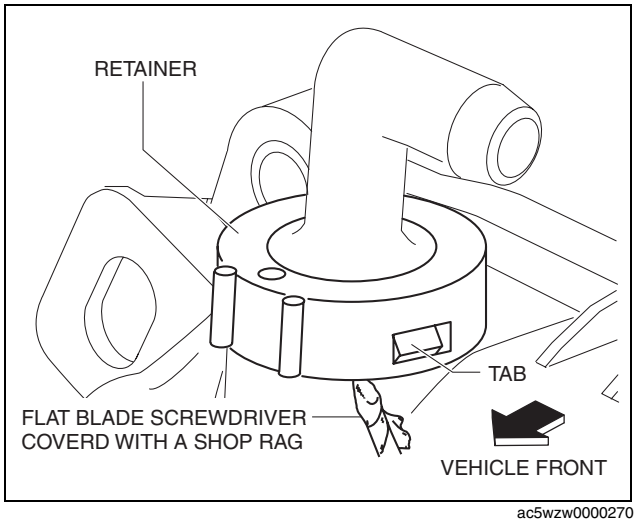

ac5wzw0000270

Retainer Installation Note

Caution

- **Be sure to replace the old retainer with a new one to prevent the escape of blow-by gas. Reinstalling the old retainer will reduce airtightness.**

1. Make sure that the retainer alignment mark is directed as shown in the left diagram before installing the retainer to the oil separator.

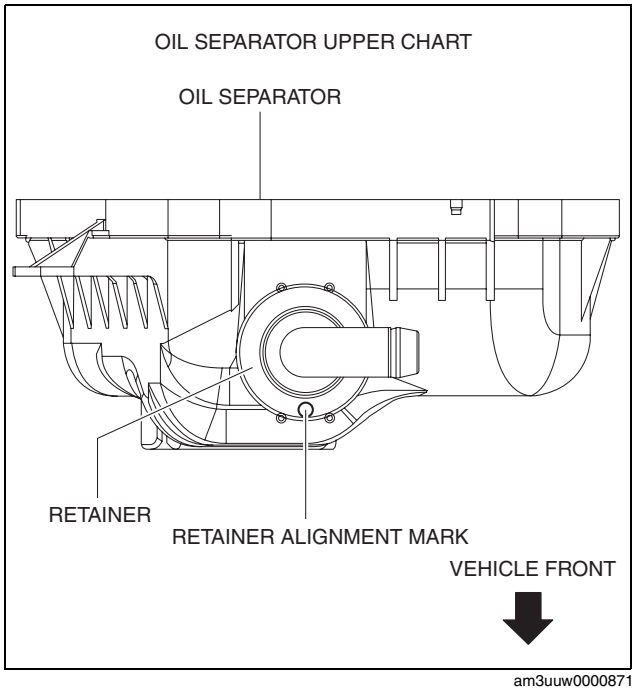

am3uuw0000871

EMISSION SYSTEM [SKYACTIV-G 2.0]

POSITIVE CRANKCASE VENTILATION (PCV) VALVE INSPECTION [SKYACTIV-G 2.0]

id0116z8800400

Airflow Inspection

1. Disconnect the section (A) of ventilation hose shown in the figure.
2. Start the engine and verify that vacuum is applied to the end of the disconnected ventilation hose while the engine is idling.
   - If vacuum is not applied to the ventilation hose, perform the procedure from Step 3.

Note

- If the PCV valve is operating normally, vacuum occurs in the ventilation hose, however, if the PCV valve is not operating normally, vacuum does not occur in the ventilation hose because the blow-by gas is circulated to the air hose from the ventilation hose.
- Verify the ventilation hose vacuum as follows:
  - — When the tip of your figure is touching the end of the ventilation hose, the tip of your figure is suctioned by the hose.
  - — When a thin scrap of paper is contacting the end of the ventilation hose. the paper is suctioned by the hose.

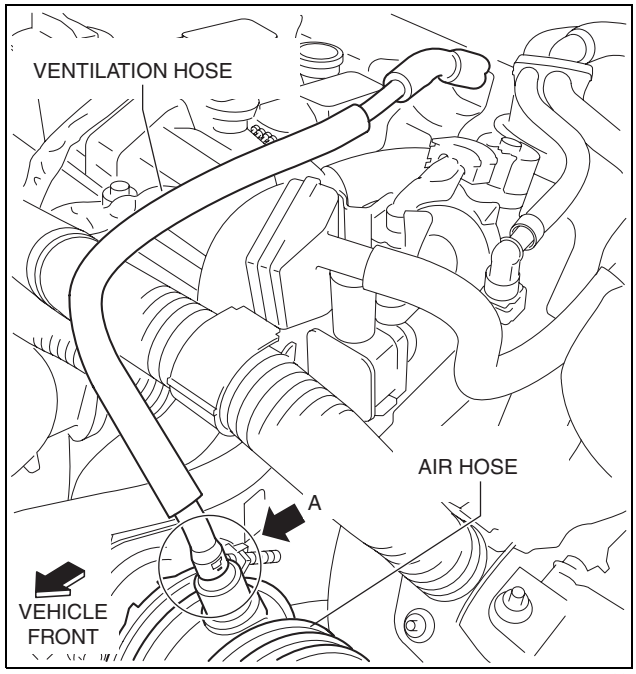

ac5uuw00000447

3. Disconnect the negative battery cable. (See 01-17A-11 NEGATIVE BATTERY CABLE DISCONNECTION/CONNECTION [SKYACTIV-G 2.0].) (See 01-17A-13 NEGATIVE BATTERY CABLE DISCONNECTION/CONNECTION [SKYACTIV-G 2.0 (WITHOUT i-stop)].)
4. Remove the intake manifold. (See 01-13A-6 INTAKE-AIR SYSTEM REMOVAL/INSTALLATION [SKYACTIV-G 2.0].)
5. Remove the PCV valve and the oil separator as a single unit. (See 01-16A-13 POSITIVE CRANKCASE VENTILATION (PCV) VALVE REMOVAL/INSTALLATION [SKYACTIV-G 2.0].)
6. Verify that there is no airflow when pressure is applied to port B.
   - If there is airflow, replace the PCV valve and the oil separator as a single unit. (See 01-16A-13 POSITIVE CRANKCASE VENTILATION (PCV) VALVE REMOVAL/INSTALLATION [SKYACTIV-G 2.0].)
7. Verify that there is airflow when vacuum is applied to port B.
   - If there is no airflow, replace the PCV valve and the oil separator as a single unit. (See 01-16A-13 POSITIVE CRANKCASE VENTILATION (PCV) VALVE REMOVAL/INSTALLATION [SKYACTIV-G 2.0].)

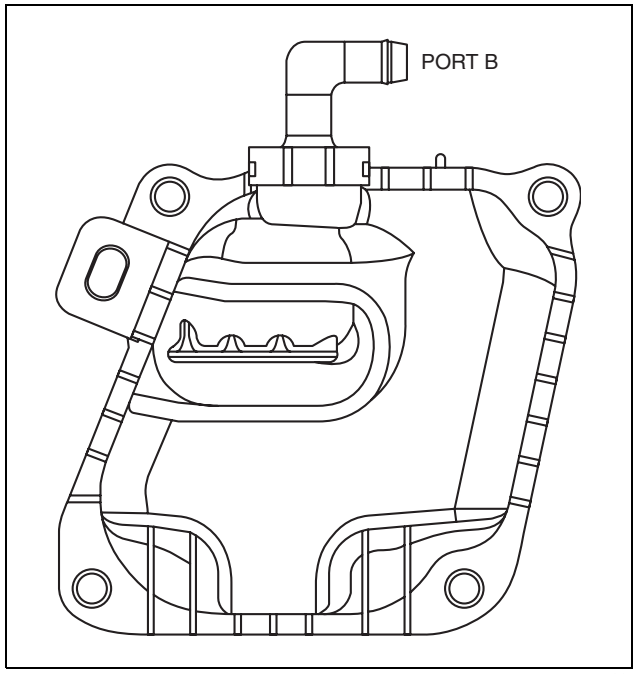

ac5uuw00000448

ROLLOVER VALVE REMOVAL/INSTALLATION [SKYACTIV-G 2.0]

id0116z8804600

Note

- The rollover valve cannot be removed as it is built into the fuel tank.

1. Remove the fuel tank. (See 01-14A-13 FUEL TANK REMOVAL/INSTALLATION [SKYACTIV-G 2.0].)

EMISSION SYSTEM [SKYACTIV-G 2.0]

ROLLOVER VALVE INSPECTION [SKYACTIV-G 2.0]

id0116z8804500

Note
- The rollover valve cannot be disassembled and inspected as it is built into the fuel tank.

1. Perform the fuel tank inspection. (See 01-14A-26 FUEL TANK INSPECTION [SKYACTIV-G 2.0].)
   - If there is any malfunction, replace the fuel tank. (See 01-14A-13 FUEL TANK REMOVAL/INSTALLATION [SKYACTIV-G 2.0].)

CHECK VALVE REMOVAL/INSTALLATION [SKYACTIV-G 2.0]

id0116z8189700

1. Remove the floor under cover. (See 09-16-44 FLOOR UNDER COVER REMOVAL/INSTALLATION.)
2. Remove in the order indicated in the table.

1	Evaporative hose
2	Check valve

3. Install in the reverse order of removal.

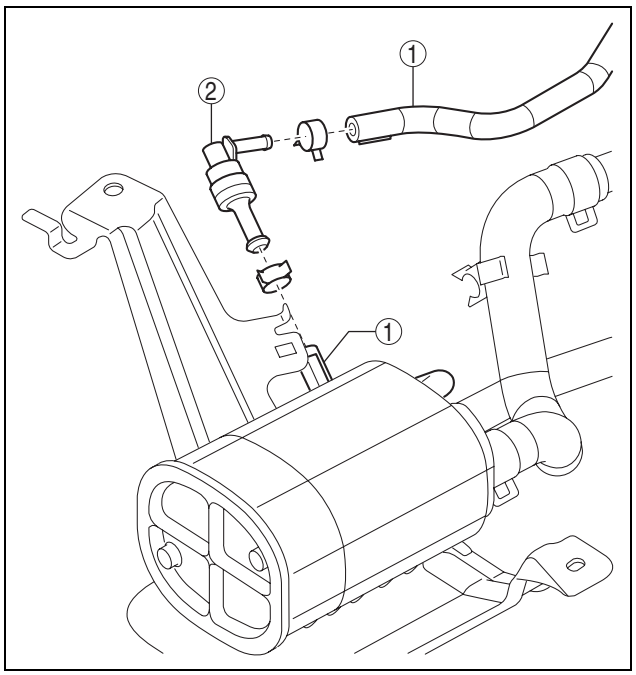

ac5wzw0000138

CHECK VALVE INSPECTION [SKYACTIV-G 2.0]

id0116z8189900

1. Remove the check valve. (See 01-16A-16 CHECK VALVE REMOVAL/INSTALLATION [SKYACTIV-G 2.0].)
2. Verify that there is no airflow when positive pressure is applied to port A.
   - If there is airflow, replace the check valve. (See 01-16A-16 CHECK VALVE REMOVAL/INSTALLATION [SKYACTIV-G 2.0].)
3. Verify that there is no airflow when negative pressure is applied to port A.
   - If there is no airflow, replace the check valve. (See 01-16A-16 CHECK VALVE REMOVAL/INSTALLATION [SKYACTIV-G 2.0].)

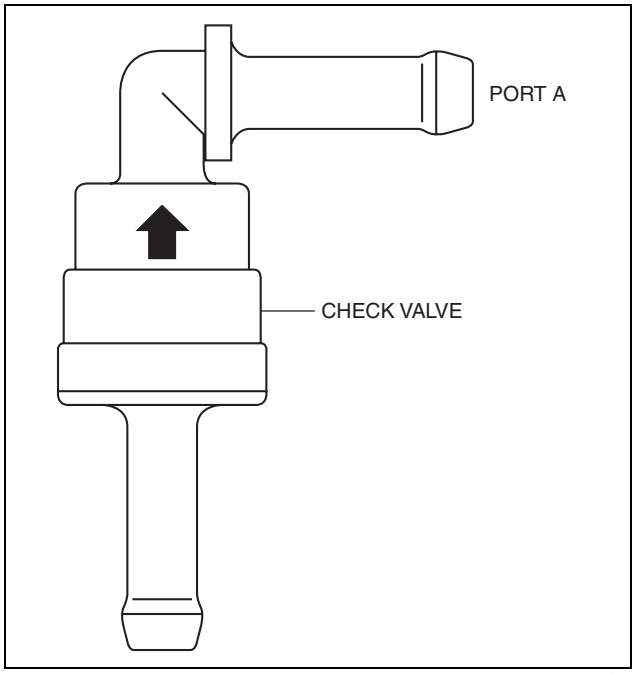

ac5wzw0000137

EMISSION SYSTEM [SKYACTIV-G 2.0]

QUICK RELEASE CONNECTOR (EMISSION SYSTEM) REMOVAL/INSTALLATION [SKYACTIV-G 2.0]

id0116z8805500

Quick Release Connector Position

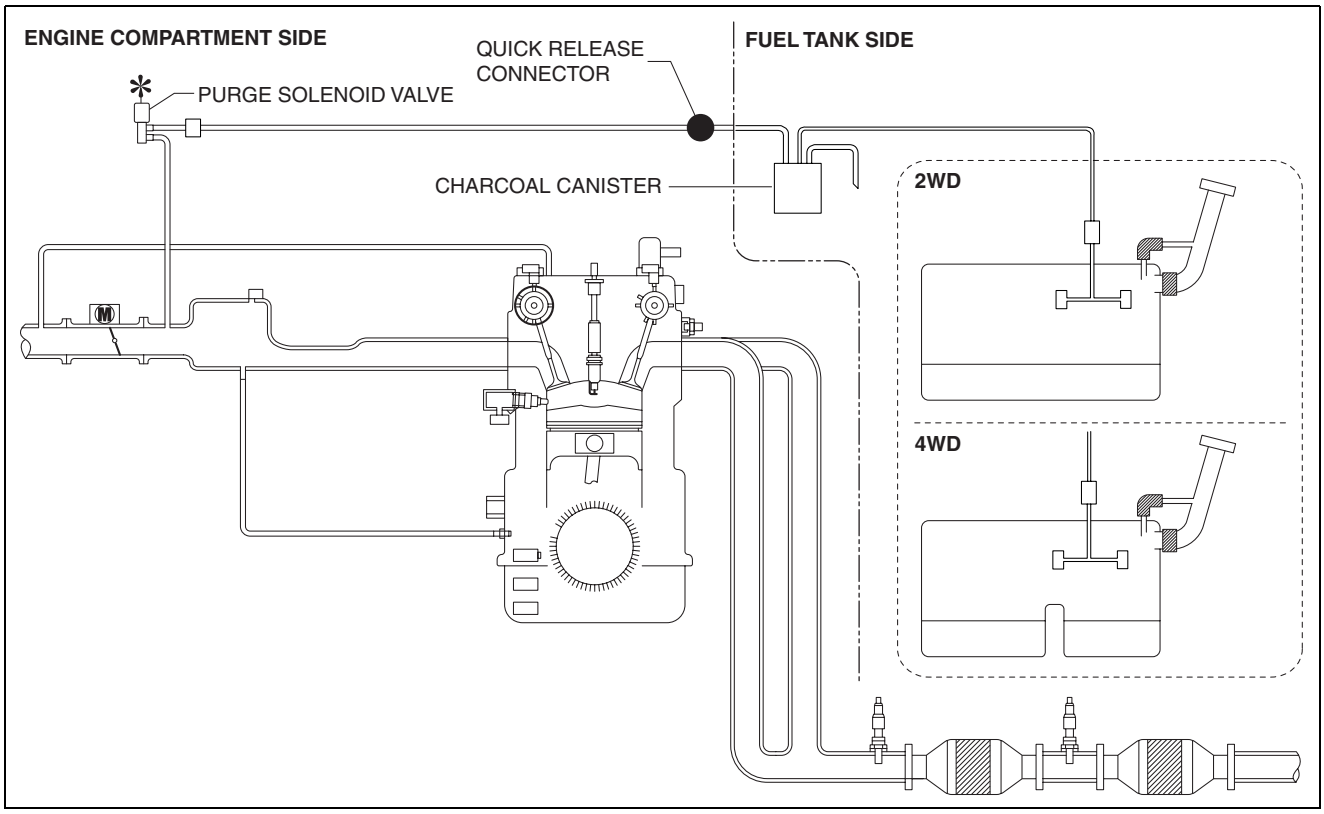

ac5wzw0000138

Removal

1. Complete the “BEFORE SERVICE PRECAUTION”. (See 01-14A-6 BEFORE SERVICE PRECAUTION [SKYACTIV-G 2.0].)
2. Move the retainer upward using a small flathead screwdriver or a similar tool.
3. Pull out the evaporative hose straight from the evaporative pipe and disconnect it.
4. Cover the disconnected quick release connector and evaporative pipe with vinyl sheeting or a similar material to prevent it from getting scratched or dirty.

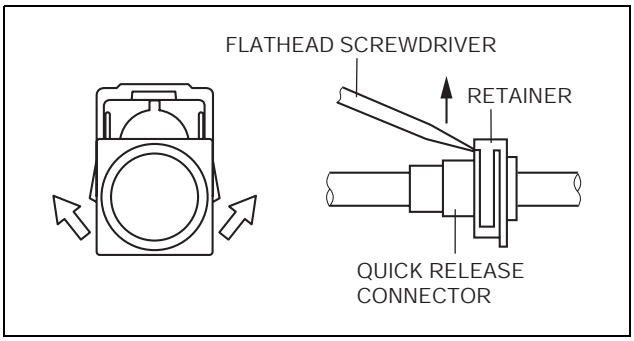

am6xuw0000138

EMISSION SYSTEM [SKYACTIV-G 2.0]

Installation

Note
- If the quick release connector O-ring is damaged or has slipped, replace the evaporative hose.
- A checker tab is integrated with the quick release connector for new evaporative hoses. Remove the checker tab from the quick release connector after the connector is completely engaged with the evaporative pipe.

1. Inspect the evaporative hose and evaporative pipe sealing surface for damage and deformation.
   - If there is any malfunction, replace it with a new one.
2. Apply a small amount of clean engine oil to the sealing surface of the evaporative pipe.
3. Install the quick release connector.
   - Insert the evaporative pipe straight to the end of the quick release connector.
   - Push down the retainer using a finger.
     — If the retainer cannot be pushed down, push the evaporative pipe further to the quick release connector.
4. Lightly pull and push the quick release connector a few times by hand, and then verify that it is connected securely.

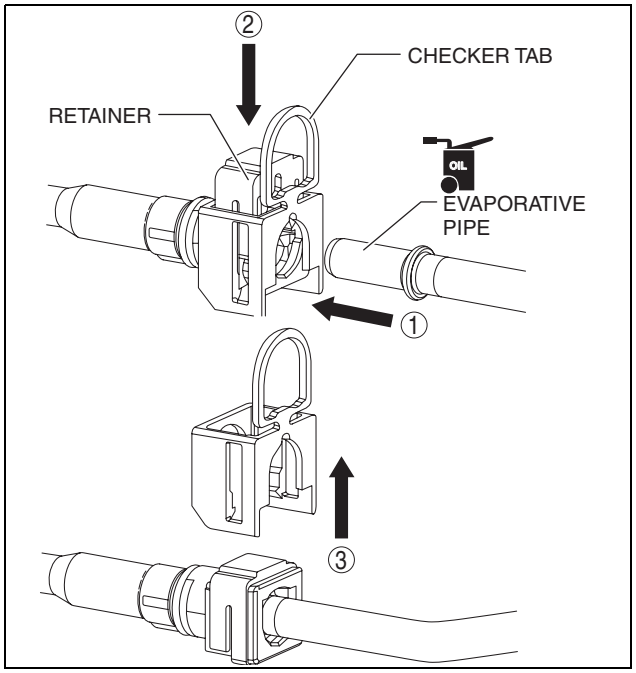

ac5uuw00000461

01-16B EMISSION SYSTEM [SKYACTIV-D 2.2]

EMISSION SYSTEM LOCATION INDEX [SKYACTIV-D 2.2] 01-16B–2
Engine Compartment Side 01-16B–2
Exhaust System Side 01-16B–3
Fuel Tank Side 01-16B–4
EMISSION SYSTEM DIAGRAM [SKYACTIV-D 2.2] 01-16B–6
EGR VALVE REMOVAL/INSTALLATION [SKYACTIV-D 2.2] 01-16B–7
Water Hose No.1 Removal Note 01-16B–7
Water Hose No.2 Removal Note 01-16B–7
EGR Valve Removal Note 01-16B–7
Water Hose No.2 Installation Note 01-16B–8
Water Hose No.1 Installation Note 01-16B–8
EGR VALVE INSPECTION [SKYACTIV-D 2.2] 01-16B–9
Resistance inspection 01-16B–9
EGR PIPE REMOVAL/INSTALLATION [SKYACTIV-D 2.2] 01-16B–9
EGR valve side 01-16B–9
EGR cooler bypass valve side 01-16B–10
Intake manifold side 01-16B–11
ROLLOVER VALVE REMOVAL/INSTALLATION [SKYACTIV-D 2.2] 01-16B–12
ROLLOVER VALVE INSPECTION [SKYACTIV-D 2.2] 01-16B–12
EGR COOLER REMOVAL/INSTALLATION [SKYACTIV-D 2.2] 01-16B–12
Vacuum Hose No.3 Removal Note 01-16B–14
Vacuum Hose No.3 Installation Note . . . 01-16B–15
Vacuum Hose No.2 Installation Note . . . 01-16B–16
Vacuum Hose No.1 Installation Note . . . 01-16B–16
EGR COOLER INSPECTION [SKYACTIV-D 2.2] 01-16B–17
EGR COOLER BYPASS VALVE REMOVAL/INSTALLATION [SKYACTIV-D 2.2] 01-16B–17
Water hose No.2 Removal Note 01-16B–19
EGR Cooler Bypass Valve Installation Bolt Installation Note 01-16B–19
Water Hose No.2 Installation Note 01-16B–19
Water Hose No.1 Installation Note 01-16B–20
EGR COOLER BYPASS VALVE INSPECTION [SKYACTIV-D 2.2] 01-16B–20
Resistance inspection 01-16B–20
INTAKE SHUTTER VALVE REMOVAL/INSTALLATION [SKYACTIV-D 2.2] 01-16B–21
Water Hose No.1 Removal Note 01-16B–21
Water Hose No.2 Installation Note 01-16B–22
Water Pipe No.1 Installation Note 01-16B–22
INTAKE SHUTTER VALVE INSPECTION [SKYACTIV-D 2.2] 01-16B–23
Resistance inspection 01-16B–23
CHECK VALVE REMOVAL/INSTALLATION [SKYACTIV-D 2.2] 01-16B–23
CHECK VALVE INSPECTION [SKYACTIV-D 2.2] 01-16B–25

EMISSION SYSTEM [SKYACTIV-D 2.2]

EMISSION SYSTEM LOCATION INDEX [SKYACTIV-D 2.2]

id0116e1803700

Engine Compartment Side

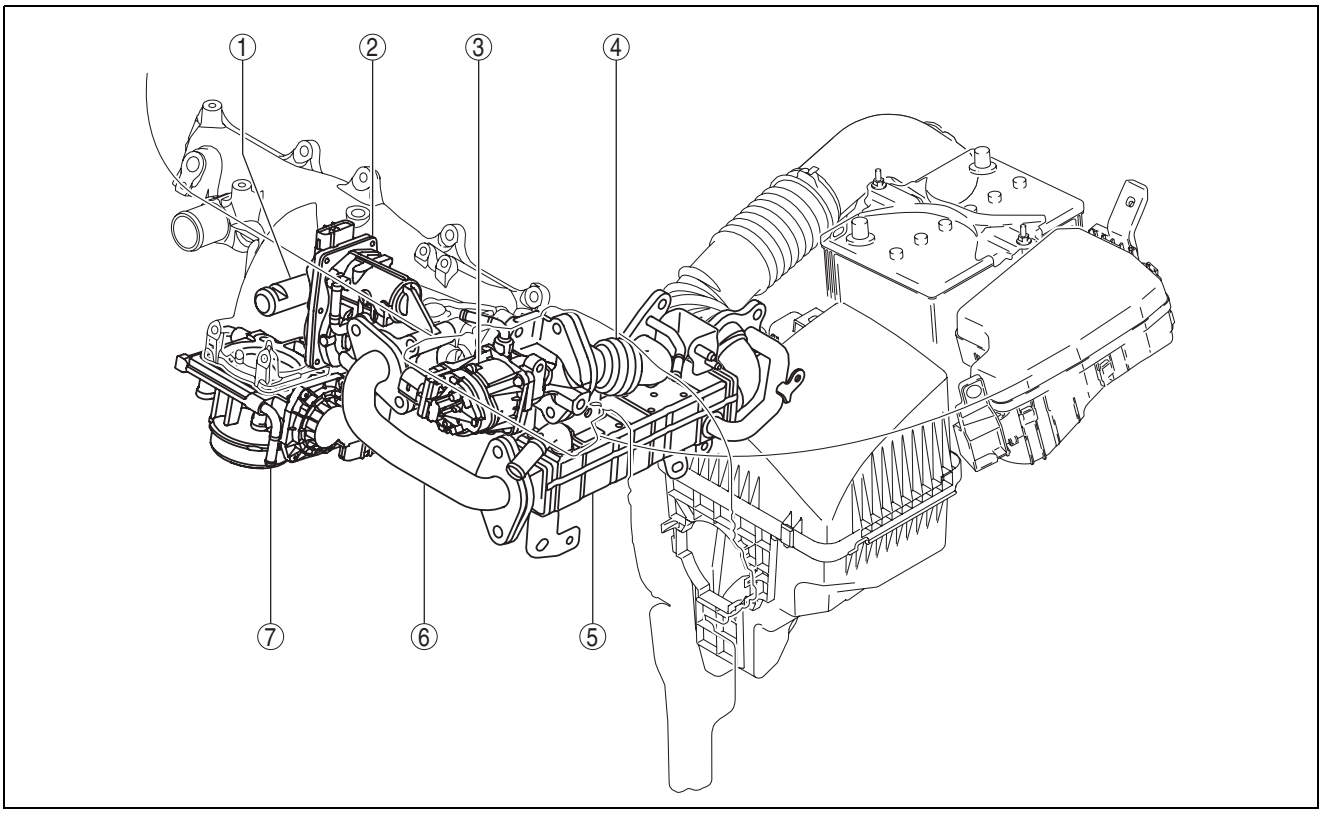

ac5jjw00003545

1	EGR pipe (Intake manifold side) (See 01-16B-9 EGR PIPE REMOVAL/ INSTALLATION [SKYACTIV-D 2.2].)
2	EGR valve (See 01-16B-7 EGR VALVE REMOVAL/ INSTALLATION [SKYACTIV-D 2.2].) (See 01-16B-9 EGR VALVE INSPECTION [SKYACTIV-D 2.2].)
3	EGR cooler bypass valve (See 01-16B-17 EGR COOLER BYPASS VALVE REMOVAL/INSTALLATION [SKYACTIV-D 2.2].) (See 01-16B-20 EGR COOLER BYPASS VALVE INSPECTION [SKYACTIV-D 2.2].)
4	EGR pipe (EGR cooler bypass valve side) (See 01-16B-9 EGR PIPE REMOVAL/ INSTALLATION [SKYACTIV-D 2.2].)
5	EGR cooler (See 01-16B-12 EGR COOLER REMOVAL/ INSTALLATION [SKYACTIV-D 2.2].) (See 01-16B-17 EGR COOLER INSPECTION [SKYACTIV-D 2.2].)
6	EGR pipe (EGR valve side) (See 01-16B-9 EGR PIPE REMOVAL/ INSTALLATION [SKYACTIV-D 2.2].)
7	Intake shutter valve (See 01-16B-21 INTAKE SHUTTER VALVE REMOVAL/INSTALLATION [SKYACTIV-D 2.2].) (See 01-16B-23 INTAKE SHUTTER VALVE INSPECTION [SKYACTIV-D 2.2].)

EMISSION SYSTEM [SKYACTIV-D 2.2]

Exhaust System Side
2WD

1	Catalytic converter (See 01-15B-1 EXHAUST SYSTEM REMOVAL/ INSTALLATION [SKYACTIV-D 2.2].)

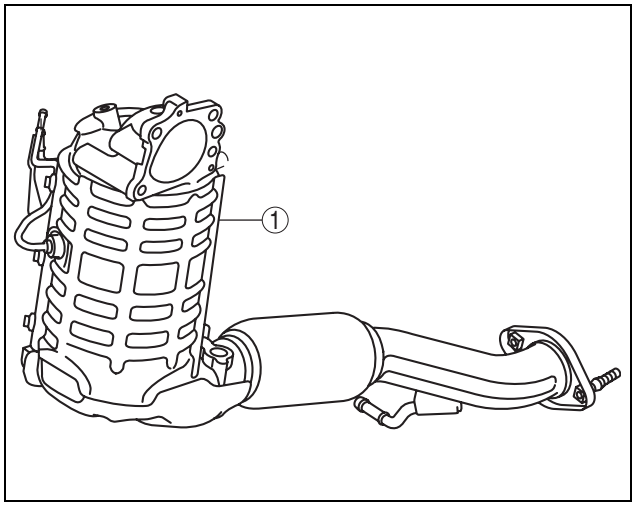

ac5jjw00003547

4WD

1	Catalytic converter (See 01-15B-1 EXHAUST SYSTEM REMOVAL/ INSTALLATION [SKYACTIV-D 2.2].)

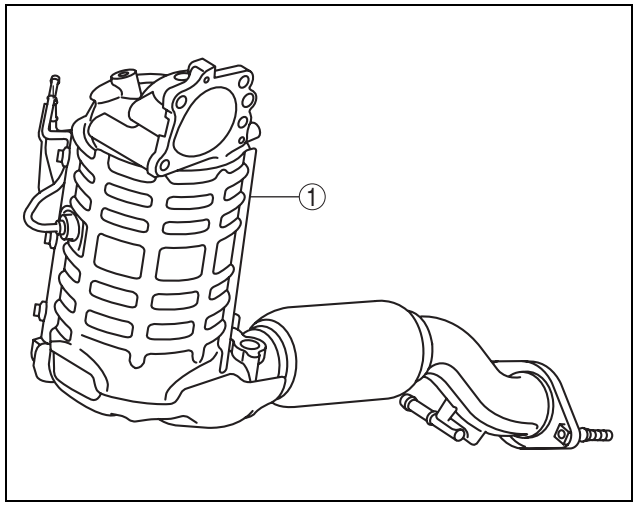

ac5jjw00003546

EMISSION SYSTEM [SKYACTIV-D 2.2]

Fuel Tank Side
2WD

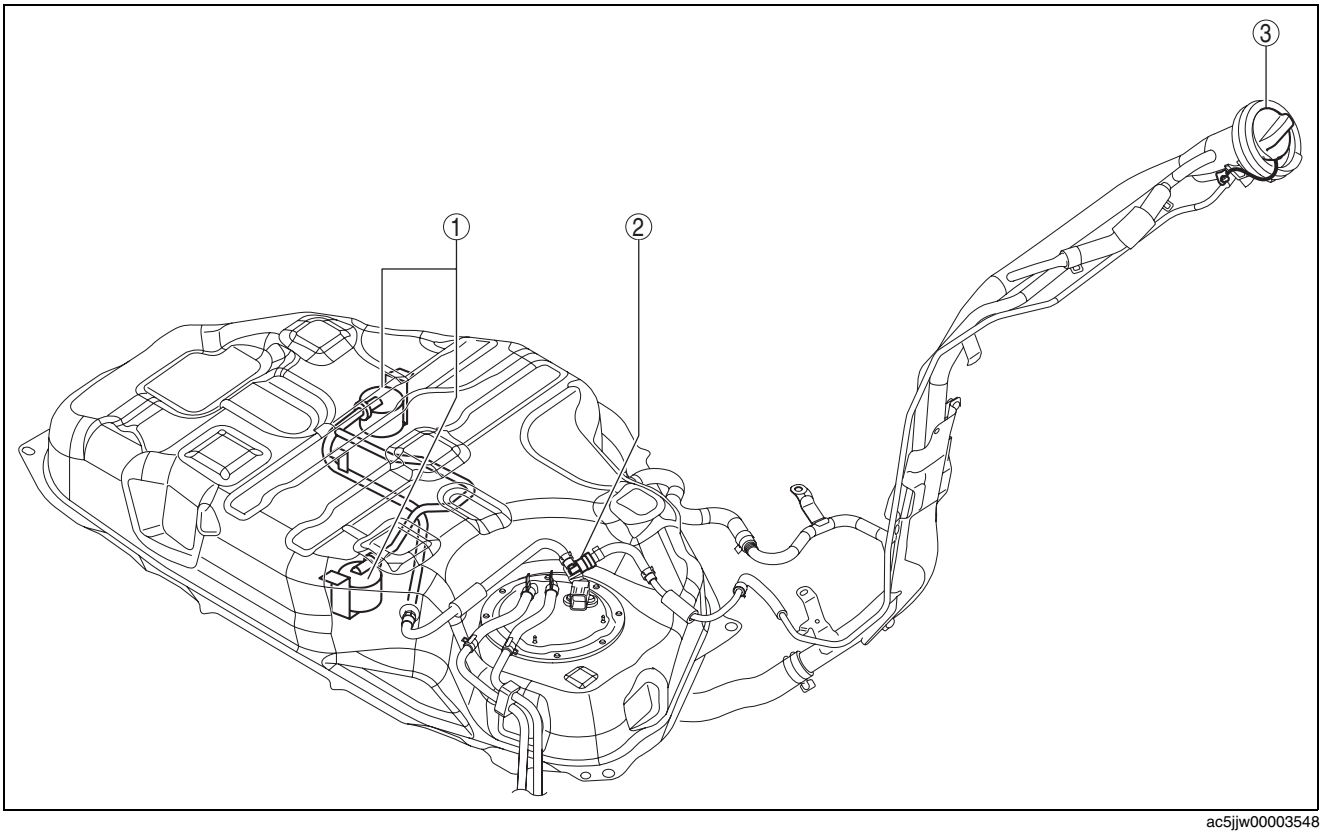

ac5jjw00003548

1	Rollover valve (See 01-16B-12 ROLLOVER VALVE REMOVAL/ INSTALLATION [SKYACTIV-D 2.2].) (See 01-16B-12 ROLLOVER VALVE INSPECTION [SKYACTIV-D 2.2].)

2	Check valve (See 01-16B-23 CHECK VALVE REMOVAL/ INSTALLATION [SKYACTIV-D 2.2].) (See 01-16B-25 CHECK VALVE INSPECTION [SKYACTIV-D 2.2].)
3	Fuel-filler cap (See 01-14B-29 FUEL-FILLER PIPE REMOVAL/ INSTALLATION [SKYACTIV-D 2.2].)

EMISSION SYSTEM [SKYACTIV-D 2.2]

4WD

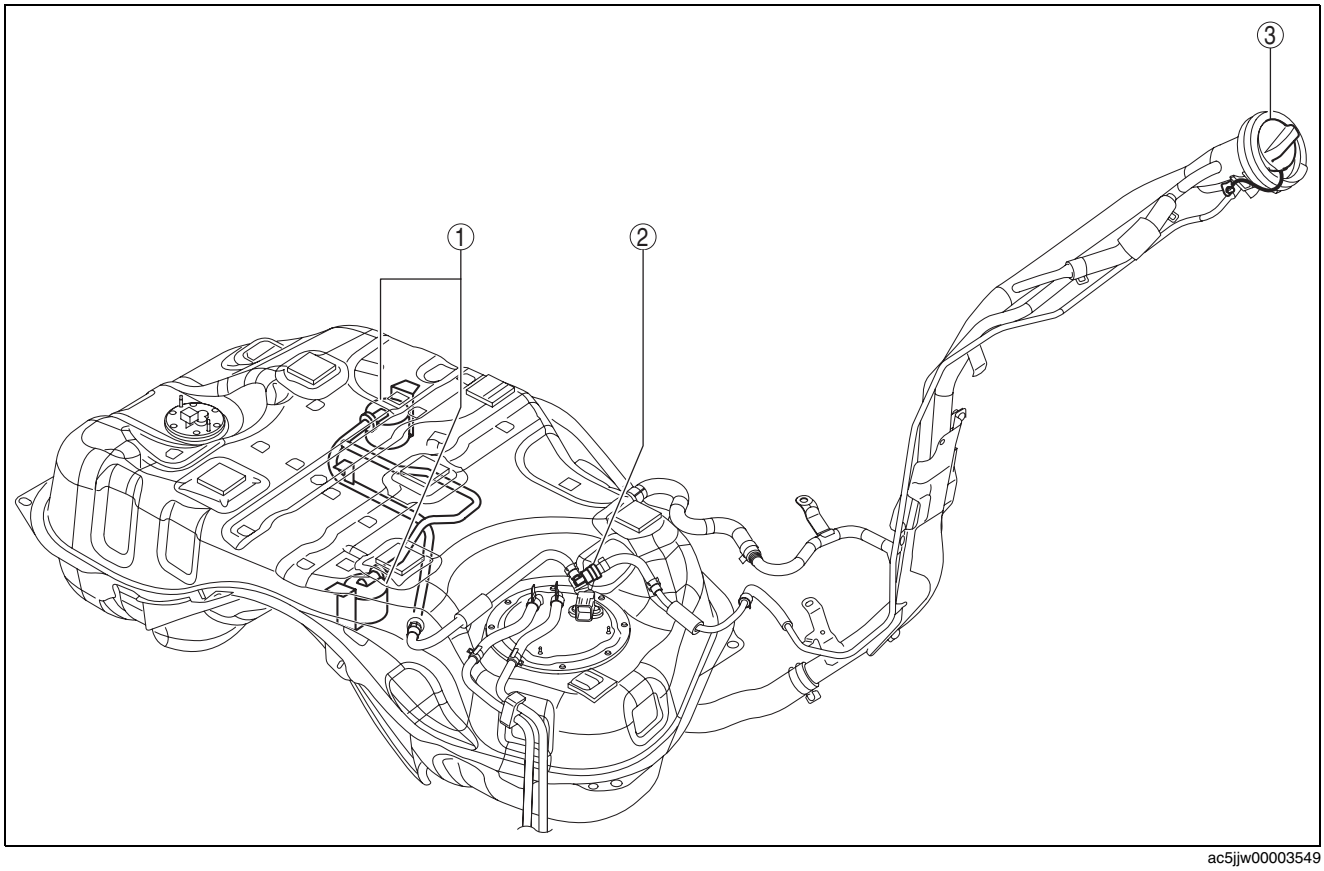

ac5jjw00003549

1	Rollover valve (See 01-16B-12 ROLLOVER VALVE REMOVAL/ INSTALLATION [SKYACTIV-D 2.2].) (See 01-16B-12 ROLLOVER VALVE INSPECTION [SKYACTIV-D 2.2].)

2	Check valve (See 01-16B-23 CHECK VALVE REMOVAL/ INSTALLATION [SKYACTIV-D 2.2].) (See 01-16B-25 CHECK VALVE INSPECTION [SKYACTIV-D 2.2].)
3	Fuel-filler cap (See 01-14B-29 FUEL-FILLER PIPE REMOVAL/ INSTALLATION [SKYACTIV-D 2.2].)

EMISSION SYSTEM [SKYACTIV-D 2.2]

EMISSION SYSTEM DIAGRAM [SKYACTIV-D 2.2]

id0116e1803600

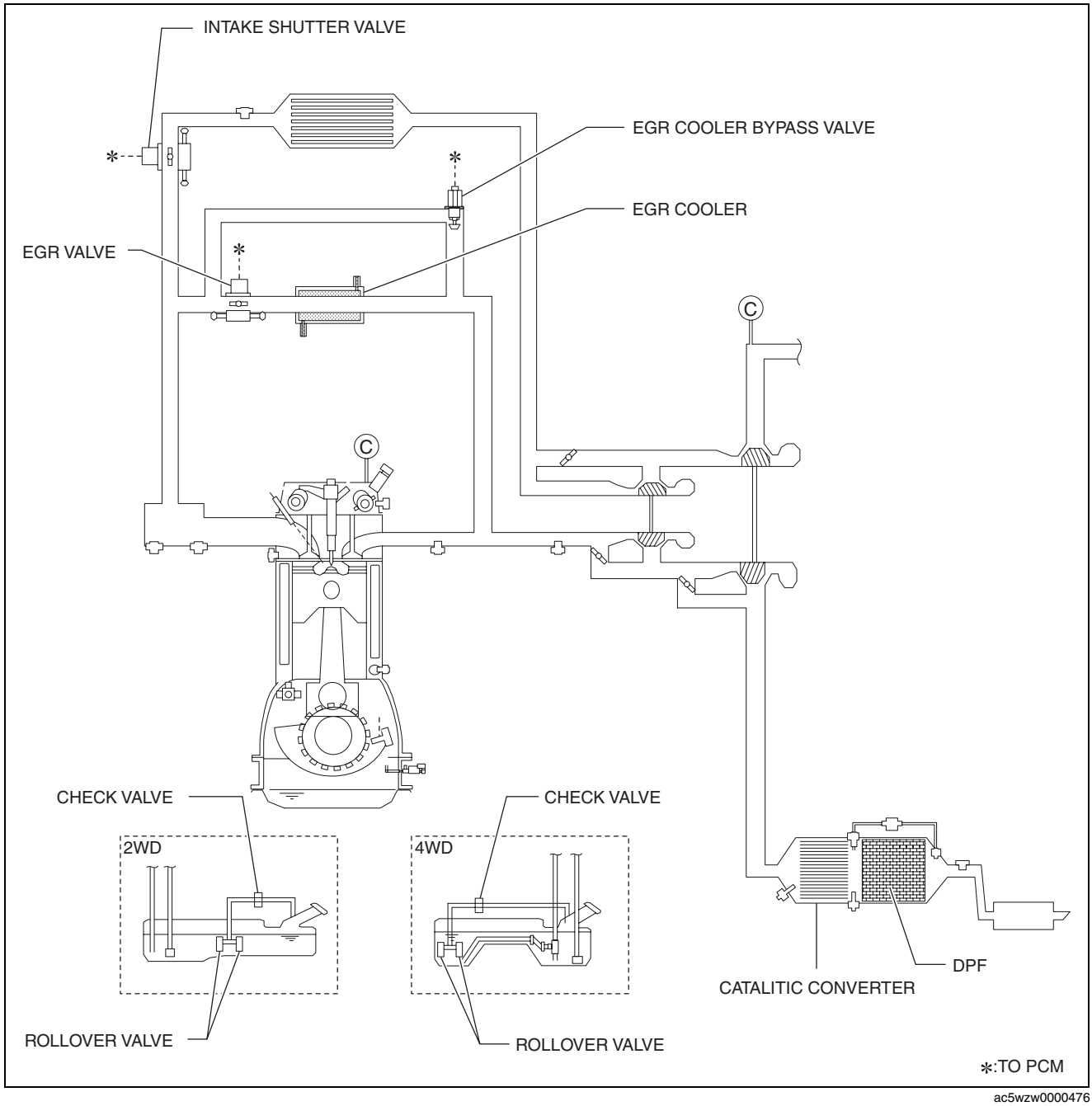

ac5wzw0000476

EMISSION SYSTEM [SKYACTIV-D 2.2]

EGR VALVE REMOVAL/INSTALLATION [SKYACTIV-D 2.2]

id0116e1801000

Note
- If the EGR valve is replaced, perform the EGR initialization procedure.

1. Disconnect the negative battery cable. (See 01-17B-9 NEGATIVE BATTERY CABLE DISCONNECTION/CONNECTION [SKYACTIV-D 2.2].)
2. Remove the engine cover. (See 01-10B-4 ENGINE COVER REMOVAL/INSTALLATION [SKYACTIV-D 2.2].)
3. Remove the EGR pipe (EGR valve side). (See 01-16B-9 EGR PIPE REMOVAL/INSTALLATION [SKYACTIV-D 2.2].)
4. Remove in the order shown in the figure.

1	EGR valve connector
2	Water hose No.1 (See 01-16B-7 Water Hose No.1 Removal Note.) (See 01-16B-8 Water Hose No.1 Installation Note.)
3	Water hose No.2 (See 01-16B-7 Water Hose No.2 Removal Note.) (See 01-16B-8 Water Hose No.2 Installation Note.)
4	EGR valve (See 01-16B-7 EGR Valve Removal Note.)

5. Install in the reverse order of removal.

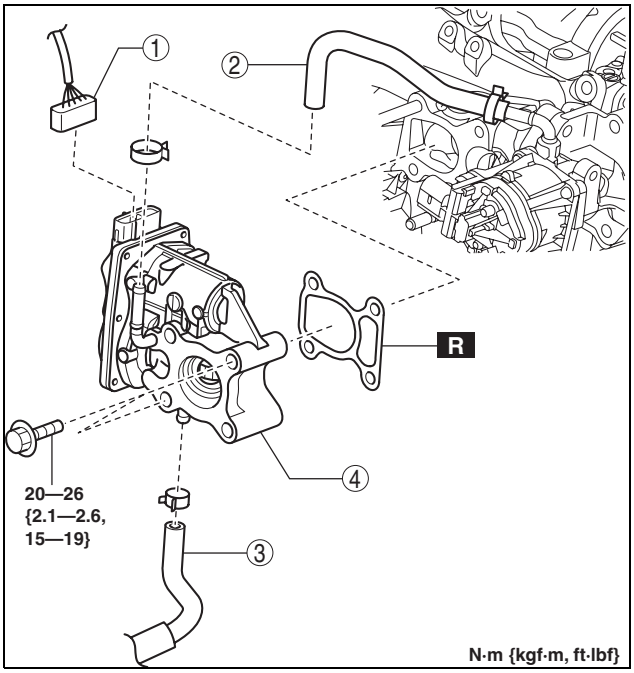

ac5wzw0000476

Water Hose No.1 Removal Note
1. Drain the engine coolant. (See 01-12B-4 ENGINE COOLANT REPLACEMENT [SKYACTIV-D 2.2].)
2. Remove water hose No.1.

Water Hose No.2 Removal Note
1. Remove the coolant reserve tank. (See 01-12B-8 COOLANT RESERVE TANK REMOVAL/INSTALLATION [SKYACTIV-D 2.2].)
2. Remove water hose No.2.

EGR Valve Removal Note
1. Disconnect the EGR cooler bypass valve connector.
2. Remove the EGR valve.

EMISSION SYSTEM [SKYACTIV-D 2.2]

Water Hose No.2 Installation Note

1. Install water hose No.2 as shown in the figure.

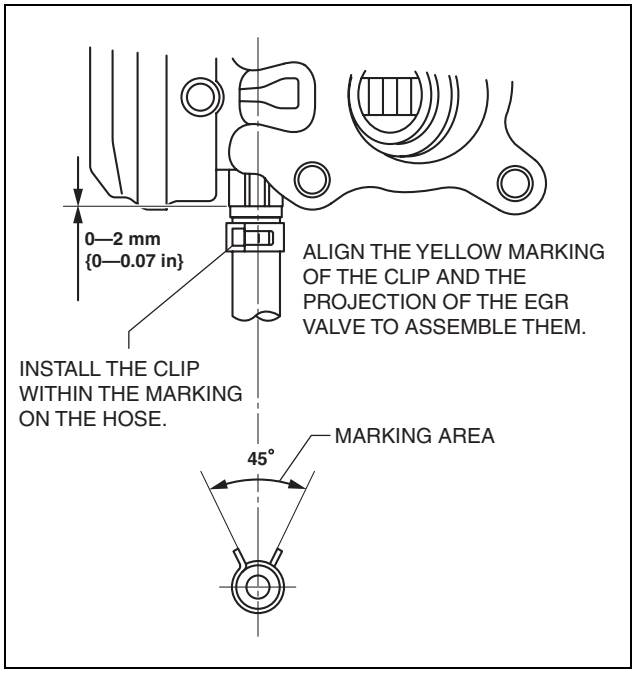

ac5wzw0000476

Water Hose No.1 Installation Note

1. Install water hose No.1 as shown in the figure.

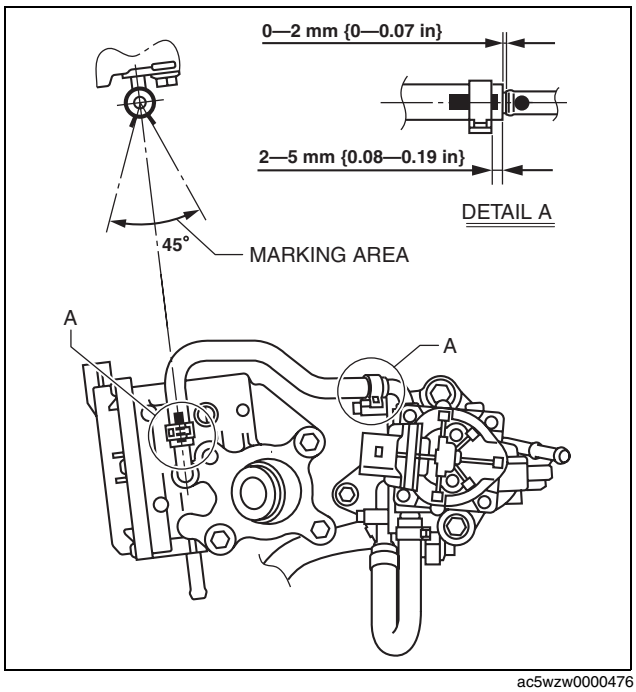

ac5wzw0000476

EMISSION SYSTEM [SKYACTIV-D 2.2]

EGR VALVE INSPECTION [SKYACTIV-D 2.2]

id0116e1801100

Resistance inspection

1. Disconnect the negative battery cable. (See 01-17B-9 NEGATIVE BATTERY CABLE DISCONNECTION/ CONNECTION [SKYACTIV-D 2.2].)
2. Remove the engine cover. (See 01-10B-4 ENGINE COVER REMOVAL/INSTALLATION [SKYACTIV-D 2.2].)
3. Disconnect the EGR valve connector.
4. Inspect the resistance between EGR valve terminals A and E.

   EGR valve resistance (specification)
   0.3—100 ohms [20 °C {68 °F}]

   - If not within the specification, replace the EGR valve. (See 01-16B-7 EGR VALVE REMOVAL/INSTALLATION [SKYACTIV-D 2.2].)

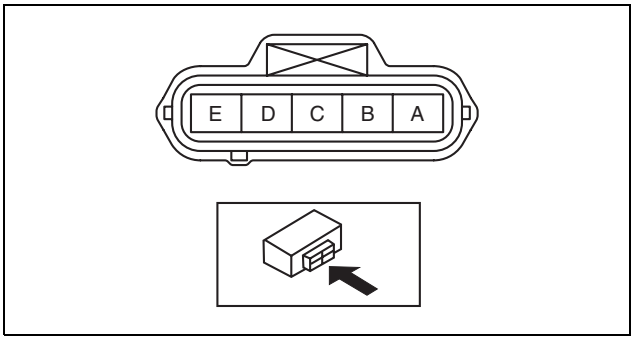

ac5wzw0000475

EGR PIPE REMOVAL/INSTALLATION [SKYACTIV-D 2.2]

id0116e1810000

EGR valve side

1. Remove the engine cover. (See 01-10B-4 ENGINE COVER REMOVAL/INSTALLATION [SKYACTIV-D 2.2].)
2. Remove the EGR pipe.
3. Install in the reverse order of removal.

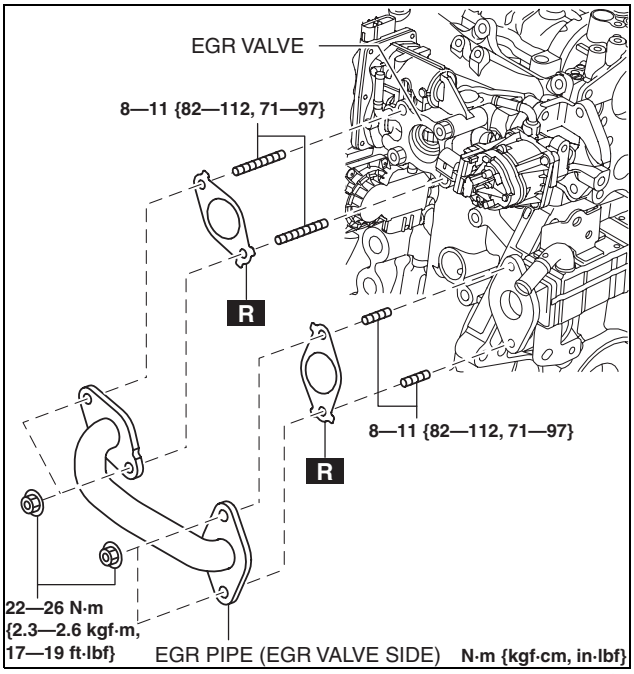

ac5wzw0000486

EMISSION SYSTEM [SKYACTIV-D 2.2]

EGR cooler bypass valve side

1. Disconnect the negative battery cable. (See 01-17B-9 NEGATIVE BATTERY CABLE DISCONNECTION/ CONNECTION [SKYACTIV-D 2.2].)
2. Remove the engine cover. (See 01-10B-4 ENGINE COVER REMOVAL/INSTALLATION [SKYACTIV-D 2.2].)
3. Remove the air cleaner. (See 01-13B-6 INTAKE-AIR SYSTEM REMOVAL/INSTALLATION [SKYACTIV-D 2.2].)
4. Remove the battery and the battery tray. (See 01-17B-3 BATTERY REMOVAL/INSTALLATION [SKYACTIV-D 2.2].)
5. Remove the following parts as a single unit: (See 01-13B-6 INTAKE-AIR SYSTEM REMOVAL/INSTALLATION [SKYACTIV-D 2.2].)
   - Air hose
   - Air inlet pipe
   - Breather hose
   - Turbocharger air inlet hose
   - PTC Heater
6. Set the turbocharger air outlet pipe, turbocharger air outlet hose, and air inlet pipe aside as a single unit as shown in the figure. (See 01-13B-6 INTAKE-AIR SYSTEM REMOVAL/ INSTALLATION [SKYACTIV-D 2.2].)
7. Drain the engine coolant. (See 01-12B-4 ENGINE COOLANT REPLACEMENT [SKYACTIV-D 2.2].)

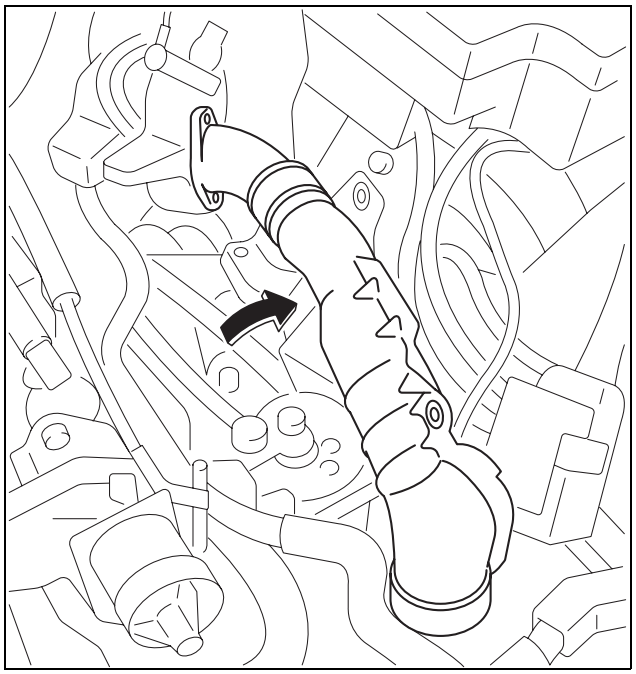
ac5jjw00003612

8. Set the water pipe component aside as shown in the figure.
9. Remove the EGR pipe (EGR valve side). (See 01-16B-9 EGR valve side.)
10. Remove the EGR cooler insulator. (See 01-16B-12 EGR COOLER REMOVAL/INSTALLATION [SKYACTIV-D 2.2].)
11. Set the EGR cooler out of the way. (See 01-16B-12 EGR COOLER REMOVAL/INSTALLATION [SKYACTIV-D 2.2].)

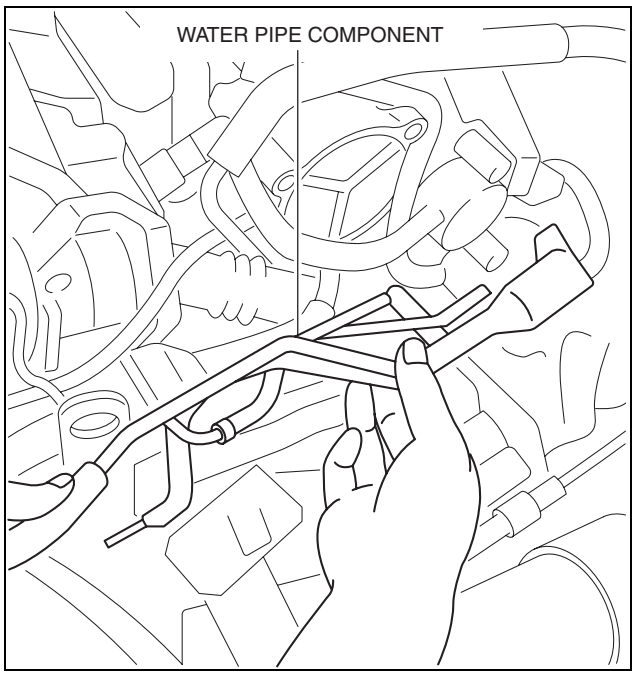

ac5wzw0000486

EMISSION SYSTEM [SKYACTIV-D 2.2]

12. Remove in the order shown in the figure.

1	EGR pipe (EGR cooler bypass valve side) installation bolt No.1 (See 01-16B-11 EGR pipe (EGR cooler bypass valve side) installation bolt removal note.) (See 01-16B-11 EGR pipe (EGR cooler bypass valve side) installation bolt installation note.)
2	EGR pipe (EGR cooler bypass valve side) installation bolt No.2 (See 01-16B-11 EGR pipe (EGR cooler bypass valve side) installation bolt installation note.)
3	EGR pipe (EGR cooler bypass valve side)

13. Install in the reverse order of removal.

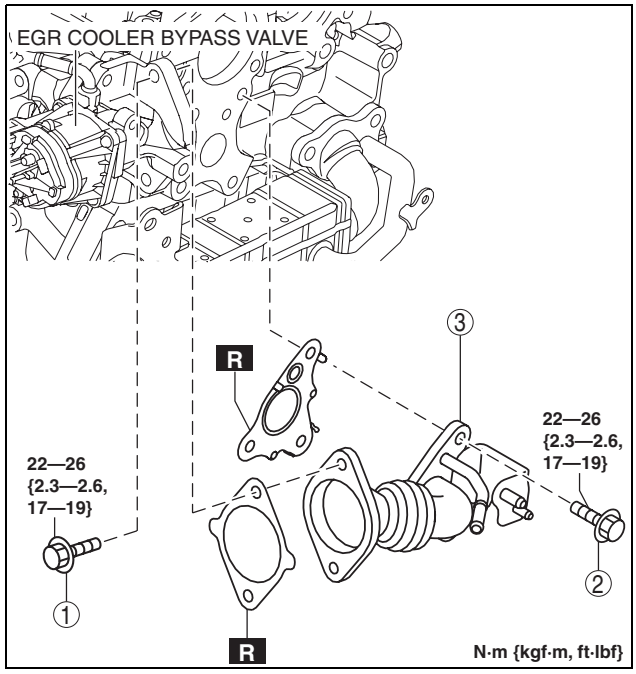

ac5wzw0000486

EGR pipe (EGR cooler bypass valve side) installation bolt removal note

1. Remove the harness bracket.
2. Remove the EGR pipe (EGR cooler bypass valve side) installation bolt No.1.

EGR pipe (EGR cooler bypass valve side) installation bolt installation note

1. Temporarily tighten the bolt until the flanged of the retaining bolt No.1 and No.2 of the EGR pipe (of the EGR cooler bypass valve) are completely seated.
2. Tighten the EGR pipe (EGR cooler bypass valve side) installation bolt No.2.
3. Tighten the EGR pipe (EGR cooler bypass valve side) installation bolt No.1.

Intake manifold side

1. Remove the intake manifold. (See 01-13B-6 INTAKE-AIR SYSTEM REMOVAL/INSTALLATION [SKYACTIV-D 2.2].)
2. Remove the EGR pipe (intake manifold side).
3. Install in the reverse order of removal.

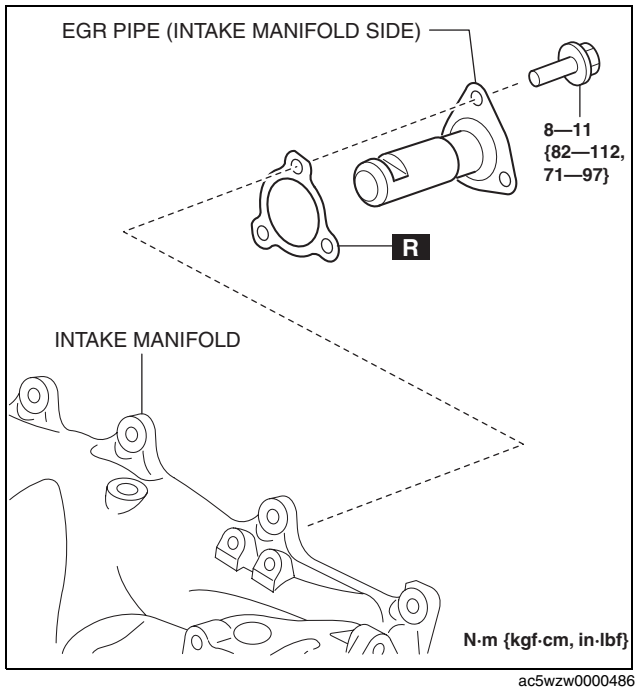

ac5wzw0000486

EMISSION SYSTEM [SKYACTIV-D 2.2]

ROLLOVER VALVE REMOVAL/INSTALLATION [SKYACTIV-D 2.2]

id0116e1804600

Note
- The rollover valve cannot be removed as it is built into the fuel tank.

1. Remove the fuel tank. (See 01-14B-10 FUEL TANK REMOVAL/INSTALLATION [SKYACTIV-D 2.2].)

ROLLOVER VALVE INSPECTION [SKYACTIV-D 2.2]

id0116e1804500

Note
- The rollover valve cannot be disassembled and inspected as it is built into the fuel tank.

1. Perform the fuel tank inspection. (See 01-14B-21 FUEL TANK INSPECTION [SKYACTIV-D 2.2].)
   - If there is any malfunction, replace the fuel tank. (See 01-14B-10 FUEL TANK REMOVAL/INSTALLATION [SKYACTIV-D 2.2].)

EGR COOLER REMOVAL/INSTALLATION [SKYACTIV-D 2.2]

id0116e1099000

Note
- If the EGR cooler bypass valve is replaced, perform the EGR initialization procedure.

1. Disconnect the negative battery cable. (See 01-17B-9 NEGATIVE BATTERY CABLE DISCONNECTION/ CONNECTION [SKYACTIV-D 2.2].)
2. Remove the engine cover. (See 01-10B-4 ENGINE COVER REMOVAL/INSTALLATION [SKYACTIV-D 2.2].)
3. Remove the air cleaner. (See 01-13B-6 INTAKE-AIR SYSTEM REMOVAL/INSTALLATION [SKYACTIV-D 2.2].)
4. Remove the battery and the battery tray. (See 01-17B-3 BATTERY REMOVAL/INSTALLATION [SKYACTIV-D 2.2].)
5. Remove the following parts as a single unit: (See 01-13B-6 INTAKE-AIR SYSTEM REMOVAL/INSTALLATION [SKYACTIV-D 2.2].)
   - Air hose
   - Air inlet pipe
   - Breather hose
   - Turbocharger air inlet hose
   - PTC Heater
6. Set the turbocharger air outlet pipe, turbocharger air outlet hose, and air inlet pipe aside as a single unit as shown in the figure. (See 01-13B-6 INTAKE-AIR SYSTEM REMOVAL/ INSTALLATION [SKYACTIV-D 2.2].)
7. Drain the engine coolant. (See 01-12B-4 ENGINE COOLANT REPLACEMENT [SKYACTIV-D 2.2].)

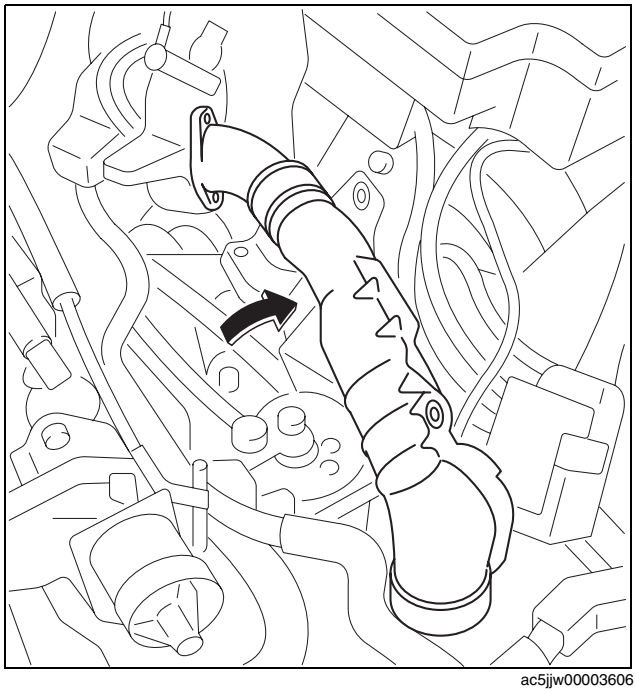

ac5jjw00003606

8. Set the water pipe component aside as shown in the figure.

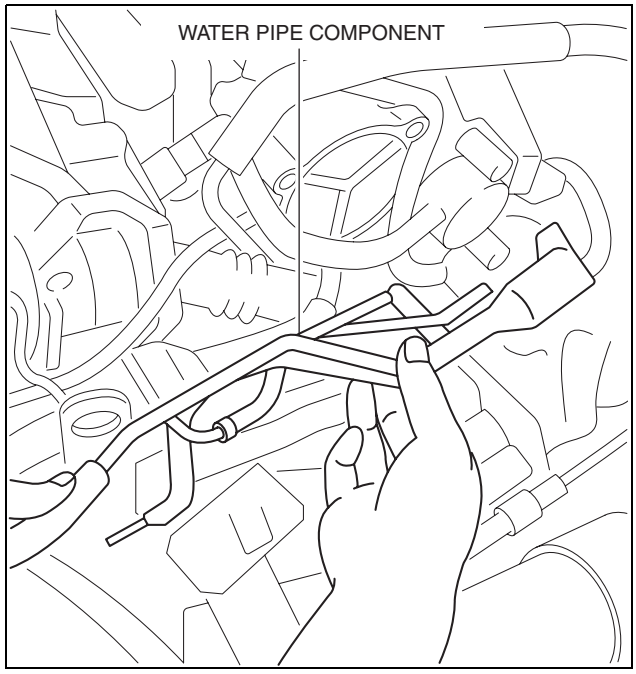

ac5wzw0000481

9. Detach the wiring harness clips shown in the figure.
10. Remove in the order shown in the figure.

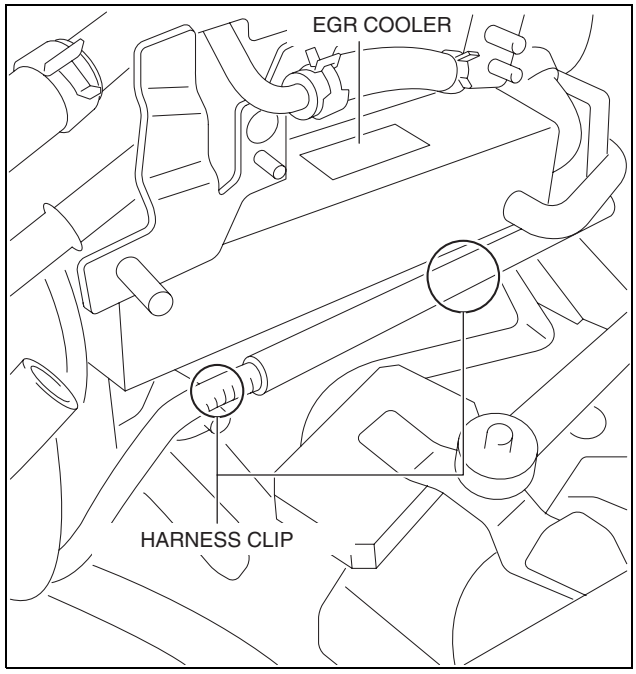

ac5wzw0000532

EMISSION SYSTEM [SKYACTIV-D 2.2]

11. Install in the reverse order of removal.

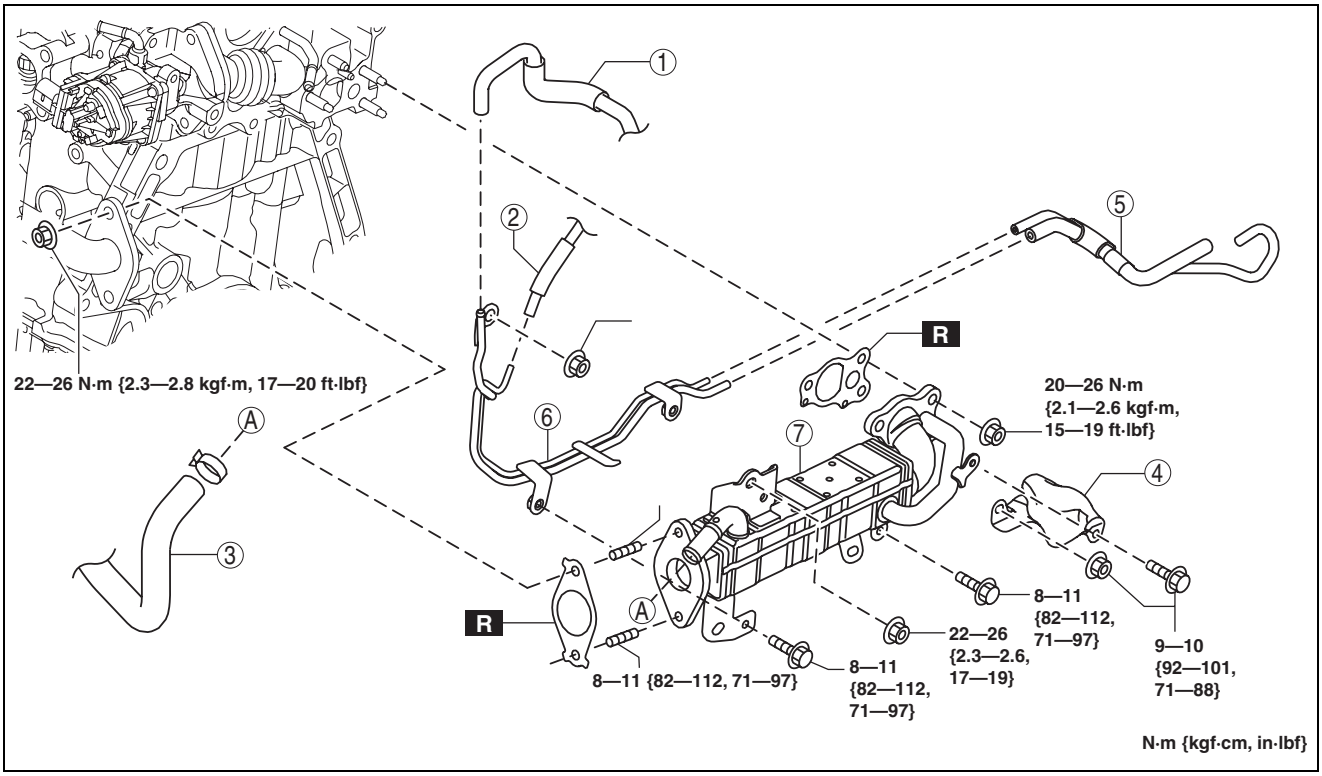

ac5wzw0000532

1	Vacuum hose No.1 (See 01-16B-16 Vacuum Hose No.1 Installation Note.)
2	Vacuum hose No.2 (See 01-16B-16 Vacuum Hose No.2 Installation Note.)
3	Water hose

4	EGR cooler insulator
5	Vacuum hose No.3 (See 01-16B-14 Vacuum Hose No.3 Removal Note.) (See 01-16B-15 Vacuum Hose No.3 Installation Note.)
6	Vacuum pipe
7	EGR cooler

Vacuum Hose No.3 Removal Note

1. Disconnect vacuum hose No.3 on the vacuum pipe bracket side.
2. Disconnect vacuum hose No.3, the vacuum pipe and the EGR cooler as a single unit.
3. Remove vacuum hose No.3.

EMISSION SYSTEM [SKYACTIV-D 2.2]

Vacuum Hose No.3 Installation Note

1. Install vacuum hose No.3 as shown in the figure.

Vacuum pipe side

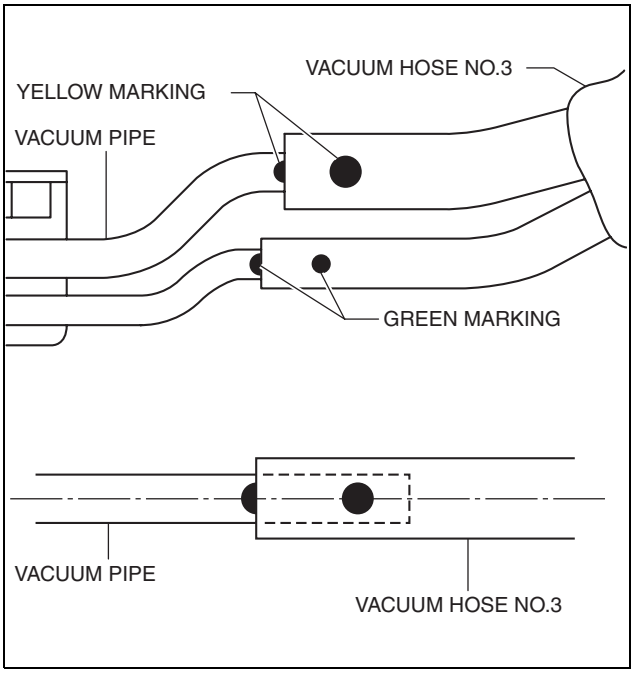

ac5wzw0000532

Vacuum pipe bracket side

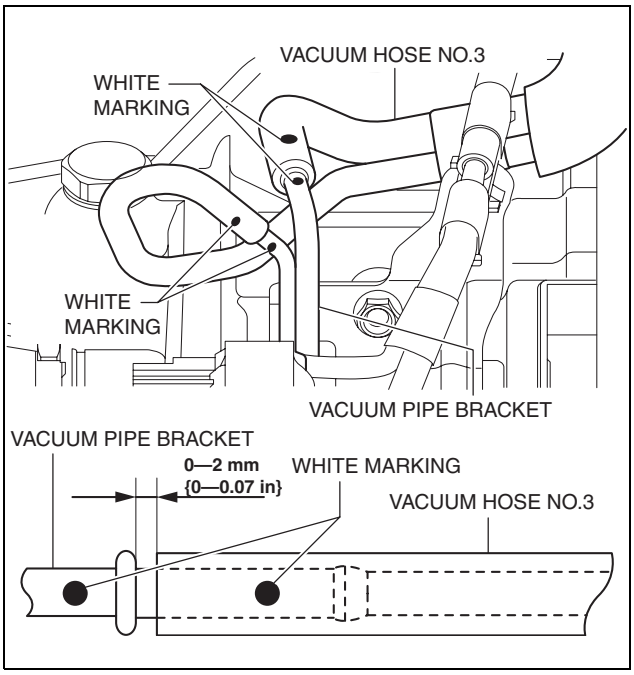

ac5wzw0000532

EMISSION SYSTEM [SKYACTIV-D 2.2]

Vacuum Hose No.2 Installation Note

1. Install vacuum hose No.2 as shown in the figure.

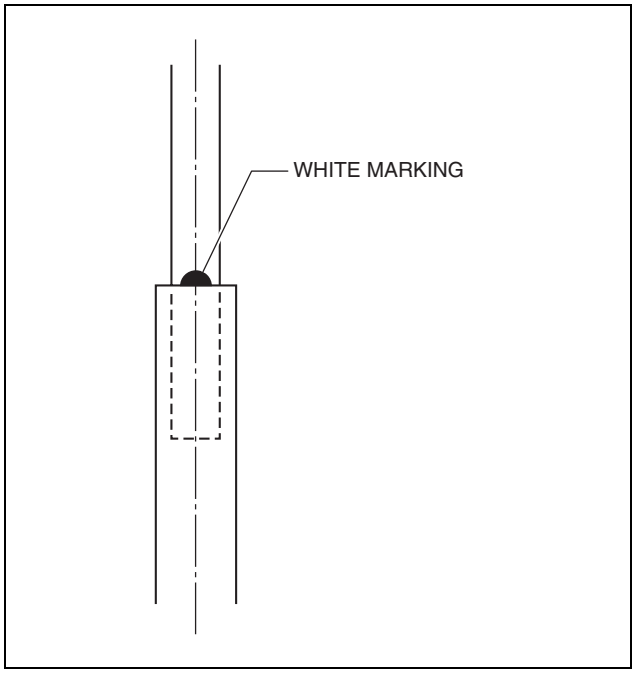

ac5wzw0000532

Vacuum Hose No.1 Installation Note

1. Install vacuum hose No.1 as shown in the figure.

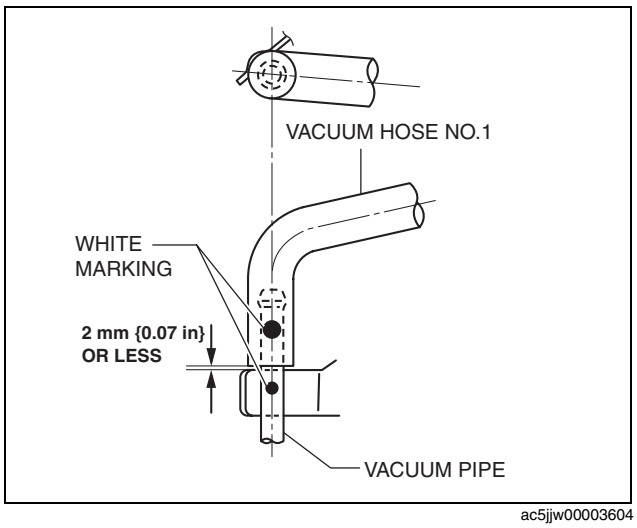

ac5jjw00003604

EMISSION SYSTEM [SKYACTIV-D 2.2]

EGR COOLER INSPECTION [SKYACTIV-D 2.2]

id0116e1099800

1. Disconnect the negative battery cable. (See 01-17B-9 NEGATIVE BATTERY CABLE DISCONNECTION/ CONNECTION [SKYACTIV-D 2.2].)
2. Remove the EGR cooler. (See 01-16B-12 EGR COOLER REMOVAL/INSTALLATION [SKYACTIV-D 2.2].)
3. Verify that there is airflow from port B when pressure is applied from port A.
   - If there is no airflow, replace the EGR cooler. (See 01-16B-12 EGR COOLER REMOVAL/ INSTALLATION [SKYACTIV-D 2.2].)

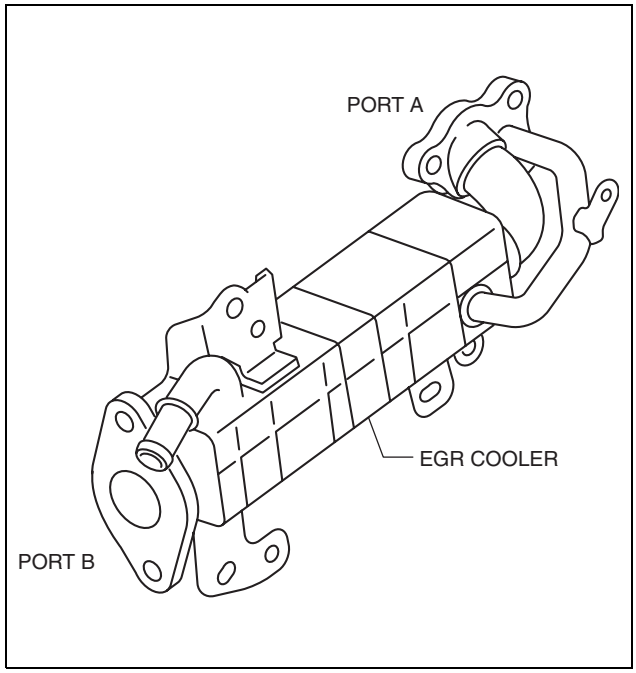

ac5wzw0000475

EGR COOLER BYPASS VALVE REMOVAL/INSTALLATION [SKYACTIV-D 2.2]

id0116e1299000

Note
- If the EGR cooler bypass valve is replaced, perform the EGR initialization procedure.

1. Disconnect the negative battery cable. (See 01-17B-9 NEGATIVE BATTERY CABLE DISCONNECTION/ CONNECTION [SKYACTIV-D 2.2].)
2. Remove the engine cover. (See 01-10B-4 ENGINE COVER REMOVAL/INSTALLATION [SKYACTIV-D 2.2].)
3. Remove the air cleaner. (See 01-13B-6 INTAKE-AIR SYSTEM REMOVAL/INSTALLATION [SKYACTIV-D 2.2].)
4. Remove the battery and the battery tray. (See 01-17B-3 BATTERY REMOVAL/INSTALLATION [SKYACTIV-D 2.2].)
5. Remove the following parts as a single unit: (See 01-13B-6 INTAKE-AIR SYSTEM REMOVAL/INSTALLATION [SKYACTIV-D 2.2].)
   - Air hose
   - Air inlet pipe
   - Breather hose
   - Turbocharger air inlet hose
   - PTC Heater

EMISSION SYSTEM [SKYACTIV-D 2.2]

6. Set the turbocharger air outlet pipe, turbocharger air outlet hose, and air inlet pipe aside as a single unit as shown in the figure. (See 01-13B-6 INTAKE-AIR SYSTEM REMOVAL/ INSTALLATION [SKYACTIV-D 2.2].)
7. Drain the engine coolant. (See 01-12B-4 ENGINE COOLANT REPLACEMENT [SKYACTIV-D 2.2].)

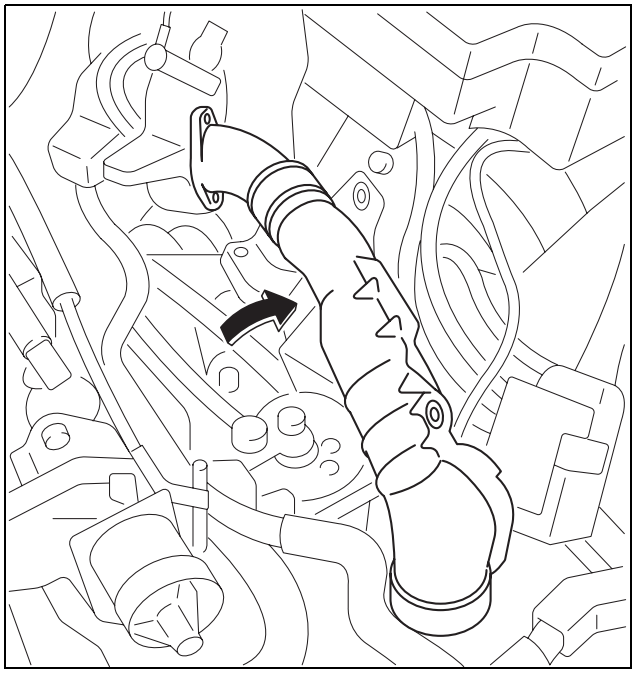
ac5jjw00003606

8. Set the water pipe component aside as shown in the figure.
9. Remove the EGR pipe (EGR valve side). (See 01-16B-9 EGR PIPE REMOVAL/INSTALLATION [SKYACTIV-D 2.2].)
10. Set the EGR cooler out of the way. (See 01-16B-12 EGR COOLER REMOVAL/INSTALLATION [SKYACTIV-D 2.2].)

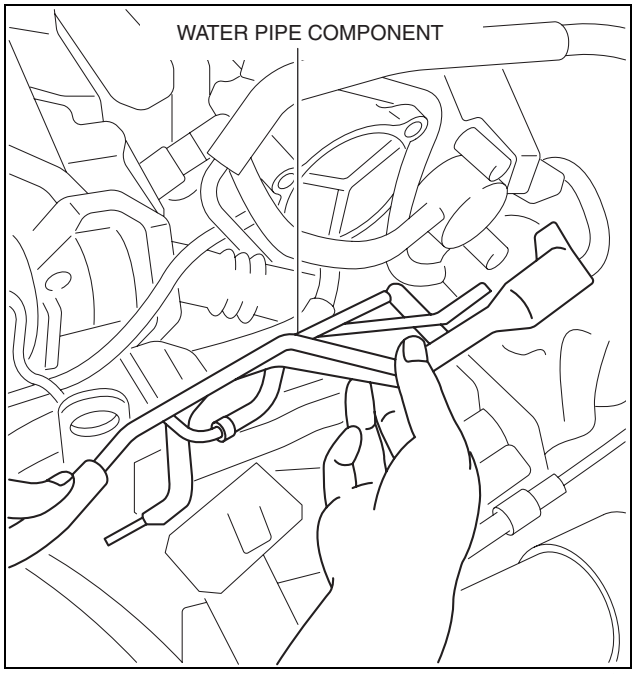

ac5wzw0000485

EMISSION SYSTEM [SKYACTIV-D 2.2]

11. Remove in the order shown in the figure.

1	EGR cooler bypass valve connector
2	Water hose No.1 (See 01-16B-20 Water Hose No.1 Installation Note.)
3	Water hose No.2 (See 01-16B-19 Water hose No.2 Removal Note.) (See 01-16B-19 Water Hose No.2 Installation Note.)
4	Wiring harness bracket
5	EGR cooler bypass valve installation bolt No.1 (See 01-16B-19 EGR Cooler Bypass Valve Installation Bolt Installation Note.)
6	EGR cooler bypass valve installation bolt No.2 (See 01-16B-19 EGR Cooler Bypass Valve Installation Bolt Installation Note.)
7	EGR cooler bypass valve

12. Install in the reverse order of removal.

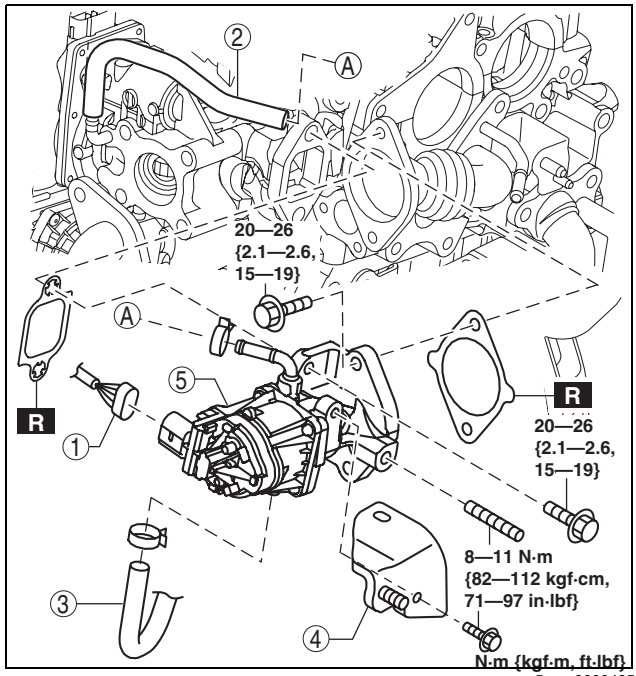

ac5wzw0000485

Water hose No.2 Removal Note

1. Remove the coolant reserve tank. (See 01-12B-8 COOLANT RESERVE TANK REMOVAL/INSTALLATION [SKYACTIV-D 2.2].)
2. Remove the water hose No.2.

EGR Cooler Bypass Valve Installation Bolt Installation Note

1. Temporarily tighten the bolt until the flanged of the retaining bolt No.1 and No.2 of the EGR pipe (of the EGR cooler bypass valve) are completely seated.
2. Tighten the EGR cooler bypass valve installation bolt No.2.
3. Tighten the EGR cooler bypass valve installation bolt No.1.

Water Hose No.2 Installation Note

1. Install water hose No.2 as shown in the figure.

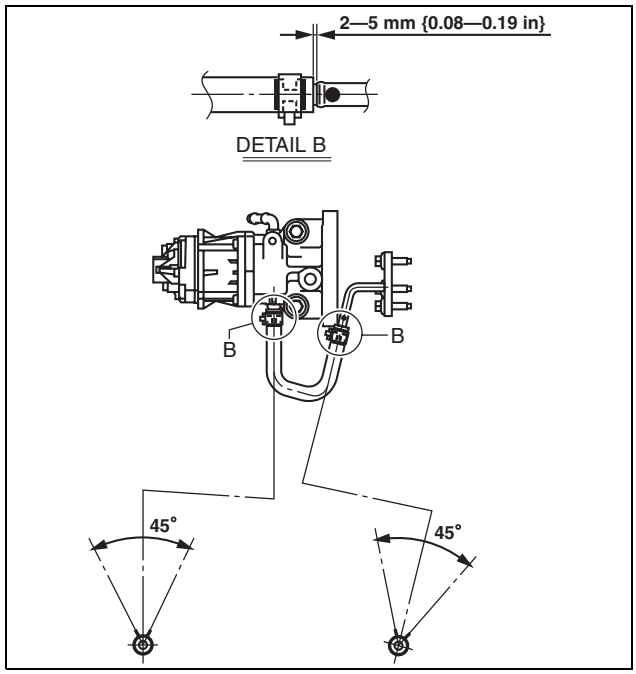

ac5wzw0000485

EMISSION SYSTEM [SKYACTIV-D 2.2]

Water Hose No.1 Installation Note

1. Install water hose No.1 as shown in the figure.

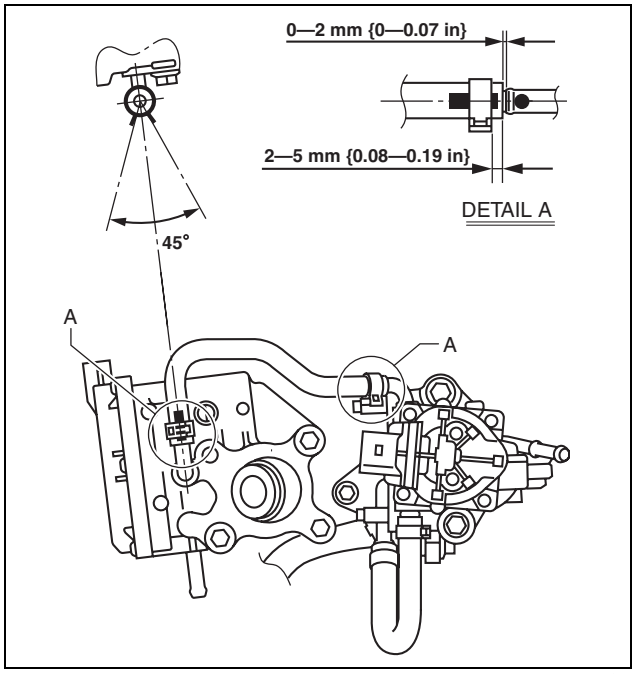

ac5wzw0000485

EGR COOLER BYPASS VALVE INSPECTION [SKYACTIV-D 2.2]

id0116e1299100

Resistance inspection

1. Disconnect the negative battery cable. (See 01-17B-9 NEGATIVE BATTERY CABLE DISCONNECTION/CONNECTION [SKYACTIV-D 2.2].)
2. Remove the engine cover. (See 01-10B-4 ENGINE COVER REMOVAL/INSTALLATION [SKYACTIV-D 2.2].)
3. Disconnect the EGR cooler bypass connector.
4. Inspect the resistance between EGR cooler bypass valve terminals A and E.

   EGR cooler bypass valve resistance (specification)
   1.45—2.95 ohms [20 °C {68 °F}]

   - If not within the specification, replace the EGR cooler bypass valve. (See 01-16B-17 EGR COOLER BYPASS VALVE REMOVAL/INSTALLATION [SKYACTIV-D 2.2].)

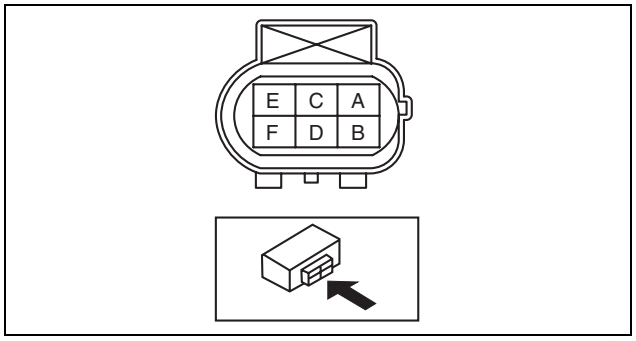

ac5wzw0000476

EMISSION SYSTEM [SKYACTIV-D 2.2]

INTAKE SHUTTER VALVE REMOVAL/INSTALLATION [SKYACTIV-D 2.2]

id0116e1708200

Note
- If the intake shutter valve is replaced, perform the intake shutter valve initialization procedure.

1. Disconnect the negative battery cable. (See 01-17B-9 NEGATIVE BATTERY CABLE DISCONNECTION/ CONNECTION [SKYACTIV-D 2.2].)
2. Remove front under cover No.1 and front under cover No.2. (See 09-16-40 FRONT UNDER COVER No.1 REMOVAL/INSTALLATION.) (See 09-16-41 FRONT UNDER COVER No.2 REMOVAL/INSTALLATION.)
3. Remove the charge air cooler outlet hose. (See 01-13B-6 INTAKE-AIR SYSTEM REMOVAL/INSTALLATION [SKYACTIV-D 2.2].)
4. Drain the engine coolant. (See 01-12B-4 ENGINE COOLANT REPLACEMENT [SKYACTIV-D 2.2].)
5. Remove in the order shown in the figure.

1	Intake shutter valve connector
2	Water hose No.1 (See 01-16B-21 Water Hose No.1 Removal Note.) (See 01-16B-22 Water Pipe No.1 Installation Note.)
3	Water hose No.2 (See 01-16B-22 Water Hose No.2 Installation Note.)
4	Intake shutter valve

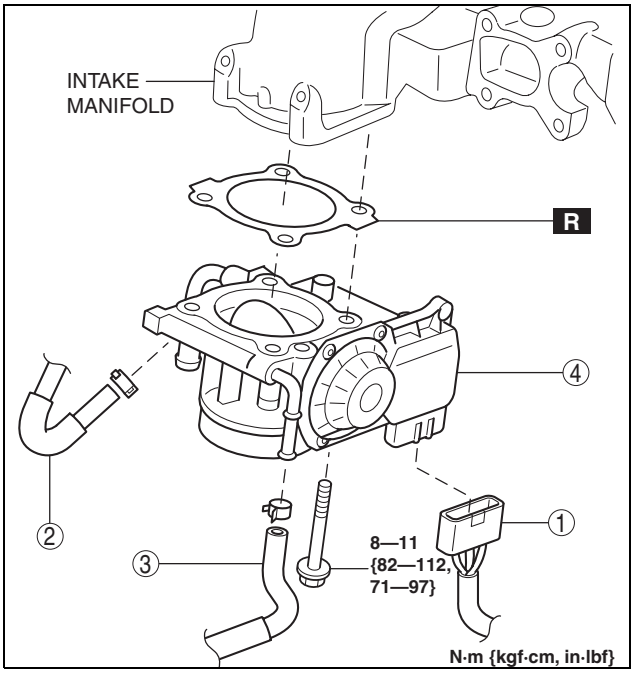

ac5wzw0000475

6. Install in the reverse order of removal.

Water Hose No.1 Removal Note

1. Remove the coolant reserve tank. (See 01-12B-8 COOLANT RESERVE TANK REMOVAL/INSTALLATION [SKYACTIV-D 2.2].)
2. Detach the wiring harness clips shown in the figure.
3. Remove the water hose No.1

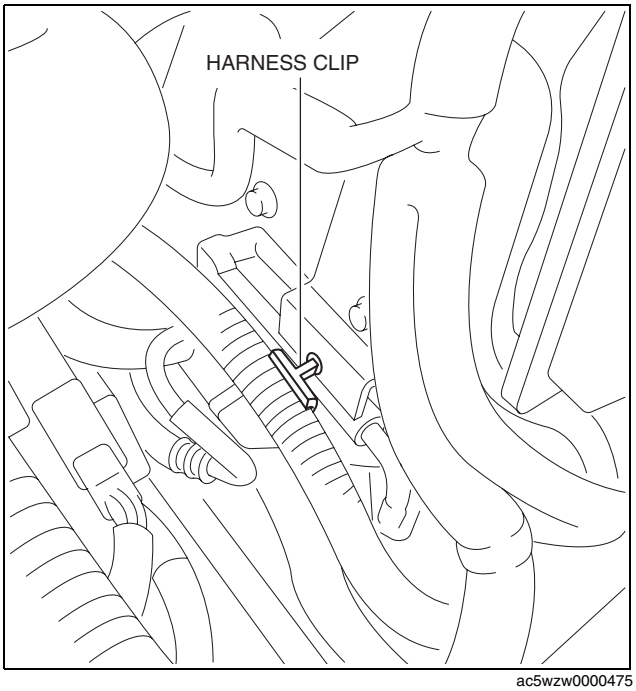

ac5wzw0000475

EMISSION SYSTEM [SKYACTIV-D 2.2]

Water Hose No.2 Installation Note

1. Install water hose No.2 as shown in the figure.

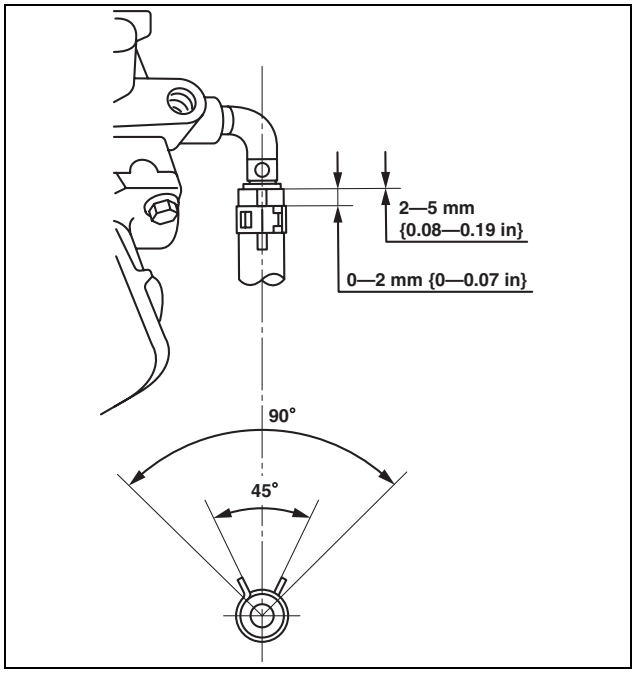

ac5wzw0000475

Water Pipe No.1 Installation Note

1. Install water hose No.1 as shown in the figure.

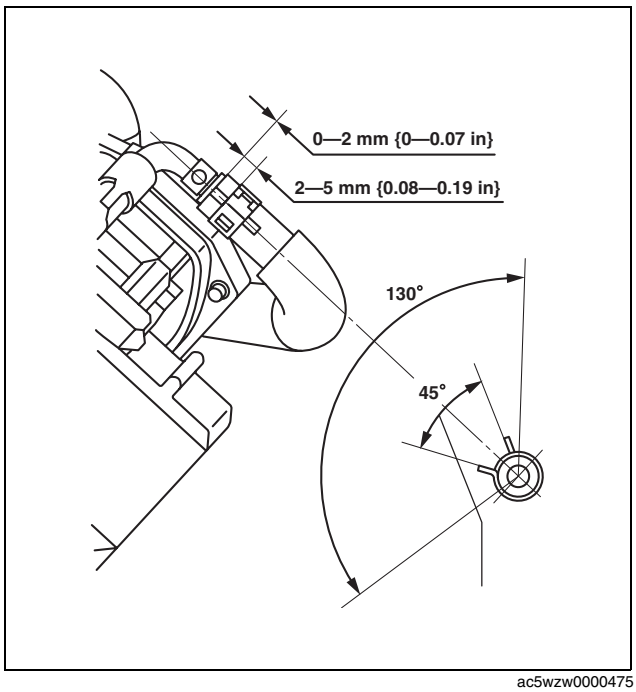

ac5wzw0000475

EMISSION SYSTEM [SKYACTIV-D 2.2]

INTAKE SHUTTER VALVE INSPECTION [SKYACTIV-D 2.2]

id0116e1093500

Resistance inspection

1. Disconnect the negative battery cable. (See 01-17B-9 NEGATIVE BATTERY CABLE DISCONNECTION/CONNECTION [SKYACTIV-D 2.2].)
2. Remove the engine cover. (See 01-10B-4 ENGINE COVER REMOVAL/INSTALLATION [SKYACTIV-D 2.2].)
3. Disconnect the intake shutter valve connector.
4. Inspect the resistance between intake shutter valve terminals A and B.

   Intake shutter valve resistance (specification)
   0.3—100 ohms [20 °C {68 °F}]

   - If not within the specification, replace the intake shutter valve. (See 01-16B-21 INTAKE SHUTTER VALVE REMOVAL/INSTALLATION [SKYACTIV-D 2.2].)

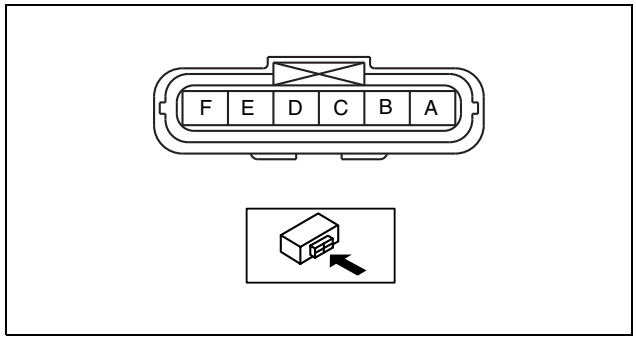

ac5jjw00003544

CHECK VALVE REMOVAL/INSTALLATION [SKYACTIV-D 2.2]

id0116e1189700

1. Perform the following procedure.
   6:4 split type seat
   1. Remove the rear seat cushion. (See 09-13-76 REAR SEAT CUSHION REMOVAL/INSTALLATION.)
   4:2:4 split type seat
   1. Set the rear seat aside as shown in the figure. (See 09-13-56 REAR SEAT REMOVAL/INSTALLATION.)

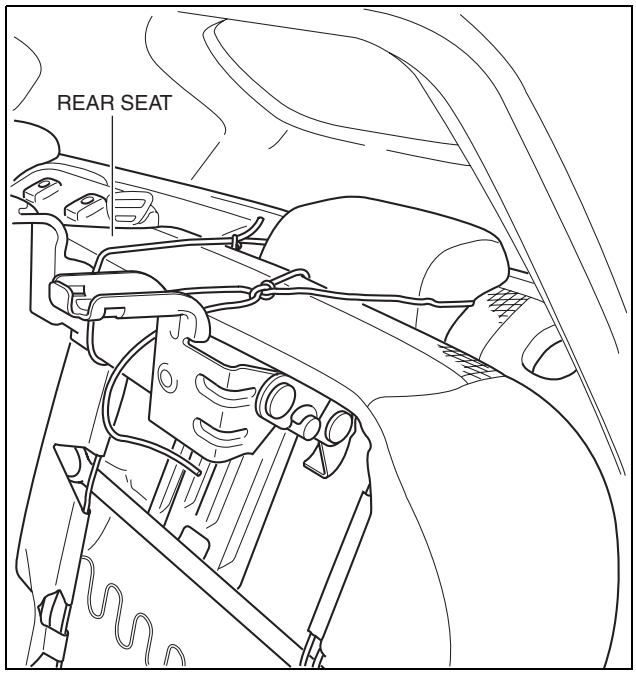

ac5wzw0000482

EMISSION SYSTEM [SKYACTIV-D 2.2]

2. Partially peel back the floor mat as shown in the figure.

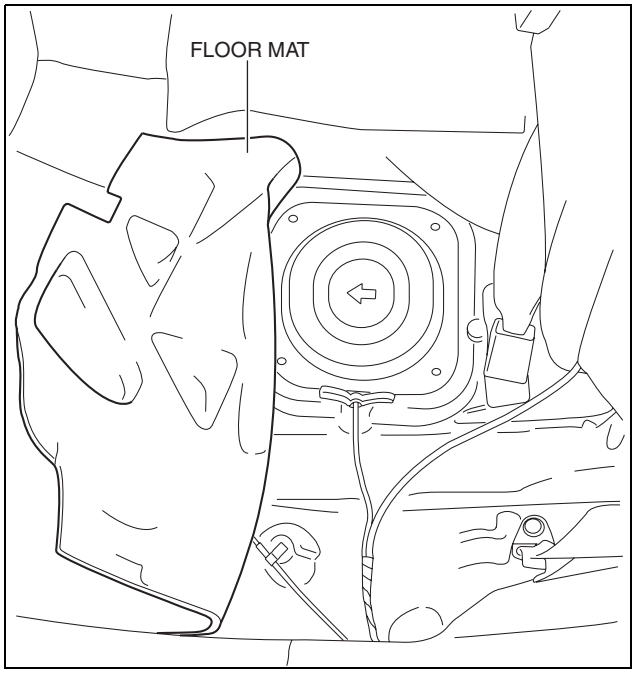

ac5wzw0000482

3. Remove the service hole cover.

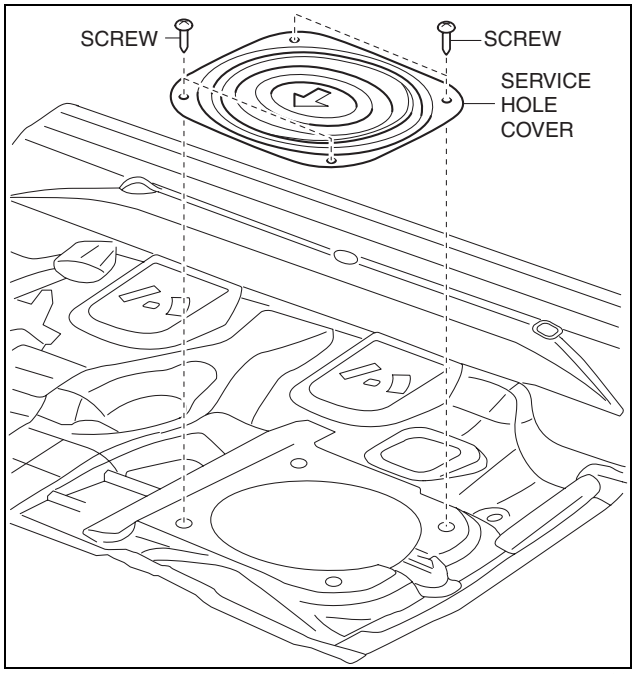

ac5wzw0000483

EMISSION SYSTEM [SKYACTIV-D 2.2]

4. Remove in the order shown in the figure.

1	Evaporative hose
2	Check valve

5. Install in the reverse order of removal.

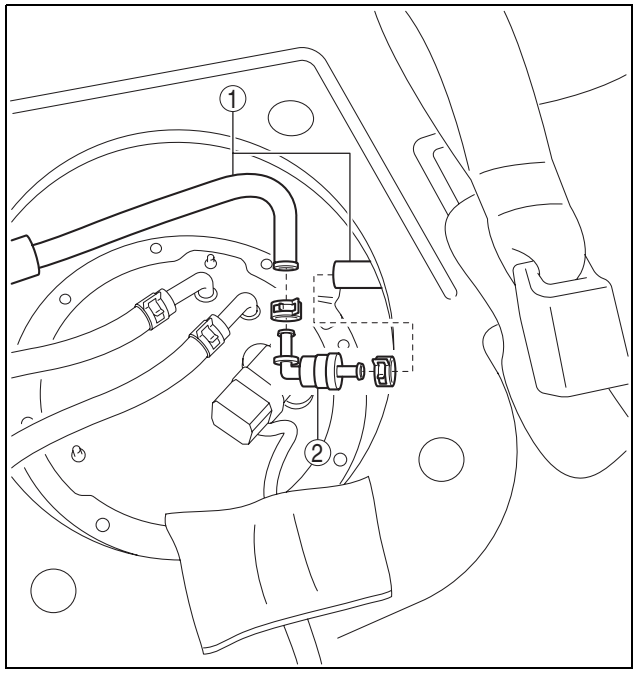

ac5jjw00003605

CHECK VALVE INSPECTION [SKYACTIV-D 2.2]

id0116e1189900

1. Remove the check valve. (See 01-16B-23 CHECK VALVE REMOVAL/INSTALLATION [SKYACTIV-D 2.2].)
2. Apply vacuum to port A and verify that there is no airflow.
   - If there is airflow, replace the check valve. (See 01-16B-23 CHECK VALVE REMOVAL/INSTALLATION [SKYACTIV-D 2.2].)
3. Verify that there is airflow when vacuum is applied to port A.
   - If there is no airflow, replace the check valve. (See 01-16B-23 CHECK VALVE REMOVAL/INSTALLATION [SKYACTIV-D 2.2].)

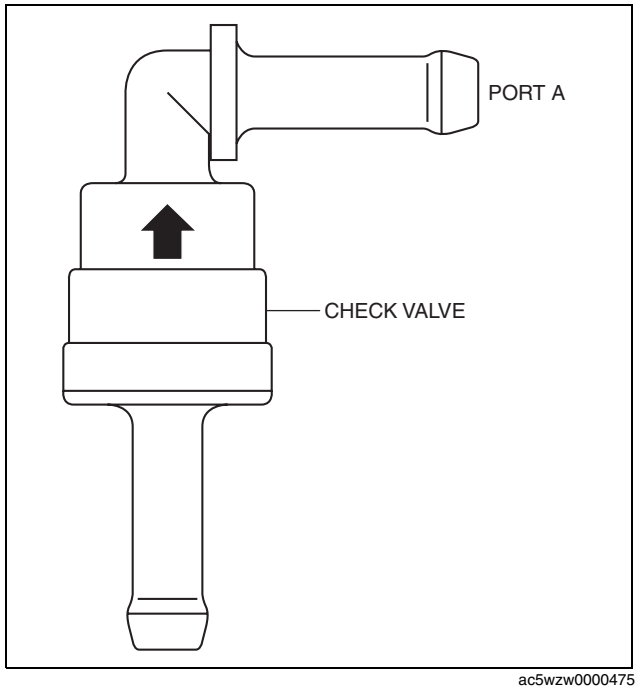

ac5wzw0000475

01-17A CHARGING SYSTEM [SKYACTIV-G 2.0]

CHARGING SYSTEM LOCATION INDEX [SKYACTIV-G 2.0] 01-17A–2
BATTERY REMOVAL/INSTALLATION [SKYACTIV-G 2.0] 01-17A–3
Operation After Replacing Battery (Vehicle With i-stop) 01-17A–3
Battery Removal/Installation 01-17A–4
BATTERY INSPECTION [SKYACTIV-G 2.0] 01-17A–7
Electrolyte Specific Gravity 01-17A–7
Parasitic Draw 01-17A–7
Battery inspection when i-stop warning light (amber) is flashing 01-17A–8
BATTERY INSPECTION [SKYACTIV-G 2.0 (WITHOUT i-stop)] 01-17A–8
Electrolyte Specific Gravity 01-17A–8
Battery Voltage. 01-17A–8
Parasitic Draw 01-17A–9
BATTERY RECHARGING [SKYACTIV-G 2.0] 01-17A–9
BATTERY RECHARGING [SKYACTIV-G 2.0 (WITHOUT i-stop)] 01-17A–10
NEGATIVE BATTERY CABLE DISCONNECTION/CONNECTION [SKYACTIV-G 2.0] 01-17A–11
Required procedure after negative battery cable terminal disconnection/connection. 01-17A–11
Negative Battery Cable Terminal Disconnection 01-17A–12
Negative Battery Cable Terminal Connection 01-17A–12
NEGATIVE BATTERY CABLE DISCONNECTION/CONNECTION [SKYACTIV-G 2.0 (WITHOUT i-stop)] 01-17A–13
Required procedure after negative battery cable disconnection/connection 01-17A–13
Negative Battery Cable Terminal Disconnection. 01-17A–13
Negative Battery Cable Terminal Connection 01-17A–13
BATTERY CONDITION INITIALIZATION SETTING (i-stop SETTING) [SKYACTIV-G 2.0] 01-17A–14
Battery Condition Initial setting (i-stop setting) Procedure 01-17A–14
GENERATOR REMOVAL/INSTALLATION [SKYACTIV-G 2.0] 01-17A–17
Generator Removal Note 01-17A–17
Generator Installation Note 01-17A–18
Drive Belt Auto Tensioner Installation Note 01-17A–19
GENERATOR INSPECTION [SKYACTIV-G 2.0] 01-17A–19
Charging System Warning Light 01-17A–19
Generator 01-17A–19
Generator Inner Parts 01-17A–22
GENERATOR DISASSEMBLY/ASSEMBLY [SKYACTIV-G 2.0] 01-17A–25
DC-DC CONVERTER REMOVAL/INSTALLATION [SKYACTIV-G 2.0] 01-17A–26
Vehicle With i-stop. 01-17A–26
DC-DC CONVERTER INSPECTION [SKYACTIV-G 2.0] 01-17A–27
DC-DC Converter Operation Inspection (Vehicle With i-stop) 01-17A–27

CHARGING SYSTEM [SKYACTIV-G 2.0]

CHARGING SYSTEM LOCATION INDEX [SKYACTIV-G 2.0]

id0117h5800100

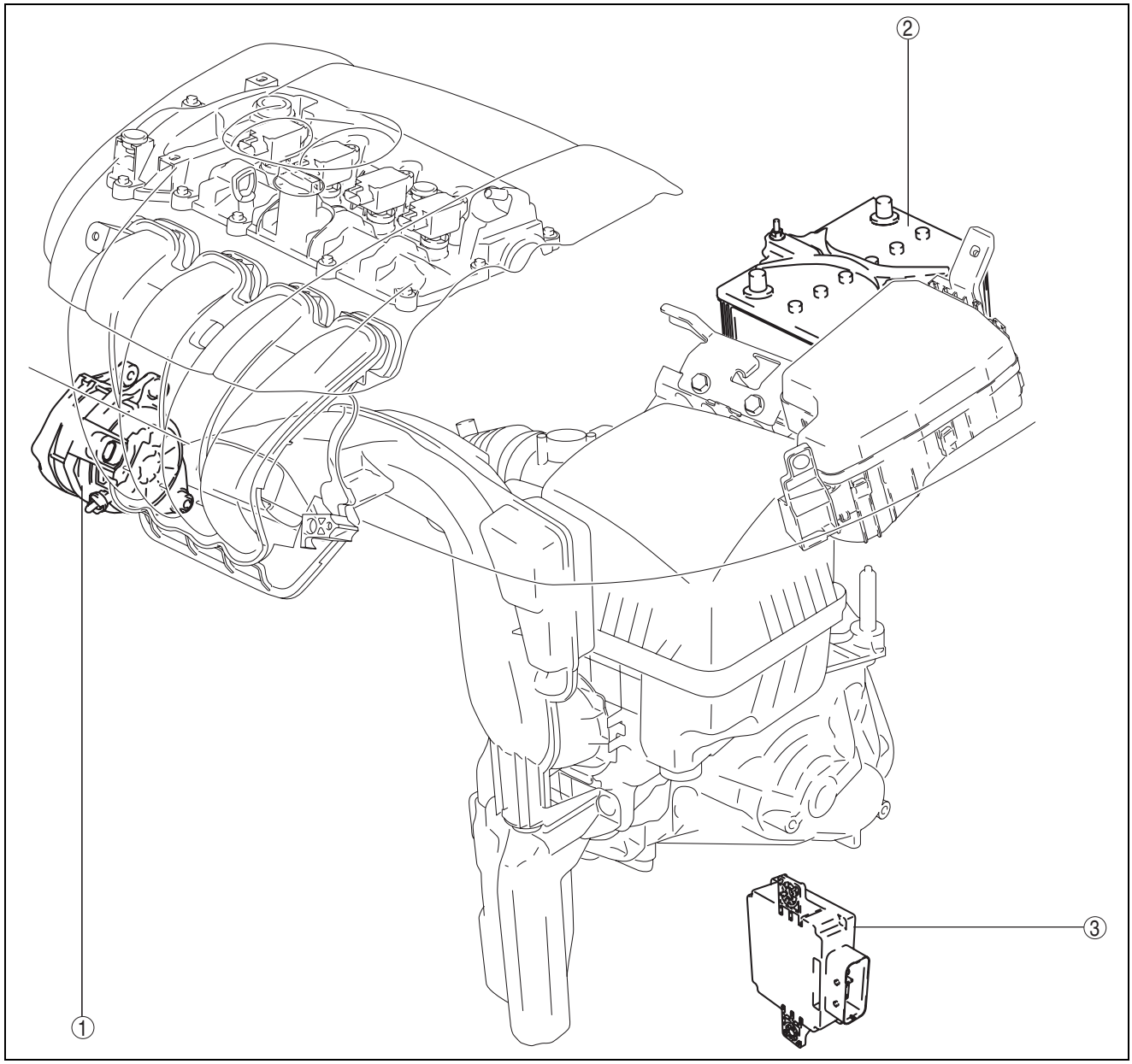

ac5wzw0000511

1	Generator (See 01-17A-17 GENERATOR REMOVAL/ INSTALLATION [SKYACTIV-G 2.0].) (See 01-17A-19 GENERATOR INSPECTION [SKYACTIV-G 2.0].) (See 01-17A-25 GENERATOR DISASSEMBLY/ ASSEMBLY [SKYACTIV-G 2.0].)

2	Battery (See 01-17A-11 NEGATIVE BATTERY CABLE DISCONNECTION/CONNECTION [SKYACTIV-G 2.0].) (See 01-17A-13 NEGATIVE BATTERY CABLE DISCONNECTION/CONNECTION [SKYACTIV-G 2.0 (WITHOUT i-stop)].) (See 01-17A-3 BATTERY REMOVAL/ INSTALLATION [SKYACTIV-G 2.0].) (See 01-17A-7 BATTERY INSPECTION [SKYACTIV-G 2.0].) (See 01-17A-8 BATTERY INSPECTION [SKYACTIV-G 2.0 (WITHOUT i-stop)].) (See 01-17A-9 BATTERY RECHARGING [SKYACTIV-G 2.0].) (See 01-17A-10 BATTERY RECHARGING [SKYACTIV-G 2.0 (WITHOUT i-stop)].) (See 01-17A-14 BATTERY CONDITION INITIALIZATION SETTING (i-stop SETTING) [SKYACTIV-G 2.0].)

CHARGING SYSTEM [SKYACTIV-G 2.0]

3	DC-DC converter (vehicle with i-stop) (See 01-17A-26 DC-DC CONVERTER REMOVAL/INSTALLATION [SKYACTIV-G 2.0].) (See 01-17A-27 DC-DC CONVERTER INSPECTION [SKYACTIV-G 2.0].)

BATTERY REMOVAL/INSTALLATION [SKYACTIV-G 2.0]

id0117h5800500

Operation After Replacing Battery (Vehicle With i-stop)

Note

- If the battery charge/discharge flow (number of times battery can operate) exceeds the specification, a DTC is recorded and the i-stop warning light (amber) flashes. If the battery charge/discharge flow (number of times battery can operate) exceeds the specification, replace the battery with a new one.
- When replacing the battery, perform the following procedure: When replacing the PCM simultaneously, perform the PCM configuration first. (See 01-40-10 PCM REMOVAL/INSTALLATION [SKYACTIV-G 2.0].) (See 01-40-39 PCM CONFIGURATION (USING READ/WRITE FUNCTION) [SKYACTIV-G 2.0].) (See 01-40-39 PCM CONFIGURATION (USING AS-BUILT DATA) [SKYACTIV-G 2.0].)

Without TFT LCD display

Step	Action
1	Switch the ignition ON (engine off).
2	Shift the selector lever to the N position.
3	Perform the following work with the brake pedal depressed. 1. Depress the accelerator pedal for 5 s or more. 2. Verify that the charging system warning light and the master warning light flash. 3. Depress and release the accelerator pedal 3 times. 4. Verify that the charging system warning light illuminates and the master warning light turns off.
4	Switch the ignition off and disconnect the negative battery cable. (See 01-17A-11 NEGATIVE BATTERY CABLE DISCONNECTION/CONNECTION [SKYACTIV-G 2.0].)
5	Verifying battery condition initialization setting (i-stop setting). (See 01-17A-14 BATTERY CONDITION INITIALIZATION SETTING (i-stop SETTING) [SKYACTIV-G 2.0].)

With TFT LCD display

Step	Action
1	Close the all doors.
2	Switch the ignition ON (engine off).
3	If a warning message is displayed in the LCD display, clear the screen using the INFO switch and then go to the next step.
4	Shift the selector lever to the N position.
5	Perform the following work with the brake pedal depressed. 1. Depress the accelerator pedal for 5 s or more. 2. Verify that a warning message (master warning light) on the LCD flashes. 3. Depress and release the accelerator pedal 3 times. 4. Verify that a warning message (master warning light) on the LCD turn off.
6	Switch the ignition off and disconnect the negative battery cable. (See 01-17A-11 NEGATIVE BATTERY CABLE DISCONNECTION/CONNECTION [SKYACTIV-G 2.0].)
7	Verifying battery condition initialization setting (i-stop setting). (See 01-17A-14 BATTERY CONDITION INITIALIZATION SETTING (i-stop SETTING) [SKYACTIV-G 2.0].)

CHARGING SYSTEM [SKYACTIV-G 2.0]

Battery Removal/Installation

1. Remove in the order indicated in the table.
2. Install in the reverse order of removal.

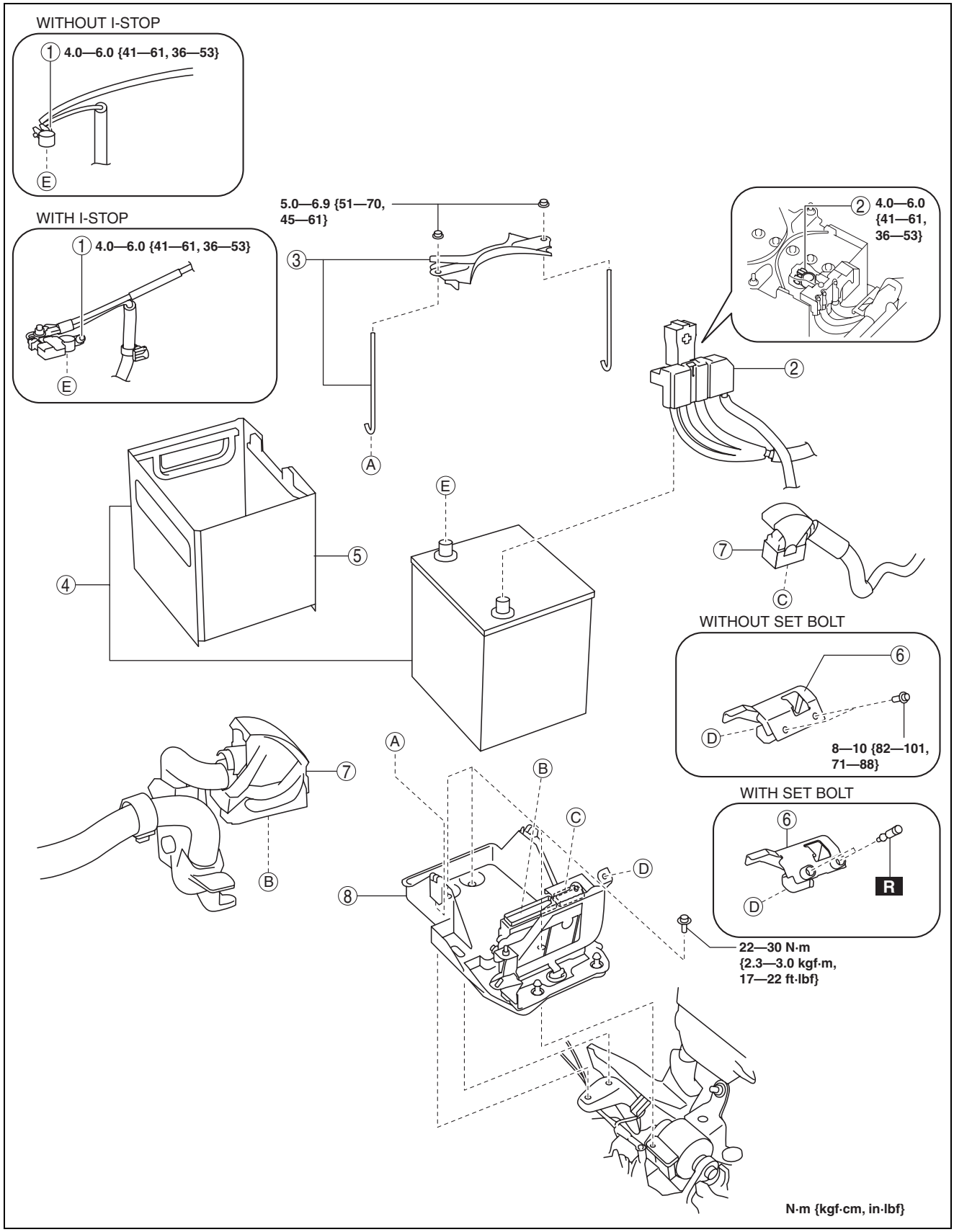

ac5wzw0000511

CHARGING SYSTEM [SKYACTIV-G 2.0]

1	Negative battery cable (See 01-17A-11 NEGATIVE BATTERY CABLE DISCONNECTION/CONNECTION [SKYACTIV-G 2.0])
2	Positive battery cable
3	Battery clamp
4	Battery, battery box (See 01-17A-5 Battery, battery box removal Note.)
5	Battery box (See 01-17A-6 Battery box installation note.)
6	PCM cover (See 01-40-10 PCM REMOVAL/INSTALLATION [SKYACTIV-G 2.0])
7	PCM connector (See 01-40-10 PCM REMOVAL/INSTALLATION [SKYACTIV-G 2.0])
8	Battery tray and PCM component (See 01-17A-5 Battery tray and PCM component Removal note.)

Battery, battery box removal Note

Caution

- **When removing the battery, do not place the battery on the PCM connector or hit it with the battery. Otherwise, the PCM or PCM connector could be damaged.**

1. Remove the battery with the battery box while the battery is positioned at an angle as shown in the figure.

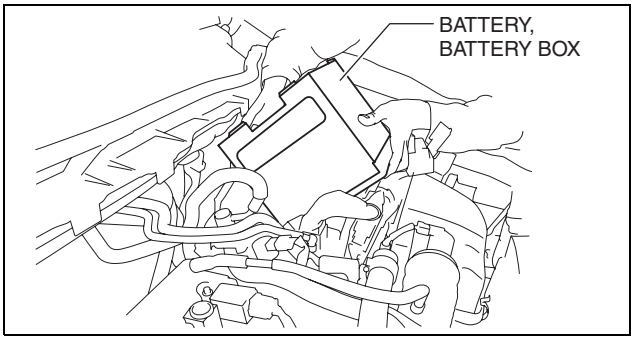

ac5wzw0000265

Battery tray and PCM component Removal note

1. Remove the air cleaner, air hose and fresh air duct component. (See 01-13A-6 INTAKE-AIR SYSTEM REMOVAL/INSTALLATION [SKYACTIV-G 2.0].)
2. Remove the bolt and nut securing the wiring harness protector to the battery tray.
3. Remove three battery tray bolts so that the battery tray is free to move.

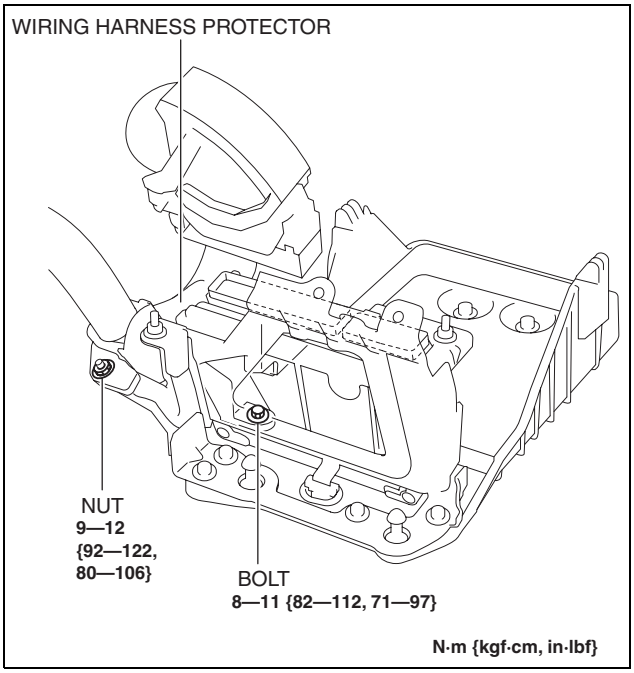

ac5wzw0000308

CHARGING SYSTEM [SKYACTIV-G 2.0]

4. Release the wiring harness clips at the three locations shown in the figure and remove the battery tray and PCM component.

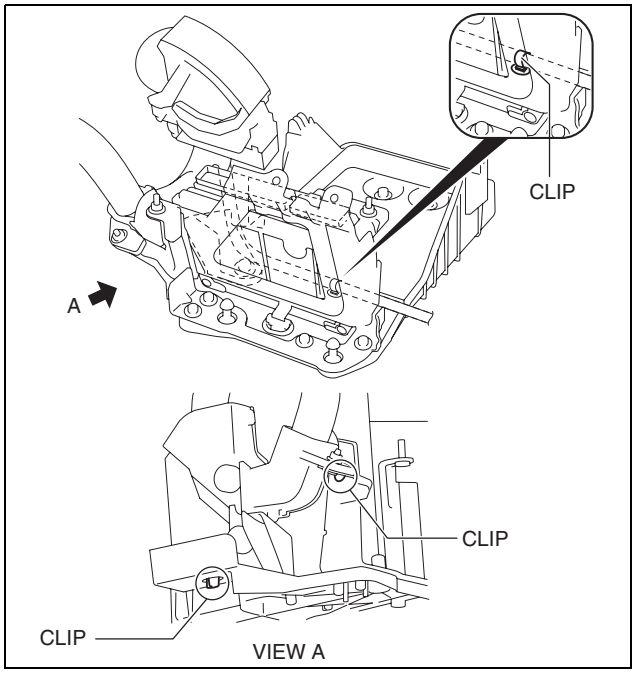

ac5wzw0000308

5. When replacing the battery tray with a new one, perform the following procedure:
   (1) Remove the PCM and bracket component.
   (2) Remove the bracket.

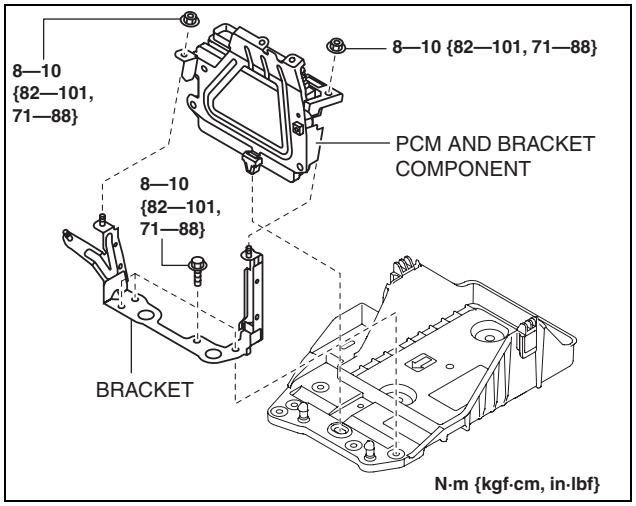

ac5wzw0000265

Battery box installation note

1. Install the battery box so that the side with the larger notch faces toward the engine side.

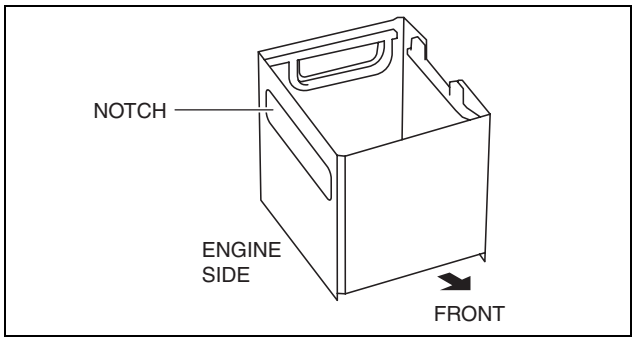

ac5wzw0000265

CHARGING SYSTEM [SKYACTIV-G 2.0]

BATTERY INSPECTION [SKYACTIV-G 2.0]

id0117h5800600

Warning
- **Since battery acid is toxic, be careful when handling the battery.**
- **Since battery acid is highly corrosive, be careful not to allow it to contact clothing or the vehicle.**
- **In case battery acid contacts skin, eyes, or clothing, flush it immediately with running water. If the acid gets in the eyes, flush with water for more than 15 min and get prompt medical attention.**

Electrolyte Specific Gravity

Purpose	Step	Inspection		Action
Battery examination (verification of dendrite short)	1	Using a hydrometer, measure the electrolyte gravity of all the cells and identify the one with the lowest electrolyte gravity value.	1.25 or more	Battery is normal.
			1.17—1.25	Recharge the battery. (See 01-17A-9 BATTERY RECHARGING [SKYACTIV-G 2.0].)
			Less than 1.17	Replace the battery because it can be determined as a dendrite short. (See 01-17A-3 BATTERY REMOVAL/INSTALLATION [SKYACTIV-G 2.0].)

Parasitic Draw

Caution
- **Operating electrical loads while the parasitic draw is being measured can damage the tester.**
- **Because the "BATT_SOC" value before disconnecting the negative battery cable is required for the battery condition initial setting (i-stop setting), always verify the "BATT_SOC" value before disconnecting the negative battery cable.**

1. Verify that the ignition is off (key has been removed) and that all doors are closed.
2. Disconnect the negative battery cable. (See 01-17A-11 NEGATIVE BATTERY CABLE DISCONNECTION/CONNECTION [SKYACTIV-G 2.0].)

Note
- If the battery is not left undisturbed for **10 min or more, but less than 30 min**, the tester will indicate a high value (**approx. 300 mA**).
- If the ignition or any electrical accessory is operated after the tester is connected, the battery must be left undisturbed for **10 min or more, but less than 30 min** from that point.
- For vehicles with the immobilizer system, the system periodically shifts synchronization of the security light flashing. Therefore, **65 mA (0.1 s)** current is supplied when the security light is illuminated, and **40 mA (2 s)** current is supplied when the security light is not illuminated. In addition, the measuring instrument, which shows the average value, indicates around **55 mA**.

3. Connect the tester between the negative battery terminal and negative battery cable, leave the battery undisturbed for **10 min or more, but less than 30 min**, and then measure the parasitic draw.
   - If not within specification, measure the parasitic draw while removing the fuses one by one from the inside of the main fuse block and the inside of the fuse block.
   - Inspect and repair wiring harnesses and connectors of the fuse where the current has decreased.

Battery parasitic draw (When the ignition is off (key is removed), all doors and the bonnet are closed.)
40—65 mA

Note
- If the battery is left for **30 min**, a battery parasitic draw value of **25—45 mA** is indicated.

CHARGING SYSTEM [SKYACTIV-G 2.0]

Battery inspection when i-stop warning light (amber) is flashing

1. Inspect the battery as follows:

Step	Inspection		Action
1	Was the vehicle engine not started for 5 days or more? (Ask the customer)	Yes	Replace the battery.
		No	Go to the next step.
2	Using a hydrometer, measure the electrolyte gravity of all the cells and identify the one with the lowest electrolyte gravity value.	1.25 or more	Battery is normal.
		1.17—1.25	Recharge the battery. (See 01-17A-9 BATTERY RECHARGING [SKYACTIV-G 2.0].)
		Less than 1.17	Replace the battery because it can be determined as a dendrite short. (See 01-17A-3 BATTERY REMOVAL/INSTALLATION [SKYACTIV-G 2.0].)
3	After performing any of the following work, verify that the i-stop warning light (amber) turns off. • Battery cable is disconnected and ignition is switched ON (engine off) after reconnection • Ignition is switched ON (engine off) after 12 hours or more have elapsed with ignition switched off		

BATTERY INSPECTION [SKYACTIV-G 2.0 (WITHOUT i-stop)]

id0117h58006h7

Warning

- **Since battery acid is toxic, be careful when handling the battery.**
- **Since battery acid is highly corrosive, be careful not to allow it to contact clothing or the vehicle.**
- **In case battery acid contacts skin, eyes, or clothing, flush it immediately with running water. If the acid gets in the eyes, flush with water for more than 15 min and get prompt medical attention.**

Electrolyte Specific Gravity

1. Measure the electrolyte specific gravity using a hydrometer.
   - If it is less than the specification, recharge the battery. (See 01-17A-10 BATTERY RECHARGING [SKYACTIV-G 2.0 (WITHOUT i-stop)].)

Battery electrolyte specific gravity [20 °C {68 °F}]
1.22—1.29

Battery Voltage

1. Inspect the battery as follows:

Step	Inspection		Action
1	Measure the battery positive voltage.	12.4 V or more	Go to Step 3.
		Less than 12.4 V	Go to the next step.
2	Quick charge for **30 min** and recheck voltage.	12.4 V or more	Go to the next step.
		Less than 12.4 V	Replace the battery.
3	Using the battery load tester, apply load current (see battery load test current) and record battery voltage after **15 s**. Is voltage more than the specification?	Yes	Normal
		No	Replace the battery.

Battery load test current
55D23L (48): 180 A
75D23L (52): 195 A

Standard specification

Battery temp. (°C {°F})	Minimum voltage (V)
4 {39}	9.3
10 {50}	9.4
16 {61}	9.5
21 {70}	9.6

CHARGING SYSTEM [SKYACTIV-G 2.0]

Parasitic Draw

1. Verify that the ignition is off (key has been removed) and that all doors are closed.
2. Disconnect the negative battery cable. (See 01-17A-13 NEGATIVE BATTERY CABLE DISCONNECTION/ CONNECTION [SKYACTIV-G 2.0 (WITHOUT i-stop)])

Caution

- **Operating electrical loads while the parasitic draw is being measured can damage the tester.**

Note

- If the battery is not left undisturbed for **10 min or more, but less than 30 min**, the tester will indicate a high value (**approx. 300 mA**).
- If the ignition or any electrical accessory is operated after the tester is connected, the battery must be left undisturbed for **10 min or more, but less than 30 min** from that point.
- For vehicles with the immobilizer system, the system periodically shifts synchronization of the security light flashing. Therefore, **65 mA (0.1 s)** current is supplied when the security light is illuminated, and **40 mA (2 s)** current is supplied when the security light is not illuminated. In addition, the measuring instrument, which shows the average value, indicates around **55 mA**.

3. Connect the tester between the negative battery terminal and negative battery cable, leave the battery undisturbed for **10 min or more, but less than 30 min**, and then measure the parasitic draw.
   - If not within specification, measure the parasitic draw while removing the fuses one by one from the inside of the main fuse block and the inside of the fuse block.
   - Inspect and repair wiring harnesses and connectors of the fuse where the current has decreased.

Battery parasitic draw (When the ignition is off (key is removed), all doors and the bonnet are closed.)
40—65 mA

Note

- If the battery is left for **30 min**, a battery parasitic draw value of **25—45 mA** is indicated.

BATTERY RECHARGING [SKYACTIV-G 2.0]

id0117h5800700

Warning

- **Keep all flames away from the battery and perform the servicing in a well-ventilated area. Otherwise, evaporated gas from the battery could ignite.**
- **Remove the battery filler caps when recharging to prevent battery deformation or damage.**
- **Do not perform battery recharging with the battery in the vehicle as it is dangerous.**
- **When connecting to the battery recharger, make sure the battery cables are connected correctly.**

Caution

- **Do not perform quick recharging. If quick recharging is performed it could result in an i-stop control malfunction.**
- **After recharging, leave the battery as it is for as long as possible (6 hours or longer recommended) to dissipate the polarization in the battery.**

1. Remove the battery.
2. Remove the battery filler caps.
3. To prevent loss of battery fluid during recharging, verify the battery fluid level.

Battery fluid level is between upper and lower or less

- Add distilled water to the upper level.

Battery fluid level is between upper and lower or more

- Go to the next step.

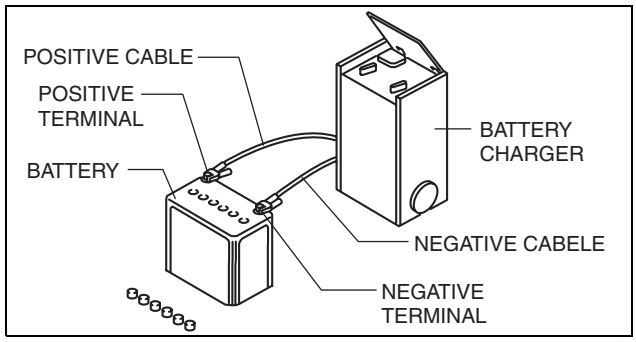

ac5wzw0000518

CHARGING SYSTEM [SKYACTIV-G 2.0]

4. Connect a battery charger to the battery and adjust the charging current as follows.

Note
- Verify the current after 30 s have elapsed since the measurement was started because the current is not stabilized after the voltage adjustment.

(1) Adjust the voltage so that the recharge current is 10 to 15 A.
(2) Charge the battery for 60 min using current in Step (1).
(3) Readjust the battery so that the recharge current is 10 to 15 A.
(4) Charge the battery so that the total time for Step (2) is the time in table.

Battery recharge time

Cell with lowest electrolyte gravity	Recharge time
1.24 or more	180 min or more
1.21 or more	240 min or more
1.17 or more	360 min or more

5. Measure electrolyte gravity of all cells.
Cell with lowest electrolyte gravity is less than 1.25
- Replace the battery as battery charge could not be restored. (See 01-17A-3 BATTERY REMOVAL/INSTALLATION [SKYACTIV-G 2.0].)

Cell with lowest electrolyte gravity is 1.25 or more
- Battery charge was restored, therefore install the recharged battery into the vehicle. (See 01-17A-3 BATTERY REMOVAL/INSTALLATION [SKYACTIV-G 2.0].)

BATTERY RECHARGING [SKYACTIV-G 2.0 (WITHOUT i-stop)]

id0117h58007h7

Warning
- **Keep all flames away from the battery, otherwise evaporated gas from the battery fluid may catch fire, and cause serious injury.**
- **Remove the battery filler caps when recharging to prevent battery deformation or damage.**

Caution
- **Do not quick charge for more than 30 min. It will damage the battery.**

1. Remove the battery and then place it in a pan of water.
2. Remove the battery filler caps.
3. Connect a battery charger to the battery and adjust the charging current as follows.

Battery slow charge current
55D23L (48): 4.5—5.5 A
75D23L (52): 5.0—6.0 A

Battery quick charge current [30 min]
55D23L (48): 30 A
75D23L (52): 35 A

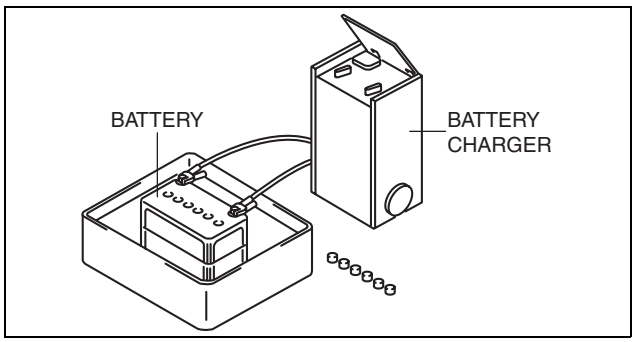

am3uuw0000485

4. After the battery is recharged, verify that the voltage is within the specification and remains at the same value for **1 h or more** after the recharging has been completed.
- If not within the specification, replace the battery.

Standard voltage
12.4 V or more

CHARGING SYSTEM [SKYACTIV-G 2.0]

NEGATIVE BATTERY CABLE DISCONNECTION/CONNECTION [SKYACTIV-G 2.0]

id0117h5800800

Warning

- **Before removing the SRS air bag system-related parts, always disconnect the negative battery cable terminal and wait for 1 min. or more to allow the back-up power supply to deplete its stored power. (See 08-10-3 AIR BAG SYSTEM SERVICE WARNINGS.)**

Caution

- **With the battery connected and the ignition switched ON, or if servicing is performed for a long period (10 min or more) with the ignition switched off.**

Required procedure after negative battery cable terminal disconnection/connection

System name	Conditions after disconnecting the negative battery cable terminal	Required procedure		Reference
		Before disconnecting negative battery cable terminal	After connecting negative battery cable terminal	
Power window system	Reset to initial setting and auto-function is disabled.	—	Perform the power window system initial setting.	(See 09-12-66 POWER WINDOW SYSTEM INITIALIZATION PROCEDURE.)
Sunroof system	Reset to initial setting and function is disabled.	—	Perform the sunroof system initial setting.	(See 09-15-18 SUNROOF SYSTEM INITIALIZATION PROCEDURE.)
Clock and audio	Clock display and audio system memory are reset.	Verify the setting content.	Set the verified content before disconnecting negative battery cable terminal.	—
i-stop system	Specified information in the PCM cleared and the i-stop does not operate normaly.	Verify PID “BATT_SOC” value and record. *1	Perform battery condition initial setting (i-stop setting). *2	(See 01-17A-14 BATTERY CONDITION INITIALIZATION SETTING (i-stop SETTING) [SKYACTIV-G 2.0].)
Tire pressure monitoring system (TPMS)	The tire pressure monitoring system detection accuracy decreases.	—	Perform the tire pressure monitoring system initialization.	(See 02-12-4 TIRE PRESSURE MONITORING SYSTEM INITIALIZATION PROCEDURE.)

*1 : For vehicles with i-stop, if the negative battery cable terminal is disconnected and re-connected, battery condition initial setting (i-stop setting) must be performed.
*2 : Because the “BATT_SOC” value before disconnecting the negative battery cable terminal is required for the battery condition initial setting (i-stop setting), record the “BATT_SOC” value before disconnecting the negative battery cable terminal.

CHARGING SYSTEM [SKYACTIV-G 2.0]

Negative Battery Cable Terminal Disconnection

1. Connect the M-MDS to the DLC-2.
2. Switch the ignition ON (engine off).
3. Verify the “BATT_SOC” value using the M-MDS data logger function. (See 01-02-8 ON-BOARD DIAGNOSTIC TEST [SKYACTIV-G 2.0].)
4. Record the “BATT_SOC” value.
   “BATT_SOC” value is less than 75%
   - Inspect the battery. (See 01-17A-7 BATTERY INSPECTION [SKYACTIV-G 2.0].)

   “BATT_SOC” value is 75% or more
   - Go to the next step.
5. Switch the ignition off.

Caution

- **Disconnect the current sensor connector before disconnecting the negative battery cable terminal. If the negative battery cable terminal is disconnected first, the PCM may mistakenly recognize a signal from the current sensor causing interference with engine control.**

6. Disconnect the current sensor connector.
7. Disconnect the negative battery cable terminal.

Negative Battery Cable Terminal Connection

Caution

- **Verifying the tightness while holding the current sensor may apply excessive force to the terminal and the terminal could loosen, causing poor engine starting. When verifying the tightness of the negative battery cable terminal, only hold the terminal area, not the current sensor.**

VERIFICATION OF NEGATIVE BATTERY CABLE TERMINAL TIGHTENING

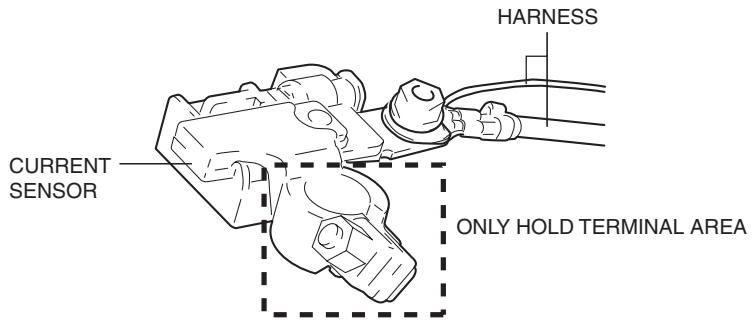

ac5wzw0000511

1. Perform battery condition initial setting (i-stop setting). (See 01-17A-14 BATTERY CONDITION INITIALIZATION SETTING (i-stop SETTING) [SKYACTIV-G 2.0].)

Note

- Connection of the negative battery cable terminal and the current sensor connector will be done in the battery condition initial setting (i-stop setting) procedure.

2. Perform services not related to i-stop control which are required after connecting the negative battery cable terminal. (See 01-17A-11 Required procedure after negative battery cable terminal disconnection/connection.)

CHARGING SYSTEM [SKYACTIV-G 2.0]

NEGATIVE BATTERY CABLE DISCONNECTION/CONNECTION [SKYACTIV-G 2.0 (WITHOUT i-stop)]

id0117h58008h7

Warning

- **Before removing the SRS air bag system-related parts, always disconnect the negative battery cable and wait for 1 min. or more to allow the back-up power supply to deplete its stored power. (See 08-10-3 AIR BAG SYSTEM SERVICE WARNINGS.)**

Required procedure after negative battery cable disconnection/connection

System name	Conditions after disconnecting the negative battery cable terminal	Required procedure		Reference
		Before disconnecting negative battery cable terminal	After connecting negative battery cable terminal	
Power window system	Reset to initial setting and auto-function is disabled.	—	Perform the power window system initial setting.	(See 09-12-66 POWER WINDOW SYSTEM INITIALIZATION PROCEDURE.)
Clock and audio	Clock display and audio system memory are reset.	Verify the setting content.	Set the verified content before disconnecting negative battery cable terminal.	—

Negative Battery Cable Terminal Disconnection

1. Switch the ignition to off.
2. Disconnect the negative battery cable.

Negative Battery Cable Terminal Connection

Caution

- **When tightening the negative battery cable, tighten it to the specified torque. If it is not tightened to the specified torque, the battery charging/discharging may be affected. (See 01-17A-3 BATTERY REMOVAL/INSTALLATION [SKYACTIV-G 2.0].)**

1. Connect the negative battery cable terminal.
2. Perform services which are required after connecting the negative battery cable terminal. (See 01-17A-13 Required procedure after negative battery cable disconnection/connection.)

CHARGING SYSTEM [SKYACTIV-G 2.0]

BATTERY CONDITION INITIALIZATION SETTING (i-stop SETTING) [SKYACTIV-G 2.0]

id0117h5801000

Battery Condition Initial setting (i-stop setting) Procedure

Caution

- **If the engine is started with the bonnet open, the i-stop function will not operate until the engine is restarted with the bonnet closed (not system malfunction). If the engine is started with the bonnet open, close the bonnet and restart the engine after the ignition is switched off once.**
- **If a vehicle with an i-stop non-operation condition is brought in, the malfunction will not be resolved by simply performing the battery condition initial setting (i-stop setting). Verify the PID "BATT_SOC" value and if the value is less than 75%, recharge the battery. (See 01-17A-9 BATTERY RECHARGING [SKYACTIV-G 2.0].)**
- **If the "BATT_SOC" value has not been verified before disconnecting the negative battery cable, perform battery condition initial setting (i-stop setting) after performing the battery inspection.**
- **The "BATT_SOC" value is displayed "0%" because the battery charge condition is not stabilized after connecting the negative battery cable (it is necessary to leave battery undisturbed for approx. 6 to 48 h to stabilize battery charge condition).**

- If the negative battery cable is disconnected, specific information stored in the PCM will be erased. Therefore, perform the following procedure after reconnecting.

Battery Condition Initial setting (i-stop setting) flow

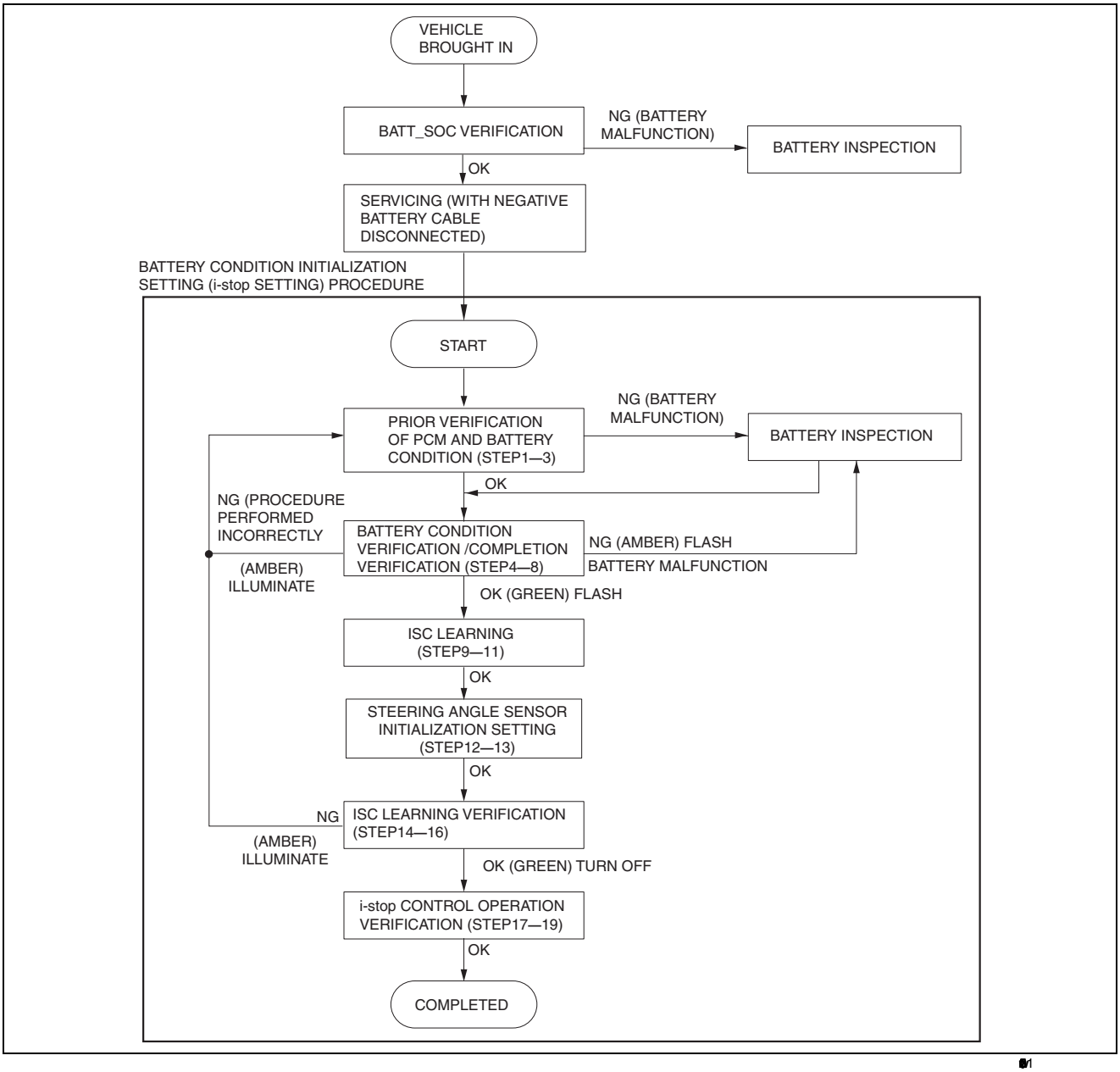

CHARGING SYSTEM [SKYACTIV-G 2.0]

Purpose	Step	Procedure	Caution/Note
Prior verification of PCM and battery condition	1	Verify the value (BATT_SOC) measured before disconnecting the negative battery cable. **When BATT_SOC value is not verified or the value is 75% or more.** • Go to the next step. **When BATT_SOC value is less than 75%** • Perform battery inspection. (See 01-17A-7 BATTERY INSPECTION [SKYACTIV-G 2.0].)	—
	2	Verify that 5 min or more have elapsed since the negative battery cable was disconnected.	**Caution** • **It is necessary to leave the battery undisturbed for 5 min or more because the voltage is not stabilized, depending on the battery usage condition, and the PCM cannot determine the "BATT_SOC" value correctly.**
	3	Disconnect the current sensor connector. If the current sensor connector has already been disconnected, go to the next step.	**Note** • Disconnect the current sensor connector to prevent the current sensor from being damaged by connecting the negative battery cable.
Battery condition verification / completion verification	4	Connect the negative battery cable and wait for 10 s or more.	**Caution** **negative battery cable terminal tightening torque: 2.9—4.9 N·m {30—49 kgf·cm, 26—43 in·lbf}**
	5	Connect the current sensor connector.	—
	6	Switch the ignition ON (engine off) and wait for 15 s or more (within 1 min.).	—
	7	**VERIFY i-stop INDICATOR LIGHT (GREEN) AND i-stop WARNING LIGHT (AMBER) FLASHING CONDITION** • Press the i-stop OFF switch for 10 s and verify the flashing condition of the i-stop indicator light (green) and i-stop warning light (amber). **When i-stop indicator light (green) flashes** — Go to the next step. **When i-stop warning light (amber) flashes** — Perform the battery inspection. (See 01-17A-7 BATTERY INSPECTION [SKYACTIV-G 2.0].) **When i-stop warning light (amber) illuminates** — Procedure is performed incorrectly. Switch the ignition off and repeat the procedure from Step 1 (Prior verification of PCM and battery condition).	**Note** • When the i-stop OFF switch is pressed, the illumination condition of the i-stop warning light (amber) changes to flashing of either the i-stop indicator light (green) or the i-stop warning light (amber).
	8	Switch the ignition off.	—
ISC learning	9	Close the bonnet.	**Note** • If the engine is not warmed up completely the ISC learning will not finish. — Warm-up is not completed even if the low engine coolant temperature indicator light (blue) turns off. As a guide, apply pressure to the radiator hose and if the radiator has warmed up, engine warming is complete.
	10	Start the engine.	
	11	Warm up the engine completely with no electrical load.	
Steering angle sensor initialization setting	12	Turn the steering wheel lock-to-lock.	**Note** • Perform steering angle sensor initialization setting because the initial value stored in the EPS control module is reset.
	13	Switch the ignition off.	

CHARGING SYSTEM [SKYACTIV-G 2.0]

Purpose	Step	Procedure	Caution/Note
ISC learning verification	14	Perform the following procedure within 25 s. 1. Switch the ignition ON (engine off) and within 5 s, long-press the i-stop OFF switch for 3 s or more. (The i-stop warning light (amber) illuminates.) 2. Start the engine. 3. Long-press the i-stop OFF switch one time. 4. Verify that the i-stop warning light (amber) stop illuminating and the i-stop indicator light (green) starts flashing. — If the amber light continues to illuminate, the procedure was performed incorrectly, therefore repeat the procedure from Step 1. (Prior verification of PCM and battery condition)	**Note** • Although the i-stop indicator light (green) may flash a few times right after the engine is started, then the i-stop warning light (amber) starts illuminating.
	15	Maintain the idle status (no electrical load) until the i-stop indicator light (green) turns off.	—
	16	After the i-stop indicator light (green) turns off, switch the ignition off.	—
i-stop control operation verification	17	Start the engine and verify that the i-stop indicator light (green) is turned off.	—
	18	Verify the i-stop control operation using the following procedure. 1. Vehicle is traveling at a speed of 4 km/h or more. (EC/Russia specs.) 1. While the vehicle is traveling at a speed of 4 km/h or more, verify that the i-stop indicator light (green) illuminates. (Except EC/Russia specs.) 2. Stop the vehicle and verify that the engine stops via the i-stop control and then restarts.	—
	19	Switch the ignition off.	—

CHARGING SYSTEM [SKYACTIV-G 2.0]

GENERATOR REMOVAL/INSTALLATION [SKYACTIV-G 2.0]

id0117h5800200

Warning

- **Remove and install all parts when the engine is cold, otherwise they can cause severe burns or serious injury.**
- **When the battery cables are connected, touching the vehicle body with generator terminal B will generate sparks. This can cause personal injury, fire, and damage to the electrical components. Always disconnect the negative battery cable before performing the following operation.**

01

1. Disconnect the negative battery cable. (See 01-17A-11 NEGATIVE BATTERY CABLE DISCONNECTION/CONNECTION [SKYACTIV-G 2.0].) (See 01-17A-13 NEGATIVE BATTERY CABLE DISCONNECTION/CONNECTION [SKYACTIV-G 2.0 (WITHOUT i-stop)])
2. Remove the front under cover No.2. (See 09-16-41 FRONT UNDER COVER No.2 REMOVAL/INSTALLATION.)
3. Remove the generator drive belt. (See 01-10A-10 DRIVE BELT REMOVAL/INSTALLATION [SKYACTIV-G 2.0].)
4. Remove the A/C compressor with the cooler hose still connected and secure it using wire or rope so that it is out of the way. (See 07-11-25 A/C COMPRESSOR REMOVAL/INSTALLATION.)
5. Remove in the order indicated in the table.
6. Install in the reverse order of removal.

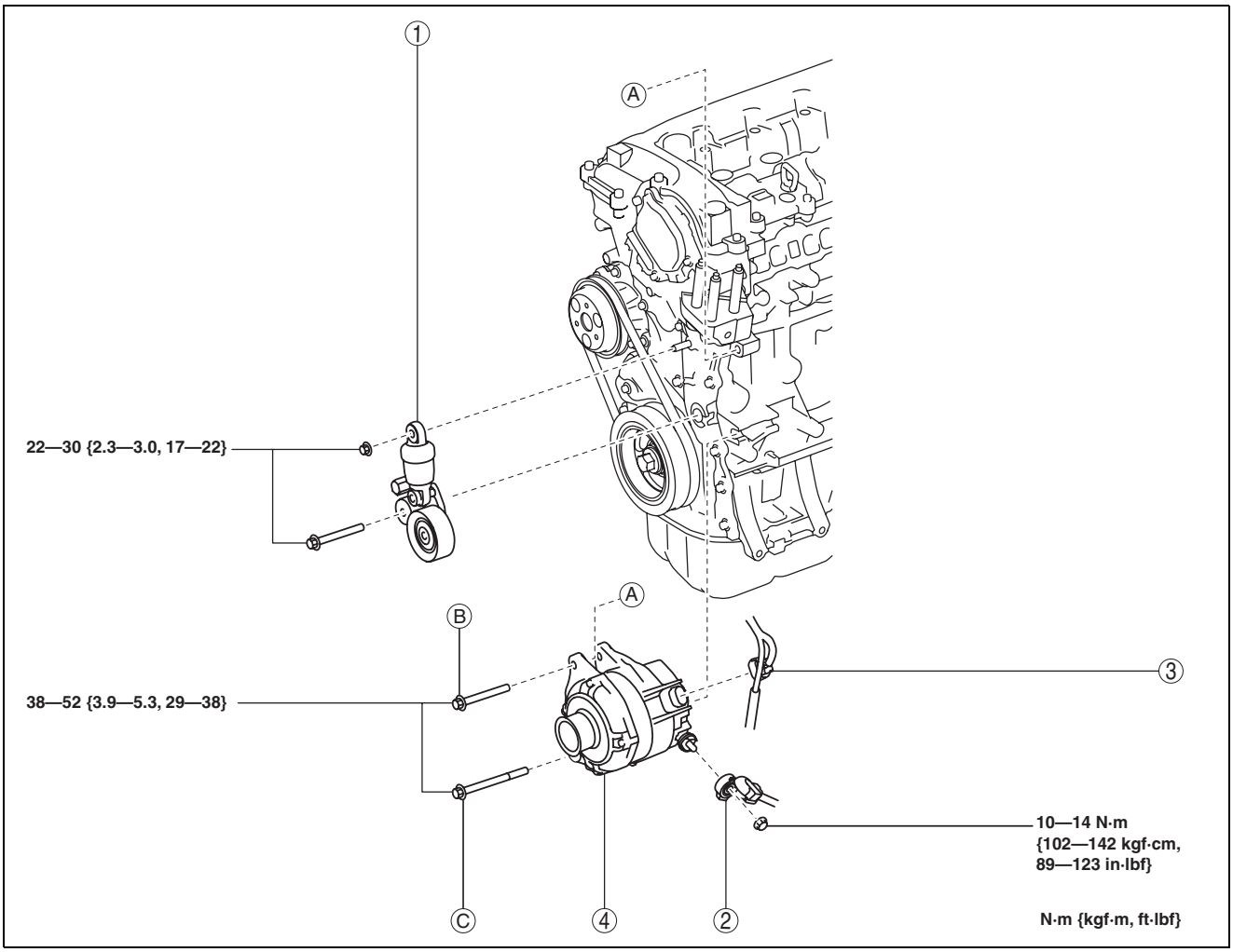

1	Drive belt tensioner (See 01-17A-19 Drive Belt Auto Tensioner Installation Note)
2	Terminal B nut
3	Generator
4	Generator (See 01-17A-17 Generator Removal Note) (See 01-17A-18 Generator Installation Note)

Generator Removal Note

1. Fully loosen the generator lower bolt and pull it outward until it contacts the body frame.

CHARGING SYSTEM [SKYACTIV-G 2.0]

Note
- The generator can be removed without fully removing the lower bolt from the engine.

2. Remove the generator upper bolt.
3. Remove the generator together with the lower bolt from the engine.
4. Remove the generator from above the engine compartment.

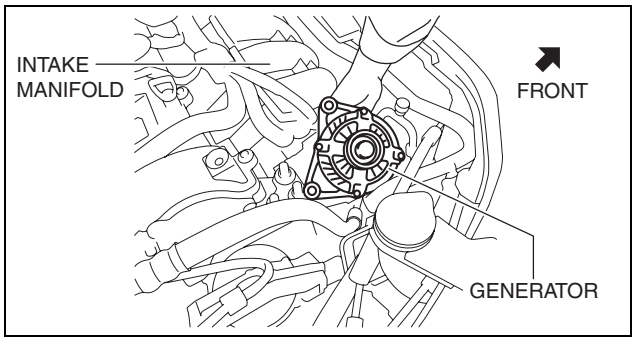

ac5wzw0000264

Generator Installation Note

1. To facilitate the installation of the generator to the engine, grasp the spacer in the bolt installation hole using pliers and push it down to the nut side.
2. Temporarily install the generator to the engine with the bolt C.
3. Align the generator fixing hole with the engine side hole, then temporarily tighten the generator installation bolt B.
4. Securely tighten the generator installation bolts in the order of B, C.

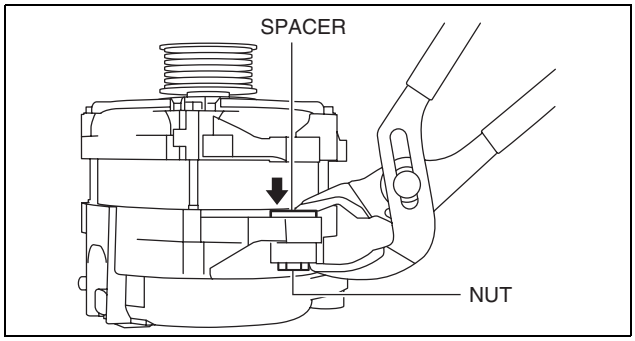

ac5wzw0000265

CHARGING SYSTEM [SKYACTIV-G 2.0]

Drive Belt Auto Tensioner Installation Note

Caution
- **To allow the drive belt auto tensioner to function correctly, always bleed the air from the drive belt auto tensioner using the following procedure after assembling the drive belt auto tensioner.**

1. Install the drive belt auto tensioner to the engine.

Caution
- **To prevent damage to the drive belt auto tensioner, do not apply excessive torque after the tensioner moves full-stroke.**

2. Insert the wrench onto the cast hexagon on the drive belt auto tensioner, move the drive belt auto tensioner up and down at full-stroke three times to bleed the air.

Note
- By moving the drive belt auto tensioner up and down full-stroke three times, the piston inside the tensioner moves to bleed the air.

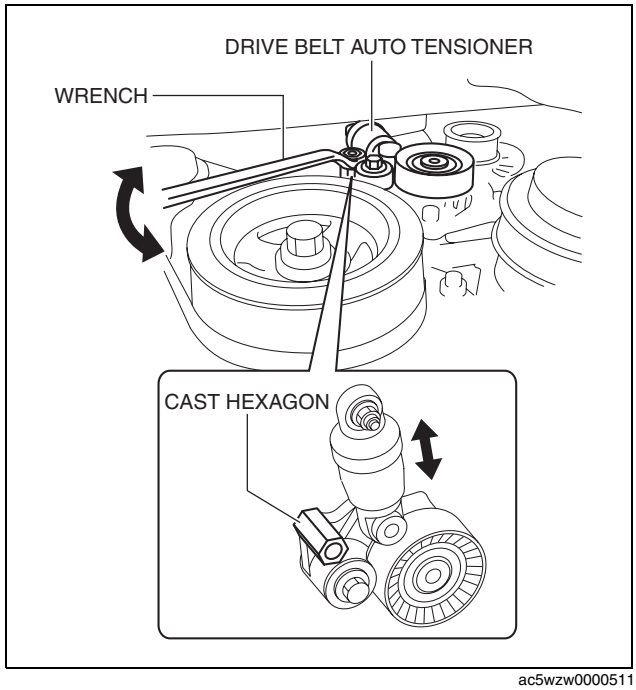

ac5wzw0000511

GENERATOR INSPECTION [SKYACTIV-G 2.0]

id0117h5800300

Caution
- **Do not apply direct battery positive voltage to generator terminal D, otherwise it could cause damage to the internal parts (power transistor) of the generator.**

Charging System Warning Light

1. Verify that the battery is fully charged.
2. Verify that the drive belt is correct. (See 01-10A-9 DRIVE BELT INSPECTION [SKYACTIV-G 2.0].)
3. Switch the ignition to ON (engine off), verify that the charging system warning light illuminates.
   - If it does not illuminate, inspect the charging system warning light and the wiring harness.
     — If the charging system warning light and the wiring harness are normal, inspect the PCM.
4. Verify that the charging system warning light goes out after the engine is started.
   - If the charging system warning light does not go out, perform the DTC inspection, then perform troubleshooting according to the corresponding diagnostic procedure. (See 01-02-8 ON-BOARD DIAGNOSTIC TEST [SKYACTIV-G 2.0].) (See 01-02-14 DTC TABLE [SKYACTIV-G 2.0].)

Generator
Voltage

1. Verify that the battery is fully charged.
2. Verify that the drive belt is correct. (See 01-10A-9 DRIVE BELT INSPECTION [SKYACTIV-G 2.0].)
3. Turn off all electrical loads.
4. Start the engine.
5. Verify that the generator rotates smoothly without any noise while the engine is running.
   - If there is any noise, find the cause and repair or replace the generator.

CHARGING SYSTEM [SKYACTIV-G 2.0]

6. Measure the voltage at each terminal using a tester.
   - If it is not as specified, find the cause and repair or replace the applicable part.

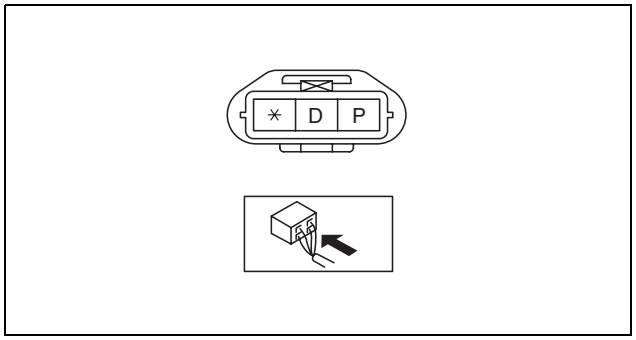

am6zzw0000234

Generator standard voltage [IG-ON]
Terminal B: B+
Terminal P: Approx. 1 V or less
Terminal D: Approx. 0 V

Generator standard voltage [Idle, 20 °C {68 °F}]
Terminal B: 13—15 V
Terminal P: Approx. 3—8 V
Terminal D: Turn the electrical loads (headlights, blower motor, rear window defroster, brake lights, etc.) on and verify that the voltage reading increases.

Current

Note
- Since the charging current decreases rapidly after starting the engine, carry out the following procedure quickly, and read the maximum current value.

1. Verify that the battery is fully charged.
2. Verify that the drive belt is correct. (See 01-10A-9 DRIVE BELT INSPECTION [SKYACTIV-G 2.0].)
3. Disconnect the negative battery cable.
4. Connect a tester, which can read **120 A or more**, between generator terminal B and the wiring harness.
5. Connect the negative battery cable. (See 01-17A-11 NEGATIVE BATTERY CABLE DISCONNECTION/CONNECTION [SKYACTIV-G 2.0].) (See 01-17A-13 NEGATIVE BATTERY CABLE DISCONNECTION/CONNECTION [SKYACTIV-G 2.0 (WITHOUT i-stop)])
6. Turn off all electrical loads.
7. Start the engine.
8. Increase engine speed to **2,500 rpm.** (Vehicle without i-stop)

Note
- When the electrical load on the vehicle is low, the specified current cannot be verified although the generator is normal. In this case, increase the electrical load (Leave the headlights turned on for a while, then discharge the battery, or use a similar method.) and recheck.
- When the generator itself or the ambient temperature are too high, the specified current also cannot be verified. In this case, cool down the generator and recheck.

Note
- When the electrical load on the vehicle is low, the specified current cannot be verified although the generator is normal. In this case, increase the electrical load (Leave the headlights turned on for a while, then discharge the battery, or use a similar method.) and recheck.
- When the generator itself or the ambient temperature are too high, the specified current also cannot be verified. In this case, cool down the generator and recheck.

9. With the electric loads such as headlights, blower motor, rear window defroster, brake lights turned on, verify that the current increases.
   — If it is not as specified, go to the PCM and generator shearing inspection. (See 01-17A-21 PCM and generator shearing inspection.)

Generator generated current minimum value (Vehicle without i-stop)
70% of the nominal output current (nominal output current: 100 A)
[Ambient temp. 20 °C {68 °F}, voltage 13.0—15.0 V, both engine and generator are hot]

CHARGING SYSTEM [SKYACTIV-G 2.0]

Generator generated current (reference value) [Ambient temperature: 20 °C {68 °F}, Engine hot] (Vehicle with i-stop)

Engine speed (rpm)	Terminal B voltage (V)	Generator output current (A)
1,000	13	83
1,000	15	83
2,000	13	98
2,000	15	105

*** Field coil current control signal 100%**

PCM and generator shearing inspection

1. Connect the M-MDS to the DLC-2.
2. Inspect as follows:

Step	Inspection		Action
1	Measure the generator terminal B voltage when the electrical loads*1 are on and off.	15 V or more	Go to Step 2.
		13—15 V	Normal*2
		13 V or less	Go to Step 3.
2	Monitor the ALTT V PID using the M-MDS. (See 01-02-8 ON-BOARD DIAGNOSTIC TEST [SKYACTIV-G 2.0].) Is the value normal?	Yes	Go to Step 4.
		No	Inspect the following, then repair or replace as necessary. • If there is no malfunction, replace the PCM. 1. Wiring harness between PCM terminal 1AF-generator terminal P. 2. Wiring harness between PCM terminal 1BE-generator terminal D. 3. Generator inner parts.
3	Monitor the ALTT V PID using the M-MDS. (See 01-02-8 ON-BOARD DIAGNOSTIC TEST [SKYACTIV-G 2.0].) Is the value normal?	Yes	Go to Step 5.
		No	Inspect the following, then repair or replace as necessary. • If there is no malfunction, replace the PCM. 1. Wiring harness between PCM terminal 1AF-generator terminal P. 2. Wiring harness between PCM terminal 1BE-generator terminal D. 3. Generator inner parts.
4	Monitor the ALTF PID using the M-MDS. Is the duty value 100%?	Yes	Replace PCM.
		No	Inspect the following, then repair or replace as necessary. • If there is no malfunction, replace the PCM. 1. Wiring harness between PCM terminal 1BE - generator terminal D. 2. Generator inner parts.
5	Monitor the ALTF PID using the M-MDS. Is the duty value 0%?	Yes	Replace PCM.
		No	Inspect the following, then repair or replace as necessary. • If there is no malfunction, replace the PCM. 1. Wiring harness between PCM terminal 1BE-generator terminal D. 2. Generator inner parts.

*1 : Headlights, blower motor, rear window defroster, brake lights, etc.
*2 : If the generator field coil duty value does not change when electrical loads (such as headlights, blower motor, rear window defroster, brake lights) are on or off, inspection with discharged battery is needed.

CHARGING SYSTEM [SKYACTIV-G 2.0]

Generator Inner Parts

Rotor

1. Measure the resistance between the slip rings using a tester.
   - If not within specification, replace the rotor.

   Generator rotor resistance (between slip rings) [20 °C {68 °F}]
   1.8—2.1 ohms

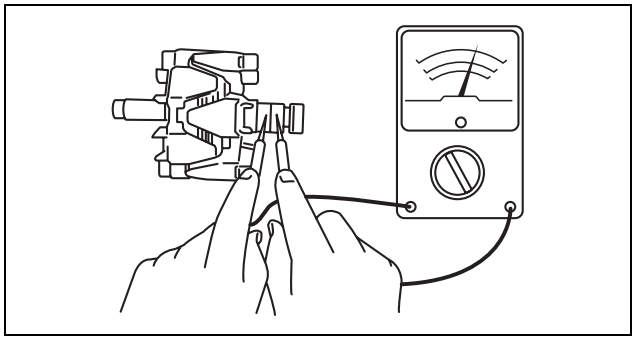
am6zzw0000235

2. Verify that there is no continuity between the slip ring and core using a tester.
   - If there is continuity, replace the rotor.
3. Inspect the slip ring surface condition.
   - If the slip ring surface is rough, use a lathe or fine sandpaper to make it smooth.

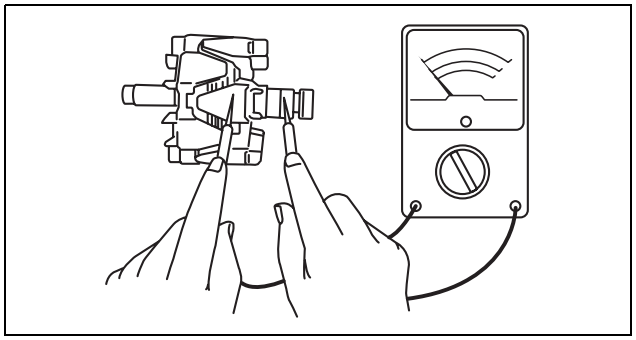
am6zzw0000235

Stator coil

1. Verify that the continuity is as indicated in the table.

○—○ : Continuity

Terminal					
1	2	3	4	5	6
○—○					
○		○—○			
	○—○				
			○—○		
			○		○
				○—○	

am6zzw0000235

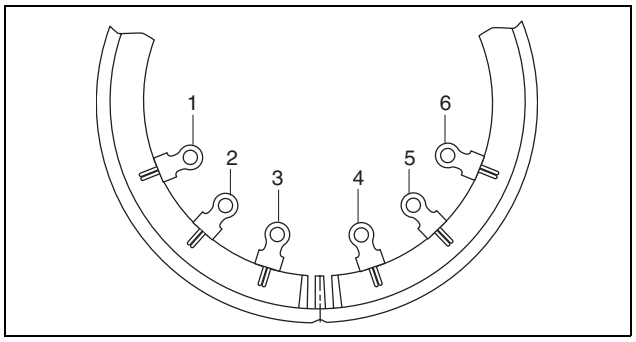

am6zzw0000235

   - If there is any malfunction, replace the stator.
2. Verify that there is no continuity between the stator coil leads and core using a tester.
   - If there is continuity, replace the stator coil.

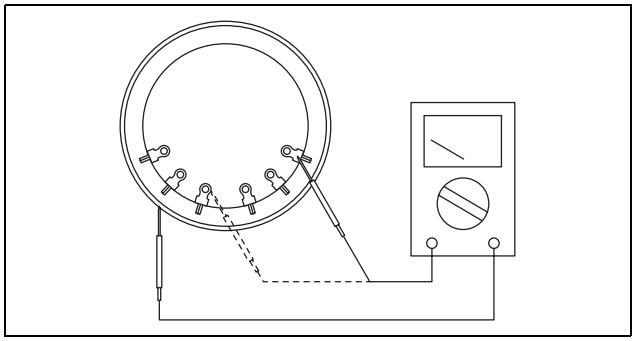
am3uuw0000326

CHARGING SYSTEM [SKYACTIV-G 2.0]

Brush

1. Inspect brushes for wear.
   - If any brush is worn almost to or beyond the limit, replace all of the brushes.

Generator brush length
Standard: 22.5 mm {0.886 in}
Minimum: 5.0 mm {0.20 in}

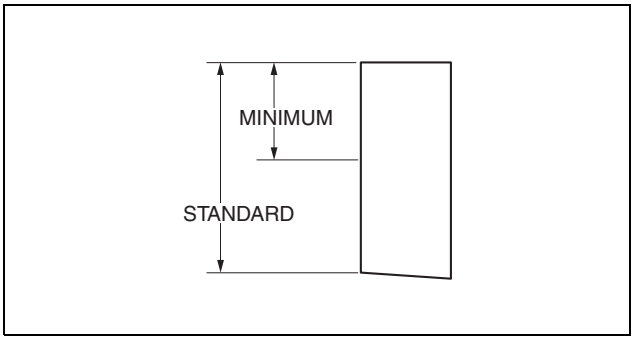

am6zzw0000235

Brush spring

1. Measure the force of the brush spring using a spring pressure gauge.
2. Read the spring pressure gauge at the brush tip projection of **2 mm {0.08 in}.**
   - If not within specification, replace the brush spring.

Generator brush spring force
Standard: 4.1—5.3 N {0.42—0.54 kgf, 1.0—1.1 lbf}
Minimum: 1.7 N {0.17 kgf, 0.38 lbf}

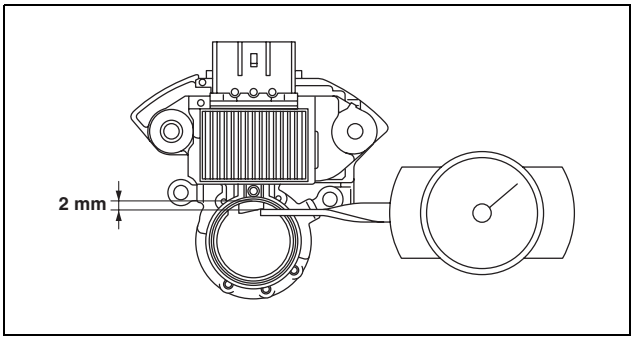

adejjw00007494

Rectifier (Using an analog circuit tester)

1. Inspect for continuity of the diodes using an analog circuit tester.
   - If not as specified, replace the rectifier.

Specification

Negative	Positive	Continuity
E	P1, P2, P3, P4, P5, P6	Yes
B		No
P1, P2, P3, P4, P5, P6	E	No
	B	Yes

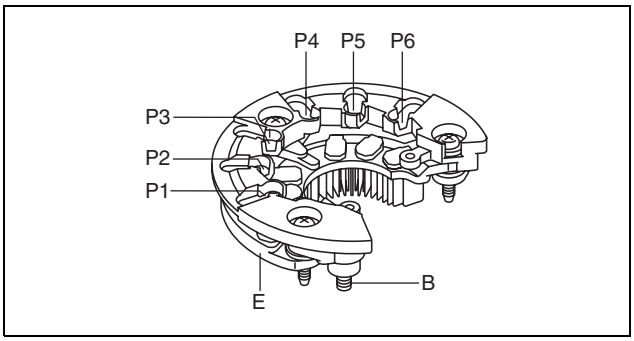

adejjw00007495

CHARGING SYSTEM [SKYACTIV-G 2.0]

Rectifier (Using a digital circuit tester)

1. Inspect for continuity of the diodes using a digital circuit tester.
   - If not as specified, replace the rectifier.

Specification

Negative	Positive	Continuity
E	P1, P2, P3, P4, P5, P6	No
B		Yes
P1, P2, P3, P4, P5, P6	E	Yes
	B	No

Bearing

1. Inspect for abnormal noise, looseness, and sticking.
   - Replace the bearing if necessary.

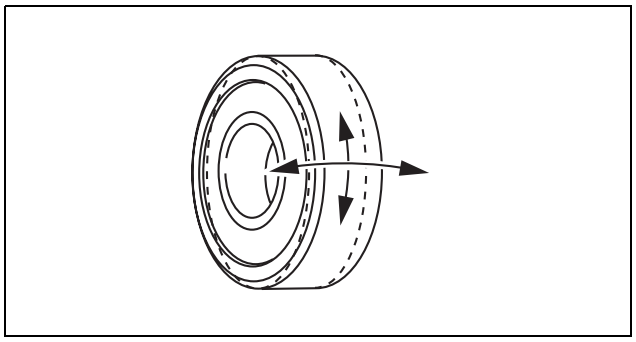

am6zzw0000235

CHARGING SYSTEM [SKYACTIV-G 2.0]

GENERATOR DISASSEMBLY/ASSEMBLY [SKYACTIV-G 2.0]

id0117h5800400

Caution
- **Melt the solder quickly, otherwise the diodes (rectifier) and regulator will be damaged by excessive heat.**

1. Disassemble in the order indicated in the table.
2. Assemble in the reverse order of disassembly.

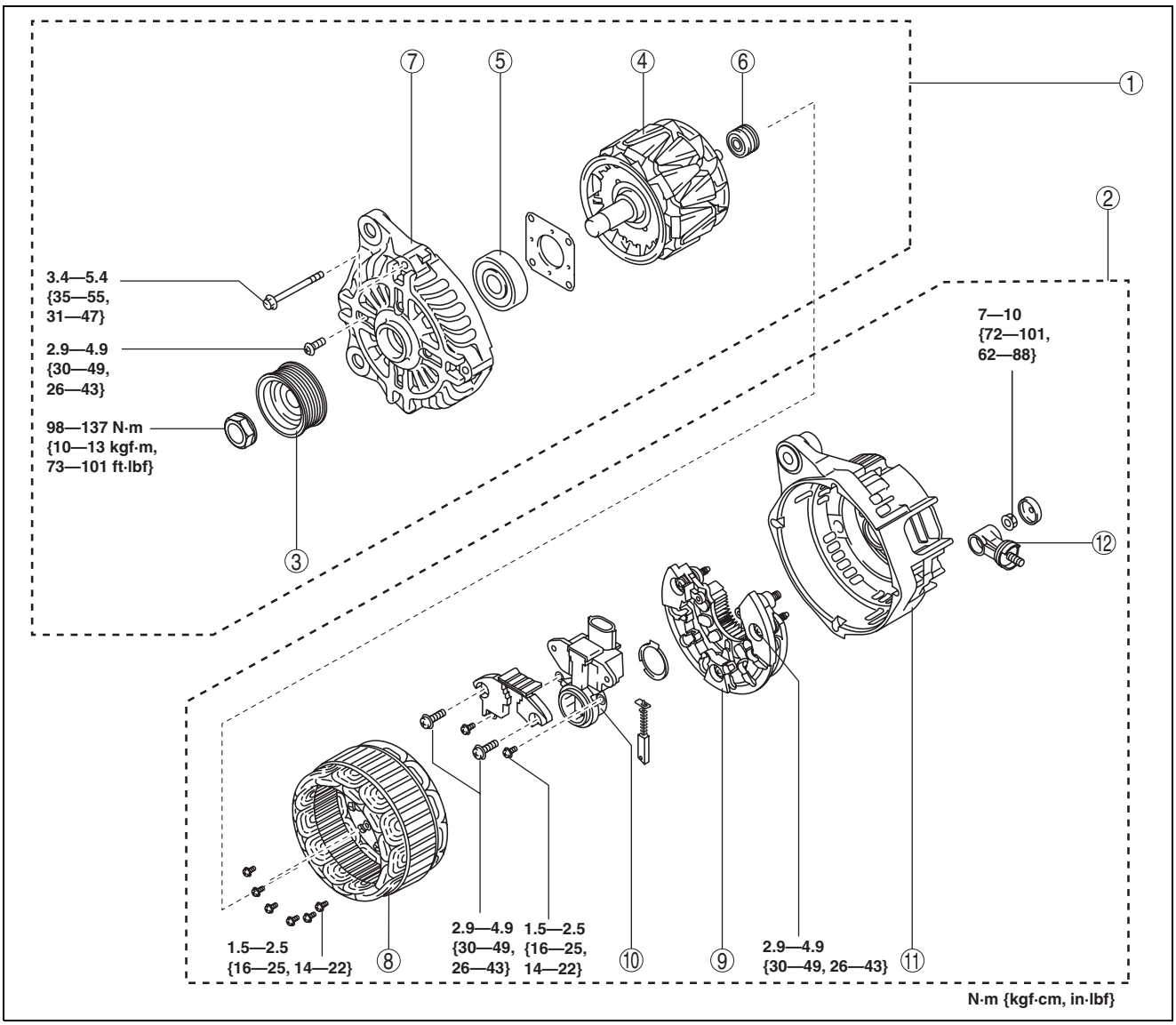

ac5wzw0000265

1	Rotor component
2	Stator coil component
3	Pulley
4	Rotor
5	Front bearing
6	Rear bearing

7	Front cover
8	Stator coil
9	Rectifier
10	Regulator component
11	Rear cover
12	Terminal B component

CHARGING SYSTEM [SKYACTIV-G 2.0]

DC-DC CONVERTER REMOVAL/INSTALLATION [SKYACTIV-G 2.0]

id0117h5004600

Vehicle With i-stop

1. Disconnect the negative battery cable. (See 01-17A-11 NEGATIVE BATTERY CABLE DISCONNECTION/ CONNECTION [SKYACTIV-G 2.0].)
2. Remove the front under cover No.1. (See 09-16-40 FRONT UNDER COVER No.1 REMOVAL/INSTALLATION.)
3. Set the front mud guard (LH) aside as shown in the figure. (See 09-16-47 MUDGUARD REMOVAL/INSTALLATION.)
4. Remove in the order indicated in the table.
5. Install in the reverse order of removal.

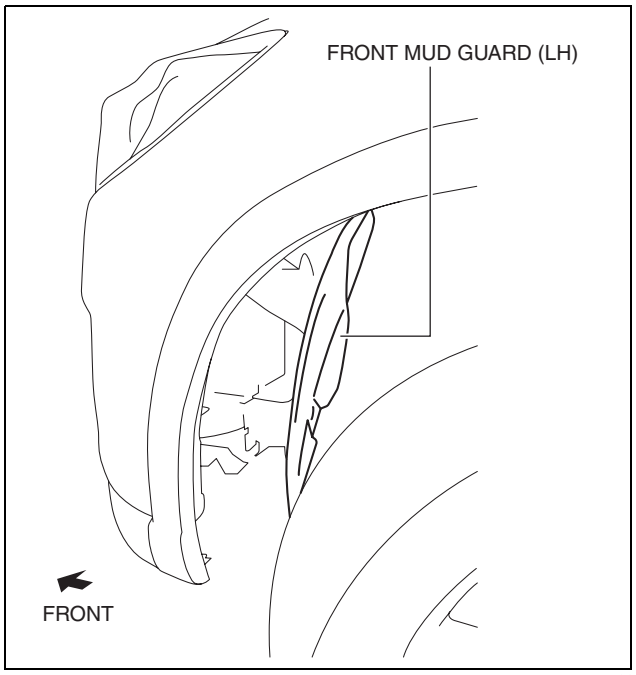

ac5wzw0000511

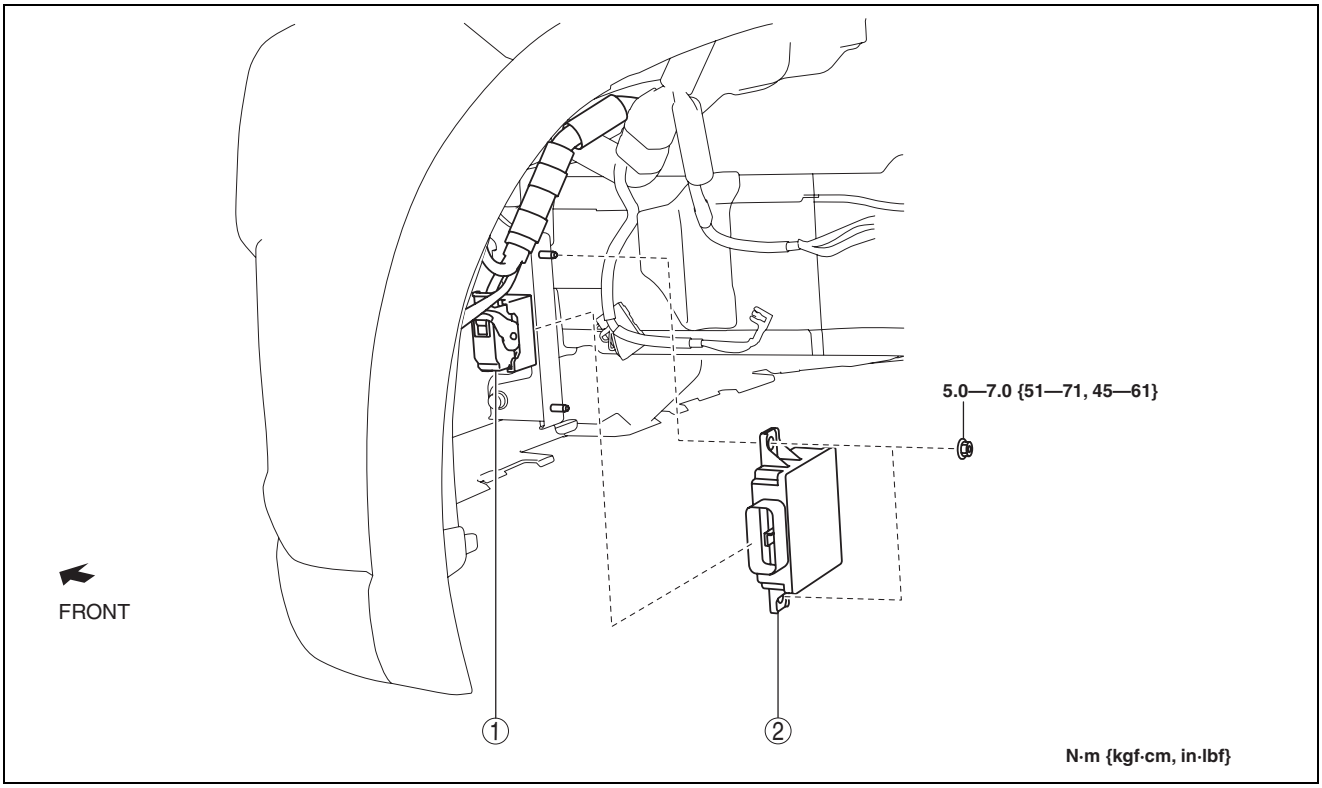

ac5wzw0000264

1	DC-DC converter connector (See 01-17A-26 Vehicle With i-stop.)

2	DC-DC converter

CHARGING SYSTEM [SKYACTIV-G 2.0]

DC-DC converter connector installation note

1. Before installation, verify that the connector lever is unlocked position.
2. Connect the DC-DC converter connector using the following procedure:

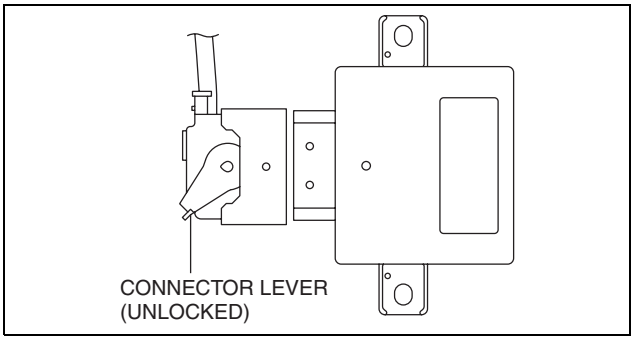

ac5wzw0000264

(1) Insert the DC-DC converter connector straight until it stops.

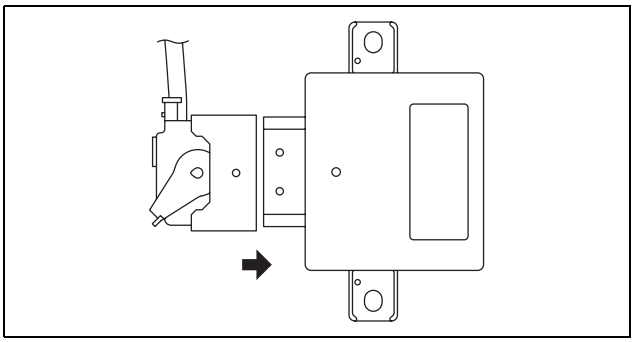
ac5wzw0000264

(2) Move the connector lever until a click sound is heard.

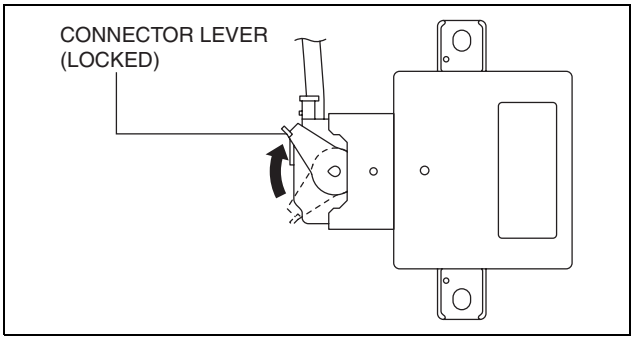

ac5wzw0000264

DC-DC CONVERTER INSPECTION [SKYACTIV-G 2.0]

id0117h5004700

DC-DC Converter Operation Inspection (Vehicle With i-stop)

1. Perform the KOER self-test.If the following DTCs are detected, repair the applicable malfunctioning part according to the applicable DTC troubleshooting. (See 01-02-14 DTC TABLE [SKYACTIV-G 2.0])
   - P058A:00, P0A8D:00, P0A94:00, U0298:00, U1007:00
2. Inspect the battery.If there is a malfunction, recharge or replace the battery, then go to the next step. (See 01-17A-9 BATTERY RECHARGING [SKYACTIV-G 2.0]) (01-17A-7 BATTERY INSPECTION [SKYACTIV-G 2.0]) (01-17A-3 BATTERY REMOVAL/INSTALLATION [SKYACTIV-G 2.0])
3. When the engine is restarted by the i-stop control, verify that the following measured voltages are not lower than **11.5V**.
   - Rain sensor (auto light sensor) supply terminal (vehicle wiring harness-side connector terminal D)
   - Audio unit supply terminal (vehicle wiring harness-side connector terminal 1B)
     - — If it cannot be verified, go to the next step.
4. Inspect the wiring harness between the following terminals for an open or short circuit.
   - DC-DC converter terminal K-Rain sensor (auto light sensor) terminal D
   - DC-DC converter terminal K-audio unit terminal 1B
     - — If there is any open or short circuit in the wiring harness, repair or replace the malfunctioning part.
     - — If there is any open or short circuit in the wiring harness, replace the DC-DC converter. (See 01-17A-26 DC-DC CONVERTER REMOVAL/INSTALLATION [SKYACTIV-G 2.0])

01-17B CHARGING SYSTEM [SKYACTIV-D 2.2]

CHARGING SYSTEM LOCATION INDEX [SKYACTIV-D 2.2] 01-17B–2
BATTERY REMOVAL/INSTALLATION [SKYACTIV-D 2.2] 01-17B–3
Operation After Replacing Battery 01-17B–3
Battery Removal/Installation 01-17B–4
BATTERY INSPECTION [SKYACTIV-D 2.2] 01-17B–6
Electrolyte Specific Gravity 01-17B–6
Parasitic Draw 01-17B–7
Battery inspection when i-stop warning light (amber) is flashing 01-17B–7
BATTERY RECHARGING [SKYACTIV-D 2.2] 01-17B–8
NEGATIVE BATTERY CABLE DISCONNECTION/CONNECTION [SKYACTIV-D 2.2] 01-17B–9
Required procedure after negative battery cable terminal disconnection/connection. 01-17B–9
Negative Battery Cable Terminal Disconnection 01-17B–10
Negative Battery Cable Terminal Connection 01-17B–10
BATTERY CONDITION INITIALIZATION SETTING (i-stop SETTING) [SKYACTIV-D 2.2]. 01-17B–11
Battery Condition Initial setting (i-stop setting) Procedure 01-17B–11
GENERATOR REMOVAL/INSTALLATION [SKYACTIV-D 2.2]. 01-17B–14
Generator Removal Note 01-17B–15
Generator Installation Note 01-17B–16
GENERATOR INSPECTION [SKYACTIV-D 2.2]. 01-17B–16
Charging System Warning Light 01-17B–16
Generator 01-17B–16
Generator Inner Parts 01-17B–18
GENERATOR DISASSEMBLY/ASSEMBLY [SKYACTIV-D 2.2]. 01-17B–21
Pulley Disassembly/Assembly Note . . .01-17B–22
DC-DC CONVERTER REMOVAL/INSTALLATION [SKYACTIV-D 2.2]. 01-17B–22
DC-DC Converter Connector Installation Note 01-17B–23

CHARGING SYSTEM [SKYACTIV-D 2.2]

CHARGING SYSTEM LOCATION INDEX [SKYACTIV-D 2.2]

id0117h6800100

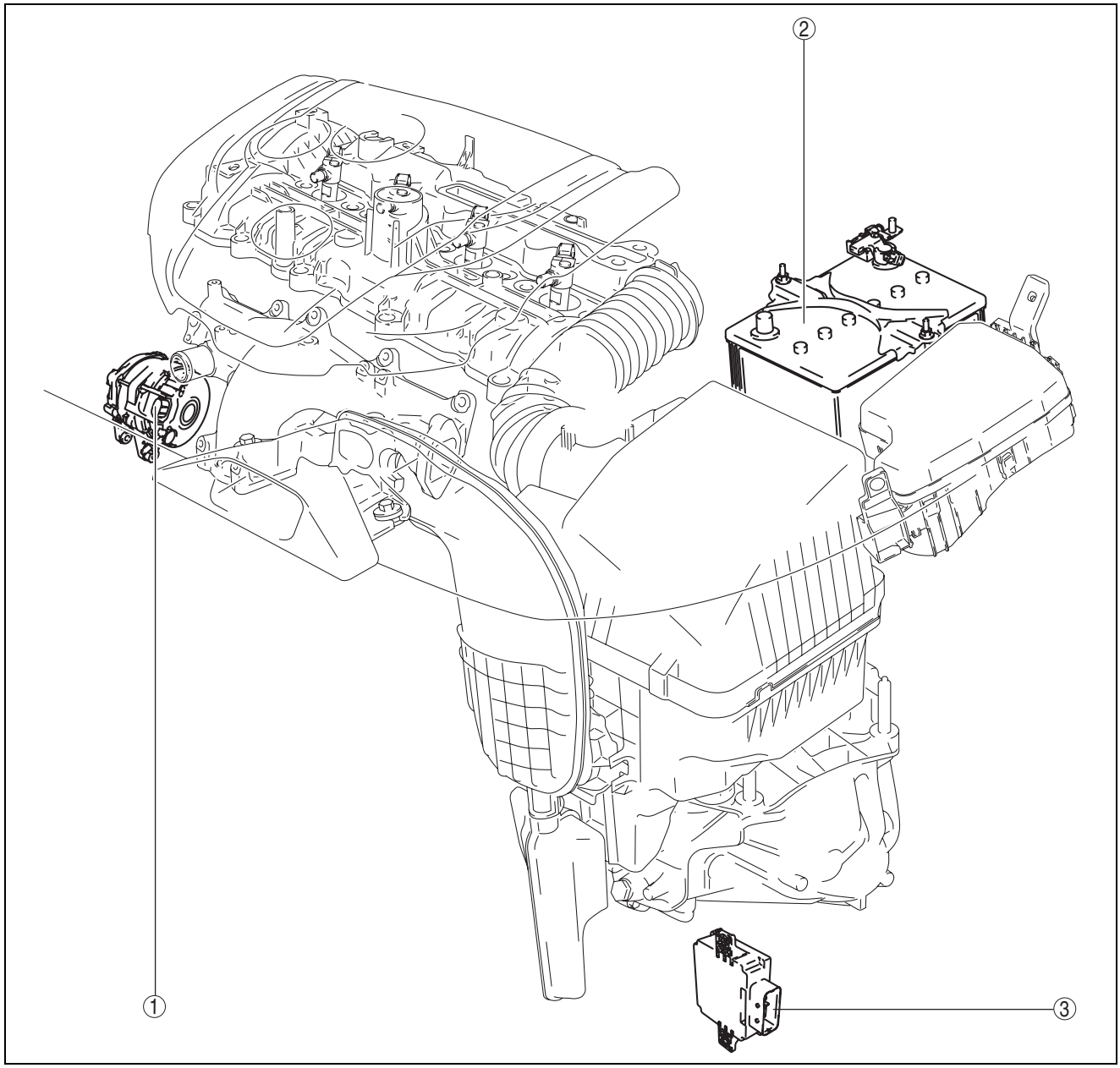

ac5wzw0000512

1	Generator (See 01-17B-14 GENERATOR REMOVAL/ INSTALLATION [SKYACTIV-D 2.2].) (See 01-17B-16 GENERATOR INSPECTION [SKYACTIV-D 2.2].) (See 01-17B-21 GENERATOR DISASSEMBLY/ ASSEMBLY [SKYACTIV-D 2.2].)

2	Battery (See 01-17B-9 NEGATIVE BATTERY CABLE DISCONNECTION/CONNECTION [SKYACTIV-D 2.2].) (See 01-17B-3 BATTERY REMOVAL/ INSTALLATION [SKYACTIV-D 2.2].) (See 01-17B-6 BATTERY INSPECTION [SKYACTIV-D 2.2].) (See 01-17B-8 BATTERY RECHARGING [SKYACTIV-D 2.2].) (See 01-17B-11 BATTERY CONDITION INITIALIZATION SETTING (i-stop SETTING) [SKYACTIV-D 2.2].)
3	DC-DC converter (See 01-17B-22 DC-DC CONVERTER REMOVAL/ INSTALLATION [SKYACTIV-D 2.2].)

CHARGING SYSTEM [SKYACTIV-D 2.2]

BATTERY REMOVAL/INSTALLATION [SKYACTIV-D 2.2]

id0117h6800500

Operation After Replacing Battery

Note

- If the battery charge/discharge flow (number of times battery can operate) exceeds the specification, a DTC is recorded and the i-stop warning light (amber) flashes. If the battery charge/discharge flow (number of times battery can operate) exceeds the specification, replace the battery with a new one.
- When replacing the battery, perform the following procedure: When replacing the PCM simultaneously, perform the PCM configuration first.

Without TFT LCD display

Step	Action
1	Switch the ignition ON (engine off).
2	Shift the selector lever to the N position.
3	Perform the following work with the brake pedal depressed. 1. Depress the accelerator pedal for 5 s or more. 2. Verify that the charging system warning light and the master warning light flash. 3. Depress and release the accelerator pedal 3 times. 4. Verify that the charging system warning light illuminates and the master warning light turns off.
4	Switch the ignition off and disconnect the negative battery cable. (See 01-17B-9 NEGATIVE BATTERY CABLE DISCONNECTION/CONNECTION [SKYACTIV-D 2.2].)
5	Verifying battery condition initialization setting (i-stop setting). (See 01-17B-11 BATTERY CONDITION INITIALIZATION SETTING (i-stop SETTING) [SKYACTIV-D 2.2].)

With TFT LCD display

Step	Action
1	Close the all doors.
2	Switch the ignition ON (engine off).
3	If a warning message is displayed in the LCD display, clear the screen using the INFO switch and then go to the next step.
4	Shift the selector lever to the N position.
5	Perform the following work with the brake pedal depressed. 1. Depress the accelerator pedal for 5 s or more. 2. Verify that a warning message (master warning light) on the LCD flashes. 3. Depress and release the accelerator pedal 3 times. 4. Verify that a warning message (master warning light) on the LCD turn off.
6	Switch the ignition off and disconnect the negative battery cable. (See 01-17B-9 NEGATIVE BATTERY CABLE DISCONNECTION/CONNECTION [SKYACTIV-D 2.2].)
5	Verifying battery condition initialization setting (i-stop setting). (See 01-17B-11 BATTERY CONDITION INITIALIZATION SETTING (i-stop SETTING) [SKYACTIV-D 2.2].)

CHARGING SYSTEM [SKYACTIV-D 2.2]

Battery Removal/Installation

1. Remove in the order indicated in the table.
2. Install in the reverse order of removal.

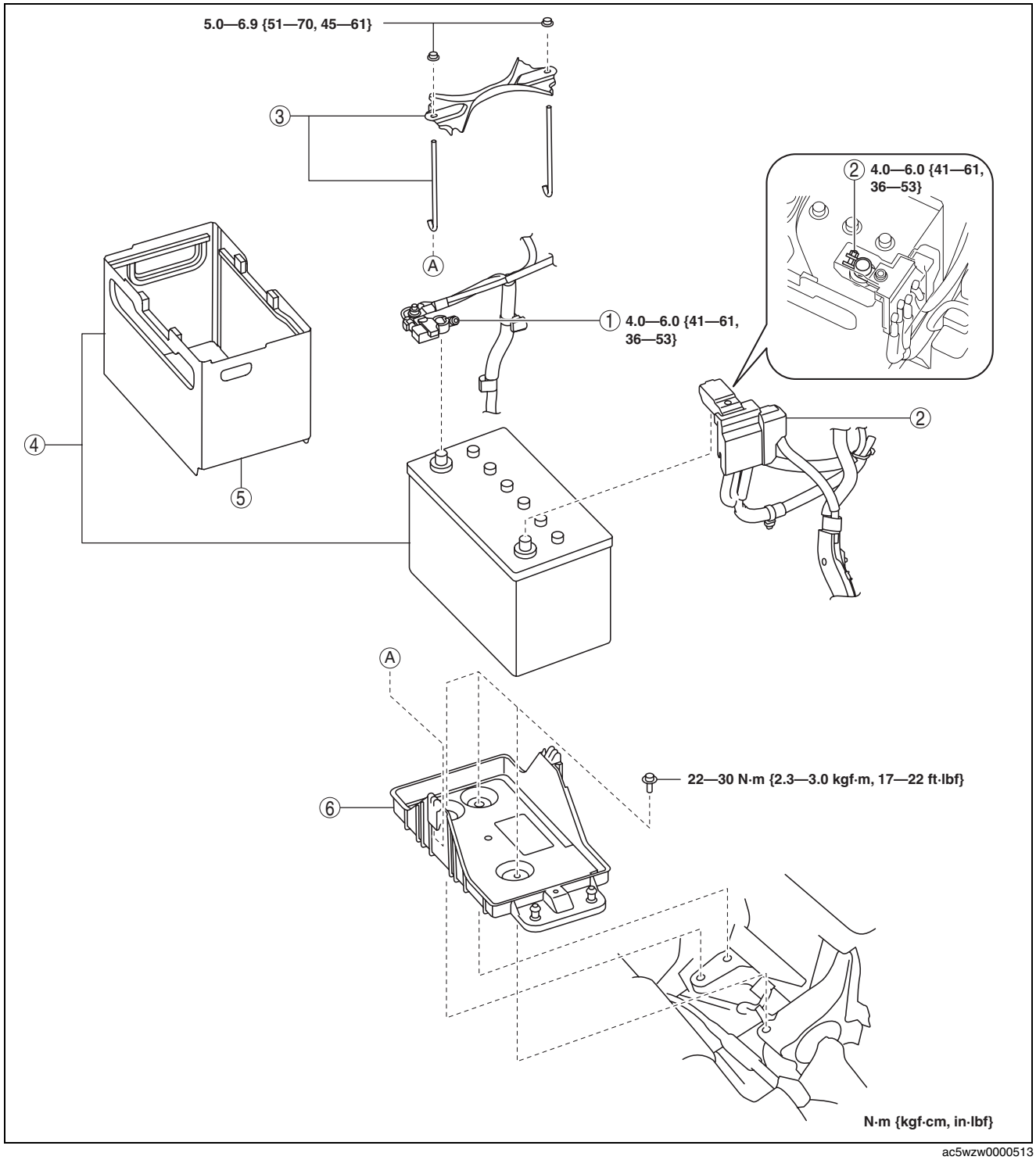

ac5wzw0000513

1	Negative battery cable (See 01-17A-11 NEGATIVE BATTERY CABLE DISCONNECTION/CONNECTION [SKYACTIV-G 2.0])
2	Positive battery cable
3	Battery clamp

4	Battery, battery box (See 01-17B-5 Battery, battery box removal note.) (See 01-17B-3 Operation After Replacing Battery.)
5	Battery box (See 01-17B-6 Battery box installation note.)
6	Battery tray (See 01-17B-5 Battery tray removal note.)

CHARGING SYSTEM [SKYACTIV-D 2.2]

Battery, battery box removal note

1. Remove the battery with the battery box while the battery is positioned at an angle as shown in the figure.

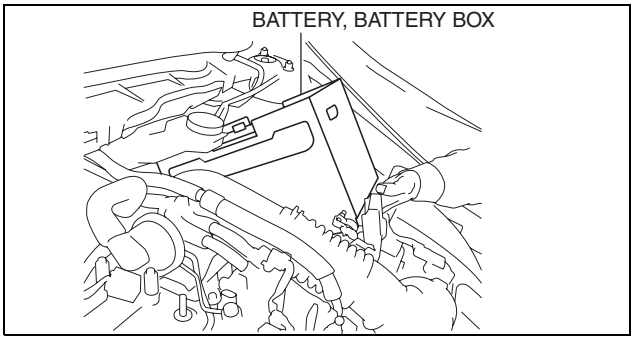

ac5wzw0000513

Battery tray removal note

1. Remove the battery tray using the following procedure:
   (1) Remove the two fresh air duct bolts shown in the figure.

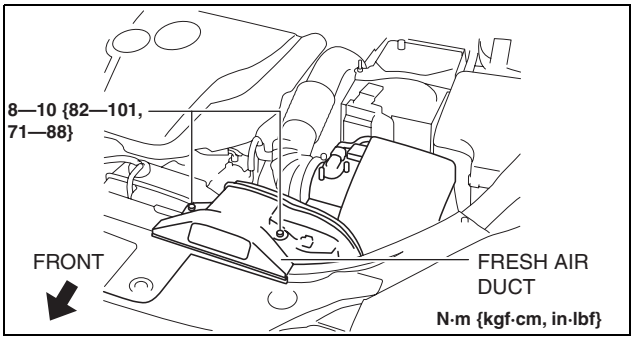

ac5wzw0000513

   (2) Lightly lift the air cleaner component and set the battery tray aside as shown in the figure.

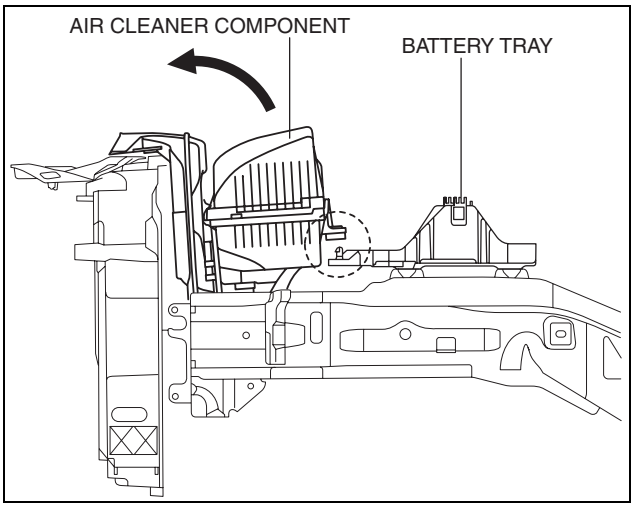

ac5wzw0000513

CHARGING SYSTEM [SKYACTIV-D 2.2]

(3) Remove the wiring harness clip shown in the figure from the battery tray.
(4) Remove the battery tray.

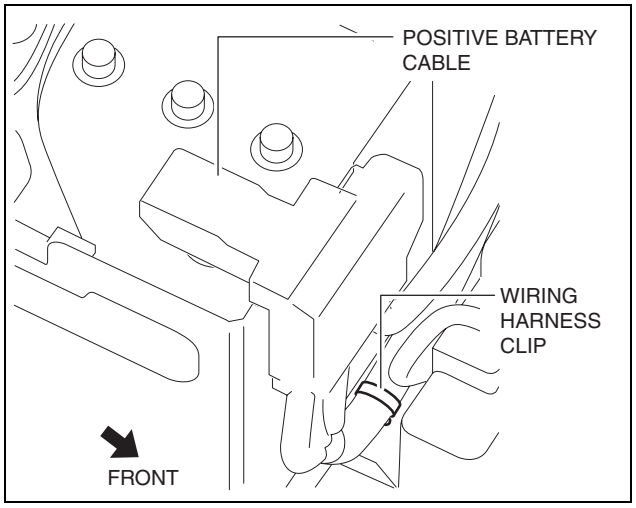

ac5wzw0000513

Battery box installation note

1. Install the battery box so that the side with the larger notch faces toward the engine side.

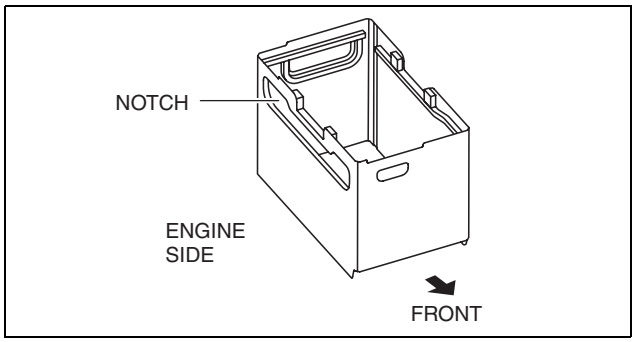

ac5wzw0000514

BATTERY INSPECTION [SKYACTIV-D 2.2]

id0117h6800600

Warning

- **Since battery acid is toxic, be careful when handling the battery.**
- **Since battery acid is highly corrosive, be careful not to allow it to contact clothing or the vehicle.**
- **In case battery acid contacts skin, eyes, or clothing, flush it immediately with running water. If the acid gets in the eyes, flush with water for more than 15 min and get prompt medical attention.**

Electrolyte Specific Gravity

Purpose	Step	Inspection		Action
Battery examination (verification of dendrite short)	1	Using a hydrometer, measure the electrolyte gravity of all the cells and identify the one with the lowest electrolyte gravity value.	1.25 or more	Battery is normal.
			1.17—1.25	Recharge the battery. (See 01-17B-8 BATTERY RECHARGING [SKYACTIV-D 2.2].)
			Less than 1.17	Replace the battery because it can be determined as a dendrite short. (See 01-17B-3 BATTERY REMOVAL/INSTALLATION [SKYACTIV-D 2.2].)

CHARGING SYSTEM [SKYACTIV-D 2.2]

Parasitic Draw

Caution
- **Operating electrical loads while the parasitic draw is being measured can damage the tester.**
- **Because the "BATT_SOC" value before disconnecting the negative battery cable is required for the battery condition initial setting (i-stop setting), always verify the "BATT_SOC" value before disconnecting the negative battery cable.**

1. Verify that the ignition is off (key has been removed) and that all doors are closed.
2. Disconnect the negative battery cable. (See 01-17B-9 NEGATIVE BATTERY CABLE DISCONNECTION/CONNECTION [SKYACTIV-D 2.2].)

Note
- If the battery is not left undisturbed for **10 min or more, but less than 30 min**, the tester will indicate a high value (**approx. 300 mA**).
- If the ignition or any electrical accessory is operated after the tester is connected, the battery must be left undisturbed for **10 min or more, but less than 30 min** from that point.
- For vehicles with the immobilizer system, the system periodically shifts synchronization of the security light flashing. Therefore, **65 mA (0.1 s)** current is supplied when the security light is illuminated, and **40 mA (2 s)** current is supplied when the security light is not illuminated. In addition, the measuring instrument, which shows the average value, indicates around **55 mA**.

3. Connect the tester between the negative battery terminal and negative battery cable, leave the battery undisturbed for **10 min or more, but less than 30 min**, and then measure the parasitic draw.
   - If not within specification, measure the parasitic draw while removing the fuses one by one from the inside of the main fuse block and the inside of the fuse block.
   - Inspect and repair wiring harnesses and connectors of the fuse where the current has decreased.

Battery parasitic draw (When the ignition is off (key is removed), all doors and the bonnet are closed.)
40—65 mA

Note
- If the battery is left for **30 min**, a battery parasitic draw value of **25—45 mA** is indicated.

Battery inspection when i-stop warning light (amber) is flashing

1. Inspect the battery as follows:

Step	Inspection		Action
1	Was the vehicle engine not started for 5 days or more? (Ask the customer)	Yes	Replace the battery.
		No	Go to the next step.
2	Using a hydrometer, measure the electrolyte gravity of all the cells and identify the one with the lowest electrolyte gravity value.	1.25 or more	Battery is normal.
		1.17—1.25	Recharge the battery. (See 01-17B-8 BATTERY RECHARGING [SKYACTIV-D 2.2].)
		Less than 1.17	Replace the battery because it can be determined as a dendrite short. (See 01-17B-3 BATTERY REMOVAL/INSTALLATION [SKYACTIV-D 2.2].)
3	After performing any of the following work, verify that the i-stop warning light (amber) turns off. • Battery cable is disconnected and ignition is switched ON (engine off) after reconnection • Ignition is switched ON (engine off) after 12 hours or more have elapsed with ignition switched off		

CHARGING SYSTEM [SKYACTIV-D 2.2]

BATTERY RECHARGING [SKYACTIV-D 2.2]

id0117h6800700

Warning

- **Keep all flames away from the battery and perform the servicing in a well-ventilated area. Otherwise, evaporated gas from the battery could ignite.**
- **Remove the battery filler caps when recharging to prevent battery deformation or damage.**
- **Do not perform battery recharging with the battery in the vehicle as it is dangerous.**
- **When connecting to the battery recharger, make sure the battery cables are connected correctly.**

Caution

- **Do not perform quick recharging. If quick recharging is performed it could result in an i-stop control malfunction.**
- **After recharging, leave the battery as it is for as long as possible (6 hours or longer recommended) to dissipate the polarization in the battery.**

1. Remove the battery.
2. Remove the battery filler caps.
3. To prevent loss of battery fluid during recharging, verify the battery fluid level.
   Battery fluid level is between upper and lower or less
   - Add distilled water to the upper level.

   Battery fluid level is between upper and lower or more
   - Go to the next step.
4. Connect a battery charger to the battery and adjust the charging current as follows.

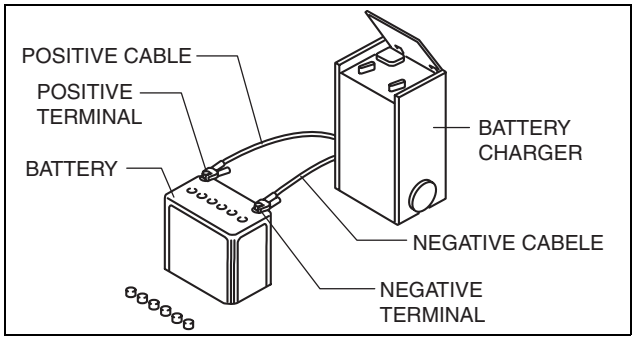

ac5wzw0000518

Note

- Verify the current after 30 s have elapsed since the measurement was started because the current is not stabilized after the voltage adjustment.

(1) Adjust the voltage so that the recharge current is 10 to 15 A.
(2) Charge the battery for 60 min using current in Step (1).
(3) Readjust the battery so that the recharge current is 10 to 15 A.
(4) Charge the battery so that the total time for Step (2) is the time in table.

Battery recharge time

Cell with lowest electrolyte gravity	Recharge time
1.24 or more	180 min or more
1.21 or more	240 min or more
1.17 or more	360 min or more

5. Measure electrolyte gravity of all cells.
   Cell with lowest electrolyte gravity is less than 1.25
   - Replace the battery as battery charge could not be restored. (See 01-17B-3 BATTERY REMOVAL/INSTALLATION [SKYACTIV-D 2.2].)

   Cell with lowest electrolyte gravity is 1.25 or more
   - Battery charge was restored, therefore install the recharged battery into the vehicle. (See 01-17B-3 BATTERY REMOVAL/INSTALLATION [SKYACTIV-D 2.2].)

CHARGING SYSTEM [SKYACTIV-D 2.2]

NEGATIVE BATTERY CABLE DISCONNECTION/CONNECTION [SKYACTIV-D 2.2]

id0117h6800800

Warning

- **Before removing the SRS air bag system-related parts, always disconnect the negative battery cable terminal and wait for 1 min. or more to allow the back-up power supply to deplete its stored power. (See 08-10-3 AIR BAG SYSTEM SERVICE WARNINGS.)**

Caution

- **With the battery connected and the ignition switched ON, or if servicing is performed for a long period (10 min or more) with the ignition switched off.**

Required procedure after negative battery cable terminal disconnection/connection

System name	Conditions after disconnecting the negative battery cable terminal	Required procedure		Reference
		Before disconnecting negative battery cable terminal	After connecting negative battery cable terminal	
Power window system	Reset to initial setting and auto-function is disabled.	—	Perform the power window system initial setting.	(See 09-12-66 POWER WINDOW SYSTEM INITIALIZATION PROCEDURE.)
Sunroof system	Reset to initial setting and function is disabled.	—	Perform the sunroof system initial setting.	(See 09-15-18 SUNROOF SYSTEM INITIALIZATION PROCEDURE.)
Clock and audio	Clock display and audio system memory are reset.	Verify the setting content.	Set the verified content before disconnecting negative battery cable terminal.	—
i-stop system	Specified information in the PCM cleared and the i-stop does not operate normaly.	Verify PID “BATT_SOC” value and record. *1	Perform battery condition initial setting (i-stop setting). *2	(See 01-17B-11 BATTERY CONDITION INITIALIZATION SETTING (i-stop SETTING) [SKYACTIV-D 2.2].)
Tire pressure monitoring system (TPMS)	The tire pressure monitoring system detection accuracy decreases.	—	Perform the tire pressure monitoring system initialization.	(See 02-12-4 TIRE PRESSURE MONITORING SYSTEM INITIALIZATION PROCEDURE.)

*1 : For vehicles with i-stop, if the negative battery cable terminal is disconnected and re-connected, battery condition initial setting (i-stop setting) must be performed.
*2 : Because the “BATT_SOC” value before disconnecting the negative battery cable terminal is required for the battery condition initial setting (i-stop setting), record the “BATT_SOC” value before disconnecting the negative battery cable terminal.

CHARGING SYSTEM [SKYACTIV-D 2.2]

Negative Battery Cable Terminal Disconnection

1. Connect the M-MDS to the DLC-2.
2. Switch the ignition ON (engine off).
3. Verify the “BATT_SOC” value using the M-MDS data logger function.
4. Record the “BATT_SOC” value.
   “BATT_SOC” value is less than 80%
   - Inspect the battery. (See 01-17B-6 BATTERY INSPECTION [SKYACTIV-D 2.2].)

   “BATT_SOC” value is 80% or more
   - Go to the next step.
5. Switch the ignition off.

Caution

- **Disconnect the current sensor connector before disconnecting the negative battery cable terminal. If the negative battery cable terminal is disconnected first, the PCM may mistakenly recognize a signal from the current sensor causing interference with engine control.**

6. Disconnect the current sensor connector.
7. Disconnect the negative battery cable terminal.

Negative Battery Cable Terminal Connection

Caution

- **Verifying the tightness while holding the current sensor may apply excessive force to the terminal and the terminal could loosen, causing poor engine starting. When verifying the tightness of the negative battery cable terminal, only hold the terminal area, not the current sensor.**

VERIFICATION OF NEGATIVE BATTERY CABLE TERMINAL TIGHTENING

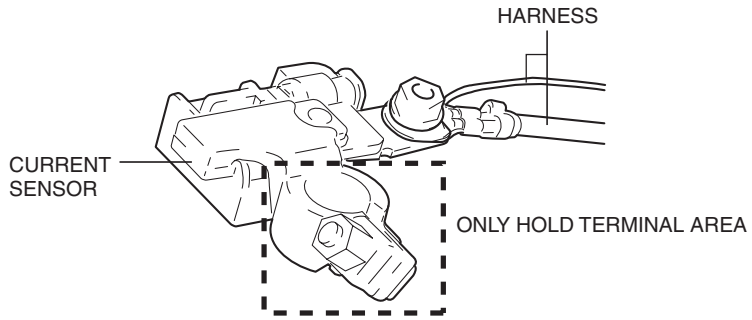

ac5wzw0000511

1. Perform battery condition initial setting (i-stop setting). (See 01-17B-11 BATTERY CONDITION INITIALIZATION SETTING (i-stop SETTING) [SKYACTIV-D 2.2].)

Note

- Connection of the negative battery cable terminal and the current sensor connector will be done in the battery condition initial setting (i-stop setting) procedure.

2. Perform services not related to i-stop control which are required after connecting the negative battery cable terminal. (See 01-17B-9 Required procedure after negative battery cable terminal disconnection/connection.)

CHARGING SYSTEM [SKYACTIV-D 2.2]

BATTERY CONDITION INITIALIZATION SETTING (i-stop SETTING) [SKYACTIV-D 2.2]

id0117h6801000

Battery Condition Initial setting (i-stop setting) Procedure

Caution

- **If the engine is started with the bonnet open, the i-stop function will not operate until the engine is restarted with the bonnet closed (not system malfunction). If the engine is started with the bonnet open, close the bonnet and restart the engine after the ignition is switched off once.**
- **If a vehicle with an i-stop non-operation condition is brought in, the malfunction will not be resolved by simply performing the battery condition initial setting (i-stop setting). Verify the PID "BATT_SOC" value and if the value is less than 80%, recharge the battery. (See 01-17B-8 BATTERY RECHARGING [SKYACTIV-D 2.2].)**
- **If the "BATT_SOC" value has not been verified before disconnecting the negative battery cable, perform battery condition initial setting (i-stop setting) after performing the battery inspection.**
- **The "BATT_SOC" value is displayed "0%" because the battery charge condition is not stabilized after connecting the negative battery cable (it is necessary to leave battery undisturbed for approx. 6 to 48 h to stabilize battery charge condition).**

- If the negative battery cable is disconnected, specific information stored in the PCM will be erased. Therefore, perform the following procedure after reconnecting.

Battery Condition Initial setting (i-stop setting) flow

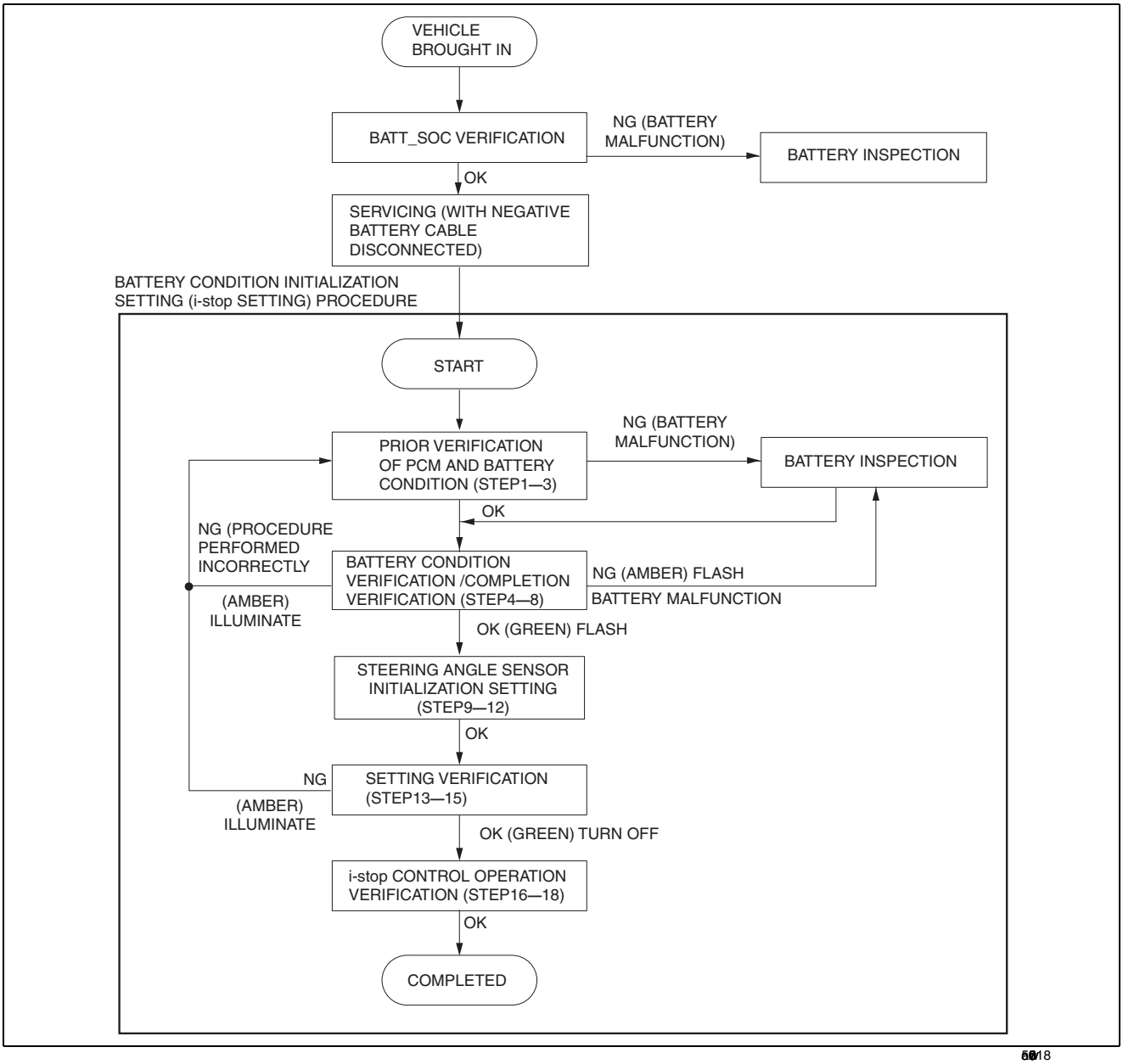

CHARGING SYSTEM [SKYACTIV-D 2.2]

Purpose	Step	Procedure	Caution/Note
Prior verification of PCM and battery condition	1	Verify the value (BATT_SOC) measured before disconnecting the negative battery cable. **When BATT_SOC value is not verified or the value is 80% or more.** • Go to the next step. **When BATT_SOC value is less than 80%** • Perform battery inspection. (See 01-17B-6 BATTERY INSPECTION [SKYACTIV-D 2.2].)	—
	2	Verify that 5 min or more have elapsed since the negative battery cable was disconnected.	**Caution** • **It is necessary to leave the battery undisturbed for 5 min or more because the voltage is not stabilized, depending on the battery usage condition, and the PCM cannot determine the "BATT_SOC" value correctly.**
	3	Disconnect the current sensor connector. If the current sensor connector has already been disconnected, go to the next step.	**Note** • Disconnect the current sensor connector to prevent the current sensor from being damaged by connecting the negative battery cable.
Battery condition verification / completion verification	4	Connect the negative battery cable and wait for 10 s or more.	**Caution** **negative battery cable terminal tightening torque: 2.9—4.9 N·m {30—49 kgf·cm, 26—43 in·lbf}**
	5	Connect the current sensor connector.	—
	6	Switch the ignition ON (engine off) and wait for 15 s or more (within 1 min.).	—
	7	**VERIFY i-stop INDICATOR LIGHT (GREEN) AND i-stop WARNING LIGHT (AMBER) FLASHING CONDITION** • Press the i-stop OFF switch for 10 s and verify the flashing condition of the i-stop indicator light (green) and i-stop warning light (amber). **When i-stop indicator light (green) flashes** — Go to the next step. **When i-stop warning light (amber) flashes** — Perform the battery inspection. (See 01-17B-6 BATTERY INSPECTION [SKYACTIV-D 2.2].) **When i-stop warning light (amber) illuminates** — Procedure is performed incorrectly. Switch the ignition off and repeat the procedure from Step 1 (Prior verification of PCM and battery condition).	**Note** • When the i-stop OFF switch is pressed, the illumination condition of the i-stop warning light (amber) changes to flashing of either the i-stop indicator light (green) or the i-stop warning light (amber).
	8	Switch the ignition off.	—
Steering angle sensor initialization setting	9	Close the bonnet.	—
	10	Start the engine.	**Note** • Perform steering angle sensor initialization setting because the initial value stored in the EPS control module is reset.
	11	Turn the steering wheel lock-to-lock.	
	12	Switch the ignition off.	

CHARGING SYSTEM [SKYACTIV-D 2.2]

Purpose	Step	Procedure	Caution/Note
Setting verification	13	Perform the following procedure within 25 s. 1. Switch the ignition ON (engine off) and within 5 s, long-press the i-stop OFF switch for 3 s or more. (The i-stop warning light (amber) illuminates.) 2. Start the engine. 3. Long-press the i-stop OFF switch one time. 4. Verify that the i-stop warning light (amber) stop illuminating and the i-stop indicator light (green) starts flashing. — If the amber light continues to illuminate, the procedure was performed incorrectly, therefore repeat the procedure from Step 1. (Prior verification of PCM and battery condition)	**Note** • Although the i-stop indicator light (green) may flash a few times right after the engine is started, then the i-stop warning light (amber) starts illuminating.
	14	Maintain the idle status (no electrical load) until the i-stop indicator light (green) turns off.	—
	15	After the i-stop indicator light (green) turns off, switch the ignition off.	—
i-stop control operation verification	16	Start the engine and verify that the i-stop indicator light (green) is turned off.	—
	17	Verify the i-stop control operation using the following procedure. 1. Vehicle is traveling at a speed of 4 km/h or more. (EC/Russia specs.) 1. While the vehicle is traveling at a speed of 4 km/h or more, verify that the i-stop indicator light (green) illuminates. (Except EC/Russia specs.) 2. Stop the vehicle and verify that the engine stops via the i-stop control and then restarts.	—
	18	Switch the ignition off.	—

CHARGING SYSTEM [SKYACTIV-D 2.2]

GENERATOR REMOVAL/INSTALLATION [SKYACTIV-D 2.2]

id0117h6800200

Warning

- **Remove and install all parts when the engine is cold, otherwise they can cause severe burns or serious injury.**
- **When the battery cables are connected, touching the vehicle body with generator terminal B will generate sparks. This can cause personal injury, fire, and damage to the electrical components. Always disconnect the negative battery cable before performing the following operation.**

1. Disconnect the negative battery cable. (See 01-17B-9 NEGATIVE BATTERY CABLE DISCONNECTION/CONNECTION [SKYACTIV-D 2.2].)
2. Remove the front under cover No.2. (See 09-16-41 FRONT UNDER COVER No.2 REMOVAL/INSTALLATION.)
3. Remove the splash shield (RH). (See 09-16-49 SPLASH SHIELD REMOVAL/INSTALLATION.)
4. Remove the drive belt. (See 01-10B-8 DRIVE BELT REMOVAL/INSTALLATION [SKYACTIV-D 2.2].)
5. Remove the engine cover. (See 01-10B-4 ENGINE COVER REMOVAL/INSTALLATION [SKYACTIV-D 2.2].)
6. Remove in the order indicated in the table.
7. Install in the reverse order of removal.

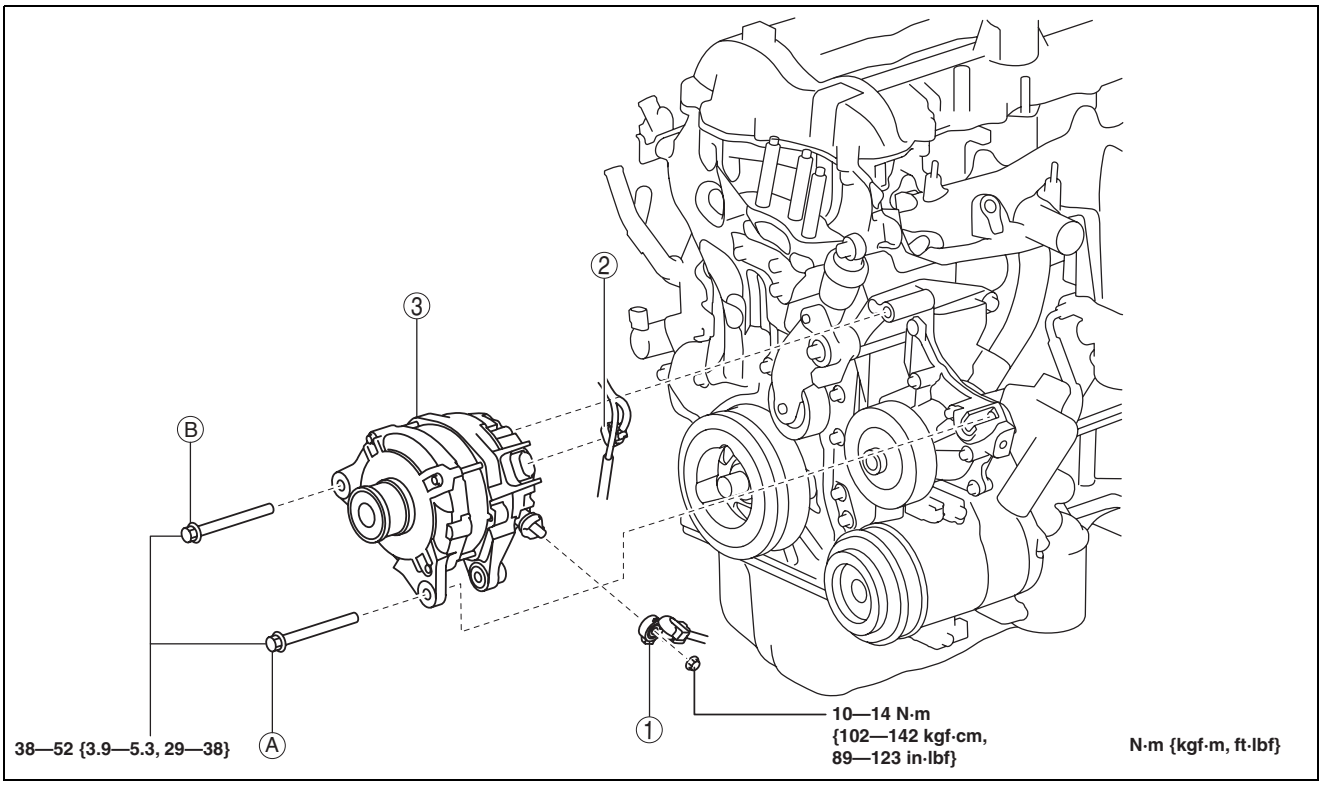

ac5wzw0000512

1	Terminal B cable
2	Generator connector

3	Generator (See 01-17B-15 Generator Removal Note.) (See 01-17B-16 Generator Installation Note.)

CHARGING SYSTEM [SKYACTIV-D 2.2]

Generator Removal Note

1. Disconnect the connectors and wiring harness clip shown in the figure.

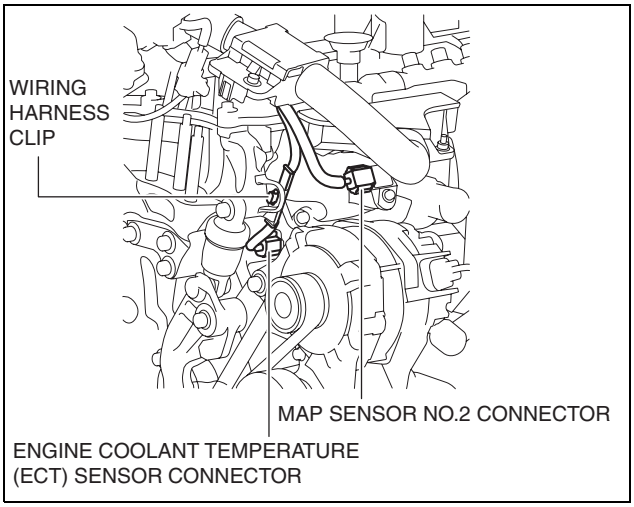

ac5wzw0000513

2. Remove the adapter shown in the figure.

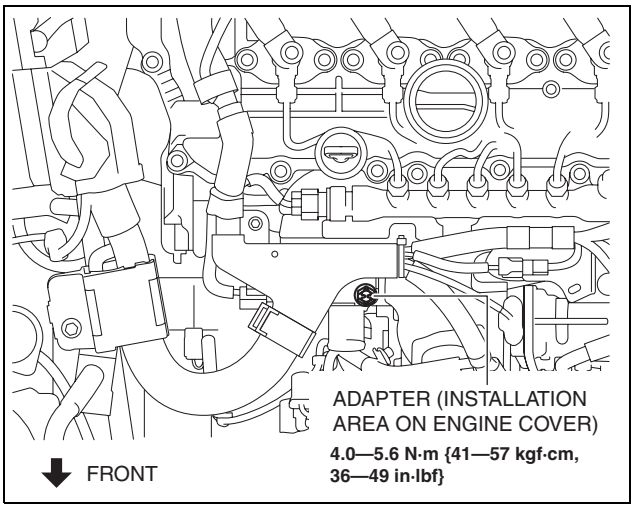

ac5wzw0000513

3. Remove the nuts and bolt shown in the figure and set the wiring harness aside.
4. Fully loosen the generator lower bolt and pull it outward until it contacts the body frame.

Note

- The generator can be removed without fully removing the lower bolt from the engine.

5. Remove the generator upper bolt.
6. Remove the generator together with the lower bolt from the engine.

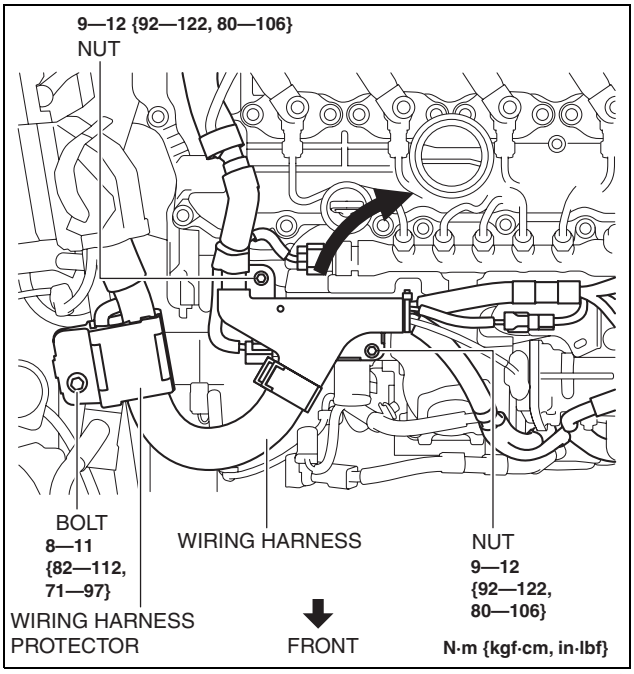

ac5wzw0000513

CHARGING SYSTEM [SKYACTIV-D 2.2]

7. Remove the generator from above the engine compartment.

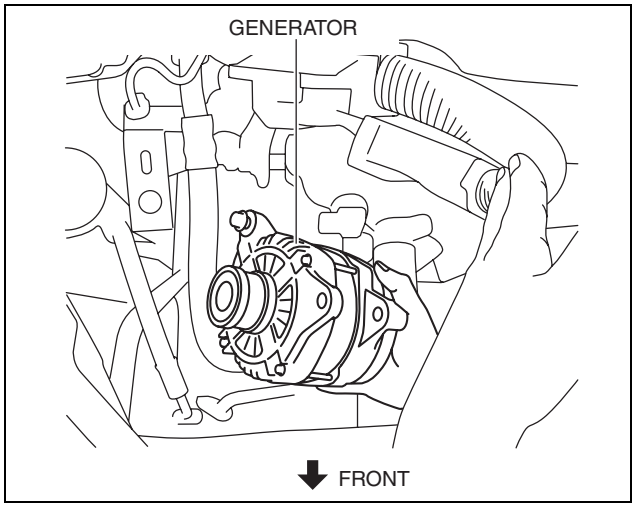

ac5wzw0000513

Generator Installation Note

1. To facilitate the installation of the generator to the engine, grasp the spacer in the lower and upper bolt installation parts using pliers and push it down to the nut side.
2. Insert generator installation bolt A into the generator.
3. Align the generator bolt installation holes on the engine and generator sides and temporarily tighten generator installation bolts A and B.
4. Tighten the generator installation bolts in the order of A, B.

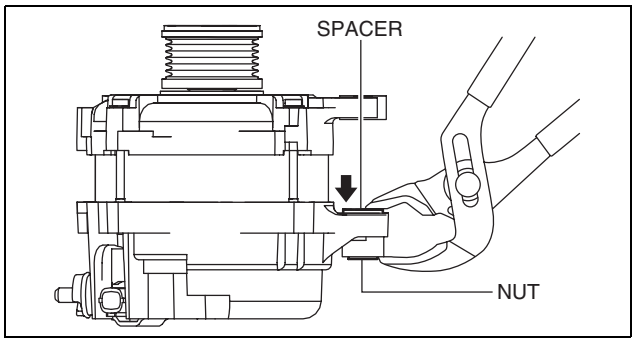

ac5wzw0000513

GENERATOR INSPECTION [SKYACTIV-D 2.2]

id0117h6800300

Caution

- **Do not apply direct battery positive voltage to generator terminal D, otherwise it could cause damage to the internal parts (power transistor) of the generator.**

Charging System Warning Light

1. Verify that the battery is fully charged.
2. Verify that the drive belt is correct. (See 01-10B-7 DRIVE BELT INSPECTION [SKYACTIV-D 2.2].)
3. Switch the ignition to ON (engine off), verify that the charging system warning light illuminates.
   - If it does not illuminate, inspect the charging system warning light and the wiring harness.
     — If the charging system warning light and the wiring harness are normal, inspect the PCM.
4. Verify that the charging system warning light goes out after the engine is started.
   - If the charging system warning light does not go out, perform the DTC inspection, then perform troubleshooting according to the corresponding diagnostic procedure.

Generator
Voltage

1. Verify that the battery is fully charged.
2. Verify that the drive belt is correct. (See 01-10B-7 DRIVE BELT INSPECTION [SKYACTIV-D 2.2].)
3. Turn off all electrical loads.
4. Start the engine.
5. Verify that the generator rotates smoothly without any noise while the engine is running.
   - If there is any noise, find the cause and repair or replace the generator.

CHARGING SYSTEM [SKYACTIV-D 2.2]

6. Measure the voltage at each terminal using a tester.
   - If it is not as specified, find the cause and repair or replace the applicable part.

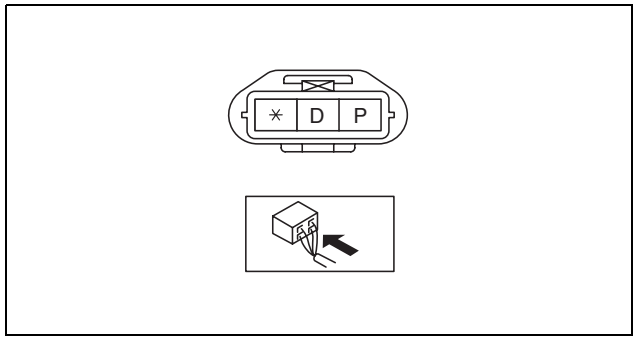

am6zzw0000234

Generator standard voltage [IG-ON]
Terminal B: B+
Terminal P: Approx. 1 V or less
Terminal D: Approx. 0 V

Generator standard voltage [Idle, 20 °C {68 °F}]
Terminal B: 13—15 V
Terminal P: Approx. 3—8 V
Terminal D: Turn the electrical loads (headlights, blower motor, rear window defroster, brake lights, etc.) on and verify that the voltage reading increases.

Current

Note
- Since the charging current decreases rapidly after starting the engine, carry out the following procedure quickly, and read the maximum current value.

1. Verify that the battery is fully charged.
2. Verify that the drive belt is correct. (See 01-10B-7 DRIVE BELT INSPECTION [SKYACTIV-D 2.2].)
3. Disconnect the negative battery cable.
4. Connect a tester, which can read **120 A or more**, between generator terminal B and the wiring harness.
5. Connect the negative battery cable. (See 01-17B-3 BATTERY REMOVAL/INSTALLATION [SKYACTIV-D 2.2].)
6. Turn off all electrical loads.
7. Start the engine.

Note
- When the electrical load on the vehicle is low, the specified current cannot be verified although the generator is normal. In this case, increase the electrical load (Leave the headlights turned on for a while, then discharge the battery, or use a similar method.) and recheck.
- When the generator itself or the ambient temperature are too high, the specified current also cannot be verified. In this case, cool down the generator and recheck.

8. Turn the electrical loads (headlights, blower motor, rear window defroster, brake lights, etc.) on and verify that the current reading increases more than the minimum value indicated below.
   — If it is not as specified, go to the PCM and generator shearing inspection. (See 01-17B-18 PCM and generator shearing inspection.)

Generator generated current (reference value) [Ambient temperature: 20 °C {68 °F}, Engine hot]

Engine speed (rpm)	Terminal B voltage (V)	Generator output current (A)
1,000	13	125
1,000	15	128
2,000	13	148
2,000	15	163

*** Field coil current control signal 100%**

CHARGING SYSTEM [SKYACTIV-D 2.2]

PCM and generator shearing inspection

1. Connect the M-MDS to the DLC-2.
2. Inspect as follows:

Step	Inspection		Action
1	Measure the generator terminal B voltage when the electrical loads*1 are on and off.	15 V or more	Go to Step 2.
		13—15 V	Normal*2
		13 V or less	Go to Step 3.
2	Monitor the ALTT V PID using the M-MDS. Is the value normal?	Yes	Go to Step 4.
		No	Inspect the following, then repair or replace as necessary. • If there is no malfunction, replace the PCM. 1. Wiring harness between PCM terminal 1D- generator terminal P. 2. Wiring harness between PCM terminal 1EI- generator terminal D. 3. Generator inner parts.
3	Monitor the ALTT V PID using the M-MDS. Is the value normal?	Yes	Go to Step 5.
		No	Inspect the following, then repair or replace as necessary. • If there is no malfunction, replace the PCM. 1. Wiring harness between PCM terminal 1D- generator terminal P. 2. Wiring harness between PCM terminal 1EI- generator terminal D. 3. Generator inner parts.
4	Monitor the ALTF PID using the M-MDS. Is the duty value 100%?	Yes	Replace PCM.
		No	Inspect the following, then repair or replace as necessary. • If there is no malfunction, replace the PCM. 1. Wiring harness between PCM terminal 1EI - generator terminal D. 2. Generator inner parts.
5	Monitor the ALTF PID using the M-MDS. Is the duty value 0%?	Yes	Replace PCM.
		No	Inspect the following, then repair or replace as necessary. • If there is no malfunction, replace the PCM. 1. Wiring harness between PCM terminal 1EI- generator terminal D. 2. Generator inner parts.

*1 : Headlights, blower motor, rear window defroster, brake lights, etc.
*2 : If the generator field coil duty value does not change when electrical loads (such as headlights, blower motor, rear window defroster, brake lights) are on or off, inspection with discharged battery is needed.

Generator Inner Parts

Rotor

1. Measure the resistance between the slip rings using a tester.
   - If not within specification, replace the rotor.

Generator rotor resistance (between slip rings) [20 °C {68 °F}]
1.8—2.1 ohms

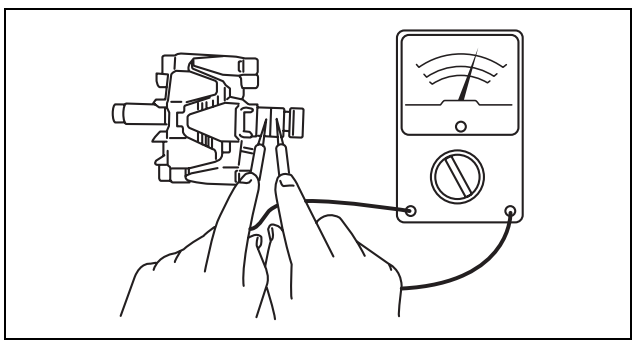

am6zzw0000235

CHARGING SYSTEM [SKYACTIV-D 2.2]

2. Verify that there is no continuity between the slip ring and core using a tester.
   - If there is continuity, replace the rotor.
3. Inspect the slip ring surface condition.
   - If the slip ring surface is rough, use a lathe or fine sandpaper to make it smooth.

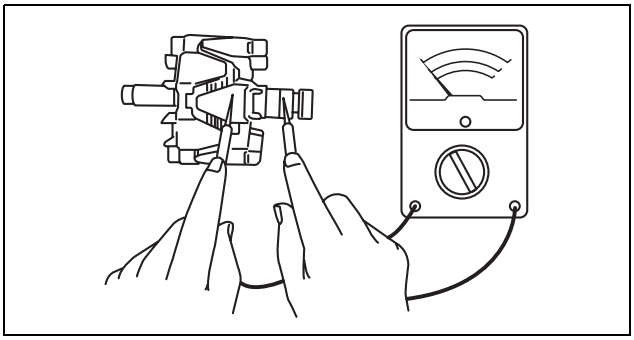
am6zzw0000235

Stator coil

1. Verify that the continuity is as indicated in the table.

○—○ : Continuity

Terminal					
1	2	3	4	5	6
○—○					
○		○			
	○—○				
			○—○		
			○		○
				○—○	

am6zzw0000235

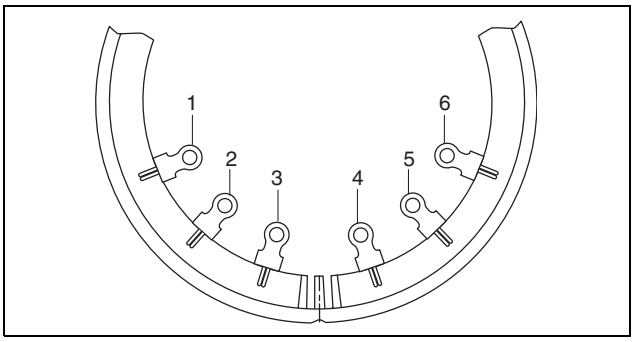

am6zzw0000235

   - If there is any malfunction, replace the stator.
2. Verify that there is no continuity between the stator coil leads and core using a tester.
   - If there is continuity, replace the stator coil.

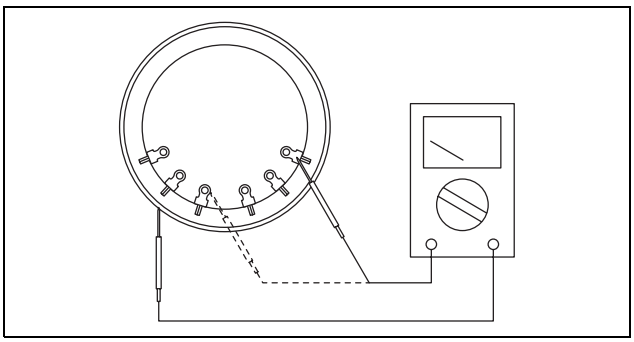
am3uuw0000326

Brush

1. Inspect brushes for wear.
   - If any brush is worn almost to or beyond the limit, replace all of the brushes.

Generator brush length
Standard: 22.5 mm {0.886 in}
Minimum: 5.0 mm {0.20 in}

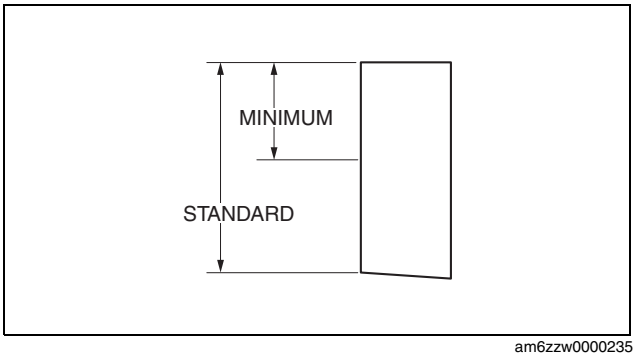

am6zzw0000235

CHARGING SYSTEM [SKYACTIV-D 2.2]

Brush spring

1. Measure the force of the brush spring using a spring pressure gauge.
2. Read the spring pressure gauge at the brush tip projection of **2 mm {0.08 in}.**
   - If not within specification, replace the brush spring.

Generator brush spring force
Standard: 4.1—5.3 N {0.42—0.54 kgf, 1.0—1.1 lbf}
Minimum: 1.7 N {0.17 kgf, 0.38 lbf}

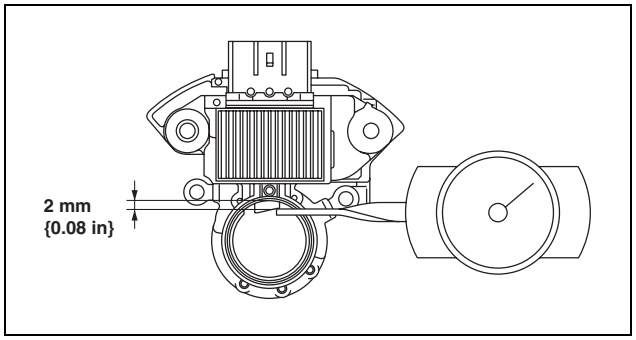

ac5uuw00000592

Rectifier (Using an analog circuit tester)

1. Inspect for continuity of the diodes using an analog circuit tester.
   - If not as specified, replace the rectifier.

Specification

Negative	Positive	Continuity
E	P1, P2, P3, P4, P5, P6	Yes
B		No
P1, P2, P3, P4, P5, P6	E	No
	B	Yes

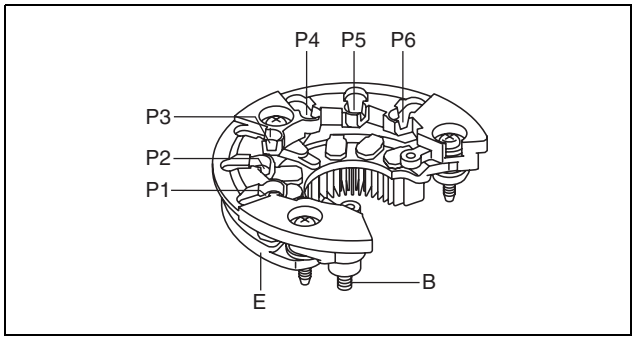

ac5uuw00000593

Rectifier (Using a digital circuit tester)

1. Inspect for continuity of the diodes using a digital circuit tester.
   - If not as specified, replace the rectifier.

Specification

Negative	Positive	Continuity
E	P1, P2, P3, P4, P5, P6	No
B		Yes
P1, P2, P3, P4, P5, P6	E	Yes
	B	No

Bearing

1. Inspect for abnormal noise, looseness, and sticking.
   - Replace the bearing if necessary.

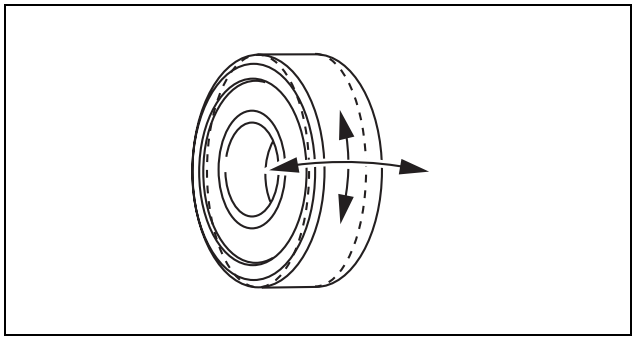
am6zzw0000235

CHARGING SYSTEM [SKYACTIV-D 2.2]

GENERATOR DISASSEMBLY/ASSEMBLY [SKYACTIV-D 2.2]

id0117h6800400

Caution
- **Melt the solder quickly, otherwise the diodes (rectifier) and regulator will be damaged by excessive heat.**

1. Disassemble in the order indicated in the table.
2. Assemble in the reverse order of disassembly.

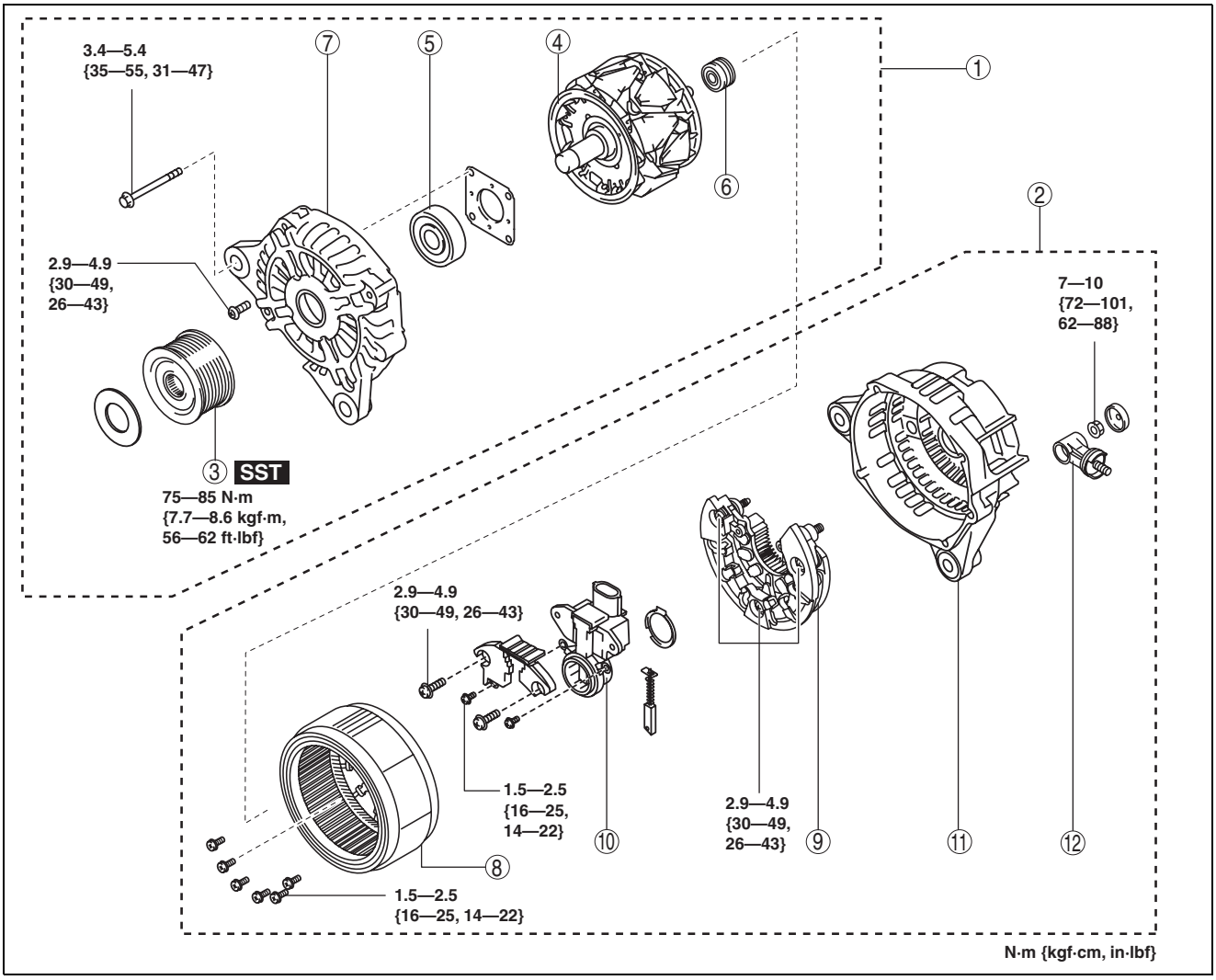

ac5wzw0000533

1	Rotor component
2	Stator coil component
3	Pulley (See 01-17B-22 Pulley Disassembly/Assembly Note.)
4	Rotor
5	Front bearing

6	Rear bearing
7	Front cover
8	Stator coil
9	Rectifier
10	Regulator component
11	Rear cover
12	Terminal B component

CHARGING SYSTEM [SKYACTIV-D 2.2]

Pulley Disassembly/Assembly Note

1. Disassemble/assemble the pulley using the **SST**.

   Tightening torque
   75—85 N·m {7.7—8.6 kgf·m, 56—62 ft·lbf}

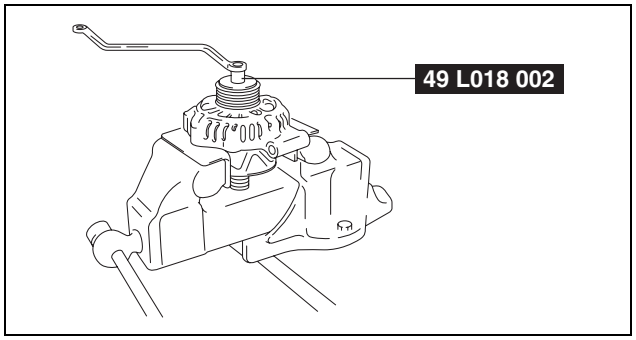

am3uuw0000609

DC-DC CONVERTER REMOVAL/INSTALLATION [SKYACTIV-D 2.2]

id0117h6004600

1. Disconnect the negative battery cable. (See 01-17B-9 NEGATIVE BATTERY CABLE DISCONNECTION/ CONNECTION [SKYACTIV-D 2.2].)
2. Remove the front under cover No.1. (See 09-16-40 FRONT UNDER COVER No.1 REMOVAL/INSTALLATION.)
3. Set the front mud guard (LH) aside as shown in the figure. (See 09-16-47 MUDGUARD REMOVAL/INSTALLATION.)
4. Remove in the order indicated in the table.

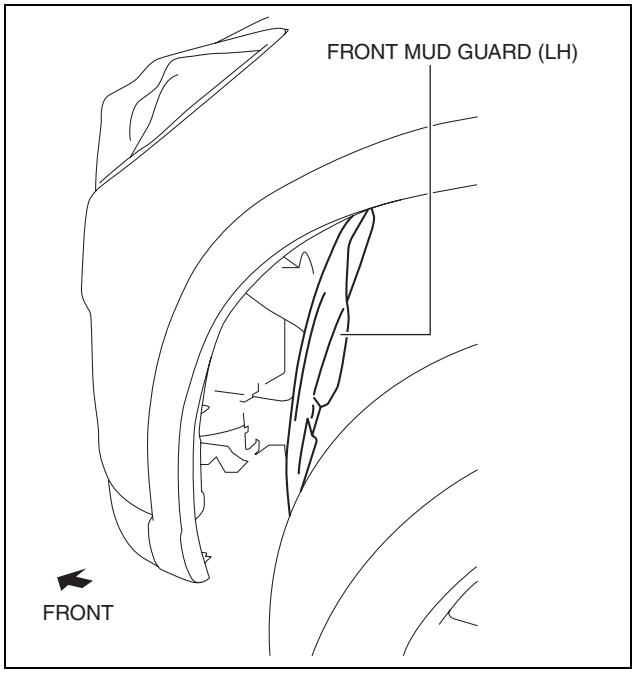

ac5wzw0000512

CHARGING SYSTEM [SKYACTIV-D 2.2]

5. Install in the reverse order of removal.

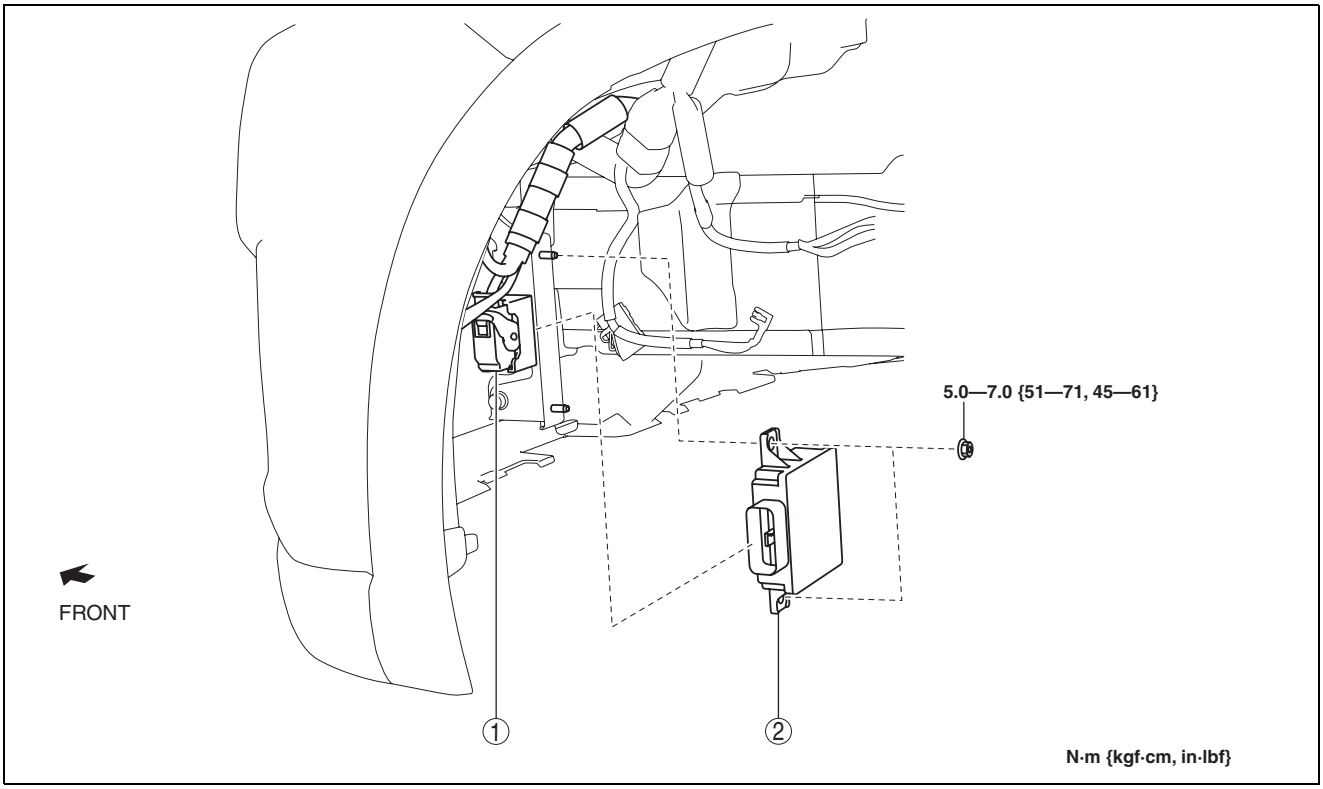

ac5wzw0000264

1	DC-DC converter connector (See 01-17B-23 DC-DC Converter Connector Installation Note.)
2	DC-DC converter

DC-DC Converter Connector Installation Note

1. Before installation, verify that the connector lever is unlocked position.
2. Connect the DC-DC converter connector using the following procedure:

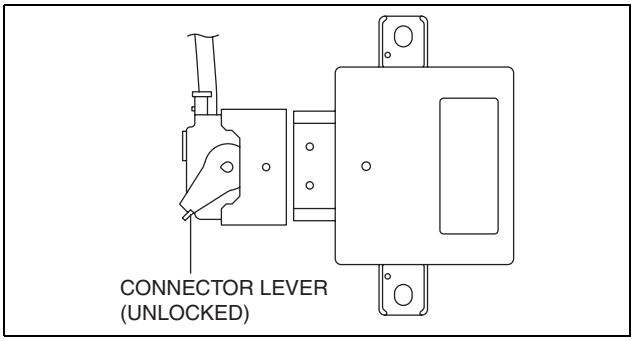

ac5wzw0000264

(1) Insert the DC-DC converter connector straight until it stops.

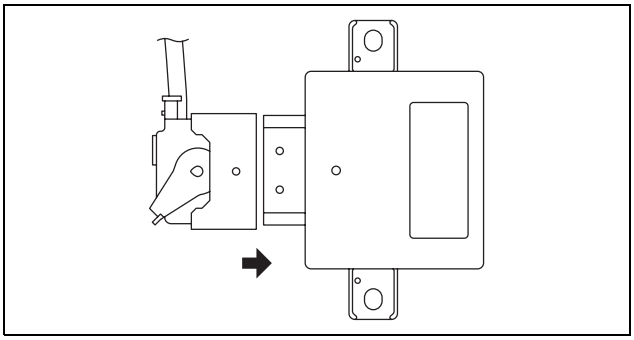

ac5wzw0000264

(2) Move the connector lever until a click sound is heard.

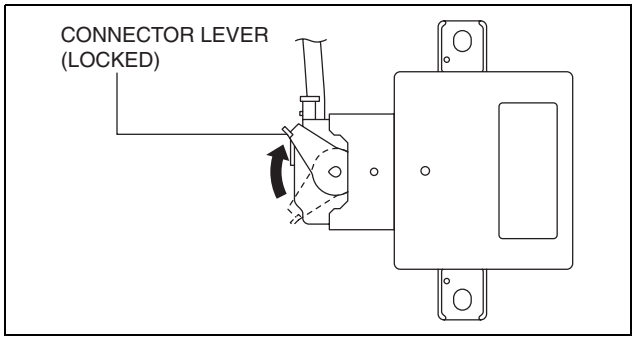

ac5wzw0000264

01-18 IGNITION SYSTEM [SKYACTIV-G 2.0]

IGNITION SYSTEM LOCATION INDEX [SKYACTIV-G 2.0] 01-18–1
IGNITION COIL/ION SENSOR REMOVAL/INSTALLATION [SKYACTIV-G 2.0] 01-18–2
IGNITION COIL INSPECTION [SKYACTIV-G 2.0] 01-18–2
Ignition Coil Inspection 01-18–2
SPARK PLUG REMOVAL/INSTALLATION [SKYACTIV-G 2.0] 01-18–3
SPARK PLUG INSPECTION [SKYACTIV-G 2.0] 01-18–3
Specification 01-18–3
Plug Gap Inspection 01-18–3
Cleaning 01-18–3
Visual Inspection 01-18–4
Resistance Inspection 01-18–4

IGNITION SYSTEM [SKYACTIV-G 2.0]

IGNITION SYSTEM LOCATION INDEX [SKYACTIV-G 2.0]

id0118h6800100

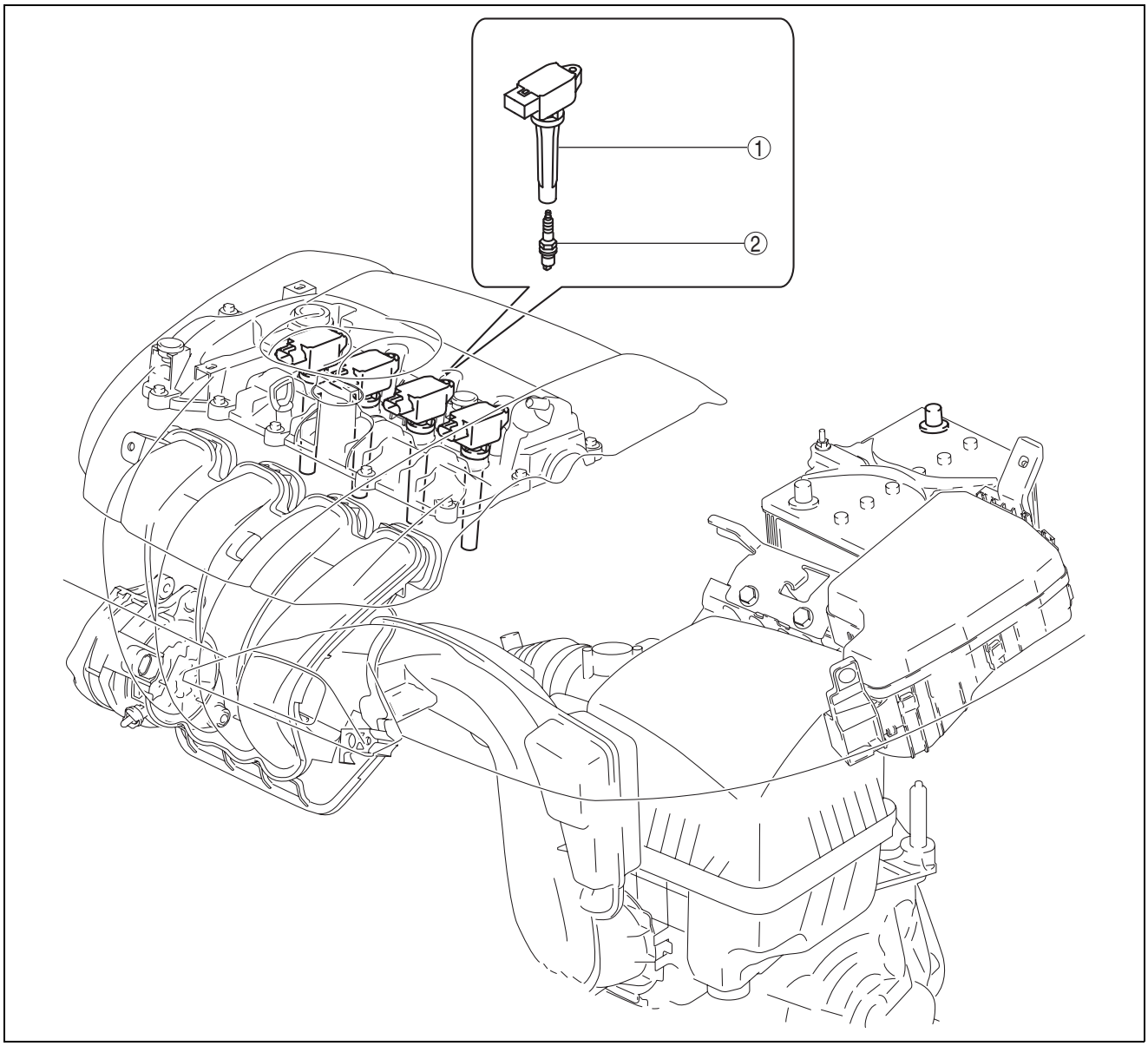

ac5wzw0000511

IGNITION SYSTEM [SKYACTIV-G 2.0]

1	Ignition coil/ion sensor (See 01-18-2 IGNITION COIL/ION SENSOR REMOVAL/INSTALLATION [SKYACTIV-G 2.0].) (See 01-18-2 IGNITION COIL INSPECTION [SKYACTIV-G 2.0].)

2	Spark plug (See 01-18-3 SPARK PLUG REMOVAL/INSTALLATION [SKYACTIV-G 2.0].) (See 01-18-3 SPARK PLUG INSPECTION [SKYACTIV-G 2.0].)

IGNITION COIL/ION SENSOR REMOVAL/INSTALLATION [SKYACTIV-G 2.0]

id0118h6811200

1. Disconnect the negative battery cable. (See 01-17A-11 NEGATIVE BATTERY CABLE DISCONNECTION/CONNECTION [SKYACTIV-G 2.0].) (See 01-17A-13 NEGATIVE BATTERY CABLE DISCONNECTION/CONNECTION [SKYACTIV-G 2.0 (WITHOUT i-stop)])
2. Remove the plug hole plate. (See 01-10A-6 PLUG HOLE PLATE REMOVAL/INSTALLATION [SKYACTIV-G 2.0].)
3. Remove in the order indicated in the table.
4. Install in the reverse order of removal.

1	Connector
2	Ignition coil/ion sensor

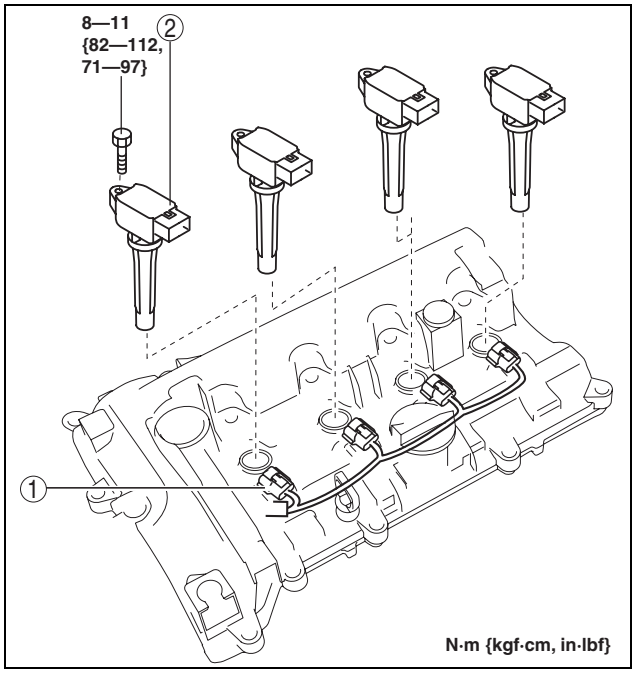

ac5uuw00000602

IGNITION COIL INSPECTION [SKYACTIV-G 2.0]

id0118h6800300

Ignition Coil Inspection

1. Perform the spark test and identify the malfunctioning cylinder. (See 01-03-118 ENGINE CONTROL SYSTEM OPERATION INSPECTION [SKYACTIV-G 2.0].)
2. Replace the ignition coil/ion sensor of the malfunctioning cylinder with that of a normal cylinder, and perform the spark test again. (See 01-03-118 ENGINE CONTROL SYSTEM OPERATION INSPECTION [SKYACTIV-G 2.0].)
   - If the spark is not normal due to a malfunctioning ignition coil/ion sensor, replace that ignition coil/ion sensor.
   - It is unlikely that all four ignition coil/ion sensors fail to operate properly. To prevent replacing a normal component, perform the above procedure, identify the malfunctioning ignition coil/ion sensor, and replace it.

IGNITION SYSTEM [SKYACTIV-G 2.0]

SPARK PLUG REMOVAL/INSTALLATION [SKYACTIV-G 2.0]

id0118h6800400

Caution
- **If a spark plug that is not as specified is installed, engine performance will be deteriorated. Install only the specified spark plug when replacing.**

1. Disconnect the negative battery cable. (See 01-17A-11 NEGATIVE BATTERY CABLE DISCONNECTION/CONNECTION [SKYACTIV-G 2.0].) (See 01-17A-13 NEGATIVE BATTERY CABLE DISCONNECTION/CONNECTION [SKYACTIV-G 2.0 (WITHOUT i-stop)])
2. Remove the plug hole plate. (See 01-10A-6 PLUG HOLE PLATE REMOVAL/INSTALLATION [SKYACTIV-G 2.0].)
3. Remove the ignition coils/ion sensors. (See 01-18-2 IGNITION COIL/ION SENSOR REMOVAL/INSTALLATION [SKYACTIV-G 2.0].)
4. Remove the spark plugs using a plug-wrench.
5. Install in the reverse order of removal.

Tightening torque
15—20 N·m {1.6—2.0 kgf·m, 12—14 ft·lbf}

SPARK PLUG INSPECTION [SKYACTIV-G 2.0]

id0118h6800500

Specification

Spark plug type
PE01-18-110, PE02-18-110

Plug Gap Inspection

Caution
- **To avoid possible damage to the tip, do not adjust the plug gap.**
- **To prevent damaging the tip, use a wire type plug gap gauge when inspecting the plug gap.**

1. Measure the spark plug gap using a wire type plug gap gauge.
   - If not within the standard specification, replace the spark plug.

Spark plug gap
Standard: 0.75—1.10 mm {0.030—0.043 in}
New spark plug (reference): 0.75—0.85 mm {0.030—0.033 in}

Cleaning

Caution
- **Carbon may adhere to the tip of the spark plug during vehicle delivery or repeated short distance driving during the winter time. If there is any malfunction such as rough idling or start difficulty due to carbon adhesion causing plug fouling, burn off the carbon by performing no-load racing of the engine.**
- **When performing the no-load racing, apply the side brake and foot brake, move the shift lever to neutral (MTX), or the selector lever to P position (ATX) to prevent an accident and serious injury.**
- **To avoid possible damage to the spark plug tip, do not use a wire brush for cleaning.**

Note
- To avoid possible damage to the tip, use gasoline to clean the spark plugs after removing dirt.
- If the accelerator pedal is depressed continuously for a specified time, the engine speed may decrease to the idle speed. This is due to the PCM control operation, which prevents overheating, and it does not indicate a malfunction.
- Do not perform no-load racing at high engine speed continuously for **10 s or more**.

1. If there is carbon adhering to the spark plug, perform no-load racing at **4,000 rpm** for **2 min**, **2 times**.

IGNITION SYSTEM [SKYACTIV-G 2.0]

Visual Inspection

1. Inspect the following items:
   - If any of the following malfunctions are indicated, replace the spark plug.
     - — Insulator breakage
     - — Worn electrode
     - — Damaged gasket
     - — Badly burned insulator (sparking side)

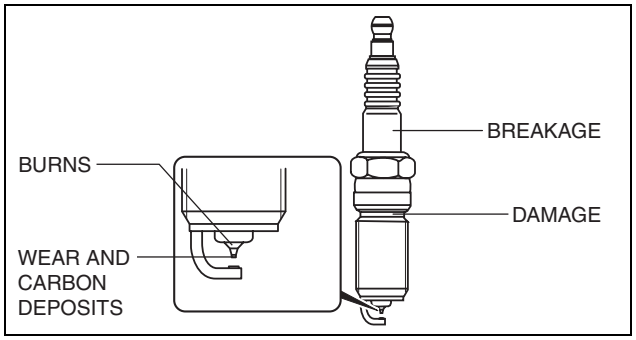

am3uuw0000624

Resistance Inspection

1. Measure the resistance of the spark plug using a tester as shown in the figure.
   - If not within specification, replace the spark plug.

   Spark plug resistance [25°C {77 °F}]
   3.0—7.5 kilohms

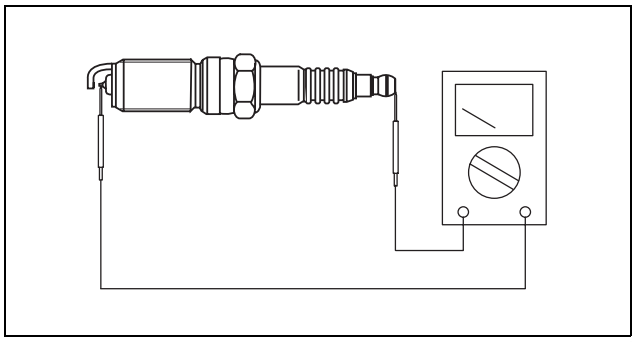
am3uuw0000624

01-19A STARTING SYSTEM [SKYACTIV-G 2.0]

STARTING SYSTEM LOCATION INDEX [SKYACTIV-G 2.0] **01-19A–1**
STARTER REMOVAL/INSTALLATION [SKYACTIV-G 2.0] **01-19A–2**
Operation After Replacing Starter (Vehicle With i-stop) **01-19A–2**
Starter Removal/Installation **01-19A–3**
STARTER INSPECTION [SKYACTIV-G 2.0] **01-19A–4**
On-vehicle Inspection **01-19A–4**
No-load Test **01-19A–4**
Magnetic Switch Operation Inspection (Vehicle Without i-stop) **01-19A–4**
Pinion Gap Inspection (Vehicle Without i-stop) **01-19A–5**
Starter Inner Parts Inspection (Vehicle Without i-stop) **01-19A–5**
STARTER DISASSEMBLY/ASSEMBLY [SKYACTIV-G 2.0 (WITHOUT i-stop)] **01-19A–8**
STARTER INTERLOCK SWITCH INSPECTION [SKYACTIV-G 2.0] **01-19A–9**

STARTING SYSTEM [SKYACTIV-G 2.0]

STARTING SYSTEM LOCATION INDEX [SKYACTIV-G 2.0]

id0119h7103700

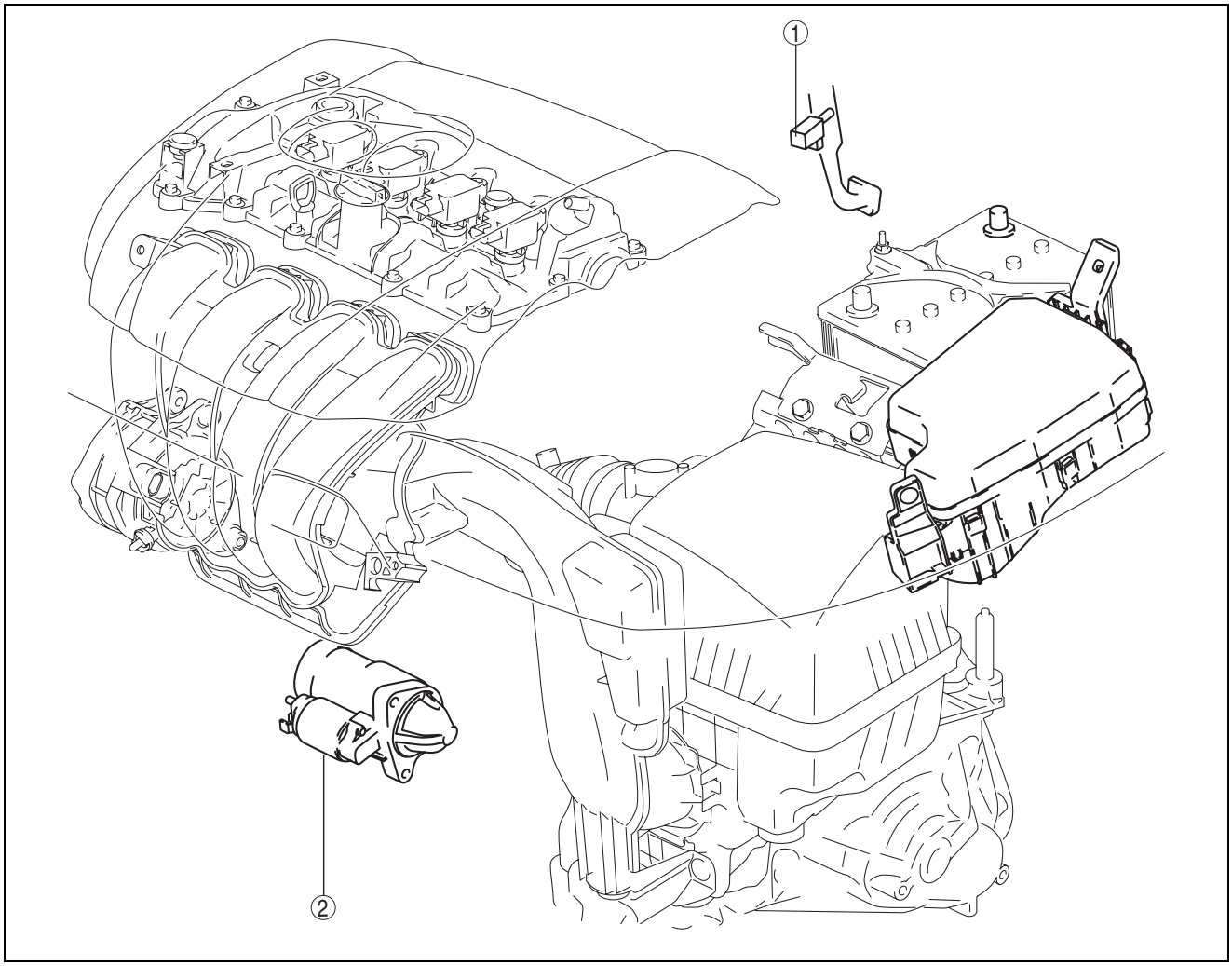

ac5wzw0000511

1	Starter interlock switch (MTX) (See 01-19A-9 STARTER INTERLOCK SWITCH INSPECTION [SKYACTIV-G 2.0].)

2	Starter (See 01-19A-2 STARTER REMOVAL/ INSTALLATION [SKYACTIV-G 2.0].) (See 01-19A-4 STARTER INSPECTION [SKYACTIV-G 2.0].) (See 01-19A-8 STARTER DISASSEMBLY/ ASSEMBLY [SKYACTIV-G 2.0 (WITHOUT i-stop)].)

STARTING SYSTEM [SKYACTIV-G 2.0]

STARTER REMOVAL/INSTALLATION [SKYACTIV-G 2.0]

id0119h7800200

Operation After Replacing Starter (Vehicle With i-stop)

Note

- If the number of times the starter can operate exceeds the limit, or there is any malfunction of the i-stop system-related parts, the i-stop warning light (amber) flashes.In addition, DTCs are stored simultaneously.
- To ensure reliability of the i-stop system, replace the starter with a new one if the number of times the sub-battery can operate has exceeded the upper limit.
- When replacing the starter, perform the following procedure: When replacing the PCM simultaneously, perform the PCM configuration first. (See 01-40-10 PCM REMOVAL/INSTALLATION [SKYACTIV-G 2.0].) (See 01-40-39 PCM CONFIGURATION (USING READ/WRITE FUNCTION) [SKYACTIV-G 2.0].) (See 01-40-39 PCM CONFIGURATION (USING AS-BUILT DATA) [SKYACTIV-G 2.0].)

Step	Action
1	**Note** • Perform the procedures from Step 1 to 5 within 2 min. — If the operation exceeds 2 min, switch the ignition off and repeat the procedures from Step 1. Switch the ignition ON (engine off).
2	Apply the parking brake firmly.
3	Shift the selector lever to the N position.
4	Perform the following work with the brake pedal depressed. 1. Depress and release the accelerator pedal 6 times. 2. Verify that the i-stop indicator light (green) flashes. • If the light does not flash, switch the ignition off and repeat the procedure from Step 1. 3. Depress and release the accelerator pedal 6 times. 4. Verify that the i-stop indicator light (green) changes from illumination to flashing. • If the light does not change to illumination, switch the ignition off and repeat the procedure from Step 1.
5	Long-press the i-stop OFF switch. Wait until the i-stop indicator light (green) turns off (for 5 s or more). • If the light does not turn off, switch the ignition off and repeat the procedure from Step 1.
6	Switch the ignition off.
7	Start the engine.
8	Verify that the i-stop warning light (amber) turns off. • If the light does not turn off, switch the ignition off and repeat the procedure from Step 1.
9	Switch the ignition off and disconnect the negative battery cable. (See 01-17A-11 NEGATIVE BATTERY CABLE DISCONNECTION/CONNECTION [SKYACTIV-G 2.0].)
10	Verifying battery condition initialization setting (i-stop setting). (See 01-17A-14 BATTERY CONDITION INITIALIZATION SETTING (i-stop SETTING) [SKYACTIV-G 2.0].)

STARTING SYSTEM [SKYACTIV-G 2.0]

Starter Removal/Installation

Warning

- **Remove and install all parts when the engine is cold, otherwise they can cause severe burns or serious injury.**
- **When the battery cables are connected, touching the vehicle body with starter terminal B will generate sparks. This can cause personal injury, fire, and damage to the electrical components. Always disconnect the negative battery cable before performing the following operation.**

1. Disconnect the negative battery cable. (See 01-17A-11 NEGATIVE BATTERY CABLE DISCONNECTION/CONNECTION [SKYACTIV-G 2.0].) (See 01-17A-13 NEGATIVE BATTERY CABLE DISCONNECTION/CONNECTION [SKYACTIV-G 2.0 (WITHOUT i-stop)])
2. Remove the front under cover No.2. (See 09-16-41 FRONT UNDER COVER No.2 REMOVAL/INSTALLATION.)
3. Remove in the order indicated in the table.
4. Install in the reverse order of removal.

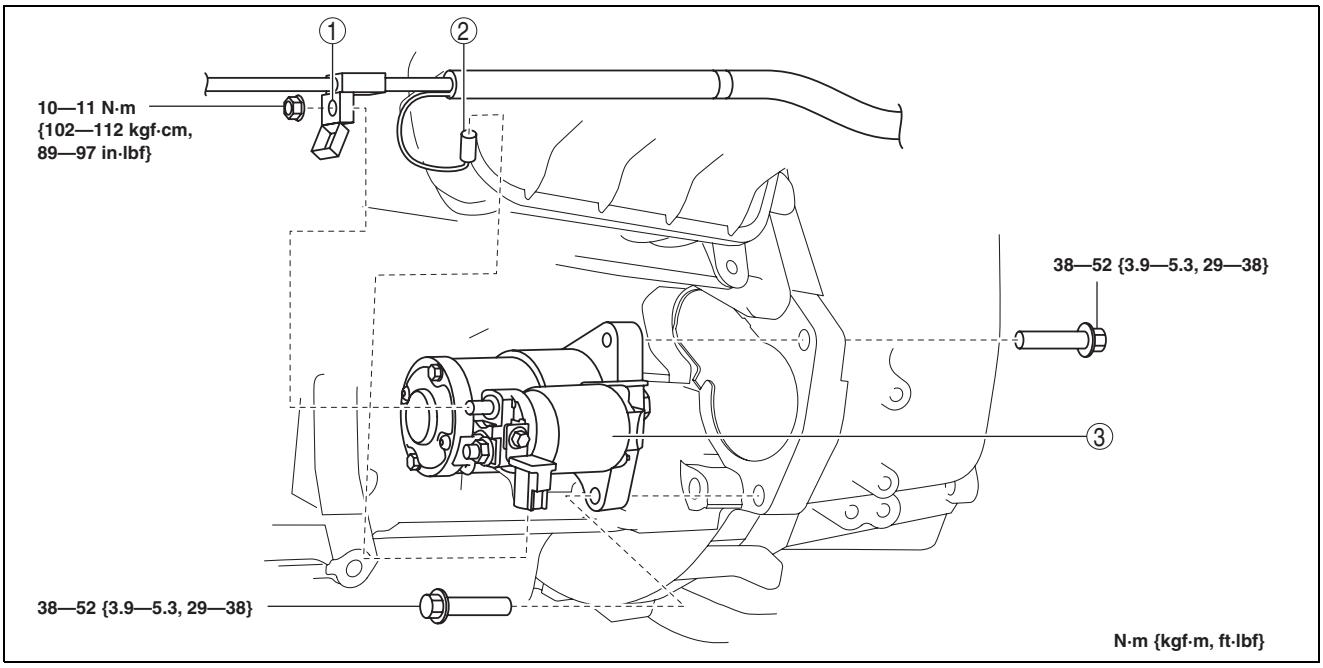

am3uuw0000896

1	Terminal B cable
2	Terminal S connector

3	Starter

STARTING SYSTEM [SKYACTIV-G 2.0]

STARTER INSPECTION [SKYACTIV-G 2.0]

id0119h7800300

On-vehicle Inspection

1. Verify that the battery is fully charged.
2. The starter is normal if it rotates smoothly and without any noise when the engine is cranked.
   - If the starter does not operate, inspect the following:
     — Remove the starter, and inspect the starter unit.
     — Inspect the related wiring harnesses, the ignition switch, and the transaxle range switch (ATX) or starter interlock switch (MTX).

No-load Test

1. Verify that the battery is fully charged.
2. Connect the starter, battery, and a tester as shown in the figure.
3. Operate the starter and verify that it rotates smoothly.
   - If the starter does not rotate smoothly, inspect the starter unit.
4. Measure the voltage and current while the starter is operating.
   - If not within specification, replace the starter.

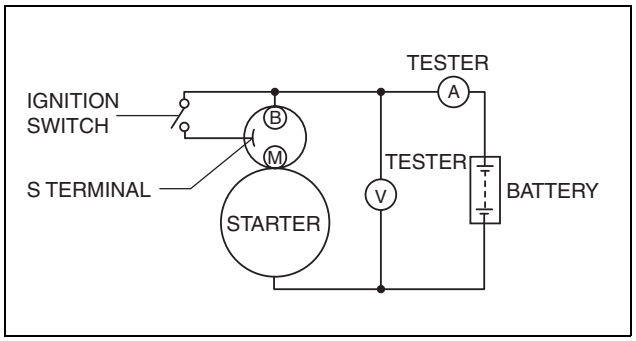

am6xuw0000234

Starter no-load test voltage
11 V

Starter no-load test current
Vehicle with i-stop: 90 A or less
Vehicle without i-stop: 95 A or less

Magnetic Switch Operation Inspection (Vehicle Without i-stop)

Pull-out test

Note
- Depending on the battery charge condition, the starter motor pinion may rotate while in an extended state. This is due to current flowing to the starter motor through the pull-in coil to turn the starter motor, and does not indicate an abnormality.

1. Verify that the starter motor pinion is extended while battery positive voltage is connected to terminal S and the starter body is grounded.
   - If the starter motor pinion is not extended, repair or replace the starter.

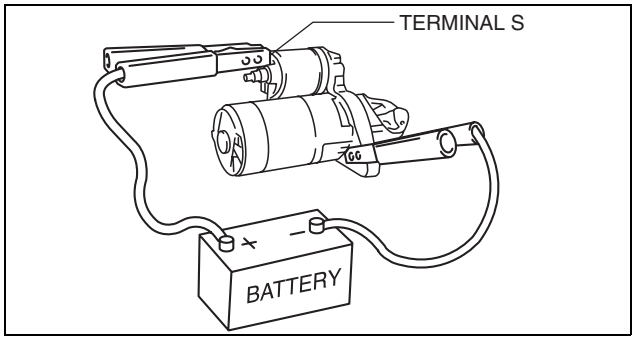

am6xuw0000234

STARTING SYSTEM [SKYACTIV-G 2.0]

Return test

1. Disconnect the motor wire from terminal M.
2. Connect battery positive voltage to terminal M and ground the starter body.
3. Pull out the drive pinion with a screwdriver. Verify that it returns to its original position when released.
   - If it does not return, repair or replace the starter.

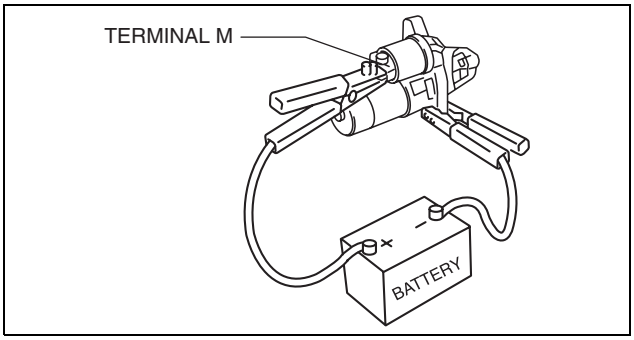

am6xuw0000234

Pinion Gap Inspection (Vehicle Without i-stop)

1. Pull out the drive pinion with the battery positive voltage connected to terminal S and the starter body grounded.

   Caution
   - **Applying power for more than 10 s can damage the starter. Do not apply power for more than 10 s.**

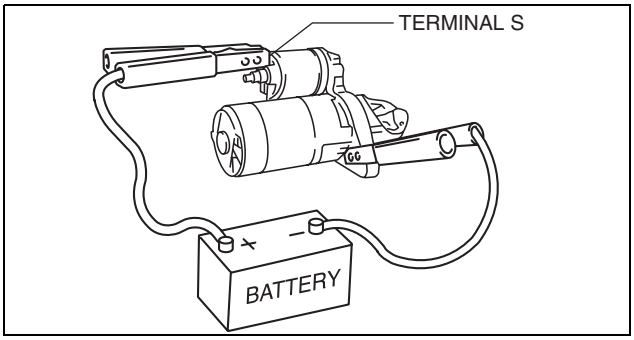

am6xuw0000234

2. Measure the pinion gap while the drive pinion is extended.
   - If not as specified, adjust with an adjustment washer (between drive housing front cover and magnetic switch).

   Starter pinion gap
   0.5—2.0 mm {0.02—0.07 in}

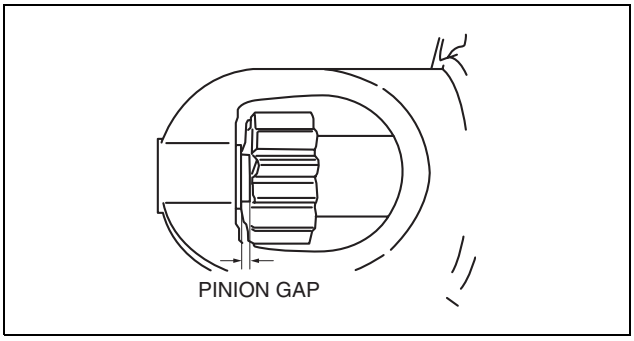

am6zzw0000237

Starter Inner Parts Inspection (Vehicle Without i-stop)
Armature

1. Verify that there is no continuity between the commutator and the core at each segment using a tester.
   - If there is continuity, replace the armature.

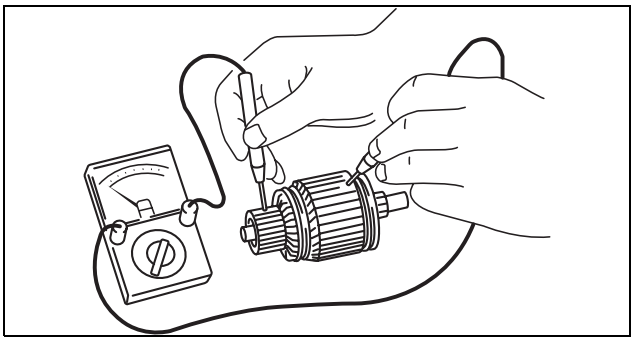
am6zzw0000237

STARTING SYSTEM [SKYACTIV-G 2.0]

2. Verify that there is no continuity between the commutator and the shaft using a tester.
   - If there is continuity, replace the armature.

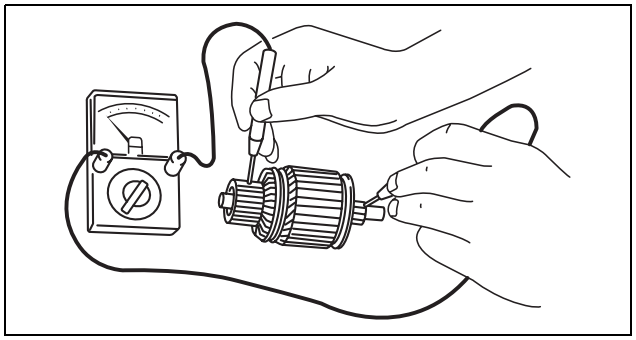
am6zzw0000237

3. Place the armature on V-blocks, and measure the runout using a dial indicator.
   - If not within specification, replace the armature.

   Starter armature runout
   0.1 mm {0.004 in} max.

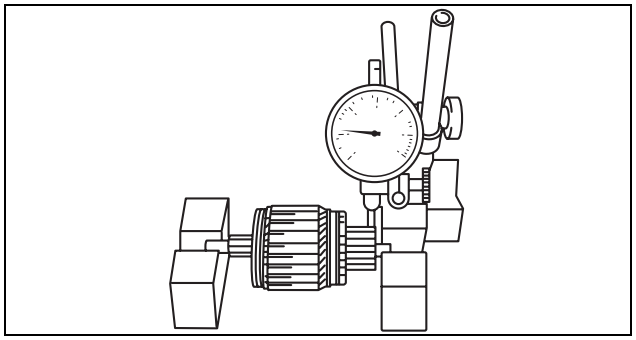
am6zzw0000238

4. Measure the commutator diameter.
   - If not within the minimum specification, replace the armature.

   Starter commutator diameter
   Standard: 29.4 mm {1.16 in}
   Minimum: 28.8 mm {1.13 in}

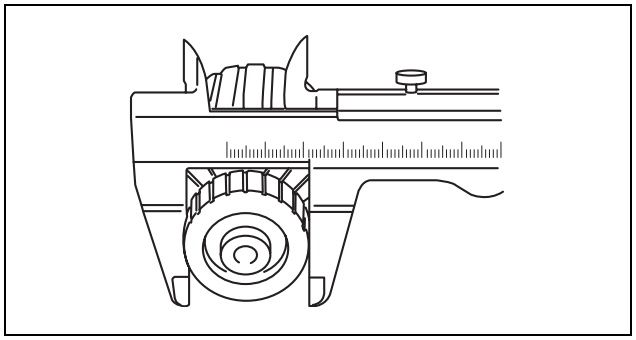
am6zzw0000238

5. Measure the segment groove depth of the commutator.
   - If not within the minimum specification, undercut the grooves to the standard depth.

   Segment groove depth of starter commutator
   Standard: 0.5 mm {0.02 in}
   Minimum: 0.2 mm {0.008 in}

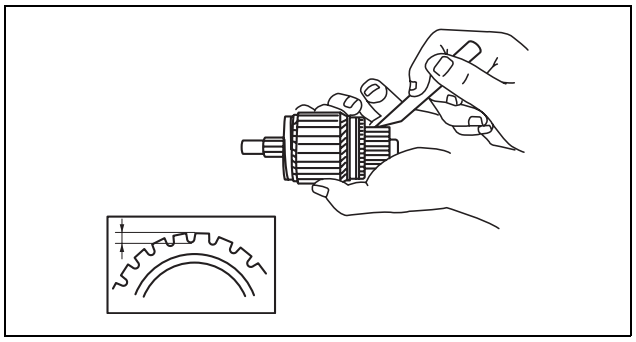
am6zzw0000238

Magnetic switch

1. Inspect for continuity between terminals S and M using a tester.
   - If there is no continuity, replace the magnetic switch.

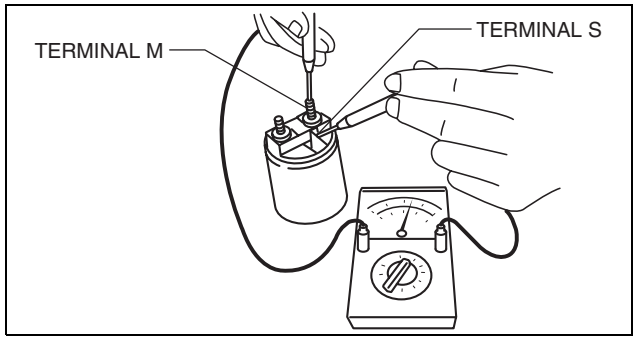

am6xuw0000234

2. Inspect for continuity between terminal S and the body using a tester.
   - If there is no continuity, replace the magnetic switch.

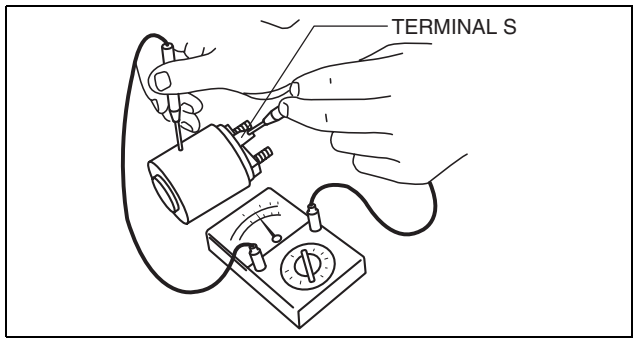

am6xuw0000234

3. Verify that there is no continuity between terminals M and B using a tester.
   - If there is continuity, replace the magnetic switch.

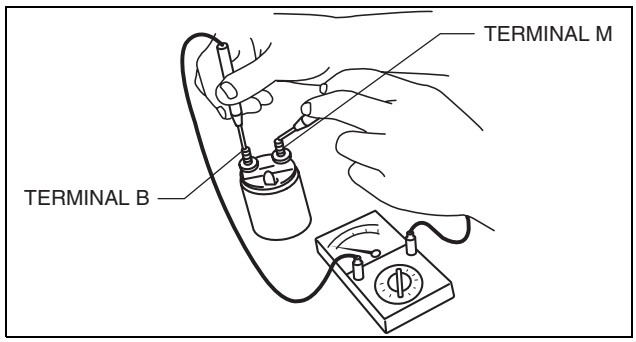

am6xuw0000234

Brush and brush holder

1. Verify that there is no continuity between each insulated brush and plate using a tester.
   - If there is continuity, replace the brush holder.

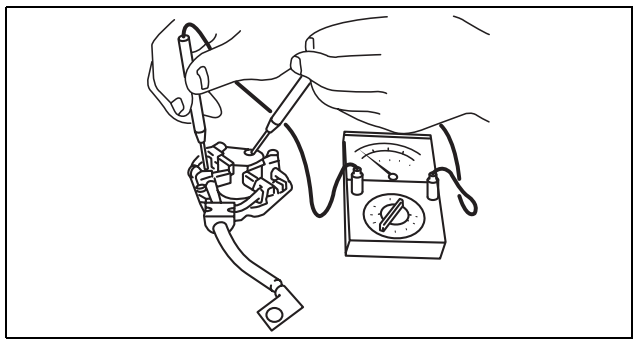
am6zzw0000238

STARTING SYSTEM [SKYACTIV-G 2.0]

2. Measure the brush length.
   - If any brush is worn almost to or beyond the minimum specification, replace all of the brushes.

Starter brush length
Standard: 12.3 mm {0.484 in}
Minimum: 5.5 mm {0.22 in}

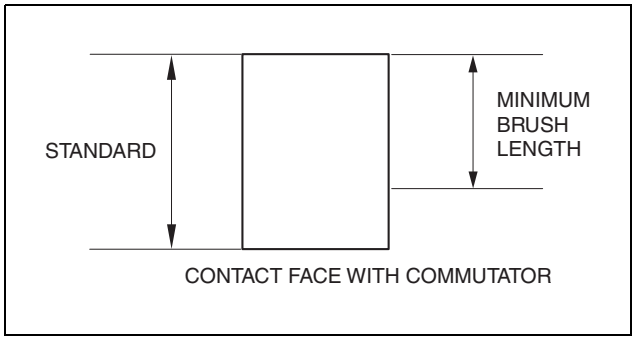

ac5uuw00002441

3. Measure the brush spring force using a spring balance.
   - If not within the minimum specification, replace the brush and brush holder component.

Starter brush spring force
Standard: 15.1—20.4 N {1.54—2.08 kgf, 3.40—4.58 lbf}
Minimum: 2.75 N {0.280 kgf, 0.618 lbf}

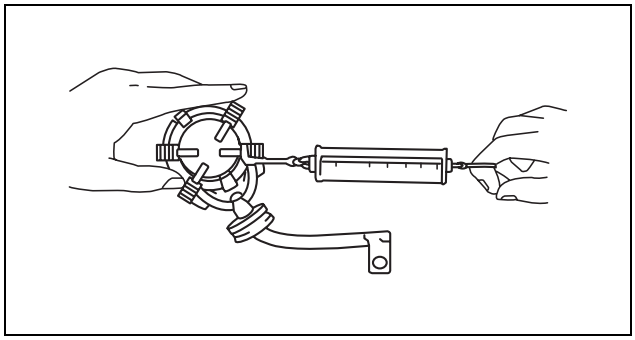

am6zzw0000238

STARTER DISASSEMBLY/ASSEMBLY [SKYACTIV-G 2.0 (WITHOUT i-stop)]

id0119h71045h9

1. Disassemble in the order indicated in the table.
2. Assemble in the reverse order of disassembly.

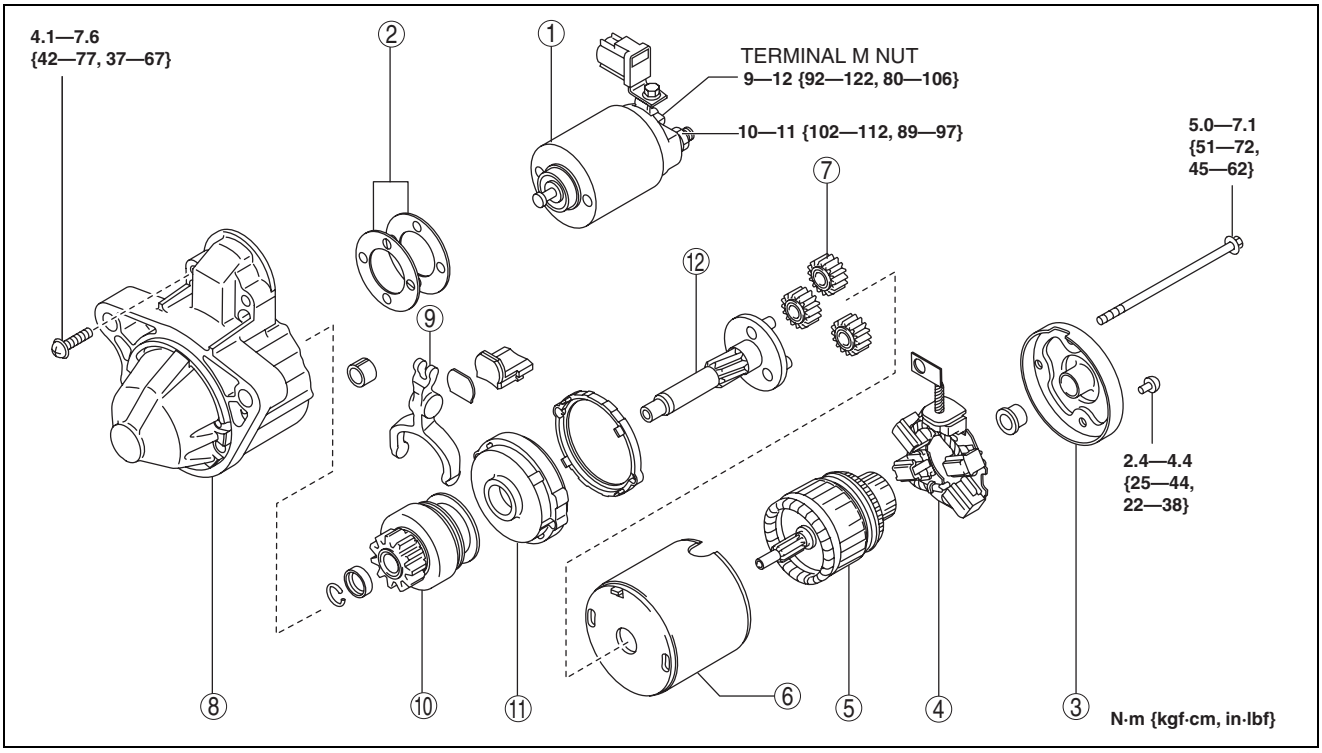

ac5uuw00002440

1	Magnetic switch
2	Adjustment washer
3	Rear housing
4	Brush and brush holder
5	Armature
6	Yoke

7	Planetary gear
8	Front cover
9	Lever
10	Drive pinion
11	Internal gear
12	Gear shaft

STARTING SYSTEM [SKYACTIV-G 2.0]

STARTER INTERLOCK SWITCH INSPECTION [SKYACTIV-G 2.0]

id0119h7104200

Caution
- **Do not reuse the starter interlock switch if it is removed from the vehicle even once. Replace with a new starter interlock switch when installing.**

1. Disconnect the negative battery cable. (See 01-17A-11 NEGATIVE BATTERY CABLE DISCONNECTION/CONNECTION [SKYACTIV-G 2.0].) (See 01-17A-13 NEGATIVE BATTERY CABLE DISCONNECTION/CONNECTION [SKYACTIV-G 2.0 (WITHOUT i-stop)])
2. Disconnect the starter interlock switch connector.
3. Verify that the continuity is as indicated in the table using a tester.

: Continuity

Condition	Terminal	
	A	B
Clutch pedal is depressed	○—○	
Clutch pedal is not depressed		

am6zzw0000236

- If the continuity is not as indicated in the table, replace the starter interlock switch. (See 05-10A-8 CLUTCH PEDAL REMOVAL/INSTALLATION [C66M-R, C66MX-R].)

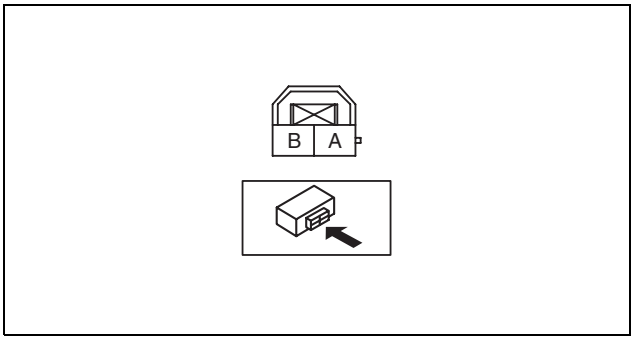

am6xuw0000234

01-19B STARTING SYSTEM [SKYACTIV-D 2.2]

STARTING SYSTEM LOCATION INDEX [SKYACTIV-D 2.2] **01-19B–1**
STARTER REMOVAL/INSTALLATION [SKYACTIV-D 2.2] **01-19B–2**
Operation After Replacing Starter **01-19B–2**
Starter Removal/Installation **01-19B–3**
STARTER INSPECTION [SKYACTIV-D 2.2] **01-19B–4**
On-vehicle Inspection **01-19B–4**
No-load Test **01-19B–4**
STARTER INTERLOCK SWITCH INSPECTION [SKYACTIV-D 2.2] **01-19B–5**

STARTING SYSTEM [SKYACTIV-D 2.2]

STARTING SYSTEM LOCATION INDEX [SKYACTIV-D 2.2]

id0119h8103700

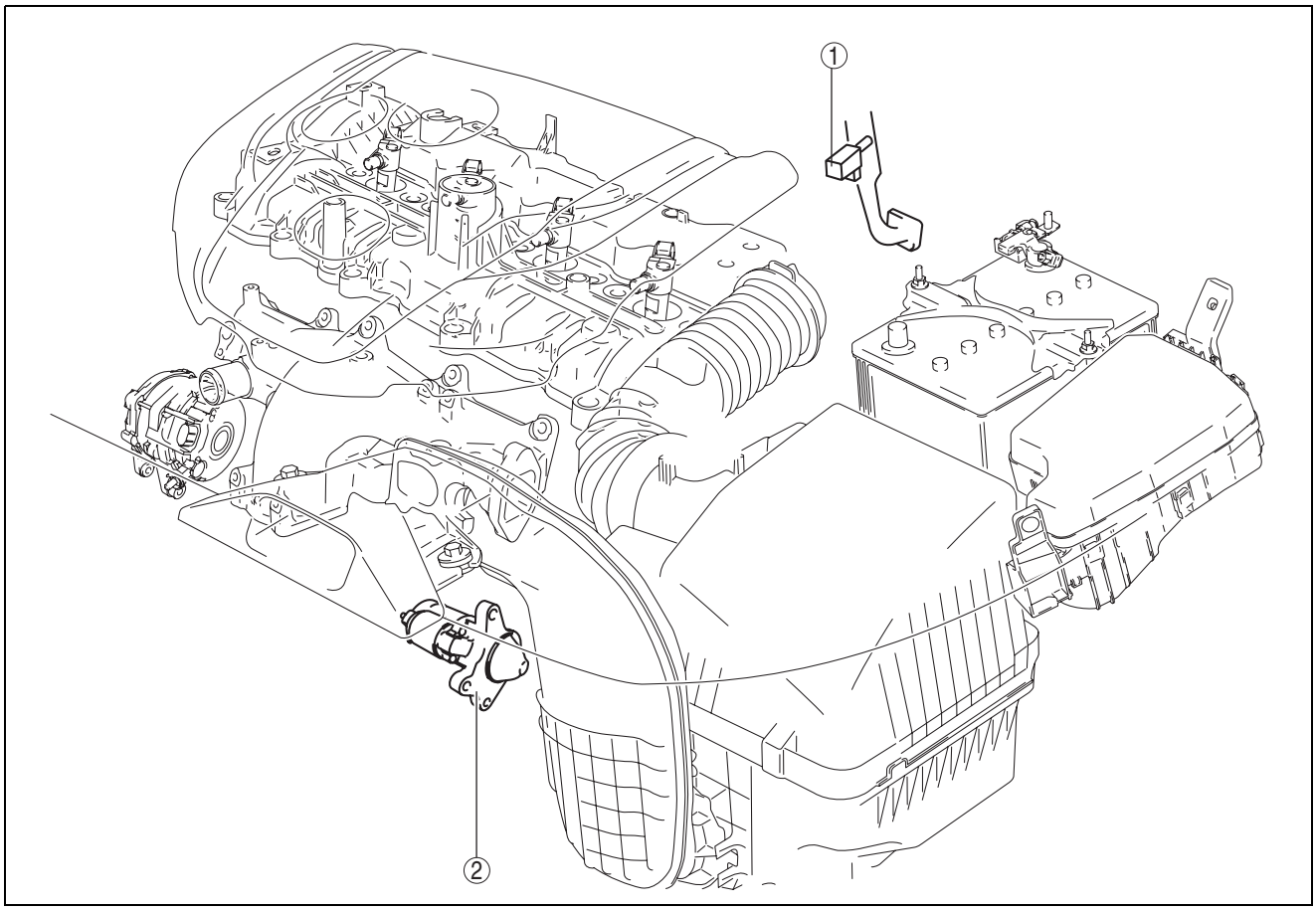

ac5wzw0000514

1	Starter interlock switch (MTX) (See 01-19B-5 STARTER INTERLOCK SWITCH INSPECTION [SKYACTIV-D 2.2].)

2	Starter (See 01-19B-2 STARTER REMOVAL/INSTALLATION [SKYACTIV-D 2.2].) (See 01-19B-4 STARTER INSPECTION [SKYACTIV-D 2.2].)

STARTING SYSTEM [SKYACTIV-D 2.2]

STARTER REMOVAL/INSTALLATION [SKYACTIV-D 2.2]

id0119h8800200

Operation After Replacing Starter

Note

- If the number of times the starter can operate exceeds the limit, or there is any malfunction of the i-stop system-related parts, the i-stop warning light (amber) flashes.In addition, DTCs are stored simultaneously.
- To ensure reliability of the i-stop system, replace the starter with a new one if the number of times the sub-battery can operate has exceeded the upper limit.
- When replacing the starter, perform the following procedure: When replacing the PCM simultaneously, perform the PCM configuration first.

Step	Action
1	**Note** • Perform the procedures from Step 1 to 5 within 2 min. — If the operation exceeds 2 min, switch the ignition off and repeat the procedures from Step 1. Switch the ignition ON (engine off).
2	Apply the parking brake firmly.
3	Shift the selector lever to the N position.
4	Perform the following work with the brake pedal depressed. 1. Depress and release the accelerator pedal 6 times. 2. Verify that the i-stop indicator light (green) flashes. • If the light does not flash, switch the ignition off and repeat the procedure from Step 1. 3. Depress and release the accelerator pedal 6 times. 4. Verify that the i-stop indicator light (green) changes from illumination to flashing. • If the light does not change to illumination, switch the ignition off and repeat the procedure from Step 1.
5	Long-press the i-stop OFF switch. Wait until the i-stop indicator light (green) turns off (for 5 s or more). • If the light does not turn off, switch the ignition off and repeat the procedure from Step 1.
6	Switch the ignition off.
7	Start the engine.
8	Verify that the i-stop warning light (amber) turns off. • If the light does not turn off, switch the ignition off and repeat the procedure from Step 1.
9	Switch the ignition off and disconnect the negative battery cable. (See 01-17B-9 NEGATIVE BATTERY CABLE DISCONNECTION/CONNECTION [SKYACTIV-D 2.2].)
10	Verifying battery condition initialization setting (i-stop setting). (See 01-17B-11 BATTERY CONDITION INITIALIZATION SETTING (i-stop SETTING) [SKYACTIV-D 2.2].)

STARTING SYSTEM [SKYACTIV-D 2.2]

Starter Removal/Installation

Warning

- **Remove and install all parts when the engine is cold, otherwise they can cause severe burns or serious injury.**
- **When the battery cables are connected, touching the vehicle body with starter terminal B will generate sparks. This can cause personal injury, fire, and damage to the electrical components. Always disconnect the negative battery cable before performing the following operation.**

1. Disconnect the negative battery cable. (See 01-17B-9 NEGATIVE BATTERY CABLE DISCONNECTION/CONNECTION [SKYACTIV-D 2.2].)
2. Remove the front under cover No.1 and No.2. (See 09-16-40 FRONT UNDER COVER No.1 REMOVAL/INSTALLATION.) (See 09-16-41 FRONT UNDER COVER No.2 REMOVAL/INSTALLATION.)
3. Remove the air cleaner and fresh-air duct component. (See 01-13B-6 INTAKE-AIR SYSTEM REMOVAL/INSTALLATION [SKYACTIV-D 2.2].)
4. Disconnect the charge air cooler outlet hose from the Intake shutter valve, and set the hose out of the way. (See 01-13B-6 INTAKE-AIR SYSTEM REMOVAL/INSTALLATION [SKYACTIV-D 2.2].)
5. Remove in the order indicated in the table.
6. Install in the reverse order of removal.

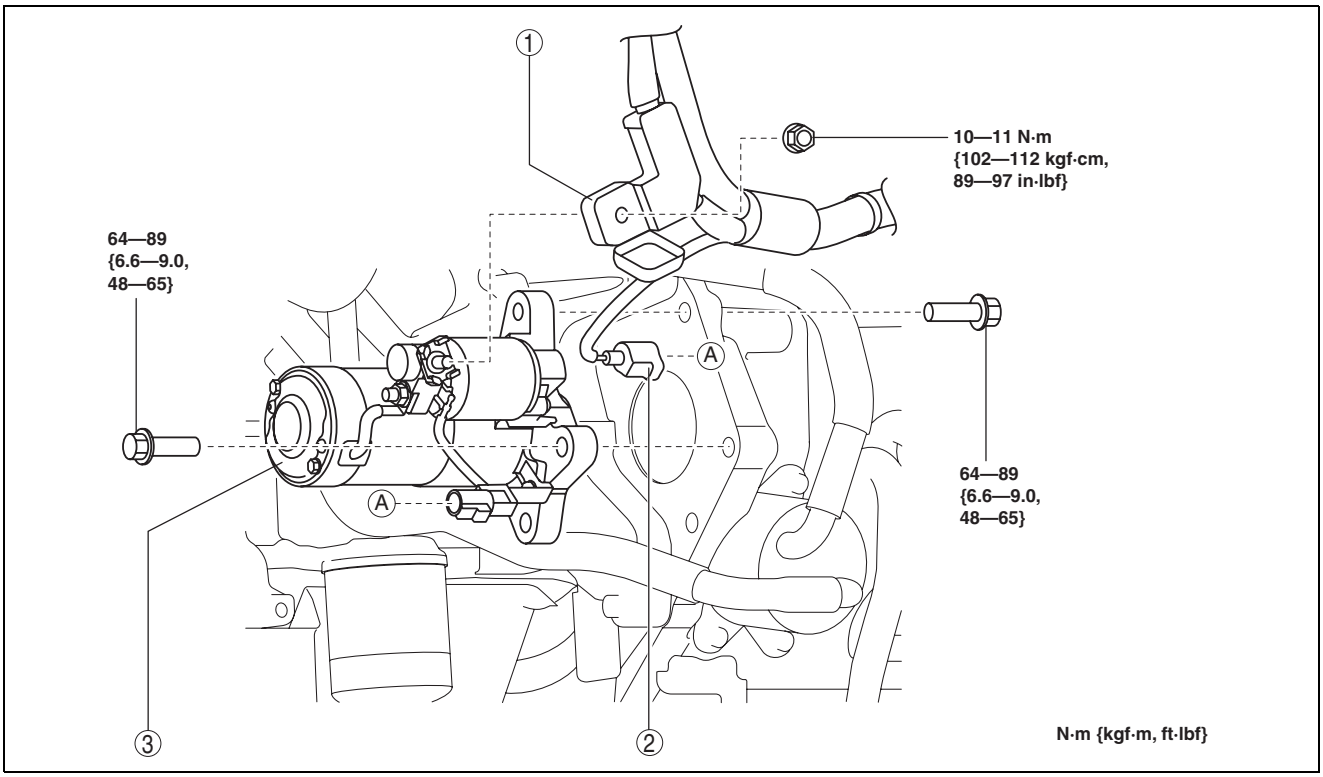

ac5wzw0000514

1	Terminal B cable
2	Terminal S connector

3	Starter (See 01-19B-4 Starter removal note.)

STARTING SYSTEM [SKYACTIV-D 2.2]

Starter removal note

1. Remove the starter upper bolt from above the engine compartment.
2. Remove the ATF oil cooler water hose bracket installation bolt shown in the figure, and set the water hose out of the way. (ATX)
3. Remove the two starter lower bolts and the starter from below the engine compartment.

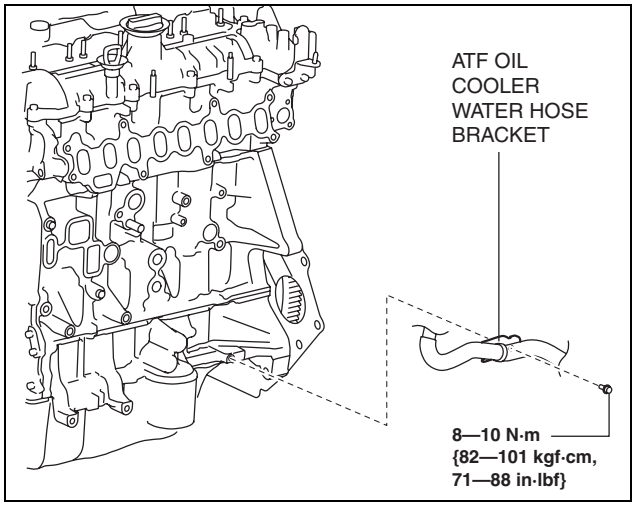

ac5wzw0000514

STARTER INSPECTION [SKYACTIV-D 2.2]

id0119h8800300

On-vehicle Inspection

1. Verify that the battery is fully charged.
2. The starter is normal if it rotates smoothly and without any noise when the engine is cranked.
   - If the starter does not operate, inspect the following:
     — Remove the starter, and inspect the starter unit.
     — Inspect the related wiring harnesses, the ignition switch, and the transaxle range switch (ATX) or starter interlock switch (MTX).

No-load Test

1. Verify that the battery is fully charged.
2. Connect the starter, battery, and a tester as shown in the figure.
3. Operate the starter and verify that it rotates smoothly.
   - If the starter does not rotate smoothly, inspect the starter unit.
4. Measure the voltage and current while the starter is operating.
   - If not within specification, replace the starter.

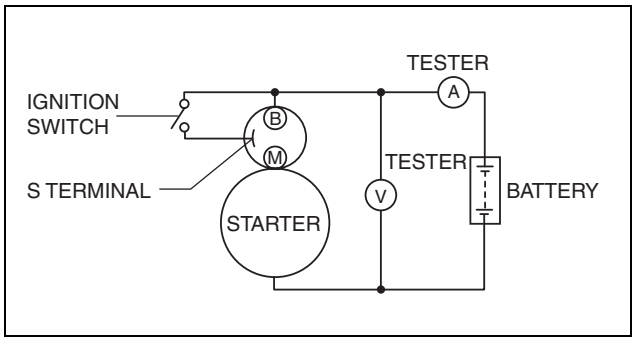

am6xuw0000234

Starter no-load test voltage
11 V

Starter no-load test current
90 A or less

STARTING SYSTEM [SKYACTIV-D 2.2]

STARTER INTERLOCK SWITCH INSPECTION [SKYACTIV-D 2.2]

id0119h8104200

Caution

- **Do not reuse the starter interlock switch if it is removed from the vehicle even once. Replace with a new starter interlock switch when installing.**

1. Disconnect the negative battery cable. (See 01-17B-9 NEGATIVE BATTERY CABLE DISCONNECTION/ CONNECTION [SKYACTIV-D 2.2].)
2. Disconnect the starter interlock switch connector.
3. Verify that the continuity is as indicated in the table using a tester.

○—○ : Continuity

Condition	Terminal	
	A	B
Clutch pedal is depressed	○	○
Clutch pedal is not depressed		

am6zzw0000236

- If the continuity is not as indicated in the table, replace the starter interlock switch. (See 05-10B-8 CLUTCH PEDAL REMOVAL/ INSTALLATION [D66M-R, D66MX-R].)

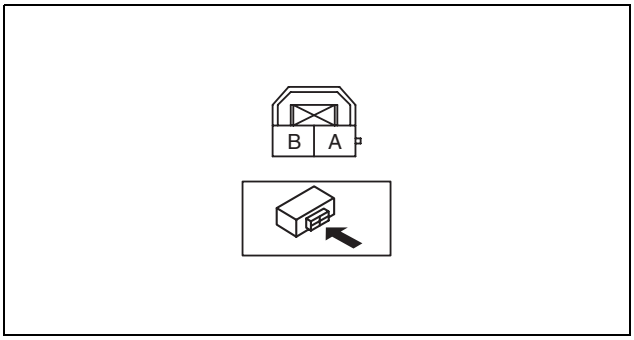

am6xuw0000234

01-20A CRUISE CONTROL SYSTEM [SKYACTIV-G 2.0]

CRUISE CONTROL SWITCH
INSPECTION [SKYACTIV-G 2.0] 01-20A–1

CRUISE CONTROL SYSTEM [SKYACTIV-D 2.2]

CRUISE CONTROL SWITCH INSPECTION [SKYACTIV-G 2.0]

id0120e3800100

1. Disconnect the negative battery cable and wait for **1 min or more**. (See 01-17A-11 NEGATIVE BATTERY CABLE DISCONNECTION/CONNECTION [SKYACTIV-G 2.0].) (See 01-17A-13 NEGATIVE BATTERY CABLE DISCONNECTION/CONNECTION [SKYACTIV-G 2.0 (WITHOUT i-stop)].)
2. Remove the driver-side air bag module. (See 08-10-6 DRIVER-SIDE AIR BAG MODULE REMOVAL/INSTALLATION.)
3. Disconnect the clock spring connector (part wiring harness-side).
4. Measure the resistance between clock spring terminals E and A (part wiring harness-side) using a tester.

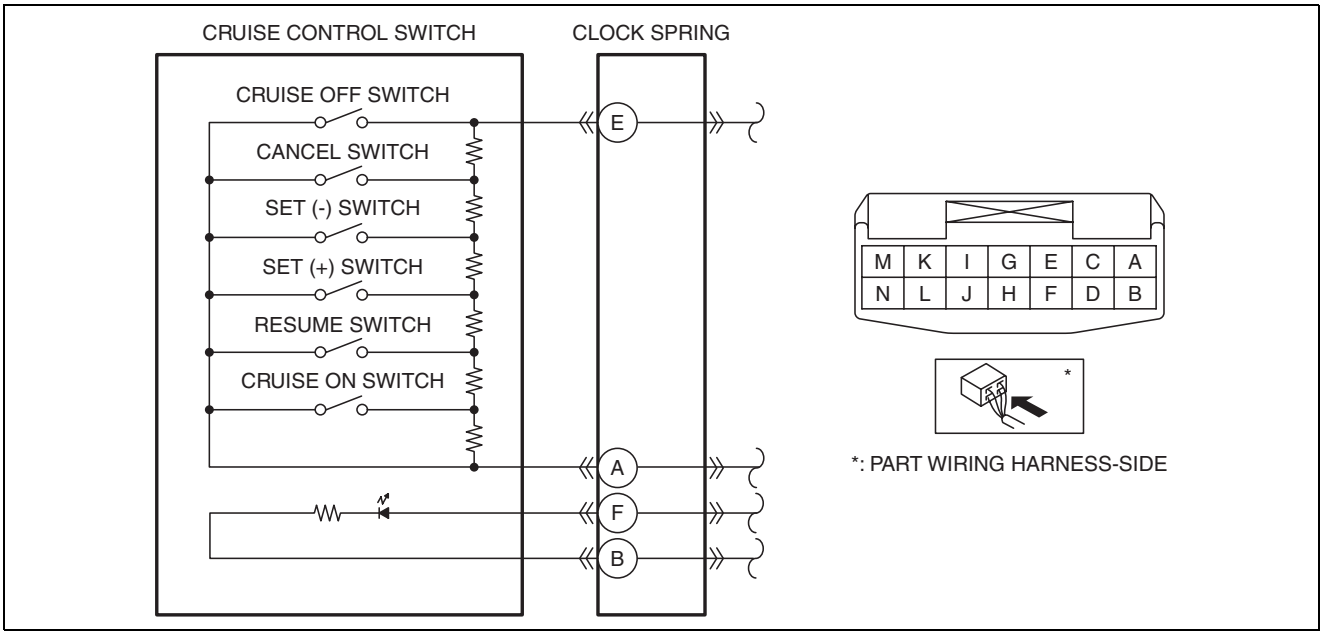

ac5wzw0000035

- If as specified, go to the next step.
- If not as specified, replace the steering switch. (See 09-20-54 STEERING SWITCH REMOVAL/INSTALLATION.)

Switch condition	Resistance (ohm)
Cruise OFF switch held at on	Continuity
CANCEL switch held at on	Approx. 84.5
SET (–) switch held at on	Approx. 189.5
SET (+) switch held at on	Approx. 326.5
RESUME switch held at on	Approx. 506.5
Cruise ON switch held at on	Approx. 761.5
Neutral	Approx. 3,311.5

5. Apply battery positive voltage to clock spring terminal F (part wiring harness-side), and terminal B (part wiring harness-side) to ground.
6. Verify that the LED illuminates.
   - If the LED does not illuminate, replace the steering switch. (See 09-20-54 STEERING SWITCH REMOVAL/INSTALLATION.)

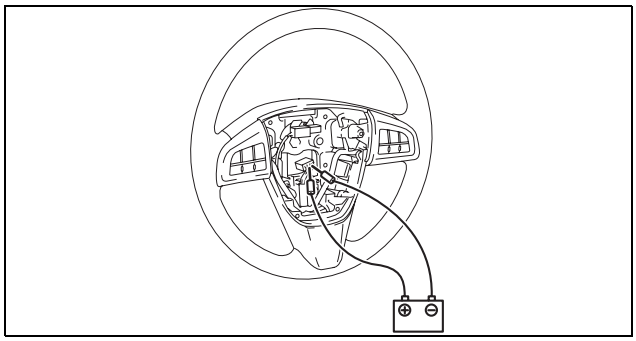

ac5wzw0000092

01-20B CRUISE CONTROL SYSTEM [SKYACTIV-D 2.2]

CRUISE CONTROL SWITCH
INSPECTION [SKYACTIV-D 2.2]. 01-20B–1

CRUISE CONTROL SYSTEM [SKYACTIV-D 2.2]

CRUISE CONTROL SWITCH INSPECTION [SKYACTIV-D 2.2]

id0120e5800100

1. Disconnect the negative battery cable and wait for **1 min or more**. (See 01-17B-9 NEGATIVE BATTERY CABLE DISCONNECTION/CONNECTION [SKYACTIV-D 2.2].)
2. Remove the driver-side air bag module. (See 08-10-6 DRIVER-SIDE AIR BAG MODULE REMOVAL/INSTALLATION.)
3. Disconnect the clock spring connector (part wiring harness-side).
4. Measure the resistance between clock spring terminals E and A (part wiring harness-side) using a tester.

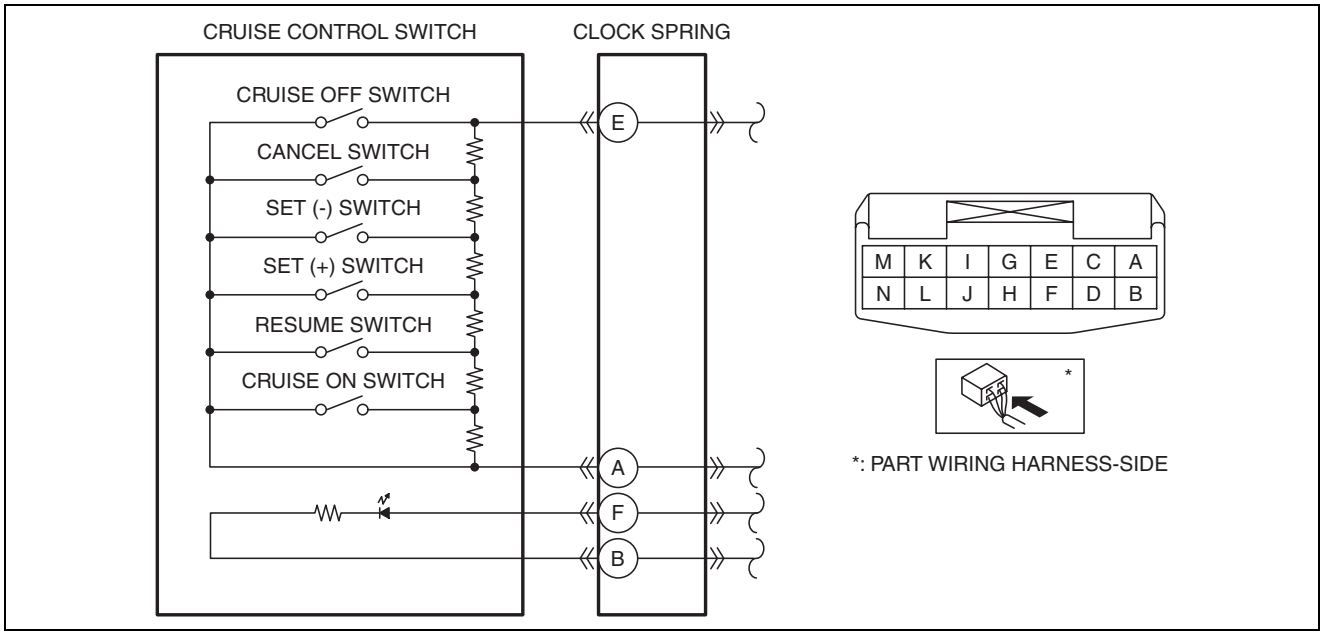

ac5wzw0000035

- If as specified, go to the next step.
- If not as specified, replace the steering switch. (See 09-20-54 STEERING SWITCH REMOVAL/INSTALLATION.)

Switch condition	Resistance (ohm)
Cruise OFF switch held at on	Continuity
CANCEL switch held at on	Approx. 84.5
SET (–) switch held at on	Approx. 189.5
SET (+) switch held at on	Approx. 326.5
RESUME switch held at on	Approx. 506.5
Cruise ON switch held at on	Approx. 761.5
Neutral	Approx. 3,311.5

5. Apply battery positive voltage to clock spring terminal F (part wiring harness-side), and terminal B (part wiring harness-side) to ground.
6. Verify that the LED illuminates.
   - If the LED does not illuminate, replace the steering switch. (See 09-20-54 STEERING SWITCH REMOVAL/INSTALLATION.)

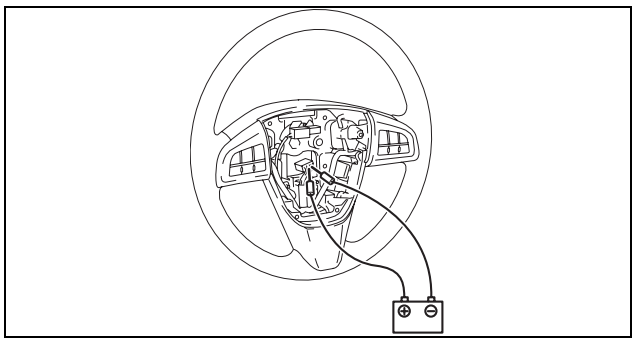

ac5wzw0000092

01-40 CONTROL SYSTEM [SKYACTIV-G 2.0]

CONTROL SYSTEM LOCATION INDEX [SKYACTIV-G 2.0] 01-40–3
Engine Room Side 01-40–3
Except Engine Room Side 01-40–5
CONTROL SYSTEM DIAGRAM [SKYACTIV-G 2.0] 01-40–6
CONTROL SYSTEM WIRING DIAGRAM [SKYACTIV-G 2.0] 01-40–7
PCM REMOVAL/INSTALLATION [SKYACTIV-G 2.0] 01-40–10
Without Set Bolt 01-40–10
With Set Bolt 01-40–12
Set Bolt Removal Note 01-40–14
Set Bolt Installation Note 01-40–14
PCM Cover Installation Note 01-40–15
PCM Connector Connection Note 01-40–15
Operation After Replacing PCM (vehicles with i-stop system) 01-40–16
PCM INSPECTION [SKYACTIV-G 2.0] 01-40–17
Without Using the M-MDS 01-40–17
Inspection Using An Oscilloscope (Reference) 01-40–26
Using The M-MDS 01-40–31
PCM CONFIGURATION (USING READ/WRITE FUNCTION) [SKYACTIV-G 2.0] 01-40–39
PCM CONFIGURATION (USING AS-BUILT DATA) [SKYACTIV-G 2.0] 01-40–39
CLUTCH PEDAL POSITION (CPP) SWITCH INSPECTION [SKYACTIV-G 2.0] 01-40–40
Continuity Inspection 01-40–40
NEUTRAL SWITCH INSPECTION [SKYACTIV-G 2.0] 01-40–40
Neutral switch No.1 01-40–40
Neutral switch No.2 01-40–41
ENGINE COOLANT TEMPERATURE (ECT) SENSOR REMOVAL/INSTALLATION [SKYACTIV-G 2.0] 01-40–41
ENGINE COOLANT TEMPERATURE (ECT) SENSOR INSPECTION [SKYACTIV-G 2.0] 01-40–43
Resistance Inspection 01-40–43
MASS AIR FLOW (MAF) SENSOR/INTAKE AIR TEMPERATURE (IAT) SENSOR NO.1 REMOVAL/INSTALLATION [SKYACTIV-G 2.0] 01-40–45
MASS AIR FLOW (MAF) SENSOR INSPECTION [SKYACTIV-G 2.0] 01-40–45
Visual Inspection 01-40–45
Voltage Inspection 01-40–45
INTAKE AIR TEMPERATURE (IAT) SENSOR INSPECTION [SKYACTIV-G 2.0] 01-40–46
IAT Sensor No.1 01-40–46
IAT Sensor No.2 01-40–47
MANIFOLD ABSOLUTE PRESSURE (MAP) SENSOR/INTAKE AIR TEMPERATURE (IAT) SENSOR NO.2 REMOVAL/INSTALLATION [SKYACTIV-G 2.0] 01-40–48
MANIFOLD ABSOLUTE PRESSURE (MAP) SENSOR INSPECTION [SKYACTIV-G 2.0] 01-40–49
Voltage Inspection 01-40–49
BAROMETRIC PRESSURE (BARO) SENSOR REMOVAL/INSTALLATION [SKYACTIV-G 2.0] 01-40–49
BAROMETRIC PRESSURE (BARO) SENSOR INSPECTION [SKYACTIV-G 2.0] 01-40–49
Voltage Inspection 01-40–49
THROTTLE POSITION (TP) SENSOR REMOVAL/INSTALLATION [SKYACTIV-G 2.0] 01-40–50
THROTTLE POSITION (TP) SENSOR INSPECTION [SKYACTIV-G 2.0] 01-40–50
Voltage Inspection 01-40–50
ACCELERATOR PEDAL POSITION (APP) SENSOR REMOVAL/INSTALLATION [SKYACTIV-G 2.0] 01-40–50
ACCELERATOR PEDAL POSITION (APP) SENSOR INSPECTION [SKYACTIV-G 2.0] 01-40–51
Voltage Inspection 01-40–51
FUEL PRESSURE SENSOR REMOVAL/INSTALLATION [SKYACTIV-G 2.0] 01-40–51
FUEL PRESSURE SENSOR INSPECTION [SKYACTIV-G 2.0] 01-40–52
Voltage Inspection 01-40–52
AIR FUEL RATIO (A/F) SENSOR REMOVAL/INSTALLATION [SKYACTIV-G 2.0] 01-40–52
Assembly of Wiring Harness to Wire Clip Note 01-40–54
AIR FUEL RATIO (A/F) SENSOR INSPECTION [SKYACTIV-G 2.0] 01-40–55
A/F Sensor Inspection 01-40–55
A/F Sensor Heater Inspection 01-40–55
HEATED OXYGEN SENSOR (HO2S) REMOVAL/INSTALLATION [SKYACTIV-G 2.0] 01-40–56
HEATED OXYGEN SENSOR (HO2S) INSPECTION [SKYACTIV-G 2.0] 01-40–58
HO2S Inspection 01-40–58
HO2S Heater Inspection 01-40–58
CRANKSHAFT POSITION (CKP) SENSOR REMOVAL/INSTALLATION [SKYACTIV-G 2.0] 01-40–59
CRANKSHAFT POSITION (CKP) SENSOR INSPECTION [SKYACTIV-G 2.0] 01-40–60
Visual Inspection 01-40–60
Voltage Inspection 01-40–60

CONTROL SYSTEM [SKYACTIV-G 2.0]

CAMSHAFT POSITION (CMP) SENSOR REMOVAL/INSTALLATION [SKYACTIV-G 2.0] 01-40–61
Intake CMP Sensor 01-40–61
Exhaust CMP Sensor. 01-40–62
CAMSHAFT POSITION (CMP) SENSOR INSPECTION [SKYACTIV-G 2.0] 01-40–62
Intake CMP Sensor 01-40–62
Exhaust CMP Sensor. 01-40–63
KNOCK SENSOR (KS) REMOVAL/INSTALLATION [SKYACTIV-G 2.0] 01-40–64
KS Installation Note 01-40–64
KNOCK SENSOR (KS) INSPECTION [SKYACTIV-G 2.0] 01-40–65
Resistance Inspection 01-40–65
CURRENT SENSOR REMOVAL/INSTALLATION [SKYACTIV-G 2.0] 01-40–65
CURRENT SENSOR INSPECTION [SKYACTIV-G 2.0] 01-40–66
DTC Inspection 01-40–66
Visual Inspection 01-40–66
i-stop OFF SWITCH REMOVAL/INSTALLATION [SKYACTIV-G 2.0]. 01-40–66
i-stop OFF SWITCH INSPECTION [SKYACTIV-G 2.0]. 01-40–66
CLUTCH STROKE SENSOR INSPECTION [SKYACTIV-G 2.0] 01-40–67
POWER BRAKE UNIT VACUUM SENSOR INSPECTION [SKYACTIV-G 2.0]. 01-40–68
Voltage Inspection. 01-40–68
ION SENSOR REMOVAL/INSTALLATION [SKYACTIV-G 2.0]. 01-40–68
ION SENSOR INSPECTION [SKYACTIV-G 2.0]. 01-40–68
DTC Inspection 01-40–68
Visual Inspection 01-40–68

CONTROL SYSTEM [SKYACTIV-G 2.0]

CONTROL SYSTEM LOCATION INDEX [SKYACTIV-G 2.0]

id0140f4804100

Engine Room Side

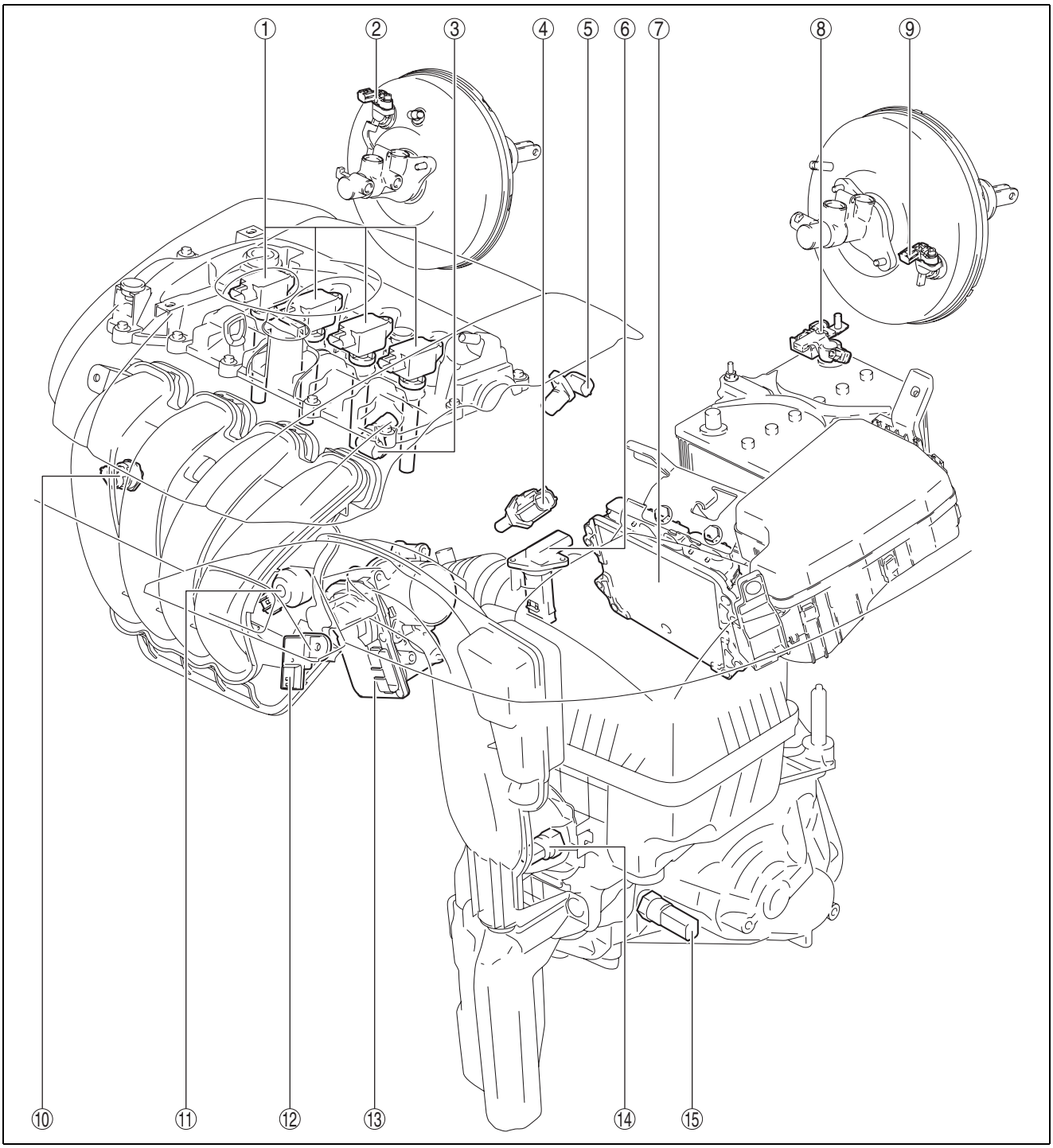

ac5wzw0000029

1	Ion sensor (See 01-40-68 ION SENSOR REMOVAL/INSTALLATION [SKYACTIV-G 2.0].) (See 01-40-68 ION SENSOR INSPECTION [SKYACTIV-G 2.0].)
2	Power brake unit vacuum sensor (Vehicles with i-stop system (R.H.D.)) (See 01-40-68 POWER BRAKE UNIT VACUUM SENSOR INSPECTION [SKYACTIV-G 2.0].)

3	Intake CMP sensor (See 01-40-61 CAMSHAFT POSITION (CMP) SENSOR REMOVAL/INSTALLATION [SKYACTIV-G 2.0].) (See 01-40-62 CAMSHAFT POSITION (CMP) SENSOR INSPECTION [SKYACTIV-G 2.0].)

CONTROL SYSTEM [SKYACTIV-G 2.0]

4	ECT sensor (See 01-40-41 ENGINE COOLANT TEMPERATURE (ECT) SENSOR REMOVAL/INSTALLATION [SKYACTIV-G 2.0].) (See 01-40-43 ENGINE COOLANT TEMPERATURE (ECT) SENSOR INSPECTION [SKYACTIV-G 2.0].)
5	Exhaust CMP sensor (See 01-40-61 CAMSHAFT POSITION (CMP) SENSOR REMOVAL/INSTALLATION [SKYACTIV-G 2.0].) (See 01-40-62 CAMSHAFT POSITION (CMP) SENSOR INSPECTION [SKYACTIV-G 2.0].)
6	MAF sensor/IAT sensor No.1 (See 01-40-45 MASS AIR FLOW (MAF) SENSOR/INTAKE AIR TEMPERATURE (IAT) SENSOR NO.1 REMOVAL/INSTALLATION [SKYACTIV-G 2.0].) (See 01-40-45 MASS AIR FLOW (MAF) SENSOR INSPECTION [SKYACTIV-G 2.0].) (See 01-40-46 INTAKE AIR TEMPERATURE (IAT) SENSOR INSPECTION [SKYACTIV-G 2.0].)
7	PCM (BARO sensor) (See 01-40-10 PCM REMOVAL/INSTALLATION [SKYACTIV-G 2.0].) (See 01-40-17 PCM INSPECTION [SKYACTIV-G 2.0].) (See 01-40-39 PCM CONFIGURATION (USING READ/WRITE FUNCTION) [SKYACTIV-G 2.0].) (See 01-40-39 PCM CONFIGURATION (USING AS-BUILT DATA) [SKYACTIV-G 2.0].) (See 01-40-49 BAROMETRIC PRESSURE (BARO) SENSOR REMOVAL/INSTALLATION [SKYACTIV-G 2.0].) (See 01-40-49 BAROMETRIC PRESSURE (BARO) SENSOR INSPECTION [SKYACTIV-G 2.0].)
8	Current sensor (Vehicles with i-stop system) (See 01-40-65 CURRENT SENSOR REMOVAL/INSTALLATION [SKYACTIV-G 2.0].) (See 01-40-66 CURRENT SENSOR INSPECTION [SKYACTIV-G 2.0].)
9	Power brake unit vacuum sensor (Vehicles with i-stop system (L.H.D.)) (See 01-40-68 POWER BRAKE UNIT VACUUM SENSOR INSPECTION [SKYACTIV-G 2.0].)
10	Fuel pressure sensor (See 01-40-51 FUEL PRESSURE SENSOR REMOVAL/INSTALLATION [SKYACTIV-G 2.0].) (See 01-40-52 FUEL PRESSURE SENSOR INSPECTION [SKYACTIV-G 2.0].)
11	KS (See 01-40-64 KNOCK SENSOR (KS) REMOVAL/INSTALLATION [SKYACTIV-G 2.0].) (See 01-40-65 KNOCK SENSOR (KS) INSPECTION [SKYACTIV-G 2.0].)
12	MAP sensor/IAT sensor No.2 (See 01-40-48 MANIFOLD ABSOLUTE PRESSURE (MAP) SENSOR/INTAKE AIR TEMPERATURE (IAT) SENSOR NO.2 REMOVAL/INSTALLATION [SKYACTIV-G 2.0].) (See 01-40-49 MANIFOLD ABSOLUTE PRESSURE (MAP) SENSOR INSPECTION [SKYACTIV-G 2.0].) (See 01-40-46 INTAKE AIR TEMPERATURE (IAT) SENSOR INSPECTION [SKYACTIV-G 2.0].)
13	TP sensor (See 01-40-50 THROTTLE POSITION (TP) SENSOR REMOVAL/INSTALLATION [SKYACTIV-G 2.0].) (See 01-40-50 THROTTLE POSITION (TP) SENSOR INSPECTION [SKYACTIV-G 2.0].)
14	Neutral switch No.1 (MTX) (See 01-40-40 NEUTRAL SWITCH INSPECTION [SKYACTIV-G 2.0].)
15	Neutral switch No.2 (Vehicles with i-stop system (MTX)) (See 01-40-40 NEUTRAL SWITCH INSPECTION [SKYACTIV-G 2.0].)

CONTROL SYSTEM [SKYACTIV-G 2.0]

Except Engine Room Side

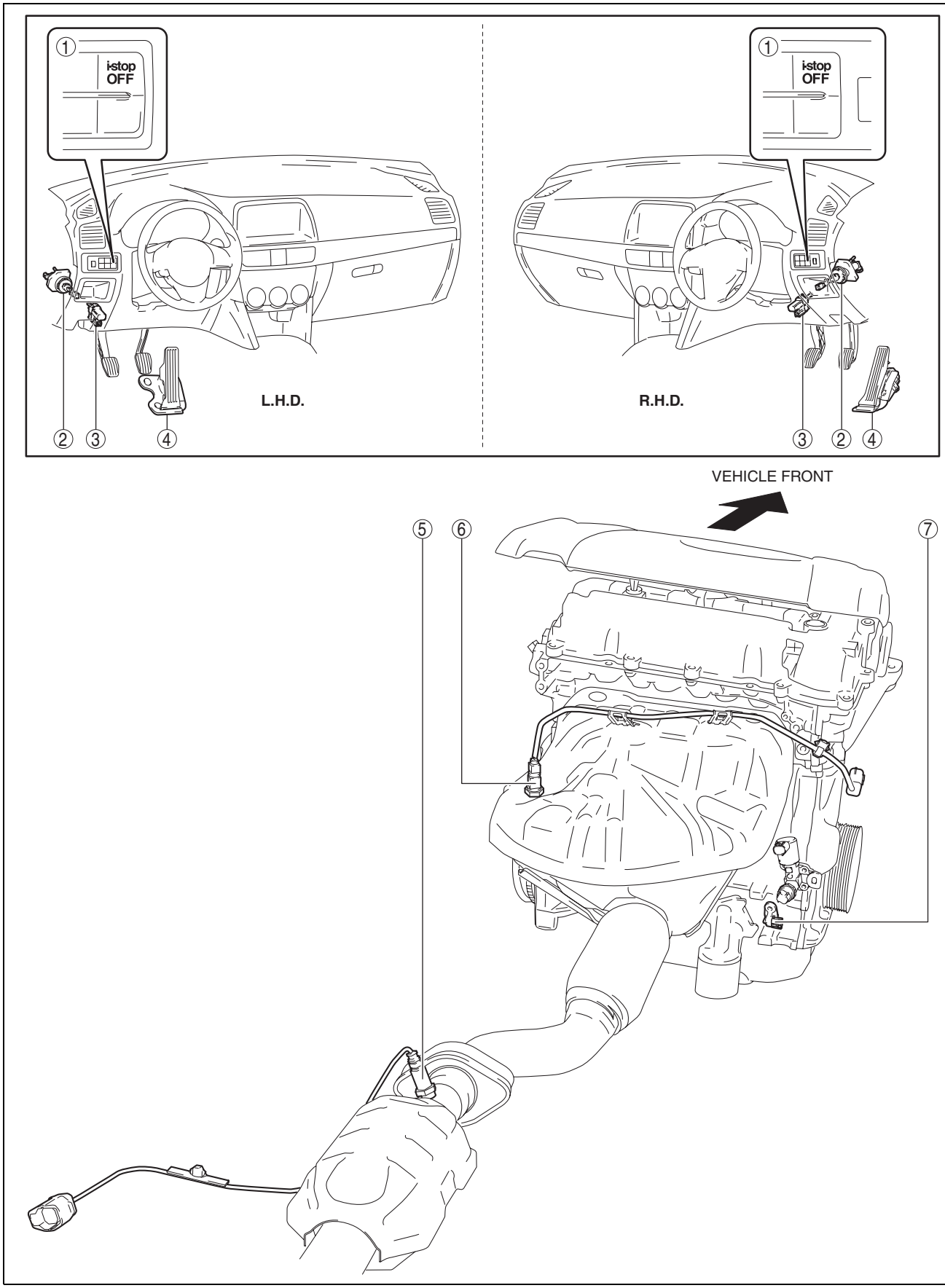

ac5wzw0000029

CONTROL SYSTEM [SKYACTIV-G 2.0]

1	i-stop OFF switch (Vehicles with i-stop system) (See 09-17-18 SWITCH PANEL REMOVAL/INSTALLATION.) (See 01-40-66 i-stop OFF SWITCH INSPECTION [SKYACTIV-G 2.0].)
2	Clutch stroke sensor (Vehicles with i-stop system (MTX)) (See 01-40-67 CLUTCH STROKE SENSOR INSPECTION [SKYACTIV-G 2.0].)
3	CPP switch (MTX) (See 01-40-40 CLUTCH PEDAL POSITION (CPP) SWITCH INSPECTION [SKYACTIV-G 2.0].)
4	APP sensor (See 01-40-50 ACCELERATOR PEDAL POSITION (APP) SENSOR REMOVAL/INSTALLATION [SKYACTIV-G 2.0].) (See 01-40-51 ACCELERATOR PEDAL POSITION (APP) SENSOR INSPECTION [SKYACTIV-G 2.0].)
5	HO2S (See 01-40-56 HEATED OXYGEN SENSOR (HO2S) REMOVAL/INSTALLATION [SKYACTIV-G 2.0].) (See 01-40-58 HEATED OXYGEN SENSOR (HO2S) INSPECTION [SKYACTIV-G 2.0].)
6	A/F sensor (See 01-40-52 AIR FUEL RATIO (A/F) SENSOR REMOVAL/INSTALLATION [SKYACTIV-G 2.0].) (See 01-40-55 AIR FUEL RATIO (A/F) SENSOR INSPECTION [SKYACTIV-G 2.0].)
7	CKP sensor (See 01-40-59 CRANKSHAFT POSITION (CKP) SENSOR REMOVAL/INSTALLATION [SKYACTIV-G 2.0].) (See 01-40-60 CRANKSHAFT POSITION (CKP) SENSOR INSPECTION [SKYACTIV-G 2.0].)

CONTROL SYSTEM DIAGRAM [SKYACTIV-G 2.0]

id0140f4800300

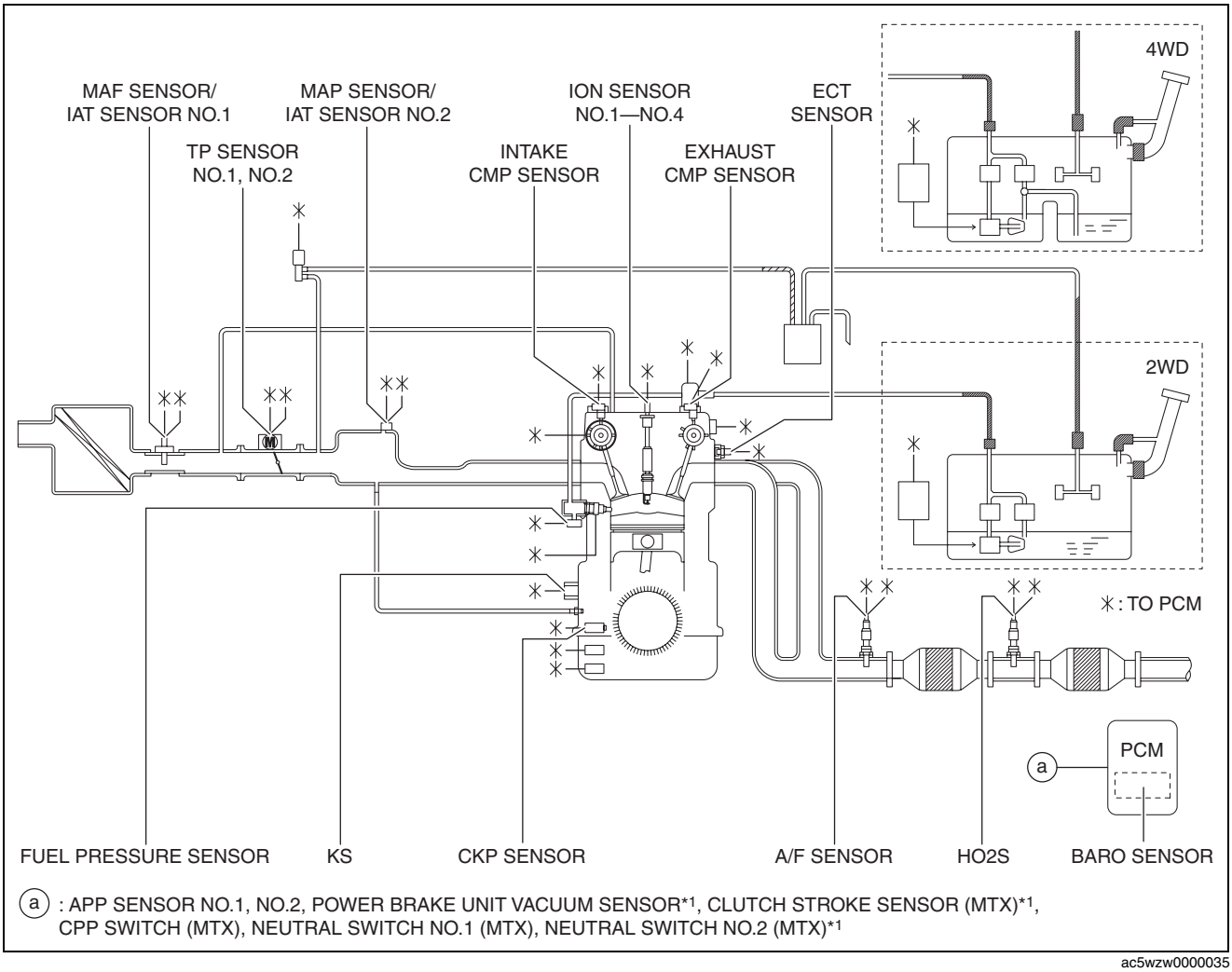

(a) : APP SENSOR NO.1, NO.2, POWER BRAKE UNIT VACUUM SENSOR*1, CLUTCH STROKE SENSOR (MTX)*1, CPP SWITCH (MTX), NEUTRAL SWITCH NO.1 (MTX), NEUTRAL SWITCH NO.2 (MTX)*1

ac5wzw0000035

*1 : Vehicles with i-stop system

CONTROL SYSTEM [SKYACTIV-G 2.0]

CONTROL SYSTEM WIRING DIAGRAM [SKYACTIV-G 2.0]

id0140f4800400

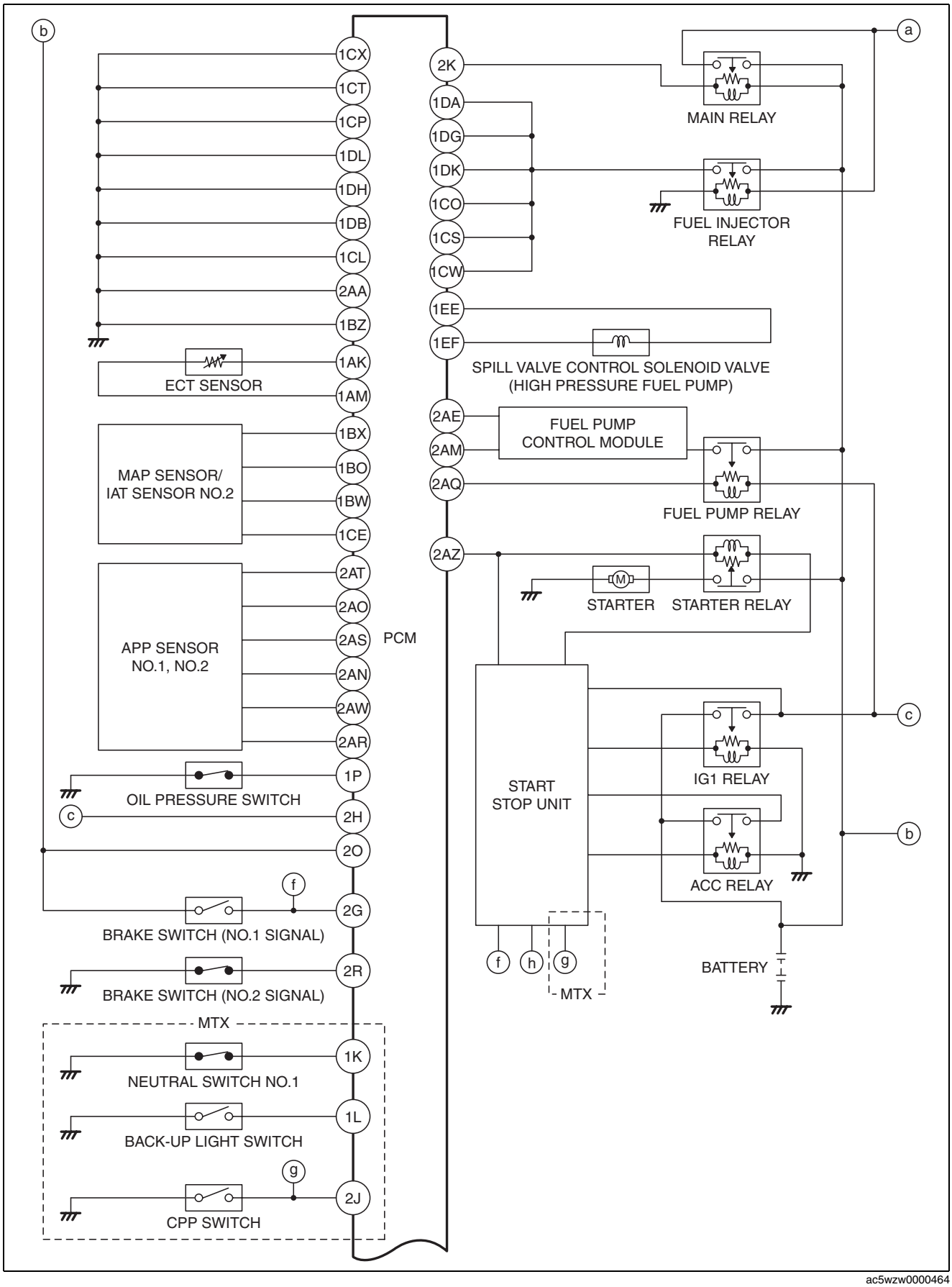

ac5wzw0000464

CONTROL SYSTEM [SKYACTIV-G 2.0]

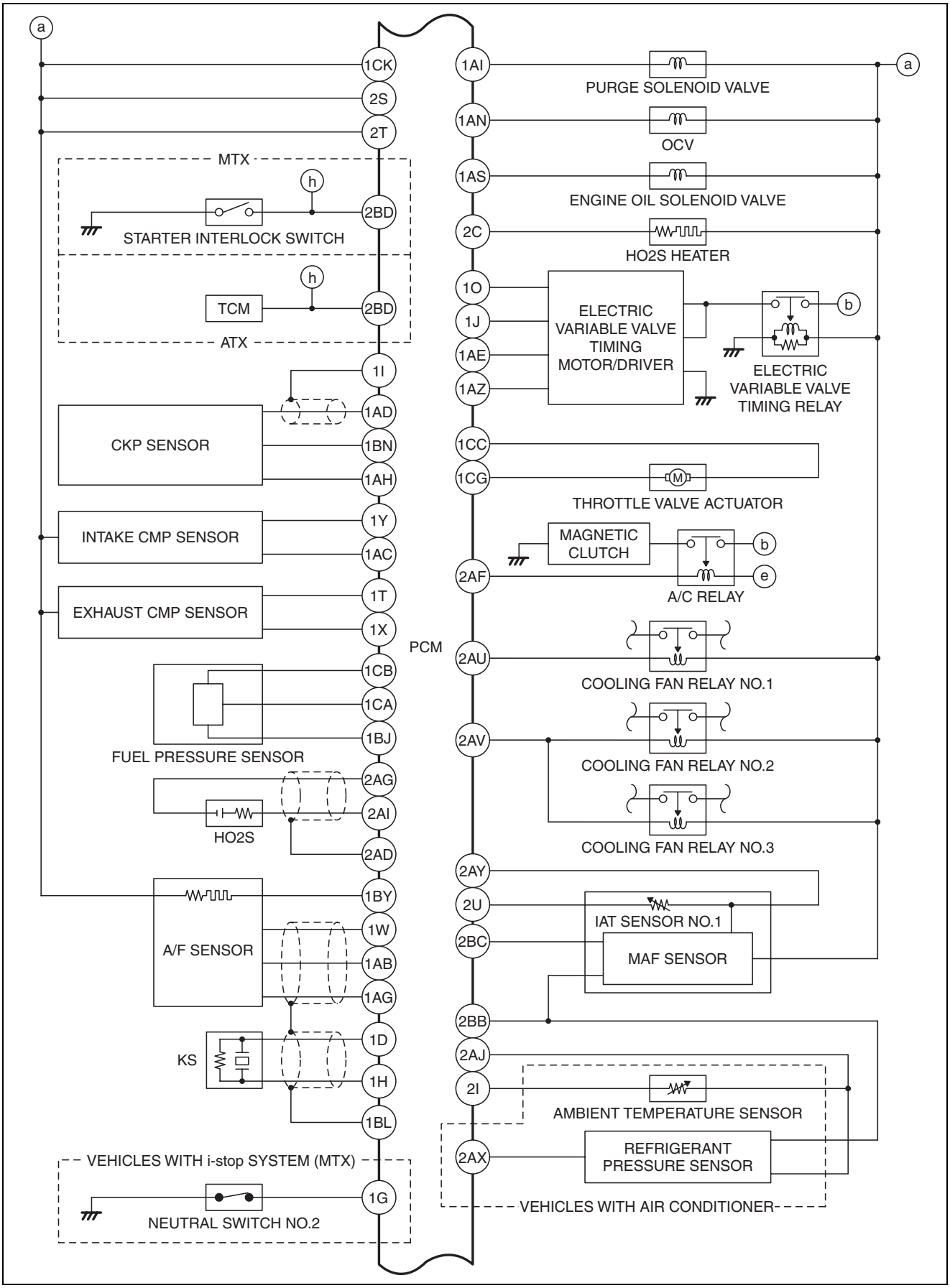

ac5wzw0000464

CONTROL SYSTEM [SKYACTIV-G 2.0]

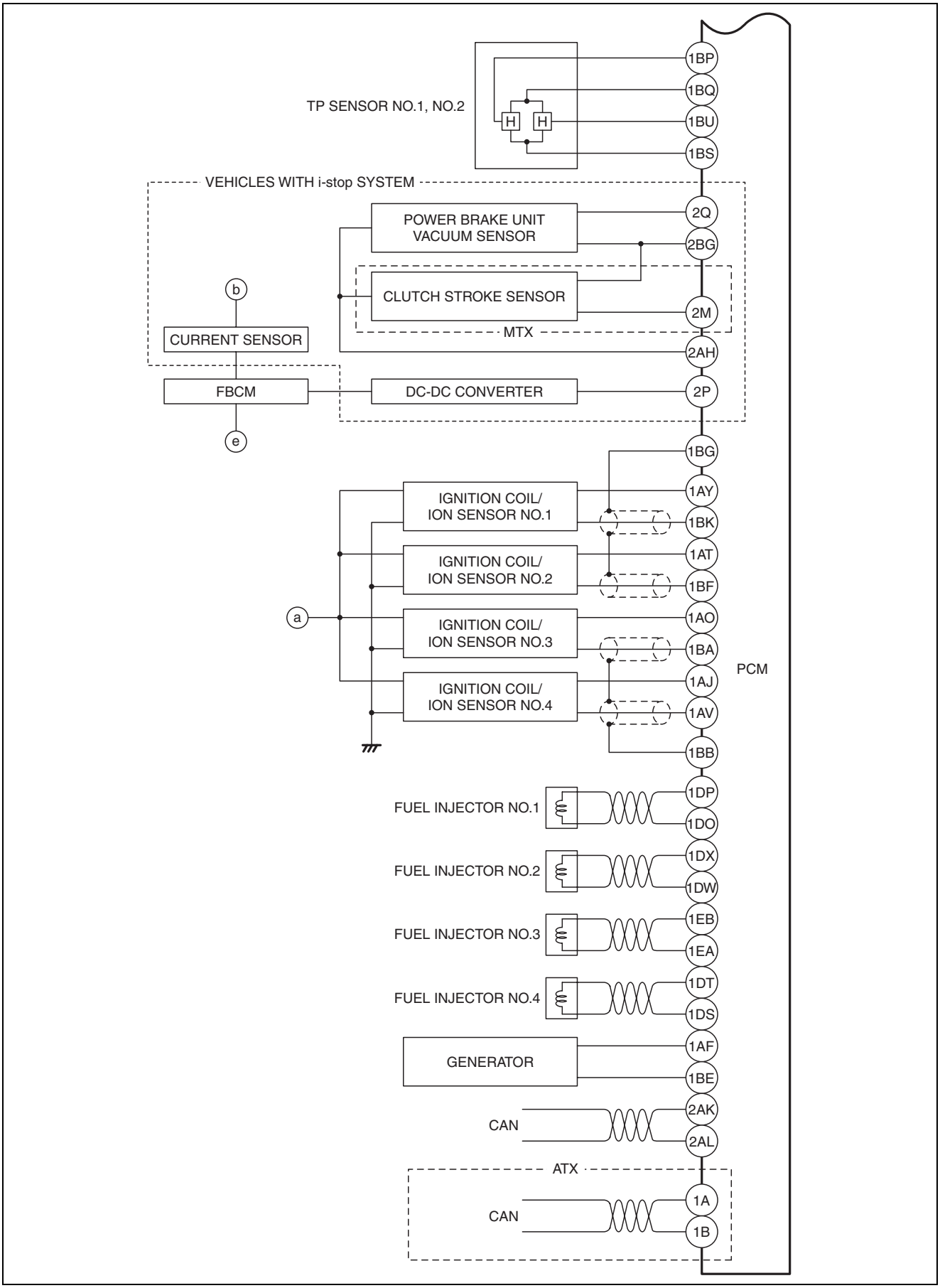

ac5wzw0000464

CONTROL SYSTEM [SKYACTIV-G 2.0]

PCM REMOVAL/INSTALLATION [SKYACTIV-G 2.0]

id0140f4802400

Caution

- **There are two types of PCM settings. If the incorrect PCM is installed, it could cause interference with engine control.**
- **When replacing the PCM, verify the first four digits of the part number indicated on the PCM label before replacement, and replace the PCM with one having the same part number.**

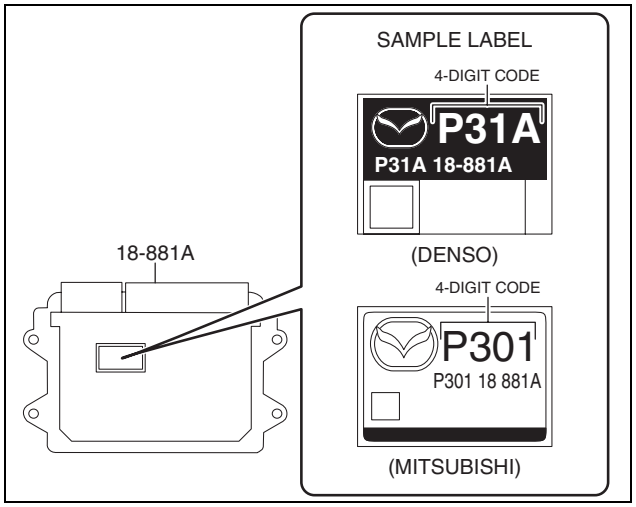

ac5wzw0000028

Without Set Bolt

1. Disconnect the negative battery cable. (See 01-17A-11 NEGATIVE BATTERY CABLE DISCONNECTION/ CONNECTION [SKYACTIV-G 2.0].) (See 01-17A-13 NEGATIVE BATTERY CABLE DISCONNECTION/ CONNECTION [SKYACTIV-G 2.0 (WITHOUT i-stop)].)
2. Remove the PCM cover. (See 01-40-15 PCM Cover Installation Note.)

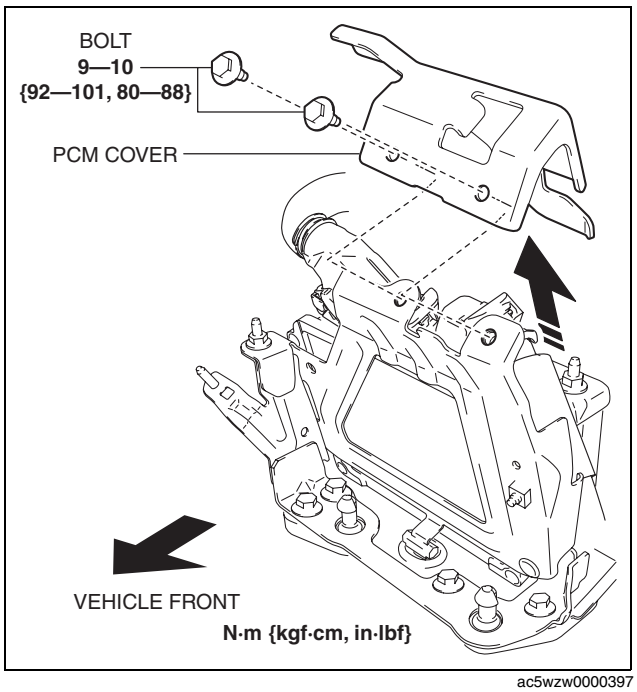

ac5wzw0000397

3. Disconnect the PCM connector. (See 01-40-15 PCM Connector Connection Note.)

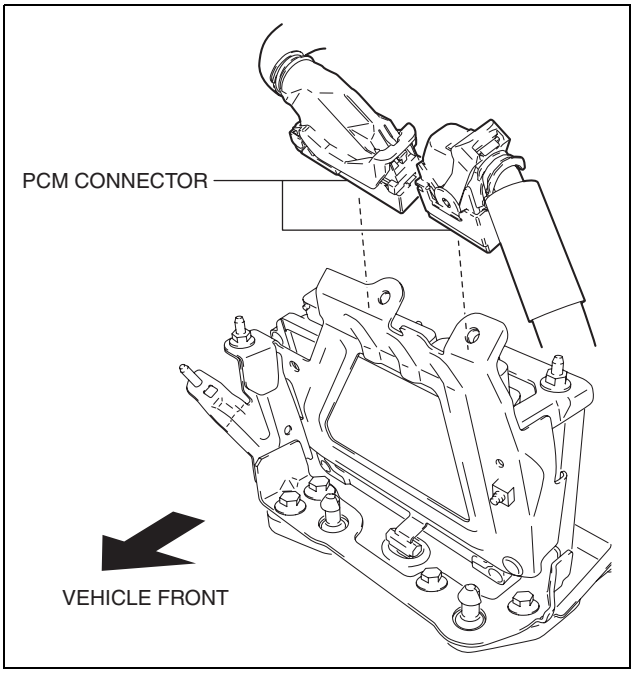

ac5wzw0000028

4. Remove the PCM assembly from the battery tray.

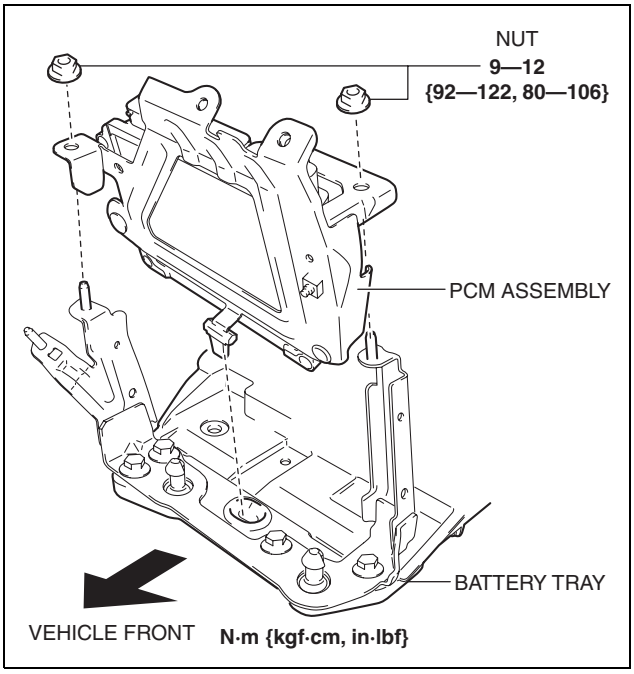

ac5wzw0000398

CONTROL SYSTEM [SKYACTIV-G 2.0]

5. Remove the PCM from the PCM bracket.
6. Install in the reverse order of removal.
7. When replacing the PCM on the vehicles, perform the following:
   - PCM configuration (See 01-40-39 PCM CONFIGURATION (USING READ/WRITE FUNCTION) [SKYACTIV-G 2.0].)

Note
- If configuration cannot be performed by reading/writing of the vehicle specification information, perform the configuration using As-Built information after replacing the PCM. (See 01-40-39 PCM CONFIGURATION (USING AS-BUILT DATA) [SKYACTIV-G 2.0].)

- Immobilizer system-related parts programming (See 09-14-78 IMMOBILIZER SYSTEM-RELATED PARTS PROGRAMMING.)

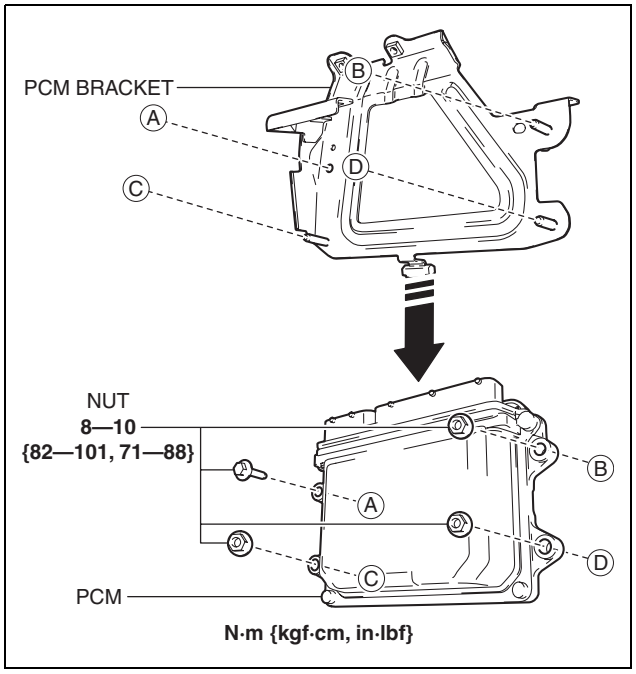

ac5wzw0000036

With Set Bolt

1. Disconnect the negative battery cable. (See 01-17A-11 NEGATIVE BATTERY CABLE DISCONNECTION/CONNECTION [SKYACTIV-G 2.0].) (See 01-17A-13 NEGATIVE BATTERY CABLE DISCONNECTION/CONNECTION [SKYACTIV-G 2.0 (WITHOUT i-stop)].)
2. Remove the PCM cover. (See 01-40-15 PCM Cover Installation Note.) (See 01-40-14 Set Bolt Removal Note.) (See 01-40-14 Set Bolt Installation Note.)

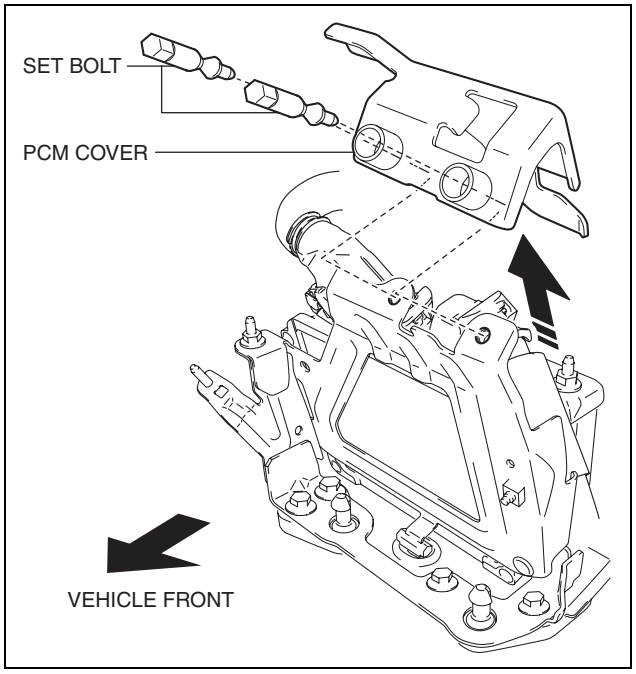

ac5wzw0000092

3. Disconnect the PCM connector. (See 01-40-15 PCM Connector Connection Note.)

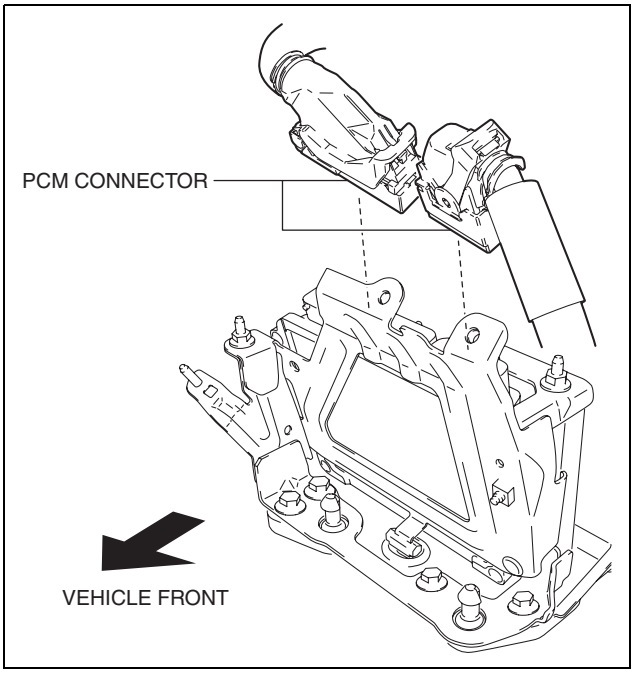

ac5wzw0000028

4. Remove the PCM assembly from the battery tray.

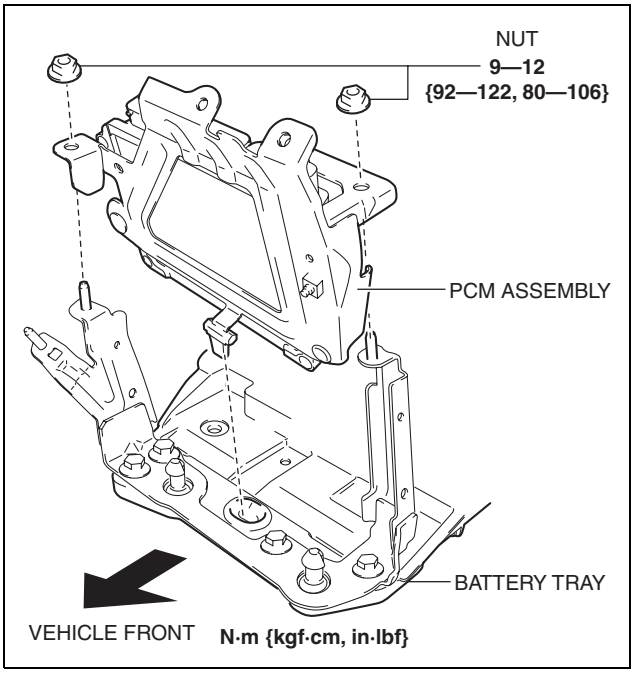

ac5wzw0000398

CONTROL SYSTEM [SKYACTIV-G 2.0]

5. Remove the PCM from the PCM bracket.
6. Install in the reverse order of removal.
7. When replacing the PCM on the vehicles, perform the following:
   - PCM configuration (See 01-40-39 PCM CONFIGURATION (USING READ/WRITE FUNCTION) [SKYACTIV-G 2.0].)

Note
- If configuration cannot be performed by reading/writing of the vehicle specification information, perform the configuration using As-Built information after replacing the PCM. (See 01-40-39 PCM CONFIGURATION (USING AS-BUILT DATA) [SKYACTIV-G 2.0].)

- Immobilizer system-related parts programming (See 09-14-78 IMMOBILIZER SYSTEM-RELATED PARTS PROGRAMMING.)

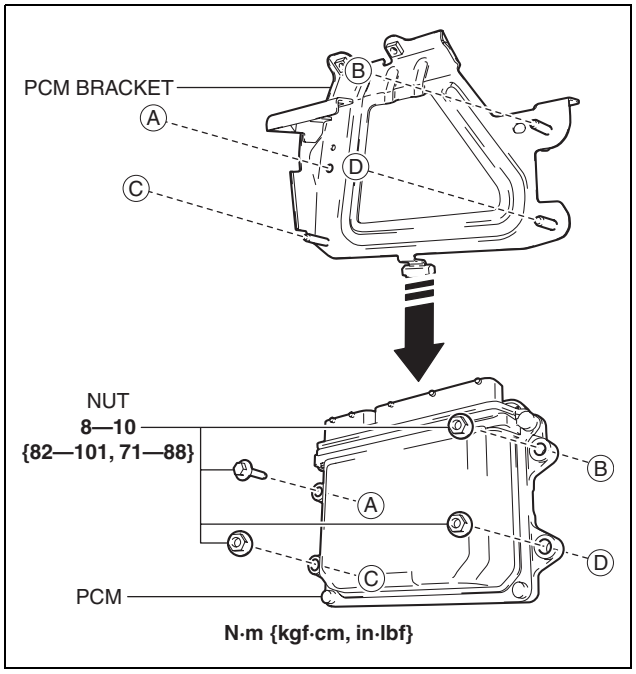

ac5wzw0000036

Set Bolt Removal Note
1. Using a chisel and a hammer, cut a groove on the head of the set bolt so that a screwdriver can be inserted.
2. Loose the set bolt using an impact screwdriver or pliers.

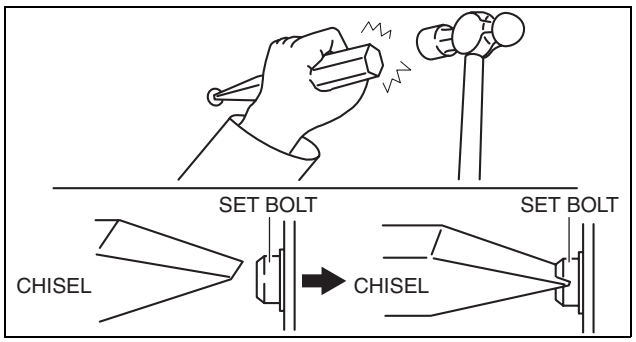

ac5wzw0000207

Set Bolt Installation Note
1. Install a new set bolt and tighten it until the neck of the bolt is cut.

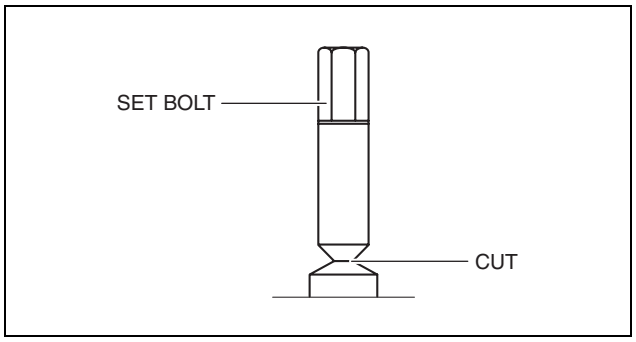

ac5wzw0000207

CONTROL SYSTEM [SKYACTIV-G 2.0]

PCM Cover Installation Note

1. Insert the PCM cover end into area A shown in the figure.
2. Temporarily tighten the two bolts, then completely tighten them.

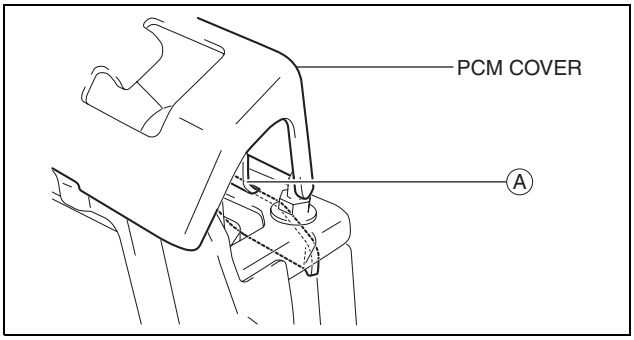

ac5wzw0000092

PCM Connector Connection Note

Caution

- **Do not touch the PCM connector terminal. The terminal is extremely thin and can be damaged by touching it.**
- **If the PCM connector is inserted at an angle and the lever is moved, the connector could be damaged. Verify that the PCM connector is inserted straight.**

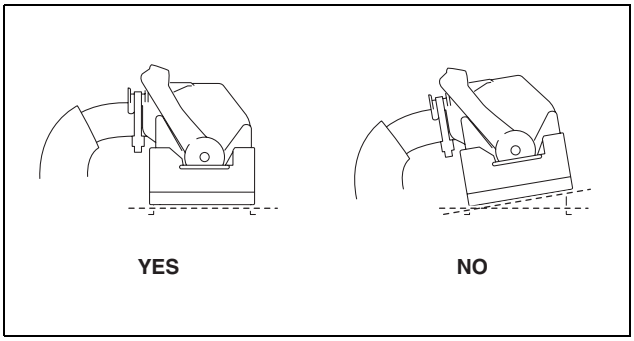

am3zzw0001257

1. Set the PCM connector to the position shown in the figure.

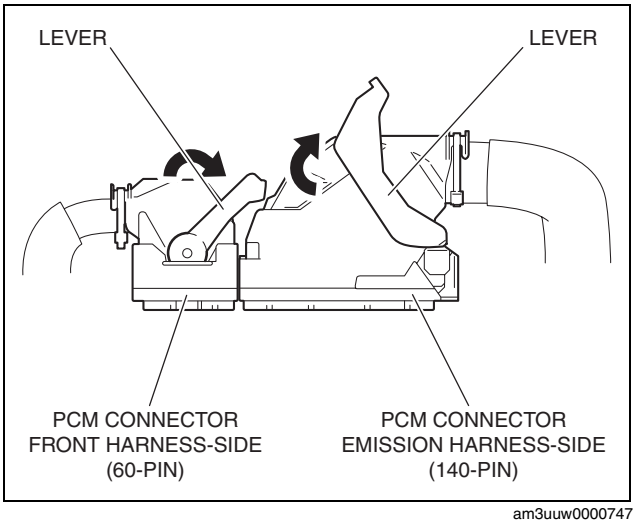

am3uuw0000747

CONTROL SYSTEM [SKYACTIV-G 2.0]

2. Align the PCM connector straight against the connection surface.

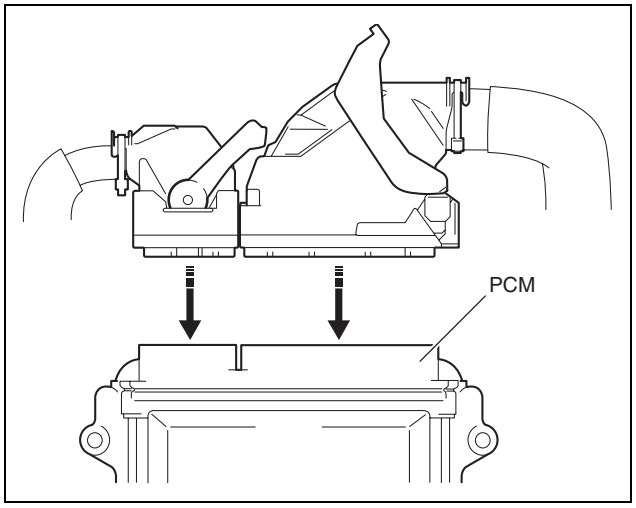

am3uuw0000747

3. Insert the PCM connector straight and press it in until the lever moves up naturally. (Front harness-side connector)

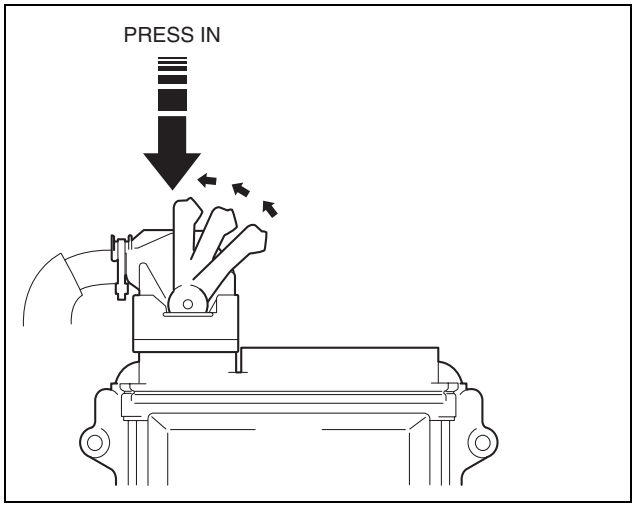

am3uuw0000747

4. Press the PCM connector lever until a click sound is heard.

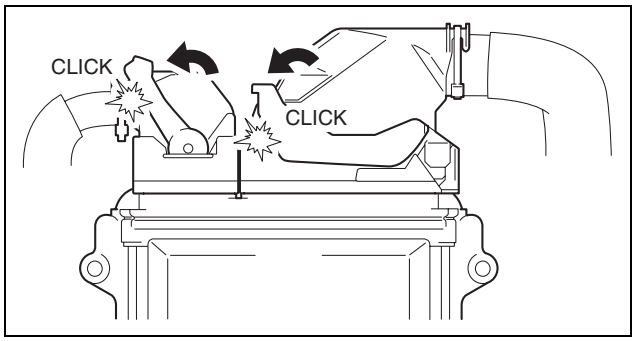

am3uuw0000747

Operation After Replacing PCM (vehicles with i-stop system)

Step	Action
1	Replace the PCM.
2	Perform the PCM configuration using the M-MDS. (See 01-40-39 PCM CONFIGURATION (USING READ/WRITE FUNCTION) [SKYACTIV-G 2.0].)
3	Switch the ignition to off, and disconnect the negative battery cable. (See 01-17A-11 NEGATIVE BATTERY CABLE DISCONNECTION/CONNECTION [SKYACTIV-G 2.0].)
4	Perform the Battery Condition Initialization Setting (i-stop setting) Procedure. (See 01-17A-14 BATTERY CONDITION INITIALIZATION SETTING (i-stop SETTING) [SKYACTIV-G 2.0].)

CONTROL SYSTEM [SKYACTIV-G 2.0]

PCM INSPECTION [SKYACTIV-G 2.0]

id0140f4802500

Without Using the M-MDS

Note

- Because the PCM uses a waterproof connector, the inspection for the voltage/wave pattern cannot be performed. The following values are for reference.

01

Terminal voltage table (Reference)

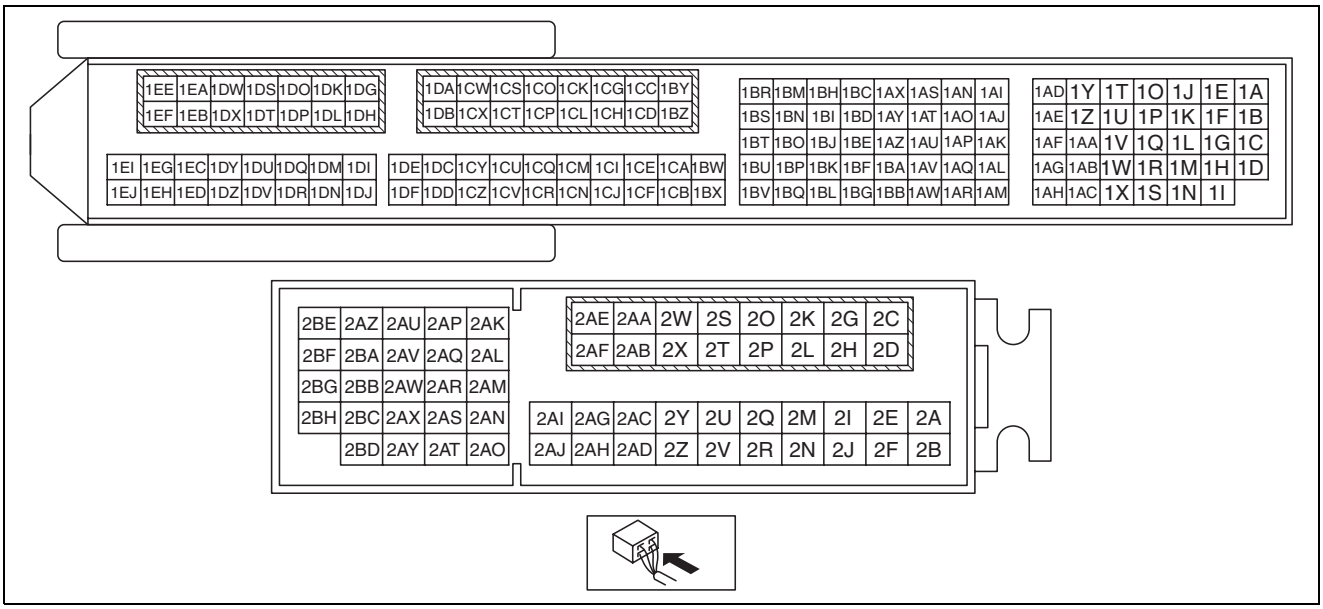

am3zzw0001279

Terminal	Signal	Connected to	Test condition		Voltage (V)	inspection item
1A*1	CAN_2H	CAN system related modules	Because this terminal is for CAN, good/no good judgment by terminal voltage is not possible.			• Related wiring harness
1B*1	CAN_2L	CAN system related modules	Because this terminal is for CAN, good/no good judgment by terminal voltage is not possible.			• Related wiring harness
1C	—	—	—		—	—
1D	Knocking (–)	KS	Switch the ignition ON (Use digital type voltmeter, because measurement voltage will be detected less than true voltage when using analog type voltmeter)		Approx. 1.65	• KS • Related wiring harness
1E	—	—	—		—	—
1F	—	—	—		—	—
1G*5	Neutral switch No.2	Neutral switch No.2	Switch the ignition ON (engine off)	Neutral	Below 1.0	• Neutral switch No.2 • Related wiring harness
				Except above	B+	
1H	Knocking (+)	KS	Switch the ignition ON (Use digital type voltmeter, because measurement voltage will be detected less than true voltage when using analog type voltmeter)		Approx. 3.38	• KS • Related wiring harness
1I	GND	Sensor shield	Under any condition		Below 1.0	• Related wiring harness
1J	Electric variable valve timing motor (rotation direction)	Electric variable valve timing motor/driver	(See 01-40-26 Electric variable valve timing motor (rotation direction) signal.)			• Electric variable valve timing motor/driver • Related wiring harness

CONTROL SYSTEM [SKYACTIV-G 2.0]

Terminal	Signal	Connected to	Test condition	Voltage (V)	inspection item
1K*2	Neutral position	Neutral switch	Shift lever is at neutral position	Below 1.0	• Neutral switch • Related wiring harness
			Shift lever is not at neutral position	B+	
1L*2	Back up light	Back up light switch	Shift lever is at R position	Below 1.0	• Back up light switch • Related wiring harness
			Shift lever is not at R position	B+	
1M	—	—	—	—	—
1N	—	—	—	—	—
1O	Electric variable valve timing motor (rotation pulse)	Electric variable valve timing motor/driver	(See 01-40-26 Electric variable valve timing motor (rotation pulse) signal.)		• Electric variable valve timing motor/driver • Related wiring harness
1P	Oil pressure	Oil pressure switch	Switch the ignition ON (engine off)	Below 1.0	• Oil pressure switch • Related wiring harness
			Idle (after warm up)	B+	
1Q	—	—	—	—	—
1R	—	—	—	—	—
1S	—	—	—	—	—
1T	Exhaust CMP	Exhaust CMP sensor	(See 01-40-26 Exhaust CMP signal.)		• Exhaust CMP sensor • Related wiring harness
1U	—	—	—	—	—
1V	—	—	—	—	—
1W	A/F	A/F sensor	Idle (after warm up)	Approx. 4.2	• A/F sensor • Related wiring harness
1X	GND	Exhaust CMP sensor	Under any condition	Below 1.0	• Related wiring harness
1Y	Intake CMP	Intake CMP sensor	(See 01-40-26 Intake CMP signal.)		• Intake CMP sensor • Related wiring harness
1Z	—	—	—	—	—
1AA	—	—	—	—	—
1AB	A/F	A/F sensor	Idle (after warm up): 0 mA		• A/F sensor • Related wiring harness
1AC	GND	Intake CMP sensor	Under any condition	Below 1.0	• Related wiring harness
1AD	CKP	CKP sensor	(See 01-40-27 CKP signal.)		• CKP sensor • Related wiring harness
1AE	Electric variable valve timing driver (diagnostic)	Electric variable valve timing motor/driver	(See 01-40-27 Electric variable valve timing driver (diagnostic) signal.)		• Electric variable valve timing motor/driver • Related wiring harness
1AF	Generator output voltage	Generator (terminal P)	(See 01-40-27 Generator output voltage.)		• Generator • Related wiring harness
1AG	A/F	A/F sensor	Idle (after warm up)	Approx. 3.48	• A/F sensor • Related wiring harness
1AH	GND	CKP sensor	Under any condition	Below 1.0	• Related wiring harness
1AI	Purge control	Purge solenoid valve	(See 01-40-27 Purge control.)		• Purge solenoid valve • Related wiring harness
1AJ	IGT4	Ignition coil No.4	(See 01-40-28 IGT1, IGT2, IGT3, IGT4 control.)		• Ignition coil No.4 • Related wiring harness

CONTROL SYSTEM [SKYACTIV-G 2.0]

Terminal	Signal	Connected to	Test condition		Voltage (V)	inspection item
1AK	ECT	ECT sensor	Switch the ignition ON (engine off)	ECT 20 °C {68 °F}	Approx. 3.10	• ECT sensor • Related wiring harness
				ECT 40 °C {104 °F}	Approx. 2.16	
				ECT 60 °C {140 °F}	Approx. 1.40	
				ECT 80 °C {176 °F}	Approx. 0.87	
				ECT 100 °C {212 °F}	Approx. 0.54	
1AL	—	—	—		—	—
1AM	GND	ECT sensor	Under any condition		Below 1.0	• Related wiring harness
1AN	Hydraulic variable valve timing control	OCV	(See 01-40-28 Hydraulic variable valve timing control signal.)			• OCV • Related wiring harness
1AO	IGT3	Ignition coil No.3	(See 01-40-28 IGT1, IGT2, IGT3, IGT4 control.)			• Ignition coil No.3 • Related wiring harness
1AP	—	—	—		—	—
1AQ	—	—	—		—	—
1AR	—	—	—		—	—
1AS	Engine oil control	Engine oil solenoid valve	(See 01-40-28 Engine oil control signal.)			• Engine oil solenoid valve • Related wiring harness
1AT	IGT2	Ignition coil No.2	(See 01-40-28 IGT1, IGT2, IGT3, IGT4 control.)			• Ignition coil No.2 • Related wiring harness
1AU	—	—	—		—	—
1AV	Ion (No.4)	Ion sensor No.4	Idle (after warm up)		Approx. 4.55	• Ion sensor No.4 • Related wiring harness
1AW	—	—	—		—	—
1AX	—	—	—		—	—
1AY	IGT1	Ignition coil No.1	(See 01-40-28 IGT1, IGT2, IGT3, IGT4 control.)			• Ignition coil No.1 • Related wiring harness
1AZ	Electric variable valve timing control	Electric variable valve timing motor/driver	(See 01-40-28 Electric variable valve timing control signal.)			• Electric variable valve timing motor/driver • Related wiring harness
1BA	Ion (No.3)	Ion sensor No.3	Idle (after warm up)		Approx. 4.55	• Ion sensor No.3 • Related wiring harness
1BB	GND	Sensor shield	Under any condition		Below 1.0	• Related wiring harness
1BC	—	—	—		—	—
1BD	—	—	—		—	—
1BE	Generator field coil control	Generator (terminal D)	(See 01-40-29 Generator field coil control signal.)			• Generator • Related wiring harness
1BF	Ion (No.2)	Ion sensor No.2	Idle (after warm up)		Approx. 4.55	• Ion sensor No.2 • Related wiring harness
1BG	GND	Sensor shield	Under any condition		Below 1.0	• Related wiring harness
1BH	—	—	—		—	—
1BI	—	—	—		—	—
1BJ	Constant voltage (Vref)	Fuel pressure sensor	Switch the ignition ON (engine off)		Approx. 5.0	• Related wiring harness

CONTROL SYSTEM [SKYACTIV-G 2.0]

Terminal	Signal	Connected to	Test condition		Voltage (V)	inspection item
1BK	Ion (No.1)	Ion sensor No.1	Idle (after warm up)		Approx. 4.55	• Ion sensor No.1 • Related wiring harness
1BL	GND	Sensor shield	Under any condition		Below 1.0	• Related wiring harness
1BM	—	—	—		—	—
1BN	Constant voltage (Vref)	CKP sensor	Switch the ignition ON (engine off)		Approx. 5.0	• Related wiring harness
1BO	Constant voltage (Vref)	MAP sensor	Switch the ignition ON (engine off)		Approx. 5.0	• Related wiring harness
1BP	TP (No.1)	TP sensor No.1	Switch the ignition ON (engine off)	Accelerator pedal released	Approx. 1.11	• TP sensor No.1 • Related wiring harness
				Accelerator pedal depressed	Approx. 4.59	
1BQ	GND	TP sensor No.1, TP sensor No.2	Under any condition		Below 1.0	• Related wiring harness
1BR	—	—	—		—	—
1BS	Constant voltage (Vref)	TP sensor No.1, TP sensor No.2	Switch the ignition ON (engine off)		Approx. 5.0	• Related wiring harness
1BT	—	—	—		—	—
1BU	TP (No.2)	TP sensor No.2	Switch the ignition ON (engine off)	Accelerator pedal released	Approx. 3.92	• TP sensor No.2 • Related wiring harness
				Accelerator pedal depressed	Approx. 0.41	
1BV	—	—	—		—	—
1BW	MAP	MAP sensor	Switch the ignition ON (engine off)		Approx. 4.07	• MAP sensor • Related wiring harness
			Idle (after warm up)		Approx. 1.34	
			Racing (Engine speed: 2,000 rpm)		Approx. 1.05	
1BX	GND	MAP sensor, IAT sensor No.2	Under any condition		Below 1.0	• Related wiring harness
1BY	A/F sensor heater control	A/F sensor heater	(See 01-40-29 A/F sensor heater control signal.)			• A/F sensor heater • Related wiring harness
1BZ	GND	GND	Under any condition		Below 1.0	• Related wiring harness
1CA	Fuel pressure	Fuel pressure sensor	Switch the ignition ON (engine off)		Approx. 1.22	• Fuel pressure sensor • Related wiring harness
			Idle (after warm up)		Approx. 1.06	
1CB	GND	Fuel pressure sensor	Under any condition		Below 1.0	• Related wiring harness
1CC	Drive-by-wire control (–)	Throttle valve actuator	Switch the ignition ON (engine off)		Approx. 10.51	• Throttle valve actuator • Related wiring harness
			Idle (after warm up)		B+	
1CD	—	—	—		—	—
1CE	IAT (No.2)	IAT sensor No.2	Switch the ignition ON (engine off)	IAT 20 °C {68 °F}	Approx. 3.57	• IAT sensor No.2 • Related wiring harness
				IAT 40 °C {104 °F}	Approx. 2.70	
				IAT 60 °C {140 °F}	Approx. 1.87	
1CF	—	—	—		—	—
1CG	Drive-by-wire control (+)	Throttle valve actuator	(See 01-40-29 Drive-by-wire control (+) signal.)			• Throttle valve actuator • Related wiring harness

CONTROL SYSTEM [SKYACTIV-G 2.0]

Terminal	Signal	Connected to	Test condition	Voltage (V)	inspection item
1CH	—	—	—	—	—
1CI	—	—	—	—	—
1CJ	—	—	—	—	—
1CK	Battery voltage	Main relay	Switch the ignition ON (engine off)	B+	• Related wiring harness
1CL	GND	GND	Under any condition	Below 1.0	• Related wiring harness
1CM	—	—	—	—	—
1CN	—	—	—	—	—
1CO	Battery voltage	Fuel injector relay	Switch the ignition ON (engine off)	B+	• Related wiring harness
1CP	GND	GND	Under any condition	Below 1.0	• Related wiring harness
1CQ	—	—	—	—	—
1CR	—	—	—	—	—
1CS	Battery voltage	Fuel injector relay	Switch the ignition ON (engine off)	B+	• Related wiring harness
1CT	GND	GND	Under any condition	Below 1.0	• Related wiring harness
1CU	—	—	—	—	—
1CV	—	—	—	—	—
1CW	Battery voltage	Fuel injector relay	Switch the ignition ON (engine off)	B+	• Related wiring harness
1CX	GND	GND	Under any condition	Below 1.0	• Related wiring harness
1CY	—	—	—	—	—
1CZ	—	—	—	—	—
1DA	Battery voltage	Fuel injector relay	Switch the ignition ON (engine off)	B+	• Related wiring harness
1DB	GND	GND	Under any condition	Below 1.0	• Related wiring harness
1DC	—	—	—	—	—
1DD	—	—	—	—	—
1DE	—	—	—	—	—
1DF	—	—	—	—	—
1DG	Battery voltage	Fuel injector relay	Switch the ignition ON (engine off)	B+	• Related wiring harness
1DH	GND	GND	Under any condition	Below 1.0	• Related wiring harness
1DI	—	—	—	—	—
1DJ	—	—	—	—	—
1DK	Battery voltage	Fuel injector relay	Switch the ignition ON (engine off)	B+	• Related wiring harness
1DL	GND	GND	Under any condition	Below 1.0	• Related wiring harness
1DM	—	—	—	—	—
1DN	—	—	—	—	—
1DO	Fuel injection control (–)	Fuel injector No.1	(See 01-40-29 Fuel injection control (-) signal.)		• Fuel injector No.1 • Related wiring harness
1DP	Fuel injection control (+)	Fuel injector No.1	(See 01-40-30 Fuel injection control (+) signal.)		• Fuel injector No.1 • Related wiring harness
1DQ	—	—	—	—	—
1DR	—	—	—	—	—
1DS	Fuel injection control (–)	Fuel injector No.4	(See 01-40-29 Fuel injection control (-) signal.)		• Fuel injector No.4 • Related wiring harness

CONTROL SYSTEM [SKYACTIV-G 2.0]

Terminal	Signal	Connected to	Test condition		Voltage (V)	inspection item
1DT	Fuel injection control (+)	Fuel injector No.4	(See 01-40-30 Fuel injection control (+) signal.)			• Fuel injector No.4 • Related wiring harness
1DU	—	—	—		—	—
1DV	—	—	—		—	—
1DW	Fuel injection control (–)	Fuel injector No.2	(See 01-40-29 Fuel injection control (-) signal.)			• Fuel injector No.2 • Related wiring harness
1DX	Fuel injection control (+)	Fuel injector No.2	(See 01-40-30 Fuel injection control (+) signal.)			• Fuel injector No.2 • Related wiring harness
1DY	—	—	—		—	—
1DZ	—	—	—		—	—
1EA	Fuel injection control (–)	Fuel injector No.3	(See 01-40-29 Fuel injection control (-) signal.)			• Fuel injector No.3 • Related wiring harness
1EB	Fuel injection control (+)	Fuel injector No.3	(See 01-40-30 Fuel injection control (+) signal.)			• Fuel injector No.3 • Related wiring harness
1EC	—	—	—		—	—
1ED	—	—	—		—	—
1EE	High pressure fuel pump control (+)	High pressure fuel pump	(See 01-40-30 High pressure fuel pump control (+) signal.)			• High pressure fuel pump • Related wiring harness
1EF	High pressure fuel pump control (–)	High pressure fuel pump	(See 01-40-30 High pressure fuel pump control (-) signal.)			• High pressure fuel pump • Related wiring harness
1EG	—	—	—		—	—
1EH	—	—	—		—	—
1EI	—	—	—		—	—
1EJ	—	—	—		—	—
2A	—	—	—		—	—
2B	—	—	—		—	—
2C	HO2S heater control	HO2S heater	(See 01-40-30 HO2S heater control signal.)			• HO2S heater • Related wiring harness
2D	—	—	—		—	—
2E	—	—	—		—	—
2F	—	—	—		—	—
2G	Brake (No.1)	Brake switch (No.1 signal)	Brake pedal released		Below 1.0	• Brake switch (No.1 signal) • Related wiring harness
			Brake pedal depressed		B+	
2H	Ignition (IG1)	IG1 relay	Switch the ignition ON (engine off)		B+	• IG1 relay • Related wiring harness
2I*4	Ambient temperature	Ambient temperature sensor	Switch the ignition ON (engine off)	AAT 20 °C {68 °F}	Approx. 2.70	• Ambient temperature sensor • Related wiring harness
				AAT 30 °C {104 °F}	Approx. 1.80	
2J*2	CPP	CPP switch, Start stop unit	Clutch pedal depressed		Below 1.0	• CPP switch • Start stop unit • Related wiring harness
			Clutch pedal released		B+	
2K	Main relay control	Main relay	Switch the ignition ON (engine off)		Approx. 0.8	• Main relay • Related wiring harness
2L	—	—	—		—	—

CONTROL SYSTEM [SKYACTIV-G 2.0]

Terminal	Signal	Connected to	Test condition		Voltage (V)	inspection item
2M*5	Clutch stroke sensor	Clutch stroke sensor	Switch the ignition ON (engine off)	Clutch pedal released	Approx. 0.6	• Clutch stroke sensor • Related wiring harness
				Clutch pedal depressed	Approx. 4.5	
2N	—	—	—		—	—
2O	Battery voltage	Battery	Switch the ignition ON (engine off)		B+	• Battery • Related wiring harness
2P*3	DC-DC converter control	DC-DC converter	Switch the ignition ON (engine off)		Below 1.0	• DC-DC converter • Related wiring harness
2Q*3	Power brake unit vacuum	Power brake unit vacuum sensor	Idle (after warm up)	Brake pedal released	Approx. 0.44	• Power brake unit vacuum sensor • Related wiring harness
2R	Brake (No.2)	Brake switch (No.2 signal)	Brake pedal released		Below 1.0	• Brake switch (No.2 signal) • Related wiring harness
			Brake pedal depressed		B+	
2S	Battery voltage	Main relay	Switch the ignition ON (engine off)		B+	• Related wiring harness
2T	Battery voltage	Main relay	Switch the ignition ON (engine off)		B+	• Related wiring harness
2U	IAT (No.1)	IAT sensor No.1	Switch the ignition ON (engine off)	IAT 20 °C {68 °F}	Approx. 2.70	• IAT sensor No.1 • Related wiring harness
				IAT 40 °C {104 °F}	Approx. 1.80	
				IAT 60 °C {140 °F}	Approx. 1.20	
2V	—	—	—		—	—
2W	—	—	—		—	—
2X	—	—	—		—	—
2Y	—	—	—		—	—
2Z	—	—	—		—	—
2AA	GND	GND	Under any condition		Below 1.0	• Related wiring harness
2AB	—	—	—		—	—
2AC	—	—	—		—	—
2AD	GND	Sensor shield	Under any condition		Below 1.0	• Related wiring harness
2AE	Fuel pump control	Fuel pump control module	(See 01-40-31 Fuel pump control signal.)			• Fuel pump control module • Related wiring harness
2AF*4	A/C cut-off control	A/C relay	A/C relay OFF		B+	• A/C relay • Related wiring harness
			A/C relay ON		Below 1.0	
2AG	HO2S (–)	HO2S	Idle (after warm up)		Approx. 1.65	• HO2S • Related wiring harness
2AH*3	GND	Power brake unit vacuum sensor, clutch stroke sensor*2	Under any condition		Below 1.0	• Related wiring harness
2AI	HO2S (+)	HO2S	Idle (after warm up)		Approx. 2.49	• HO2S • Related wiring harness
2AJ*4	GND	Refrigerant pressure sensor	Under any condition		Below 1.0	• Related wiring harness

CONTROL SYSTEM [SKYACTIV-G 2.0]

Terminal	Signal	Connected to	Test condition		Voltage (V)	inspection item
2AK	CAN_H	CAN system related modules	Because this terminal is for CAN, good/no good judgment by terminal voltage is not possible.			• Related wiring harness
2AL	CAN_L	CAN system related modules	Because this terminal is for CAN, good/no good judgment by terminal voltage is not possible.			• Related wiring harness
2AM	Fuel pump control module (diagnostic)	Fuel pump control module	(See 01-40-31 Fuel pump control module (diagnostic) signal.)			• Fuel pump control module • Related wiring harness
2AN	APP (No.1)	APP sensor No.1	Switch the ignition ON (engine off)	Accelerator pedal released	Approx. 0.75	• APP sensor No.1 • Related wiring harness
				Accelerator pedal depressed	Approx. 4.1	
2AO	GND	APP sensor No.1	Under any condition		Below 1.0	• Related wiring harness
2AP	—	—	—		—	—
2AQ	Fuel pump control	Fuel pump relay	Switch the ignition ON (engine off)		B+	• Fuel pump relay • Related wiring harness
			Idle (after warm up)		Below 1.0	
2AR	Constant voltage (Vref)	APP sensor No.1	Switch the ignition ON (engine off)		Approx. 5.0	• Related wiring harness
2AS	APP (No.2)	APP sensor No.2	Switch the ignition ON (engine off)	Accelerator pedal released	Approx. 0.38	• APP sensor No.2 • Related wiring harness
				Accelerator pedal depressed	Approx. 2.05	
2AT	GND	APP sensor No.2	Under any condition		Below 1.0	• Related wiring harness
2AU	Cooling fan control	Cooling fan relay No.1	Cooling fan operating		Below 1.0	• Cooling fan relay No.1 • Related wiring harness
			Cooling fan not operating		B+	
2AV	Cooling fan control	Cooling fan relay No.2, No.3	Cooling fan operating		Below 1.0	• Cooling fan relay No.2, No.3 • Related wiring harness
			Cooling fan not operating		B+	
2AW	Constant voltage (Vref)	APP sensor No.2	Switch the ignition ON (engine off)		Approx. 5.0	• Related wiring harness
2AX*4	Refrigerant pressure	Refrigerant pressure sensor	Refrigerant pressure: 1.0 MPa {10 kgf/cm^2, 145 psi}		Approx. 1.58	• Refrigerant pressure sensor • Related wiring harness
			Refrigerant pressure: 1.1 MPa {11 kgf/cm^2, 160 psi}		Approx. 1.75	
			Refrigerant pressure: 1.2 MPa {12 kgf/cm^2, 174 psi}		Approx. 1.88	
2AY	GND	MAF sensor, IAT sensor No.1	Under any condition		Below 1.0	• Related wiring harness

CONTROL SYSTEM [SKYACTIV-G 2.0]

Terminal	Signal	Connected to	Test condition		Voltage (V)	inspection item
2AZ	Starter cut-off control	Starter relay, start stop unit	Switch the ignition ON (engine off)	**MTX** • Clutch pedal released **ATX** • Selector lever position is not P or N range	B+	• Starter relay • Start stop unit • Related wiring harness
				MTX • Clutch pedal depressed **ATX** • Selector lever position is P or N range	Below 1.0	
2BA	—	—	—		—	—
2BB	Constant voltage (Vref)	Refrigerant pressure sensor*4, MAF sensor	Switch the ignition ON (engine off)		Approx. 5.0	• Related wiring harness
2BC	MAF	MAF sensor	Switch the ignition ON (engine off)		Approx. 0.72	• MAF sensor • Related wiring harness
			Idle (after warm up)		Approx. 0.86	
			Racing (Engine speed: 2,000 rpm)		Approx. 1.07	
2BD	Selector lever position*1	TCM, start stop unit	Selector lever position is not P or N range		B+	• TCM • Start stop unit • Related wiring harness
			Selector lever position is P or N range		Below 1.0	
	Starter interlock*2	Starter interlock switch, start stop unit	Clutch pedal depressed		Below 1.0	• Starter interlock switch • Start stop unit • Related wiring harness
			Clutch pedal released		B+	
2BE	—	—	—		—	—
2BF	—	—	—		—	—
2BG*3	Constant voltage (Vref)	Power brake unit vacuum sensor, clutch stroke sensor*2	Switch the ignition ON (engine off)		Approx. 5.0	• Related wiring harness
2BH	—	—	—		—	—

*1 : ATX
*2 : MTX
*3 : Vehicles with i-stop system
*4 : Vehicles with air conditioner
*5 : Vehicles with i-stop system (MTX)

CONTROL SYSTEM [SKYACTIV-G 2.0]

Inspection Using An Oscilloscope (Reference)
Electric variable valve timing motor (rotation direction) signal
PCM terminals
- 1J(+)—body ground(–)

Oscilloscope setting
- 2 V/DIV (Y), 5 ms/DIV (X), DC range

Vehicle condition
- Idle (after warm up)

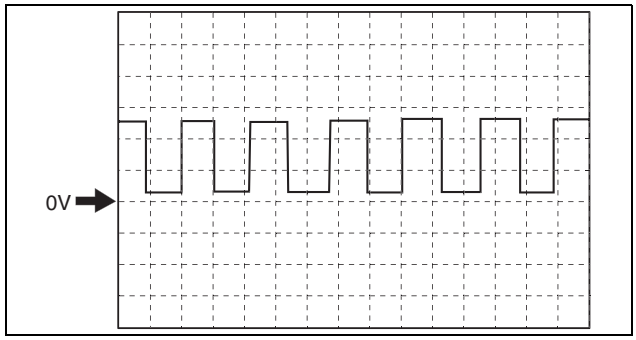

adejjw00007909

Electric variable valve timing motor (rotation pulse) signal
PCM terminals
- 1O(+)—body ground(–)

Oscilloscope setting
- 2 V/DIV (Y), 5 ms/DIV (X), DC range

Vehicle condition
- Idle (after warm up)

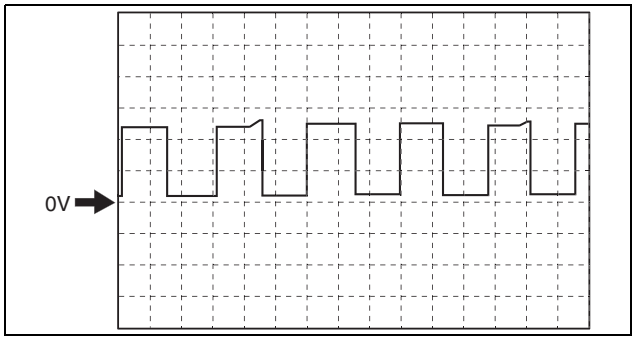

adejjw00007910

Exhaust CMP signal
PCM terminals
- 1T(+)—body ground(–)

Oscilloscope setting
- 2 V/DIV (Y), 20 ms/DIV (X), DC range

Vehicle condition
- Idle (after warm up)

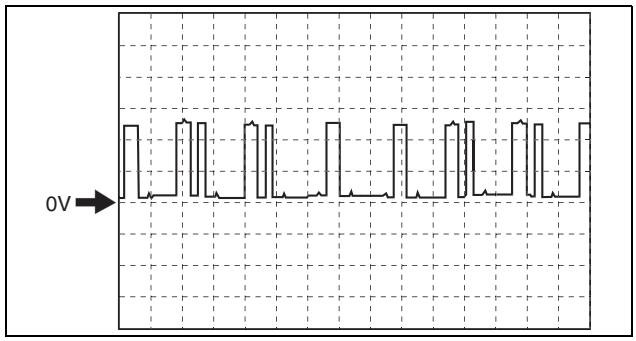

adejjw00007911

Intake CMP signal
PCM terminals
- 1Y(+)—body ground(–)

Oscilloscope setting
- 2 V/DIV (Y), 20 ms/DIV (X), DC range

Vehicle condition
- Idle (after warm up)

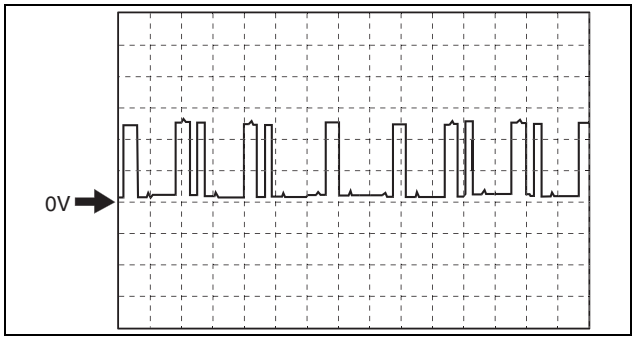

adejjw00007911

CONTROL SYSTEM [SKYACTIV-G 2.0]

CKP signal
PCM terminals
- 1AD(+)—body ground(–)

Oscilloscope setting
- 2 V/DIV (Y), 1 ms/DIV (X), DC range

Vehicle condition
- Idle (after warm up)

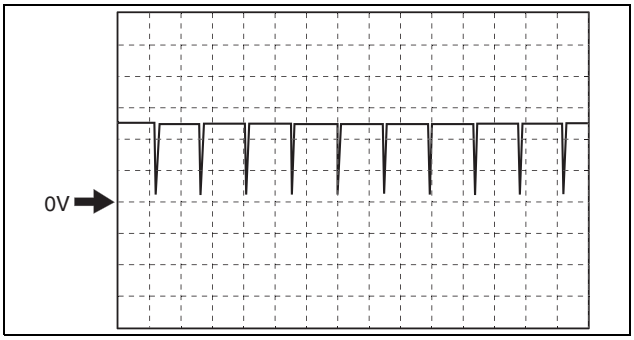

adejjw00007912

Electric variable valve timing driver (diagnostic) signal
PCM terminals
- 1AE(+)—body ground(–)

Oscilloscope setting
- 2 V/DIV (Y), 100 ms/DIV (X), DC range

Vehicle condition
- Idle (after warm up)

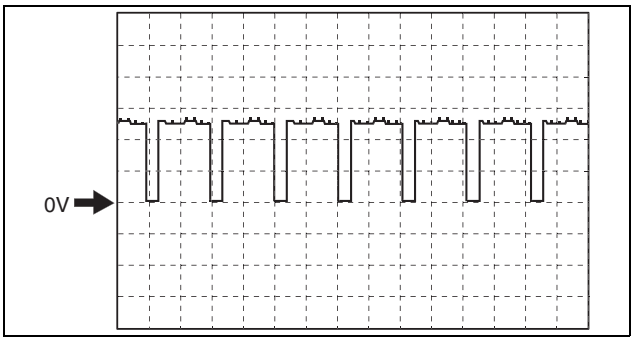

adejjw00007913

Generator output voltage
PCM terminals
- 1AF(+)—body ground(–)

Oscilloscope setting
- 5 V/DIV (Y), 2 ms/DIV (X), DC range

Vehicle condition
- Idle after warm up

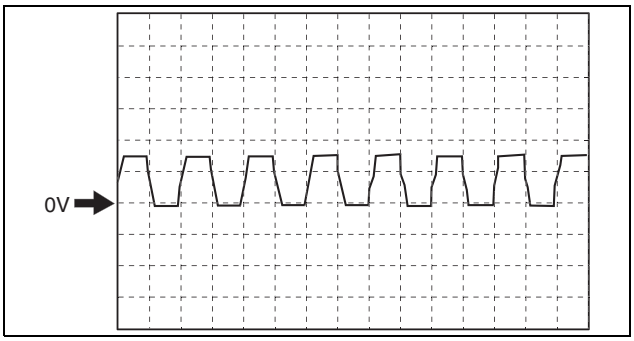

adejjw00007914

Purge control
PCM terminals
- 1AI(+)—body ground(–)

Oscilloscope setting
- 10 V/DIV (Y), 50 ms/DIV (X), DC range

Vehicle condition
- Idle after warm up

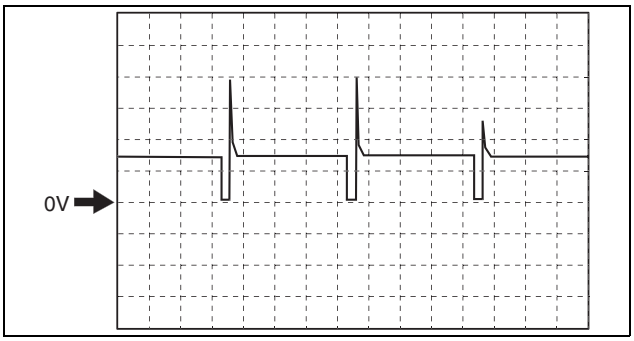

adejjw00007915

CONTROL SYSTEM [SKYACTIV-G 2.0]

IGT1, IGT2, IGT3, IGT4 control
PCM terminals
- IGT1(ignition coil No.1): 1AY(+)—body ground(–)
- IGT2(ignition coil No.2): 1AT(+)—body ground(–)
- IGT3(ignition coil No.3): 1AO(+)—body ground(–)
- IGT4(ignition coil No.4): 1AJ(+)—body ground(–)

Oscilloscope setting
- 2 V/DIV (Y), 20 ms/DIV (X), DC range

Vehicle condition
- Idle after warm up

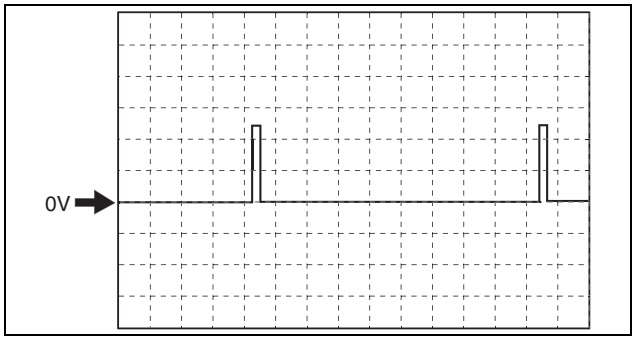

adejjw00007916

Hydraulic variable valve timing control signal
PCM terminals
- 1AN(+)—body ground(–)

Oscilloscope setting
- 5 V/DIV (Y), 1 ms/DIV (X), DC range

Vehicle condition
- Idle after warm up

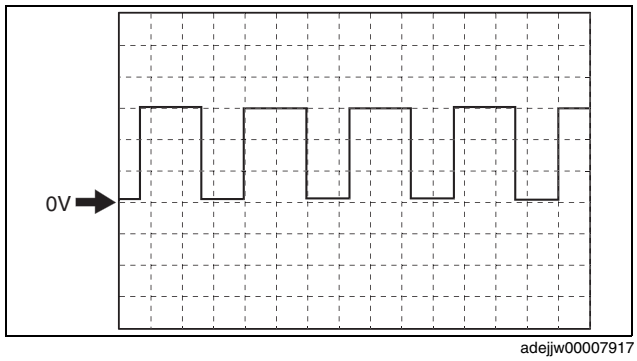

adejjw00007917

Engine oil control signal
PCM terminals
- 1AS(+)—body ground(–)

Oscilloscope setting
- 5 V/DIV (Y), 1 ms/DIV (X), DC range

Vehicle condition
- Idle after warm up

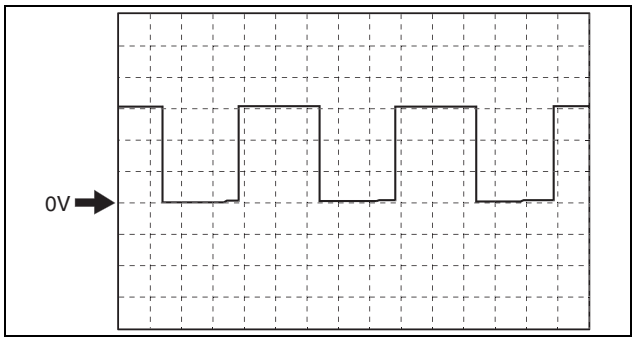

adejjw00007918

Electric variable valve timing control signal
PCM terminals
- 1AZ(+)—body ground(–)

Oscilloscope setting
- 2 V/DIV (Y), 2 ms/DIV (X), DC range

Vehicle condition
- Idle after warm up

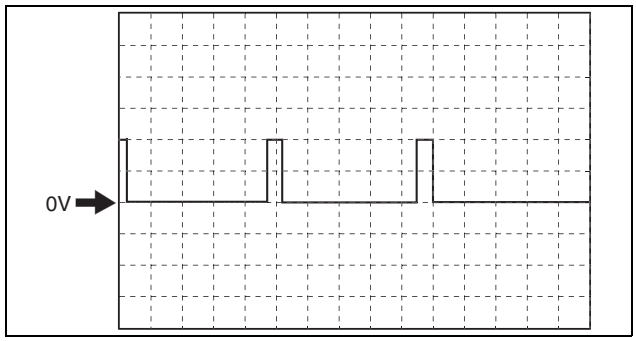

adejjw00007919

CONTROL SYSTEM [SKYACTIV-G 2.0]

Generator field coil control signal
PCM terminals
- 1BE(+)—body ground(–)

Oscilloscope setting
- 1 V/DIV (Y), 2 ms/DIV (X), DC range

Vehicle condition
- Idle after warm up

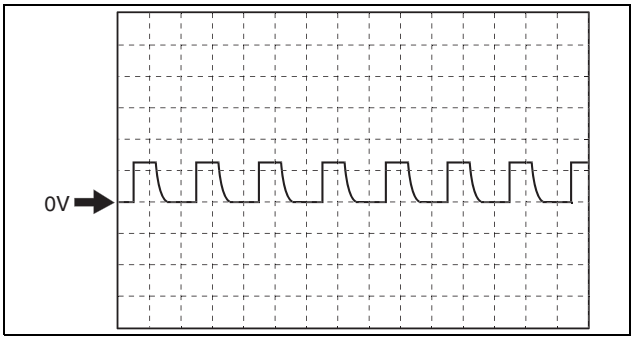

adejjw00007920

A/F sensor heater control signal
PCM terminals
- 1BY(+)—body ground(–)

Oscilloscope setting
- 5 V/DIV (Y), 50 ms/DIV (X), DC range

Vehicle condition
- Idle after warm up

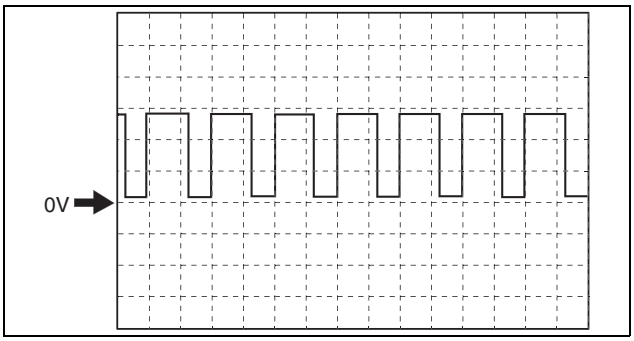

adejjw00007921

Drive-by-wire control (+) signal
PCM terminals
- 1CG(+)—body ground(–)

Oscilloscope setting
- 5 V/DIV (Y), 1 ms/DIV (X), DC range

Vehicle condition
- Idle after warm up

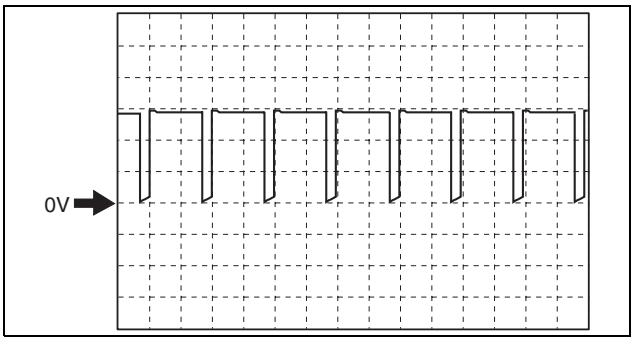

am3zzw0001279

Fuel injection control (-) signal
PCM terminals
- Fuel Injection No.1: 1DO(+)—body ground(–)
- Fuel Injection No.2: 1DW(+)—body ground(–)
- Fuel Injection No.3: 1EA(+)—body ground(–)
- Fuel Injection No.4: 1DS(+)—body ground(–)

Oscilloscope setting
- 10 V/DIV (Y), 5 ms/DIV (X), DC range

Vehicle condition
- Idle after warm up

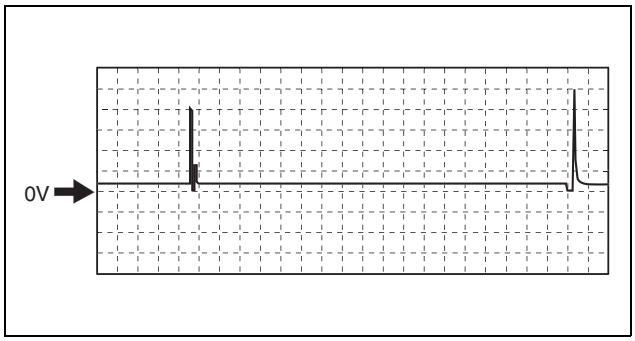

adejjw00007923

CONTROL SYSTEM [SKYACTIV-G 2.0]

Fuel injection control (+) signal
PCM terminals
- Fuel Injection No.1: 1DP(+)—body ground(–)
- Fuel Injection No.2: 1DX(+)—body ground(–)
- Fuel Injection No.3: 1EB(+)—body ground(–)
- Fuel Injection No.4: 1DT(+)—body ground(–)

Oscilloscope setting
- 10 V/DIV (Y), 5 ms/DIV (X), DC range

Vehicle condition
- Idle after warm up

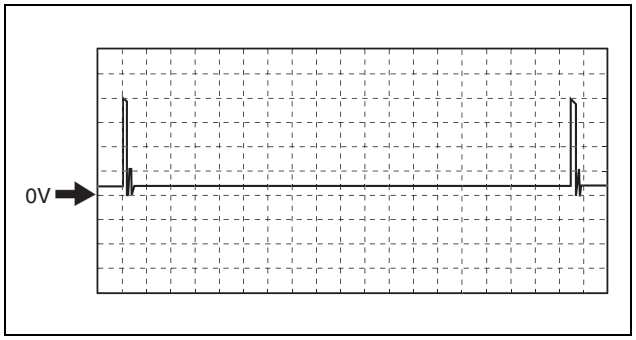

adejjw00007924

High pressure fuel pump control (+) signal
PCM terminals
- 1EE(+)—body ground(–)

Oscilloscope setting
- 10 V/DIV (Y), 5 ms/DIV (X), DC range

Vehicle condition
- Idle after warm up

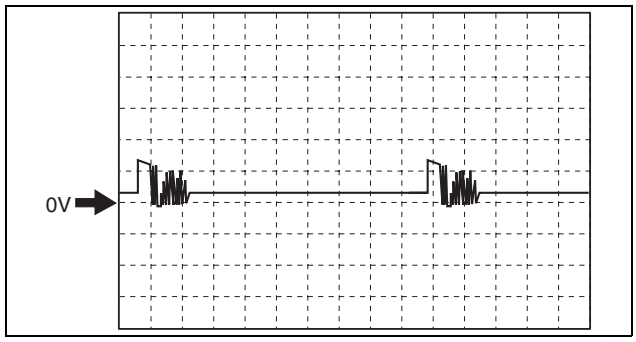

am3zzw0001279

High pressure fuel pump control (-) signal
PCM terminals
- 1EF(+)—body ground(–)

Oscilloscope setting
- 10 V/DIV (Y), 5 ms/DIV (X), DC range

Vehicle condition
- Idle after warm up

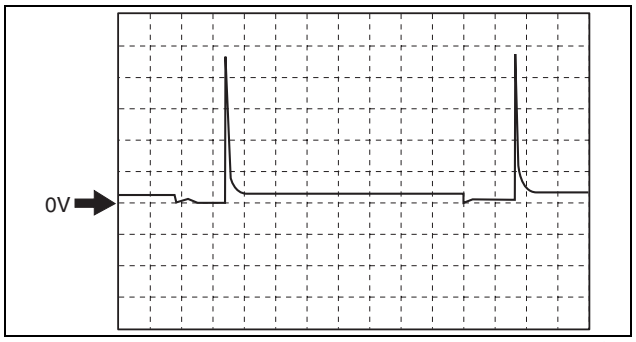

am3zzw0001279

HO2S heater control signal
PCM terminals
- 2C(+)—body ground(–)

Oscilloscope setting
- 5 V/DIV (Y), 50 ms/DIV (X), DC range

Vehicle condition
- Idle (immediately after starting the engine)

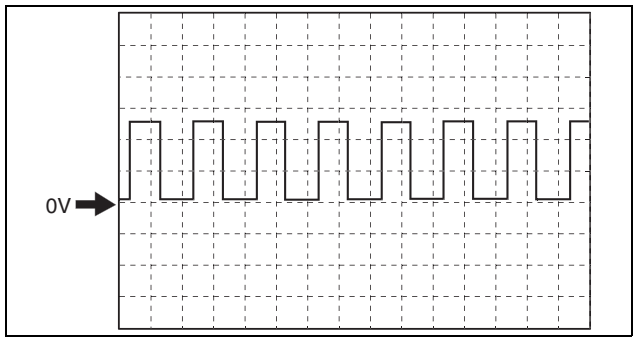

adejjw00007927

CONTROL SYSTEM [SKYACTIV-G 2.0]

Fuel pump control signal
PCM terminals
- 2AE(+)—body ground(–)

Oscilloscope setting
- 5 V/DIV (Y), 2 ms/DIV (X), DC range

Vehicle condition
- Idle after warm up

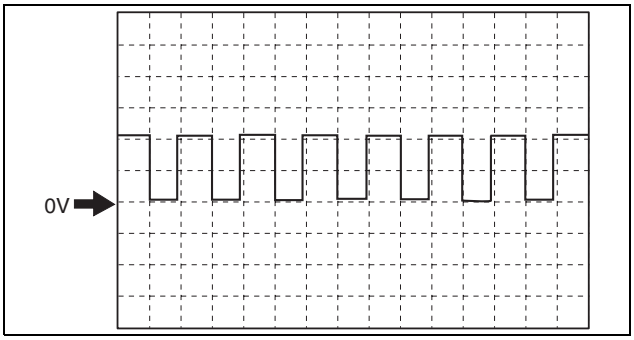

am3zzw0001279

Fuel pump control module (diagnostic) signal
PCM terminals
- 2AM(+)—body ground(–)

Oscilloscope setting
- 2 V/DIV (Y), 50 ms/DIV (X), DC range

Vehicle condition
- Idle after warm up

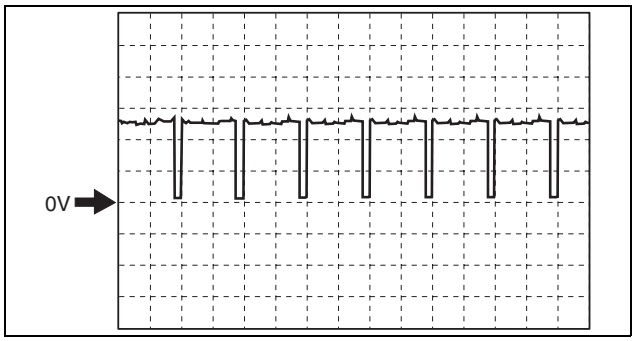

am3zzw0001280

Using The M-MDS

Note
- PIDs for the following parts are not available on this model. Go to the appropriate part inspection page.
  - — Intake CMP sensor and Exhaust CMP sensor (See 01-40-62 CAMSHAFT POSITION (CMP) SENSOR INSPECTION [SKYACTIV-G 2.0].)
  - — Main relay (See 09-21-29 RELAY INSPECTION.)

1. Connect the M-MDS to the DLC-2.
2. Switch the ignition ON (engine off).
3. Measure the PID value.
   - If PID value is not within the specification, follow the instructions in Action column.

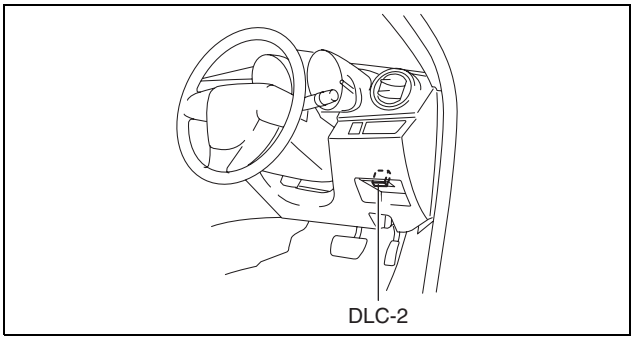

am3zzw0001267

Note
- The PID/DATA MONITOR function monitors the calculated value of the input/output signals in the PCM. Therefore, an output device malfunction is not directly indicated as a malfunction of the monitored value for the output device. If a monitored value of an output device is out of specification, inspect the monitored value of the input device related to the output control.
- The simulation items that are used in the ENGINE CONTROL SYSTEM OPERATION INSPECTION are as follows.
  - — ACCS, ALTF, ARPMDES, EVAPCP, FAN1, FAN2, FAN3, FP, INJ_1, INJ_2, INJ_3, INJ_4, OIL_P_SOL, Test, VT EX_DES

CONTROL SYSTEM [SKYACTIV-G 2.0]

Item (definition)	Unit/Condition	Condition/Specification (Reference)	Inspection item(s)
AAT*4 (Ambient air temperature)	°C, °F	• Displays the ambient air temperature	• IAT sensor No.1
ACCS*4 (A/C relay)	OFF/ON	• A/C relay is OFF: Off • A/C relay is ON: On	• A/C relay • The following PIDs — AC_PRES, APP1, APP2, TP1, TP2, ECT, RPM
AC_PRES*4 (Refrigerant pressure)	kPa, Bar, psi	• Displays the refrigerant pressure	• Refrigerant pressure sensor
	V	• Refrigerant pressure is 1.0 MPa {10 kgf/cm^2, 145 psi}: Approx. 1.58 V • Refrigerant pressure is 1.1 MPa {11 kgf/cm^2, 160 psi}: Approx. 1.75 V • Refrigerant pressure is 1.2 MPa {12 kgf/cm^2, 174 psi}: Approx. 1.88 V	
AC_REQ*4 (A/C request signal)	OFF/ON	• A/C switch OFF: Off • A/C switch ON: On	• A/C switch
ALTF (Generator field coil control duty value)	%	• Switch the ignition ON (engine off): 0% • Idle: Approx. 42% • Racing (Engine speed is 2,000 rpm): Approx. 29%	• Generator • The following PIDs — IAT, ECT, RPM, VPWR
ALTT V (Generator output voltage)	V	• Idle (no E/L): Approx. 14 V (This is an internal calculation value and differs from the terminal voltage.)	• Generator
AMB_TEMP*4 (Ambient air temperature)	°C, °F	• Displays the ambient air temperature	• Ambient temperature sensor
APP (Accelerator pedal position)	%	• Accelerator pedal released: Approx. 0% • Accelerator pedal depressed: Approx. 100%	• The following PIDs — APP1, APP2
APP1 (APP sensor No.1)	%	• Accelerator pedal released: Approx. 15% • Accelerator pedal depressed: Approx. 82%	• APP sensor No.1
	V	• Accelerator pedal released: Approx. 0.75 V • Accelerator pedal depressed: Approx. 4.1 V	
APP2 (APP sensor No.2)	%	• Accelerator pedal released: Approx. 7.45% • Accelerator pedal depressed: Approx. 41%	• APP sensor No.2
	V	• Accelerator pedal released: Approx. 0.38 V • Accelerator pedal depressed: Approx. 2.05 V	
ARPMDES (Target engine speed)	RPM	• Displays the target engine speed	• The following PIDs — APP1, APP2, TP1, TP2, MAF, IAT, IAT2, MAP, RPM, ECT, FUEL_PRES, BARO, BOO, BPA, ALTT V, AC_REQ
BARO (Barometric pressure)	kPa, Bar, psi	• Displays the BARO	• BARO sensor
	V	• Switch the ignition ON (at sea level): Approx. 4.08 V	
BATT_CUR (Current sensor)	A	• Displays the battery charge/discharge current value	• Current sensor
BATT_DAY (Vehicle battery - days in service)	—	• Displays the vehicle battery days in service	• Current sensor
BATT_RES (Battery inferred internal resistance)	—	• Displays the battery inferred internal resistance	• Current sensor
BATT_SOC (Battery estimated state of charge)	%	• Displays the battery estimated state of charge	• Current sensor

CONTROL SYSTEM [SKYACTIV-G 2.0]

Item (definition)	Unit/Condition	Condition/Specification (Reference)	Inspection item(s)
BATT_TEMP (Battery fluid temperature sensor)	°C, °F	• Displays the battery fluid temperature	• Current sensor
BATT_V (Battery voltage)	V	• Displays the battery voltage	• Battery
BBP*3 (Power brake unit vacuum sensor)	kPa, psi, Bar	• Displays the power brake unit vacuum	• Power brake unit vacuum sensor
	V	• Power brake unit vacuum is 7.54 kPa {0.0769 kgf/cm^2, 1.09 psi}: approx. 0.29 V • Power brake unit vacuum is 96.7 kPa {0.986 kgf/cm^2, 14.0 psi}: approx. 3.81 V	
BFP (Brake fluid pressure)	kPa, psi, Bar	• Displays the brake fluid pressure	• DSC HU/CM
BOO (Brake switch)	OFF/ON	• Brake pedal released: Off • Brake pedal depressed: On	• Brake switch (No.1 signal)
BPA (Brake pressure applied switch)	OFF/ON	• Brake pedal released: Off • Brake pedal depressed: On	• Brake switch (No.2 signal)
CATT11_DSD (Estimated catalytic converter temperature)	°C, °F	• Displays the estimated catalytic converter temperature	• Perform applicable DTC troubleshooting.
CHRGLP (Charging system warning light)	OFF/ON	• Charging system warning light not illuminates: Off • Charging system warning light illuminates: On	• Charging system warning light • Perform applicable DTC troubleshooting.
COLP (Refrigerant pressure (middle))	OFF/ON	• Refrigerant pressure is less than the specification.: Off • Refrigerant pressure is more than the specification.: On	• Refrigerant pressure sensor
CLU_CUT_SW*1 (Starter interlock)	OFF/ON	• Starter interlock switch ON: On • Starter interlock switch OFF: Off	• Starter interlock switch
CPP*1 (Clutch pedal position)	OFF/ON	• Clutch pedal depressed: On • Clutch pedal released: Off	• CPP switch
CPP/PNP*1 (Shift lever position)	OFF/ON	• Neutral: On • Other than neutral: Off	• Neutral switch No.1
ECT (Engine coolant temperature)	°C, °F	• Displays the ECT	• ECT sensor
	V	• ECT is 20 °C {68 °F}: Approx. 3.10 V • ECT is 40 °C {104 °F}: Approx. 2.16 V • ECT is 60 °C {140 °F}: Approx. 1.40 V • ECT is 80 °C {176 °F}: Approx. 0.87 V • ECT is 100 °C {212 °F}: Approx. 0.54 V	
EQ_RAT11 (Equivalence ratio (lambda))	—	• idle (after warm up): Approx. 1	• A/F sensor
EQ_RAT11_DSD (Desired equivalence ratio (lambda))	—	• Indicate the target lambda (Excess air factor = supplied air amount / theoretical air/ fuel ratio)	• A/F sensor
ETC_ACT (Electric throttle control actual)	°	**Switch the ignition ON (engine off)** • Accelerator pedal released: Approx. 12.89 ° • Accelerator pedal depressed: Approx. 86.03 ° **Idle (after warm up)** • Accelerator pedal released: Approx. 3.2 °	• Throttle valve actuator • The following PIDs — APP1, APP2, TP1, TP2, MAF, IAT, IAT2, MAP, RPM, ECT, FUEL_PRES, BARO, BOO, BPA, ALTT V, AC_REQ

CONTROL SYSTEM [SKYACTIV-G 2.0]

Item (definition)	Unit/Condition	Condition/Specification (Reference)	Inspection item(s)
ETC_DSD (Electric throttle control desired)	%	• Displays the target TP angle (percent)	• Throttle valve actuator • The following PIDs — APP1, APP2, TP1, TP2, MAF, IAT, IAT2, MAP, RPM, ECT, FUEL_PRES, BARO, BOO, BPA, ALTT V, AC_REQ
	°	• Displays the target TP angle	
EVAPCP (Purge solenoid valve duty value)	%	• idle (after warm up): Approx. 0% • Racing (Engine speed 2,000 rpm): 4.3—35% • Racing (Engine speed 4,000 rpm): Approx. 66%	• Purge solenoid valve • The following PIDs — APP1, APP2, MAF, IAT, IAT2, MAP, RPM, ECT, BARO, O2S11, VPWR
FAN1(Cooling fan relay No.1)	OFF/ON	• Cooling fan relay No.1 not operating: OFF • Cooling fan relay No.1 operating: ON	• Cooling fan relay No.1 • The following PIDs — APP1, APP2, MAF, IAT, IAT2, RPM, ECT, BARO, Test, AC_PRES, COLP
FAN2(Cooling fan relay No.2)	OFF/ON	• Cooling fan relay No.2 not operating: OFF • Cooling fan relay No.2 operating: ON	• Cooling fan relay No.2 • The following PIDs — APP1, APP2, MAF, IAT, IAT2, RPM, ECT, BARO, Test, AC_PRES, COLP
FAN3(Cooling fan relay No.3)	OFF/ON	• Cooling fan relay No.3 not operating: OFF • Cooling fan relay No.3 operating: ON	• Cooling fan relay No.3 • The following PIDs — APP1, APP2, MAF, IAT, IAT2, RPM, ECT, BARO, Test, AC_PRES, COLP
FIA (Fuel injection amount)	%	• Displays the fuel injection amount	• Fuel injector • Fuel injector relay
FLI (Fuel level)	%	• Fuel gauge level F: Approx. 100% • Fuel gauge level E: Approx. 0%	• Fuel gauge sender unit • Perform applicable DTC troubleshooting.
FP (Fuel pump relay)	OFF/ON	• Switch the ignition ON (engine off): Off • Cranking: On • idle (after warm up): On	• Fuel pump relay • The following PIDs — FUEL_PRES, RPM, VPWR
FP_DUTY (Fuel pump control module)	%	• Switch the ignition ON (engine off): Approx. 55.74% • Cranking: Approx. 95% • Idle (after warm up): Approx. 55.74%	• Fuel pump control module • The following PIDs — FUEL_PRES, RPM, VPWR
FP_Hi_PRES (High pressure fuel pump)	OFF/ON	• When spill valve control solenoid valve is not energization: Off • When spill valve control solenoid valve is energization: On	• High pressure fuel pump • The following PIDs — MAF, ECT, FUEL_PRES, RPM, VPWR
FUELPW (Fuel injector duration)	sec	• idle (after warm up): Approx. 1.4 ms • Racing (engine speed is 2,000 rpm): Approx. 1.1 ms • Racing (engine speed is 4,000 rpm): Approx. 1.0 ms	• Fuel injector • The following PIDs — APP1, APP2, TP1, TP2, MAF, IAT, IAT2, MAP, RPM, ECT, FUEL_PRES, BARO, O2S11, O2S12
FUELSYS (Fuel system status)	OL/CL/ OL_Drive/ OL_Fault/ CL_Fault	• idle (after warm up): OL or CL • Racing (engine speed is 2,000 rpm): CL • Deceleration fuel cut (accelerator pedal released from engine speed of 4,000 rpm or more): OL-Drive	• Fuel injector • The following PIDs — APP1, APP2, TP1, TP2, MAF, IAT, IAT2, MAP, RPM, ECT, FUEL_PRES, BARO, O2S11, O2S12
FUEL_PRES (Fuel pressure sensor)	kPa, Bar, psi	• Displays the fuel pressure	• Fuel pressure sensor
	V	• Fuel pressure is 3.0 MPa {31 kgf/cm^2, 435 psi}: Approx. 0.92 V • Fuel pressure is 4.8 MPa {49 kgf/cm^2, 696 psi}: Approx. 1.17 V	
FUEL_P_DSD (Fuel pressure desired)	kPa, Bar, psi	• Displays the target fuel pressure.	• Fuel pressure sensor

CONTROL SYSTEM [SKYACTIV-G 2.0]

Item (definition)	Unit/Condition	Condition/Specification (Reference)	Inspection item(s)
GEAR*2 (Gear commanded)	1st, 2nd, 3rd, 4th, 5th, 6th, 7th, Park, Neutral, Drive, Reverse	• Selector lever at P position: Park • Selector lever at R position: Reverse • Selector lever at N position: Neutral • Selector lever in 1GR at D position: 1st	• Shift solenoid No.1 • Shift solenoid No.2 • Shift solenoid No.3 • Shift solenoid No.4 • Transaxle range sensor
HTR11 (A/F sensor heater)	OFF/ON	• Switch the ignition ON (engine off): Off • Idle (after warm up): On	• A/F sensor heater • Inspect following PIDs — MAF, ECT, RPM
	%	• Switch the ignition ON (engine off): 0% • Idle (after warm up): Approx. 42%	
HTR12 (HO2S heater control)	OFF/ON	• Switch the ignition ON (engine off): Off • Idle (after warm up): On	• HO2S heater • The following PIDs — MAF, ECT, RPM
	%	• Switch the ignition ON (engine off): 0% • Idle (after warm up): Approx. 40%	
IAT (Intake air temperature No.1)	°C, °F	• Displays the IAT (No.1)	• IAT sensor No.1
	V	• IAT is 20 °C {68 °F}: Approx. 2.70 V • IAT is 40 °C {104 °F}: Approx. 1.80 V • IAT is 60 °C {140 °F}: Approx. 1.20 V	
IAT2 (Intake air temperature No.2)	°C, °F	• Displays the IAT (No.2)	• IAT sensor No.2
	V	• IAT2 is 20 °C {68 °F}: Approx. 3.57 V • IAT2 is 40 °C {104 °F}: Approx. 2.70 V • IAT2 is 60 °C {140 °F}: Approx. 1.87 V	
ISC_FBK (ISC feedback value)	%	• Displays the ISC feedback value	• PCM
ISC_FBK_LRN (ISC feedback learning value)	%	• Displays the ISC feedback learning value	• PCM
I-Stop_OFF*3 (i-stop OFF switch)	OFF/ON	• i-stop OFF switch OFF: OFF • i-stop OFF switch ON: ON	• i-stop OFF switch
I-Stop_TRD*3 (i-stop transmission D position selected status)	OFF/ON	• D range:On • Except above: Off	• i-stop related system
I-Stop_VSP*3 (i-stop vehicle speed history flag)	OFF/ON	• Vehicle speed in which engine stop condition is met via i-stop control is detected: On • Except above: Off	• i-stop related system
I-Stop_VST*3 (i-stop vehicle stop flag)	OFF/ON	• Vehicle stop predicted: On • Except above: Off	• i-stop related system
IVS (CTP condition)	Idle/Off Idle	• Idle: Idle • Racing: Off Idle	• Perform applicable DTC troubleshooting.
KNOCKR (Knocking retard)	°	• Switch the ignition ON (engine off): 0 ° • idle (after warm up): 0 °	• KS
LOAD (Engine load)	%	• idle (after warm up): Approx. 17.64% • Racing (engine speed is 2,000 rpm): Approx. 14.51% • Racing (engine speed is 4,000 rpm): Approx. 21.17%	• The following PIDs — MAP, IAT, IAT2, MAF, RPM
LONGFT1 (Long term fuel trim)	%	• idle (after warm up): Approx. -2.34% • Racing (engine speed is 2,000 rpm): Approx. -0.78% • Racing (engine speed is 4,000 rpm): Approx. -0.78%	• The following PIDs — APP1, APP2, TP1, TP2, MAF, IAT, IAT2, MAP, RPM, ECT, FUEL_PRES, BARO, O2S11, O2S12
LONGFT12 (Long term fuel trim (HO2S))	%	• idle (after warm up): Approx. 0%	• The following PIDs — APP1, APP2, TP1, TP2, MAF, IAT, IAT2, MAP, RPM, ECT, FUEL_PRES, BARO, O2S11, O2S12
LOW_OIL (Engine Oil Level Status)	NO/YES	• Switch the ignition ON (engine off): YES • idle (after warm up): YES • Racing (engine speed is 2,000 rpm): NO	• Oil pressure switch

CONTROL SYSTEM [SKYACTIV-G 2.0]

Item (definition)	Unit/Condition	Condition/Specification (Reference)	Inspection item(s)
MAF (Mass airflow)	g/sec	• Displays the MAF	• MAF sensor
	V	• Switch the ignition ON (engine off) (MAF: 0.59 g/s {0.078 lb/min}): Approx. 0.72 V • Idle (after warm up) (MAF: 2.17 g/s {0.287 lb/min}): Approx. 0.86 V • Racing (engine speed is 2,000 rpm) (MAF: 4.73 g/s {0.626 lb/min}): Approx. 1.07 V	
MAP (Manifold absolute pressure)	kPa, Bar, psi	• Displays the MAP	• MAP sensor
	V	• Switch the ignition ON (engine off) (MAP:101 kPa {1.03 kgf/cm^2, 14.6 psi}): Approx. 4.07 V • Idle (after warm up) (MAP: 33 kPa {0.34 kgf/cm^2, 4.8 psi}): Approx. 1.34 V • Racing (engine speed is 2,000 rpm) (MAP: 26 kPa {0.27 kgf/cm^2, 3.8 psi}): Approx. 1.05 V	
MF_CAT1 (Number of misfires corresponding to possible catalytic converter damage (No.1 cylinder))	—	• Displays the number of misfires corresponding to possible catalytic converter damage (No.1 cylinder).	• Perform applicable DTC troubleshooting.
MF_CAT_2 (Number of misfires corresponding to possible catalytic converter damage (No.2 cylinder))	—	• Displays the number of misfires corresponding to possible catalytic converter damage (No.2 cylinder).	• Perform applicable DTC troubleshooting.
MF_CAT_3 (Number of misfires corresponding to possible catalytic converter damage (No.3 cylinder))	—	• Displays the number of misfires corresponding to possible catalytic converter damage (No.3 cylinder).	• Perform applicable DTC troubleshooting.
MF_CAT_4 (Number of misfires corresponding to possible catalytic converter damage (No.4 cylinder))	—	• Displays the number of misfires corresponding to possible catalytic converter damage (No.4 cylinder).	• Perform applicable DTC troubleshooting.
MF_CAT_FCC (Number of misfire determinations (for catalytic converter))	—	• Displays the number of misfire determinations (for catalytic converter).	• Perform applicable DTC troubleshooting.
MF_CAT_TTL (Number of misfires corresponding to possible catalytic converter damage (total))	—	• Displays the number of misfires corresponding to possible catalytic converter damage (total).	• Perform applicable DTC troubleshooting.
MF_EMI1 (Number of misfires possibly affecting emission (No.1 cylinder))	—	• Displays the number of misfires possibly affecting emission (No.1 cylinder).	• Perform applicable DTC troubleshooting.
MF_EMI_2 (Number of misfires possibly affecting emission (No.2 cylinder))	—	• Displays the number of misfires possibly affecting emission (No.2 cylinder).	• Perform applicable DTC troubleshooting.

CONTROL SYSTEM [SKYACTIV-G 2.0]

Item (definition)	Unit/Condition	Condition/Specification (Reference)	Inspection item(s)
MF_EMI_3 (Number of misfires possibly affecting emission (No.3 cylinder))	—	• Displays the number of misfires possibly affecting emission (No.3 cylinder).	• Perform applicable DTC troubleshooting.
MF_EMI_4 (Number of misfires possibly affecting emission (No.4 cylinder))	—	• Displays the number of misfires possibly affecting emission (No.4 cylinder).	• Perform applicable DTC troubleshooting.
MF_EMI_FCC (Number of misfire determinations (for emission))	—	• Displays the number of misfire determinations (for emission).	• Perform applicable DTC troubleshooting.
MF_EMI_TTL (Number of misfires possibly affecting emission (total))	—	• Displays the number of misfires possibly affecting emission (total).	• Perform applicable DTC troubleshooting.
M_GEAR*1 (Manual Gear Position)	OFF/ON	• Displays the manual gear position	• CPP switch • Neutral switch No.1
MIL (Malfunction indicator lamp)	OFF/ON	• MIL not illuminate: Off • MIL illuminate: ON	• MIL • Perform applicable DTC troubleshooting.
MIL_DIS (Travelled distance since the MIL illuminated)	km, ft, mi	• Displays the travelled distance since the MIL illuminated	• Perform applicable DTC troubleshooting.
NEUTRAL_SW1*1 (Neutral switch No.1)	OFF/ON	• Neutral: On • Other than neutral: Off	• Neutral switch No.1
NEUTRAL_SW2*5 (Neutral switch No.2)	OFF/ON	• Neutral: On • Other than neutral: Off	• Neutral switch No.2
O2S11 (A/F sensor)	A	• Idle (after warm up): Approx. -39 μA • Deceleration fuel cut (accelerator pedal released from engine speed of 4,000 rpm or more): Approx. 3.84 mA	• A/F sensor
O2S12 (HO2S)	V	• Idle (after warm up): 0—1.0 V • Deceleration fuel cut (accelerator pedal released from engine speed of 4,000 rpm or more): Approx. 0 V	• HO2S
OIL_P_SOL (Engine oil solenoid valve)	OFF/ON	• ECT below 98 °C {208 °F} and engine speed below 4,000 rpm: On • ECT above 98 °C {208 °F} or engine speed above 4,000 rpm: Off	• Engine oil solenoid valve • The following PIDs — MAF, MAP, RPM, ECT
OIL_TEMP (Estimated engine oil temperature)	°C, °F	• Displays the estimated engine oil temperature	• The following PIDs — ECT
PN_SW (Parking/neutral)	Open/Closed	• Selector lever at P position or N position: Closed • Except above: Open	• Transaxle range sensor
RO2FT1 (HO2S fuel trim)	%	• Idle (after warm up): Approx. 0.5% • Deceleration fuel cut (accelerator pedal released from engine speed of 4,000 rpm or more): Approx. 3.99%	• Perform applicable DTC troubleshooting.
RPM (Engine speed)	RPM	• Displays the engine speed	• CKP sensor
SHRTFT1 (Short term fuel trim)	%	• idle (after warm up): Approx. 1.56% • Racing (engine speed is 2,000 rpm): Approx. -3.12% • Racing (engine speed is 4,000 rpm): Approx. -8.59%	• Perform applicable DTC troubleshooting.

CONTROL SYSTEM [SKYACTIV-G 2.0]

Item (definition)	Unit/Condition	Condition/Specification (Reference)	Inspection item(s)
SHRTFT12 (Short term fuel trim (HO2S))	%	• idle (after warm up): Approx. 0%	• Perform applicable DTC troubleshooting.
SPARKADV (Ignition timing)	°	• Displays the ignition timing	• Ignition coil • The following PIDs — APP1, APP2, TP1, TP2, MAF, IAT, IAT2, ECT, RPM, KNOCKR, VPWR, ALTT V
Test (Test mode)	OFF/ON	• Test mode OFF: Off • Test mode ON: On	—
TP REL (Relative throttle position)	%	• Accelerator pedal released: Approx. 12% • Accelerator pedal depressed: Approx. 82%	• The following PIDs — TP1, TP2
TP1 (TP sensor No.1)	V	• Accelerator pedal released: Approx. 1.11 V • Accelerator pedal depressed: Approx. 4.59 V	• TP sensor No.1
	%	• Accelerator pedal released: Approx. 22% • Accelerator pedal depressed: Approx. 92%	
TP2 (TP sensor No.2)	V	• Accelerator pedal released: Approx. 3.92 V • Accelerator pedal depressed: Approx. 0.41 V	• TP sensor No.2
	%	• Accelerator pedal released: Approx. 22% • Accelerator pedal depressed: Approx. 82%	
TPCT (TP sensor No.1 voltage at CTP)	V	• Switch the ignition ON: Approx. 0.5 V	• TP sensor No.1
TPCT2 (TP sensor No.2 voltage at CTP)	V	• Switch the ignition ON: Approx. 4.5 V	• TP sensor No.2
VPWR (Battery positive voltage)	V	• Displays the battery voltage	• Battery
VSS (Vehicle speed)	KPH, MPH	• Displays the vehicle speed	• DSC HU/CM
VT_EX_ACT (Actual exhaust valve timing)	°	• Displays the actual exhaust valve timing	• OCV • The following PIDs — APP1, APP2, MAF, RPM, ECT, VPWR
VT_EX_DES (Desired exhaust valve timing)	°	• Displays the desired exhaust valve timing	• OCV • The following PIDs — APP1, APP2, MAF, RPM, ECT, VPWR
VT_EX_DUTY (OCV control)	%	• idle (after warm up): Approx. 0% • Racing (engine speed is 2,000 rpm): Approx. 46%	• OCV • The following PIDs — APP1, APP2, MAF, RPM, ECT, VPWR
VT_IN_ACT (Actual intake valve timing)	°	• Displays the actual intake valve timing	• Electric variable valve timing motor/driver • The following PIDs — MAF, IAT, IAT2, MAP, RPM, ECT, BARO
VT_IN_DES (Desired intake valve timing)	°	• Displays the desired intake valve timing	• Electric variable valve timing motor/driver • The following PIDs — MAF, IAT, IAT2, MAP, RPM, ECT, BARO

*1 : MTX
*2 : ATX
*3 : Vehicles with i-stop system
*4 : Vehicles with air conditioner
*5 : Vehicles with i-stop system (MTX)

CONTROL SYSTEM [SKYACTIV-G 2.0]

PCM CONFIGURATION (USING READ/WRITE FUNCTION) [SKYACTIV-G 2.0]

id0140f4816500

Note
- When performing configuration, it is necessary to read the vehicle specification information from the PCM before replacing it. Connect the M-MDS to the vehicle and perform vehicle identification before removing the PCM. The vehicle specification information is temporarily stored in the M-MDS.

1. Connect the M-MDS to the DLC-2.
2. After the vehicle is identified, select the following items from the initialization screen of the M-MDS.
   1. Select “Module Programming”.
3. Then, select items from the screen menu in the following order.
   1. Select “Programmable Module Installation”.
   2. Select “PCM”.
4. Perform the configuration according to the directions on the screen.

Caution
- **When the configuration is performed, CAN communication between the PCM and control module connected to the CAN line is cut temporarily, and communication error DTCs may be detected. After performing the configuration, verify the DTCs for the control module connected to the CAN line and clear it if any DTC is detected.**

5. Verify the DTCs for all of the control modules connected to the CAN line.
   - If any DTC is stored, clear it.
   - If the DTC is cleared, finish the procedure because the configuration has been completed normally.
   - If the DTC remains, perform troubleshooting according to the DTC.

PCM CONFIGURATION (USING AS-BUILT DATA) [SKYACTIV-G 2.0]

id0140f4816600

Note
- If the configuration is performed using As-Built data, the set value of the personalization function is reset to the initial value (condition when shipped from factory). Verify the set value with the customer and perform the personalization function setting after performing the configuration using As-Built data.

1. Connect the M-MDS to the DLC-2.
2. After the vehicle is identified, select the following items from the initialization screen of the M-MDS.
   1. Select “Module Programming”.
3. Then, select items from the screen menu in the following order.
   1. Select “As-Built”.
   2. Select “PCM”.
4. Perform the configuration according to the directions on the screen.

Caution
- **When the configuration is performed, CAN communication between the PCM and control module connected to the CAN line is cut temporarily, and communication error DTCs may be detected. After performing the configuration, verify the DTCs for the control module connected to the CAN line and clear it if any DTC is detected.**

5. Verify the DTCs for all of the control modules connected to the CAN line.
   - If any DTC is stored, clear it.
   - If the DTC is cleared, finish the procedure because the configuration has been completed normally.
   - If the DTC remains, perform troubleshooting according to the DTC.

CONTROL SYSTEM [SKYACTIV-G 2.0]

CLUTCH PEDAL POSITION (CPP) SWITCH INSPECTION [SKYACTIV-G 2.0]

id0140f4801600

Continuity Inspection

1. Verify that the CPP switch is installed properly. (See 05-10A-13 CLUTCH PEDAL POSITION SWITCH REMOVAL/INSTALLATION [C66M-R, C66MX-R].)
2. Disconnect the negative battery cable. (See 01-17A-11 NEGATIVE BATTERY CABLE DISCONNECTION/CONNECTION [SKYACTIV-G 2.0].) (See 01-17A-13 NEGATIVE BATTERY CABLE DISCONNECTION/CONNECTION [SKYACTIV-G 2.0 (WITHOUT i-stop)].)
3. Disconnect the CPP switch connector.
4. Verify that the continuity between CPP switch terminals A and B when the clutch pedal is depressed and when it is released is according to the following table:
   - If not as verified, replace the CPP switch. (See 05-10A-13 CLUTCH PEDAL POSITION SWITCH REMOVAL/INSTALLATION [C66M-R, C66MX-R].)

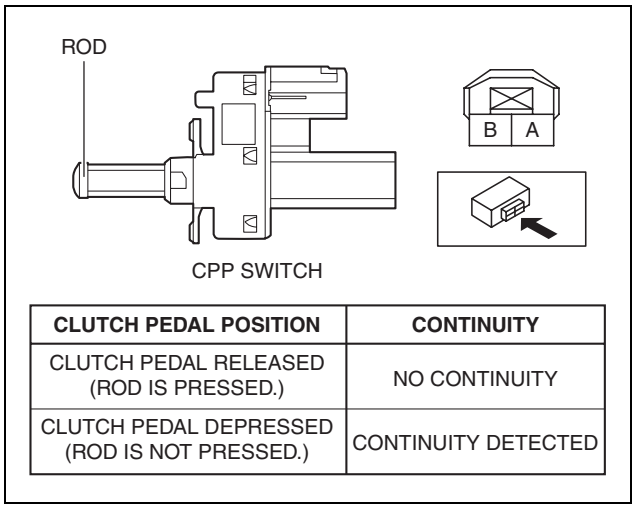

CLUTCH PEDAL POSITION	CONTINUITY
CLUTCH PEDAL RELEASED (ROD IS PRESSED.)	NO CONTINUITY
CLUTCH PEDAL DEPRESSED (ROD IS NOT PRESSED.)	CONTINUITY DETECTED

am3uuw0000874

NEUTRAL SWITCH INSPECTION [SKYACTIV-G 2.0]

id0140f4800800

Neutral switch No.1

Continuity Inspection

1. Disconnect the negative battery cable. (See 01-17A-11 NEGATIVE BATTERY CABLE DISCONNECTION/CONNECTION [SKYACTIV-G 2.0].) (See 01-17A-13 NEGATIVE BATTERY CABLE DISCONNECTION/CONNECTION [SKYACTIV-G 2.0 (WITHOUT i-stop)].)
2. Remove the neutral switch. (See 05-15A-2 NEUTRAL SWITCH REMOVAL/INSTALLATION [C66M-R, C66MX-R].)
3. Inspect for continuity between neutral switch No.1 terminal A and B.
   - If not as specified, replace the neutral switch No.1. (See 05-15A-2 NEUTRAL SWITCH REMOVAL/INSTALLATION [C66M-R, C66MX-R].)

Specification

Measured condition	Continuity
Rod pushed	Continuity detected
Rod not pushed	No continuity

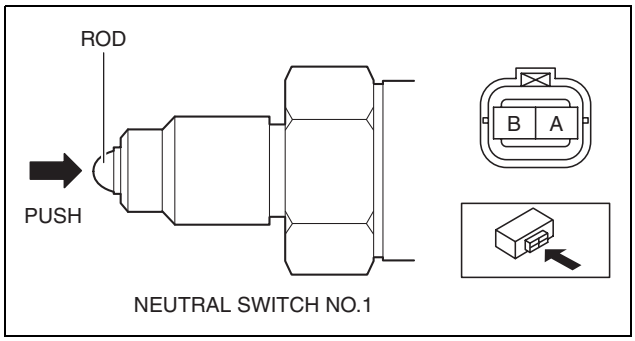

ac5wzw0000027

CONTROL SYSTEM [SKYACTIV-G 2.0]

Neutral switch No.2
Continuity Inspection

1. Disconnect the negative battery cable. (See 01-17A-11 NEGATIVE BATTERY CABLE DISCONNECTION/ CONNECTION [SKYACTIV-G 2.0].)
2. Remove the neutral switch No.2. (See 05-15A-2 NEUTRAL SWITCH REMOVAL/INSTALLATION [C66M-R, C66MX-R].)
3. Inspect for continuity between neutral switch No.2 terminal B and C.
   - If not as specified, replace the neutral switch No.2. (See 05-15A-2 NEUTRAL SWITCH REMOVAL/INSTALLATION [C66M-R, C66MX-R].)

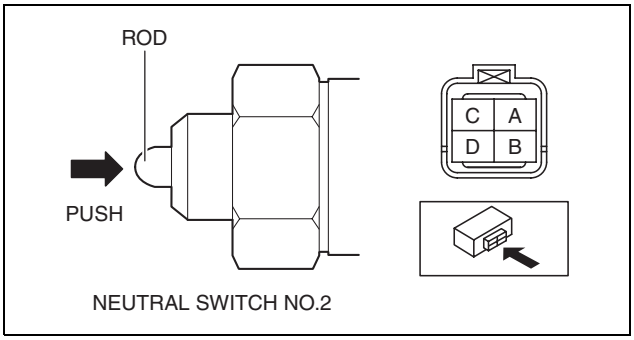

ac5wzw0000035

Specification

Measured condition	Continuity
Rod pushed	Continuity detected
Rod not pushed	No continuity

ENGINE COOLANT TEMPERATURE (ECT) SENSOR REMOVAL/INSTALLATION [SKYACTIV-G 2.0]

id0140f4801900

Warning

- **When the engine is hot, it can badly burn. Turn off the engine and wait until it is cool before removing the ECT sensor.**

1. Disconnect the negative battery cable. (See 01-17A-11 NEGATIVE BATTERY CABLE DISCONNECTION/ CONNECTION [SKYACTIV-G 2.0].) (See 01-17A-13 NEGATIVE BATTERY CABLE DISCONNECTION/ CONNECTION [SKYACTIV-G 2.0 (WITHOUT i-stop)].)
2. Remove the plug hole plate. (See 01-10A-6 PLUG HOLE PLATE REMOVAL/INSTALLATION [SKYACTIV-G 2.0].)
3. Drain the engine coolant. (See 01-12A-4 ENGINE COOLANT REPLACEMENT [SKYACTIV-G 2.0].)
4. Pull out the evaporative hose No.1 from the catch tank and set it aside.

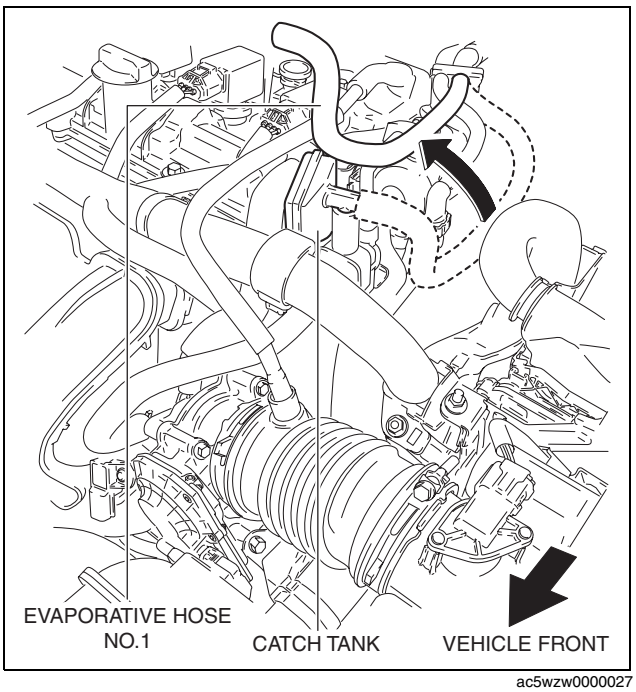

ac5wzw0000027

CONTROL SYSTEM [SKYACTIV-G 2.0]

5. Pull out the ventilation hose from the air hose and set it aside.

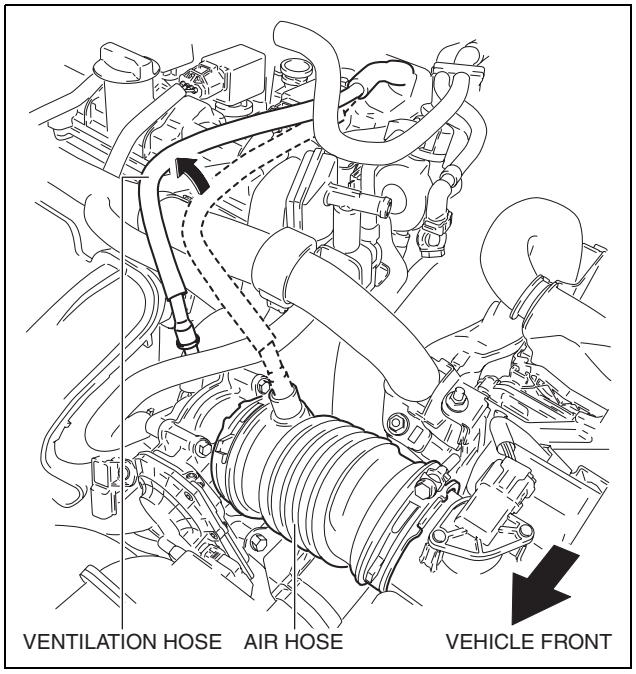

ac5wzw0000027

6. Remove the clip and loosen the wiring harness.

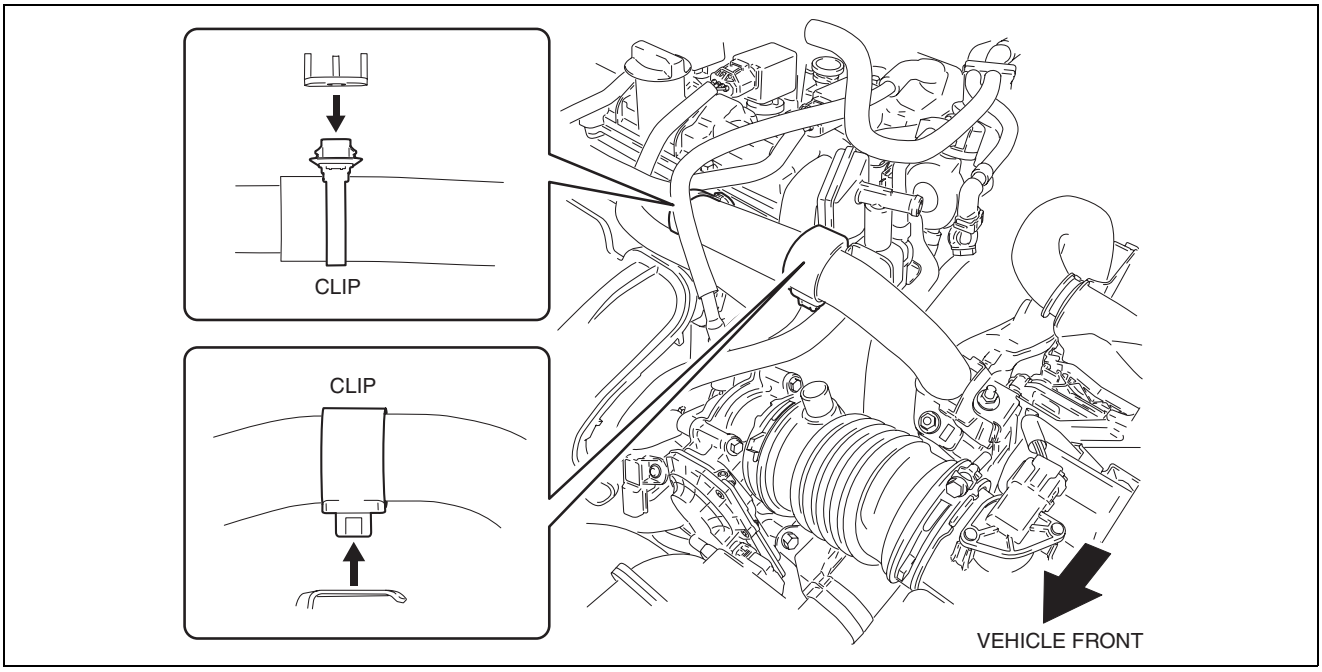

ac5wzw0000027

7. Disconnect the ECT sensor connector.

8. Remove the ECT sensor using the **SST**.
9. Install in the reverse order of removal.
10. Refill the engine coolant. (See 01-12A-4 ENGINE COOLANT REPLACEMENT [SKYACTIV-G 2.0].)

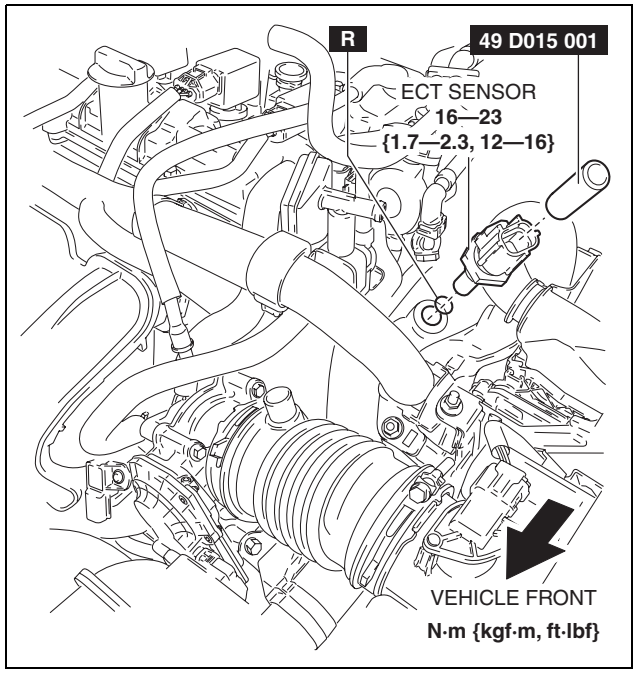

ac5wzw0000397

ENGINE COOLANT TEMPERATURE (ECT) SENSOR INSPECTION [SKYACTIV-G 2.0]

id0140f4802000

Resistance Inspection

Warning

- **When the engine is hot, it can badly burn. Turn off the engine and wait until it is cool before removing the ECT sensor.**

1. Disconnect the negative battery cable. (See 01-17A-11 NEGATIVE BATTERY CABLE DISCONNECTION/CONNECTION [SKYACTIV-G 2.0].) (See 01-17A-13 NEGATIVE BATTERY CABLE DISCONNECTION/CONNECTION [SKYACTIV-G 2.0 (WITHOUT i-stop)].)
2. Remove the plug hole plate. (See 01-10A-6 PLUG HOLE PLATE REMOVAL/INSTALLATION [SKYACTIV-G 2.0].)
3. Drain the engine coolant. (See 01-12A-4 ENGINE COOLANT REPLACEMENT [SKYACTIV-G 2.0].)
4. Pull out the evaporative hose No.1 from the catch tank and set it aside. (See 01-40-41 ENGINE COOLANT TEMPERATURE (ECT) SENSOR REMOVAL/INSTALLATION [SKYACTIV-G 2.0].)
5. Pull out the ventilation hose from the air hose and set it aside. (See 01-40-41 ENGINE COOLANT TEMPERATURE (ECT) SENSOR REMOVAL/INSTALLATION [SKYACTIV-G 2.0].)
6. Remove the clip and loosen the wiring harness. (See 01-40-41 ENGINE COOLANT TEMPERATURE (ECT) SENSOR REMOVAL/INSTALLATION [SKYACTIV-G 2.0].)
7. Disconnect the ECT sensor connector.
8. Remove the ECT sensor. (See 01-40-41 ENGINE COOLANT TEMPERATURE (ECT) SENSOR REMOVAL/INSTALLATION [SKYACTIV-G 2.0].)

CONTROL SYSTEM [SKYACTIV-G 2.0]

9. Place the ECT sensor in water with a thermometer, and heat the water gradually.

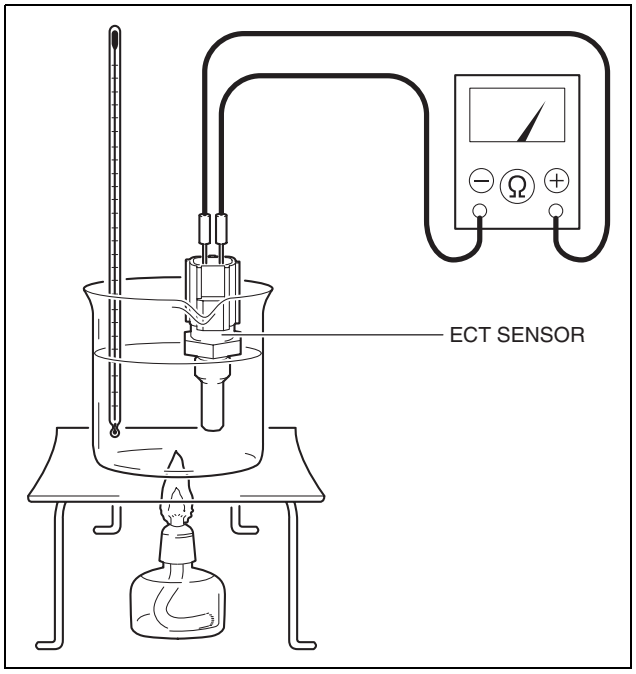

am3zzw0001256

10. Measure the resistance between ECT sensor terminals A and B.
    - If not as specified, replace the ECT sensor. (See 01-40-41 ENGINE COOLANT TEMPERATURE (ECT) SENSOR REMOVAL/ INSTALLATION [SKYACTIV-G 2.0].)

Specification

ECT (°C {°F})	Resistance (Kilohms)
20 {68}	Approx. 2.45
80 {176}	Approx. 0.318

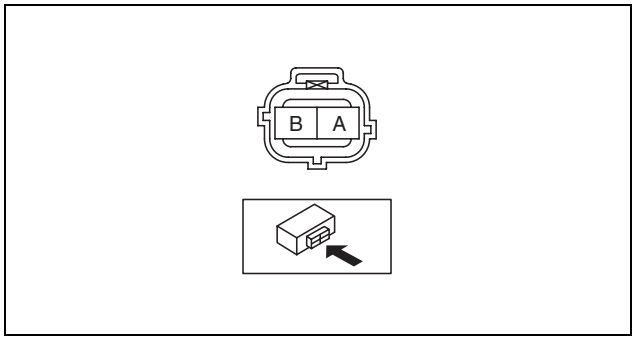

am3zzw0001256

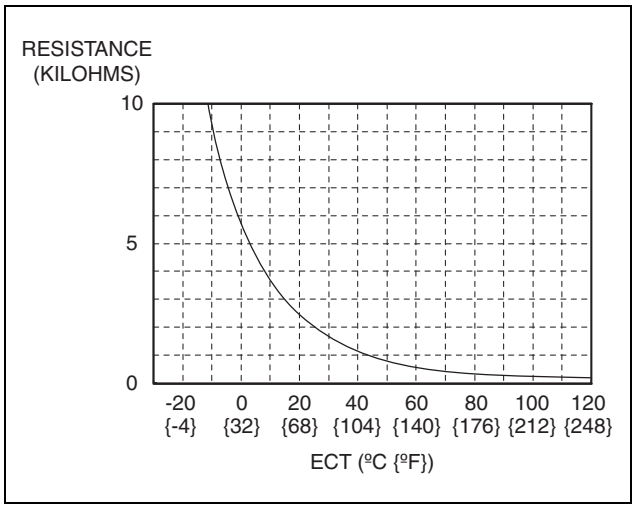

am3zzw0001256

CONTROL SYSTEM [SKYACTIV-G 2.0]

MASS AIR FLOW (MAF) SENSOR/INTAKE AIR TEMPERATURE (IAT) SENSOR NO.1 REMOVAL/INSTALLATION [SKYACTIV-G 2.0]

id0140f4900300

Note
- Because the IAT sensor No.1 is integrated in the MAF sensor, replacing the IAT sensor No.1 includes replacement of the MAF sensor/IAT sensor No.1.

1. Disconnect the negative battery cable. (See 01-17A-11 NEGATIVE BATTERY CABLE DISCONNECTION/CONNECTION [SKYACTIV-G 2.0].) (See 01-17A-13 NEGATIVE BATTERY CABLE DISCONNECTION/CONNECTION [SKYACTIV-G 2.0 (WITHOUT i-stop)].)
2. Disconnect the MAF sensor/IAT sensor No.1 connector.
3. Remove the MAF sensor/IAT sensor No.1.
4. Install in the reverse order of removal.

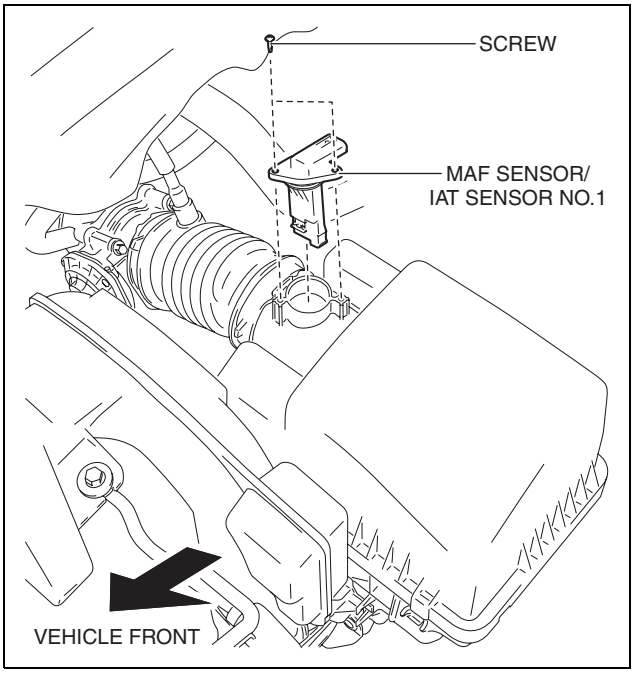

ac5wzw0000398

MASS AIR FLOW (MAF) SENSOR INSPECTION [SKYACTIV-G 2.0]

id0140f4800700

Visual Inspection

1. Disconnect the negative battery cable. (See 01-17A-11 NEGATIVE BATTERY CABLE DISCONNECTION/CONNECTION [SKYACTIV-G 2.0].) (See 01-17A-13 NEGATIVE BATTERY CABLE DISCONNECTION/CONNECTION [SKYACTIV-G 2.0 (WITHOUT i-stop)].)
2. Disconnect the MAF sensor/IAT sensor No.1 connector.
3. Remove the MAF sensor/IAT sensor No.1. (See 01-40-45 MASS AIR FLOW (MAF) SENSOR/INTAKE AIR TEMPERATURE (IAT) SENSOR NO.1 REMOVAL/INSTALLATION [SKYACTIV-G 2.0].)
4. Visually inspect the MAF sensor for the following:
   - Damage, cracks, soiling
   - Rusted sensor terminal
   - Bent sensor terminal
     - — If there is any malfunction, repair or replace the MAF sensor/IAT sensor No.1. (See 01-40-45 MASS AIR FLOW (MAF) SENSOR/INTAKE AIR TEMPERATURE (IAT) SENSOR NO.1 REMOVAL/INSTALLATION [SKYACTIV-G 2.0].)

Voltage Inspection

1. Disconnect the negative battery cable. (See 01-17A-11 NEGATIVE BATTERY CABLE DISCONNECTION/CONNECTION [SKYACTIV-G 2.0].) (See 01-17A-13 NEGATIVE BATTERY CABLE DISCONNECTION/CONNECTION [SKYACTIV-G 2.0 (WITHOUT i-stop)].)
2. Remove the MAF sensor/IAT sensor No.1 without disconnect the connector. (See 01-40-45 MASS AIR FLOW (MAF) SENSOR/INTAKE AIR TEMPERATURE (IAT) SENSOR NO.1 REMOVAL/INSTALLATION [SKYACTIV-G 2.0].)
3. Reconnect the negative battery cable. (See 01-17A-11 NEGATIVE BATTERY CABLE DISCONNECTION/CONNECTION [SKYACTIV-G 2.0].) (See 01-17A-13 NEGATIVE BATTERY CABLE DISCONNECTION/CONNECTION [SKYACTIV-G 2.0 (WITHOUT i-stop)].)
4. Connect the M-MDS to the DLC-2.
5. Switch the ignition ON (engine off or on).

CONTROL SYSTEM [SKYACTIV-G 2.0]

6. As the air gradually approaches the MAF detection part of the MAF sensor/IAT sensor No.1, verify that the MAF sensor output voltage (PID: MAF) varies. (See 01-02-8 ON-BOARD DIAGNOSTIC TEST [SKYACTIV-G 2.0].)
   - If not as verified, replace the MAF sensor/IAT sensor No.1. (See 01-40-45 MASS AIR FLOW (MAF) SENSOR/INTAKE AIR TEMPERATURE (IAT) SENSOR NO.1 REMOVAL/INSTALLATION [SKYACTIV-G 2.0].)

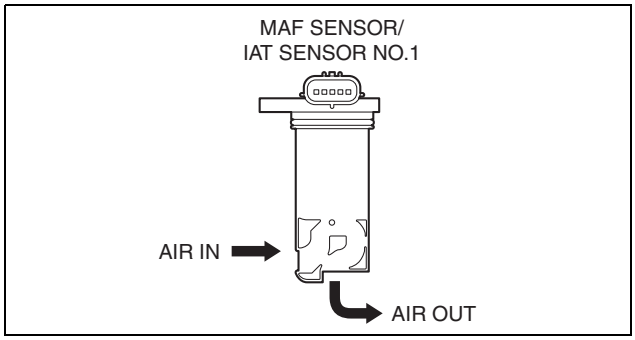

Specification

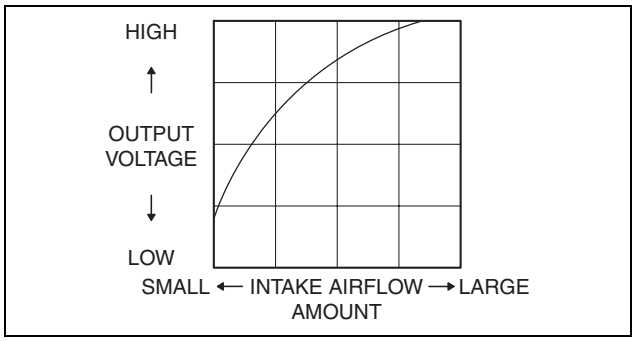

INTAKE AIR TEMPERATURE (IAT) SENSOR INSPECTION [SKYACTIV-G 2.0]

id0140f4802200

IAT Sensor No.1
Resistance inspection

Note
- Because the IAT sensor No.1 is integrated in the MAF sensor, replacing the IAT sensor No.1 includes replacement of the MAF sensor/IAT sensor No.1.

1. Disconnect the negative battery cable. (See 01-17A-11 NEGATIVE BATTERY CABLE DISCONNECTION/CONNECTION [SKYACTIV-G 2.0].) (See 01-17A-13 NEGATIVE BATTERY CABLE DISCONNECTION/CONNECTION [SKYACTIV-G 2.0 (WITHOUT i-stop)].)
2. Disconnect the MAF sensor/IAT sensor No.1 connector.
3. Measure the resistance between MAF sensor/IAT sensor No.1 terminals A and B.
   - If not as specified, replace the MAF sensor/IAT sensor No.1. (See 01-40-45 MASS AIR FLOW (MAF) SENSOR/INTAKE AIR TEMPERATURE (IAT) SENSOR NO.1 REMOVAL/INSTALLATION [SKYACTIV-G 2.0].)

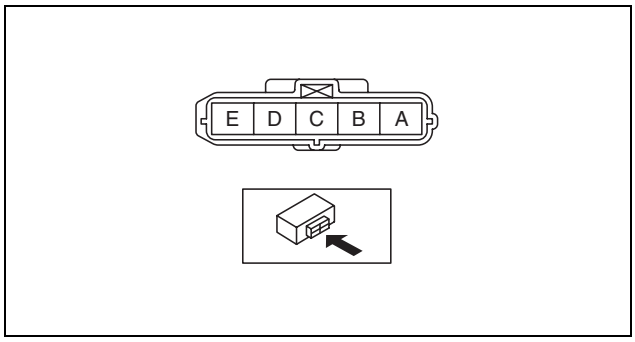

ac5wzw0000028

Specification

IAT (°C {°F})	Resistance (Kilohms)
–20 {–4}	13.7—16.6
20 {68}	2.49—2.79
60 {140}	0.622—0.703

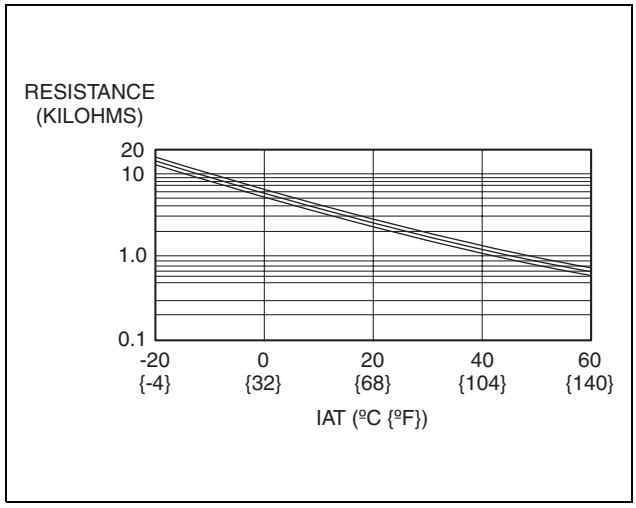

am3zzw0001257

IAT Sensor No.2
Resistance inspection

Note
- Because the IAT sensor No.2 is integrated in the MAP sensor, replacing the IAT sensor No.2 includes replacement of the MAP sensor/IAT sensor No.2.

1. Disconnect the negative battery cable. (See 01-17A-11 NEGATIVE BATTERY CABLE DISCONNECTION/ CONNECTION [SKYACTIV-G 2.0].) (See 01-17A-13 NEGATIVE BATTERY CABLE DISCONNECTION/ CONNECTION [SKYACTIV-G 2.0 (WITHOUT i-stop)].)
2. Disconnect the MAP sensor/IAT sensor No.2 connector.
3. Remove the MAP sensor/IAT sensor No.2. (See 01-40-48 MANIFOLD ABSOLUTE PRESSURE (MAP) SENSOR/INTAKE AIR TEMPERATURE (IAT) SENSOR NO.2 REMOVAL/INSTALLATION [SKYACTIV-G 2.0].)
4. Measure the resistance between MAP sensor/IAT sensor No.2 terminals A and B.
   - If not as specified, replace the MAP sensor/ IAT sensor No.2. (See 01-40-48 MANIFOLD ABSOLUTE PRESSURE (MAP) SENSOR/ INTAKE AIR TEMPERATURE (IAT) SENSOR NO.2 REMOVAL/INSTALLATION [SKYACTIV-G 2.0].)

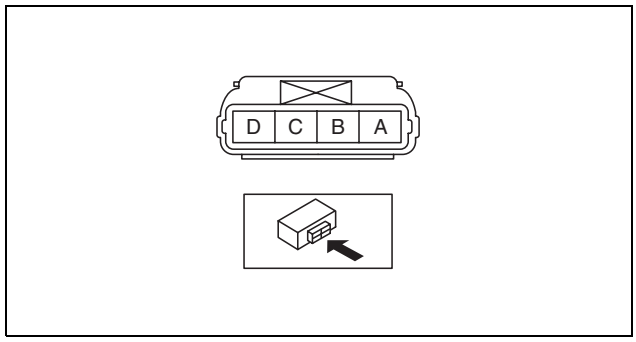

am3uuw0000721

Specification

IAT (°C {°F})	Resistance (Kilohms)
0 {32}	Approx. 5.9
20 {68}	2.375—2.625
80 {176}	Approx. 0.323
130 {266}	Approx. 0.0893

CONTROL SYSTEM [SKYACTIV-G 2.0]

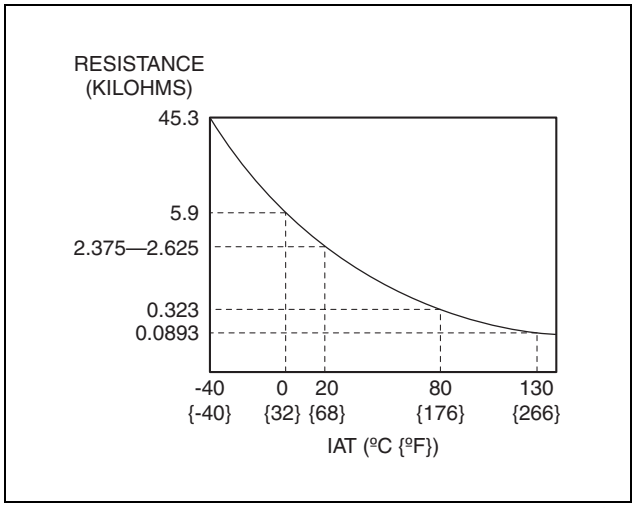

am3zzw0001257

MANIFOLD ABSOLUTE PRESSURE (MAP) SENSOR/INTAKE AIR TEMPERATURE (IAT) SENSOR NO.2 REMOVAL/INSTALLATION [SKYACTIV-G 2.0]

id0140f4900400

Note
- Because the IAT sensor No.2 is integrated in the MAP sensor, replacing the IAT sensor No.2 includes replacement of the MAP sensor/IAT sensor No.2.

1. Disconnect the negative battery cable. (See 01-17A-11 NEGATIVE BATTERY CABLE DISCONNECTION/ CONNECTION [SKYACTIV-G 2.0].) (See 01-17A-13 NEGATIVE BATTERY CABLE DISCONNECTION/ CONNECTION [SKYACTIV-G 2.0 (WITHOUT i-stop)].)
2. Disconnect the MAP sensor/IAT sensor No.2 connector.
3. Remove the MAP sensor/IAT sensor No.2.
4. Install in the reverse order of removal.

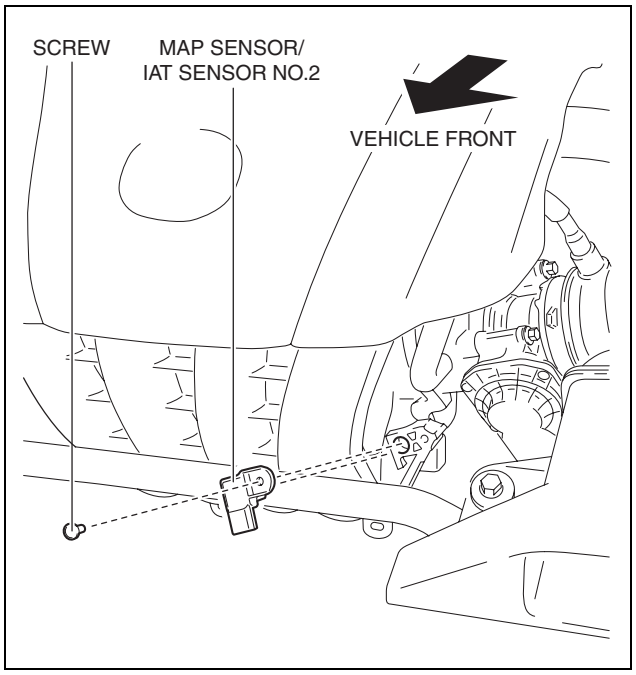

ac5wzw0000398

CONTROL SYSTEM [SKYACTIV-G 2.0]

MANIFOLD ABSOLUTE PRESSURE (MAP) SENSOR INSPECTION [SKYACTIV-G 2.0]

id0140f4800900

Voltage Inspection

1. Connect the M-MDS to the DLC-2.
2. Switch the ignition ON (engine off or on).
3. Verify that the MAP sensor output voltage (PID: MAP) is within the specification. (See 01-02-8 ON-BOARD DIAGNOSTIC TEST [SKYACTIV-G 2.0].) (See 01-40-17 PCM INSPECTION [SKYACTIV-G 2.0].)
   - If not as specified, replace the MAP sensor/IAT sensor No.2. (See 01-40-48 MANIFOLD ABSOLUTE PRESSURE (MAP) SENSOR/INTAKE AIR TEMPERATURE (IAT) SENSOR NO.2 REMOVAL/INSTALLATION [SKYACTIV-G 2.0].)

Specification

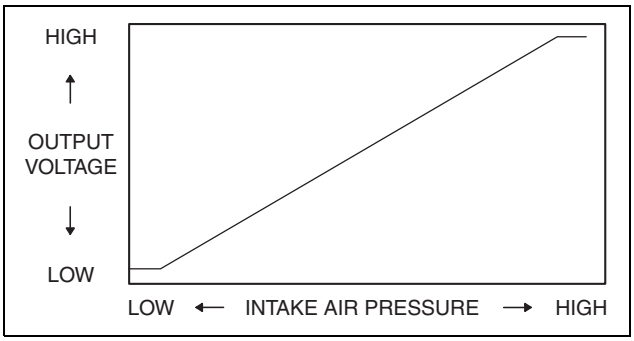

ac5wzw0000027

BAROMETRIC PRESSURE (BARO) SENSOR REMOVAL/INSTALLATION [SKYACTIV-G 2.0]

id0140f4805600

Note

- Because the BARO sensor is integrated in the PCM, replacing the BARO sensor includes replacement of the PCM.

1. Remove the PCM. (See 01-40-10 PCM REMOVAL/INSTALLATION [SKYACTIV-G 2.0].)

BAROMETRIC PRESSURE (BARO) SENSOR INSPECTION [SKYACTIV-G 2.0]

id0140f4801100

Voltage Inspection

Note

- Because the BARO sensor is integrated in the PCM, replacing the BARO sensor includes replacement of the PCM.

1. Connect the M-MDS to the DLC-2.
2. Switch the ignition ON (engine off or on).
3. Verify that the BARO sensor output voltage (PID: BARO) is within the specification. (See 01-02-8 ON-BOARD DIAGNOSTIC TEST [SKYACTIV-G 2.0].) (See 01-40-17 PCM INSPECTION [SKYACTIV-G 2.0].)
   - If not as specified, replace the PCM. (See 01-40-10 PCM REMOVAL/INSTALLATION [SKYACTIV-G 2.0].)

Specification

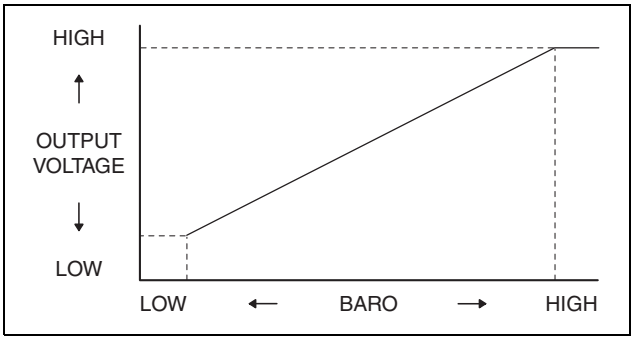

ac5wzw0000027

CONTROL SYSTEM [SKYACTIV-G 2.0]

THROTTLE POSITION (TP) SENSOR REMOVAL/INSTALLATION [SKYACTIV-G 2.0]

id0140f4805100

Note
- The TP sensor cannot be removed as a single unit. When replacing the TP sensor, replace it together with the throttle body as a single unit.

1. Remove the throttle body. (See 01-13A-6 INTAKE-AIR SYSTEM REMOVAL/INSTALLATION [SKYACTIV-G 2.0].)

THROTTLE POSITION (TP) SENSOR INSPECTION [SKYACTIV-G 2.0]

id0140f4802700

Voltage Inspection

Caution
- **The inspection cannot be performed with this method correctly if there is a malfunction of the APP sensor or throttle valve actuator. Verify that no DTCs related to the APP sensor or throttle valve actuator are stored before the inspection.**

Note
- The TP sensor cannot be removed as a single unit. When replacing the TP sensor, replace it together with the throttle body as a single unit.

1. Connect the M-MDS to the DLC-2.
2. Switch the ignition ON (engine off or on).
3. Verify that the TP sensor output voltage (PID: TP1, TP2) varies according to the accelerator opening angle when the accelerator opening angle is gradually increased. (See 01-02-8 ON-BOARD DIAGNOSTIC TEST [SKYACTIV-G 2.0].)
   - If verified, go to the next step.
   - If not as verified, replace the throttle body. (See 01-13A-6 INTAKE-AIR SYSTEM REMOVAL/INSTALLATION [SKYACTIV-G 2.0].)
4. Verify that the TP sensor output voltage (PID: TP1, TP2) is within the specification when the accelerator pedal is depressed and not depressed. (See 01-02-8 ON-BOARD DIAGNOSTIC TEST [SKYACTIV-G 2.0].) (See 01-40-17 PCM INSPECTION [SKYACTIV-G 2.0].)
   - If not as specified, replace the throttle body. (See 01-13A-6 INTAKE-AIR SYSTEM REMOVAL/INSTALLATION [SKYACTIV-G 2.0].)

Specification

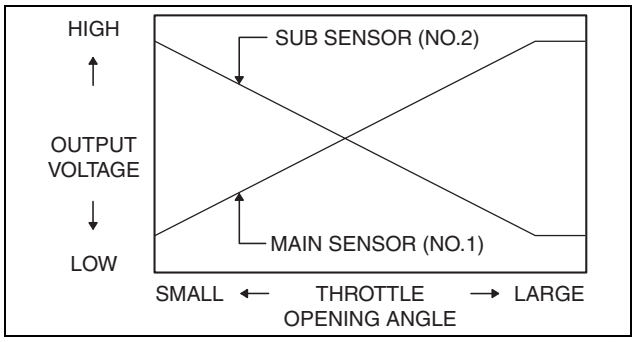

am3uun0000167

ACCELERATOR PEDAL POSITION (APP) SENSOR REMOVAL/INSTALLATION [SKYACTIV-G 2.0]

id0140f4877800

Note
- Because the APP sensor is integrated in the accelerator pedal, replacing the APP sensor includes replacement of the accelerator pedal.

1. Remove the accelerator pedal. (See 01-13A-14 ACCELERATOR PEDAL REMOVAL/INSTALLATION [SKYACTIV-G 2.0].)

CONTROL SYSTEM [SKYACTIV-G 2.0]

ACCELERATOR PEDAL POSITION (APP) SENSOR INSPECTION [SKYACTIV-G 2.0]

id0140f4803200

Voltage Inspection

Note
- Because the APP sensor is integrated in the accelerator pedal, replacing the APP sensor includes replacement of the accelerator pedal.

1. Connect the M-MDS to the DLC-2.
2. Switch the ignition ON (engine off or on).
3. Verify that the APP sensor output voltage (PID: APP1, APP2) increases according to the increase in the accelerator opening angle when the accelerator opening angle is gradually increased. (See 01-02-8 ON-BOARD DIAGNOSTIC TEST [SKYACTIV-G 2.0].)
   - If verified, go to the next step.
   - If not as verified, replace the accelerator pedal. (See 01-13A-14 ACCELERATOR PEDAL REMOVAL/INSTALLATION [SKYACTIV-G 2.0].)
4. Verify that the APP sensor output voltage (PID: APP1, APP2) is within the specification when the accelerator pedal is depressed and not depressed. (See 01-02-8 ON-BOARD DIAGNOSTIC TEST [SKYACTIV-G 2.0].) (See 01-40-17 PCM INSPECTION [SKYACTIV-G 2.0].)
   - If not as specified, replace the accelerator pedal. (See 01-13A-14 ACCELERATOR PEDAL REMOVAL/INSTALLATION [SKYACTIV-G 2.0].)

Specification

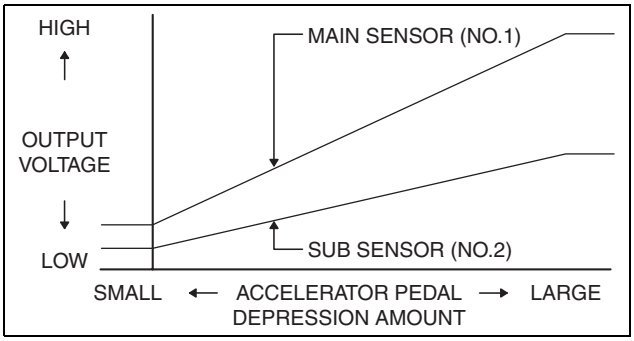

am3uun0000168

FUEL PRESSURE SENSOR REMOVAL/INSTALLATION [SKYACTIV-G 2.0]

id0140f4801200

Note
- The fuel pressure sensor cannot be removed as a single unit. When replacing the fuel pressure sensor, replace it together with the fuel distributor as a single unit.

1. Remove the fuel distributor. (See 01-14A-51 FUEL INJECTOR REMOVAL/INSTALLATION [SKYACTIV-G 2.0].)

CONTROL SYSTEM [SKYACTIV-G 2.0]

FUEL PRESSURE SENSOR INSPECTION [SKYACTIV-G 2.0]

id0140f4801300

Voltage Inspection

Note
- The fuel pressure sensor cannot be removed as a single unit. When replacing the fuel pressure sensor, replace it together with the fuel distributor as a single unit.

1. Connect the M-MDS to the DLC-2.
2. Switch the ignition ON (engine off or on).
3. Verify that the fuel pressure sensor output voltage (PID: FUEL_PRES) is within the specification. (See 01-02-8 ON-BOARD DIAGNOSTIC TEST [SKYACTIV-G 2.0].) (See 01-40-17 PCM INSPECTION [SKYACTIV-G 2.0].)
   - If not as specified, replace the fuel distributor. (See 01-14A-51 FUEL INJECTOR REMOVAL/INSTALLATION [SKYACTIV-G 2.0].)

Specification

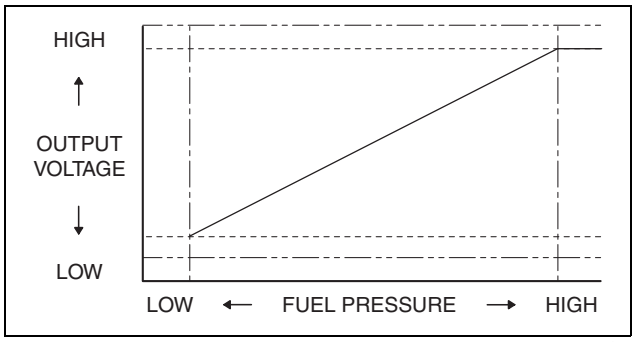

am3uun0000172

AIR FUEL RATIO (A/F) SENSOR REMOVAL/INSTALLATION [SKYACTIV-G 2.0]

id0140f4899700

Warning
- **A hot engine and exhaust system can cause severe burns. Turn off the engine and wait until they are cool before removing the exhaust system.**

Caution
- **Do not allow flammable objects such as the taping for bundling wiring harness to come into contact with the exhaust manifold and silencer.**

Note
- If penetrant lubricating spray penetrates the airflow hole of the A/F sensor, it could cause interference with the A/F sensor function.
- When removing the A/F sensor, wrap a rag around the lower position so that penetrant lubricating spray does not get sprayed into the airflow hole.

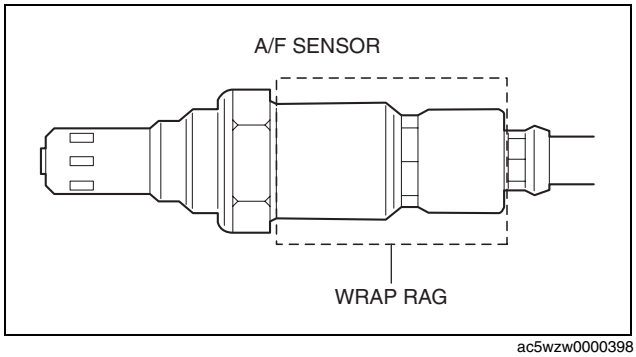

ac5wzw0000398

CONTROL SYSTEM [SKYACTIV-G 2.0]

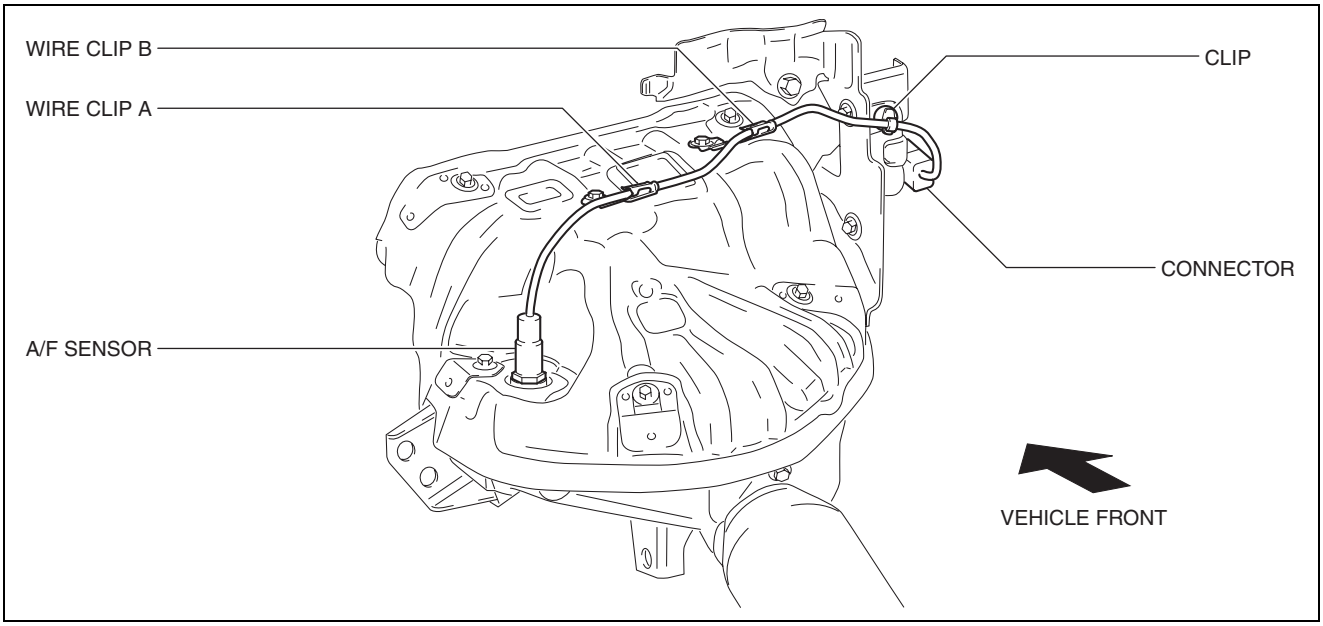

ac5wzw0000029

1. Disconnect the negative battery cable. (See 01-17A-11 NEGATIVE BATTERY CABLE DISCONNECTION/CONNECTION [SKYACTIV-G 2.0].) (See 01-17A-13 NEGATIVE BATTERY CABLE DISCONNECTION/CONNECTION [SKYACTIV-G 2.0 (WITHOUT i-stop)].)
2. Remove the plug hole plate. (See 01-10A-6 PLUG HOLE PLATE REMOVAL/INSTALLATION [SKYACTIV-G 2.0].)
3. Disconnect the A/F sensor connector.
4. Remove the clip from the heat insulator.

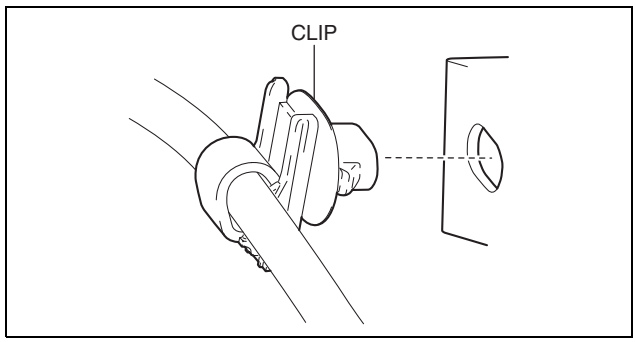

ac5wzw0000029

5. Remove the wiring harness from the wire clip A and B. (See 01-40-54 Assembly of Wiring Harness to Wire Clip Note.)

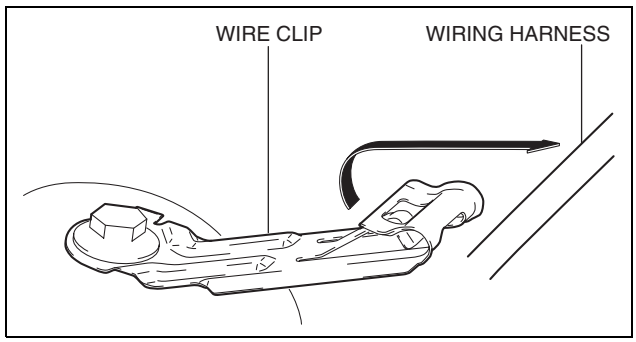

ac5wzw0000030

CONTROL SYSTEM [SKYACTIV-G 2.0]

6. Remove the A/F sensor using the **SST**.
7. Install in the reverse order of removal.

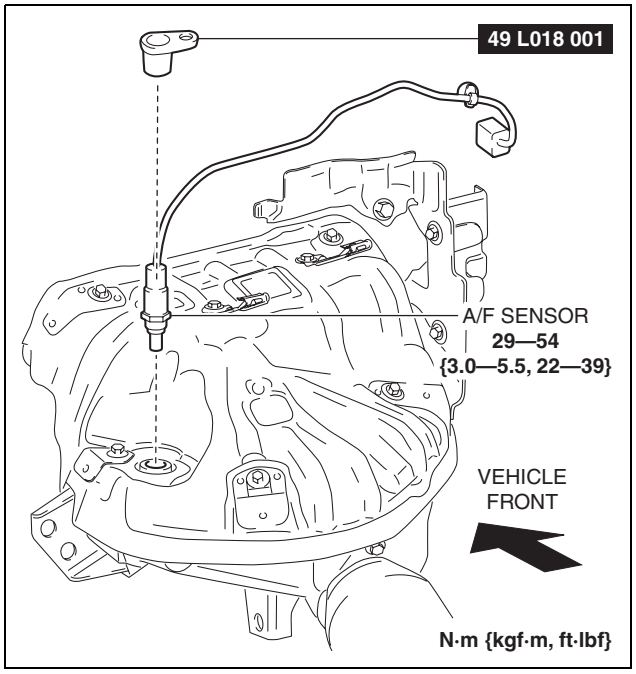

ac5wzw0000398

Assembly of Wiring Harness to Wire Clip Note

- Secure the heat shrinkable tube on the wiring harness to wire clip A.

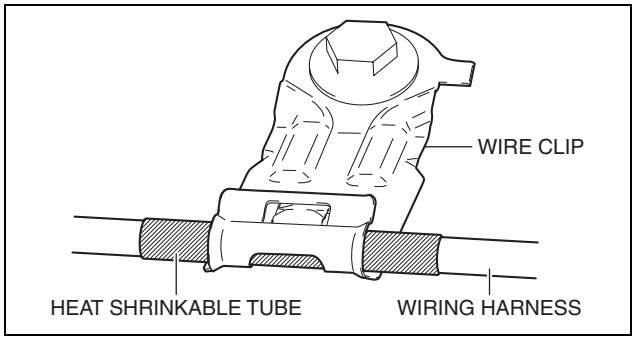

ac5wzw0000036

- Secure the band on the wiring harness so that the band is positioned on both sides of wire clip B.

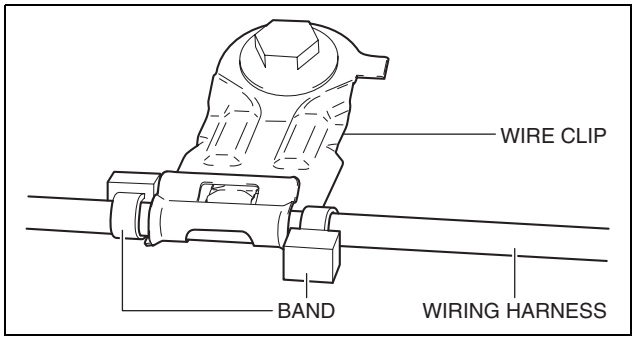

ac5wzw0000036

CONTROL SYSTEM [SKYACTIV-G 2.0]

AIR FUEL RATIO (A/F) SENSOR INSPECTION [SKYACTIV-G 2.0]

id0140f4899600

A/F Sensor Inspection

1. Connect the M-MDS to the DLC-2.
2. Switch the ignition ON (engine on).
3. Warm up the engine to normal operating temperature.
4. Access the following PIDs using the M-MDS. (See 01-02-8 ON-BOARD DIAGNOSTIC TEST [SKYACTIV-G 2.0].)
   - — VSS (Vehicle speed)
   - — RPM (Engine speed)
   - — O2S11 (A/F sensor output current)
5. Drive the vehicle and decelerate the engine speed by releasing the accelerator pedal fully when the engine speed is **3,000 rpm or more**.
6. Verify that the A/F sensor output current (PID: O2S11) is **0.25 mA or more** while decelerating as shown in the figure.
   - If not as specified, replace the A/F sensor. (See 01-40-52 AIR FUEL RATIO (A/F) SENSOR REMOVAL/INSTALLATION [SKYACTIV-G 2.0].)

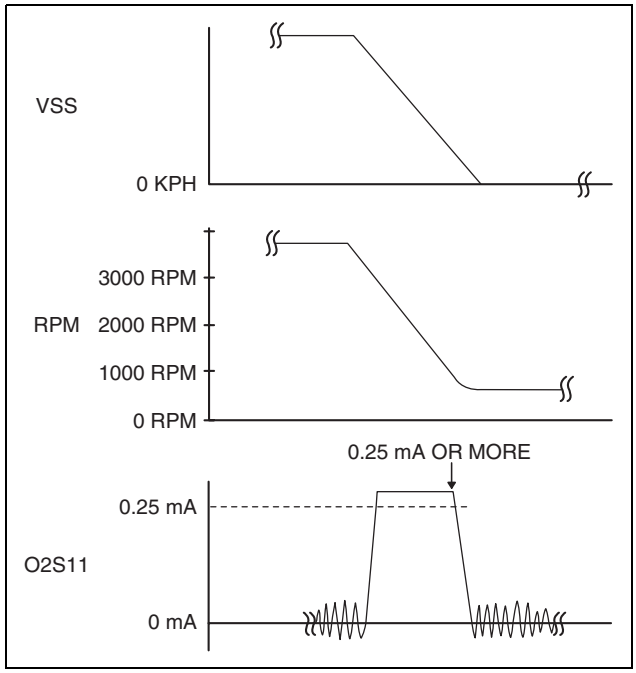

am3uuw0000724

A/F Sensor Heater Inspection

Warning

- **A hot engine and exhaust system can cause severe burns. Turn off the engine and wait until they are cool before removing the exhaust system.**

1. Disconnect the negative battery cable. (See 01-17A-11 NEGATIVE BATTERY CABLE DISCONNECTION/ CONNECTION [SKYACTIV-G 2.0].) (See 01-17A-13 NEGATIVE BATTERY CABLE DISCONNECTION/ CONNECTION [SKYACTIV-G 2.0 (WITHOUT i-stop)].)
2. Disconnect the A/F sensor connector.
3. Measure the resistance between A/F sensor terminals A and E.
   - If not as specified, replace the A/F sensor. (See 01-40-52 AIR FUEL RATIO (A/F) SENSOR REMOVAL/INSTALLATION [SKYACTIV-G 2.0].)

A/F sensor heater resistance
1—10 ohms [normal temperature]

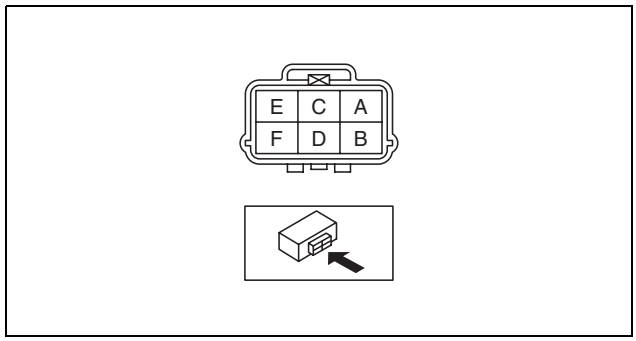

ac5wzw0000029

CONTROL SYSTEM [SKYACTIV-G 2.0]

HEATED OXYGEN SENSOR (HO2S) REMOVAL/INSTALLATION [SKYACTIV-G 2.0]

id0140f4804000

Warning

- **A hot engine and exhaust system can cause severe burns. Turn off the engine and wait until they are cool before removing the exhaust system.**

Caution

- **Do not allow flammable objects such as the taping for bundling wiring harness to come into contact with the exhaust manifold and silencer.**

Note

- If penetrant lubricating spray penetrates the airflow hole of the HO2S, it could cause interference with the HO2S function.
- When removing the HO2S, wrap a rag around the lower position so that penetrant lubricating spray does not get sprayed into the airflow hole.

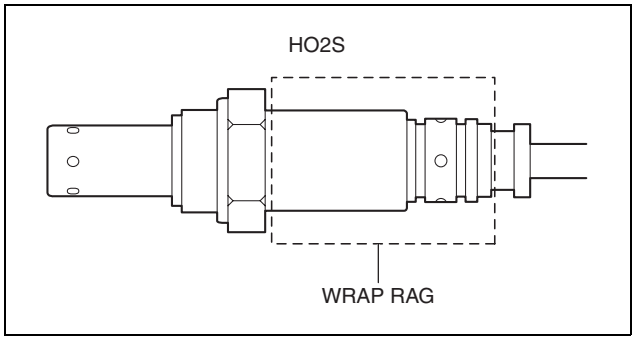

ac5wzw0000398

1. Disconnect the negative battery cable. (See 01-17A-11 NEGATIVE BATTERY CABLE DISCONNECTION/CONNECTION [SKYACTIV-G 2.0].) (See 01-17A-13 NEGATIVE BATTERY CABLE DISCONNECTION/CONNECTION [SKYACTIV-G 2.0 (WITHOUT i-stop)].)
2. Lift up the vehicle.
3. Remove the floor under cover. (vehicles with floor under cover) (See FLOOR UNDER COVER REMOVAL/INSTALLATION.)
4. Remove the insulator and brace bar. (2WD) (See 01-15A-2 EXHAUST SYSTEM REMOVAL/INSTALLATION [SKYACTIV-G 2.0].)
5. Disconnect the HO2S connector.

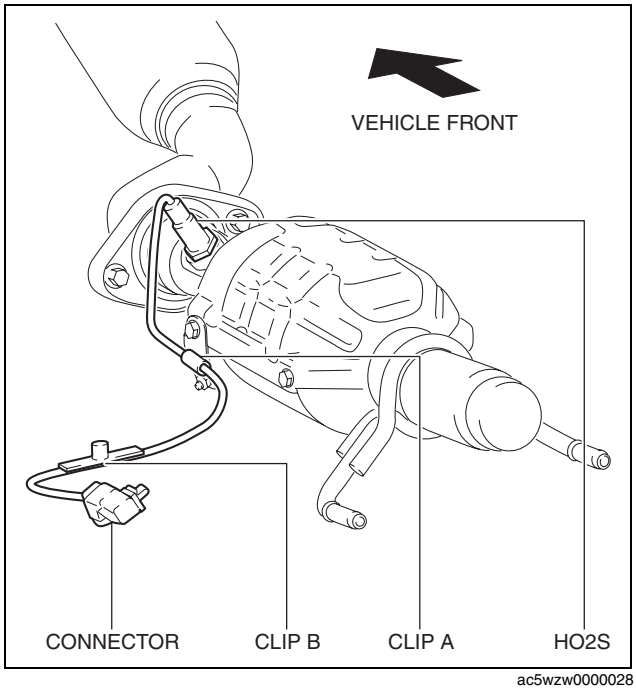

ac5wzw0000028

6. Remove the clip A from the bracket.
7. Remove the clip B.

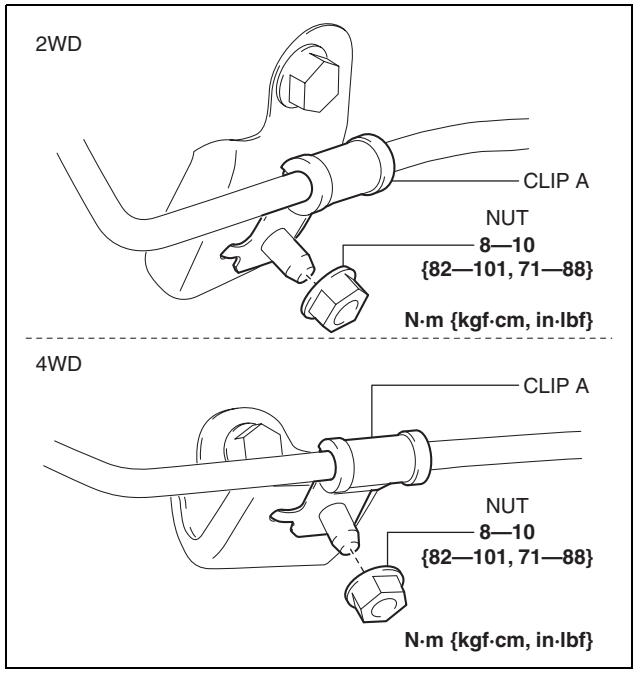

ac5wzw0000036

8. Remove the HO2S using the **SST**.
9. Install in the reverse order of removal.

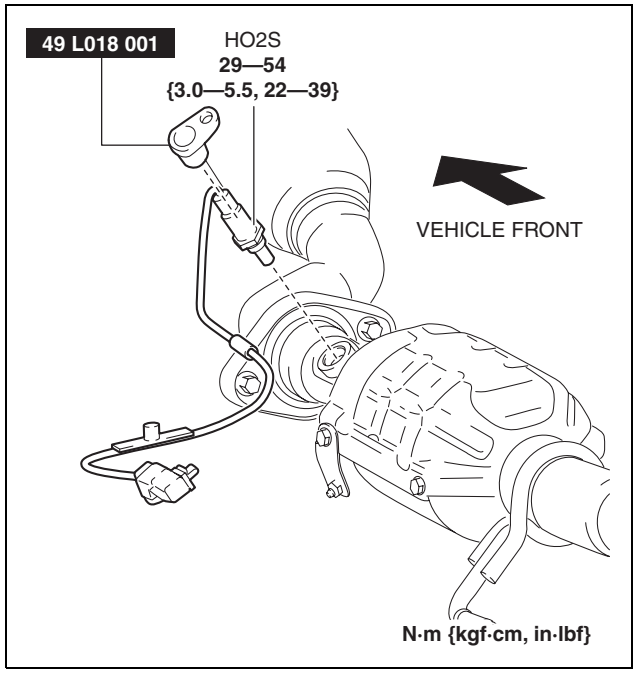

ac5wzw0000398

CONTROL SYSTEM [SKYACTIV-G 2.0]

HEATED OXYGEN SENSOR (HO2S) INSPECTION [SKYACTIV-G 2.0]

id0140f4802300

HO2S Inspection

1. Connect the M-MDS to the DLC-2.
2. Switch the ignition ON (engine on).
3. Warm up the engine to normal operating temperature.
4. Access the following PIDs using the M-MDS. (See 01-02-8 ON-BOARD DIAGNOSTIC TEST [SKYACTIV-G 2.0].)
   - VSS (Vehicle speed)
   - RPM (Engine speed)
   - O2S12 (HO2S output voltage)
5. Drive the vehicle and decelerate the engine speed by releasing the accelerator pedal fully when the engine speed is **3,000 rpm or more**.
6. Verify that the HO2S output voltage (PID: O2S12) is **0.3 V or less** while decelerating as shown in the figure.
   - If not as specified, replace the HO2S. (See 01-40-56 HEATED OXYGEN SENSOR (HO2S) REMOVAL/INSTALLATION [SKYACTIV-G 2.0].)

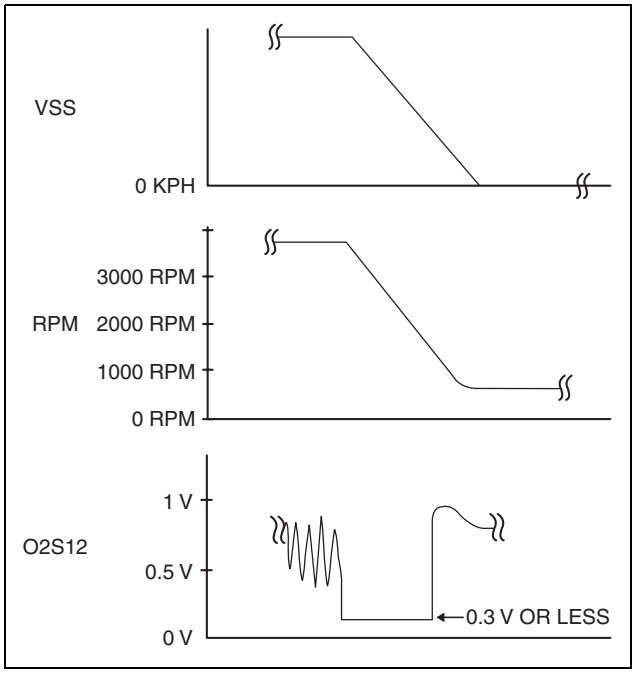

am3uuw0000724

HO2S Heater Inspection

Warning

- **A hot engine and exhaust system can cause severe burns. Turn off the engine and wait until they are cool before removing the exhaust system.**

1. Disconnect the negative battery cable. (See 01-17A-11 NEGATIVE BATTERY CABLE DISCONNECTION/CONNECTION [SKYACTIV-G 2.0].) (See 01-17A-13 NEGATIVE BATTERY CABLE DISCONNECTION/CONNECTION [SKYACTIV-G 2.0 (WITHOUT i-stop)].)
2. Lift up the vehicle.
3. Remove the floor under cover. (vehicles with floor under cover) (See FLOOR UNDER COVER REMOVAL/INSTALLATION.)
4. Disconnect the HO2S connector.
5. Measure the resistance between HO2S terminals C and D.
   - If not as specified, replace the HO2S. (See 01-40-56 HEATED OXYGEN SENSOR (HO2S) REMOVAL/INSTALLATION [SKYACTIV-G 2.0].)

HO2S heater resistance
2—50 ohms [normal temperature]

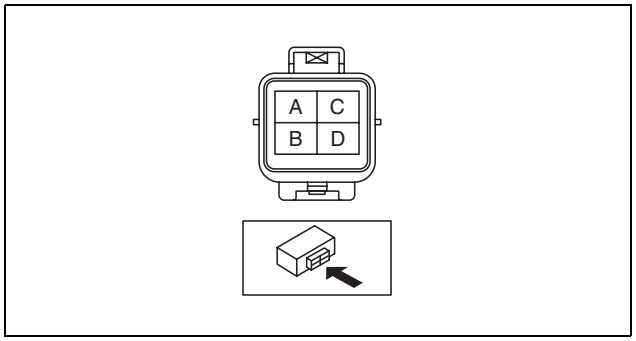

ac5wzw0000028

CONTROL SYSTEM [SKYACTIV-G 2.0]

CRANKSHAFT POSITION (CKP) SENSOR REMOVAL/INSTALLATION [SKYACTIV-G 2.0]

id0140f4800600

Caution

- **When foreign material such as an iron chip is on the CKP sensor, it can cause abnormal output from the sensor because of flux turbulence and adversely affect the engine control. Be sure there is no foreign material on the CKP sensor when replacing.**
- **Do not assemble the CKP sensor or change the installation position using any method other than the following. Otherwise, it could negatively affect engine controls, such as the ignition timing and fuel injection.**

1. Disconnect the negative battery cable. (See 01-17A-11 NEGATIVE BATTERY CABLE DISCONNECTION/CONNECTION [SKYACTIV-G 2.0].) (See 01-17A-13 NEGATIVE BATTERY CABLE DISCONNECTION/CONNECTION [SKYACTIV-G 2.0 (WITHOUT i-stop)].)
2. Lift up the vehicle.
3. Perform the following procedure for easier access.
   (1) Remove the service hole cover (installed to front under cover No.2) used to remove the oil filter. (See 01-11A-5 OIL FILTER REPLACEMENT [SKYACTIV-G 2.0].)
   (2) Remove the front splash shield. (See 09-16-49 SPLASH SHIELD REMOVAL/INSTALLATION.)
4. Disconnect the CKP sensor connector.
5. Remove the CKP sensor.
6. Install in the reverse order of removal.

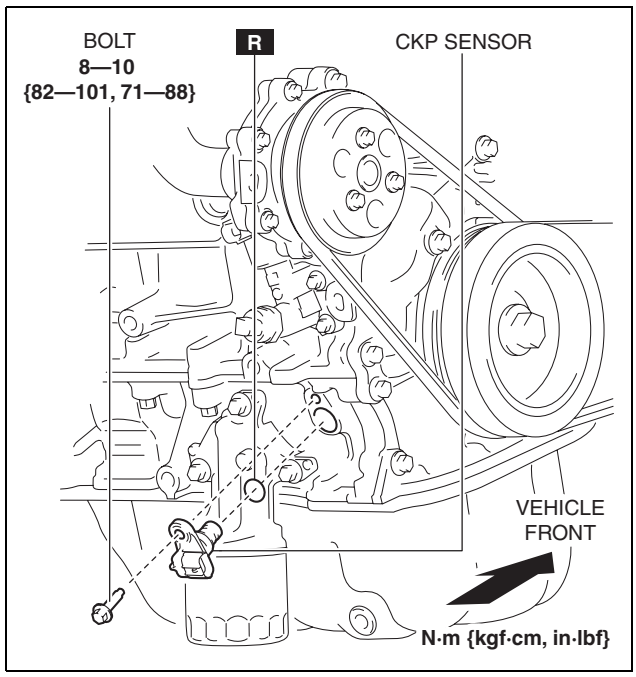

ac5wzw0000397

CONTROL SYSTEM [SKYACTIV-G 2.0]

CRANKSHAFT POSITION (CKP) SENSOR INSPECTION [SKYACTIV-G 2.0]

id0140f4800500

Visual Inspection

Caution
- **When foreign material such as an iron chip is on the CKP sensor, it can cause abnormal output from the sensor because of flux turbulence and adversely affect the engine control. Be sure there is no foreign material on the CKP sensor when replacing.**
- **Do not assemble the CKP sensor or change the installation position using any method other than the following. Otherwise, it could negatively affect engine controls, such as the ignition timing and fuel injection.**

1. Disconnect the negative battery cable. (See 01-17A-11 NEGATIVE BATTERY CABLE DISCONNECTION/CONNECTION [SKYACTIV-G 2.0].) (See 01-17A-13 NEGATIVE BATTERY CABLE DISCONNECTION/CONNECTION [SKYACTIV-G 2.0 (WITHOUT i-stop)].)
2. Lift up the vehicle.
3. Perform the following procedure for easier access.
   (1) Remove the service hole cover (installed to front under cover No.2) used to remove the oil filter. (See 01-11A-5 OIL FILTER REPLACEMENT [SKYACTIV-G 2.0].)
   (2) Remove the front splash shield. (See 09-16-49 SPLASH SHIELD REMOVAL/INSTALLATION.)
4. Disconnect the CKP sensor connector.
5. Remove the CKP sensor. (See 01-40-59 CRANKSHAFT POSITION (CKP) SENSOR REMOVAL/INSTALLATION [SKYACTIV-G 2.0].)
6. Verify that there are no metal shavings on the sensor.
   - If there is a malfunction, remove any metal shavings that are adhering.

Voltage Inspection

Caution
- **When foreign material such as an iron chip is on the CKP sensor, it can cause abnormal output from the sensor because of flux turbulence and adversely affect the engine control. Be sure there is no foreign material on the CKP sensor when replacing.**
- **Do not assemble the CKP sensor or change the installation position using any method other than the following. Otherwise, it could negatively affect engine controls, such as the ignition timing and fuel injection.**
- **If the wiring harnesses or waterproof connectors are damaged, water penetrating the connector will cause a sensor malfunction. To prevent this, be careful not to damage wiring harnesses or waterproof connectors.**

1. Idle the engine.
2. Measure the CKP sensor output voltage using the oscilloscope.
   - If not as specified, replace the CKP sensor. (See 01-40-59 CRANKSHAFT POSITION (CKP) SENSOR REMOVAL/INSTALLATION [SKYACTIV-G 2.0].)

Terminal	Voltage (V)	Condition
A	Approx. 5.0	Under any condition
B	Below 1.0	Under any condition
C	Above 4.5	High output*
	Below 0.8	Low output*

* : Output voltage varies with crankshaft rotation.

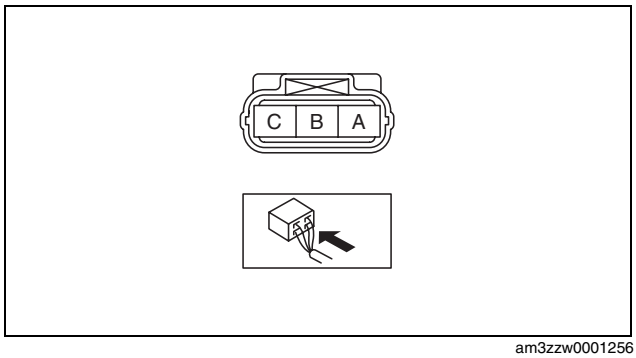

am3zzw0001256

CONTROL SYSTEM [SKYACTIV-G 2.0]

CAMSHAFT POSITION (CMP) SENSOR REMOVAL/INSTALLATION [SKYACTIV-G 2.0]

id0140f4801500

Caution

- **When replacing the CMP sensor, make sure there is no foreign material on it such as metal shavings. If it is installed with foreign material, the sensor output signal will malfunction resulting from fluctuation in magnetic flux and cause a deterioration in engine control.**

Intake CMP Sensor

1. Disconnect the negative battery cable. (See 01-17A-11 NEGATIVE BATTERY CABLE DISCONNECTION/CONNECTION [SKYACTIV-G 2.0].) (See 01-17A-13 NEGATIVE BATTERY CABLE DISCONNECTION/CONNECTION [SKYACTIV-G 2.0 (WITHOUT i-stop)].)
2. Remove the plug hole plate. (See 01-10A-6 PLUG HOLE PLATE REMOVAL/INSTALLATION [SKYACTIV-G 2.0].)
3. Remove the intake manifold. (See 01-13A-6 INTAKE-AIR SYSTEM REMOVAL/INSTALLATION [SKYACTIV-G 2.0].)
4. Disconnect the intake CMP sensor connector.
5. Remove the intake CMP sensor.
6. Install in the reverse order of removal.

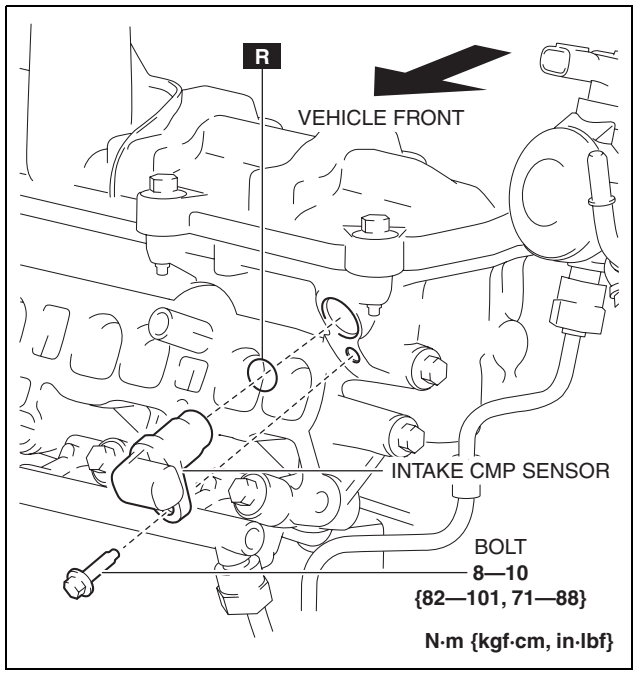

ac5wzw0000397

CONTROL SYSTEM [SKYACTIV-G 2.0]

Exhaust CMP Sensor

1. Disconnect the negative battery cable. (See 01-17A-11 NEGATIVE BATTERY CABLE DISCONNECTION/ CONNECTION [SKYACTIV-G 2.0].) (See 01-17A-13 NEGATIVE BATTERY CABLE DISCONNECTION/ CONNECTION [SKYACTIV-G 2.0 (WITHOUT i-stop)].)
2. Remove the plug hole plate. (See 01-10A-6 PLUG HOLE PLATE REMOVAL/INSTALLATION [SKYACTIV-G 2.0].)
3. Disconnect the exhaust CMP sensor connector.
4. Remove the exhaust CMP sensor.
5. Install in the reverse order of removal.

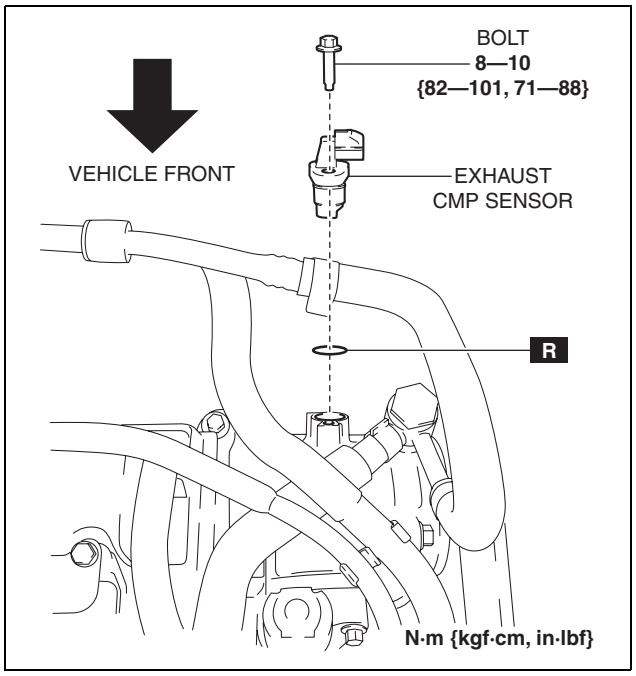

ac5wzw0000397

CAMSHAFT POSITION (CMP) SENSOR INSPECTION [SKYACTIV-G 2.0]

id0140f4801400

Intake CMP Sensor
Visual inspection

Caution

- **When replacing the CMP sensor, make sure there is no foreign material on it such as metal shavings. If it is installed with foreign material, the sensor output signal will malfunction resulting from fluctuation in magnetic flux and cause a deterioration in engine control.**

1. Disconnect the negative battery cable. (See 01-17A-11 NEGATIVE BATTERY CABLE DISCONNECTION/ CONNECTION [SKYACTIV-G 2.0].) (See 01-17A-13 NEGATIVE BATTERY CABLE DISCONNECTION/ CONNECTION [SKYACTIV-G 2.0 (WITHOUT i-stop)].)
2. Remove the plug hole plate. (See 01-10A-6 PLUG HOLE PLATE REMOVAL/INSTALLATION [SKYACTIV-G 2.0].)
3. Remove the intake manifold. (See 01-13A-6 INTAKE-AIR SYSTEM REMOVAL/INSTALLATION [SKYACTIV-G 2.0].)
4. Disconnect the intake CMP sensor connector.
5. Remove the intake CMP sensor. (See 01-40-61 CAMSHAFT POSITION (CMP) SENSOR REMOVAL/ INSTALLATION [SKYACTIV-G 2.0].)
6. Verify that there are no metal shavings on the intake CMP sensor.
   - If there is a malfunction, remove any metal shavings that are adhering.

Voltage inspection

Caution

- **When replacing the CMP sensor, make sure there is no foreign material on it such as metal shavings. If it is installed with foreign material, the sensor output signal will malfunction resulting from fluctuation in magnetic flux and cause a deterioration in engine control.**
- **If the wiring harnesses or waterproof connectors are damaged, water penetrating the connector will cause a sensor malfunction. To prevent this, be careful not to damage wiring harnesses or waterproof connectors.**

1. Idle the engine.

2. Measure the intake CMP sensor output voltage using the oscilloscope.
   - If not as specified, replace the intake CMP sensor. (See 01-40-61 CAMSHAFT POSITION (CMP) SENSOR REMOVAL/INSTALLATION [SKYACTIV-G 2.0].)

Terminal	Voltage (V)	Condition
A	Above 4.8	High output*
	Below 0.8	Low output*
B	Below 1.0	Under any condition
C	B+	Under any condition

* : Output voltage varies with camshaft rotation.

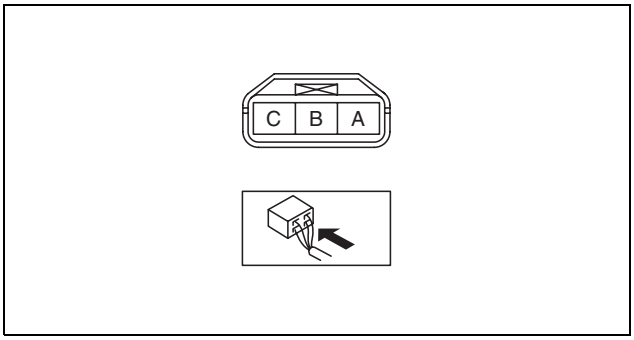

am3uuw0000720

Exhaust CMP Sensor
Visual inspection

Caution
- **When replacing the CMP sensor, make sure there is no foreign material on it such as metal shavings. If it is installed with foreign material, the sensor output signal will malfunction resulting from fluctuation in magnetic flux and cause a deterioration in engine control.**

1. Disconnect the negative battery cable. (See 01-17A-11 NEGATIVE BATTERY CABLE DISCONNECTION/CONNECTION [SKYACTIV-G 2.0].) (See 01-17A-13 NEGATIVE BATTERY CABLE DISCONNECTION/CONNECTION [SKYACTIV-G 2.0 (WITHOUT i-stop)].)
2. Remove the plug hole plate. (See 01-10A-6 PLUG HOLE PLATE REMOVAL/INSTALLATION [SKYACTIV-G 2.0].)
3. Disconnect the exhaust CMP sensor connector.
4. Remove the exhaust CMP sensor. (See 01-40-61 CAMSHAFT POSITION (CMP) SENSOR REMOVAL/INSTALLATION [SKYACTIV-G 2.0].)
5. Verify that there are no metal shavings on the exhaust CMP sensor.
   - If there is a malfunction, remove any metal shavings that are adhering.

Voltage inspection

Caution
- **When replacing the CMP sensor, make sure there is no foreign material on it such as metal shavings. If it is installed with foreign material, the sensor output signal will malfunction resulting from fluctuation in magnetic flux and cause a deterioration in engine control.**
- **If the wiring harnesses or waterproof connectors are damaged, water penetrating the connector will cause a sensor malfunction. To prevent this, be careful not to damage wiring harnesses or waterproof connectors.**

1. Idle the engine.
2. Measure the exhaust CMP sensor output voltage using the oscilloscope.
   - If not as specified, replace the exhaust CMP sensor. (See 01-40-61 CAMSHAFT POSITION (CMP) SENSOR REMOVAL/INSTALLATION [SKYACTIV-G 2.0].)

Terminal	Voltage (V)	Condition
A	Above 4.8	High output*
	Below 0.8	Low output*
B	Below 1.0	Under any condition
C	B+	Under any condition

* : Output voltage varies with camshaft rotation.

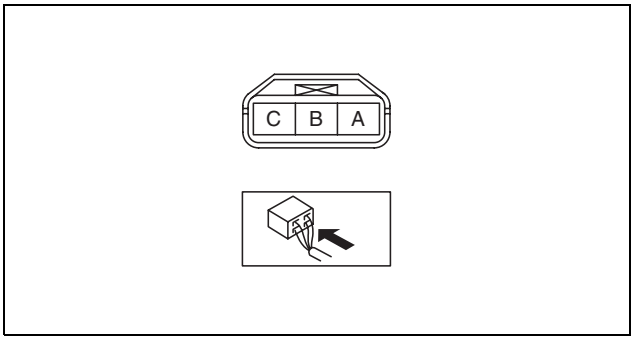

am3uuw0000721

CONTROL SYSTEM [SKYACTIV-G 2.0]

KNOCK SENSOR (KS) REMOVAL/INSTALLATION [SKYACTIV-G 2.0]

id0140f4802900

1. Disconnect the negative battery cable. (See 01-17A-11 NEGATIVE BATTERY CABLE DISCONNECTION/CONNECTION [SKYACTIV-G 2.0].) (See 01-17A-13 NEGATIVE BATTERY CABLE DISCONNECTION/CONNECTION [SKYACTIV-G 2.0 (WITHOUT i-stop)].)
2. Remove the plug hole plate. (See 01-10A-6 PLUG HOLE PLATE REMOVAL/INSTALLATION [SKYACTIV-G 2.0].)
3. Remove the intake manifold. (See 01-13A-6 INTAKE-AIR SYSTEM REMOVAL/INSTALLATION [SKYACTIV-G 2.0].)
4. Disconnect the KS connector.
5. Remove the KS. (See 01-40-64 KS Installation Note.)
6. Install in the reverse order of removal.

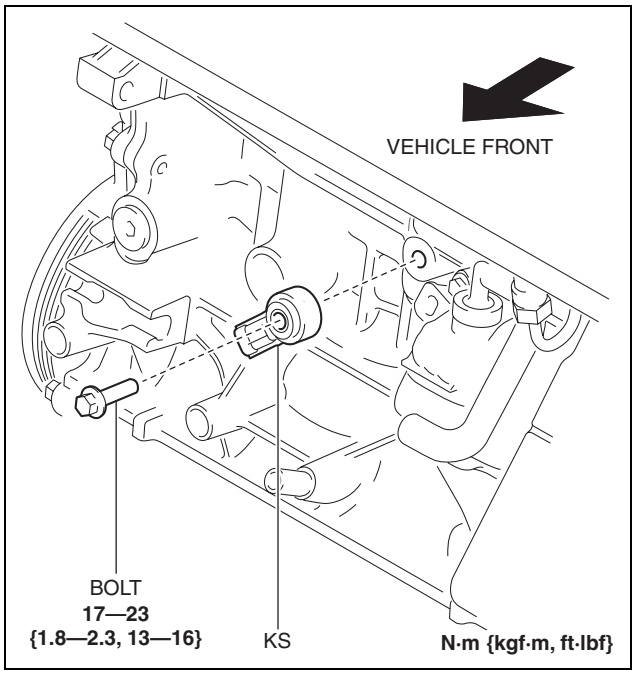

ac5wzw0000398

KS Installation Note

- Verify that there is no foreign matter caught between the KS unit and cylinder block.
- The direction of the KS connector is within the 90-degree angle range shown in the figure.

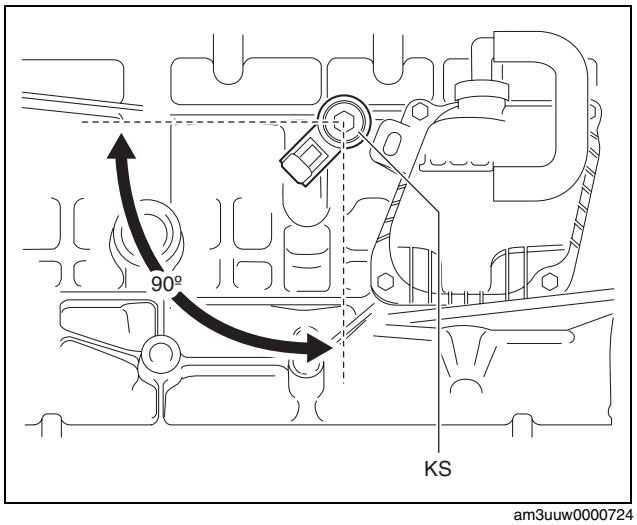

am3uuw0000724

CONTROL SYSTEM [SKYACTIV-G 2.0]

KNOCK SENSOR (KS) INSPECTION [SKYACTIV-G 2.0]

id0140f4802800

Resistance Inspection

1. Disconnect the negative battery cable. (See 01-17A-11 NEGATIVE BATTERY CABLE DISCONNECTION/CONNECTION [SKYACTIV-G 2.0].) (See 01-17A-13 NEGATIVE BATTERY CABLE DISCONNECTION/CONNECTION [SKYACTIV-G 2.0 (WITHOUT i-stop)].)
2. Remove the plug hole plate. (See 01-10A-6 PLUG HOLE PLATE REMOVAL/INSTALLATION [SKYACTIV-G 2.0].)
3. Remove the intake manifold. (See 01-13A-6 INTAKE-AIR SYSTEM REMOVAL/INSTALLATION [SKYACTIV-G 2.0].)
4. Disconnect the KS connector.
5. Remove the KS. (See 01-40-64 KNOCK SENSOR (KS) REMOVAL/INSTALLATION [SKYACTIV-G 2.0].)
6. Measure the resistance between KS terminals A and B.
   - If not as specified, replace the KS. (See 01-40-64 KNOCK SENSOR (KS) REMOVAL/INSTALLATION [SKYACTIV-G 2.0].)

Specification
504—616 kilohms [10—30 °C {50—86 °F}]

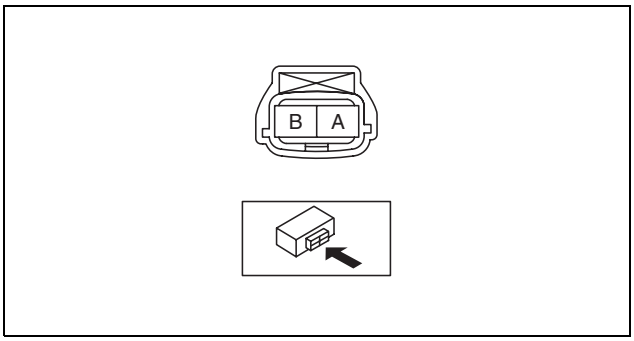

am3uuw0000721

CURRENT SENSOR REMOVAL/INSTALLATION [SKYACTIV-G 2.0]

id0140f4805400

Caution
- **Disconnect the current sensor connector before disconnecting the negative battery cable. If the negative battery cable is disconnected first, the PCM may mistakenly recognize a signal from the current sensor causing interference with engine control.**

1. Disconnect the current sensor connector.
2. Disconnect the negative battery cable. (See 01-17A-11 NEGATIVE BATTERY CABLE DISCONNECTION/CONNECTION [SKYACTIV-G 2.0].)
3. Remove the current sensor.
4. Install the current sensor.
5. Reconnect the current sensor connector.
6. Reconnect the negative battery cable. (See 01-17A-11 NEGATIVE BATTERY CABLE DISCONNECTION/CONNECTION [SKYACTIV-G 2.0].)

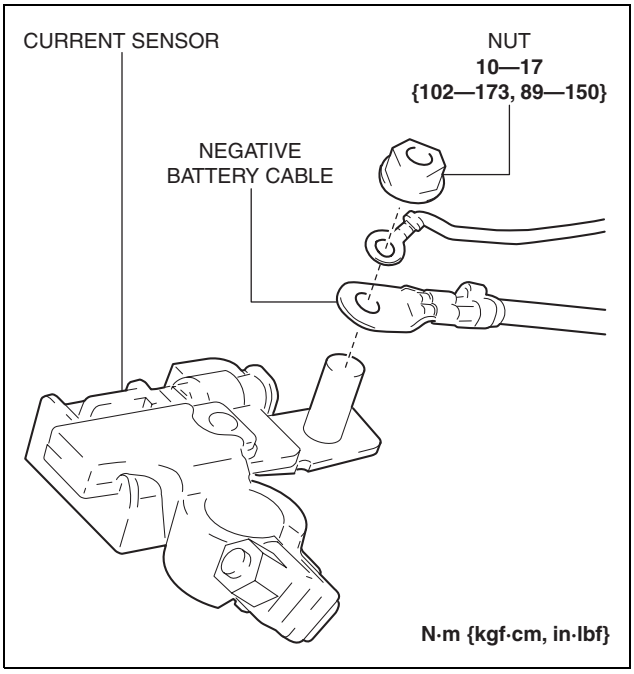

ac5wzw0000398

CONTROL SYSTEM [SKYACTIV-G 2.0]

CURRENT SENSOR INSPECTION [SKYACTIV-G 2.0]

id0140f4805300

DTC Inspection

1. Connect the M-MDS to the DLC-2.
2. Perform the DTC inspection using the M-MDS. (See 01-02-8 ON-BOARD DIAGNOSTIC TEST [SKYACTIV-G 2.0].)
   - If any DTC related to the current sensor is present, repair the malfunctioning location according to the applicable DTC troubleshooting. (See 01-02-14 DTC TABLE [SKYACTIV-G 2.0].)

Visual Inspection

1. Disconnect the current sensor connector.
2. Disconnect the negative battery cable. (See 01-17A-11 NEGATIVE BATTERY CABLE DISCONNECTION/CONNECTION [SKYACTIV-G 2.0].)
3. Remove the current sensor. (See 01-40-65 CURRENT SENSOR REMOVAL/INSTALLATION [SKYACTIV-G 2.0].)
4. Verify that there is no damage to the current sensor, and no corrosion and damage to the connector.
   - If there is a malfunction, replace the current sensor. (See 01-40-65 CURRENT SENSOR REMOVAL/INSTALLATION [SKYACTIV-G 2.0].)

i-stop OFF SWITCH REMOVAL/INSTALLATION [SKYACTIV-G 2.0]

id0140f4888800

Note

- The i-stop OFF switch is integrated with the cluster switch.
- For the cluster switch removal/installation, refer to “SWITCH PANEL REMOVAL/INSTALLATION” because the cluster switch is installed to the switch panel. (See 09-17-18 SWITCH PANEL REMOVAL/INSTALLATION.)

i-stop OFF SWITCH INSPECTION [SKYACTIV-G 2.0]

id0140f4888900

1. Disconnect the negative battery cable. (See 01-17A-11 NEGATIVE BATTERY CABLE DISCONNECTION/CONNECTION [SKYACTIV-G 2.0].)
2. Remove the switch panel. (See 09-17-18 SWITCH PANEL REMOVAL/INSTALLATION.)
3. Verify that the resistance between cluster switch terminals B and C is as indicated in the table.

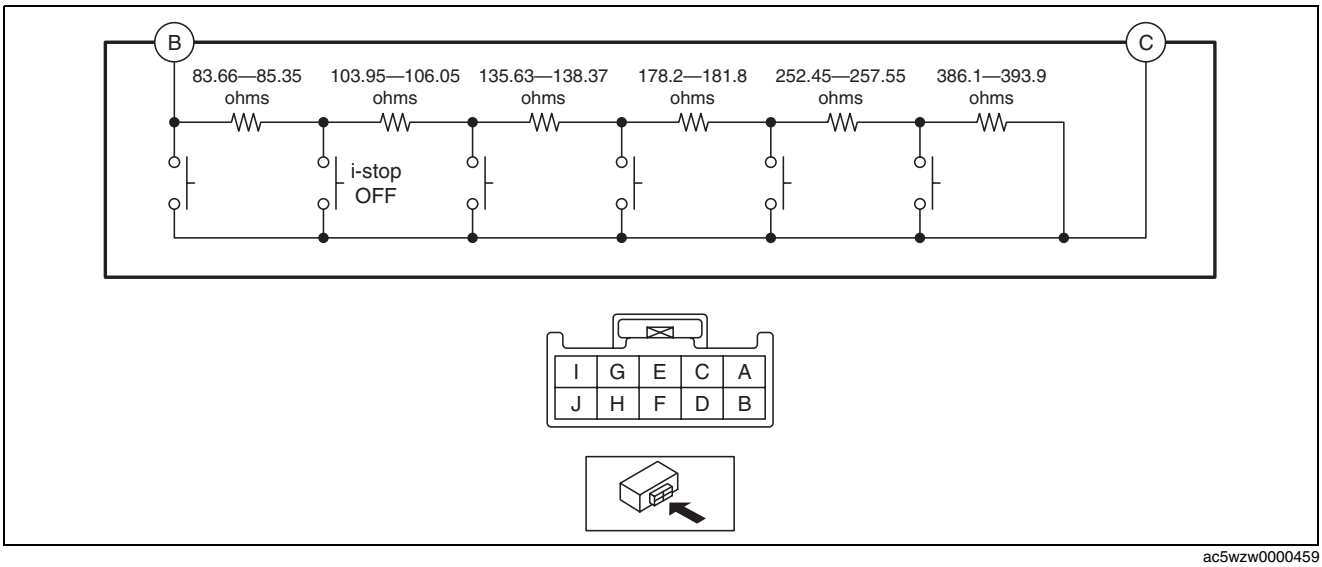

ac5wzw0000459

CONTROL SYSTEM [SKYACTIV-G 2.0]

- If the resistance can be verified as indicated in the table, go to the next step.
- If not as indicated in the table, replace the cluster switch.

Test condition	Resistance (ohms)
i-stop OFF switch pressed	83.66—85.35
All switches released	1,139.99—1,163.02

ac5wzw0000459

4. Apply battery positive voltage to cluster switch terminal J, and connect terminal I to ground.
5. Verify that the LED illuminates.
   - If the LED does not illuminate, replace the cluster switch.

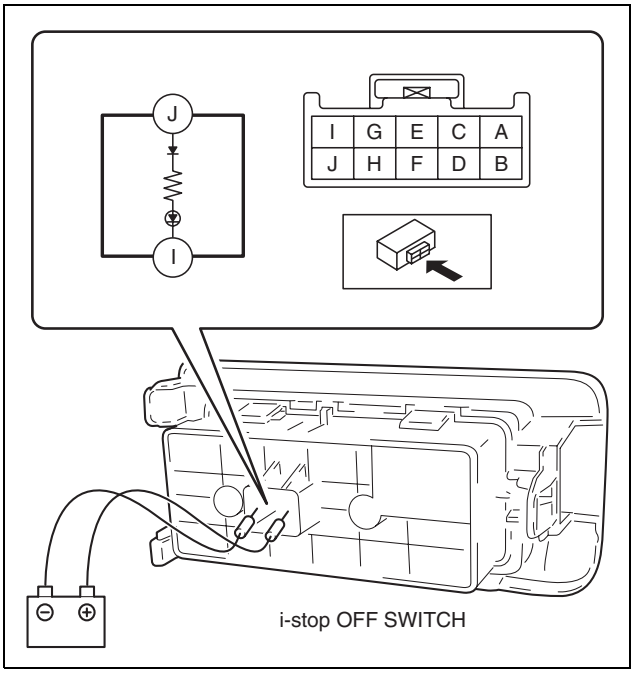

ac5wzw0000460

CLUTCH STROKE SENSOR INSPECTION [SKYACTIV-G 2.0]

id0140f4889000

Note
- The clutch stroke sensor cannot be removed as a single unit. When replacing the clutch stroke sensor, replace it together with the clutch master cylinder as a single unit.

1. Connect the M-MDS to the DLC-2.
2. Switch the ignition to ON.
3. Verify that the clutch stroke sensor output voltage (PID: CPP) within the specification. (See 01-02-8 ON-BOARD DIAGNOSTIC TEST [SKYACTIV-G 2.0].) (See 01-40-17 PCM INSPECTION [SKYACTIV-G 2.0].)
   - If not as specified, replace the clutch master cylinder. (See 05-10A-17 CLUTCH MASTER CYLINDER REMOVAL/INSTALLATION [C66M-R, C66MX-R].)

CONTROL SYSTEM [SKYACTIV-G 2.0]

POWER BRAKE UNIT VACUUM SENSOR INSPECTION [SKYACTIV-G 2.0]

id0140f4889400

Voltage Inspection

1. Connect the M-MDS to the DLC-2.
2. Switch the ignition ON (engine off or on).
3. Verify that the power brake unit vacuum sensor output voltage (PID: BBP) is within the specification. (See 01-02-8 ON-BOARD DIAGNOSTIC TEST [SKYACTIV-G 2.0].) (See 01-40-17 PCM INSPECTION [SKYACTIV-G 2.0].)
   - If not as specified, replace the power brake unit vacuum sensor. (See 04-11-19 POWER BRAKE UNIT VACUUM SENSOR REMOVAL/INSTALLATION.)

Specification

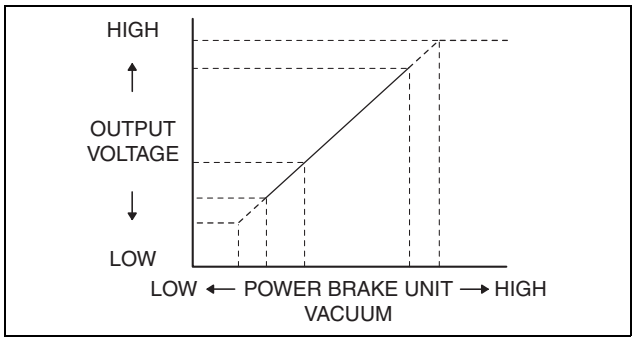

am3zzw0001258

ION SENSOR REMOVAL/INSTALLATION [SKYACTIV-G 2.0]

id0140f4954600

Note

- Because the ion sensor is integrated in the ignition coil, replacing the ion sensor includes replacement of the ignition coil/ion sensor.

1. Remove the ignition coil/ion sensor. (See 01-18-2 IGNITION COIL/ION SENSOR REMOVAL/INSTALLATION [SKYACTIV-G 2.0].)

ION SENSOR INSPECTION [SKYACTIV-G 2.0]

id0140f4954700

DTC Inspection

1. Connect the M-MDS to the DLC-2.
2. Perform the DTC inspection using the M-MDS. (See 01-02-8 ON-BOARD DIAGNOSTIC TEST [SKYACTIV-G 2.0].)
   - If any DTC related to the ignition coil/ion sensor is present, repair the malfunctioning location according to the applicable DTC troubleshooting. (See 01-02-14 DTC TABLE [SKYACTIV-G 2.0].)

Visual Inspection

Note

- Because the ion sensor is integrated in the ignition coil, replacing the ion sensor includes replacement of the ignition coil/ion sensor.

1. Disconnect the negative battery cable. (See 01-17A-11 NEGATIVE BATTERY CABLE DISCONNECTION/CONNECTION [SKYACTIV-G 2.0].) (See 01-17A-13 NEGATIVE BATTERY CABLE DISCONNECTION/CONNECTION [SKYACTIV-G 2.0 (WITHOUT i-stop)].)
2. Remove the plug hole plate. (See 01-10A-6 PLUG HOLE PLATE REMOVAL/INSTALLATION [SKYACTIV-G 2.0].)
3. Remove the ignition coil/ion sensor. (See 01-18-2 IGNITION COIL/ION SENSOR REMOVAL/INSTALLATION [SKYACTIV-G 2.0].)
4. Verify that there is no damage to the ignition coil/ion sensor, and no corrosion and damage to the connector.
   - If there is a malfunction, replace the ignition coil/ion sensor. (See 01-18-2 IGNITION COIL/ION SENSOR REMOVAL/INSTALLATION [SKYACTIV-G 2.0].)

01-50A TECHNICAL DATA [SKYACTIV-G 2.0]

ENGINE TECHNICAL DATA
[SKYACTIV-G 2.0] 01-50A–1

TECHNICAL DATA [SKYACTIV-G 2.0]

ENGINE TECHNICAL DATA [SKYACTIV-G 2.0]

id0150f5800100

Item	Specification
Idle speed (MTX: Neutral Position, ATX: P, N position)	MTX: 500—600 rpm ATX: 550—650 rpm
Ignition timing	Approx. BTDC 14°
CO concentration	Within the regulation
HC concentration	Within the regulation
Idle-up speed (MTX: Neutral Position, ATX: P, N position)	A/C on: 650—800 rpm Electrical loads on: 600—750 rpm
Compression [European (L.H.D. U.K.) specs.]	Standard: 978 kPa {9.97 kgf/cm^2, 142 psi}[300 rpm] Minimum: 783 kPa {7.98 kgf/cm^2, 114 psi}[300 rpm] Maximum difference between cylinders: 166 kPa {1.69 kgf/cm^2, 24.1 psi}
Compression [Except European (L.H.D. U.K.) specs.]	Standard: 885 kPa {9.02 kgf/cm^2, 128 psi}[300 rpm] Minimum: 708 kPa {7.22 kgf/cm^2, 103 psi}[300 rpm] Maximum difference between cylinders: 150 kPa {1.53 kgf/cm^2, 21.8 psi}
OCV coil resistance	6.9—7.5 ohms [20°C {68°F}]
Cylinder head bolt length L	145.2—145.8 mm {5.717—5.740 in}
Cylinder head bolt length L maximum	146.5 mm {5.767 in}
Front oil seal press-in amount	0—0.5 mm {0—0.019 in}
Rear oil seal press-in amount	0—0.5 mm {0—0.019 in}
Engine oil capacity [Without oil cooler] (approx. quantity)	Oil replacement: 4.0 L {4.2 US qt, 3.5 Imp qt} Oil and oil filter replacement: 4.2 L {4.4 US qt, 3.7 Imp qt} Total (dry engine): 4.9 L {5.2 US qt, 4.3 Imp qt}
Engine oil capacity [With oil cooler] (approx. quantity)	Oil replacement: 4.0 L {4.2 US qt, 3.5 Imp qt} Oil and oil filter replacement: 4.2 L {4.4 US qt, 3.7 Imp qt} Total (dry engine): 5.0 L {5.3 US qt, 4.4 Imp qt}
Oil pressure (reference value) [coolant temperature: 80—90 °C {176—194 °F}]	Lo: 110—175 kPa {1.13—1.78 kgf/cm^2, 16.0—25.3 psi} [1,500 rpm] Hi: 300—430 kPa {3.06—4.38 kgf/cm^2, 43.6—62.3 psi} [4,500 rpm]
Engine coolant capacity [European (L.H.D.) specs.] (approx. quantity)	ATX: 7.6 L {8.0 US qt, 6.7 Imp qt} MTX: 7.4 L {7.8 US qt, 6.5 Imp qt}
Engine coolant capacity [European (U.K.) specs.] (approx. quantity)	7.4 L {7.8 US qt, 6.5 Imp qt}
Engine coolant capacity [General (R.H.D.) specs.] (approx. quantity)	ATX: 7.4 L {7.8 US qt, 6.5 Imp qt} MTX: 7.1 L {7.5 US qt, 6.2 Imp qt}
Engine coolant capacity [Israel, China] (approx. quantity)	7.5 L {7.9 US qt, 6.6 Imp qt}
Engine coolant capacity [Saudi] (approx. quantity)	7.8 L {8.2 US qt, 6.9 Imp qt}
Engine coolant capacity [Except European (L.H.D. U.K.) specs., General (R.H.D.) specs., Israel, Saudi, China] (approx. quantity)	ATX: 7.5 L {7.9 US qt, 6.6 Imp qt} MTX: 7.3 L {7.7 US qt, 6.4 Imp qt}
Cooling system cap valve opening pressure	93.2—122.6 kPa {0.951—1.250 kgf/cm^2, 13.6—17.7 psi}
Thermostat initial-opening temperature	80.5—83.5 °C {177—182 °F}
Thermostat full-open temperature	95 °C {203 °F}
Thermostat full-open lift	8.5 mm {0.33 in} or more
Fuel pressure	405—485 kPa {4.13—4.94 kgf/cm^2, 58.8—70.3 psi}
Fuel hold pressure	230 kPa {2.35 kgf/cm^2, 33.4 psi} or more
Fuel injector resistance	1.74—2.04 ohms [20 °C {68 °F}]
Battery parasitic draw (When the ignition is off (key is removed), all doors and the bonnet are closed.)	40—65 mA

TECHNICAL DATA [SKYACTIV-G 2.0]

Item	Specification
Battery electrolyte specific gravity [20 °C {68 °F}] (Vehicle without i-stop)	1.22—1.29
Battery load test current (Vehicle without i-stop)	55D23L (48): 180 A 75D23L (52): 195 A
Battery slow charge current (Vehicle without i-stop)	55D23L (48): 4.5—5.5 A 75D23L (52): 5.0—6.0 A
Battery quick charge current [30 min] (Vehicle without i-stop)	55D23L (48): 30 A 75D23L (52): 35 A
Generator standard voltage [IG-ON]	Terminal B: B+ Terminal P: Approx. 1 V or less Terminal D: Approx. 0 V
Generator standard voltage [Idle, 20 °C {68 °F}]	Terminal B: 13—15 V Terminal P: Approx. 3—8 V Terminal D: Turn the electrical loads (headlights, blower motor, rear window defroster, brake lights, etc.) on and verify that the voltage reading increases.
Generator generated current minimum value (Vehicle without i-stop)	70% of the nominal output current (nominal output current: 100 A) [Ambient temp. 20 °C {68 °F}, voltage 13.0—15.0 V, both engine and generator are hot]
Generator rotor resistance (between slip rings) [20 °C {68 °F}]	1.8—2.1 ohms
Generator brush length	Standard: 22.5 mm {0.886 in} Minimum: 5.0 mm {0.20 in}
Generator brush spring force	Standard: 4.1—5.3 N {0.42—0.54 kgf, 1.0—1.1 lbf} Minimum: 1.7 N {0.17 kgf, 0.38 lbf}
Firing order	1-3-4-2 (all cylinders independent firing) 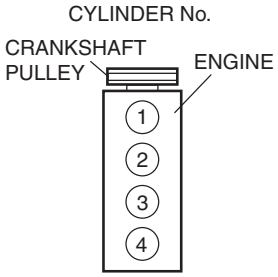
Spark plug type	PE01-18-110, PE02-18-110
Spark plug gap	Standard: 0.75—1.10 mm {0.030—0.043 in} New spark plug (reference): 0.75—0.85 mm {0.030—0.033 in}
Spark plug resistance [25°C {77 °F}]	3.0—7.5 kilohms
Starter no-load test voltage	11 V
Starter no-load test current	Vehicle with i-stop: 90 A or less Vehicle without i-stop: 95 A or less
Starter pinion gap (Vehicle Without i-stop)	0.5—2.0 mm {0.02—0.07 in}
Starter armature runout (Vehicle without i-stop)	0.1 mm {0.004 in} max.
Starter commutator diameter (Vehicle without i-stop)	Standard: 29.4 mm {1.16 in} Minimum: 28.8 mm {1.13 in}
Segment groove depth of starter commutator (Vehicle without i-stop)	Standard: 0.5 mm {0.02 in} Minimum: 0.2 mm {0.008 in}
Starter brush length (Vehicle without i-stop)	Standard: 12.3 mm {0.484 in} Minimum: 5.5 mm {0.22 in}
Starter brush spring force (Vehicle without i-stop)	Standard: 15.1—20.4 N {1.54—2.08 kgf, 3.40—4.58 lbf} Minimum: 2.75 N {0.280 kgf, 0.618 lbf}

TECHNICAL DATA [SKYACTIV-G 2.0]

Engine oil [Europe]

Recommended engine oil		Alternative engine oil	
Mazda Original Oil Supra 0W-20	Mazda Original Oil Ultra 5W-30	API SM/SN 0W-20	API SL/SM or ACEA A3/A5 5W-30

Engine oil [Except Europe]

Item	Specifications
Grade	API SG/SH/SJ/SL/SM/SN or ILSAC GF-2/GF-3/GF-4/GF-5
Viscosity (SAE)	10W-30, 10W-40, 10W-50, 5W-20, 5W-30, 5W-40, 0W-20, 0W-30*1

*1 : Except China

Generator generated current (reference value) [Ambient temperature: 20 °C {68 °F}, Engine hot] (Vehicle with i-stop)

Engine speed (rpm)	Terminal B voltage (V)	Generator output current (A)
1,000	13	83
1,000	15	83
2,000	13	98
2,000	15	105

* Field coil current control signal 100%

01-50B TECHNICAL DATA [SKYACTIV-D 2.2]

ENGINE TECHNICAL DATA
[SKYACTIV-D 2.2] 01-50B–1

TECHNICAL DATA [SKYACTIV-D 2.2]

ENGINE TECHNICAL DATA [SKYACTIV-D 2.2]

id0150f6800100

Item	Specification
Difference between target idle speed and the engine speed	Within 50 rpm
Target idle speed (reference)	[MTX] Normal: 750 rpm DPF auto regeneration: 775 rpm Injector learning: 775 rpm [ATX] Normal: 800 rpm DPF auto regeneration: 800 rpm Injector learning: 775 rpm
Compression	Standard: 2255 kPa {22.99 kgf/cm^2, 327.1 psi}[180 rpm] Minimum: 1804 kPa {18.40 kgf/cm^2, 261.6 psi}[180 rpm] Maximum difference between cylinders: 147 kPa {1.50 kgf/cm^2, 21.3 psi} [180 rpm]
OCV coil resistance	6.9—7.9 ohms [20 °C {68 °F}]
Cylinder head bolt length L	L: 169.2—169.8 mm {6.662—6.685 in}
Cylinder head bolt length L maximum	L: 170.5 mm {6.713 in}
Front oil seal press-in amount	0—0.5 mm {0—0.019 in}
Rear oil seal press-in amount	0—0.5 mm {0—0.019 in}
Engine oil capacity (approx. quantity)	Oil replacement: 4.8 L {5.1 US qt, 4.2 Imp qt} Oil and oil filter replacement: 5.1 L {5.4 US qt, 4.5 Imp qt} Total (dry engine): 6.0 L {6.3 US qt, 5.3 Imp qt}
Oil pressure (reference value) [oil temperature: 80—90 °C {176—194 °F}, coolant temperature: 80—90 °C {176—194 °F}]	Lo: 140—190 kPa {1.43—1.93 kgf/cm^2, 20.4—27.5 psi} [1,500 rpm] Hi: 300—440 kPa {3.06—4.48 kgf/cm^2, 43.6—63.8 psi} [3,500 rpm]
Engine coolant capacity (approx. quantity)	European (L.H.D.) specs.: 8.9 L {9.4 US qt, 7.8 Imp qt} European (R.H.D.) specs.: 9.1 L {9.6 US qt, 8.0 Imp qt} Except European specs.: 9.2 L {9.7 US qt, 8.1 Imp qt}
Cooling system cap valve opening pressure	93.2—122.6 kPa {0.951—1.250 kgf/cm^2, 13.6—17.7 psi}
Thermostat initial-opening temperature	80—84 °C {176—183 °F}
Thermostat full-open temperature	95 °C {203 °F}
Thermostat full-open lift	8.5 mm {0.33 in} or more
Cooling fan motor No.1, No.2 standard current	15—21 A [12 V]
Glow plug resistance (specification)	Approx. 1.0 Ω [20 °C {68 °F}]
Compressor bypass solenoid valve resistance (specification)	30—34 ohms [20 °C {68 °F}]
Regulating solenoid valve resistance (specification)	9.8—11.2 ohms [20 °C {68 °F}]
Wastegate solenoid valve resistance (specification)	9.8—11.2 ohms [20 °C {68 °F}]
Fuel injector resistance (specification)	0.9—1.1 Megohms [20 °C {68 °F}]
Fuel pressure limiter valve resistance (specification)	0.96—1.16 ohms [20 °C {68 °F}]
Suction control valve resistance (specification)	Approx. 2.1 ohms [20 °C {68 °F}]
Fuel warmer resistance (specification)	Approx. 0.5—2.0 ohms
EGR valve resistance (specification)	0.3—100 Ω [20 °C {68 °F}]
EGR cooler bypass valve resistance (specification)	1.45—2.95 Ω [20 °C {68 °F}]
Intake shutter valve resistance (specification)	0.3—100 ohms [20 °C {68 °F}]
Battery parasitic draw (When the ignition is off (key is removed), all doors and the hood are closed.)	40—65 mA
Generator standard voltage [IG-ON]	Terminal B: B+ Terminal P: Approx. 1 V or less Terminal D: Approx. 0 V

TECHNICAL DATA [SKYACTIV-D 2.2]

Item	Specification
Generator standard voltage [Idle, 20 °C {68 °F}]	Terminal B: 13—15 V Terminal P: Approx. 3—8 V Terminal D: Turn the electrical loads (headlights, blower motor, rear window defroster, brake lights, etc.) on and verify that the voltage reading increases.
Generator rotor resistance (between slip rings) [20 °C {68 °F}]	1.8—2.1 ohms
Generator brush length	Standard: 22.5 mm {0.886 in} Minimum: 5.0 mm {0.20 in}
Generator brush spring force	Standard: 4.1—5.3 N {0.42—0.54 kgf, 1.0—1.1 lbf} Minimum: 1.7 N {0.17 kgf, 0.38 lbf}
Starter no-load test voltage	11 V
Starter no-load test current	90 A or less

Engine oil [Europe]

Recommended engine oil		Alternative engine oil
Mazda Original Oil Supra DPF 0W-30	Mazda Original Oil Ultra DPF 5W-30	ACEA C3 0W-30, 5W-30

Engine oil [Except Europe]

Item	Specifications	
Grade	ACEA C3	ACEA C1 or JASO DL-1
Viscosity (SAE)	0W-30, 5W-30	5W-30

Generator generated current (reference value) [Ambient temperature: 20 °C {68 °F}, Engine hot]

Engine speed (rpm)	Terminal B voltage (V)	Generator output current (A)
1,000	13	125
1,000	15	128
2,000	13	148
2,000	15	163

* Field coil current control signal 100%

01-60A SERVICE TOOLS [SKYACTIV-G 2.0]

ENGINE SST [SKYACTIV-G 2.0]. 01-60A–1

SERVICE TOOLS [SKYACTIV-G 2.0]

ENGINE SST [SKYACTIV-G 2.0]

id0160s0119200

1: Mazda SST number
2: Global SST number
Example

1:49 UN20 5072 2:205–072 Holder	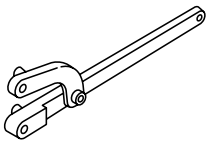

1: 49 UN20 5072 2: 205–072 Holder	1: 49 B011 105 2: – Adapter	1: 49 E033 101 2: – Dust cover installer
1: 49 UN30 3050 2: 303–050 Engine lifting bracket	1: 49 C017 5A0 2: – Engine support set	1: 49 L017 5A0 2: – Support hanger
1: 49 G028 205 2: – Oil seal installer	1: 49 D019 908 2: – Gauge (Part of 49 D019 9A2)	1: 49 D019 909 2: – Hose (Part of 49 D019 9A2)
1: 49 D019 910 2: – Adapter (Part of 49 D019 9A2)	1: 49 D019 911 2: – Adapter (Part of 49 D019 9A2)	1: 49 N013 1A0D 2: – Fuel pressure gauge set
1: 49 D013 1A0 2: – Injector seal installer set	1:49 D015 001 2:– Box wrench	1:49 L018 001 2:– O2 sensor wrench

01-60B SERVICE TOOLS [SKYACTIV-D 2.2]

ENGINE SST [SKYACTIV-D 2.2]. 01-60B–1

SERVICE TOOLS [SKYACTIV-D 2.2]

ENGINE SST [SKYACTIV-D 2.2]

id0160r9119200

1: Mazda SST number
2: Global SST number
Example

1: 49 UN30 3050 2: 303–050 Engine lifting bracket	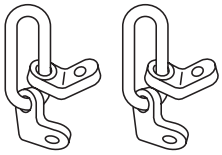

1: 49 UN30 3050 2: 303–050 Engine lifting bracket	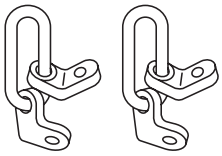	1: 49 C017 5A0 2: – Engine support set	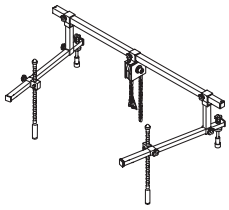	1: 49 L017 5A0 2: – Support hanger	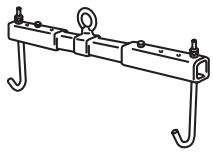
1: 49 U027 003 2: – Oil seal installer	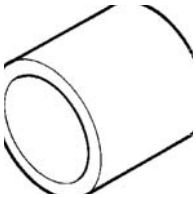	1: 49 S120 710 2: – Coupling flange holder	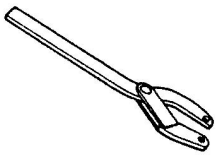	1: 49 S010 1A0A 2: – Compression gauge set	
1: 49 S013 102A 2: – Adapter	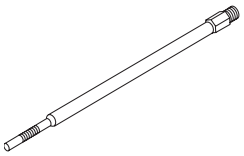	1: 49 G033 107A 2: – Dust cover installer	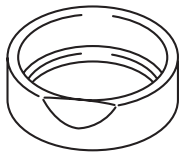	1: 49 D019 908 2: – Gauge (Part of 49 D019 9A2)	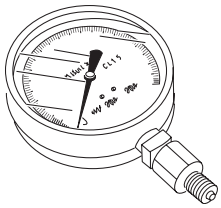
1: 49 D019 909 2: – Hose (Part of 49 D019 9A2)	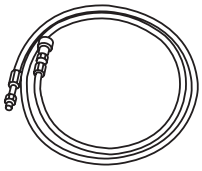	1: 49 D019 910 2: – Adapter (Part of 49 D019 9A2)	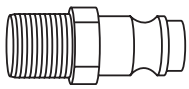	1: 49 D019 911 2: – Adapter (Part of 49 D019 9A2)	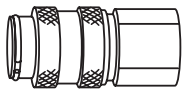
1:49 L018 002 2:– Serrated bit	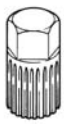	1:49 D015 001 2:– Box wrench	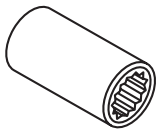	1:49 L018 001 2:– O2 sensor wrench	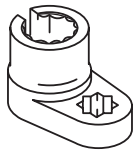
1:49 JE02 050 2:310–110 Hand pressure pump set	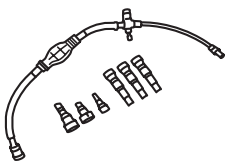	—		—	

SUSPENSION

02
SECTION

ON-BOARD DIAGNOSTIC. . . . 02-02
SYMPTOM
TROUBLESHOOTING. 02-03
GENERAL PROCEDURES . . . 02-10
WHEEL ALIGNMENT 02-11
WHEEL AND TIRES 02-12
FRONT SUSPENSION 02-13
REAR SUSPENSION 02-14
TECHNICAL DATA 02-50
SERVICE TOOLS 02-60

02-02 ON-BOARD DIAGNOSTIC

TIRE PRESSURE MONITORING SYSTEM (TPMS) WIRING DIAGRAM **02-02–2**
FOREWORD **02-02–3**
Troubleshooting Procedure **02-02–3**
Action for non-repeatable malfunction **02-02–4**
TIRE PRESSURE MONITORING SYSTEM (TPMS) ON-BOARD DIAGNOSIS **02-02–4**

ON-BOARD DIAGNOSTIC

TIRE PRESSURE MONITORING SYSTEM (TPMS) WIRING DIAGRAM

id020200800100

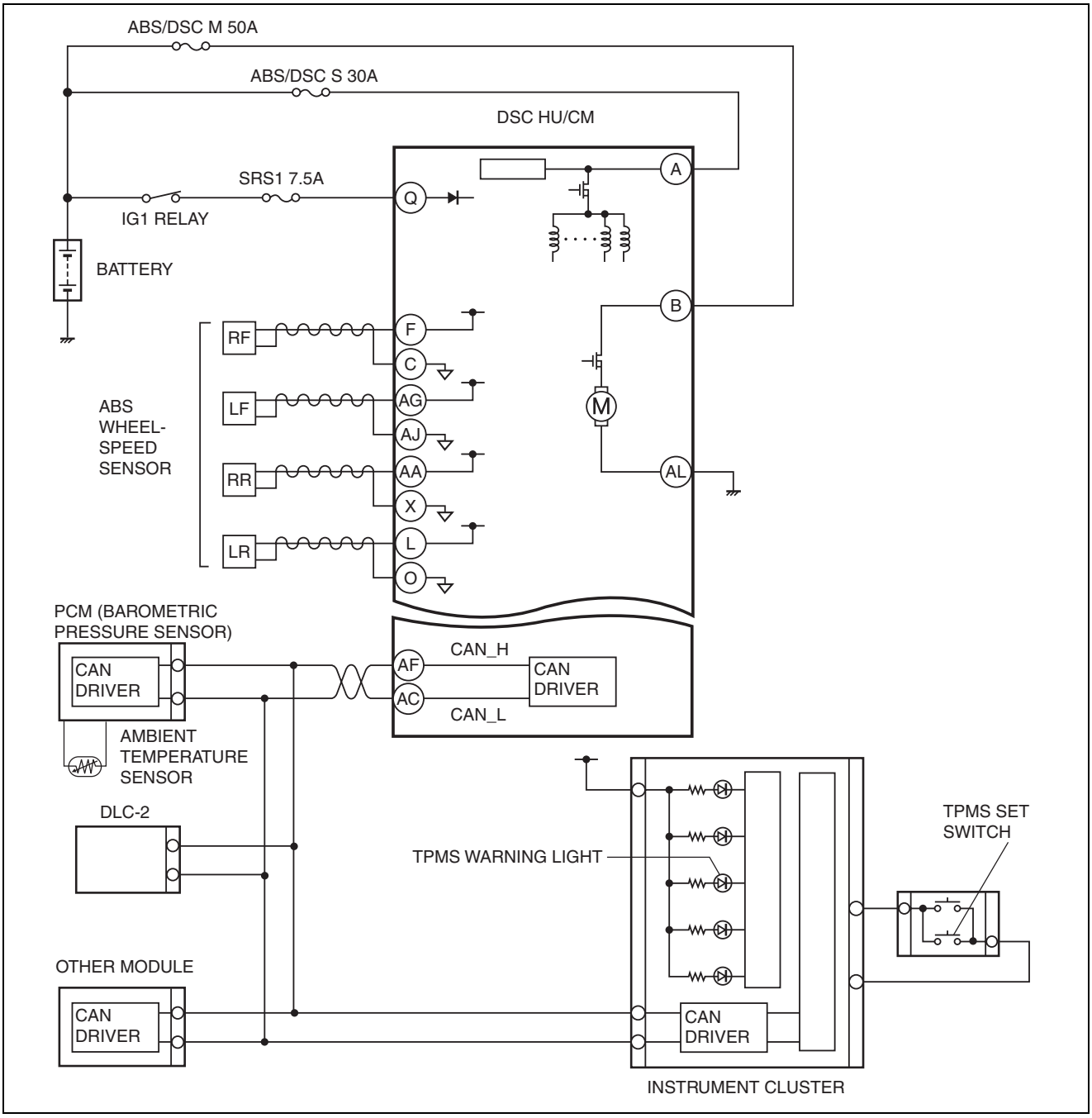

ac5wzw0000281

ON-BOARD DIAGNOSTIC

FOREWORD

id020200801700

- If there is any vehicle malfunction complaint lodged by a customer, perform malfunction diagnosis according to the troubleshooting procedure.

Troubleshooting Procedure

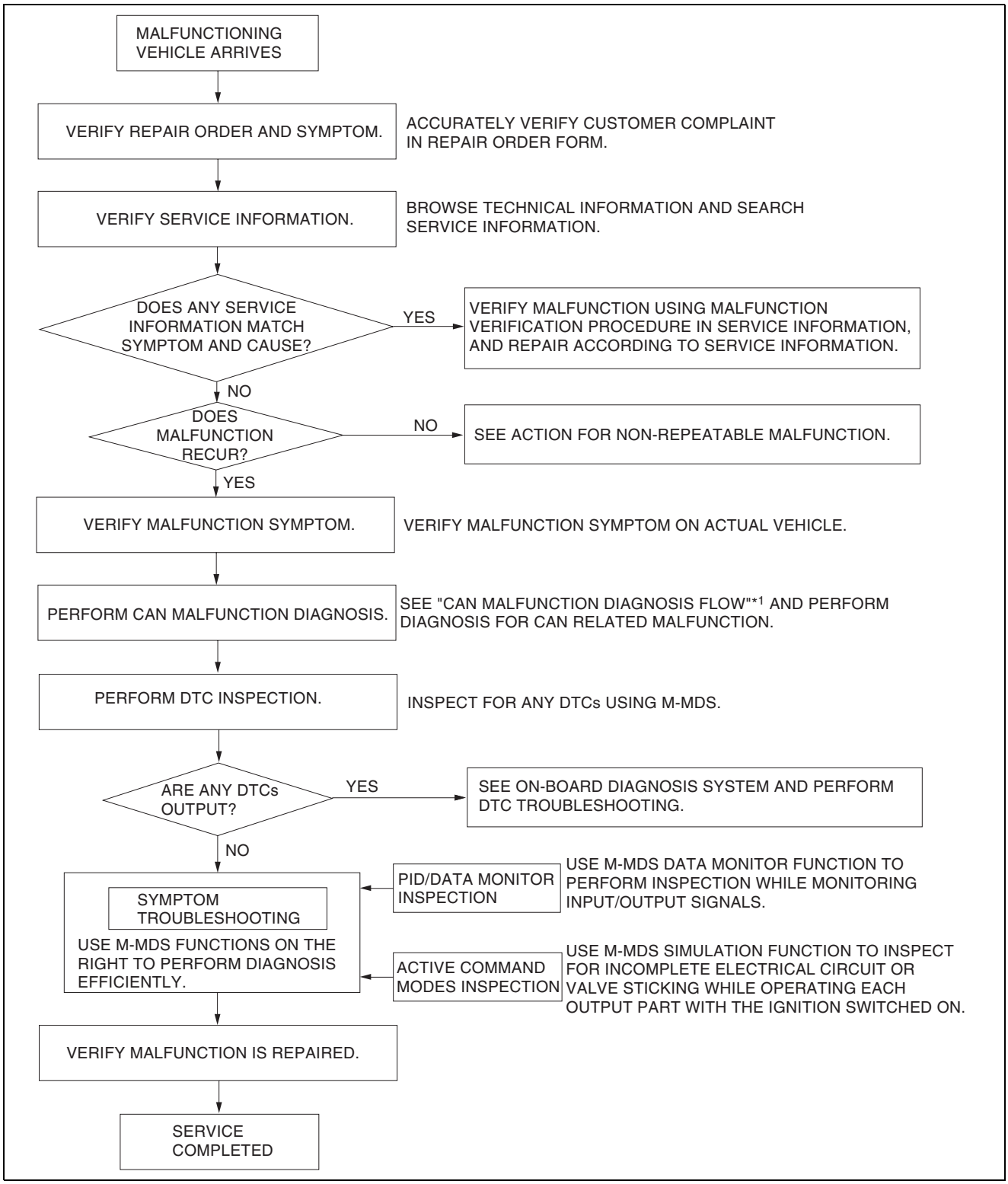

am3uuw0000731

ON-BOARD DIAGNOSTIC

*1 : 10-02A-3 CONTROLLER AREA NETWORK (CAN) MALFUNCTION DIAGNOSIS FLOW [SKYACTIV-G 2.0 (L.H.D.)]10-02B-3 CONTROLLER AREA NETWORK (CAN) MALFUNCTION DIAGNOSIS FLOW [SKYACTIV-G 2.0 (R.H.D.)]10-02C-3 CONTROLLER AREA NETWORK (CAN) MALFUNCTION DIAGNOSIS FLOW [SKYACTIV-D 2.2 (L.H.D.)]10-02D-3 CONTROLLER AREA NETWORK (CAN) MALFUNCTION DIAGNOSIS FLOW [SKYACTIV-D 2.2 (R.H.D.)]

Action for non-repeatable malfunction

- If the malfunction does not recur, verify the malfunction cause by performing the following actions:
  - — Based on the repair order form, attempt to drive the vehicle or perform tests to replicate the malfunction, record the data (such as CAN circuit voltage) at that time, and detect the malfunction cause.
  - — Refer to [Determining Open Circuit Location] based on the recorded DTC, shake the wiring harness or connector of the electrical component which is suspected to be the cause of the malfunction, and inspect for any changes in CAN system voltage or occurrence of any DTCs.

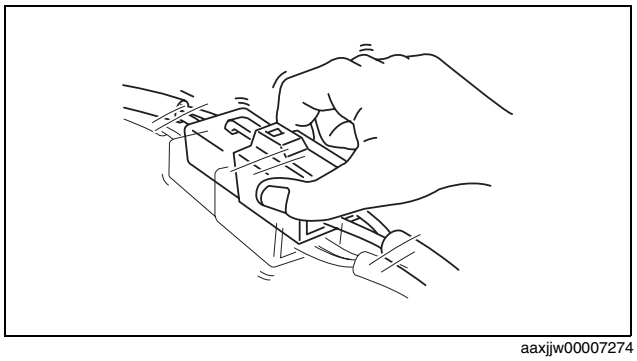

aaxjjw00007274

  - — Inspect the female terminals on the connector of the electric component which is suspected to be the cause of the malfunction for poor connection.

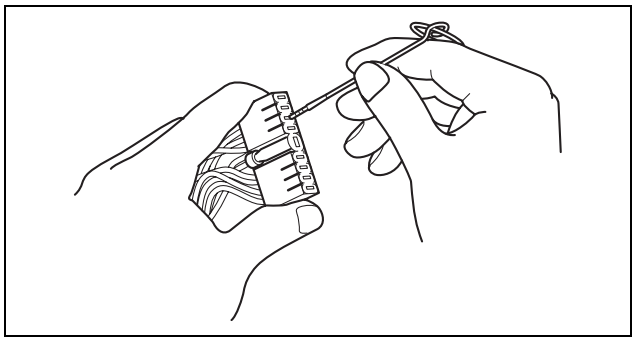

am3uuw0000750

TIRE PRESSURE MONITORING SYSTEM (TPMS) ON-BOARD DIAGNOSIS

id020200800200

- For the tire pressure monitoring system on-board diagnostic system, refer to Sec 04 as it is controlled by the DSC CM. (See 04-02A-7 ON-BOARD DIAGNOSIS [DYNAMIC STABILITY CONTROL (DSC)].)

02-03 SYMPTOM TROUBLESHOOTING

TIRE PRESSURE MONITORING SYSTEM (TPMS) WIRING DIAGRAM 02-03–1
FOREWORD 02-03–2
Troubleshooting Procedure 02-03–2
Action for non-repeatable malfunction. 02-03–3
SYMPTOM TROUBLESHOOTING 02-03–3
NO.1 TPMS WARNING LIGHT ILLUMINATES. 02-03–4
Possible malfunction 02-03–4
Diagnostic Procedure 02-03–4

SYMPTOM TROUBLESHOOTING

TIRE PRESSURE MONITORING SYSTEM (TPMS) WIRING DIAGRAM

id020300800100

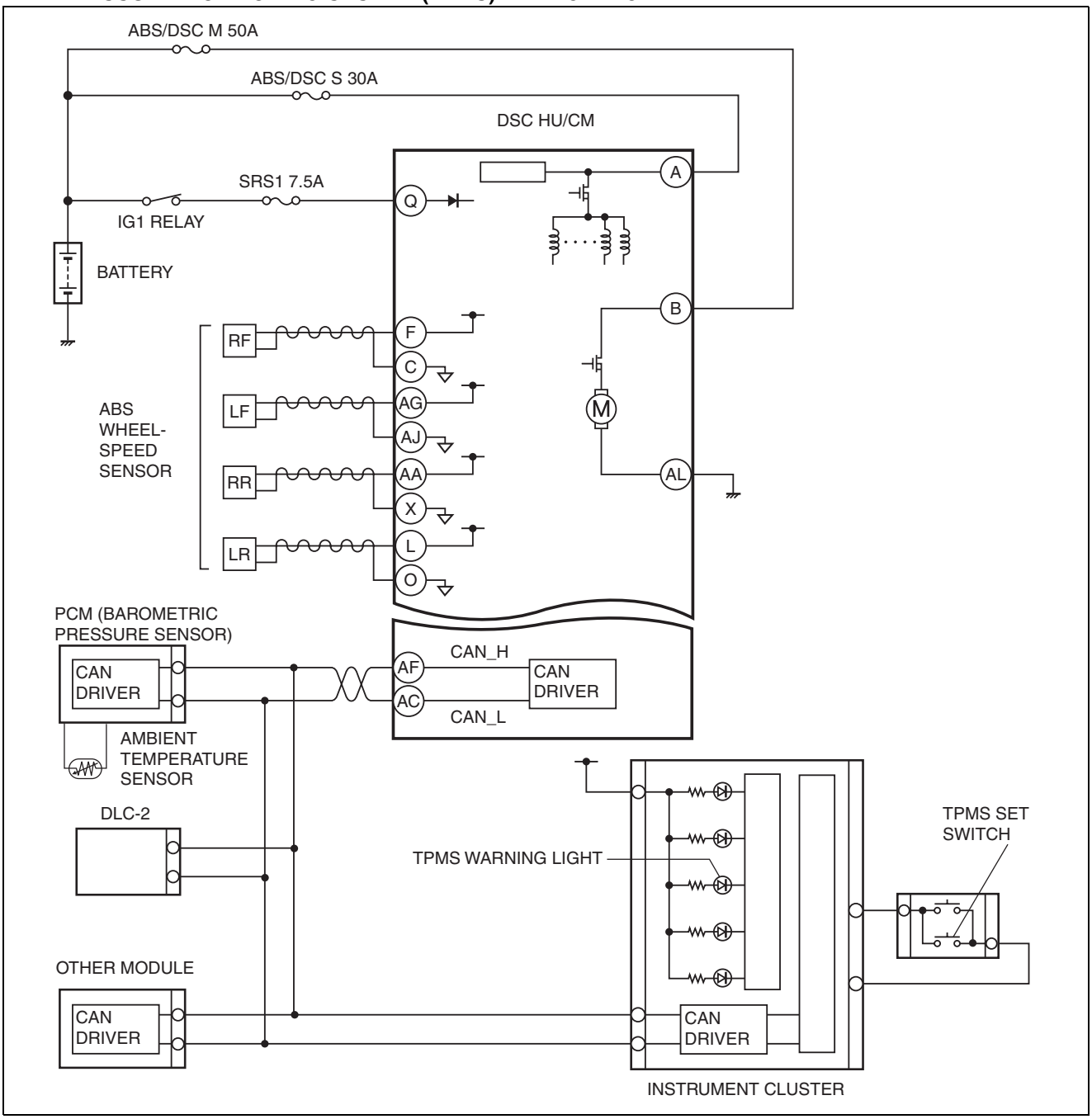

ac5wzw0000281

SYMPTOM TROUBLESHOOTING

FOREWORD

id020300800200

- If there is any vehicle malfunction complaint lodged by a customer, perform malfunction diagnosis according to the troubleshooting procedure.

Troubleshooting Procedure

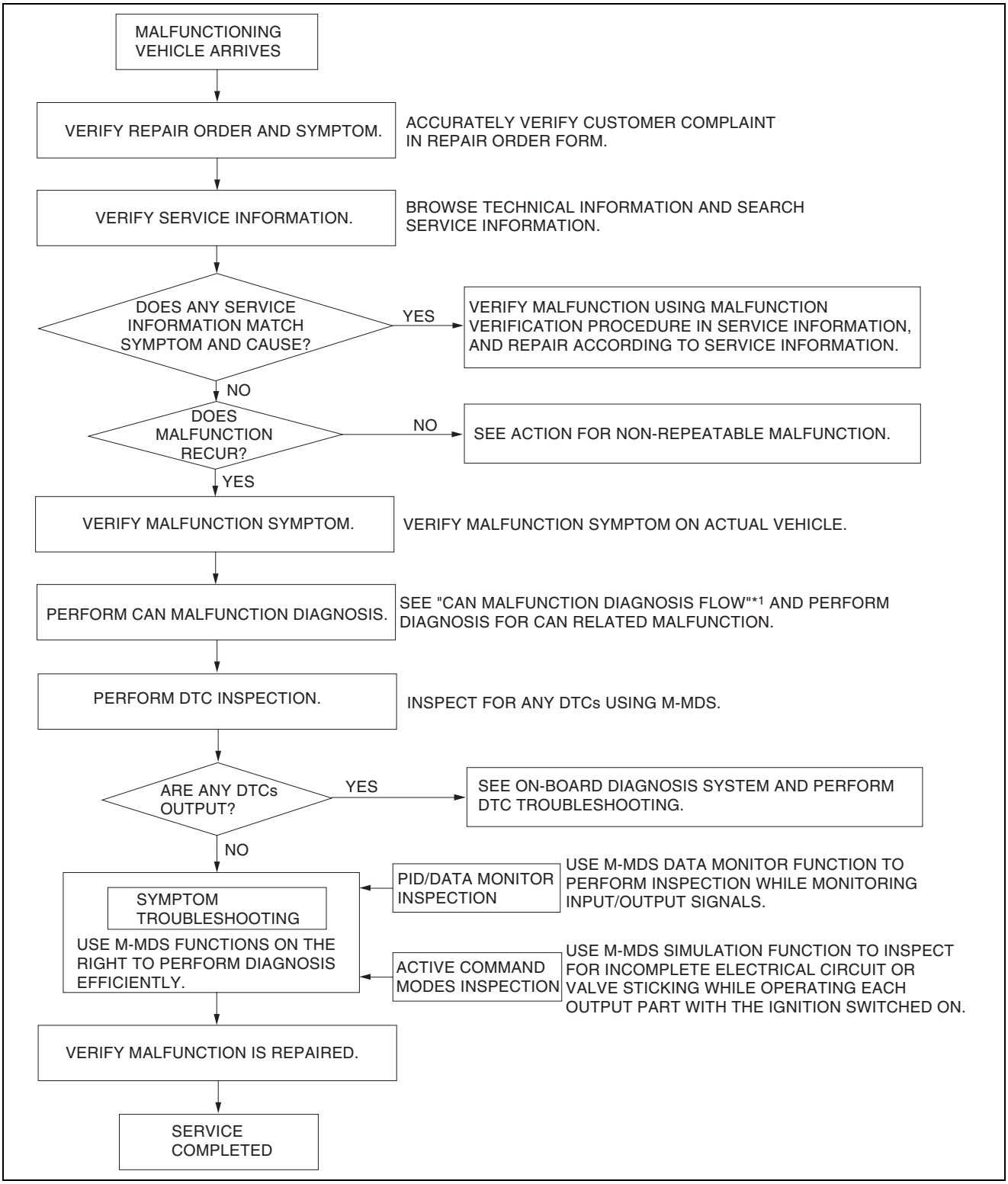

am3uuw0000731

SYMPTOM TROUBLESHOOTING

*1 : 10-02A-3 CONTROLLER AREA NETWORK (CAN) MALFUNCTION DIAGNOSIS FLOW [SKYACTIV-G 2.0 (L.H.D.)]10-02B-3 CONTROLLER AREA NETWORK (CAN) MALFUNCTION DIAGNOSIS FLOW [SKYACTIV-G 2.0 (R.H.D.)]10-02C-3 CONTROLLER AREA NETWORK (CAN) MALFUNCTION DIAGNOSIS FLOW [SKYACTIV-D 2.2 (L.H.D.)]10-02D-3 CONTROLLER AREA NETWORK (CAN) MALFUNCTION DIAGNOSIS FLOW [SKYACTIV-D 2.2 (R.H.D.)]

Action for non-repeatable malfunction

- If the malfunction does not recur, verify the malfunction cause by performing the following actions:
  - — Based on the repair order form, attempt to drive the vehicle or perform tests to replicate the malfunction, record the data (such as CAN circuit voltage) at that time, and detect the malfunction cause.
  - — Refer to [Determining Open Circuit Location] based on the recorded DTC, shake the wiring harness or connector of the electrical component which is suspected to be the cause of the malfunction, and inspect for any changes in CAN system voltage or occurrence of any DTCs.

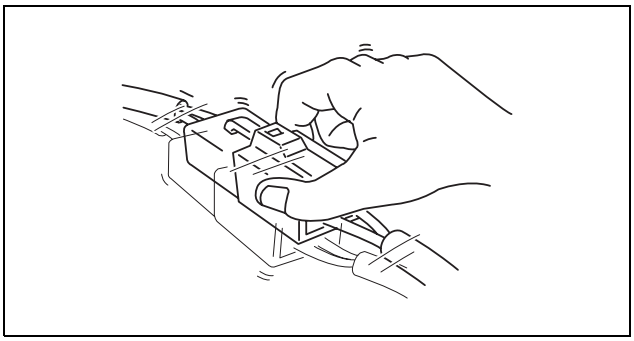

aaxjjw00007274

  - — Inspect the female terminals on the connector of the electric component which is suspected to be the cause of the malfunction for poor connection.

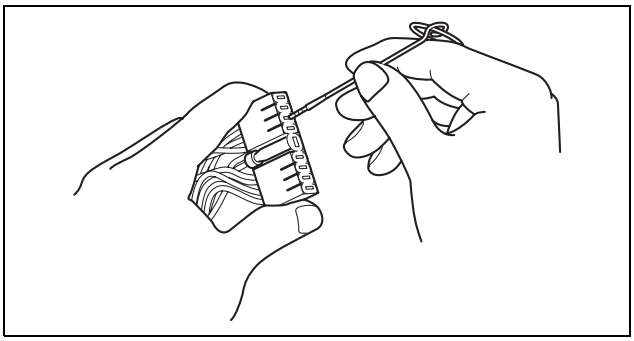

am3uuw0000750

SYMPTOM TROUBLESHOOTING

id020300800400

No.	Symptom	Description
1	TPMS warning light illuminates.	The tire pressure monitoring system warning light illuminates according to the decrease in a tire air pressure (tire pressure monitoring system is normal).

SYMPTOM TROUBLESHOOTING

NO.1 TPMS WARNING LIGHT ILLUMINATES

id020300101000

Caution

- **The tire pressure monitoring system warning light illuminates according to the decrease in a tire air pressure (tire pressure monitoring system is normal).**
- **The No.1 TPMS WARNING LIGHT ILLUMINATES the diagnostic procedure if the tire pressure monitoring system warning light illuminated due to a decrease in a tire pressure although the tire pressure monitoring system is normal.**

Possible malfunction

- The air pressure of a tire has decreased. (Tire pressure monitoring system normal)
- The tire pressure monitoring warning light illuminates based on mis-use prevention logic. (Tire pressure monitoring system normal)

Diagnostic Procedure

Step	Inspection	Results	Action
1	TIRE PRESSURE INSPECTION • Inspect tire pressures while the tires are cold. (See 02-12-1 WHEEL AND TIRE SPECIFICATION.) • Are the tire pressures at the specification?	Yes	Go to the next step.
		No	Adjust the tire pressures to the specification while the tires are cold.
2	TIRE PRESSURE MONITORING SYSTEM INITIALIZATION • Perform tire pressure monitoring system initialization. (See 02-12-4 TIRE PRESSURE MONITORING SYSTEM INITIALIZATION PROCEDURE.) • Was the tire pressure monitoring system initialization performed?	Yes	Go to the next step.
		No	Perform the tire pressure monitoring system initialization. (See 02-12-4 TIRE PRESSURE MONITORING SYSTEM INITIALIZATION PROCEDURE.)
3	VERIFY MIS-USE PREVENTION LOGIC (FIRST TIME) • Drive the vehicle for several minutes after the tire pressure monitoring warning light turns off. • Does the tire pressure monitoring warning light illuminate?	Yes	Go to the next step.
		No	The tire pressure monitoring system is normal.
4	TIRE PRESSURE MONITORING SYSTEM INITIALIZATION • Perform the tire pressure monitoring system initialization. (See 02-12-4 TIRE PRESSURE MONITORING SYSTEM INITIALIZATION PROCEDURE.) • Was the tire pressure monitoring system initialization performed?	Yes	Go to the next step.
		No	Perform the tire pressure monitoring system initialization. (See 02-12-4 TIRE PRESSURE MONITORING SYSTEM INITIALIZATION PROCEDURE.)
5	MIS-USE PREVENTION LOGIC VERIFICATION (SECOND TIME) • Drive the vehicle for several minutes after the tire pressure monitoring warning light turns off. • Does the tire pressure monitoring warning light illuminate?	Yes	Go to the next step.
		No	The tire pressure monitoring system is normal.
6	TIRE PRESSURE MONITORING SYSTEM INITIALIZATION • Perform the tire pressure monitoring system initialization. (See 02-12-4 TIRE PRESSURE MONITORING SYSTEM INITIALIZATION PROCEDURE.) • Was the tire pressure monitoring system initialization performed?	Yes	Go to the next step.
		No	Perform the tire pressure monitoring system initialization. (See 02-12-4 TIRE PRESSURE MONITORING SYSTEM INITIALIZATION PROCEDURE.)

SYMPTOM TROUBLESHOOTING

Step	Inspection	Results	Action
7	MIS-USE PREVENTION LOGIC VERIFICATION (THIRD TIME) • Drive the vehicle for several minutes after the tire pressure monitoring warning light turns off. • Does the tire pressure monitoring warning light illuminate?	Yes	Inspect the tires and wheels for air leakage.
		No	The tire pressure monitoring system is normal.

02-10 GENERAL PROCEDURES

GENERAL PROCEDURES (SUSPENSION) **02-10–1**
Wheel and Tire Installation **02-10–1**
Suspension Links Removal/Installation **02-10–1**
Connector Disconnection **02-10–1**
Headlight Auto Leveling System Initialization (Vehicle with discharge headlight system) **02-10–1**

GENERAL PROCEDURES

GENERAL PROCEDURES (SUSPENSION)

id021000800300

Wheel and Tire Installation

1. When installing the wheels and tires, tighten the wheel nuts in a criss-cross pattern to the following tightening torque.

   Tightening torque
   108—147 N·m {12—14 kgf·m, 80—108 ft·lbf}

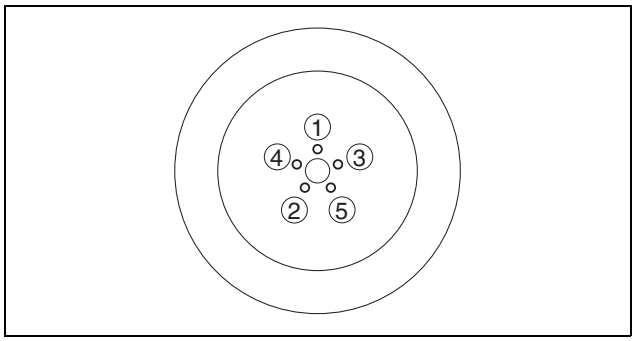

ac5wzw0000098

Suspension Links Removal/Installation

1. For the joint sections with rubber bushings, raise the vehicle using a lift, and then temporarily tighten the installation bolts and nuts. Lower the vehicle to the ground and tighten them to the specified tightening torque.

Connector Disconnection

1. Disconnect the negative battery cable before performing any work that requires handling of connectors. (See 01-17A-13 NEGATIVE BATTERY CABLE DISCONNECTION/CONNECTION [SKYACTIV-G 2.0 (WITHOUT i-stop)].) (See 01-17A-11 NEGATIVE BATTERY CABLE DISCONNECTION/CONNECTION [SKYACTIV-G 2.0].) (See 01-17B-9 NEGATIVE BATTERY CABLE DISCONNECTION/CONNECTION [SKYACTIV-D 2.2].)

Headlight Auto Leveling System Initialization (Vehicle with discharge headlight system)

1. Initialize the auto leveling sensor, when performing the following services. (See 09-18-82 HEADLIGHT AUTO LEVELING SYSTEM INITIALIZATION.)
   — Removing the auto leveling sensor
   — Disconnecting the auto leveling sensor link
   — Removing the suspension parts related the vehicle height

02-11 WHEEL ALIGNMENT

WHEEL ALIGNMENT
PRE-INSPECTION 02-11–1
FRONT WHEEL ALIGNMENT 02-11–1
Steering Angle Adjustment **02-11–2**
Total Toe-in Adjustment **02-11–2**
REAR WHEEL ALIGNMENT 02-11–3
Total Toe-in Adjustment **02-11–3**

WHEEL ALIGNMENT

WHEEL ALIGNMENT PRE-INSPECTION

id021100800100

1. Park the vehicle on level ground, in an unloaded condition*, with the wheels straight forward.
   *: Unloaded condition.....Fuel tank is full. Engine coolant and engine oil are at specified level. Spare tire, jack and tools are in designated position.
2. Inspect the tire pressure.
   - Adjust to the recommended pressure if necessary. (See 02-50-1 SUSPENSION TECHNICAL DATA.)
3. Inspect the wheel bearing play.
   - Correct if necessary. (See 03-11-2 WHEEL HUB, STEERING KNUCKLE INSPECTION.)
4. Inspect the wheel runout.
   - Correct if necessary. (See 02-50-1 SUSPENSION TECHNICAL DATA.)
5. Rock the vehicle, and verify that there is no looseness in the steering wheel joint and suspension ball joint.
6. Rock the vehicle, and verify that the shock absorber operates properly.
7. Measure height H from the center of the wheel to the fender brim.
8. Verify that the difference between the left and right dimension H is within the specification.
   - If it exceeds the specification, repeat the Step 2—7.

Standard specification
10 mm {0.39 in} or less

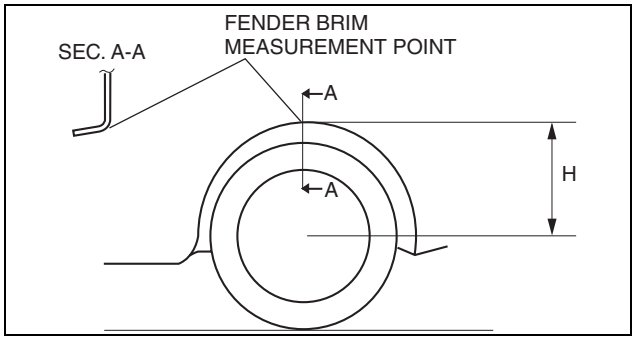

ac5wzw0000098

FRONT WHEEL ALIGNMENT

id021100800200

Front wheel alignment (Unloaded)*1 [SKYACTIV-G 2.0]

Item			Fuel gauge indication				
			Empty	1/4	1/2	3/4	Full
Maximum steering angle [Tolerance ±3°]		Inner	37°48′				
		Outer	30°54′				
Total toe-in	Tire [Tolerance ±4 {0.2}]	(mm {in})	2 {0.08}				
	Rim inner [Tolerance ±3 {0.1}]		1.0 {0.04}				
		(degree)	0°10′±0°20′				
Caster angle*2 (Reference value) [Tolerance ±1°]			6°19′	6°21′	6°24′	6°27′	6°29′
Camber angle*2 (Reference value) [Tolerance ±1°]			-0°20′	-0°21′	-0°21′	-0°21′	-0°22′
Steering axis inclination (Reference value)			11°57′	11°58′	11°59′	11°59′	12°00′

***1 : Engine coolant and engine oil are at specified level. Spare tire, jack and tools are in designated position.**
***2 : Difference between left and right must not exceed 1°30′.**

WHEEL ALIGNMENT

Front wheel alignment (Unloaded)*1 [SKYACTIV-D 2.2]

Item			Fuel gauge indication				
			Empty	1/4	1/2	3/4	Full
Maximum steering angle [Tolerance ±3°]		Inner	37°48′				
		Outer	30°54′				
Total toe-in	Tire [Tolerance ±4 {0.2}]	(mm {in})	2 {0.08}				
	Rim inner [Tolerance ±3 {0.1}]	(mm {in})	1.0 {0.04}				
		(degree)	0°10′±0°20′				
Caster angle*2 (Reference value) [Tolerance ±1°]			6°15′	6°17′	6°20′	6°23′	6°25′
Camber angle*2 (Reference value) [Tolerance ±1°]			-0°20′	-0°21′	-0°21′	-0°21′	-0°22′
Steering axis inclination (Reference value)			11°57′	11°58′	11°59′	11°59′	12°00′

***1 : Engine coolant and engine oil are at specified level. Spare tire, jack and tools are in designated position.**
***2 : Difference between left and right must not exceed 1°30′.**

Steering Angle Adjustment

1. Loosen the tie-rod end locknuts.
2. Remove the steering gear boot clamp.
3. Turn the tie rods.

   Standard length L
   10.1—23.1 mm {0.4—0.9 in}

4. Turn the tie rods equally to provide the correct maximum steering angle.
5. Tighten the tie-rod end locknuts.

   Tightening torque
   69—98 N·m {7.1—9.9 kgf·m, 51—72 ft·lbf}

6. Verify that the boot is not twisted, and install the boot clamp.
7. Adjust the toe-in after adjusting the steering angle.

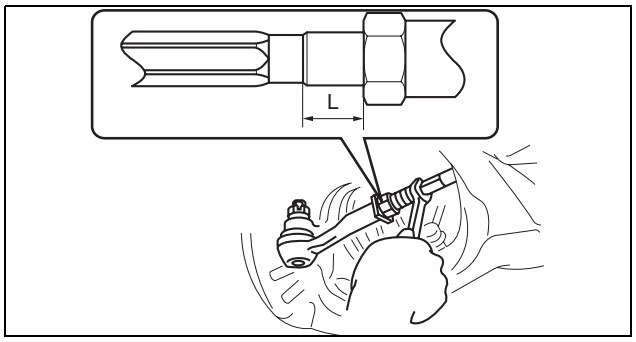

ac5wzw0000242

Total Toe-in Adjustment

1. Loosen the locknut of the tie-rod end.
2. Remove the rack boot clamp.
3. Adjust the total toe-in by rotating each tie rod (left and right) in the opposite directions by the same amount respectively.

   Note
   - Toe angle changes by **approx. 4 mm {0.2 in}** per one rotation of the tie rod for one wheel.
   - Each tie rod has a right-hand thread. When increasing the toe-in angle, rotate the right tie rod toward the front of the vehicle and rotate the left tie rod toward the rear of the vehicle by the same amount.

4. Tighten the locknut of the tie-rod end.

   Tightening torque
   69—98 N·m {7.1—9.9 kgf·m, 51—72 ft·lbf}

5. Verify that the rack boot does not have any twisting and install the rack boot clamp.

WHEEL ALIGNMENT

REAR WHEEL ALIGNMENT

id021100800300

Rear wheel alignment (Unloaded)*1

Item			Fuel gauge indication				
			Empty	1/4	1/2	3/4	Full
Total toe-in	Tire [Tolerance ±4 {0.2}]	(mm {in})	2 {0.08}				
	Rim inner [Tolerance ±3 {0.1}]		1.0 {0.04}				
		(degree)	0°10′±0°20′				
Camber angle*2 (Reference value) [Tolerance ±1°]			-0°51′	-0°54′	-0°56′	-0°58′	-1°01′
Thrust angle (Reference value) [Tolerance ±0°48′]			0°00′				

***1 : Engine coolant and engine oil are at specified level. Spare tire, jack and tools are in designated position.**
***2 : Difference between left and right must not exceed 1°30′.**

Total Toe-in Adjustment

1. Loosen the installation nut of the adjusting cam bolt.
2. Rotate the adjusting cam bolt in either direction to adjust the toe-in.

	Left wheel	Right wheel
Toe-out direction	Clockwise	Counterclockwise
Toe-in direction	Counterclockwise	Clockwise

3. Tighten the nut.

Tightening torque
84—101 N·m {8.6—10 kgf·m, 62—74 ft·lbf}

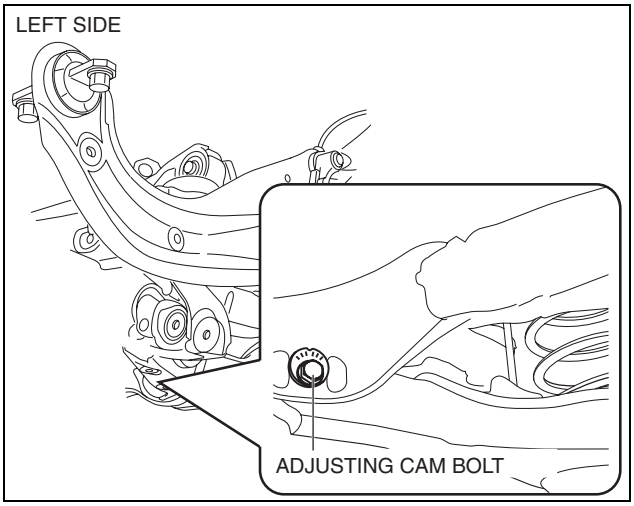

ac5wzw0000245

02-12 WHEEL AND TIRES

WHEEL AND TIRE SPECIFICATION . . . 02-12–1
WHEEL BALANCE ADJUSTMENT (ALUMINUM ALLOY WHEEL) 02-12–2
Adhesive-type Balance Weight (Outer) 02-12–2
Knock-type Balance Weight (Inner) . . . 02-12–3
Remaining Amount of Unbalance Confirmation 02-12–3
REPAIR AGENT REMOVAL 02-12–3
TIRE PRESSURE MONITORING SYSTEM INITIALIZATION PROCEDURE 02-12–4
TIRE PRESSURE MONITORING SYSTEM SET SWITCH REMOVAL/INSTALLATION 02-12–4
TIRE PRESSURE MONITORING SYSTEM SET SWITCH INSPECTION 02-12–5

WHEEL AND TIRES

WHEEL AND TIRE SPECIFICATION

id021200800100

Standard tire and wheel

Item				Specification	
Wheel	Size			17 × 7J	19 × 7J
	Inset (mm {in})			50 {2.0}	
	Pitch circle diameter (mm {in})			114.3 {4.50}	
	Material			Steel Aluminum alloy	Aluminum alloy
Tire	Size			225/65R17 102V	225/55R19 99V
	Air pressure (kPa {bar <psi>})	Front	Up to 3 persons	230 {2.3, <33>}*3 250 {2.5, <36>}*3	250 {2.5, <36>}
			Full load	260 {2.6, <38>}*3 270 {2.7, <39>}*3	260 {2.6, <38>}
		Rear	Up to 3 persons	230 {2.3, <33>}*3 250 {2.5, <36>}*3	250 {2.5, <36>}
			Full load	280 {2.8, <41>}*3 290 {2.9, <42>}*3	290 {2.9, <42>}
	Remaining tread (mm {in})			1.6 {0.063} min.	
Wheel and tire	Lug nut tightening torque (N·m {kgf·m, ft·lbf})			108—147 {12—14, 80—108}	
	Wheel and tire runout (mm {in})	Radial direction		1.5 {0.059} max.	
		Lateral direction		Steel:2.5 {0.098} max. Aluminum alloy:2.0 {0.079} max.	2.0 {0.079} max.
	Wheel imbalance (g {oz})			Adhesive-type*1: 13 {0.46} max. Knock-type*2: 8 {0.3} max.	Adhesive-type*1: 12 {0.42} max. Knock-type*2: 7 {0.2} max.

***1 : Total weight exceeds 160 g {5.64 oz}.**
***2 : One balance weight: 60 g {2.1 oz} max. If the total weight exceeds 100 g {3.53 oz} on one side, rebalance after moving the tire around on the rim. Do not use three or more balance weights.**
***3 : Verify the vehicle tire pressures.**

Temporary spare tire and wheel

Item			Specification
Wheel	Size		17 × 5 1/2J
	Inset	(mm {in})	45 {1.8}
	Pitch circle diameter	(mm {in})	114.3 {4.50}
	Material		Steel
Tire	Size		185/80R17 95M
	Air pressure	(kPa {bar <psi>})	250 {2.5, <36>}
	Remaining tread	(mm {in})	1.6 {0.063} min.
Wheel and tire	Lug nut tightening torque	(N·m {kgf·m, ft·lbf})	108—147 {12—14, 80—108}

WHEEL AND TIRES

WHEEL BALANCE ADJUSTMENT (ALUMINUM ALLOY WHEEL)

id021200104300

Caution
- **Adjust the outer wheel balance first, then the inner wheel balance.**
- **Be careful not to scratch the wheels.**

Adhesive-type Balance Weight (Outer)

1. Remove the old balance weight from the wheel.
2. Remove the double-sided adhesive tape remaining on the wheel, then clean and degrease the bonding area.
3. Set the wheel on a wheel balancer, measure the amount of unbalance and the position with the mode set for knock-type balance weight.
4. Multiply the amount of unbalance by **1.6** to obtain the balance weight value.
5. Select a balance weight closest to the weight value and attach the balance weight on the position (outer) indicated by the wheel balancer.

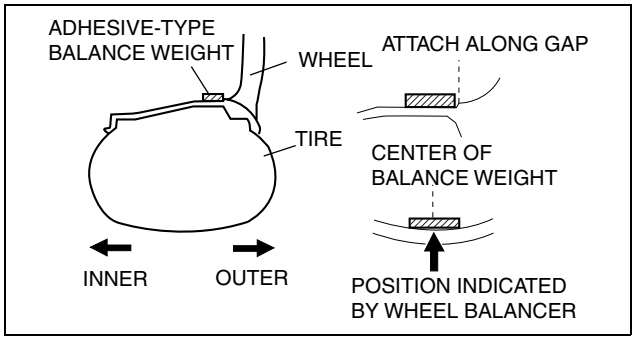

am6uuw0000146

Example calculation of balance weight value
Indicated amount of unbalance: 23 g {0.81 oz}
23 g {0.81 oz}×1.6 = 36.8 g {1.30 oz}
Selected balance weight value: 35 g {1.24 oz}

Note
- When selecting a balance weight, select one closest to the calculated value.
  Example: **32.4 g {1.14 oz} = 30 g {1.06 oz}**

Caution
- **Use a genuine balance weight or equivalent (steel).**
- **When attaching the weight, press the weight with a force of 25 N {2.5 kgf, 5.5 lbf} per 5 g for 2 s or more.**

6. If attaching two balance weights, position them so that each is on either side of the position indicated by the wheel balancer.

Caution
- **Do not attach weight balances in a row.**
- **Do not overlap the balance weights.**
- **Total weight must not exceed 160g {5.65 oz}.**

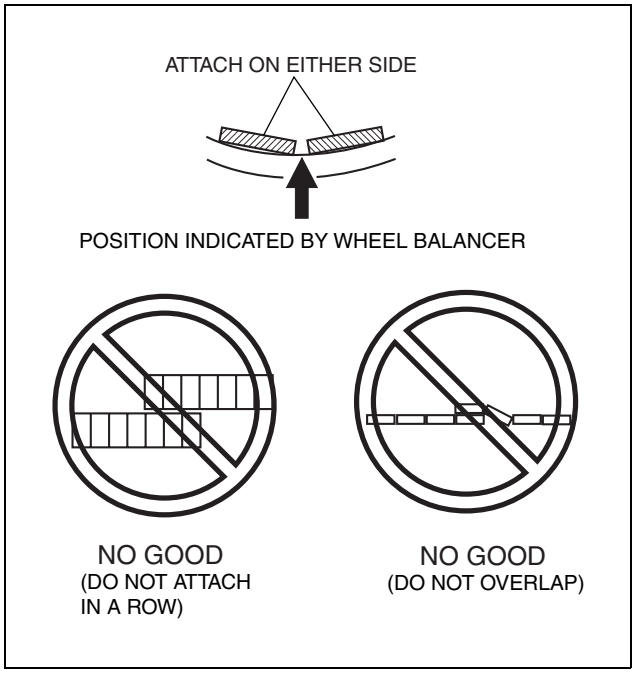

am6uuw0000146

WHEEL AND TIRES

Knock-type Balance Weight (Inner)

1. Measure the amount of unbalance with a wheel balancer.
2. Attach a weight corresponding to the measured weight value on the position (inner) indicated by the wheel balancer.

Caution

- **Do not attach three or more balance weights.**
- **One balance weight must not exceed 60g {2.12 oz}, and a total of two balance weights must not exceed 100g {3.53 oz}.**

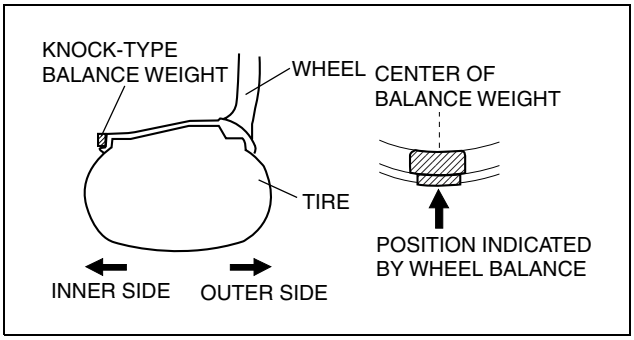

am6uuw0000146

Remaining Amount of Unbalance Confirmation

1. After installing the outer and inner balance weights, operate the wheel balancer again.
2. Confirm that the remaining unbalance does not exceed the following on either side.
   - If the remaining unbalance exceeds the specifications, adjust the wheel balance again.

Specifications

	Outer (Adhesive-type)	Inner (Knock-type)
17 inch wheel	13 g {0.46 oz}	8 g {0.28 oz}
19 inch wheel	12 g {0.42 oz}	7 g {0.25 oz}

REPAIR AGENT REMOVAL

id021200800500

Caution

- **Be careful not to spill the repair agent from inside of the tire.**

1. Remove the flat tire from the vehicle, and let the air out of the tire.
2. Cut the tire valve by the root and push the remaining part of the wheel into the tire.

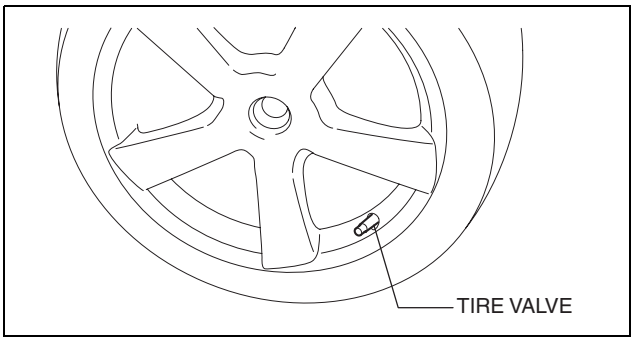

ac5wzw0000213

3. Insert the hose through the valve and into the tire. Stand the tire up so that the hose end sinks into the repair agent.
4. Pump out the repair agent.
5. Repeat the pumping procedure, changing the position of the hose end, until there is no repair agent left in the tire.
6. Remove the tire from the wheel and pick the wheel unit pushed in at Step 2 out.

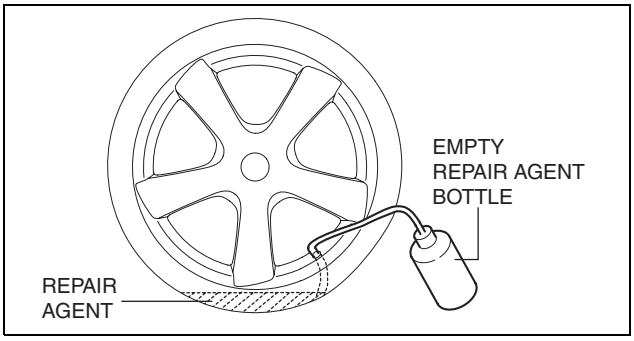

ac5wzw0000214

WHEEL AND TIRES

7. Wipe off the repair agent remaining on the wheel, wheel unit and tire.

Note
- The expiration date of the repair agent is printed on the repair agent bottle. Do not use the repair agent if has passed the expiration date has expired.
- Dispose of waste repair agent according to local disposal law.
- The repair agent is composed of the following:
  — Deproteinized natural rubber latex
  — Emulsified adhesive resin
  — Propylene glycol
- The tire must be replaced with a new one and clean all tire repair agent off to the wheel.

TIRE PRESSURE MONITORING SYSTEM INITIALIZATION PROCEDURE

id021200204000

- Perform the tire pressure monitoring system initialization when the following operations have been performed:
  — Tire pressures have been adjusted
  — Tires or wheels have been replaced
  — Tires have been rotated
  — DSC HU/CM replaced
  — DSC HU/CM connector disconnected
  — Battery replaced
  — Negative battery cable is disconnected

1. Park the vehicle on safe, level ground.
2. Adjust all four tire pressures to the specification while the tires are cold. (See 02-12-1 WHEEL AND TIRE SPECIFICATION.)
3. Switch the ignition ON (engine off or on).
4. Press and hold the tire pressure monitoring system set switch.

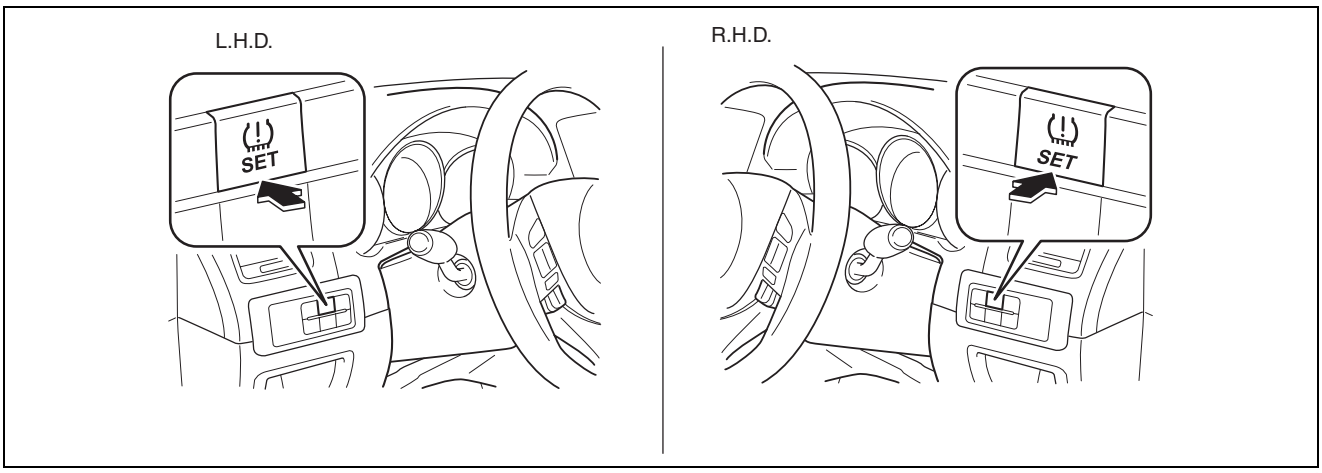

ac5wzw0000254

5. Press and hold the tire pressure monitoring system set switch until the tire pressure monitoring system warning light flashes 1 or 2 times and the indicator alarm sounds 1 time.

Note
- When the tire pressure monitoring system initialization is performed, learning initiates. Learning is completed by driving the vehicle for 20 min.
- While the tire pressure monitoring system is undergoing learning, its primary functions do not operate.

TIRE PRESSURE MONITORING SYSTEM SET SWITCH REMOVAL/INSTALLATION

id021200205000

Note
- The tire pressure monitoring system (TPMS) set switch is integrated with the cluster switch.
- Refer to SWITCH PANEL REMOVAL/INSTALLATION to remove the cluster switch.

1. Remove the switch panel. (See 09-17-18 SWITCH PANEL REMOVAL/INSTALLATION.)
2. Install in the reverse order of removal.

WHEEL AND TIRES

TIRE PRESSURE MONITORING SYSTEM SET SWITCH INSPECTION

id021200206000

1. Remove the TPMS set switch. (See 02-12-4 TIRE PRESSURE MONITORING SYSTEM SET SWITCH REMOVAL/INSTALLATION.)
2. Verify that the resistance between the TPMS set switch terminals B and C is as indicated in the table.
   - If not as indicated in the table, replace the TPMS set switch.

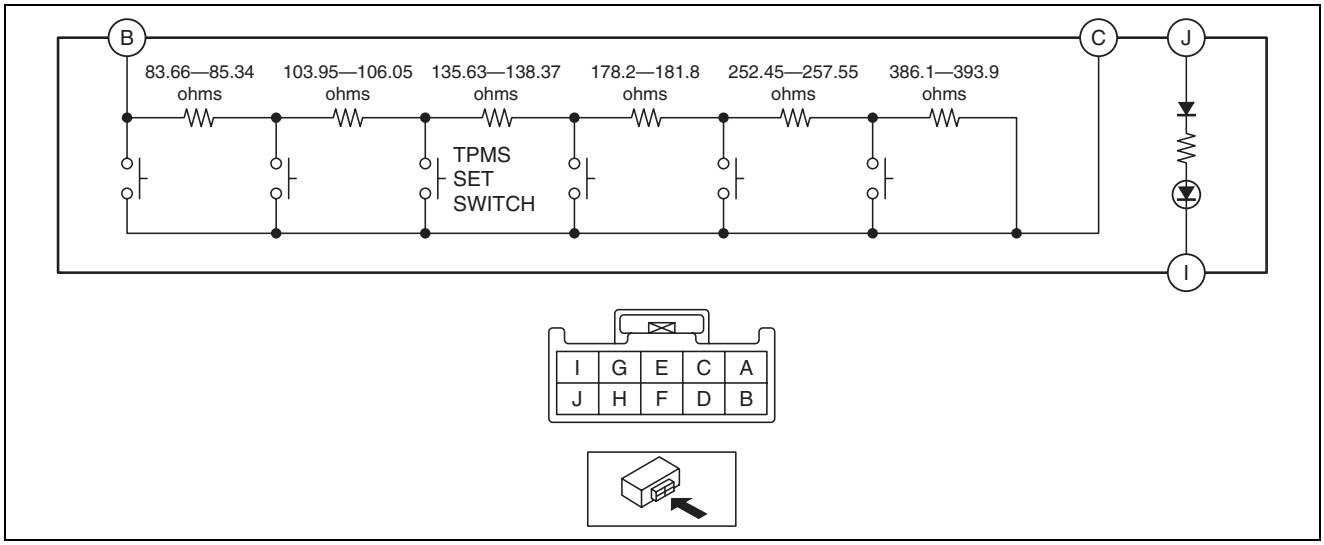

ac5wzw0000024

TPMS set switch specification

Terminal	Test condition	Resistance (ohms)
B—C	TPMS set switch pressed	187.61—191.39
	All switches released	1139.99—1163.01

3. Apply battery voltage to TPMS set switch terminal J, and connect terminal I to ground.
4. Verify that the LED illuminates.
   - If there is any malfunction, replace the TPMS set switch.

02-13 FRONT SUSPENSION

FRONT SUSPENSION LOCATION INDEX 02-13–1
FRONT SHOCK ABSORBER AND COIL SPRING REMOVAL/INSTALLATION 02-13–2
Front Shock Absorber Lower Bolt Installation Note 02-13–3
FRONT SHOCK ABSORBER AND COIL SPRING DISASSEMBLY/ASSEMBLY 02-13–4
Piston Rod Nut Removal Note 02-13–5
Coil Spring Installation Note 02-13–6
Mounting Rubber Installation Note 02-13–6
FRONT SHOCK ABSORBER INSPECTION 02-13–6
FRONT SHOCK ABSORBER DISPOSAL 02-13–6
FRONT LOWER ARM REMOVAL/INSTALLATION 02-13–7
Front Lower Arm Bushing Removal Note 02-13–8
Front Lower Arm Bushing Installation Note 02-13–9
FRONT LOWER ARM INSPECTION 02-13–10
FRONT STABILIZER REMOVAL/INSTALLATION 02-13–10
Front Stabilizer Bracket Removal Note 02-13–12
Front Stabilizer Bushing, Front Stabilizer Bracket Installation Note . . . 02-13–12
Front Stabilizer, Front Stabilizer Bushing and Front Stabilizer Bracket Installation Note 02-13–14
FRONT STABILIZER CONTROL LINK INSPECTION 02-13–14
FRONT CROSSMEMBER REMOVAL/INSTALLATION 02-13–15
Front Crossmember Component Removal Note 02-13–19
No.1 Engine Mount Rubber and Front Crossmember Component Installation Note 02-13–19

FRONT SUSPENSION

FRONT SUSPENSION LOCATION INDEX

id021300800100

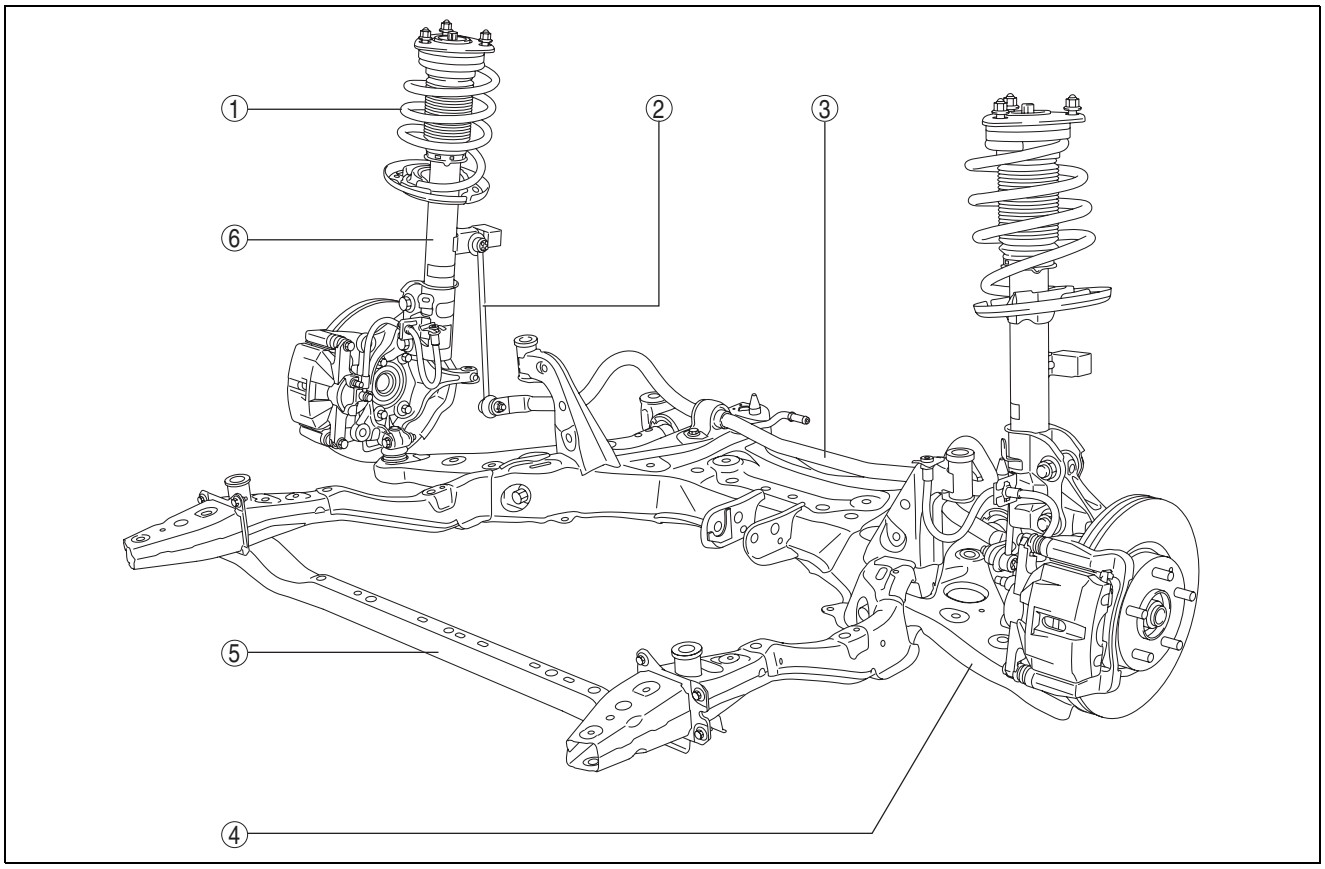

ac5uuw00000112

FRONT SUSPENSION

1	Front shock absorber and coil spring (See 02-13-2 FRONT SHOCK ABSORBER AND COIL SPRING REMOVAL/INSTALLATION.) (See 02-13-4 FRONT SHOCK ABSORBER AND COIL SPRING DISASSEMBLY/ASSEMBLY.)
2	Front stabilizer control link (See 02-13-10 FRONT STABILIZER REMOVAL/INSTALLATION.) (See 02-13-14 FRONT STABILIZER CONTROL LINK INSPECTION.)
3	Front stabilizer (See 02-13-10 FRONT STABILIZER REMOVAL/INSTALLATION.) (See 02-13-14 FRONT STABILIZER CONTROL LINK INSPECTION.)
4	Front lower arm (See 02-13-7 FRONT LOWER ARM REMOVAL/INSTALLATION.) (See 02-13-10 FRONT LOWER ARM INSPECTION.)
5	Front crossmember (See 02-13-15 FRONT CROSSMEMBER REMOVAL/INSTALLATION.)
6	Front shock absorber (See 02-13-6 FRONT SHOCK ABSORBER INSPECTION.) (See 02-13-6 FRONT SHOCK ABSORBER DISPOSAL.)

FRONT SHOCK ABSORBER AND COIL SPRING REMOVAL/INSTALLATION

id021300800200

Caution

- **Performing the following procedures without first removing the front ABS wheel-speed sensor may possibly cause an open circuit in the wiring harness if it is pulled by mistake. Before performing the following procedures, disconnect the front ABS wheel-speed sensor wiring harness (axle side) and fix the wiring harness to an appropriate place where it will not be pulled by mistake while servicing the vehicle.**

1. Disconnect the front ABS wheel-speed sensor wiring harness installed to the steering knuckle and set it aside. (See 04-15-9 FRONT ABS WHEEL-SPEED SENSOR REMOVAL/INSTALLATION.)
2. Remove in the order indicated in the table.
3. Install in the reverse order of removal.
4. Inspect the wheel alignment. (See 02-11-1 FRONT WHEEL ALIGNMENT.)

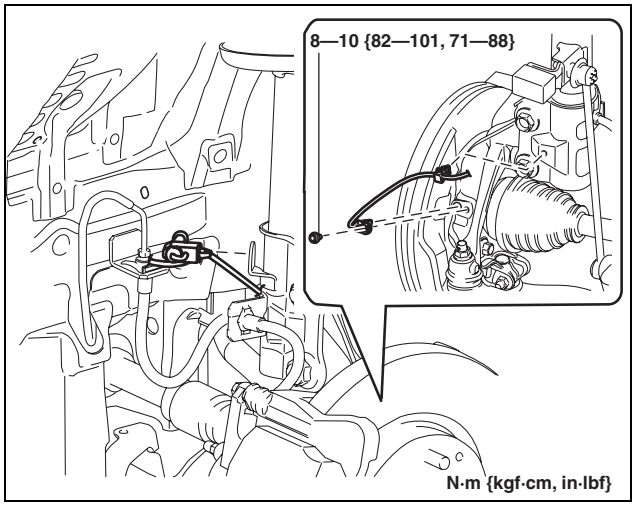

ac5uuw00000113

FRONT SUSPENSION

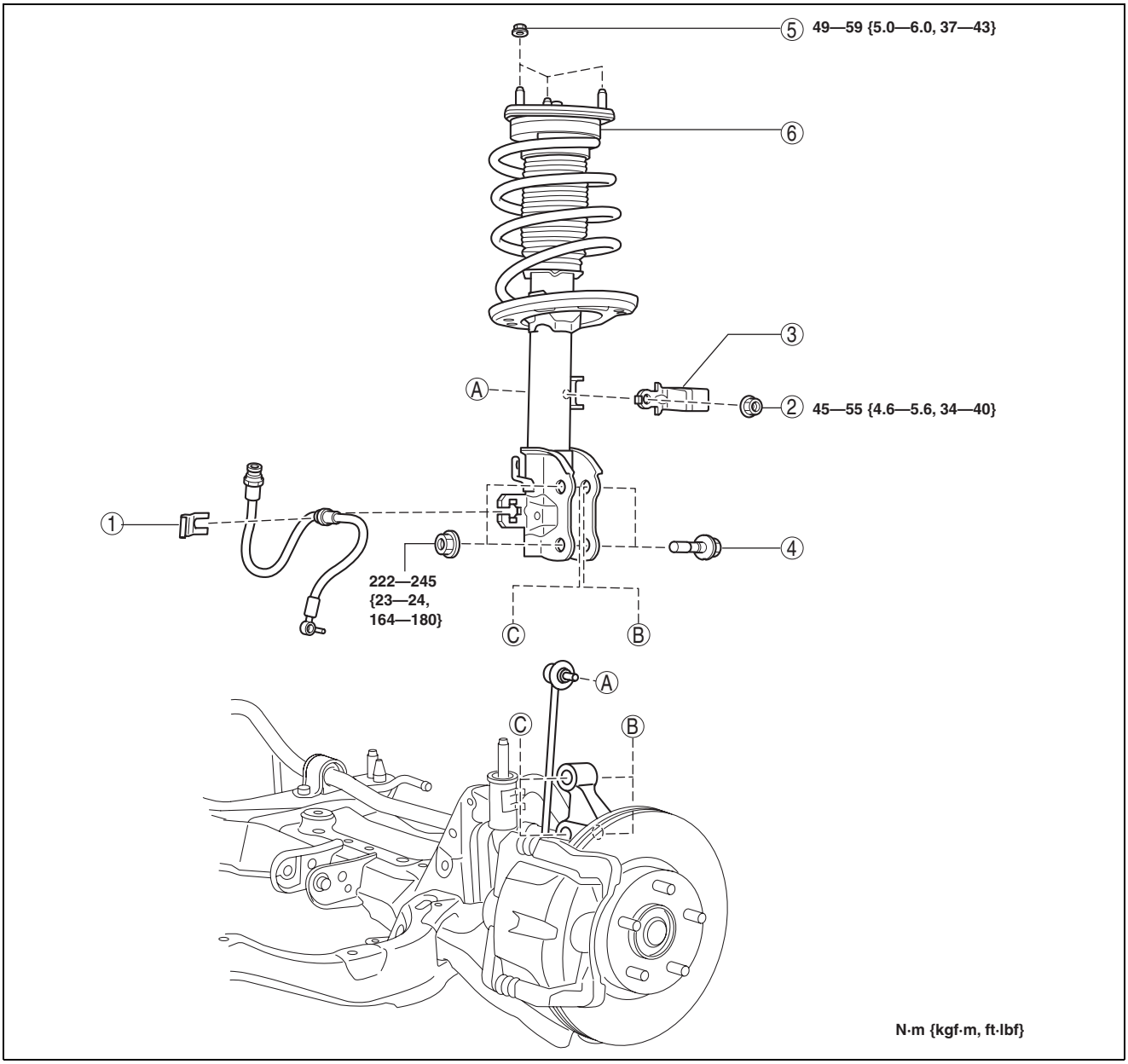

ac5uuw00000114

1	Front brake hose clip (See 04-11-30 BRAKE HOSE (FRONT) REMOVAL/ INSTALLATION.)
2	Front stabilizer control link upper nut (See 02-13-10 FRONT STABILIZER REMOVAL/ INSTALLATION.)

3	Dynamic damper (if equipped)
4	Front shock absorber lower bolt (See 02-13-3 Front Shock Absorber Lower Bolt Installation Note.)
5	Front shock absorber upper nut
6	Front shock absorber and coil spring

Front Shock Absorber Lower Bolt Installation Note

1. Install the steering knuckle to the front shock absorber, insert the bolts from the direction shown as follows, then tighten them to the specified torque.
   - — Vehicle right side: Insert the bolts from the vehicle front.
   - — Vehicle left side: Insert the bolts from the vehicle rear.

FRONT SUSPENSION

FRONT SHOCK ABSORBER AND COIL SPRING DISASSEMBLY/ASSEMBLY

id021300121900

Warning

- **Removing/installing the front shock absorber and coil spring is dangerous. The front shock absorber and coil spring could fly off and cause serious injury or death, and damage the vehicle.**

1. Remove the front shock absorber and coil spring. (See 02-13-2 FRONT SHOCK ABSORBER AND COIL SPRING REMOVAL/INSTALLATION.)
2. Remove in the order indicated in the table.
3. Install in the reverse order of removal.

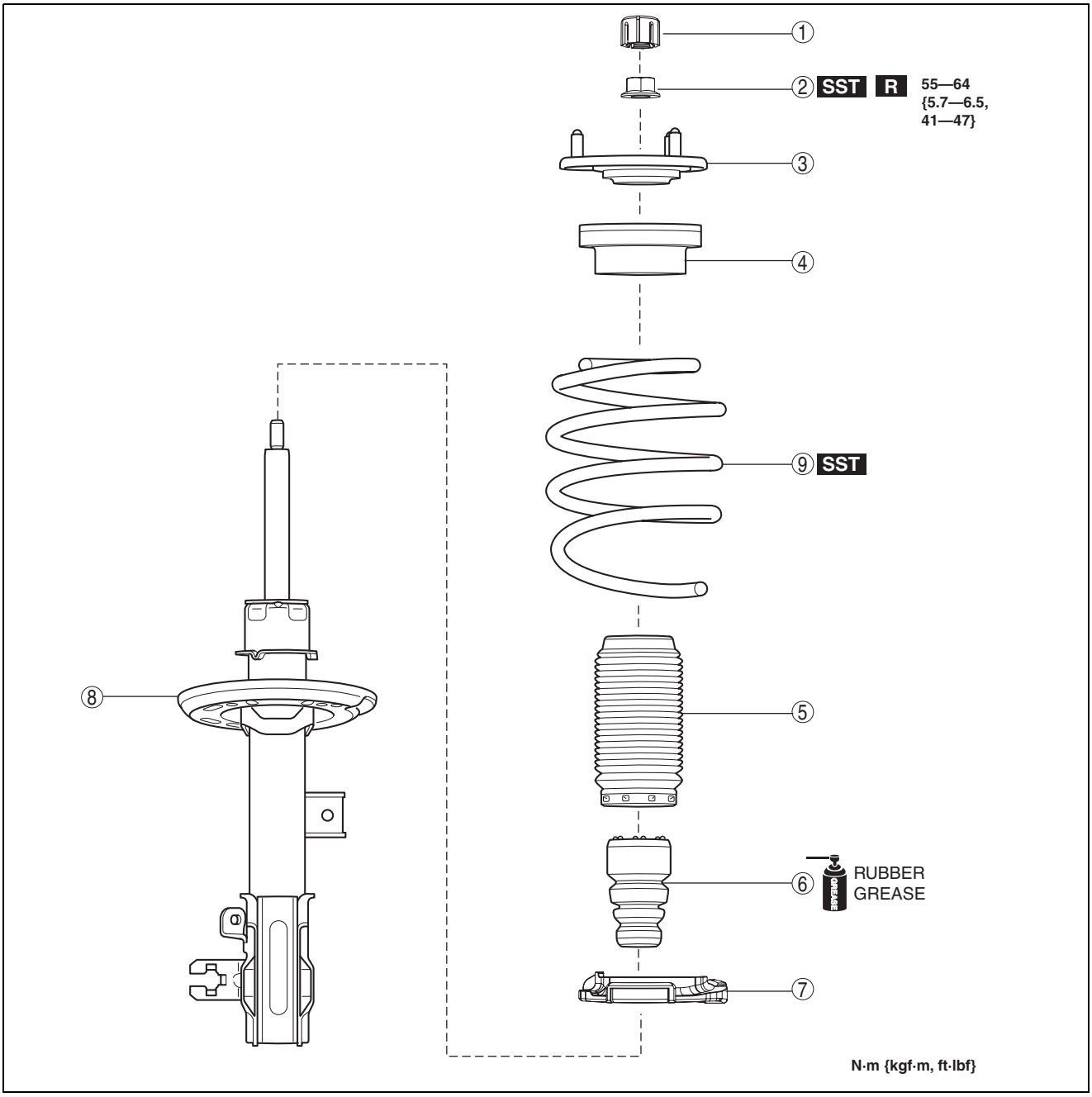

ac5wzw0000272

1	Cap
2	Piston rod nut (See 02-13-5 Piston Rod Nut Removal Note.)
3	Mounting rubber (See 02-13-6 Mounting Rubber Installation Note.)
4	Bearing

5	Dust boot
6	Bound stopper
7	Lower spring seat
8	Front shock absorber
9	Coil spring (See 02-13-6 Coil Spring Installation Note.)

FRONT SUSPENSION

Piston Rod Nut Removal Note

Warning
- **Before removing the piston rod nut, secure the front shock absorber and coil spring in the SST. Otherwise, the coil spring could fly off under tremendous pressure and cause serious injury or death, or damage to vehicle parts.**

1. Install the front shock absorber and coil spring to the **SST** according to the following procedures.

Note
- Install the **SST** using a clean rag to prevent the coil spring from being scratched.

(1) Set the **SST** attachments (tabs) to the positions shown in the figure.

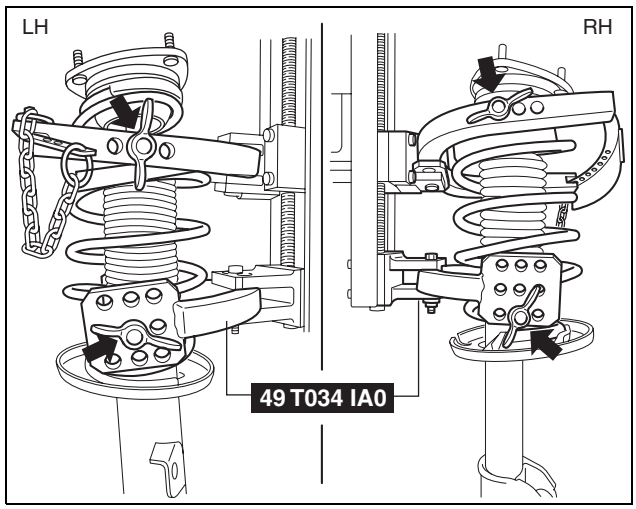

ac5wzw0000272

(2) Install the front shock absorber and coil spring to the **SST** so that the coil spring is set to the position shown in the figure.
2. Compress the coil spring using the **SST**.
3. Remove the piston rod nut.

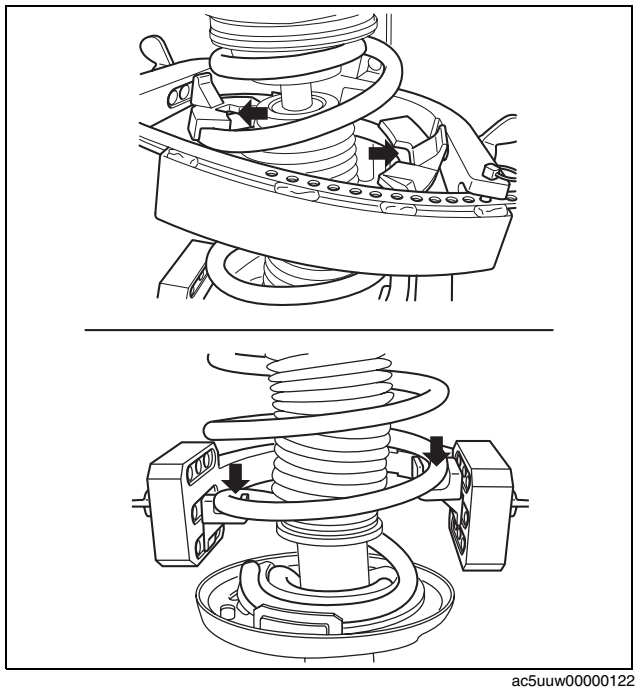
ac5uuw00000122

FRONT SUSPENSION

Coil Spring Installation Note

1. Compress the coil spring using the **SST**.
2. Install the front shock absorber so that the lower end of the coil spring is seated on the step of the lower spring seat.

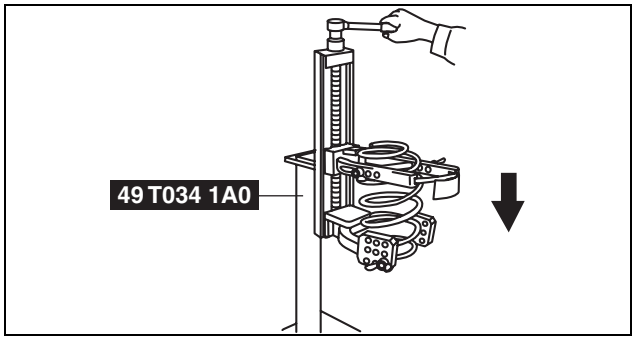

ac5uuw00000123

Mounting Rubber Installation Note

1. Install the mounting rubber so that the mounting rubber stud and the front shock absorber bracket are in position A shown in the following figure.

   A: 0°±5°

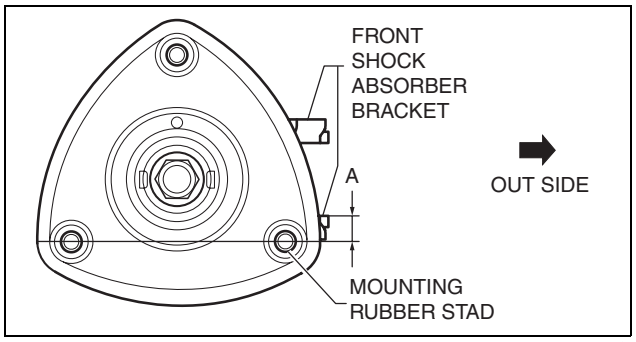

ac5wzw0000246

FRONT SHOCK ABSORBER INSPECTION

id021300800800

1. Remove the front shock absorber. (See 02-13-2 FRONT SHOCK ABSORBER AND COIL SPRING REMOVAL/INSTALLATION.) (See 02-13-4 FRONT SHOCK ABSORBER AND COIL SPRING DISASSEMBLY/ASSEMBLY.)
2. Inspect for damage and oil leakage.
3. Compress and extend the shock absorber piston rod **at least three times** at a steady rate. **From the fourth** compression stroke, verify that the operational force does not change and that there is no unusual noise.
   - If there is any malfunction, replace the front shock absorber.

FRONT SHOCK ABSORBER DISPOSAL

id021300800900

Warning

- **Whenever drilling into a front shock absorber, wear protective eye wear. The gas in the front shock absorber is pressurized, and could spray metal chips into the eyes and face when drilling.**

1. Place the shock absorber on a level surface or with the piston pointing downwards.
2. Drill a **2—3 mm {0.08—0.11 in}** hole at point A shown in the figure so the gas can escape.

   Point A: 340 mm {13.4 in}

3. Drill a **2—3 mm {0.08—0.11 in}** hole at the point B shown in the figure to drain the oil.

   Point B: 145 mm {5.71 in}

4. Turn the hole made in Step 3 downwards and drain the oil by pumping the piston rod up and down several times.
5. Cut off the bottom end of the front shock absorber.
6. Dispose of waste oil according to local waste disposal laws.

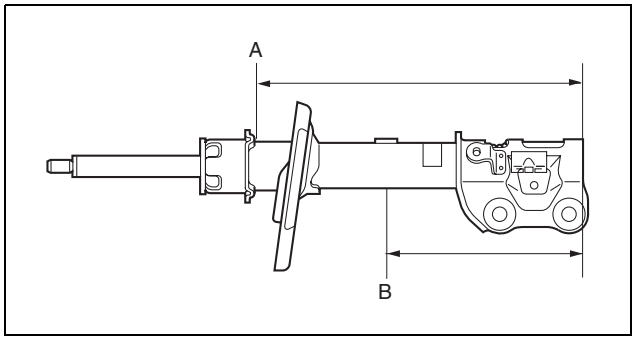

ac5wzw0000242

FRONT SUSPENSION

FRONT LOWER ARM REMOVAL/INSTALLATION

id021300800600

1. Remove the front under cover No.2. (See 09-16-41 FRONT UNDER COVER No.2 REMOVAL/INSTALLATION.)
2. Remove in the order indicated in the table.
3. Install in the reverse order of removal.
4. Inspect the wheel alignment and adjust it if necessary. (See 02-11-1 FRONT WHEEL ALIGNMENT.)

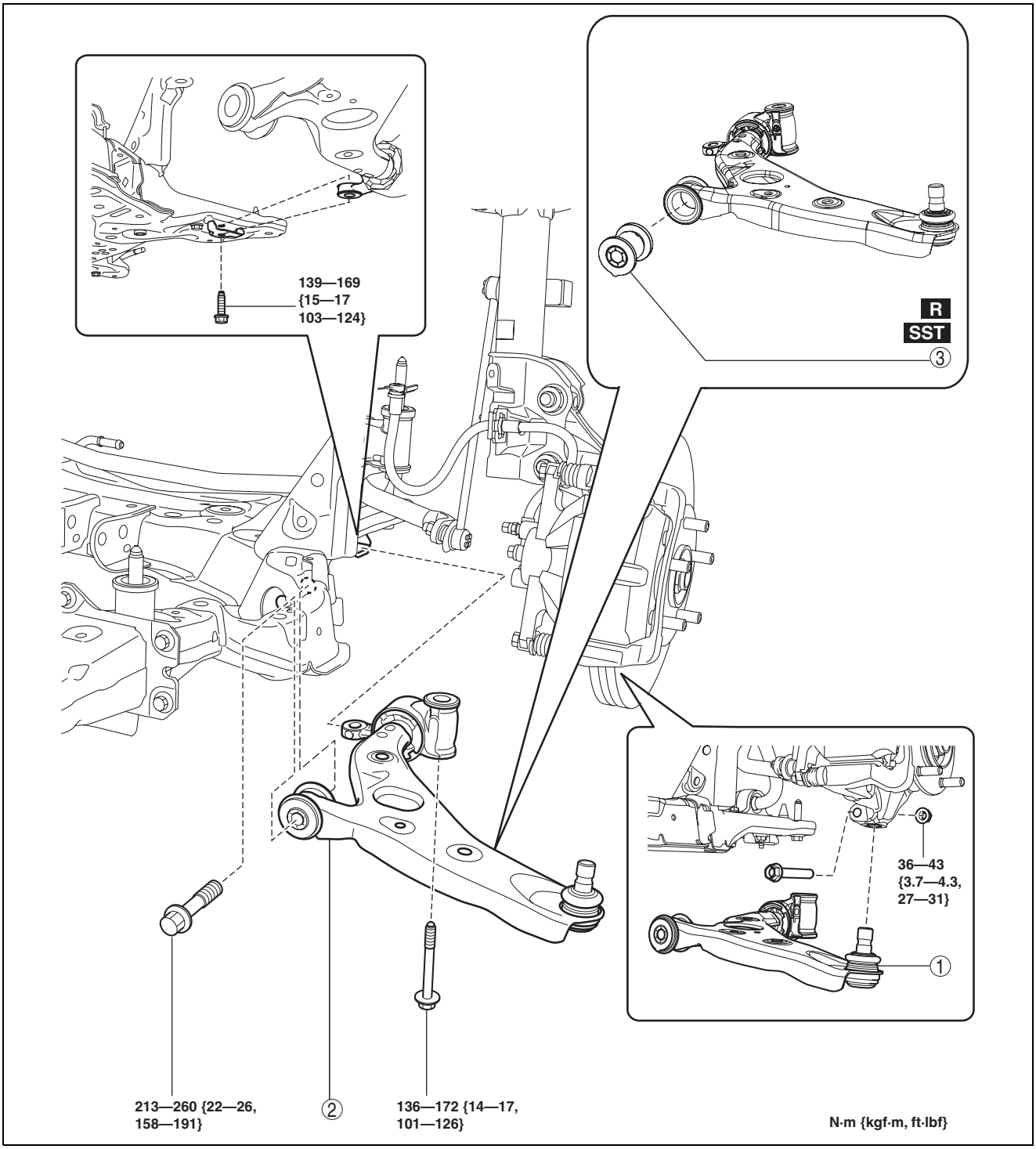

ac5uuw00000119

1	Front lower arm ball joint
2	Front lower arm

3	Front lower arm bushing (See 02-13-8 Front Lower Arm Bushing Removal Note.) (See 02-13-9 Front Lower Arm Bushing Installation Note.)

FRONT SUSPENSION

Front Lower Arm Bushing Removal Note

1. Cut off the entire circumference of the knob on front lower arm bushing rear side using a hacksaw as shown in the figure.

Caution

- **When using a hacksaw to cut off the knob on the rear side of the front lower arm bushing, be careful not to scratch or damage the front lower arm.**

2. Remove the front lower arm bushing using the **SSTs**.

Caution

- **Set the SST (49 U034 204) as shown in the figure and remove the rear lower arm bushing.**

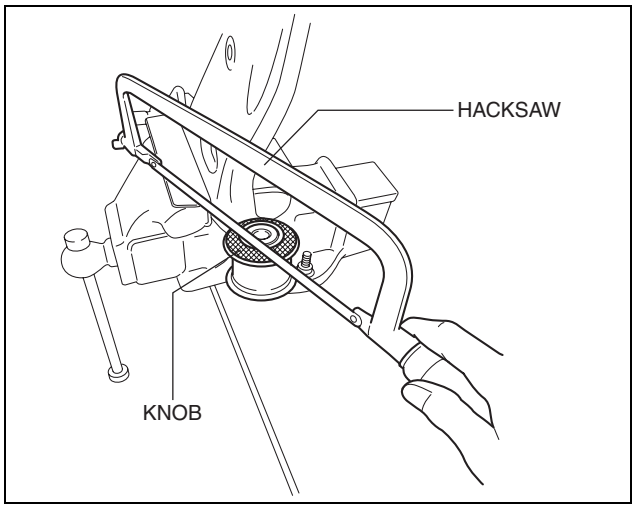

ac5wzw0000231

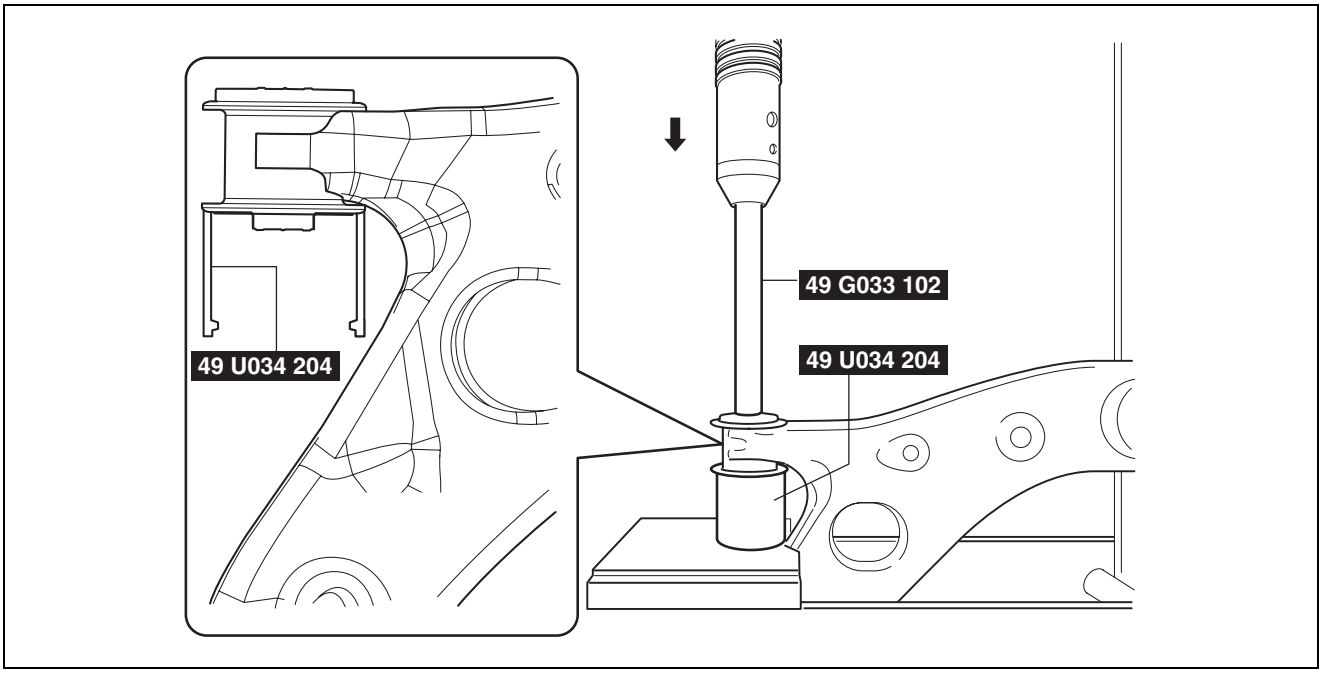

ac5wzw0000231

FRONT SUSPENSION

Front Lower Arm Bushing Installation Note

1. Install the front lower arm bushing using the **SSTs**.

Caution

- **Set the SST (49 U034 204) as shown in the figure and remove the rear lower arm bushing.**
- **Install the front lower arm bushing so that the projection shown in the figure is pointing toward the front of the vehicle.**

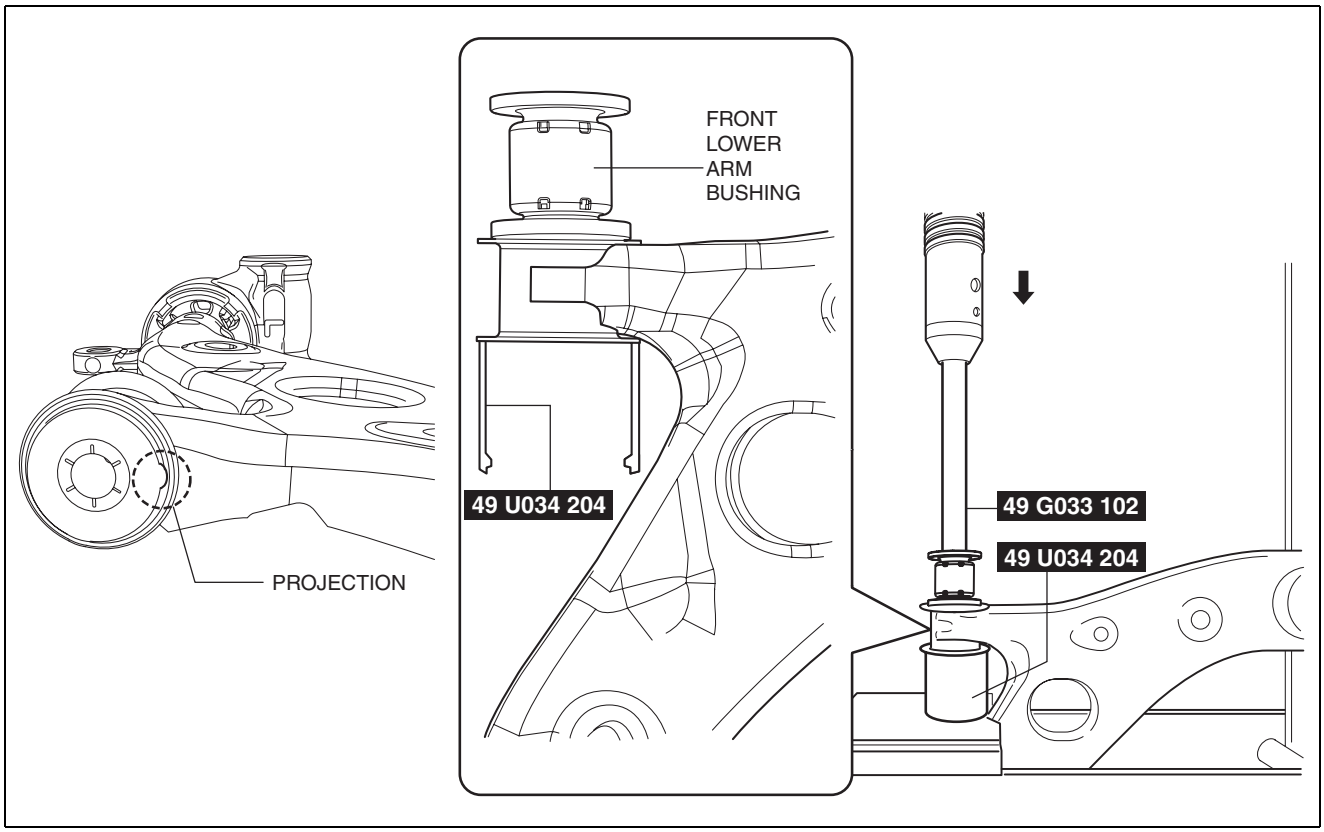

ac5wzw0000232

Note

- Applying soapy water to the front lower arm bushing facilitates installation.
- If soapy water gets in the inner pipe of the front lower arm bushing, always wipe it off using a cloth.

2. After installing the front lower arm bushing, verify that it is installed to the position shown in the figure.

W: 5.8±0.8 mm {0.23±0.03 in}

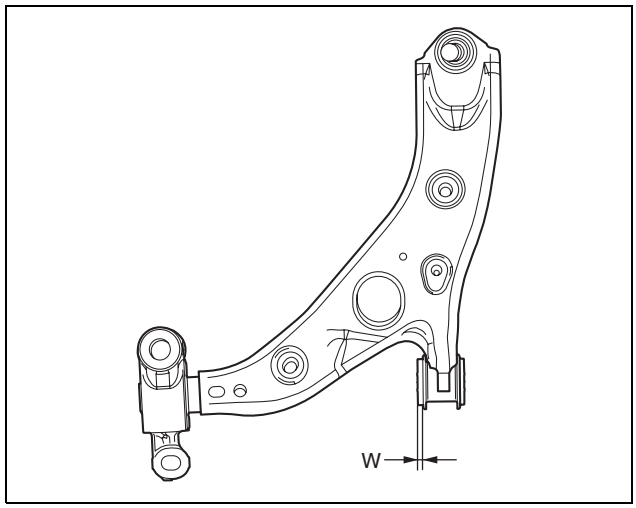

ac5wzw0000245

FRONT SUSPENSION

FRONT LOWER ARM INSPECTION

id021300800700

1. Remove the front lower arm. (See 02-13-7 FRONT LOWER ARM REMOVAL/INSTALLATION.)
2. Inspect the front lower arm for bending or damage, and the front lower arm ball joint for excessive looseness.
   - If there is any malfunction, replace the front lower arm.
3. Rotate the front lower arm ball joint stud **5 times**. Install the **SST** to the front lower arm ball joint stud, measure the rotational,starting torque using a torque wrench.
   - If not within the specification, replace the front lower arm.

Front lower arm ball joint stud starting torque
18 N·m {1.8 kgf·m,13 ft·lbf} max.
Front lower arm ball joint stud rotational torque
3.2 N·m {33 kgf·cm,28 in·lbf} max.

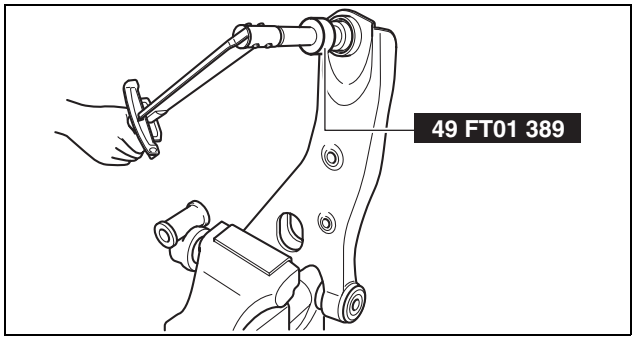

ac5uuw00000125

FRONT STABILIZER REMOVAL/INSTALLATION

id021300800400

Caution
- **Performing the following procedures without first removing the front ABS wheel-speed sensor may possibly cause an open circuit in the wiring harness if it is pulled by mistake. Before performing the following procedures, disconnect the front ABS wheel-speed sensor wiring harness (axle side) and fix the wiring harness to an appropriate place where it will not be pulled by mistake while servicing the vehicle.**
- **Secure the steering wheel using tape or a cable to prevent the steering shaft from rotating after disconnecting the steering shaft. If the steering wheel rotates after the steering shaft and the steering gear and linkage are disconnected, the internal parts of the clock spring could be damaged.**

1. Remove the joint cover. (See 06-13-4 STEERING WHEEL AND COLUMN REMOVAL/INSTALLATION.)
2. Disconnect the intermediate shaft from the steering gear and linkage. (See 06-13-4 STEERING WHEEL AND COLUMN REMOVAL/INSTALLATION.)
3. Disconnect the front ABS wheel-speed sensor wiring harness installed to the steering knuckle and set it aside. (See 04-15-9 FRONT ABS WHEEL-SPEED SENSOR REMOVAL/INSTALLATION.)
4. Remove in the order indicated in the table.
5. Install in the reverse order of removal.
6. Inspect the wheel alignment and adjust it if necessary. (See 02-11-1 FRONT WHEEL ALIGNMENT.)

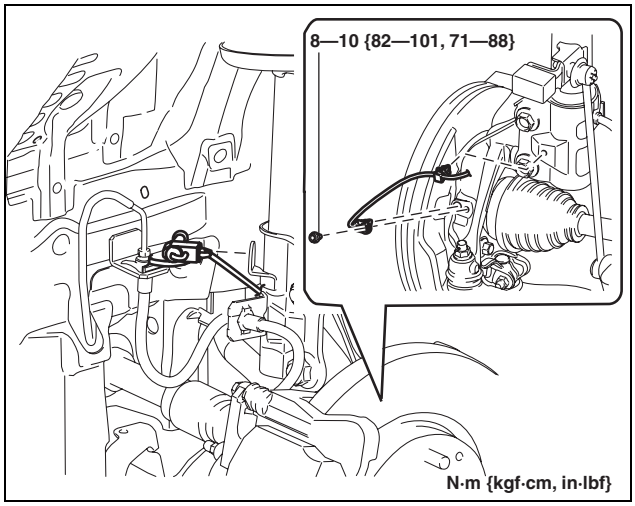

ac5uuw00000127

FRONT SUSPENSION

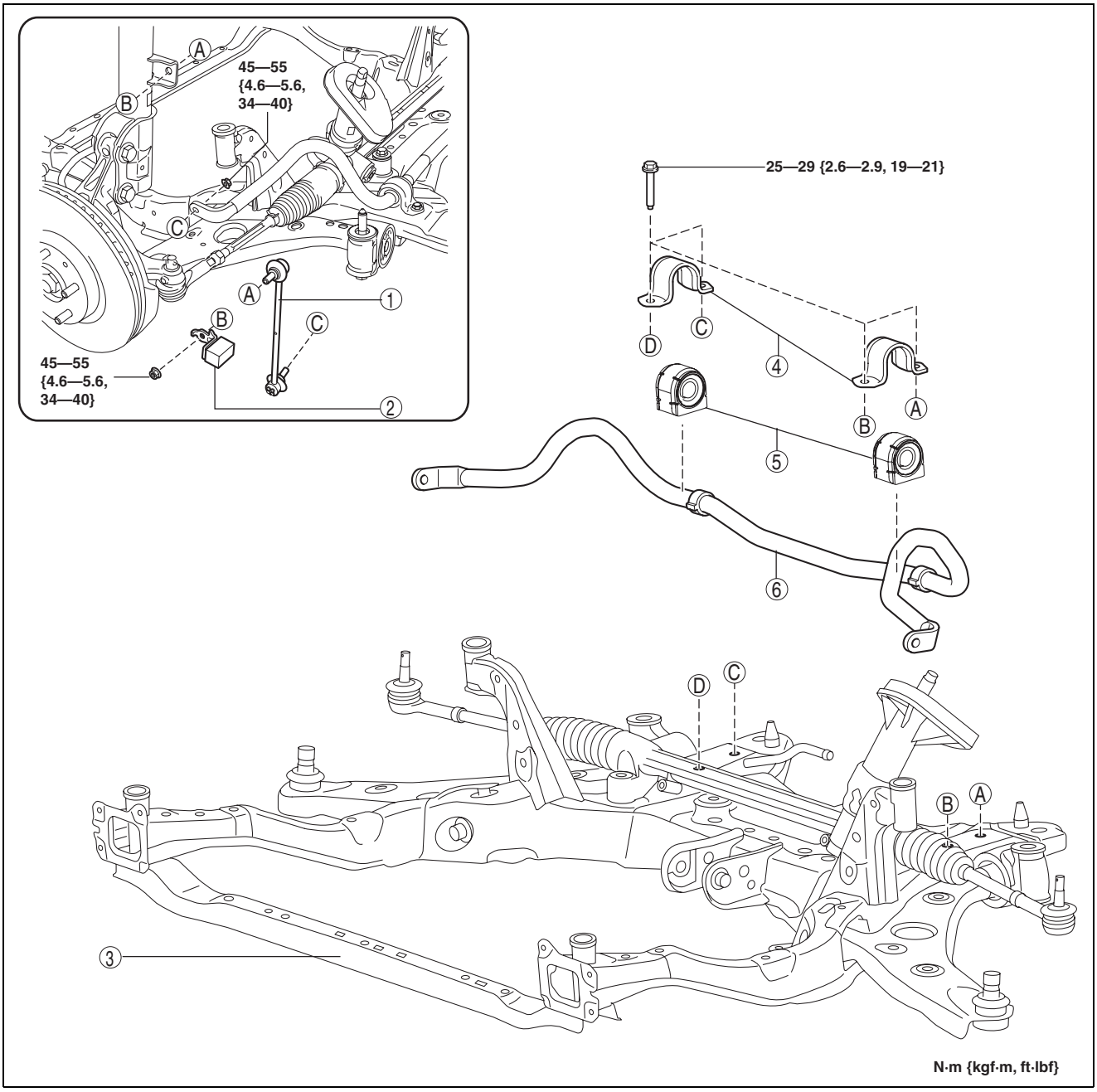

ac5wzw0000232

1	Front stabilizer control link
2	Dynamic damper (if equipped)
3	Front crossmember component (See 02-13-15 FRONT CROSSMEMBER REMOVAL/INSTALLATION.)
4	Front stabilizer bracket (See 02-13-12 Front Stabilizer Bushing, Front Stabilizer Bracket Installation Note.)

5	Front stabilizer bushing (See 02-13-12 Front Stabilizer Bracket Removal Note.) (See 02-13-12 Front Stabilizer Bushing, Front Stabilizer Bracket Installation Note.)
6	Front stabilizer (See 02-13-12 Front Stabilizer Bushing, Front Stabilizer Bracket Installation Note.)

FRONT SUSPENSION

Front Stabilizer Bracket Removal Note

1. Secure the front stabilizer bracket flange using a vise.

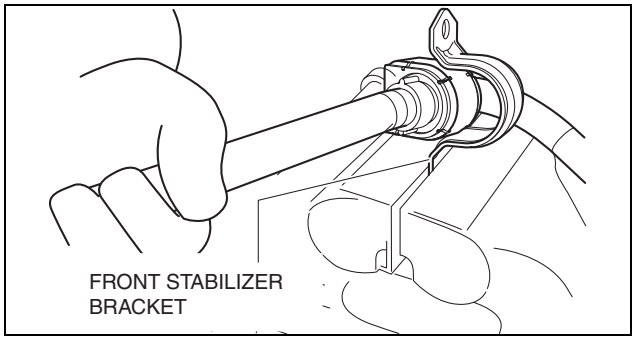

ac5uuw00000902

Front Stabilizer Bushing, Front Stabilizer Bracket Installation Note

1. Install the front stabilizer bushing to the front stabilizer with its slit positioned rearward of the vehicle.
2. Install the front stabilizer bracket to the front stabilizer bushing by hand using the following procedure.
3. If the front stabilizer bracket cannot be installed by hand, install it using a vise.

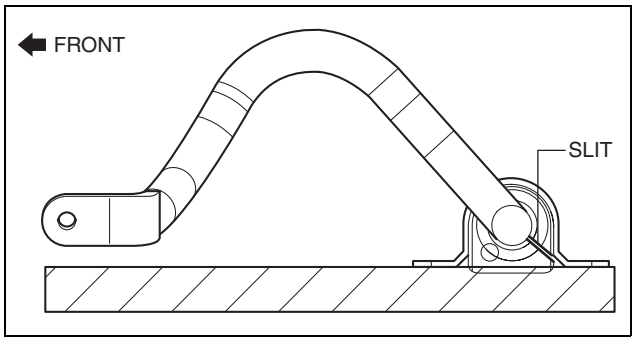

ac5uuw00000903

Caution

- **If the front stabilizer bracket is installed using a vise, it could be deformed.**
- **Set a cylindrically-shaped object as shown in the figure so that pressure is applied to the front stabilizer bracket flange, and install the front stabilizer bracket to the front stabilizer bushing.**

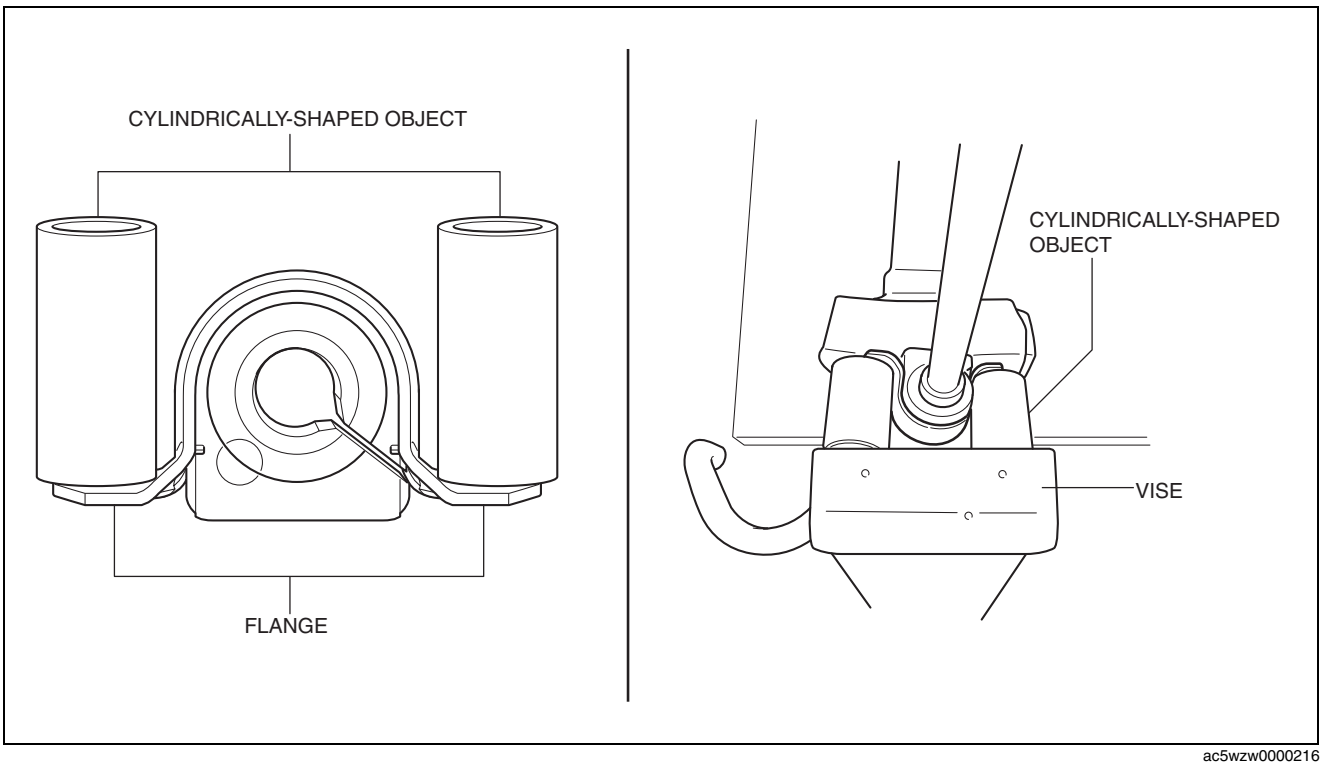

ac5wzw0000216

FRONT SUSPENSION

4. During front stabilizer bracket installation, keep the deviation in the positions of the front stabilizer bracket and the front stabilizer bushing within the range shown in the figure.

   W^1: 0.5 mm {0.21 in} max.

   W^2: 2 mm {0.08 in} max.

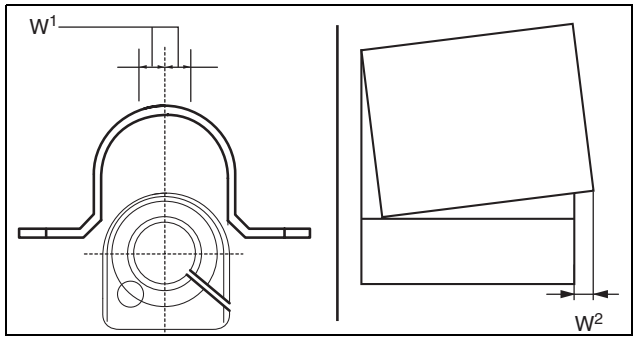

ac5wzw0000272

5. After installing the front stabilizer bracket, verify that the positions of the front stabilizer bracket and the front stabilizer bushing are within the range shown in the figure.

   H^1: 13 mm {0.51 in} max.

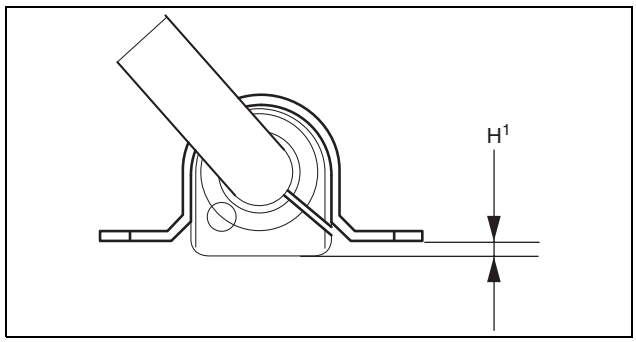

ac5uuw00000906

6. After installing the front stabilizer bracket, verify that the right and left-side positions of the front stabilizer bracket are within the range shown in the figure.

   H^2: 6 mm {0.2 in} max.

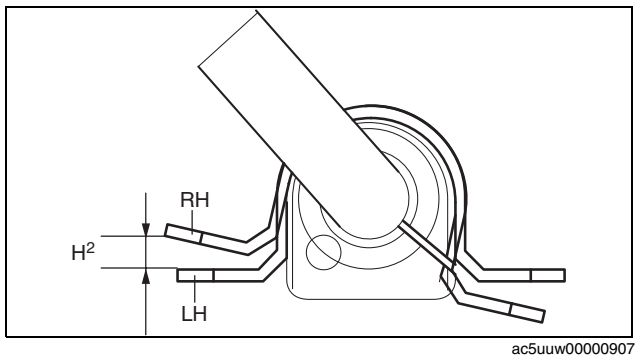

ac5uuw00000907

7. Place the front stabilizer component on a level workbench, and verify that it is within the range shown in the figure.

   H^3: 32.1—42.1 mm {1.27—1.65 in}

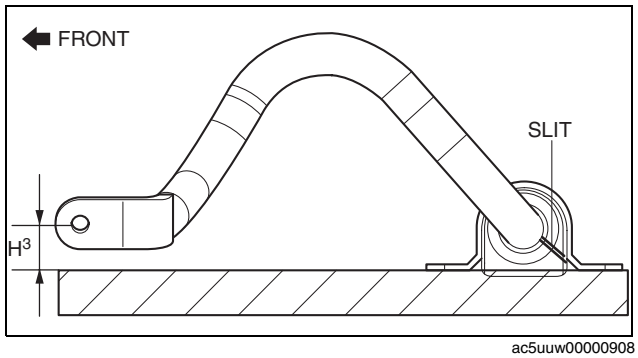

ac5uuw00000908

FRONT SUSPENSION

Front Stabilizer, Front Stabilizer Bushing and Front Stabilizer Bracket Installation Note

1. Temporarily tighten bolts A and B shown in the figure.
2. Tighten bolt A.

   Tightening torque
   25—29 N·m {2.6—2.9kgf·m, 19—21 ft·lbf}

3. Tighten bolt B.

   Tightening torque
   25—29 N·m {2.6—2.9kgf·m, 19—21 ft·lbf}

4. Tighten bolt A.

   Tightening torque
   25—29 N·m {2.6—2.9kgf·m, 19—21 ft·lbf}

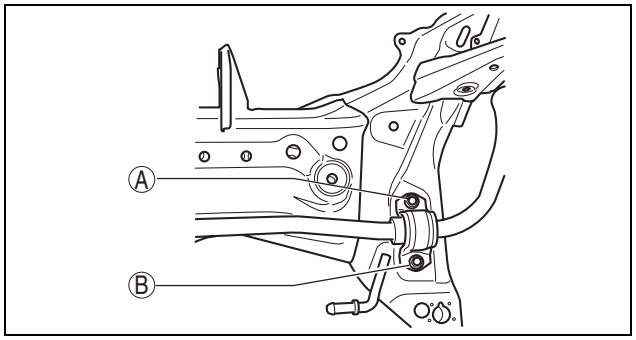

ac5uuw00000117

FRONT STABILIZER CONTROL LINK INSPECTION

id021300800500

1. Remove the front stabilizer control link. (See 02-13-10 FRONT STABILIZER REMOVAL/INSTALLATION.)
2. Inspect for bending or damage. If there is any malfunction, replace the front stabilizer control link.
3. Rotate the front stabilizer control link ball joint stud **10 times** and shake it side to side **10 times**.
4. Measure the front stabilizer control link ball joint rotational torque using an allen wrench and a torque wrench.

   Front stabilizer control link ball joint starting torque
   0.8—3.5 N·m {8.2—35 kgf·cm, 7.1—30 in·lbf}

   - If not within the specification, replace the front stabilizer control link.
   - Even when within the specification, if there is excessive play in the front stabilizer control link ball joint, replace the front stabilizer control link.

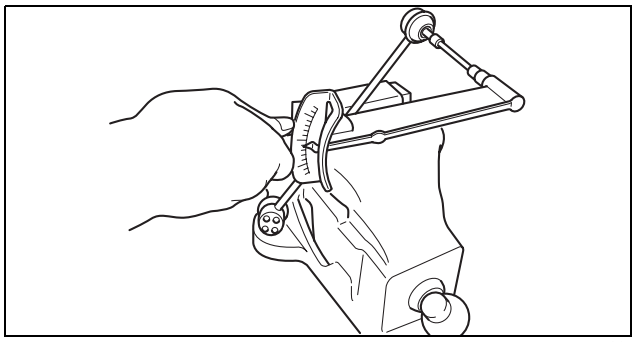
ac5uuw00000118

FRONT SUSPENSION

FRONT CROSSMEMBER REMOVAL/INSTALLATION

id021300801000

Caution

- **Performing the following procedures without first removing the front ABS wheel-speed sensor may possibly cause an open circuit in the harness if it is pulled by mistake. Before performing the following procedures, disconnect the front ABS wheel-speed sensor (axle side) and fix it to an appropriate place where the sensor will not be pulled by mistake while servicing the vehicle.**
- **Secure the steering wheel using tape or a cable to prevent the steering shaft from rotating after disconnecting the steering shaft. If the steering wheel rotates after the steering shaft and the steering gear and linkage are disconnected, the internal parts of the clock spring could be damaged.**

1. Remove the joint cover. (See 06-13-4 STEERING WHEEL AND COLUMN REMOVAL/INSTALLATION.)
2. Disconnect the intermediate shaft from the steering gear and linkage. (See 06-13-4 STEERING WHEEL AND COLUMN REMOVAL/INSTALLATION.)
3. Disconnect the front ABS wheel-speed sensor wiring harness installed to the steering knuckle and set it aside. (See 04-15-9 FRONT ABS WHEEL-SPEED SENSOR REMOVAL/INSTALLATION.)
4. Remove the front under cover No.2. (See 09-16-41 FRONT UNDER COVER No.2 REMOVAL/INSTALLATION.)
5. Remove the front under cover No.1. (See 09-16-40 FRONT UNDER COVER No.1 REMOVAL/INSTALLATION.)
6. Remove the splash shield. (See 09-16-49 SPLASH SHIELD REMOVAL/INSTALLATION.)

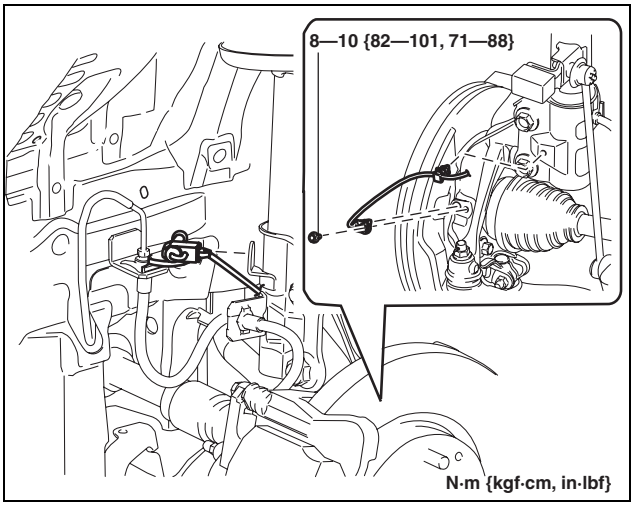

ac5uuw00000127

7. Set the front mudguard away from the front crossmember and front bumper. (See 09-16-47 MUDGUARD REMOVAL/INSTALLATION.)

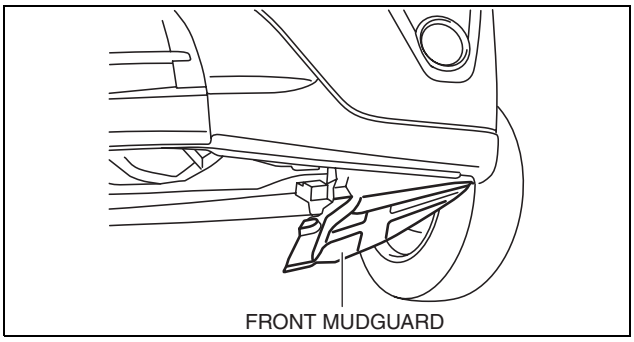

ac5uuw00000358

8. Disconnect the front crossmember extension.

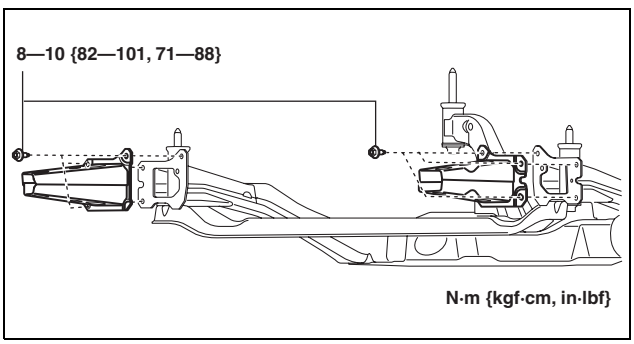

ac5uuw00000131

FRONT SUSPENSION

9. Disconnect the front stabilizer control link (front stabilizer side). (See 02-13-10 FRONT STABILIZER REMOVAL/INSTALLATION.)
10. Remove the front crossmember insulator.

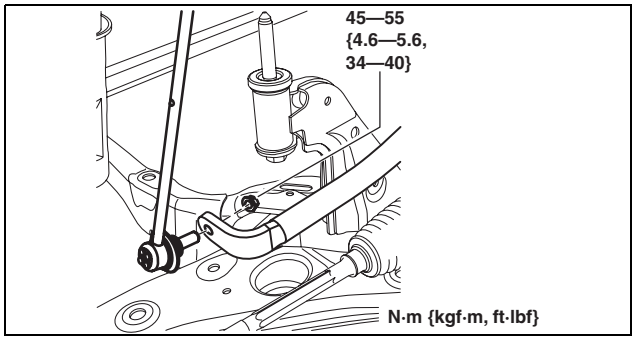

ac5uuw00000128

2WD

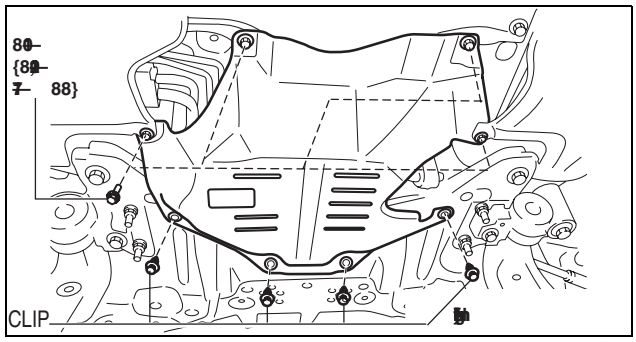

ac5uuw00001624

4WD

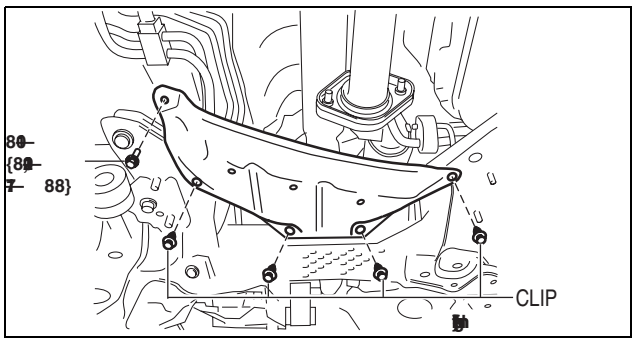

ac5uuw00000129

11. Disconnect the hanger rubber from the front crossmember and set it aside.

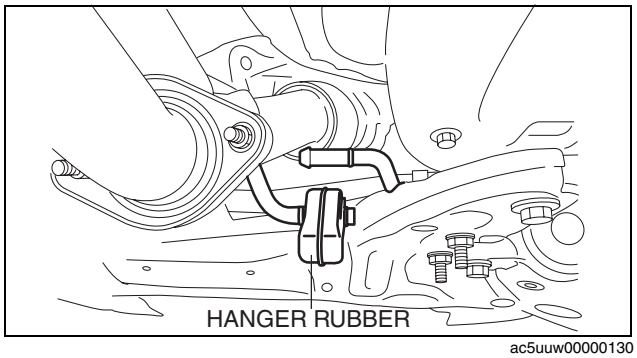

ac5uuw00000130

FRONT SUSPENSION

12. Remove the bracket plate (No.1). (2WD)

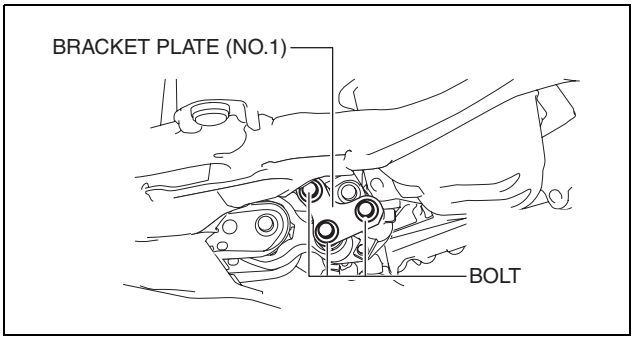

ac5wzw0000286

13. Remove the bracket plate. (4WD)
14. Remove the tie-rod end locknut.

Tightening torque
47—59 N·m {4.8—6.0 kgf·m, 35—43 ft·lbf}

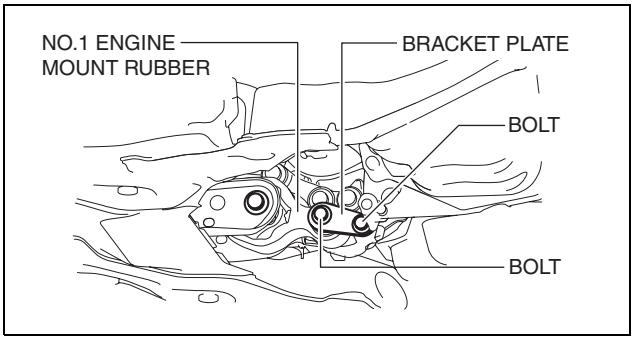

ac5wzw0000286

15. Detach the tie-rod end from the steering knuckle using the **SST**.

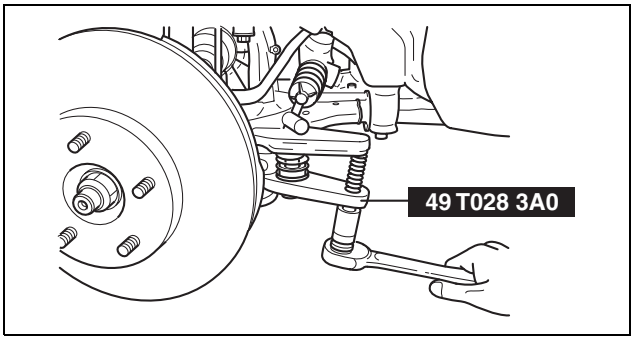

ac5uuw00000134

16. Disconnect the front lower arm ball joint.
17. Remove in the order indicated in the table.
18. Install in the reverse order of removal.
19. Inspect the wheel alignment and adjust it if necessary. (See 02-11-1 FRONT WHEEL ALIGNMENT.)

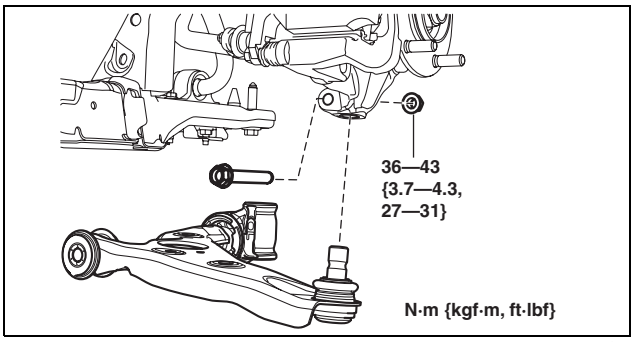

ac5uuw00000135

FRONT SUSPENSION

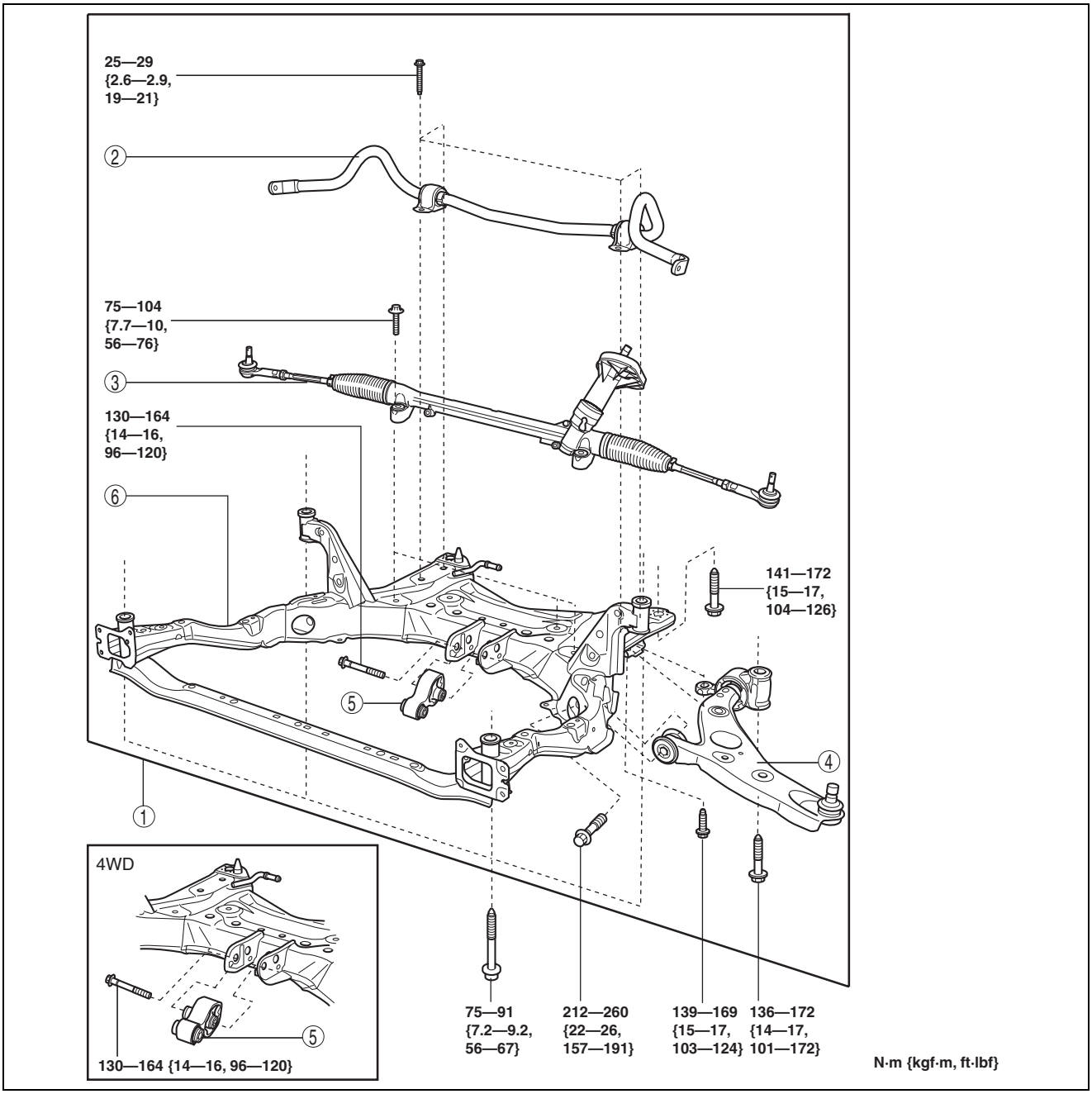

ac5wzw0000242

1	Front crossmember component (See 02-13-19 Front Crossmember Component Removal Note.) (See 02-13-19 No.1 Engine Mount Rubber and Front Crossmember Component Installation Note.)
2	Front stabilizer (See 02-13-10 FRONT STABILIZER REMOVAL/INSTALLATION.)
3	Steering gear and linkage (See 06-13-16 STEERING GEAR AND LINKAGE REMOVAL/INSTALLATION.)

4	Front lower arm (See 02-13-7 FRONT LOWER ARM REMOVAL/INSTALLATION.)
5	No.1 engine mount rubber (See 01-10A-91 ENGINE MOUNT DISASSEMBLY/ASSEMBLY [SKYACTIV-G 2.0].) (See 01-10B-80 ENGINE MOUNT DISASSEMBLY/ASSEMBLY [SKYACTIV-D 2.2].) (See 02-13-19 No.1 Engine Mount Rubber and Front Crossmember Component Installation Note.)
6	Front crossmember

FRONT SUSPENSION

Front Crossmember Component Removal Note

Warning

- **Removing the crossmember is dangerous. The crossmember component could fall and cause serious injury or death. Verify that the jack securely supports the crossmember component.**

1. Support the front crossmember component using a jack.
2. Remove the front crossmember installation bolts.
3. Remove the front crossmember, front stabilizer, front lower arm, and steering gear and linkage as a single unit.

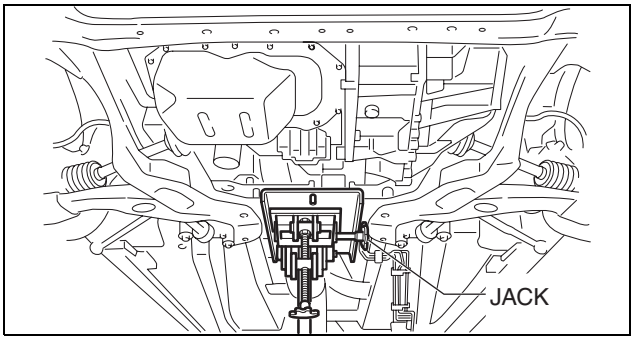

ac5uuw00000137

No.1 Engine Mount Rubber and Front Crossmember Component Installation Note

2WD

1. Temporarily install the bracket plate (No.1) and No.1 engine mount rubber.

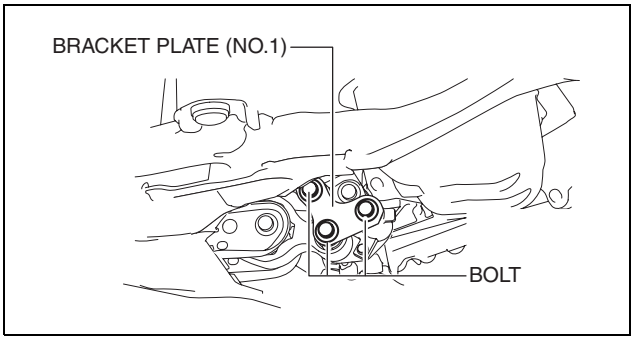

ac5wzw0000286

2. Tighten the bracket plate (No.1) installation bolts in the order shown in the figure.

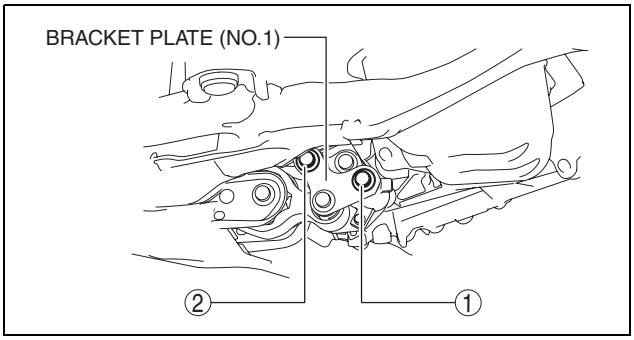

ac5uuw00000142

No.	Tightening torque
1	84—98 N·m {8.6—9.9 kgf·m, 62—72 ft·lbf}
2	84—98 N·m {8.6—9.9 kgf·m, 62—72 ft·lbf}

3. Tighten the No.1 engine mount rubber installation bolts in the order shown in the figure.

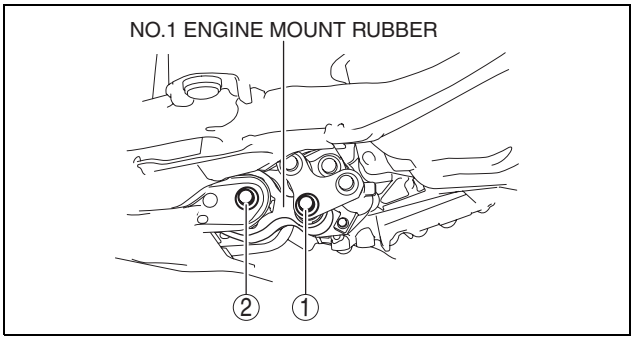

ac5uuw00000139

No.	Tightening torque
1	140—163 N·m {15—16 kgf·m, 104—120 ft·lbf}
2	130—164 N·m {14—16 kgf·m, 96—120 ft·lbf}

FRONT SUSPENSION

4WD

1. Temporarily install the No.1 engine mount rubber and bracket plate.

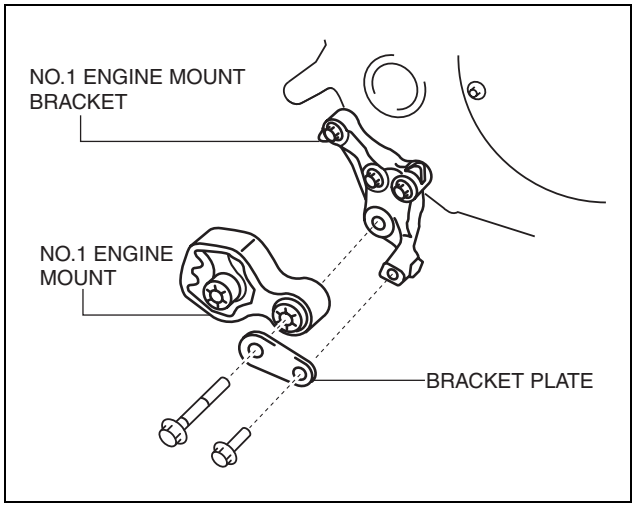

ac5uuw00000140

2. Tighten the No.1 engine mount rubber and bracket plate installation bolts.

No.	Tightening torque
1	140—163 N·m {15—16 kgf·m, 104—120 ft·lbf}
2	55—69 N·m {5.7—7.0 kgf·m, 41—50 ft·lbf}
3	130—164 N·m {14—16 kgf·m, 96—120 ft·lbf}

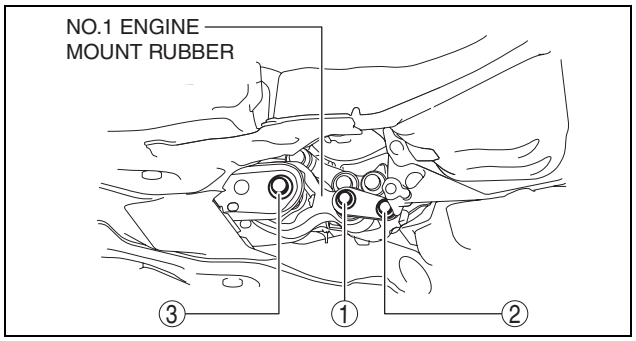

ac5uuw00000141

02-14 REAR SUSPENSION

REAR SUSPENSION LOCATION INDEX 02-14–2
REAR SHOCK ABSORBER REMOVAL/INSTALLATION 02-14–4
Rear Shock Absorber Upper Nut Installation Note 02-14–5
REAR SHOCK ABSORBER INSPECTION 02-14–5
REAR SHOCK ABSORBER DISPOSAL 02-14–5
REAR COIL SPRING REMOVAL/INSTALLATION 02-14–6
Rear Coil Spring Removal Note 02-14–7
Rear Coil Spring Installation Note 02-14–7
REAR LOWER ARM REMOVAL/INSTALLATION 02-14–8
Rear Lower Arm Outer Bolt Removal Note 02-14–9
Rear Lower Arm Outer Bolt Installation Note 02-14–9
REAR UPPER ARM REMOVAL/INSTALLATION [2WD] 02-14–10
Rear Upper Arm Removal Note 02-14–12
Rear Upper Arm Bushing Removal Note 02-14–13
Rear Upper Arm Bushing Installation Note 02-14–13
Rear Upper Arm Installation Note 02-14–15
REAR UPPER ARM REMOVAL/INSTALLATION [4WD] 02-14–16
Rear Upper Arm Removal Note 02-14–20
Rear Upper Arm Bushing Removal Note 02-14–21
Rear Upper Arm Bushing Installation Note 02-14–21
Rear Upper Arm Installation Note 02-14–23
REAR TRAILING LINK REMOVAL/INSTALLATION 02-14–24
Rear Trailing Link Installation Note. . . . 02-14–25
REAR LATERAL LINK REMOVAL/INSTALLATION 02-14–25
Rear Lateral Link Removal Note 02-14–27
Rear Lateral Link Installation Note 02-14–27
REAR STABILIZER REMOVAL/INSTALLATION [2WD] 02-14–27
Rear Stabilizer Component Removal Note 02-14–30
Rear Stabilizer Bracket Removal Note 02-14–30
Rear Stabilizer Bushing, Rear Stabilizer Bracket Installation Note . . . 02-14–30
Rear Stabilizer Component Installation Note 02-14–32
REAR STABILIZER REMOVAL/INSTALLATION [4WD] 02-14–33
Rear Stabilizer Component Removal Note 02-14–37
Rear Stabilizer Bracket Removal Note 02-14–37
Rear Stabilizer Bushing, Rear Stabilizer Bracket Installation Note . . . 02-14–37
Rear Stabilizer Component Installation Note 02-14–39
REAR STABILIZER CONTROL LINK INSPECTION 02-14–40
REAR CROSSMEMBER REMOVAL/INSTALLATION [2WD] 02-14–40
Rear Crossmember Component Removal Note 02-14–43
Rear Crossmember Component Installation Note 02-14–43
REAR CROSSMEMBER REMOVAL/INSTALLATION [4WD] 02-14–44
Rear Crossmember Component Removal Note 02-14–48
Rear Crossmember Component Installation Note 02-14–48

REAR SUSPENSION

REAR SUSPENSION LOCATION INDEX

id021400800400

2WD

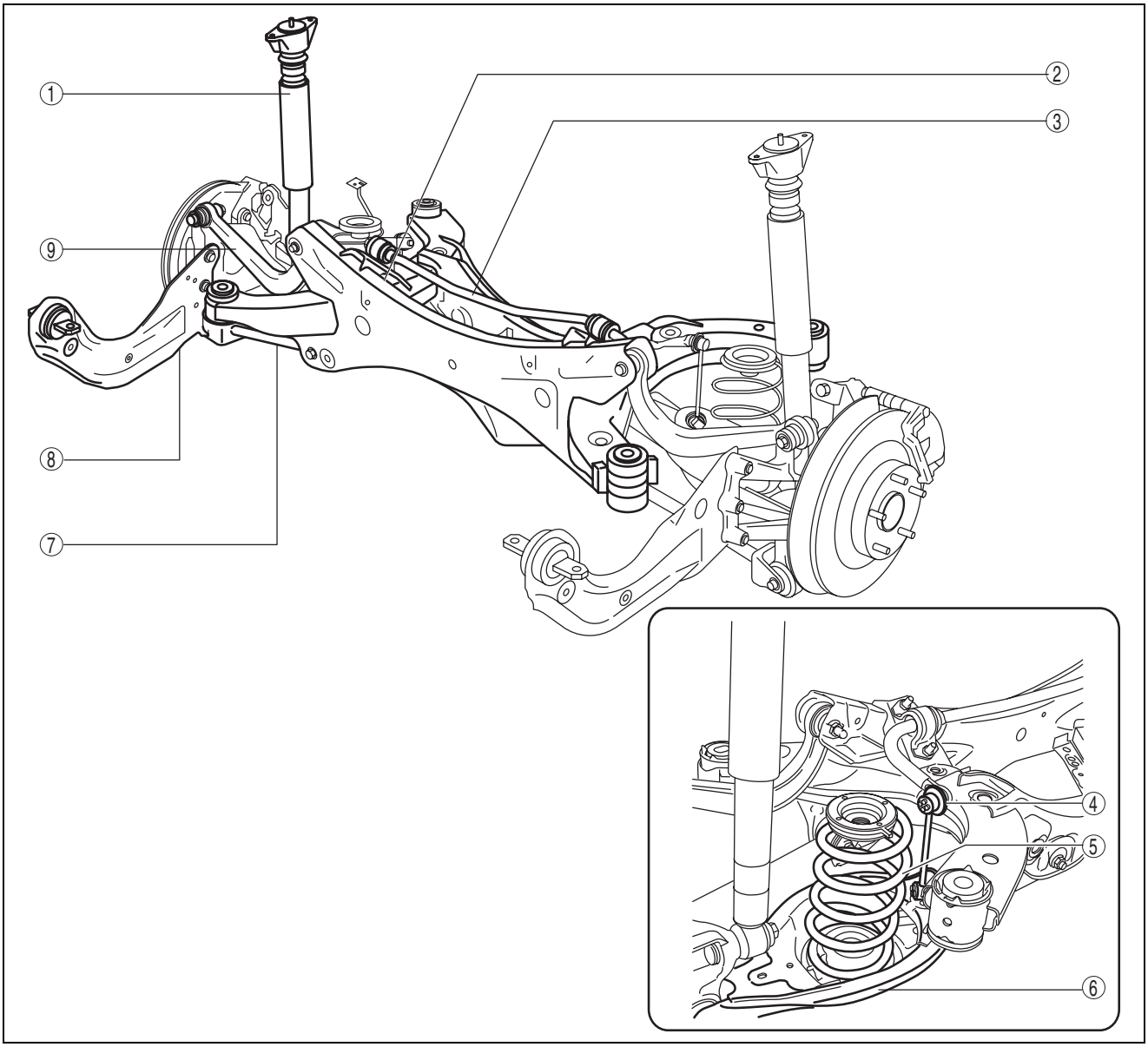

ac5uuw00000144

REAR SUSPENSION

4WD

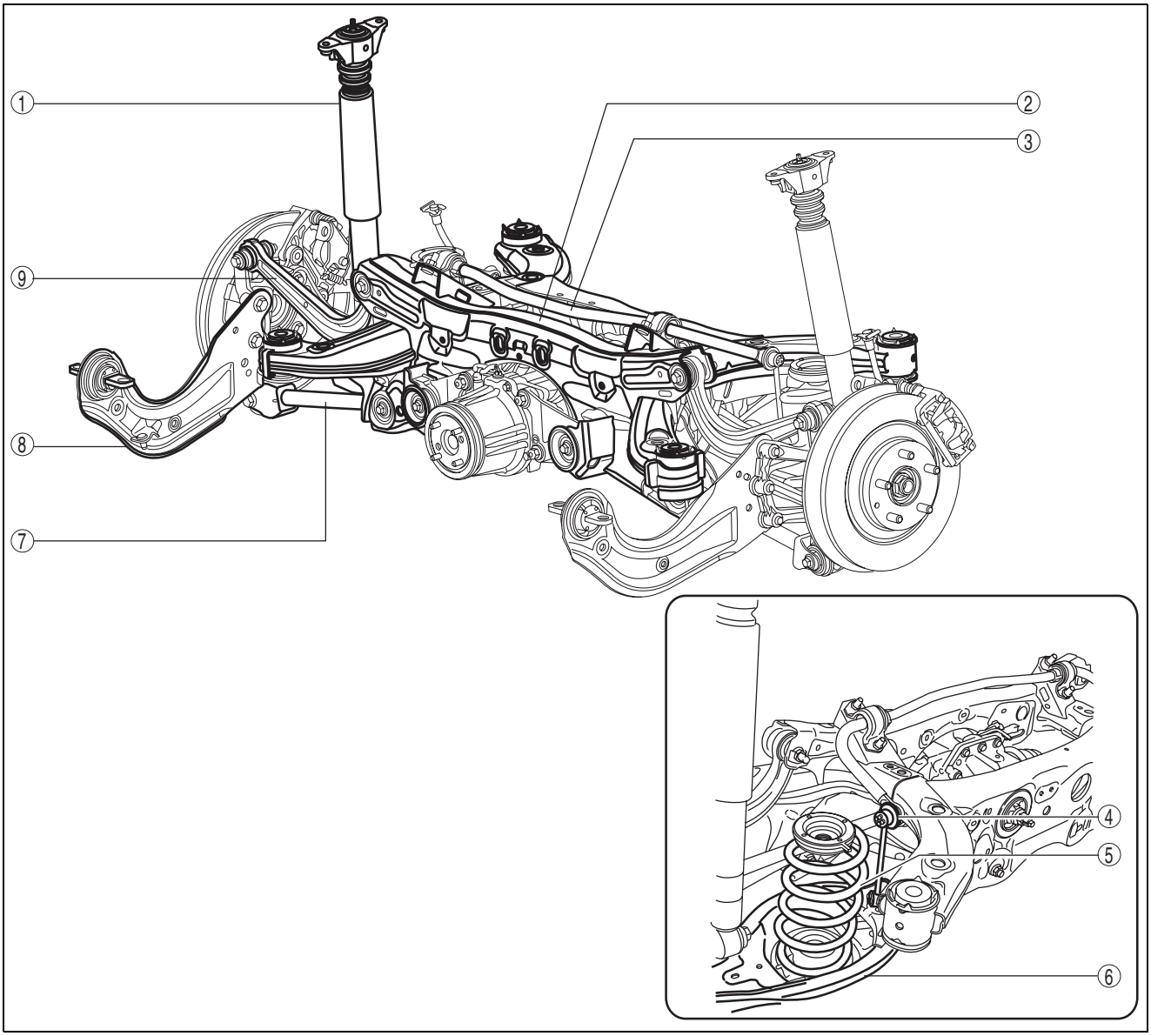

ac5uuw00000145

1	Rear shock absorber (See 02-14-4 REAR SHOCK ABSORBER REMOVAL/INSTALLATION.) (See 02-14-5 REAR SHOCK ABSORBER INSPECTION.) (See 02-14-5 REAR SHOCK ABSORBER DISPOSAL.)
2	Rear crossmember (See 02-14-40 REAR CROSSMEMBER REMOVAL/INSTALLATION [2WD].) (See 02-14-44 REAR CROSSMEMBER REMOVAL/INSTALLATION [4WD].)
3	Rear stabilizer (See 02-14-40 REAR STABILIZER CONTROL LINK INSPECTION.)
4	Rear stabilizer control link (See 02-14-27 REAR STABILIZER REMOVAL/INSTALLATION [2WD].) (See 02-14-33 REAR STABILIZER REMOVAL/INSTALLATION [4WD].)

5	Rear coil spring (See 02-14-6 REAR COIL SPRING REMOVAL/INSTALLATION.)
6	Rear lower arm (See 02-14-8 REAR LOWER ARM REMOVAL/INSTALLATION.)
7	Rear lateral link (See 02-14-25 REAR LATERAL LINK REMOVAL/INSTALLATION.)
8	Rear trailing link (See 02-14-24 REAR TRAILING LINK REMOVAL/INSTALLATION.)
9	Rear upper arm (See 02-14-10 REAR UPPER ARM REMOVAL/INSTALLATION [2WD].) (See 02-14-16 REAR UPPER ARM REMOVAL/INSTALLATION [4WD].)

REAR SUSPENSION

REAR SHOCK ABSORBER REMOVAL/INSTALLATION

id021400801300

1. Remove in the order indicated in the table.
2. Install in the reverse order of removal.

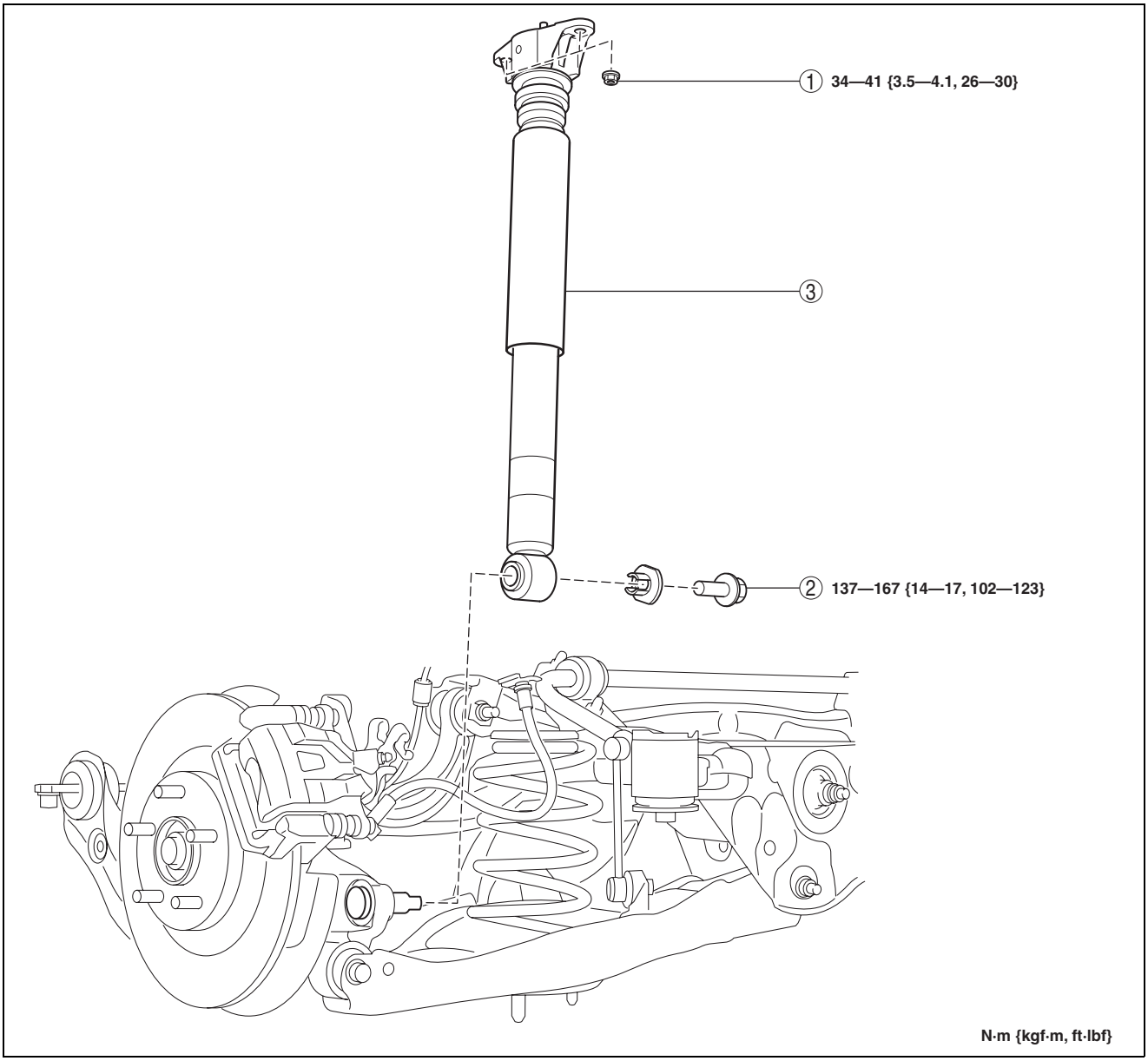

ac5wzw0000278

1	Rear shock absorber upper nut (See 02-14-5 Rear Shock Absorber Upper Nut Installation Note.)

2	Rear shock absorber lower bolt
3	Rear shock absorber

REAR SUSPENSION

Rear Shock Absorber Upper Nut Installation Note

1. Lift up the rear lower arm using a jack and install the rear shock absorber upper nuts.

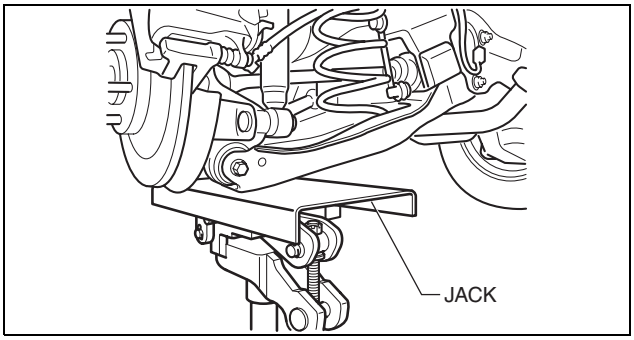

ac5wzw0000285

REAR SHOCK ABSORBER INSPECTION

id021400801400

1. Remove the rear shock absorber. (See 02-14-4 REAR SHOCK ABSORBER REMOVAL/INSTALLATION.)
2. Inspect for damage and oil leakage.
3. Compress and extend the shock piston at least three times. Verify that the operational force does not change and that there is no unusual noise.
   - If not as specified, replace the rear shock absorber.

REAR SHOCK ABSORBER DISPOSAL

id021400801500

Warning

- **Whenever drilling into a rear shock absorber, wear protective eye wear. The gas in the rear shock absorber is pressurized, and could spray metal chips into the eyes and face when drilling.**

1. Clamp a rear shock absorber on a flat surface or with the piston pointing downwards.
2. Drill a **2—3 mm {0.08—0.11 in}** hole at a point A from the bottom of the tube, so that the gas can escape.

   Point A: 40—50 mm {1.6—1.8 in}

3. Turn the hole downwards.
4. The oil can be collected by moving the piston rod several times up and down and cutting the tube at the end.
5. Dispose of waste oil according to the waste disposal law.

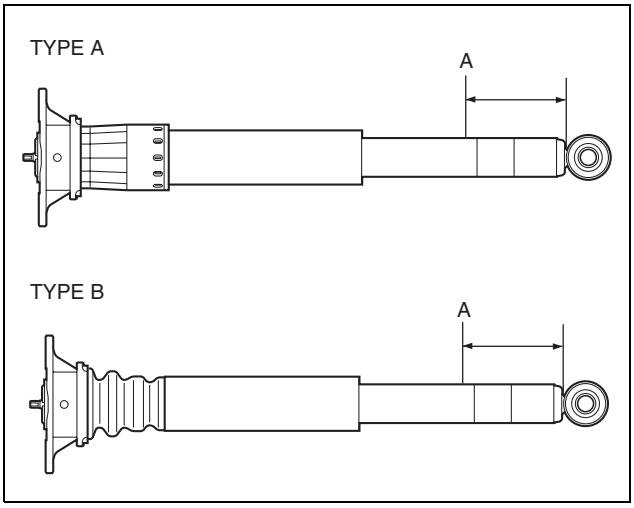

ac5wzw0000242

REAR SUSPENSION

REAR COIL SPRING REMOVAL/INSTALLATION

id021400800700

Warning

- **Be careful not to allow the coil spring to fly off when removing/installing the coil spring. Otherwise, the coil spring could fly off and cause serious injure or death, or damage to the vehicle.**

1. When working on the left side of the vehicle, disconnect the auto leveling sensor link. (With auto leveling sensor) (See 09-18-79 AUTO LEVELING SENSOR REMOVAL/INSTALLATION.)
2. Remove in the order indicated in the table.
3. Install in the reverse order of removal.
4. Inspect the wheel alignment and adjust it if necessary. (See 02-11-3 REAR WHEEL ALIGNMENT.)

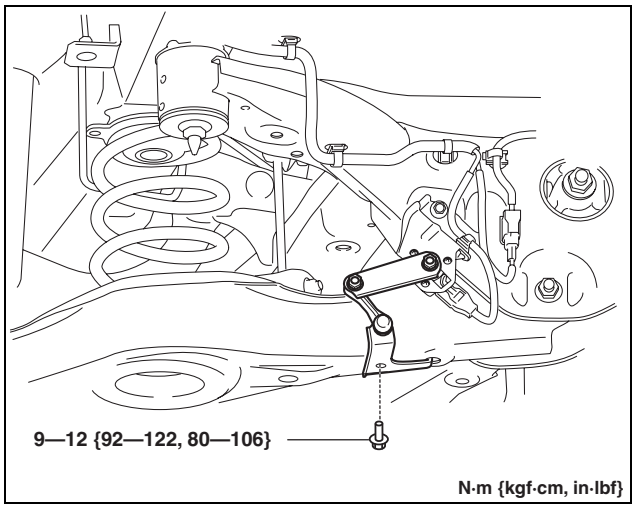

ac5wzw0000099

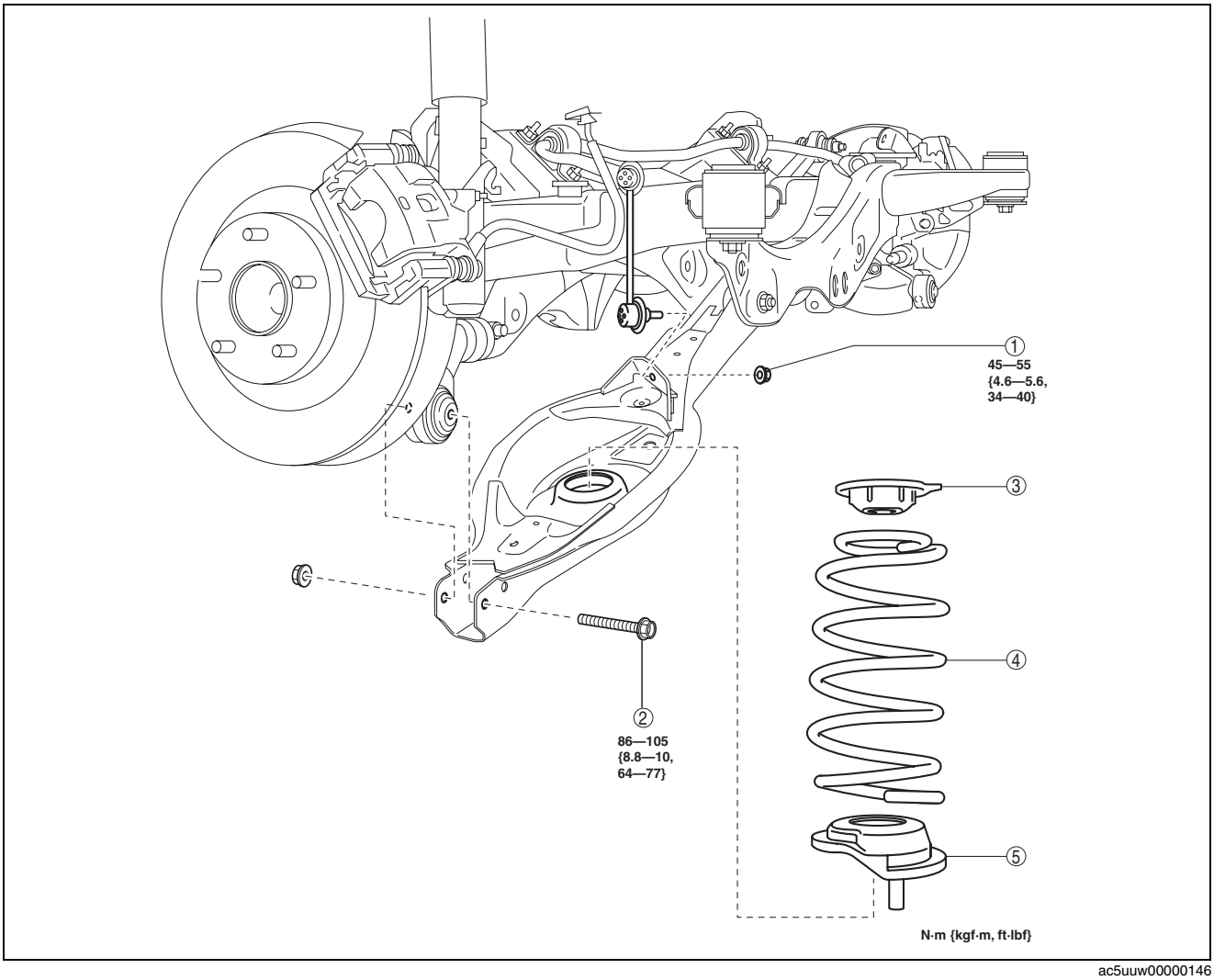

ac5uuw00000146

REAR SUSPENSION

1	Rear stabilizer control link lower side nut
2	Rear lower arm outer bolt (See 02-14-7 Rear Coil Spring Removal Note.)
3	Upper spring seat rubber
4	Rear coil spring (See 02-14-7 Rear Coil Spring Installation Note.)
5	Lower spring seat rubber

Rear Coil Spring Removal Note

1. Support the rear lower arm using a jack.
2. Remove the rear lower arm outer bolt.
3. Remove the rear coil spring.

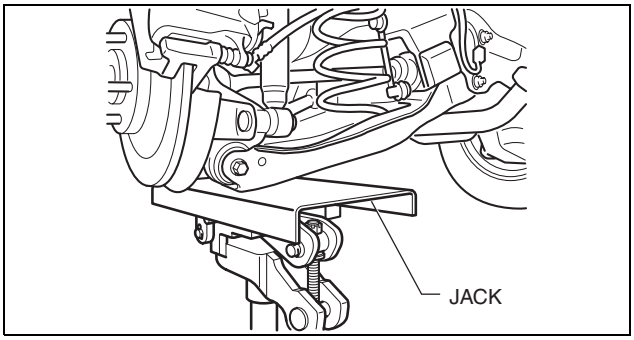

ac5wzw0000286

Rear Coil Spring Installation Note

1. Position the jack under the rear lower arm and jack up slowly.

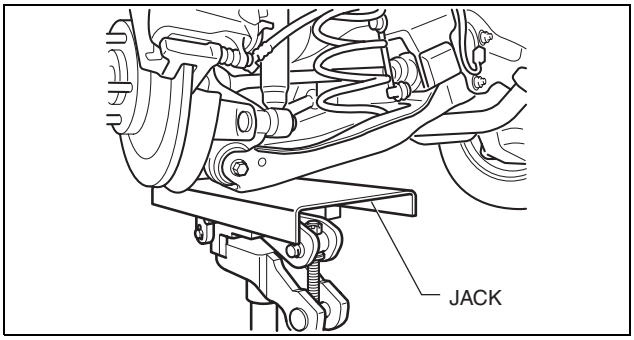

ac5wzw0000286

2. Install the rear coil spring so that the light green paint is pointed upward of the vehicle.
3. Align the upper end of the rear coil spring with the step of the upper spring seat rubber.
4. Align the lower end of the rear coil spring with the step of the lower spring seat rubber.
5. Install the rear lower arm outer bolt.

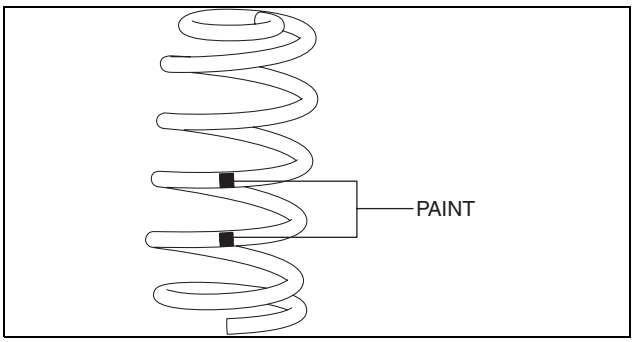

ac5wzw0000273

REAR SUSPENSION

REAR LOWER ARM REMOVAL/INSTALLATION

id021400800900

Warning

- **Be careful not to allow the coil spring to fly off when removing/installing the coil spring. Otherwise, the coil spring could fly off and cause serious injure or death, or damage to the vehicle.**

1. When working on the left side of the vehicle, disconnect the auto leveling sensor link. (With auto leveling sensor) (See 09-18-79 AUTO LEVELING SENSOR REMOVAL/INSTALLATION.)
2. Remove in the order indicated in the table.
3. Install in the reverse order of removal.
4. Inspect the wheel alignment and adjust it if necessary. (See 02-11-3 REAR WHEEL ALIGNMENT.)

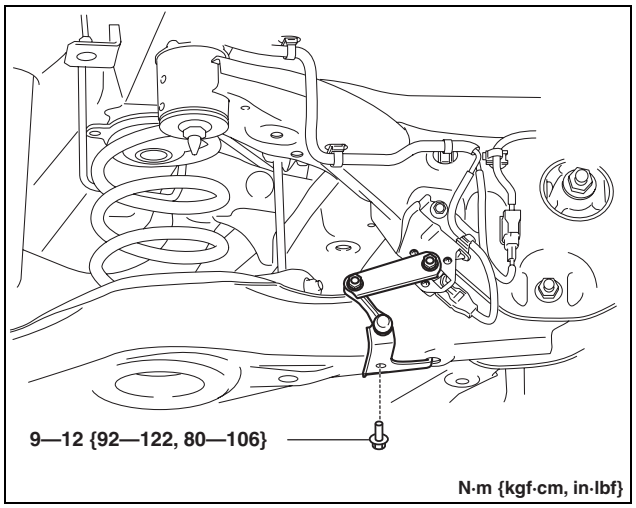

ac5wzw0000099

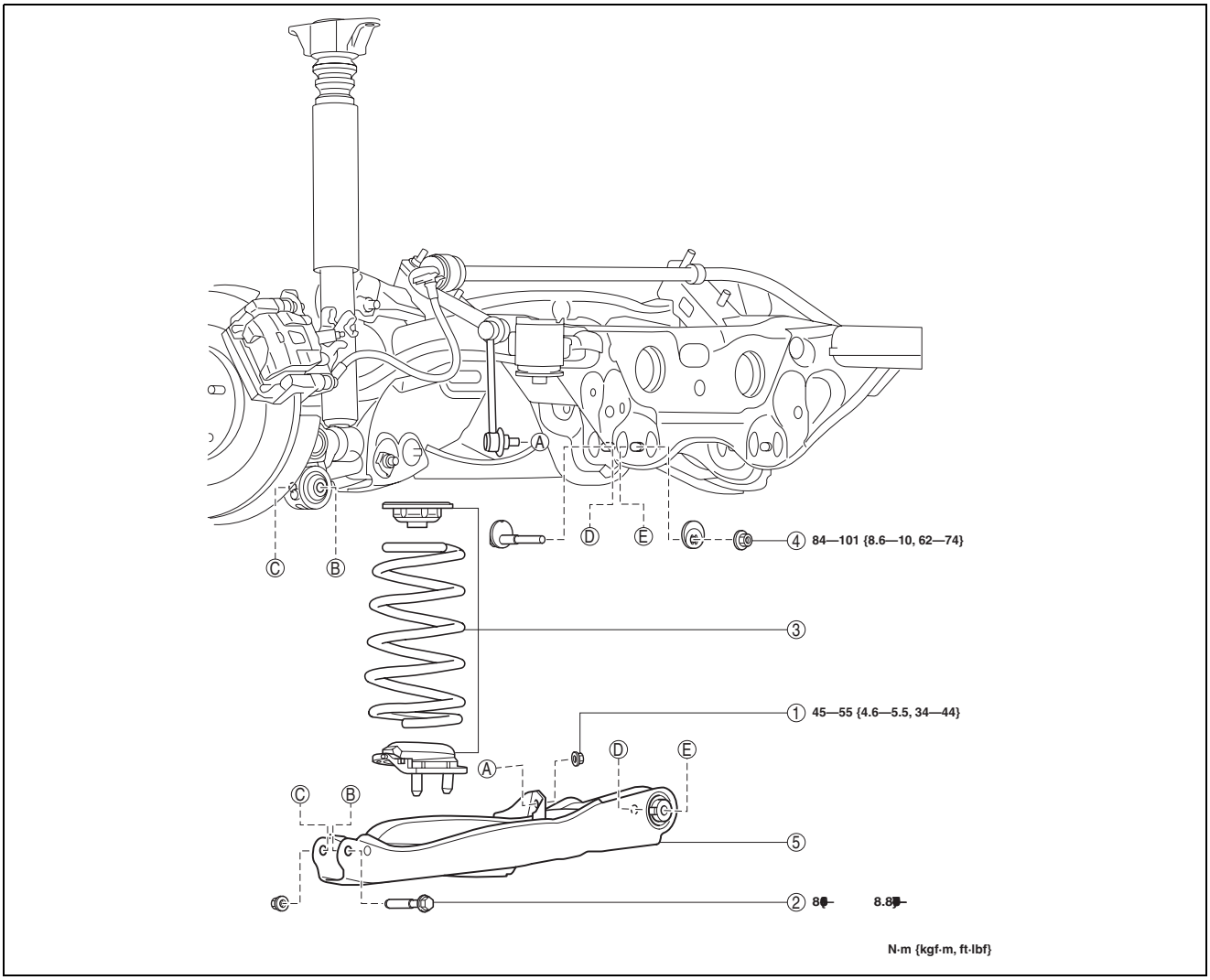

ac5wzw0000273

REAR SUSPENSION

1	Rear stabilizer control link lower side nut (See 02-14-27 REAR STABILIZER REMOVAL/ INSTALLATION [2WD].) (See 02-14-33 REAR STABILIZER REMOVAL/ INSTALLATION [4WD].)
2	Rear lower arm outer bolt (See 02-14-9 Rear Lower Arm Outer Bolt Removal Note.) (See 02-14-9 Rear Lower Arm Outer Bolt Installation Note.)
3	Rear coil spring component (See 02-14-6 REAR COIL SPRING REMOVAL/ INSTALLATION.)
4	Rear lower arm inner nut
5	Rear lower arm

Rear Lower Arm Outer Bolt Removal Note

1. Support the rear lower arm using a jack.
2. Remove the rear lower arm outer bolt.

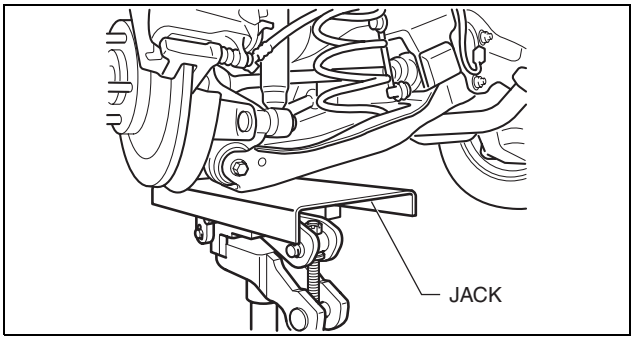

ac5wzw0000286

Rear Lower Arm Outer Bolt Installation Note

1. Position the jack under the rear lower arm and jack up slowly.
2. Align the upper end of the rear coil spring with the step of the upper spring seat rubber.
3. Align the lower end of the rear coil spring with the step of the lower spring seat rubber.
4. Install the lower arm outer bolt.

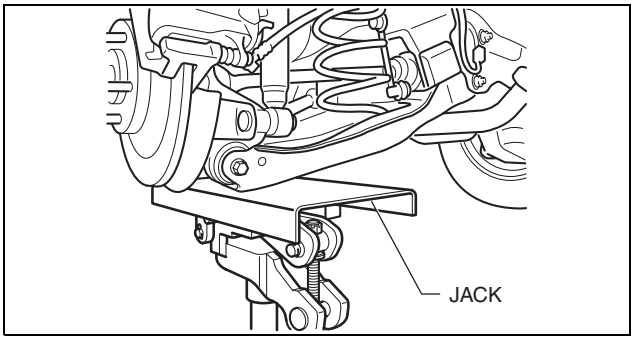

ac5wzw0000286

REAR SUSPENSION

REAR UPPER ARM REMOVAL/INSTALLATION [2WD]

id0214008008a1

Caution

- **Performing the following procedures without first removing the rear ABS wheel-speed sensor may possibly cause an open circuit in the harness if it is pulled by mistake. Before performing the following procedures, disconnect the rear ABS wheel-speed sensor (axle side) and fix it to an appropriate place where the sensor will not be pulled by mistake while servicing the vehicle.**

Note

- Mark the position before removing the rear upper arm.
- Align the rear crossmember and rear upper arm markings when installing the rear upper arm.
- Tighten the rear upper arm inner bolt completely before installing the rear crossmember component to the vehicle.

1. Disconnect the auto leveling sensor link. (With auto leveling sensor) (See 09-18-79 AUTO LEVELING SENSOR REMOVAL/INSTALLATION.)

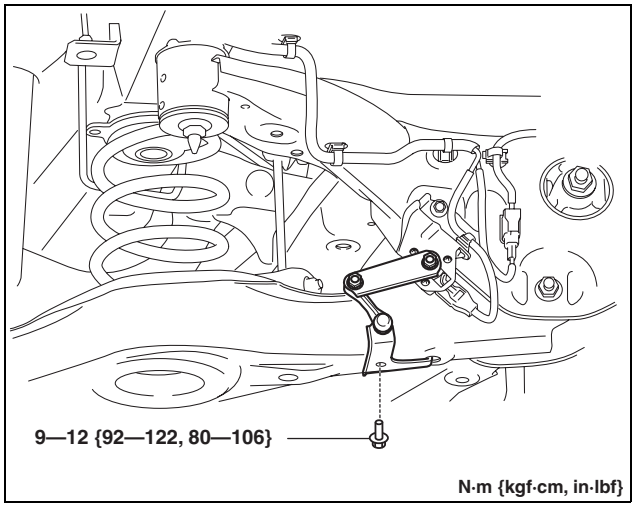

ac5wzw0000099

2. Disconnect the wiring harness clips and connector installed to the rear crossmember. (With auto leveling sensor)

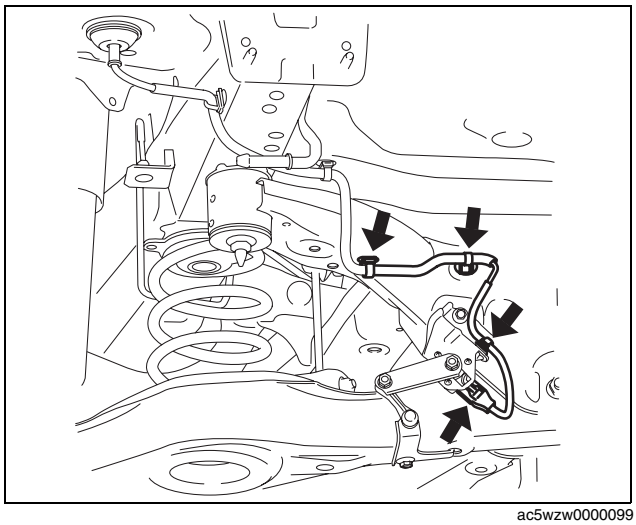

ac5wzw0000099

3. Disconnect the rear ABS wheel-speed sensor wiring harness installed to the hub support and set it aside. (See 04-15-11 REAR ABS WHEEL-SPEED SENSOR REMOVAL/INSTALLATION.)
4. Remove the TWC. (SKYACTIV-G 2.0) (See 01-15A-2 EXHAUST SYSTEM REMOVAL/INSTALLATION [SKYACTIV-G 2.0].)
5. Remove the middle pipe. (SKYACTIV-D 2.2) (See 01-15B-1 EXHAUST SYSTEM REMOVAL/INSTALLATION [SKYACTIV-D 2.2].)
6. Remove the rear coil spring. (See 02-14-6 REAR COIL SPRING REMOVAL/INSTALLATION.)
7. Remove in the order indicated in the table.

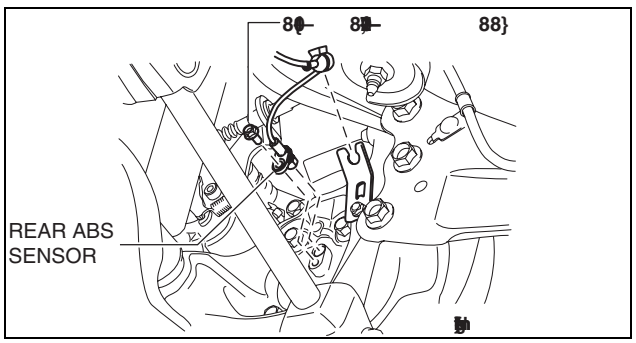

ac5uuw00000178

REAR SUSPENSION

8. Install in the reverse order of removal.
9. Inspect the wheel alignment and adjust it if necessary. (See 02-11-3 REAR WHEEL ALIGNMENT.)

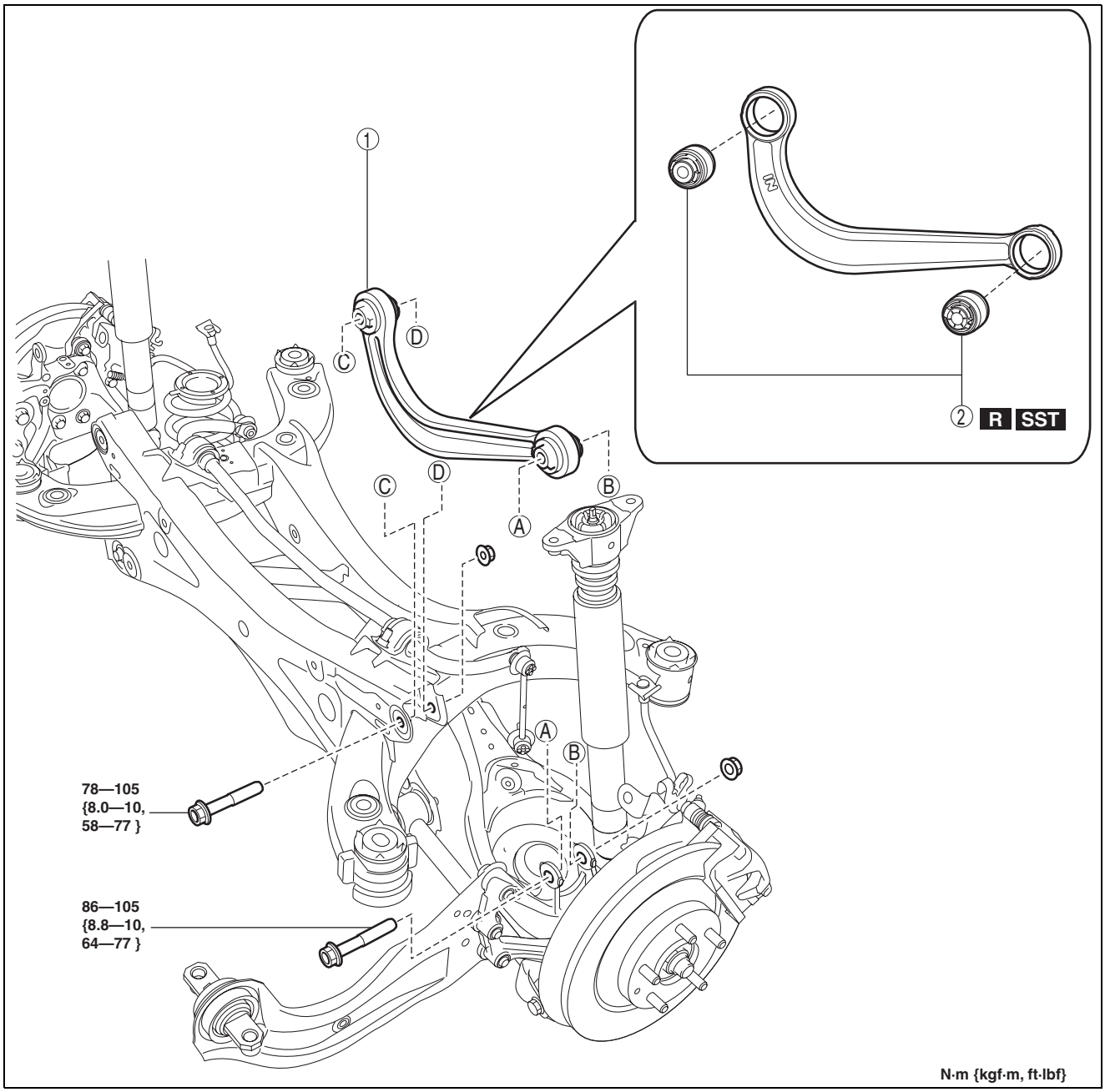

ac5uuw00000179

1	Rear upper arm (See 02-14-12 Rear Upper Arm Removal Note.) (See 02-14-15 Rear Upper Arm Installation Note.)
2	Rear upper arm bushing (See 02-14-13 Rear Upper Arm Bushing Removal Note.) (See 02-14-13 Rear Upper Arm Bushing Installation Note.)

REAR SUSPENSION

Rear Upper Arm Removal Note

1. Jack up the vehicle to the unloaded condition, and support the rear trailing link component using a jack.

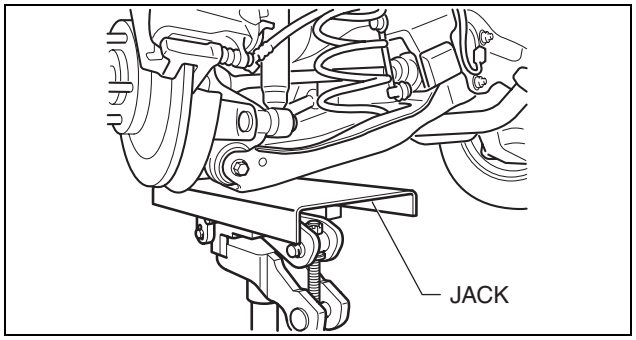

ac5wzw0000286

2. Align the rear crossmember component and rear upper arm and mark them.

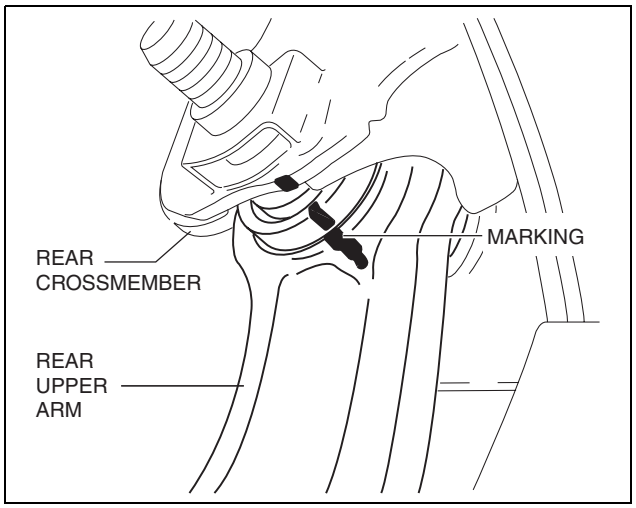

ac5uuw00000181

3. Support the rear crossmember component with a jack and remove the rear crossmember installation nuts.

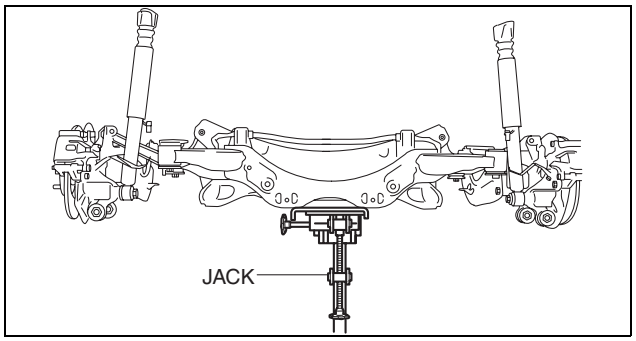

ac5uuw00000188

4. Press down on the rear crossmember component slowly until the rear upper arm inside installation bolts can be removed using a jack.
5. Remove the rear upper arm.

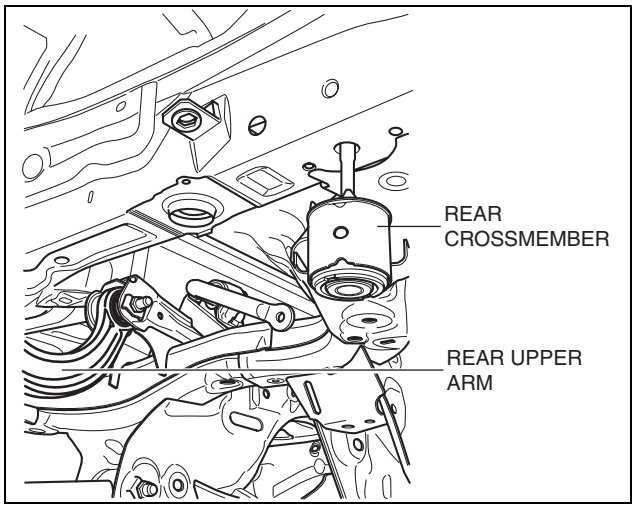

ac5wzw0000232

REAR SUSPENSION

Rear Upper Arm Bushing Removal Note

1. Mark the rear upper arm as shown in the figure.
2. Press the rear upper arm bushing out using the **SSTs**.

Caution

- **Set using the SST (49 U034 204) as shown in the figure to prevent damaging the rear upper arm and rear upper arm bushing and remove the rear upper arm bushing.**

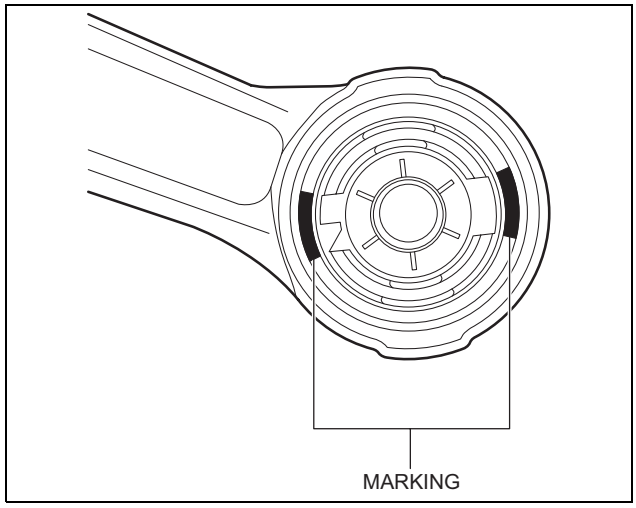

ac5wzw0000214

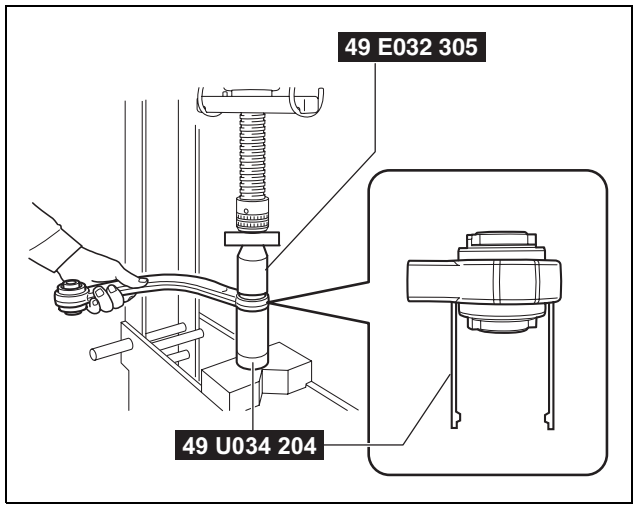

ac5wzw0000232

Rear Upper Arm Bushing Installation Note

1. Mark the new rear upper arm bushing as shown in the figure.

H^1: 6.0 mm {0.24 in}

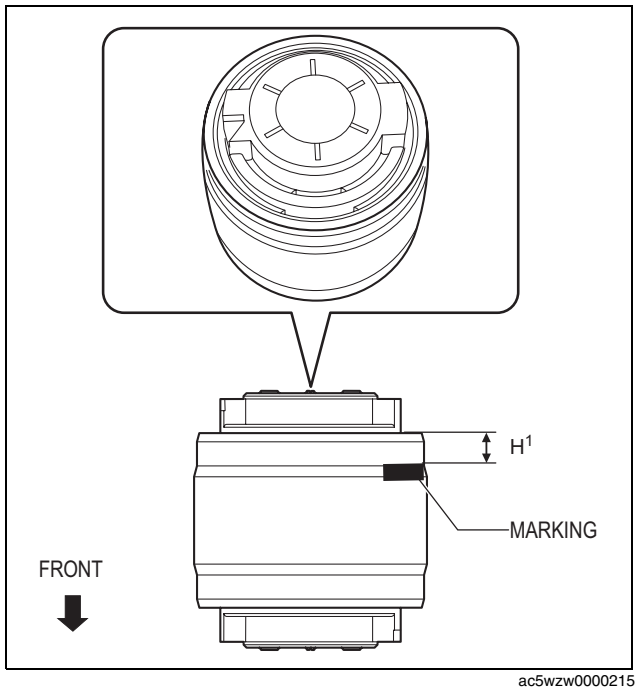

ac5wzw0000215

REAR SUSPENSION

2. Align the projection of a new rear upper arm bushing with the marks placed during removal.
3. Press fit the rear upper arm bushing until the marks placed in Step 1 cannot be seen using the SSTs.

Caution

- **Set using the SST (49 U034 204) as shown in the figure to prevent damaging the rear upper arm and rear upper arm bushing and install the rear upper arm bushing.**

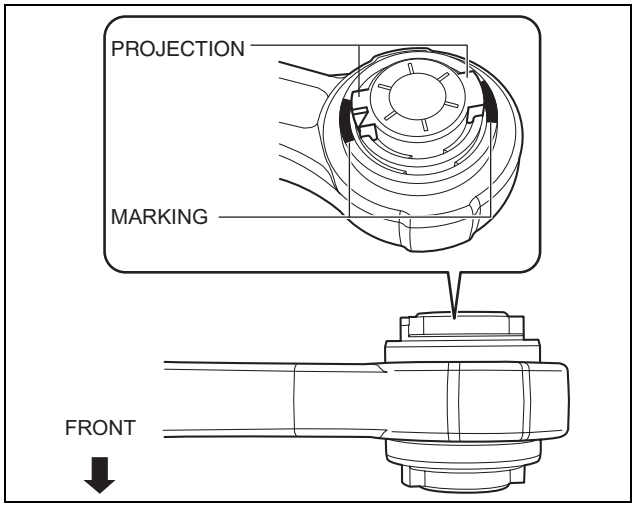

ac5wzw0000215

Note

- Be careful when press-fitting the rear upper arm bushing because the bushing height of the inner and outer sides differs.

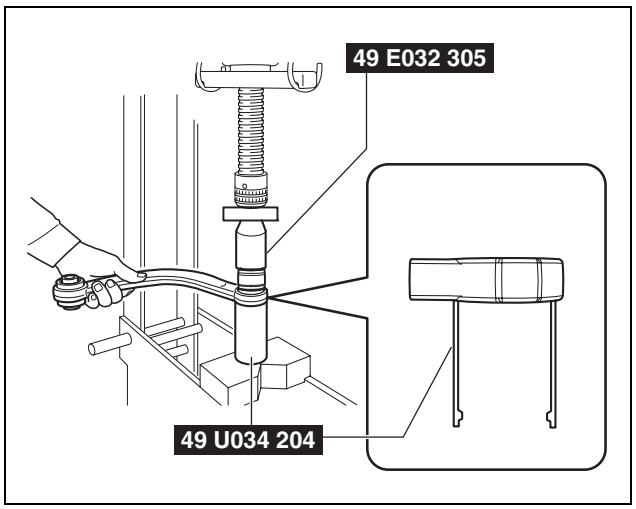

ac5wzw0000232

H^2: 49.5 mm {1.95 in}

H^3: 44.5 mm {1.75 in}

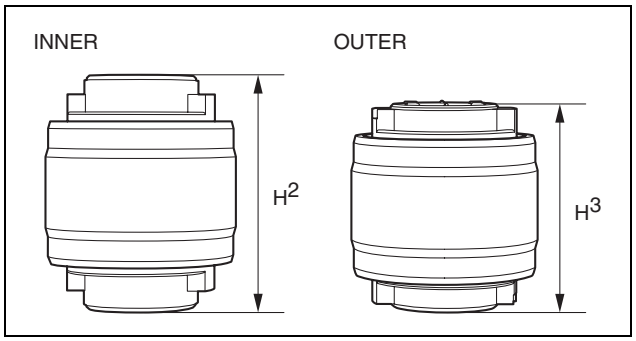

ac5wzw0000215

REAR SUSPENSION

4. After installing the rear upper arm bushing, verify that it is installed to the position shown in the figure.

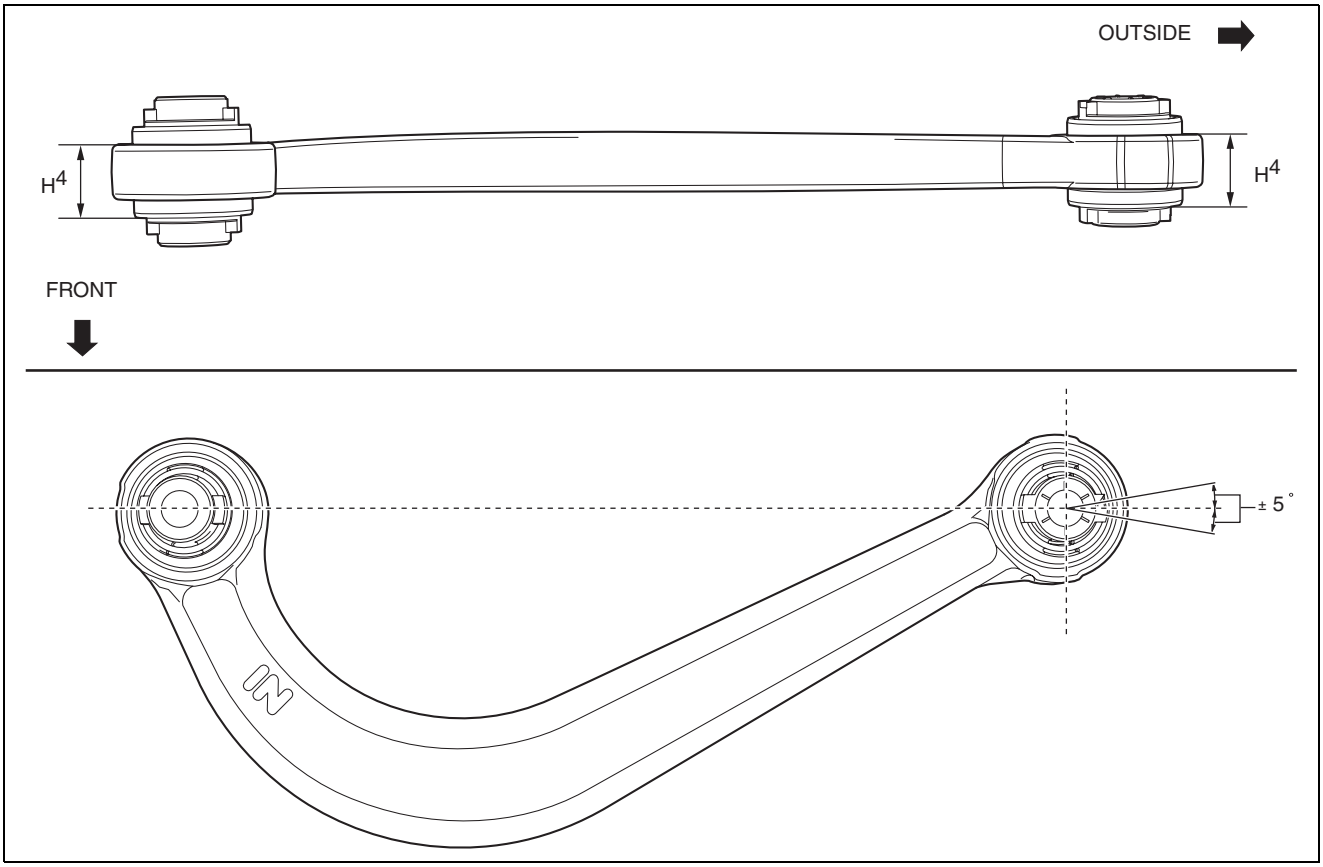

ac5wzw0000215

H^4: 24.0±0.6 mm {0.945±0.02 in}

Rear Upper Arm Installation Note

1. Place alignment mark on the new rear upper arm in the same positions as the removed rear upper arm.
2. Install the rear upper arm.

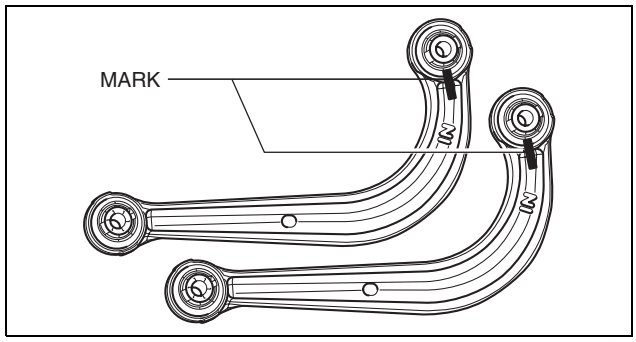

ac5uuw00000183

3. Lift up the rear crossmember component using a jack and install the rear crossmember installation nuts.

Tightening torque
91—111 N·m {9.3—11 kgf·m, 68—81 ft·lbf}

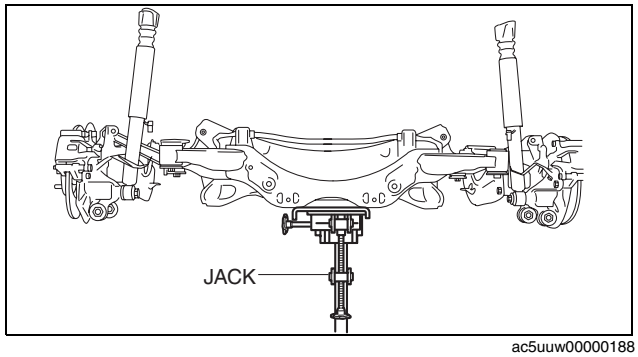

ac5uuw00000188

REAR SUSPENSION

REAR UPPER ARM REMOVAL/INSTALLATION [4WD]

id0214008008a2

Caution

- **Performing the following procedures without first removing the rear ABS wheel-speed sensor may possibly cause an open circuit in the harness if it is pulled by mistake. Before performing the following procedures, disconnect the rear ABS wheel-speed sensor (axle side) and fix it to an appropriate place where the sensor will not be pulled by mistake while servicing the vehicle.**

Note

- Mark the position before removing the rear upper arm.
- Align the rear crossmember and rear upper arm markings when installing the rear upper arm.
- Tighten the rear upper arm inner bolt completely before installing the rear crossmember component to the vehicle.

1. Disconnect the rear auto leveling sensor link. (With auto leveling sensor) (See 09-18-79 AUTO LEVELING SENSOR REMOVAL/INSTALLATION.)

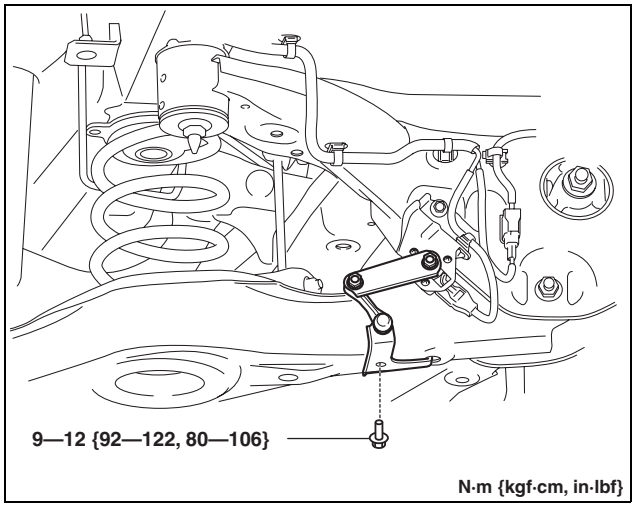

ac5wzw0000099

REAR SUSPENSION

2. Disconnect the wiring harness clips and connectors installed to the rear crossmember.

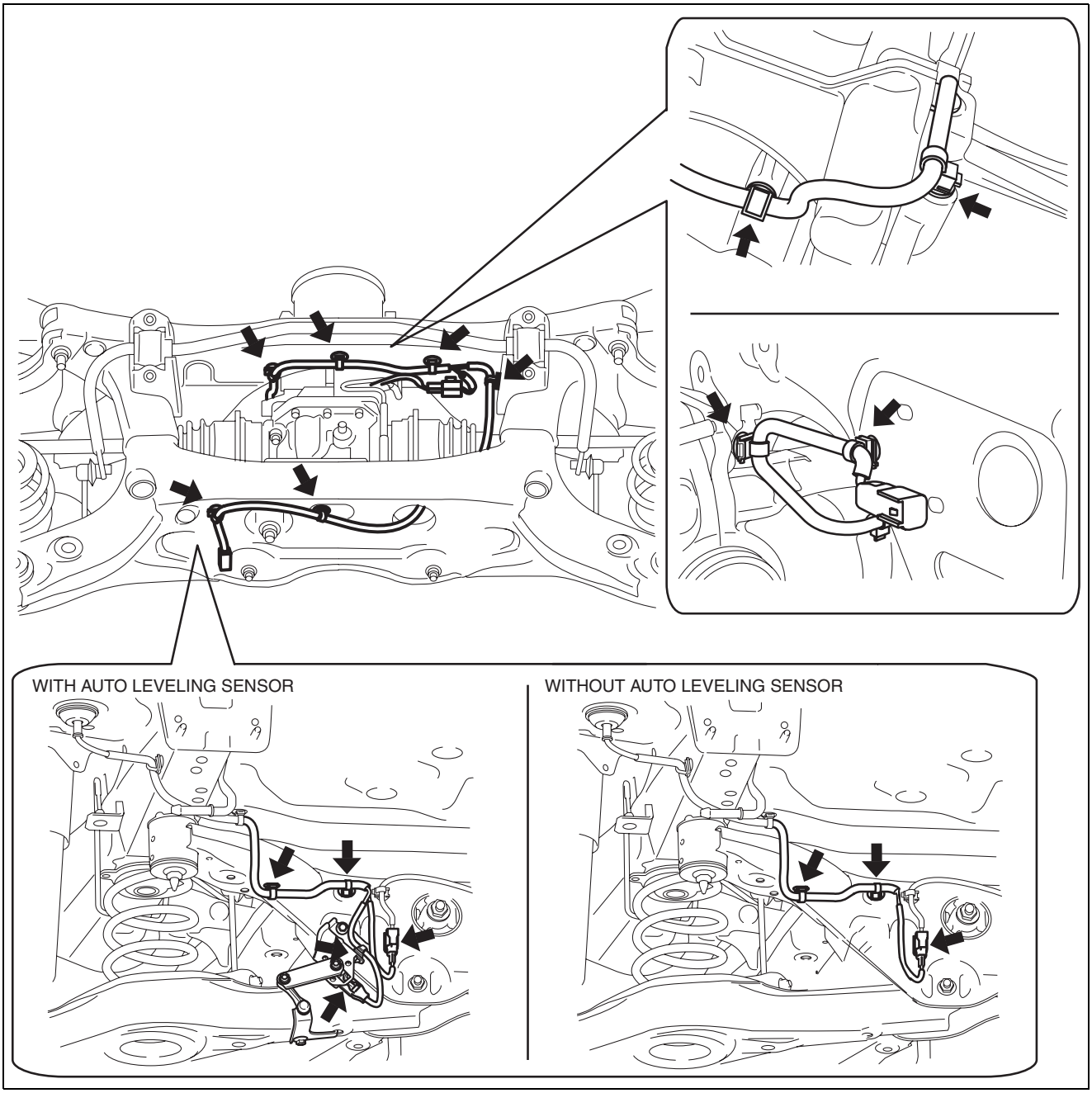

ac5wzw0000100

REAR SUSPENSION

3. Set the rear differential breather hose aside.

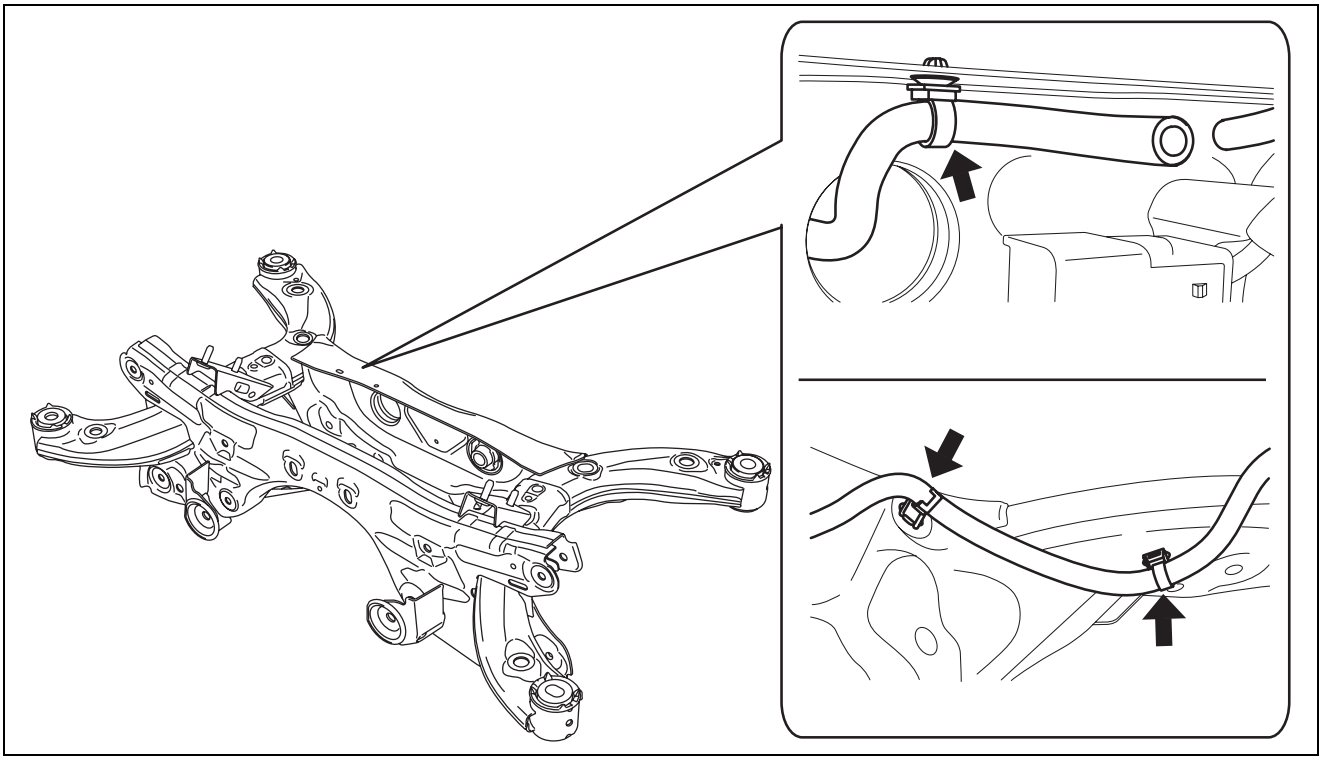

ac5uuw00000172

4. Disconnect the rear ABS wheel-speed sensor wiring harness installed to the hub support and set it aside. (See 04-15-11 REAR ABS WHEEL-SPEED SENSOR REMOVAL/INSTALLATION.)
5. Remove the propeller shaft. (See 03-15-2 PROPELLER SHAFT REMOVAL/INSTALLATION.)
6. Remove the TWC. (SKYACTIV-G 2.0) (See 01-15A-2 EXHAUST SYSTEM REMOVAL/INSTALLATION [SKYACTIV-G 2.0].)
7. Remove the middle pipe. (SKYACTIV-D 2.2) (See 01-15B-1 EXHAUST SYSTEM REMOVAL/INSTALLATION [SKYACTIV-D 2.2].)
8. Remove the rear coil spring. (See 02-14-6 REAR COIL SPRING REMOVAL/INSTALLATION.)
9. Remove in the order indicated in the table.
10. Install in the reverse order of removal.
11. Inspect the wheel alignment and adjust it if necessary. (See 02-11-3 REAR WHEEL ALIGNMENT.)

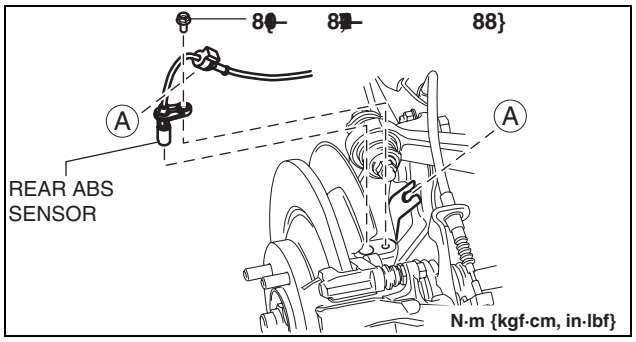

ac5uuw00000170

REAR SUSPENSION

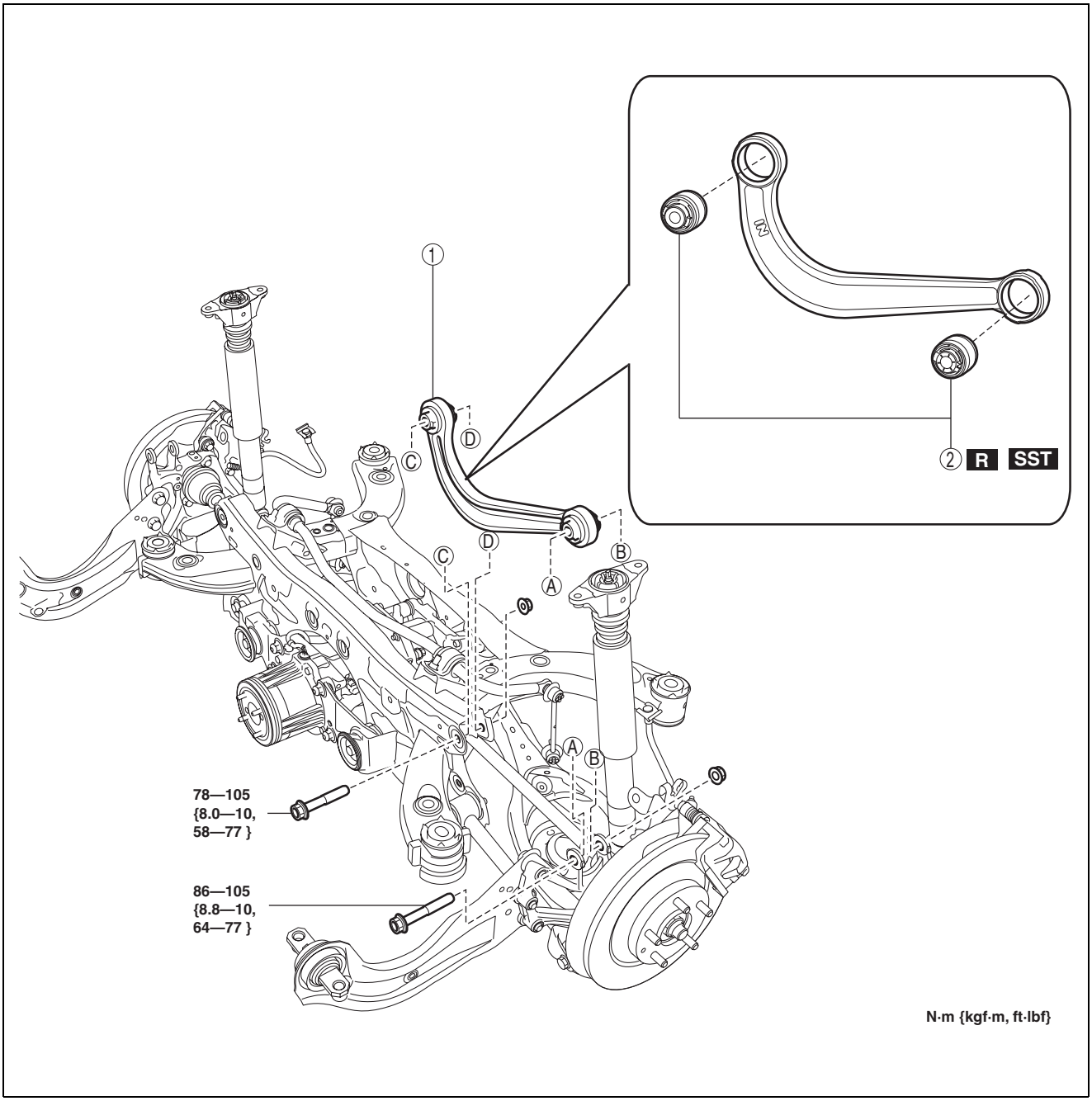

ac5uuw00000173

1	Rear upper arm (See 02-14-20 Rear Upper Arm Removal Note.) (See 02-14-23 Rear Upper Arm Installation Note.)

2	Rear upper arm bushing (See 02-14-21 Rear Upper Arm Bushing Removal Note.) (See 02-14-21 Rear Upper Arm Bushing Installation Note.)

REAR SUSPENSION

Rear Upper Arm Removal Note

1. Jack up the vehicle to the unloaded condition, and support the rear trailing link component using a jack.

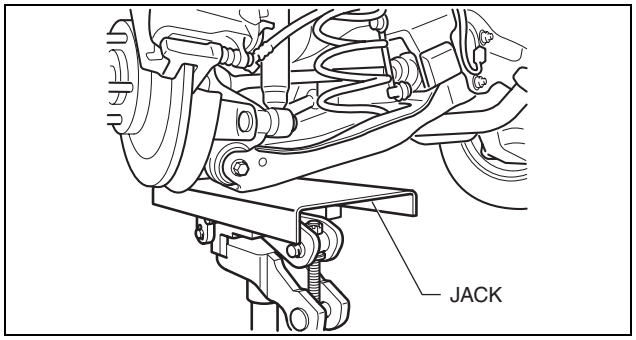

ac5wzw0000286

2. Align the rear crossmember component and rear upper arm and mark them.

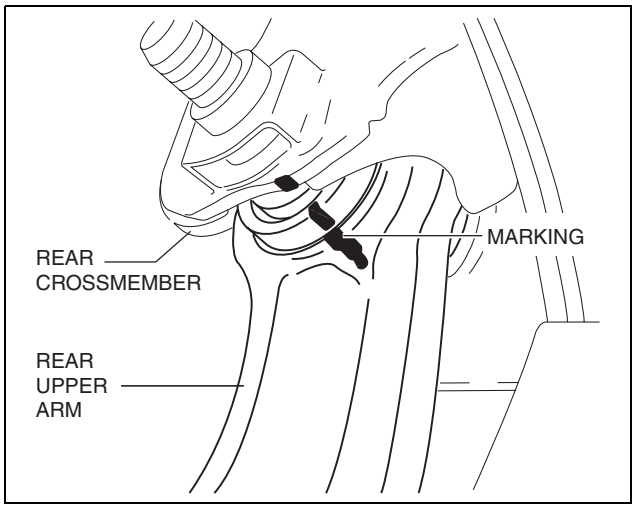

ac5uuw00000175

3. Support the rear crossmember component with a jack and remove the rear crossmember installation nuts.

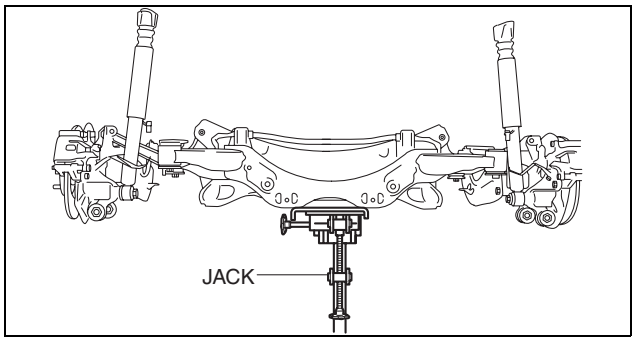

ac5uuw00000188

4. Press down on the rear crossmember component slowly until the rear upper arm inside installation bolts can be removed using a jack.
5. Remove the rear upper arm.

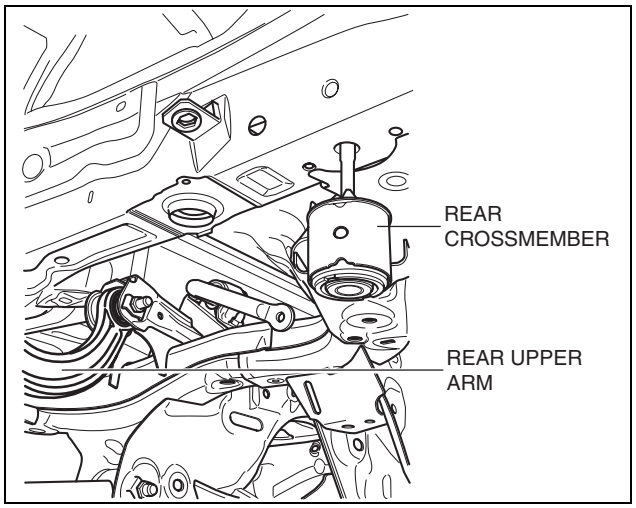

ac5wzw0000232

REAR SUSPENSION

Rear Upper Arm Bushing Removal Note

1. Mark the rear upper arm as shown in the figure.
2. Press the rear upper arm bushing out using the **SSTs**.

Caution

- **Set using the SST (49 U034 204) as shown in the figure to prevent damaging the rear upper and rear upper arm bushing and remove the rear upper arm bushing.**

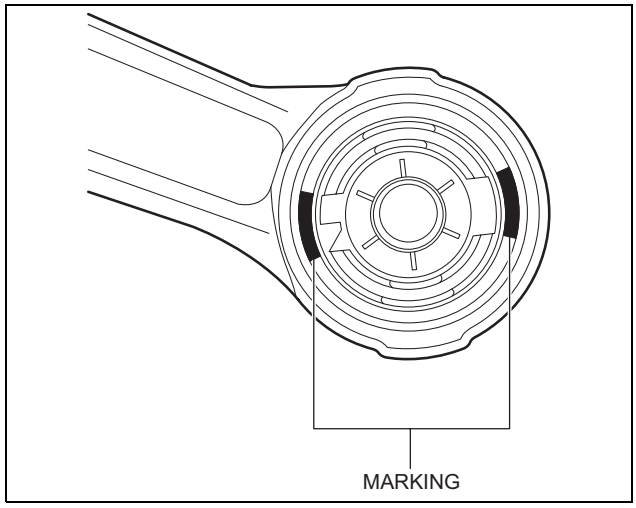

ac5wzw0000215

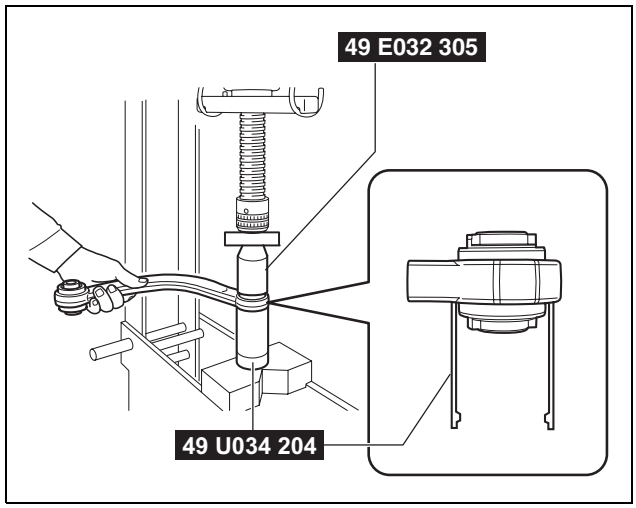

ac5wzw0000232

Rear Upper Arm Bushing Installation Note

1. Mark the new rear upper arm bushing as shown in the figure.

H^1: 6.0 mm {0.24 in}

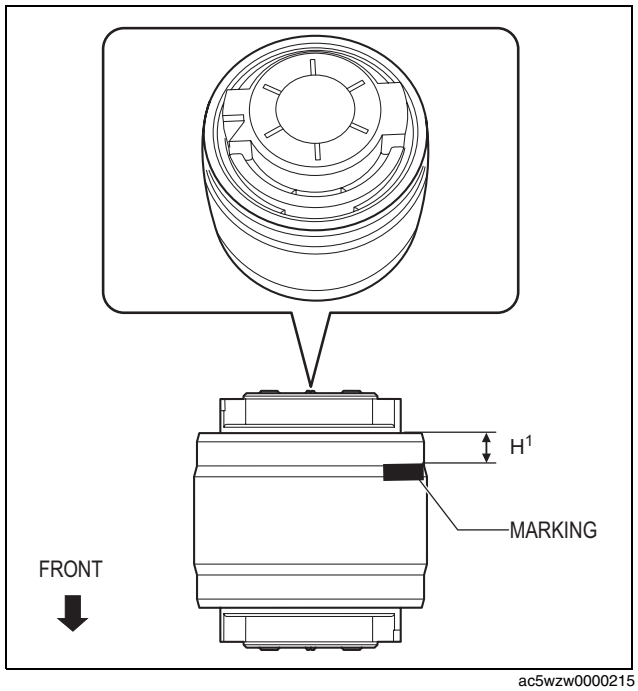

ac5wzw0000215

REAR SUSPENSION

2. Align the projection of a new rear upper arm bushing with the marks placed during removal.
3. Press fit the rear upper arm bushing until the marks placed in Step 1 cannot be seen using the **SSTs**.

Caution

- **Set using the SST (49 U034 204) as shown in the figure to prevent damaging the rear upper arm and rear upper arm bushing and install the rear upper arm bushing.**

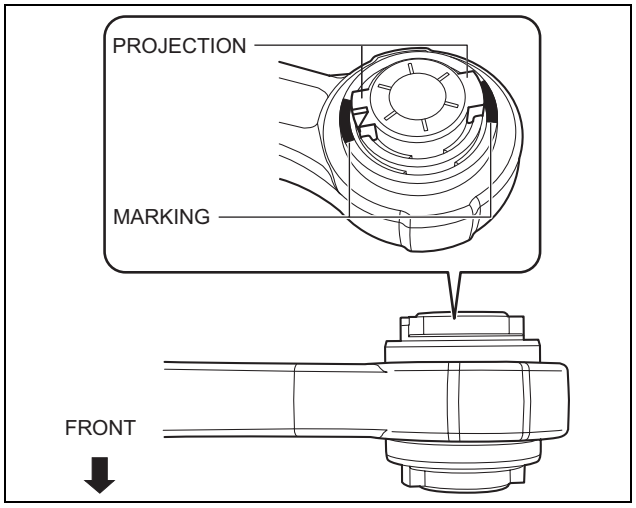

ac5wzw0000215

Note

- Be careful when press-fitting the rear upper arm bushing because the bushing height of the inner and outer sides differs.

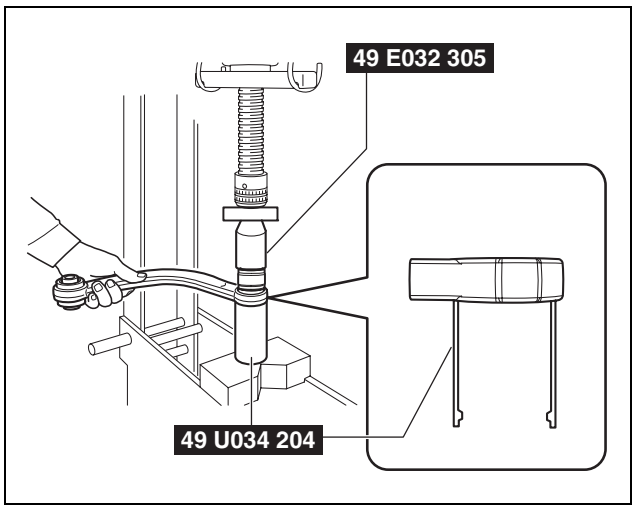

ac5wzw0000232

H^2: 49.5 mm {1.95 in}

H^3: 44.5 mm {1.75 in}

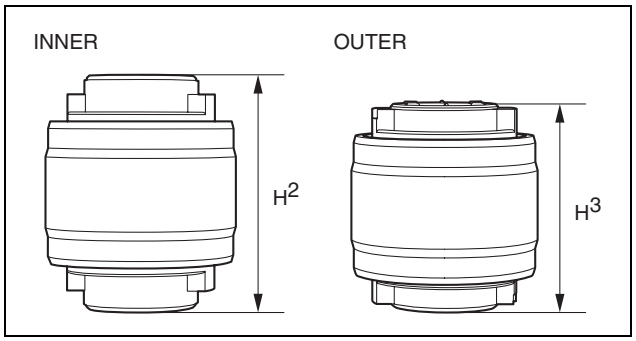

ac5wzw0000215

REAR SUSPENSION

4. After installing the rear upper arm bushing, verify that it is installed to the position shown in the figure.

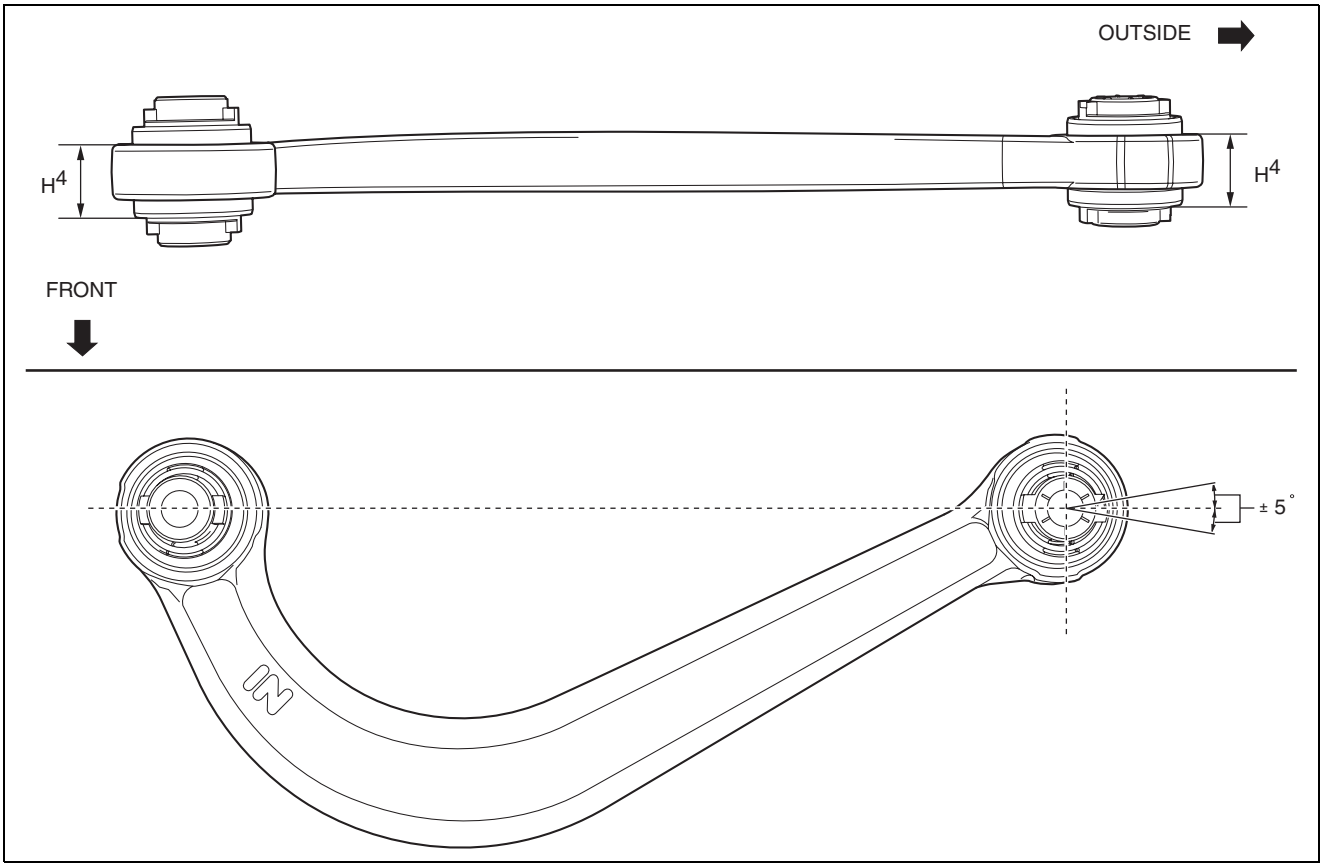

ac5wzw0000215

H^4: 24.0±0.6 mm {0.945±0.02 in}

Rear Upper Arm Installation Note

1. Place alignment mark on the new rear upper arm in the same positions as the removed rear upper arm.
2. Install the rear upper arm.

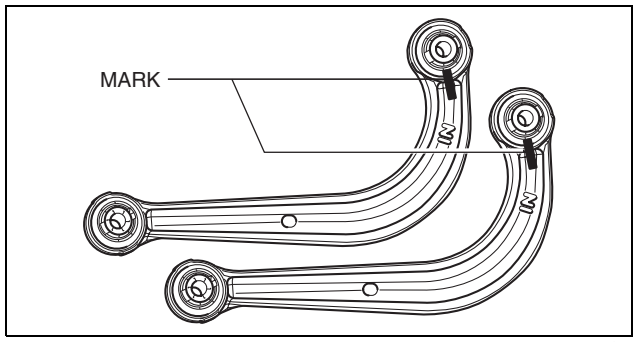

ac5uuw00000177

3. Lift up the rear crossmember component using a jack and install the rear crossmember installation nuts.

Tightening torque
91—111 N·m {9.3—11 kgf·m, 68—81 ft·lbf}

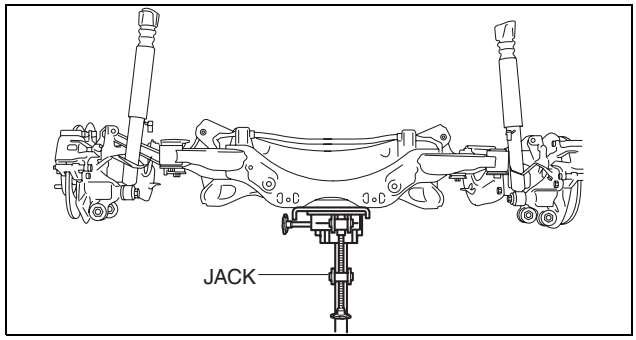

ac5uuw00000188

REAR SUSPENSION

REAR TRAILING LINK REMOVAL/INSTALLATION

id021400800100

1. Remove the floor under cover. (See 09-16-44 FLOOR UNDER COVER REMOVAL/INSTALLATION.)
2. Disconnect the rear parking cable. (See 04-12-7 REAR PARKING BRAKE CABLE REMOVAL/INSTALLATION.)
3. Remove in the order indicated in the table.
4. Install in the reverse order of removal.
5. Inspect the wheel alignment and adjust it if necessary. (See 02-11-3 REAR WHEEL ALIGNMENT.)

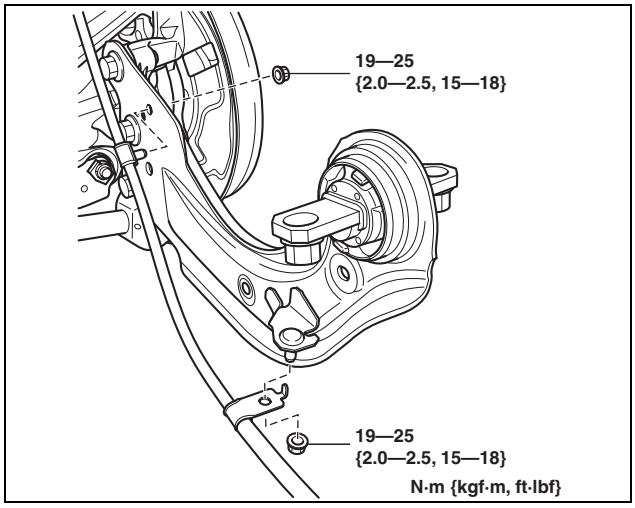

ac5wzw0000214

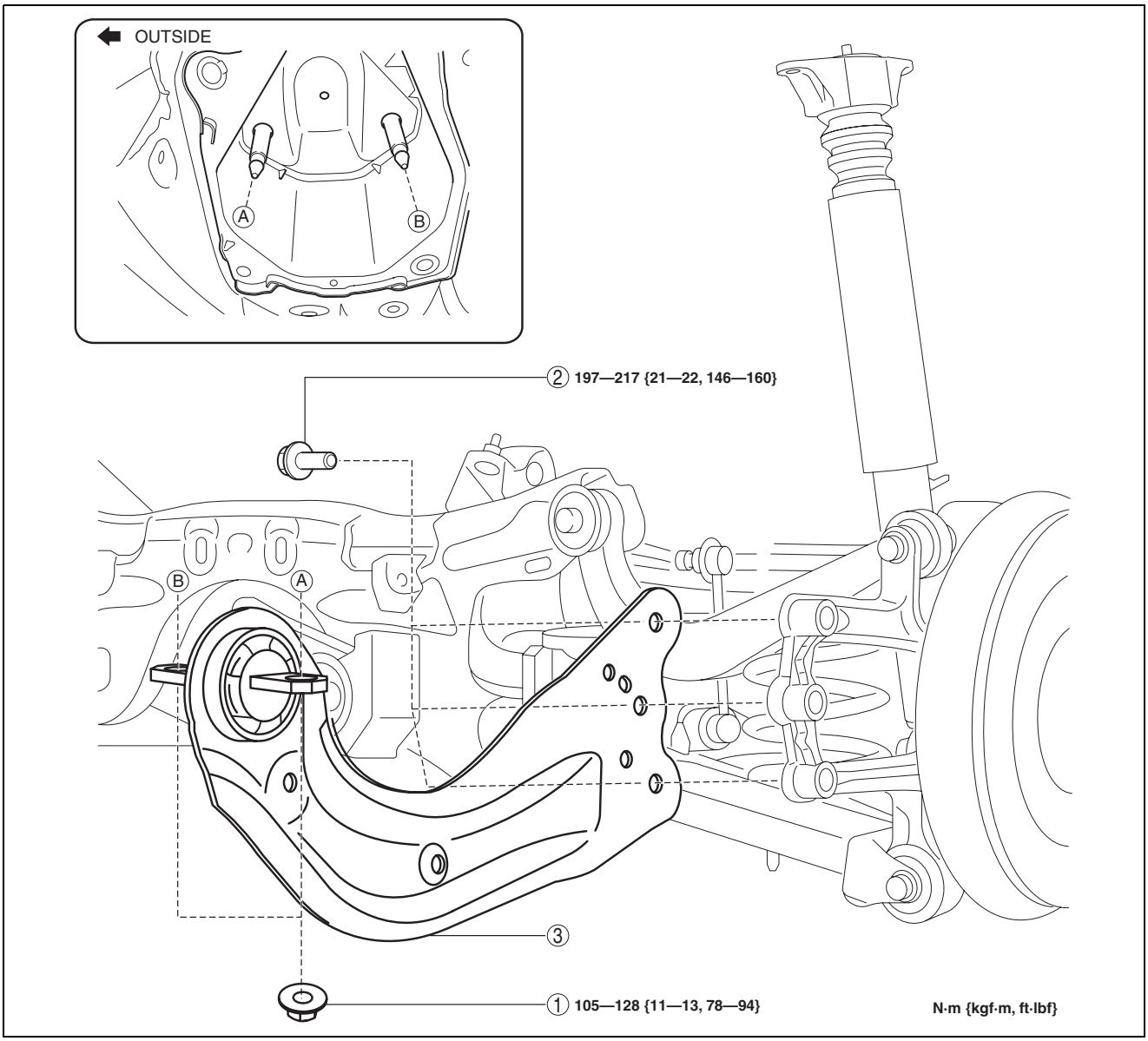

ac5wzw0000275

REAR SUSPENSION

1	Rear trailing link installation nut
2	Rear trailing link installation bolt
3	Rear trailing link (See 02-14-25 Rear Trailing Link Installation Note.)

Rear Trailing Link Installation Note

1. Install the rear trailing link installation bolts using a jack.
2. Install the rear trailing link installation nut.

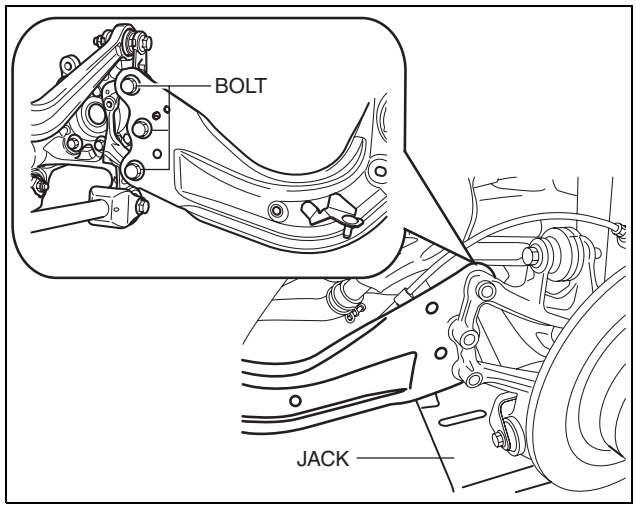

ac5uuw00000357

REAR LATERAL LINK REMOVAL/INSTALLATION

id021400801200

1. Disconnect the rear stabilizer control link lower side nut. (See 02-14-27 REAR STABILIZER REMOVAL/INSTALLATION [2WD].) (See 02-14-33 REAR STABILIZER REMOVAL/INSTALLATION [4WD].)
2. Remove in the order indicated in the table.
3. Install in the reverse order of removal.
4. Inspect the wheel alignment and adjust it if necessary. (See 02-11-3 REAR WHEEL ALIGNMENT.)

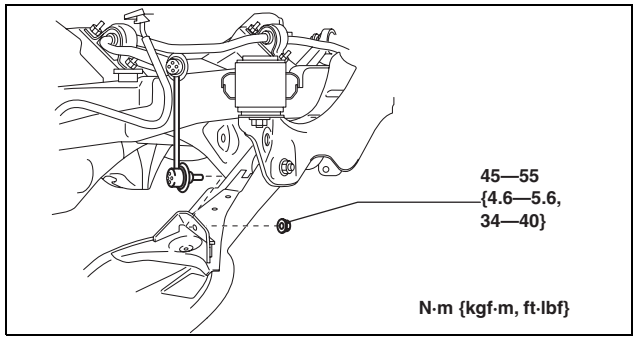

ac5uuw00000154

REAR SUSPENSION

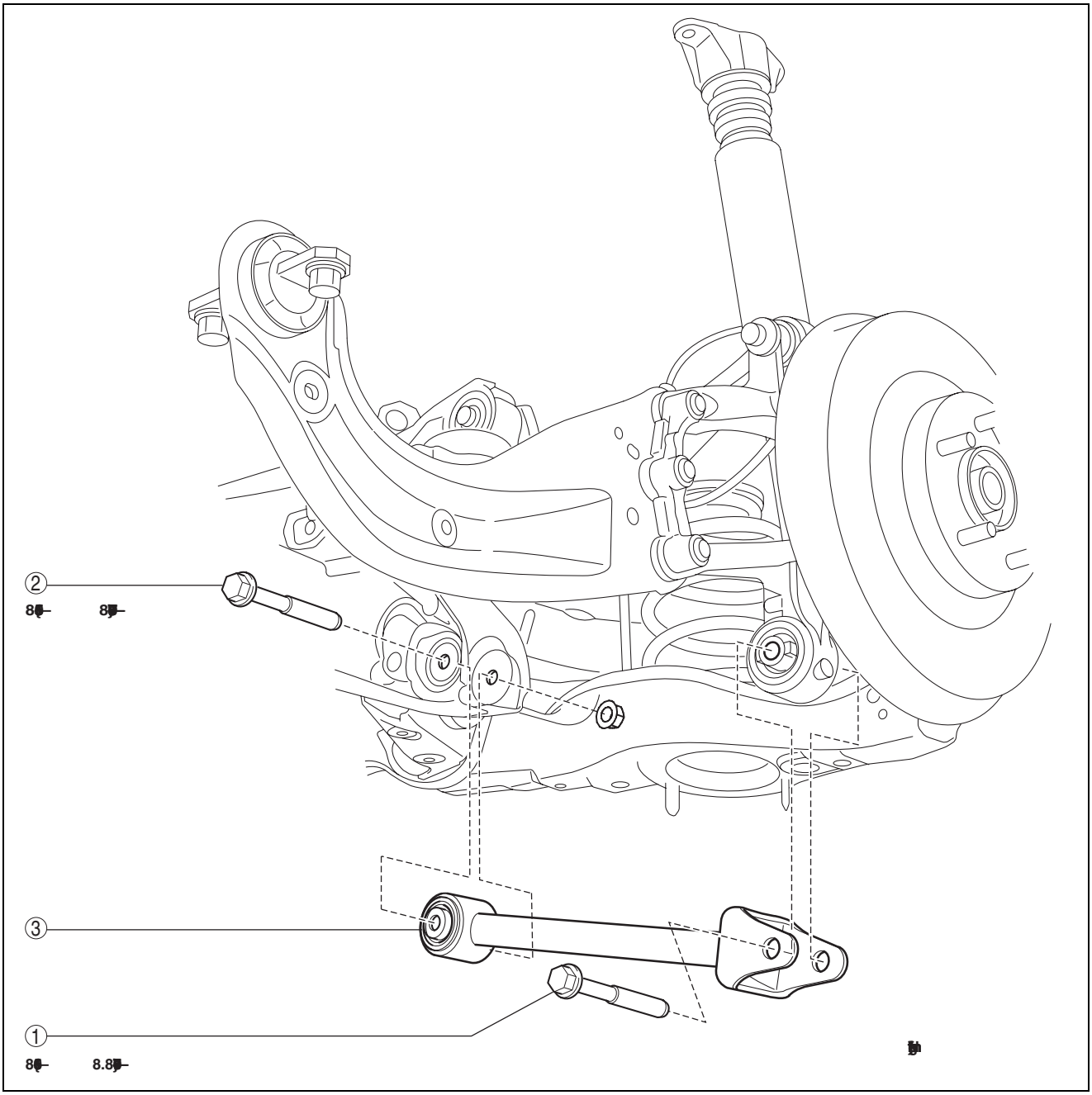

ac5wzw0000273

1	Rear lateral link outer bolt
2	Rear lateral link inner bolt

3	Rear lateral link (See 02-14-27 Rear Lateral Link Removal Note.) (See 02-14-27 Rear Lateral Link Installation Note.)

REAR SUSPENSION

Rear Lateral Link Removal Note

1. Jack up the vehicle to the unloaded condition, and support the rear trailing link component using a jack.
2. Remove the rear lateral link.

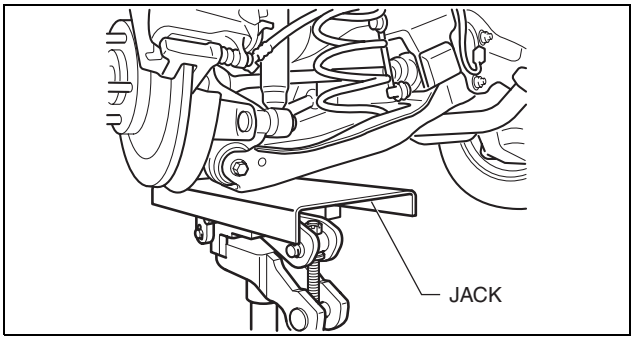

ac5wzw0000460

Rear Lateral Link Installation Note

1. Jack up the vehicle to the unloaded condition, and support the rear trailing link component using a jack.
2. Install the rear lateral link.

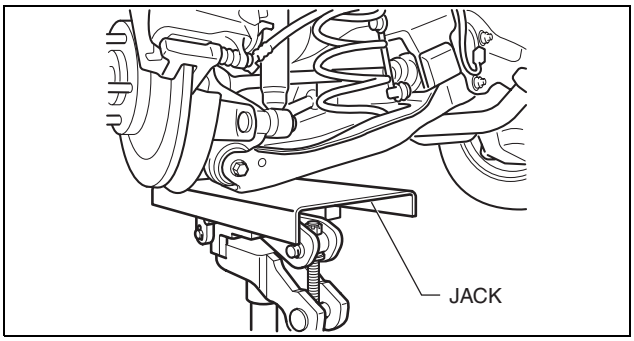

ac5wzw0000460

REAR STABILIZER REMOVAL/INSTALLATION [2WD]

id0214008005a1

Caution

- **Performing the following procedures without first removing the rear ABS wheel-speed sensor may possibly cause an open circuit in the harness if it is pulled by mistake. Before performing the following procedures, disconnect the rear ABS wheel-speed sensor (axle side) and fix it to an appropriate place where the sensor will not be pulled by mistake while servicing the vehicle.**

1. Disconnect the auto leveling sensor link. (With auto leveling sensor) (See 09-18-79 AUTO LEVELING SENSOR REMOVAL/INSTALLATION.)

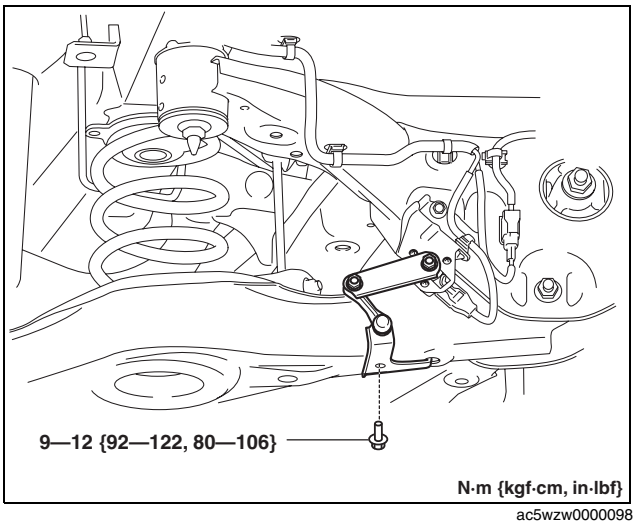

ac5wzw0000098

REAR SUSPENSION

2. Disconnect the wiring harness clips and connector installed to the rear crossmember. (With auto leveling sensor)

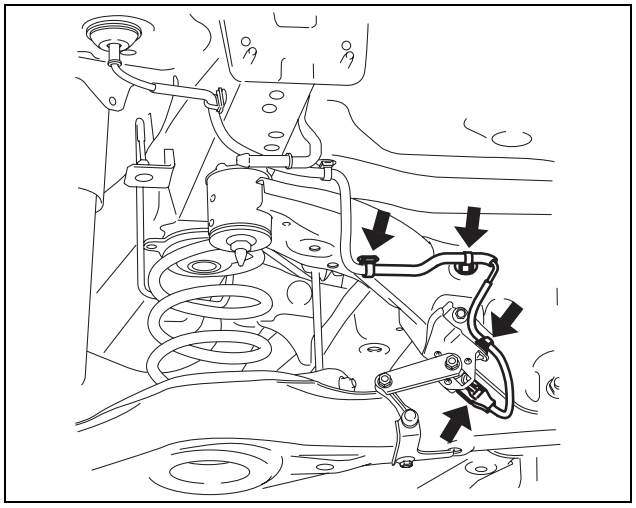
ac5wzw0000098

3. Disconnect the rear ABS wheel-speed sensor wiring harness installed to the hub support and set it aside. (See 04-15-11 REAR ABS WHEEL-SPEED SENSOR REMOVAL/INSTALLATION.)
4. Remove the TWC. (SKYACTIV-G 2.0) (See 01-15A-2 EXHAUST SYSTEM REMOVAL/INSTALLATION [SKYACTIV-G 2.0].)
5. Remove the middle pipe. (SKYACTIV-D 2.2) (See 01-15B-1 EXHAUST SYSTEM REMOVAL/INSTALLATION [SKYACTIV-D 2.2].)
6. Remove the rear coil spring. (See 02-14-6 REAR COIL SPRING REMOVAL/INSTALLATION.)
7. Remove in the order indicated in the table.
8. Install in the reverse order of removal.
9. Inspect the wheel alignment and adjust it if necessary. (See 02-11-3 REAR WHEEL ALIGNMENT.)

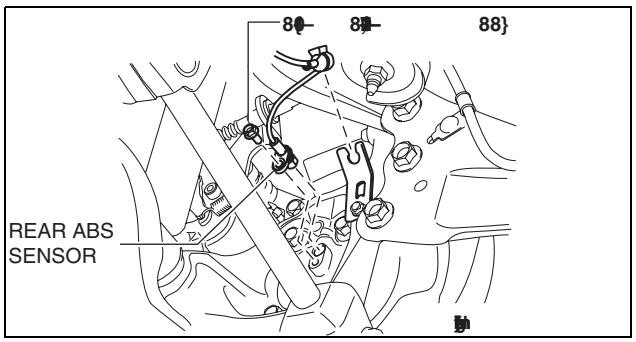

ac5uuw00000158

REAR SUSPENSION

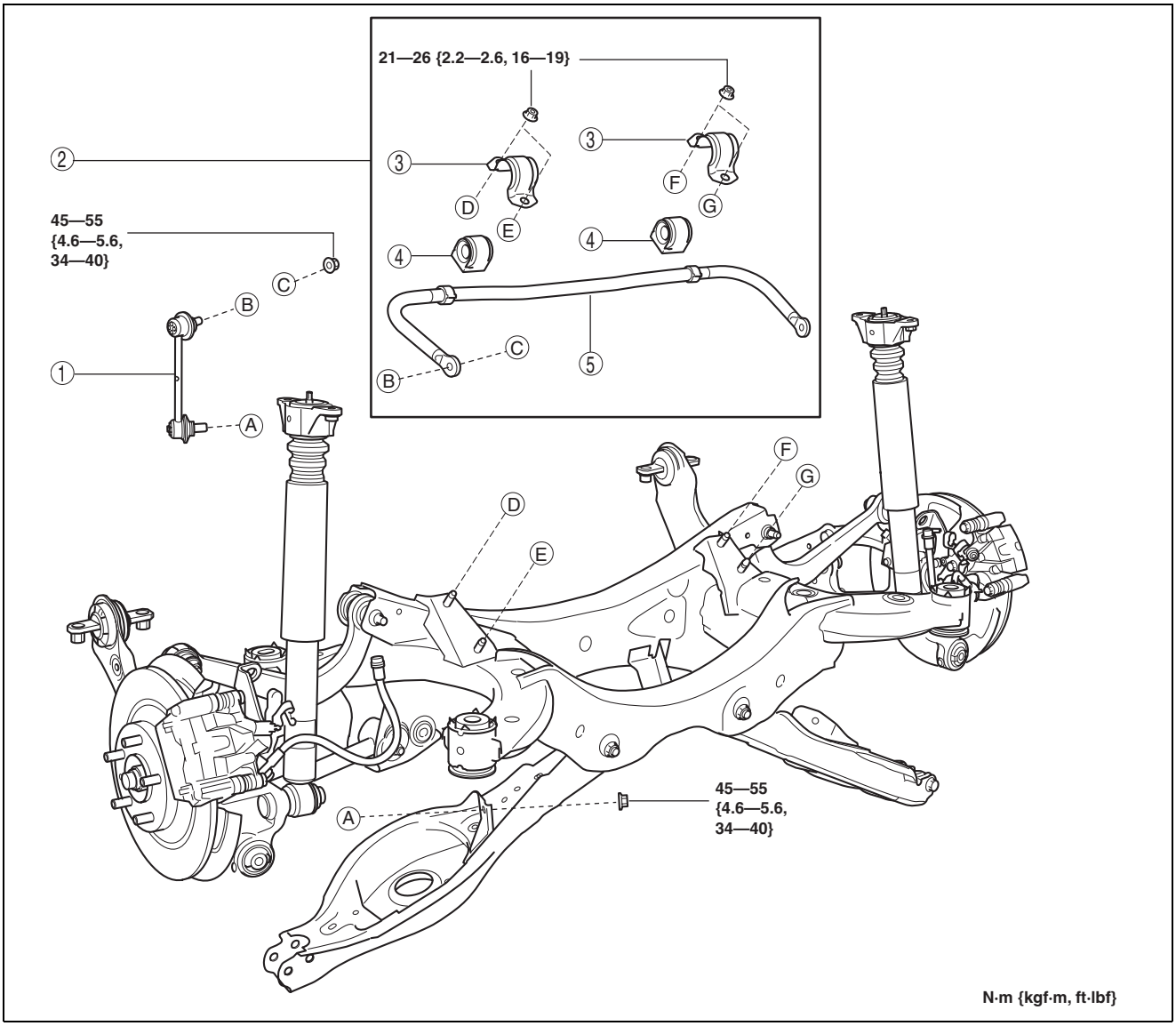

ac5uuw00000159

1	Rear stabilizer control link
2	Rear stabilizer component (See 02-14-30 Rear Stabilizer Component Removal Note.) (See 02-14-32 Rear Stabilizer Component Installation Note)

3	Rear stabilizer bracket (See 02-14-30 Rear Stabilizer Bushing, Rear Stabilizer Bracket Installation Note.)
4	Rear stabilizer bushing (See 02-14-30 Rear Stabilizer Bushing, Rear Stabilizer Bracket Installation Note.)
5	Rear stabilizer

REAR SUSPENSION

Rear Stabilizer Component Removal Note

1. Support the rear crossmember component with a jack and remove the rear crossmember installation nuts.

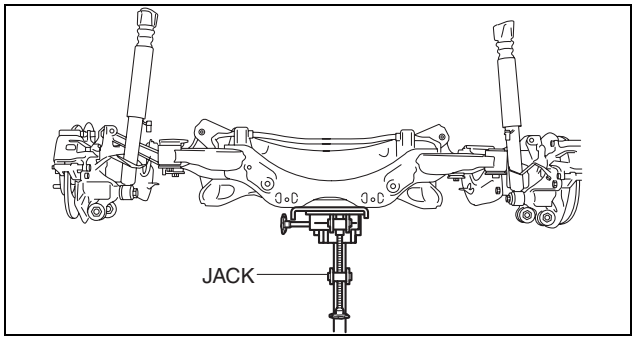

ac5uuw00000188

2. Press down on the rear crossmember component until the rear stabilizer component can be removed from the vehicle using a jack.

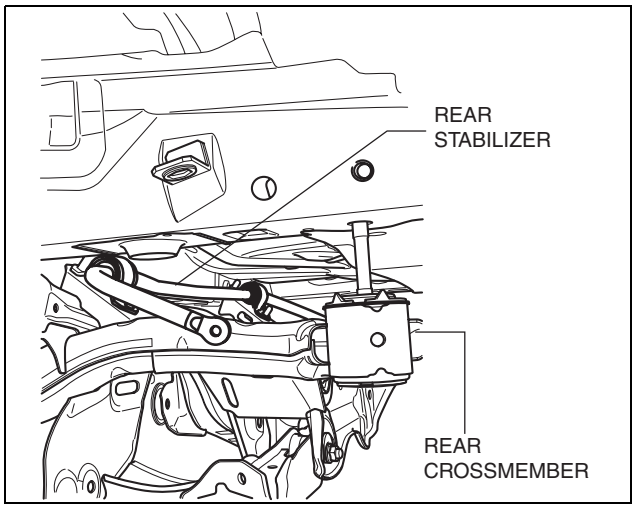

ac5uuw00000914

Rear Stabilizer Bracket Removal Note

1. Secure the rear stabilizer bracket flange using a vise.

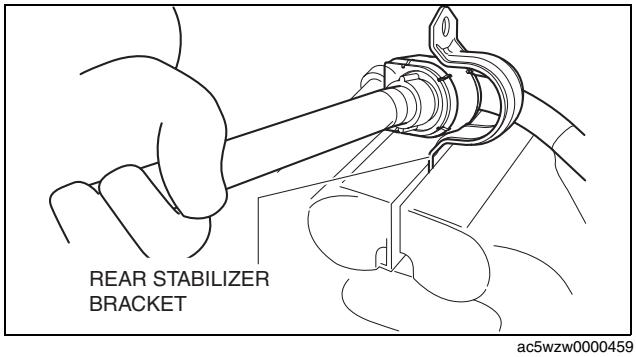

ac5wzw0000459

Rear Stabilizer Bushing, Rear Stabilizer Bracket Installation Note

1. Install the rear stabilizer bushing with the slit pointing toward the front of the vehicle.
2. Install the rear stabilizer bracket to the front stabilizer bushing by hand using the following procedure.
3. If the rear stabilizer bracket cannot be installed by hand, install it using a vise.

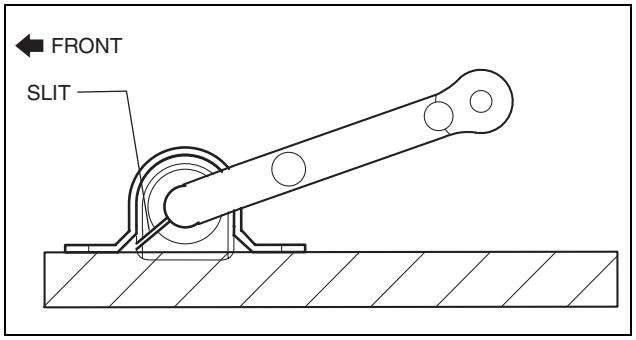

ac5wzw0000273

Caution

- **If the rear stabilizer bracket is installed using a vise, it could be deformed.**
- **Set a cylindrically-shaped object as shown in the figure so that pressure is applied to the rear stabilizer bracket flange, and install the rear stabilizer bracket to the rear stabilizer bushing.**

REAR SUSPENSION

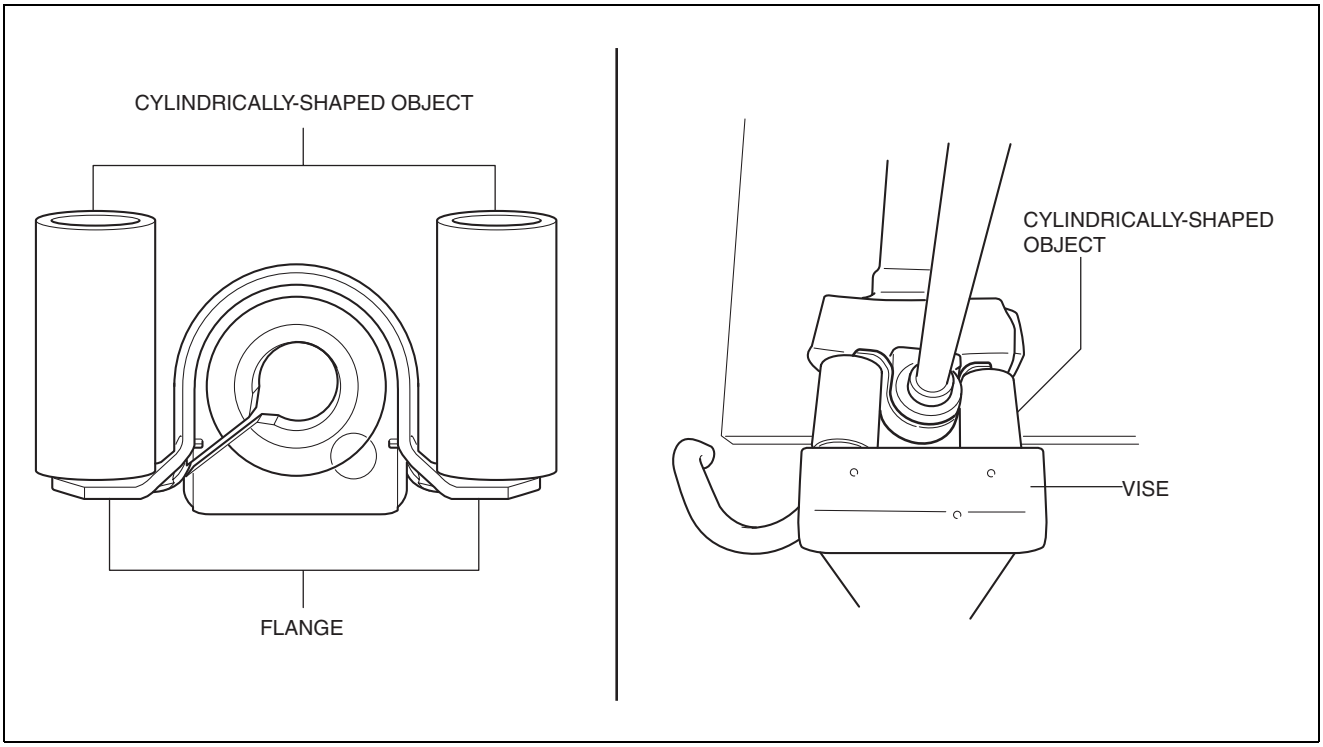

ac5wzw0000216

4. During rear stabilizer bracket installation, keep the deviation in the positions of the rear stabilizer bracket and the rear stabilizer bushing within the range shown in the figure.

   W^1: 0.5 mm {0.21 in} max.

   W^2: 2 mm {0.08 in} max.

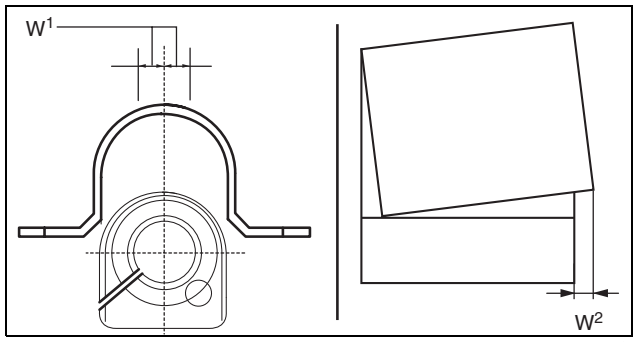

ac5wzw0000242

5. After installing the rear stabilizer bracket, verify that the positions of the rear stabilizer bracket and the rear stabilizer bushing are within the range shown in the figure.

   H^1: 13 mm {0.51 in} max.

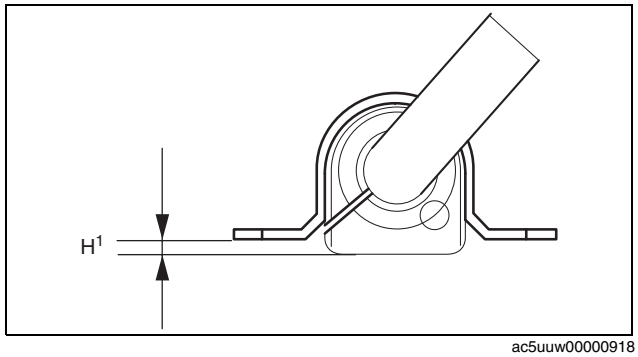

ac5uuw00000918

REAR SUSPENSION

6. After installing the rear stabilizer bracket, verify that the right and left-side positions of the rear stabilizer bracket are within the range shown in the figure.

   H^2: 3 mm {0.1 in} max.

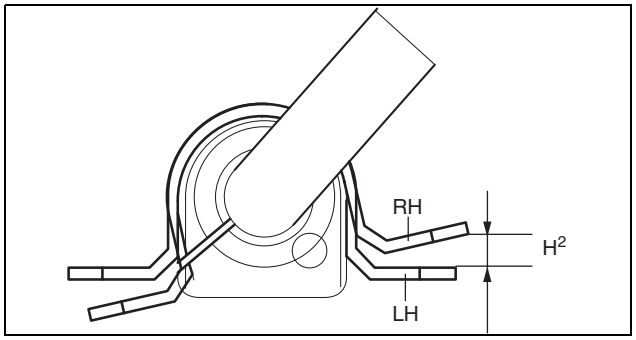

ac5uuw00000919

7. Place the rear stabilizer component on a level workbench, and verify that it is within the range shown in the figure.

   H^3: 66.5—76.5 mm {2.62—3.01 in}

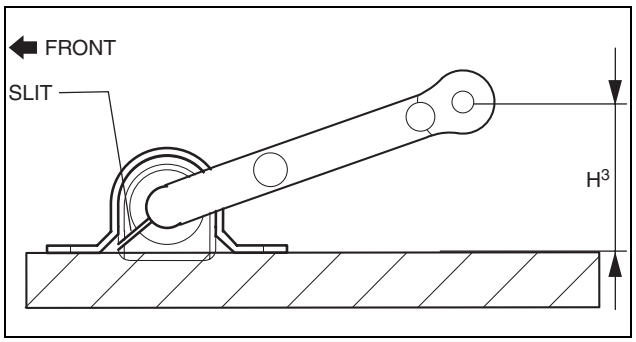

ac5wzw0000273

Rear Stabilizer Component Installation Note

1. Temporarily tighten bolts A and B shown in the figure.
2. Tighten bolt A.

   Tightening torque
   21—26 N·m {9.3—11 kgf·m, 16—19 ft·lbf}

3. Tighten bolt B.

   Tightening torque
   21—26 N·m {9.3—11 kgf·m, 16—19 ft·lbf}

4. Tighten bolt A.

   Tightening torque
   21—26 N·m {9.3—11 kgf·m, 16—19 ft·lbf}

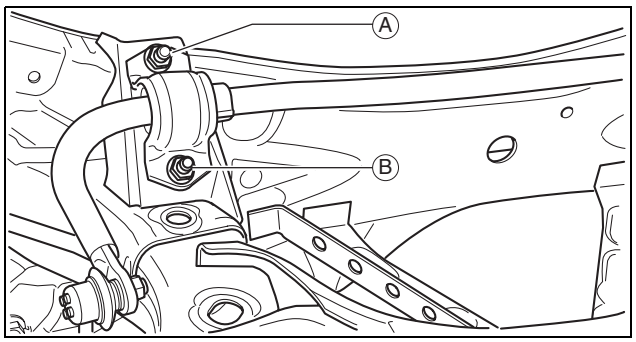

ac5uuw00000162

5. Lift up the rear crossmember component using a jack and install the rear crossmember installation nuts.

   Tightening torque
   91—111 N·m {9.3—11 kgf·m, 68—81 ft·lbf}

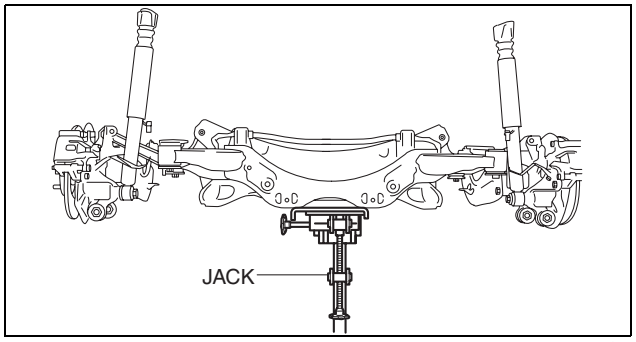

ac5uuw00000188

REAR SUSPENSION

REAR STABILIZER REMOVAL/INSTALLATION [4WD]

id0214008005a2

Caution

- **Performing the following procedures without first removing the rear ABS wheel-speed sensor may possibly cause an open circuit in the harness if it is pulled by mistake. Before performing the following procedures, disconnect the rear ABS wheel-speed sensor (axle side) and fix it to an appropriate place where the sensor will not be pulled by mistake while servicing the vehicle.**

1. Disconnect the auto leveling sensor link. (With auto leveling sensor) (See 09-18-79 AUTO LEVELING SENSOR REMOVAL/INSTALLATION.)

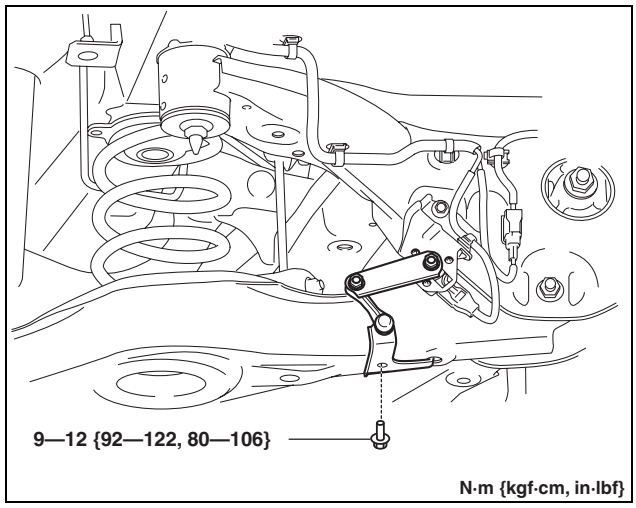

ac5wzw0000099

REAR SUSPENSION

2. Disconnect the wiring harness clips and connectors installed to the rear crossmember.

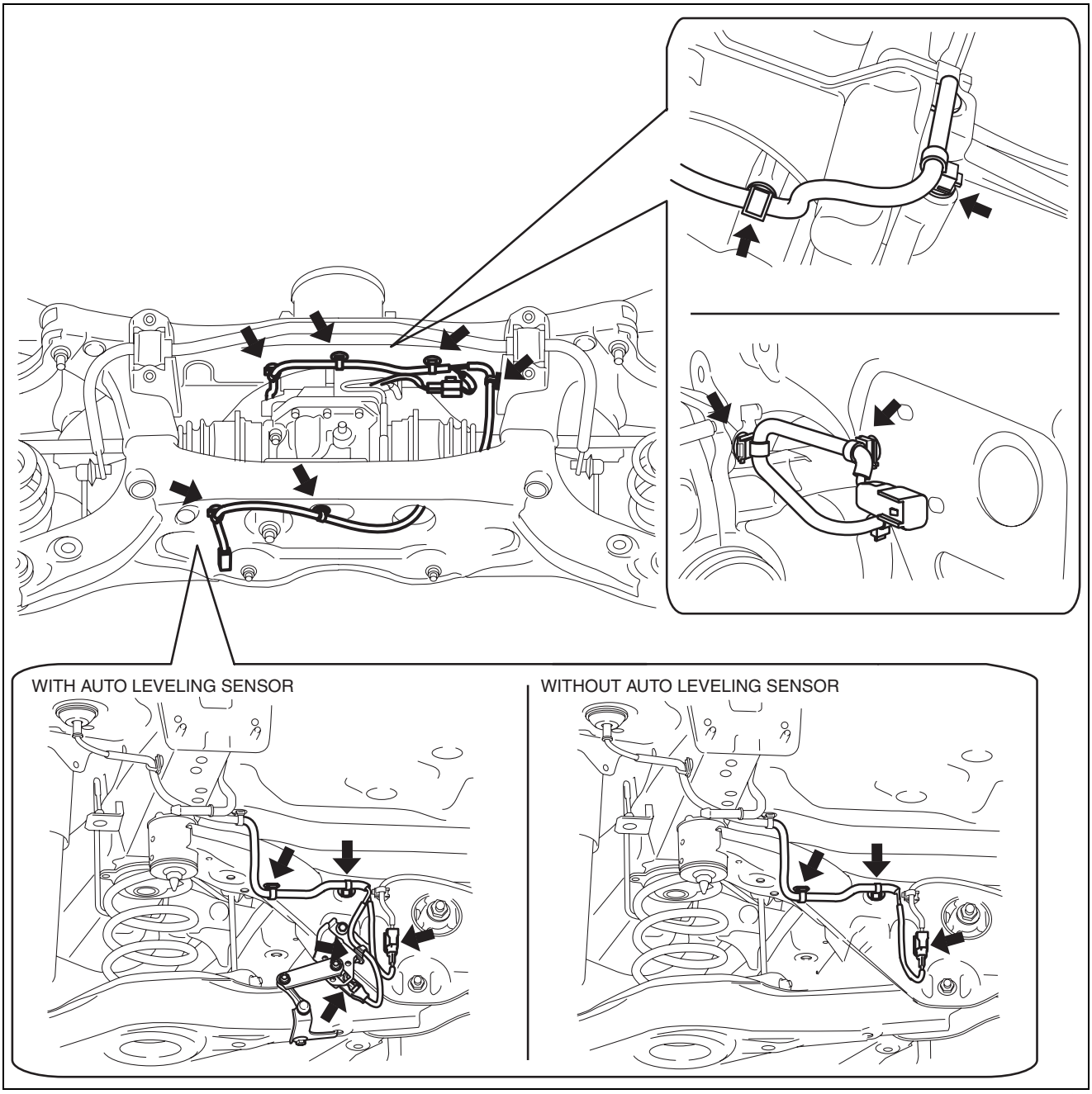

ac5uuw00000164

REAR SUSPENSION

3. Set the rear differential breather hose aside.

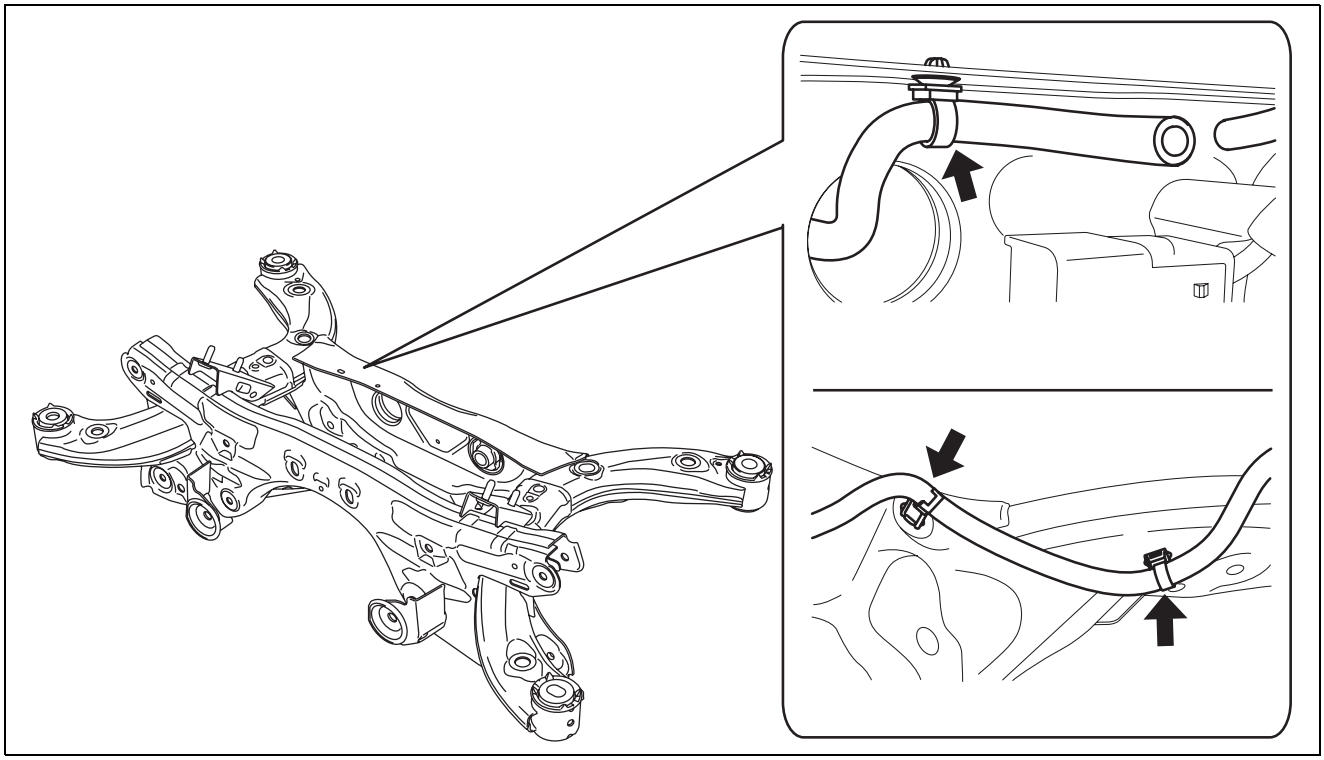

ac5uuw00000165

4. Disconnect the rear ABS wheel-speed sensor wiring harness installed to the hub support and set it aside. (See 04-15-11 REAR ABS WHEEL-SPEED SENSOR REMOVAL/INSTALLATION.)
5. Remove the propeller shaft. (See 03-15-2 PROPELLER SHAFT REMOVAL/INSTALLATION.)
6. Remove the TWC. (SKYACTIV-G 2.0) (See 01-15A-2 EXHAUST SYSTEM REMOVAL/INSTALLATION [SKYACTIV-G 2.0].)
7. Remove the middle pipe. (SKYACTIV-D 2.2) (See 01-15B-1 EXHAUST SYSTEM REMOVAL/INSTALLATION [SKYACTIV-D 2.2].)
8. Remove the rear coil spring. (See 02-14-6 REAR COIL SPRING REMOVAL/INSTALLATION.)
9. Remove in the order indicated in the table.
10. Install in the reverse order of removal.
11. Inspect the wheel alignment and adjust it if necessary. (See 02-11-3 REAR WHEEL ALIGNMENT.)

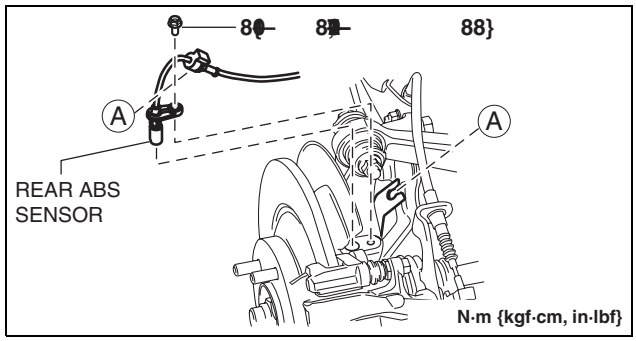

ac5wzw0000099

REAR SUSPENSION

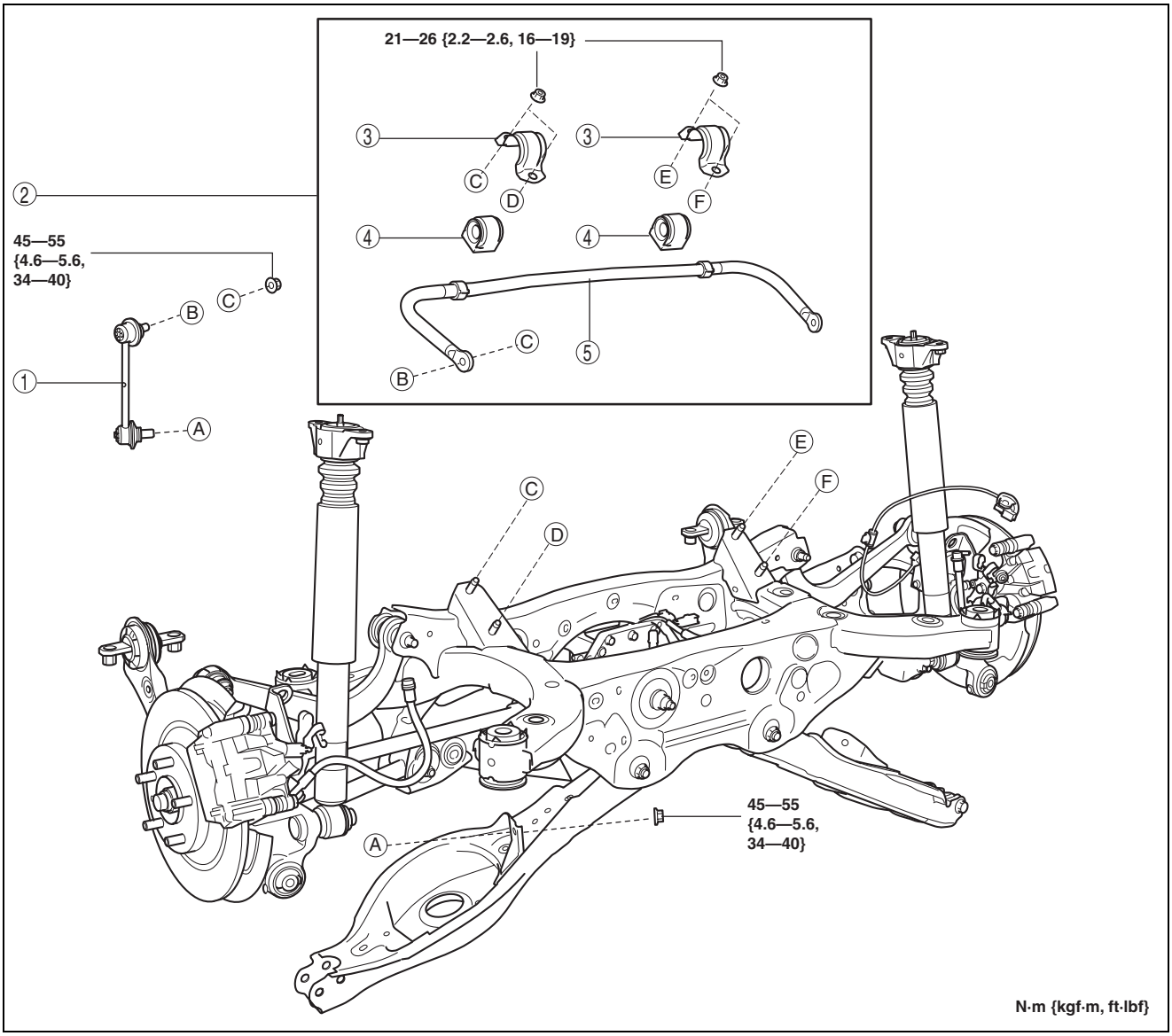

ac5uuw00000166

1	Rear stabilizer control link
2	Rear stabilizer component (See 02-14-37 Rear Stabilizer Component Removal Note.) (See 02-14-39 Rear Stabilizer Component Installation Note.)

3	Rear stabilizer bracket (See 02-14-37 Rear Stabilizer Bushing, Rear Stabilizer Bracket Installation Note.)
4	Rear stabilizer bushing (See 02-14-37 Rear Stabilizer Bushing, Rear Stabilizer Bracket Installation Note.)
5	Rear stabilizer

REAR SUSPENSION

Rear Stabilizer Component Removal Note

1. Support the rear crossmember component with a jack and remove the rear crossmember installation nuts.

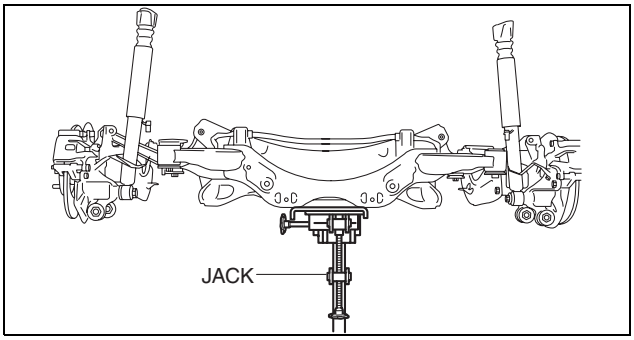

ac5uuw00000188

2. Press down on the rear crossmember component until the rear stabilizer component can be removed from the vehicle using a jack.

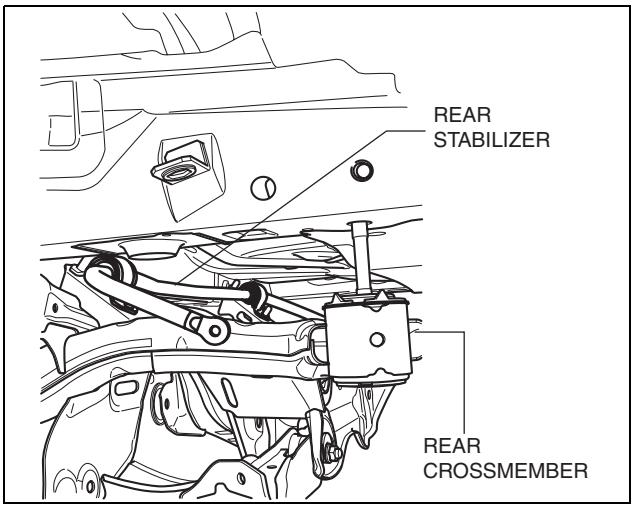

ac5wzw0000232

Rear Stabilizer Bracket Removal Note

1. Secure the rear stabilizer bracket flange using a vise.

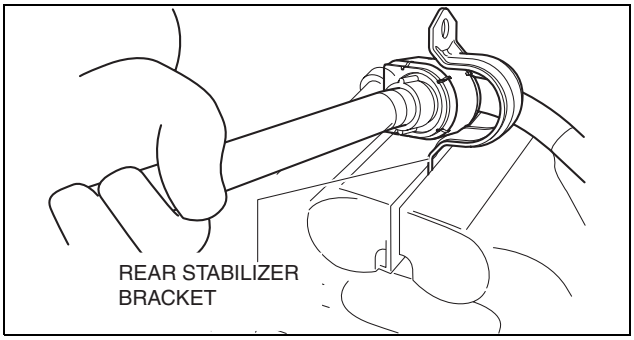

ac5uuw00000922

Rear Stabilizer Bushing, Rear Stabilizer Bracket Installation Note

1. Install the rear stabilizer bushing with the slit pointing toward the front of the vehicle.
2. Install the rear stabilizer bracket to the front stabilizer bushing by hand using the following procedure.
3. If the rear stabilizer bracket cannot be installed by hand, install it using a vise.

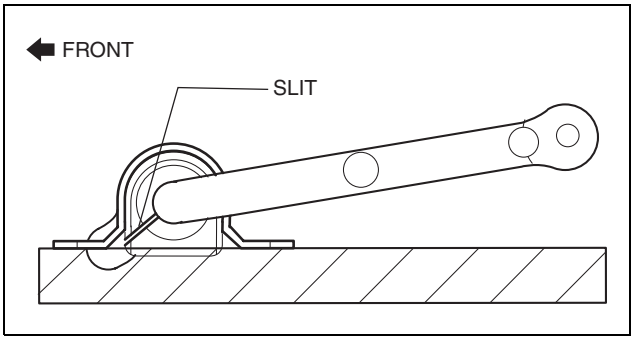

ac5wzw0000273

Caution

- **If the rear stabilizer bracket is installed using a vise, it could be deformed.**
- **Set a cylindrically-shaped object as shown in the figure so that pressure is applied to the rear stabilizer bracket flange, and install the rear stabilizer bracket to the rare stabilizer bushing.**

REAR SUSPENSION

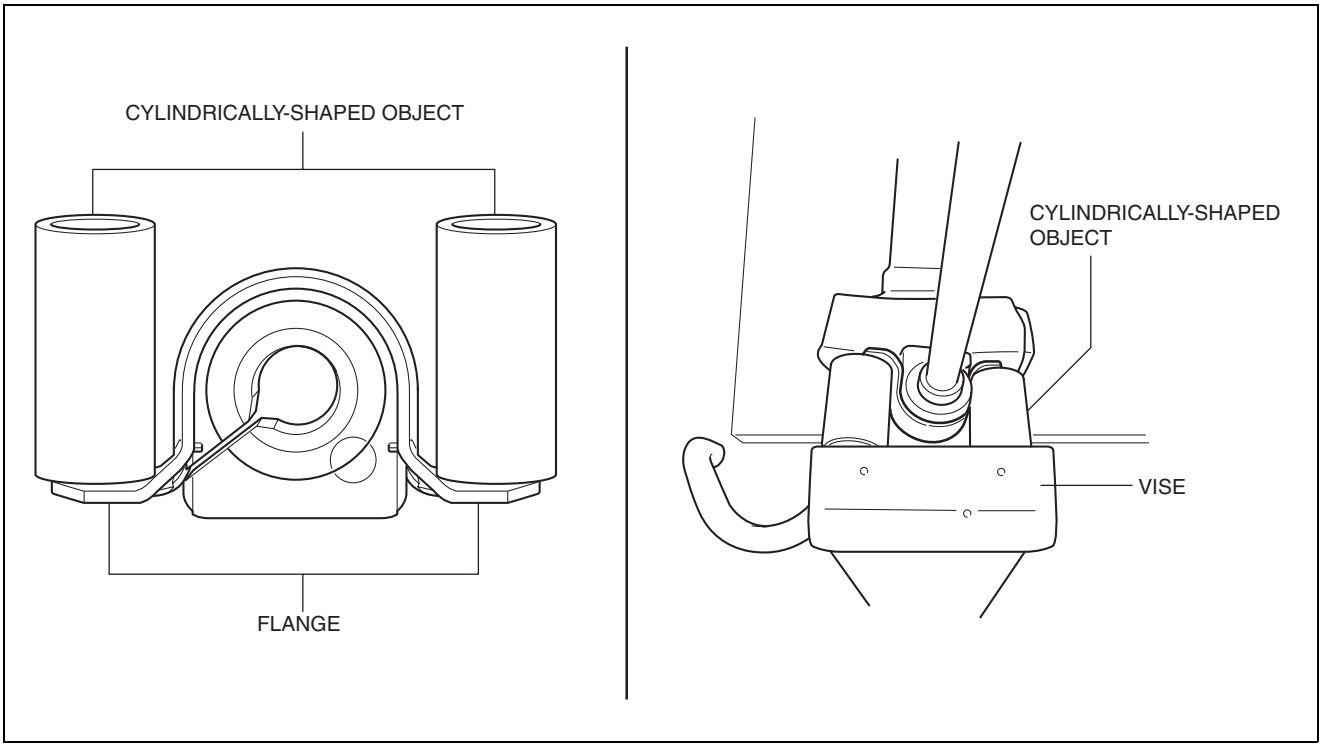

ac5wzw0000216

4. During rear stabilizer bracket installation, keep the deviation in the positions of the rear stabilizer bracket and the rear stabilizer bushing within the range shown in the figure.

   W^1: 0.5 mm {0.21 in} max.

   W^2: 2 mm {0.08 in} max.

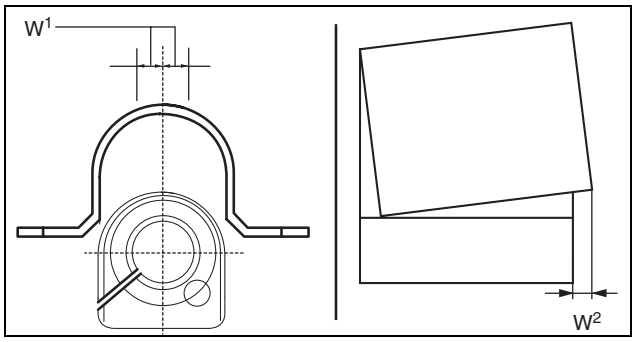

ac5wzw0000242

5. After installing the rear stabilizer bracket, verify that the positions of the rear stabilizer bracket and the rear stabilizer bushing are within the range shown in the figure.

   H^1: 13 mm {0.51 in} max.

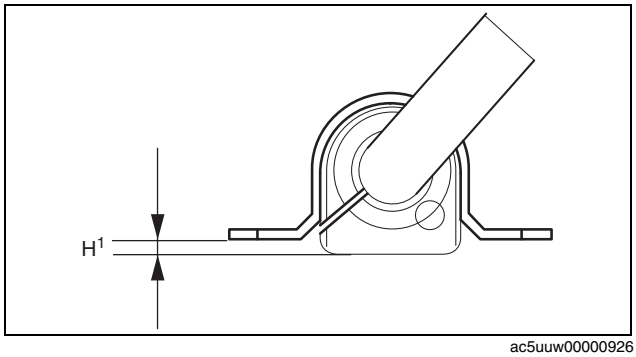

ac5uuw00000926

REAR SUSPENSION

6. After installing the rear stabilizer bracket, verify that the right and left-side positions of the rear stabilizer bracket are within the range shown in the figure.

   H^2: 3 mm {0.1 in} max.

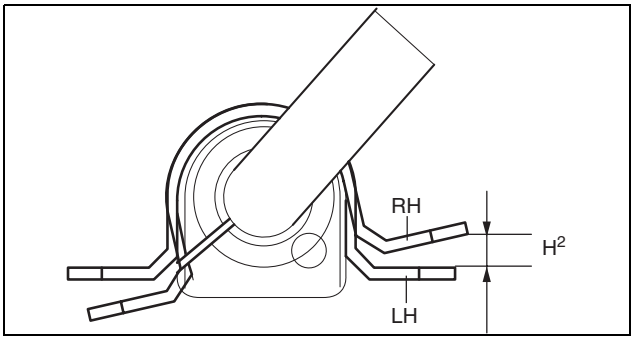

ac5wzw0000214

7. Place the rear stabilizer component on a level workbench, and verify that it is within the range shown in the figure.

   H^3: 41.8—51.8 mm {1.65—2.03 in}

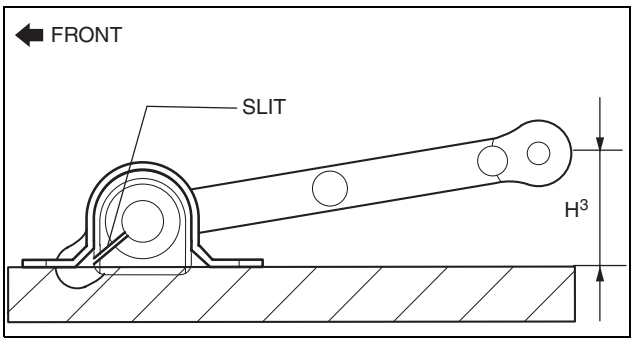

ac5wzw0000273

Rear Stabilizer Component Installation Note

1. Temporarily tighten bolts A and B shown in the figure.
2. Tighten bolt A.

   Tightening torque
   21—26 N·m {9.3—11 kgf·m, 16—19 ft·lbf}

3. Tighten bolt B.

   Tightening torque
   21—26 N·m {9.3—11 kgf·m, 16—19 ft·lbf}

4. Tighten bolt A.

   Tightening torque
   21—26 N·m {9.3—11 kgf·m, 16—19 ft·lbf}

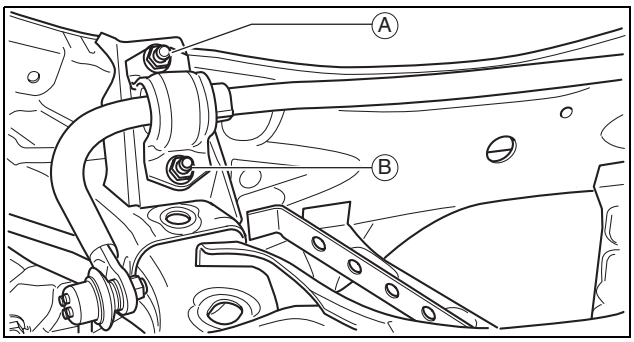

ac5uuw00000169

5. Lift up the rear crossmember component using a jack and install the rear crossmember installation nuts.

   Tightening torque
   91—111 N·m {9.3—11 kgf·m, 68—81 ft·lbf}

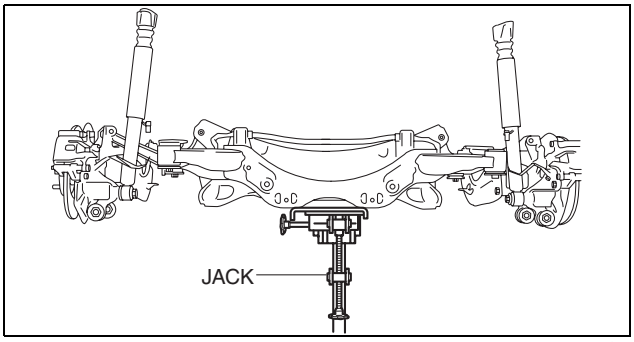

ac5uuw00000188

REAR SUSPENSION

REAR STABILIZER CONTROL LINK INSPECTION

id021400800300

1. Remove the rear stabilizer control link. (See 02-14-27 REAR STABILIZER REMOVAL/INSTALLATION [2WD].) (See 02-14-33 REAR STABILIZER REMOVAL/INSTALLATION [4WD].)
2. Inspect for bending or damage. If there is any malfunction, replace the rear stabilizer control link.
3. Rotate the ball joint stud **10 times** and shake it side to side **10 times**.
4. Measure the ball-joint rotational torque using an allen wrench and a torque wrench.

   Rear stabilizer control link ball joint starting torque
   0.8—3.5 N·m {8.2—35 kgf·cm, 7.1—30 in·lbf}

   - If not within the specification, replace the rear stabilizer control link.
   - Even if within specification, if there is excessive play in the ball joint, replace the rear stabilizer control link.

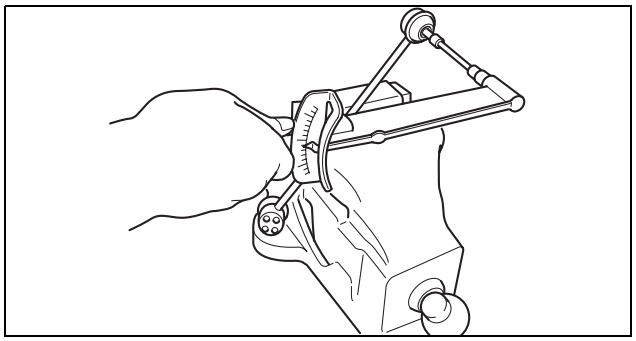

ac5uuw00000143

REAR CROSSMEMBER REMOVAL/INSTALLATION [2WD]

id0214008010a1

Warning
- **Verify that the rear crossmember is securely supported by a jack. If the rear crossmember falls off, it can cause serious injury or death, and damage to the vehicle.**

Caution
- **Performing the following procedures without first removing the rear ABS wheel-speed sensor may possibly cause an open circuit in the harness if it is pulled by mistake. Before performing the following procedures, disconnect the rear ABS wheel-speed sensor (axle side) and fix it to an appropriate place where the sensor will not be pulled by mistake while servicing the vehicle.**

Note
- Mark the position before removing the rear upper arm.
- Align the rear crossmember and rear upper arm markings when installing the rear upper arm.
- Tighten the rear upper arm inner bolt completely before installing the rear crossmember component to the vehicle.

1. Disconnect the wiring harness clips and connector installed to the rear crossmember. (With auto leveling sensor)

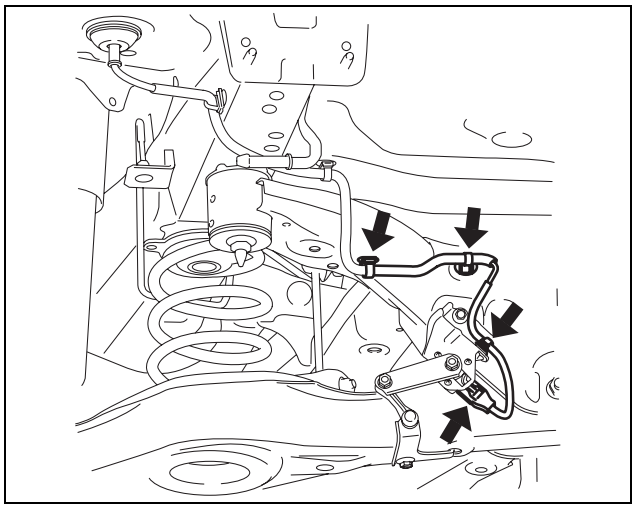

ac5wzw0000100

REAR SUSPENSION

2. Remove the auto leveling sensor. (With auto leveling sensor) (See 09-18-79 AUTO LEVELING SENSOR REMOVAL/INSTALLATION.)

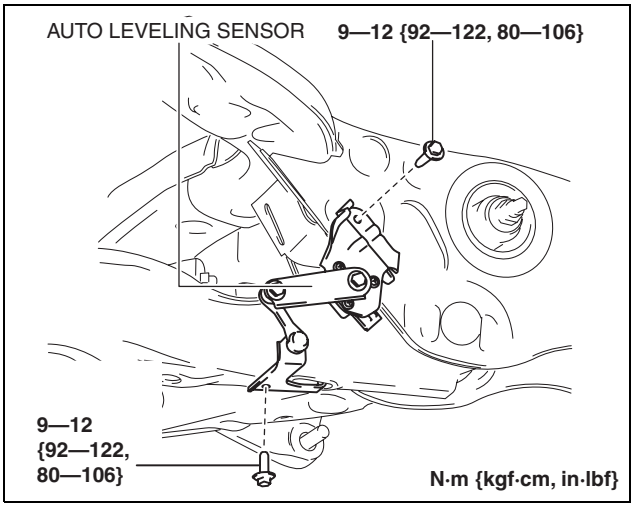

ac5wzw0000099

3. Disconnect the rear ABS wheel-speed sensor wiring harness installed to the hub support and set it aside. (See 04-15-11 REAR ABS WHEEL-SPEED SENSOR REMOVAL/INSTALLATION.)

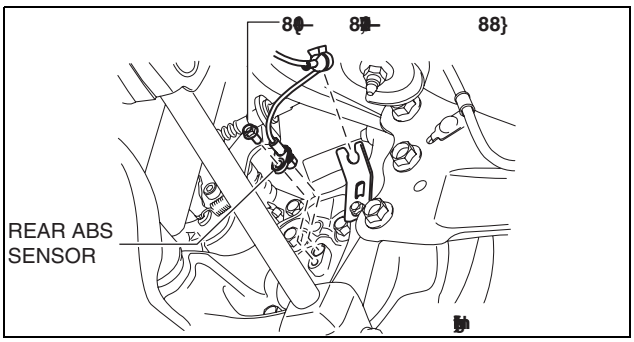

ac5uuw00000184

4. Jack up the vehicle to the unloaded condition, and support the rear trailing link component using a jack.

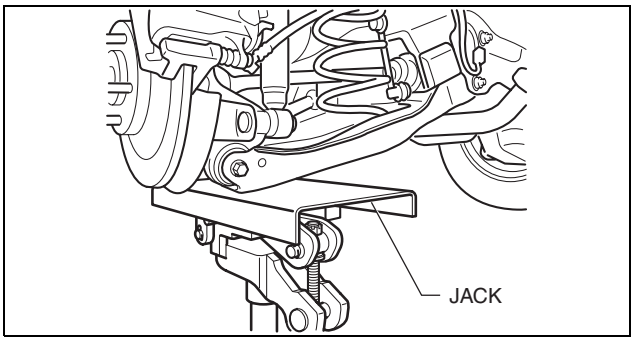

ac5wzw0000286

5. Align the rear crossmember component and rear upper arm and mark them.
6. Remove the TWC. (SKYACTIV-G 2.0) (See 01-15A-2 EXHAUST SYSTEM REMOVAL/INSTALLATION [SKYACTIV-G 2.0].)
7. Remove the middle pipe. (SKYACTIV-D 2.2) (See 01-15B-1 EXHAUST SYSTEM REMOVAL/INSTALLATION [SKYACTIV-D 2.2].)
8. Remove the rear lateral link. (See 02-14-25 REAR LATERAL LINK REMOVAL/INSTALLATION.)
9. Remove the rear coil spring. (See 02-14-6 REAR COIL SPRING REMOVAL/INSTALLATION.)
10. Remove the rear lower arm. (See 02-14-8 REAR LOWER ARM REMOVAL/INSTALLATION.)
11. Remove in the order indicated in the table.
12. Install in the reverse order of removal.
13. Inspect the wheel alignment and adjust it if necessary. (See 02-11-3 REAR WHEEL ALIGNMENT.)

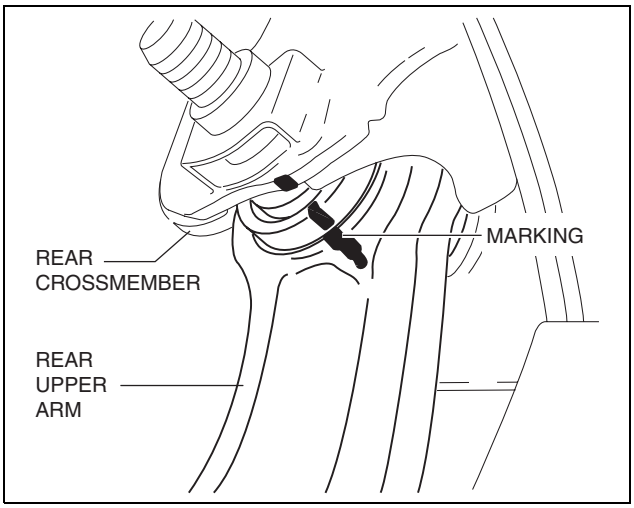

ac5uuw00000186

REAR SUSPENSION

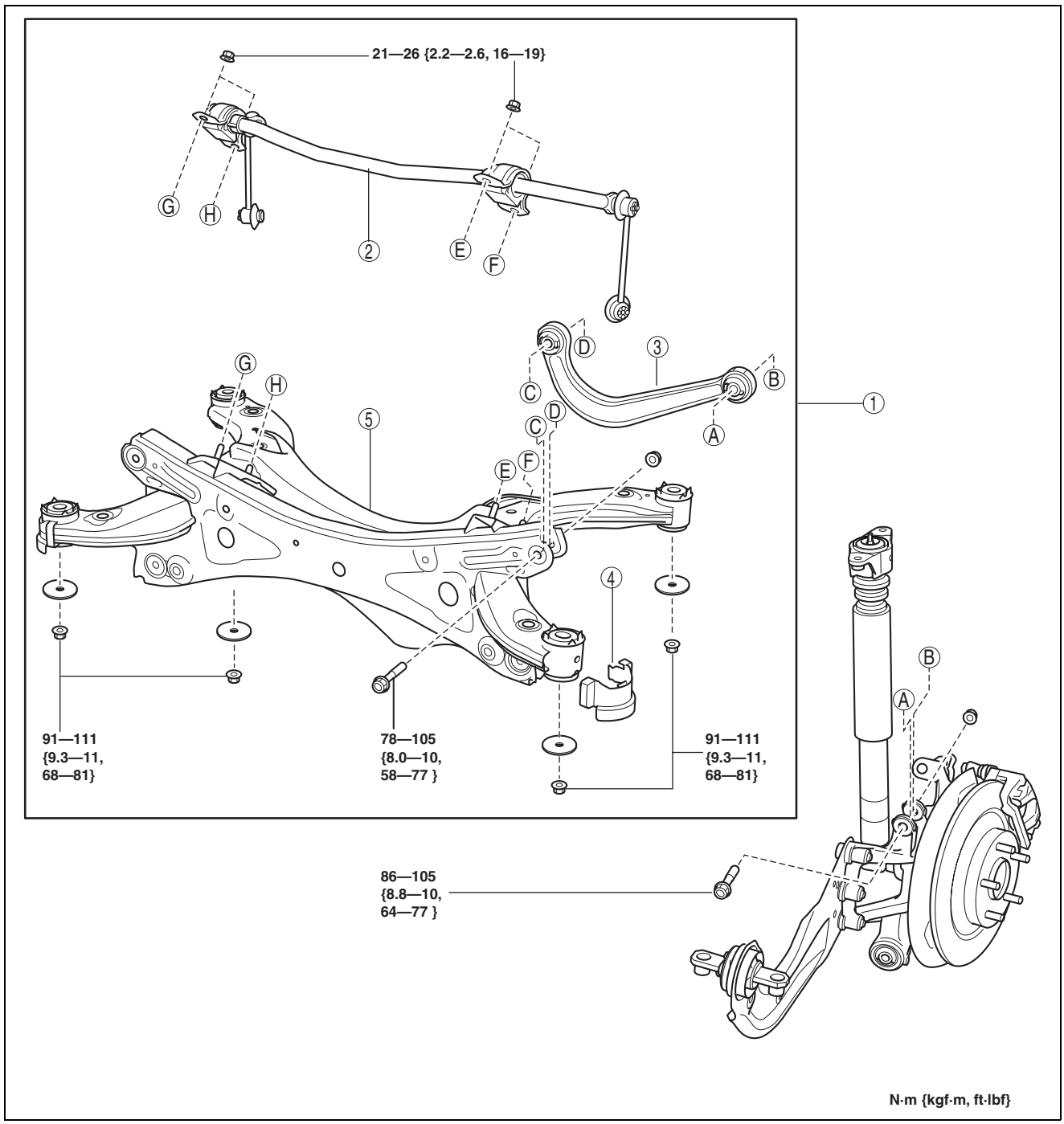

ac5uuw00000187

1	Rear crossmember component (See 02-14-43 Rear Crossmember Component Removal Note.) (See 02-14-43 Rear Crossmember Component Installation Note.)
2	Rear stabilizer component

3	Rear upper arm (See 02-14-10 REAR UPPER ARM REMOVAL/ INSTALLATION [2WD].)
4	Rear crossmember mudguard
5	Rear crossmember

REAR SUSPENSION

Rear Crossmember Component Removal Note

Warning
- **Verify that the rear crossmember is securely supported by a jack. If the rear crossmember falls off, it can cause serious injury or death, and damage to the vehicle.**

1. Support the rear crossmember with the jack and remove the nuts
2. Remove the rear crossmember component.

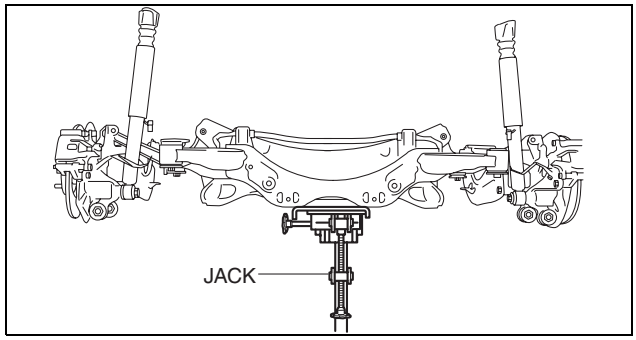

ac5uuw00000188

Rear Crossmember Component Installation Note

Warning
- **Verify that the rear crossmember is securely supported by a jack. If the rear crossmember falls off, it can cause serious injury or death, and damage to the vehicle.**

1. Support the rear crossmember component and install the rear crossmember.

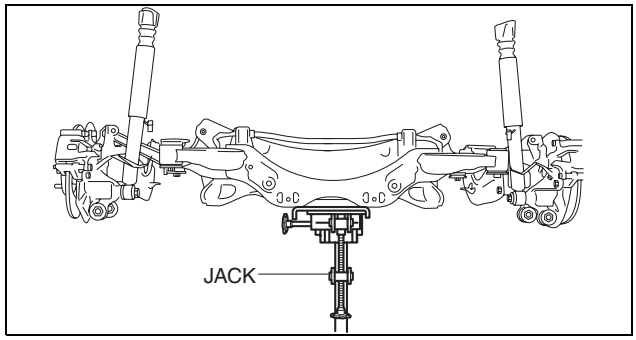

ac5uuw00000188

REAR SUSPENSION

REAR CROSSMEMBER REMOVAL/INSTALLATION [4WD]

id0214008010a2

Warning

- **Verify that the rear crossmember is securely supported by a jack. If the rear crossmember falls off, it can cause serious injury or death, and damage to the vehicle.**

Caution

- **Performing the following procedures without first removing the rear ABS wheel-speed sensor may possibly cause an open circuit in the harness if it is pulled by mistake. Before performing the following procedures, disconnect the rear ABS wheel-speed sensor (axle side) and fix it to an appropriate place where the sensor will not be pulled by mistake while servicing the vehicle.**

Note

- Mark the position before removing the rear upper arm.
- Align the rear crossmember and rear upper arm markings when installing the rear upper arm.
- Tighten the rear upper arm inner bolt completely before installing the rear crossmember component to the vehicle.

1. Disconnect the wiring harness clips and connectors installed to the rear crossmember.

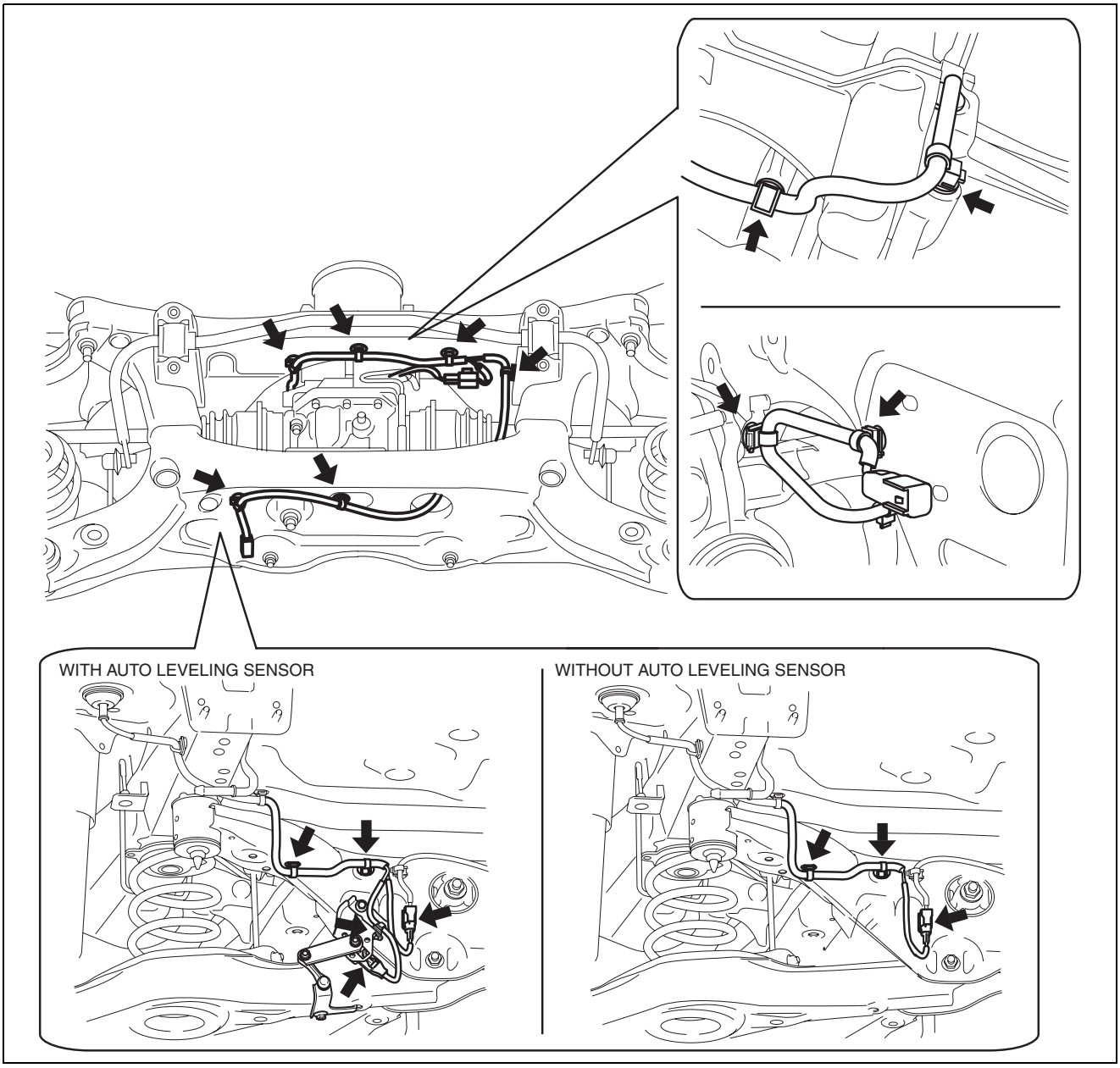

ac5wzw0000100

REAR SUSPENSION

2. Set the rear differential breather hose aside.

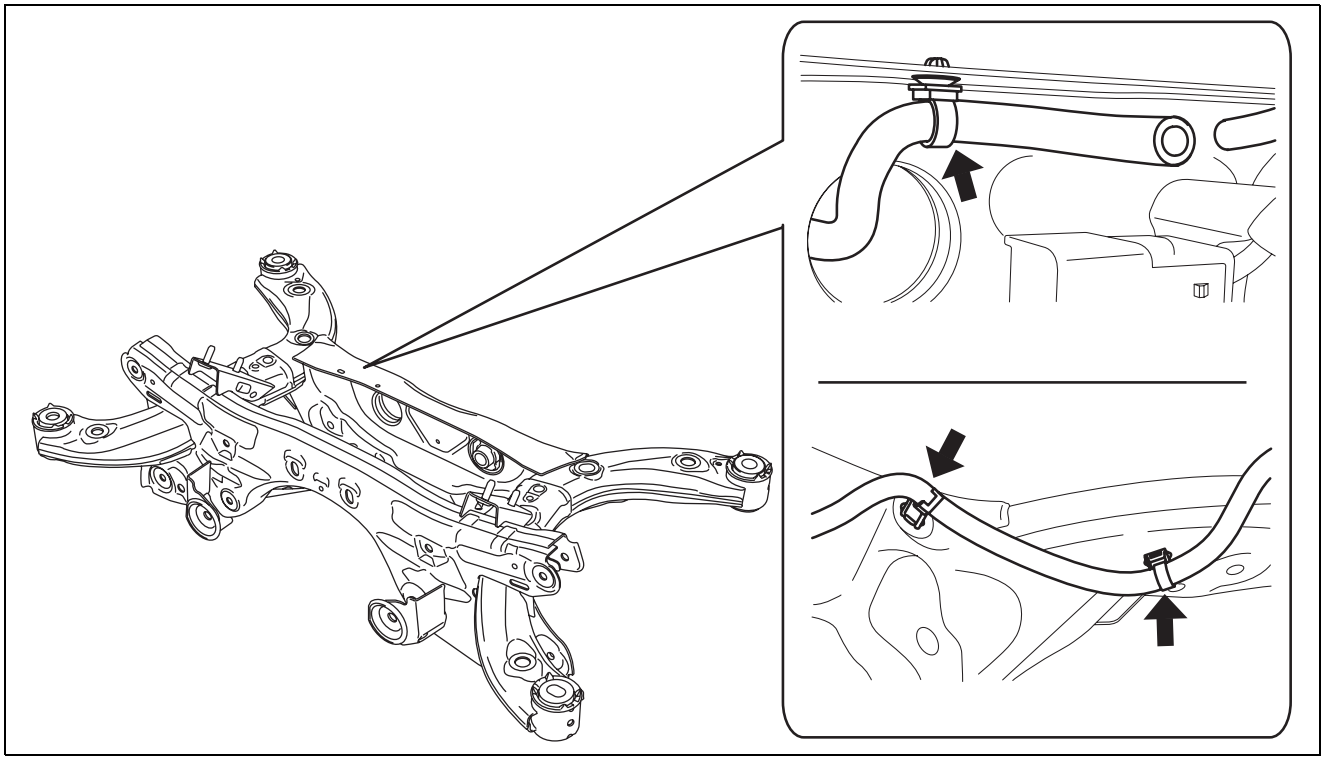

ac5uuw00000193

3. Remove the auto leveling sensor. (With auto leveling sensor) (See 09-18-79 AUTO LEVELING SENSOR REMOVAL/INSTALLATION.)

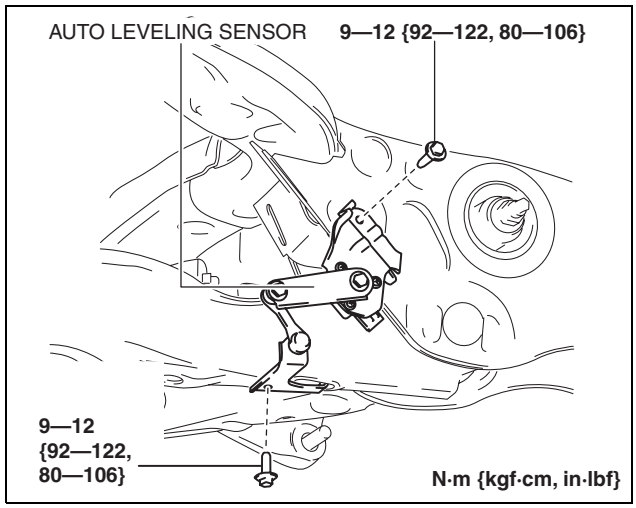

ac5wzw0000099

4. Disconnect the rear ABS wheel-speed sensor wiring harness installed to rear hub support, then move aside the rear ABS sensor. (See 04-15-11 REAR ABS WHEEL-SPEED SENSOR REMOVAL/INSTALLATION.)

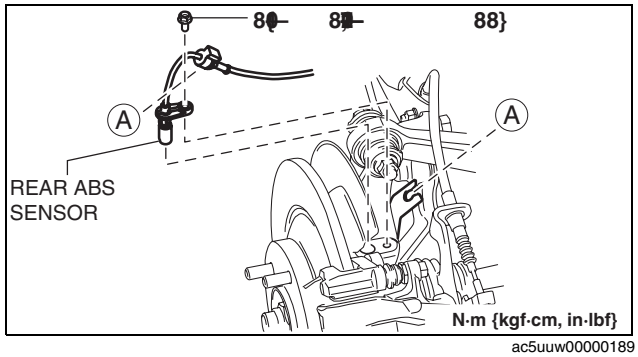

ac5uuw00000189

REAR SUSPENSION

5. Jack up the vehicle to the unloaded condition, and support the rear trailing link component using a jack.

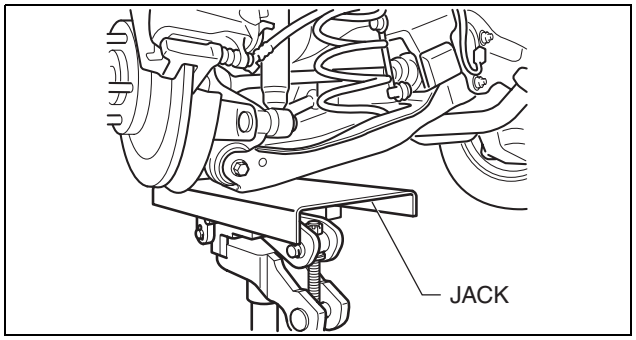

ac5wzw0000286

6. Align the rear crossmember component and rear upper arm and mark them.
7. Remove the propeller shaft. (See 03-15-2 PROPELLER SHAFT REMOVAL/INSTALLATION.)
8. Remove the TWC. (SKYACTIV-G 2.0) (See 01-15A-2 EXHAUST SYSTEM REMOVAL/INSTALLATION [SKYACTIV-G 2.0].)
9. Remove the middle pipe. (SKYACTIV-D 2.2) (See 01-15B-1 EXHAUST SYSTEM REMOVAL/INSTALLATION [SKYACTIV-D 2.2].)
10. Remove the rear lateral link. (See 02-14-25 REAR LATERAL LINK REMOVAL/INSTALLATION.)
11. Remove the rear coil spring. (See 02-14-6 REAR COIL SPRING REMOVAL/INSTALLATION.)
12. Remove the rear lower arm. (See 02-14-8 REAR LOWER ARM REMOVAL/INSTALLATION.)
13. Remove the rear drive shaft. (See 03-13-17 REAR DRIVE SHAFT REMOVAL/INSTALLATION.)

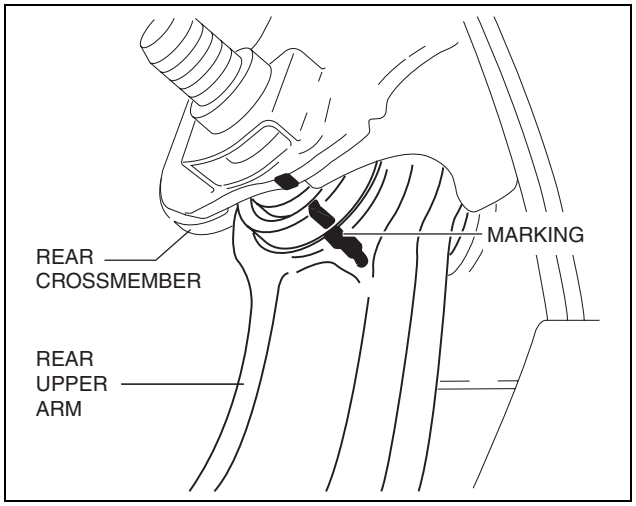

ac5uuw00000191

14. Remove in the order indicated in the table.
15. Install in the reverse order of removal.
16. Inspect the wheel alignment and adjust it if necessary. (See 02-11-3 REAR WHEEL ALIGNMENT.)

REAR SUSPENSION

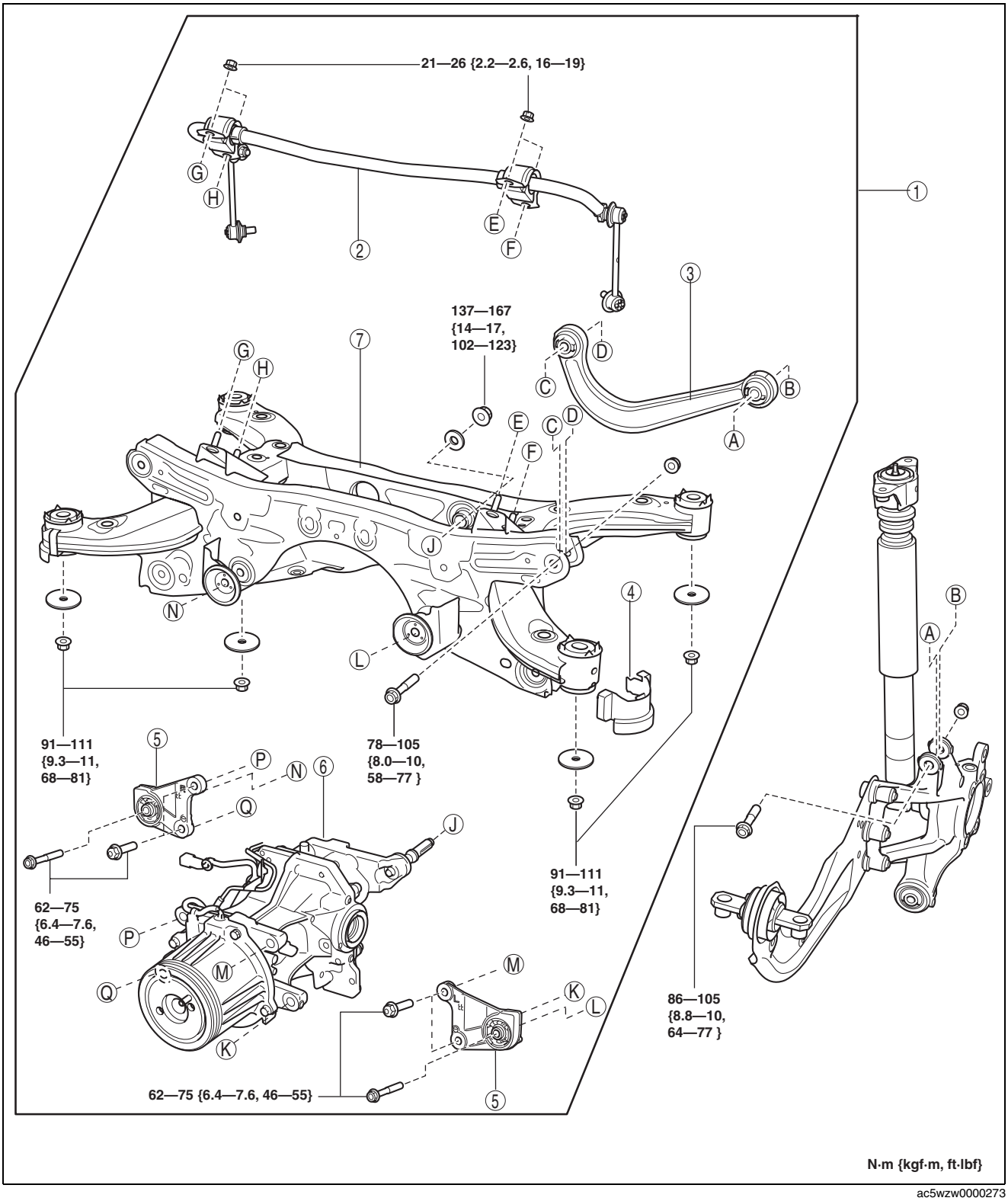

ac5wzw0000273

1	Rear crossmember component (See 02-14-48 Rear Crossmember Component Removal Note.) (See 02-14-48 Rear Crossmember Component Installation Note.)
2	Rear stabilizer component
3	Rear upper arm (See 02-14-16 REAR UPPER ARM REMOVAL/ INSTALLATION [4WD].)

4	Rear crossmember mudguard
5	Front differential mounting rubber (See 03-14-3 REAR DIFFERENTIAL REMOVAL/ INSTALLATION.)
6	Rear differential (See 03-14-3 REAR DIFFERENTIAL REMOVAL/ INSTALLATION.)
7	Rear crossmember

REAR SUSPENSION

Rear Crossmember Component Removal Note

Warning
- **Verify that the rear crossmember is securely supported by a jack. If the rear crossmember falls off, it can cause serious injury or death, and damage to the vehicle.**

1. Support the rear crossmember with the jack and remove the nut.
2. Remove the rear crossmember component.

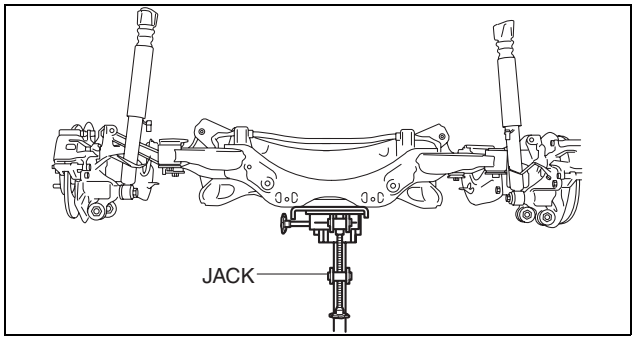

ac5uuw00000195

Rear Crossmember Component Installation Note

Warning
- **Verify that the rear crossmember is securely supported by a jack. If the rear crossmember falls off, it can cause serious injury or death, and damage to the vehicle.**

1. Support the rear crossmember component and install the rear crossmember.

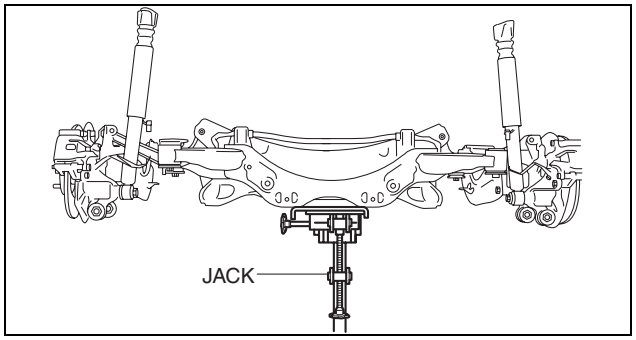

ac5uuw00000195

02-50 TECHNICAL DATA

SUSPENSION TECHNICAL DATA 02-50–1

TECHNICAL DATA

SUSPENSION TECHNICAL DATA

id025000800100

Front wheel alignment (Unloaded)*1 [SKYACTIV-G 2.0]

Item			Fuel gauge indication				
			Empty	1/4	1/2	3/4	Full
Maximum steering angle [Tolerance ±3°]		Inner	37°48′				
		Outer	30°54′				
Total toe-in	Tire [Tolerance ±4 {0.2}]	(mm {in})	2 {0.08}				
	Rim inner [Tolerance ±3 {0.1}]		1.0 {0.04}				
		(degree)	0°10′±0°20′				
Caster angle*2 (Reference value) [Tolerance ±1°]			6°19′	6°21′	6°24′	6°27′	6°29′
Camber angle*2 (Reference value) [Tolerance ±1°]			-0°20′	-0°21′	-0°21′	-0°21′	-0°22′
Steering axis inclination (Reference value)			11°57′	11°58′	11°59′	11°59′	12°00′

*1 : Engine coolant and engine oil are at specified level. Spare tire, jack and tools are in designated position.
*2 : Difference between left and right must not exceed **1°30′**.

Front wheel alignment (Unloaded)*1 [SKYACTIV-D 2.2]

Item			Fuel gauge indication				
			Empty	1/4	1/2	3/4	Full
Maximum steering angle [Tolerance ±3°]		Inner	37°48′				
		Outer	30°54′				
Total toe-in	Tire [Tolerance ±4 {0.2}]	(mm {in})	2 {0.08}				
	Rim inner [Tolerance ±3 {0.1}]		1.0 {0.04}				
		(degree)	0°10′±0°20′				
Caster angle*2 (Reference value) [Tolerance ±1°]			6°15′	6°17′	6°20′	6°23′	6°25′
Camber angle*2 (Reference value) [Tolerance ±1°]			-0°20′	-0°21′	-0°21′	-0°21′	-0°22′
Steering axis inclination (Reference value)			11°57′	11°58′	11°59′	11°59′	12°00′

*1 : Engine coolant and engine oil are at specified level. Spare tire, jack and tools are in designated position.
*2 : Difference between left and right must not exceed **1°30′**.

Rear wheel alignment (Unloaded)*1

Item			Fuel gauge indication				
			Empty	1/4	1/2	3/4	Full
Total toe-in	Tire [Tolerance ±4 {0.2}]	(mm {in})	2 {0.08}				
	Rim inner [Tolerance ±3 {0.1}]		1.0 {0.04}				
		(degree)	0°10′±0°20′				
Camber angle*2 (Reference value) [Tolerance ±1°]			-0°51′	-0°54′	-0°56′	-0°58′	-1°01′
Thrust angle (Reference value) [Tolerance ±0°48′]			0°00′				

*1 : Engine coolant and engine oil are at specified level. Spare tire, jack and tools are in designated position.
*2 : Difference between left and right must not exceed **1°30′**.

TECHNICAL DATA

Suspension

Item	Specification
Front lower arm ball joint stud starting torque	18 N·m {1.8 kgf·m, 13 ft·lbf} max.
Front lower arm ball joint stud rotational torque	3.2 N·m {33 kgf·cm, 28 in·lbf} max.
Front stabilizer control link ball joint starting torque	0.8—3.5 N·m {8.2—35 kgf·cm, 7.1—30 in·lbf}
Rear stabilizer control link ball joint starting torque	0.8—3.5 N·m {8.2—35 kgf·cm, 7.1—30 in·lbf}

Standard tire and wheel

Item				Specification	
Wheel	Size			17 × 7J	19 × 7J
	Inset (mm {in})			50 {2.0}	
	Pitch circle diameter (mm {in})			114.3 {4.50}	
	Material			Steel Aluminum alloy	Aluminum alloy
Tire	Size			225/65R17 102V	225/55R19 99V
	Air pressure (kPa {bar <psi>})	Front	Up to 3 persons	230 {2.3, <33>}*3 250 {2.5, <36>}*3	250 {2.5, <36>}
			Full load	260 {2.6, <38>}*3 270 {2.7, <39>}*3	260 {2.6, <38>}
		Rear	Up to 3 persons	230 {2.3, <33>}*3 250 {2.5, <36>}*3	250 {2.5, <36>}
			Full load	280 {2.8, <41>}*3 290 {2.9, <42>}*3	290 {2.9, <42>}
	Remaining tread (mm {in})			1.6 {0.063} min.	
Wheel and tire	Lug nut tightening torque (N·m {kgf·m, ft·lbf})			108—147 {12—14, 80—108}	
	Wheel and tire runout (mm {in})	Radial direction		1.5 {0.059} max.	
		Lateral direction		Steel:2.5 {0.098} max. Aluminum alloy:2.0 {0.079} max.	2.0 {0.079} max.
	Wheel imbalance (g {oz})			Adhesive-type*1: 13 {0.46} max. Knock-type*2: 8 {0.3} max.	Adhesive-type*1: 12 {0.42} max. Knock-type*2: 7 {0.2} max.

*1 : Total weight exceeds **160 g {5.64 oz}**.
*2 : One balance weight: **60 g {2.1 oz}** max. If the total weight exceeds **100 g {3.53 oz}** on one side, rebalance after moving the tire around on the rim. Do not use three or more balance weights.
*3 : Verify the vehicle tire pressures.

Temporary spare tire and wheel

Item			Specification
Wheel	Size		17 × 5 1/2J
	Inset	(mm {in})	45 {1.8}
	Pitch circle diameter	(mm {in})	114.3 {4.50}
	Material		Steel
Tire	Size		185/80R17 95M
	Air pressure	(kPa {bar <psi>})	250 {2.5, <36>}
	Remaining tread	(mm {in})	1.6 {0.063} min.
Wheel and tire	Lug nut tightening torque	(N·m {kgf·m, ft·lbf})	108—147 {12—14, 80—108}

02-60 SERVICE TOOLS

SUSPENSION 02-60–1

SERVICE TOOLS

SUSPENSION

id026000800200

49 T034 1A0 Coil spring compressor set 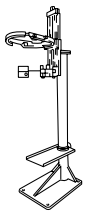	49 T028 3A0 Ball joint puller set 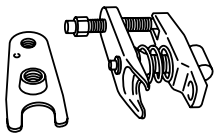	49 G033 102 Handle
49 U034 204 Dust boot installer 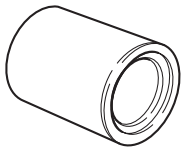	49 FT01 389 Preload adapter 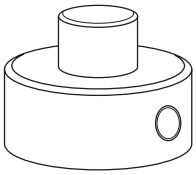	49 E032 305 Slipper seal protector 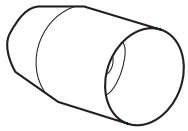

DRIVELINE/AXLE

03
SECTION

ON-BOARD DIAGNOSTIC. . . . 03-02
SYMPTOM
TROUBLESHOOTING. 03-03
GENERAL PROCEDURES . . . 03-10
FRONT AXLE. 03-11
REAR AXLE. 03-12
DRIVE SHAFT 03-13
DIFFERENTIAL 03-14
PROPELLER SHAFT 03-15
TRANSFER
[C66MX-R, D66MX-R] 03-16A
TRANSFER
[FW6AX-EL, GW6AX-EL] . . . 03-16B
4-WHEEL DRIVE 03-18
TECHNICAL DATA 03-50
SERVICE TOOLS 03-60

03-02 ON-BOARD DIAGNOSTIC

ELECTRONIC 4WD CONTROL SYSTEM WIRING DIAGRAM **03-02–2**
FOREWORD **03-02–3**
Troubleshooting Procedure **03-02–3**
Action for Non-repeatable Malfunction. **03-02–4**
ELECTRONIC 4WD CONTROL SYSTEM ON-BOARD DIAGNOSIS. . . . **03-02–4**
On-Board Diagnostic (OBD) Test Description **03-02–4**
Reading DTCs Procedure **03-02–5**
Clearing DTCs Procedure **03-02–5**
PID/Data Monitor and Record Procedure **03-02–5**
Active Command Modes Procedure . . **03-02–5**
DTC Table **03-02–6**
Snapshot Data Table **03-02–7**
PID/DATA Monitor Table. **03-02–7**
Active Command Modes Table **03-02–8**
DTC P164D:00 . . . . . **03-02–8**
DTC P182F:00 . . . . . **03-02–9**
DTC P187B:00 . . . . . **03-02–9**
DTC P1886:00 . . . . . **03-02–10**
DTC P1887:11/P1887:12/ P1887:13/P1887:14 . . . . . **03-02–11**
DTC P1888:11/P1888:15 . . . . . **03-02–13**
DTC P188A:00 . . . . . **03-02–14**
DTC U0001:88/U0100:00/ U0101:00/U0121:00 . . . . . **03-02–15**
Diagnostic procedure **03-02–15**
DTC U0401:68 . . . . . **03-02–15**
DTC U0402:68 . . . . . **03-02–16**
Diagnostic Procedure **03-02–16**
DTC U0415:68 . . . . . **03-02–17**
DTC U2100:00 . . . . . **03-02–17**

ON-BOARD DIAGNOSTIC

ELECTRONIC 4WD CONTROL SYSTEM WIRING DIAGRAM

id030200802400

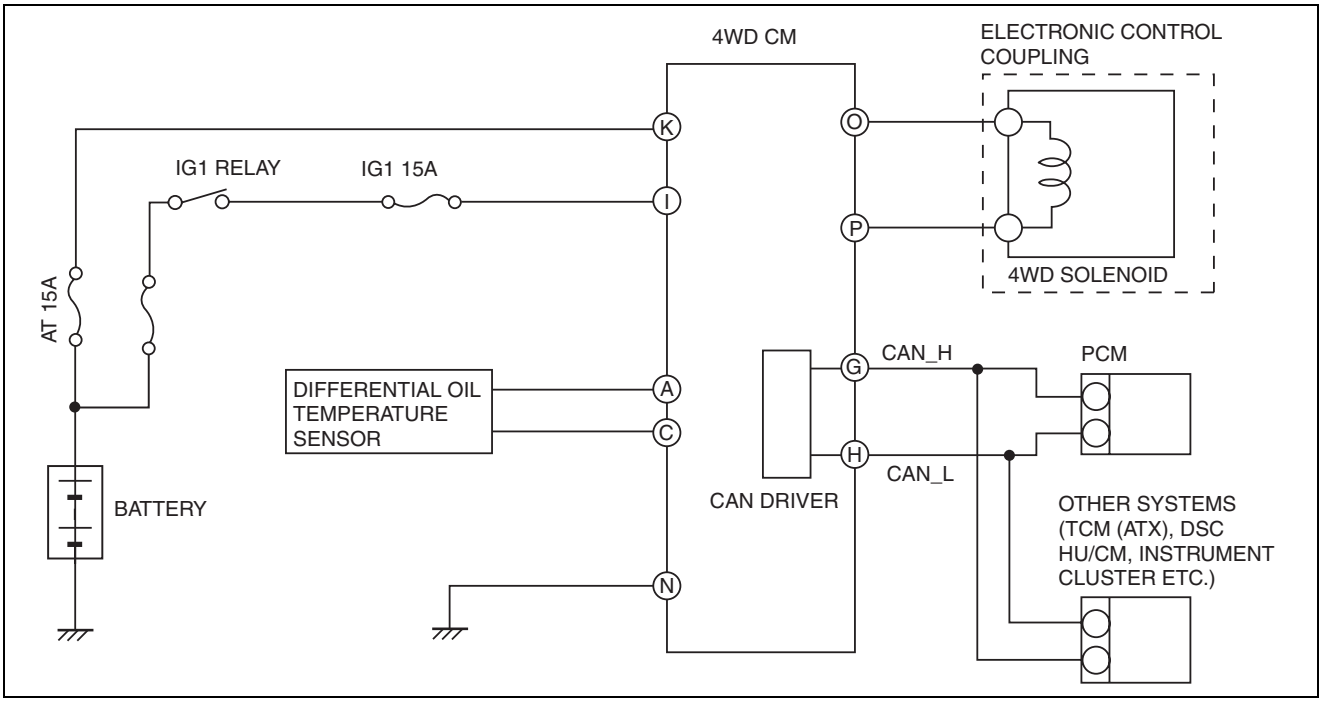

ac5wzw0000255

ON-BOARD DIAGNOSTIC

FOREWORD

id030200130500

- If there is any vehicle malfunction complaint lodged by a customer, perform malfunction diagnosis according to the troubleshooting procedure.

Troubleshooting Procedure

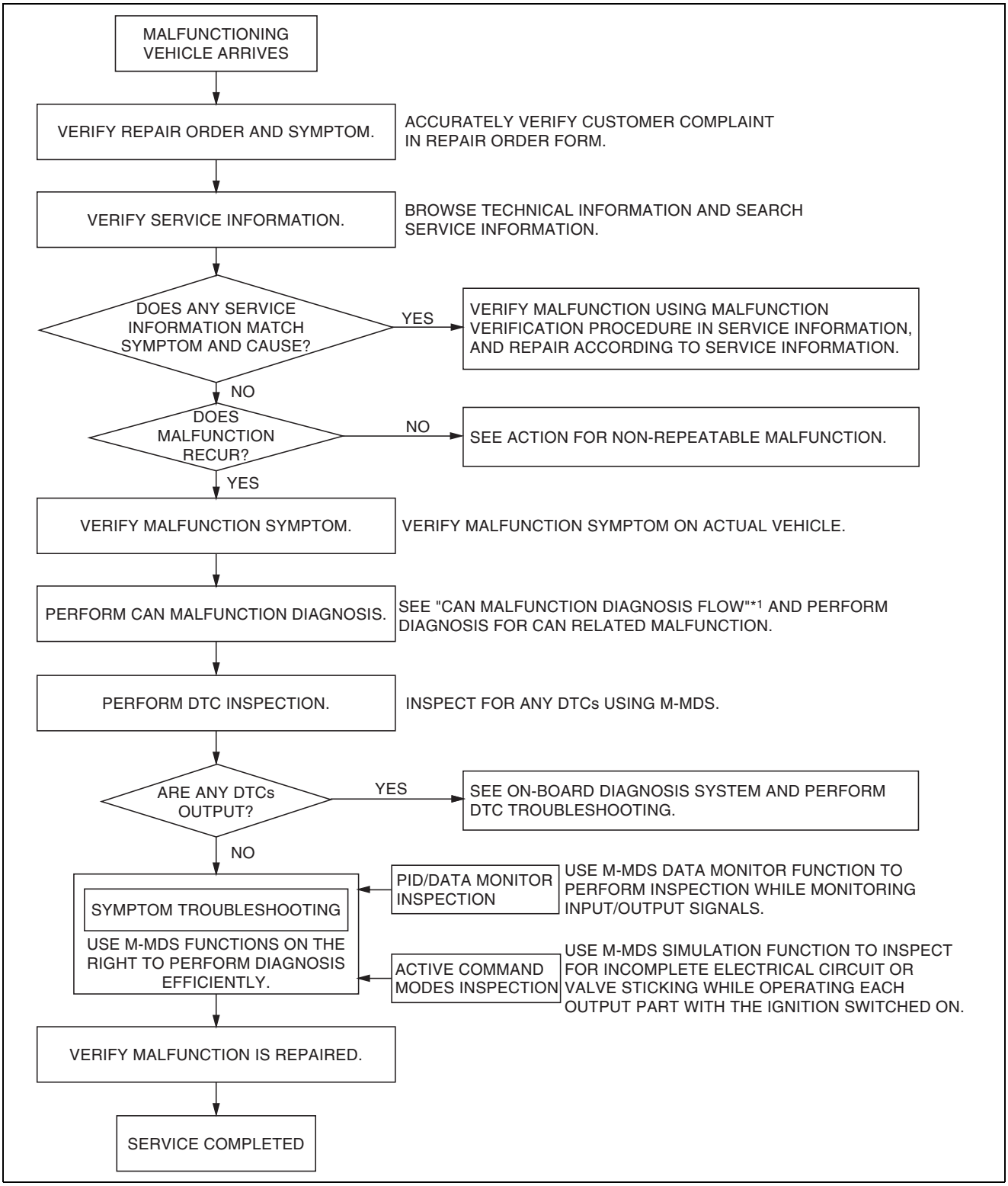

am3zzw0001266

ON-BOARD DIAGNOSTIC

*1 : 10-02A-3 CONTROLLER AREA NETWORK (CAN) MALFUNCTION DIAGNOSIS FLOW [SKYACTIV-G 2.0 (L.H.D.)], 10-02B-3 CONTROLLER AREA NETWORK (CAN) MALFUNCTION DIAGNOSIS FLOW [SKYACTIV-G 2.0 (R.H.D.)] 10-02C-3 CONTROLLER AREA NETWORK (CAN) MALFUNCTION DIAGNOSIS FLOW [SKYACTIV-D 2.2 (L.H.D.)] 10-02D-3 CONTROLLER AREA NETWORK (CAN) MALFUNCTION DIAGNOSIS FLOW [SKYACTIV-D 2.2 (R.H.D.)]

Action for Non-repeatable Malfunction

- If the malfunction does not recur, verify the malfunction cause by performing the following actions:
  - Based on the repair order form, attempt to drive the vehicle or perform tests to replicate the malfunction, record the data (such as PCM circuit voltage) at that time, and detect the malfunction cause.
  - Shake the wiring harness or connector of the electrical component which is suspected to be the cause of the malfunction, and inspect for malfunction or occurrence of any DTCs.

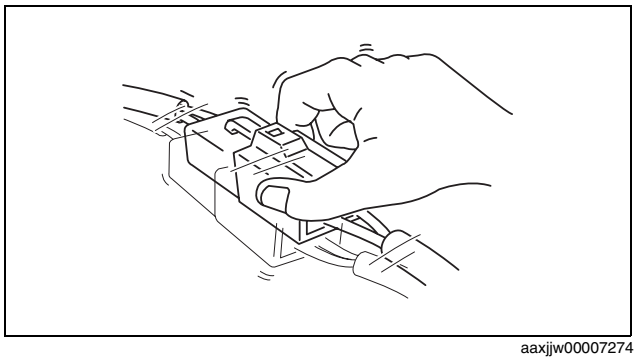

aaxjjw00007274

  - Inspect the female terminals on the connector of the electric component which is suspected to be the cause of the malfunction for poor connection.

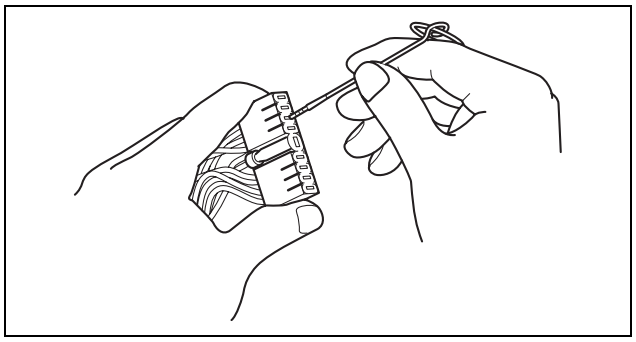

am3uuw0000750

ELECTRONIC 4WD CONTROL SYSTEM ON-BOARD DIAGNOSIS

id030200802500

On-Board Diagnostic (OBD) Test Description

- The OBD test inspects the integrity and function of the 4WD control module and outputs the results when requested by the specific tests.
- On-board diagnostic test also:
  - Provides a quick inspection of the 4WD control module usually performed at the start of each diagnostic procedure.
  - Provides verification after repairs to ensure that no other faults occurred during service.
- The OBD test is divided into 3 tests:
  - Read/clear diagnostic results, PID monitor and record and active command modes.

Read/clear diagnostic results

- This function allows you to read or clear DTCs in the 4WD control module memory.

PID/Data monitor and record

- This function allows you to access certain data values, input signals, calculated values, and system status information.

Active command modes

- This function allows you to control devices through the M-MDS.

ON-BOARD DIAGNOSTIC

Reading DTCs Procedure
CMDTC self test

1. Connect the M-MDS (IDS) to the DLC-2.
2. After the vehicle is identified, select the following items from the initialization screen of the IDS.
   (1) Select “Self Test”.
   (2) Select “All CMDTCs”.

   Note
   - Snapshot data appears at the top of the help screen when the displayed DTC is selected.

3. Verify the DTC according to the directions on the screen.
   - If any DTCs are displayed, perform troubleshooting according to the corresponding DTC inspection after recording the snapshot data.
4. After completion of repairs, clear all DTCs stored in the 4WD control module. (See 03-02-5 Clearing DTCs Procedure.)

Clearing DTCs Procedure
CMDTC self test

1. Connect the M-MDS (IDS) to the DLC-2.
2. After the vehicle is identified, select the following items from the initialization screen of the IDS.
   (1) Select “Self Test”.
   (2) Select “All CMDTCs”.
3. Verify the DTC according to the directions on the screen.
4. Press the clear button on the DTC screen to clear the DTC.
5. Switch the ignition OFF (LOCK).
6. Switch the ignition to ON (engine off) and wait for **5 s or more**.
7. Perform DTC inspection. (See 03-02-5 Reading DTCs Procedure.)
8. Verify that no DTCs are displayed.

PID/Data Monitor and Record Procedure

1. Connect the M-MDS (IDS) to the DLC-2.
2. After the vehicle is identified, select the following items from the initialization screen of the IDS.
   (1) Select “DataLogger”.
   (2) Select “Modules”.
   (3) Select “4X4”.
3. Select the applicable PID from the PID table.
4. Verify the PID data according to the directions on the screen.

   Note
   - The PID data screen function is used for monitoring the calculated value of input/output signals in the module.Therefore, if the monitored value of the output parts is not within the specification, it is necessary to inspect the monitored value of input parts corresponding to the applicable output part control. In addition, because the system does not display an output part malfunction as an abnormality in the monitored value, it is necessary to inspect the output parts individually.
   - When detecting DTCs, PIDs related to a malfunctioning system may not display even if the module is normal. Therefore, if a PID is not displayed, it is necessary to verify the DTC, perform malfunction diagnosis of the DTC that was detected, and do repairs.

Active Command Modes Procedure

1. Connect the M-MDS (IDS) to the DLC-2.
2. After the vehicle is identified, select the following items from the initialization screen of the IDS.
   (1) Select “DataLogger”.
   (2) Select “Modules”.
   (3) Select “4X4”.
3. Select the simulation items from the PID table.
4. Perform the active command modes function, inspect the operations for each parts.
   - If the operation of output parts cannot be verified after the active command mode inspection is performed, this could indicate the possibility of an open or short circuit, sticking, or operation malfunction in the output parts.

ON-BOARD DIAGNOSTIC

DTC Table

×: Applicable
—: Not applicable

DTC M-MDS	4WD warning light illumination status	Diagnosis system component	Fail-safe	Drive cycle	Self test type*1	Memory function	Page
P164D:00	Illuminated	4WD CM configuration	X	—	C	X	(See 03-02-8 DTC P164D:00.)
P182F:00	Flashed	4WD CM	X	—	C	X	(See 03-02-9 DTC P182F:00.)
P187B:00	Illuminated	4WD CM	X	—	C	X	(See 03-02-9 DTC P187B:00.)
P1886:00	Illuminated	4WD CM	X	—	C	X	(See 03-02-10 DTC P1886:00.)
P1887:11	Illuminated	4WD solenoid circuit	X	—	C	X	(See 03-02-11 DTC P1887:11/ P1887:12/P1887:13/P1887:14.)
P1887:12	Illuminated	4WD solenoid circuit	X	—	C	X	
P1887:13	Illuminated	4WD solenoid circuit	X	—	C	X	
P1887:14	Illuminated	4WD solenoid circuit	X	—	C	X	
P1888:11	Illuminated	Differential oil temperature sensor circuit	X	—	C	X	(See 03-02-13 DTC P1888:11/ P1888:15.)
P1888:15	Illuminated	Differential oil temperature sensor circuit	X	—	C	X	
P188A:00	Flashed	4WD CM	X	—	C	X	(See 03-02-14 DTC P188A:00.)
U0001:88	—	CAN system communication error	X	—	C	X	(See 03-02-15 DTC U0001:88/ U0100:00/U0101:00/U0121:00.)
U0100:00	—	Communication error to PCM	X	—	C	X	
U0101:00	—	CAN system communication error	X	—	C	X	
U0121:00	—	CAN system communication error	X	—	C	X	
U0401:68	—	Signal error from PCM	X	—	C	X	(See 03-02-15 DTC U0401:68.)
U0402:68	—	Signal error from TCM	X	—	C	X	(See 03-02-16 DTC U0402:68.)
U0415:68	—	Signal error from DSC HU/CM	X	—	C	X	(See 03-02-17 DTC U0415:68.)
U2100:00	Illuminated	4WD CM configuration	X	—	C	X	(See 03-02-17 DTC U2100:00.)

*1 : C: CMDTC self test

ON-BOARD DIAGNOSTIC

Snapshot Data Table

Note
- Snapshot data items are not displayed, according to detected DTC.

Snapshot data item	Unit	Definition	Corresponding PID data monitor item
IG-ON_TIMER	hh:mm:ss	Times Since Ignition Switch ON	—
TOTAL_TIME	hh:mm:ss	Total Time	—
TOTAL_DIST	KPH, MPH	Total Distance	—
IC_VPWR	V	Instrument Cluster Power Supply	—
AAT	°C, °F	Ambient Air Temperature	AAT
PWR_MODE_KEY	—	Power Mode Key State	—

PID/DATA Monitor Table

PID name (definition)	Unit/Condition	Operation condition (reference)	Action
WARN_LAMP	—	• Displays the warning light state	Inspect the 4WD CM. (See 03-18-3 4WD CONTROL MODULE INSPECTION.)
AAT	°C, °F	• Displays the ambient air temperature	Inspect the ambient air temperature sensor. (See 07-40A-23 AMBIENT TEMPERATURE SENSOR INSPECTION [FULL-AUTO AIR CONDITIONER].)
APP	%	• Displays the accelerator pedal position	Inspect the accelerator pedal position sensor. (See 01-40-51 ACCELERATOR PEDAL POSITION (APP) SENSOR INSPECTION [SKYACTIV-G 2.0].)
CAL_TABLE	—	• Displays the selected calibration table	—
CUP_SOL	%	• Displays the coupling solenoid duty cycle	Inspect the 4WD CM. (See 03-18-3 4WD CONTROL MODULE INSPECTION.)
GEAR	1st/2nd/3rd/4th/ 5th/6th/7th/Park/ Neutral/Drive/ Reverse	• Displays the gear position	Inspect the PCM. (See 01-40-17 PCM INSPECTION [SKYACTIV-G 2.0].)
OIL_TEMP	°C, °F	• Displays the differential oil temperature	Inspect the differential oil temperature sensor. (See 03-18-2 DIFFERENTIAL OIL TEMPERATURE SENSOR INSPECTION.)
RPM	RPM	• Displays the engine speed	Inspect the CKP sensor. (See 01-40-60 CRANKSHAFT POSITION (CKP) SENSOR INSPECTION [SKYACTIV-G 2.0].)
SHIFT	P/R/N/D/S/L	• Displays the select lever position	Perform the DTC inspection for the TCM. (See 05-02A-11 ON-BOARD DIAGNOSTIC SYSTEM DTC TABLE [FW6A-EL, FW6AX-EL].)
VPWR	V	• Engine stopped: **Approx. 12 V** • Idling: **Approx. 14 V**	Inspect the voltage of the 4WD control module terminal I. (See 03-18-3 4WD CONTROL MODULE INSPECTION.)

ON-BOARD DIAGNOSTIC

PID name (definition)	Unit/Condition	Operation condition (reference)	Action
WSPD_LF	KPH, MPH	• Vehicle stopped: **0 KPH, 0 MPH** • Vehicle running: Vehicle speed	Inspect the front ABS wheel-speed sensor. (See 04-15-10 FRONT ABS WHEEL-SPEED SENSOR INSPECTION.)
WSPD_LR			Inspect the rear ABS wheel-speed sensor. (See 04-15-13 REAR ABS WHEEL-SPEED SENSOR INSPECTION [4WD].)
WSPD_RF			Inspect the front ABS wheel-speed sensor. (See 04-15-10 FRONT ABS WHEEL-SPEED SENSOR INSPECTION.)
WSPD_RR			Inspect the rear ABS wheel-speed sensor. (See 04-15-13 REAR ABS WHEEL-SPEED SENSOR INSPECTION [4WD].)
TORQUE	Nm	• Displays the total wheel torque	—

Active Command Modes Table

Command name	Output part	Operation	Operating condition
CUP_SOL	4WD solenoid	on/off	Switch the ignition to ON (engine off or on)

DTC P164D:00

id030200200100

DTC P164D:00	Configuration data not recorded
DETECTION CONDITION	• 4WD CM detects coupling component calibration data error
FAIL-SAFE FUNCTION	• Control enabled with default data. • 4WD warning light: Illuminated
POSSIBLE CAUSE	• Module configuration procedure is not done properly

Diagnostic procedure

STEP	INSPECTION		ACTION
1	**COUPLING COMPONENT CALIBRATION DATA WRITING** • Write the coupling component calibration data. (See 03-18-7 COUPLING COMPONENT CALIBRATION DATA WRITING.) • Clear the DTCs from the memory. (See 03-02-4 ELECTRONIC 4WD CONTROL SYSTEM ON-BOARD DIAGNOSIS.) • Is the same DTC present?		Go to the next step.
2	**VERIFY THAT THE SAME DTC IS NOT PRESENT** • Clear the DTCs from the memory. (See 03-02-4 ELECTRONIC 4WD CONTROL SYSTEM ON-BOARD DIAGNOSIS.) • Is the same DTC present?	Yes	Repeat the inspection from Step 1.
		No	Go to the next step.
3	**VERIFY THAT NO OTHER DTCS ARE PRESENT** • Are any other DTCs output?	Yes	Go to the applicable DTC inspection. (See 03-02-4 ELECTRONIC 4WD CONTROL SYSTEM ON-BOARD DIAGNOSIS.)
		No	DTC troubleshooting completed.

ON-BOARD DIAGNOSTIC

DTC P182F:00

id030200200200

DTC P182F:00	Excessive load detected on 4WD part
DETECTION CONDITION	• 4WD CM detects excessive load
FAIL-SAFE FUNCTION	• 4WD protection condition (4WD control paused) • 4WD warning light: Flashed
POSSIBLE CAUSE	• Detects excessive load on 4WD part to switch to 2WD and protect the system

Diagnostic procedure

STEP	INSPECTION		ACTION
1	**SWITCH THE IGNITION TO OFF AND ALLOW 4WD CM TO COOL DOWN.**		
2	**VERIFY THAT THE SAME DTC IS NOT PRESENT** • Clear the DTCs from the memory. (See 03-02-4 ELECTRONIC 4WD CONTROL SYSTEM ON-BOARD DIAGNOSIS.) • Is the same DTC present?	Yes	Repeat the inspection from Step 1.
		No	Go to the next step.
3	**VERIFY THAT NO OTHER DTCS ARE PRESENT** • Are any other DTCs output?	Yes	Go to the applicable DTC inspection. (See 03-02-4 ELECTRONIC 4WD CONTROL SYSTEM ON-BOARD DIAGNOSIS.)
		No	DTC troubleshooting completed.

DTC P187B:00

id030200200300

DTC P187B:00	A tire diameter is outside of the allowable range
DETECTION CONDITION	• 4WD CM detects a tire diameter is outside of the allowable range
FAIL-SAFE FUNCTION	• Control disabled. • 4WD warning light: Illuminated
POSSIBLE CAUSE	• Detects a tire diameter which is outside of the allowable range to switch to 2WD and protect the system. • Flat tire • Wrong tire pressure

Diagnostic procedure

STEP	INSPECTION		ACTION
1	**INSPECT A TIRE DIAMETER** • Is the tire diameter as specified?	Yes	Go to the next step.
		No	Replace with specified tire.
2	**VERIFY THAT THE SAME DTC IS NOT PRESENT** • Clear the DTCs from the memory. (See 03-02-4 ELECTRONIC 4WD CONTROL SYSTEM ON-BOARD DIAGNOSIS.) • Drive the vehicle in a straight line at **10 km/h or more** for **10 s or more**. • Is the same DTC present?	Yes	Repeat the inspection from Step 1.
		No	Go to the next step.
3	**VERIFY THAT NO OTHER DTCS ARE PRESENT** • Are any other DTCs output?	Yes	Go to the applicable DTC inspection. (See 03-02-4 ELECTRONIC 4WD CONTROL SYSTEM ON-BOARD DIAGNOSIS.)
		No	DTC troubleshooting completed.

ON-BOARD DIAGNOSTIC

DTC P1886:00

id030200200400

DTC P1886:00	Configuration data not recorded
DETECTION CONDITION	• 4WD CM detects vehicle type information data error
FAIL-SAFE FUNCTION	• Control disabled. • 4WD warning light: Illuminated
POSSIBLE CAUSE	• PCM malfunction • Wrong 4WD CM is installed

Diagnostic procedure

STEP	INSPECTION		ACTION
1	**INSPECT FOR PCM MALFUNCTION** • Switch the ignition to off. • Using the M-MDS, perform the DTC inspection for the PCM. (See 01-02-8 ON-BOARD DIAGNOSTIC TEST [SKYACTIV-G 2.0].) • Are any DTCs detected?	Yes	Go to applicable DTC inspection. (See 01-02-14 DTC TABLE [SKYACTIV-G 2.0].)
		No	Go to the next step.
2	**INSPECT THE 4WD CM** • Is correct 4WD CM installed?	Yes	Replace the 4WD CM. (See 03-18-4 4WD CONTROL MODULE REMOVAL/INSTALLATION.)
		No	Go to the next step.
3	**COUPLING COMPONENT CALIBRATION DATA WRITING** • Write the coupling component calibration data. (See 03-18-7 COUPLING COMPONENT CALIBRATION DATA WRITING.) • Clear the DTCs from the memory. (See 03-02-4 ELECTRONIC 4WD CONTROL SYSTEM ON-BOARD DIAGNOSIS.) • Is the same DTC present?		Go to the next step.
4	**VERIFY THAT THE SAME DTC IS NOT PRESENT** • Clear the DTCs from the memory. (See 03-02-4 ELECTRONIC 4WD CONTROL SYSTEM ON-BOARD DIAGNOSIS.) • Is the same DTC present?	Yes	Repeat the inspection from Step 1.
		No	Go to the next step.
5	**VERIFY THAT NO OTHER DTCS ARE PRESENT** • Are any other DTCs output?	Yes	Go to the applicable DTC inspection. (See 03-02-4 ELECTRONIC 4WD CONTROL SYSTEM ON-BOARD DIAGNOSIS.)
		No	DTC troubleshooting completed.

ON-BOARD DIAGNOSTIC

DTC P1887:11/P1887:12/P1887:13/P1887:14

id030200200500

DTC P1887:11 **DTC P1887:12** **DTC P1887:13** **DTC P1887:14**	**4WD solenoid circuit**
DETECTION CONDITION	• Current detection circuit in 4WD CM detects current above specification for more than specified period. • 4WD CM detects that 4WD solenoid control signal differs from current detected at current detection circuit for more than specified period. • Relay voltage detection circuit detects that voltage does not concur with relay ON/OFF signal for more than specified period.
FAIL-SAFE FUNCTION	• Control disabled. • 4WD warning light: Illuminated
POSSIBLE CAUSE	• 4WD solenoid malfunction • Open circuit or short to ground between 4WD CM terminal O and 4WD solenoid terminal A • Open circuit or short to ground between 4WD CM terminal P and 4WD solenoid terminal B • Open circuit or short to ground in harness between battery and 4WD CM terminal K • Open circuit between 4WD CM terminal N and body ground • Open or short circuit in 4WD CM internal circuit • AT (15A) fuse malfunction • 4WD CM malfunction • Poor connection of connectors (female terminals)

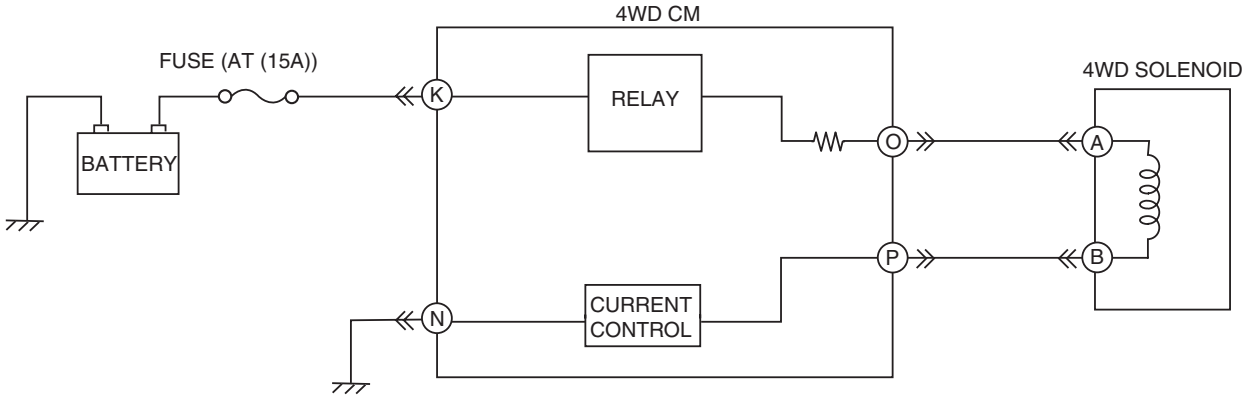

4WD CM CONNECTOR

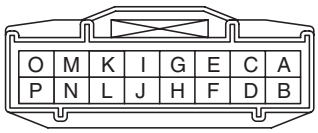

4WD SOLENOID CONNECTOR

ON-BOARD DIAGNOSTIC

Diagnostic procedure

STEP	INSPECTION		ACTION
1	**INSPECT 4WD SOLENOID CONDITION** • Switch the ignition to OFF. • Disconnect 4WD solenoid connector. • Inspect 4WD solenoid. (See 03-18-3 4WD SOLENOID INSPECTION.) • Is 4WD solenoid normal?	Yes	Go to next step.
		No	Replace 4WD solenoid, then go to Step 8.
2	**INSPECT 4WD SOLENOID TO 4WD CM (POWER SUPPLY CIRCUIT) FOR OPEN CIRCUIT** • Disconnect 4WD CM connector. • Inspect for continuity between 4WD CM terminal O and 4WD solenoid terminal A. • Is there continuity?	Yes	Go to next step.
		No	Repair or replace harness for open circuit between 4WD CM and 4WD solenoid, then go to Step 8.
3	**INSPECT 4WD SOLENOID TO 4WD CM (POWER SUPPLY CIRCUIT) FOR SHORT TO GROUND** • Inspect for continuity between 4WD CM terminal O and ground. • Is there continuity?	Yes	Repair or replace harness for short to ground between 4WD CM and 4WD solenoid, then go to Step 8.
		No	Go to next step.
4	**INSPECT 4WD SOLENOID TO 4WD CM (GROUND CIRCUIT) FOR OPEN CIRCUIT** • Inspect for continuity between 4WD CM terminal P and 4WD solenoid terminal B. • Is there continuity?	Yes	Go to next step.
		No	Repair or replace harness for open circuit between 4WD CM and 4WD solenoid, then go to Step 8.
5	**INSPECT 4WD SOLENOID TO 4WD CM (GROUND CIRCUIT) FOR SHORT TO GROUND** • Inspect for continuity between 4WD CM terminal P and ground. • Is there continuity?	Yes	Repair or replace harness for short to ground between 4WD CM and 4WD solenoid, then go to Step 8.
		No	Go to next step.
6	**INSPECT 4WD CM POWER SUPPLY CIRCUIT FOR OPEN CIRCUIT** • Measure voltage between 4WD CM terminal K and ground. • Is voltage B+?	Yes	Replace 4WD CM, then go to Step 8.
		No	Repair or replace harness for open circuit between 4WD CM and 4WD solenoid, then go to next step.
7	**INSPECT FUSE CONDITION** • Turn ignition key to OFF. • Is AT (15A) fuse normal?	Yes	Go to next step.
		No	Replace fuse, then go to Step 9.
8	**VERIFY TROUBLESHOOTING COMPLETED** • Make sure to reconnect all disconnected connectors. • Clear DTC from memory. (See 03-02-4 ELECTRONIC 4WD CONTROL SYSTEM ON-BOARD DIAGNOSIS.) • Drive vehicle. • Is the same DTC present?	Yes	Replace 4WD CM, then go to next step.
		No	Go to next step.
9	**VERIFY AFTER REPAIR PROCEDURE** • Is there any other DTC present?	Yes	Go to applicable DTC inspection.
		No	Troubleshooting completed.

ON-BOARD DIAGNOSTIC

DTC P1888:11/P1888:15

id030200200600

DTC P1888:11 **DTC P1888:15**	**Differential oil temperature sensor circuit**
DETECTION CONDITION	• Differential oil temperature sensor voltage monitor circuit detects abnormal input voltage.
FAIL-SAFE FUNCTION	• Control disabled. • 4WD warning light: Illuminated
POSSIBLE CAUSE	• Differential oil temperature sensor malfunction • Open circuit, or short to power or ground between 4WD CM terminal A and differential oil temperature sensor terminal A • Open circuit or short to power between 4WD CM terminal C and differential oil temperature sensor terminal B • 4WD CM malfunction • Poor connection of connectors (female terminals)

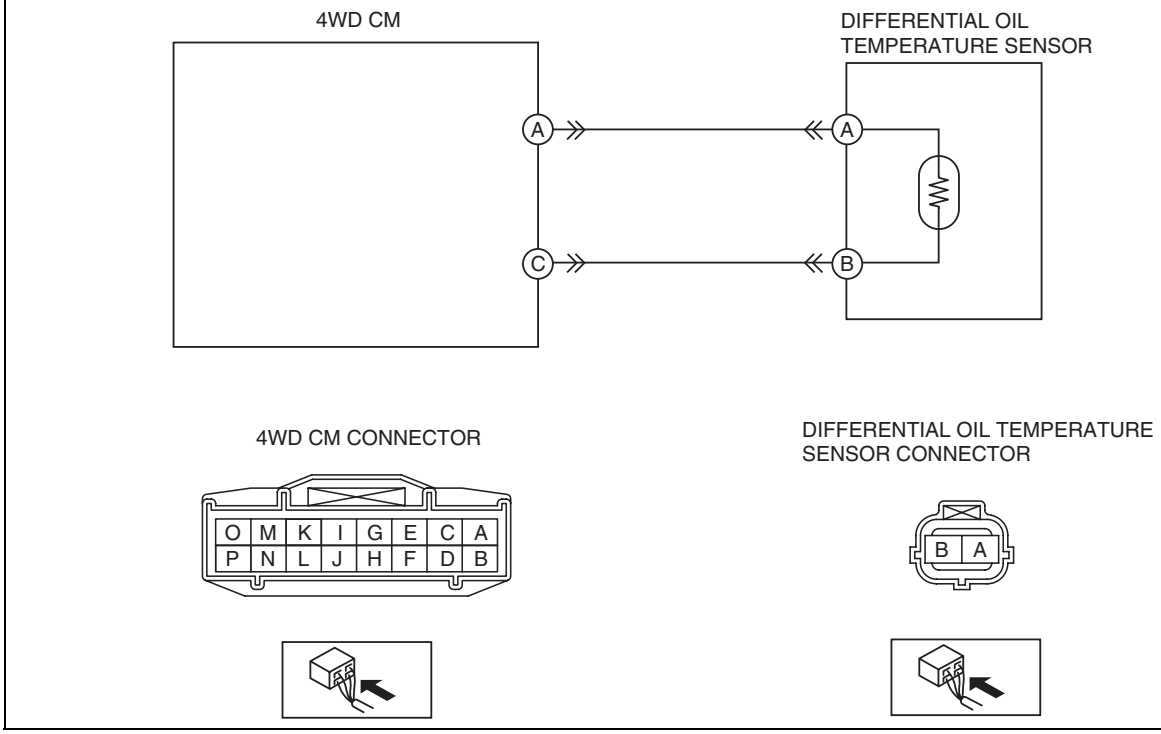

Diagnostic procedure

STEP	INSPECTION		ACTION
1	**INSPECT DIFFERENTIAL OIL TEMPERATURE SENSOR CONDITION** • Disconnect differential oil temperature sensor connector. • Inspect the differential oil temperature sensor. (See 03-18-2 DIFFERENTIAL OIL TEMPERATURE SENSOR INSPECTION.) • Is the differential oil temperature sensor normal?	Yes	Go to next step.
		No	Replace differential oil temperature sensor, then go to Step 7.
2	**INSPECT 4WD CM TO DIFFERENTIAL OIL TEMPERATURE SENSOR FOR OPEN CIRCUIT** • Disconnect 4WD CM connector. • Inspect for continuity between 4WD CM terminal A and differential oil temperature sensor terminal A. • Is there continuity?	Yes	Go to next step.
		No	Repair or replace harness for open circuit between 4WD CM and differential oil temperature sensor, then go to Step 7.

ON-BOARD DIAGNOSTIC

STEP	INSPECTION		ACTION
3	**INSPECT 4WD CM TO DIFFERENTIAL OIL TEMPERATURE SENSOR FOR SHORT TO POWER** • Inspect voltage between 4WD CM terminal A and ground. • Is voltage B+?	Yes	Repair or replace harness for short to power between 4WD CM and differential oil temperature sensor, then go to Step 7.
		No	Go to next step.
4	**INSPECT 4WD CM TO DIFFERENTIAL OIL TEMPERATURE SENSOR FOR SHORT TO GROUND** • Inspect for continuity between 4WD CM terminal A and ground. • Is there continuity?	Yes	Repair or replace harness for short to ground between 4WD CM and differential oil temperature sensor, then go to Step 7.
		No	Go to next step.
5	**INSPECT 4WD CM TO DIFFERENTIAL OIL TEMPERATURE SENSOR FOR OPEN CIRCUIT** • Inspect for continuity between 4WD CM terminal C and differential oil temperature sensor terminal B. • Is there continuity?	Yes	Go to next step.
		No	Repair or replace harness for open circuit between 4WD CM and differential oil temperature sensor, then go to Step 7.
6	**INSPECT 4WD CM TO DIFFERENTIAL OIL TEMPERATURE SENSOR FOR SHORT TO POWER** • Inspect voltage between 4WD CM terminal C and ground. • Is voltage B+?	Yes	Repair or replace harness for short to power between 4WD CM and differential oil temperature sensor, then go to next step.
		No	Go to next step.
7	**VERIFY TROUBLESHOOTING COMPLETED** • Make sure to reconnect all disconnected connectors. • Clear DTC from memory. (See 03-02-4 ELECTRONIC 4WD CONTROL SYSTEM ON-BOARD DIAGNOSIS.) • Drive vehicle. • Is the same DTC present?	Yes	Replace 4WD CM, then go to next step.
		No	Go to next step.
8	**VERIFY AFTER REPAIR PROCEDURE** • Is there any other DTC present?	Yes	Go to applicable DTC inspection.
		No	Troubleshooting completed.

DTC P188A:00

id030200200700

DTC P188A:00	Differential oil temperature is out of range
DETECTION CONDITION	• 4WD CM detects the differential oil temperature is out of range.
FAIL-SAFE FUNCTION	• 4WD protection condition (4WD control paused) • 4WD warning light: Flashed
POSSIBLE CAUSE	• Detects high differential oil temperature to switch to 2WD and protect the system

Diagnostic procedure

STEP	INSPECTION		ACTION
1	**SWITCH THE IGNITION TO OFF AND ALLOW 4WD CM TO COOL DOWN.**		
2	**VERIFY THAT THE SAME DTC IS NOT PRESENT** • Clear the DTCs from the memory. (See 03-02-4 ELECTRONIC 4WD CONTROL SYSTEM ON-BOARD DIAGNOSIS.) • Is the same DTC present?	Yes	Repeat the inspection from Step 1.
		No	Go to the next step.
3	**VERIFY THAT NO OTHER DTCS ARE PRESENT** • Are any other DTCs output?	Yes	Go to the applicable DTC inspection. (See 03-02-4 ELECTRONIC 4WD CONTROL SYSTEM ON-BOARD DIAGNOSIS.)
		No	DTC troubleshooting completed.

ON-BOARD DIAGNOSTIC

DTC U0001:88/U0100:00/U0101:00/U0121:00

id030200200800

DTC U0001:88	CAN system Communication error
DTC U0100:00	Communication error to PCM
DTC U0101:00	Communication error to TCM
DTC U0121:00	Communication error to DSC HU/CM
DETECTION CONDITION	• U0001:88 — Open or short circuit in CAN system wiring harness is detected. • U0100:00 — Communication error with PCM is detected in CAN communication. • U0101:00 — Communication error with TCM is detected in CAN communication. • U0121:00 — Communication error to DSC HU/CM is detected in CAN communication
FAIL-SAFE FUNCTION	• U0001:88, U0121:00 — Control disabled. • U0100:00 — Lost gear position signal (MTX): 4WD operates by the specified data. — Except above: Control disabled. • U0101:00 — Lost gear position signal (ATX): 4WD operates by the specified data. — Except above: Control disabled.
POSSIBLE CAUSE	• CAN system wiring harness open or short circuit • CAN system wiring harness open or short circuit with PCM • CAN system wiring harness open or short circuit with TCM • CAN system wiring harness open or short circuit with DSC HU/CM • CAN system wiring harness open or short circuit with instrument cluster • instrument cluster malfunction

Diagnostic procedure

- Inspect according to diagnostic procedure in BODY & ACCESSORIES.

DTC U0401:68

id030200201200

DTC U0401:68	Abnormal message from PCM
DETECTION CONDITION	• Correct data cannot be received from PCM
FAIL-SAFE FUNCTION	• Gear position signal error (MTX) — 4WD operates by the specified data. • Except for gear position signal error — Control disabled.
POSSIBLE CAUSE	• PCM malfunction

Diagnostic procedure

STEP	INSPECTION		ACTION
1	**INSPECT FOR PCM MALFUNCTION** • Switch the ignition to off. • Using the M-MDS, perform the DTC inspection for the PCM. (See 01-02-8 ON-BOARD DIAGNOSTIC TEST [SKYACTIV-G 2.0].) • Are any DTCs detected?	Yes	Go to applicable DTC inspection. (See 01-02-14 DTC TABLE [SKYACTIV-G 2.0].)
		No	Go to the next step.
2	**VERIFY THAT THE SAME DTC IS NOT PRESENT** • Clear the DTCs from the memory. (See 03-02-4 ELECTRONIC 4WD CONTROL SYSTEM ON-BOARD DIAGNOSIS.) • Are the same DTCs present?	Yes	Repeat the inspection from Step 1. If the malfunction recurs, replace the PCM, then go to the next step. (See 01-40-10 PCM REMOVAL/INSTALLATION [SKYACTIV-G 2.0].)
		No	Go to the next step.
3	**VERIFY THAT NO OTHER DTCS ARE PRESENT** • Are any other DTCs output?	Yes	Go to the applicable DTC inspection. (See 03-02-4 ELECTRONIC 4WD CONTROL SYSTEM ON-BOARD DIAGNOSIS.)
		No	DTC troubleshooting completed.

ON-BOARD DIAGNOSTIC

DTC U0402:68

id030200201300

DTC U0402:68	Error signal received from transaxle
DETECTION CONDITION	• The instrument cluster received error signals from the transaxle for **1 s or more** with the ignition switched ON (engine off or on).
FAIL-SAFE FUNCTION	• 4WD operates by the specified data.
POSSIBLE CAUSE	• The transaxle could not send a normal signal temporarily. (DTCs are stored in the TCM.) • Transaxle malfunction • Instrument cluster malfunction

Diagnostic Procedure

Step	Inspection	Results	Action
1	**VERIFY DTCs FOR TCM** • Verify DTCs for the TCM using the M-MDS. (See 05-02A-7 ON-BOARD DIAGNOSTIC SYSTEM DTC INSPECTION [FW6A-EL, FW6AX-EL].) (See 05-02B-6 ON-BOARD DIAGNOSTIC SYSTEM DTC INSPECTION [GW6A-EL, GW6AX-EL].) • Is the DTC displayed?	Yes	Repair the malfunctioning part according to the applicable DTC troubleshooting. (See 05-02A-11 ON-BOARD DIAGNOSTIC SYSTEM DTC TABLE [FW6A-EL, FW6AX-EL].) (See 05-02B-10 ON-BOARD DIAGNOSTIC SYSTEM DTC TABLE [GW6A-EL, GW6AX-EL].)
		No	Go to the next step.
2	**DRIVE VEHICLE THEN VERIFY DTCs FOR TCM AGAIN** • Drive the vehicle at a vehicle speed of 30 km/h {19 mph} or more for 100 s or more. • Verify DTCs for the TCM using the M-MDS. (See 05-02A-7 ON-BOARD DIAGNOSTIC SYSTEM DTC INSPECTION [FW6A-EL, FW6AX-EL].) (See 05-02B-6 ON-BOARD DIAGNOSTIC SYSTEM DTC INSPECTION [GW6A-EL, GW6AX-EL].) • Is the DTC displayed?	Yes	Repair the malfunctioning part according to the applicable DTC troubleshooting. (See 05-02A-11 ON-BOARD DIAGNOSTIC SYSTEM DTC TABLE [FW6A-EL, FW6AX-EL].) (See 05-02B-10 ON-BOARD DIAGNOSTIC SYSTEM DTC TABLE [GW6A-EL, GW6AX-EL].)
		No	Go to the next step.
3	**VERIFY THAT REPAIRS HAVE BEEN COMPLETED** • Clear DTC for the instrument cluster using the M-MDS. (See 05-02A-7 ON-BOARD DIAGNOSTIC SYSTEM DTC INSPECTION [FW6A-EL, FW6AX-EL].) (See 05-02B-6 ON-BOARD DIAGNOSTIC SYSTEM DTC INSPECTION [GW6A-EL, GW6AX-EL].) • Switch the ignition ON (engine off) and wait for 20 s or more. • Perform the DTC inspection for the instrument cluster using the M-MDS. (See 05-02A-7 ON-BOARD DIAGNOSTIC SYSTEM DTC INSPECTION [FW6A-EL, FW6AX-EL].) (See 05-02B-6 ON-BOARD DIAGNOSTIC SYSTEM DTC INSPECTION [GW6A-EL, GW6AX-EL].) • Is DTC U0402:68 displayed?	Yes	Replace the instrument cluster, then go to the next step. (See 09-22-6 INSTRUMENT CLUSTER REMOVAL/INSTALLATION.)
		No	Go to the next step.
4	**VERIFY IF OTHER DTCs DISPLAYED** • Are any other DTCs displayed?	Yes	Repair the malfunctioning part according to the applicable DTC troubleshooting. (See 03-02-4 ELECTRONIC 4WD CONTROL SYSTEM ON-BOARD DIAGNOSIS.)
		No	DTC troubleshooting completed.

ON-BOARD DIAGNOSTIC

DTC U0415:68

id030200201400

DTC U0415:68	Abnormal message from DSC HU/CM
DETECTION CONDITION	• Correct data cannot be received from DSC HU/CM
FAIL-SAFE FUNCTION	• Control disabled.
POSSIBLE CAUSE	• DSC HU/CM malfunction

Diagnostic procedure

STEP	INSPECTION		ACTION
1	**INSPECT FOR DSC HU/CM MALFUNCTION** • Switch the ignition to off. • Using the M-MDS, perform the DTC inspection for the DSC HU/CM. (See 04-02A-7 ON-BOARD DIAGNOSIS [DYNAMIC STABILITY CONTROL (DSC)].) • Are any DTCs detected?	Yes	Go to applicable DTC inspection. (See 04-02A-7 ON-BOARD DIAGNOSIS [DYNAMIC STABILITY CONTROL (DSC)].)
		No	Go to the next step.
2	**VERIFY THAT THE SAME DTC IS NOT PRESENT** • Clear the DTCs from the memory. (See 03-02-4 ELECTRONIC 4WD CONTROL SYSTEM ON-BOARD DIAGNOSIS.) • Are the same DTCs present?	Yes	Repeat the inspection from Step 1. If the malfunction recurs, replace the DSC HU/CM, then go to the next step. (See 04-15-4 DSC HU/CM REMOVAL/INSTALLATION.)
		No	Go to the next step.
3	**VERIFY THAT NO OTHER DTCS ARE PRESENT** • Are any other DTCs output?	Yes	Go to the applicable DTC inspection. (See 03-02-4 ELECTRONIC 4WD CONTROL SYSTEM ON-BOARD DIAGNOSIS.)
		No	DTC troubleshooting completed.

DTC U2100:00

id030200201500

DTC U2100:00	Configuration data not recorded
DETECTION CONDITION	• 4WD CM detects configuration data not record
FAIL-SAFE FUNCTION	• 4WD operates by the specified data. • 4WD warning light: Illuminated
POSSIBLE CAUSE	• Module configuration procedure is not done properly

Diagnostic procedure

STEP	INSPECTION		ACTION
1	**COUPLING COMPONENT CALIBRATION DATA WRITING** • Write the coupling component calibration data. (See 03-18-7 COUPLING COMPONENT CALIBRATION DATA WRITING.) • Clear the DTCs from the memory. (See 03-02-4 ELECTRONIC 4WD CONTROL SYSTEM ON-BOARD DIAGNOSIS.) • Is the same DTC present?		Go to the next step.
2	**VERIFY THAT THE SAME DTC IS NOT PRESENT** • Clear the DTCs from the memory. (See 03-02-4 ELECTRONIC 4WD CONTROL SYSTEM ON-BOARD DIAGNOSIS.) • Is the same DTC present?	Yes	Repeat the inspection from Step 1.
		No	Go to the next step.
3	**VERIFY THAT NO OTHER DTCS ARE PRESENT** • Are any other DTCs output?	Yes	Go to the applicable DTC inspection. (See 03-02-4 ELECTRONIC 4WD CONTROL SYSTEM ON-BOARD DIAGNOSIS.)
		No	DTC troubleshooting completed.

03-03 SYMPTOM TROUBLESHOOTING

ELECTRONIC 4WD CONTROL SYSTEM WIRING DIAGRAM 03-03–1
FOREWORD 03-03–2
Troubleshooting Procedure 03-03–2
Action for non-repeatable malfunction. 03-03–3
SYMPTOM TROUBLESHOOTING 03-03–3
NO.1 FREQUENT FRONT WHEEL SLIP 03-03–4
NO.2 TIGHT CORNER BRAKING 03-03–5
NO.3 ABNORMAL NOISE AND/OR VIBRATION FROM COUPLING COMPONENT. 03-03–6

SYMPTOM TROUBLESHOOTING

ELECTRONIC 4WD CONTROL SYSTEM WIRING DIAGRAM

id030300803100

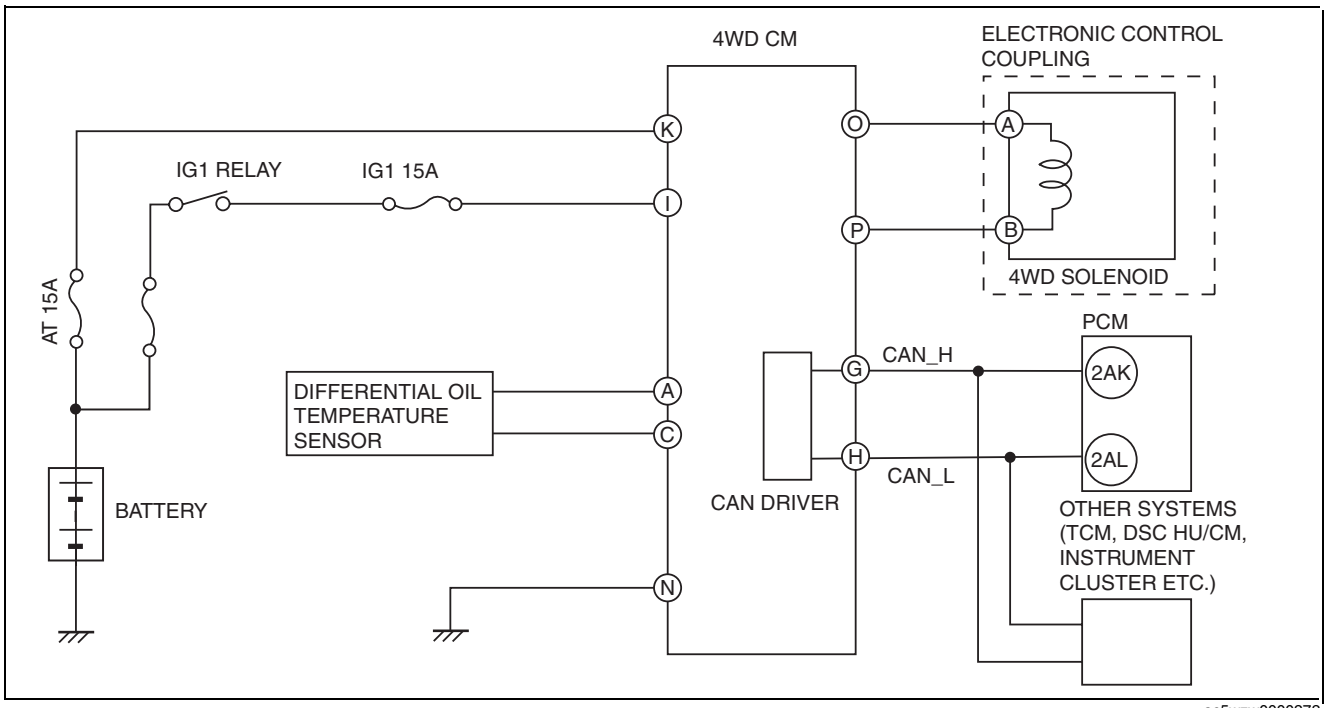

ac5wzw0000272

SYMPTOM TROUBLESHOOTING

FOREWORD

id030300800200

- If there is any vehicle malfunction complaint lodged by a customer, perform malfunction diagnosis according to the troubleshooting procedure.

Troubleshooting Procedure

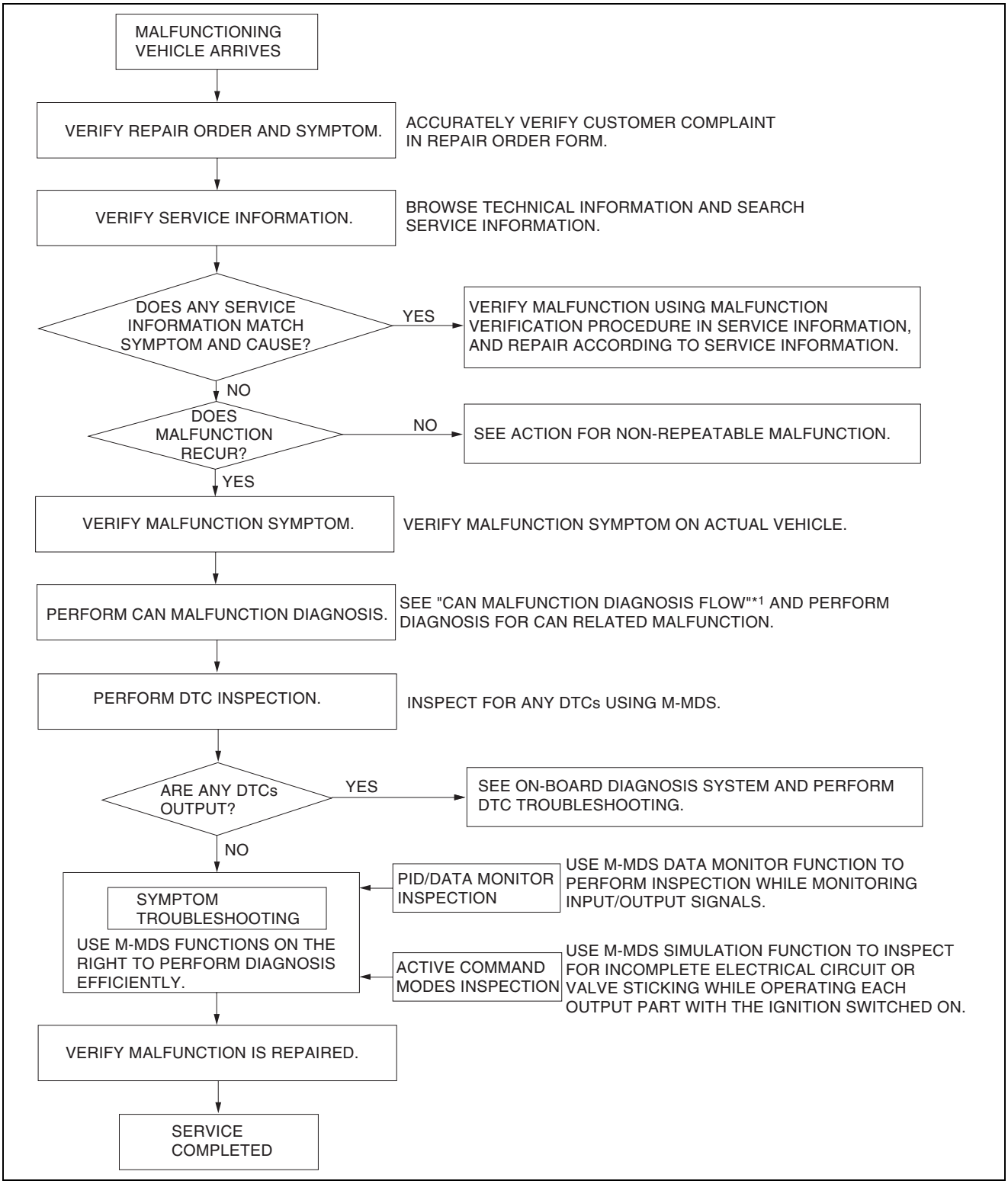

am3uuw0000731

SYMPTOM TROUBLESHOOTING

*1 : 10-02A-3 CONTROLLER AREA NETWORK (CAN) MALFUNCTION DIAGNOSIS FLOW [SKYACTIV-G 2.0 (L.H.D.)]10-02B-3 CONTROLLER AREA NETWORK (CAN) MALFUNCTION DIAGNOSIS FLOW [SKYACTIV-G 2.0 (R.H.D.)]10-02C-3 CONTROLLER AREA NETWORK (CAN) MALFUNCTION DIAGNOSIS FLOW [SKYACTIV-D 2.2 (L.H.D.)]10-02D-3 CONTROLLER AREA NETWORK (CAN) MALFUNCTION DIAGNOSIS FLOW [SKYACTIV-D 2.2 (R.H.D.)]

Action for non-repeatable malfunction

- If the malfunction does not recur, verify the malfunction cause by performing the following actions:
  - — Based on the repair order form, attempt to drive the vehicle or perform tests to replicate the malfunction, record the data (such as CAN circuit voltage) at that time, and detect the malfunction cause.
  - — Refer to [Determining Open Circuit Location] based on the recorded DTC, shake the wiring harness or connector of the electrical component which is suspected to be the cause of the malfunction, and inspect for any changes in CAN system voltage or occurrence of any DTCs.

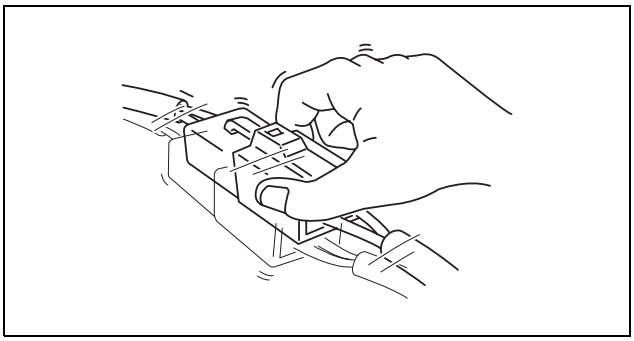

aaxjjw00007274

  - — Inspect the female terminals on the connector of the electric component which is suspected to be the cause of the malfunction for poor connection.

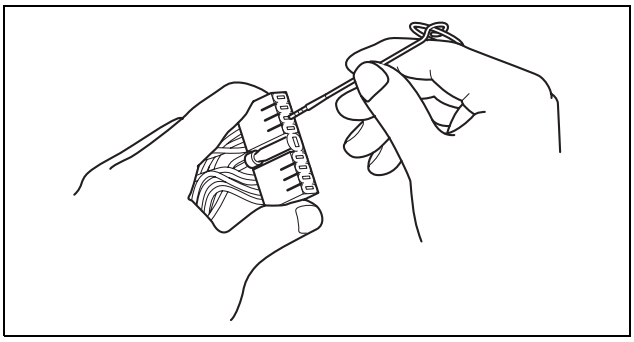

am3uuw0000750

SYMPTOM TROUBLESHOOTING

id030300800300

- Verify the symptoms, and perform troubleshooting according to the appropriate number.

No.	Symptom	Description
1	Frequent front wheel slip	Front wheels slip frequently during acceleration on low-friction road.
2	Tight corner braking effect	Brakes seem to be applied during tight cornering while driving very slowly on paved road.
3	Abnormal noise and/or vibration from coupling unit	There is abnormal noise and/or vibration from coupling unit during driving.

SYMPTOM TROUBLESHOOTING

NO.1 FREQUENT FRONT WHEEL SLIP

id030300800400

1	Frequent front wheel slip

[TROUBLESHOOTING HINTS]

- **Tire traction performance is extremely poor for given road friction. (4WD system is normal.)**
- **Improper wheel alignment (4WD system is normal.)**
- **Rear differential oil temperature is extremely high (Fail-safe condition)**
- **Differential oil temperature sensor malfunction (Fail-safe condition)**
- **Compare slip frequency with another vehicle of the same model (under the same road conditions and tire traction performance).**
- **Replace tires with others of the same model and perform test under the same road conditions to determine if the malfunction was caused by tire traction performance.**
- **Coupling component malfunction**
- **4WD solenoid malfunction**

Warning

- **During simulation driving, vehicle stability may decrease extremely and cause an accident. Be sure to perform the simulation test driving in a safe area.**

Diagnostic procedure

STEP	INSPECTION		ACTION
1	**VERIFY DSC, PCM, TCM, INSTRUMENT CLUSTER, EPS, AND 4WD SYSTEM DTCs** • Verify DSC, PCM, TCM (ATX), instrument cluster, EPS and 4WD system DTCs using the M-MDS. • Are there any DTCs present?	Yes	Go to applicable DTC inspection.
		No	Go to next step.
2	**VERIFY TIRE AIR PRESSURE** • Inspect tire air pressure. • Is it within specification?	Yes	Go to next step.
		No	Adjust tire air pressure, then go to next step.
3	**COMPARE WITH SAME MODEL TIRES** • Install tires of the same model. • Perform simulation driving. • Does malfunction recur?	Yes	Go to next step.
		No	4WD system is okay.
4	**COMPARE WITH SAME MODEL VEHICLE** • Install tires of malfunctioning vehicle to another same model vehicle. • Perform simulation driving. • Does malfunction recur?	Yes	4WD system is okay.
		No	Go to next step.
5	**INSPECT 4WD SOLENOID** • Inspect 4WD solenoid. (See 03-18-3 4WD SOLENOID INSPECTION.) • Is coupling component solenoid okay?	Yes	Inspect harness between 4WD solenoid and 4WD CM, then go to next step.
		No	Replace coupling component. (See 03-18-5 COUPLING COMPONENT REMOVAL/INSTALLATION.)
6	**INSPECT WHEEL ALIGNMENT** • Inspect wheel alignment. • Is it okay?	Yes	Replace coupling component. (See 03-18-5 COUPLING COMPONENT REMOVAL/INSTALLATION.)
		No	Inspect wheel alignment, and adjust it if necessary.

SYMPTOM TROUBLESHOOTING

NO.2 TIGHT CORNER BRAKING

id030300800500

2	Tight corner braking

[TROUBLESHOOTING HINTS]

- **Because the coupling component locks up easily (similar to direct 4WD), rotational difference between the front and rear wheels cannot be absorbed and brake-like phenomenon occurs.**
- **Due to the coupling component construction, slight tight corner braking effect occurs during tight cornering on a paved road. (4WD system is okay. Compare with another same model vehicle to determine malfunction.)**
- **Coupling component malfunction**
- **4WD solenoid malfunction**

Diagnostic procedure

STEP	INSPECTION		ACTION
1	**VERIFY DSC, PCM, TCM (ATX), INSTRUMENT CLUSTER, EPS, AND 4WD SYSTEM DTCS** • Verify DSC, PCM, TCM (ATX), instrument cluster, EPS, and 4WD system DTCs using the M-MDS. • Are there any DTCs present?	Yes	Go to applicable DTC inspection.
		No	Go to next step.
2	**VERIFY TIRE AIR PRESSURE** • Inspect tire air pressure. • Is it within specification?	Yes	Go to next step.
		No	Adjust tire air pressure, then go to next step.
3	**INSPECT ABS WHEEL-SPEED SENSOR** • Inspect ABS wheel-speed sensor. • Is it okay?	Yes	Go to next step.
		No	Repair or replace malfunctioning part.
4	**COMPARE WITH SAME MODEL VEHICLE** • Perform simulation driving with another same model vehicle. • Does malfunction recur on the same model vehicle?	Yes	4WD system is okay.
		No	Go to next step.
5	**USING THE ACTIVE COMMAND MODES FUNCTION, DRIVE THE VEHICLE WITHOUT THE COUPLING UNIT OPERATING (2WD CONDITION)** • (See 03-02-4 ELECTRONIC 4WD CONTROL SYSTEM ON-BOARD DIAGNOSIS.) • Perform simulation driving. • Does malfunction recur?	Yes	Replace coupling component. (See 03-18-5 COUPLING COMPONENT REMOVAL/ INSTALLATION.)
		No	Go to next step.
6	**INSPECT 4WD SOLENOID** • Inspect 4WD solenoid. (See 03-18-3 4WD SOLENOID INSPECTION.) • Is it okay?	Yes	Inspect harness between 4WD solenoid and 4WD CM, then go to next step.
		No	Replace coupling component. (See 03-18-5 COUPLING COMPONENT REMOVAL/ INSTALLATION.)

SYMPTOM TROUBLESHOOTING

NO.3 ABNORMAL NOISE AND/OR VIBRATION FROM COUPLING COMPONENT

id030300800600

3	Abnormal noise and/or vibration from coupling component

[TROUBLESHOOTING HINTS]
- Abnormal noise and/or vibration from coupling component during driving
- Propeller shaft is malfunctioning or attached improperly.
- Engine mount or differential mount malfunction
- Resonance of rotating parts on vehicle (engine, propeller shaft, rear differential, tire, etc.)
- Resonance with engine vibration (mainly with exhaust system parts)
- Rear differential malfunction
- Coupling component malfunction

Diagnostic procedure

STEP	INSPECTION		ACTION
1	**VERIFY DSC, PCM, TCM (ATX), INSTRUMENT CLUSTER, EPS, AND 4WD SYSTEM DTCS** • Verify DSC, PCM, TCM (ATX), BCM (MTX), instrument cluster, EPS, and 4WD system DTCs using the M-MDS. • Are there any DTCs present?	Yes	Go to applicable DTC inspection.
		No	Go to next step.
2	**VERIFY INSTALLATION CONDITION OF VEHICLE PARTS** • Verify installation condition for following: — Propeller shaft (including bending and joint operation) — Center bearing — Engine mount — Differential mount — Hub bearing — Exhaust system parts — ABS wheel-speed sensor • Are they properly installed?	Yes	Go to next step.
		No	Repair or replace malfunctioning part.
3	**DETERMINE IF MALFUNCTION IS CAUSED BY REAR DIFFERENTIAL** • Install tires of another brand. **Note** • When tires of another brand are installed, the same malfunction can occur due to conditions different from customer explanation. Be careful not to confuse it with customer complaint. • Perform simulation driving at the same engine speed, gear position, and vehicle speed that customer vehicle had malfunction. • Does the same malfunction occur?	Yes	Reinstall customer's vehicle tire. Go to next step.
		No	4WD system is okay. Reinstall customer's vehicle tire.
4	**INSPECT REAR DIFFERENTIAL** • Inspect rear differential for following: — Backlash — Teeth contact (See 03-14-10 REAR DIFFERENTIAL ASSEMBLY.) • Are they okay?	Yes	Replace coupling component.
		No	Inspect malfunctioning part and adjust it if necessary.

03-10 GENERAL PROCEDURES

GENERAL PROCEDURES (FRONT AND REAR AXLES) 03-10–1
Wheel and Tire Installation **03-10–1**
Suspension Links Removal/Installation **03-10–1**
Connector Disconnection **03-10–1**
Electronic 4WD Control System Parts **03-10–1**

GENERAL PROCEDURES

GENERAL PROCEDURES (FRONT AND REAR AXLES)

id031000800100

Wheel and Tire Installation

1. When installing the wheels and tires, tighten the wheel nuts in a criss-cross pattern to the following tightening torque.

   Tightening torque
   108—147 N·m {12—14 kgf·m, 80—108 ft·lbf}

Suspension Links Removal/Installation

1. For the joint sections with rubber bushings, raise the vehicle using a lift, and then temporarily tighten the installation bolts and nuts. Lower the vehicle to the ground and tighten them to the specified tightening torque.

Connector Disconnection

1. Disconnect the negative battery cable before performing any work that requires handling of connectors. (See 01-17A-11 NEGATIVE BATTERY CABLE DISCONNECTION/CONNECTION [SKYACTIV-G 2.0].) (See 01-17A-13 NEGATIVE BATTERY CABLE DISCONNECTION/CONNECTION [SKYACTIV-G 2.0 (WITHOUT i-stop)].) (See 01-17B-9 NEGATIVE BATTERY CABLE DISCONNECTION/CONNECTION [SKYACTIV-D 2.2].)

Electronic 4WD Control System Parts

1. After servicing the electronic 4WD control system parts, verify that no DTC has been stored. Clear any DTCs remaining in the memory.

03-11 FRONT AXLE

FRONT AXLE LOCATION INDEX **03-11–2**
WHEEL HUB, STEERING KNUCKLE INSPECTION **03-11–2**
Wheel Bearing Excessive Play Inspection **03-11–2**
WHEEL HUB, STEERING KNUCKLE REMOVAL/INSTALLATION **03-11–3**
Locknut Removal Note **03-11–4**
Brake Caliper Removal Note **03-11–4**
Wheel Hub Bolt Removal Note **03-11–4**
Wheel Hub Bolt Installation Note **03-11–5**
Wheel Hub Installation Note **03-11–5**
Bolt (Wheel Hub) Installation Note **03-11–5**
Front Shock Absorber Bolt Installation Note **03-11–5**
Locknut Installation Note **03-11–5**
FRONT WHEEL HUB BOLT REPLACEMENT **03-11–5**

FRONT AXLE

FRONT AXLE LOCATION INDEX

id031100800100

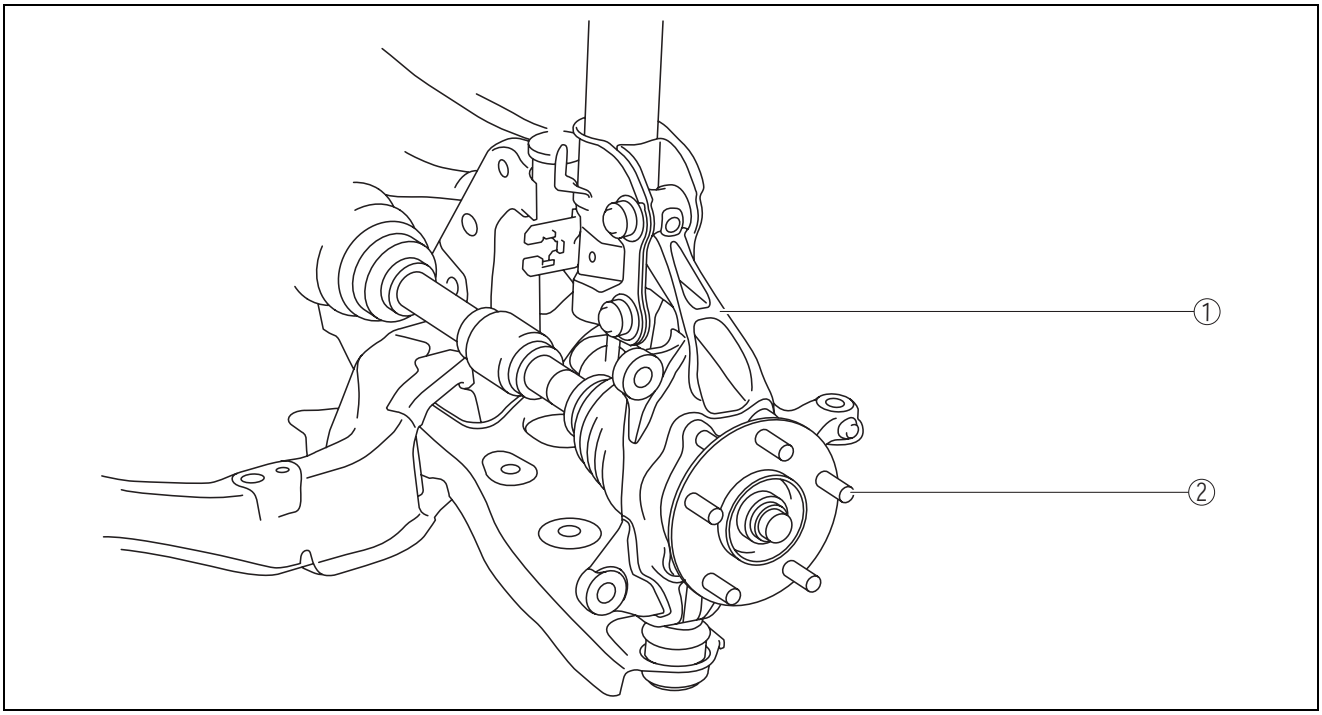

ac5wzw0000255

1	Wheel hub, steering knuckle (See 03-11-2 WHEEL HUB, STEERING KNUCKLE INSPECTION.) (See 03-11-3 WHEEL HUB, STEERING KNUCKLE REMOVAL/INSTALLATION.)
2	Wheel hub bolt (See 03-11-5 FRONT WHEEL HUB BOLT REPLACEMENT.)

WHEEL HUB, STEERING KNUCKLE INSPECTION

id031100800300

Wheel Bearing Excessive Play Inspection

1. Install the magnetic base and dial gauge as shown in the figure and measure the wheel bearing axial excessive play.
   - If it exceeds the maximum specification, replace the wheel hub bearing.

   Front wheel bearing maximum play
   0.05 mm {0.002 in}

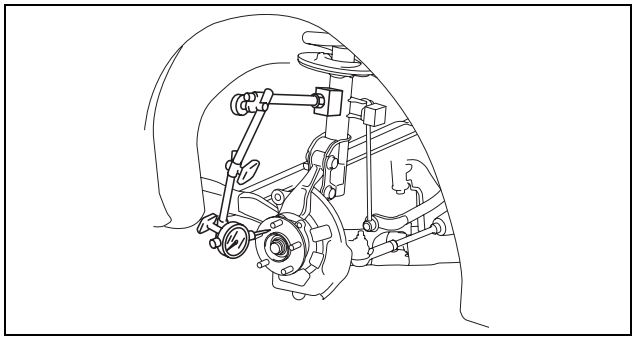

ac5wzw0000255

FRONT AXLE

WHEEL HUB, STEERING KNUCKLE REMOVAL/INSTALLATION

id031100800400

Caution

- **Performing the following procedures without first removing the ABS wheel-speed sensor may possibly cause an open circuit in the wiring harness if it is pulled by mistake. Before performing the following procedures, disconnect the ABS wheel-speed sensor connector (axle side) and fix the wiring harness to an appropriate place where it will not be pulled by mistake while servicing the vehicle.**

1. Disconnect the front ABS wheel-speed sensor. (See 04-15-9 FRONT ABS WHEEL-SPEED SENSOR REMOVAL/INSTALLATION.)
2. Remove in the order indicated in the table.
3. Install in the reverse order of removal.
4. After installation, inspect the front wheel alignment and adjust it if necessary. (See 02-11-1 FRONT WHEEL ALIGNMENT.)

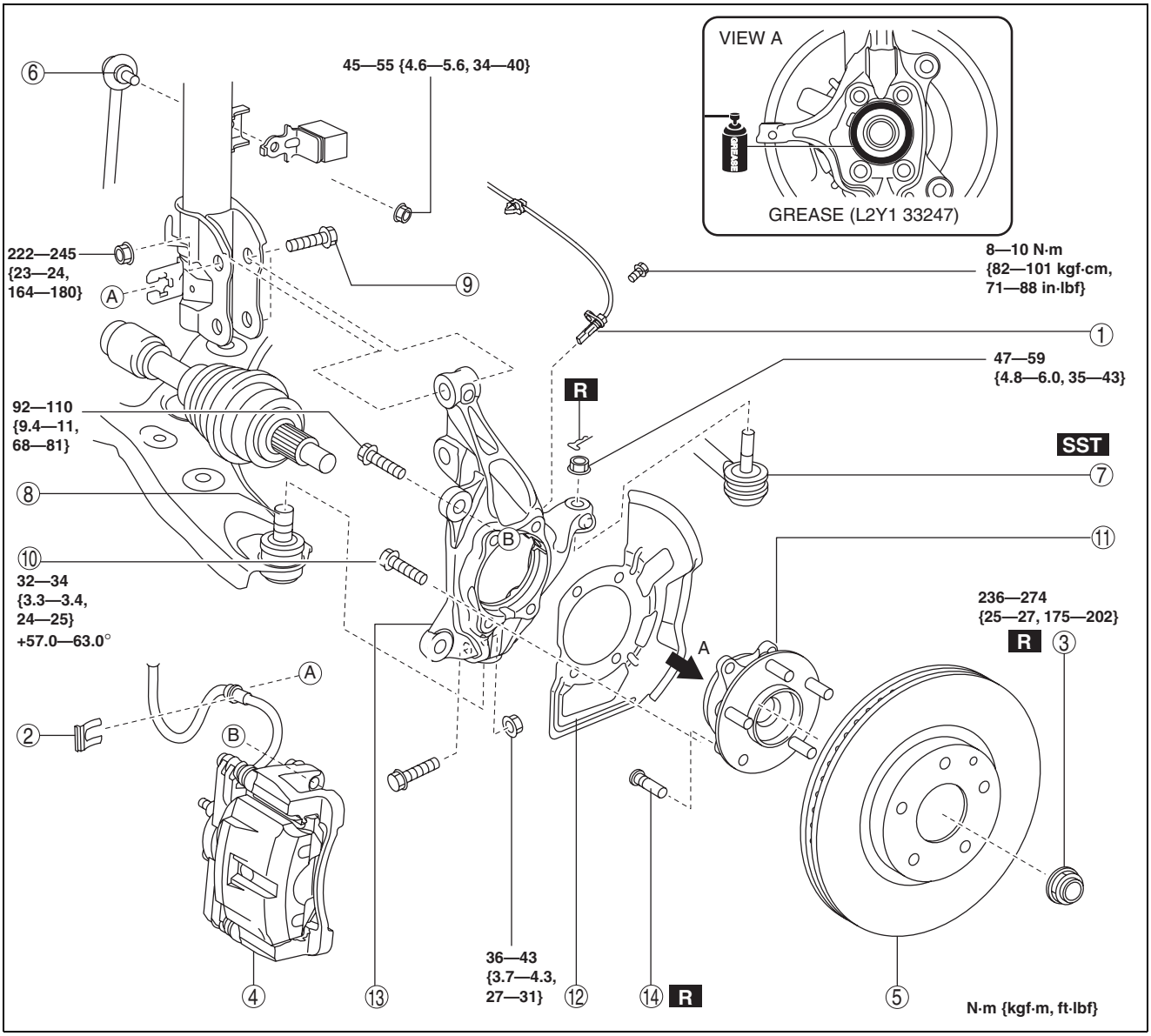

ac5uuw00000970

1	ABS wheel-speed sensor
2	Brake hose clip
3	Locknut (See 03-11-4 Locknut Removal Note.) (See 03-11-5 Locknut Installation Note.)
4	Brake caliper component (See 03-11-4 Brake Caliper Removal Note.)
5	Disc plate
6	Stabilizer control link (upper side)

FRONT AXLE

7	Tie-rod end ball joint (See 02-13-15 FRONT CROSSMEMBER REMOVAL/INSTALLATION.)
8	Front lower arm ball joint
9	Front shock absorber bolt (See 03-11-5 Locknut Installation Note.)
10	Bolt (wheel hub) (See 03-11-5 Front Shock Absorber Bolt Installation Note.)
11	Wheel hub (See 03-11-5 Wheel Hub Installation Note.)
12	Dust cover
13	Steering knuckle
14	Wheel hub bolt (See 03-11-4 Wheel Hub Bolt Removal Note.) (See 03-11-5 Wheel Hub Bolt Installation Note.)

Locknut Removal Note

1. Remove the locknut.
2. Install a spare nut onto the drive shaft so that the nut is flush with the end of the drive shaft.
3. Tap the nut with a copper hammer to loosen the drive shaft from the front wheel hub.
4. Separate the drive shaft from the wheel hub.

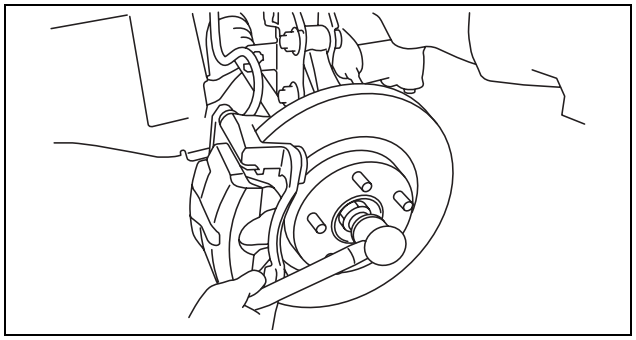

ac5wzw0000255

Brake Caliper Removal Note

1. Remove the brake caliper component from the steering knuckle and suspend it out of the way using a cable.

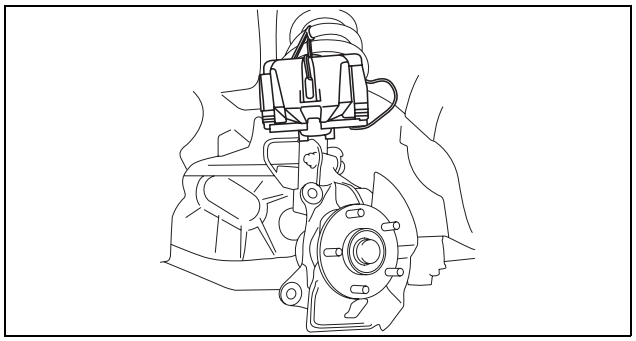

ac5wzw0000255

Wheel Hub Bolt Removal Note

Note

- The wheel hub bolts do not need to be removed unless they are being replaced.

1. Remove the wheel hub bolt using a press.

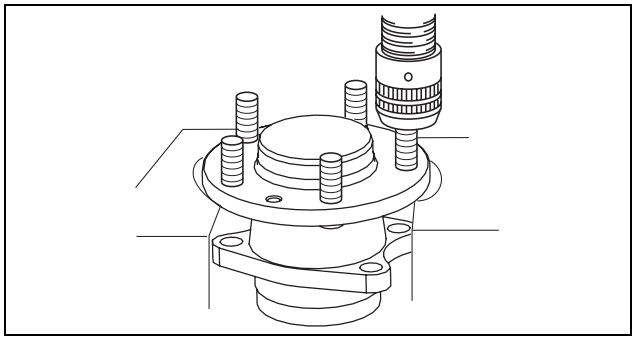

ac5wzw0000255

FRONT AXLE

Wheel Hub Bolt Installation Note

1. Install the new wheel hub bolt using a press.

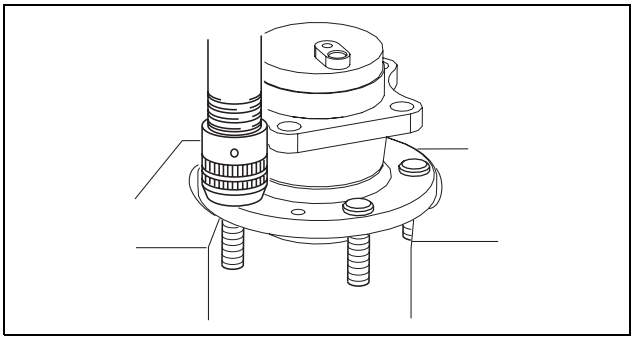

ac5wzw0000255

Wheel Hub Installation Note

1. Apply grease (L2Y1 33247) to the wheel bearing inner race and drive shaft contact surface (Area A in figure).

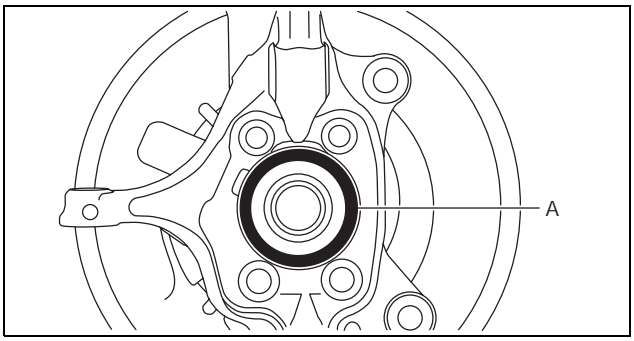

ac5wzw0000255

Bolt (Wheel Hub) Installation Note

Caution

- **The wheel hub installation bolts are tightened to a specific angle, but they are not plastic tightening bolts. Accordingly, the bolt length inspection is not needed.**

Front Shock Absorber Bolt Installation Note

1. Install the steering knuckle to the front shock absorber, insert the bolts from the direction shown as follows, then tighten them to the specified torque.
   - — Vehicle right side: Insert the bolts from the vehicle front.
   - — Vehicle left side: Insert the bolts from the vehicle rear.

Locknut Installation Note

1. After tightening the locknut once at a torque of **390 N·m {40 kgf·m, 288 ft·lbf}**, return it temporarily **180 degrees**, then retighten it to a torque of **236—274 N·m {25—27 kgf·m, 175—202 ft·lbf}**.

FRONT WHEEL HUB BOLT REPLACEMENT

id031100800200

1. Remove the brake caliper component from the steering knuckle and suspend it out of the way using a cable.
2. Remove the disc plate.
3. Remove the wheel hub bolt using the **SST** as shown in the figure.
4. Place a new wheel hub bolt in the wheel hub.

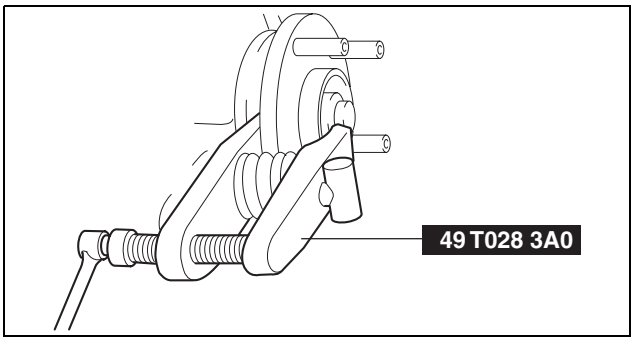

ac5uuw00000254

FRONT AXLE

5. Install the wheel hub by placing a proper sized washer on the hub, and tightening the nut as shown in the figure.

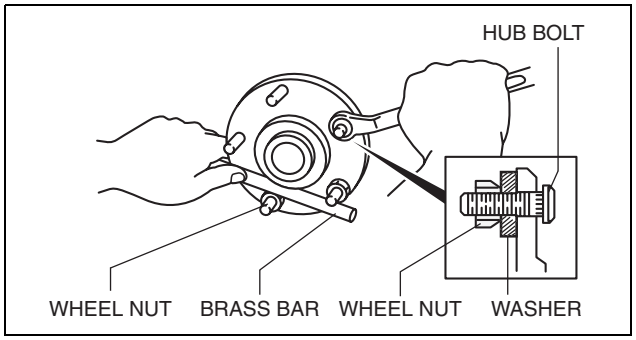

am3uuw0000618

03-12 REAR AXLE

REAR AXLE LOCATION INDEX **03-12–2**
WHEEL HUB COMPONENT INSPECTION **03-12–2**
Wheel Bearing Excessive Play Inspection **03-12–2**
WHEEL HUB COMPONENT REMOVAL/INSTALLATION [2WD] **03-12–3**
Brake Caliper Component Removal Note **03-12–4**
Rear Lower Arm Outer Bolt Removal Note **03-12–4**
Wheel Hub Bolt Removal Note **03-12–4**
Hub Support Bushing (Front) Removal Note **03-12–5**
Hub Support Bushing (Rear) Removal Note **03-12–5**
Hub Support Bushing (Rear) Installation Note **03-12–6**
Hub Support Bushing (Front) Installation Note **03-12–6**
Wheel Hub Bolt Installation Note **03-12–7**
Bolt (Wheel Hub) Installation Note **03-12–7**
WHEEL HUB COMPONENT REMOVAL/INSTALLATION [4WD] **03-12–8**
Locknut Installation Note **03-12–9**
REAR WHEEL HUB BOLT REPLACEMENT **03-12–9**

REAR AXLE

REAR AXLE LOCATION INDEX

id031200800100

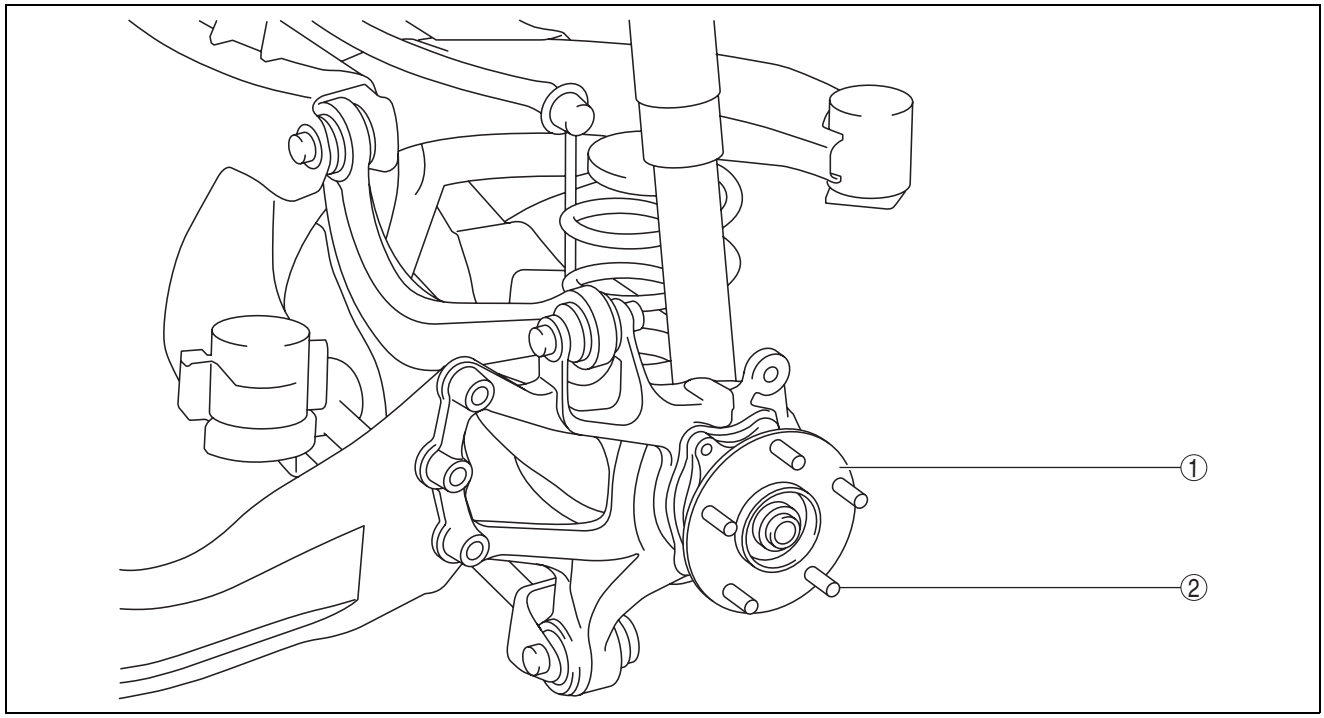

ac5uuw00000262

1	Wheel hub component (See 03-12-2 WHEEL HUB COMPONENT INSPECTION.) (See 03-12-3 WHEEL HUB COMPONENT REMOVAL/INSTALLATION [2WD].) (See 03-12-8 WHEEL HUB COMPONENT REMOVAL/INSTALLATION [4WD].)
2	Wheel hub bolt (See 03-12-9 REAR WHEEL HUB BOLT REPLACEMENT.)

WHEEL HUB COMPONENT INSPECTION

id031200800300

Wheel Bearing Excessive Play Inspection

1. Install the magnetic base and dial gauge as shown in the figure and measure the wheel bearing axial excessive play.
   - If it exceeds the maximum specification, replace the wheel hub component.

Rear wheel bearing maximum play
0.05 mm {0.002 in}

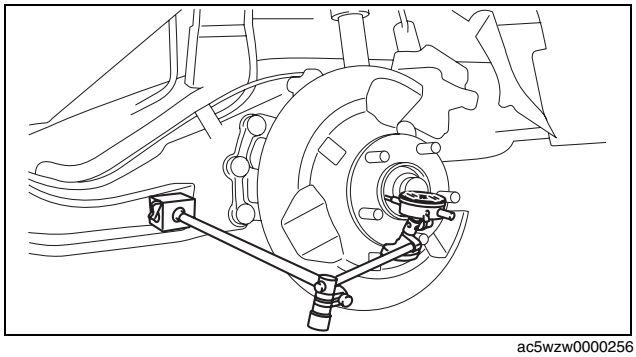

ac5wzw0000256

REAR AXLE

WHEEL HUB COMPONENT REMOVAL/INSTALLATION [2WD]

id0312008004a1

Caution

- **Performing the following procedures without first removing the ABS wheel-speed sensor may possibly cause an open circuit in the wiring harness if it is pulled by mistake. Before performing the following procedures, disconnect the ABS wheel-speed sensor connector (body side) and fix the wiring harness to an appropriate place where it will not be pulled by mistake while servicing the vehicle.**

1. When working on the left side of the vehicle, disconnect the auto leveling sensor link. (See 09-18-79 AUTO LEVELING SENSOR REMOVAL/INSTALLATION.)
2. Remove in the order indicated in the table.
3. Install in the reverse order of removal.
4. Inspect the rear wheel alignment. (See 02-11-3 REAR WHEEL ALIGNMENT.)

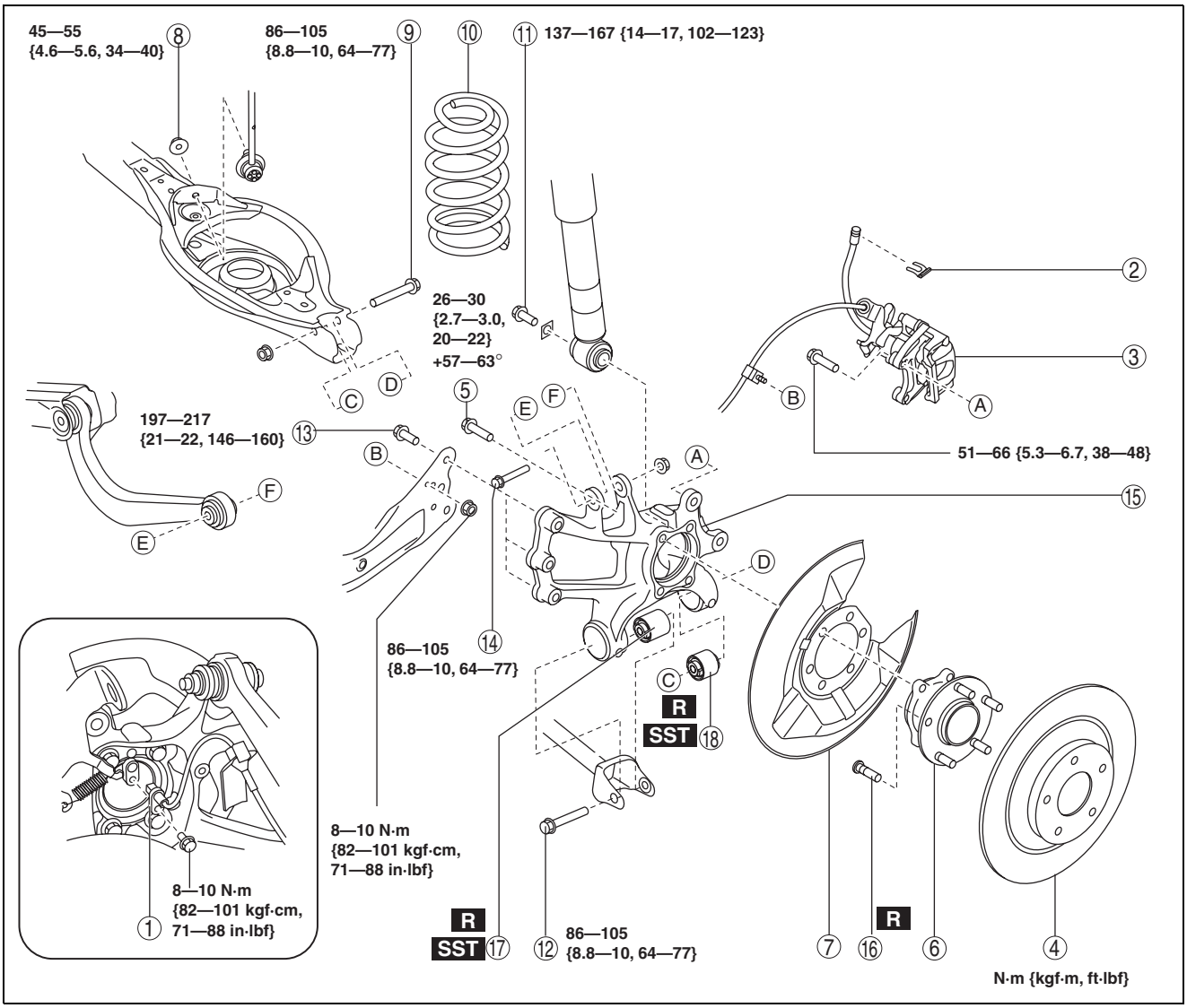

ac5uuw00000971

1	ABS wheel-speed sensor
2	Brake hose clip
3	Brake caliper component (See 03-12-4 Brake Caliper Component Removal Note.)
4	Disc plate
5	Bolt (wheel hub) (See 03-12-7 Bolt (Wheel Hub) Installation Note.)
6	Wheel hub

7	Dust cover
8	Rear stabilizer control link lower side nut
9	Rear lower arm outer bolt (See 03-12-4 Rear Lower Arm Outer Bolt Removal Note.)
10	Rear coil spring (See 02-14-6 REAR COIL SPRING REMOVAL/INSTALLATION.)

REAR AXLE

11	Rear shock absorber lower bolt (See 02-14-4 REAR SHOCK ABSORBER REMOVAL/INSTALLATION.)
12	Rear lateral link outer bolt (See 02-14-25 REAR LATERAL LINK REMOVAL/INSTALLATION.)
13	Rear trailing link installation bolt (See 02-14-25 REAR LATERAL LINK REMOVAL/INSTALLATION.)
14	Bolt (rear upper arm outer side)
15	Hub support

16	Wheel hub bolt (See 03-12-4 Wheel Hub Bolt Removal Note.) (See 03-12-4 Wheel Hub Bolt Removal Note.)
17	Hub support bushing (front) (See 03-12-5 Hub Support Bushing (Front) Removal Note.) (See 03-12-6 Hub Support Bushing (Front) Installation Note.)
18	Hub support bushing (rear) (See 03-12-5 Hub Support Bushing (Rear) Removal Note.) (See 03-12-6 Hub Support Bushing (Rear) Installation Note.)

Brake Caliper Component Removal Note

1. Remove the brake caliper component from the trailing link and suspend it out of the way using a cable.

Rear Lower Arm Outer Bolt Removal Note

1. Support the rear lower arm using a jack.
2. Remove the rear lower arm outer bolt.

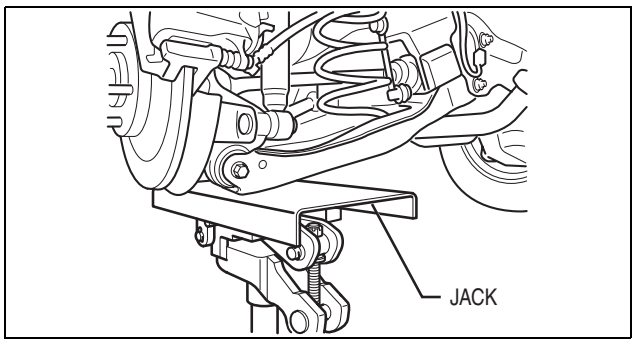

ac5wzw0000256

Wheel Hub Bolt Removal Note

Note

- The wheel hub bolts do not need to be removed unless they are being replaced.

1. Remove the wheel hub bolt using a press.

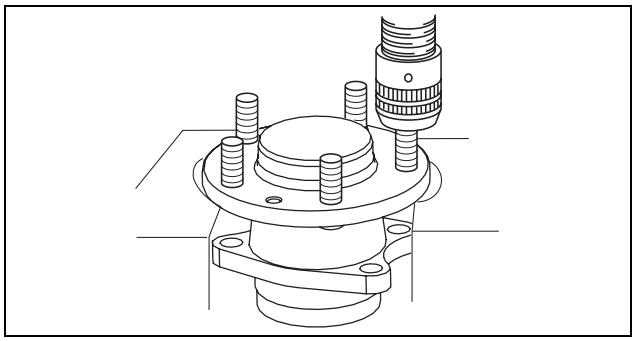
ac5wzw0000256

REAR AXLE

Hub Support Bushing (Front) Removal Note

1. Mark the hub support as shown in the figure.

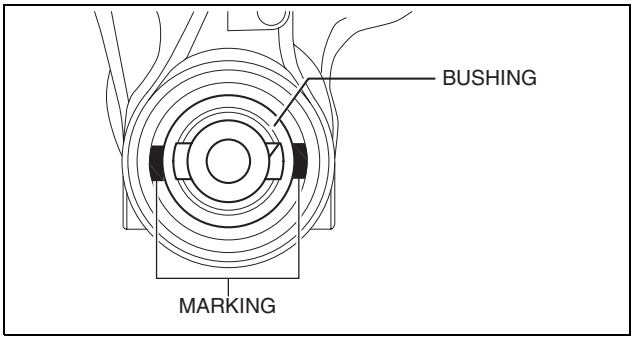

ac5wzw0000256

2. Press the rear hub support bushing (front) out using the **SSTs**.

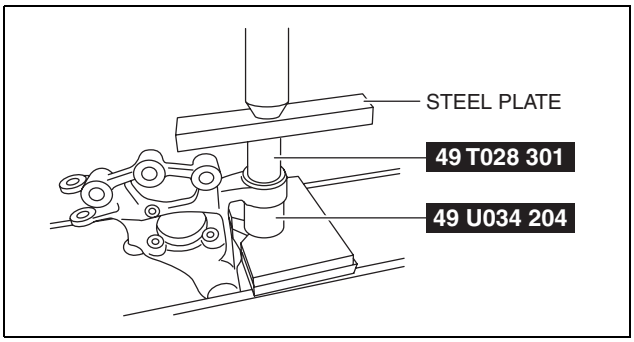

ac5wzw0000256

Hub Support Bushing (Rear) Removal Note

1. Mark the hub support as shown in the figure.

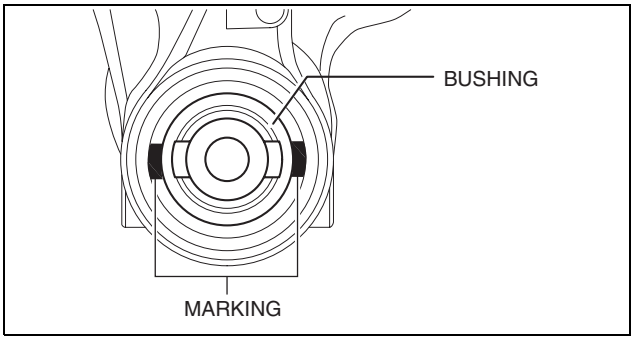

ac5wzw0000256

2. Press the rear hub support bushing (rear) out using the **SSTs**.

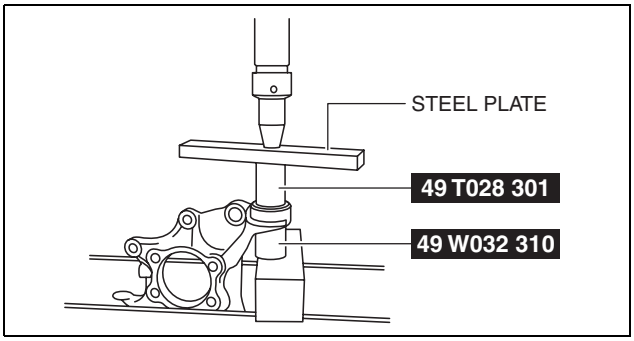

ac5wzw0000256

REAR AXLE

Hub Support Bushing (Rear) Installation Note

1. Align the projection of a hub support bushing with the marks placed during removal.

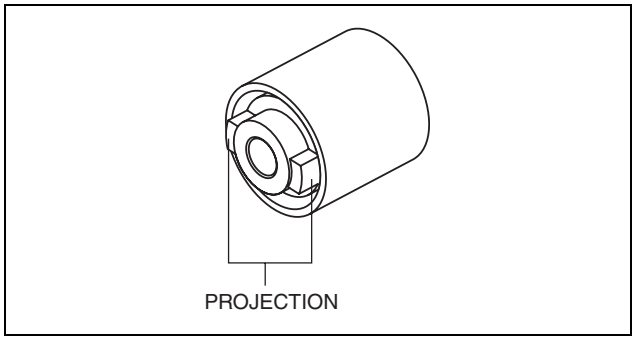

ac5wzw0000256

2. Install a new hub support bushing (rear) using the **SSTs**.

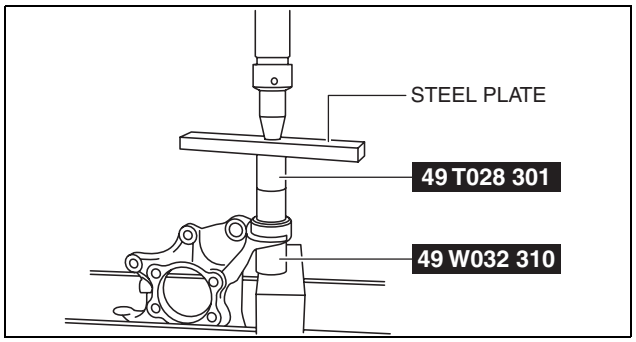

ac5wzw0000256

Hub Support Bushing (Front) Installation Note

1. Align the projection of a hub support bushing with the marks placed during removal.

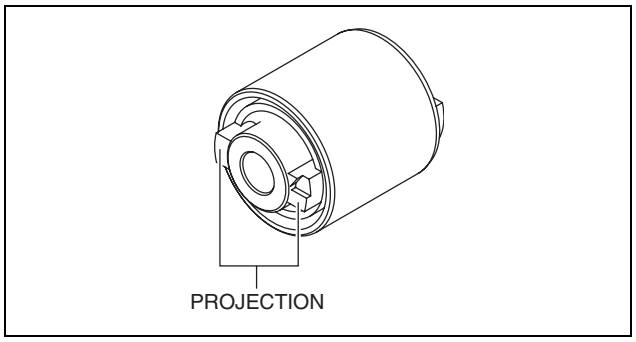

ac5wzw0000257

REAR AXLE

2. Install a new hub support bushing (front) using the **SSTs**.

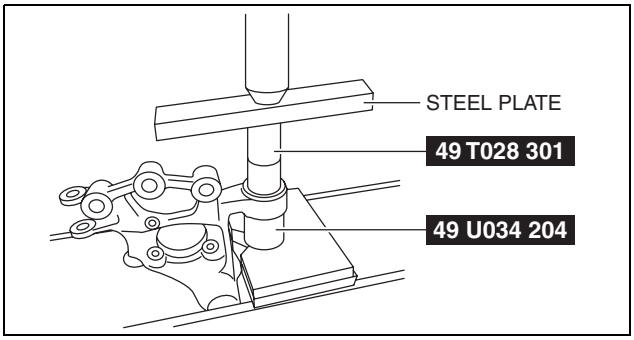

ac5wzw0000257

Wheel Hub Bolt Installation Note

1. Install the new wheel hub bolt using a press.

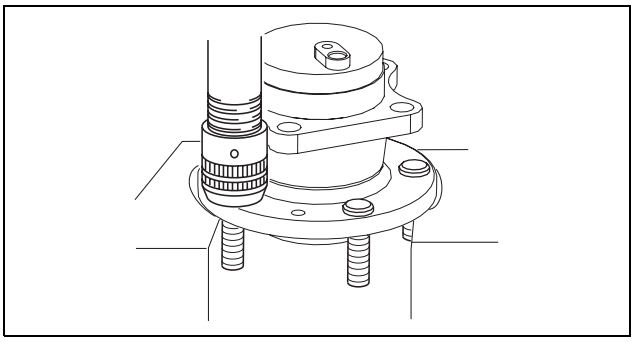
acxuuw00003087

Bolt (Wheel Hub) Installation Note

Caution

- **The wheel hub installation bolts are tightened to a specific angle, but they are not plastic tightening bolts. Accordingly, the bolt length inspection is not needed.**

REAR AXLE

WHEEL HUB COMPONENT REMOVAL/INSTALLATION [4WD]

id0312008004a2

Caution

- **Performing the following procedures without first removing the ABS wheel-speed sensor may possibly cause an open circuit in the wiring harness if it is pulled by mistake. Before performing the following procedures, disconnect the ABS wheel-speed sensor connector (body side) and fix the wiring harness to an appropriate place where it will not be pulled by mistake while servicing the vehicle.**

1. When working on the left side of the vehicle, disconnect the auto leveling sensor link. (See 09-18-79 AUTO LEVELING SENSOR REMOVAL/INSTALLATION.)
2. Remove in the order indicated in the table.
3. Install in the reverse order of removal.
4. Inspect the rear wheel alignment. (See 02-11-3 REAR WHEEL ALIGNMENT.)

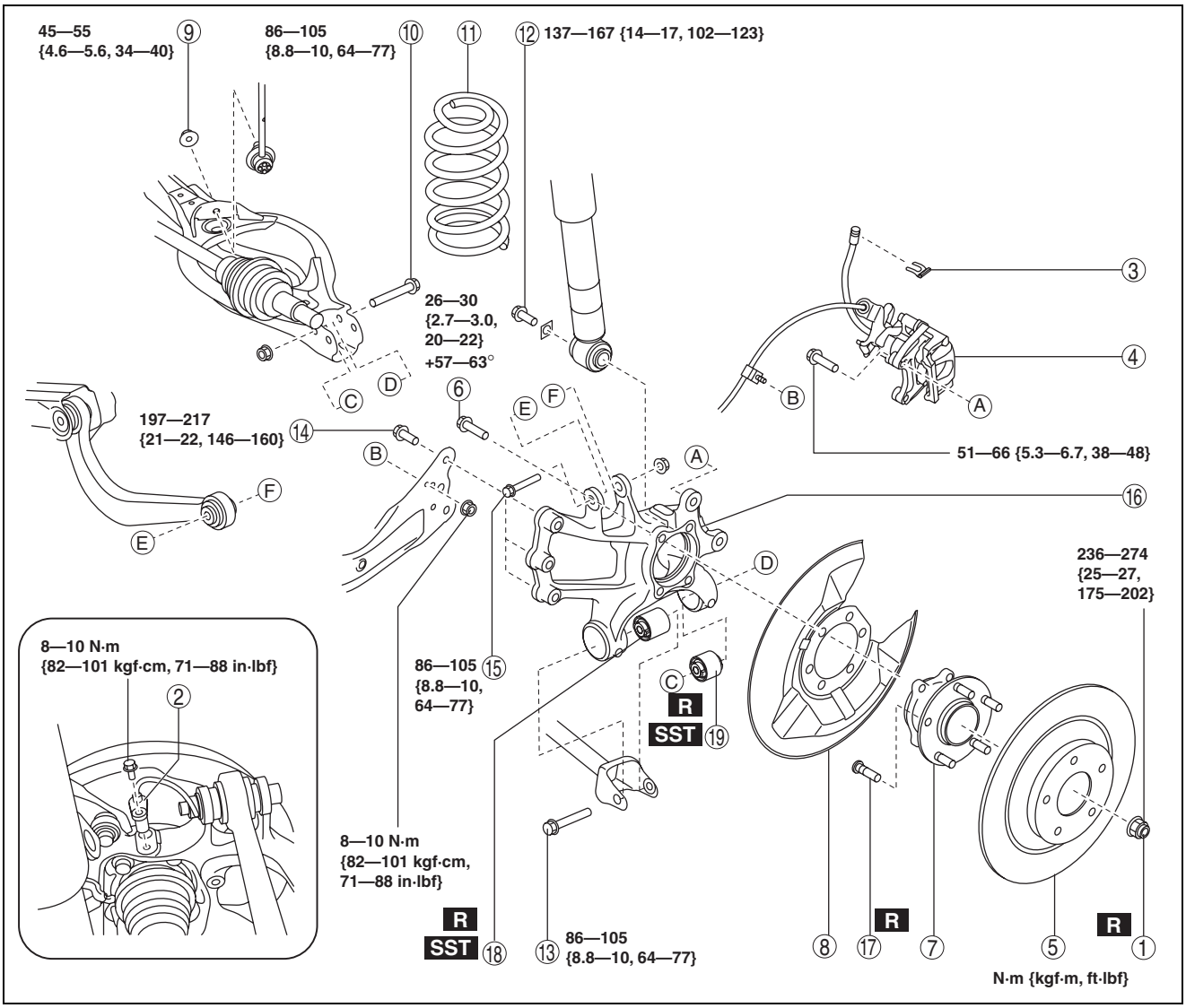

ac5uuw00000972

1	Locknut (See 03-12-9 Locknut Installation Note.)
2	ABS wheel-speed sensor
3	Brake hose clip
4	Brake caliper component
5	Disc plate
6	Bolt (wheel hub) (See 03-12-3 WHEEL HUB COMPONENT REMOVAL/INSTALLATION [2WD].)

7	Wheel hub
8	Dust cover
9	Rear stabilizer control link lower side nut
10	Rear lower arm outer bolt (See 03-12-3 WHEEL HUB COMPONENT REMOVAL/INSTALLATION [2WD].)
11	Rear coil spring (See 02-14-6 REAR COIL SPRING REMOVAL/INSTALLATION.)

REAR AXLE

12	Rear shock absorber lower bolt (See 02-14-4 REAR SHOCK ABSORBER REMOVAL/INSTALLATION.)
13	Rear lateral link outer bolt (See 02-14-25 REAR LATERAL LINK REMOVAL/INSTALLATION.)
14	Rear trailing link installation bolt (See 02-14-25 REAR LATERAL LINK REMOVAL/INSTALLATION.)
15	Bolt (rear upper arm outer side)

16	Hub support
17	Wheel hub bolt (See 03-12-3 WHEEL HUB COMPONENT REMOVAL/INSTALLATION [2WD].)
18	Hub support bushing (front) (See 03-12-3 WHEEL HUB COMPONENT REMOVAL/INSTALLATION [2WD].)
19	Hub support bushing (rear) (See 03-12-3 WHEEL HUB COMPONENT REMOVAL/INSTALLATION [2WD].)

Locknut Installation Note

1. After tightening the locknut once at a torque of **390 N·m {40 kgf·m, 288 ft·lbf}**, return it temporarily **180 degrees**, then retighten it to a torque of **236—274 N·m {25—27 kgf·m, 175—202 ft·lbf}**.

REAR WHEEL HUB BOLT REPLACEMENT

id031200800200

1. Remove the brake caliper component and suspend it out of the way using a cable.
2. Remove the disc plate.
3. Remove the wheel hub bolt using the **SST** as shown in the figure.
4. Place a new wheel hub bolt in the wheel hub.

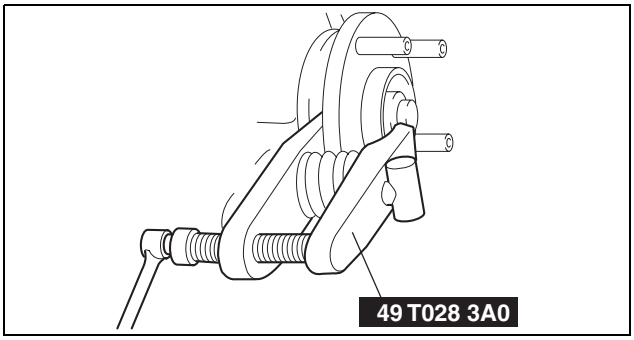

acxuuw00003088

5. Install the wheel hub by placing a proper sized washer on the hub, and tightening the nut as shown in the figure.

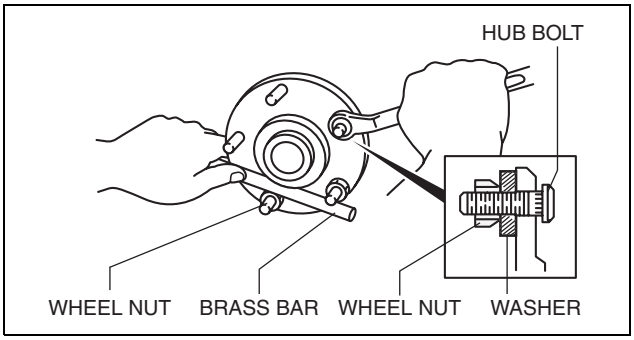

am3uuw0000618

03-13 DRIVE SHAFT

DRIVE SHAFT LOCATION INDEX **03-13–2**
FRONT DRIVE SHAFT INSPECTION . . . **03-13–2**
FRONT DRIVE SHAFT
REMOVAL/INSTALLATION **03-13–3**
Drive Shaft Removal Note **03-13–4**
Bracket No.1 Removal Note **03-13–4**
Bracket, Drive Shaft (RH)
Installation Note **03-13–5**
Drive Shaft Clip Installation Note **03-13–5**
Drive Shaft (LH) Installation Note **03-13–6**
Locknut Installation Note **03-13–6**
FRONT DRIVE SHAFT (TRIPOD JOINT)
DISASSEMBLY/ASSEMBLY **03-13–7**
Boot Band (Transaxle Side
(Large Diameter))
Disassembly Note **03-13–8**
Boot Band (Transaxle Side
(Small Diameter), Wheel Side))
Disassembly Note **03-13–8**
Outer Ring Disassembly Note **03-13–8**
Dust Cover Disassembly Note **03-13–9**
Bearing Disassembly Note **03-13–9**
Snap Ring, Tripod Joint
Disassembly Note **03-13–9**
Boot Disassembly Note **03-13–10**
Boot Assembly Note **03-13–10**
Boot Band (Transaxle Side
(Small Diameter), Wheel Side))
Assembly Note **03-13–10**
Tripod Joint, Snap Ring
Assembly Note **03-13–11**
Bearing Assembly Note **03-13–12**
Dust Cover Assembly Note **03-13–12**
Outer Ring Assembly Note **03-13–12**
Boot Band (Transaxle Side
(Large Diameter)) Assembly Note . . . **03-13–13**
FRONT DRIVE SHAFT
(DOUBLE OFFSET JOINT)
DISASSEMBLY/ASSEMBLY **03-13–14**
Clip Disassembly Note **03-13–15**
Snap Ring Disassembly Note **03-13–15**
Boot Assembly Note **03-13–15**
Cage, Inner Ring, Balls, Snap
Ring Assembly Note **03-13–15**
Outer Ring Assembly Note **03-13–16**
REAR DRIVE SHAFT INSPECTION **03-13–16**
REAR DRIVE SHAFT
REMOVAL/INSTALLATION **03-13–17**
Wheel Hub Removal Note **03-13–18**
Rear Drive Shaft Removal Note **03-13–18**
Clip Installation Note **03-13–18**
Locknut Installation Note **03-13–18**
REAR DRIVE SHAFT
DISASSEMBLY/ASSEMBLY **03-13–19**
Boot Band (Differential Side)
Disassembly Note **03-13–19**
Outer Ring Disassembly Note **03-13–20**
Snap Ring, Tripod Joint
Disassembly Note **03-13–20**
Boot Disassembly Note **03-13–20**
Boot Band (Wheel Side)
Disassembly Note **03-13–21**
Boot Assembly Note **03-13–21**
Boot Band (Wheel Side)
Assembly Note **03-13–21**
Tripod Joint, Snap Ring
Assembly Note **03-13–22**
Outer Ring Assembly Note **03-13–23**
Boot Band (Differential Side)
Assembly Note **03-13–23**

DRIVE SHAFT

DRIVE SHAFT LOCATION INDEX

id031300800100

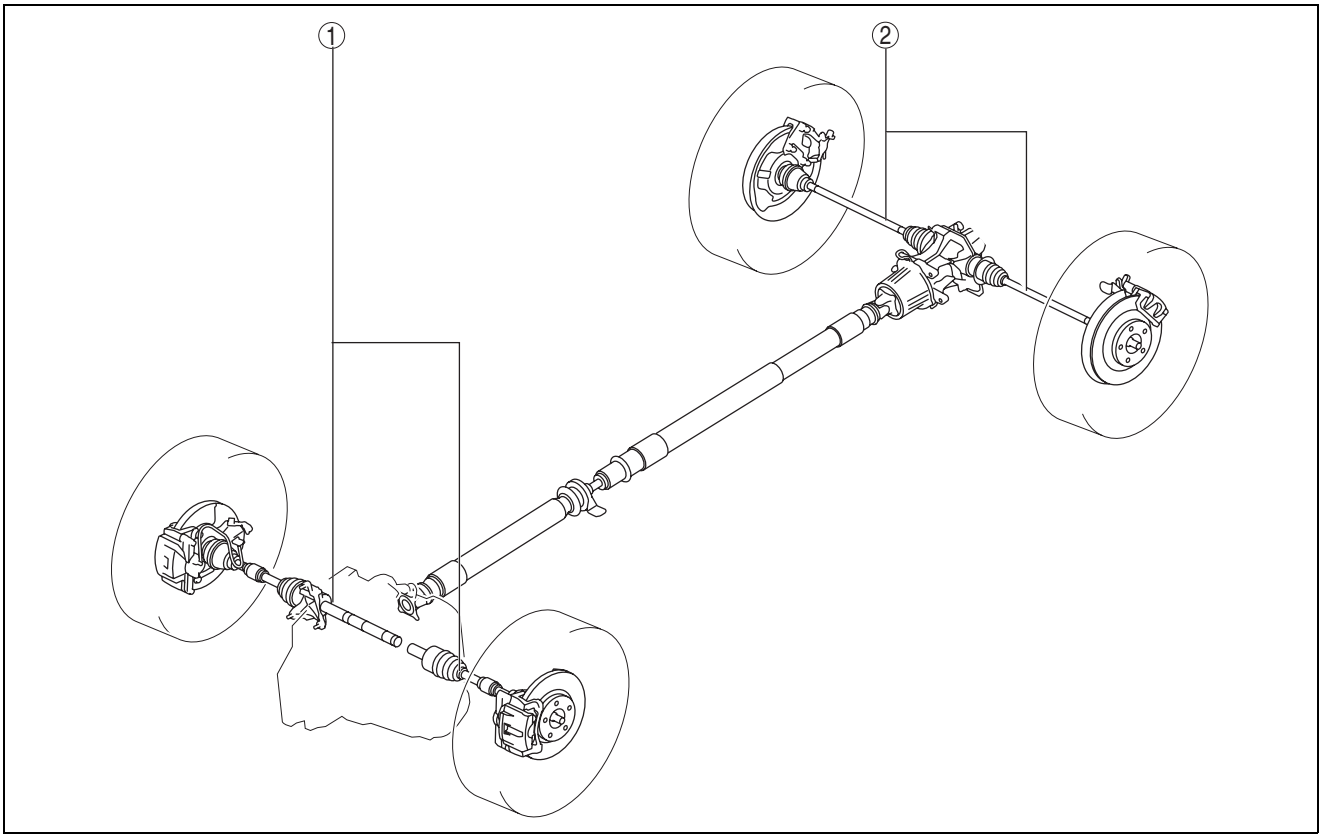

ac5uuw00000265

1	Front drive shaft (See 03-13-2 FRONT DRIVE SHAFT INSPECTION.) (See 03-13-3 FRONT DRIVE SHAFT REMOVAL/INSTALLATION.) (See 03-13-7 FRONT DRIVE SHAFT (TRIPOD JOINT) DISASSEMBLY/ASSEMBLY.) (See 03-13-14 FRONT DRIVE SHAFT (DOUBLE OFFSET JOINT) DISASSEMBLY/ASSEMBLY.)

2	Rear drive shaft (4WD) (See 03-13-16 REAR DRIVE SHAFT INSPECTION.) (See 03-13-17 REAR DRIVE SHAFT REMOVAL/INSTALLATION.) (See 03-13-19 REAR DRIVE SHAFT DISASSEMBLY/ASSEMBLY.)

FRONT DRIVE SHAFT INSPECTION

id031300801200

1. Inspect the connections for any looseness.
   - If there is any malfunction, tighten or replace the applicable part.
2. Inspect the dust boot for damage and cracks.
   - If there is any malfunction, replace the applicable part.
3. Move the spline and joint up and down, left and right by hand and verify that there is no excessive play.
   - If there is any malfunction, replace the applicable part.

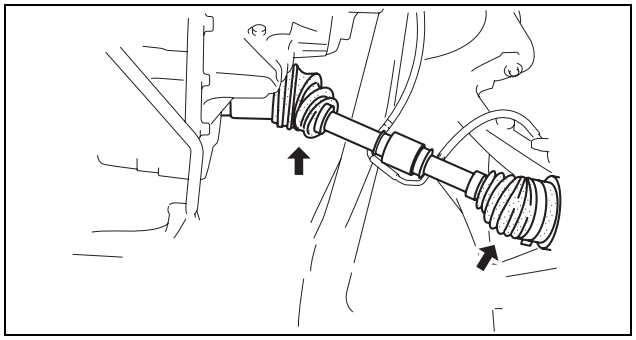

ac5wzw0000258

DRIVE SHAFT

FRONT DRIVE SHAFT REMOVAL/INSTALLATION

id031300802500

Caution

- **Performing the following procedures without first removing the ABS wheel-speed sensor may possibly cause an open circuit in the wiring harness if it is pulled by mistake. Before performing the following procedures, disconnect the ABS wheel-speed sensor connector (axle side) and fix the wiring harness to an appropriate place where it will not be pulled by mistake while servicing the vehicle.**
- **If the right side drive shaft is removed for 4WD vehicle, replace transfer oil seals (RH) No.1 and No.3.**

1. Remove the front under cover No.2. (See 09-16-41 FRONT UNDER COVER No.2 REMOVAL/INSTALLATION.)
2. Remove the splash shield. (See 09-16-49 SPLASH SHIELD REMOVAL/INSTALLATION.)
3. Drain the transaxle oil or ATF. (See 05-15A-2 MANUAL TRANSAXLE OIL REPLACEMENT [C66M-R, C66MX-R].) (See 05-15B-2 MANUAL TRANSAXLE OIL REPLACEMENT [D66M-R, D66MX-R].) (See 05-17A-12 AUTOMATIC TRANSAXLE FLUID (ATF) REPLACEMENT [FW6A-EL, FW6AX-EL].) (See 05-17B-12 AUTOMATIC TRANSAXLE FLUID (ATF) REPLACEMENT [GW6A-EL, GW6AX-EL].)
4. Remove in the order indicated in the table.
5. Install in the reverse order of removal.

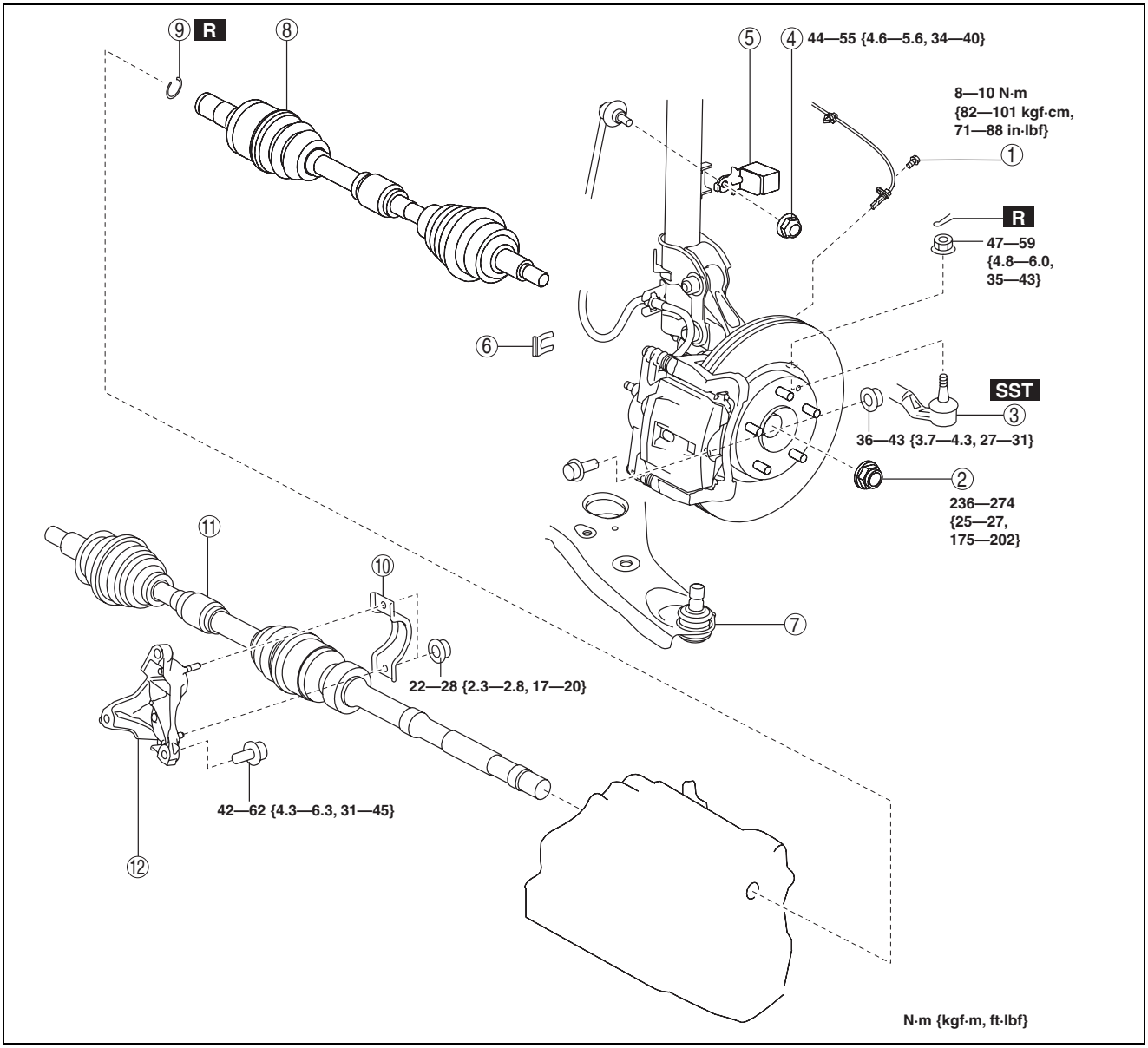

ac5uuw00000282

DRIVE SHAFT

1	ABS wheel-speed sensor
2	Locknut (See 03-13-6 Locknut Installation Note.)
3	Tie-rod end ball joint (See 02-13-15 FRONT CROSSMEMBER REMOVAL/INSTALLATION.)
4	Stabilizer control link upper nut
5	Dynamic damper (if equipped)
6	Brake hose clip
7	Front lower arm ball joint
8	Drive shaft (LH) (See 03-13-4 Drive Shaft Removal Note.) (See 03-13-6 Drive Shaft (LH) Installation Note.)
9	Drive shaft clip (See 03-13-5 Drive Shaft Clip Installation Note.)
10	Bracket No.2 (See 03-13-5 Bracket, Drive Shaft (RH) Installation Note.)
11	Drive shaft (RH) (See 03-13-5 Bracket, Drive Shaft (RH) Installation Note.)
12	Bracket No.1 (See 03-13-4 Bracket No.1 Removal Note.) (See 03-13-5 Bracket, Drive Shaft (RH) Installation Note.)

Drive Shaft Removal Note

1. Install a spare nut onto the drive shaft.
2. Tap the nut with a copper hammer and separate the drive shaft from the axle.
3. Separate the drive shaft from the wheel hub.

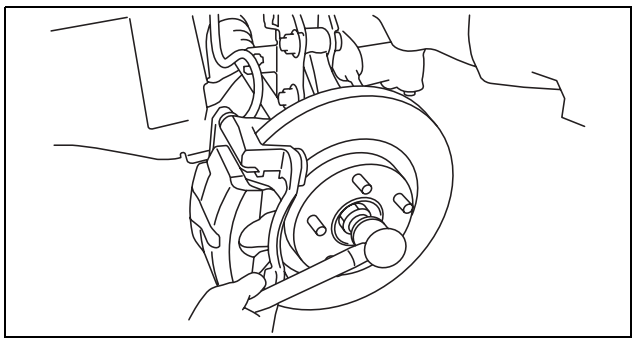

ac5wzw0000259

4. Separate the drive shaft (LH) from the transaxle using the **SSTs**.

Caution

- **Be careful not to damage the transaxle oil seal with the bar.**

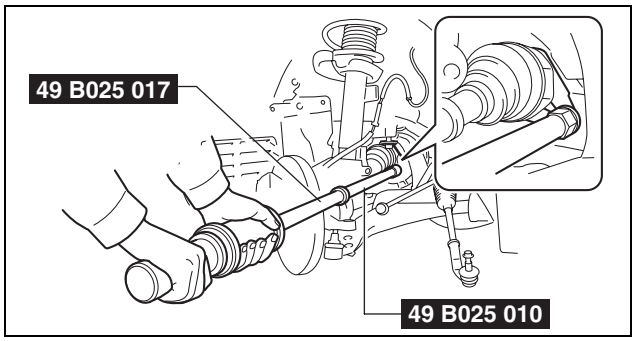

ac5wzw0000259

Bracket No.1 Removal Note

1. Remove the exhaust manifold bracket. (Only for SKYACTIV-D 2.2).
2. Remove the bracket No.1

DRIVE SHAFT

Bracket, Drive Shaft (RH) Installation Note

Caution
- **Retighten the bracket No.1 stud bolts when the bracket No.2 nuts are loosened**

1. Tighten the bracket No.1 stud bolts.

Tightening torque
8—11 N·m {82—112 kgf·cm, 71—97 in·lbf}

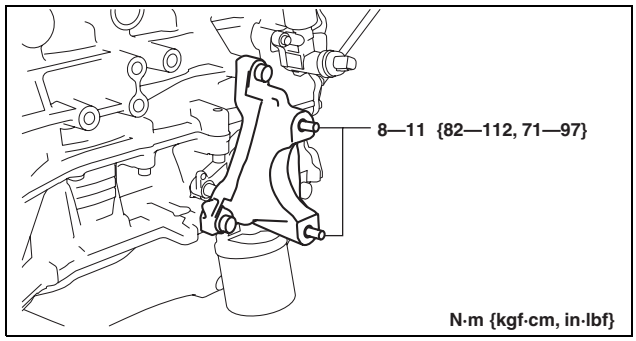

ac5wzw0000259

2. Temporarily tighten the bolts A and B.
3. Tighten the bolts A, then tighten the bolt B to the specified torque.

Tightening torque
42—62 N·m {4.3—6.3 kgf·m, 31—45 ft·lbf}

4. Insert the drive shaft into the transaxle until the drive shaft bearing contacts the bracket stopper.
5. Temporarily tighten the nuts C, then tighten the nuts C to the specified torque.

Tightening torque
22—28 N·m {2.3—2.8 kgf·m, 17—20 ft·lbf}

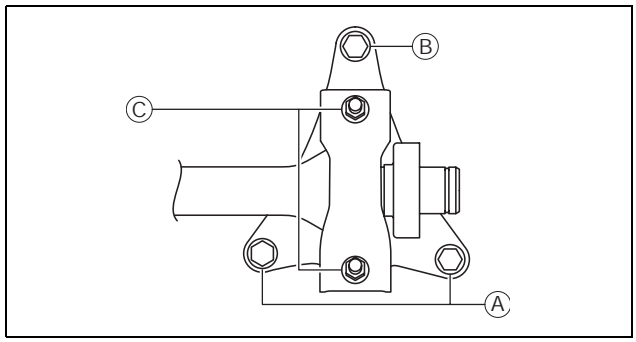

ac5wzw0000259

6. Apply transaxle oil to the oil seal lip.
7. Apply grease (L2Y1 33247) to the wheel bearing inner race and drive shaft contact surface (Area A in figure).

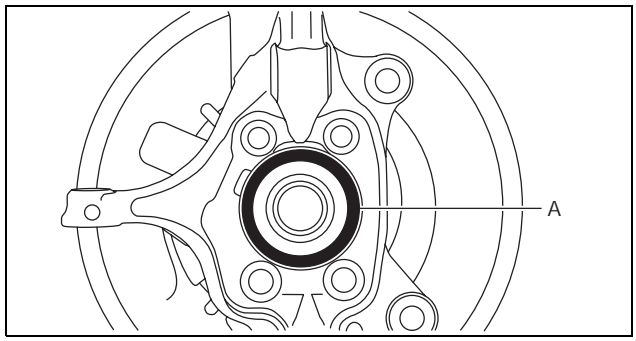

ac5wzw0000259

Drive Shaft Clip Installation Note

1. Install a new drive shaft clip to the clip groove at the end of the drive shaft with the clip opening facing upward.
2. After installation, measure the outer diameter.
   - If it exceeds the specification, repeat installation using a new clip.

Standard
34 mm {1.3 in}

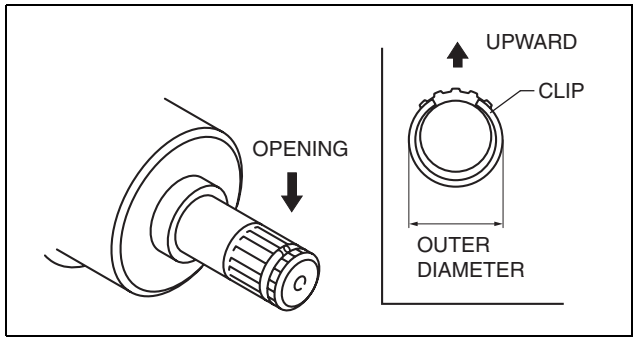

ac5wzw0000259

DRIVE SHAFT

Drive Shaft (LH) Installation Note

Caution
- **The sharp edges of the drive shaft can slice or puncture the oil seal. Be careful when installing the drive shaft to the transaxle.**

1. Apply transaxle oil to the oil seal lip.
2. Apply grease (L2Y1 33247) to the wheel bearing inner race and drive shaft contact surface (Area A in figure).
3. Insert the drive shaft into the wheel hub.

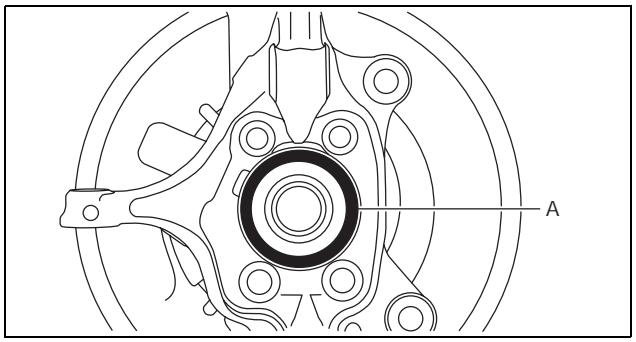

ac5wzw0000259

4. Install the drive shaft to the transaxle.
5. After installation, pull the transaxle side outer ring forward to confirm that the drive shaft is securely held by the clip.

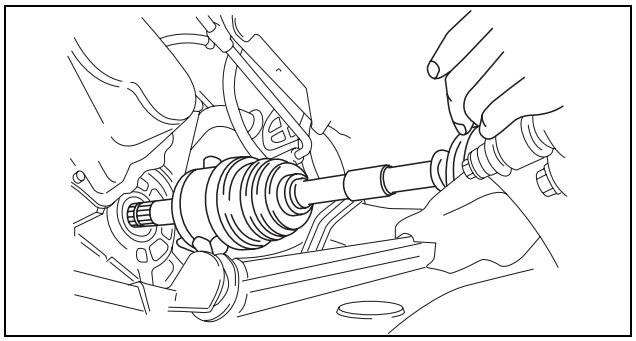
ac5wzw0000259

Locknut Installation Note

1. After tightening the locknut once at a torque of **390 N·m {40 kgf·m, 288 ft·lbf}**, return it temporarily **180 degrees**, then retighten it to a torque of **236—274 N·m {25—27 kgf·m, 175—202 ft·lbf}**.

DRIVE SHAFT

FRONT DRIVE SHAFT (TRIPOD JOINT) DISASSEMBLY/ASSEMBLY

id031300802600

1. Disassemble in the order indicated in the table.
2. Assemble in the reverse order of disassembly.

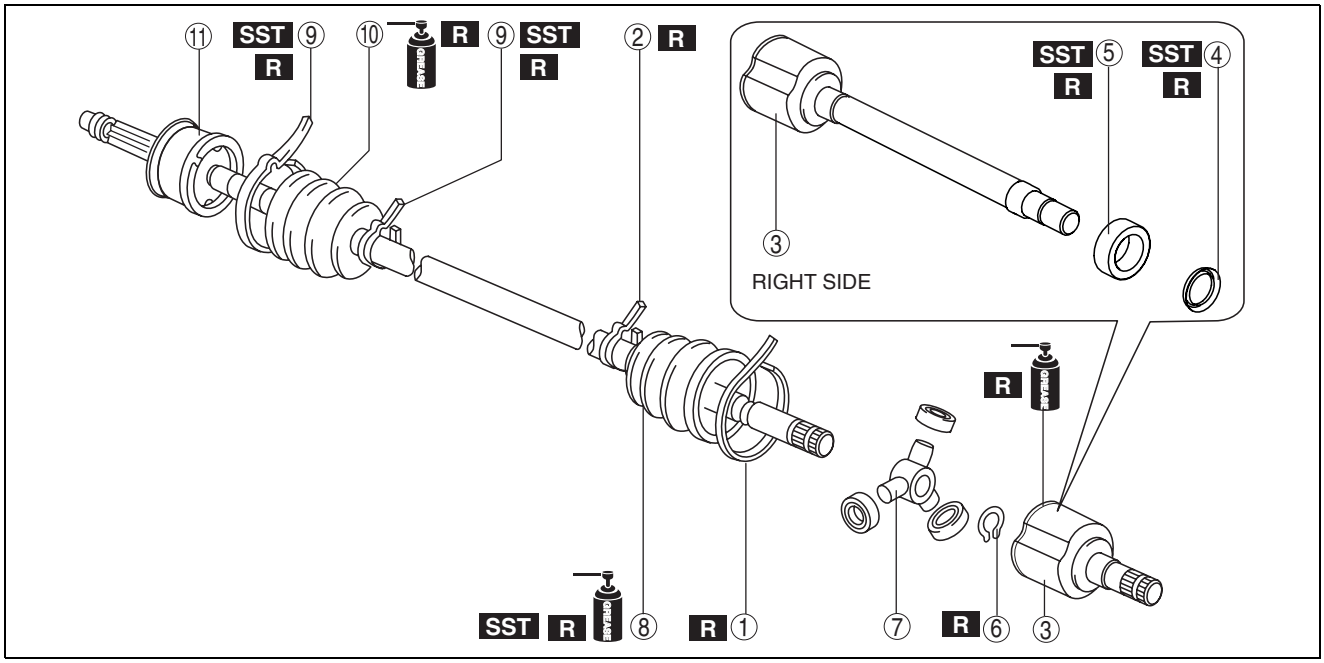

ac5wzw0000260

1	Boot band (transaxle side (large diameter)) (See 03-13-8 Boot Band (Transaxle Side (Large Diameter)) Disassembly Note.) (See 03-13-13 Boot Band (Transaxle Side (Large Diameter)) Assembly Note.)
2	Boot band (transaxle side (small diameter)) (See 03-13-8 Boot Band (Transaxle Side (Small Diameter), Wheel Side)) Disassembly Note.) (See 03-13-10 Boot Band (Transaxle Side (Small Diameter), Wheel Side)) Assembly Note.)
3	Outer ring (See 03-13-8 Outer Ring Disassembly Note.) (See 03-13-12 Outer Ring Assembly Note.)
4	Dust cover (if equipped) (See 03-13-9 Dust Cover Disassembly Note.) (See 03-13-9 Dust Cover Disassembly Note.)
5	Bearing (See 03-13-9 Bearing Disassembly Note.) (See 03-13-12 Bearing Assembly Note.)
6	Snap ring (See 03-13-9 Snap Ring, Tripod Joint Disassembly Note.) (See 03-13-11 Tripod Joint, Snap Ring Assembly Note.)
7	Tripod joint (See 03-13-9 Snap Ring, Tripod Joint Disassembly Note.) (See 03-13-11 Tripod Joint, Snap Ring Assembly Note.)
8	Boot (See 03-13-10 Boot Disassembly Note.) (See 03-13-10 Boot Assembly Note.)
9	Boot band (wheel side) (See 03-13-8 Boot Band (Transaxle Side (Small Diameter), Wheel Side)) Disassembly Note.) (See 03-13-10 Boot Band (Transaxle Side (Small Diameter), Wheel Side)) Assembly Note.)
10	Boot (See 03-13-10 Boot Disassembly Note.) (See 03-13-10 Boot Assembly Note.)
11	Shaft and ball joint component

DRIVE SHAFT

Boot Band (Transaxle Side (Large Diameter)) Disassembly Note

1. Pry up the boot band at the points indicated in the figure using pliers and remove the band.

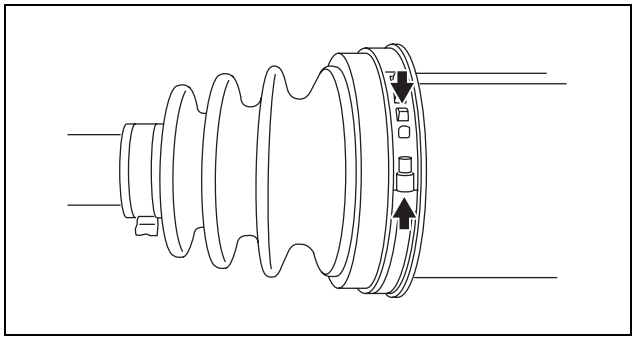
ac5wzw0000261

Boot Band (Transaxle Side (Small Diameter), Wheel Side)) Disassembly Note

Note
- Remove the boot band only if there is a malfunction.

1. Remove the boot band using end clamp pliers.

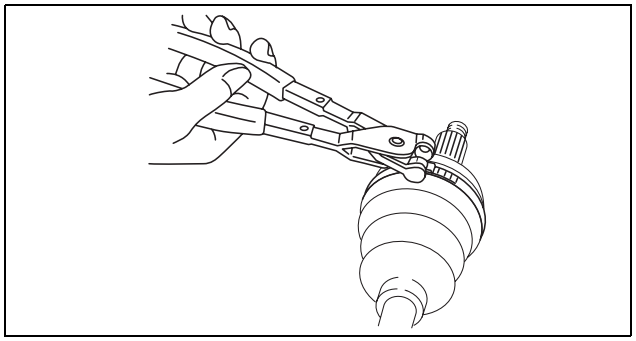
ac5wzw0000261

Outer Ring Disassembly Note

1. Mark the outer ring and the shaft for proper assembly.

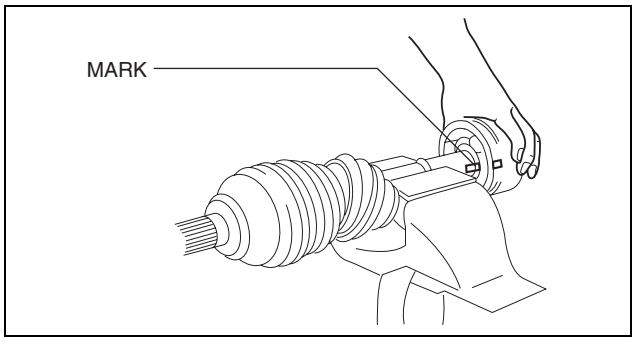

ac5wzw0000261

2. Secure the drive shaft using a vise.

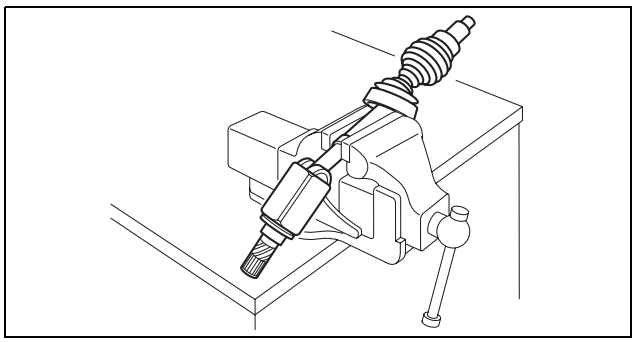
ac5wzw0000261

DRIVE SHAFT

3. Tap the outer ring slightly by using a hammer and urethane bar or equivalent, and remove the outer ring from the drive shaft.

Caution
- **Lightly tap the outer ring carefully, otherwise the tripod joint rollers could be damaged.**

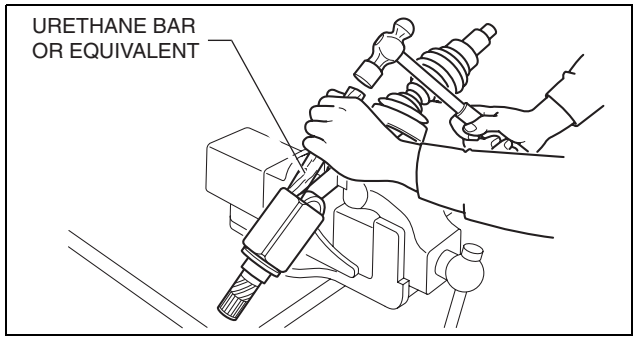

ac5wzw0000261

Dust Cover Disassembly Note

1. Disassemble the dust cover using the press and the **SST**.

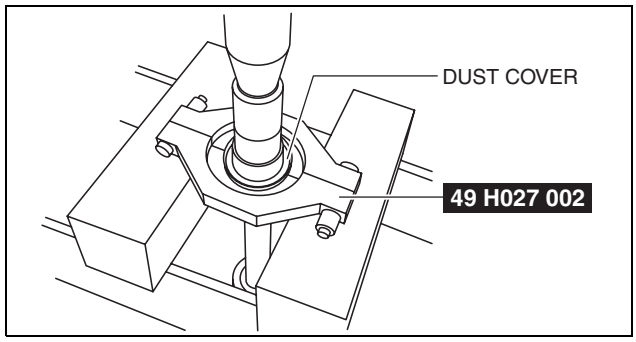

ac5wzw0000261

Bearing Disassembly Note

1. Disassemble the bearing using the press and the **SST**.

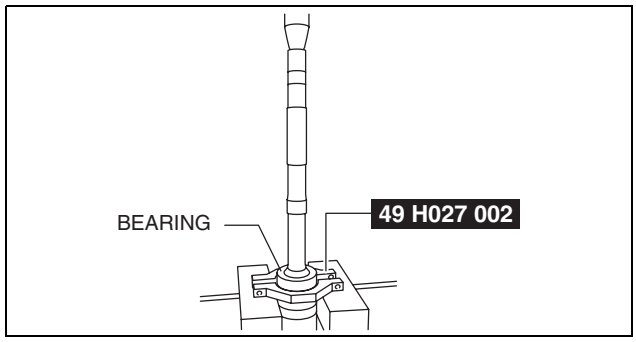

Snap Ring, Tripod Joint Disassembly Note

1. Place an alignment mark on the shaft and tripod joint.
2. Remove the snap ring using snap ring pliers.
3. Remove the tripod joint from the shaft.

Caution
- **Do not try to remove the tripod joint by hitting it with a hammer. The tripod joint could be damaged.**

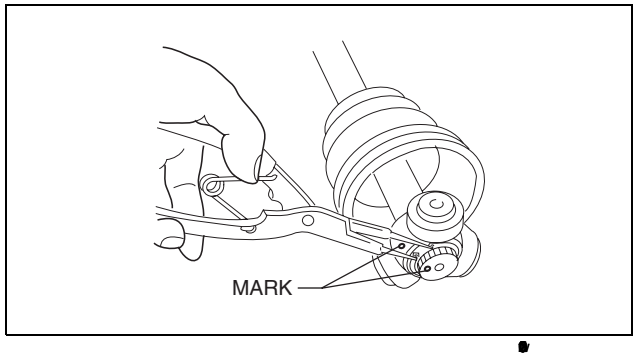

DRIVE SHAFT

Boot Disassembly Note

Note
- Remove the wheel side boot only if there is any malfunction.

1. Wrap the shaft splines with tape.
2. Remove the boot.

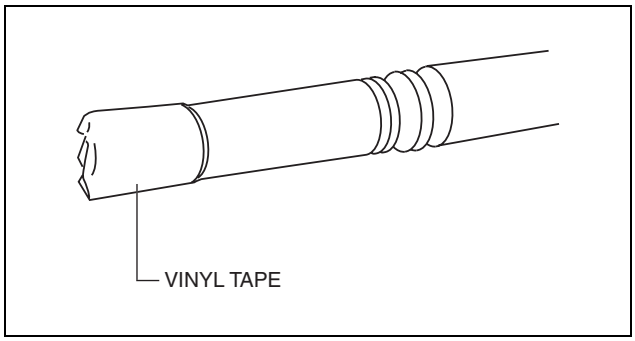

Boot Assembly Note

Note
- The boot shapes on the wheel side and the differential side are different. Do not install the wrong boot by mistake.

1. Fill the inside of the new dust boot (wheel side) with grease.

Note
- Do not touch the grease with your hand. Apply it from the tube to prevent foreign matter from entering the boot.

Grease amount
SKYACTIV-G 2.0: 96—106 g {3.4—3.7 oz}
SKYACTIV-D 2.2: 160—180 g {5.65—6.34 oz}

2. Install the boot with the drive shaft spline still wrapped with vinyl tape.
3. Remove the vinyl tape.

Boot Band (Transaxle Side (Small Diameter), Wheel Side)) Assembly Note
Boot band (small diameter side)
1. Adjust clearance A by turning the adjusting bolt of the **SST**.

Clearance A
2.9 mm {0.11 in}

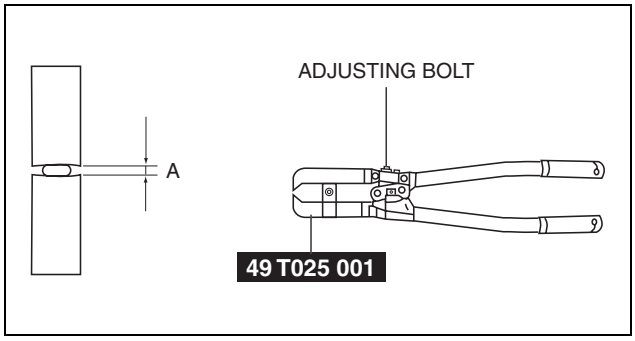

ac5wzw0000261

DRIVE SHAFT

2. Crimp the wheel side small boot band using the **SST**. Verify that clearance B is within the specification.
   - If clearance B is more than the specification, reduce clearance A of the **SST** and crimp the boot again.
   - If clearance B is less than the specification, replace the boot band, increase clearance A of the **SST**, and crimp the new boot.

   Clearance B
   2.4—2.8 mm {0.10—0.11 in}

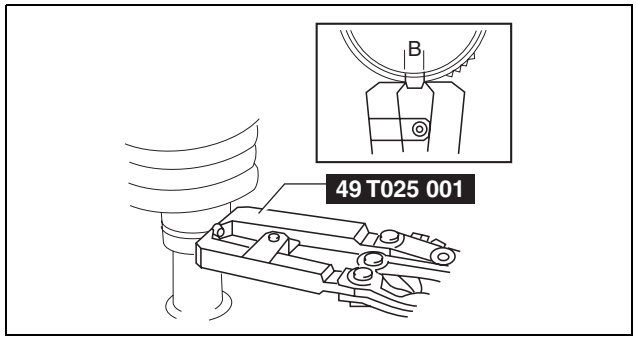

ac5wzw0000262

3. Verify that the boot band does not protrude from the boot band installation area.
   - If it does, replace the boot band and repeat Steps 2 and 3.

Boot band (Large diameter side)

1. Adjust clearance C by turning the adjusting bolt of the **SST**.

   Clearance C
   3.2 mm {0.13 in}

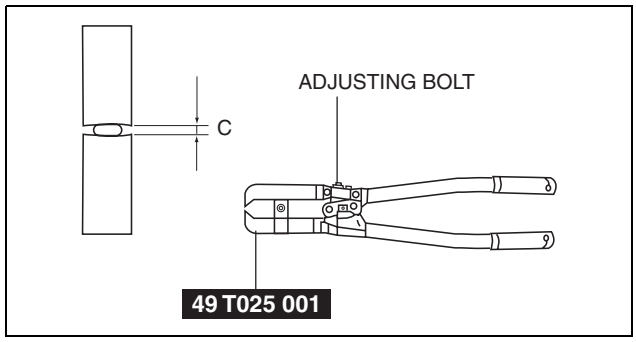

ac5wzw0000262

2. Crimp the wheel side small boot band using the **SST**. Verify that clearance D is within the specification.
   - If clearance B is more than the specification, reduce clearance C of the **SST** and crimp the boot again.
   - If clearance B is less than the specification, replace the boot band, increase clearance C of the **SST**, and crimp the new boot.

   Clearance D
   2.4—2.8 mm {0.10—0.11 in}

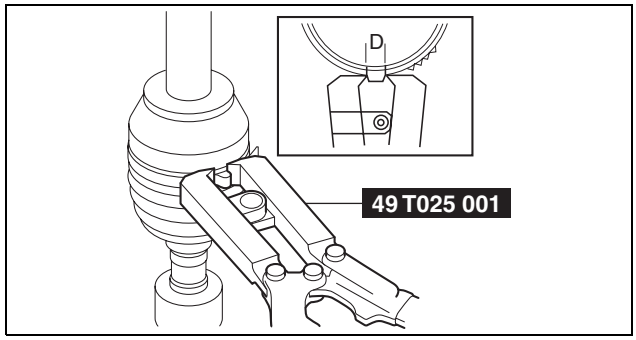

ac5wzw0000262

3. Verify that the boot band does not protrude from the boot band installation area.
   - If it does, replace the boot band and repeat Steps 2 and 3.

Tripod Joint, Snap Ring Assembly Note

1. While aligning the marks on the shaft and the tripod joint, insert the tripod joint using a bar and a hammer.
2. Insert a new snap ring using snap ring pliers.
3. Verify that the snap ring is engaged correctly in the groove of the shaft.

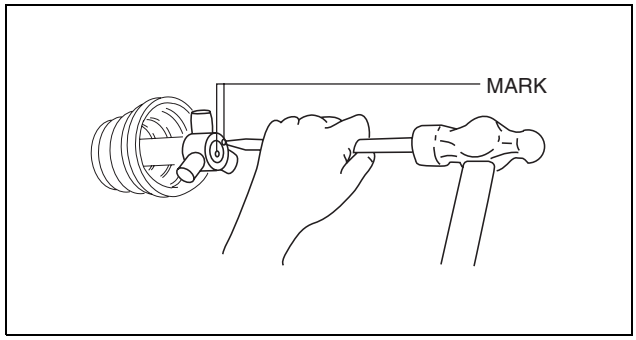

ac5wzw0000262

DRIVE SHAFT

Bearing Assembly Note

1. Install a new bearing using the **SST**.

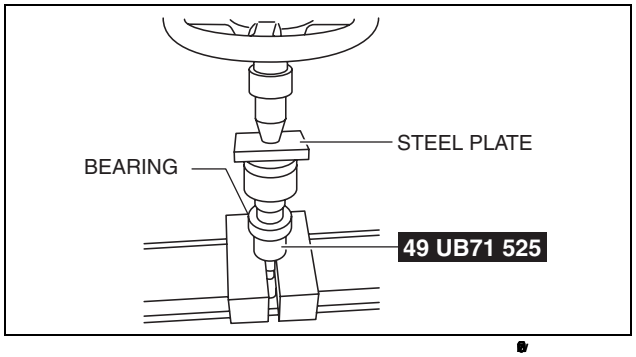

Dust Cover Assembly Note

1. Using the **SST**, install a new dust cover.

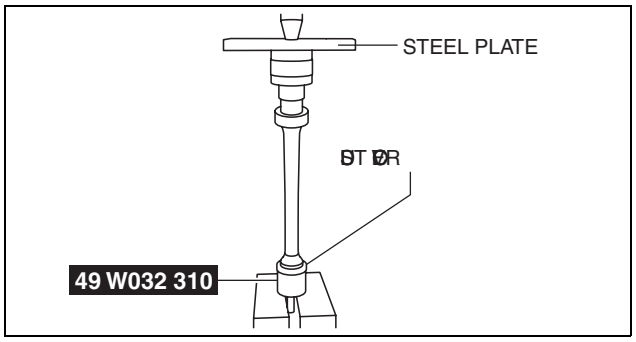

ac5wzw0000262

Outer Ring Assembly Note

1. Fill the outer ring and boot (transaxle side) with the specified grease.

Note

- Do not touch the grease with your hand. Apply it from the tube to prevent foreign matter from entering the boot.

Grease amount

SKYACTIV-G 2.0: 89—99 g {3.2—3.4 oz}
SKYACTIV-D 2.2: 155—175 g {5.47—6.17 oz}

2. Secure the outer ring using a vise.

Caution

- **Carefully perform the work when securing the outer ring to the vise, otherwise other wise the oil seal could be deformed.**

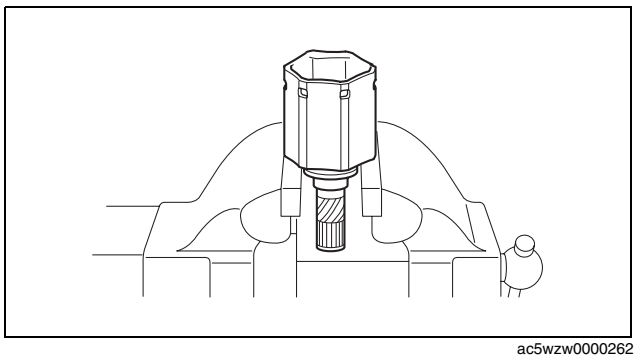

ac5wzw0000262

DRIVE SHAFT

3. Align the roller with the outer ring, tap the roller slightly using a hammer and urethane bar or equivalent, and install the drive shaft to the outer ring with keeping the drive shaft verticality.

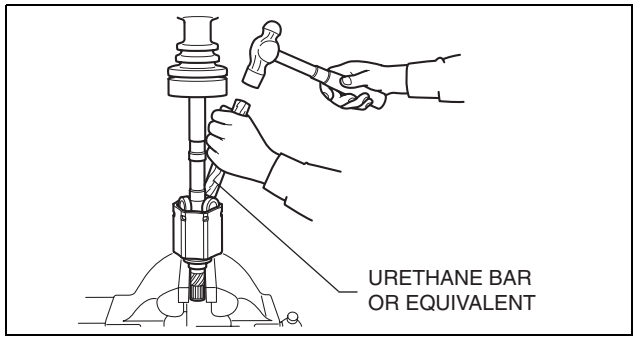

ac5wzw0000262

Caution
- **Be careful that no foreign matter such as dust or dirt gets into the outer ring, otherwise the drive shaft could be damaged.**

4. Set the drive shaft to the standard length.

Front drive shaft standard length (ATX)
LH
- **— SKYACTIV-G 2.0: 675.5—685.5 mm {26.60—26.98 in}**
- **— SKYACTIV-D 2.2: 672.5—682.5 mm {26.48—26.87 in}**

RH
- **— SKYACTIV-G 2.0: 1038.95—1048.95 mm {40.9036—41.2972 in}**
- **— SKYACTIV-D 2.2: 1052.50—1062.50 mm {41.4371—41.8307 in}**

5. Release any trapped air from the boots by carefully lifting up the small end of each boot with a cloth wrapped screwdriver.

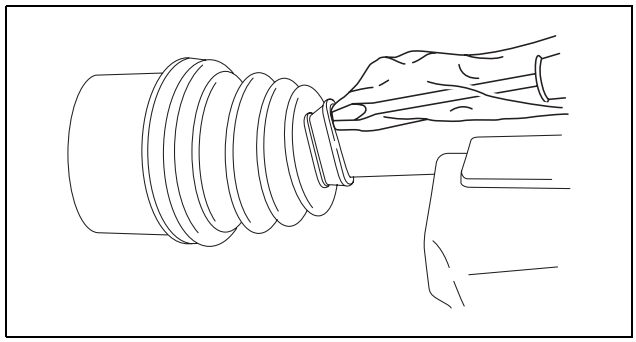
ac5wzw0000262

Note
- Verify that there is no grease leak while being careful not to damage the boot.
- If the boot is damaged, it may not be possible to perform the full-length adjustment of the drive shaft.

6. Verify that the drive shaft length is within the specification under atmospheric pressure inside the boot.
   - If not within the specification, repeat from Step 3.

Boot Band (Transaxle Side (Large Diameter)) Assembly Note

1. Pry up the boot band at the points indicated in the figure using pliers and tighten the boot band.
2. Verify that the boot band is installed to the boot slot securely.

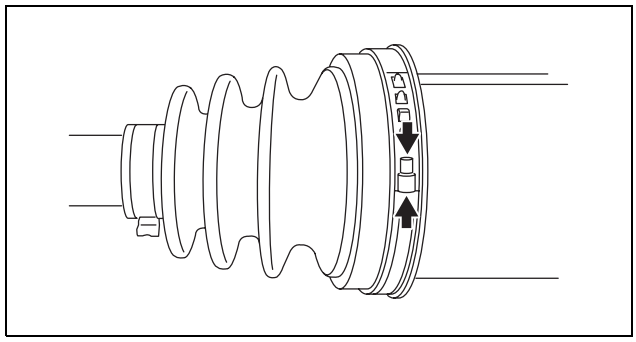
ac5uuw00000281

DRIVE SHAFT

FRONT DRIVE SHAFT (DOUBLE OFFSET JOINT) DISASSEMBLY/ASSEMBLY

id031300802700

1. Disassemble in the order indicated in the table.
2. Assemble in the reverse order of disassembly.

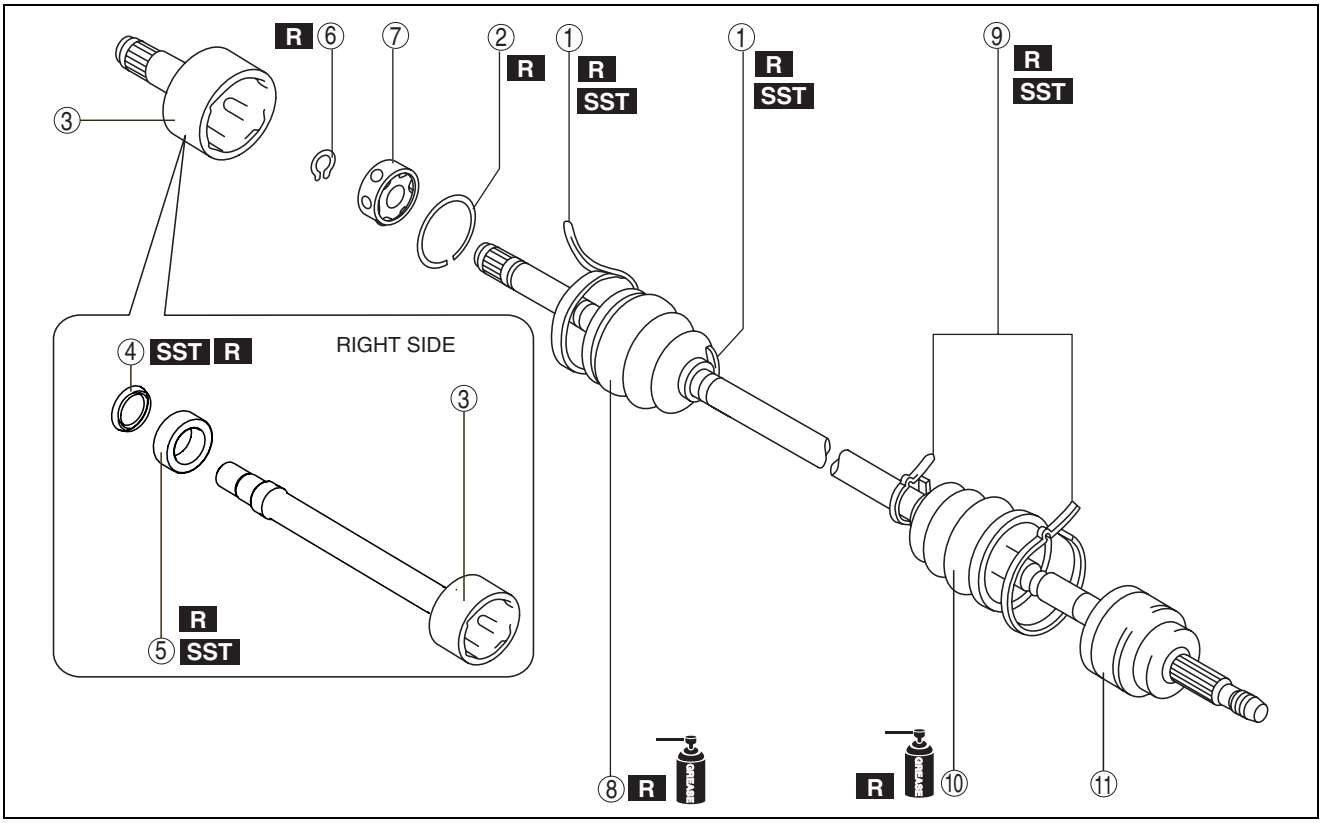

ac5wzw0000442

1	Boot band (transaxle side) (See 03-13-7 FRONT DRIVE SHAFT (TRIPOD JOINT) DISASSEMBLY/ASSEMBLY.)
2	Clip (See 03-13-15 Clip Disassembly Note.)
3	Outer ring (See 03-13-16 Outer Ring Assembly Note.)
4	Dust cover (if equipped) (See 03-13-7 FRONT DRIVE SHAFT (TRIPOD JOINT) DISASSEMBLY/ASSEMBLY.)
5	Bearing (See 03-13-7 FRONT DRIVE SHAFT (TRIPOD JOINT) DISASSEMBLY/ASSEMBLY.)

6	Snap ring (See 03-13-15 Snap Ring Disassembly Note.) (See 03-13-15 Cage, Inner Ring, Balls, Snap Ring Assembly Note.)
7	Balls, inner ring, cage (See 03-13-15 Cage, Inner Ring, Balls, Snap Ring Assembly Note.)
8	Boot (See 03-13-15 Boot Assembly Note.)
9	Boot band (wheel side) (See 03-13-7 FRONT DRIVE SHAFT (TRIPOD JOINT) DISASSEMBLY/ASSEMBLY.)
10	Boot (See 03-13-15 Boot Assembly Note.)
11	Shaft and ball joint component

DRIVE SHAFT

Clip Disassembly Note

Caution
- **Mark with paint; do not use a punch.**

1. Mark the drive shaft and outer ring for proper assembly.

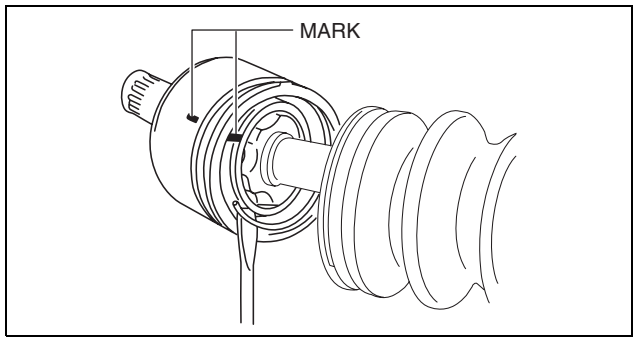

ac5wzw0000259

Snap Ring Disassembly Note

Caution
- **Mark with paint; do not use a punch.**

1. Mark the drive shaft end and inner ring for proper assembly.

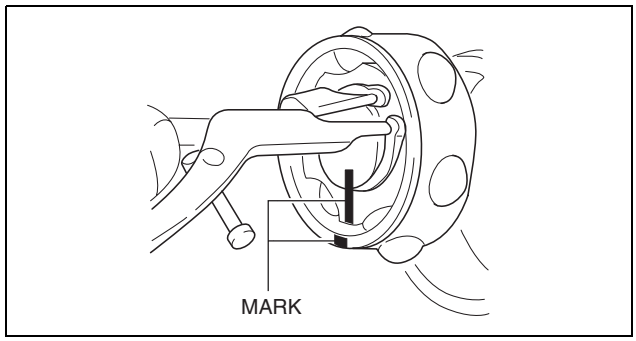

ac5wzw0000259

Boot Assembly Note

Note
- The wheel-side and transaxle-side boots are different.

1. Fill the boot (wheel side) with the specified grease.

Note
- Do not touch grease with your hand. Apply it from the tube to prevent foreign matter from entering the boot.

Grease amount
SKYACTIV-G 2.0: 95—115 g {3.4—4.0 oz}
SKYACTIV-D 2.2: 125—145 g {4.41—5.11 oz}

2. Install the boot with the splines of the shaft still wrapped in tape from disassembly.
3. Remove the tape.

Cage, Inner Ring, Balls, Snap Ring Assembly Note

1. Align the marks and install the balls and cage to the inner ring in the direction shown in the figure.

Caution
- **Install the cage so that the major diameter is at the same side as the snap ring groove. If incorrectly installed, the drive shaft may become disengaged.**

2. Align the marks and install the inner ring to the shaft.
3. Install a new snap ring.

DRIVE SHAFT

Outer Ring Assembly Note

1. Fill the outer ring and boot (transaxle side) with the specified grease.

Note

- Do not touch grease with your hand. Apply it from the tube to prevent foreign matter from entering the boot.

Grease amount

SKYACTIV-G 2.0: 85—105 g {3.0—3.7 oz}
SKYACTIV-D 2.2: 100—120 g {3.53—4.23 oz}

2. Install the outer ring on to the shaft.
3. Install the boot.
4. Set the drive shaft to the standard length.

Front drive shaft standard length (MTX)

LH

— **SKYACTIV-G 2.0: 673.8—679.0 mm {26.6—26.7 in}**
— **SKYACTIV-D 2.2: 663.1—668.3 mm {26.11—26.31 in}**

RH

— **SKYACTIV-G 2.0: 1036.6—1042.8 mm {40.812—41.055 in}**
— **SKYACTIV-D 2.2: 1044.1—1049.3 mm {41.107—41.311 in}**

5. Release any trapped air from the boots by carefully lifting up the small end of each boot with a cloth wrapped screwdriver.

Caution

- **Be careful not to allow the grease to leak.**
- **Do not damage the boot.**

6. Verify that the drive shaft length is within the specification.

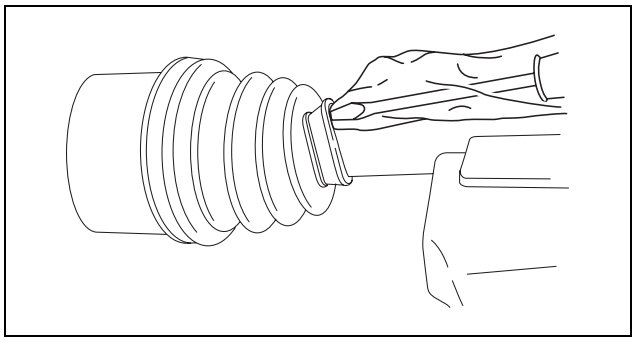

ac5wzw0000260

id031300801300

REAR DRIVE SHAFT INSPECTION

1. Inspect each connecting part for looseness.
   - Tighten or replace parts if necessary.
2. Inspect the dust boot on the drive shaft for cracks, damage, leaking grease, and looseness in the boot band.
3. Inspect the drive shaft for bends, cracks, and wear in the joints or splines.
   - Repair or replace the drive shaft or boot band if necessary.

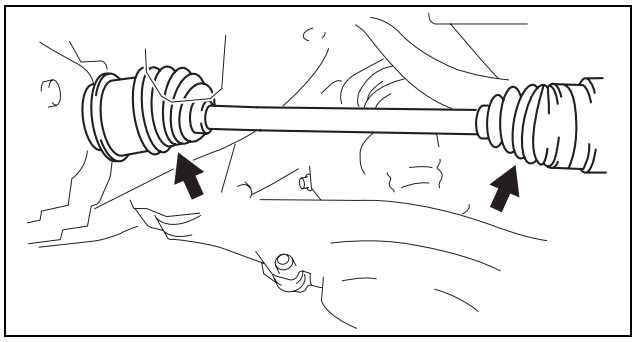

ac5uuw00000271

DRIVE SHAFT

REAR DRIVE SHAFT REMOVAL/INSTALLATION

id031300800600

Caution

- **Performing the following procedures without first removing the ABS wheel-speed sensor may possibly cause an open circuit in the harness if it is pulled by mistake. Before performing the following procedures, remove the ABS wheel-speed sensor (wheel side) and fix it to an appropriate place where the sensor will not be pulled by mistake while the vehicle is being serviced.**

1. Drain the rear differential oil into a container. (See 03-14-2 DIFFERENTIAL OIL REPLACEMENT.)
2. Remove in the order indicated in the table.
3. Install in the reverse order of removal.
4. After installation, add the specified rear differential oil. (See 03-14-2 DIFFERENTIAL OIL REPLACEMENT.)
5. Inspect the rear wheel alignment and adjust it if necessary. (See 02-11-3 REAR WHEEL ALIGNMENT.)

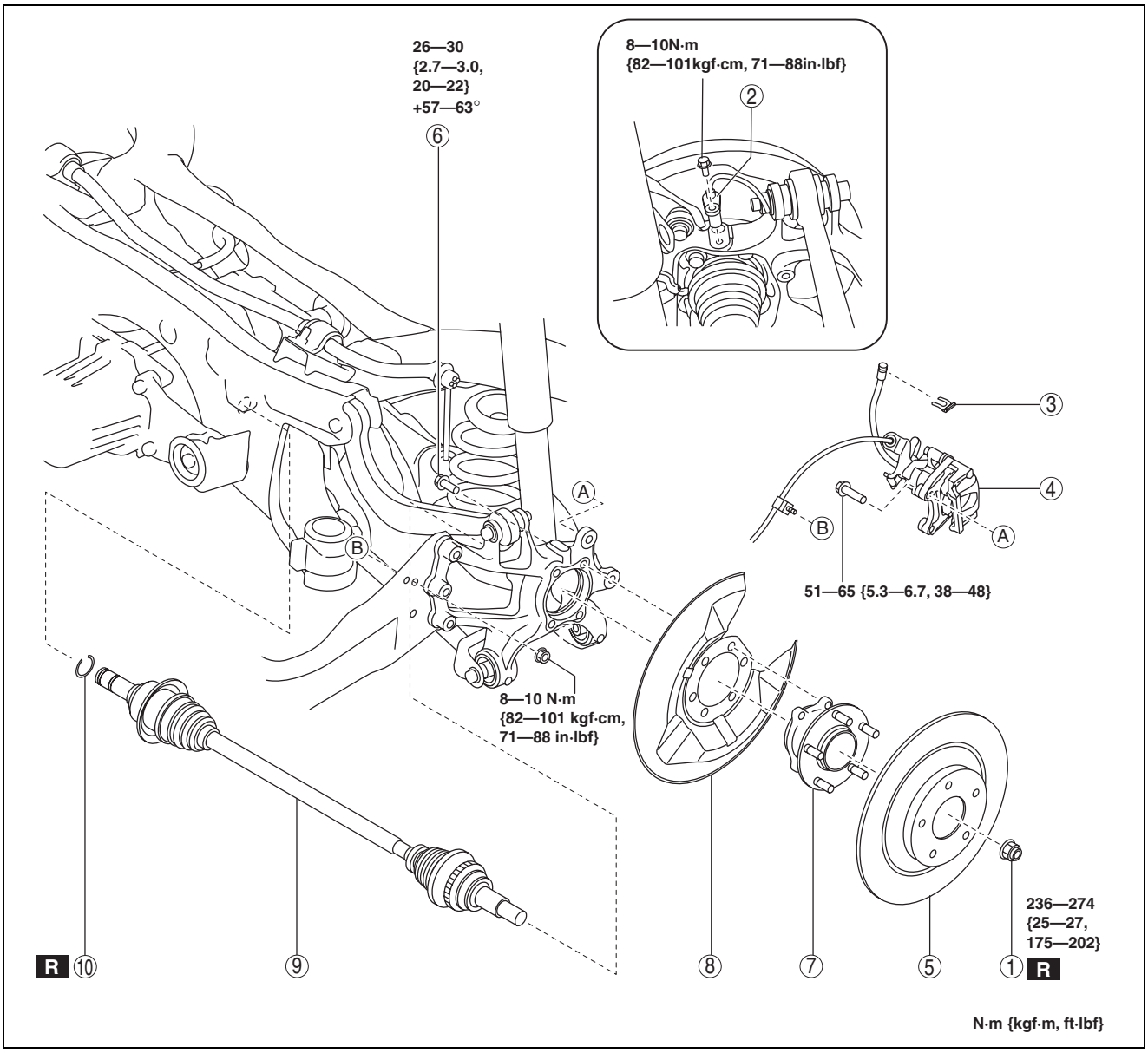

ac5uuw00000867

1	Locknut (See 03-13-18 Locknut Installation Note.)
2	ABS wheel-speed sensor (See 03-12-8 WHEEL HUB COMPONENT REMOVAL/INSTALLATION [4WD].)
3	Brake hose clip
4	Brake caliper component

5	Disc plate
6	Bolt (wheel hub) (See 03-12-3 WHEEL HUB COMPONENT REMOVAL/INSTALLATION [2WD].)
7	Wheel hub (See 03-13-18 Wheel Hub Removal Note.)
8	Dust cover

DRIVE SHAFT

9	Rear drive shaft (See 03-13-18 Rear Drive Shaft Removal Note.)
10	Clip (See 03-13-18 Clip Installation Note.)

Wheel Hub Removal Note

1. Before removing the wheel hub, place alignment marks on the wheel hub and the hub support so that they can be installed to the same position before removal.
2. Remove the wheel hub.

Rear Drive Shaft Removal Note

Caution

- **Be careful not to damage the rear differential oil seal.**
- **Be careful not to damage the drive shaft boots and ABS sensor rotor.**

1. Pull the drive shaft toward the wheel side, then remove the drive shaft.

Clip Installation Note

1. Install a new clip onto the joint shaft with the opening facing upward. Ensure that the diameter of the clip does not exceed the specification on installation.
2. After installation, measure the outer diameter. If it exceeds the specification, repeat Steps 1—2 using a new clip.

Clip outer diameter specification
25.2 mm {0.992 in} max.

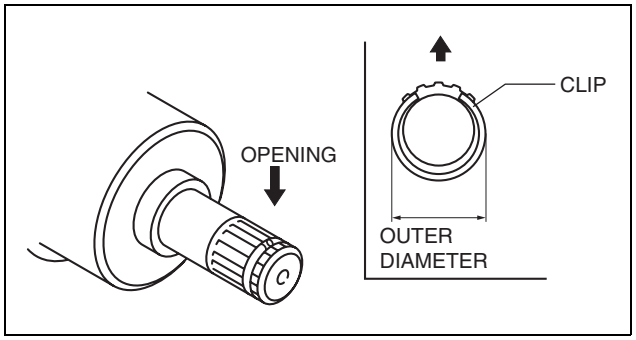

ac5wzw0000257

Locknut Installation Note

1. After tightening the locknut once at a torque of **390 N·m {40 kgf·m, 288 ft·lbf}**, return it temporarily **180 degrees**, then retighten it to a torque of **236—274 N·m {25—27 kgf·m, 175—202 ft·lbf}**.

DRIVE SHAFT

REAR DRIVE SHAFT DISASSEMBLY/ASSEMBLY

id031300800700

1. Disassemble in the order indicated in the table.
2. Assemble in the reverse order of disassembly.

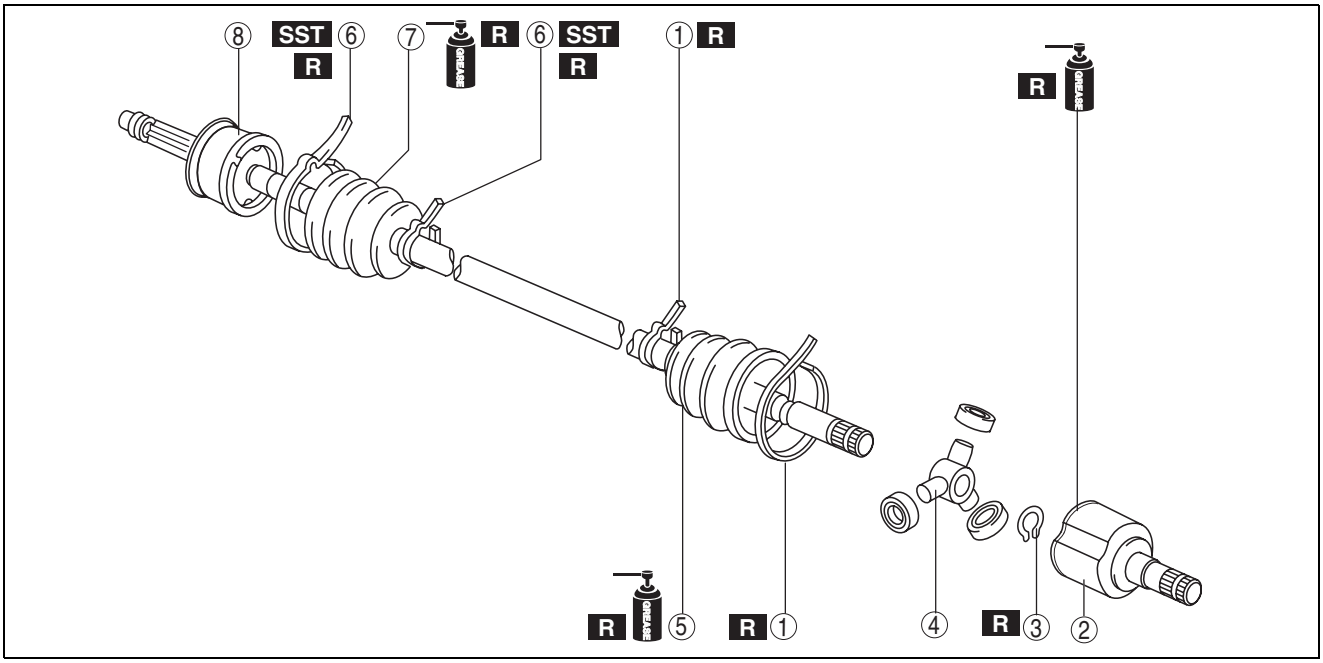

1	Boot band (differential side) (See 03-13-19 Boot Band (Differential Side) Disassembly Note.) (See 03-13-23 Boot Band (Differential Side) Assembly Note.)
2	Outer ring (See 03-13-20 Outer Ring Disassembly Note.) (See 03-13-23 Outer Ring Assembly Note)
3	Snap ring (See 03-13-20 Snap Ring, Tripod Joint Disassembly Note.) (See 03-13-22 Tripod Joint, Snap Ring Assembly Note.)
4	Tripod joint (See 03-13-20 Snap Ring, Tripod Joint Disassembly Note.) (See 03-13-22 Tripod Joint, Snap Ring Assembly Note.)
5	Boot (See 03-13-20 Boot Disassembly Note.) (See 03-13-21 Boot Assembly Note.)
6	Boot band (wheel side) (See 03-13-21 Boot Band (Wheel Side) Disassembly Note.) (See 03-13-21 Boot Band (Wheel Side) Assembly Note.)
7	Boot (See 03-13-20 Boot Disassembly Note.) (See 03-13-21 Boot Assembly Note.)
8	Shaft and ball joint component

Boot Band (Differential Side) Disassembly Note

1. Pry up the boot band at the points indicated in the figure using pliers and remove the band.

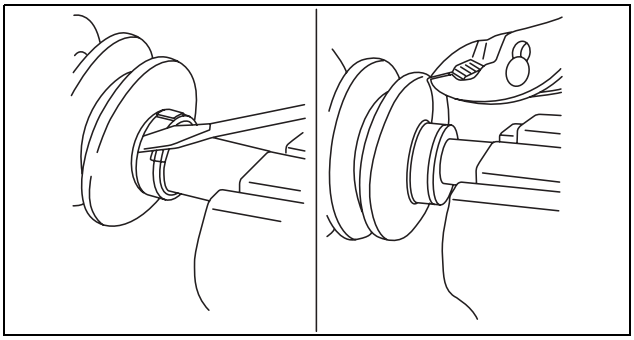

DRIVE SHAFT

Outer Ring Disassembly Note

1. Mark the outer ring and the shaft for proper assembly.
2. Remove the outer ring

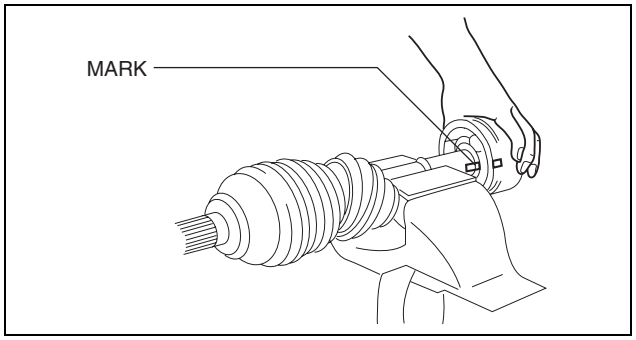

ac5wzw0000257

Snap Ring, Tripod Joint Disassembly Note

1. Place an alignment mark on the shaft and tripod joint.
2. Remove the snap ring using snap ring pliers.
3. Remove the tripod joint from the shaft.

Caution

- **Do not try to remove the tripod joint by hitting it with a hammer. The tripod joint could be damaged.**

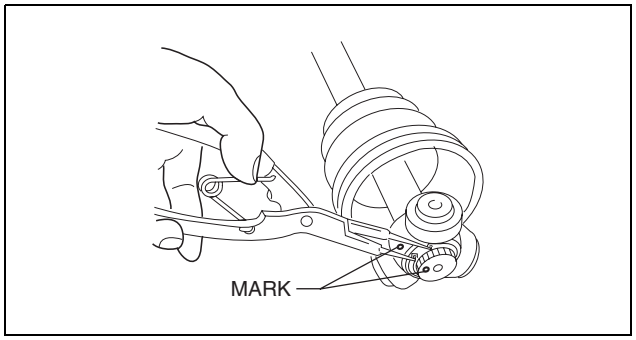

ac5wzw0000257

Boot Disassembly Note

Note

- Remove the wheel side boot only if there is any malfunction.

1. Wrap the shaft splines with tape.
2. Remove the boot.

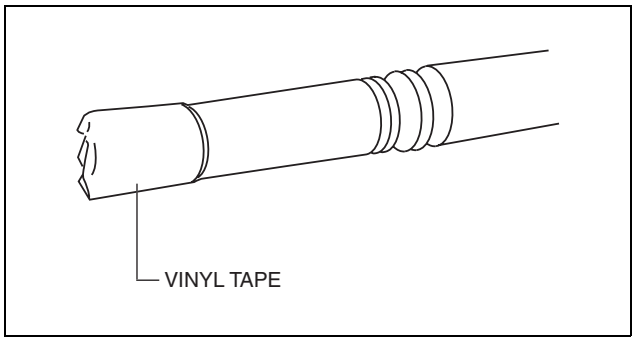

ac5wzw0000257

DRIVE SHAFT

Boot Band (Wheel Side) Disassembly Note

Note
- Remove the boot band only if there is a malfunction.

1. Remove the boot band using end clamp pliers.

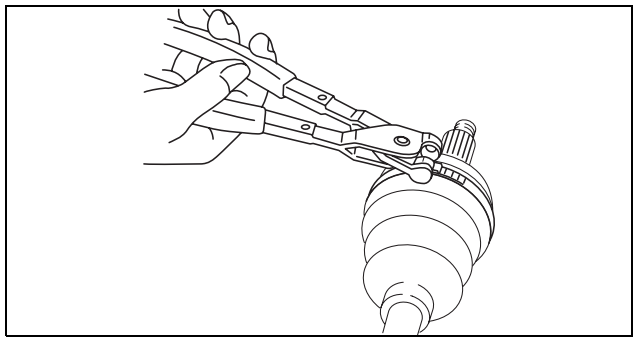
ac5wzw0000258

Boot Assembly Note

Note
- The boot shapes on the wheel side and the differential side are different. Do not install the wrong boot by mistake.

1. Fill the inside of the new dust boot (wheel side) with grease.

Note
- Do not touch the grease with your hand. Apply it from the tube to prevent foreign matter from entering the boot.

Grease amount
40—60 g {1.5—2.1 oz}

2. Install the boot with the drive shaft spline still wrapped with vinyl tape.
3. Remove the vinyl tape.

Boot Band (Wheel Side) Assembly Note
Boot band (small diameter side)

1. Adjust clearance A by turning the adjusting bolt of the **SST**.

Clearance A
2.9 mm {0.11 in}

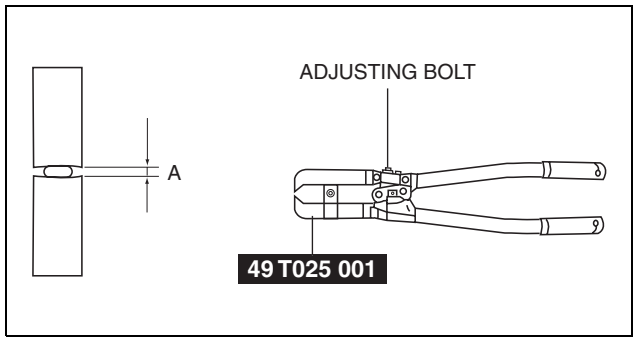

ac5wzw0000258

2. Crimp the wheel side small boot band using the **SST**. Verify that clearance B is within the specification.
   - If clearance B is more than the specification, reduce clearance A of the **SST** and crimp the boot again.
   - If clearance B is less than the specification, replace the boot band, increase clearance A of the **SST**, and crimp the new boot.

Clearance B
2.4—2.8 mm {0.10—0.11 in}

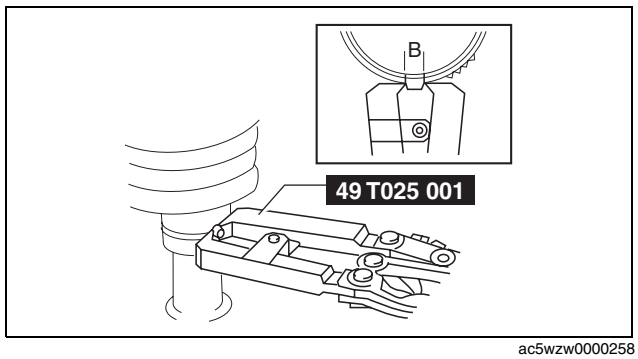

ac5wzw0000258

DRIVE SHAFT

3. Verify that the boot band does not protrude from the boot band installation area.
   - If it does, replace the boot band and repeat Steps 2 and 3.

Boot band (Large diameter side)

1. Adjust clearance C by turning the adjusting bolt of the **SST**.

   Clearance C
   3.2 mm {0.13 in}

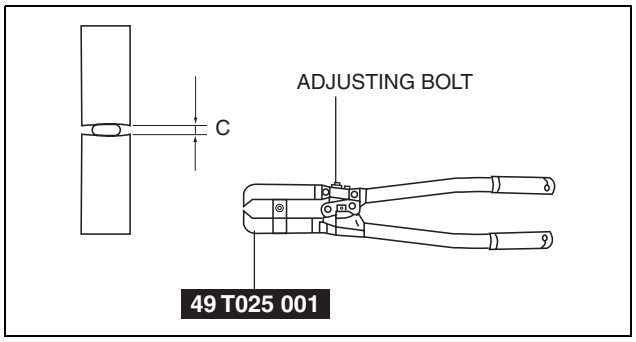

ac5wzw0000258

2. Crimp the wheel side small boot band using the **SST**. Verify that clearance D is within the specification.
   - If clearance B is more than the specification, reduce clearance C of the **SST** and crimp the boot again.
   - If clearance B is less than the specification, replace the boot band, increase clearance C of the **SST**, and crimp the new boot.

   Clearance D
   2.4—2.8 mm {0.10—0.11 in}

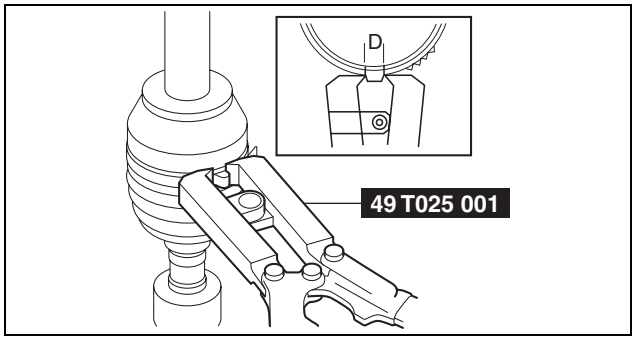

ac5wzw0000258

3. Verify that the boot band does not protrude from the boot band installation area.
   - If it does, replace the boot band and repeat Steps 2 and 3.

Tripod Joint, Snap Ring Assembly Note

1. While aligning the marks on the shaft and the tripod joint, insert the tripod joint using a bar and a hammer.
2. Insert a new snap ring using snap ring pliers.
3. Verify that the snap ring is engaged correctly in the groove of the shaft.

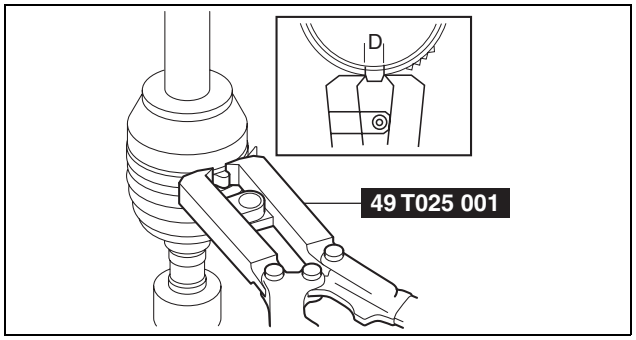

ac5wzw0000258

DRIVE SHAFT

Outer Ring Assembly Note

1. Fill the outer ring and boot (transaxle side) with the specified grease.

   Note
   - Do not touch the grease with your hand. Apply it from the tube to prevent foreign matter from entering the boot.

   Grease amount
   70—90 g {2.5—3.1 oz}

2. Assemble the outer ring.
3. Set the drive shaft to the standard length.

   Rear drive shaft standard length
   LH: 836.8—842.0 mm {32.95—33.14 in}
   RH: 874.8—880.0 mm {34.45—34.64 in}

4. Release any trapped air from the boots by carefully lifting up the small end of each boot with a cloth wrapped screwdriver.

   Note
   - Verify that there is no grease leak while being careful not to damage the boot.
   - If the boot is damaged, it may not be possible to perform the full-length adjustment of the drive shaft.

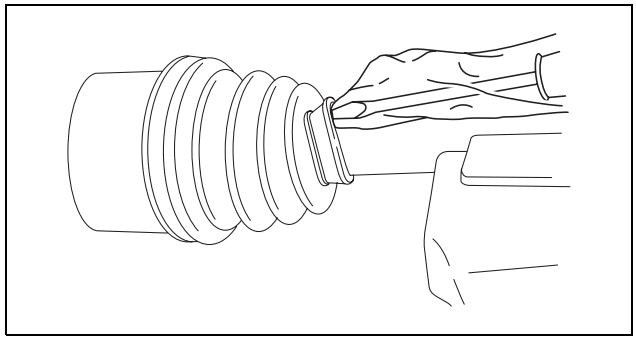
ac5wzw0000258

5. Verify that the drive shaft length is within the specification under atmospheric pressure inside the boot.
   - If not within the specification, repeat from Step 3.

Boot Band (Differential Side) Assembly Note

1. Fold the band in the direction opposite to the forward revolving direction of the drive shaft and use pliers to pull it tight.

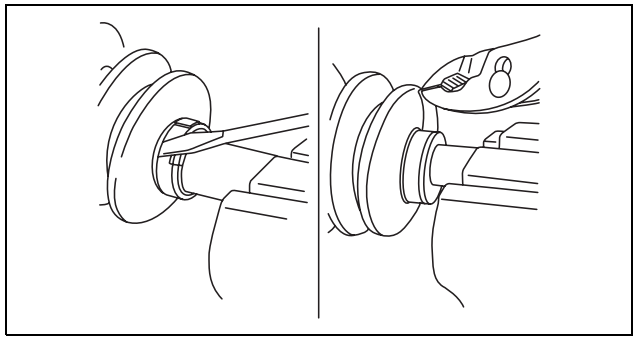
ac5wzw0000258

03-14 DIFFERENTIAL

REAR DIFFERENTIAL
LOCATION INDEX **03-14–1**
DIFFERENTIAL OIL INSPECTION **03-14–2**
DIFFERENTIAL OIL
REPLACEMENT **03-14–2**
OIL SEAL (SIDE GEAR)
REPLACEMENT **03-14–3**
REAR DIFFERENTIAL
REMOVAL/INSTALLATION **03-14–3**
Rear Differential Component
Removal Note **03-14–5**
Rear Differential Mounting
Bracket Installation Note **03-14–5**
REAR DIFFERENTIAL
DISASSEMBLY **03-14–6**
Rear Cover Disassembly Note **03-14–7**
Rear Differential Component
Disassembly Note **03-14–7**
Locknut Disassembly Note **03-14–7**
Drive Pinion Disassembly Note **03-14–8**
Bearing Inner Race (Rear Bearing)
Disassembly Note **03-14–8**
Bearing Outer Race
Disassembly Note **03-14–8**
Ring Gear Disassembly Note **03-14–9**
Side Bearing Inner Race
Disassembly Note **03-14–9**
REAR DIFFERENTIAL ASSEMBLY **03-14–10**
Side Bearing Inner Race
Assembly Note **03-14–11**
Thrust washer Assembly Note **03-14–11**
Ring Gear Assembly Note **03-14–12**
Bearing Outer Race Assembly Note . . . **03-14–12**
Spacer, Inner Race Assembly Note . . . **03-14–12**
Locknut Assembly Note **03-14–13**
Adjust Shim Assembly Note **03-14–13**
Rear Cover Assembly Note **03-14–14**
Oil Seal (Side Gear) Assembly Note . . . **03-14–16**
Oil Seal (Coupling Component)
Assembly Note **03-14–16**
OIL SEAL (COUPLING COMPONENT)
REPLACEMENT **03-14–17**

DIFFERENTIAL

REAR DIFFERENTIAL LOCATION INDEX

id031400800300

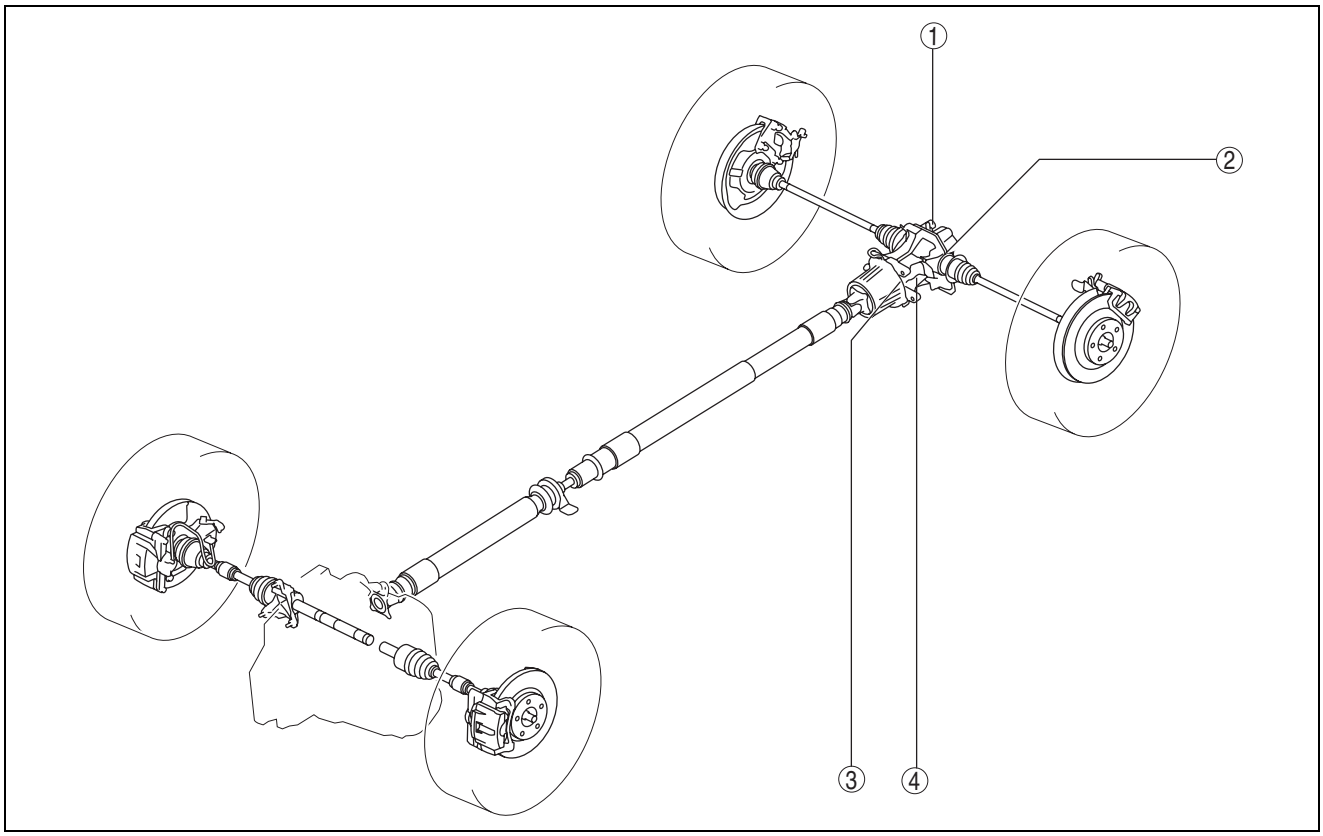

ac5uuw00000287

1	Differential oil (See 03-14-2 DIFFERENTIAL OIL INSPECTION.) (See 03-14-2 DIFFERENTIAL OIL REPLACEMENT.)

2	Oil seal (side gear) (See 03-14-3 OIL SEAL (SIDE GEAR) REPLACEMENT.)
3	Oil seal (coupling component) (See 03-14-17 OIL SEAL (COUPLING COMPONENT) REPLACEMENT.)

DIFFERENTIAL

4	Rear differential (See 03-14-3 REAR DIFFERENTIAL REMOVAL/ INSTALLATION.) (See 03-14-6 REAR DIFFERENTIAL DISASSEMBLY.) (See 03-14-10 REAR DIFFERENTIAL ASSEMBLY.)

DIFFERENTIAL OIL INSPECTION

id031400800100

1. Place the vehicle on level ground.
2. Remove the filler plug and washer.
3. Verify that the oil is at the brim of the filler plug hole.
4. If it is low, add the specified oil.
5. Install a new washer and the filler plug, and tighten.

Tightening torque
40—53 N·m {4.1—5.4 kgf·m, 30—39 ft·lbf}

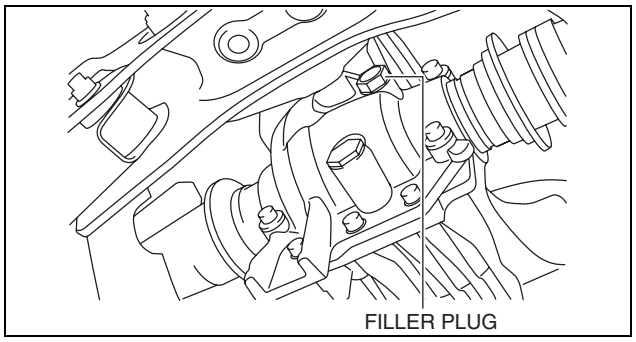

ac5uuw00000285

DIFFERENTIAL OIL REPLACEMENT

id031400800200

1. Place the vehicle on level ground.
2. Remove the filler plug.
3. Remove the drain plug and drain the differential oil into a container.
4. Install a new washer and the drain plug, and tighten.

Tightening torque
40—53 N·m {4.1—5.4 kgf·m, 30—39 ft·lbf}

5. Add the specified differential oil from the filler plug until the level reaches the brim of the plug hole.

Rear differential oil
Specified oil grade: API service GL-5
Specified oil viscosity: SAE 80W-90
Capacity (approx. quantity): 0.45 L {0.48 US qt, 0.40 Imp qt}

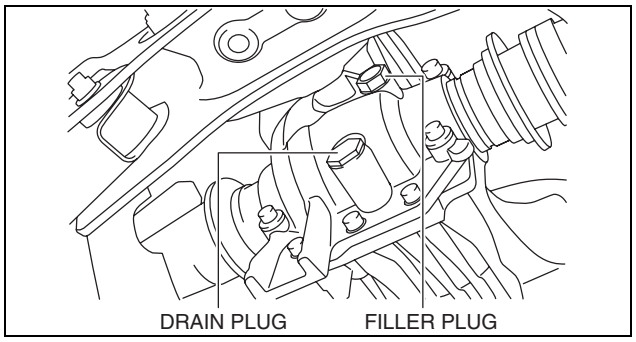

ac5uuw00000286

6. After filling with differential oil, perform oil level inspection.
7. Install a new washer and the drain plug, and tighten.

Tightening torque
40—53 N·m {4.1—5.4 kgf·m, 30—39 ft·lbf}

DIFFERENTIAL

OIL SEAL (SIDE GEAR) REPLACEMENT

id031400800700

1. Remove the drain plug and the drain differential oil into a container.
2. Install a new washer and the drain plug, and tighten.
3. Remove the rear drive shaft. (See 03-13-17 REAR DRIVE SHAFT REMOVAL/INSTALLATION.)
4. Remove the clip from the drive shaft.

Caution
- **Wrap the end of a screwdriver with cloth to prevent scratches to the inside of the differential casing.**

5. Remove the oil seal from the differential casing using a screwdriver.
6. Apply differential oil to the new oil seal lip.

Note
- Install the oil seal at a straight angle.

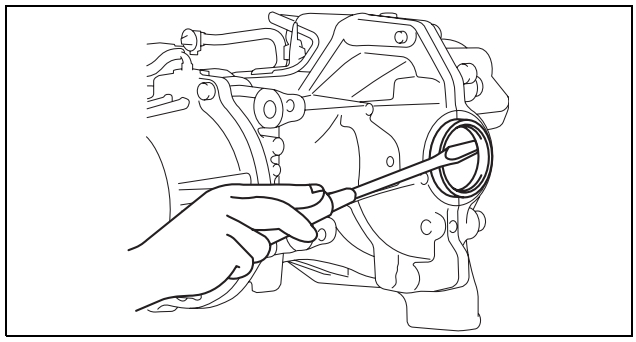
ac5uuw00000304

7. Install the new oil seal to the differential carrier using the **SST**.
8. After installing the new clip onto the drive shaft, insert the drive shaft into the differential. (See 03-13-17 REAR DRIVE SHAFT REMOVAL/INSTALLATION.)
9. Verify that the drive shaft cannot be pulled out.
10. Add the specified differential oil.
11. After adding the oil, perform an oil level inspection. (See 03-14-2 DIFFERENTIAL OIL INSPECTION.)
12. Install a new washer and the oil filler plug, and tighten.

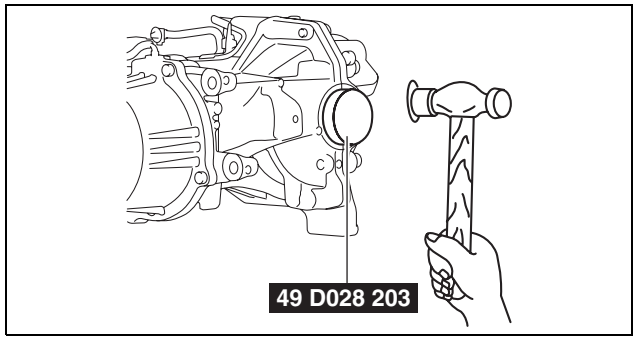

ac5uuw00000305

Tightening torque
40—53 N·m {4.1—5.4 kgf·m, 30—39 ft·lbf}

REAR DIFFERENTIAL REMOVAL/INSTALLATION

id031400800400

Warning
- **When replacing the coupling component, read the special character string before installing a new coupling component and write it to the 4WD control module after replacement. The special character string is indicated in the two locations shown in the figure.**

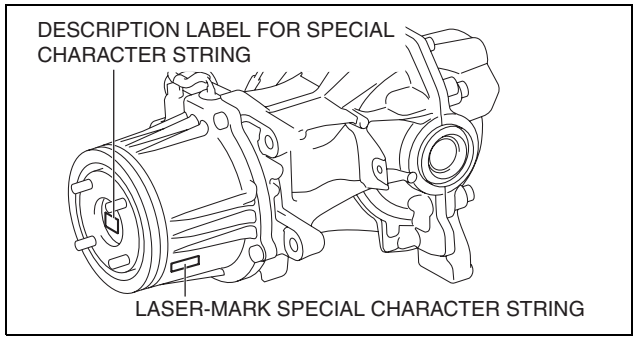

ac5wzw0000260

Caution
- **Performing the following procedures without first removing the ABS wheel-speed sensor may possibly cause an open circuit in the wiring harness if it is pulled by mistake. Before performing the following procedures, disconnect the ABS wheel-speed sensor connector (body side) and fix the wiring harness to an appropriate place where it will not be pulled by mistake while servicing the vehicle.**

1. Drain the rear differential oil into a container.
2. Remove the propeller shaft. (See 03-15-2 PROPELLER SHAFT REMOVAL/INSTALLATION.)

DIFFERENTIAL

3. Remove the TWC. (See 01-15A-2 EXHAUST SYSTEM REMOVAL/INSTALLATION [SKYACTIV-G 2.0].) (See 01-15B-1 EXHAUST SYSTEM REMOVAL/INSTALLATION [SKYACTIV-D 2.2].)
4. Remove the rear drive shaft. (See 03-13-17 REAR DRIVE SHAFT REMOVAL/INSTALLATION.)
5. Remove in the order indicated in the table.
6. Install in the reverse order of removal.
7. Add the specified rear differential oil. (See 03-14-2 DIFFERENTIAL OIL REPLACEMENT.)
8. Inspect the rear wheel alignment and adjust it if necessary. (See 02-11-3 REAR WHEEL ALIGNMENT.)

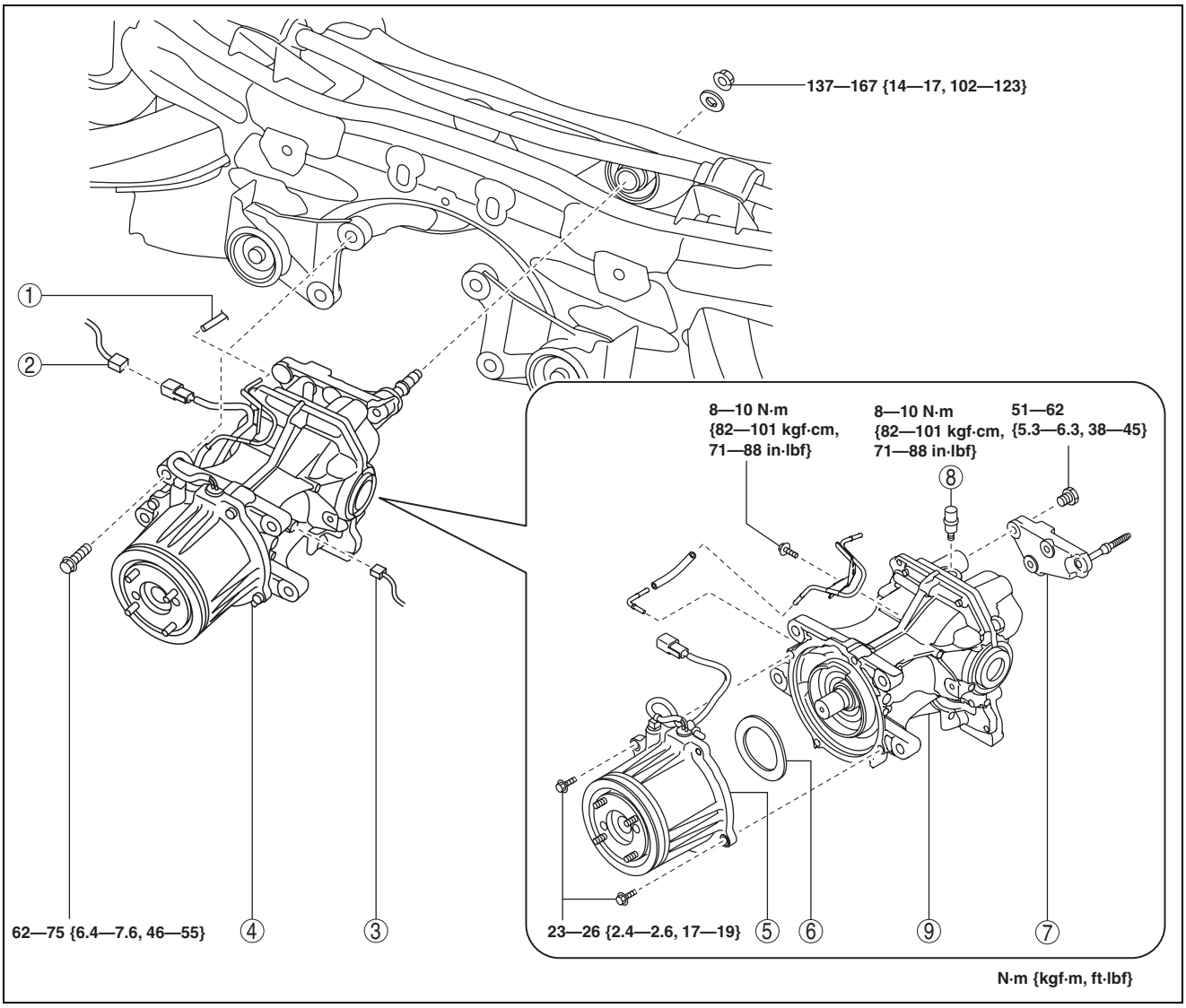

ac5wzw0000260

1	Hose
2	Connector (4WD solenoid)
3	Connector (differential oil temperature sensor)
4	Rear differential component (See 03-14-5 Rear Differential Component Removal Note.)
5	Coupling component

6	Washer
7	Rear differential mounting bracket (See 03-14-5 Rear Differential Mounting Bracket Installation Note.)
8	Breather
9	Rear differential

DIFFERENTIAL

Rear Differential Component Removal Note

1. Support the rear differential using a jack.

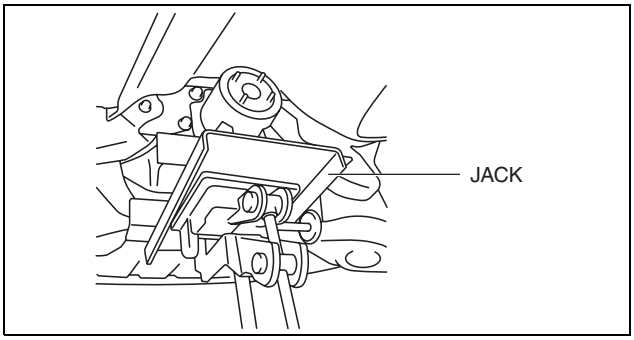

ac5wzw0000260

2. Loosen the differential mounting bracket bolt and rotate the bracket as shown in the figure.

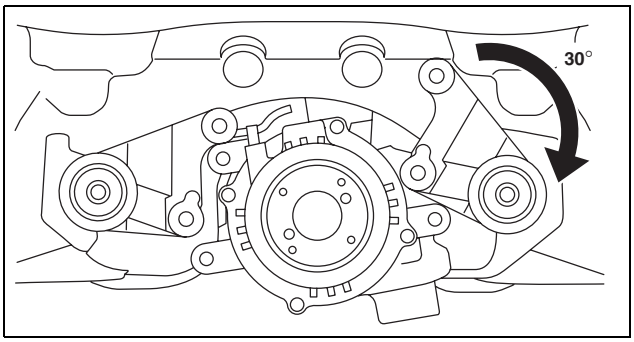

ac5wzw0000260

3. Rotate the rear differential as shown in the figure, and then remove the rear differential.

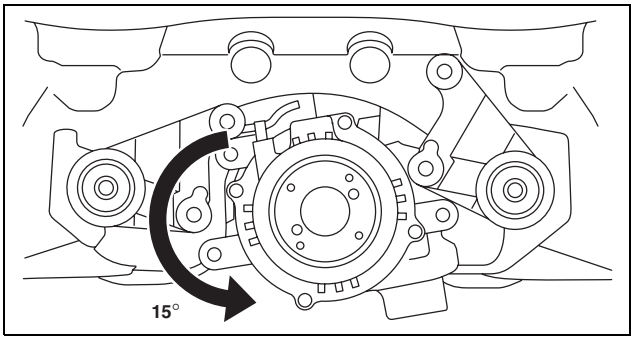

ac5wzw0000260

Rear Differential Mounting Bracket Installation Note

Caution

- **Retighten the rear differential mounting bracket stud bolt when the rear differential mounting bracket nut is loosened.**

1. Tighten the rear differential mounting bracket stud bolt.

Tightening torque
30—37 N·m {3.1—3.7 kgf·m, 23—27 ft·lbf}

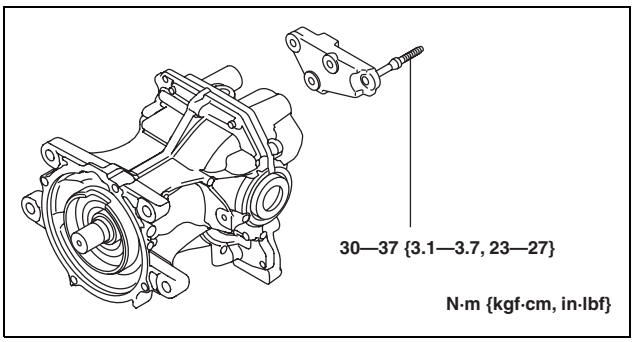

ac5wzw0000260

DIFFERENTIAL

REAR DIFFERENTIAL DISASSEMBLY

id031400800500

Warning

- **The engine stand is equipped with a self-lock mechanism, however, if the rear differential is in a tilted condition, the self-lock mechanism could become inoperative. If the rear differential unexpectedly rotates it could cause injury, therefore do not maintain the rear differential in a tilted condition. When turning the rear differential, grasp the rotation handle firmly.**

1. Disassemble in the order indicated in the table.

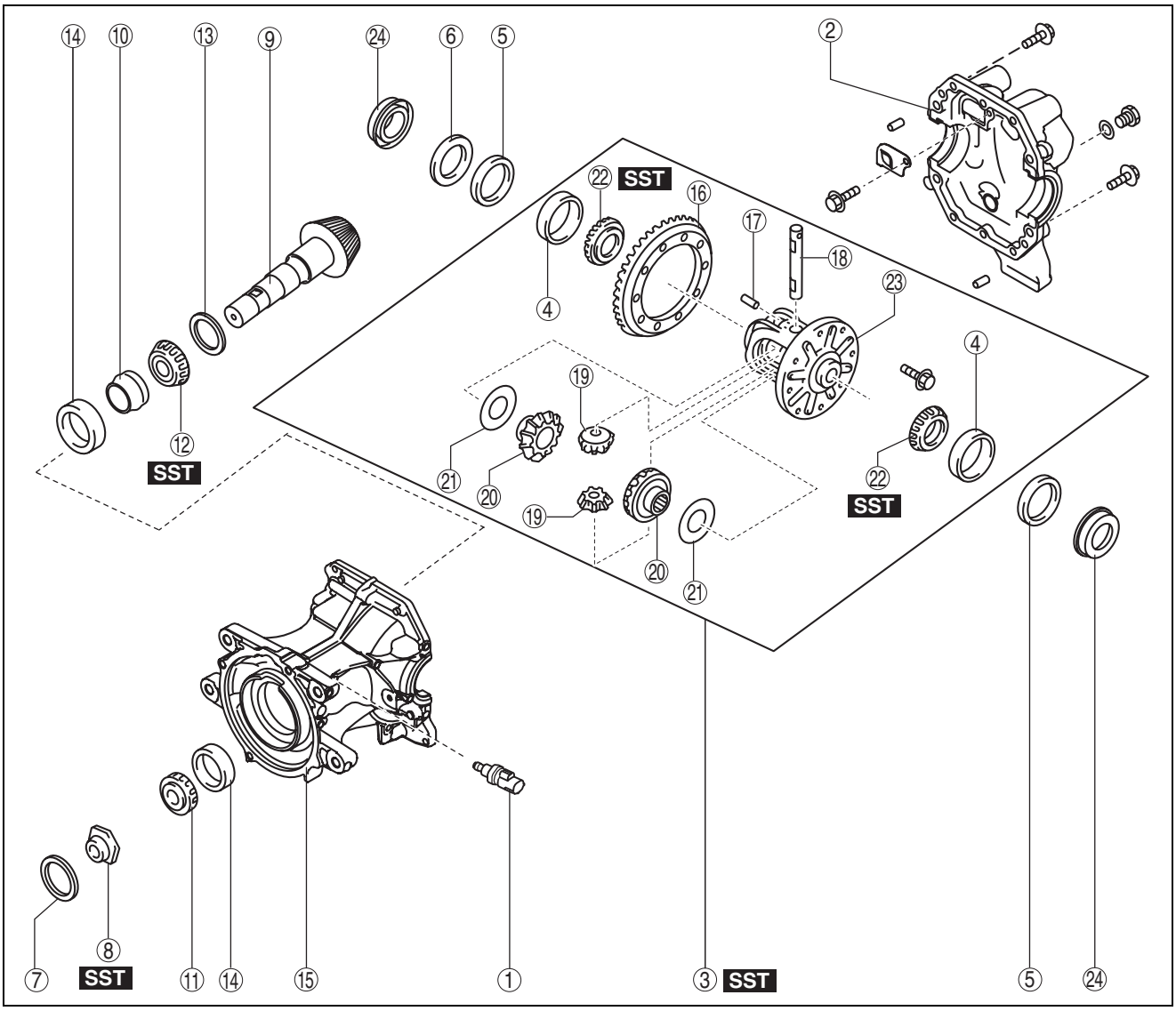

ac5wzw0000260

1	Differential oil temperature sensor
2	Rear cover (See 03-14-7 Rear Cover Disassembly Note.)
3	Rear differential component (See 03-14-7 Rear Differential Component Disassembly Note.)
4	Side bearing outer race
5	Adjusting shim
6	Spacer
7	Oil seal (Coupling component)
8	Locknut (See 03-14-7 Locknut Disassembly Note.)
9	Drive pinion (See 03-14-8 Drive Pinion Disassembly Note.)

10	Collapsible spacer
11	Bearing inner race (front bearing)
12	Bearing inner race (rear bearing) (See 03-14-8 Bearing Inner Race (Rear Bearing) Disassembly Note.)
13	Spacer
14	Bearing outer race (See 03-14-8 Bearing Outer Race Disassembly Note.)
15	Differential carrier
16	Ring gear (See 03-14-9 Ring Gear Disassembly Note.)
17	Pin
18	Pinion shaft

DIFFERENTIAL

19	Pinion gear
20	Side gear
21	Thrust washer

22	Side bearing inner race (See 03-14-9 Side Bearing Inner Race Disassembly Note.)
23	Gear case
24	Oil seal (side gear)

Rear Cover Disassembly Note

1. Install the **SSTs** to the engine stand.

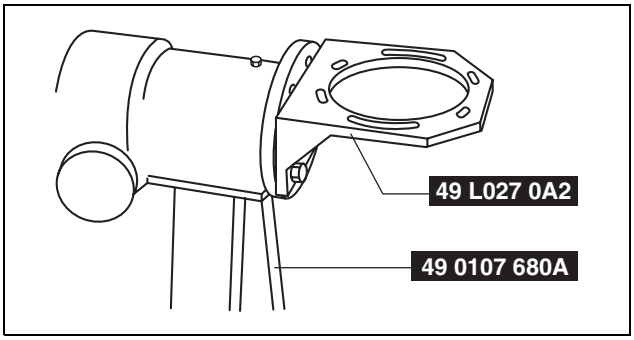

ac5uuw00000289

2. Install the rear differential to the **SSTs**.
3. Remove the rear cover.

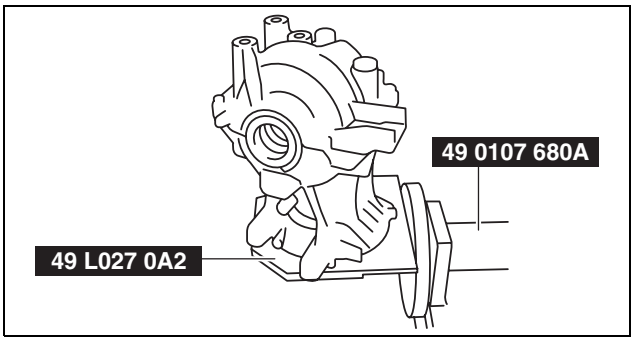

ac5uuw00000290

Rear Differential Component Disassembly Note

1. If the rear differential component cannot be removed by hand, remove the rear differential component using the **SSTs**.
2. Mark or otherwise distinguish between the removed left and right adjusting shims, spacers and side bearing outer races so that they are not mixed up at the time of reassembly.

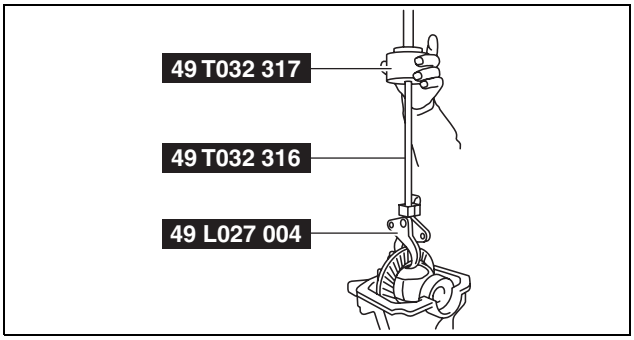

ac5uuw00000291

Locknut Disassembly Note

1. Remove the locknut using the **SSTs**.

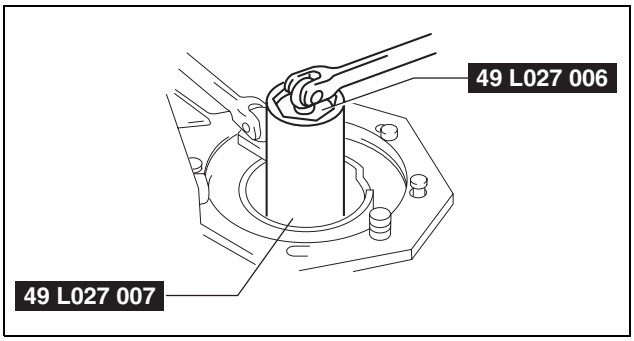

ac5uuw00000292

DIFFERENTIAL

Drive Pinion Disassembly Note

1. Remove the drive pinion by lightly tapping with a copper hammer.

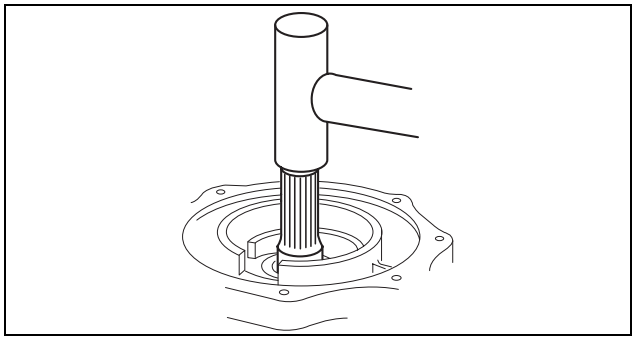

acxuuw00004574

Bearing Inner Race (Rear Bearing) Disassembly Note

1. Remove the bearing inner races (rear bearing) using the **SST** and a press.

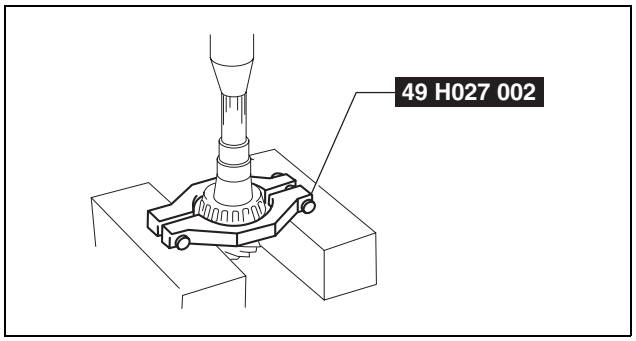

ac5uuw00000293

Bearing Outer Race Disassembly Note

1. Remove the bearing outer races using the 2 grooves in the carrier and alternately tapping the sides of the races with a brass bar.

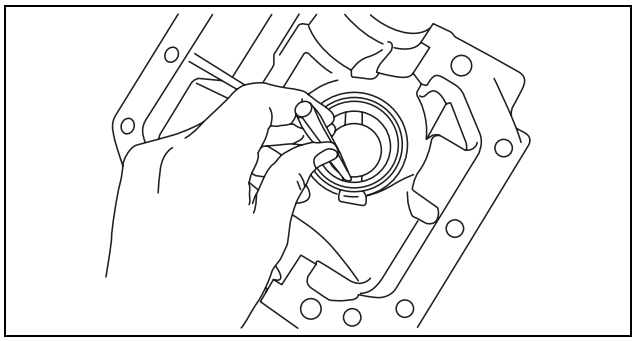

ac5uuw00000294

DIFFERENTIAL

Ring Gear Disassembly Note

1. Secure the gear case in a vice and remove the bolts.
2. Lightly tap around the ring gear using a plastic hammer to remove the ring gear from the gear case.

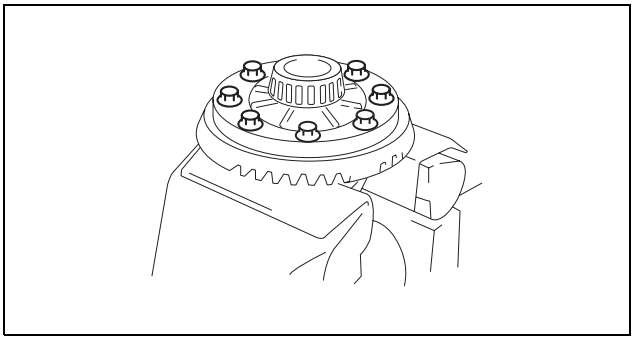

acxuuw00003143

Side Bearing Inner Race Disassembly Note

Note

- Mark or otherwise distinguish between the left and right side bearings so that they are not mixed up at the time of reassembly.

1. Remove the side bearing inner races from the gear case using the **SST.**

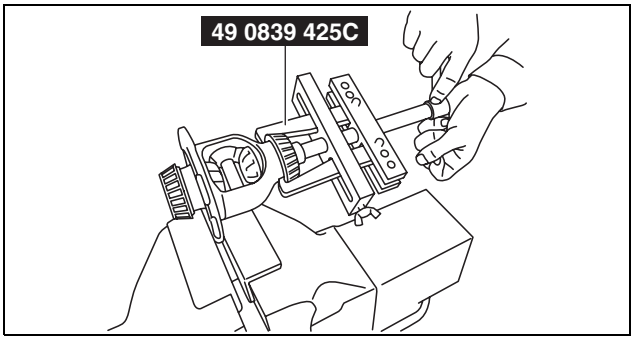

ac5uuw00000295

DIFFERENTIAL

REAR DIFFERENTIAL ASSEMBLY

id031400800600

Warning

- **The engine stand is equipped with a self-lock mechanism, however, if the rear differential is in a tilted condition, the self-lock mechanism could become inoperative. If the rear differential unexpectedly rotates it could cause injury, therefore do not maintain the rear differential in a tilted condition. When turning the rear differential, grasp the rotation handle firmly.**

Caution

- **Clean away the old sealant before applying the new sealant.**
- **Install the rear cover before the applied sealant starts to harden.**
- **Allow the sealant to set at least 30 minutes after installation before filling the differential with the specified oil.**

1. Assemble in the order indicated in the table.

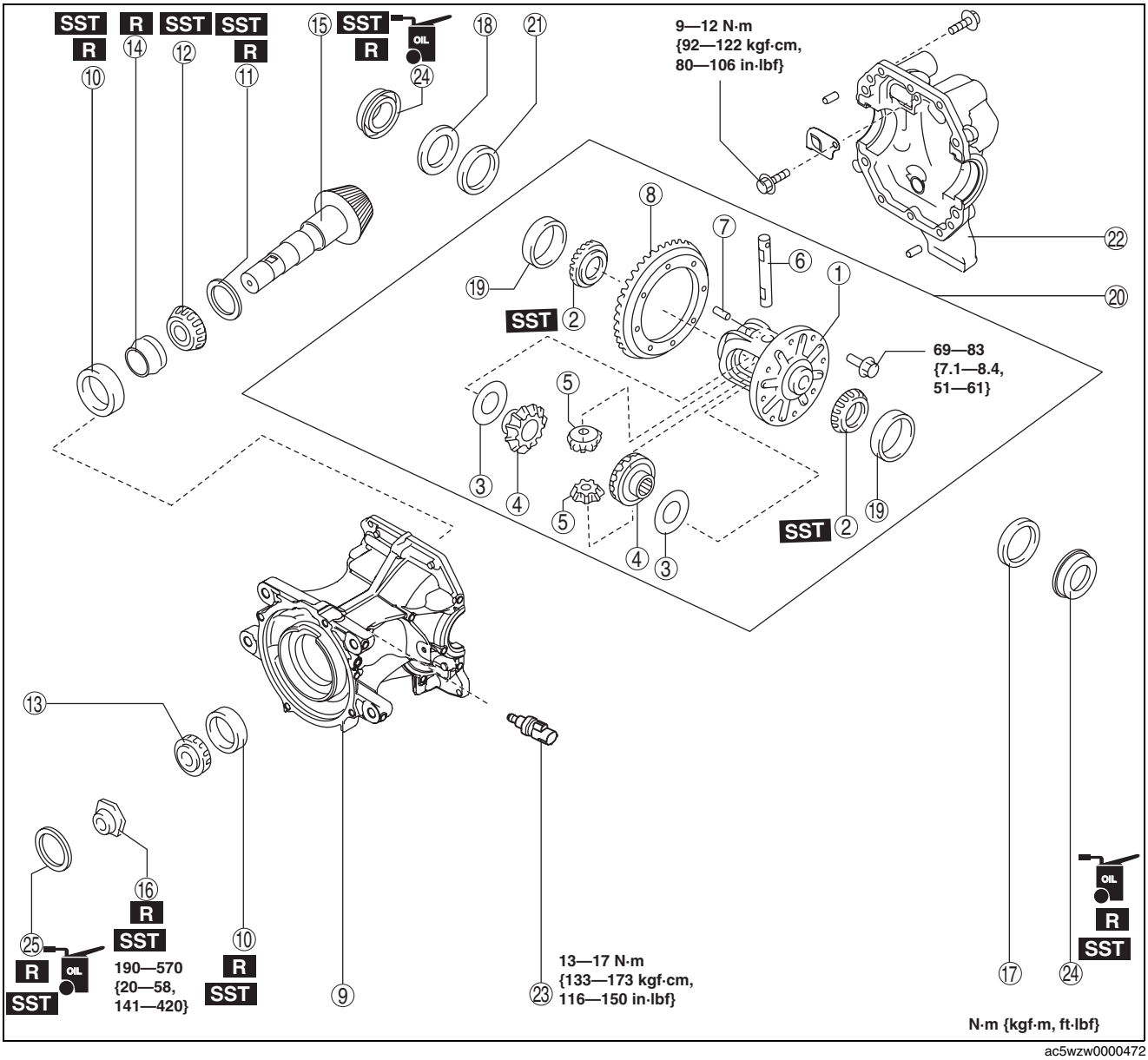

ac5wzw0000472

1	Gear case
2	Side bearing inner race (See 03-14-11 Side Bearing Inner Race Assembly Note.)
3	Thrust washer (See 03-14-12 Ring Gear Assembly Note.)

4	Side gear
5	Pinion gear
6	Pinion shaft
7	Pin
8	Ring gear (See 03-14-12 Bearing Outer Race Assembly Note.)

DIFFERENTIAL

9	Differential carrier
10	Bearing outer race (See 03-14-12 Bearing Outer Race Assembly Note.)
11	Spacer (See 03-14-12 Spacer, Inner Race Assembly Note.)
12	Bearing inner race (rear) (See 03-14-12 Spacer, Inner Race Assembly Note.)
13	Bearing inner race (front)
14	Collapsible spacer
15	Drive pinion
16	Locknut (See 03-14-13 Locknut Assembly Note.)
17	Adjusting shim (LH) (See 03-14-13 Adjust Shim Assembly Note.)
18	Spacer
19	Side bearing outer race
20	Rear differential component
21	Adjusting shim (RH) (See 03-14-13 Adjust Shim Assembly Note.)
22	Rear cover (See 03-14-14 Rear Cover Assembly Note.)
23	Differential oil temperature sensor
24	Oil seal (side gear) (See 03-14-16 Oil Seal (Side Gear) Assembly Note.)
25	Oil seal (Coupling component) (See 03-14-16 Oil Seal (Side Gear) Assembly Note.)

03

Side Bearing Inner Race Assembly Note

Caution
- **Do not mix up the left and right side bearing inner races.**

1. Press the side bearing inner races into the gear case using the **SSTs**.

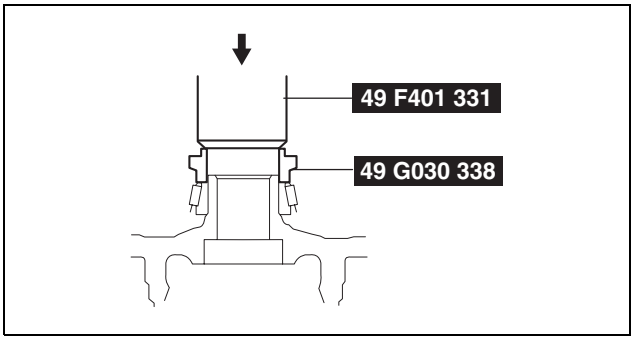

ac5uuw00000297

Thrust washer Assembly Note

1. Assemble the side gears, thrust washers and pinion gears to the gear case, then assemble the knock pin.
2. After assembling the knock pin, make a crimp so that the pin will not come out of the gear case.
3. Set a dial gauge to the pinion gear as indicated in the figure.
4. Secure one of the side gears.
5. Move the pinion gear and measure the backlash at the end of the pinion gear.
   - If the backlash exceeds the standard, use the thrust washers to adjust.

Rear differential backlash of pinion gear and side gear
0.1 mm {0.004 in} or less

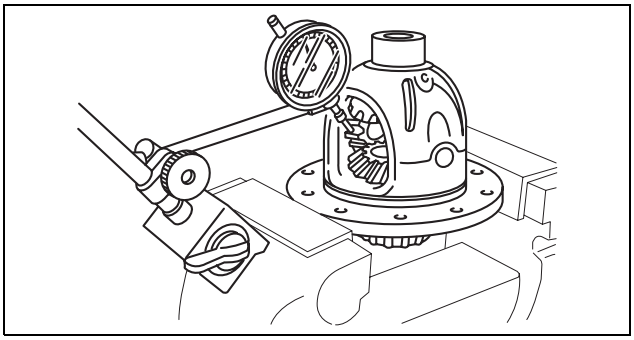
ac5uuw00000872

Thrust washer thickness

Identification mark	Thickness
9	0.90 mm {0.035 in}
95	0.95 mm {0.037 in}
0	1.00 mm {0.0394 in}
05	1.05 mm {0.0413 in}
1	1.10 mm {0.0433 in}

DIFFERENTIAL

Ring Gear Assembly Note

1. Align the marks placed on the ring gear case at the time of disassembly and tighten the bolts in diagonal order.

   Tightening torque
   69—83 N·m {7.1—8.4 kgf·m, 51—61 ft·lbf}

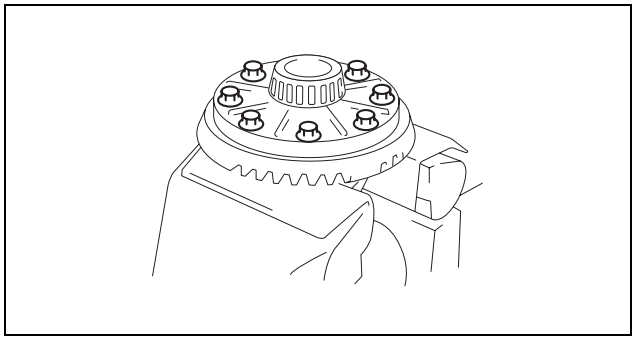

acxuuw00003149

Bearing Outer Race Assembly Note

1. Press in the bearing outer race using the **SSTs** and a press.

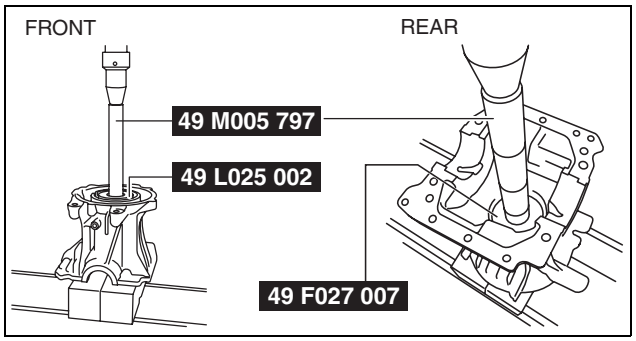

ac5uuw00000873

Spacer, Inner Race Assembly Note

1. Install a new spacer of the same size as the originally installed spacer.

Spacer thickness

Identification mark	Thickness (mm {in})	Identification mark	Thickness (mm {in})
08	3.08 {0.1213}	29	3.29 {0.1295}
09	3.095 {0.1219}	30	3.305 {0.1301}
11	3.11 {0.1224}	32	3.32 {0.1307}
12	3.125 {0.1230}	33	3.335 {0.1313}
14	3.14 {0.1236}	35	3.35 {0.1319}
15	3.155 {0.1242}	36	3.365 {0.1325}
17	3.17 {0.1248}	38	3.38 {0.1331}
18	3.185 {0.1254}	39	3.395 {0.1337}
20	3.20 {0.1260}	41	3.41 {0.1343}
21	3.215 {0.1266}	42	3.425 {0.1348}
23	3.23 {0.1272}	44	3.44 {0.1354}
24	3.245 {0.1278}	45	3.455 {0.1360}
26	3.26 {0.1283}	47	3.47 {0.1366}
27	3.275 {0.1289}	—	—

2. Press the bearing inner race (rear bearing) into the drive pinion using the **SSTs** and a press.

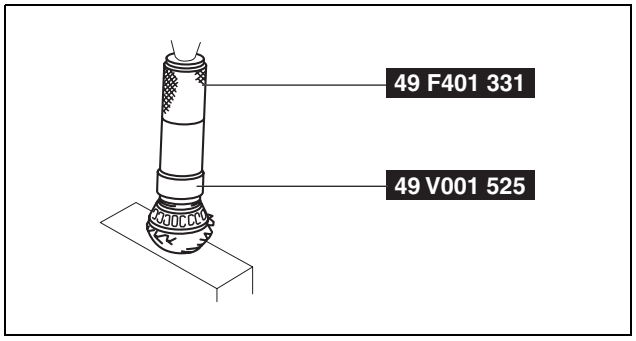

ac5uuw00000299

DIFFERENTIAL

Locknut Assembly Note
Drive pinion preload adjustment

1. Apply differential oil to a new locknut.
2. Assemble a new collapsible spacer, bearing inner race (front bearing), spacer and locknut to the drive pinion, and temporarily tighten the locknut.
3. Turn the serrated part of the drive pinion by hand to seat the bearing.
4. Tighten the locknut temporarily tightened in Step 1 from the lower limit of the specified tightening torque using the **SSTs**, and make this the specified preload.
   - If the specified preload cannot be obtained within the specified tightening torque, replace the collapsible spacer and inspect again.

   Tightening torque
   190—570 N·m {20—58 kgf·m, 141—420 ft·lbf}

   Rear differential drive pinion preload
   0.9—1.6 N·m {9.2—16 kgf·cm, 8.0—14 in·lbf}

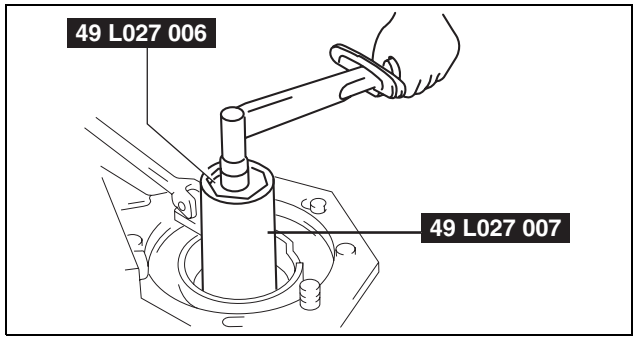

ac5uuw00000300

5. Crimp the locknut using a chisel and hammer.

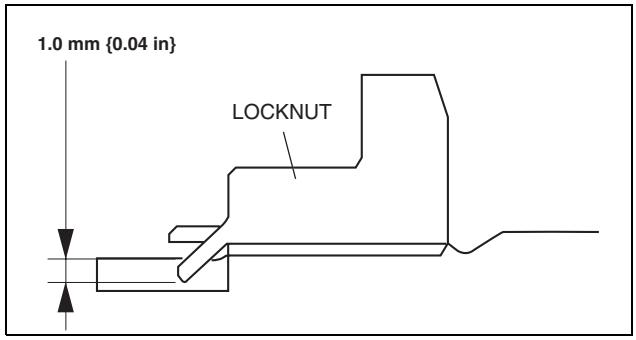

acxuuw00003157

Adjust Shim Assembly Note

1. Assemble the differential carrier to the **SSTs**.
2. Assemble the spacer to the differential carrier.
3. Stack the side bearing outer race and gear case component on the surface plate as indicated in the figure, and measure the height using a caliper and a ruler. This is value A.

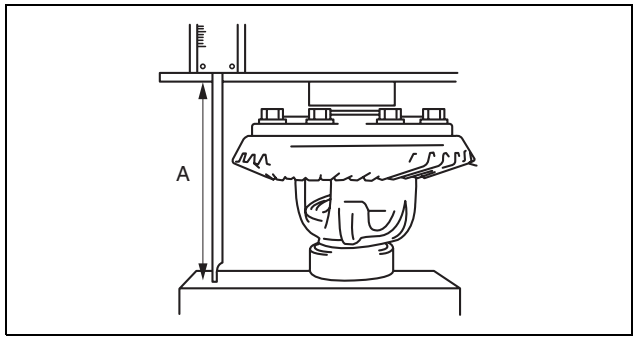

acxuuw00003158

4. Measure the width of the installed differential in the differential carrier with the spacer installed. This is value B.
5. The combined thickness of the left and right adjusting shims is obtained by the following formula.
   C_1 = B – A + 0.16 mm {0.0063 in}
   C_2 = B – A + 0.25 mm {0.0098 in}
6. If the combined thickness of the previously installed adjusting shims is between C1 and C2, use the shims as they are.
7. If the combined thickness of the previously installed adjusting shims is not between C1 and C2, or if the adjusting shims have to be replaced, select two appropriate adjusting shims from the table below.

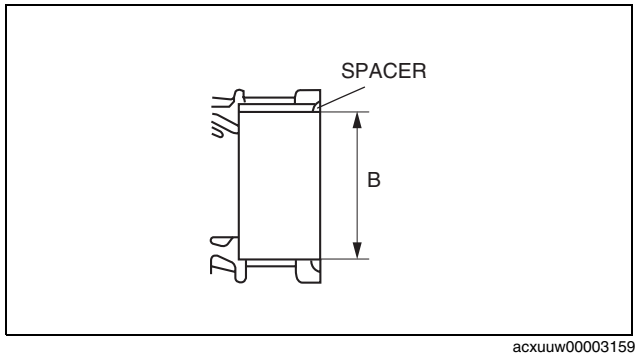

acxuuw00003159

DIFFERENTIAL

Adjusting shim thickness

Identification mark	Thickness (mm {in})	Identification mark	Thickness (mm {in})
339	3.39{0.133}	393	3.93 {0.155}
342	3.42 {0.135}	396	3.96 {0.156}
345	3.45 {0.136}	399	3.99 {0.157}
348	3.48 {0.13}	402	4.02 {0.158}
351	3.51 {0.138}	405	4.05 {0.159}
354	3.54 {0.139}	408	4.08 {0.161}
357	3.57 {0.141}	411	4.11 {0.162}
360	3.60 {0.142}	414	4.14 {0.163}
363	3.63 {0.143}	417	4.17 {0.164}
366	3.66 {0.144}	420	4.20 {0.165}
369	3.69 {0.145}	423	4.23 {0.167}
372	3.72 {0.146}	426	4.26 {0.168}
375	3.75 {0.148}	429	4.29 {0.169}
378	3.78 {0.149}	432	4.32 {0.170}
381	3.81 {0.150}	435	4.35 {0.171}
384	3.84 {0.151}	438	4.38 {0.172}
387	3.87 {0.152}	441	4.41 {0.174}
390	3.90 {0.154}	—	—

Caution
- **If adjusting shims are to be reused, do not mix up the left and right shims.**
- **Do not mix up the left and right side bearing outer races and spacers.**

8. Assemble the differential and bearing outer race to the differential carrier.
9. Tap the selected adjusting shim between the spacer and the bearing race with a plastic hammer.

Rear Cover Assembly Note

1. Clean the alignment surface of the carrier and rear cover.
2. Apply pressure to the case using a press and install the rear cover using the **SSTs** (49 B032 335A) as shown in the figure.

Caution
- **Do not apply pressure of 2 t or more.**

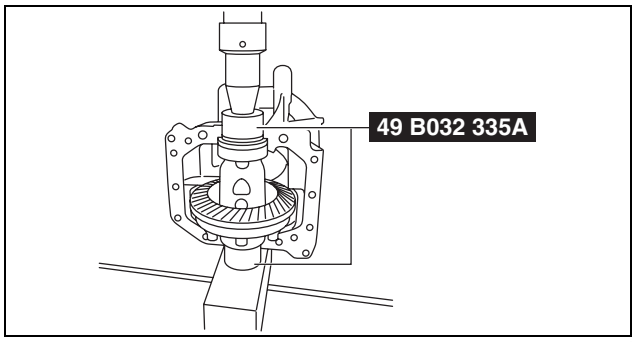

ac5uuw00000874

3. Install the bolts with the specified torque as shown in the figure.

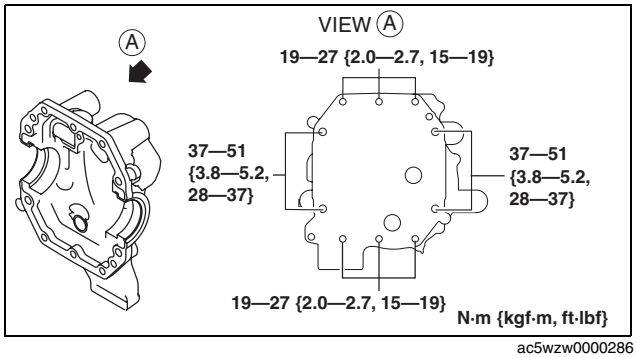

ac5wzw0000286

DIFFERENTIAL

4. Install the commercially-available tool (vise clamp) to the drive pinion shaft and measure **100 mm {3.94 in}** of backlash from the center of the shaft axle.

   Rear differential backlash of drive pinion and ring gear
   Standard: 0.13—0.21 mm {0.0052—0.0082 in}
   Minimum value: 0.07 mm {0.003 in}

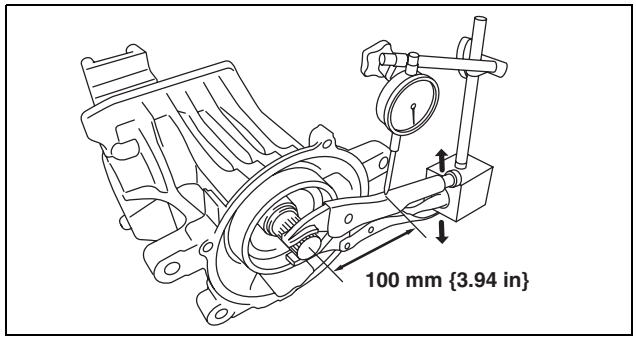

ac5uuw00001706

5. If the backlash is not within the specification, adjust the gear case component by moving it in the axial direction.

   Note
   - When moving the gear case component in the axial direction, replace the adjusting shims. If the adjusting shim on the right side is replaced with one that is **0.05 mm {0.002 in}** thicker, replace the one on the left with one that is **0.05 mm {0.002 in}** thinner.

6. Inspect the drive pinion and ring gear teeth contact points.
   (1) Coat both surfaces of the ring gear uniformly with a thin red lead coating.
   (2) While rotating the ring gear back and forth by hand, rotate the drive pinion several times and inspect the tooth contact.
   (3) Inspect the tooth contacts in four locations around the ring gear, and check that the tooth contacts showing the red lead coating are the same as the pattern indicated in the figure.
      - If the tooth contact is good, wipe off the red lead coating.
      - If it is not good, adjust the pinion height, then adjust the backlash.

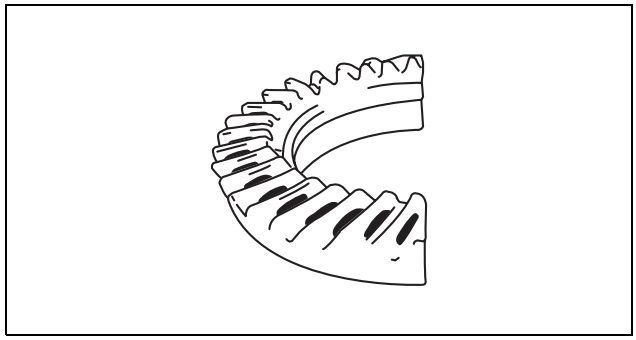
acxuuw00003162

   (4) If toe and flank contact appears as shown in the figure, replace the spacer with a thinner one, and move the drive pinion outward.

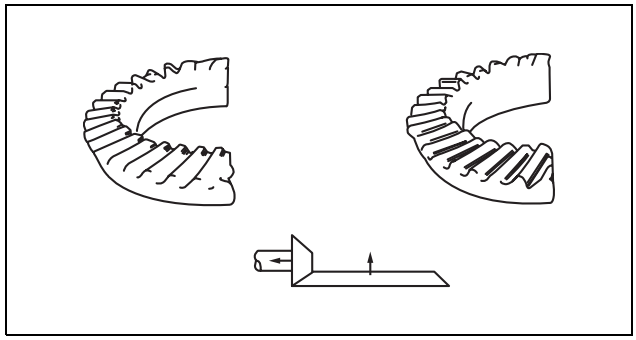
acxuuw00003163

   (5) If heel and face contact appears as indicated in the figure, replace the spacer with a thicker one and move the drive the pinion inward.

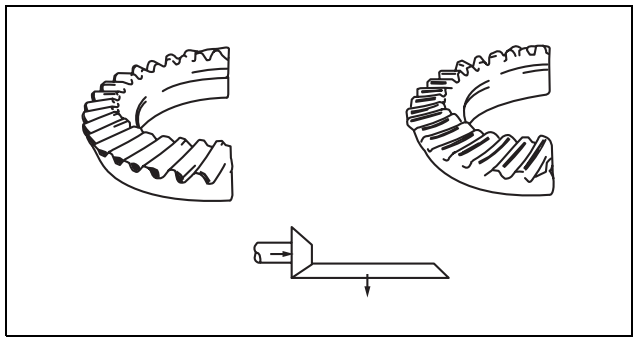
acxuuw00003164

7. If the backlash is within the specification and the tooth contact is correct, install the rear cover.

   Caution
   - **Clean away the old sealant before applying the new sealant.**
   - **Install the rear cover before the applied sealant starts to harden.**
   - **Allow the sealant to set at least 30 minutes after installation before filling the differential with the specified oil.**

8. Clean the alignment surface of the carrier and rear cover, and apply a thin coat of sealant.

DIFFERENTIAL

9. Apply pressure to the case using a press and install the rear cover using the **SSTs** (49 B032 335A) as shown in the figure.

Caution
- **Do not apply pressure of 2 t or more.**

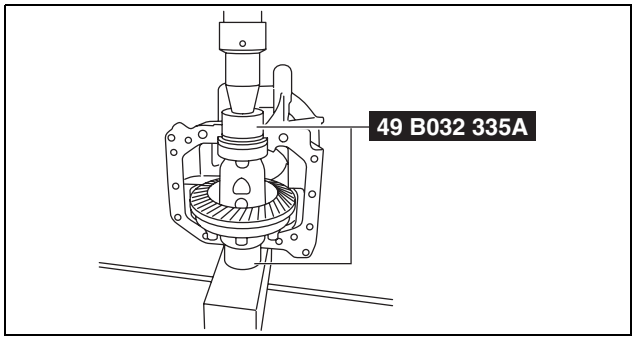

ac5uuw00000874

10. Install the bolts with the specified torque as shown in the figure.

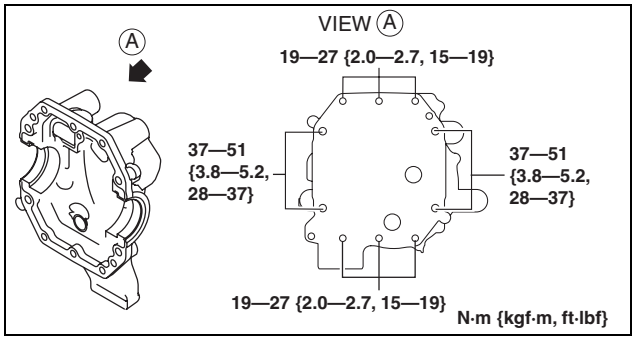

ac5wzw0000286

Oil Seal (Side Gear) Assembly Note
1. Apply differential oil to the new oil seal lip.
2. Assemble the oil seal using the **SST**.

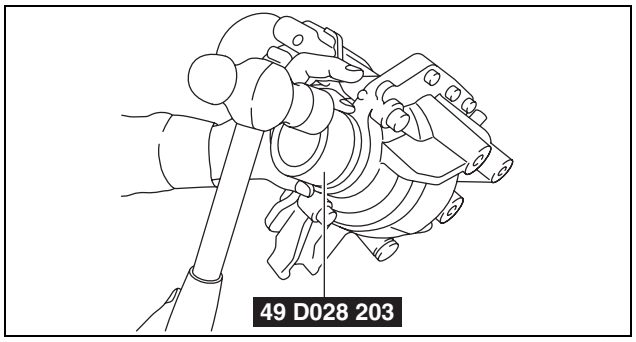

ac5uuw00001707

Oil Seal (Coupling Component) Assembly Note
1. Apply differential oil to the new oil seal lip.
2. Assemble the oil seal using the **SST**.

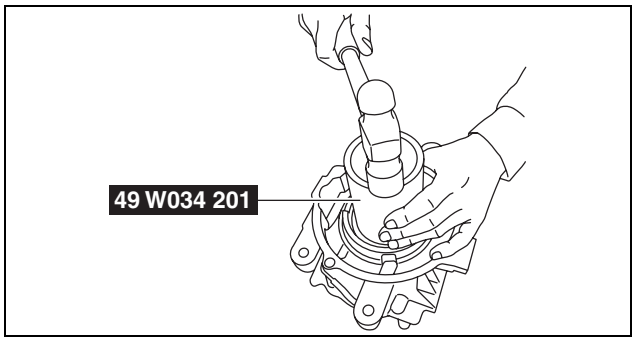

ac5uuw00000303

DIFFERENTIAL

OIL SEAL (COUPLING COMPONENT) REPLACEMENT

id031400802000

1. Drain the differential oil into a container.
2. Remove the coupling component. (See 03-18-5 COUPLING COMPONENT REMOVAL/INSTALLATION.)
3. Remove the oil seal from the differential carrier using a screwdriver or similar tool.
4. Apply differential oil to the new oil seal lip.
5. Install the new oil seal to the differential carrier using the **SST**.
6. Install the coupling component. (See 03-18-5 COUPLING COMPONENT REMOVAL/INSTALLATION.)
7. Add the specified differential oil from the filler plug. (See 03-14-2 DIFFERENTIAL OIL REPLACEMENT.)

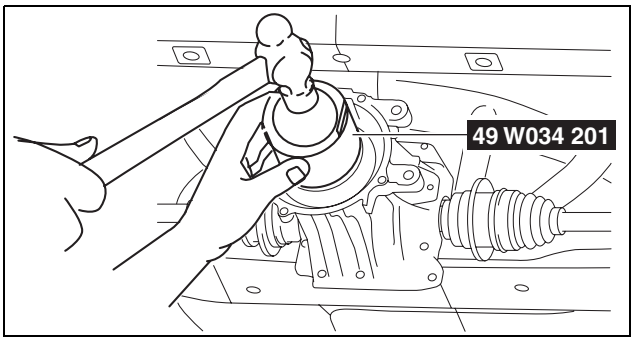

ac5uuw00000306

03-15 PROPELLER SHAFT

PROPELLER SHAFT
LOCATION INDEX. 03-15–1
PROPELLER SHAFT
REMOVAL/INSTALLATION. 03-15–2
Propeller Shaft Removal Note **03-15–3**
Propeller Shaft Installation Note **03-15–3**
PROPELLER SHAFT INSPECTION 03-15–4
PROPELLER SHAFT
ON-VEHICLE INSPECTION. 03-15–4
Joint Area Excessive
Play Inspection **03-15–4**
Propeller Shaft Runout Inspection **03-15–5**

PROPELLER SHAFT

PROPELLER SHAFT LOCATION INDEX

id031500800100

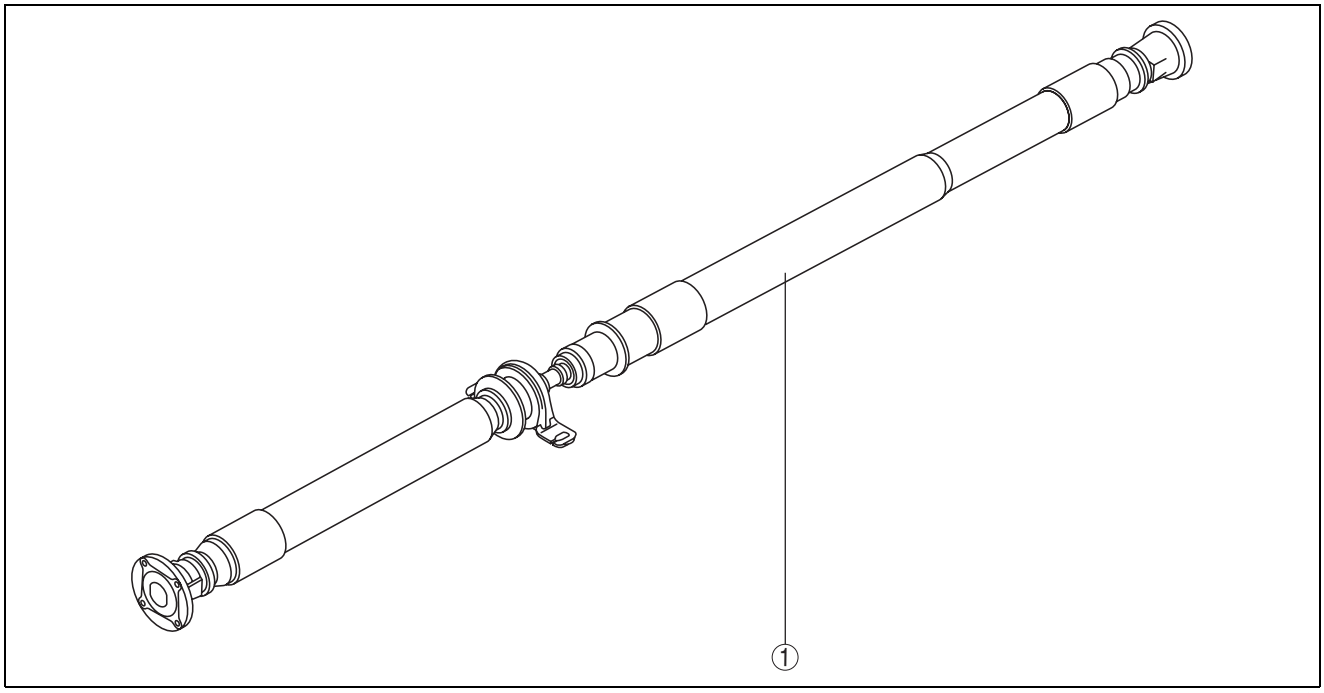

ac5uuw00000312

1	Propeller shaft (See 03-15-4 PROPELLER SHAFT ON-VEHICLE INSPECTION.) (See 03-15-2 PROPELLER SHAFT REMOVAL/INSTALLATION.) (See 03-15-4 PROPELLER SHAFT INSPECTION.)

PROPELLER SHAFT

PROPELLER SHAFT REMOVAL/INSTALLATION

id031500800300

Caution

- **If the constant velocity joint is bent during propeller shaft removal/ installation or transportation after servicing, the constant velocity joint boot may contact the metallic cover and the boot may be damaged. Insert a rag between the boot and the metallic cover before servicing to protect the boot**

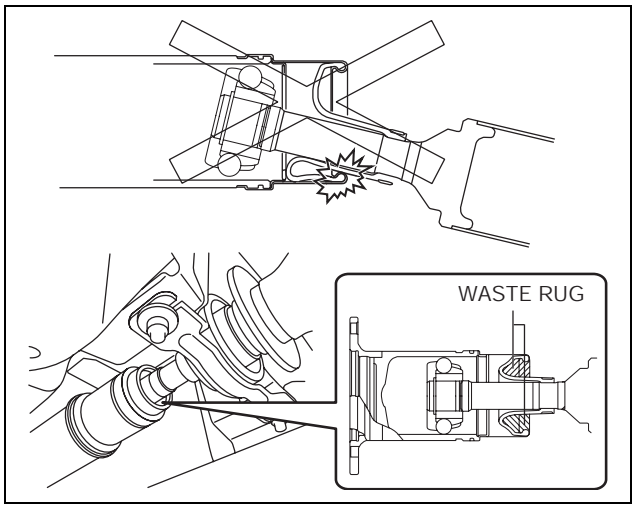

ac5wzw0000263

1. Remove the floor under cover. (See 09-16-44 FLOOR UNDER COVER REMOVAL/ INSTALLATION.)
2. Remove the center under cover.(See 09-16-42 CENTER UNDER COVER REMOVAL/ INSTALLATION.)
3. Remove the insulator (exhaust system). (See 01-15A-2 EXHAUST SYSTEM REMOVAL/ INSTALLATION [SKYACTIV-G 2.0].) (See 01-15B-1 EXHAUST SYSTEM REMOVAL/ INSTALLATION [SKYACTIV-D 2.2].)
4. Remove the tunnel member. (See 01-15A-2 EXHAUST SYSTEM REMOVAL/INSTALLATION [SKYACTIV-G 2.0].) (See 01-15B-1 EXHAUST SYSTEM REMOVAL/INSTALLATION [SKYACTIV-D 2.2].)
5. Remove the brace bar. (See 01-15A-2 EXHAUST SYSTEM REMOVAL/INSTALLATION [SKYACTIV-G 2.0].) (See 01-15B-1 EXHAUST SYSTEM REMOVAL/INSTALLATION [SKYACTIV-D 2.2].)
6. Remove in the order indicated in the figure.
7. Install in the reverse order of removal.

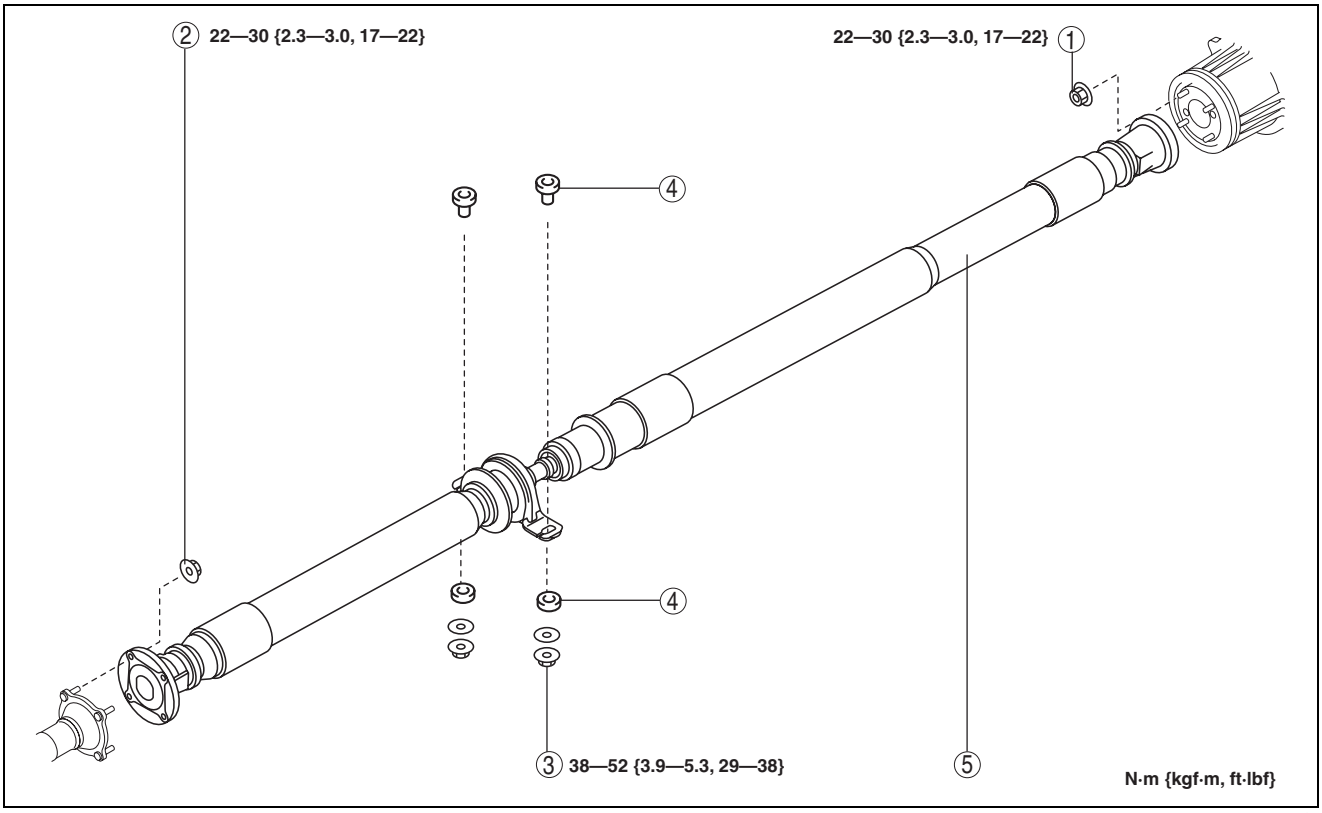

ac5uuw00000315

1	Nut (rear)
2	Nut (front)
3	Nut (center bearing support)

4	Bush, spacer
5	Propeller shaft (See03-15-3 Propeller Shaft Removal Note.) (See03-15-3 Propeller Shaft Installation Note.)

PROPELLER SHAFT

Propeller Shaft Removal Note

Caution
- **Do not mark with a punch to prevent imbalance.**

1. Before removing the nut, place alignment marks on the companion flange (front) and constant velocity joint, and on the coupling component (rear) and yoke.
2. Loosen the nuts (front, rear, center bearing support).
3. Remove the front and rear nuts.

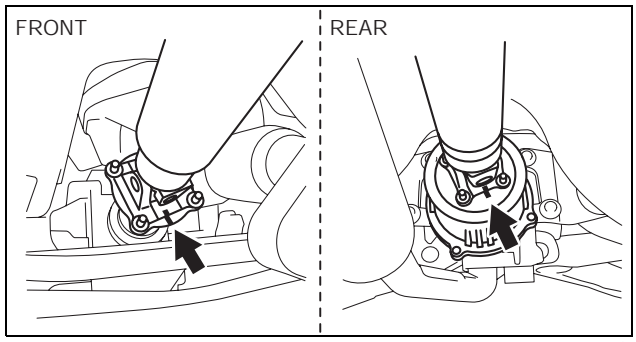

ac5uuw00000316

Caution
- **Propeller shaft is attached to the stud.**

4. Press the propeller shaft and remove it from the rear side.

Caution
- **Do not bend the propeller shaft to the extent that it interferes with the boot.**

5. Remove the center bearing support nut, then remove the propeller shaft

Propeller Shaft Installation Note

Caution
- **If the nuts are loosened, verify that the stud bolt tightening torque against the coupling is 6.4 N {0.65 kgf, 1.4 lbf} or more. If the tightening torque is less than 6.4 N·m {65 kgf·cm, 57 in·lbf}, tighten the stud bolt with 6.4—9.6 N·m {66—97 kgf·cm, 57—84 in·lbf}.**
- **When loosening the nut, if a nut is stuck to a stud bolt, replace the stud bolt with a new one.**
- **When replacing the stud bolts, clean off oil and foreign matter on the bolts and coupling installation areas in advance.**

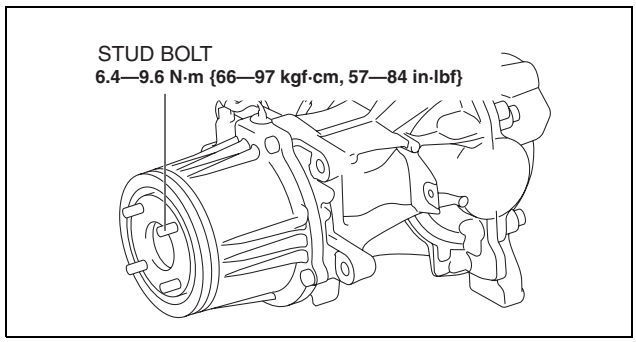

ac5uuw00000877

Note
- The stud bolts are entirely threaded with no front/rear distinction.

1. Degrease the tightening area.
2. Align the alignment marks, and temporarily install the nuts (front, rear, center bearing support).

Caution
- **Do not bend the propeller shaft to the extent that it interferes with the boot.**

3. Tighten the nut (front) with specified torque first, and then install the other nuts.
4. Perform a road test and verify that there is no abnormal vibration or noise.

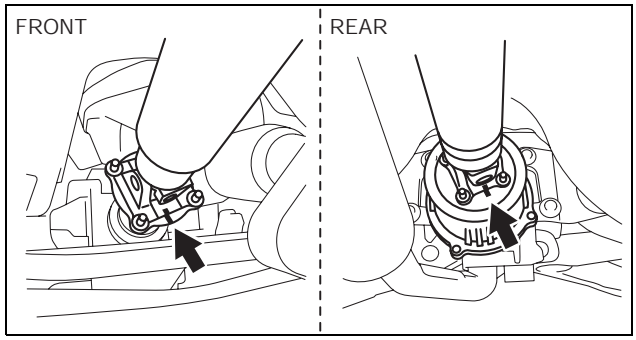

ac5uuw00000316

PROPELLER SHAFT

PROPELLER SHAFT INSPECTION

id031500800500

1. Measure the propeller shaft center runout using the dial gauge.
   - If it exceeds the maximum specification, replace the propeller shaft as a single component. (See 03-15-2 PROPELLER SHAFT REMOVAL/INSTALLATION.)

   Propeller shaft maximum runout
   0.8 mm {0.031 in}

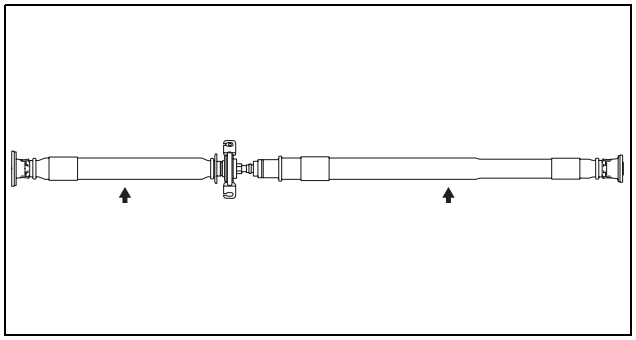

ac5uuw00000317

2. Inspect the play and rotation of the joint by turning the universal joint in the directions shown by the arrows.
   - If it is not within the specification, replace the propeller shaft. (See 03-15-2 PROPELLER SHAFT REMOVAL/INSTALLATION.)

   Propeller shaft rotation torque
   0.29—1.47 N·m {3.0—14.9 kgf·cm, 2.6—13.0 in·lbf}

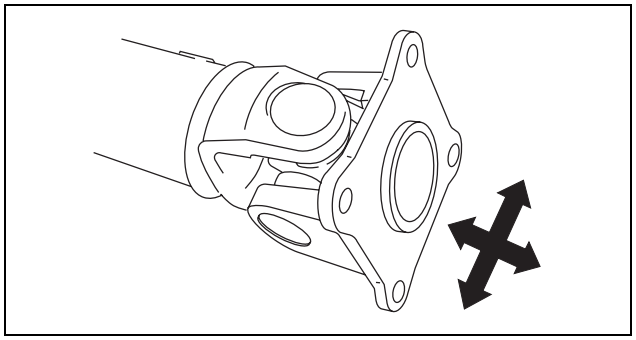

acxuuw00003098

PROPELLER SHAFT ON-VEHICLE INSPECTION

id031500800200

Joint Area Excessive Play Inspection

1. Shake the universal joint by hand and verify that there is no excessive play.
2. If there is any excessive play, replace the propeller shaft. (See 03-15-2 PROPELLER SHAFT REMOVAL/INSTALLATION.)

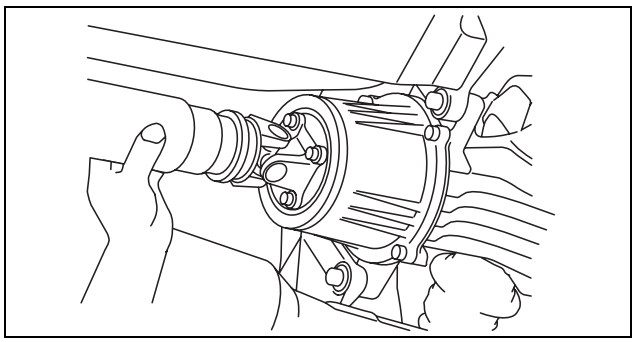

ac5wzw0000262

PROPELLER SHAFT

Propeller Shaft Runout Inspection

Caution
- **Do not rotate the propeller shaft using engine force when inspecting.**

1. Shift to neutral position and release the parking brake.
2. Rotate the rear wheel by hand and inspect the propeller shaft runout at the two locations shown in the figure.
   - If it exceeds the standard specification, replace the propeller shaft.

Standard propeller shaft runout (on-vehicle)
0.8 mm {0.031 in}

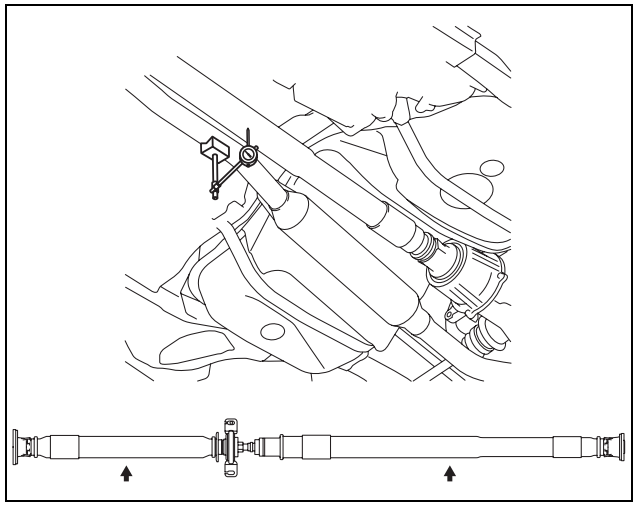

ac5uuw00000314

03-16A TRANSFER [C66MX-R, D66MX-R]

TRANSFER LOCATION INDEX
[C66MX-R, D66MX-R] **03-16A–1**
TRANSFER OIL INSPECTION
[C66MX-R, D66MX-R] **03-16A–2**
TRANSFER OIL REPLACEMENT
[C66MX-R, D66MX-R] **03-16A–2**
TRANSFER REMOVAL/INSTALLATION
[C66MX-R] **03-16A–4**
Transfer Bracket Installation Note **03-16A–5**
TRANSFER REMOVAL/INSTALLATION
[D66MX-R] **03-16A–6**
Transfer Bracket Installation Note **03-16A–8**
TRANSFER OIL SEAL REPLACEMENT
[C66MX-R, D66MX-R] **03-16A–8**
Transfer oil seal (LH) **03-16A–8**
Transfer oil seal (RH) No.1 . . . . . **03-16A–9**
Transfer oil seal (RH) No.2 . . . . . **03-16A–10**
Transfer oil seal (RH) No.3 . . . . . **03-16A–11**

TRANSFER [C66MX-R, D66MX-R]

TRANSFER LOCATION INDEX [C66MX-R, D66MX-R]

id0316g5800100

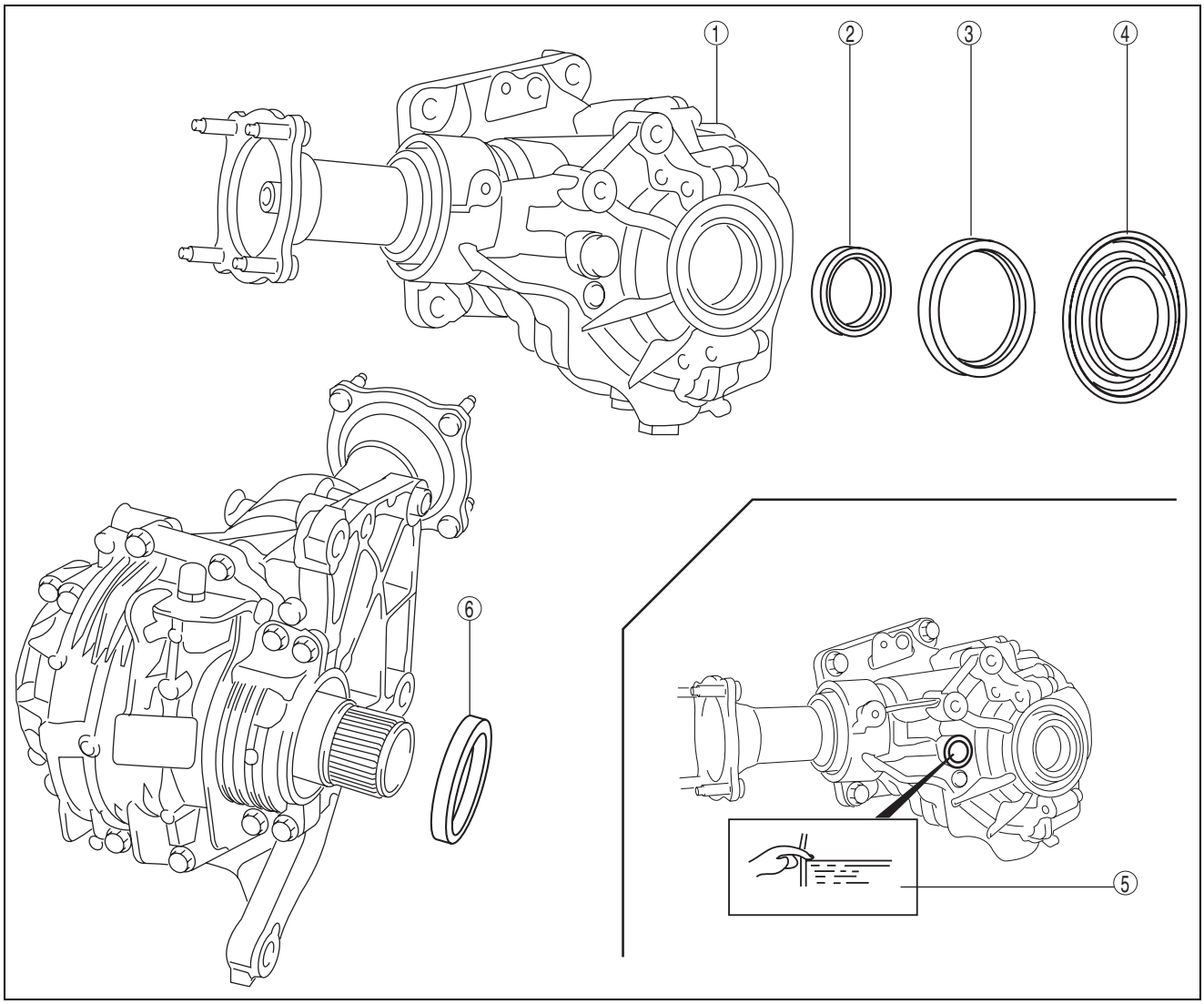

ac5uuw00000088

1	Transfer (See 03-16A-4 TRANSFER REMOVAL/ INSTALLATION [C66MX-R].) (See 03-16A-6 TRANSFER REMOVAL/ INSTALLATION [D66MX-R].)
2	Transfer oil seal (RH) No.3 (See 03-16A-8 TRANSFER OIL SEAL REPLACEMENT [C66MX-R, D66MX-R].)
3	Transfer oil seal (RH) No.2 (See 03-16A-8 TRANSFER OIL SEAL REPLACEMENT [C66MX-R, D66MX-R].)
4	Transfer oil seal (RH) No.1 (See 03-16A-8 TRANSFER OIL SEAL REPLACEMENT [C66MX-R, D66MX-R].)

TRANSFER [C66MX-R, D66MX-R]

5	Transfer oil (See 03-16A-2 TRANSFER OIL INSPECTION [C66MX-R, D66MX-R].) (See 03-16A-2 TRANSFER OIL REPLACEMENT [C66MX-R, D66MX-R].)

6	Transfer oil seal (LH) (See 03-16A-8 TRANSFER OIL SEAL REPLACEMENT [C66MX-R, D66MX-R].)

TRANSFER OIL INSPECTION [C66MX-R, D66MX-R]

id0316g5800200

1. Park the vehicle on level ground.
2. Remove the oil level plug and with the washer.
3. Checking by hand, verify that the oil is near the brim of the plug hole.
   - If the oil level is low, add the specified amount and type of oil through the oil level plug hole.

   Transfer oil
   Specified oil grade: API Service GL-5
   Specified oil viscosity: SAE 80W-90
   Capacity (approx quantity): 0.45 L {0.48 US qt, 0.40 Imp qt}

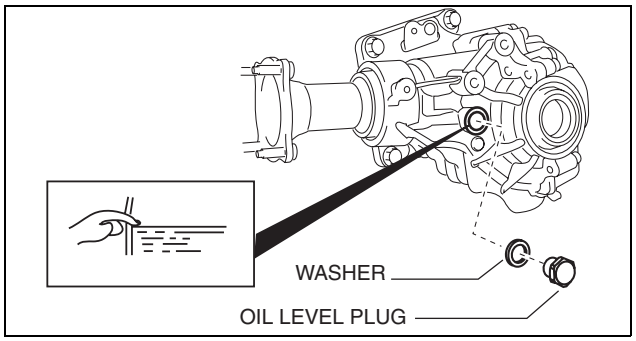

ac5wzw0000212

4. Tighten the oil level plug with a new washer.

   Tightening torque
   40—58 N·m {4.1—5.9 kgf·m, 30—42 ft·lbf}

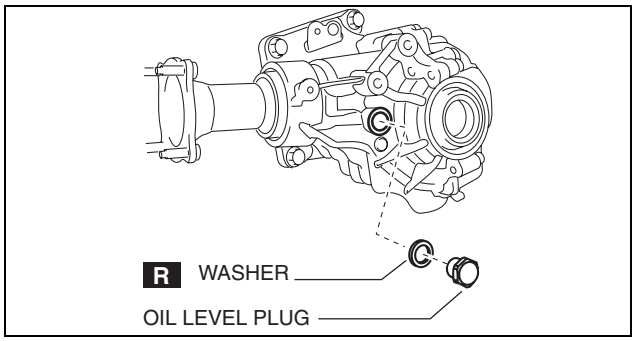

ac5uuw00000090

TRANSFER OIL REPLACEMENT [C66MX-R, D66MX-R]

id0316g5800300

1. Removal the front under cover No.2. (See 09-16-41 FRONT UNDER COVER No.2 REMOVAL/INSTALLATION.)
2. Remove the drain plug with the washer.
3. Drain the oil into a suitable container.

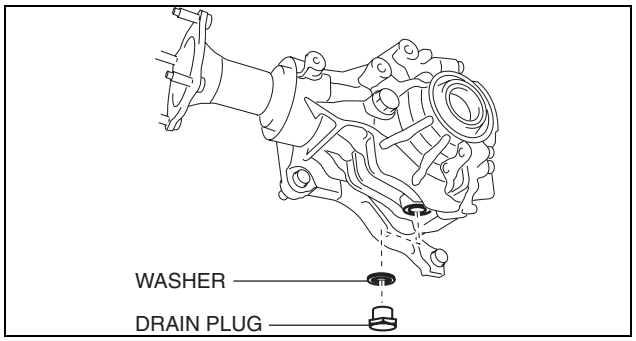

ac5uuw00000091

TRANSFER [C66MX-R, D66MX-R]

4. Tighten the drain plug with a new washer.

   Tightening torque
   40—58 N·m {4.1—5.9 kgf·m, 30—42 ft·lbf}

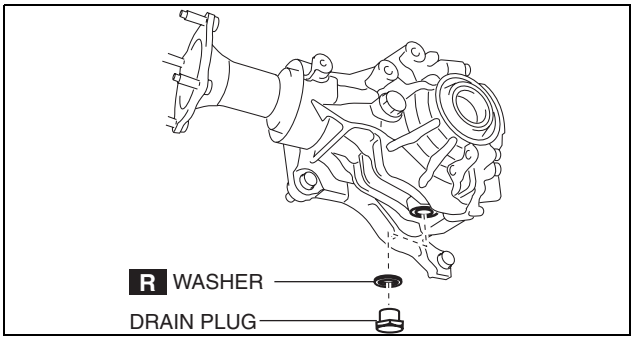

ac5uuw00000092

5. Remove the oil level plug with the washer and add the specified amount and type of oil through the oil level plug hole until the level reaches the bottom of the oil level plug hole.

   Transfer oil
   Specified oil grade: API Service GL-5
   Specified oil viscosity: SAE 80W-90
   Capacity (approx quantity): 0.45 L {0.48 US qt, 0.40 Imp qt}

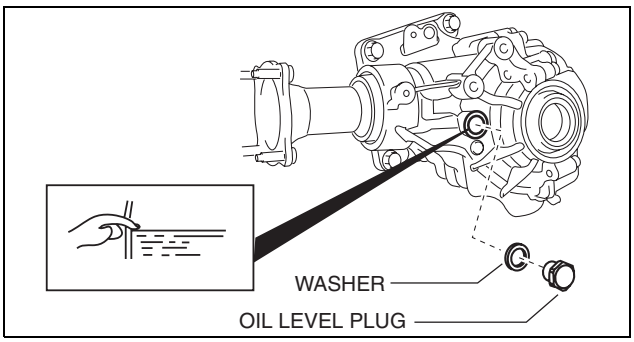

ac5wzw0000212

6. Tighten the oil level plug with a new washer.

   Tightening torque
   40—58 N·m {4.1—5.9 kgf·m, 30—42 ft·lbf}

7. Install the front under cover No.2. (See 09-16-41 FRONT UNDER COVER No.2 REMOVAL/ INSTALLATION.)

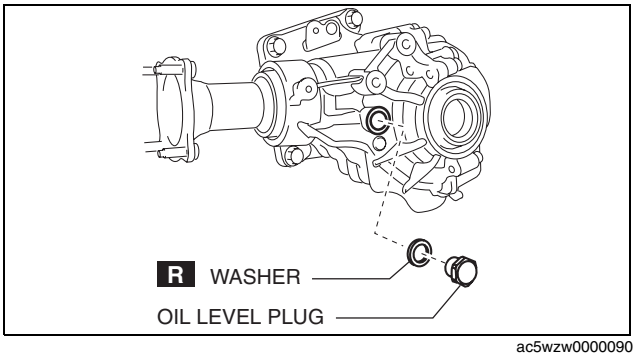

ac5wzw0000090

TRANSFER [C66MX-R, D66MX-R]

TRANSFER REMOVAL/INSTALLATION [C66MX-R]

id0316g58006f8

Caution

- **Performing the following procedures without first removing the front ABS wheel-speed sensor may possibly cause an open circuit in the harness if it is pulled by mistake. Before performing the following procedures, disconnect the front ABS wheel-speed sensor (axle side) and fix it to an appropriate place where the sensor will not be pulled by mistake while servicing the vehicle.**
- **Secure the steering wheel using tape or a cable to prevent the steering shaft from rotating after disconnecting the steering shaft. If the steering wheel rotates after the steering shaft and the steering gear and linkage are disconnected, the internal parts of the clock spring could be damaged.**

1. Disconnect the negative battery cable. (See 01-17A-11 NEGATIVE BATTERY CABLE DISCONNECTION/CONNECTION [SKYACTIV-G 2.0].)
2. Remove the propeller shaft. (See 03-15-2 PROPELLER SHAFT REMOVAL/INSTALLATION.)
3. Remove the front crossmember component. (See 02-13-15 FRONT CROSSMEMBER REMOVAL/INSTALLATION.)
4. Remove the exhaust manifold (WU-TWC). (See 01-15A-2 EXHAUST SYSTEM REMOVAL/INSTALLATION [SKYACTIV-G 2.0].)
5. Remove the front drive shaft (RH). (See 03-13-3 FRONT DRIVE SHAFT REMOVAL/INSTALLATION.)
6. Remove the heat shield.
7. Install in the reverse order of removal.
8. Warm up the engine and transaxle, inspect for oil leakage, and inspect the transfer operation.

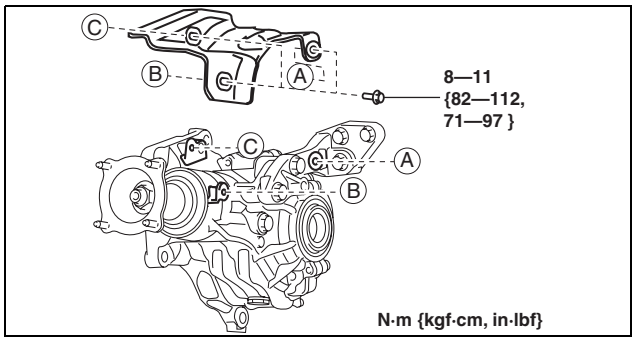

ac5uuw00000095

TRANSFER [C66MX-R, D66MX-R]

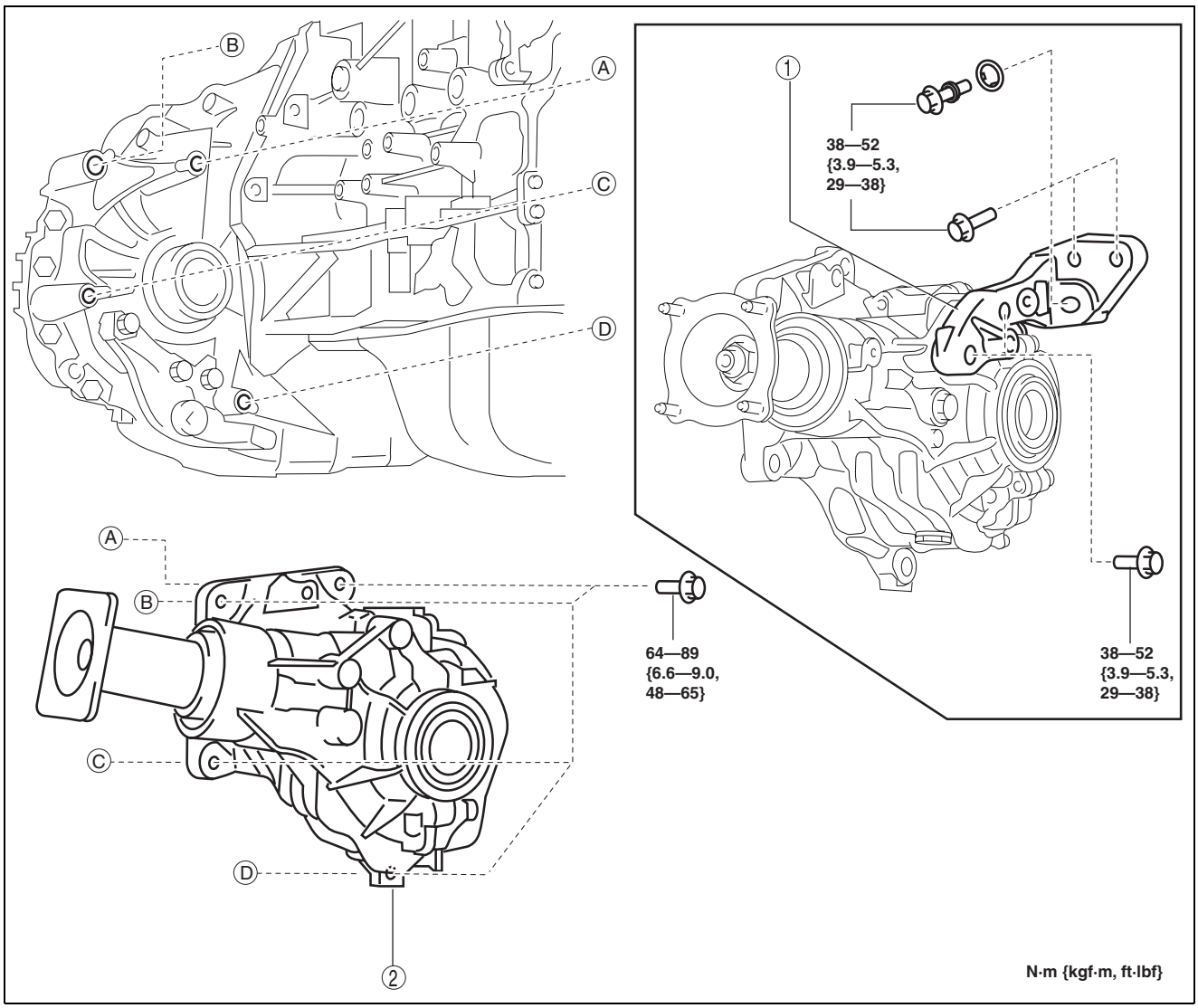

ac5wzw0000090

1	Transfer bracket (See 03-16A-5 Transfer Bracket Installation Note.)
2	Transfer

Transfer Bracket Installation Note

1. Install the transfer bracket to transfer, then temporarily tighten bolts A and B.
2. Tighten bolts B, A & C in this order.

Tightening torque
38—52 N·m {3.9—5.3kgf·m, 29—38 ft·lbf}

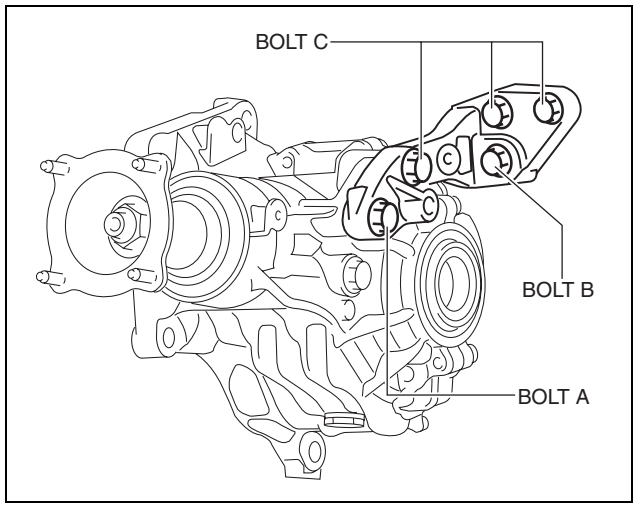

ac5uuw00000097

TRANSFER [C66MX-R, D66MX-R]

TRANSFER REMOVAL/INSTALLATION [D66MX-R]

id0316g58006f9

Caution

- **Performing the following procedures without first removing the front ABS wheel-speed sensor may possibly cause an open circuit in the harness if it is pulled by mistake. Before performing the following procedures, disconnect the front ABS wheel-speed sensor (axle side) and fix it to an appropriate place where the sensor will not be pulled by mistake while servicing the vehicle.**
- **Secure the steering wheel using tape or a cable to prevent the steering shaft from rotating after disconnecting the steering shaft. If the steering wheel rotates after the steering shaft and the steering gear and linkage are disconnected, the internal parts of the clock spring could be damaged.**

1. Disconnect the negative battery cable. (See 01-17B-9 NEGATIVE BATTERY CABLE DISCONNECTION/CONNECTION [SKYACTIV-D 2.2].)
2. Remove the propeller shaft. (See 03-15-2 PROPELLER SHAFT REMOVAL/INSTALLATION.)
3. Remove the front crossmember component. (See 02-13-15 FRONT CROSSMEMBER REMOVAL/INSTALLATION.)
4. Remove the front drive shaft (RH). (See 03-13-3 FRONT DRIVE SHAFT REMOVAL/INSTALLATION.)
5. Remove the turbocharger bracket.

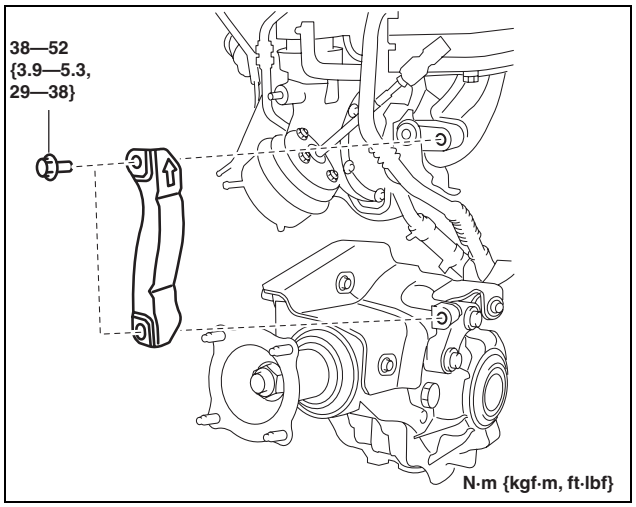

ac5wzw0000237

6. Remove the seal rubber.

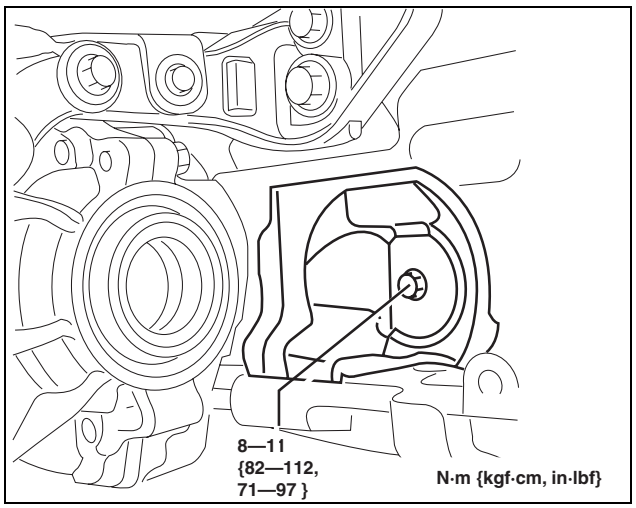

ac5wzw0000237

TRANSFER [C66MX-R, D66MX-R]

7. Remove the heat shield.
8. Install in the reverse order of removal.
9. Warm up the engine and transaxle, inspect for oil leakage, and inspect the transfer operation.

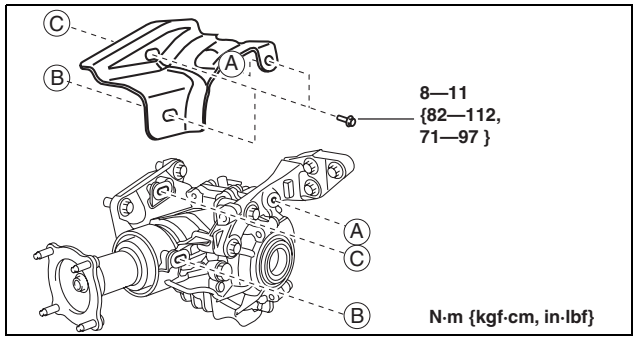

ac5wzw0000237

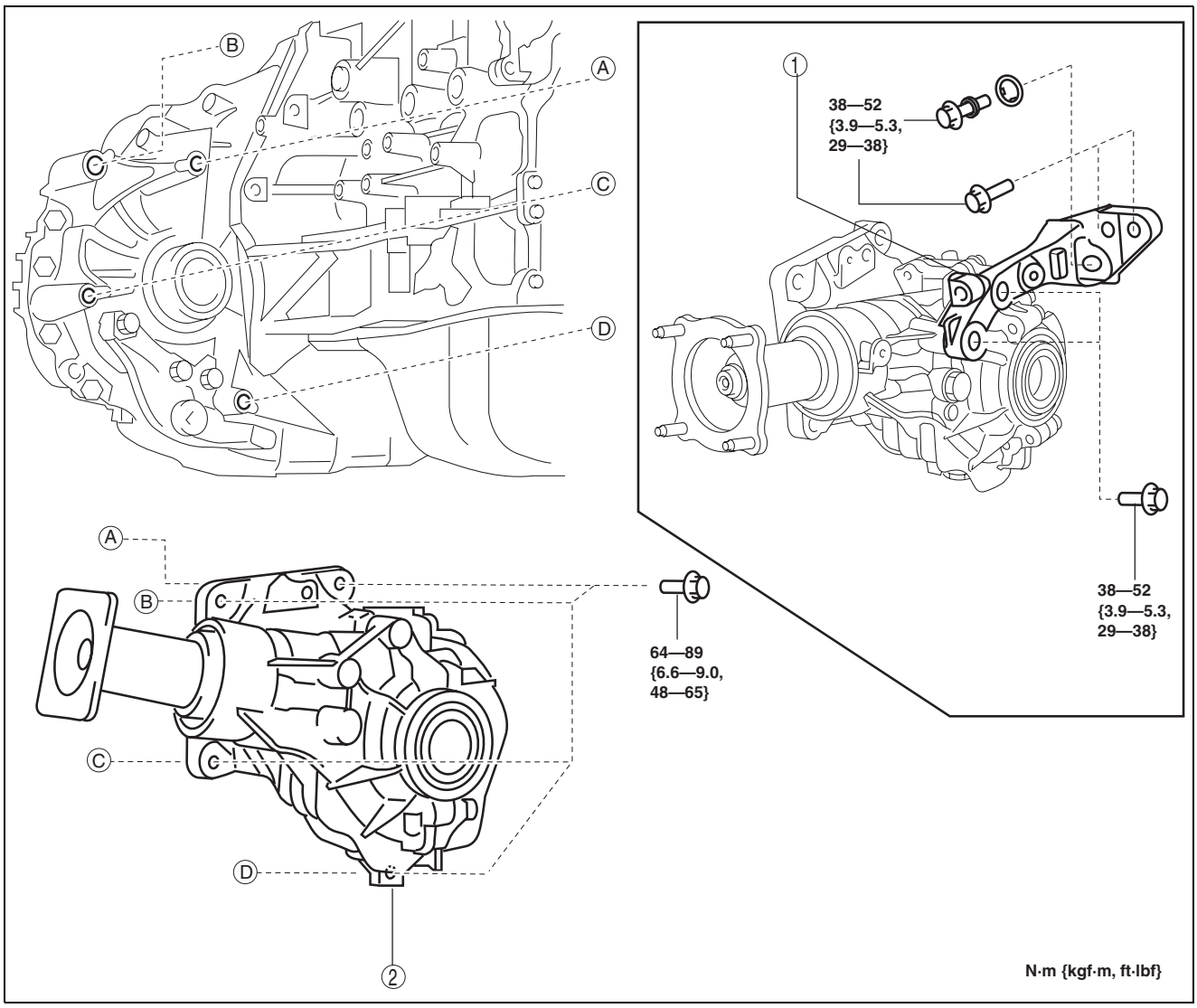

ac5wzw0000237

1	Transfer bracket (See 03-16A-8 Transfer Bracket Installation Note.)
2	Transfer

TRANSFER [C66MX-R, D66MX-R]

Transfer Bracket Installation Note

1. Install the transfer bracket to transfer, then temporarily tighten bolts A and B.
2. Tighten bolts B, A & C in this order.

Tightening torque
38—52 N·m {3.9—5.3kgf·m, 29—38 ft·lbf}

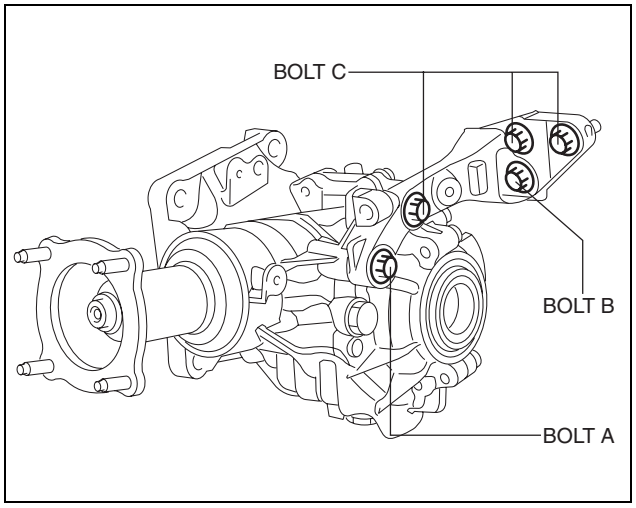

ac5wzw0000237

TRANSFER OIL SEAL REPLACEMENT [C66MX-R, D66MX-R]

id0316g5800400

Transfer oil seal (LH)

1. Drain the transfer oil. (See 03-16A-2 TRANSFER OIL REPLACEMENT [C66MX-R, D66MX-R].)
2. Remove the transfer from the vehicle. (See 03-16A-4 TRANSFER REMOVAL/INSTALLATION [C66MX-R].) (See 03-16A-6 TRANSFER REMOVAL/INSTALLATION [D66MX-R].)
3. Insert a tape-wrapped flathead screwdriver into the lip area of the oil seal (LH) as shown in the figure and remove the oil seal (LH).

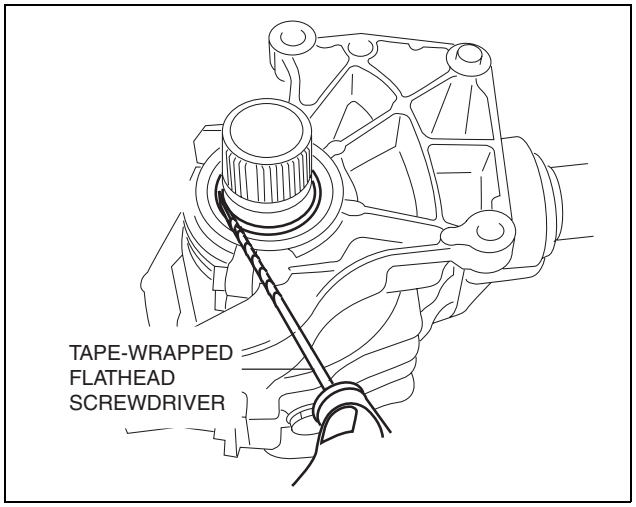

ac5uuw00000098

TRANSFER [C66MX-R, D66MX-R]

4. Using the **SST** and a hammer, tap the new seal into place.

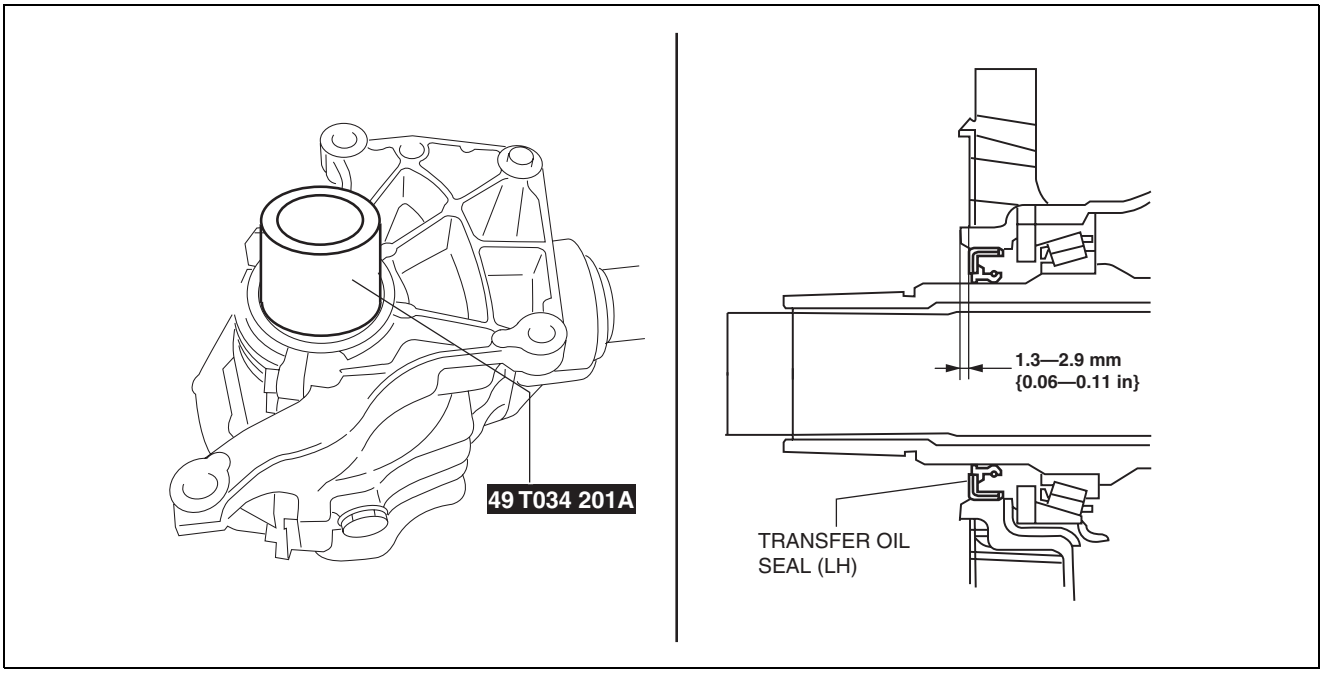

ac5wzw0000232

5. Apply the lip of the oil seal with transfer oil.
6. Install the transfer to the vehicle. (See 03-16A-4 TRANSFER REMOVAL/INSTALLATION [C66MX-R].) (See 03-16A-6 TRANSFER REMOVAL/INSTALLATION [D66MX-R].)
7. Add the specified amount and type of oil. (See 03-16A-2 TRANSFER OIL REPLACEMENT [C66MX-R, D66MX-R].)

Transfer oil seal (RH) No.1

1. Remove the front drive shaft (RH). (See 03-13-3 FRONT DRIVE SHAFT REMOVAL/INSTALLATION.)
2. Insert a flathead screwdriver into the notch of the transfer and remove the oil seal (RH) No.1.

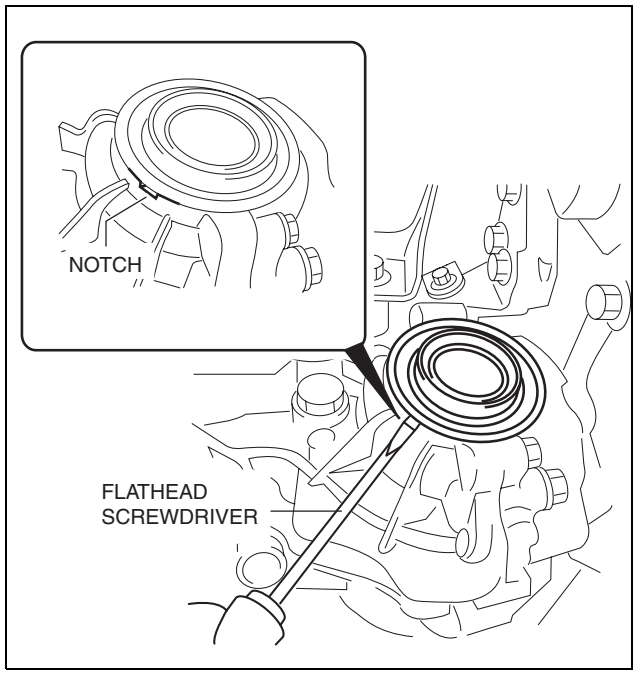

ac5uuw00000100

TRANSFER [C66MX-R, D66MX-R]

3. Using the **SST** and a hammer, tap the new seal into place.
4. Apply the lip of the oil seal with transfer oil.
5. Install the front drive shaft (RH). (See 03-13-3 FRONT DRIVE SHAFT REMOVAL/INSTALLATION.)

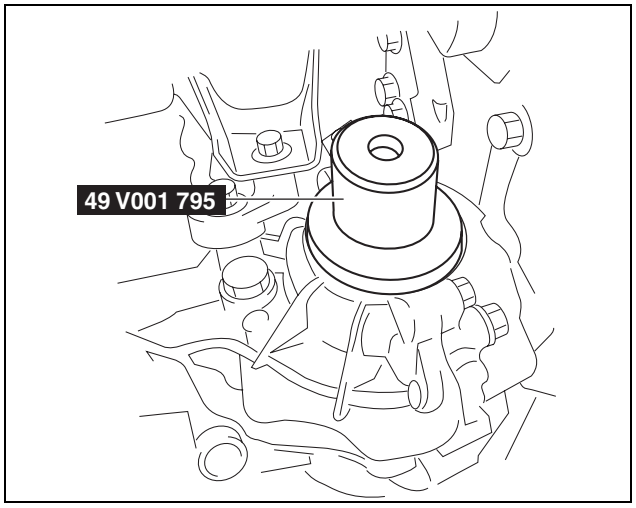

ac5wzw0000232

Transfer oil seal (RH) No.2

1. Drain the transfer oil. (See 03-16A-2 TRANSFER OIL REPLACEMENT [C66MX-R, D66MX-R].)
2. Remove the front drive shaft (RH). (See 03-13-3 FRONT DRIVE SHAFT REMOVAL/INSTALLATION.)
3. Remove the transfer oil seal (RH) No.1. (See 03-16A-9 Transfer oil seal (RH) No.1.)
4. Insert a tape-wrapped flathead screwdriver into the lip area of the oil seal (RH) No.2 as shown in the figure and remove the oil seal (RH) No.2.

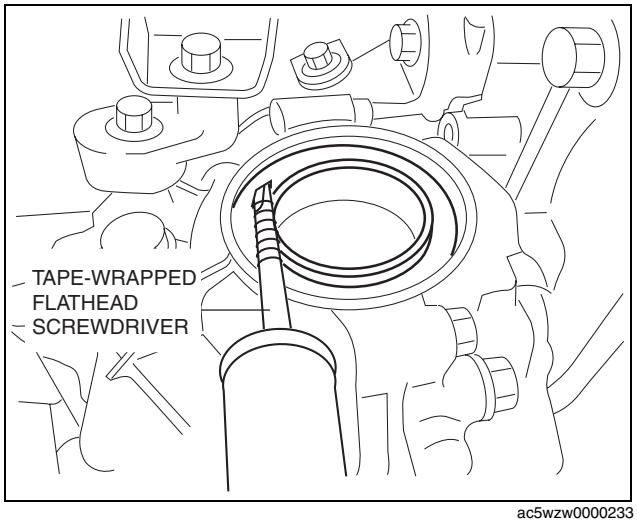

ac5wzw0000233

TRANSFER [C66MX-R, D66MX-R]

5. Using the **SST** and a hammer, tap the new seal into place.

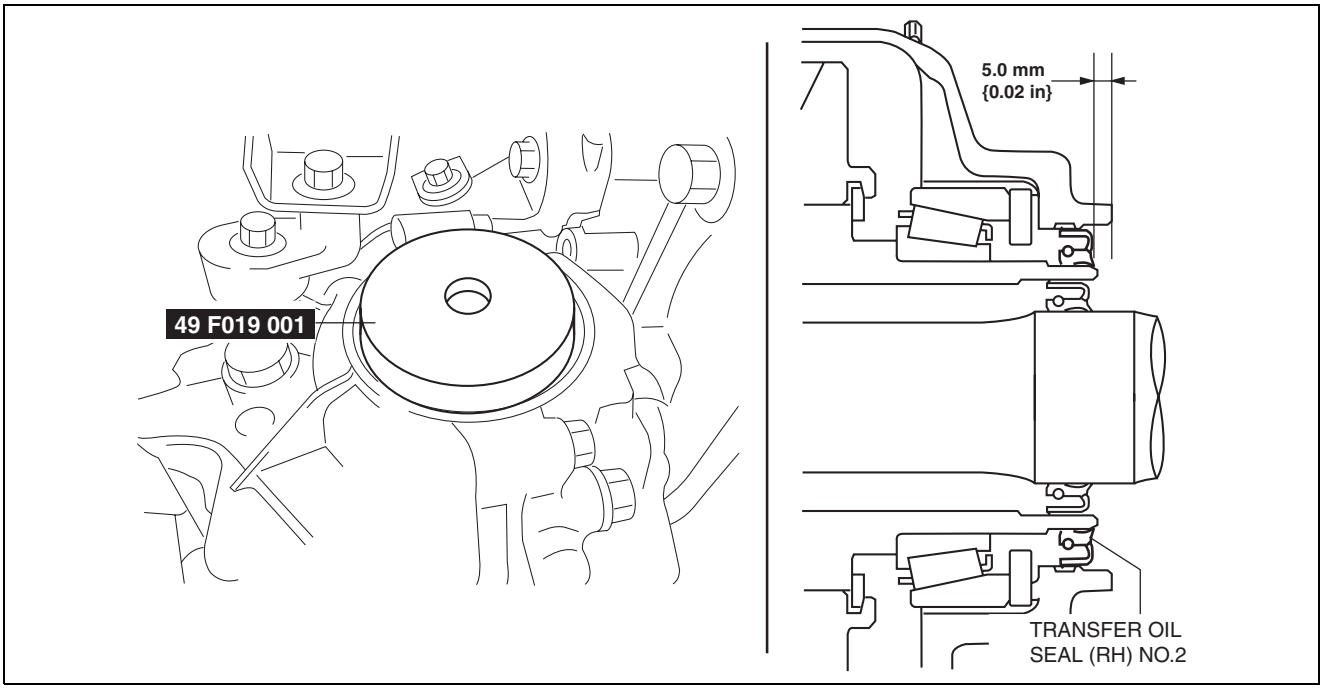

ac5wzw0000273

6. Apply the lip of the oil seal with transfer oil.
7. Install the transfer oil seal (RH) No.1. (See 03-16A-9 Transfer oil seal (RH) No.1.)
8. Install the front drive shaft (RH). (See 03-13-3 FRONT DRIVE SHAFT REMOVAL/INSTALLATION.)
9. Add the specified amount and type of oil. (See 03-16A-2 TRANSFER OIL REPLACEMENT [C66MX-R, D66MX-R].)

Transfer oil seal (RH) No.3

1. Drain the transfer oil. (See 03-16A-2 TRANSFER OIL REPLACEMENT [C66MX-R, D66MX-R].)
2. Remove the front drive shaft (RH). (See 03-13-3 FRONT DRIVE SHAFT REMOVAL/INSTALLATION.)
3. Remove the transfer oil seal (RH) No.1. (See 03-16A-9 Transfer oil seal (RH) No.1.)
4. Remove the oil seals using a tape-wrapped flathead screwdriver.

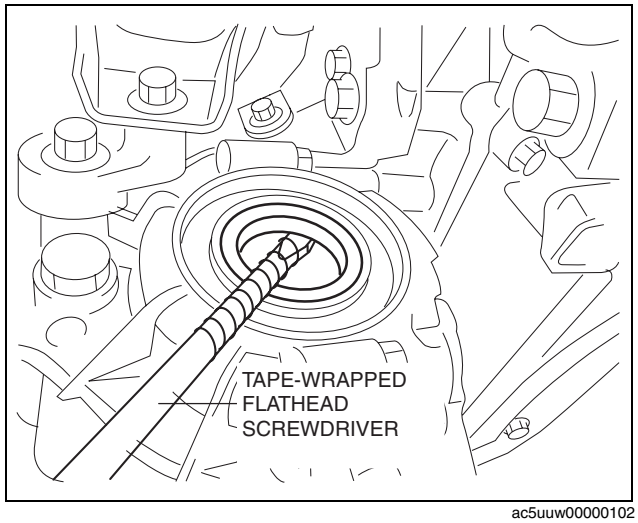

ac5uuw00000102

TRANSFER [C66MX-R, D66MX-R]

5. Using the **SST** and a hammer, tap the new seal into place.

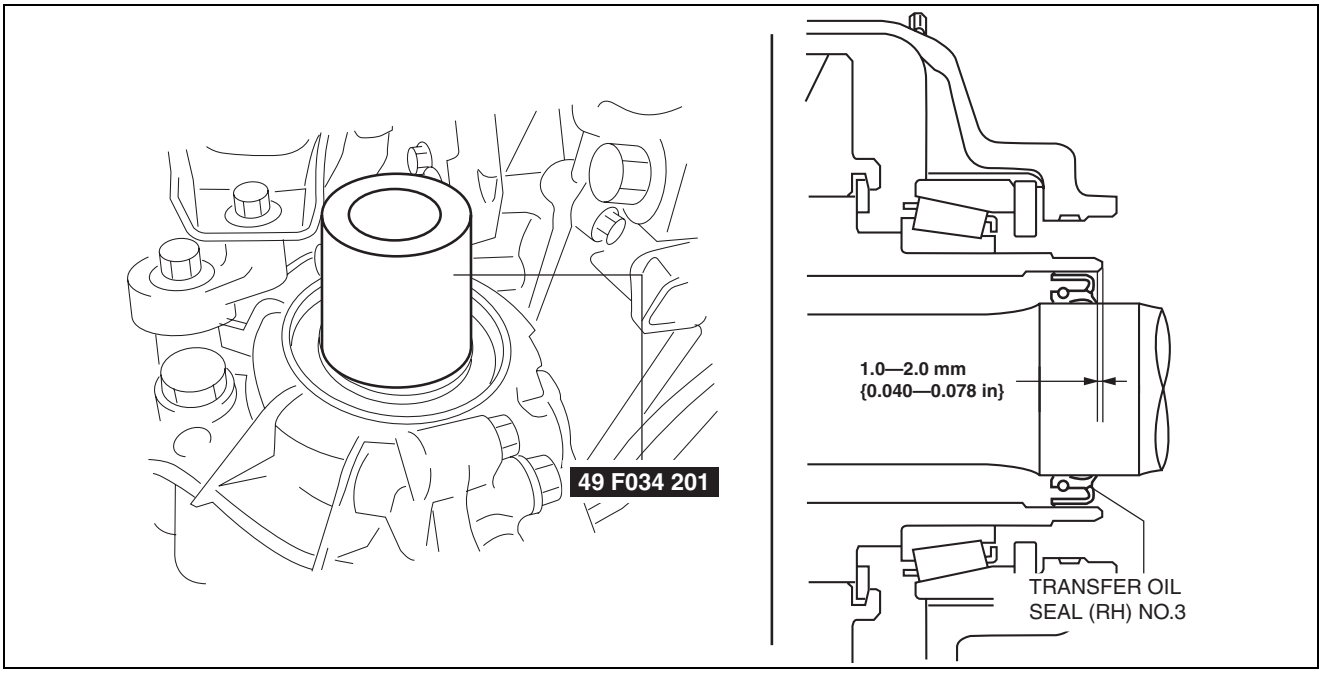

ac5wzw0000274

6. Apply the lip of the oil seal with transfer oil.
7. Install the transfer oil seal (RH) No.1. (See 03-16A-9 Transfer oil seal (RH) No.1.)
8. Install the front drive shaft (RH). (See 03-13-3 FRONT DRIVE SHAFT REMOVAL/INSTALLATION.)
9. Add the specified amount and type of oil. (See 03-16A-2 TRANSFER OIL REPLACEMENT [C66MX-R, D66MX-R].)

03-16B TRANSFER [FW6AX-EL, GW6AX-EL]

TRANSFER LOCATION INDEX [FW6AX-EL, GW6AX-EL] **03-16B–1**
TRANSFER OIL INSPECTION [FW6AX-EL, GW6AX-EL] **03-16B–2**
TRANSFER OIL REPLACEMENT [FW6AX-EL, GW6AX-EL] **03-16B–2**
TRANSFER REMOVAL/INSTALLATION [FW6AX-EL] **03-16B–4**
Transfer Bracket Installation Note **03-16B–5**
TRANSFER REMOVAL/INSTALLATION [GW6AX-EL] **03-16B–6**
Transfer Bracket Installation Note **03-16B–8**
TRANSFER OIL SEAL REPLACEMENT [FW6AX-EL, GW6AX-EL] **03-16B–8**
Transfer oil seal (LH) **03-16B–8**
Transfer oil seal (RH) No.1 . . . . . **03-16B–9**
Transfer oil seal (RH) No.2 . . . . . **03-16B–10**
Transfer oil seal (RH) No.3 . . . . . **03-16B–11**

TRANSFER [FW6AX-EL, GW6AX-EL]

TRANSFER LOCATION INDEX [FW6AX-EL, GW6AX-EL]

id0316g6800100

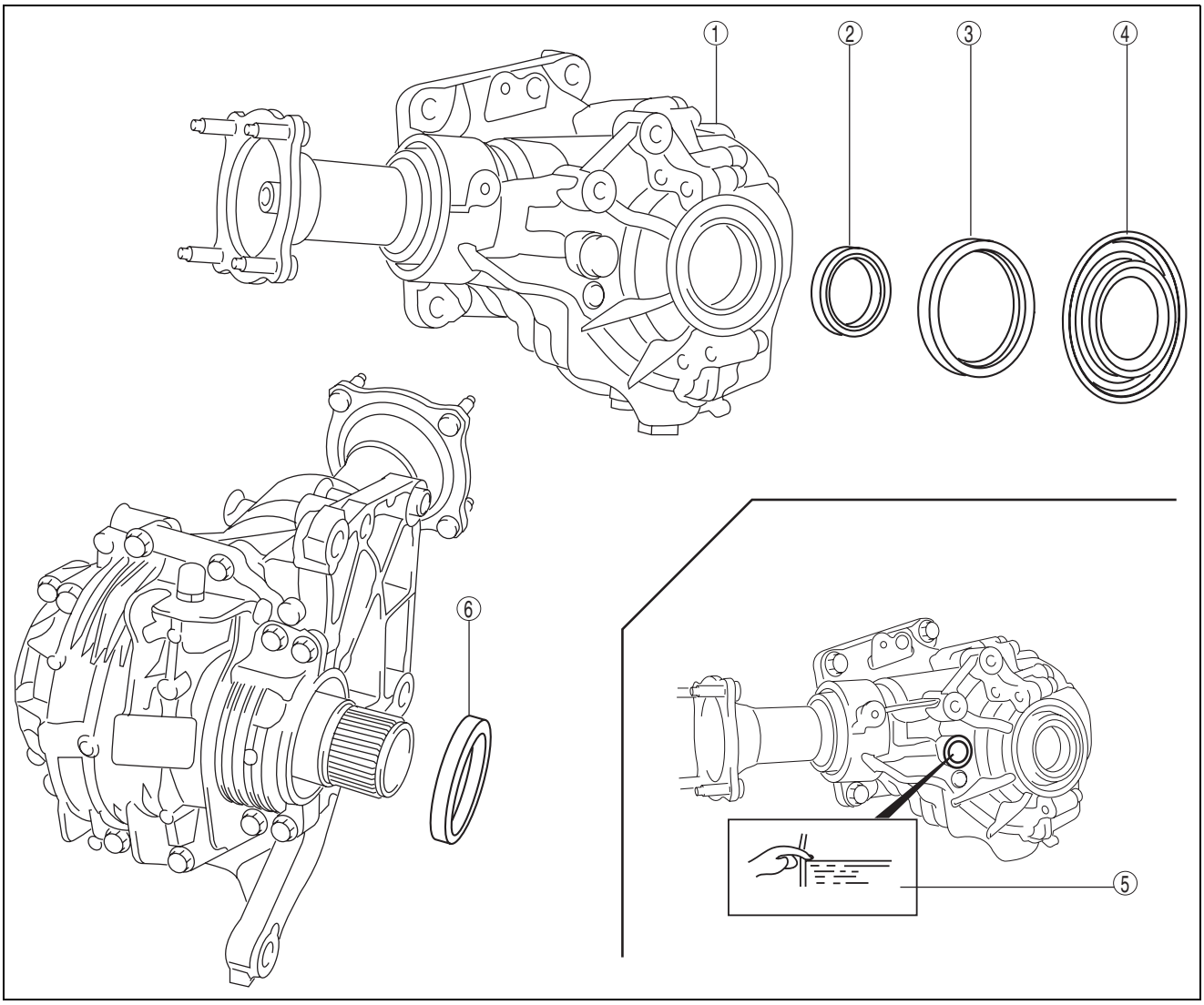

ac5uuw00000088

1	Transfer (See 03-16B-4 TRANSFER REMOVAL/ INSTALLATION [FW6AX-EL].) (See 03-16B-6 TRANSFER REMOVAL/ INSTALLATION [GW6AX-EL].)
2	Transfer oil seal (RH) No.3 (See 03-16B-8 TRANSFER OIL SEAL REPLACEMENT [FW6AX-EL, GW6AX-EL].)

3	Transfer oil seal (RH) No.2 (See 03-16B-8 TRANSFER OIL SEAL REPLACEMENT [FW6AX-EL, GW6AX-EL].)
4	Transfer oil seal (RH) No.1 (See 03-16B-8 TRANSFER OIL SEAL REPLACEMENT [FW6AX-EL, GW6AX-EL].)

TRANSFER [FW6AX-EL, GW6AX-EL]

5	Transfer oil (See 03-16B-2 TRANSFER OIL INSPECTION [FW6AX-EL, GW6AX-EL].) (See 03-16B-2 TRANSFER OIL REPLACEMENT [FW6AX-EL, GW6AX-EL].)
6	Transfer oil seal (LH) (See 03-16B-8 TRANSFER OIL SEAL REPLACEMENT [FW6AX-EL, GW6AX-EL].)

TRANSFER OIL INSPECTION [FW6AX-EL, GW6AX-EL]

id0316g6800200

1. Park the vehicle on level ground.
2. Remove the oil level plug and with the washer.
3. Verify that the oil is near the brim of the plug hole.
   - If the oil level is low, add the specified amount and type of oil through the oil level plug hole.

Transfer oil
Specified oil grade: API Service GL-5
Specified oil viscosity: SAE 80W-90
Capacity (approx quantity): 0.45 L {0.48 US qt, 0.40 Imp qt}

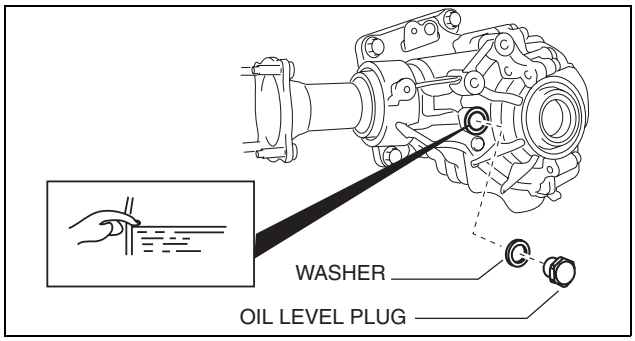

ac5uuw00000089

4. Tighten the oil level plug with a new washer.

Tightening torque
40—58 N·m {4.1—5.9 kgf·m, 30—42 ft·lbf}

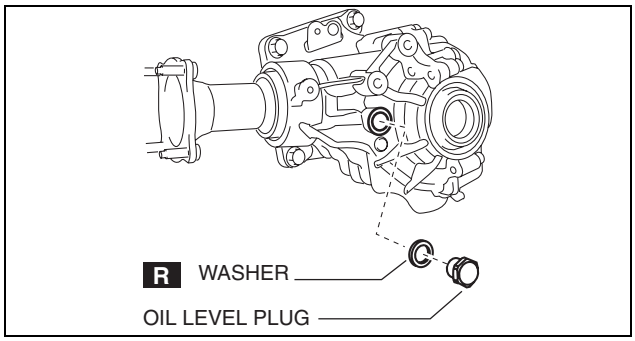

ac5uuw00000090

TRANSFER OIL REPLACEMENT [FW6AX-EL, GW6AX-EL]

id0316g6800300

1. Removal the front under cover No.2. (See 09-16-41 FRONT UNDER COVER No.2 REMOVAL/INSTALLATION.)
2. Remove the drain plug with the washer.
3. Drain the oil into a suitable container.

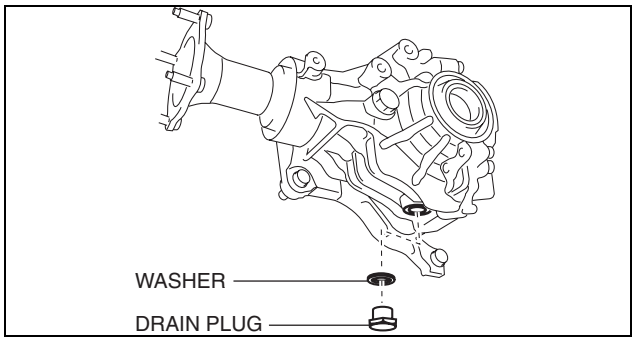

ac5uuw00000091

TRANSFER [FW6AX-EL, GW6AX-EL]

4. Tighten the drain plug with a new washer.

   Tightening torque
   40—58 N·m {4.1—5.9 kgf·m, 30—42 ft·lbf}

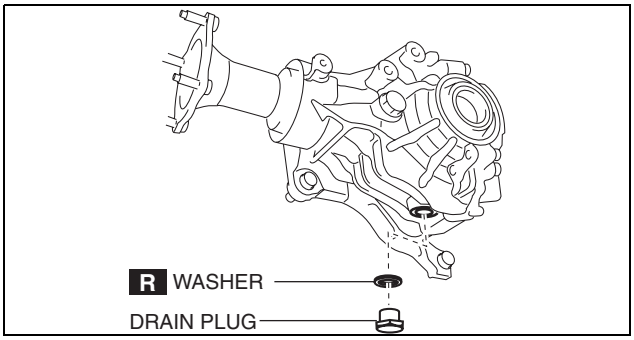

ac5uuw00000092

5. Remove the oil level plug with the washer and add the specified amount and type of oil through the oil level plug hole until the level reaches the bottom of the oil level plug hole.

   Transfer oil
   Specified oil grade: API Service GL-5
   Specified oil viscosity: SAE 80W-90
   Capacity (approx quantity) : 0.45 L {0.48 US qt, 0.40 Imp qt}

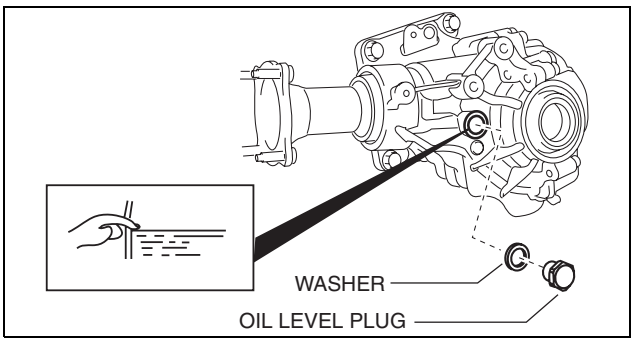

ac5uuw00000093

6. Tighten the oil level plug with a new washer.

   Tightening torque
   40—58 N·m {4.1—5.9 kgf·m, 30—42 ft·lbf}

7. Install the front under cover No.2. (See 09-16-41 FRONT UNDER COVER No.2 REMOVAL/ INSTALLATION.)

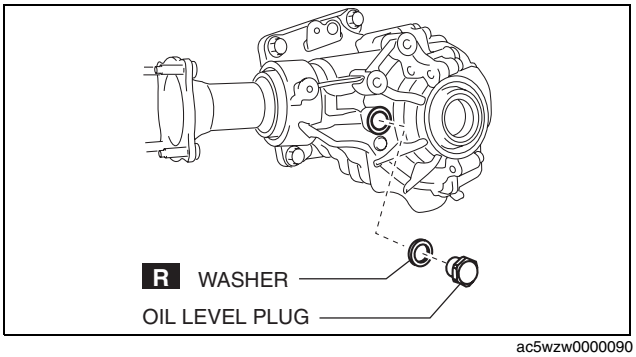

ac5wzw0000090

TRANSFER [FW6AX-EL, GW6AX-EL]

TRANSFER REMOVAL/INSTALLATION [FW6AX-EL]

id0316g68006g1

Caution

- **Performing the following procedures without first removing the front ABS wheel-speed sensor may possibly cause an open circuit in the harness if it is pulled by mistake. Before performing the following procedures, disconnect the front ABS wheel-speed sensor (axle side) and fix it to an appropriate place where the sensor will not be pulled by mistake while servicing the vehicle.**
- **Secure the steering wheel using tape or a cable to prevent the steering shaft from rotating after disconnecting the steering shaft. If the steering wheel rotates after the steering shaft and the steering gear and linkage are disconnected, the internal parts of the clock spring could be damaged.**

1. Disconnect the negative battery cable. (See 01-17A-11 NEGATIVE BATTERY CABLE DISCONNECTION/ CONNECTION [SKYACTIV-G 2.0].)
2. Remove the propeller shaft. (See 03-15-2 PROPELLER SHAFT REMOVAL/INSTALLATION.)
3. Remove the front crossmember component. (See 02-13-15 FRONT CROSSMEMBER REMOVAL/ INSTALLATION.)
4. Remove the exhaust manifold (WU-TWC). (See 01-15A-2 EXHAUST SYSTEM REMOVAL/INSTALLATION [SKYACTIV-G 2.0].)
5. Remove the front drive shaft (RH). (See 03-13-3 FRONT DRIVE SHAFT REMOVAL/INSTALLATION.)
6. Remove the heat shield.
7. Install in the reverse order of removal.
8. Warm up the engine and transaxle, inspect for oil leakage, and inspect the transfer operation.

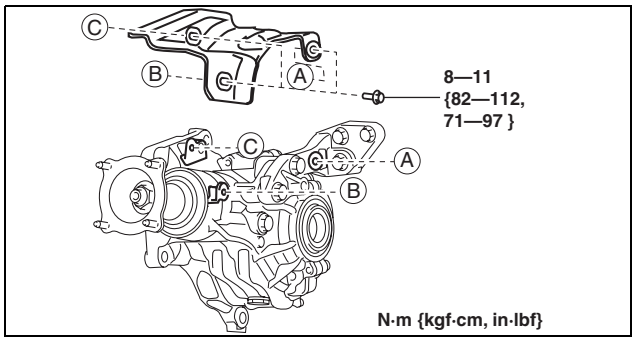

ac5uuw00000095

TRANSFER [FW6AX-EL, GW6AX-EL]

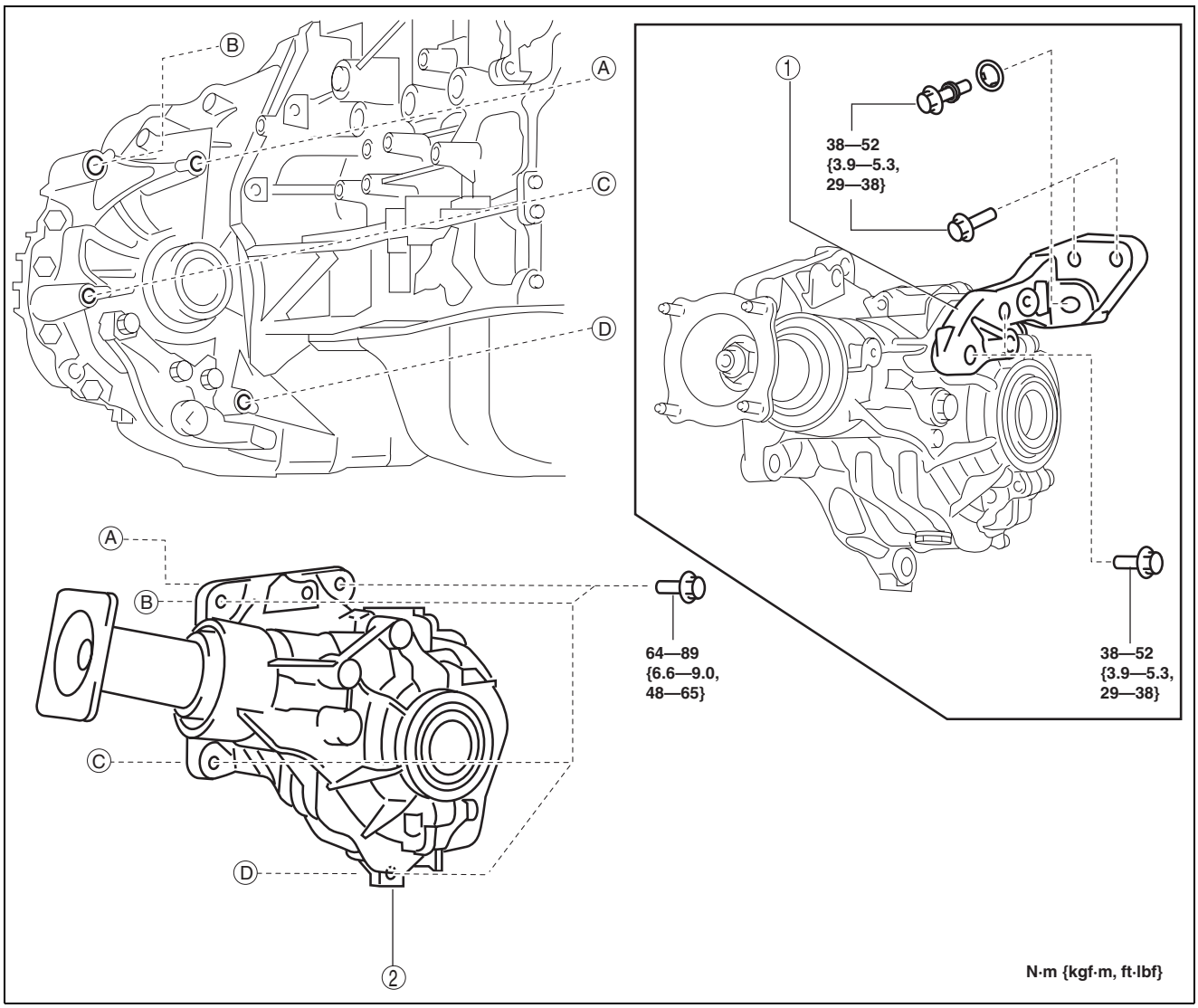

ac5wzw0000090

1	Transfer bracket (See 03-16B-5 Transfer Bracket Installation Note.)
2	Transfer

Transfer Bracket Installation Note

1. Install the transfer bracket to transfer, then temporarily tighten bolts A and B.
2. Tighten bolts B, A & C in this order.

Tightening torque
38—52 N·m {3.9—5.3kgf·m, 29—38 ft·lbf}

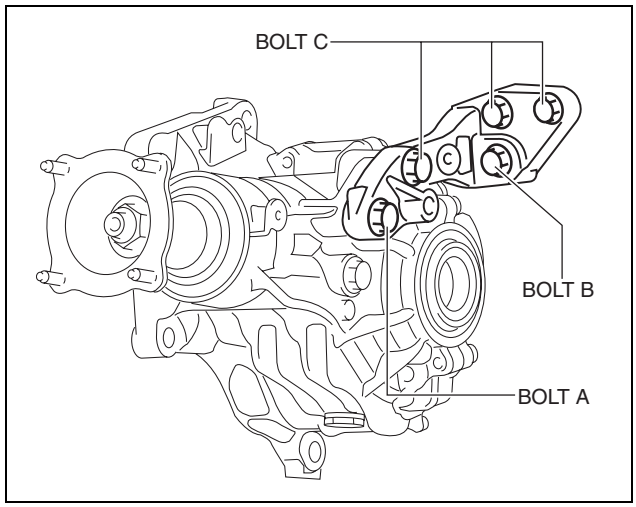

ac5uuw00000097

TRANSFER [FW6AX-EL, GW6AX-EL]

TRANSFER REMOVAL/INSTALLATION [GW6AX-EL]

id0316g68006g3

Caution

- **Performing the following procedures without first removing the front ABS wheel-speed sensor may possibly cause an open circuit in the harness if it is pulled by mistake. Before performing the following procedures, disconnect the front ABS wheel-speed sensor (axle side) and fix it to an appropriate place where the sensor will not be pulled by mistake while servicing the vehicle.**
- **Secure the steering wheel using tape or a cable to prevent the steering shaft from rotating after disconnecting the steering shaft. If the steering wheel rotates after the steering shaft and the steering gear and linkage are disconnected, the internal parts of the clock spring could be damaged.**

1. Disconnect the negative battery cable. (See 01-17B-9 NEGATIVE BATTERY CABLE DISCONNECTION/ CONNECTION [SKYACTIV-D 2.2].)
2. Remove the propeller shaft. (See 03-15-2 PROPELLER SHAFT REMOVAL/INSTALLATION.)
3. Remove the front crossmember component. (See 02-13-15 FRONT CROSSMEMBER REMOVAL/ INSTALLATION.)
4. Remove the front drive shaft (RH). (See 03-13-3 FRONT DRIVE SHAFT REMOVAL/INSTALLATION.)
5. Remove the turbocharger bracket.

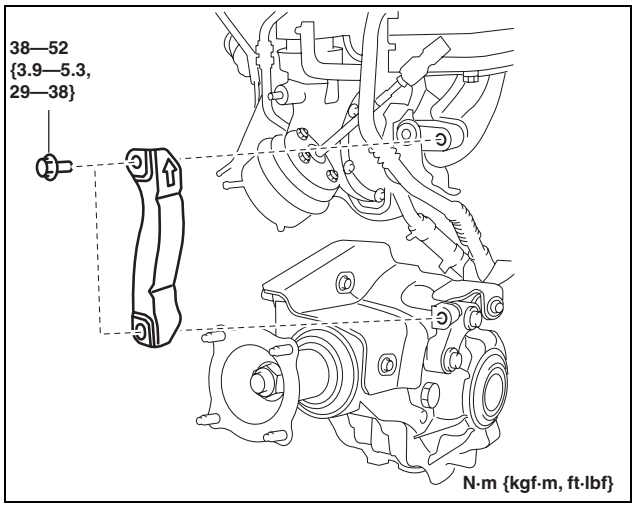

ac5wzw0000238

6. Remove the seal rubber.

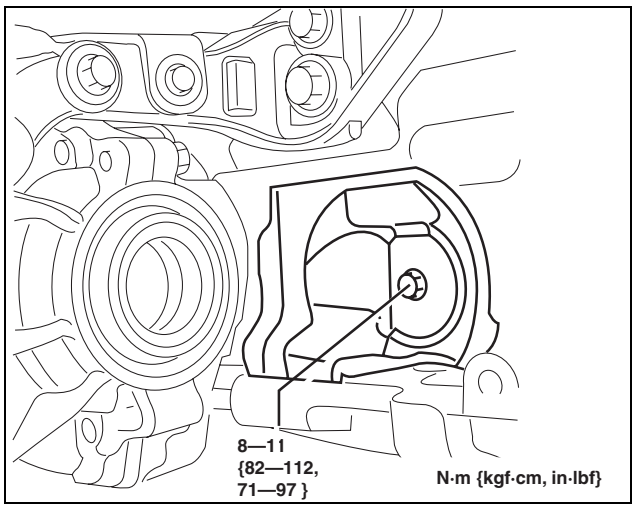

ac5wzw0000238

TRANSFER [FW6AX-EL, GW6AX-EL]

7. Remove the heat shield.
8. Install in the reverse order of removal.
9. Warm up the engine and transaxle, inspect for oil leakage, and inspect the transfer operation.

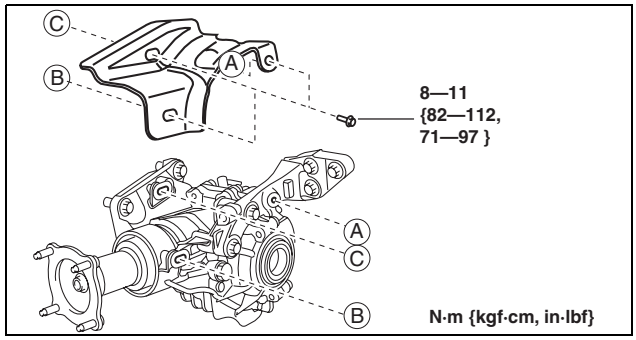

ac5wzw0000238

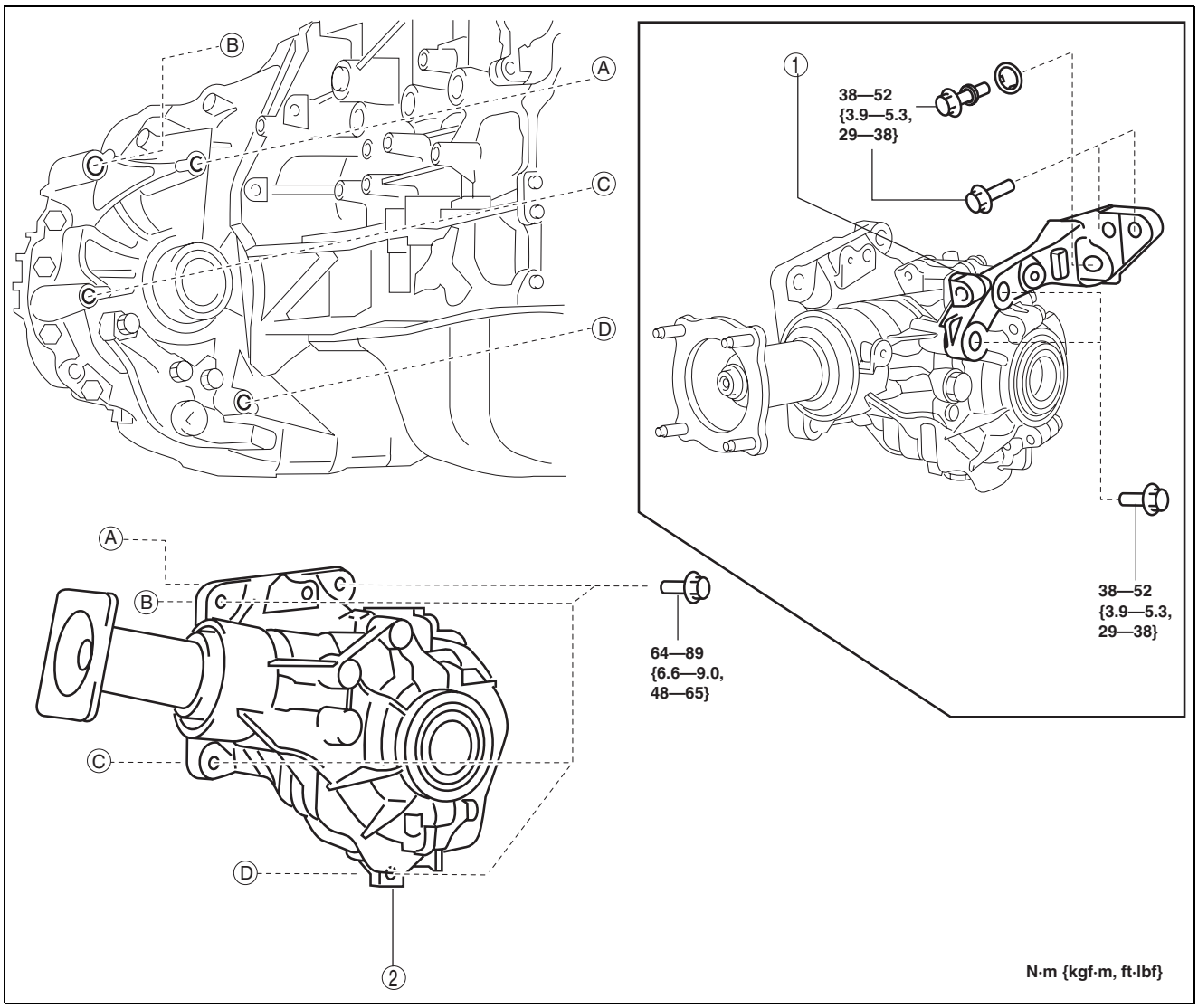

ac5wzw0000238

1	Transfer bracket (See 03-16B-8 Transfer Bracket Installation Note.)
2	Transfer

TRANSFER [FW6AX-EL, GW6AX-EL]

Transfer Bracket Installation Note

1. Install the transfer bracket to transfer, then temporarily tighten bolts A and B.
2. Tighten bolts B, A & C in this order.

Tightening torque
38—52 N·m {3.9—5.3kgf·m, 29—38 ft·lbf}

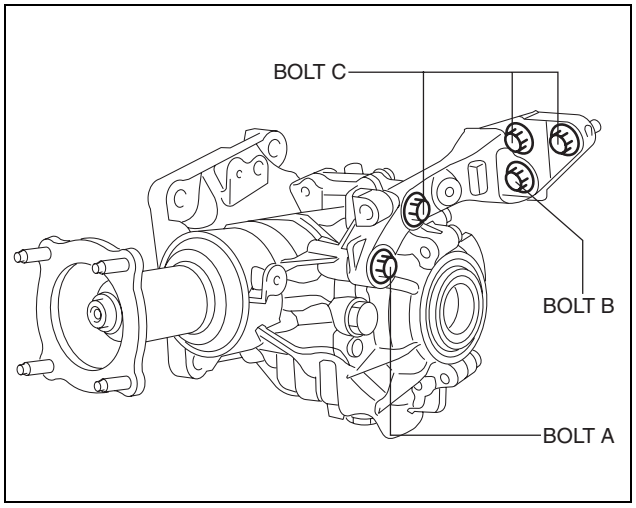

ac5wzw0000238

TRANSFER OIL SEAL REPLACEMENT [FW6AX-EL, GW6AX-EL]

id0316g6800400

Transfer oil seal (LH)

1. Drain the transfer oil. (See 03-16B-2 TRANSFER OIL REPLACEMENT [FW6AX-EL, GW6AX-EL].)
2. Remove the transfer from the vehicle. (See 03-16B-4 TRANSFER REMOVAL/INSTALLATION [FW6AX-EL].) (See 03-16B-6 TRANSFER REMOVAL/INSTALLATION [GW6AX-EL].)
3. Insert a tape-wrapped flathead screwdriver into the lip area of the oil seal (LH) as shown in the figure and remove the oil seal (LH).

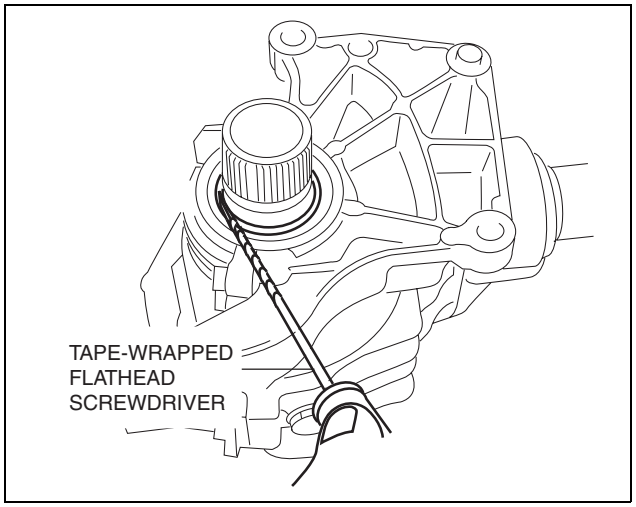

ac5uuw00000098

TRANSFER [FW6AX-EL, GW6AX-EL]

4. Using the **SST** and a hammer, tap the new seal into place.

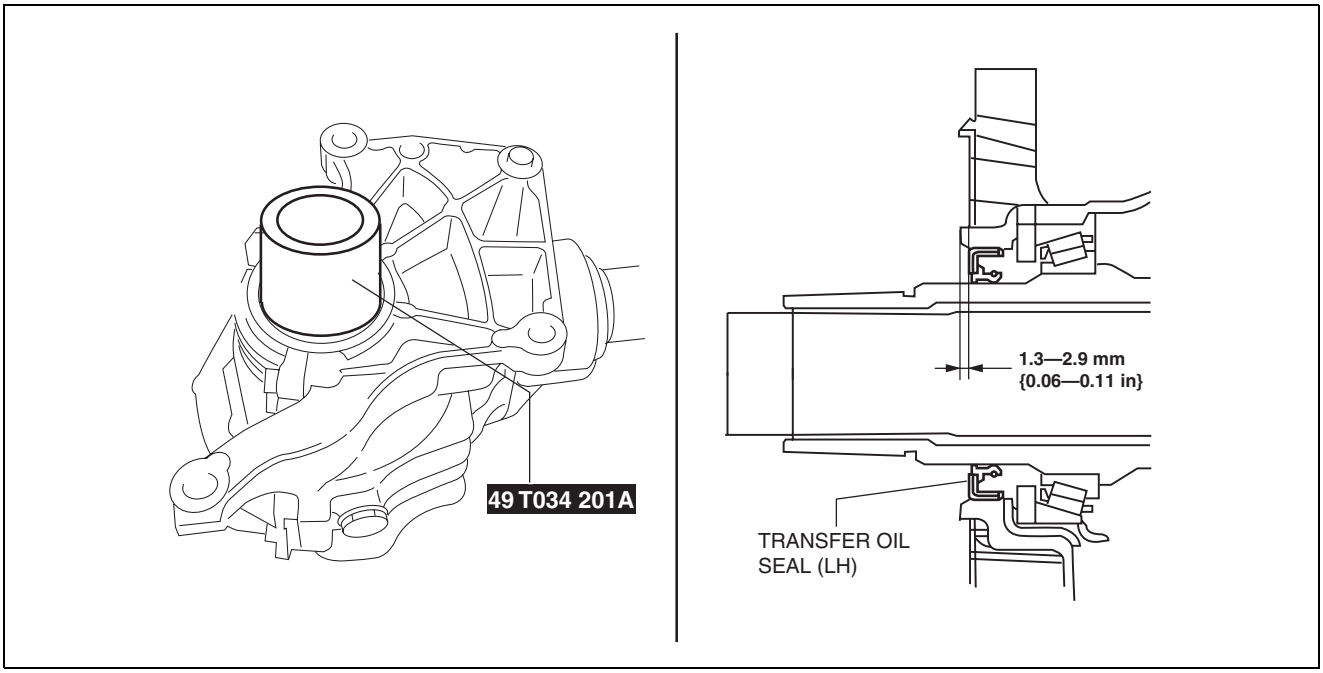

ac5wzw0000233

5. Apply the lip of the oil seal with transfer oil.
6. Install the transfer to the vehicle. (See 03-16B-4 TRANSFER REMOVAL/INSTALLATION [FW6AX-EL].) (See 03-16B-6 TRANSFER REMOVAL/INSTALLATION [GW6AX-EL].)
7. Add the specified amount and type of oil. (See 03-16B-2 TRANSFER OIL REPLACEMENT [FW6AX-EL, GW6AX-EL].)

Transfer oil seal (RH) No.1

1. Remove the front drive shaft (RH). (See 03-13-3 FRONT DRIVE SHAFT REMOVAL/INSTALLATION.)
2. Insert a flathead screwdriver into the notch of the transfer and remove the oil seal (RH) No.1.

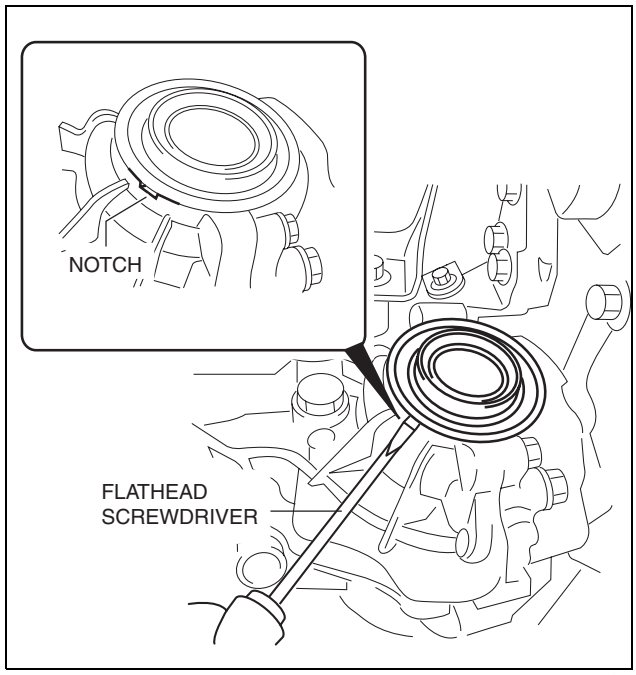

ac5uuw00000100

TRANSFER [FW6AX-EL, GW6AX-EL]

3. Using the **SST** and a hammer, tap the new seal into place.
4. Apply the lip of the oil seal with transfer oil.
5. Install the front drive shaft (RH). (See 03-13-3 FRONT DRIVE SHAFT REMOVAL/INSTALLATION.)

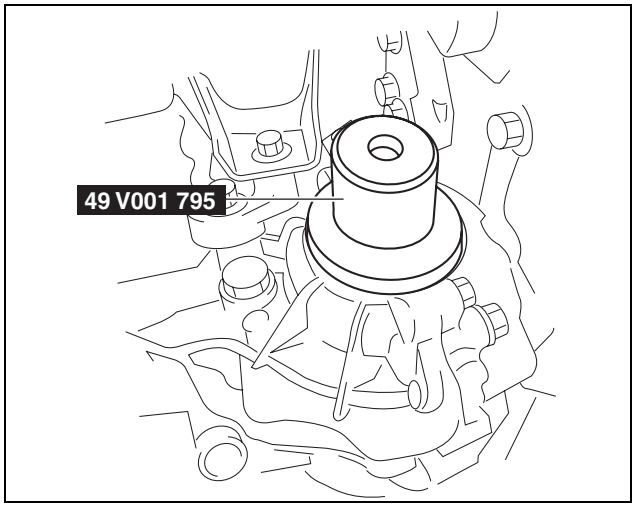

ac5wzw0000233

Transfer oil seal (RH) No.2

1. Drain the transfer oil. (See 03-16B-2 TRANSFER OIL REPLACEMENT [FW6AX-EL, GW6AX-EL].)
2. Remove the front drive shaft (RH). (See 03-13-3 FRONT DRIVE SHAFT REMOVAL/INSTALLATION.)
3. Remove the transfer oil seal (RH) No.1. (See 03-16B-9 Transfer oil seal (RH) No.1.)
4. Insert a tape-wrapped flathead screwdriver into the lip area of the oil seal (RH) No.2 as shown in the figure and remove the oil seal (RH) No.2.

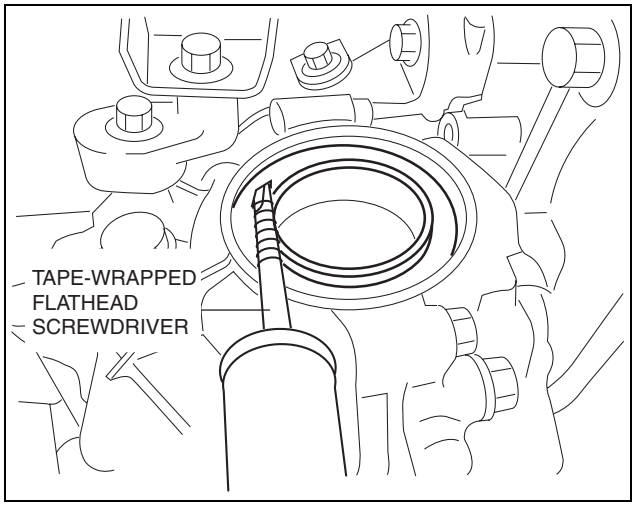

ac5wzw0000233

TRANSFER [FW6AX-EL, GW6AX-EL]

5. Using the **SST** and a hammer, tap the new seal into place.

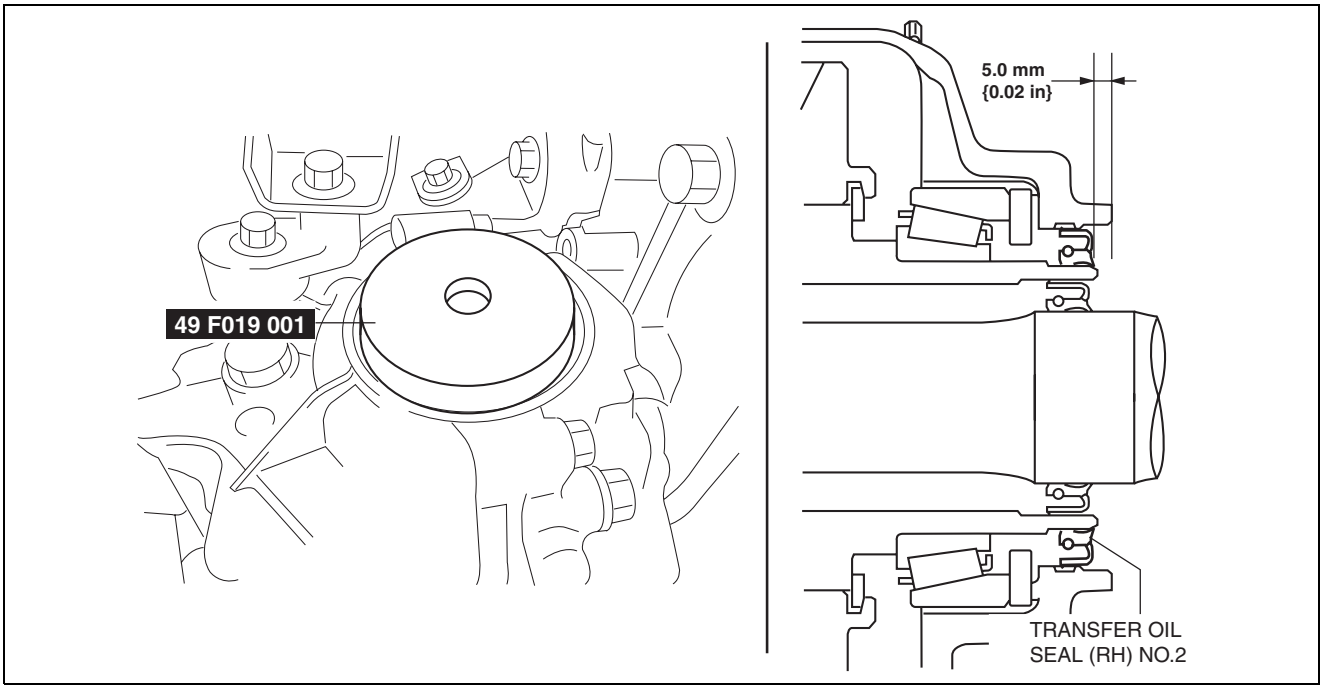

ac5wzw0000273

6. Apply the lip of the oil seal with transfer oil.
7. Install the transfer oil seal (RH) No.1 (See 03-16B-9 Transfer oil seal (RH) No.1.)
8. Install the front drive shaft (RH). (See 03-13-3 FRONT DRIVE SHAFT REMOVAL/INSTALLATION.)
9. Add the specified amount and type of oil. (See 03-16B-2 TRANSFER OIL REPLACEMENT [FW6AX-EL, GW6AX-EL].)

Transfer oil seal (RH) No.3

1. Drain the transfer oil. (See 03-16B-2 TRANSFER OIL REPLACEMENT [FW6AX-EL, GW6AX-EL].)
2. Remove the front drive shaft (RH). (See 03-13-3 FRONT DRIVE SHAFT REMOVAL/INSTALLATION.)
3. Remove the transfer oil seal (RH) No.1 (See 03-16B-9 Transfer oil seal (RH) No.1.)
4. Remove the oil seals using a tape-wrapped flathead screwdriver.

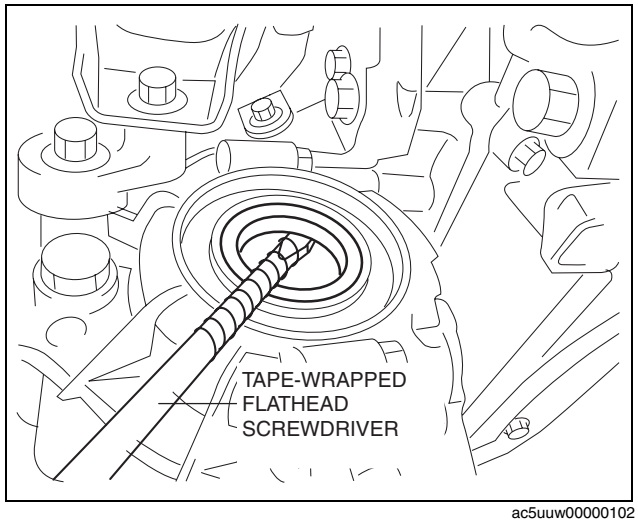

ac5uuw00000102

TRANSFER [FW6AX-EL, GW6AX-EL]

5. Using the **SST** and a hammer, tap the new seal into place.

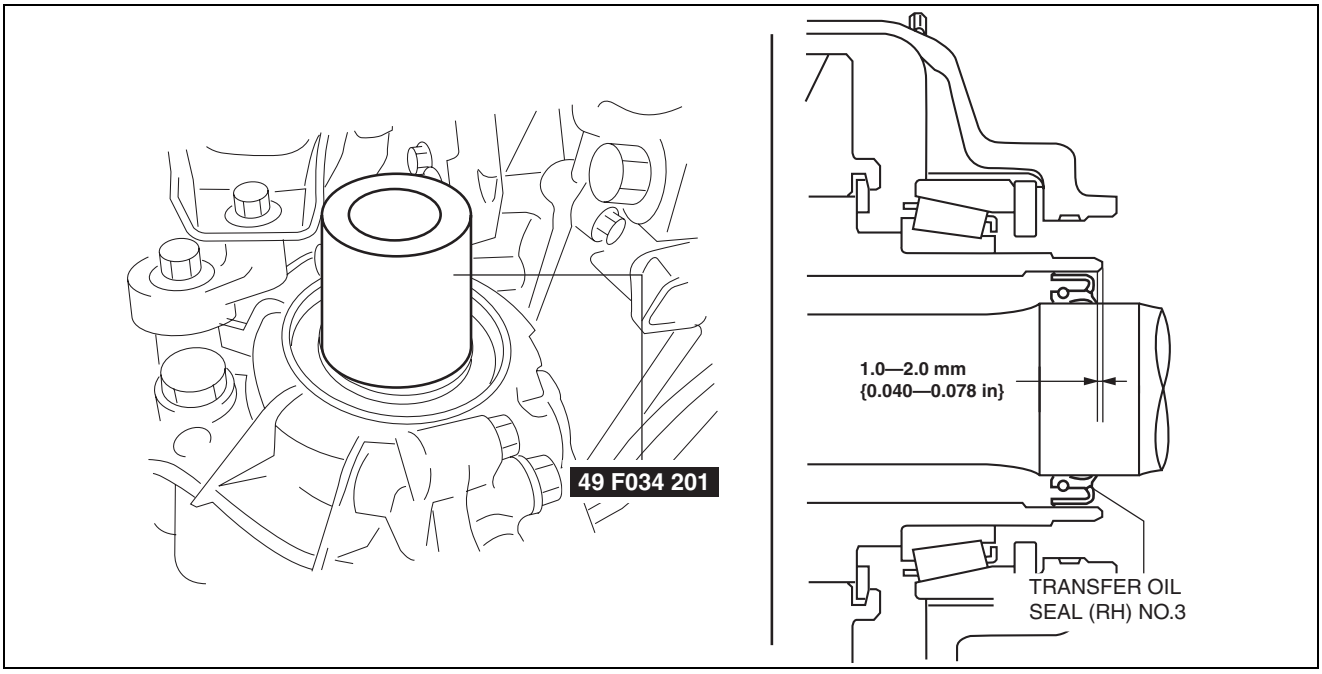

ac5wzw0000233

6. Apply the lip of the oil seal with transfer oil.
7. Install the transfer oil seal (RH) No.1 (See 03-16B-9 Transfer oil seal (RH) No.1.)
8. Install the front drive shaft (RH). (See 03-13-3 FRONT DRIVE SHAFT REMOVAL/INSTALLATION.)
9. Add the specified amount and type of oil. (See 03-16B-2 TRANSFER OIL REPLACEMENT [FW6AX-EL, GW6AX-EL].)

03-18 4-WHEEL DRIVE

ELECTRONIC 4WD CONTROL SYSTEM LOCATION INDEX 03-18–1
DIFFERENTIAL OIL TEMPERATURE SENSOR INSPECTION 03-18–2
DIFFERENTIAL OIL TEMPERATURE SENSOR REMOVAL/INSTALLATION 03-18–2
4WD SOLENOID INSPECTION 03-18–3
4WD CONTROL MODULE INSPECTION 03-18–3
Terminal Voltage List (Reference) 03-18–3
4WD CONTROL MODULE REMOVAL/INSTALLATION 03-18–4
4WD Control module Removal Note . . . 03-18–5
COUPLING COMPONENT REMOVAL/INSTALLATION 03-18–5
Coupling Component Removal Note . . . 03-18–6
Coupling Component Installation Note 03-18–6
4WD CONTROL MODULE CONFIGURATION 03-18–7
COUPLING COMPONENT CALIBRATION DATA WRITING 03-18–7

03

4-WHEEL DRIVE

ELECTRONIC 4WD CONTROL SYSTEM LOCATION INDEX

id031800805200

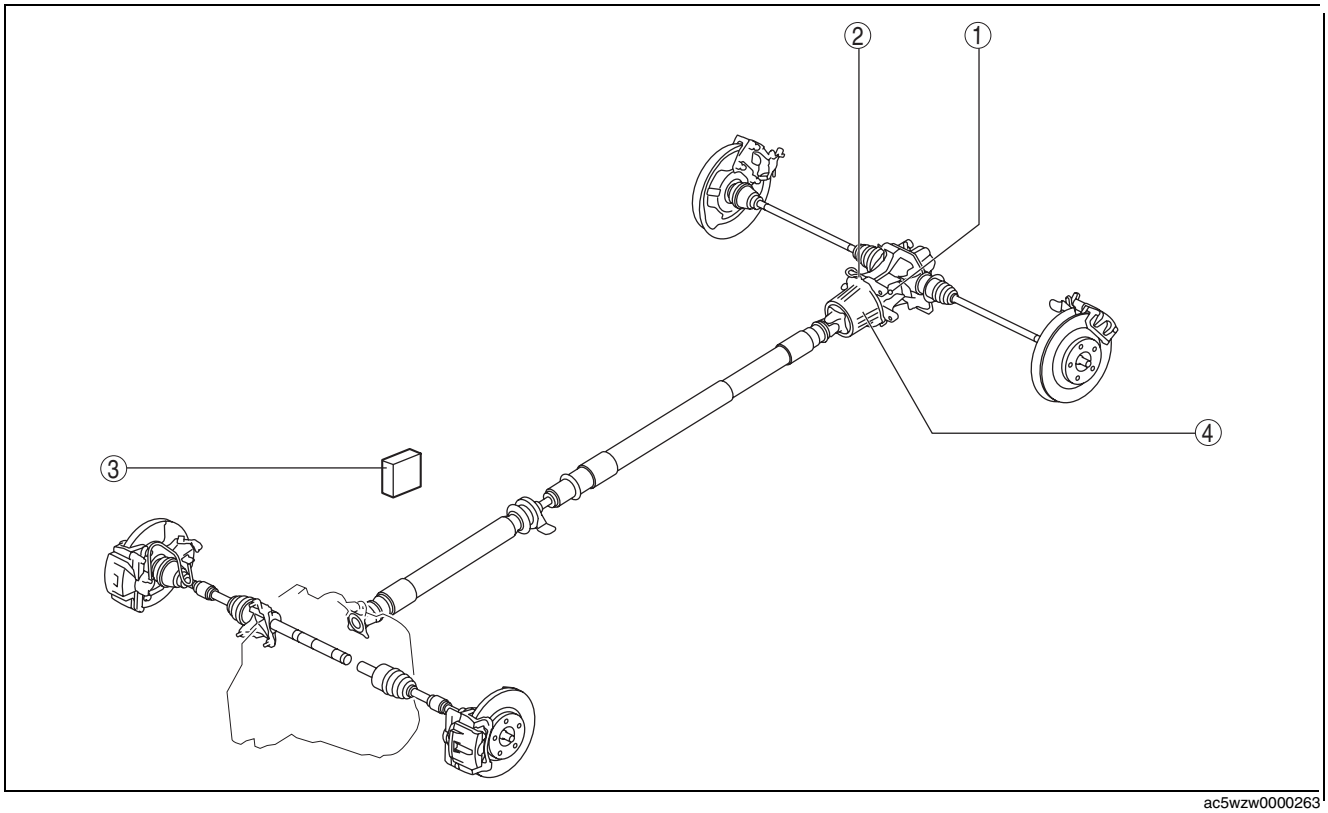

ac5wzw0000263

1	Differential oil temperature sensor (See 03-18-2 DIFFERENTIAL OIL TEMPERATURE SENSOR INSPECTION.) (See 03-18-2 DIFFERENTIAL OIL TEMPERATURE SENSOR REMOVAL/INSTALLATION.)
2	4WD solenoid (See 03-18-3 4WD SOLENOID INSPECTION.)

3	4WD control module (See 03-18-3 4WD CONTROL MODULE INSPECTION.) (See 03-18-4 4WD CONTROL MODULE REMOVAL/INSTALLATION.) (See 03-18-7 4WD CONTROL MODULE CONFIGURATION.) (See 03-18-7 COUPLING COMPONENT CALIBRATION DATA WRITING.)
4	Coupling component (See 03-18-5 COUPLING COMPONENT REMOVAL/INSTALLATION.)

4-WHEEL DRIVE

DIFFERENTIAL OIL TEMPERATURE SENSOR INSPECTION

id031800805600

Warning
- **Hot differential oil may cause severe burns. Do not perform maintenance while differential oil is hot.**

1. Disconnect the negative battery cable.
2. Disconnect the differential oil temperature sensor connector and remove the differential oil temperature sensor.
3. Wrap the differential oil temperature sensor with plastic wrap and immerse it into a beaker filled with water. Gradually raise the water temperature, and measure resistance between differential oil temperature sensor terminals A and B.
   - If not as specified, inspect the harness for continuity. If there is normal continuity between the terminals, replace the differential oil temperature sensor.

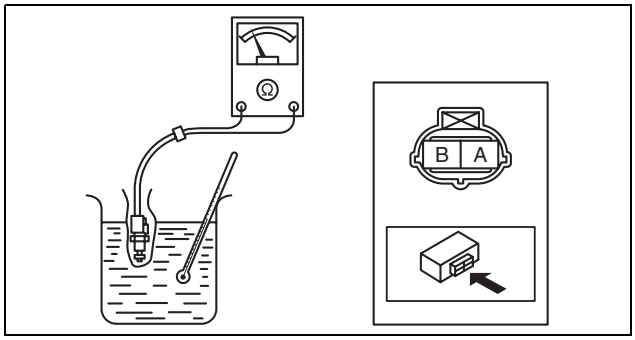

ac5wzw0000263

Differential oil temperature sensor specification

Water temperature (°C {°F})	Resistance (kilohm)
0 {32}	91—100
10 {50}	56—61
20 {68}	35—39
30 {86}	23—25
40 {104}	15—16
50 {122}	10—11
60 {140}	7.1—7.9
70 {158}	5.0—5.6
80 {176}	3.6—4.0

4. Install the differential oil temperature sensor and connect the connector.
5. Connect the negative battery cable. (See 01-17A-11 NEGATIVE BATTERY CABLE DISCONNECTION/CONNECTION [SKYACTIV-G 2.0].) (See 01-17A-13 NEGATIVE BATTERY CABLE DISCONNECTION/CONNECTION [SKYACTIV-G 2.0 (WITHOUT i-stop)].) (See 01-17B-9 NEGATIVE BATTERY CABLE DISCONNECTION/CONNECTION [SKYACTIV-D 2.2].)

DIFFERENTIAL OIL TEMPERATURE SENSOR REMOVAL/INSTALLATION

id031800805700

Warning
- **Hot differential oil may cause severe burns. Do not perform maintenance while differential oil is hot.**

1. Disconnect the negative battery cable.
2. Disconnect the differential oil temperature sensor connector.
3. Remove the differential oil temperature sensor.
4. Apply differential oil to the O-ring.
5. Install the differential oil temperature sensor.

Tightening torque
13—17 N·m {133—173 kgf·cm, 116—150 in·lbf}

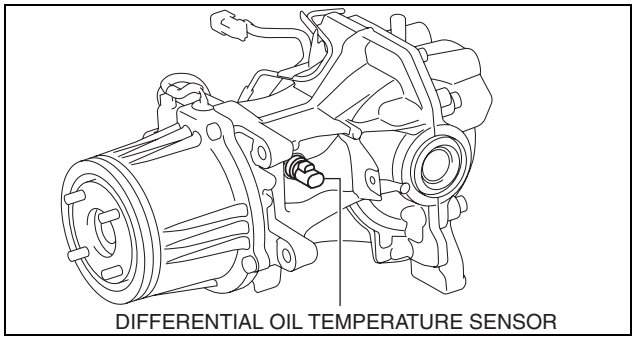
DIFFERENTIAL OIL TEMPERATURE SENSOR
ac5wzw0000263

6. Connect the differential oil temperature sensor connector.
7. Connect the negative battery cable. (See 01-17A-11 NEGATIVE BATTERY CABLE DISCONNECTION/CONNECTION [SKYACTIV-G 2.0].) (See 01-17A-13 NEGATIVE BATTERY CABLE DISCONNECTION/CONNECTION [SKYACTIV-G 2.0 (WITHOUT i-stop)].) (See 01-17B-9 NEGATIVE BATTERY CABLE DISCONNECTION/CONNECTION [SKYACTIV-D 2.2].)

4-WHEEL DRIVE

4WD SOLENOID INSPECTION

id031800805800

1. Disconnect the negative battery cable.
2. Disconnect the 4WD solenoid connector.
3. Measure resistance between 4WD solenoid connector terminals A and B.
   - If the resistance is not within the specification, replace the coupling unit.

   4WD solenoid resistance
   2.2—2.7 ohms
   (Rear differential oil temperature at 20°C {68°F})

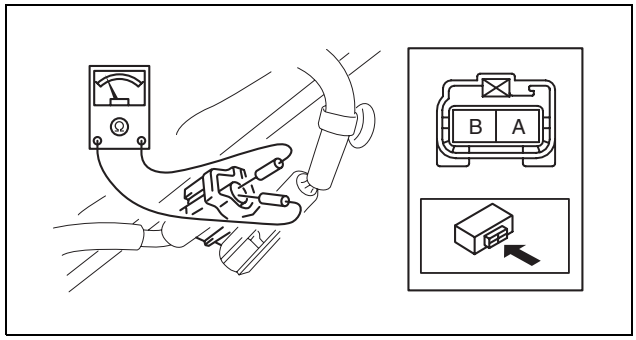

ac5wzw0000263

4. Connect the 4WD solenoid connector.
5. Connect the negative battery cable. (See 01-17A-11 NEGATIVE BATTERY CABLE DISCONNECTION/CONNECTION [SKYACTIV-G 2.0].) (See 01-17A-13 NEGATIVE BATTERY CABLE DISCONNECTION/CONNECTION [SKYACTIV-G 2.0 (WITHOUT i-stop)].) (See 01-17B-9 NEGATIVE BATTERY CABLE DISCONNECTION/CONNECTION [SKYACTIV-D 2.2].)

4WD CONTROL MODULE INSPECTION

id031800805900

Note
- 4WD CM terminal voltage can vary depending on measuring conditions and vehicle aging, resulting in misdiagnosis. Therefore, it is necessary to perform an overall inspection of the input/output systems and 4WD CM to determine which part is malfunctioning.
- With the 4WD CM connector connected, measure voltage by connecting the voltmeter negative (-) lead to the body ground and positive (+) lead to each 4WD CM terminal.

1. Measure voltage or resistance at each 4WD CM terminal using a voltmeter and an ohmmeter.
   - If not as specified, replace the 4WD CM.

Terminal Voltage List (Reference)

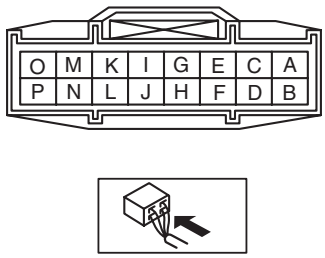

ac5wzw0000263

Terminal	Signal	Input/ output	Connected to	Measuring item	Test condition		Voltage (V)/ Continuity	Inspection location in case of failure
A	Differential oil temperature sensor signal	Input	Differential oil temperature sensor	Voltage	Ignition ON (engine off or on)	Differential oil temperature 20°C {68°F}	3.0	• Inspect differential oil temperature sensor • Inspect related harness
						Differential oil temperature 60°C {140°F}	1.4	
B	—	—	—	—	—	—	—	—
C	Differential oil temperature sensor GND	—	Differential oil temperature sensor	Continuity	Any condition		Yes	• Inspect related harness
D	—	—	—	—	—	—	—	—
E	—	—	—	—	—	—	—	—

4-WHEEL DRIVE

Terminal	Signal	Input/ output	Connected to	Measuring item	Test condition		Voltage (V)/ Continuity	Inspection location in case of failure
F	—	—	—	—	—	—	—	—
G	CAN_H	Input/ output	—	Perform measurement during DTC inspection.				—
H	CAN_L	Input/ output	—	Perform measurement during DTC inspection.				—
I	Power supply (Ignition switch)	Input	Ignition switch	Voltage	ignition switch ON (engine off or on)		B+	• Inspect fuse • Inspect related harness
					ignition switch OFF		1.0 or below	
J	—	—	—	—	—	—	—	—
K	Power supply (Main)	Input	Battery	Voltage	Any condition		B+	• Inspect fuse • Inspect related harness
L	—	—	—	—	—	—	—	—
M	—	—	—	—	—	—	—	—
N	Ground	—	Ground	Voltage	Any condition		0	• Inspect related harness
O	4WD solenoid (+)	Output	4WD solenoid	Voltage	ignition switch ON (engine off or on)		B+	• 4WD solenoid • Inspect related harness
					ignition switch OFF		1.0 or below	
P	4WD solenoid (-)	Output	4WD solenoid	Voltage	ignition switch ON (engine off or on)		B+	• 4WD solenoid • Inspect related harness
					ignition switch OFF		1.0 or below	

4WD CONTROL MODULE REMOVAL/INSTALLATION

id031800806000

Caution

- **When performing configuration, it is necessary to read the coupling component calibration data from the 4WD control module before replacing it. Connect the M-MDS to the vehicle and perform vehicle identification before removing the 4WD control module. The coupling component calibration data is temporarily stored in the M-MDS.**
- **If the configuration was not performed after replacing with a new 4WD control module, the following conditions can be considered as occurring because the coupling component calibration data was not recorded in the 4WD control module.**
  - **— System does not operate normally**
  - **— Problem with coupling component durability may occur**

Note

- The 4WD control module prior to replacement stores the coupling component calibration data.
- If coupling component calibration data from the 4WD control module prior to replacement cannot be read, perform the coupling component calibration data writing. (See 03-18-7 COUPLING COMPONENT CALIBRATION DATA WRITING.)

1. When replacing the 4WD control module, perform the configuration. (See 03-18-7 4WD CONTROL MODULE CONFIGURATION.)
2. Disconnect the negative battery cable. (See 01-17A-11 NEGATIVE BATTERY CABLE DISCONNECTION/ CONNECTION [SKYACTIV-G 2.0].) (See 01-17A-13 NEGATIVE BATTERY CABLE DISCONNECTION/ CONNECTION [SKYACTIV-G 2.0 (WITHOUT i-stop)].) (See 01-17B-9 NEGATIVE BATTERY CABLE DISCONNECTION/CONNECTION [SKYACTIV-D 2.2].)
3. Remove the front scuff plate. (See 09-17-61 FRONT SCUFF PLATE REMOVAL/INSTALLATION.)
4. Remove the front side trim. (See 09-17-62 FRONT SIDE TRIM REMOVAL/INSTALLATION.)

4-WHEEL DRIVE

1	Connector
2	Bolt
3	4WD control module (See 03-18-5 4WD Control module Removal Note.)

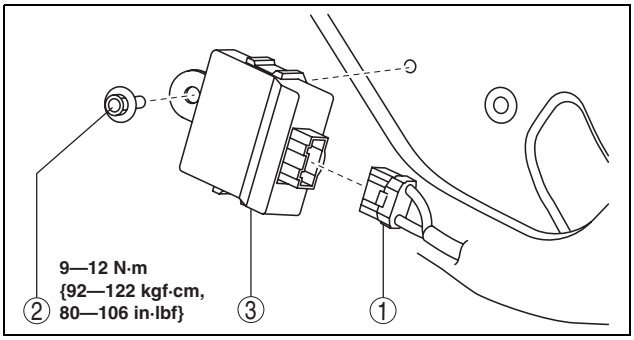

ac5uuw00000320

5. Remove in the order indicated in the table.
6. Install in the reverse order of removal.

Note
- If configuration cannot be performed by reading/writing of the coupling component calibration data, perform the coupling component calibration data writing. (See 03-18-7 COUPLING COMPONENT CALIBRATION DATA WRITING.)

4WD Control module Removal Note
1. Slide the 4WD control module toward the connector, and remove it.

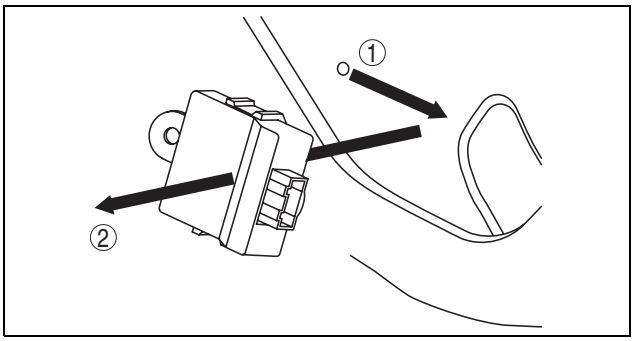

ac5uuw00000878

COUPLING COMPONENT REMOVAL/INSTALLATION

id031800805300

Warning
- **When replacing the coupling component, read the special character string before installing a new coupling component and write it to the 4WD control module after replacement. The special character string is indicated in the two locations shown in the figure.**

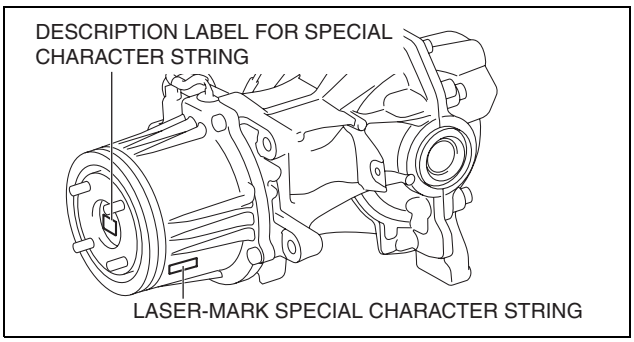

ac5uuw00000879

1. Drain the rear differential oil into a container.
2. Remove the propeller shaft. (See 03-15-2 PROPELLER SHAFT REMOVAL/INSTALLATION.)
3. Remove in the order indicated in the table.
4. Install in the reverse order of removal.
5. Add rear differential oil. (See 03-14-2 DIFFERENTIAL OIL REPLACEMENT.)

4-WHEEL DRIVE

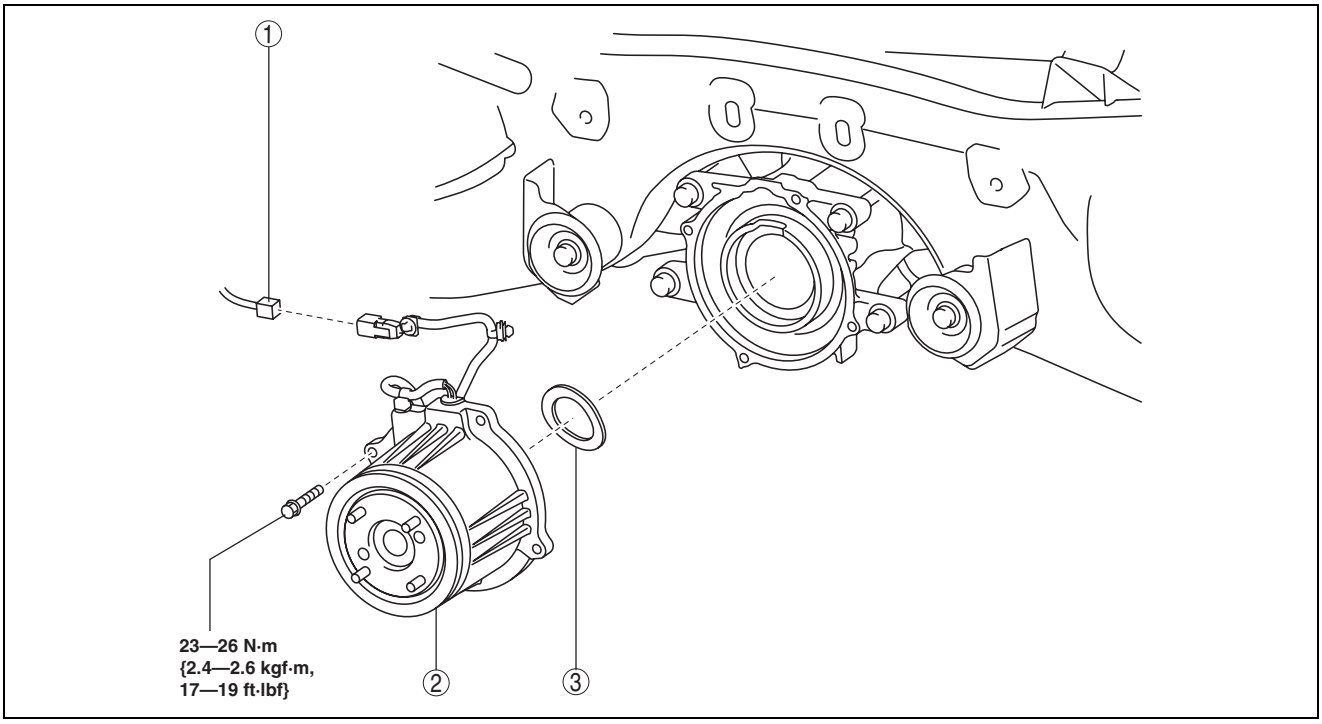

ac5uuw00000355

1	4WD solenoid connector
2	Coupling component (See 03-18-6 Coupling Component Removal Note.) (See 03-18-6 Coupling Component Installation Note.)
3	Washer

Coupling Component Removal Note

1. Support the coupling unit with a transmission jack.
2. Cut away the coupling unit using an oil pan seal cutter.

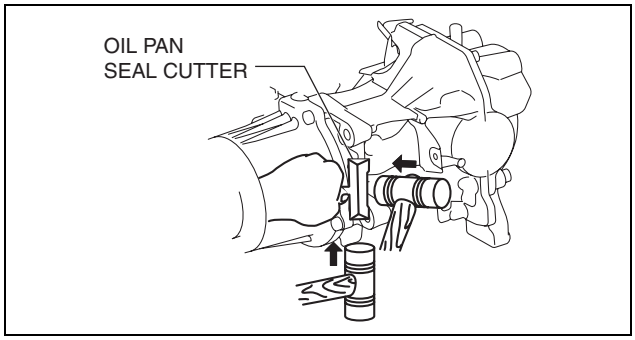

ac5uuw00000880

Coupling Component Installation Note

Note

- Clean away the old sealant before applying the new sealant.
- Install the coupling component before the applied sealant starts to harden.
- Allow the sealant to set at least **30 min** after installation before filling the differential with the specified oil.

1. Apply sealant to the coupling case surface that contacts the rear differential case.
2. Install the coupling unit to the rear differential.

Tightening torque

23—26 N·m {2.4—2.6 kgf·m, 17—19 ft·lbf}

4-WHEEL DRIVE

4WD CONTROL MODULE CONFIGURATION

id031800806100

Caution
- **When performing configuration, it is necessary to read the coupling component calibration data from the 4WD control module before replacing it. Connect the M-MDS to the vehicle and perform vehicle identification before removing the 4WD control module. The coupling component calibration data is temporarily stored in the M-MDS.**

1. Connect the M-MDS to the DLC-2.
2. After the vehicle is identified, select the following items from the toolbox of the M-MDS.
   1. Select “Module Programming”.
3. Then, select items from the screen menu in the following order.
   1. Select “Programmable Module Installation”.
   2. Select “4X4”.
4. Perform the configuration according to the directions on the screen.

Caution
- **When the configuration is performed, CAN communication between the 4WD control module and control module connected to the CAN line is cut temporarily, and communication error DTCs may be detected. After performing the configuration, verify the DTCs for the control module connected to the CAN line and clear it if any DTC is detected.**

5. Verify all the DTCs for the control module connected to the CAN line.
   - If any DTC is stored, clear it.
   - If the DTC is cleared, finish the procedure because the configuration is completely normally.
   - If the DTC remains, perform troubleshooting according to the DTC.

COUPLING COMPONENT CALIBRATION DATA WRITING

id031800806200

1. Connect the M-MDS to the DLC-2.
2. After the vehicle is identified, select the following items from the toolbox of the M-MDS.
   1. Select “Chassis”.
3. Then, select items from the screen menu in the following order.
   1. Select “4WD/AWD”.
   2. Select “Coupling Calibration Data Writing”.
4. Perform the Coupling calibration data writing according to the directions on the screen.
5. Verify all the DTCs for the control module connected to the CAN line.
   - If any DTC is stored, clear it.
   - If the DTC is cleared, finish the procedure because the calibration data writing is completely normally.
   - If the DTC remains, perform troubleshooting according to the DTC.

03-50 TECHNICAL DATA

DRIVELINE/AXLE
TECHNICAL DATA 03-50–1

TECHNICAL DATA

DRIVELINE/AXLE TECHNICAL DATA

id035000800100

Item		Specification
Front wheel bearing maximum play		0.05 mm {0.002 in}
Rear wheel bearing maximum play		0.05 mm {0.002 in}
Front drive shaft standard length (SKYACTIV-G 2.0)	MTX	LH: 673.8—679.0 mm {26.6—26.7 in} RH: 1036.6—1042.8 mm {40.812—41.055 in}
	ATX	LH: 675.5—685.5 mm {26.60—26.98 in} RH: 1038.95—1048.95 mm {40.9036—41.2972 in}
Front drive shaft standard length (SKYACTIV-D 2.2)	MTX	LH: 663.1—668.3 mm {26.11—26.31 in} RH: 1044.1—1049.3 mm {41.107—41.311 in}
	ATX	LH: 672.5—682.5 mm {26.48—26.87 in} RH: 1052.50—1062.50 mm {41.4371—41.8307 in}
Rear drive shaft standard length		LH: 836.8—842.0 mm {32.95—33.14 in} RH: 874.8—880.0 mm {34.45—34.64 in}
Rear differential oil		Specified oil grade: API service GL-5 Specified oil viscosity: SAE 80W-90 Capacity (approx. quantity): 0.45 L {0.48 US qt, 0.40 Imp qt}
Rear differential backlash of pinion gear and side gear		0.1 mm {0.004 in} or less
Rear differential drive pinion preload		0.9—1.6 N·m {9.2—16 kgf·cm, 8.0—14 in·lbf}
Rear differential backlash of drive pinion and ring gear		Standard: 0.13—0.21 mm {0.0052—0.0082 in} Minimum value: 0.07 mm {0.003 in}
Propeller shaft maximum runout		0.8 mm {0.031 in}
Propeller shaft rotation torque		0.29—1.47 N·m {3.0—14.9 kgf·cm, 2.6—13.0 in·lbf}
Transfer oil		Specified oil grade: API Service GL-5 Specified oil viscosity: SAE 80W-90 Capacity (approx. quantity): 0.45 L {0.48 US qt, 0.40 Imp qt}

03-60 SERVICE TOOLS

DRIVELINE/AXLE SST 03-60–1

SERVICE TOOLS

DRIVELINE/AXLE SST

id036000800200

Front and Rear Axle

49 T028 3A0 Ball joint puller set 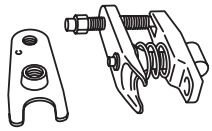	49 T028 301 Dust boot installer 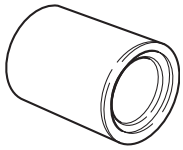	49 U034 204 Dust boot installer 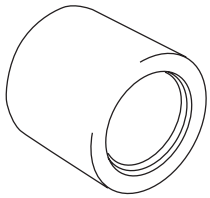
49 W032 310 Support block 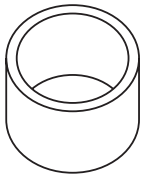	—	—

Drive Shaft

49 B025 017 Sliding hammer 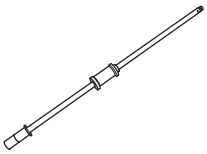	49 B025 010 Attachment A 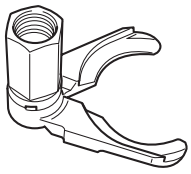	49 H027 002 Bearing remover 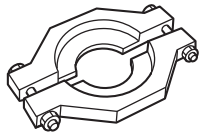
49 W032 310 Support block 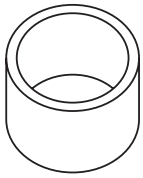	49 T025 001 Boot clamp crimpers 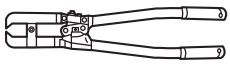	49 UB71 525 Bearing installer 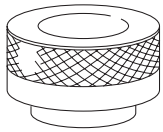

Differential

49 D028 203 Support block 	49 W034 201 Dust boot installer 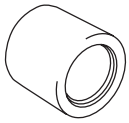	49 0107 680A Engine stand 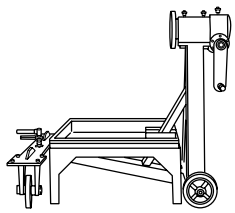
49 L027 0A2 Diff hanger set 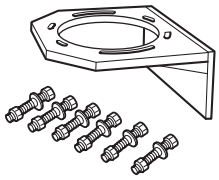	49 T032 317 Weight 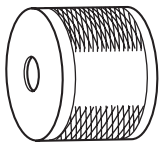	49 T032 316 Shaft
49 L027 004 Gear case remover 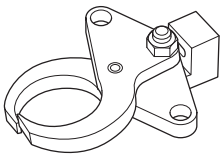	49 L027 006 Serrate socket 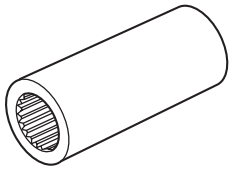	49 L027 007 Hex socket 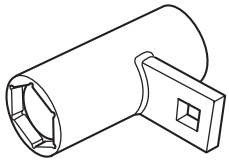
49 H027 002 Bearing remover 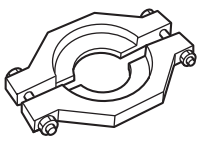	49 0839 425C Bearing puller set 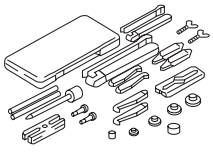	49 F401 331 Bearing installer body 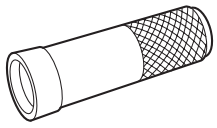

SERVICE TOOLS

49 G030 338 Attachment E 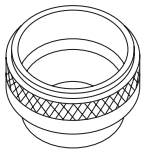	49 M005 797 Oil seal installer 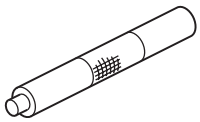	49 L025 002 Bearing installer 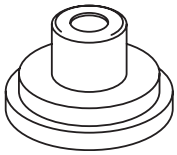
49 F027 007 Attachment ø 72 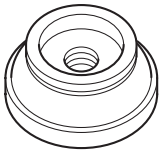	49 B032 335A Oil seal installer 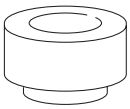	49 V001 525 Bearing installer 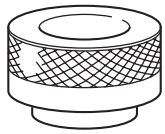

Transfer

49 T034 201A Dust boot installer 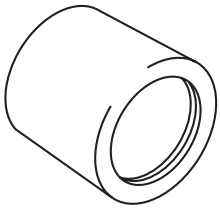	49 V001 795 Oil seal installer 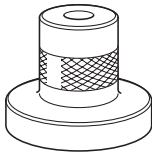	49 F034 201 Dust boot installer 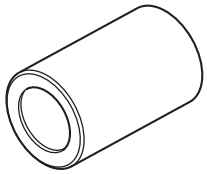
49 F019 001 Oil seal installer 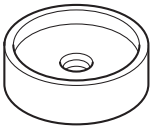	—	—

BRAKES

04 SECTION

ON-BOARD DIAGNOSTIC [DYNAMIC STABILITY CONTROL (DSC)] 04-02A
ON-BOARD DIAGNOSTIC [LASER SENSOR] 04-02B
SYMPTOM TROUBLESHOOTING [DYNAMIC STABILITY CONTROL (DSC)] 04-03
GENERAL PROCEDURES. . . . 04-10
CONVENTIONAL BRAKE SYSTEM 04-11
PARKING BRAKE SYSTEM. . . 04-12
DYNAMIC STABILITY CONTROL. 04-15
TECHNICAL DATA 04-50
SERVICE TOOLS 04-60

04-02A ON-BOARD DIAGNOSTIC [DYNAMIC STABILITY CONTROL (DSC)]

DYNAMIC STABILITY CONTROL SYSTEM WIRING DIAGRAM [DYNAMIC STABILITY CONTROL (DSC)] 04-02A–3
FOREWORD [DYNAMIC STABILITY CONTROL (DSC)] 04-02A–5
Troubleshooting Procedure 04-02A–5
Action for non-repeatable malfunction. 04-02A–6
ON-BOARD DIAGNOSIS [DYNAMIC STABILITY CONTROL (DSC)] 04-02A–7
On-Board Diagnostic (OBD) Test Description 04-02A–7
Reading DTCs Procedure 04-02A–7
Clearing DTCs Procedure 04-02A–7
PID/Data Monitor and Record Procedure 04-02A–8
Active Command Modes Procedure . . 04-02A–8
Snapshot Data Access Procedure. . . . 04-02A–8
DTC Table 04-02A–9
PID/DATA Monitor Table. 04-02A–22
Snapshot Data Table 04-02A–24
Active Command Modes Table 04-02A–25
DTC B10DF:46/C1A08:1C/U2007:46/ U2007:62/U3000:49 [DYNAMIC STABILITY CONTROL (DSC)] 04-02A–26
DTC B11D4:08/U2107:68 [DYNAMIC STABILITY CONTROL (DSC)] 04-02A–27
DTC C0001:01/C0002:01/C0003:01/ C0004:01/C0010:01/C0011:01/ C0014:01/C0015:01/C0018:01/ C0019:01/C001C:01/C001D:01 [DYNAMIC STABILITY CONTROL (DSC)] 04-02A–28
DTC C0020:11/C0020:12/ C0020:13/C0020:71 [DYNAMIC STABILITY CONTROL (DSC)] 04-02A–29
DTC C0023:62/C0040:64 [DYNAMIC STABILITY CONTROL (DSC)] 04-02A–31
DTC C0030:07/C0031:07/C0031:29/ C0031:2F/C0031:64/C0033:07/ C0034:07/C0034:29/C0034:2F/ C0034:64/C0036:07/C0037:07/ C0037:29/C0037:2F/C0037:64/ C0039:07/C003A:07/C003A:29/ C003A:2F/C003A:64 [DYNAMIC STABILITY CONTROL (DSC)] 04-02A–34
DTC C0031:11/C0031:15/C0034:11/ C0034:15/C0037:11/C0037:15/ C003A:11/C003A:15 [DYNAMIC STABILITY CONTROL (DSC)] 04-02A–37
DTC C0044:01/C0044:28/ C0044:54/C0044:64 [DYNAMIC STABILITY CONTROL (DSC)] 04-02A–40
DTC C0051:62/C0051:64/ C0051:67/C0051:85 [DYNAMIC STABILITY CONTROL (DSC)] 04-02A–41
DTC C0061:28/C0061:64/C0062:28/ C0062:64/C0063:28/C0063:64 [DYNAMIC STABILITY CONTROL (DSC)] 04-02A–42
DTC C0061:54/C0062:54/C0063:54 [DYNAMIC STABILITY CONTROL (DSC)] 04-02A–44
DTC C0062:76 [DYNAMIC STABILITY CONTROL (DSC)] 04-02A–45
DTC C006B:00/C0072:68 [DYNAMIC STABILITY CONTROL (DSC)] 04-02A–46
DTC C0089:64 [DYNAMIC STABILITY CONTROL (DSC)] 04-02A–47

ON-BOARD DIAGNOSTIC [DYNAMIC STABILITY CONTROL (DSC)]

DTC C1031:35
[DYNAMIC STABILITY
CONTROL (DSC)] 04-02A–48
DTC C1031:41
[DYNAMIC STABILITY
CONTROL (DSC)] 04-02A–49
DTC C1031:54
[DYNAMIC STABILITY
CONTROL (DSC)] 04-02A–50
DTC C1031:68 [
DYNAMIC STABILITY
CONTROL (DSC)] 04-02A–51
DTC U0001:88/U0100:00/U0101:00/
U0114:00/U0131:00/U0154:00/
U0155:00/U0235:00
[DYNAMIC STABILITY
CONTROL (DSC)] 04-02A–52
Diagnostic procedure 04-02A–53
DTC U0151:00
[DYNAMIC STABILITY
CONTROL (DSC)] 04-02A–53
DTC U0401:00
[DYNAMIC STABILITY
CONTROL (DSC)] 04-02A–54
DTC U0402:00
[DYNAMIC STABILITY
CONTROL (DSC)] 04-02A–56
DTC U0420:00
[DYNAMIC STABILITY
CONTROL (DSC)] 04-02A–57
DTC U0423:00/U0443:00
[DYNAMIC STABILITY
CONTROL (DSC)] 04-02A–58
DTC U0433:00
[DYNAMIC STABILITY
CONTROL (DSC)] 04-02A–59
DTC U0452:00/U0452:86
[DYNAMIC STABILITY
CONTROL (DSC)] 04-02A–60
DTC U2101:00/U2300:52/U2300:54/
U2300:55/U2300:56/U2300:64
[DYNAMIC STABILITY
CONTROL (DSC)] 04-02A–61
DTC U3003:08/U3003:16/U3003:17
[DYNAMIC STABILITY
CONTROL (DSC)] 04-02A–62

ON-BOARD DIAGNOSTIC [DYNAMIC STABILITY CONTROL (DSC)]

DYNAMIC STABILITY CONTROL SYSTEM WIRING DIAGRAM [DYNAMIC STABILITY CONTROL (DSC)]

id0402b2804700

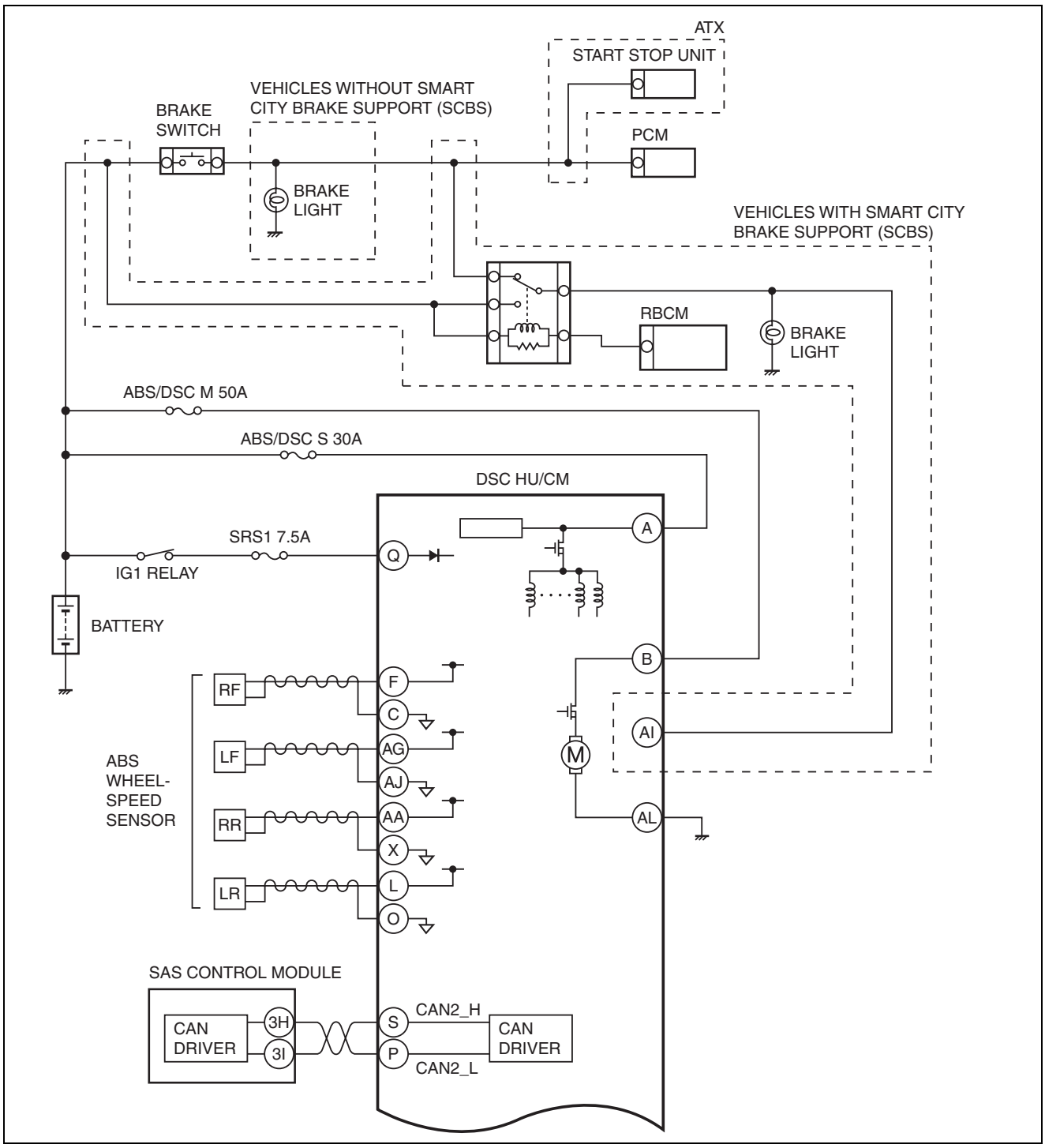

ac5wzw0000380

ON-BOARD DIAGNOSTIC [DYNAMIC STABILITY CONTROL (DSC)]

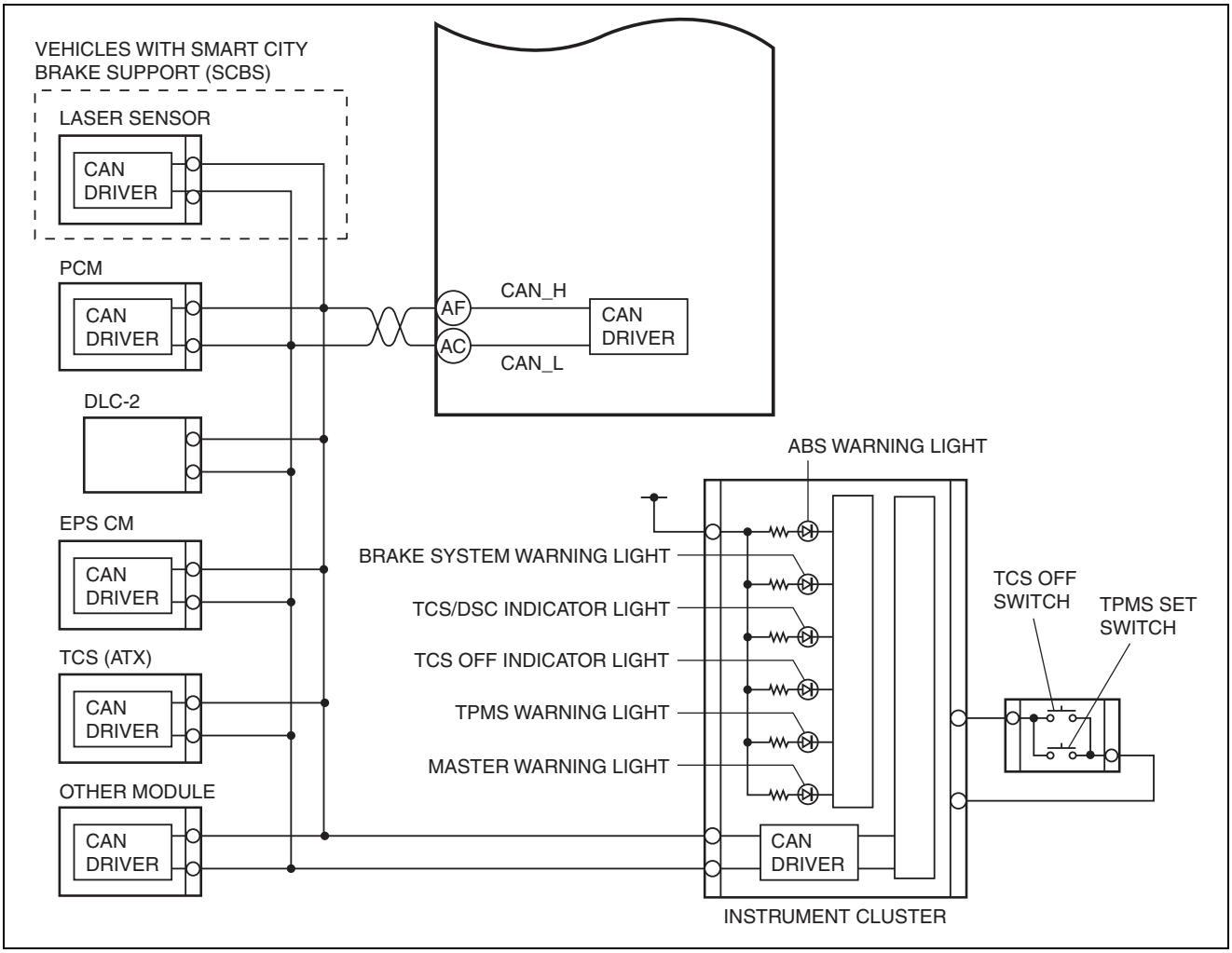

ac5wzn00001119

ON-BOARD DIAGNOSTIC [DYNAMIC STABILITY CONTROL (DSC)]

FOREWORD [DYNAMIC STABILITY CONTROL (DSC)]

id0402b2892400

- If there is any vehicle malfunction complaint lodged by a customer, perform malfunction diagnosis according to the troubleshooting procedure.

Troubleshooting Procedure

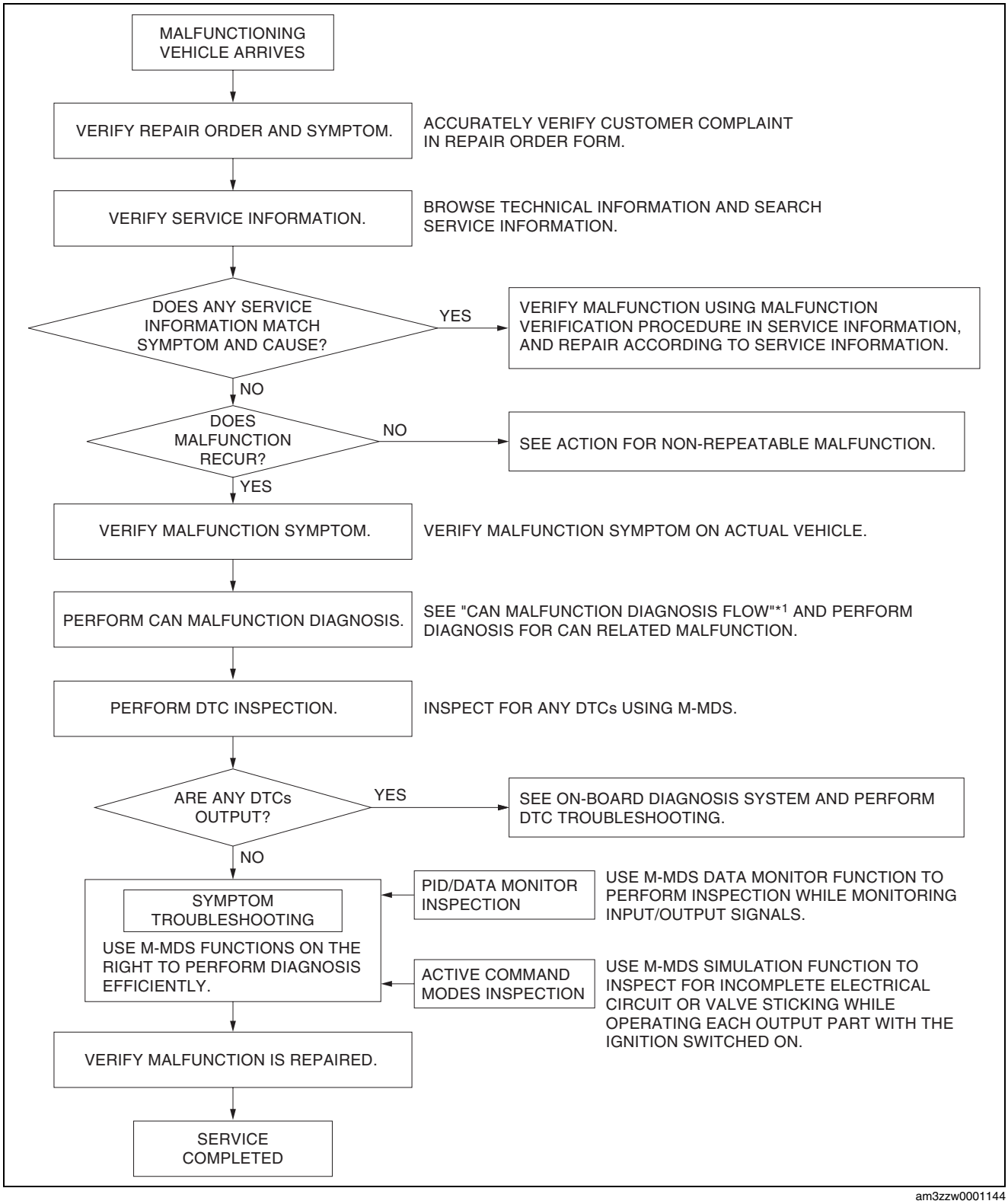

am3zzw0001144

ON-BOARD DIAGNOSTIC [DYNAMIC STABILITY CONTROL (DSC)]

*1 : 10-02A-3 CONTROLLER AREA NETWORK (CAN) MALFUNCTION DIAGNOSIS FLOW [SKYACTIV-G 2.0 (L.H.D.)], 10-02B-3 CONTROLLER AREA NETWORK (CAN) MALFUNCTION DIAGNOSIS FLOW [SKYACTIV-G 2.0 (R.H.D.)], 10-02C-3 CONTROLLER AREA NETWORK (CAN) MALFUNCTION DIAGNOSIS FLOW [SKYACTIV-D 2.2 (L.H.D.)], 10-02D-3 CONTROLLER AREA NETWORK (CAN) MALFUNCTION DIAGNOSIS FLOW [SKYACTIV-D 2.2 (R.H.D.)]

Action for non-repeatable malfunction

- If the malfunction does not recur, verify the malfunction cause by performing the following actions:
  1. Verify that a DTC has been recorded in the memory using the M-MDS. (See 04-02A-7 ON-BOARD DIAGNOSIS [DYNAMIC STABILITY CONTROL (DSC)].)
  2. Perform a simulation test in the simulation mode based on the repair order form, record the data at that time, and detect the malfunction cause.
  3. Shake the wiring harness or connector of the electrical component which is suspected to be the cause of the malfunction, and inspect for the occurrence of any malfunction or DTCs.

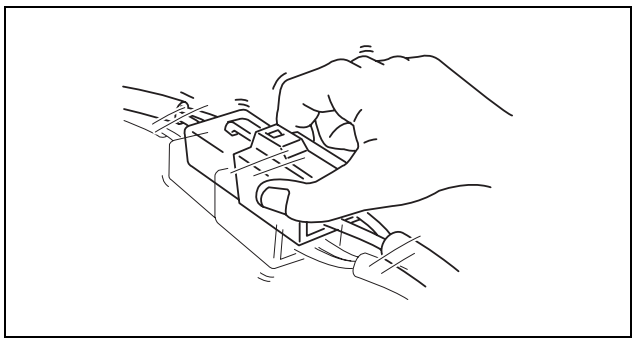

am3uuw0000813

  4. Inspect the female terminals for poor connection.

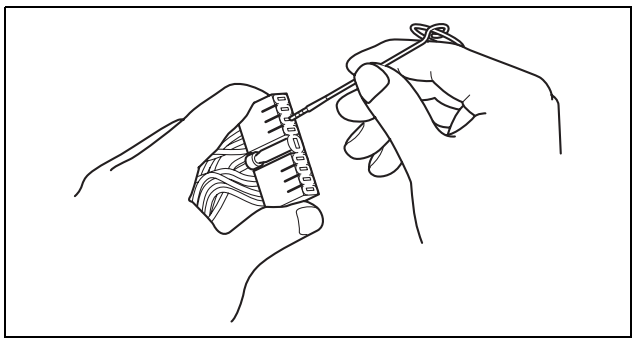

am3uuw0000813

ON-BOARD DIAGNOSTIC [DYNAMIC STABILITY CONTROL (DSC)]

ON-BOARD DIAGNOSIS [DYNAMIC STABILITY CONTROL (DSC)]

id0402b2800200

On-Board Diagnostic (OBD) Test Description

- The OBD test inspects the integrity and function of the DSC and outputs the results when requested by the specific tests.
- On-board diagnostic test also:
  - — Provides a quick inspection of the DSC usually performed at the start of each diagnostic procedure.
  - — Provides verification after repairs to ensure that no other faults occurred during service.
- The OBD test is divided into 3 tests:
  - — Read/clear diagnostic results, PID monitor and record and active command modes.

Read/clear diagnostic results

- This function allows you to read or clear DTCs in the DSC HU/CM memory.

PID/Data monitor and record

- This function allows you to access certain data values, input signals, calculated values, and system status information.

Active command modes

- This function allows you to control devices through the M-MDS.

Reading DTCs Procedure

CMDTC self test

1. Connect the M-MDS (IDS) to the DLC-2.
2. After the vehicle is identified, select the following items from the initialization screen of the IDS.
   (1) Select “Self Test”.
   (2) Select “All CMDTCs”.
3. Verify the DTC according to the directions on the screen.
   - If any DTCs are displayed, perform troubleshooting according to the corresponding DTC inspection.
4. After completion of repairs, clear all DTCs stored in the DSC. (See 04-02A-7 Clearing DTCs Procedure.)

ODDTC self test

1. Connect the M-MDS (IDS) to the DLC-2.
2. After the vehicle is identified, select the following items from the initialization screen of the IDS.
   (1) Select “Self Test”.
   (2) Select “Modules”.
   (3) Select “ABS”.
3. Verify the DTC according to the directions on the screen.
   - If any DTCs are displayed, perform troubleshooting according to the corresponding DTC inspection.
4. After completion of repairs, clear all DTCs stored in the DSC. (See 04-02A-7 Clearing DTCs Procedure.)

Clearing DTCs Procedure

CMDTC clearing DTCs procedure

1. Connect the M-MDS (IDS) to the DLC-2.
2. After the vehicle is identified, select the following items from the initialization screen of the IDS.
   (1) Select “Self Test”.
   (2) Select “All CMDTCs”.
3. Verify the DTC according to the directions on the screen.
4. Press the clear button on the DTC screen to clear the DTC.
5. Switch the ignition to off.
6. Switch the ignition ON (engine off) and wait for **5 s or more**.
7. Perform DTC inspection. (See 04-02A-7 Reading DTCs Procedure.)
8. Verify that no DTCs are displayed.

ODDTC clearing DTCs procedure

1. Connect the M-MDS (IDS) to the DLC-2.
2. After the vehicle is identified, select the following items from the initialization screen of the IDS.
   (1) Select “Self Test”.
   (2) Select “Modules”.
   (3) Select “ABS”.
3. Verify the DTC according to the directions on the screen.
4. Press the clear button on the DTC screen to clear the DTC.
5. Switch the ignition to off.
6. Switch the ignition ON (engine off) and wait for **5 s or more**.
7. Perform DTC inspection. (See 04-02A-7 Reading DTCs Procedure.)
8. Verify that no DTCs are displayed.

ON-BOARD DIAGNOSTIC [DYNAMIC STABILITY CONTROL (DSC)]

PID/Data Monitor and Record Procedure

1. Connect the M-MDS (IDS) to the DLC-2.
2. After the vehicle is identified, select the following items from the initialization screen of the IDS.
   (1) Select “DataLogger”.
   (2) Select “Modules”.
   (3) Select “ABS”.
3. Select the applicable PID from the PID table.
4. Verify the PID data according to the directions on the screen.

Note

- The PID data screen function is used for monitoring the calculated value of input/output signals in the module.Therefore, if the monitored value of the output parts is not within the specification, it is necessary to inspect the monitored value of input parts corresponding to the applicable output part control. In addition, because the system does not display an output part malfunction as an abnormality in the monitored value, it is necessary to inspect the output parts individually.

Active Command Modes Procedure

1. Connect the M-MDS (IDS) to the DLC-2.
2. After the vehicle is identified, select the following items from the initialization screen of the IDS.
   (1) Select “DataLogger”.
   (2) Select “Modules”.
   (3) Select “ABS”.
3. Select the simulation items from the PID table.
4. Perform the active command modes function, inspect the operations for each parts.
   - If the operation of output parts cannot be verified after the active command mode inspection is performed, this could indicate the possibility of an open or short circuit, sticking, or operation malfunction in the output parts.

Snapshot Data Access Procedure

1. Connect the M-MDS (IDS) to the DLC-2.
2. After the vehicle is identified, select the following items from the initialization screen of the IDS.
   (1) Select “Self Test”.
   (2) Select “Modules”.
   (3) Select “ABS”.
3. Then, select the “Retrieve CMDTCs” and perform procedures according to directions on the IDS screen.
4. Retrieve the snapshot data according to the directions on the IDS screen.

Note

- Snapshot data appears at the top of the help screen when the displayed DTC is selected.
- The snapshot data stores the currently detected DTC data.

ON-BOARD DIAGNOSTIC [DYNAMIC STABILITY CONTROL (DSC)]

DTC Table

×: Applicable
-: Not applicable/not illuminated

DTC No.	ABS warning light	Brake system warning light (when parking brake is released)	TCS/ DSC indicator light	TCS OFF indicator light	Tire pressure monitoring system warning light	Master warning light*1	Malfunction location	Fail-safe	Drive cycle	Self test type*2	Memory function	Page
B10DF:46	-	-	Illuminated	-	-	Illuminated	DSC HU/CM (internal malfunction)	×	-	C, D	×	(See 04-02A-26 DTC B10DF:46/ C1A08:1C/ U2007:46/U2007:62/ U3000:49 [DYNAMIC STABILITY CONTROL (DSC)].)
B11D4:08*1	-	-	-	-	-	Illuminated	Laser sensor	×	-	C, D	×	(See 04-02A-27 DTC B11D4:08/ U2107:68 [DYNAMIC STABILITY CONTROL (DSC)].)
C0001:01 C0002:01 C0003:01 C0004:01 C0010:01 C0011:01 C0014:01 C0015:01 C0018:01 C0019:01 C001C:01 C001D:01	Illuminated	Illuminated	Illuminated	-	-	Illuminated	DSC HU/CM internal malfunction (solenoid valve system)	×	-	C, D	×	(See 04-02A-28 DTC C0001:01/ C0002:01/C0003:01/ C0004:01/C0010:01/ C0011:01/C0014:01/ C0015:01/C0018:01/ C0019:01/ C001C:01/ C001D:01 [DYNAMIC STABILITY CONTROL (DSC)].)
C0020:11 C0020:12 C0020:13 C0020:71	Illuminated	-	Illuminated	-	-	Illuminated	Pump motor, motor relay	×	-	C, D	×	(See 04-02A-29 DTC C0020:11/ C0020:12/C0020:13/ C0020:71 [DYNAMIC STABILITY CONTROL (DSC)].)
C0023:62*1	-	-	-	-	-	Illuminated	Brake switch	×	-	C, D	×	(See 04-02A-31 DTC C0023:62/ C0040:64 [DYNAMIC STABILITY CONTROL (DSC)].)

ON-BOARD DIAGNOSTIC [DYNAMIC STABILITY CONTROL (DSC)]

DTC No.	ABS warning light	Brake system warning light (when parking brake is released)	TCS/ DSC indicator light	TCS OFF indicator light	Tire pressure monitoring system warning light	Master warning light*1	Malfunction location	Fail-safe	Drive cycle	Self test type*2	Memory function	Page
C0030:07	Illuminated	-*3	Illuminated	-	Flashes*4	Illuminated	LF ABS sensor rotor	×	-	C, D	×	(See 04-02A-34 DTC C0030:07/ C0031:07/C0031:29/ C0031:2F/ C0031:64/C0033:07/ C0034:07/C0034:29/ C0034:2F/ C0034:64/C0036:07/ C0037:07/C0037:29/ C0037:2F/ C0037:64/C0039:07/ C003A:07/ C003A:29/ C003A:2F/C003A:64 [DYNAMIC STABILITY CONTROL (DSC)].)
C0031:07							LF ABS wheel-speed sensor/ ABS sensor rotor					
C0031:11	Illuminated	-*3	Illuminated	-	Flashes*4	Illuminated	LF ABS wheel-speed sensor	×	-	C, D	×	(See 04-02A-37 DTC C0031:11/ C0031:15/C0034:11/ C0034:15/C0037:11/ C0037:15/ C003A:11/C003A:15 [DYNAMIC STABILITY CONTROL (DSC)].)
C0031:15												
C0031:29	Illuminated	-*3	Illuminated	-	Flashes*4	Illuminated	LF ABS wheel-speed sensor/ ABS sensor rotor	×	-	C, D	×	(See 04-02A-34 DTC C0030:07/ C0031:07/C0031:29/ C0031:2F/ C0031:64/C0033:07/ C0034:07/C0034:29/ C0034:2F/ C0034:64/C0036:07/ C0037:07/C0037:29/ C0037:2F/ C0037:64/C0039:07/ C003A:07/ C003A:29/ C003A:2F/C003A:64 [DYNAMIC STABILITY CONTROL (DSC)].)
C0031:2F												
C0031:64												
C0033:07	Illuminated	-*3	Illuminated	-	Flashes*4	Illuminated	RF ABS sensor rotor	×	-	C, D	×	(See 04-02A-34 DTC C0030:07/ C0031:07/C0031:29/ C0031:2F/ C0031:64/C0033:07/ C0034:07/C0034:29/ C0034:2F/ C0034:64/C0036:07/ C0037:07/C0037:29/ C0037:2F/ C0037:64/C0039:07/ C003A:07/ C003A:29/ C003A:2F/C003A:64 [DYNAMIC STABILITY CONTROL (DSC)].)
C0034:07							RF ABS wheel-speed sensor/ ABS sensor rotor					

ON-BOARD DIAGNOSTIC [DYNAMIC STABILITY CONTROL (DSC)]

DTC No.	ABS warning light	Brake system warning light (when parking brake is released)	TCS/ DSC indicator light	TCS OFF indicator light	Tire pressure monitoring system warning light	Master warning light*1	Malfunction location	Fail-safe	Drive cycle	Self test type*2	Memory function	Page
C0034:11 C0034:15	Illuminated	-*3	Illuminated	-	Flashes*4	Illuminated	RF ABS wheel-speed sensor	×	-	C, D	×	(See 04-02A-37 DTC C0031:11/ C0031:15/C0034:11/ C0034:15/C0037:11/ C0037:15/ C003A:11/C003A:15 [DYNAMIC STABILITY CONTROL (DSC)].)
C0034:29 C0034:2F C0034:64	Illuminated	-*3	Illuminated	-	Flashes*4	Illuminated	RF ABS wheel-speed sensor/ ABS sensor rotor	×	-	C, D	×	(See 04-02A-34 DTC C0030:07/ C0031:07/C0031:29/ C0031:2F/ C0031:64/C0033:07/ C0034:07/C0034:29/ C0034:2F/ C0034:64/C0036:07/ C0037:07/C0037:29/ C0037:2F/ C0037:64/C0039:07/ C003A:07/ C003A:29/ C003A:2F/C003A:64 [DYNAMIC STABILITY CONTROL (DSC)].)
C0036:07	Illuminated	-*3	Illuminated	-	Flashes*4	Illuminated	LR ABS sensor rotor	×	-	C, D	×	(See 04-02A-34 DTC C0030:07/ C0031:07/C0031:29/ C0031:2F/ C0031:64/C0033:07/ C0034:07/C0034:29/ C0034:2F/ C0034:64/C0036:07/ C0037:07/C0037:29/ C0037:2F/ C0037:64/C0039:07/ C003A:07/ C003A:29/ C003A:2F/C003A:64 [DYNAMIC STABILITY CONTROL (DSC)].)
C0037:07							LR ABS wheel-speed sensor/ ABS sensor rotor					
C0037:11 C0037:15	Illuminated	-*3	Illuminated	-	Flashes*4	Illuminated	LR ABS wheel-speed sensor	×	-	C, D	×	(See 04-02A-37 DTC C0031:11/ C0031:15/C0034:11/ C0034:15/C0037:11/ C0037:15/ C003A:11/C003A:15 [DYNAMIC STABILITY CONTROL (DSC)].)

ON-BOARD DIAGNOSTIC [DYNAMIC STABILITY CONTROL (DSC)]

DTC No.	ABS warning light	Brake system warning light (when parking brake is released)	TCS/ DSC indicator light	TCS OFF indicator light	Tire pressure monitoring system warning light	Master warning light *1	Malfunction location	Fail-safe	Drive cycle	Self test type *2	Memory function	Page
C0037:29 C0037:2F C0037:64	Illuminated	-*3	Illuminated	-	Flashes *4	Illuminated	LR ABS wheel-speed sensor/ ABS sensor rotor	×	-	C, D	×	(See 04-02A-34 DTC C0030:07/ C0031:07/C0031:29/ C0031:2F/ C0031:64/C0033:07/ C0034:07/C0034:29/ C0034:2F/ C0034:64/C0036:07/ C0037:07/C0037:29/ C0037:2F/ C0037:64/C0039:07/ C003A:07/ C003A:29/ C003A:2F/C003A:64 [DYNAMIC STABILITY CONTROL (DSC)].)
C0039:07	Illuminated	-*3	Illuminated	-	Flashes *4	Illuminated	RR ABS sensor rotor	×	-	C, D	×	(See 04-02A-34 DTC C0030:07/ C0031:07/C0031:29/ C0031:2F/ C0031:64/C0033:07/ C0034:07/C0034:29/ C0034:2F/ C0034:64/C0036:07/ C0037:07/C0037:29/ C0037:2F/ C0037:64/C0039:07/ C003A:07/ C003A:29/ C003A:2F/C003A:64 [DYNAMIC STABILITY CONTROL (DSC)].)
C003A:07							RR ABS wheel-speed sensor/ ABS sensor rotor					
C003A:11 C003A:15	Illuminated	-*3	Illuminated	-	Flashes *4	Illuminated	RR ABS wheel-speed sensor	×	-	C, D	×	(See 04-02A-37 DTC C0031:11/ C0031:15/C0034:11/ C0034:15/C0037:11/ C0037:15/ C003A:11/C003A:15 [DYNAMIC STABILITY CONTROL (DSC)].)
C003A:29 C003A:2F C003A:64	Illuminated	-*3	Illuminated	-	Flashes *4	Illuminated	RR ABS wheel-speed sensor/ ABS sensor rotor	×	-	C, D	×	(See 04-02A-34 DTC C0030:07/ C0031:07/C0031:29/ C0031:2F/ C0031:64/C0033:07/ C0034:07/C0034:29/ C0034:2F/ C0034:64/C0036:07/ C0037:07/C0037:29/ C0037:2F/ C0037:64/C0039:07/ C003A:07/ C003A:29/ C003A:2F/C003A:64 [DYNAMIC STABILITY CONTROL (DSC)].)

ON-BOARD DIAGNOSTIC [DYNAMIC STABILITY CONTROL (DSC)]

DTC No.	ABS warning light	Brake system warning light (when parking brake is released)	TCS/ DSC indicator light	TCS OFF indicator light	Tire pressure monitoring system warning light	Master warning light*1	Malfunction location	Fail-safe	Drive cycle	Self test type*2	Memory function	Page
C0040:64	-	-	Illuminated	-	Flashes*4	Illuminated	Brake switch	×	-	C, D	×	(See 04-02A-31 DTC C0023:62/C0040:64 [DYNAMIC STABILITY CONTROL (DSC)].)
C0044:01	-	-	Illuminated	-	Flashes*4*5	Illuminated*6	Brake fluid pressure sensor	×	-	C, D	×	(See 04-02A-40 DTC C0044:01/C0044:28/C0044:54/C0044:64 [DYNAMIC STABILITY CONTROL (DSC)].)
C0044:28	-	-	Illuminated	-	Flashes*4	Illuminated						
C0044:54	-	-	Illuminated	-	Flashes*4*5	Illuminated*6						
C0044:64	-	-	Illuminated	-	Flashes*4	Illuminated						
C0051:62	-	-	Illuminated	-	Flashes*4	Illuminated	Steering angle sensor	×	-	C, D	×	(See 04-02A-41 DTC C0051:62/C0051:64/C0051:67/C0051:85 [DYNAMIC STABILITY CONTROL (DSC)].)
C0051:64												
C0051:67	-	-	Illuminated	-	-	Illuminated						
C0051:85	-	-	Illuminated	-	Flashes*4	Illuminated						
C0061:28	-	-	Illuminated	-	Flashes*4	Illuminated	SAS control module system	×	-	C, D	×	(See 04-02A-42 DTC C0061:28/C0061:64/C0062:28/C0062:64/C0063:28/C0063:64 [DYNAMIC STABILITY CONTROL (DSC)].)
C0061:54	Illuminated*6	-	Illuminated	-	Flashes*4*5	Illuminated*6	DSC HU/CM system (unperformed initialization procedure)	×	-	C, D	×	(See 04-02A-44 DTC C0061:54/C0062:54/C0063:54 [DYNAMIC STABILITY CONTROL (DSC)].)
C0061:64	-	-	Illuminated	-	Flashes*4	Illuminated	SAS control module system	×	-	C, D	×	(See 04-02A-42 DTC C0061:28/C0061:64/C0062:28/C0062:64/C0063:28/C0063:64 [DYNAMIC STABILITY CONTROL (DSC)].)
C0062:28	Illuminated*6	-	Illuminated	-	-	Illuminated*6						
C0062:54	Illuminated*6	-	Illuminated	-	Flashes*4*5	Illuminated*6	DSC HU/CM system (unperformed initialization procedure)	×	-	C, D	×	(See 04-02A-44 DTC C0061:54/C0062:54/C0063:54 [DYNAMIC STABILITY CONTROL (DSC)].)

ON-BOARD DIAGNOSTIC [DYNAMIC STABILITY CONTROL (DSC)]

DTC No.	ABS warning light	Brake system warning light (when parking brake is released)	TCS/ DSC indicator light	TCS OFF indicator light	Tire pressure monitoring system warning light	Master warning light*1	Malfunction location	Fail-safe	Drive cycle	Self test type*2	Memory function	Page
C0062:64	Illuminated*6	-	Illuminated	-	-	Illuminated*6	SAS control module system	×	-	C, D	×	(See 04-02A-42 DTC C0061:28/ C0061:64/C0062:28/ C0062:64/C0063:28/ C0063:64 [DYNAMIC STABILITY CONTROL (DSC)].)
C0062:76	Illuminated*6	-	Illuminated	-	Flashes*4*5	Illuminated*6	SAS control module system	×	-	C, D	×	(See 04-02A-45 DTC C0062:76 [DYNAMIC STABILITY CONTROL (DSC)].)
C0063:28	-	-	Illuminated	-	Flashes*4	Illuminated	SAS control module system	×	-	C, D	×	(See 04-02A-42 DTC C0061:28/ C0061:64/C0062:28/ C0062:64/C0063:28/ C0063:64 [DYNAMIC STABILITY CONTROL (DSC)].)
C0063:54	Illuminated*6	-	Illuminated	-	Flashes*4*5	Illuminated*6	DSC HU/CM system (unperformed initialization procedure)	×	-	C, D	×	(See 04-02A-44 DTC C0061:54/ C0062:54/C0063:54 [DYNAMIC STABILITY CONTROL (DSC)].)
C0063:64	-	-	Illuminated	-	Flashes*4	Illuminated	SAS control module system	×	-	C, D	×	(See 04-02A-42 DTC C0061:28/ C0061:64/C0062:28/ C0062:64/C0063:28/ C0063:64 [DYNAMIC STABILITY CONTROL (DSC)].)
C006B:00	-	-	Illuminated	-	Flashes*4	Illuminated	TCS/DSC control system	×	-	C, D	×	(See 04-02A-46 DTC C006B:00/ C0072:68 [DYNAMIC STABILITY CONTROL (DSC)].)
C0072:68			-*9		-	-						
C0089:64	-	-	-	-	-	-	TCS OFF switch	-	-	C, D	×	(See 04-02A-47 DTC C0089:64 [DYNAMIC STABILITY CONTROL (DSC)].)
C1031:35	-	-	-	-	Flashes*4	-	Tire pressure monitoring system (TPMS) set switch	×	-	C, D	×	(See 04-02A-48 DTC C1031:35 [DYNAMIC STABILITY CONTROL (DSC)].)

ON-BOARD DIAGNOSTIC [DYNAMIC STABILITY CONTROL (DSC)]

DTC No.	ABS warning light	Brake system warning light (when parking brake is released)	TCS/ DSC indicator light	TCS OFF indicator light	Tire pressure monitoring system warning light	Master warning light*1	Malfunction location	Fail-safe	Drive cycle	Self test type*2	Memory function	Page
C1031:41	-	-	-	-	Flashes*4	-	Tire pressure monitoring system (TPMS) system	×	-	C, D	×	(See 04-02A-49 DTC C1031:41 [DYNAMIC STABILITY CONTROL (DSC)].)
C1031:54												(See 04-02A-50 DTC C1031:54 [DYNAMIC STABILITY CONTROL (DSC)].)
C1031:68												(See 04-02A-51 DTC C1031:68 [DYNAMIC STABILITY CONTROL (DSC)].)
C1A08:1C	-	-	Illuminated	-	Flashes*4	Illuminated	DSC HU/CM (internal malfunction)	×	-	C, D	×	(See 04-02A-26 DTC B10DF:46/ C1A08:1C/ U2007:46/U2007:62/ U3000:49 [DYNAMIC STABILITY CONTROL (DSC)].)
U0001:88	Illuminated	-	Illuminated	-	Flashes*4	Illuminated	CAN line	×	-	C, D	×	(See 04-02A-52 DTC U0001:88/ U0100:00/U0101:00/ U0114:00/U0131:00/ U0154:00/U0155:00/ U0235:00 [DYNAMIC STABILITY CONTROL (DSC)].)
U0100:00	Illuminated*6	-	Illuminated*6	-	Flashes*4*5	Illuminated*6						
U0101:00*7	-	-	Illuminated	-	Flashes*4	Illuminated						
U0114:00*8	-	-	-	-	Flashes*4	-						
U0131:00	-	-	Illuminated	-	Flashes*4	Illuminated						
U0151:00	-	Illuminated*6	Illuminated	-	Flashes*4*5	Illuminated*6	SAS control module system (CAN2 line malfunction)	×	-	C, D	×	(See 04-02A-53 DTC U0151:00 [DYNAMIC STABILITY CONTROL (DSC)].)
U0154:00	-	-	Illuminated	-	-	-	CAN line	×	-	C, D	×	(See 04-02A-52 DTC U0001:88/ U0100:00/U0101:00/ U0114:00/U0131:00/ U0154:00/U0155:00/ U0235:00 [DYNAMIC STABILITY CONTROL (DSC)].)
U0155:00	Illuminated*6	-	Illuminated*6	-	Flashes*4*5	Illuminated*6						
U0235:00*1	-	-	-	-	-	Illuminated						
U0401:00	-	-	Illuminated*6	-	Flashes*4*5	Illuminated*6	Abnormal message from PCM	×	-	C, D	×	(See 04-02A-54 DTC U0401:00 [DYNAMIC STABILITY CONTROL (DSC)].)

ON-BOARD DIAGNOSTIC [DYNAMIC STABILITY CONTROL (DSC)]

DTC No.	ABS warning light	Brake system warning light (when parking brake is released)	TCS/ DSC indicator light	TCS OFF indicator light	Tire pressure monitoring system warning light	Master warning light*1	Malfunction location	Fail-safe	Drive cycle	Self test type*2	Memory function	Page
U0402:00*7	-	-	Illuminated	-	Flashes*4	Illuminated	Abnormal message from transmission/ transaxle	×	-	C, D	×	(See 04-02A-56 DTC U0402:00 [DYNAMIC STABILITY CONTROL (DSC)].)
U0420:00	-	-	Illuminated	-	Flashes*4	Illuminated	Abnormal message from EPS CM	×	-	C, D	×	(See 04-02A-57 DTC U0420:00 [DYNAMIC STABILITY CONTROL (DSC)].)
U0423:00	-	-	-	-	Flashes*4	Illuminated	Abnormal message from instrument cluster	×	-	C, D	×	(See 04-02A-58 DTC U0423:00/ U0443:00 [DYNAMIC STABILITY CONTROL (DSC)].)
U0433:00*1	-	-	-	-	-	Illuminated	Abnormal message from laser sensor	×	-	C, D	×	(See 04-02A-59 DTC U0433:00 [DYNAMIC STABILITY CONTROL (DSC)].)
U0443:00	-	-	-	-	-	Illuminated	Abnormal message from instrument cluster	×	-	C, D	×	(See 04-02A-58 DTC U0423:00/ U0443:00 [DYNAMIC STABILITY CONTROL (DSC)].)
U0452:00	-	-	Illuminated	-	-	-	Abnormal message from SAS control module	×	-	C, D	×	(See 04-02A-60 DTC U0452:00/ U0452:86 [DYNAMIC STABILITY CONTROL (DSC)].)
U0452:86	Illuminated*6	-	Illuminated	-	Flashes*4*5	Illuminated*6						
U2007:46	-	-	Illuminated	-	-	Illuminated	DSC HU/ CM (internal malfunction)	×	-	C, D	×	(See 04-02A-26 DTC B10DF:46/ C1A08:1C/ U2007:46/U2007:62/ U3000:49 [DYNAMIC STABILITY CONTROL (DSC)].)
U2007:62	Illuminated	Illuminated	Illuminated	-	-	Illuminated	DSC HU/ CM (internal malfunction)	×	-	C, D	×	(See 04-02A-26 DTC B10DF:46/ C1A08:1C/ U2007:46/U2007:62/ U3000:49 [DYNAMIC STABILITY CONTROL (DSC)].)
U2101:00	Illuminated	-	Illuminated	-	Flashes*4	Illuminated	Configuration data not recorded	×	-	C, D	×	(See 04-02A-61 DTC U2101:00/ U2300:52/U2300:54/ U2300:55/U2300:56/ U2300:64 [DYNAMIC STABILITY CONTROL (DSC)].)

ON-BOARD DIAGNOSTIC [DYNAMIC STABILITY CONTROL (DSC)]

DTC No.	ABS warning light	Brake system warning light (when parking brake is released)	TCS/ DSC indicator light	TCS OFF indicator light	Tire pressure monitoring system warning light	Master warning light*1	Malfunction location	Fail-safe	Drive cycle	Self test type*2	Memory function	Page
U2107:68*1	-	-	-	-	-	Illuminated	Laser sensor	×	-	C, D	×	(See 04-02A-27 DTC B11D4:08/ U2107:68 [DYNAMIC STABILITY CONTROL (DSC)].)
U2300:52 U2300:54 U2300:55 U2300:56 U2300:64	Illuminated	-	Illuminated	-	Flashes*4	Illuminated	Configuration data not recorded	×	-	C, D	×	(See 04-02A-61 DTC U2101:00/ U2300:52/U2300:54/ U2300:55/U2300:56/ U2300:64 [DYNAMIC STABILITY CONTROL (DSC)].)
U3000:49	Illuminated*6	Illuminated*6	Illuminated	-	Flashes*4*5	Illuminated	DSC HU/ CM (internal malfunction)	×	-	C, D	×	(See 04-02A-26 DTC B10DF:46/ C1A08:1C/ U2007:46/U2007:62/ U3000:49 [DYNAMIC STABILITY CONTROL (DSC)].)
U3003:08	-	-	-	-	-	-	Power supply system	-	-	C, D	×	(See 04-02A-62 DTC U3003:08/ U3003:16/U3003:17 [DYNAMIC STABILITY CONTROL (DSC)].)
U3003:16	Illuminated	-*10 Illuminated*11*12	Illuminated	-	Flashes*4	Illuminated		×				
U3003:17	Illuminated	Illuminated	Illuminated	-	Flashes*4	Illuminated						

*1 : Vehicles with smart city brake support (SCBS)
*2 : C: CMDTC self-test, D: ODDTC self-test
*3 : Illuminates when two wheels or more have a malfunction.
*4 : Tire pressure monitoring system warning light illuminates after flashes.
*5 : Not illuminated/flashed depending on malfunction content.
*6 : Not illuminated depending on malfunction content.
*7 : ATX only
*8 : 4WD only
*9 : Turns on if the slip of a specific wheel is **10km/h {6.2 mph} or more**.
*10 : When power supply voltage is **7.9—9.6 V** for **550 ms or more**.
*11 : When power supply voltage is **6.0—7.9 V** for **630 ms or more**.
*12 : When power supply voltage is **below 6 V** for **50 ms or more**.

ON-BOARD DIAGNOSTIC [DYNAMIC STABILITY CONTROL (DSC)]

Fail-safe Function Malfunction Contents

DTC No.	Fail-safe function											
	Control status											
	ABS control	EBD control	TCS Control		DSC Control	Roll over mitigation (ROM)	Brake assist control	Vehicle roll prevention function *1	Hill launch assist (HLA)	Tire pressure monitoring system (TPMS)	Smart city brake support (SCBS) *2	Secondary collision reduction (SCR)
			Brake control	Engine control								
B10DF:46	Control enabled	Control enabled	Control disabled		Control disabled	Control disabled	Control disabled	Control disabled	Control disabled	Control enabled	Control disabled	Control disabled
B11D4:08 *2	Control enabled	Control enabled	Control enabled		Control enabled	Control enabled	Control enabled	Control enabled	Control enabled	Control enabled	Control disabled	Control enabled
C0001:01 C0002:01 C0003:01 C0004:01 C0010:01 C0011:01 C0014:01 C0015:01 C0018:01 C0019:01 C001C:01 C001D:01	Control disabled	Control disabled	Control disabled		Control disabled	Control disabled	Control disabled	Control disabled	Control disabled	Control enabled	Control disabled	Control disabled
C0020:11 C0020:12 C0020:13 C0020:71	Control disabled	Control enabled	Control disabled		Control disabled	Control disabled	Control disabled	Control disabled	Control disabled	Control enabled	Control disabled	Control disabled
C0023:62 *2	Control enabled	Control enabled	Control enabled		Control enabled	Control enabled	Control enabled	Control enabled	Control enabled	Control enabled	Control disabled	Control enabled
C0030:07 C0031:07 C0031:11 C0031:15 C0031:29 C0031:2F C0031:64	Control disabled	Control enabled *3	Control disabled		Control disabled	Control disabled	Control disabled	Control disabled	Control disabled	Control disabled	Control disabled	Control disabled
C0033:07 C0034:07 C0034:11 C0034:15 C0034:29 C0034:2F C0034:64	Control disabled	Control enabled *3	Control disabled		Control disabled	Control disabled	Control disabled	Control disabled	Control disabled	Control disabled	Control disabled	Control disabled
C0036:07 C0037:07 C0037:11 C0037:15 C0037:29 C0037:2F C0037:64	Control disabled	Control enabled *3	Control disabled		Control disabled	Control disabled	Control disabled	Control disabled	Control disabled	Control disabled	Control disabled	Control disabled

ON-BOARD DIAGNOSTIC [DYNAMIC STABILITY CONTROL (DSC)]

DTC No.	Fail-safe function											
	Control status											
	ABS control	EBD control	TCS Control		DSC Control	Roll over mitigation (ROM)	Brake assist control	Vehicle roll prevention function *1	Hill launch assist (HLA)	Tire pressure monitoring system (TPMS)	Smart city brake support (SCBS) *2	Secondary collision reduction (SCR)
			Brake control	Engine control								
C0039:07 C003A:07 C003A:11 C003A:15 C003A:29 C003A:2F C003A:64	Controlled	Controlled *3	Control disabled		Controlled	Controlled	Controlled	Controlled	Controlled	Controlled	Controlled	Controlled
C0040:64	Controlled	Controlled	Control enabled		Controlled	Controlled	Controlled	Controlled	Controlled	Controlled	Controlled	Controlled
C0044:01	Controlled	Controlled	Controlled *4		Controlled *4	Controlled *4	Controlled	Controlled *4	Controlled *4	Controlled *4	Controlled *4	Controlled *4
C0044:28	Controlled	Controlled	Control disabled		Controlled	Controlled	Controlled	Controlled	Controlled	Controlled	Controlled	Controlled
C0044:54	Controlled	Controlled	Controlled *4		Controlled *4	Controlled *4	Controlled *4	Controlled *4	Controlled *4	Controlled *4	Controlled *4	Controlled *4
C0044:64	Controlled	Controlled	Control disabled		Controlled	Controlled	Controlled	Controlled	Controlled	Controlled	Controlled	Controlled
C0051:62 C0051:64	Controlled	Controlled	Control disabled		Controlled	Controlled	Controlled	Controlled	Controlled	Controlled	Controlled	Controlled
C0051:67	Controlled	Controlled	Control disabled		Controlled	Controlled	Controlled	Controlled	Controlled	Controlled	Controlled	Controlled
C0051:85	Controlled	Controlled	Control disabled		Controlled	Controlled	Controlled	Controlled	Controlled	Controlled	Controlled	Controlled
C0061:28	Controlled	Controlled	Control disabled		Controlled	Controlled	Controlled	Controlled	Controlled	Controlled	Controlled	Controlled
C0061:54	Controlled *4	Controlled	Controlled *4		Controlled *4	Controlled *4	Controlled *4	Controlled *4	Controlled *4	Controlled *4	Controlled *4	Controlled *4
C0061:64	Controlled	Controlled	Control disabled		Controlled	Controlled	Controlled	Controlled	Controlled	Controlled	Controlled	Controlled
C0062:28	Controlled *4	Controlled	Controlled *4		Controlled *4	Controlled *4	Controlled *4	Controlled	Controlled	Controlled	Controlled *4	Controlled *4
C0062:54	Controlled *4	Controlled	Controlled *4		Controlled *4	Controlled *4	Controlled *4	Controlled *4	Controlled *4	Controlled *4	Controlled *4	Controlled *4
C0062:64	Controlled *4	Controlled	Controlled *4		Controlled *4	Controlled *4	Controlled *4	Controlled	Controlled	Controlled	Controlled *4	Controlled *4
C0062:76	Controlled *4	Controlled	Controlled *4		Controlled *4	Controlled *4	Controlled *4	Controlled	Controlled	Controlled *4	Controlled *4	Controlled *4

ON-BOARD DIAGNOSTIC [DYNAMIC STABILITY CONTROL (DSC)]

DTC No.	Fail-safe function											
	Control status											
	ABS control	EBD control	TCS Control		DSC Control	Roll over mitigation (ROM)	Brake assist control	Vehicle roll prevention function *1	Hill launch assist (HLA)	Tire pressure monitoring system (TPMS)	Smart city brake support (SCBS) *2	Secondary collision reduction (SCR)
			Brake control	Engine control								
C0063:28	Controlled	Controlled	Control disabled		Controlled	Controlled	Controlled	Controlled	Controlled	Controlled	Controlled	Controlled
C0063:54	Controlled *4	Controlled	Control disabled *4		Controlled *4	Controlled *4	Controlled *4	Controlled *4	Controlled *4	Controlled *4	Controlled *4	Controlled *4
C0063:64	Controlled	Controlled	Control disabled		Controlled	Controlled	Controlled	Controlled	Controlled	Controlled	Controlled	Controlled
C006B:00	Controlled	Controlled	Control disabled		Controlled	Controlled	Controlled	Controlled	Controlled	Controlled	Controlled	Controlled
C0072:68	Controlled	Controlled	Controlled	Controlled	Controlled	Controlled	Controlled	Controlled	Controlled	Controlled	Controlled	Controlled
C0089:64	Control enabled											
C1031:35 C1031:41 C1031:54 C1031:68	Control enabled									Controlled	Control enabled	
C1A08:1C	Controlled	Controlled	Control disabled		Controlled	Controlled	Controlled	Controlled	Controlled	Controlled	Controlled	Controlled
U0001:88	Controlled	Controlled	Control disabled		Controlled	Controlled	Controlled	Controlled	Controlled	Controlled	Controlled	Controlled
U0100:00	Controlled *4	Controlled	Control disabled *4		Controlled *4	Controlled *4	Controlled *4	Controlled *4	Controlled *4	Controlled *4	Controlled *4	Controlled *4
U0101:00 *1	Controlled	Controlled	Control disabled		Controlled	Controlled	Controlled	Controlled	Controlled	Controlled	Controlled	Controlled
U0114:00 *5	Controlled	Controlled	Control enabled		Controlled	Controlled	Controlled	Controlled	Controlled	Controlled	Controlled	Controlled
U0131:00	Controlled	Controlled	Control disabled		Controlled	Controlled	Controlled	Controlled	Controlled	Controlled	Controlled	Controlled
U0151:00	Controlled *4	Controlled	Control disabled *4		Controlled *4	Controlled *4	Controlled *4	Controlled *4	Controlled *4	Controlled *4	Controlled *4	Controlled *4
U0154:00	Controlled	Controlled	Control enabled		Controlled	Controlled	Controlled	Controlled	Controlled	Controlled	Controlled	Controlled
U0155:00	Controlled *4	Controlled	Control disabled *4		Controlled *4	Controlled *4	Controlled *4	Controlled *4	Controlled *4	Controlled *4	Controlled *4	Controlled *4
U0235:00 *2	Controlled	Controlled	Control enabled		Controlled	Controlled	Controlled	Controlled	Controlled	Controlled	Controlled	Controlled
U0401:00	Controlled	Controlled	Control disabled *4		Controlled *4	Controlled *4	Controlled	Controlled *4	Controlled *4	Controlled *4	Controlled *4	Controlled *4

ON-BOARD DIAGNOSTIC [DYNAMIC STABILITY CONTROL (DSC)]

DTC No.	Fail-safe function											
	Control status											
	ABS control	EBD control	TCS Control		DSC Control	Roll over mitigation (ROM)	Brake assist control	Vehicle roll prevention function *1	Hill launch assist (HLA)	Tire pressure monitoring system (TPMS)	Smart city brake support (SCBS) *2	Secondary collision reduction (SCR)
			Brake control	Engine control								
U0402:00 *1	Control enabled	Control enabled	Control disabled		Control disabled	Control disabled	Control enabled	Control disabled	Control disabled	Control disabled	Control disabled	Control disabled
U0420:00	Control enabled	Control enabled	Control disabled		Control disabled	Control disabled	Control enabled	Control enabled	Control enabled	Control disabled	Control disabled	Control disabled
U0423:00	Control enabled	Control enabled	Control enabled		Control enabled	Control enabled	Control enabled	Control enabled	Control enabled	Control disabled	Control disabled	Control enabled
U0433:00 *2	Control enabled	Control enabled	Control enabled		Control enabled	Control enabled	Control enabled	Control enabled	Control enabled	Control enabled	Control disabled	Control enabled
U0443:00	Control enabled	Control enabled	Control enabled		Control enabled	Control enabled	Control enabled	Control enabled	Control enabled	Control enabled	Control disabled	Control enabled
U0452:00	Control enabled	Control enabled	Control enabled		Control enabled	Control enabled	Control enabled	Control enabled	Control enabled	Control enabled	Control enabled	Control disabled
U0452:86	Control disabled *4	Control enabled	Control disabled *4		Control disabled *4	Control disabled *4	Control disabled *4	Control disabled *4	Control disabled *4	Control disabled *4	Control disabled *4	Control disabled *4
U2007:46	Control enabled	Control enabled	Control disabled		Control disabled	Control disabled	Control disabled	Control disabled	Control disabled	Control enabled	Control disabled	Control disabled
U2007:62	Control disabled	Control disabled	Control disabled		Control disabled	Control disabled	Control disabled	Control disabled	Control disabled	Control enabled	Control disabled	Control disabled
U2101:00	Control disabled	Control enabled	Control disabled		Control disabled	Control disabled	Control disabled	Control disabled	Control disabled	Control disabled	Control disabled	Control disabled
U2107:68 *2	Control enabled	Control enabled	Control enabled		Control enabled	Control enabled	Control enabled	Control enabled	Control enabled	Control enabled	Control disabled	Control enabled
U2300:52	Control disabled	Control enabled	Control disabled		Control disabled	Control disabled	Control disabled	Control disabled	Control disabled	Control disabled	Control disabled	Control disabled
U2300:54												
U2300:55												
U2300:56												
U2300:64												
U3000:49	Control disabled *4	Control disabled *4	Control disabled		Control disabled	Control disabled	Control disabled *4	Control disabled	Control disabled	Control disabled *4	Control disabled	Control disabled
U3003:08	Control enabled											
U3003:16	Control disabled	Control enabled *6 / Control disabled *7*8	Control disabled		Control disabled	Control disabled	Control disabled	Control disabled	Control disabled	Control disabled	Control disabled	Control disabled
U3003:17	Control disabled	Control disabled	Control disabled		Control disabled	Control disabled	Control disabled	Control disabled	Control disabled	Control disabled	Control disabled	Control disabled

*1 : ATX only
*2 : Vehicles with smart city brake support (SCBS)

ON-BOARD DIAGNOSTIC [DYNAMIC STABILITY CONTROL (DSC)]

*3 : Control disabled when two wheels or more have a malfunction.
*4 : Enabled depending on malfunction content.
*5 : 4WD only
*6 : When power supply voltage is **7.9—9.6 V** for **550 ms or more**.
*7 : When power supply voltage is **6.0—7.9 V** for **630 ms or more**.
*8 : When power supply voltage is **below 6 V** for **50 ms or more**.

PID/DATA Monitor Table

PID name (definition)	Unit/Condition	Operation condition (reference)	Action
BRAKE_SW	Off/On	• Brake pedal released: Off • Brake pedal depressed: On	Inspect the brake switch. (See 04-11-11 BRAKE SWITCH INSPECTION.)
BRK_F_P_C (Calculated Value) BRK_F_P_R (Raw Value)	Pa, psi	• Brake pedal depressed: Changes according to the brake fluid pressure	Inspect the brake fluid pressure sensor. (See 04-15-14 BRAKE FLUID PRESSURE SENSOR INSPECTION.)
DDS_MODE	Not_Learned/ Learning/ Learned	• During initialization: Not_Learned • During learning: Learning • Learning completed*: Learned	Perform the DTC inspection for the DSC HU/CM. (See 04-02A-7 ON-BOARD DIAGNOSIS [DYNAMIC STABILITY CONTROL (DSC)].)
DSC_OFF_SW	Off/On	• TCS OFF switch is released: Off • TCS OFF switch is depressed: On	Inspect the TCS OFF switch. (See 04-15-15 TCS OFF SWITCH INSPECTION.)
DSC_ST	Off/On	• During TCS OFF mode: Off • Other than TCS OFF mode: On	Perform the DTC inspection for the DSC HU/CM. (See 04-02A-7 ON-BOARD DIAGNOSIS [DYNAMIC STABILITY CONTROL (DSC)].)
LAT_ACCL_C (Calculated Value) LAT_ACCL_R (Raw Value)	G	• Vehicle stopped or driving at constant speed: **0 G** • Cornering to left: Changes **0 G—positive** • Cornering to right: Changes **0 G—negative**	Perform the DTC inspection for the SAS control module. (See 08-02-7 DTC INSPECTION.)
LON_ACCL_C (Calculated Value) LON_ACCL_R (Raw Value)	G	• Vehicle stopped or driving at constant speed: **0 G** • Vehicle is driving at a acceleration: Changes **0 G—positive** • Vehicle is driving at a deceleration: Changes **0 G—negative**	Perform the DTC inspection for the SAS control module. (See 08-02-7 DTC INSPECTION.)
P_BRAKE_SW	Off/On	• Parking brake lever released: OFF • Parking brake lever pulled: ON	Inspect the parking brake switch. (See 04-12-8 PARKING BRAKE SWITCH INSPECTION.)
PMP_MT PMP_MT_SP	Off/On	• Pump motor not activated: Off • Pump motor activated: On	Inspect the DSC HU/CM. (See 04-15-7 DSC HU/CM INSPECTION.)
R_GEAR_SW	Off/On	• Except shift/selector lever at R position: OFF • Shift/selector lever at R position: ON	Inspect the PCM. (MTX) (See 01-40-17 PCM INSPECTION [SKYACTIV-G 2.0].) Inspect the TCM. (ATX) (See 05-02A-7 ON-BOARD DIAGNOSTIC SYSTEM DTC INSPECTION [FW6A-EL, FW6AX-EL].)
STR_ANG_C (Calculated Value) STR_ANG_R (Raw Value)	°	• Steering wheel in neutral position (not turned): **0°** • Steering wheel turned to left: Changes **0°—positive** • Steering wheel turned to right: Changes **0°—negative**	Inspect the EPS CM. (See 06-13-26 EPS CONTROL MODULE INSPECTION.)
TPMS_TYPE	No_DDS/ DDS+TOM_EU/ DDS+TOM_US	• TPMS not equipped: No_DDS • TPMS equipped (Corresponding to European regulations): DDS+TOM_EU • TPMS equipped (Corresponding to U.S. regulations): DDS+TOM_US	Perform the DTC inspection for the DSC HU/CM. (See 04-02A-7 ON-BOARD DIAGNOSIS [DYNAMIC STABILITY CONTROL (DSC)].)

ON-BOARD DIAGNOSTIC [DYNAMIC STABILITY CONTROL (DSC)]

PID name (definition)	Unit/Condition	Operation condition (reference)	Action
V_INLET_LF	Off/On	• Solenoid valve not activated: Off • Solenoid valve activated: On	Inspect the DSC HU/CM. (See 04-15-7 DSC HU/CM INSPECTION.)
V_INLET_LR			
V_INLET_RF			
V_INLET_RR			
V_OUTLET_LF			
V_OUTLET_LR			
V_OUTLET_RF			
V_OUTLET_RR			
V_STB_LF/RR	Off/On	• Solenoid valve activated: On • Solenoid valve not activated: Off	Inspect the DSC HU/CM. (See 04-15-7 DSC HU/CM INSPECTION.)
V_STB_RF/LR			
V_TRC_LF/RR	Off/On	• Solenoid valve activated: On • Solenoid valve not activated: Off	Inspect the DSC HU/CM. (See 04-15-7 DSC HU/CM INSPECTION.)
V_TRC_RF/LR			
VPWR_B_SOL	V	• Ignition switched ON (engine off): **Approx. 12.2 V** • Idling: **Approx. 14.1 V**	Inspect power supply circuit. (See 04-15-7 DSC HU/CM INSPECTION.)
VSPD	KPH, MPH	• Vehicle stopped: **0 KPH, 0 MPH** • Vehicle running: Vehicle speed	Inspect the DSC HU/CM. (See 04-15-7 DSC HU/CM INSPECTION.)
WSPD_SEN_LF	KPH, MPH	• Vehicle stopped: **0 KPH, 0 MPH** • Vehicle running: Vehicle speed	Inspect the front ABS wheel-speed sensor. (See 04-15-10 FRONT ABS WHEEL-SPEED SENSOR INSPECTION.)
WSPD_SEN_LR			Inspect the rear ABS wheel-speed sensor. (See 04-15-13 REAR ABS WHEEL-SPEED SENSOR INSPECTION [2WD].) (See 04-15-13 REAR ABS WHEEL-SPEED SENSOR INSPECTION [4WD].)
WSPD_SEN_RF			Inspect the front ABS wheel-speed sensor. (See 04-15-10 FRONT ABS WHEEL-SPEED SENSOR INSPECTION.)
WSPD_SEN_RR			Inspect the rear ABS wheel-speed sensor. (See 04-15-13 REAR ABS WHEEL-SPEED SENSOR INSPECTION [2WD].) (See 04-15-13 REAR ABS WHEEL-SPEED SENSOR INSPECTION [4WD].)
YAW_RATE_C (Calculated Value)	°/s	• Vehicle stopped or driving straight: **0 °/s** • Cornering to left: Changes **0 °/s—positive** • Cornering to right: Changes **0 °/s—negative**	Perform the DTC inspection for the SAS control module. (See 08-02-7 DTC INSPECTION.)
YAW_RATE_R (Raw Value)			

* : After ignition is switched off, switch it ON (engine off or on) and verify.

ON-BOARD DIAGNOSTIC [DYNAMIC STABILITY CONTROL (DSC)]

Snapshot Data Table

Note

- Refer to PID monitor table for confirm the DSC system operation status while the DSC CM does not store the DTC. (See 04-02A-22 PID/DATA Monitor Table.)
- Snapshot data items are not displayed, according to detected DTC.

Snapshot data item	Unit	Definition	Corresponding data monitor items
AAT	°C, °F	Ambient air temperature	—
ABS	Inactive/ Active	Antilock braking system	—
APP_STATUS	Accelerator Pedal Off/ Under 20%/ Over 20%/ FAIL	Accelerator pedal position	—
AYC	Inactive/ Active	Active yaw control	—
BRK_F_P_R	Pa, psi	Brake fluid line hydraulic pressure (Raw Value)	BRK_F_P_R
BTCS	Inactive/ Active	Brake traction control system	—
CFG_STATUS	Config Complete/ Not Configured/ Config Error	Configuration status	—
ECT_STATUS	Under 0 degrees C/ 0 - Under 80 degrees C/ Over 80 degrees C/ FAIL	Engine coolant temperature status	—
EDC	Inactive/ Active	Engine drag control	—
IC_VPWR	V	Instrument cluster power supply	—
IG-ON_TIMER	hh:mm:ss	Times since ignition switch ON	—
LAT_ACCL_R	G	Lateral acceleration (Raw Value)	LAT_ACCL_R
LON_ACCL_R	G	Longitudinal acceleration (Raw Value)	LON_ACCL_R
PMP_MT	Off/On	Pump motor	PMP_MT
PWR_MODE_KEY	Key Out/ Key Recently Out/ Key Approved(Position 0)/ Post Accessory (Position 0)/ Accessory (Position 1)/ Post Ignition (Position 1)/ Ignition On (Position 2)/ Running (Position 2)/ Running - Starting In Progress (Position 2)/ Crank (Position 3)	Power mode key state	—
RPM_STATUS	Engine Stop/ Under 1500rpm/ Over 1500rpm/ FAIL	Engine RPM status	—
SHIFT_STATUS	P/N D/ R/ FAIL	Shift position status	—
STR_ANG_C	°	Steering wheel angle (Calculated Value)	STR_ANG_C

ON-BOARD DIAGNOSTIC [DYNAMIC STABILITY CONTROL (DSC)]

Snapshot data item	Unit	Definition	Corresponding data monitor items
TCS	Inactive/ Active	Traction control system	—
TOTAL_DIST	km, ft, mi	Total distance	—
TOTAL_TIME	hh:mm:ss	Total time	—
VPWR	V	Power supply	VPWR
VSPD	KPH, MPH	Vehicle speed	VSPD
VSPD_STATUS	Stop/ 0 - 10km/h/ Over 10km/h/ FAIL	Vehicle speed status	—
YAW_RATE_R	°/S	Yaw Rate (Raw Value)	YAW_RATE_R

Active Command Modes Table

Command name	Output part	Operation	Operating condition
PMP_MT_SP	Pump motor	Off/On	Switch the ignition ON (engine off)
V_INLET_LF	LF inlet solenoid valve		
V_INLET_LR	LR inlet solenoid valve		
V_INLET_RF	RF inlet solenoid valve		
V_INLET_RR	RR inlet solenoid valve		
V_OUTLET_LF	LF outlet solenoid valve		
V_OUTLET_LR	LR outlet solenoid valve		
V_OUTLET_RF	RF outlet solenoid valve		
V_OUTLET_RR	RR outlet solenoid valve		
V_STB_LF/RR	LF/RR stability control solenoid valve		
V_STB_RF/LR	RF/LR stability control solenoid valve		
V_TRC_LF/RR	LF/RR traction control solenoid valve		
V_TRC_RF/LR	RF/LR traction control solenoid valve		

ON-BOARD DIAGNOSTIC [DYNAMIC STABILITY CONTROL (DSC)]

DTC B10DF:46/C1A08:1C/U2007:46/U2007:62/U3000:49 [DYNAMIC STABILITY CONTROL (DSC)]

id0402b2905700

DTC	B10DF:46, C1A08:1C, U2007:46, U2007:62, U3000:49	DSC HU/CM (internal malfunction)
DETECTION CONDITION	• The DSC CM on-board diagnostic function detects control module internal malfunction.	
FAIL-SAFE FUNCTION	• B10DF:46, U2007:46 — Illuminates the TCS/DSC indicator light and master warning light*1. — Inhibits the TCS, DSC, roll over mitigation (ROM), brake assist control, vehicle roll prevention function*2, hill launch assist (HLA), smart city brake support (SCBS)*1, and secondary collision reduction (SCR) controls. • C1A08:1C — Illuminates the TCS/DSC indicator light and master warning light*1. — Tire pressure monitoring system warning light illuminates after flashes. — Inhibits the TCS, DSC, roll over mitigation (ROM), brake assist control, vehicle roll prevention function*2, hill launch assist (HLA), TPMS, smart city brake support (SCBS)*1, and secondary collision reduction (SCR) controls. • U2007:62 — Illuminates the ABS warning light, brake system warning light, TCS/DSC indicator light, and master warning light*1. — Inhibits the ABS, EBD, TCS, DSC, roll over mitigation (ROM), brake assist control, vehicle roll prevention function*2, hill launch assist (HLA), smart city brake support (SCBS)*1, and secondary collision reduction (SCR) controls. • U3000:49 — Illuminates the ABS warning light*3, brake system warning light*3, TCS/DSC indicator light, and master warning light*1. — Tire pressure monitoring system warning light illuminates after flashes. (Not illuminated/flashed depending on malfunction content.) — Inhibits the ABS*4, EBD*4, TCS, DSC, roll over mitigation (ROM), brake assist control*4, vehicle roll prevention function*2, hill launch assist (HLA), TPMS*4, smart city brake support (SCBS)*1, and secondary collision reduction (SCR) controls. *1: Vehicles with smart city brake support (SCBS) *2: ATX only *3: Not illuminated depending on malfunction content. *4: Enabled depending on malfunction content.	
POSSIBLE CAUSE	• DSC HU/CM internal malfunction	
SYSTEM WIRING DIAGRAM	—	

Diagnostic procedure

STEP	INSPECTION		ACTION
1	**VERIFY NO DSC HU/CM MALFUNCTION** • Clear the DTCs from the memory. (See 04-02A-7 ON-BOARD DIAGNOSIS [DYNAMIC STABILITY CONTROL (DSC)].) • Start the engine and drive the vehicle at **10km/h {6.2 mph} or more**. • Are the same DTCs present?	Yes	Replace the DSC HU/CM, then go to the next step. (See 04-15-4 DSC HU/CM REMOVAL/INSTALLATION.)
		No	Go to the next step.
2	**VERIFY THAT NO OTHER DTCS ARE PRESENT** • Are any other DTCs output?	Yes	Go to the applicable DTC inspection. (See 04-02A-7 ON-BOARD DIAGNOSIS [DYNAMIC STABILITY CONTROL (DSC)].)
		No	DTC troubleshooting completed.

ON-BOARD DIAGNOSTIC [DYNAMIC STABILITY CONTROL (DSC)]

DTC B11D4:08/U2107:68 [DYNAMIC STABILITY CONTROL (DSC)]

id0402b2905900

DTC	B11D4:08, U2107:68	Laser sensor
DETECTION CONDITION	• B11D4:08 — Correct data cannot be received from laser sensor • U2107:68 — The difference between the laser sensor request deceleration speed and the actual deceleration speed exceeds the specification.	
FAIL-SAFE FUNCTION	• Illuminates the master warning light. • Inhibits the smart city brake support (SCBS) control.	
POSSIBLE CAUSE	• Laser sensor malfunction • Brake fluid for clogging or leakage	
SYSTEM WIRING DIAGRAM	—	

Diagnostic procedure

STEP	INSPECTION		ACTION
1	**INSPECT FOR LASER SENSOR MALFUNCTION** • Switch the ignition to off. • Using the M-MDS, perform the DTC inspection for the laser sensor. (See 04-02B-6 ON-BOARD DIAGNOSIS [LASER SENSOR].) • Are any DTCs detected?	Yes	Go to applicable DTC inspection. (See 04-02B-6 ON-BOARD DIAGNOSIS [LASER SENSOR].)
		No	Go to the next step.
2	**VERIFY THAT THE SAME DTC IS NOT PRESENT** • Clear the DTCs from the memory. (See 04-02A-7 ON-BOARD DIAGNOSIS [DYNAMIC STABILITY CONTROL (DSC)].) • Are the same DTCs present?	Yes	Repeat the inspection from Step 1. If the malfunction recurs, replace the laser sensor, then go to the next step. (See 04-15-17 LASER SENSOR REMOVAL/INSTALLATION.)
		No	Go to the next step.
3	**VERIFY THAT NO OTHER DTCS ARE PRESENT** • Are any other DTCs output?	Yes	Go to the applicable DTC inspection. (See 04-02A-7 ON-BOARD DIAGNOSIS [DYNAMIC STABILITY CONTROL (DSC)].)
		No	DTC troubleshooting completed.

ON-BOARD DIAGNOSTIC [DYNAMIC STABILITY CONTROL (DSC)]

DTC C0001:01/C0002:01/C0003:01/C0004:01/C0010:01/C0011:01/C0014:01/C0015:01/C0018:01/C0019:01/C001C:01/C001D:01 [DYNAMIC STABILITY CONTROL (DSC)]

id0402b2878200

DTC	**C0001:01, C0002:01**	**Traction control solenoid valve system**
	C0003:01, C0004:01	**Stability control solenoid valve system**
	C0010:01	**LF inlet solenoid valve system**
	C0011:01	**LF outlet solenoid valve system**
	C0014:01	**RF inlet solenoid valve system**
	C0015:01	**RF outlet solenoid valve system**
	C0018:01	**LR inlet solenoid valve system**
	C0019:01	**LR outlet solenoid valve system**
	C001C:01	**RR inlet solenoid valve system**
	C001D:01	**RR outlet solenoid valve system**
DETECTION CONDITION	• Malfunction detected in the DSC HU/CM solenoid valve or internal circuit by the DSC HU/CM on-board diagnostic function	
FAIL-SAFE FUNCTION	• Illuminates the ABS warning light, brake system warning light, TCS/DSC indicator light, and master warning light*1. • Inhibits the ABS, EBD, TCS, DSC, roll over mitigation (ROM), brake assist control, vehicle roll prevention function*2, hill launch assist (HLA), smart city brake support (SCBS)*1, and secondary collision reduction (SCR) controls. *1: Vehicles with smart city brake support (SCBS) *2: ATX only	
POSSIBLE CAUSE	• Open or short circuit in the DSC HU/CM internal solenoid valves • Solenoid valve malfunction	
SYSTEM WIRING DIAGRAM	—	

Diagnostic procedure

STEP	INSPECTION		ACTION
1	**VERIFY SOLENOID VALVE OPERATION** • Switch the ignition to off. • Connect the M-MDS to the DLC-2. • Switch the ignition ON (engine off). • Access the active command mode for the solenoid valve using the M-MDS. (See 04-02A-7 ON-BOARD DIAGNOSIS [DYNAMIC STABILITY CONTROL (DSC)].) • Does the solenoid valve operate?	Yes	Go to the next step.
		No	Replace the DSC HU/CM, then go to the next step. (See 04-15-4 DSC HU/CM REMOVAL/INSTALLATION.)
2	**VERIFY DTC TROUBLESHOOTING COMPLETED** • Clear the DTC from the memory. (See 04-02A-7 ON-BOARD DIAGNOSIS [DYNAMIC STABILITY CONTROL (DSC)].) • Start the engine and drive the vehicle at **10 km/h {6.2 mph} or more**. • Gradually slow down and stop vehicle. • Are the same DTCs present?	Yes	Repeat the inspection from Step 1. If the malfunction recurs, replace the DSC HU/CM, then go to the next step. (See 04-15-4 DSC HU/CM REMOVAL/INSTALLATION.)
		No	Go to the next step.
3	**VERIFY AFTER REPAIR PROCEDURE** • Are any other DTCs present?	Yes	Go to the applicable DTC inspection. (See 04-02A-7 ON-BOARD DIAGNOSIS [DYNAMIC STABILITY CONTROL (DSC)].)
		No	DTC troubleshooting completed.

ON-BOARD DIAGNOSTIC [DYNAMIC STABILITY CONTROL (DSC)]

DTC C0020:11/C0020:12/C0020:13/C0020:71 [DYNAMIC STABILITY CONTROL (DSC)]

id0402b2906000

DTC	C0020:11, C0020:12, C0020:13, C0020:71	Pump motor, motor relay
DETECTION CONDITION	• C0020:11 — Motor relay signal does not correspond to DSC HU/CM OFF signal. • C0020:12 — DSC motor monitor signal does not correspond to DSC HU/CM OFF signal. — DSC motor monitor signal does not correspond to DSC HU/CM ON signal. • C0020:13 — Motor relay signal does not correspond to DSC HU/CM ON signal. • C0020:71 — DSC HU/CM motor monitor ON signal is not input within specified time limit or more when motor signal is switched from ON to OFF by DSC HU/CM.	
FAIL-SAFE FUNCTION	• Illuminates the ABS warning light, TCS/DSC indicator light and master warning light*1. • Inhibits the ABS, TCS, DSC, roll over mitigation (ROM), brake assist control, vehicle roll prevention function*2, hill launch assist (HLA), smart city brake support (SCBS)*1, and secondary collision reduction (SCR) controls. *1: Vehicles with smart city brake support (SCBS) *2: ATX only	
POSSIBLE CAUSE	• Fuse (ABS/DSC M 50A) malfunction • Open or short circuit in DSC HU/CM internal motor relay, or stuck motor relay • Open or short circuit in DSC HU/CM internal pump motor, or frozen pump motor • Open circuit or short to ground in the wiring harness between the battery and DSC HU/CM terminal B • Open circuit in the wiring harness between DSC HU/CM terminal AL and body ground • Poor connection at connectors (female terminal)	

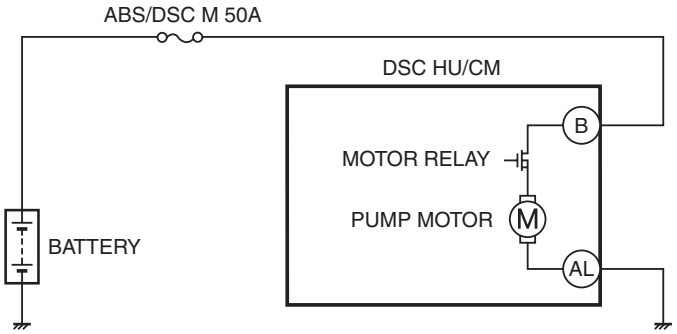

DSC HU/CM WIRING HARNESS-SIDE CONNECTOR

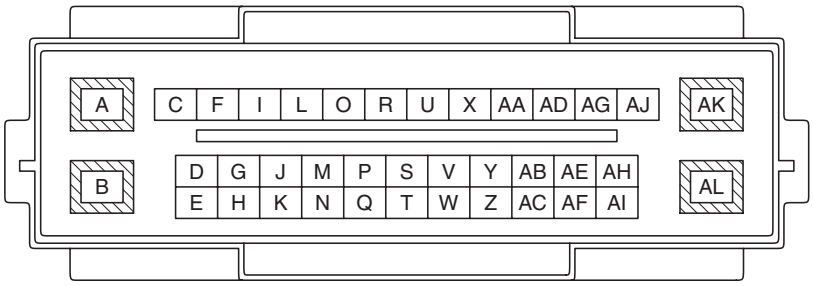

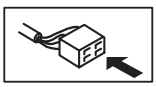

ON-BOARD DIAGNOSTIC [DYNAMIC STABILITY CONTROL (DSC)]

Diagnostic procedure

STEP	INSPECTION		ACTION
1	**INSPECT FUSE CONDITION** • Is the fuse (ABS/DSC M 50A) normal?	Yes	Go to the next step.
		No	Replace the fuse, then go to Step 6.
2	**VERIFY PUMP MOTOR OPERATION** • Switch the ignition to off. • Connect the M-MDS to the DLC-2. • Switch the ignition ON (engine off). • Access PMP_MT_SP active command modes using the M-MDS. • Does the pump motor operate?	Yes	Go to the next step.
		No	Replace the DSC HU/CM, then go to Step 6. (See 04-15-4 DSC HU/CM REMOVAL/ INSTALLATION.)
3	**INSPECT MOTOR RELAY POWER SUPPLY FOR OPEN CIRCUIT** • Switch the ignition to off. • Disconnect the DSC HU/CM connector. • Inspect for continuity between DSC HU/CM terminal B (vehicle harness-side) and the positive battery terminal. • Is there continuity?	Yes	Go to the next step.
		No	Repair or replace the wiring harness, then go to Step 6.
4	**INSPECT MOTOR RELAY POWER SUPPLY FOR SHORT CIRCUIT** • Inspect for continuity between DSC HU/CM terminal B (vehicle harness-side) and body ground. • Is there continuity?	Yes	Repair or replace the wiring harness, then go to Step 6.
		No	Go to the next step.
5	**INSPECT PUMP MOTOR GROUND FOR OPEN CIRCUIT** • Inspect for continuity between DSC HU/CM terminal AL (vehicle harness-side) and body ground. • Is there continuity?	Yes	Go to the next step.
		No	Repair or replace the wiring harness, then go to the next step.
6	**VERIFY THAT THE SAME DTC IS NOT PRESENT** • Reconnect all disconnected connectors. • Clear the DTCs from the memory. (See 04-02A-7 ON-BOARD DIAGNOSIS [DYNAMIC STABILITY CONTROL (DSC)].) • Start the engine and drive the vehicle at **10 km/h {6.2 mph} or more**. • Are the same DTCs present?	Yes	Repeat the inspection from Step 1. If the malfunction recurs, replace the DSC HU/CM, then go to the next step. (See 04-15-4 DSC HU/CM REMOVAL/ INSTALLATION.)
		No	Go to the next step.
7	**VERIFY THAT NO OTHER DTCS ARE PRESENT** • Are any other DTCs output?	Yes	Go to the applicable DTC inspection. (See 04-02A-7 ON-BOARD DIAGNOSIS [DYNAMIC STABILITY CONTROL (DSC)].)
		No	DTC troubleshooting completed.

ON-BOARD DIAGNOSTIC [DYNAMIC STABILITY CONTROL (DSC)]

DTC C0023:62/C0040:64 [DYNAMIC STABILITY CONTROL (DSC)]

id0402b2906400

DTC	C0023:62, C0040:64	Brake switch
DETECTION CONDITION	• C0023:62 — Brake switch ON signal is not input even though the control module determines vehicle deceleration. • C0040:64 — Brake switch ON signal is input for **6 min or more** when driving at a vehicle speed of **20 km/h {12 mph} or more**. — A brake switch ON signal is not input when the brake fluid pressure sensor signal reaches the specified value.	
FAIL-SAFE FUNCTION	• C0023:62 — Illuminates the master warning light. — Inhibits the smart city brake support (SCBS) control. • C0040:64 — Illuminates the TCS/DSC indicator light and master warning light*1. — Tire pressure monitoring system warning light illuminates after flashes. — Inhibits the brake assist control, vehicle roll prevention function*2, hill launch assist (HLA), TPMS, and smart city brake support (SCBS)*1 controls. *1: Vehicles with smart city brake support (SCBS) *2: ATX only	
POSSIBLE CAUSE	• Open or short circuit in wiring harness between the brake switch and PCM terminal 2G (SKYACTIV-G 2.0) • Open or short circuit in wiring harness between the brake switch and PCM terminal 2AA (SKYACTIV-D 2.2) • Brake switch malfunction • Poor connection at connectors (female terminal)	

ON-BOARD DIAGNOSTIC [DYNAMIC STABILITY CONTROL (DSC)]

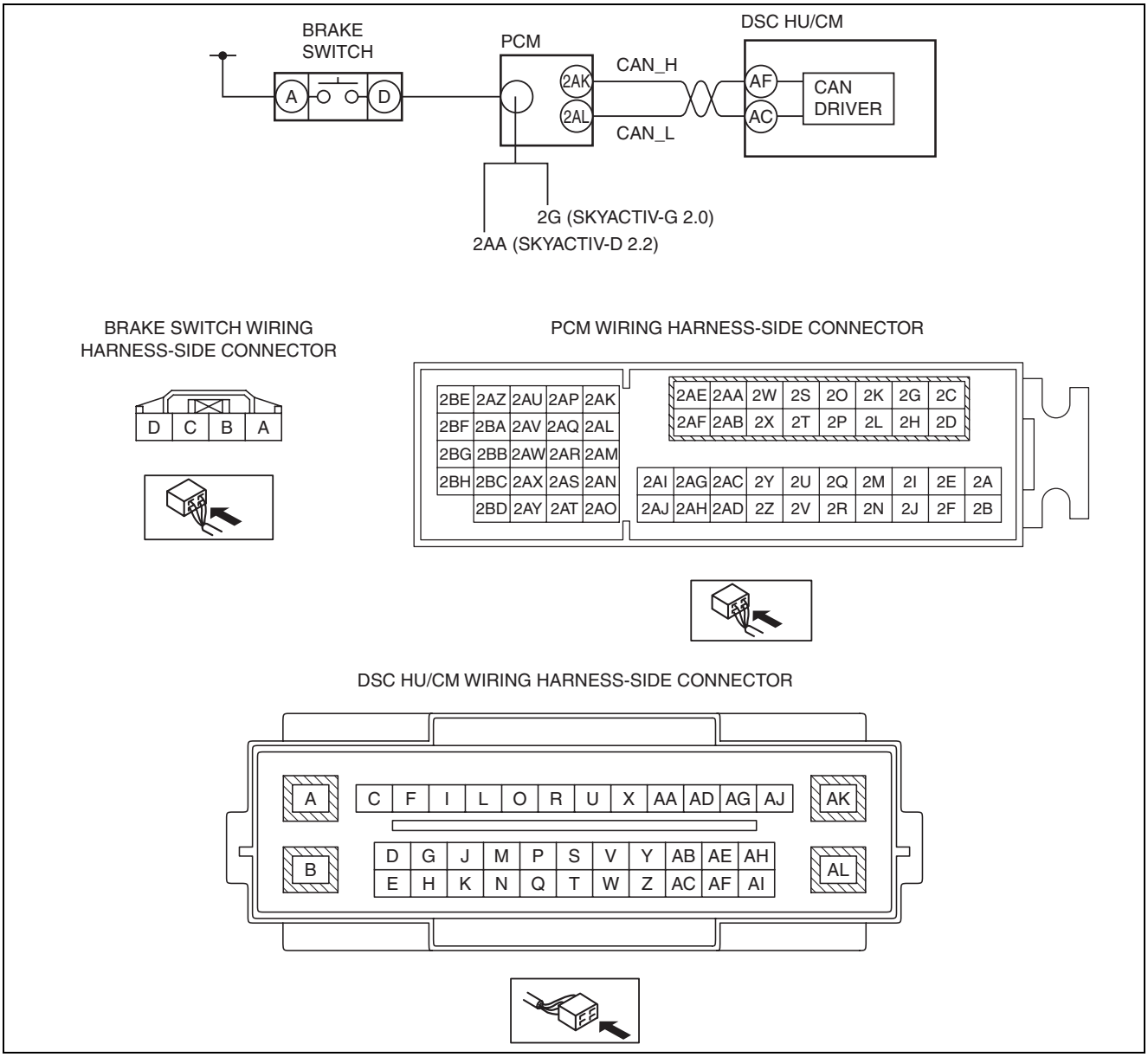

Diagnostic procedure

STEP	INSPECTION		ACTION
1	**VERIFY OPEN OR SHORT CIRCUIT IN BRAKE SWITCH SIGNAL** • Switch the ignition ON (engine off). • Measure the voltage between the PCM connector terminal 2G (vehicle harness-side) and body ground when the brake pedal is depressed and released. **Voltage** **Brake pedal depressed: B+** **Brake pedal released: 1 V or less** • Is the voltage normal?	Yes	Go to Step 5.
		No	If it is **B+** under any condition, then go to the next step. If it is **1 V or less** under any condition, then go to Step 3.
2	**INSPECT BRAKE SWITCH SIGNAL FOR SHORT TO POWER SUPPLY CIRCUIT** • Disconnect the brake switch connector. • Measure voltage between the brake switch connector terminal D (vehicle harness-side) and body ground. • Is the voltage **1 V or less**?	Yes	Go to Step 4.
		No	Repair or replace the wiring harness between the PCM and brake switch, then go to Step 5

ON-BOARD DIAGNOSTIC [DYNAMIC STABILITY CONTROL (DSC)]

STEP	INSPECTION		ACTION
3	**INSPECT BRAKE SWITCH SIGNAL FOR OPEN CIRCUIT** • Disconnect the PCM connectors. • Disconnect the brake switch connector. • Inspect continuity between the PCM and brake switch as follows. — SKYACTIV-G 2.0 • PCM connector terminal 2G (vehicle harness-side) and brake switch connector terminal D (vehicle harness-side) — SKYACTIV-D 2.2 • PCM connector terminal 2AA (vehicle harness-side) and brake switch connector terminal D (vehicle harness-side) • Is there continuity?	Yes	Go to the next step.
		No	Repair or replace the wiring harness between the PCM and brake switch, then go to Step 5.
4	**INSPECT BRAKE SWITCH** • Inspect the brake switch. (See 04-11-11 BRAKE SWITCH INSPECTION.) • Is the brake switch normal?	Yes	Go to the next step.
		No	Replace the brake switch, then go to the next step. (See 04-11-8 BRAKE PEDAL REMOVAL/INSTALLATION [L.H.D.].) (See 04-11-9 BRAKE PEDAL REMOVAL/INSTALLATION [R.H.D.].)
5	**VERIFY THAT THE SAME DTC IS NOT PRESENT** • Reconnect all disconnected connectors. • Clear the DTCs from the memory. (See 04-02A-7 ON-BOARD DIAGNOSIS [DYNAMIC STABILITY CONTROL (DSC)].) • Start the engine and drive the vehicle at **20 km/h {12 mph} or more**. • Are the same DTCs present?	Yes	Repeat the inspection from Step 1.
		No	Go to the next step.
6	**VERIFY THAT NO OTHER DTCS ARE PRESENT** • Are any other DTCs output?	Yes	Go to the applicable DTC inspection. (See 04-02A-7 ON-BOARD DIAGNOSIS [DYNAMIC STABILITY CONTROL (DSC)].)
		No	DTC troubleshooting completed.

ON-BOARD DIAGNOSTIC [DYNAMIC STABILITY CONTROL (DSC)]

DTC C0030:07/C0031:07/C0031:29/C0031:2F/C0031:64/C0033:07/C0034:07/C0034:29/C0034:2F/C0034:64/C0036:07/C0037:07/C0037:29/C0037:2F/C0037:64/C0039:07/C003A:07/C003A:29/C003A:2F/C003A:64 [DYNAMIC STABILITY CONTROL (DSC)]

id0402b2906100

Note

- When only the driving wheels are rotated while the vehicle is jacked up, DTCs C0037:29 and C003A:29 are input to the memory.

DTC	**C0030:07**	**LF ABS sensor rotor**
	C0031:07, C0031:29, C0031:2F, C0031:64	**LF ABS wheel-speed sensor/ABS sensor rotor**
	C0033:07	**RF ABS sensor rotor**
	C0034:07, C0034:29, C0034:2F, C0034:64	**RF ABS wheel-speed sensor/ABS sensor rotor**
	C0036:07	**LR ABS sensor rotor**
	C0037:07, C0037:29, C0037:2F, C0037:64	**LR ABS wheel-speed sensor/ABS sensor rotor**
	C0039:07	**RR ABS sensor rotor**
	C003A:07, C003A:29, C003A:2F, C003A:64	**RR ABS wheel-speed sensor/ABS sensor rotor**
DETECTION CONDITION	• C0030:07, C0033:07, C0036:07, C0039:07 — Periodic abnormality is detected in the signal wave pattern from the ABS wheel-speed sensors. • C0031:07, C0034:07, C0037:07, C003A:07 — While the vehicle is traveling at a speed of **10 km/h {6.2 mph} or more**, no signal in any of the four wheels or an extremely low vehicle speed signal is detected. • C0031:29, C0034:29, C0037:29, C003A:29 — The wheel-speed signal is not input or an extremely low wheel-speed signal is detected from any of the four wheels when driving at a vehicle speed of **10 km/h {6.2 mph} or more** • C0031:2F, C0034:2F, C0037:2F, C003A:2F — The wheel speed or acceleration speed in any of the 4 wheels is not within the specification. — ABS control continues to operate for **28 s or more**. • C0031:64, C0034:64, C0037:64, C003A:64 — While the vehicle is traveling at a speed of **20 km/h {12 mph} or more**, an extremely high vehicle speed signal in any of the four wheels is detected.	
FAIL-SAFE FUNCTION	• Illuminates the ABS warning light, TCS/DSC indicator light, and master warning light*1. • Tire pressure monitoring system warning light illuminates after flashes. • Inhibits the ABS, TCS, DSC, roll over mitigation (ROM), brake assist control, vehicle roll prevention function*2, hill launch assist (HLA), TPMS, smart city brake support (SCBS)*1, and secondary collision reduction (SCR) controls. (Additionally, when any malfunction is detected in two wheels or more, EBD control is inhibited and the brake system warning light is illuminated.) *1: Vehicles with smart city brake support (SCBS) *2: ATX only	
POSSIBLE CAUSE	• ABS sensor rotor malfunction (missing ABS sensor rotor teeth due to foreign material obstruction) • ABS wheel-speed sensor or ABS sensor rotor installation malfunction (If the ABS sensor rotor is installed at an angle, it may cause output of abnormal wave pattern at high speeds.) • Excessive clearance between the ABS wheel-speed sensor and sensor rotor • ABS wheel-speed sensor malfunction • Continuous ABS operation	

ON-BOARD DIAGNOSTIC [DYNAMIC STABILITY CONTROL (DSC)]

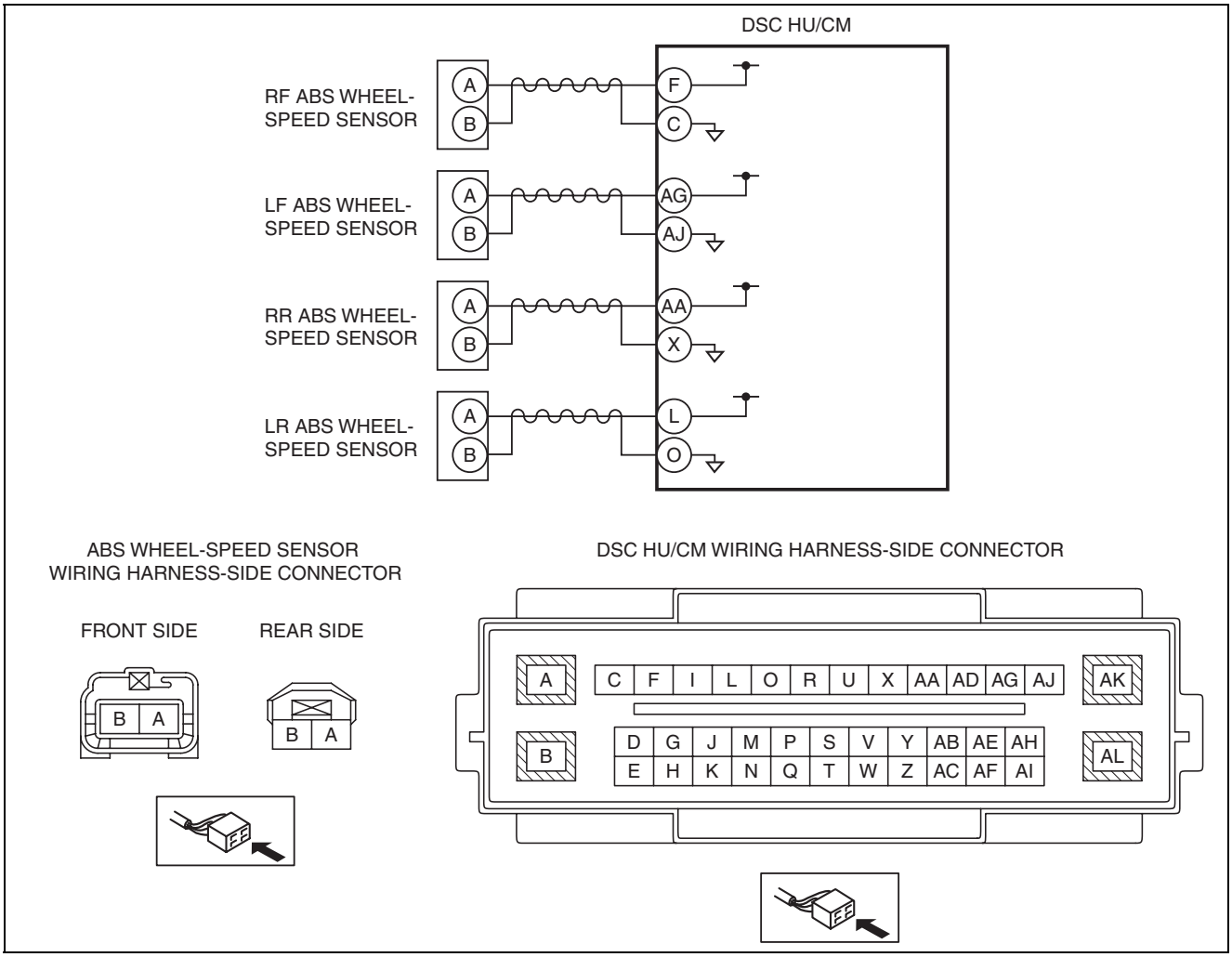

04

Diagnostic procedure

STEP	INSPECTION		ACTION
1	**INSPECT PID FOR ABS WHEEL-SPEED SENSOR OUTPUT ERROR USING M-MDS** • Switch the ignition to off. • Connect the M-MDS to the DLC-2. • Select the following PIDs using the M-MDS: — WSPD_SEN_LF — WSPD_SEN_LR — WSPD_SEN_RF — WSPD_SEN_RR • Drive the vehicle. • Verify that the vehicle speeds detected by the four ABS wheel-speed sensors are approximately the same. • Are the vehicle speeds approximately the same?	Yes	Go to Step 3.
		No	Go to the next step.
2	**INSPECT FOR SHORT TO GROUND BETWEEN ABS WHEEL-SPEED SENSOR CONNECTORS AND GROUND** • Disconnect the ABS wheel-speed sensor connectors. • Inspect for no continuity between the following ABS wheel-speed sensor connector terminals (vehicle harness-side) and body ground: — ABS wheel-speed sensor (RF): B—Body ground — ABS wheel-speed sensor (LF): B—Body ground — ABS wheel-speed sensor (RR): B—Body ground — ABS wheel-speed sensor (LR): B—Body ground • Is the continuity normal?	Yes	Go to the next step.
		No	Repair or replace the wiring harness, then go to Step 5.

ON-BOARD DIAGNOSTIC [DYNAMIC STABILITY CONTROL (DSC)]

STEP	INSPECTION		ACTION
3	**INSPECT IF MALFUNCTION OCCURRED DUE TO IMPROPER SENSOR CLEARANCE.** • Inspect the clearance between the ABS wheel-speed sensor and the ABS sensor rotor. (See 04-15-10 FRONT ABS WHEEL-SPEED SENSOR INSPECTION.) (See 04-15-13 REAR ABS WHEEL-SPEED SENSOR INSPECTION [2WD].) (See 04-15-13 REAR ABS WHEEL-SPEED SENSOR INSPECTION [4WD].) • Is the clearance normal?	Yes	Go to the next step.
		No	Replace the ABS wheel-speed sensor, then go to Step 5. (See 04-15-9 FRONT ABS WHEEL-SPEED SENSOR REMOVAL/INSTALLATION.) (See 04-15-11 REAR ABS WHEEL-SPEED SENSOR REMOVAL/INSTALLATION.)
4	**VISUALLY INSPECT ABS SENSOR ROTOR FOR FOREIGN MATERIAL ADHERING OR IMPROPER INSTALLATION** • Is the result normal?	Yes	Go to the next step.
		No	Repair or replace the ABS sensor rotor, then go to the next step. • Front ABS sensor rotor (front wheel hub) (See 03-11-3 WHEEL HUB, STEERING KNUCKLE REMOVAL/INSTALLATION.) • Rear ABS sensor rotor (rear wheel hub (2WD) or shaft and ball joint component (4WD)) (See 03-12-3 WHEEL HUB COMPONENT REMOVAL/INSTALLATION [2WD].) (See 03-13-19 REAR DRIVE SHAFT DISASSEMBLY/ASSEMBLY.)
5	**VERIFY THAT THE SAME DTC IS NOT PRESENT** • Reconnect all disconnected connectors. • Clear the DTCs from the memory. (See 04-02A-7 ON-BOARD DIAGNOSIS [DYNAMIC STABILITY CONTROL (DSC)].) • Start the engine and drive the vehicle at **20 km/h {12 mph} or more**. • Are the same DTCs present?	Yes	Repeat the inspection from Step 1. If the malfunction recurs, replace the DSC HU/CM, then go to the next step. (See 04-15-4 DSC HU/CM REMOVAL/INSTALLATION.)
		No	Go to the next step.
6	**VERIFY THAT NO OTHER DTCS ARE PRESENT** • Are any other DTCs output?	Yes	Go to the applicable DTC inspection. (See 04-02A-7 ON-BOARD DIAGNOSIS [DYNAMIC STABILITY CONTROL (DSC)].)
		No	DTC troubleshooting completed.

ON-BOARD DIAGNOSTIC [DYNAMIC STABILITY CONTROL (DSC)]

DTC C0031:11/C0031:15/C0034:11/C0034:15/C0037:11/C0037:15/C003A:11/C003A:15 [DYNAMIC STABILITY CONTROL (DSC)]

id0402b2180700

DTC	**C0031:11, C0031:15**	**LF ABS wheel-speed sensor**
	C0034:11, C0034:15	**RF ABS wheel-speed sensor**
	C0037:11, C0037:15	**LR ABS wheel-speed sensor**
	C003A:11, C003A:15	**RR ABS wheel-speed sensor**
DETECTION CONDITION	• C0031:11, C0034:11, C0037:11, C003A:11 — Short to ground has been detected in the ABS wheel-speed sensor wiring harness on any of the four vehicle wheels. • C0031:15, C0034:15, C0037:15, C003A:15 — Open circuit or short to power supply has been detected in the ABS wheel-speed sensor wiring harness on any of the four vehicle wheels.	
FAIL-SAFE FUNCTION	• Illuminates the ABS warning light, TCS/DSC indicator light, and master warning light*1. • Tire pressure monitoring system warning light illuminates after flashes. • Inhibits the ABS, TCS, DSC, roll over mitigation (ROM), brake assist control, vehicle roll prevention function*2, hill launch assist (HLA), TPMS, smart city brake support (SCBS)*1, and secondary collision reduction (SCR) controls. (Additionally, when any malfunction is detected in two wheels or more, EBD control is inhibited and the brake system warning light is illuminated.) *1: Vehicles with smart city brake support (SCBS) *2: ATX only	
POSSIBLE CAUSE	• Open circuit or short to ground/power supply in the wiring harness between the following DSC HU/CM terminals and ABS wheel-speed sensor terminals: — DSC HU/CM terminal F—RF ABS wheel-speed sensor terminal A — DSC HU/CM terminal C—RF ABS wheel-speed sensor terminal B — DSC HU/CM terminal AG—LF ABS wheel-speed sensor terminal A — DSC HU/CM terminal AJ—LF ABS wheel-speed sensor terminal B — DSC HU/CM terminal AA—RR ABS wheel-speed sensor terminal A — DSC HU/CM terminal X—RR ABS wheel-speed sensor terminal B — DSC HU/CM terminal L—LR ABS wheel-speed sensor terminal A — DSC HU/CM terminal O—LR ABS wheel-speed sensor terminal B • Malfunction in the ABS wheel-speed sensor • Poor connection at connectors (female terminal)	

ON-BOARD DIAGNOSTIC [DYNAMIC STABILITY CONTROL (DSC)]

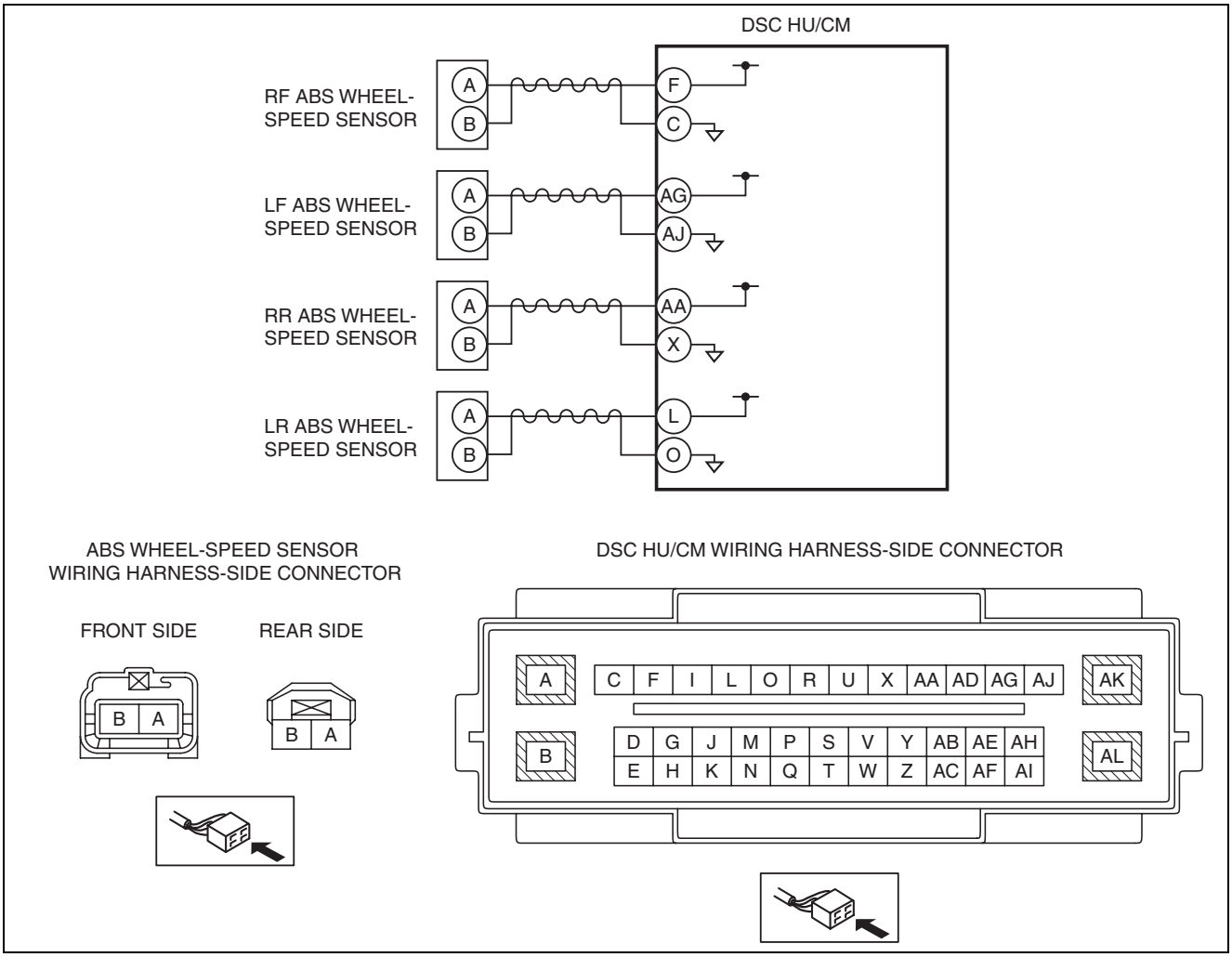

Diagnostic procedure

STEP	INSPECTION		ACTION
1	**INSPECT ABS WHEEL-SPEED SENSOR FOR SHORT TO GROUND** • Switch the ignition to off. • Disconnect the DSC HU/CM connectors. • Inspect for continuity between the following DSC HU/CM connector terminals (vehicle harness-side) and body ground: — RF ABS wheel-speed sensor (+): F — RF ABS wheel-speed sensor (-): C — LF ABS wheel-speed sensor (+): AG — LF ABS wheel-speed sensor (-): AJ — RR ABS wheel-speed sensor (+): AA — RR ABS wheel-speed sensor (-): X — LR ABS wheel-speed sensor (+): L — LR ABS wheel-speed sensor (-): O • Is there continuity?	Yes	Go to the next step.
		No	Go to Step 3.

ON-BOARD DIAGNOSTIC [DYNAMIC STABILITY CONTROL (DSC)]

STEP	INSPECTION		ACTION
2	**INSPECT ABS WHEEL-SPEED SENSOR WIRING HARNESS FOR SHORT TO GROUND** • Disconnect the ABS wheel-speed sensor connectors. • Inspect for continuity between the following DSC HU/CM connector terminals (vehicle harness-side) and body ground: — RF ABS wheel-speed sensor (+): F — RF ABS wheel-speed sensor (-): C — LF ABS wheel-speed sensor (+): AG — LF ABS wheel-speed sensor (-): AJ — RR ABS wheel-speed sensor (+): AA — RR ABS wheel-speed sensor (-): X — LR ABS wheel-speed sensor (+): L — LR ABS wheel-speed sensor (-): O • Is there continuity?	Yes	Repair or replace the wiring harness, then go to Step 5.
		No	Replace the ABS wheel-speed sensor, then go to Step 5. (See 04-15-9 FRONT ABS WHEEL-SPEED SENSOR REMOVAL/INSTALLATION.) (See 04-15-11 REAR ABS WHEEL-SPEED SENSOR REMOVAL/INSTALLATION.)
3	**INSPECT FOR OPEN CIRCUIT IN ABS WHEEL-SPEED SENSOR WIRING HARNESS** • Inspect for continuity between the DSC HU/CM connectors (vehicle harness-side) and the following vehicle harness-side connector terminals of the ABS wheel-speed sensors: — RF ABS wheel-speed sensor (+): F—A — RF ABS wheel-speed sensor (-): C—B — LF ABS wheel-speed sensor (+): AG—A — LF ABS wheel-speed sensor (-): AJ—B — RR ABS wheel-speed sensor (+): AA—A — RR ABS wheel-speed sensor (-): X—B — LR ABS wheel-speed sensor (+): L—A — LR ABS wheel-speed sensor (-): O—B • Is there continuity?	Yes	Go to the next step.
		No	Repair or replace the wiring harness, then go to the next step.
4	**INSPECT ABS WHEEL-SPEED SENSOR WIRING HARNESS FOR SHORT TO POWER SUPPLY** • Inspect for voltage between the following DSC HU/CM connector terminals (vehicle harness-side) and body ground: — RF ABS wheel-speed sensor (+): F — RF ABS wheel-speed sensor (-): C — LF ABS wheel-speed sensor (+): AG — LF ABS wheel-speed sensor (-): AJ — RR ABS wheel-speed sensor (+): AA — RR ABS wheel-speed sensor (-): X — LR ABS wheel-speed sensor (+): L — LR ABS wheel-speed sensor (-): O • Is the voltage **1 V or less**?	Yes	Go to the next step.
		No	Repair or replace the wiring harness, then go to the next step.
5	**VERIFY THAT THE SAME DTC IS NOT PRESENT** • Reconnect all disconnected connectors. • Clear the DTCs from the memory. (See 04-02A-7 ON-BOARD DIAGNOSIS [DYNAMIC STABILITY CONTROL (DSC)].) • Are the same DTCs present?	Yes	Repeat the inspection from Step 1. If the malfunction recurs, replace the DSC HU/CM, then go to the next step. (See 04-15-4 DSC HU/CM REMOVAL/INSTALLATION.)
		No	Go to the next step.
6	**VERIFY THAT NO OTHER DTCS ARE PRESENT** • Are any other DTCs output?	Yes	Go to the applicable DTC inspection. (See 04-02A-7 ON-BOARD DIAGNOSIS [DYNAMIC STABILITY CONTROL (DSC)].)
		No	DTC troubleshooting completed.

ON-BOARD DIAGNOSTIC [DYNAMIC STABILITY CONTROL (DSC)]

DTC C0044:01/C0044:28/C0044:54/C0044:64 [DYNAMIC STABILITY CONTROL (DSC)]

id0402b2888500

DTC	C0044:01, C0044:28, C0044:54, C0044:64	Brake fluid pressure sensor
DETECTION CONDITION	• C0044:01 — The voltage value from the brake fluid pressure sensor is not within specification. • C0044:28, C0044:64 — The pressure from the brake fluid pressure sensor is not within specification. • C0044:54 — The brake fluid pressure sensor detects the initialization procedure has not been perform.	
FAIL-SAFE FUNCTION	• C0044:01 — Illuminates the TCS/DSC indicator light and master warning light*1*2. — Tire pressure monitoring system warning light illuminates after flashes. (Not illuminated/flashed depending on malfunction content.) — Inhibits the TCS*3, DSC*3, roll over mitigation (ROM)*3, brake assist control, vehicle roll prevention function*3*4, hill launch assist (HLA)*3, TPMS*3, smart city brake support (SCBS)*1*3, and secondary collision reduction (SCR)*3 controls. • C0044:28, C0044:64 — Illuminates the TCS/DSC indicator light and master warning light*1. — Tire pressure monitoring system warning light illuminates after flashes. — Inhibits the TCS, DSC, roll over mitigation (ROM), brake assist control, vehicle roll prevention function*4, hill launch assist (HLA), TPMS, smart city brake support (SCBS)*1, and secondary collision reduction (SCR) controls. • C0044:54 — Illuminates the TCS/DSC indicator light and master warning light*1*2. — Tire pressure monitoring system warning light illuminates after flashes. (Not illuminated/flashed depending on malfunction content.) — Inhibits the TCS*3, DSC*3, roll over mitigation (ROM)*3, brake assist control*3, vehicle roll prevention function*3*4, hill launch assist (HLA)*3, TPMS*3, smart city brake support (SCBS)*1*3, and secondary collision reduction (SCR)*3 controls. *1: Vehicles with smart city brake support (SCBS) *2: Not illuminated depending on malfunction content. *3: Enabled depending on malfunction content. *4: ATX only	
POSSIBLE CAUSE	• The initialization procedure for the brake fluid pressure sensor has not been performed. • Brake fluid pressure sensor malfunction • Open or short circuit in the brake fluid pressure sensor circuit in DSC HU/CM	
SYSTEM WIRING DIAGRAM	—	

Diagnostic procedure

STEP	INSPECTION		ACTION
1	**VERIFY INITIALIZATION PROCEDURE** • Was the brake fluid pressure sensor initialization procedure been performed?	Yes	Go to the next step.
		No	Perform the brake fluid pressure sensor initialization procedure, then go to the next step. (See 04-15-7 DSC RELATED PARTS SENSOR INITIALIZATION PROCEDURE.)
2	**VERIFY NO ABNORMALITY ON BRAKE FLUID PRESSURE SENSOR** • Clear the DTCs from the memory. (See 04-02A-7 ON-BOARD DIAGNOSIS [DYNAMIC STABILITY CONTROL (DSC)].) • Start the engine and drive the vehicle at **10 km/h {6.2 mph} or more**. • Are the same DTCs present?	Yes	Replace the DSC HU/CM, then go to the next step. (See 04-15-4 DSC HU/CM REMOVAL/INSTALLATION.)
		No	Go to the next step.
3	**VERIFY THAT NO OTHER DTCS ARE PRESENT** • Are any other DTCs output?	Yes	Go to the applicable DTC inspection. (See 04-02A-7 ON-BOARD DIAGNOSIS [DYNAMIC STABILITY CONTROL (DSC)].)
		No	DTC troubleshooting completed.

ON-BOARD DIAGNOSTIC [DYNAMIC STABILITY CONTROL (DSC)]

DTC C0051:62/C0051:64/C0051:67/C0051:85 [DYNAMIC STABILITY CONTROL (DSC)]

id0402b2906200

DTC	C0051:62, C0051:64, C0051:67, C0051:85	Steering angle sensor
DETECTION CONDITION	• C0051:62 — The difference between the steering angle calculated by each sensor and the steering angle from the steering angle sensor is the specification or more when the vehicle is driven in a straight line. • C0051:64 — The difference between the steering angle calculated by each sensor and the steering angle from the steering angle sensor exceeds the specification. • C0051:67 — The neutral position of the steering angle cannot be estimated from the signals from the ABS wheel-speed sensors and the SAS control module. • C0051:85 — The steering angle sensor detects signal modulation or steering angle that exceeds specification.	
FAIL-SAFE FUNCTION	• C0051:62, C0051:64, C0051:85 — Illuminates the TCS/DSC indicator light and master warning light*. — Tire pressure monitoring system warning light illuminates after flashes. — Inhibits the TCS, DSC, roll over mitigation (ROM), TPMS, smart city brake support (SCBS)*, and secondary collision reduction (SCR) controls. • C0051:67 — Illuminates the TCS/DSC indicator light and master warning light*. — Inhibits the TCS, DSC, roll over mitigation (ROM), smart city brake support (SCBS)*, and secondary collision reduction (SCR) controls. *: Vehicles with smart city brake support (SCBS)	
POSSIBLE CAUSE	• Improper installation or positioning of the steering angle sensor • Steering angle sensor malfunction • Connector or terminal malfunction	
SYSTEM WIRING DIAGRAM	—	

Diagnostic procedure

STEP	INSPECTION		ACTION
1	**PERFORM EPS CM DTC INSPECTION** • Perform the EPS CM DTC inspection. (See 06-02-5 ELECTRIC POWER STEERING (EPS) ON-BOARD DIAGNOSIS.) • Are any DTCs present?	Yes	Go to the applicable DTC inspection. (See 06-02-5 ELECTRIC POWER STEERING (EPS) ON-BOARD DIAGNOSIS.)
		No	Go to the next step.
2	**VERIFY THAT THE SAME DTC IS NOT PRESENT** • Clear the DTCs from the memory. (See 04-02A-7 ON-BOARD DIAGNOSIS [DYNAMIC STABILITY CONTROL (DSC)].) • Start the engine and drive the vehicle at **10 km/h {6.2 mph} or more**. • Are the same DTCs present?	Yes	Repeat the inspection from Step 1. If the malfunction recurs, replace the EPS CM, then go to the next step. (See 06-13-4 STEERING WHEEL AND COLUMN REMOVAL/INSTALLATION.)
		No	Go to the next step.
3	**VERIFY THAT NO OTHER DTCS ARE PRESENT** • Are any other DTCs output?	Yes	Go to the applicable DTC inspection. (See 04-02A-7 ON-BOARD DIAGNOSIS [DYNAMIC STABILITY CONTROL (DSC)].)
		No	DTC troubleshooting completed.

ON-BOARD DIAGNOSTIC [DYNAMIC STABILITY CONTROL (DSC)]

DTC C0061:28/C0061:64/C0062:28/C0062:64/C0063:28/C0063:64 [DYNAMIC STABILITY CONTROL (DSC)]

id0402b2180800

DTC	C0061:28, C0061:64, C0062:28, C0062:64, C0063:28, C0063:64	SAS control module system

DETECTION CONDITION

Note
- The low-G sensor and the yaw rate sensor are built into the SAS control module.

- C0061:28, C0061:64
  — Out-of-specification signal modulation or lateral-G value is detected from the low-G sensor.
- C0062:28, C0062:64
  — Out-of-specification signal modulation or longitudinal-G value is detected from the low-G sensor.
- C0063:28, C0063:64
  — Out-of-specification signal modulation or yaw rate value is detected from the yaw rate sensor.

FAIL-SAFE FUNCTION

- C0061:28, C0061:64, C0063:28, C0063:64
  — Illuminates the TCS/DSC indicator light and master warning light*1.
  — Tire pressure monitoring system warning light illuminates after flashes.
  — Inhibits the TCS, DSC, roll over mitigation (ROM), TPMS, smart city brake support (SCBS)*1, and secondary collision reduction (SCR) controls.
- C0062:28, C0062:64
  — Illuminates the ABS warning light*2, TCS/DSC indicator light, and master warning light*1*2.
  — Inhibits the ABS*3, TCS*3, DSC*3, roll over mitigation (ROM)*3, brake assist control*3, vehicle roll prevention function*4, hill launch assist (HLA), smart city brake support (SCBS)*1*3, and secondary collision reduction (SCR)*3 controls.

*1: Vehicles with smart city brake support (SCBS)
*2: Not illuminated depending on malfunction content.
*3: Enabled depending on malfunction content.
*4: ATX only

POSSIBLE CAUSE

- SAS control module malfunction
- Open or short circuit in the CAN2_H wiring harness between DSC HU/CM terminal S and SAS control module terminal 3H
- Open or short circuit in the CAN2_L wiring harness between DSC HU/CM terminal P and SAS control module terminal 3I
- DSC HU/CM malfunction
- Poor connection at connectors (female terminal)

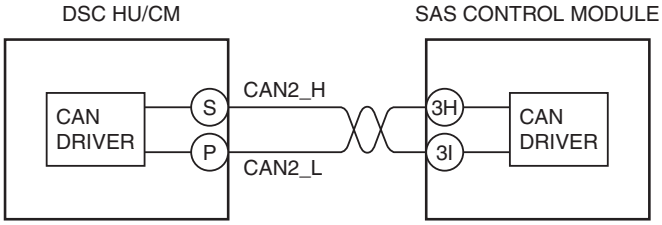

DSC HU/CM WIRING HARNESS-SIDE CONNECTOR

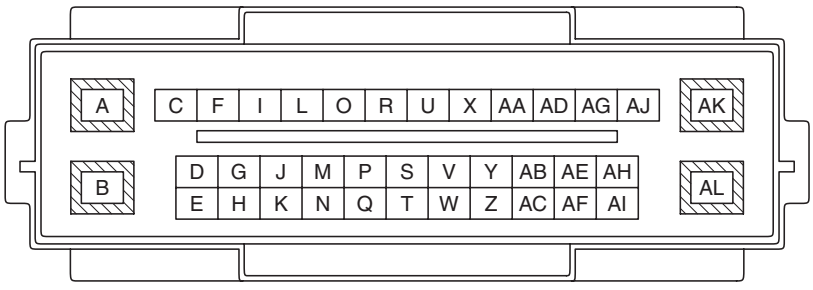

SAS CONTROL MODULE WIRING HARNESS-SIDE CONNECTOR

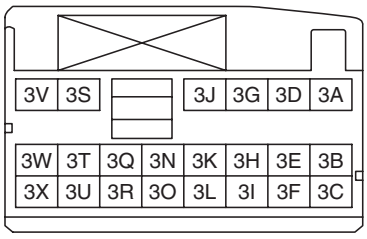

ON-BOARD DIAGNOSTIC [DYNAMIC STABILITY CONTROL (DSC)]

Diagnostic procedure

STEP	INSPECTION		ACTION
1	**INSPECT SAS CONTROL MODULE MALFUNCTION** • Switch the ignition to off. • Using the M-MDS, perform the DTC inspection for the SAS control module. (See 08-02-7 DTC INSPECTION.) • Are any DTCs detected?	Yes	Go to applicable DTC inspection. (See 08-02-11 DTC TABLE.)
		No	Go to the next step.
2	**INSPECT SAS CONTROL MODULE SIGNAL (CAN2 LINE) FOR OPEN CIRCUIT** • Disconnect the DSC HU/CM connector. • Disconnect the SAS control module connectors. • Inspect for continuity between the following DSC HU/CM connector terminals (vehicle harness-side) and SAS control module connector terminals (vehicle harness-side): — DSC HU/CM terminal S—SAS control module terminal 3H — DSC HU/CM terminal P—SAS control module terminal 3I • Is there continuity?	Yes	Go to the next step.
		No	Repair or replace the wiring harness, then go to Step 4.
3	**INSPECT SAS CONTROL MODULE SIGNAL (CAN2 LINE) FOR SHORT CIRCUIT** • Inspect for continuity between the following DSC HU/CM connector terminals (vehicle harness-side) and body ground: — DSC HU/CM terminal S—body ground — DSC HU/CM terminal P—body ground • Is there continuity?	Yes	Repair or replace the wiring harness, then go to the next step.
		No	Go to the next step.
4	**VERIFY THAT THE SAME DTC IS NOT PRESENT** • Reconnect all disconnected connectors. • Clear the DTCs from the memory. (See 04-02A-7 ON-BOARD DIAGNOSIS [DYNAMIC STABILITY CONTROL (DSC)].) • Start the engine and drive the vehicle at **10 km/h {6.2 mph} or more**. • Are the same DTCs present?	Yes	Repeat the inspection from Step 1. If the malfunction recurs, replace the DSC HU/CM, then go to the next step. (See 04-15-4 DSC HU/CM REMOVAL/INSTALLATION.)
		No	Go to the next step.
5	**VERIFY THAT NO OTHER DTCS ARE PRESENT** • Are any other DTCs output?	Yes	Go to the applicable DTC inspection. (See 04-02A-7 ON-BOARD DIAGNOSIS [DYNAMIC STABILITY CONTROL (DSC)].)
		No	DTC troubleshooting completed.

ON-BOARD DIAGNOSTIC [DYNAMIC STABILITY CONTROL (DSC)]

DTC C0061:54/C0062:54/C0063:54 [DYNAMIC STABILITY CONTROL (DSC)]

id0402b2901200

DTC	C0061:54, C0062:54, C0063:54	DSC HU/CM system (unperformed initialization procedure)
DETECTION CONDITION	• C0061:54 — DSC HU/CM detects that the initialization procedure has not been performed. (Lateral acceleration sensor) • C0062:54 — DSC HU/CM detects that the initialization procedure has not been performed. (Longitudinal acceleration sensor) • C0063:54 — DSC HU/CM detects that the initialization procedure has not been performed. (Yaw rate sensor)	
FAIL-SAFE FUNCTION	• Illuminates the ABS warning light*1, TCS/DSC indicator light, and master warning light*1*2. • Tire pressure monitoring system warning light illuminates after flashes. (Not illuminated/flashed depending on malfunction content.) • Inhibits the ABS*3, TCS*3, DSC*3, roll over mitigation (ROM)*3, brake assist control*3, vehicle roll prevention function*3*4, hill launch assist (HLA)*3, TPMS*3, smart city brake support (SCBS)*2*3, and secondary collision reduction (SCR)*3 controls. *1: Not illuminated depending on malfunction content. *2: Vehicles with smart city brake support (SCBS) *3: Enabled depending on malfunction content. *4: ATX only	
POSSIBLE CAUSE	• Initialization procedure for the lateral acceleration sensor, longitudinal acceleration sensor or yaw rate sensor not performed • SAS control module malfunction • DSC HU/CM malfunction	
SYSTEM WIRING DIAGRAM	—	

Diagnostic procedure

STEP	INSPECTION		ACTION
1	**VERIFY INITIALIZATION PROCEDURE** • Was the DSC related parts sensor initialization procedure performed?	Yes	Go to the next step.
		No	Perform the DSC related parts sensor initialization procedure, then go to Step 3. (See 04-15-7 DSC RELATED PARTS SENSOR INITIALIZATION PROCEDURE.)
2	**INSPECT SAS CONTROL MODULE MALFUNCTION** • Switch the ignition to off. • Using the M-MDS, perform the DTC inspection for the SAS control module. (See 08-02-7 DTC INSPECTION.) • Are any DTCs detected?	Yes	Go to applicable DTC inspection. (See 08-02-11 DTC TABLE.)
		No	Go to the next step.
3	**VERIFY THAT THE SAME DTC IS NOT PRESENT** • Clear the DTCs from the memory. (See 04-02A-7 ON-BOARD DIAGNOSIS [DYNAMIC STABILITY CONTROL (DSC)].) • Are the same DTCs present?	Yes	Repeat the inspection from Step 1. If the malfunction recurs, replace the DSC HU/CM, then go to the next step. (See 04-15-4 DSC HU/CM REMOVAL/INSTALLATION.)
		No	Go to the next step.
4	**VERIFY THAT NO OTHER DTCS ARE PRESENT** • Are any other DTCs output?	Yes	Go to the applicable DTC inspection. (See 04-02A-7 ON-BOARD DIAGNOSIS [DYNAMIC STABILITY CONTROL (DSC)].)
		No	DTC troubleshooting completed.

ON-BOARD DIAGNOSTIC [DYNAMIC STABILITY CONTROL (DSC)]

DTC C0062:76 [DYNAMIC STABILITY CONTROL (DSC)]

id0402b2901000

DTC	C0062:76	SAS control module system
DETECTION CONDITION	• Error is detected in communication with SAS control module by CAN communication (CAN2).	
FAIL-SAFE FUNCTION	• Illuminates the ABS warning light[*1], TCS/DSC indicator light, and master warning light[*1*2]. • Tire pressure monitoring system warning light illuminates after flashes. (Not illuminated/flashed depending on malfunction content.) • Inhibits the ABS[*3], TCS[*3], DSC[*3], roll over mitigation (ROM)[*3], brake assist control[*3], vehicle roll prevention function[*4], hill launch assist (HLA), TPMS[*3], smart city brake support (SCBS)[*2*3], and secondary collision reduction (SCR)[*3] controls. [*1]: Not illuminated depending on malfunction content. [*2]: Vehicles with smart city brake support (SCBS) [*3]: Enabled depending on malfunction content. [*4]: ATX only	
POSSIBLE CAUSE	• Poor SAS control module installation • Low-G sensor malfunction in SAS control module	

STEP	INSPECTION		ACTION
1	**VERIFY IF SAS CONTROL MODULE IS CORRECTLY INSTALLED** • Verify the SAS control module installation condition. (See 08-10-20 SAS CONTROL MODULE REMOVAL/INSTALLATION.) • Is the installation condition normal?	Yes	Go to the next step.
		No	Install the SAS control module correctly, then go to the next step.
2	**INSPECT SAS CONTROL MODULE MALFUNCTION** • Switch the ignition to off. • Using the M-MDS, perform the DTC inspection for the SAS control module. (See 08-02-7 DTC INSPECTION.) • Are any DTCs detected?	Yes	Go to applicable DTC inspection. (See 08-02-11 DTC TABLE.)
		No	Go to the next step.
3	**PERFORM DSC RELATED PARTS SENSOR INITIALIZATION** • Perform the DSC related parts sensor initialization for the PCM using the M-MDS. (See 04-15-7 DSC RELATED PARTS SENSOR INITIALIZATION PROCEDURE.) • Is the DSC sensor initialization completed normally?	Yes	Go to the next step.
		No	Replace the DSC HU/CM, then go to the next step. (See 04-15-4 DSC HU/CM REMOVAL/INSTALLATION.)
4	**VERIFY THAT THE SAME DTC IS NOT PRESENT** • Clear the DTCs from the memory. (See 04-02A-7 ON-BOARD DIAGNOSIS [DYNAMIC STABILITY CONTROL (DSC)].) • Are the same DTCs present?	Yes	Repeat the inspection from Step 1. If the malfunction recurs, replace the DSC HU/CM, then go to the next step. (See 04-15-4 DSC HU/CM REMOVAL/INSTALLATION.)
		No	Go to the next step.
5	**VERIFY THAT NO OTHER DTCS ARE PRESENT** • Are any other DTCs output?	Yes	Go to the applicable DTC inspection. (See 04-02A-7 ON-BOARD DIAGNOSIS [DYNAMIC STABILITY CONTROL (DSC)].)
		No	DTC troubleshooting completed.

ON-BOARD DIAGNOSTIC [DYNAMIC STABILITY CONTROL (DSC)]

DTC C006B:00/C0072:68 [DYNAMIC STABILITY CONTROL (DSC)]

id0402b2884600

DTC	C006B:00, C0072:68	TCS/DSC control system
DETECTION CONDITION	• C006B:00 — DSC control continues for a specified period of time or more • C0072:68 — Due to excessive braking, TCS control using braking is temporarily inhibited.	
FAIL-SAFE FUNCTION	• C006B:00 — Illuminates the TCS/DSC indicator light and master warning light*. — Tire pressure monitoring system warning light illuminates after flashes. — Inhibits the TCS, DSC, roll over mitigation (ROM), TPMS, smart city brake support (SCBS)*, and secondary collision reduction (SCR) controls. • C0072:68 — Illuminates the TCS/DSC indicator light. (Turns on if the slip of a specific wheel is 10km/h {6.2 mph} or more.) — Inhibits the TCS (brake control) control. *: Vehicles with smart city brake support (SCBS)	
POSSIBLE CAUSE	• This does not indicate a malfunction since constant TCS or DSC control over an extended period of time is inhibited to protect the DSC solenoid valve inside the DSC HU or the engine.	
SYSTEM WIRING DIAGRAM	—	

Diagnostic procedure

STEP	INSPECTION		ACTION
1	**VERIFY THAT THE SAME DTC IS NOT PRESENT** • Clear the DTCs from the memory. (See 04-02A-7 ON-BOARD DIAGNOSIS [DYNAMIC STABILITY CONTROL (DSC)].) • Are the same DTCs present?	Yes	Replace the DSC HU/CM, then go to the next step. (See 04-15-4 DSC HU/CM REMOVAL/INSTALLATION.)
		No	Go to the next step.
2	**VERIFY THAT NO OTHER DTCS ARE PRESENT** • Are any other DTCs output?	Yes	Go to the applicable DTC inspection. (See 04-02A-7 ON-BOARD DIAGNOSIS [DYNAMIC STABILITY CONTROL (DSC)].)
		No	DTC troubleshooting completed.

ON-BOARD DIAGNOSTIC [DYNAMIC STABILITY CONTROL (DSC)]

DTC C0089:64 [DYNAMIC STABILITY CONTROL (DSC)]

id0402b2906500

DTC	C0089:64	TCS OFF switch
DETECTION CONDITION	• Continuous ON signal from the TCS OFF switch for **10 s or more** is detected.	
FAIL-SAFE FUNCTION	• Permits the control and does not illuminate each warning/indicator light.	
POSSIBLE CAUSE	• The driver pressed and held the TCS OFF switch for **10 s or more**. • Short to ground in the wiring harness between the instrument cluster terminal V and TCS OFF switch terminal B • Open circuit in wiring harness between instrument cluster terminal T and TCS OFF switch terminal C • TCS OFF switch malfunction • Poor connection at connectors (female terminal)	

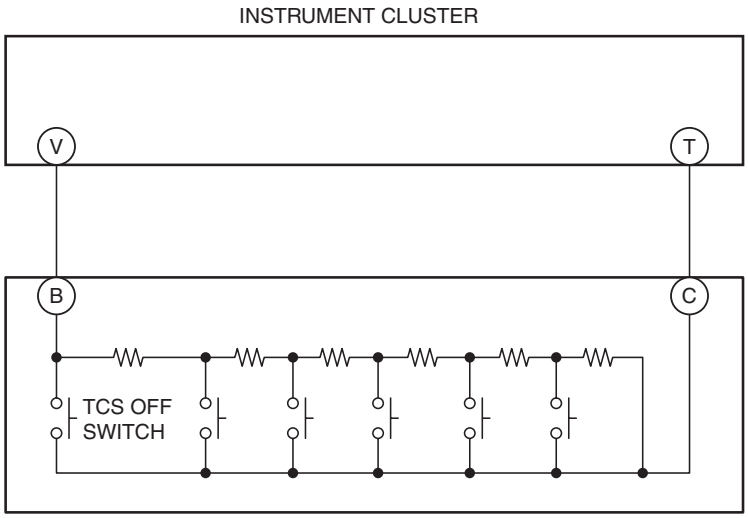

INSTRUMENT CLUSTER WIRING HARNESS-SIDE CONNECTOR

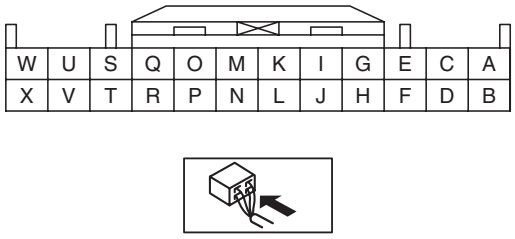

TCS OFF SWITCH WIRING HARNESS-SIDE CONNECTOR

Diagnostic procedure

STEP	INSPECTION		ACTION
1	**INSPECT FOR INSTRUMENT CLUSTER MALFUNCTION** • Switch the ignition to off. • Using the M-MDS, perform the DTC inspection for the instrument cluster. (See 09-02G-7 DTC INSPECTION [INSTRUMENT CLUSTER].) • Are any DTCs detected?	Yes	Go to applicable DTC inspection. (See 09-02G-10 DTC TABLE [INSTRUMENT CLUSTER].)
		No	Go to the next step.
2	**INSPECT TCS OFF SWITCH SIGNAL CIRCUIT FOR SHORT TO GROUND** • Disconnect the TCS OFF switch. • Disconnect the instrument cluster connector. • Inspect for continuity between the TCS OFF switch connector terminal B (vehicle harness-side) and body ground. • Is there continuity?	Yes	Repair or replace the wiring harness, then go to Step 5.
		No	Go to the next step.

ON-BOARD DIAGNOSTIC [DYNAMIC STABILITY CONTROL (DSC)]

STEP	INSPECTION		ACTION
3	**INSPECT TCS OFF SWITCH SIGNAL CIRCUIT FOR OPEN CIRCUIT** • Inspect for continuity between the TCS OFF switch connector terminal C (vehicle harness-side) and instrument cluster connector terminal T (vehicle harness-side). • Is there continuity?	Yes	Go to the next step.
		No	Repair or replace the wiring harness, then go to Step 5.
4	**INSPECT TCS OFF SWITCH** • Inspect the TCS OFF switch. (See 04-15-15 TCS OFF SWITCH INSPECTION.) • Is the TCS OFF switch normal?	Yes	Go to the next step.
		No	Replace the TCS OFF switch, then go to the next step. (See 04-15-15 TCS OFF SWITCH REMOVAL/INSTALLATION.)
5	**VERIFY THAT THE SAME DTC IS NOT PRESENT** • Reconnect all disconnected connectors. • Clear the DTCs from the memory. (See 04-02A-7 ON-BOARD DIAGNOSIS [DYNAMIC STABILITY CONTROL (DSC)].) • Are the same DTCs present?	Yes	Repeat the inspection from Step 1.
		No	Go to the next step.
6	**VERIFY THAT NO OTHER DTCS ARE PRESENT** • Are any other DTCs output?	Yes	Go to the applicable DTC inspection. (See 04-02A-7 ON-BOARD DIAGNOSIS [DYNAMIC STABILITY CONTROL (DSC)].)
		No	DTC troubleshooting completed.

DTC C1031:35 [DYNAMIC STABILITY CONTROL (DSC)]

id0402b2906600

DTC	C1031:35	Tire pressure monitoring system (TPMS) set switch
DETECTION CONDITION	• Continuous ON signal from the TPMS set switch for **60 s or more** is detected.	
FAIL-SAFE FUNCTION	• Tire pressure monitoring system warning light illuminates after flashes. • Inhibits the TPMS control.	
POSSIBLE CAUSE	• The driver pressed and held the TPMS set switch for **60 s or more**. • TPMS set switch malfunction	
SYSTEM WIRING DIAGRAM	—	

Diagnostic procedure

STEP	INSPECTION		ACTION
1	**VERIFY DTCs FOR INSTRUMENT CLUSTER** • Switch the ignition to off. • Using the M-MDS, perform the DTC inspection for the instrument cluster. (See 09-02G-7 DTC INSPECTION [INSTRUMENT CLUSTER].) • Are any DTCs detected?	Yes	Go to applicable DTC inspection. (See 09-02G-10 DTC TABLE [INSTRUMENT CLUSTER].)
		No	Go to the next step.
2	**INSPECT TPMS SET SWITCH** • Inspect the TPMS set switch. (See 02-12-5 TIRE PRESSURE MONITORING SYSTEM SET SWITCH INSPECTION.) • Is the TPMS set switch normal?	Yes	Go to the next step.
		No	Replace the TPMS set switch, then go to the next step. (See 02-12-4 TIRE PRESSURE MONITORING SYSTEM SET SWITCH REMOVAL/INSTALLATION.)
3	**VERIFY THAT THE SAME DTC IS NOT PRESENT** • Reconnect all disconnected connectors. • Clear the DTCs from the memory. (See 04-02A-7 ON-BOARD DIAGNOSIS [DYNAMIC STABILITY CONTROL (DSC)].) • Are the same DTCs present?	Yes	Repeat the inspection from Step 1.
		No	Go to the next step.
4	**VERIFY THAT NO OTHER DTCS ARE PRESENT** • Are any other DTCs output?	Yes	Go to the applicable DTC inspection. (See 04-02A-7 ON-BOARD DIAGNOSIS [DYNAMIC STABILITY CONTROL (DSC)].)
		No	DTC troubleshooting completed.

ON-BOARD DIAGNOSTIC [DYNAMIC STABILITY CONTROL (DSC)]

DTC C1031:41 [DYNAMIC STABILITY CONTROL (DSC)]

id0402b2906700

DTC	C1031:41	Tire pressure monitoring system (TPMS) system
DETECTION CONDITION	• When the DSC HU/CM detects malfunction in the memory for storing a calculated tire pressure value.	
FAIL-SAFE FUNCTION	• Tire pressure monitoring system warning light illuminates after flashes. • Inhibits the TPMS control.	
POSSIBLE CAUSE	• DSC HU/CM internal error • DSC HU/CM malfunction	
SYSTEM WIRING DIAGRAM	—	

Diagnostic procedure

STEP	INSPECTION		ACTION
1	**INITIALIZE A TPMS MEMORY** • Switch the ignition to off. • Connect the M-MDS (IDS) to DLC-2. • After the vehicle is identified, select the following items from the initial screen of the IDS. 1. Select “Chassis”. 2. Select “ABS/DSC”. 3. Select “TPMS DTC Reset for ABS/DSC”. • Perform the procedure according to the directions on the screen. • Is the initialization normally completed?	Yes	Go to the next step.
		No	Repeat the inspection from Step 1. If the malfunction recurs, replace the DSC HU/CM, then go to the next step. (See 04-15-4 DSC HU/CM REMOVAL/INSTALLATION.)
2	**VERIFY THAT THE SAME DTC IS NOT PRESENT** • Clear the DTCs from the memory. (See 04-02A-7 ON-BOARD DIAGNOSIS [DYNAMIC STABILITY CONTROL (DSC)].) • Are the same DTCs present?	Yes	Repeat the inspection from Step 1. If the malfunction recurs, replace the DSC HU/CM, then go to the next step. (See 04-15-4 DSC HU/CM REMOVAL/INSTALLATION.)
		No	Go to the next step.
3	**VERIFY THAT NO OTHER DTCS ARE PRESENT** • Are any other DTCs output?	Yes	Go to the applicable DTC inspection. (See 04-02A-7 ON-BOARD DIAGNOSIS [DYNAMIC STABILITY CONTROL (DSC)].)
		No	DTC troubleshooting completed.

ON-BOARD DIAGNOSTIC [DYNAMIC STABILITY CONTROL (DSC)]

DTC C1031:54 [DYNAMIC STABILITY CONTROL (DSC)]

id0402b2906900

DTC	C1031:54	Tire pressure monitoring system (TPMS) system
DETECTION CONDITION	• Detects that tire such as temporary spare tire with outer diameter of considerable difference is installed • There is a large fluctuation in steering angle and acceleration/deceleration speed repeatedly over short intervals.	
FAIL-SAFE FUNCTION	• Tire pressure monitoring system warning light illuminates after flashes. • Inhibits the TPMS control.	
POSSIBLE CAUSE	• Diameter of currently installed tires differs from Mazda recommended tires • There is a large fluctuation in steering angle and acceleration/deceleration speed repeatedly over short intervals. • DSC HU/CM malfunction	
SYSTEM WIRING DIAGRAM	—	

Diagnostic procedure

STEP	INSPECTION		ACTION
1	**VERIFY THE TIRE** • Verify that the currently equipped tire type (size, supplier, and type) conform to the Mazda recommendation. (See 02-12-1 WHEEL AND TIRE SPECIFICATION.) • Is the tire type as specified?	Yes	Go to the next step.
		No	Replace the tire, then go to Step 3. (See 02-12-1 WHEEL AND TIRE SPECIFICATION.)
2	**MEASURE THE TIRE PRESSURE** • Measure the tire pressure when the tires are cold. (See 02-12-1 WHEEL AND TIRE SPECIFICATION.) • Is the pressure as specified?	Yes	Go to the next step.
		No	Adjust the tire pressure to the specification when the tires are cold, then go to the next step. (See 02-12-1 WHEEL AND TIRE SPECIFICATION.)
3	**INITIALIZE THE TPMS** • Initialize the TPMS. (See 02-12-4 TIRE PRESSURE MONITORING SYSTEM INITIALIZATION PROCEDURE.) • Is the initialization normally completed?	Yes	Go to the next step.
		No	Repeat the inspection from Step 1. If the malfunction recurs, replace the DSC HU/CM, then go to the next step. (See 04-15-4 DSC HU/CM REMOVAL/INSTALLATION.)
4	**VERIFY THAT THE SAME DTC IS NOT PRESENT** • Clear the DTCs from the memory. (See 04-02A-7 ON-BOARD DIAGNOSIS [DYNAMIC STABILITY CONTROL (DSC)].) • Are the same DTCs present?	Yes	Repeat the inspection from Step 1. If the malfunction recurs, replace the DSC HU/CM, then go to the next step. (See 04-15-4 DSC HU/CM REMOVAL/INSTALLATION.)
		No	Go to the next step.
5	**VERIFY THAT NO OTHER DTCS ARE PRESENT** • Are any other DTCs output?	Yes	Go to the applicable DTC inspection. (See 04-02A-7 ON-BOARD DIAGNOSIS [DYNAMIC STABILITY CONTROL (DSC)].)
		No	DTC troubleshooting completed.

ON-BOARD DIAGNOSTIC [DYNAMIC STABILITY CONTROL (DSC)]

DTC C1031:68 [DYNAMIC STABILITY CONTROL (DSC)]

id0402b2907000

DTC	C1031:68	Tire pressure monitoring system (TPMS) system
DETECTION CONDITION	• Error is detected in ambient temperature sensor from PCM via CAN communication.	
FAIL-SAFE FUNCTION	• Tire pressure monitoring system warning light illuminates after flashes. • Inhibits the TPMS control.	
POSSIBLE CAUSE	• Ambient temperature sensor malfunction • PCM malfunction	
SYSTEM WIRING DIAGRAM	—	

Diagnostic procedure

STEP	INSPECTION		ACTION
1	**VERIFY DTCs FOR PCM** • Switch the ignition to off. • Verify DTCs for the PCM using the M-MDS. (See 01-02-8 ON-BOARD DIAGNOSTIC TEST [SKYACTIV-G 2.0].) • Is the DTC displayed?	Yes	Repair the malfunctioning part according to the applicable DTC troubleshooting. (See 01-02-14 DTC TABLE [SKYACTIV-G 2.0].)
		No	Go to the next step.
2	**INSPECT AMBIENT TEMPERATURE SENSOR** • Inspect the AMBIENT TEMPERATURE SENSOR. (See 07-40B-11 AMBIENT TEMPERATURE SENSOR INSPECTION [MANUAL AIR CONDITIONER].) (See 07-40A-23 AMBIENT TEMPERATURE SENSOR INSPECTION [FULL-AUTO AIR CONDITIONER].) • Is the ambient temperature sensor normal?	Yes	Go to the next step.
		No	Replace the ambient temperature sensor, then go to the next step. (See 07-40B-11 AMBIENT TEMPERATURE SENSOR REMOVAL/INSTALLATION [MANUAL AIR CONDITIONER].) (See 07-40A-22 AMBIENT TEMPERATURE SENSOR REMOVAL/INSTALLATION [FULL-AUTO AIR CONDITIONER].)
3	**VERIFY THAT THE SAME DTC IS NOT PRESENT** • Clear the DTCs from the memory. (See 04-02A-7 ON-BOARD DIAGNOSIS [DYNAMIC STABILITY CONTROL (DSC)].) • Are the same DTCs present?	Yes	Repeat the inspection from Step 1. If the malfunction recurs, replace the PCM, then go to the next step. (See 01-40-10 PCM REMOVAL/INSTALLATION [SKYACTIV-G 2.0].)
		No	Go to the next step.
4	**VERIFY THAT NO OTHER DTCS ARE PRESENT** • Are any other DTCs output?	Yes	Go to the applicable DTC inspection. (See 04-02A-7 ON-BOARD DIAGNOSIS [DYNAMIC STABILITY CONTROL (DSC)].)
		No	DTC troubleshooting completed.

ON-BOARD DIAGNOSTIC [DYNAMIC STABILITY CONTROL (DSC)]

DTC U0001:88/U0100:00/U0101:00/U0114:00/U0131:00/U0154:00/U0155:00/U0235:00 [DYNAMIC STABILITY CONTROL (DSC)]

id0402b2906300

DTC	U0001:88, U0100:00, U0101:00, U0114:00, U0131:00, U0154:00, U0155:00, U0235:00	CAN line

DETECTION CONDITION	• U0001:88 — Open or short circuit in CAN system wiring harness is detected. • U0100:00 — Communication error with PCM is detected in CAN communication. • U0101:00 — Communication error with TCM is detected in CAN communication. • U0114:00 — Communication error with 4WD control module is detected in CAN communication. • U0131:00 — Communication error with EPS CM is detected in CAN communication. • U0154:00 — Communication error with SAS control module is detected in CAN communication. • U0155:00 — Communication error with instrument cluster is detected in CAN communication. • U0235:00 — Communication error with laser sensor is detected in CAN communication.
FAIL-SAFE FUNCTION	• U0001:88 — Illuminates the ABS warning light, TCS/DSC indicator light, and master warning light*1. — Tire pressure monitoring system warning light illuminates after flashes. — Inhibits the ABS, TCS, DSC, roll over mitigation (ROM), brake assist control, vehicle roll prevention function*2, hill launch assist (HLA), TPMS, smart city brake support (SCBS)*1, and secondary collision reduction (SCR) controls. • U0100:00 — Illuminates the ABS warning light*3, TCS/DSC indicator light*3, and master warning light*1*3. — Tire pressure monitoring system warning light illuminates after flashes. (Not illuminated/flashed depending on malfunction content.) — Inhibits the ABS*4, TCS*4, DSC*4, roll over mitigation (ROM)*4, brake assist control*4, vehicle roll prevention function*2*4, hill launch assist (HLA)*4, TPMS*4, smart city brake support (SCBS)*1*4, and secondary collision reduction (SCR)*4 controls. • U0101:00 — Illuminates the TCS/DSC indicator light and master warning light*1. — Tire pressure monitoring system warning light illuminates after flashes. — Inhibits the TCS, DSC, roll over mitigation (ROM), vehicle roll prevention function, hill launch assist (HLA), TPMS, smart city brake support (SCBS)*1, and secondary collision reduction (SCR) controls. • U0114:00 — Tire pressure monitoring system warning light illuminates after flashes. — Inhibits the TPMS control. • U0131:00 — Illuminates the TCS/DSC indicator light and master warning light*1. — Tire pressure monitoring system warning light illuminates after flashes. — Inhibits the TCS, DSC, roll over mitigation (ROM), TPMS, smart city brake support (SCBS)*1, and secondary collision reduction (SCR) controls. • U0154:00 — Illuminates the TCS/DSC indicator light. — Inhibits the secondary collision reduction (SCR) control. • U0155:00 — Illuminates the ABS warning light*3, TCS/DSC indicator light*3, and master warning light*1*3. — Tire pressure monitoring system warning light illuminates after flashes. (Not illuminated/flashed depending on malfunction content.) — Inhibits the ABS*4, TCS*4, DSC*4, roll over mitigation (ROM)*4, brake assist control*4, vehicle roll prevention function*2*4, hill launch assist (HLA)*4, TPMS*4, smart city brake support (SCBS)*1*4, and secondary collision reduction (SCR)*4 controls. • U0235:00 — Illuminates the master warning light. — Inhibits the smart city brake support (SCBS) control. *1: Vehicles with smart city brake support (SCBS) *2: ATX only *3: Not illuminated depending on malfunction content. *4: Enabled depending on malfunction content.

ON-BOARD DIAGNOSTIC [DYNAMIC STABILITY CONTROL (DSC)]

POSSIBLE CAUSE	• CAN system wiring harness open or short circuit • CAN system wiring harness open or short circuit with PCM • CAN system wiring harness open or short circuit with TCM • CAN system wiring harness open or short circuit with 4WD control module • CAN system wiring harness open or short circuit with EPS CM • CAN system wiring harness open or short circuit with SAS control module • CAN system wiring harness open or short circuit with instrument cluster • CAN system wiring harness open or short circuit with laser sensor • instrument cluster malfunction
SYSTEM WIRING DIAGRAM	—

Diagnostic procedure

- Inspect according to diagnostic procedure in MULTIPLEX COMMUNICATION SYSTEM. (See 10-02A-1 FOREWORD [SKYACTIV-G 2.0 (L.H.D.)].), (See 10-02B-1 FOREWORD [SKYACTIV-G 2.0 (R.H.D.)].), (See 10-02C-1 FOREWORD [SKYACTIV-D 2.2 (L.H.D.)].), (See 10-02D-1 FOREWORD [SKYACTIV-D 2.2 (R.H.D.)].)

DTC U0151:00 [DYNAMIC STABILITY CONTROL (DSC)]

id0402b2883700

DTC	U0151:00	SAS control module system (CAN2 line malfunction)
DETECTION CONDITION	• Communication error with SAS control module is detected in CAN communication.	
FAIL-SAFE FUNCTION	• Illuminates the brake system warning light*1, TCS/DSC indicator light, and master warning light*1*2. • Tire pressure monitoring system warning light illuminates after flashes. (Not illuminated/flashed depending on malfunction content.) • Inhibits the ABS*3, TCS*3, DSC*3, roll over mitigation (ROM)*3, brake assist control*3, vehicle roll prevention function*3*4, hill launch assist (HLA)*3, TPMS*3, smart city brake support (SCBS)*2*3, and secondary collision reduction (SCR)*3 controls. *1: Not illuminated depending on malfunction content. *2: Vehicles with smart city brake support (SCBS) *3: Enabled depending on malfunction content. *4: ATX only	
POSSIBLE CAUSE	• SAS control module malfunction • Open or short circuit in the CAN2_H wiring harness between DSC HU/CM terminal S and SAS control module terminal 3H • Open or short circuit in the CAN2_L wiring harness between DSC HU/CM terminal P and SAS control module terminal 3I • DSC HU/CM malfunction • Poor connection at connectors (female terminal)	

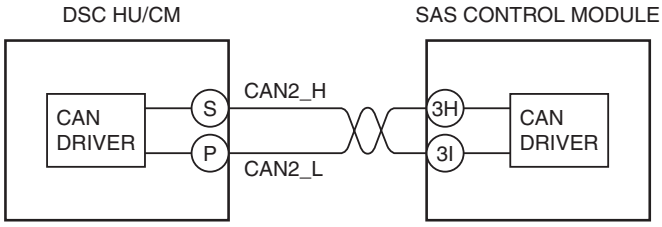

DSC HU/CM WIRING HARNESS-SIDE CONNECTOR

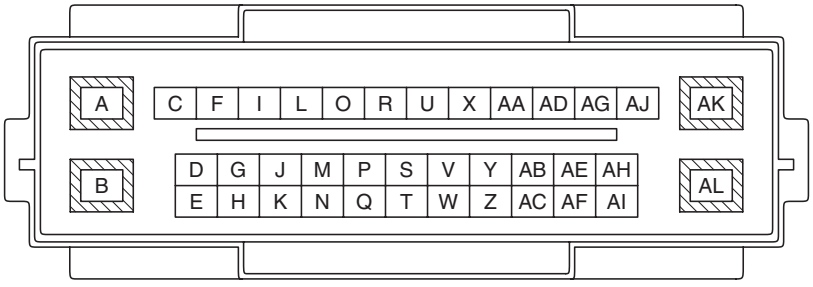

SAS CONTROL MODULE WIRING HARNESS-SIDE CONNECTOR

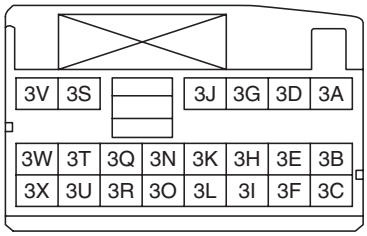

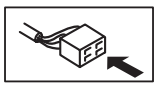

ON-BOARD DIAGNOSTIC [DYNAMIC STABILITY CONTROL (DSC)]

Diagnostic procedure

STEP	INSPECTION		ACTION
1	**INSPECT SAS CONTROL MODULE MALFUNCTION** • Switch the ignition to off. • Using the M-MDS, perform the DTC inspection for the SAS control module. (See 08-02-7 DTC INSPECTION.) • Are any DTCs detected?	Yes	Go to applicable DTC inspection. (See 08-02-11 DTC TABLE.)
		No	Go to the next step.
2	**INSPECT SAS CONTROL MODULE SIGNAL (CAN2 LINE) FOR OPEN CIRCUIT** • Disconnect the DSC HU/CM connector. • Disconnect the SAS control module connectors. • Inspect for continuity between the following DSC HU/CM connector terminals (vehicle harness-side) and SAS control module connector terminals (vehicle harness-side): — DSC HU/CM terminal S—SAS control module terminal 3H — DSC HU/CM terminal P—SAS control module terminal 3I • Is there continuity?	Yes	Go to the next step.
		No	Repair or replace the wiring harness, then go to Step 4.
3	**INSPECT SAS CONTROL MODULE SIGNAL (CAN2 LINE) FOR SHORT CIRCUIT** • Inspect for continuity between the following DSC HU/CM connector terminals (vehicle harness-side) and body ground: — DSC HU/CM terminal S—body ground — DSC HU/CM terminal P—body ground • Is there continuity?	Yes	Repair or replace the wiring harness, then go to the next step.
		No	Go to the next step.
4	**VERIFY THAT THE SAME DTC IS NOT PRESENT** • Reconnect all disconnected connectors. • Clear the DTCs from the memory. (See 04-02A-7 ON-BOARD DIAGNOSIS [DYNAMIC STABILITY CONTROL (DSC)].) • Start the engine and drive the vehicle at **10 km/h {6.2 mph} or more**. • Are the same DTCs present?	Yes	Repeat the inspection from Step 1. If the malfunction recurs, replace the DSC HU/CM, then go to the next step. (See 04-15-4 DSC HU/CM REMOVAL/INSTALLATION.)
		No	Go to the next step.
5	**VERIFY THAT NO OTHER DTCS ARE PRESENT** • Are any other DTCs output?	Yes	Go to the applicable DTC inspection. (See 04-02A-7 ON-BOARD DIAGNOSIS [DYNAMIC STABILITY CONTROL (DSC)].)
		No	DTC troubleshooting completed.

DTC U0401:00 [DYNAMIC STABILITY CONTROL (DSC)]

id0402b2887900

DTC	U0401:00	Abnormal message from PCM
DETECTION CONDITION	• Correct data cannot be received from PCM	
FAIL-SAFE FUNCTION	• Illuminates the TCS/DSC indicator light*1 and master warning light*1*2. • Tire pressure monitoring system warning light illuminates after flashes. (Not illuminated/flashed depending on malfunction content.) • Inhibits the TCS*3, DSC*3, roll over mitigation (ROM)*3, vehicle roll prevention function*3*4, hill launch assist (HLA)*3, TPMS*3, smart city brake support (SCBS)*2*3, and secondary collision reduction (SCR)*3 controls. *1: Not illuminated depending on malfunction content. *2: Vehicles with smart city brake support (SCBS) *3: Enabled depending on malfunction content. *4: ATX only	
POSSIBLE CAUSE	• PCM malfunction	
SYSTEM WIRING DIAGRAM	—	

ON-BOARD DIAGNOSTIC [DYNAMIC STABILITY CONTROL (DSC)]

Diagnostic procedure

STEP	INSPECTION		ACTION
1	**INSPECT FOR PCM MALFUNCTION** • Switch the ignition to off. • Using the M-MDS, perform the DTC inspection for the PCM. (See 01-02-8 ON-BOARD DIAGNOSTIC TEST [SKYACTIV-G 2.0].) • Are any DTCs detected?	Yes	Go to applicable DTC inspection. (See 01-02-14 DTC TABLE [SKYACTIV-G 2.0].)
		No	Go to the next step.
2	**VERIFY THAT THE SAME DTC IS NOT PRESENT** • Clear the DTCs from the memory. (See 04-02A-7 ON-BOARD DIAGNOSIS [DYNAMIC STABILITY CONTROL (DSC)].) • Are the same DTCs present?	Yes	Repeat the inspection from Step 1. If the malfunction recurs, replace the PCM, then go to the next step. (See 01-40-10 PCM REMOVAL/INSTALLATION [SKYACTIV-G 2.0].)
		No	Go to the next step.
3	**VERIFY THAT NO OTHER DTCS ARE PRESENT** • Are any other DTCs output?	Yes	Go to the applicable DTC inspection. (See 04-02A-7 ON-BOARD DIAGNOSIS [DYNAMIC STABILITY CONTROL (DSC)].)
		No	DTC troubleshooting completed.

ON-BOARD DIAGNOSTIC [DYNAMIC STABILITY CONTROL (DSC)]

DTC U0402:00 [DYNAMIC STABILITY CONTROL (DSC)]

id0402b2881800

DTC	U0402:00	Abnormal message from transmission/transaxle
DETECTION CONDITION	• The DSC HU/CM received error signals from the transmission/transaxle for **1 s or more** with the ignition switched ON (engine off or on).	
FAIL-SAFE FUNCTION	• Illuminates the TCS/DSC indicator light and master warning light*1. • Tire pressure monitoring system warning light illuminates after flashes. • Inhibits the TCS, DSC, roll over mitigation (ROM), vehicle roll prevention function*2, hill launch assist (HLA), TPMS, smart city brake support (SCBS)*1, and secondary collision reduction (SCR) controls. *1: Vehicles with smart city brake support (SCBS) *2: ATX only	
POSSIBLE CAUSE	• The transmission/transaxle could not send a normal signal temporarily. (DTCs are stored in the TCM.) • transmission/transaxle malfunction • DSC HU/CM malfunction	
SYSTEM WIRING DIAGRAM	—	

Diagnostic procedure

STEP	INSPECTION		ACTION
1	**VERIFY DTCs FOR TCM** • Switch the ignition to off. • Verify DTCs for the TCM using the M-MDS. (See 05-02A-7 ON-BOARD DIAGNOSTIC SYSTEM DTC INSPECTION [FW6A-EL, FW6AX-EL].) • Is the DTC displayed?	Yes	Repair the malfunctioning part according to the applicable DTC troubleshooting. (See 05-02A-11 ON-BOARD DIAGNOSTIC SYSTEM DTC TABLE [FW6A-EL, FW6AX-EL].)
		No	Go to the next step.
2	**VERIFY THAT THE SAME DTC IS NOT PRESENT** • Clear DTC for the DSC HU/CM using the M-MDS. (See 04-02A-7 ON-BOARD DIAGNOSIS [DYNAMIC STABILITY CONTROL (DSC)].) • Are the same DTCs present?	Yes	Repeat the inspection from Step 1. If the malfunction recurs, replace the TCM, then go to the next step. (See 05-17A-67 CONTROL VALVE BODY REMOVAL/INSTALLATION [FW6A-EL, FW6AX-EL].)
		No	Go to the next step.
3	**VERIFY IF OTHER DTCs DISPLAYED** • Are any other DTCs displayed?	Yes	Repair the malfunctioning part according to the applicable DTC troubleshooting. (See 04-02A-7 ON-BOARD DIAGNOSIS [DYNAMIC STABILITY CONTROL (DSC)].)
		No	DTC troubleshooting completed.

ON-BOARD DIAGNOSTIC [DYNAMIC STABILITY CONTROL (DSC)]

DTC U0420:00 [DYNAMIC STABILITY CONTROL (DSC)]

id0402b2905000

DTC	U0420:00	Abnormal message from EPS CM
DETECTION CONDITION	• Correct data cannot be received from EPS CM	
FAIL-SAFE FUNCTION	• Illuminates the TCS/DSC indicator light and master warning light*. • Tire pressure monitoring system warning light illuminates after flashes. • Inhibits the TCS, DSC, roll over mitigation (ROM), TPMS, smart city brake support (SCBS)*, and secondary collision reduction (SCR) controls. *: Vehicles with smart city brake support (SCBS)	
POSSIBLE CAUSE	• EPS CM malfunction	
SYSTEM WIRING DIAGRAM	—	

Diagnostic procedure

STEP	INSPECTION		ACTION
1	**INSPECT FOR EPS CM MALFUNCTION** • Switch the ignition to off. • Using the M-MDS, perform the DTC inspection for the EPS CM. (See 06-02-5 ELECTRIC POWER STEERING (EPS) ON-BOARD DIAGNOSIS.) • Are any DTCs detected?	Yes	Go to applicable DTC inspection. (See 06-02-5 ELECTRIC POWER STEERING (EPS) ON-BOARD DIAGNOSIS.)
		No	Go to the next step.
2	**VERIFY THAT THE SAME DTC IS NOT PRESENT** • Clear the DTCs from the memory. (See 04-02A-7 ON-BOARD DIAGNOSIS [DYNAMIC STABILITY CONTROL (DSC)].) • Are the same DTCs present?	Yes	Repeat the inspection from Step 1. If the malfunction recurs, replace the EPS CM, then go to the next step. (See 06-13-4 STEERING WHEEL AND COLUMN REMOVAL/INSTALLATION.)
		No	Go to the next step.
3	**VERIFY THAT NO OTHER DTCS ARE PRESENT** • Are any other DTCs output?	Yes	Go to the applicable DTC inspection. (See 04-02A-7 ON-BOARD DIAGNOSIS [DYNAMIC STABILITY CONTROL (DSC)].)
		No	DTC troubleshooting completed.

ON-BOARD DIAGNOSTIC [DYNAMIC STABILITY CONTROL (DSC)]

DTC U0423:00/U0443:00 [DYNAMIC STABILITY CONTROL (DSC)]

id0402b2905300

DTC	U0423:00/U0443:00	Abnormal message from instrument cluster
DETECTION CONDITION	• Correct data cannot be received from instrument cluster	
FAIL-SAFE FUNCTION	• U0423:00 — Illuminates the master warning light*. — Tire pressure monitoring system warning light illuminates after flashes. — Inhibits the TPMS and smart city brake support (SCBS)* controls. • U0443:00 — Illuminates the master warning light*. — Inhibits the smart city brake support (SCBS)* controls. *: Vehicles with smart city brake support (SCBS)	
POSSIBLE CAUSE	• Instrument cluster malfunction	
SYSTEM WIRING DIAGRAM	—	

Diagnostic procedure

STEP	INSPECTION		ACTION
1	**INSPECT FOR INSTRUMENT CLUSTER MALFUNCTION** • Switch the ignition to off. • Using the M-MDS, perform the DTC inspection for the instrument cluster. (See 09-02G-7 DTC INSPECTION [INSTRUMENT CLUSTER].) • Are any DTCs detected?	Yes	Go to applicable DTC inspection. (See 09-02G-10 DTC TABLE [INSTRUMENT CLUSTER].)
		No	Go to the next step.
2	**VERIFY THAT THE SAME DTC IS NOT PRESENT** • Clear the DTCs from the memory. (See 04-02A-7 ON-BOARD DIAGNOSIS [DYNAMIC STABILITY CONTROL (DSC)].) • Are the same DTCs present?	Yes	Repeat the inspection from Step 1. If the malfunction recurs, replace the instrument cluster, then go to the next step. (See 01-40-10 PCM REMOVAL/INSTALLATION [SKYACTIV-G 2.0].)
		No	Go to the next step.
3	**VERIFY THAT NO OTHER DTCS ARE PRESENT** • Are any other DTCs output?	Yes	Go to the applicable DTC inspection. (See 04-02A-7 ON-BOARD DIAGNOSIS [DYNAMIC STABILITY CONTROL (DSC)].)
		No	DTC troubleshooting completed.

ON-BOARD DIAGNOSTIC [DYNAMIC STABILITY CONTROL (DSC)]

DTC U0433:00 [DYNAMIC STABILITY CONTROL (DSC)]

id0402b2905400

DTC	U0433:00	Abnormal message from laser sensor
DETECTION CONDITION	• Correct data cannot be received from laser sensor	
FAIL-SAFE FUNCTION	• Illuminates the master warning light. • Inhibits the smart city brake support (SCBS) control.	
POSSIBLE CAUSE	• Laser sensor malfunction	
SYSTEM WIRING DIAGRAM	—	

Diagnostic procedure

STEP	INSPECTION		ACTION
1	**INSPECT FOR LASER SENSOR MALFUNCTION** • Switch the ignition to off. • Using the M-MDS, perform the DTC inspection for the laser sensor. (See 04-02B-6 ON-BOARD DIAGNOSIS [LASER SENSOR].) • Are any DTCs detected?	Yes	Go to applicable DTC inspection. (See 04-02B-6 ON-BOARD DIAGNOSIS [LASER SENSOR].)
		No	Go to the next step.
2	**VERIFY THAT THE SAME DTC IS NOT PRESENT** • Clear the DTCs from the memory. (See 04-02A-7 ON-BOARD DIAGNOSIS [DYNAMIC STABILITY CONTROL (DSC)].) • Are the same DTCs present?	Yes	Repeat the inspection from Step 1. If the malfunction recurs, replace the laser sensor, then go to the next step. (See 04-15-17 LASER SENSOR REMOVAL/INSTALLATION.)
		No	Go to the next step.
3	**VERIFY THAT NO OTHER DTCS ARE PRESENT** • Are any other DTCs output?	Yes	Go to the applicable DTC inspection. (See 04-02A-7 ON-BOARD DIAGNOSIS [DYNAMIC STABILITY CONTROL (DSC)].)
		No	DTC troubleshooting completed.

ON-BOARD DIAGNOSTIC [DYNAMIC STABILITY CONTROL (DSC)]

DTC U0452:00/U0452:86 [DYNAMIC STABILITY CONTROL (DSC)]

id0402b2905600

DTC	U0452:00, U0452:86	Abnormal message from SAS control module
DETECTION CONDITION	• Correct data cannot be received from SAS control module	
FAIL-SAFE FUNCTION	• U0452:00 — Illuminates the TCS/DSC indicator light. — Inhibits the secondary collision reduction (SCR) control. • U0452:86 — Illuminates the ABS warning light*1, TCS/DSC indicator light, and master warning light*1*2. — Tire pressure monitoring system warning light illuminates after flashes. (Not illuminated/flashed depending on malfunction content.) — Inhibits the ABS*3, TCS*3, DSC*3, roll over mitigation (ROM)*3, brake assist control*3, vehicle roll prevention function*3*4, hill launch assist (HLA)*3, TPMS*3, smart city brake support (SCBS)*2*3, and secondary collision reduction (SCR)*3 controls. *1: Not illuminated depending on malfunction content. *2: Vehicles with smart city brake support (SCBS) *3: Enabled depending on malfunction content. *4: ATX only	
POSSIBLE CAUSE	• SAS control module malfunction	
SYSTEM WIRING DIAGRAM	—	

Diagnostic procedure

STEP	INSPECTION		ACTION
1	**INSPECT FOR SAS CONTROL MODULE MALFUNCTION** • Switch the ignition to off. • Using the M-MDS, perform the DTC inspection for the SAS control module. (See 08-02-7 DTC INSPECTION.) • Are any DTCs detected?	Yes	Go to applicable DTC inspection. (See 08-02-11 DTC TABLE.)
		No	Go to the next step.
2	**VERIFY THAT THE SAME DTC IS NOT PRESENT** • Clear the DTCs from the memory. (See 04-02A-7 ON-BOARD DIAGNOSIS [DYNAMIC STABILITY CONTROL (DSC)].) • Are the same DTCs present?	Yes	Repeat the inspection from Step 1. If the malfunction recurs, replace the SAS control module, then go to the next step. (See 08-10-20 SAS CONTROL MODULE REMOVAL/INSTALLATION.)
		No	Go to the next step.
3	**VERIFY THAT NO OTHER DTCS ARE PRESENT** • Are any other DTCs output?	Yes	Go to the applicable DTC inspection. (See 04-02A-7 ON-BOARD DIAGNOSIS [DYNAMIC STABILITY CONTROL (DSC)].)
		No	DTC troubleshooting completed.

ON-BOARD DIAGNOSTIC [DYNAMIC STABILITY CONTROL (DSC)]

DTC U2101:00/U2300:52/U2300:54/U2300:55/U2300:56/U2300:64 [DYNAMIC STABILITY CONTROL (DSC)]

id0402b2905800

DTC	**U2101:00, U2300:52, U2300:54, U2300:55, U2300:56, U2300:64**	**Configuration data not recorded**
DETECTION CONDITION	• DSC CM detects configuration data not record or data error	
FAIL-SAFE FUNCTION	• Illuminates the ABS warning light, TCS/DSC indicator light, and master warning light*1. • Tire pressure monitoring system warning light illuminates after flashes. • Inhibits the ABS, TCS, DSC, roll over mitigation (ROM), brake assist control, vehicle roll prevention function*2, hill launch assist (HLA), TPMS, smart city brake support (SCBS)*1, and secondary collision reduction (SCR) controls. *1: Vehicles with smart city brake support (SCBS) *2: ATX only	
POSSIBLE CAUSE	• Module configuration procedure is not done properly • Correct data cannot be received from instrument cluster	
SYSTEM WIRING DIAGRAM	—	

Diagnostic procedure

STEP	INSPECTION		ACTION
1	**RECORD THE CAR CONFIGURATION DATA** • Switch the ignition to off. • Switch the ignition ON (engine off) and wait for **10 s or more**. • Switch the ignition to off and wait for **3 s or more**. • Switch the ignition ON (engine off) and wait for **3 s or more**.		Go to the next step.
2	**VERIFY THAT THE SAME DTC IS NOT PRESENT** • Clear the DTCs from the memory. (See 04-02A-7 ON-BOARD DIAGNOSIS [DYNAMIC STABILITY CONTROL (DSC)].) • Are the same DTCs present?	Yes	Repeat the inspection from Step 1. If the malfunction recurs, go to the next step.
		No	Go to Step 6.
3	**VERIFY IF PARTS FROM ANOTHER VEHICLE INSTALLED TO INSTRUMENT CLUSTER OR PCM** • Verify if an instrument cluster or PCM from another vehicle is installed. • Has an instrument cluster, PCM or other vehicle part been installed to vehicle?	Yes	Install the correct instrument cluster or PCM, then go to Step 1. (See 09-22-6 INSTRUMENT CLUSTER REMOVAL/INSTALLATION.) (See 01-40-10 PCM REMOVAL/INSTALLATION [SKYACTIV-G 2.0].)
		No	Go to the next step.
4	**INSPECT FOR INSTRUMENT CLUSTER/PCM MALFUNCTION** • Switch the ignition to off. • Using the M-MDS, perform the DTC inspection for the instrument cluster and PCM. (See 09-02G-7 DTC INSPECTION [INSTRUMENT CLUSTER].) (See 01-02-8 ON-BOARD DIAGNOSTIC TEST [SKYACTIV-G 2.0].) • Are any DTCs detected?	Yes	Go to applicable DTC inspection. (See 09-02G-10 DTC TABLE [INSTRUMENT CLUSTER].) (See 01-02-14 DTC TABLE [SKYACTIV-G 2.0].)
		No	Go to the next step.
5	**VERIFY THAT THE SAME DTC IS NOT PRESENT** • Clear the DTCs from the memory. (See 04-02A-7 ON-BOARD DIAGNOSIS [DYNAMIC STABILITY CONTROL (DSC)].) • Are the same DTCs present?	Yes	Repeat the inspection from Step 1.
		No	Go to the next step.
6	**VERIFY THAT NO OTHER DTCS ARE PRESENT** • Are any other DTCs output?	Yes	Go to the applicable DTC inspection. (See 04-02A-7 ON-BOARD DIAGNOSIS [DYNAMIC STABILITY CONTROL (DSC)].)
		No	DTC troubleshooting completed.

ON-BOARD DIAGNOSTIC [DYNAMIC STABILITY CONTROL (DSC)]

DTC U3003:08/U3003:16/U3003:17 [DYNAMIC STABILITY CONTROL (DSC)]

id0402b2902000

DTC	U3003:08, U3003:16, U3003:17	Power supply system
DETECTION CONDITION	• U3003:08 — While the vehicle is traveling at a speed of **10km/h {6.2 mph} or more**, a CAN signal error caused by low power supply voltage is detected. • U3003:16 — Low ignition voltage (**7.9—9.6 V**) is detected at the voltage monitor of the solenoid valve or motor monitor. (Except engine cranking condition) — Low ignition voltage (**6.0—7.9 V**) is detected at the voltage monitor of the solenoid valve or motor monitor. — Low ignition voltage (**below 6.0 V**) is detected at the voltage monitor of the solenoid valve or motor monitor. • U3003:17 — High ignition voltage (**17 V or more**) is detected at the voltage monitor of the solenoid valve or motor monitor.	
FAIL-SAFE FUNCTION	• U3003:08 — Permits the control and does not illuminate each warning/indicator light. • U3003:16 — Illuminates the ABS warning light, TCS/DSC indicator light and master warning light*1. — Does not illuminate the brake warning light.*2 — Illuminates the brake warning light.*3*4 — Tire pressure monitoring system warning light illuminates after flashes. — Inhibits the ABS, TCS, DSC, roll over mitigation (ROM), brake assist control, vehicle roll prevention function*5, hill launch assist (HLA), TPMS, smart city brake support (SCBS)*1, and secondary collision reduction (SCR) controls. — Permits the EBD control.*2 — Inhibits the EBD control.*3*4 • U3003:17 — Illuminates the ABS warning light, brake system warning light, TCS/DSC indicator light, and master warning light*1. — Tire pressure monitoring system warning light illuminates after flashes. — Inhibits the ABS, EBD, TCS, DSC, roll over mitigation (ROM), brake assist control, vehicle roll prevention function*5, hill launch assist (HLA), TPMS, smart city brake support (SCBS)*1, and secondary collision reduction (SCR) controls. *1: Vehicles with smart city brake support (SCBS) *2: When power supply voltage is **7.9—9.6 V** for **550 ms or more**. *3: When power supply voltage is **6.0—7.9 V** for **630 ms or more**. *4: When power supply voltage is **below 6 V** for **50 ms or more**. *5: ATX only	
POSSIBLE CAUSE	• Battery deterioration • Generator malfunction • Fuse (SRS1 7.5A, ABS/DSC S 30A, ABS/DSC M 50A) malfunction • Open or short circuit in wiring harness between DSC HU/CM terminal A and battery • Open or short circuit in wiring harness between DSC HU/CM terminal B and battery • Open or short circuit in wiring harness between DSC HU/CM terminal Q and battery • Open circuit in wiring harness between DSC HU/CM terminal AL and body ground • Poor connection at connectors (female terminal)	

ON-BOARD DIAGNOSTIC [DYNAMIC STABILITY CONTROL (DSC)]

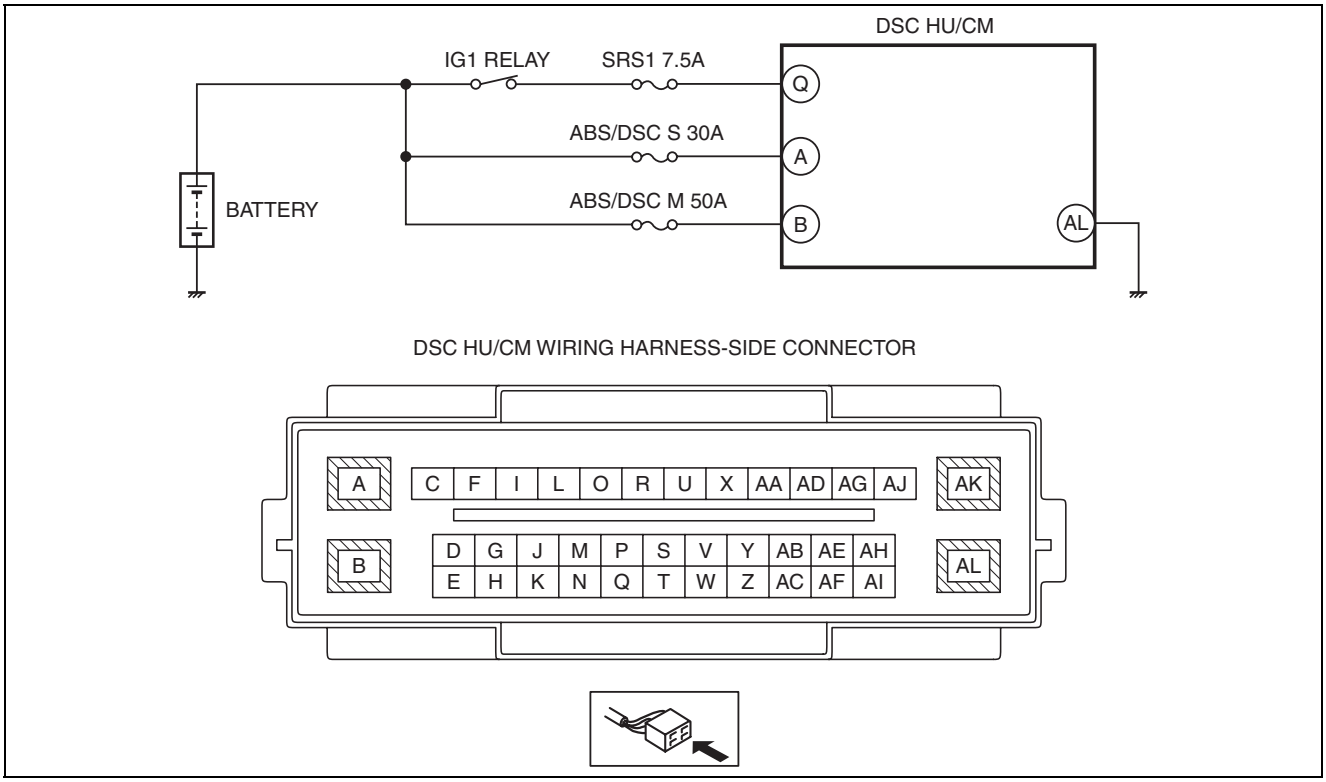

Diagnostic procedure

STEP	INSPECTION		ACTION
1	**INSPECT BATTERY VOLTAGE** • Is the battery positive terminal voltage normal?	Yes	Inspect for normal connection of the battery terminals. Go to the next step.
		No	Charge or replace the battery, then go to Step 7. (See 01-17A-9 BATTERY RECHARGING [SKYACTIV-G 2.0].) (See 01-17A-10 BATTERY RECHARGING [SKYACTIV-G 2.0 (WITHOUT i-stop)].) (See 01-17B-8 BATTERY RECHARGING [SKYACTIV-D 2.2].) (See 01-17A-3 BATTERY REMOVAL/INSTALLATION [SKYACTIV-G 2.0].) (See 01-17B-3 BATTERY REMOVAL/INSTALLATION [SKYACTIV-D 2.2].)
2	**INSPECT BATTERY GRAVITY** • Is battery specific gravity as specified?	Yes	Go to the next step.
		No	Replace the battery, then go to Step 7. (See 01-17A-3 BATTERY REMOVAL/INSTALLATION [SKYACTIV-G 2.0].) (See 01-17B-3 BATTERY REMOVAL/INSTALLATION [SKYACTIV-D 2.2].)
3	**INSPECT CHARGING SYSTEM** • Are the generator and the drive belt tensions normal?	Yes	Go to the next step.
		No	Replace the generator and/or drive belt if necessary. (See 01-17A-17 GENERATOR REMOVAL/INSTALLATION [SKYACTIV-G 2.0].) (See 01-17B-14 GENERATOR REMOVAL/INSTALLATION [SKYACTIV-D 2.2].) (See 01-10A-10 DRIVE BELT REMOVAL/INSTALLATION [SKYACTIV-G 2.0].) (See 01-10B-8 DRIVE BELT REMOVAL/INSTALLATION [SKYACTIV-D 2.2].) Go to Step 7.
4	**INSPECT FUSE CONDITION** • Inspect the following fuses. — SRS1 7.5A — ABS/DSC S 30A — ABS/DSC M 50A • Is the fuse normal?	Yes	Go to the next step.
		No	Replace the fuse, then go to Step 7.

ON-BOARD DIAGNOSTIC [DYNAMIC STABILITY CONTROL (DSC)]

STEP	INSPECTION		ACTION
5	**INSPECT DSC HU/CM POWER SUPPLY FOR OPEN CIRCUIT** • Disconnect the DSC HU/CM connectors. • Switch the ignition ON (engine off). • Measure the voltage between following connector terminals of the DSC HU/CM (vehicle harness-side) and body ground: — DSC HU/CM: A—Body ground — DSC HU/CM: B—Body ground — DSC HU/CM: Q—Body ground • Is the voltage **10 V or more**?	Yes	Go to the next step.
		No	Repair or replace the wiring harness, then go to Step 7.
6	**INSPECT DSC HU/CM GROUND FOR POOR GROUND OR OPEN CIRCUIT** • Switch the ignition to off. • Measure the resistance between the DSC HU/CM terminal AL (vehicle harness-side) and body ground. • Is the resistance **within 0—1 ohm**?	Yes	Go to the next step.
		No	If there is open circuit: • Repair or replace the wiring harness, then go to the next step. If resistance is not within specification: • Repair or replace the poor ground part, then go to the next step.
7	**VERIFY THAT THE SAME DTC IS NOT PRESENT** • Reconnect all disconnected connectors. • Clear the DTCs from the memory. (See 04-02A-7 ON-BOARD DIAGNOSIS [DYNAMIC STABILITY CONTROL (DSC)].) • Start the engine and drive the vehicle at **20 km/h {12 mph} or more**. • Are the same DTCs present?	Yes	Repeat the inspection from Step 1.
		No	Go to the next step.
8	**VERIFY THAT NO OTHER DTCS ARE PRESENT** • Are any other DTCs output?	Yes	Go to the applicable DTC inspection. (See 04-02A-7 ON-BOARD DIAGNOSIS [DYNAMIC STABILITY CONTROL (DSC)].)
		No	DTC troubleshooting completed.

04-02B ON-BOARD DIAGNOSTIC [LASER SENSOR]

DYNAMIC STABILITY CONTROL SYSTEM WIRING DIAGRAM [LASER SENSOR] 04-02B–2
FOREWORD [LASER SENSOR] 04-02B–4
Troubleshooting Procedure **04-02B–4**
Action for non-repeatable malfunction. **04-02B–5**
ON-BOARD DIAGNOSIS [LASER SENSOR] 04-02B–6
On-Board Diagnostic (OBD) Test Description **04-02B–6**
Reading DTCs Procedure **04-02B–6**
Clearing DTCs Procedure **04-02B–6**
PID/Data Monitor and Record Procedure **04-02B–6**
Snapshot Data Access Procedure. . . . **04-02B–7**
DTC Table **04-02B–7**
PID/DATA Monitor Table **04-02B–8**
Snapshot Data Table. **04-02B–8**
DTC U0001:00/U0100:00/U0121:00/ U0131:00/U0155:00 [LASER SENSOR] 04-02B–9
Diagnostic procedure **04-02B–9**
DTC U0401:68 [LASER SENSOR] 04-02B–9
DTC U0415:68 [LASER SENSOR] 04-02B–10
DTC U0420:68 [LASER SENSOR] 04-02B–11
DTC U0423:68 [LASER SENSOR] 04-02B–12
DTC U1A14:49 [LASER SENSOR] 04-02B–13
DTC U2300:55/U2300:56 [LASER SENSOR] 04-02B–13
DTC U3000:00/U3000:64 [LASER SENSOR] 04-02B–14
DTC U3000:66 [LASER SENSOR] 04-02B–15

ON-BOARD DIAGNOSTIC [LASER SENSOR]

DYNAMIC STABILITY CONTROL SYSTEM WIRING DIAGRAM [LASER SENSOR]

id0402c4800100

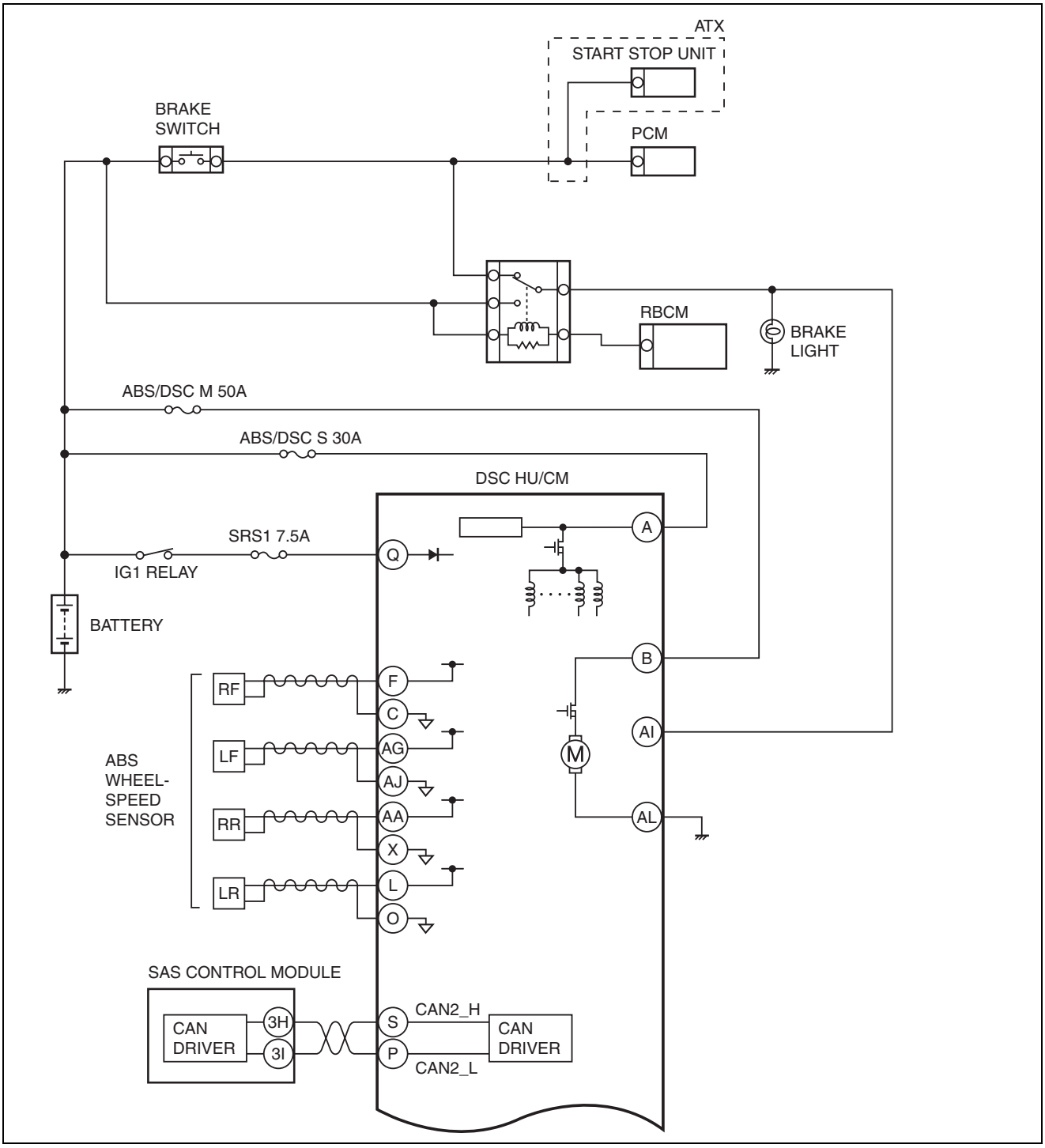

ac5wzw0000380

ON-BOARD DIAGNOSTIC [LASER SENSOR]

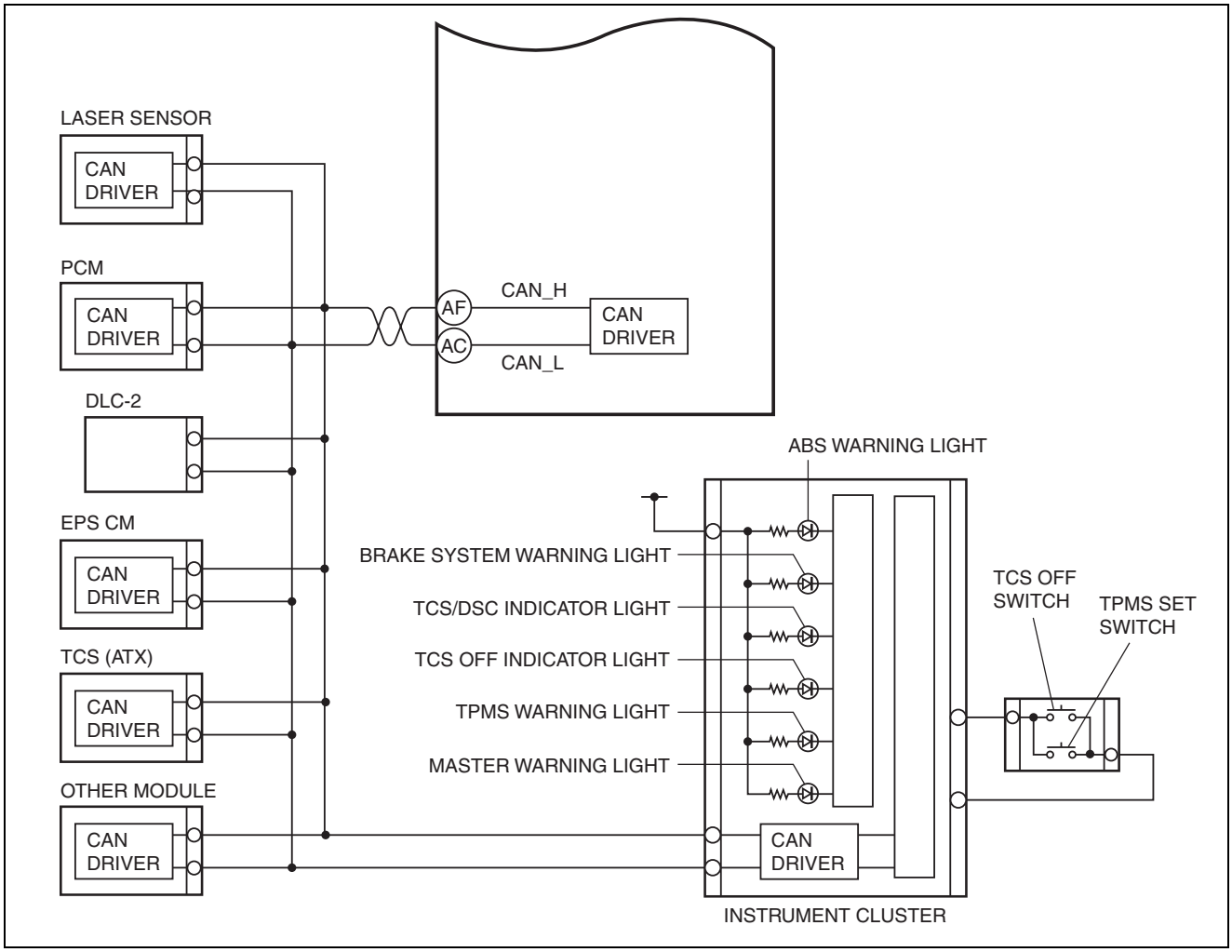

ac5wzw0000380

ON-BOARD DIAGNOSTIC [LASER SENSOR]

FOREWORD [LASER SENSOR]

id0402c4892400

- If there is any vehicle malfunction complaint lodged by a customer, perform malfunction diagnosis according to the troubleshooting procedure.

Troubleshooting Procedure

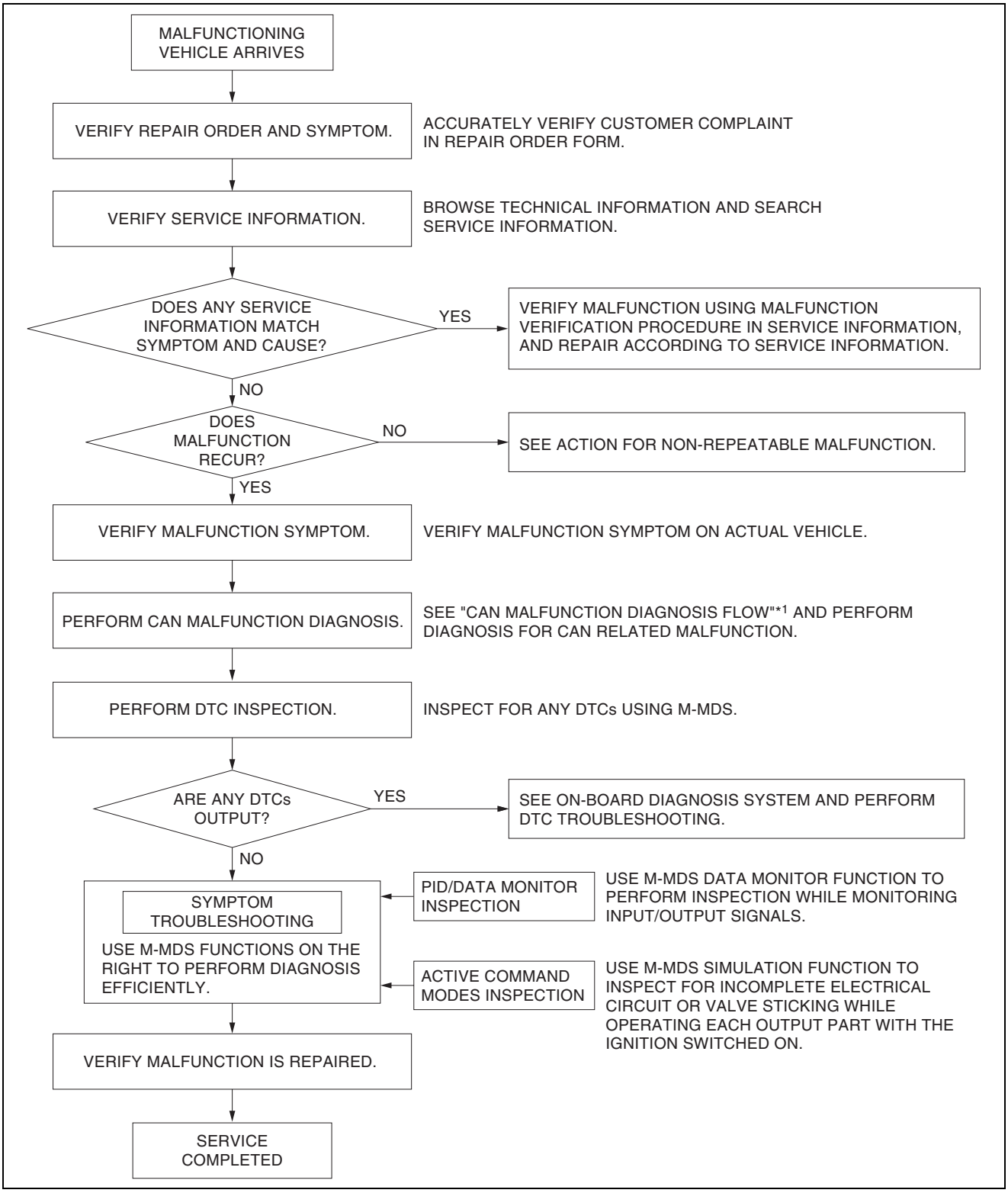

am3zzw0001144

ON-BOARD DIAGNOSTIC [LASER SENSOR]

*1 : 10-02A-3 CONTROLLER AREA NETWORK (CAN) MALFUNCTION DIAGNOSIS FLOW [SKYACTIV-G 2.0 (L.H.D.)], 10-02B-3 CONTROLLER AREA NETWORK (CAN) MALFUNCTION DIAGNOSIS FLOW [SKYACTIV-G 2.0 (R.H.D.)], 10-02C-3 CONTROLLER AREA NETWORK (CAN) MALFUNCTION DIAGNOSIS FLOW [SKYACTIV-D 2.2 (L.H.D.)], 10-02D-3 CONTROLLER AREA NETWORK (CAN) MALFUNCTION DIAGNOSIS FLOW [SKYACTIV-D 2.2 (R.H.D.)]

Action for non-repeatable malfunction

- If the malfunction does not recur, verify the malfunction cause by performing the following actions:
  1. Verify that a DTC has been recorded in the memory using the M-MDS. (See 04-02B-6 ON-BOARD DIAGNOSIS [LASER SENSOR].)
  2. Perform a simulation test in the simulation mode based on the repair order form, record the data at that time, and detect the malfunction cause.
  3. Shake the wiring harness or connector of the electrical component which is suspected to be the cause of the malfunction, and inspect for the occurrence of any malfunction or DTCs.

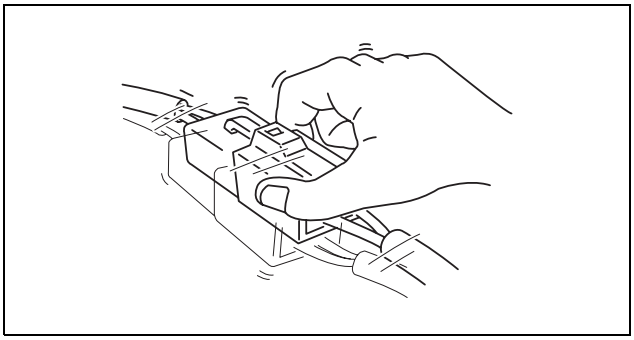

am3uuw0000813

  4. Inspect the female terminals for poor connection.

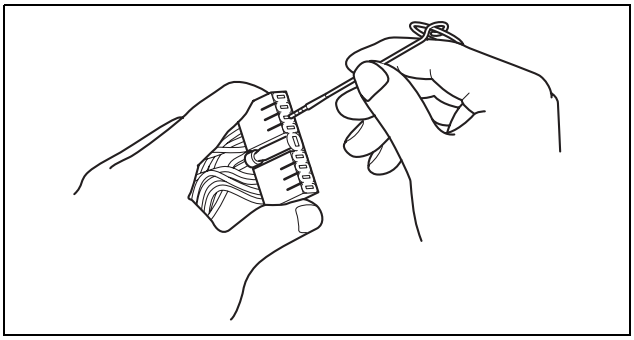

am3uuw0000813

ON-BOARD DIAGNOSTIC [LASER SENSOR]

ON-BOARD DIAGNOSIS [LASER SENSOR]

id0402c4800200

On-Board Diagnostic (OBD) Test Description

- The OBD test inspects the integrity and function of the laser sensor and outputs the results when requested by the specific tests.
- On-board diagnostic test also:
  - — Provides a quick inspection of the laser sensor usually performed at the start of each diagnostic procedure.
  - — Provides verification after repairs to ensure that no other faults occurred during service.
- The OBD test is divided into 3 tests:
  - — Read/clear diagnostic results, PID monitor and record and active command modes.

Read/clear diagnostic results

- This function allows you to read or clear DTCs in the laser sensor memory.

PID/Data monitor and record

- This function allows you to access certain data values, input signals, calculated values, and system status information.

Reading DTCs Procedure

CMDTC self test

1. Connect the M-MDS (IDS) to the DLC-2.
2. After the vehicle is identified, select the following items from the initialization screen of the IDS.
   (1) Select “Self Test”.
   (2) Select “All CMDTCs”.
3. Verify the DTC according to the directions on the screen.
   - If any DTCs are displayed, perform troubleshooting according to the corresponding DTC inspection.
4. After completion of repairs, clear all DTCs stored in the laser sensor. (See 04-02B-6 Clearing DTCs Procedure.)

Note

- Snapshot data appears at the top of the help screen when the displayed DTC is selected.
- The data for all DTCs currently detected is stored.

Clearing DTCs Procedure

CMDTC clearing DTCs procedure

1. Connect the M-MDS (IDS) to the DLC-2.
2. After the vehicle is identified, select the following items from the initialization screen of the IDS.
   (1) Select “Self Test”.
   (2) Select “All CMDTCs”.
3. Verify the DTC according to the directions on the screen.
4. Press the clear button on the DTC screen to clear the DTC.
5. Switch the ignition to off.
6. Switch the ignition to ON and wait for **5 s or more**.
7. Perform DTC inspection. (See 04-02B-6 Reading DTCs Procedure.)
8. Verify that no DTCs are displayed.

PID/Data Monitor and Record Procedure

1. Connect the M-MDS (IDS) to the DLC-2.
2. After the vehicle is identified, select the following items from the initialization screen of the IDS.
   (1) Select “DataLogger”.
   (2) Select “Modules”.
   (3) Select “SCBS”.
3. Select the applicable PID from the PID table.
4. Verify the PID data according to the directions on the screen.

Note

- The PID data screen function is used for monitoring the calculated value of input/output signals in the module. Therefore, if the monitored value of the output parts is not within the specification, it is necessary to inspect the monitored value of input parts corresponding to the applicable output part control. In addition, because the system does not display an output part malfunction as an abnormality in the monitored value, it is necessary to inspect the output parts individually.

ON-BOARD DIAGNOSTIC [LASER SENSOR]

Snapshot Data Access Procedure

1. Connect the M-MDS (IDS) to the DLC-2.
2. After the vehicle is identified, select the following items from the initialization screen of the IDS.
   (1) Select “Self Test”.
   (2) Select “Modules”.
   (3) Select “SCBS”.
3. Then, select the “Retrieve CMDTCs” and perform procedures according to directions on the IDS screen.
4. Retrieve the snapshot data according to the directions on the IDS screen.

Note

- Snapshot data appears at the top of the help screen when the displayed DTC is selected.
- The snapshot data stores the currently detected DTC data.

DTC Table

×: Applicable
-: Not applicable

DTC No.	Master warning light	Message in the TFT LCD display	Malfunction location	Fail-safe	Drive cycle	Self test type*1	Memory function	Page
U0001:00 U0100:00 U0121:00 U0131:00 U0155:00	Illuminated	SCBS Inspection Required	CAN line	×	-	C	×	(See 04-02B-9 DTC U0001:00/U0100:00/ U0121:00/U0131:00/ U0155:00 [LASER SENSOR].)
U0401:68	Illuminated	SCBS Inspection Required	Abnormal message from PCM	×	-	C	×	(See 04-02B-9 DTC U0401:68 [LASER SENSOR].)
U0415:68	Illuminated	SCBS Inspection Required	Abnormal message from DSC HU/CM	×	-	C	×	(See 04-02B-10 DTC U0415:68 [LASER SENSOR].)
U0420:68	Illuminated	SCBS Inspection Required	Abnormal message from EPS CM	×	-	C	×	(See 04-02B-11 DTC U0420:68 [LASER SENSOR].)
U0423:68	Illuminated	SCBS Inspection Required	Abnormal message from instrument cluster	×	-	C	×	(See 04-02B-12 DTC U0423:68 [LASER SENSOR].)
U1A14:49	Illuminated	SCBS Inspection Required	Laser sensor	×	-	C	×	(See 04-02B-13 DTC U1A14:49 [LASER SENSOR].)
U2300:55 U2300:56	Illuminated	SCBS Inspection Required	Configuration data not recorded or data error	×	-	C	×	(See 04-02B-13 DTC U2300:55/U2300:56 [LASER SENSOR].)
U3000:00 U3000:64	Illuminated	SCBS Inspection Required	Laser sensor (internal malfunction)	×	-	C	×	(See 04-02B-14 DTC U3000:00/U3000:64 [LASER SENSOR].)
U3000:66	Illuminated	SCBS Inspection Required	Laser sensor	×	-	C	×	(See 04-02B-15 DTC U3000:66 [LASER SENSOR].)

*1 : C: CMDTC self-test

ON-BOARD DIAGNOSTIC [LASER SENSOR]

PID/DATA Monitor Table

PID name (definition)	Unit/Condition	Operation condition (reference)	Action
DIST_BMP_TGT	m	Changes according to the distance from bumper to target that the laser sensor has detected	Perform the DTC inspection for the laser sensor. (See 04-02B-6 Reading DTCs Procedure.)
VPWR_IG1	V	Module supply voltage (IG1)	Inspect the battery. (See 01-17A-7 BATTERY INSPECTION [SKYACTIV-G 2.0].) (See 01-17A-8 BATTERY INSPECTION [SKYACTIV-G 2.0 (WITHOUT i-stop)].) (See 01-17B-6 BATTERY INSPECTION [SKYACTIV-D 2.2].) Inspect the push button start. (See 09-21-25 PUSH BUTTON START INSPECTION.)
VSPD	KPH, MPH	Vehicle speed	Inspect the DSC HU/CM. (See 04-15-7 DSC HU/CM INSPECTION.)

Snapshot Data Table

Note

- Refer to PID monitor table for confirm the laser sensor operation status while the laser sensor does not store the DTC. (See 04-02B-8 PID/DATA Monitor Table.)
- Snapshot data items are not displayed, according to detected DTC.

Snapshot data item	Unit	Definition	Corresponding data monitor items
DSC_R_BRK	OK/Error	DSC response against brake request from SCBS module	—
DSC_R_BRK_C	OK/Error	DSC response against brake assist threshold change from SCBS module	—
DSC_R_BRK_NOREQ	OK/Error	DSC response while no request from SCBS module	—
DSC_R_PRECH	OK/Error	DSC response against pre-charge request from SCBS module	—
DSC_SYSTEM	OK/Error	DSC system condition	—
ECU_IN_TEMP	°C	ECU internal temperature	—
PCM_R_NOREQ	OK/Error	PCM response while no request from SCBS module	—
PCM_R_REQ	OK/Error	PCM response against request from SCBS module	—
PCM_SYSTEM	OK/Error	PCM system condition	—
TOTAL_DIST	km, ft, mi	Total distance	—
TOTAL_TIME	hh:mm:ss	Total time	—
VPWR	V	Power supply	—
VSPD	KPH, MPH	Vehicle speed	VSPD

ON-BOARD DIAGNOSTIC [LASER SENSOR]

DTC U0001:00/U0100:00/U0121:00/U0131:00/U0155:00 [LASER SENSOR]

id0402c4894900

DTC	U0001:00, U0100:00, U0121:00, U0131:00, U0155:00	CAN line
DETECTION CONDITION	• U0001:00 — Open or short circuit in CAN system wiring harness is detected. • U0100:00 — Communication error with PCM is detected in CAN communication. • U0121:00 — Communication error with DSC HU/CM is detected in CAN communication. • U0131:00 — Communication error with EPS CM is detected in CAN communication. • U0155:00 — Communication error with instrument cluster is detected in CAN communication.	
FAIL-SAFE FUNCTION	• Inhibits the smart city brake support (SCBS) controls. • Illuminates the master warning light • The message “SCBS Inspection Required” is indicated in the display.	
POSSIBLE CAUSE	• CAN system wiring harness open or short circuit • CAN system wiring harness open or short circuit with PCM • CAN system wiring harness open or short circuit with DSC HU/CM • CAN system wiring harness open or short circuit with EPS CM • CAN system wiring harness open or short circuit with instrument cluster • instrument cluster malfunction	
SYSTEM WIRING DIAGRAM	—	

Diagnostic procedure

- Inspect according to diagnostic procedure in BODY & ACCESSORIES.

DTC U0401:68 [LASER SENSOR]

id0402c4895000

DTC	U0401:68	Abnormal message from PCM
DETECTION CONDITION	• Correct data cannot be received from PCM	
FAIL-SAFE FUNCTION	• Inhibits the smart city brake support (SCBS) controls. • Illuminates the master warning light • The message ”SCBS Inspection Required” is indicated in the display.	
POSSIBLE CAUSE	• PCM malfunction	
SYSTEM WIRING DIAGRAM	—	

Diagnostic procedure

STEP	INSPECTION		ACTION
1	**INSPECT FOR PCM MALFUNCTION** • Switch the ignition to off. • Using the M-MDS, perform the DTC inspection for the PCM. (See 01-02-8 ON-BOARD DIAGNOSTIC TEST [SKYACTIV-G 2.0].) • Are any DTCs detected?	Yes	Go to applicable DTC inspection. (See 01-02-14 DTC TABLE [SKYACTIV-G 2.0].)
		No	Go to the next step.
2	**VERIFY THAT THE SAME DTC IS NOT PRESENT** • Clear the DTCs from the memory. (See 04-02B-6 ON-BOARD DIAGNOSIS [LASER SENSOR].) • Are the same DTCs present?	Yes	Repeat the inspection from Step 1. If the malfunction recurs, replace the PCM, then go to the next step. (See 01-40-10 PCM REMOVAL/INSTALLATION [SKYACTIV-G 2.0].)
		No	Go to the next step.
3	**VERIFY THAT NO OTHER DTCS ARE PRESENT** • Are any other DTCs output?	Yes	Go to the applicable DTC inspection. (See 04-02B-6 ON-BOARD DIAGNOSIS [LASER SENSOR].)
		No	DTC troubleshooting completed.

ON-BOARD DIAGNOSTIC [LASER SENSOR]

DTC U0415:68 [LASER SENSOR]

id0402c4895100

DTC	U0415:68	Abnormal message from DSC HU/CM
DETECTION CONDITION	• Correct data cannot be received from DSC HU/CM	
FAIL-SAFE FUNCTION	• Inhibits the smart city brake support (SCBS) controls. • Illuminates the master warning light • The message ”SCBS Inspection Required” is indicated in the display.	
POSSIBLE CAUSE	• DSC HU/CM malfunction	
SYSTEM WIRING DIAGRAM	—	

Diagnostic procedure

STEP	INSPECTION		ACTION
1	**INSPECT FOR DSC HU/CM MALFUNCTION** • Switch the ignition to off. • Using the M-MDS, perform the DTC inspection for the DSC HU/CM. (See 04-02A-7 ON-BOARD DIAGNOSIS [DYNAMIC STABILITY CONTROL (DSC)].) • Are any DTCs detected?	Yes	Go to applicable DTC inspection. (See 04-02A-7 ON-BOARD DIAGNOSIS [DYNAMIC STABILITY CONTROL (DSC)].)
		No	Go to the next step.
2	**VERIFY THAT THE SAME DTC IS NOT PRESENT** • Clear the DTCs from the memory. (See 04-02B-6 ON-BOARD DIAGNOSIS [LASER SENSOR].) • Are the same DTCs present?	Yes	Repeat the inspection from Step 1. If the malfunction recurs, replace the DSC HU/CM, then go to the next step. (See 04-15-4 DSC HU/CM REMOVAL/INSTALLATION.)
		No	Go to the next step.
3	**VERIFY THAT NO OTHER DTCS ARE PRESENT** • Are any other DTCs output?	Yes	Go to the applicable DTC inspection. (See 04-02B-6 ON-BOARD DIAGNOSIS [LASER SENSOR].)
		No	DTC troubleshooting completed.

ON-BOARD DIAGNOSTIC [LASER SENSOR]

DTC U0420:68 [LASER SENSOR]

id0402c4895200

DTC	U0420:68	Abnormal message from EPS control module
DETECTION CONDITION	• Correct data cannot be received from EPS CM	
FAIL-SAFE FUNCTION	• Inhibits the smart city brake support (SCBS) controls. • Illuminates the master warning light • The message ”SCBS Inspection Required” is indicated in the display.	
POSSIBLE CAUSE	• EPS CM malfunction	
SYSTEM WIRING DIAGRAM	—	

Diagnostic procedure

STEP	INSPECTION		ACTION
1	**INSPECT FOR EPS CONTROL MODULE MALFUNCTION** • Switch the ignition to off. • Using the M-MDS, perform the DTC inspection for the EPS control module. (See 06-02-5 ELECTRIC POWER STEERING (EPS) ON-BOARD DIAGNOSIS.) • Are any DTCs detected?	Yes	Go to applicable DTC inspection. (See 06-02-5 ELECTRIC POWER STEERING (EPS) ON-BOARD DIAGNOSIS.)
		No	Go to the next step.
2	**VERIFY THAT THE SAME DTC IS NOT PRESENT** • Clear the DTCs from the memory. (See 04-02B-6 ON-BOARD DIAGNOSIS [LASER SENSOR].) • Are the same DTCs present?	Yes	Repeat the inspection from Step 1. If the malfunction recurs, replace the EPS CM, then go to the next step. (See 06-13-4 STEERING WHEEL AND COLUMN REMOVAL/INSTALLATION.)
		No	Go to the next step.
3	**VERIFY THAT NO OTHER DTCS ARE PRESENT** • Are any other DTCs output?	Yes	Go to the applicable DTC inspection. (See 04-02B-6 ON-BOARD DIAGNOSIS [LASER SENSOR].)
		No	DTC troubleshooting completed.

ON-BOARD DIAGNOSTIC [LASER SENSOR]

DTC U0423:68 [LASER SENSOR]

id0402c4895300

DTC	U0423:68	Abnormal message from instrument cluster
DETECTION CONDITION	• Correct data cannot be received from instrument cluster	
FAIL-SAFE FUNCTION	• Inhibits the smart city brake support (SCBS) controls. • Illuminates the master warning light • The message ”SCBS Inspection Required” is indicated in the display.	
POSSIBLE CAUSE	• Instrument cluster malfunction	
SYSTEM WIRING DIAGRAM	—	

Diagnostic procedure

STEP	INSPECTION		ACTION
1	**INSPECT FOR INSTRUMENT CLUSTER MALFUNCTION** • Switch the ignition to off. • Using the M-MDS, perform the DTC inspection for the instrument cluster . (See 09-02G-7 DTC INSPECTION [INSTRUMENT CLUSTER].) • Are any DTCs detected?	Yes	Go to applicable DTC inspection. (See 09-02G-10 DTC TABLE [INSTRUMENT CLUSTER].)
		No	Go to the next step.
2	**VERIFY THAT THE SAME DTC IS NOT PRESENT** • Clear the DTCs from the memory. (See 04-02B-6 ON-BOARD DIAGNOSIS [LASER SENSOR].) • Are the same DTCs present?	Yes	Configure the instrument cluster, then repeat the inspection from Step 1. (See 09-22-19 INSTRUMENT CLUSTER CONFIGURATION (USING READ/WRITE FUNCTION).) (See 09-22-19 INSTRUMENT CLUSTER CONFIGURATION (USING AS-BUILT DATA).) If the malfunction recurs, replace the instrument cluster, then go to the next step. (See 09-22-6 INSTRUMENT CLUSTER REMOVAL/INSTALLATION.)
		No	Go to the next step.
3	**VERIFY THAT NO OTHER DTCS ARE PRESENT** • Are any other DTCs output?	Yes	Go to the applicable DTC inspection. (See 04-02B-6 ON-BOARD DIAGNOSIS [LASER SENSOR].)
		No	DTC troubleshooting completed.

ON-BOARD DIAGNOSTIC [LASER SENSOR]

DTC U1A14:49 [LASER SENSOR]

id0402c4894700

DTC	U1A14:49	Laser sensor internal electronic malfunction
DETECTION CONDITION	• Laser sensor detects the internal electronic malfunction when the ignition switched ON.	
FAIL-SAFE FUNCTION	• Inhibits the smart city brake support (SCBS) controls. • Illuminates the master warning light • The message "SCBS Inspection Required" is indicated in the display.	
POSSIBLE CAUSE	• Laser sensor malfunction	
SYSTEM WIRING DIAGRAM	—	

Diagnostic procedure

STEP	INSPECTION		ACTION
1	**RECORD THE CAR CONFIGURATION DATA** • Switch the ignition to off. • Switch the ignition ON (engine on).		Go to the next step.
2	**VERIFY THAT THE SAME DTC IS NOT PRESENT** • Clear the DTCs from the memory. (See 04-02B-6 ON-BOARD DIAGNOSIS [LASER SENSOR].) • Are the same DTCs present?	Yes	Repeat the inspection from Step 1. If the malfunction recurs, replace the laser sensor, then go to the next step. (See 04-15-17 LASER SENSOR REMOVAL/ INSTALLATION.)
		No	Go to the next step.
3	**VERIFY THAT NO OTHER DTCS ARE PRESENT** • Are any other DTCs output?	Yes	Go to the applicable DTC inspection. (See 04-02B-6 ON-BOARD DIAGNOSIS [LASER SENSOR].)
		No	DTC troubleshooting completed.

DTC U2300:55/U2300:56 [LASER SENSOR]

id0402c4894800

DTC	U2300:55, U2300:56	Configuration data not recorded
DETECTION CONDITION	• Laser sensor detects configuration data not recorded or data error.	
FAIL-SAFE FUNCTION	• Inhibits the smart city brake support (SCBS) controls. • Illuminates the master warning light • The message "SCBS Inspection Required" is indicated in the display.	
POSSIBLE CAUSE	• Laser sensor configuration procedure is not done properly • Correct data cannot be received from instrument cluster	
SYSTEM WIRING DIAGRAM	—	

Diagnostic procedure

STEP	INSPECTION		ACTION
1	**RECORD THE CAR CONFIGURATION DATA** • Switch the ignition to off. • Switch the ignition ON (engine on).		Go to the next step.
2	**VERIFY THAT THE SAME DTC IS NOT PRESENT** • Clear the DTCs from the memory. (See 04-02B-6 ON-BOARD DIAGNOSIS [LASER SENSOR].) • Are the same DTCs present?	Yes	Repeat the inspection from Step 1. If the malfunction recurs, go to the next step.
		No	Go to step 5.
3	**INSPECT FOR INSTRUMENT CLUSTER MALFUNCTION** • Switch the ignition to off. • Using the M-MDS, perform the DTC inspection for the instrument cluster. (See 09-02G-7 DTC INSPECTION [INSTRUMENT CLUSTER].) • Are any DTCs detected?	Yes	Go to the applicable DTC inspection. (See 09-02G-10 DTC TABLE [INSTRUMENT CLUSTER].) After repairing the instrument cluster, then go to the next step.
		No	Go to the next step.

ON-BOARD DIAGNOSTIC [LASER SENSOR]

STEP	INSPECTION		ACTION
4	**VERIFY THAT THE SAME DTC IS NOT PRESENT** • Clear the DTCs from the memory. (See 04-02B-6 ON-BOARD DIAGNOSIS [LASER SENSOR].) • Are the same DTCs present?	Yes	Replace the laser sensor. (See 04-15-17 LASER SENSOR REMOVAL/ INSTALLATION.)
		No	Go to the next step.
5	**VERIFY THAT NO OTHER DTCS ARE PRESENT** • Are any other DTCs output?	Yes	Go to the applicable DTC inspection. (See 04-02B-6 ON-BOARD DIAGNOSIS [LASER SENSOR].)
		No	DTC troubleshooting completed.

DTC U3000:00/U3000:64 [LASER SENSOR]

id0402c4894600

DTC	U3000:00, U3000:64	Laser sensor internal malfunction
DETECTION CONDITION	• Laser sensor detects the internal malfunction when the ignition switched ON. • Laser sensor detects the invalid output signal.	
FAIL-SAFE FUNCTION	• Inhibits the smart city brake support (SCBS) controls. • Illuminates the master warning light • The message ”SCBS Inspection Required” is indicated in the display.	
POSSIBLE CAUSE	• Laser sensor malfunction	
SYSTEM WIRING DIAGRAM	—	

Diagnostic procedure

STEP	INSPECTION		ACTION
1	**RECORD THE CAR CONFIGURATION DATA** • Switch the ignition to off. • Switch the ignition ON (engine on).		Go to the next step.
2	**VERIFY THAT THE SAME DTC IS NOT PRESENT** • Clear the DTCs from the memory. (See 04-02B-6 ON-BOARD DIAGNOSIS [LASER SENSOR].) • Are the same DTCs present?	Yes	Repeat the inspection from Step 1. If the malfunction recurs, replace the laser sensor, then go to the next step. (See 04-15-17 LASER SENSOR REMOVAL/ INSTALLATION.)
		No	Go to the next step.
3	**VERIFY THAT NO OTHER DTCS ARE PRESENT** • Are any other DTCs output?	Yes	Go to the applicable DTC inspection. (See 04-02B-6 ON-BOARD DIAGNOSIS [LASER SENSOR].)
		No	DTC troubleshooting completed.

ON-BOARD DIAGNOSTIC [LASER SENSOR]

DTC U3000:66 [LASER SENSOR]

id0402c4895400

DTC	U3000:66	Laser sensor malfunction
DETECTION CONDITION	• Laser sensor detects a large number of consecutive drive cycles with the smart city brake support (SCBS) system malfunction.	
FAIL-SAFE FUNCTION	• Inhibits the smart city brake support (SCBS) controls. • Illuminates the master warning light • The message ”SCBS Inspection Required” is indicated in the display.	
POSSIBLE CAUSE	• Laser sensor malfunction • Instrument cluster malfunction	
SYSTEM WIRING DIAGRAM	—	

Diagnostic procedure

STEP	INSPECTION		ACTION
1	**INSPECT FOR INSTRUMENT CLUSTER MALFUNCTION** • Switch the ignition to off. • Using the M-MDS, perform the DTC inspection for the DSC HU/CM. (See 04-02A-7 ON-BOARD DIAGNOSIS [DYNAMIC STABILITY CONTROL (DSC)].) • Are any other DTCs detected?	Yes	Go to the applicable DTC inspection. (See 09-02G-10 DTC TABLE [INSTRUMENT CLUSTER].)
		No	Go to the next step.
2	**VERIFY THAT NO OTHER DTCS ARE PRESENT** • Are any other DTCs output?	Yes	Go to the applicable DTC inspection. (See 04-02B-6 ON-BOARD DIAGNOSIS [LASER SENSOR].)
		No	Go to the next step.
3	**VERIFY THAT THE SAME DTC IS NOT PRESENT** • Clear the DTCs from the memory. (See 04-02B-6 ON-BOARD DIAGNOSIS [LASER SENSOR].) • Are the same DTCs present?	Yes	Repeat the inspection from Step 1. If the malfunction recurs, replace the laser sensor. (See 04-15-17 LASER SENSOR REMOVAL/INSTALLATION.)
		No	DTC troubleshooting completed.

04-03 SYMPTOM TROUBLESHOOTING [DYNAMIC STABILITY CONTROL (DSC)]

SYSTEM WIRING DIAGRAM [DYNAMIC STABILITY CONTROL (DSC)] 04-03–2
FOREWORD [DYNAMIC STABILITY CONTROL (DSC)] 04-03–4
Troubleshooting Procedure 04-03–4
Action for non-repeatable malfunction . 04-03–5
PRECAUTION [DYNAMIC STABILITY CONTROL (DSC)] 04-03–6
Intermittent Concern Troubleshooting 04-03–7
SYMPTOM TROUBLESHOOTING [DYNAMIC STABILITY CONTROL (DSC)] 04-03–8
NO.1 ANY OF THE FOLLOWING LIGHTS DO NOT ILLUMINATE WITH THE IGNITION ON: (ABS WARNING LIGHT, BRAKE SYSTEM WARNING LIGHT, TCS/DSC INDICATOR LIGHT AND/OR TCS OFF INDICATOR LIGHT) [DYNAMIC STABILITY CONTROL (DSC)] 04-03–11
NO.2 ANY OF THE FOLLOWING LIGHTS STAY ON: (ABS WARNING LIGHT, TCS/DSC INDICATOR LIGHT AND/OR TCS OFF INDICATOR LIGHT) [DYNAMIC STABILITY CONTROL (DSC)] 04-03–13
NO.3 BRAKE SYSTEM WARNING LIGHT STAY ON [DYNAMIC STABILITY CONTROL (DSC)] 04-03–15
NO.4 THERE IS A MALFUNCTION IN THE SYSTEM EVEN THOUGH ABS WARNING LIGHT, BRAKE SYSTEM WARNING LIGHT, TCS/DSC INDICATOR LIGHT AND TCS OFF INDICATOR LIGHT DO NOT ILLUMINATE [DYNAMIC STABILITY CONTROL (DSC)] 04-03–17
NO.5 ABS OR TCS*1 OPERATES FREQUENTLY/TCS DOES NOT WORK CORRECTLY *1: DSC SYSTEM FUNCTION CONTAINS TRACTION CONTROL FUNCTION, TCS/DSC INDICATOR LIGHT GOES ON AND OFF WHILE TCS OPERATES [DYNAMIC STABILITY CONTROL (DSC)] 04-03–17
NO.6 DSC*2 OPERATES FREQUENTLY/DSC DOES NOT WORK CORRECTLY *2: TCS/DSC INDICATOR LIGHT GOES ON AND OFF WHILE DSC OPERATES [DYNAMIC STABILITY CONTROL (DSC)] 04-03–18
NO.7 TCS/DSC INDICATOR LIGHT FLASHES (WHEN NEITHER THE TCS NOR THE DSC ARE OPERATING) [DYNAMIC STABILITY CONTROL (DSC)] 04-03–19
NO.8 HILL LAUNCH ASSIST (HLA) OPERATES EVEN ON A DOWNHILL/HILL LAUNCH ASSIST (HLA) DOES NOT OPERATE ON A SLOPE [DYNAMIC STABILITY CONTROL (DSC)] 04-03–19
NO.9 MASTER WARNING LIGHT STAY ON AND A MESSAGE "SCBS Inspection Required" IS INDICATED IN THE DISPLAY [DYNAMIC STABILITY CONTROL (DSC)] 04-03–22

SYMPTOM TROUBLESHOOTING [DYNAMIC STABILITY CONTROL (DSC)]

SYSTEM WIRING DIAGRAM [DYNAMIC STABILITY CONTROL (DSC)]

id0403b2806400

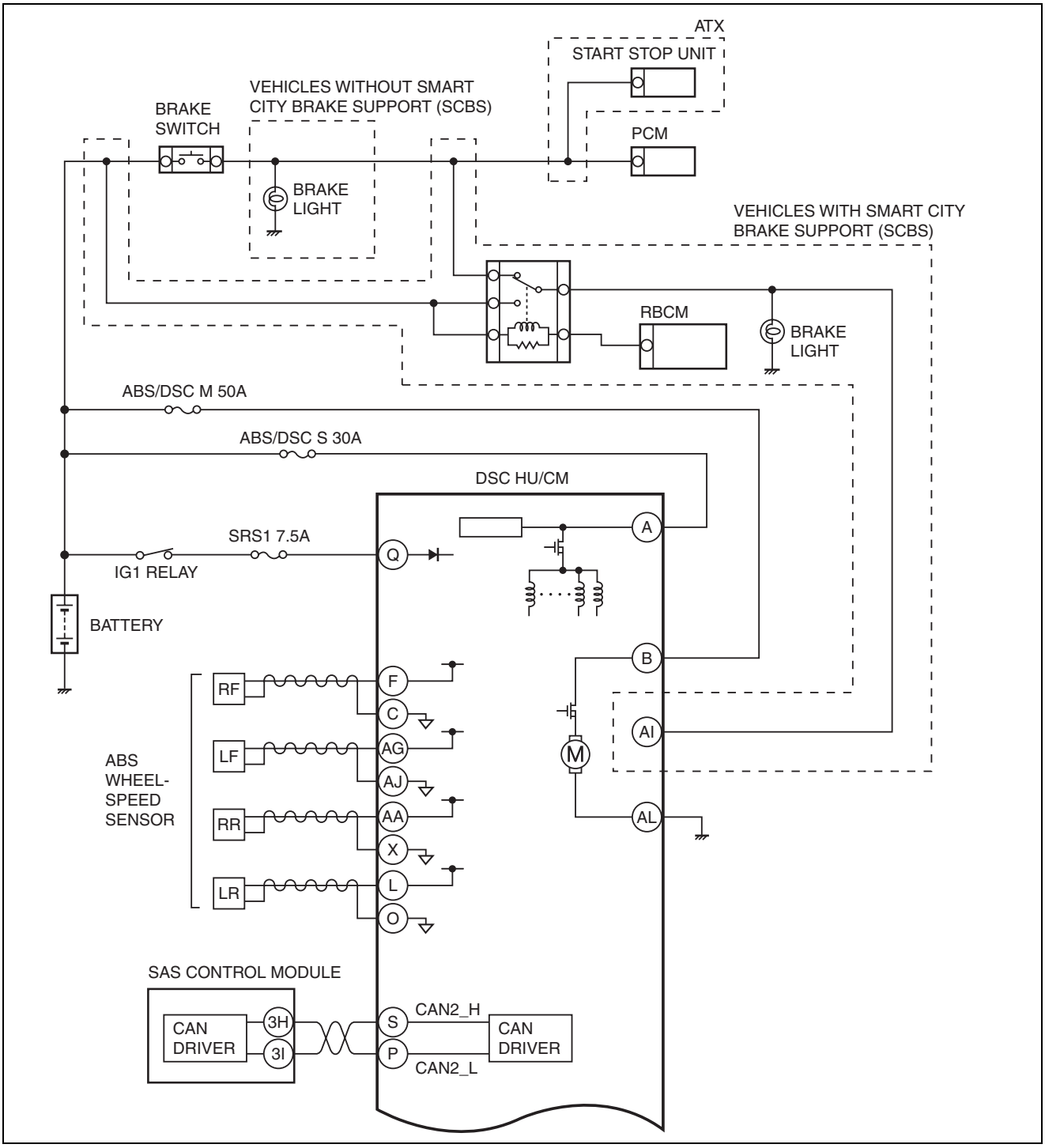

ac5wzw0000380

SYMPTOM TROUBLESHOOTING [DYNAMIC STABILITY CONTROL (DSC)]

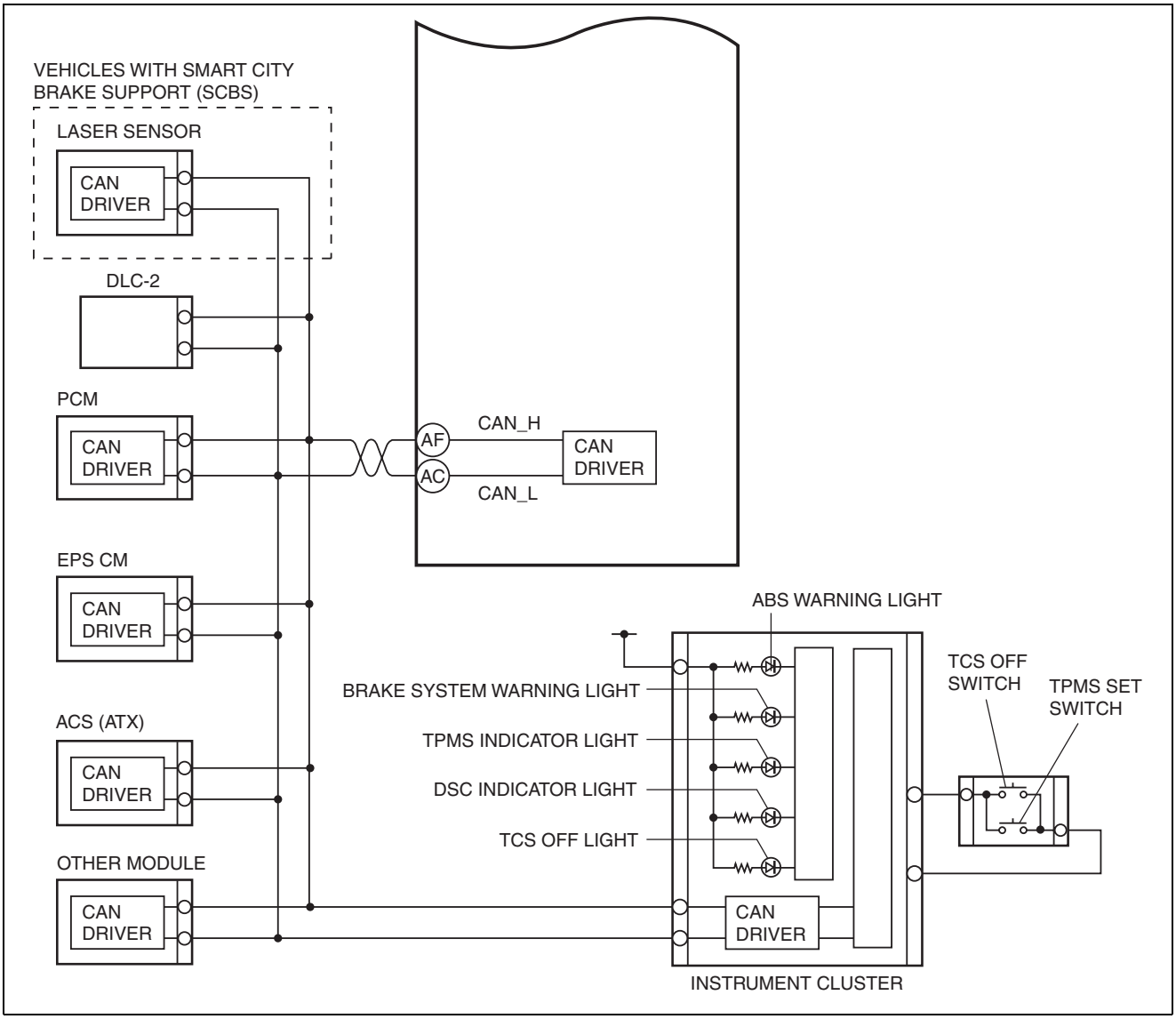

ac5wzw0000113

SYMPTOM TROUBLESHOOTING [DYNAMIC STABILITY CONTROL (DSC)]

FOREWORD [DYNAMIC STABILITY CONTROL (DSC)]

id0403b2804000

- If there is any vehicle malfunction complaint lodged by a customer, perform malfunction diagnosis according to the troubleshooting procedure.

Troubleshooting Procedure

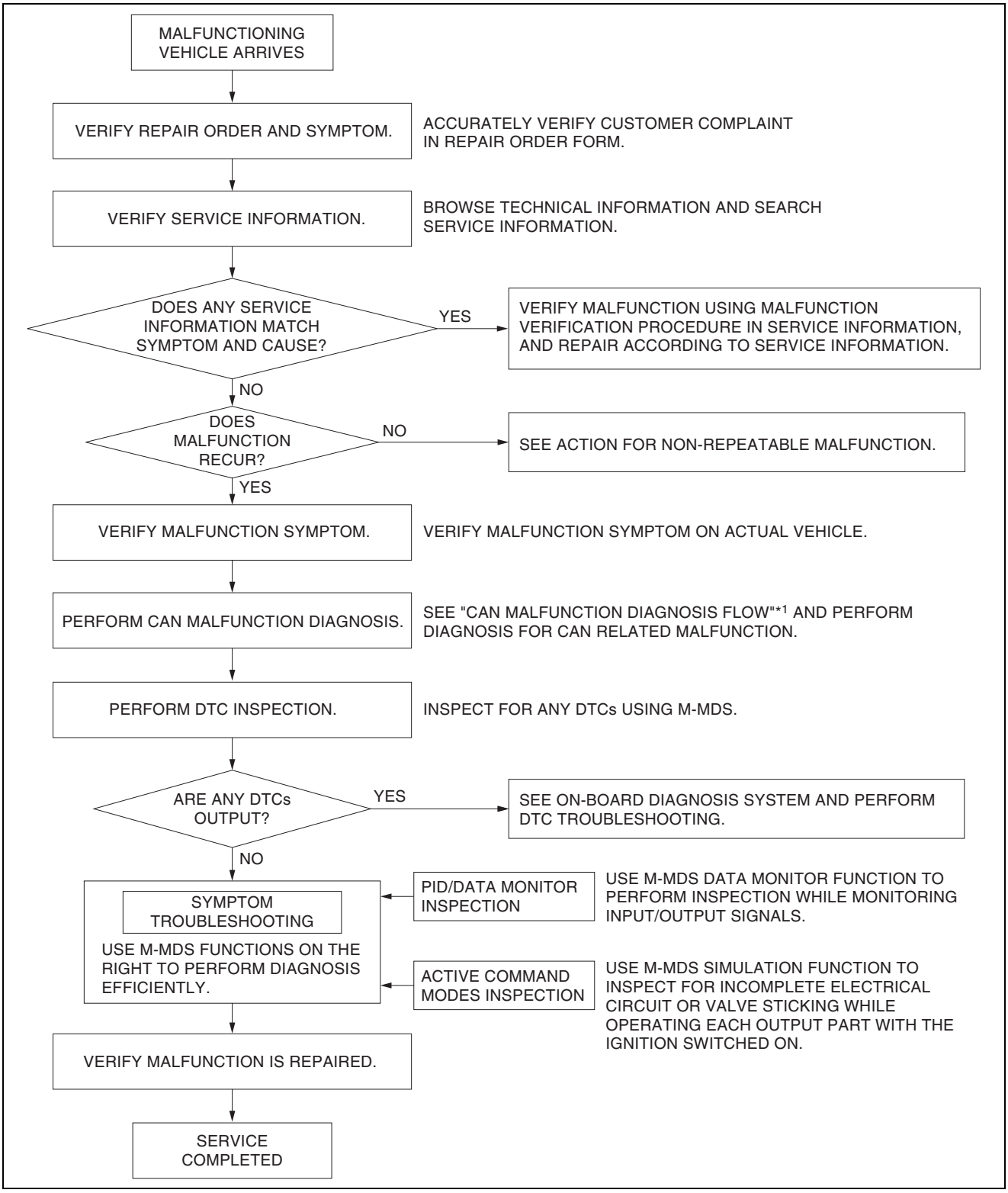

am3zzw0001144

SYMPTOM TROUBLESHOOTING [DYNAMIC STABILITY CONTROL (DSC)]

*1 : 10-02A-3 CONTROLLER AREA NETWORK (CAN) MALFUNCTION DIAGNOSIS FLOW [SKYACTIV-G 2.0 (L.H.D.)], 10-02B-3 CONTROLLER AREA NETWORK (CAN) MALFUNCTION DIAGNOSIS FLOW [SKYACTIV-G 2.0 (R.H.D.)], 10-02C-3 CONTROLLER AREA NETWORK (CAN) MALFUNCTION DIAGNOSIS FLOW [SKYACTIV-D 2.2 (L.H.D.)], 10-02D-3 CONTROLLER AREA NETWORK (CAN) MALFUNCTION DIAGNOSIS FLOW [SKYACTIV-D 2.2 (R.H.D.)]

Action for non-repeatable malfunction

- If the malfunction does not recur, verify the malfunction cause by performing the following actions:
  1. Verify that a DTC has been recorded in the memory using the M-MDS. (See 04-02A-7 ON-BOARD DIAGNOSIS [DYNAMIC STABILITY CONTROL (DSC)].)
  2. Perform a simulation test in the simulation mode based on the repair order form, record the data at that time, and detect the malfunction cause.
  3. Shake the wiring harness or connector of the electrical component which is suspected to be the cause of the malfunction, and inspect for the occurrence of any malfunction or DTCs.

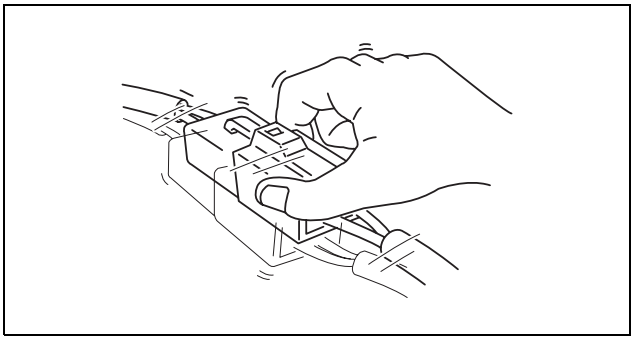

am3uuw0000813

  4. Inspect the female terminals for poor connection.

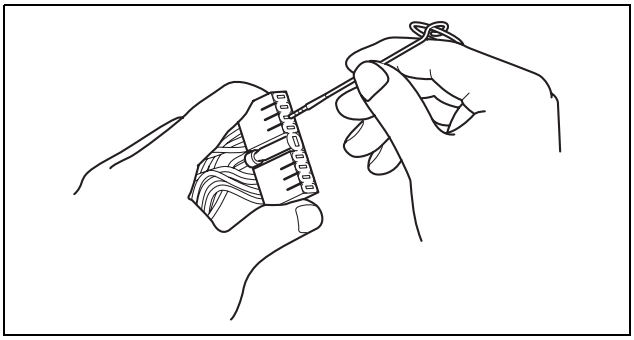

am3uuw0000813

SYMPTOM TROUBLESHOOTING [DYNAMIC STABILITY CONTROL (DSC)]

PRECAUTION [DYNAMIC STABILITY CONTROL (DSC)]

id0403b2804100

1. The ABS warning light and/or brake system warning light and/or TCS/DSC indicator light and/or TCS OFF indicator light illuminate even when the system is normal.

Warning lights/Indicator lights that may illuminate and/or flash	Cases in which the light may illuminate	Conditions in which the light will go out	ABS, EBD, TCS and DSC control
• ABS warning light • Brake system warning light (*1) • TCS/DSC indicator light	Only the front wheels rotate under the following condition while jacked up, stuck, or on the chassis dynamometer: • Detected **8 times** for a continuous **20 s** while at a vehicle speed of **20 km/h {12 mph} or more**. (One detection period is when ignition is switched from ON to off.)	After turning off the ignition once and then restarting the engine, the vehicle is driven at **10km/h {6.2 mph} or more**, and then normal operation is verified.	• ABS: Cuts control. • EBD: Cuts control. • TCS: Cuts control. • DSC: Cuts control.
	Parking brake is not fully released while driving.		
	Brake drag.		
	Sudden acceleration/ deceleration.		
	Left/right or front/rear tires are different. (Size, radius, tire pressure, or wear is other than that listed on tire label.)		
	Battery voltage at DSC HU/ CM ignition terminal Y drops **below about 9.5 V**. (*2)	Battery voltage rises **above about 9.5 V**.	• ABS: Operates control. • EBD: Operates control. • TCS: Operates control. • DSC: Operates control.
Brake system warning light	Brake fluid amount is low.	Brake fluid level is with in the specification.	• ABS: Operates control. • EBD: Operates control. • TCS: Operates control. • DSC: Operates control.

*1 : In case where the light may illuminate, only when DSC HU/CM detects that a wheel-speed sensor determines that more than two wheels are malfunctioning.

*2 : If battery voltage drops **below 10 V** while vehicle speed is **greater than 3 km/h {2 mph}**, DSC HU/CM detects DTC U3003:16.

2. Precautions during servicing of DSC. The DSC is composed of electrical and mechanical parts. It is necessary to categorize malfunctions as being either electrical or hydraulic when performing troubleshooting.
   (1) Malfunction in electrical system
   - The control module has an on-board diagnostic function. With this function, the ABS warning light and/ or brake system warning light and/or TCS/DSC indicator light and/or TCS OFF indicator light will come on when there is a problem in the electrical system.
     Also, past and present malfunctions are recorded in the control module. This function can find malfunction that do not occur during periodic inspections. Connect the M-MDS (IDS) to the DLC-2. The stored malfunctions will be displayed in the order of occurrence. To find out the causes of DSC malfunction, use these on-board diagnostic results.
   - If a malfunction occurred in the past but is now normal, the cause is likely a temporary poor connection of the harness. The control module usually operates normally. Be careful when searching for the cause of malfunction.
   - After repair, it is necessary to clear the DTC from the control module memory. Also, if the DSC related parts have been replaced, verify that the no DTC has been displayed after repairs.
   - After repairing the ABS wheel-speed sensor or ABS sensor rotor, or after replacing the control module, the ABS warning light may not go off even when the ignition is switched to ON. In this case, drive the vehicle at a speed of **more than 10 km/h {6.2 mph}**, make sure the ABS warning light goes off, and then clear the DTC.
   - When repairing, if the DSC related connectors are disconnected and the ignition is switched to ON, the control module will mistakenly detect a fault and record it as a malfunction.

SYMPTOM TROUBLESHOOTING [DYNAMIC STABILITY CONTROL (DSC)]

Caution

- **When any DSC HU/CM (brake fluid pressure sensor), SAS control module (yaw rate sensor, low-G sensor) are replaced. Perform the sensor standard point installation of each sensor.**

- To protect the control module, make sure the ignition is off before connecting or disconnecting the control module connector.

(2) Malfunctions in hydraulic system

- Symptoms in a hydraulic system malfunction are similar to those in a conventional brake malfunction. However, it is necessary to determine if the malfunction is in a DSC component or the conventional brake system.
- The hydraulic unit contains delicate mechanical parts. If foreign materials get into the component, the DSC may fail to operate. Also, it will likely become extremely difficult to find the location of the malfunction in the event that the brakes operate but the DSC does not. Make sure foreign materials do not get inside when servicing the DSC (e.g. brake fluid replacement, pipe removal).

Intermittent Concern Troubleshooting

Vibration method

- If malfunction occurs or becomes worse while driving on a rough road or when engine is vibrating, perform the steps below.

Note

- There are several reasons why vehicle or engine vibration could cause an electrical malfunction. Some of the things to check for are:
  - — Connectors not fully seated.
  - — Wire harnesses not having full play.
  - — Wires laying across brackets or moving parts.
  - — Wires routed too close to hot parts.
- An improperly routed, improperly clamped, or loose harness can cause wiring to become pinched between parts.
- The connector joints, points of vibration, and places where wire harnesses pass through the firewall, body panels, etc. are the major areas to be checked.

Inspection method for switch and/or sensor connectors or wires

1. Connect the M-MDS (IDS) to the DLC-2.
2. Switch the ignition to ON (engine off).

Note

- If the engine starts and runs, perform the following steps at idle.

3. Access PIDs for the switch or sensor you are inspecting.
4. Turn the switch on manually.
5. Slightly shake each connector or wiring harness vertically and horizontally while monitoring the PID.
   - If the PID value is unstable, inspect for poor connection.

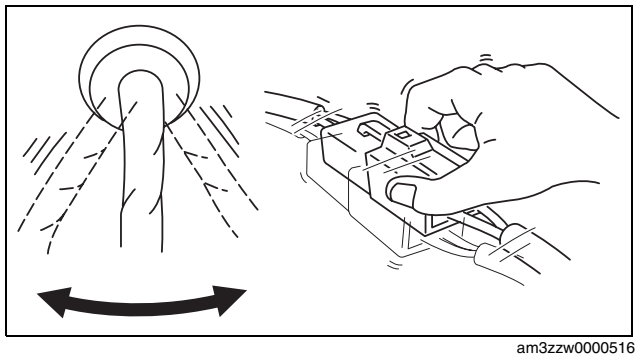

am3zzw0000516

SYMPTOM TROUBLESHOOTING [DYNAMIC STABILITY CONTROL (DSC)]

Inspection method for switches and/or sensors

1. Connect the M-MDS (IDS) to the DLC-2.
2. Switch the ignition to ON (engine off).

Note

- If engine starts and runs, perform the following steps at idle.

3. Access PIDs for the switch or sensor you are inspecting.
4. Vibrate the sensor slightly with your finger.
   - If PID value is unstable or malfunction occurs, check for poor connection and/or poorly mounted sensor.

Malfunction data monitor method

1. Perform malfunction reappearance test according to malfunction reappearance mode and malfunction data monitor. The malfunction cause is found in the malfunction data.

Connector terminal check method

1. Check the connection condition of each female terminal.
2. Insert male terminal; fit female terminal size to female terminal and check to see whether malfunction is in female terminal or not.

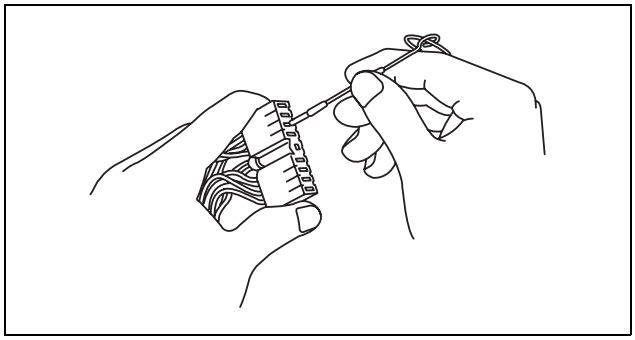

am6zzw0000002

SYMPTOM TROUBLESHOOTING [DYNAMIC STABILITY CONTROL (DSC)]

id0403b2804200

- Verify the symptoms, and perform troubleshooting according to the appropriate number.

No.	Symptom
1	Any of the following lights do not illuminate with the ignition to ON: • ABS warning light • Brake system warning light • TCS/DSC indicator light • TCS OFF indicator light
2	Any of the following lights stay on: • ABS warning light • TCS/DSC indicator light • TCS OFF indicator light
3	Brake system warning light stay on
4	There is a malfunction in the system even though ABS warning light, brake system warning light, TCS/DSC indicator light and TCS OFF indicator light do not illuminate
5	ABS or TCS*1 operates frequently
	TCS does not work correctly
6	DSC*2 operates frequently
	DSC does not work correctly
7	TCS/DSC indicator light flashes (when neither the TCS nor the DSC are operating)
8	Hill launch assist (HLA) operates even on a downhill
	Hill launch assist (HLA) does not operate on a slope
9	Master warning light stay on and a message “SCBS Inspection Required” is indicated in the display

SYMPTOM TROUBLESHOOTING [DYNAMIC STABILITY CONTROL (DSC)]

X: Applied

Troubleshooting item	1	2	3	4	5	6	7	8	9
	Any of the following lights do not illuminate with the ignition to ON: (ABS warning light, brake system warning light, TCS/DSC indicator light and/or TCS OFF indicator light)	of the following lights stay on: S warning light, brake system warning light,)/DSC indicator light and/or TCS OFF indicator li	Brake system warning light stay on	There is a malfunction in the system even though ABS warning light, brake system warning light, TCS/DSC indicator light and TCS OFF indicator light do not illuminate	ABS or TCS*1 operates frequently/ TCS does not work correctly	DSC*2 operates frequently/ DSC does not work correctly	TCS/DSC indicator light flashes (when neither the TCS nor the DSC are operating)	Hill launch assist (HLA) operates even on a downhill/ Hill launch assist (HLA) does not operate on a slope	It stay on and "Inspection Required" is indic
DSC HU/CM does not operate	X	X	X						
Communication error between DSC HU/CM and instrument cluster	X	X	X						
DSC HU/CM internal malfunction	X	X	X						X
Instrument cluster malfunction	X	X	X						
Brake fluid amount is low			X						
DSC HU/CM detected malfunction (input and output device malfunction)		X	X		X	X		X	X
DSC HU/CM detects low voltage in power supply		X	X						
DSC HU/CM ground malfunction	X	X	X						
No connection at DSC HU/CM connector		X	X						
Parking brake does not release			X					X	
Parking brake switch or brake fluid level sensor stuck on			X						
Short to ground in wiring harness between parking brake switch and instrument cluster			X						
Short to ground in wiring harness between brake fluid level sensor and front body control module (FBCM)			X						
There is a mechanical malfunction in system				X					

SYMPTOM TROUBLESHOOTING [DYNAMIC STABILITY CONTROL (DSC)]

Incorrect ABS wheel-speed signal is inputted to DSC HU/CM		X			X	X		X		
There is a difference in size, air pressure or wear conditions between front and rear tires					X	X		X		
There is a malfunction in engine control system (TCS malfunction)					X					
Poor installation with SAS control module (yaw rate sensor, low-G sensor)						X		X		
DSC HU/CM initial setting has not been performed after replacing DSC HU/CM		X				X		X		
Input signal malfunction from instrument cluster (parking brake signal)			X					X		
Input signal malfunction from PCM (reverse gear signal)								X		
Communication error between DSC HU/CM and front body control module (FBCM)			X					X		
Communication error between DSC HU/CM and PCM		X						X		
Low-G sensor initialization has not been performed after replacing SAS control module		X					X	X		
DSC HU/CM detects a malfunction (input/output device malfunction)		X						X		
Center point of low-G sensor has deviated		X						X		
PCM and/or instrument cluster detect a malfunction		X						X	X	
Error input signal from PCM		X						X		
Brake (foot brake/parking brake) drag								X		
Laser sensor detect a malfunction									X	

*1 : DSC system function contains traction control function, TCS/DSC indicator light goes on and off while TCS operates

*2 : TCS/DSC indicator light goes on and off while DSC operates

SYMPTOM TROUBLESHOOTING [DYNAMIC STABILITY CONTROL (DSC)]

NO.1 ANY OF THE FOLLOWING LIGHTS DO NOT ILLUMINATE WITH THE IGNITION ON: (ABS WARNING LIGHT, BRAKE SYSTEM WARNING LIGHT, TCS/DSC INDICATOR LIGHT AND/OR TCS OFF INDICATOR LIGHT) [DYNAMIC STABILITY CONTROL (DSC)]

id0403b2895600

1	**Any of the following lights do not illuminate with the ignition to ON: (ABS warning light, brake system warning light, TCS/DSC indicator light and/or TCS OFF indicator light)**
POSSIBLE CAUSE	• DSC HU/CM does not operate. • Communication error between DSC HU/CM and instrument cluster • Instrument cluster malfunction • DSC HU/CM internal malfunction

Diagnostic procedure

STEP	INSPECTION		ACTION
1	**VERIFY WHERE MALFUNCTION IS IN WARNING LIGHTS AND INDICATOR LIGHTS' COMMON POWER SUPPLY, OR IN OTHER WARNING LIGHTS AND INDICATOR LIGHTS** • Connect the M-MDS (IDS) to the DLC-2. • Turn on all warning lights and indicator lights using the instrument cluster PID WL+IL of active command modes. (See 09-02G-38 ACTIVE COMMAND MODES INSPECTION [INSTRUMENT CLUSTER].) • Do other warning and indicator lights illuminate?	Yes	Go to Step 5.
		No	If communication error message is displayed on the M-MDS (IDS) screen: • Go to the next step. If communication error message is not displayed: • Replace the instrument cluster. (See 09-22-6 INSTRUMENT CLUSTER REMOVAL/ INSTALLATION.)
2	**INSPECT INSTRUMENT CLUSTER POWER SUPPLY FUSE** • Inspect the instrument cluster ignition power supply fuse. • Is the fuse normal?	Yes	Go to the next step.
		No	Inspect the blown fuse's circuit for short to ground. Repair or replace the wiring harness for a possible short to ground as necessary. Install appropriate amperage fuse.
*3	**VERIFY WHETHER MALFUNCTION IS IN WIRING HARNESS (BETWEEN INSTRUMENT CLUSTER POWER SUPPLY AND INSTRUMENT CLUSTER FOR CONTINUITY) OR ELSEWHERE** • Switch the ignition to ON. • Measure the voltage at the instrument cluster terminal 2S (wiring harness-side). • Is the voltage **approx. 12 V**?	Yes	Go to the next step.
		No	Inspect for open circuit between instrument cluster and ignition. Repair or replace the wiring harness for a possible open circuit as necessary.
*4	**VERIFY WHETHER MALFUNCTION IS IN WIRING HARNESS (BETWEEN INSTRUMENT CLUSTER AND GROUND FOR CONTINUITY) OR INSTRUMENT CLUSTER** • Switch the ignition to off. • Disconnect the instrument cluster connector. • Inspect for continuity between instrument cluster terminal 2K (wiring harness-side) and body ground. • Is there continuity?	Yes	Replace the instrument cluster. (Open circuit in the instrument cluster) (See 09-22-6 INSTRUMENT CLUSTER REMOVAL/ INSTALLATION.)
		No	Repair or replace the wiring harness for a possible open circuit and poor contact in GND point.
5	**CONFIRM DSC HU/CM DTC** • Retrieve the DSC HU/CM DTC using the M-MDS (IDS). (See 04-02A-7 ON-BOARD DIAGNOSIS [DYNAMIC STABILITY CONTROL (DSC)].) • Are any DTCs present?	Yes	Go to the applicable DTC inspection. (See 04-02A-7 ON-BOARD DIAGNOSIS [DYNAMIC STABILITY CONTROL (DSC)].)
		No	If communication error message is displayed on the M-MDS (IDS) screen: • Go to the next step. If communication error message is not displayed: • Go to Step 9.
6	**INSPECT DSC HU/CM POWER SUPPLY FUSE** • Inspect the DSC HU/CM ignition power supply fuse. • Is the fuse normal?	Yes	Go to the next step.
		No	Inspect the blown fuse's circuit for short to ground. Repair or replace the wiring harness for a possible short to ground as necessary. Install appropriate amperage fuse.

SYMPTOM TROUBLESHOOTING [DYNAMIC STABILITY CONTROL (DSC)]

STEP	INSPECTION		ACTION
*7	**VERIFY WHETHER MALFUNCTION IS IN WIRING HARNESS (BETWEEN DSC HU/CM POWER SUPPLY AND DSC HU/CM FOR CONTINUITY) OR ELSEWHERE** • Switch the ignition to ON. • Measure the voltage at the DSC HU/CM terminal Q (wiring harness-side). • Is the voltage **approx. 12 V**?	Yes	Go to the next step.
		No	Inspect for open circuit between DSC HU/CM and ignition. Repair or replace the wiring harness for a possible open circuit as necessary.
*8	**VERIFY WHETHER MALFUNCTION IS IN WIRING HARNESS (BETWEEN DSC HU/CM AND GROUND FOR CONTINUITY) OR ELSEWHERE** • Switch the ignition to off. • Disconnect the DSC HU/CM connector. • Inspect for continuity between DSC HU/CM terminal AL (wiring harness-side) and body ground. • Is there continuity?	Yes	Replace the DSC HU/CM. (Open circuit in the DSC HU/CM) (See 04-15-4 DSC HU/CM REMOVAL/INSTALLATION.)
		No	Repair or replace the wiring harness for a possible open circuit and poor contact in GND point.
9	**CONFIRM INSTRUMENT CLUSTER DTC** • Retrieve the instrument cluster DTC using the M-MDS (IDS). (See 09-02G-7 DTC INSPECTION [INSTRUMENT CLUSTER].) • Are any DTCs present?	Yes	Go to the applicable DTC inspection. (See 09-02G-10 DTC TABLE [INSTRUMENT CLUSTER].)
		No	Replace the instrument cluster. (See 09-22-6 INSTRUMENT CLUSTER REMOVAL/INSTALLATION.)

- When performing an asterisked (*) troubleshooting inspection, shake the wiring harness and connectors while doing the inspection to discover whether poor contact points are the cause of any intermittent malfunctions. If there is a problem, check to make sure connectors, terminals and wiring harness are connected correctly and undamaged.

SYMPTOM TROUBLESHOOTING [DYNAMIC STABILITY CONTROL (DSC)]

NO.2 ANY OF THE FOLLOWING LIGHTS STAY ON: (ABS WARNING LIGHT, TCS/DSC INDICATOR LIGHT AND/OR TCS OFF INDICATOR LIGHT) [DYNAMIC STABILITY CONTROL (DSC)]

id0403b2895700

2	**Any of the following lights stay on: (ABS warning light, TCS/DSC indicator light and/or TCS OFF indicator light)**
POSSIBLE CAUSE	• No connection at DSC HU/CM connector (When DSC HU/CM connector comes off, ABS warning light, brake system warning light, TCS/DSC indicator light, and TCS OFF indicator light illuminate.) • DSC HU/CM detected malfunction. (Input and output device malfunction) • DSC HU/CM detects low voltage in power supply. • DSC HU/CM ground malfunction (When DSC HU/CM ground is not securely connected, ABS warning light, brake system warning light, TCS/DSC indicator light, and TCS OFF indicator light illuminate but diagnostic trouble code does not display.) • DSC HU/CM does not operate. • PCM detected malfunction. • Error signal input from PCM • Communication error between DSC HU/CM and instrument cluster • Communication error between DSC HU/CM and PCM • Communication error between DSC HU/CM and EPS CM • After replacing SAS control module low-G sensor and yaw rate sensor initialization have not been performed. • After replacing DSC HU/CM brake fluid pressure sensor initialization has not been performed. • Non-completion of module configuration (When module configuration does not carried out, after replacing DSC HU/CM, ABS warning light will stay on.) • DSC HU/CM internal malfunction

04

Diagnostic procedure

STEP	INSPECTION		ACTION
1	**CONFIRM DSC HU/CM DTC** • Retrieve the DSC HU/CM DTC using the M-MDS (IDS). (See 04-02A-7 ON-BOARD DIAGNOSIS [DYNAMIC STABILITY CONTROL (DSC)].) • Are any DTCs present?	Yes	Go to the applicable DTC inspection. (See 04-02A-7 ON-BOARD DIAGNOSIS [DYNAMIC STABILITY CONTROL (DSC)].)
		No	If communication error message is displayed on the M-MDS (IDS) screen: • Go to the next step. If communication error message is not displayed: • Go to Step 6.
2	**INSPECT CONNECTION OF DSC HU/CM CONNECTOR** • Inspect for connection of the DSC HU/CM connector. • Is the DSC HU/CM connector connected securely?	Yes	Go to the next step.
		No	Connect the DSC HU/CM connector securely, then go to Step 6.
3	**INSPECT DSC HU/CM POWER SUPPLY FUSE** • Inspect the DSC HU/CM ignition power supply fuse. • Is the fuse normal?	Yes	Go to the next step.
		No	Inspect the blown fuse's circuit for short to ground. Repair or replace the wiring harness for a possible short to ground as necessary. Install appropriate amperage fuse.
*4	**VERIFY WHETHER MALFUNCTION IS IN WIRING HARNESS (BETWEEN DSC HU/CM POWER SUPPLY AND DSC HU/CM FOR CONTINUITY) OR ELSEWHERE** • Switch the ignition to ON. • Measure the voltage at the DSC HU/CM terminal Q (wiring harness-side). • Is the voltage **approx. 12 V**?	Yes	Go to the next step.
		No	Inspect for open circuit between DSC HU/CM and ignition. Repair or replace the wiring harness for a possible open circuit as necessary.
*5	**VERIFY WHETHER MALFUNCTION IS IN WIRING HARNESS (BETWEEN DSC HU/CM AND GND FOR CONTINUITY) OR ELSEWHERE** • Switch the ignition to off. • Disconnect the DSC HU/CM connector. • Inspect for continuity between DSC HU/CM terminal AL (wiring harness-side) and body ground. • Is there continuity?	Yes	Replace the DSC HU/CM. (open circuit in the DSC HU/CM) (See 04-15-4 DSC HU/CM REMOVAL/INSTALLATION.)
		No	Repair or replace the wiring harness for a possible open circuit and poor contact in ground point.

SYMPTOM TROUBLESHOOTING [DYNAMIC STABILITY CONTROL (DSC)]

STEP	INSPECTION		ACTION
6	**CONFIRM PCM DTCs** • Retrieve the PCM DTCs using the M-MDS (IDS). (See 01-02-8 ON-BOARD DIAGNOSTIC TEST [SKYACTIV-G 2.0].) • Are any DTCs present?	Yes	Go to the applicable DTC inspection. (See 01-02-14 DTC TABLE [SKYACTIV-G 2.0].)
		No	Go to the next step.
7	**VERIFY IF MALFUNCTION CAUSED BY INITIALIZATION PROCEDURE FOR MODULE NOT PERFORMED** • Verify if malfunction caused by initialization procedure for brake fluid pressure sensor not performed. • Has the initial setting for the brake fluid pressure sensor been performed after replacing the DSC HU/CM?	Yes	Go to the next step.
		No	Perform the brake fluid pressure sensor initial setting. (See 04-15-7 DSC RELATED PARTS SENSOR INITIALIZATION PROCEDURE.)
8	**VERIFY IF MALFUNCTION CAUSED BY INITIALIZATION PROCEDURE FOR LOW-G SENSOR NOT PERFORMED** • Verify if malfunction caused by initialization procedure for low-G sensor not performed. • Has the initial setting for the low-G sensor been performed after replacing the DSC HU/CM and the SAS control module?	Yes	Go to the next step.
		No	Perform the low-G sensor initial setting. (See 04-15-7 DSC RELATED PARTS SENSOR INITIALIZATION PROCEDURE.)
9	**VERIFY IF MALFUNCTION CAUSED BY INITIALIZATION PROCEDURE FOR YAW RATE SENSOR NOT PERFORMED** • Verify if malfunction caused by initialization procedure for yaw rate sensor not performed. • Has the initial setting for the yaw rate sensor been performed after replacing the DSC HU/CM and the SAS control module?	Yes	Go to the next step.
		No	Perform the yaw rate sensor initial setting. (See 04-15-7 DSC RELATED PARTS SENSOR INITIALIZATION PROCEDURE.)
10	**VERIFY WHETHER MALFUNCTION IS IN INSTRUMENT CLUSTER OR DSC HU/CM** • Connect the M-MDS (IDS) to the DLC-2. • Turn off and on all warning light and indicator lights using the instrument cluster PID WL+IL of active command modes. (See 09-02G-38 ACTIVE COMMAND MODES INSPECTION [INSTRUMENT CLUSTER].) • Do the ABS warning light, brake system warning light, TCS/DSC indicator light and DSC OFF indicator light turn on and off according to the active command modes?	Yes	Replace the DSC HU/CM. (Internal malfunction) (See 04-15-4 DSC HU/CM REMOVAL/INSTALLATION.)
		No	Replace the instrument cluster. (See 09-22-6 INSTRUMENT CLUSTER REMOVAL/INSTALLATION.)

- When performing an asterisked (*) troubleshooting inspection, shake the wiring harness and connectors while doing the inspection to discover whether poor contact points are the cause of any intermittent malfunctions. If there is a problem, check to make sure connectors, terminals and wiring harness are connected correctly and undamaged.

SYMPTOM TROUBLESHOOTING [DYNAMIC STABILITY CONTROL (DSC)]

NO.3 BRAKE SYSTEM WARNING LIGHT STAY ON [DYNAMIC STABILITY CONTROL (DSC)]

id0403b2895800

3	Brake system warning lights stay on
POSSIBLE CAUSE	• Brake fluid amount is low. • Parking brake does not release. • Parking brake switch or brake fluid level sensor stuck on. • Short to ground in following circuit: — Between parking brake switch and instrument cluster — Between brake fluid level sensor and front body control module (FBCM) • No connection at DSC HU/CM connector (When DSC HU/CM connector comes off, ABS warning light, brake system warning light, TCS/DSC indicator light, and TCS OFF indicator light illuminate.) • DSC HU/CM detected malfunction. (Input and output device malfunction) • DSC HU/CM detects low voltage in power supply. • DSC HU/CM ground malfunction (When DSC HU/CM ground is not securely connected, ABS warning light, brake system warning light, TCS/DSC indicator light, and TCS OFF indicator light illuminate but diagnostic trouble code does not display.) • DSC HU/CM does not operate. • Front body control module (FBCM) detected malfunction. • DSC HU/CM internal malfunction • Instrument cluster detected malfunction

Diagnostic procedure

STEP	INSPECTION		ACTION
1	**INSPECT BRAKE FLUID AMOUNT AND VERIFY THAT PARKING BRAKE RELEASED** • Inspect the brake fluid amount and verify that the parking brake released. • Is the brake fluid amount normal? • Is the parking brake lever released?	Yes	Go to the next step.
		No	Add the brake fluid or release the parking brake lever. If the brake fluid refilled: • Inspect and repair the brake line for leakage.
2	**CONFIRM DSC HU/CM DTC** • Retrieve the DSC HU/CM DTC using the M-MDS (IDS). (See 04-02A-7 ON-BOARD DIAGNOSIS [DYNAMIC STABILITY CONTROL (DSC)].) • Are any DTCs present?	Yes	Go to the applicable DTC inspection. (See 04-02A-7 ON-BOARD DIAGNOSIS [DYNAMIC STABILITY CONTROL (DSC)].)
		No	If communication error message is displayed on the M-MDS (IDS) screen: • Go to the next step. If communication error message is not displayed: • Go to Step 4.
3	**INSPECT CONNECTION OF DSC HU/CM CONNECTOR** • Inspect for connection of the DSC HU/CM connector. • Is the DSC HU/CM connector connected securely?	Yes	Go to the next step.
		No	Connect the DSC HU/CM connector securely, then go to the next step.
4	**CONFIRM INSTRUMENT CLUSTER OPERATION RECORD** • Retrieve the warning system operation history using the M-MDS (IDS). (See 09-22-20 INSTRUMENT CLUSTER OPERATION RECORD.) • Is the brake system warning light illumination history recorded?	Yes	If the Brake Waning Lamp recorded: • Go to Step 5. If the Brake Waning Lamp (Brake fluid low) recorded: • Go to Step 6. If the Brake Waning Lamp (Parking Brake ON over 20 km/h or 12.4 mile/h) recorded: • Go to Step 8.
		No	Go to Step 10.
5	**VERIFY WHETHER MALFUNCTION IS IN INSTRUMENT CLUSTER OR ELSEWHERE** • Connect the M-MDS (IDS) to the DLC-2. • Turn off and on all warning light and indicator lights using the instrument cluster PID WL+IL of active command modes. (See 09-02G-38 ACTIVE COMMAND MODES INSPECTION [INSTRUMENT CLUSTER].) • Do the ABS warning light, brake system warning light, TCS/DSC indicator light and DSC OFF indicator light turn on and off according to the active command modes?	Yes	Go to Step 10.
		No	Replace the instrument cluster. (See 09-22-6 INSTRUMENT CLUSTER REMOVAL/INSTALLATION.)

SYMPTOM TROUBLESHOOTING [DYNAMIC STABILITY CONTROL (DSC)]

STEP	INSPECTION		ACTION
6	**INSPECT WHETHER MALFUNCTION IS IN BRAKE FLUID LEVEL SENSOR OR ELSEWHERE** • Inspect the brake fluid level sensor for continuity. (See 04-11-14 BRAKE FLUID LEVEL SENSOR INSPECTION.) • Is the continuity condition normal?	Yes	Go to the next step.
		No	Replace the malfunctioning part. (See 04-11-11 MASTER CYLINDER REMOVAL/INSTALLATION.)
*7	**INSPECT FOR SHORT TO GROUND IN WIRING HARNESS BETWEEN FRONT BODY CONTROL MODULE (FBCM) AND BRAKE FLUID LEVEL SWITCH** • Inspect for short to ground in the following circuit: — Between brake fluid level switch and front body control module (FBCM) terminal 2Q • Is the short to ground detected?	Yes	Repair or replace the wiring harness for a possible short to ground.
		No	Retrieve the front body control module (FBCM) DTC using the M-MDS (IDS). (See 09-02K-10 DTC INSPECTION [FRONT BODY CONTROL MODULE (FBCM)].) If the DTC remains: • Go to the applicable DTC inspection. (See 09-02K-13 DTC TABLE [FRONT BODY CONTROL MODULE (FBCM)].) If the DTC does not remain: • Replace the front body control module (FBCM). (See 09-40-2 FRONT BODY CONTROL MODULE (FBCM) REMOVAL/INSTALLATION.)
8	**INSPECT WHETHER MALFUNCTION IS IN PARKING BRAKE SWITCH OR ELSEWHERE** • Inspect the following parts for continuity: — Parking brake switch (See 04-12-8 PARKING BRAKE SWITCH INSPECTION.) • Is the continuity condition normal?	Yes	Go to the next step.
		No	Replace the malfunctioning part. (See 04-12-3 PARKING BRAKE LEVER REMOVAL/INSTALLATION.)
*9	**INSPECT FOR SHORT TO GROUND IN WIRING HARNESS BETWEEN INSTRUMENT CLUSTER AND PARKING BRAKE SWITCH** • Inspect for short to ground in the following circuit: — Between parking brake switch and instrument cluster terminal 2X • Is the short to ground detected?	Yes	Repair or replace the wiring harness for a possible short to ground.
		No	Retrieve the instrument cluster DTC using the M-MDS (IDS). (See 09-02G-7 DTC INSPECTION [INSTRUMENT CLUSTER].) If the DTC remains: • Go to the applicable DTC inspection. (See 09-02G-10 DTC TABLE [INSTRUMENT CLUSTER].) If the DTC does not remain: • Replace the instrument cluster. (See 09-22-6 INSTRUMENT CLUSTER REMOVAL/INSTALLATION.)
10	**INSPECT DSC HU/CM POWER SUPPLY FUSE** • Inspect the DSC HU/CM ignition power supply fuse. • Is the fuse normal?	Yes	Go to the next step.
		No	Inspect the blown fuse's circuit for short to ground. Repair or replace the wiring harness for a possible short to ground as necessary. Install appropriate amperage fuse.
*11	**VERIFY WHETHER MALFUNCTION IS IN WIRING HARNESS (BETWEEN DSC HU/CM POWER SUPPLY AND DSC HU/CM FOR CONTINUITY) OR ELSEWHERE** • Switch the ignition to ON. • Measure the voltage at the DSC HU/CM terminal Q (wiring harness-side). • Is the voltage **approx. 12 V**?	Yes	Go to the next step.
		No	Inspect for open circuit between DSC HU/CM and ignition. Repair or replace the wiring harness for a possible open circuit as necessary.
*12	**VERIFY WHETHER MALFUNCTION IS IN WIRING HARNESS (BETWEEN DSC HU/CM AND GROUND FOR CONTINUITY) OR ELSEWHERE** • Switch the ignition to off. • Disconnect the DSC HU/CM connector. • Inspect for continuity between DSC HU/CM terminal AL (wiring harness-side) and body ground. • Is there continuity?	Yes	Replace the DSC HU/CM. (open circuit in the DSC HU/CM) (See 04-15-4 DSC HU/CM REMOVAL/INSTALLATION.)
		No	Repair or replace the wiring harness for a possible open circuit and poor contact in ground point.

SYMPTOM TROUBLESHOOTING [DYNAMIC STABILITY CONTROL (DSC)]

- When performing an asterisked (*) troubleshooting inspection, shake the wiring harness and connectors while doing the inspection to discover whether poor contact points are the cause of any intermittent malfunctions. If there is a problem, check to make sure connectors, terminals and wiring harness are connected correctly and undamaged.

NO.4 THERE IS A MALFUNCTION IN THE SYSTEM EVEN THOUGH ABS WARNING LIGHT, BRAKE SYSTEM WARNING LIGHT, TCS/DSC INDICATOR LIGHT AND TCS OFF INDICATOR LIGHT DO NOT ILLUMINATE [DYNAMIC STABILITY CONTROL (DSC)]

id0403b2895900

4	**There is a malfunction in the system even though ABS warning light, brake system warning light, TCS/DSC indicator light and DSC OFF indicator light do not illuminate**
POSSIBLE CAUSE	• There is a mechanical malfunction in system.

Diagnostic procedure

STEP	INSPECTION		ACTION
1	**CONFIRM DSC HU/CM DTC** • Retrieve the DSC HU/CM DTC using the M-MDS (IDS). (See 04-02A-7 ON-BOARD DIAGNOSIS [DYNAMIC STABILITY CONTROL (DSC)].) • Are any DTCs present?	Yes	Go to the applicable DTC inspection. (See 04-02A-7 ON-BOARD DIAGNOSIS [DYNAMIC STABILITY CONTROL (DSC)].)
		No	Go to the next step.
2	**VERIFY SOLENOID VALVE OPERATION** • Switch the ignition to off. • Connect the M-MDS (IDS) to the DLC-2. • Switch the ignition to ON (engine off). • Access the active command mode for the solenoid valve using the M-MDS (IDS). (See 04-02A-7 ON-BOARD DIAGNOSIS [DYNAMIC STABILITY CONTROL (DSC)].) • Does the solenoid valve operate?	Yes	Inspect the conventional brake system. If there is a malfunction: • Repair or replace any malfunctioning parts according to the inspection result.
		No	Repair or replace any malfunctioning parts according to the inspection result.

NO.5 ABS OR TCS*1 OPERATES FREQUENTLY/TCS DOES NOT WORK CORRECTLY *1: DSC SYSTEM FUNCTION CONTAINS TRACTION CONTROL FUNCTION, TCS/DSC INDICATOR LIGHT GOES ON AND OFF WHILE TCS OPERATES [DYNAMIC STABILITY CONTROL (DSC)]

id0403b2896000

5	**ABS or TCS*1 operates frequently** **TCS does not work correctly** ***1: DSC system function contains traction control function, TCS/DSC indicator light goes on and off while TCS operates**
POSSIBLE CAUSE	• There is a difference in size or air pressure between front and rear tires. • Incorrect ABS wheel-speed signal is inputted to DSC HU/CM. • There is a malfunction in engine control system. (TCS malfunction)

Diagnostic procedure

STEP	INSPECTION		ACTION
1	**CONFIRM DSC HU/CM AND PCM DTC** • Retrieve the DSC HU/CM DTC using the M-MDS (IDS). (See 04-02A-7 ON-BOARD DIAGNOSIS [DYNAMIC STABILITY CONTROL (DSC)].) • Retrieve the PCM DTC using the M-MDS (IDS), if the traction control function has problem. (See 01-02-8 ON-BOARD DIAGNOSTIC TEST [SKYACTIV-G 2.0].) • Are any DTCs present?	Yes	Go to the applicable DTC inspection. (See 04-02A-7 ON-BOARD DIAGNOSIS [DYNAMIC STABILITY CONTROL (DSC)].) (See 01-02-14 DTC TABLE [SKYACTIV-G 2.0].)
		No	Go to the next step.
2	**INSPECT TIRE SIZE AND AIR PRESSURE** • Inspect tire size and air pressure. • Tire size and air pressure as specified?	Yes	Go to the next step.
		No	Replace with specified tires and adjust tire air pressure.

SYMPTOM TROUBLESHOOTING [DYNAMIC STABILITY CONTROL (DSC)]

STEP	INSPECTION		ACTION
*3	**INSPECT ABS WHEEL-SPEED SENSOR OUTPUT PULSE** • Perform the Voltage Pattern Inspection for each ABS wheel-speed sensor. (See 04-15-10 FRONT ABS WHEEL-SPEED SENSOR INSPECTION.) (See 04-15-13 REAR ABS WHEEL-SPEED SENSOR INSPECTION [2WD].) (See 04-15-13 REAR ABS WHEEL-SPEED SENSOR INSPECTION [4WD].) • Is the output voltage pattern normal?	Yes	Found malfunctioning part according to the “INTERMITTENT CONCERN TROUBLESHOOTING”. (See 04-03-6 PRECAUTION [DYNAMIC STABILITY CONTROL (DSC)].)
		No	ABS wheel-speed sensor installation inspection: • Inspect the ABS wheel-speed sensor for looseness and confirm it is securely adhered. ABS sensor rotor installation inspection: • Inspect the ABS sensor rotor for poor installation. Repair or replace any malfunctioning parts according to the inspection result.

- When performing an asterisked (*) troubleshooting inspection, shake the wiring harness and connectors while doing the inspection to discover whether poor contact points are the cause of any intermittent malfunctions. If there is a problem, check to make sure connectors, terminals and wiring harness are connected correctly and undamaged.

NO.6 DSC*2 OPERATES FREQUENTLY/DSC DOES NOT WORK CORRECTLY *2: TCS/DSC INDICATOR LIGHT GOES ON AND OFF WHILE DSC OPERATES [DYNAMIC STABILITY CONTROL (DSC)]

id0403b2896100

6	**DSC*2 operates frequently** **DSC does not work correctly** ***2: TCS/DSC indicator light goes on and off while DSC operates**
POSSIBLE CAUSE	• DSC HU/CM detected malfunction. (Input and output device malfunction) • There is a difference in size or air pressure between front or rear tires. • Poor installation with SAS control module (yaw rate sensor, low-G sensor) (If SAS control module is poorly installed, DSC may operate intermittently.) • When replacing DSC HU/CM initialization is not performed. (If initialization is not performed correctly, DSC may not work correctly.) • Incorrect ABS wheel speed sensor is inputted to DSC HU/CM.

Diagnostic procedure

STEP	INSPECTION		ACTION
1	**CONFIRM DSC HU/CM DTC** • Retrieve the DSC HU/CM DTC using the M-MDS (IDS). (See 04-02A-7 ON-BOARD DIAGNOSIS [DYNAMIC STABILITY CONTROL (DSC)].) • Are any DTCs present?	Yes	Go to the applicable DTC inspection. (See 04-02A-7 ON-BOARD DIAGNOSIS [DYNAMIC STABILITY CONTROL (DSC)].)
		No	Go to the next step.
2	**VERIFY THAT SAS CONTROL MODULE IS INSTALLED** • Verify that each sensor is installed. • Is SAS control module (yaw rate sensor, low-G sensor) securely installed?	Yes	Go to the next step.
		No	Install the malfunctioning sensor securely.
3	**VERIFY THAT BRAKE FLUID PRESSURE SENSOR IS INITIALIZED** • Verify that each sensor is initialized. • Has the initialization for the DSC HU/CM been performed after replacing the DSC HU/CM and the SAS control module?	Yes	Go to the next step.
		No	Perform the initialization procedure. (See 04-15-7 DSC RELATED PARTS SENSOR INITIALIZATION PROCEDURE.)
4	**INSPECT TIRE SIZE AND AIR PRESSURE** • Inspect tire size and air pressure. • Tire size and air pressure as specified?	Yes	Go to the next step.
		No	Replace with specified tires and adjust tire air pressure.
5*	**INSPECT ABS WHEEL-SPEED SENSOR OUTPUT PULSE** • Perform the Voltage Pattern Inspection for each ABS wheel-speed sensor. (See 04-15-10 FRONT ABS WHEEL-SPEED SENSOR INSPECTION.) (See 04-15-13 REAR ABS WHEEL-SPEED SENSOR INSPECTION [2WD].) (See 04-15-13 REAR ABS WHEEL-SPEED SENSOR INSPECTION [4WD].) • Is the output voltage pattern normal?	Yes	Found malfunctioning part according to the “INTERMITTENT CONCERN TROUBLESHOOTING”. (See 04-03-6 PRECAUTION [DYNAMIC STABILITY CONTROL (DSC)].)
		No	ABS wheel-speed sensor installation inspection: • Inspect the ABS wheel-speed sensor for looseness and confirm it is securely adhered. ABS sensor rotor installation inspection: • Inspect the ABS sensor rotor for poor installation. Repair or replace any malfunctioning parts according to the inspection result.

SYMPTOM TROUBLESHOOTING [DYNAMIC STABILITY CONTROL (DSC)]

- When performing an asterisked (*) troubleshooting inspection, shake the wiring harness and connectors while doing the inspection to discover whether poor contact points are the cause of any intermittent malfunctions. If there is a problem, check to make sure connectors, terminals and wiring harness are connected correctly and undamaged.

NO.7 TCS/DSC INDICATOR LIGHT FLASHES (WHEN NEITHER THE TCS NOR THE DSC ARE OPERATING) [DYNAMIC STABILITY CONTROL (DSC)]

id0403b2896200

7	TCS/DSC indicator light flashes (when neither the TCS nor the DSC are operating)
POSSIBLE CAUSE	• Non-completion of DSC related parts sensor initialization. (If the initialization is not carried out after replacing the DSC HU/CM and/or SAS control module, a TCS/DSC indicator light will flash. In this case, the DSC is not detected.)

Diagnostic procedure

STEP	INSPECTION		ACTION
1	**INSPECT CONNECTION OF DSC HU/CM AND SAS CONTROL MODULE CONNECTORS** • Inspect for connection of DSC HU/CM and SAS control module (yaw rate sensor, low-G sensor) connectors. • Are DSC HU/CM and SAS control module connectors connected securely?	Yes	Perform the initialization procedure. (See 04-15-7 DSC RELATED PARTS SENSOR INITIALIZATION PROCEDURE.)
		No	Perform the initialization procedure after connect the suspected connector securely. (See 04-15-7 DSC RELATED PARTS SENSOR INITIALIZATION PROCEDURE.)

NO.8 HILL LAUNCH ASSIST (HLA) OPERATES EVEN ON A DOWNHILL/HILL LAUNCH ASSIST (HLA) DOES NOT OPERATE ON A SLOPE [DYNAMIC STABILITY CONTROL (DSC)]

id0403b2896300

8	**Hill launch assist (HLA) operates even on a downhill** **Hill launch assist (HLA) does not operate on a slope**
POSSIBLE CAUSE	**Note** • HLA operates on an up slope of **about 3% or more** when the shift lever is in a position other than the reverse (R) position. (MTX) • HLA operates on an up slope of **about 6% or more** when selector lever position is in a forward gear. (ATX) • HLA operates on a down slope of **about 3% or more** when shift lever is in a reverse (R) position. (MTX) • HLA operates on a down slope of **about 6% or more** when selector lever is in a R position. (ATX) • HLA operates for a maximum of **2 s** after releasing brake pedal. • DSC HU/CM detects a malfunction (Input/output device malfunction). • PCM and/or instrument cluster detect a malfunction. • SAS control module installation malfunction (If there is a malfunction resulting from SAS control module removal, HLA may not operate at desired inclination angle.) • Tire malfunction (Differing air pressure on four wheels, use of tires with differing conditions of wear) • DSC HU/CM initial setting and low-G sensor initialization have not been performed after replacing DSC HU/CM and SAS control module. (If initial setting and initialization are not performed, HLA may not operate at desired inclination angle.) • Center point of low-G sensor has deviated. • Input signal malfunction from ABS wheel-speed sensor • Input signal malfunction from PCM (Engine torque signal, engine speed signal, accelerator pedal position signal, reverse gear signal, and clutch pedal signal) • Input signal malfunction from instrument cluster (Parking brake signal) • Input signal malfunction from TCM (Selector lever position signal) • Communication error between DSC HU/CM and PCM • Communication error between DSC HU/CM and instrument cluster • Brake (foot brake/parking brake) drag

SYMPTOM TROUBLESHOOTING [DYNAMIC STABILITY CONTROL (DSC)]

Diagnostic procedure

STEP	INSPECTION		ACTION
1	**VERIFY DTC FOR RELATED MODULES** • Retrieve the DSC HU/CM, PCM, TCM (ATX) and instrument cluster DTC using the M-MDS. (See 04-02A-7 ON-BOARD DIAGNOSIS [DYNAMIC STABILITY CONTROL (DSC)].) (See 01-02-8 ON-BOARD DIAGNOSTIC TEST [SKYACTIV-G 2.0].) (See 05-02A-7 ON-BOARD DIAGNOSTIC SYSTEM DTC INSPECTION [FW6A-EL, FW6AX-EL].) (See 09-02G-7 DTC INSPECTION [INSTRUMENT CLUSTER].) • Are any DTCs present?	Yes	Go to the applicable DTC inspection. (See 04-02A-7 ON-BOARD DIAGNOSIS [DYNAMIC STABILITY CONTROL (DSC)].) (See 01-02-14 DTC TABLE [SKYACTIV-G 2.0].) (See 05-02A-11 ON-BOARD DIAGNOSTIC SYSTEM DTC TABLE [FW6A-EL, FW6AX-EL].) (See 09-02G-10 DTC TABLE [INSTRUMENT CLUSTER].)
		No	Go to the next step.
2	**VERIFY IF FALSE DETECTION OF INCLINATION ANGLE CAUSED BY MALFUNCTIONING SAS CONTROL MODULE INSTALLATION** • Inspect the SAS control module installation condition for the following: — Is the module installed with any twisting? — Is the module installed correctly?	Yes	Go to the next step.
		No	Repair the SAS control module installation condition. (See 08-10-20 SAS CONTROL MODULE REMOVAL/INSTALLATION.)
3	**VERIFY IF MALFUNCTION CAUSED BY INITIALIZATION PROCEDURE FOR LOW-G SENSOR NOT PERFORMED** • Verify if malfunction caused by initialization procedure for low-G sensor not performed. • Has the initialization for the low-G sensor been performed after replacing the DSC HU/CM and the SAS control module?	Yes	Go to the next step.
		No	Perform the initialization procedure. (See 04-15-7 DSC RELATED PARTS SENSOR INITIALIZATION PROCEDURE.)
4	**VERIFY IF MALFUNCTION CAUSED BY TIRE MALFUNCTION PERFORMED** • Inspect the tire pressure and condition. • Are tire pressure and condition normal?	Yes	Go to the next step.
		No	If the pressure is incorrect, adjust the tire pressure to the specification. If the tires are worn, replace the tires.

SYMPTOM TROUBLESHOOTING [DYNAMIC STABILITY CONTROL (DSC)]

STEP	INSPECTION		ACTION
5	**INSPECT RELATED MODULES FOR MALFUNCTION CAUSED BY FALSE SIGNAL** • Access the following DSC HU/CM, PCM and instrument cluster PIDs using the M-MDS: (See 04-02A-7 ON-BOARD DIAGNOSIS [DYNAMIC STABILITY CONTROL (DSC)].) (See 01-40-17 PCM INSPECTION [SKYACTIV-G 2.0].) (See 05-02A-94 ON-BOARD DIAGNOSTIC SYSTEM PID/DATA MONITOR INSPECTION [FW6A-EL, FW6AX-EL].) (See 09-02G-37 PID/DATA MONITOR INSPECTION [INSTRUMENT CLUSTER].) **DSC HU/CM** — BRAKE_SW (Brake signal) — LON_ACCL_C (Low-G sensor (longitudinal G) calculated value signal) — LON_ACCL_R (Low-G sensor (longitudinal G) raw value signal) — BRK_F_P_C (Brake fluid pressure calculated value signal) — BRK_F_P_R (Brake fluid pressure raw value signal) — WSPD_LF (ABS wheel-speed sensor (LF) signal) — WSPD_RF (ABS wheel-speed sensor (RF) signal) — WSPD_LR (ABS wheel-speed sensor (LR) signal) — WSPD_RR (ABS wheel-speed sensor (RR) signal) **PCM** — RPM (Engine speed signal) — APP (APP sensor signal) — CPP (Clutch pedal signal: MTX) — M_GEAR (Manual gear position signal: MTX) — GEAR (Gear commanded signal: ATX) **TCM (ATX)** — TR (Transaxle range sensor signal) **INSTRUMENT CLUSTER** — P_BRAKE_SW (Parking brake signal) • Are all PID values normal?	Yes	Inspect the following: • Brake (foot brake/parking brake) drag • Engine output malfunction Repair or replace any malfunctioning parts according to the inspection result.
		No	Inspect the related parts and wiring harness. Repair or replace any malfunctioning parts according to the inspection result.

SYMPTOM TROUBLESHOOTING [DYNAMIC STABILITY CONTROL (DSC)]

NO.9 MASTER WARNING LIGHT STAY ON AND A MESSAGE "SCBS Inspection Required" IS INDICATED IN THE DISPLAY [DYNAMIC STABILITY CONTROL (DSC)]

id0403b2896400

9	Master warning light stay on and a message “SCBS Inspection Required” is indicated in the display*
POSSIBLE CAUSE	• Laser sensor detects a malfunction. • DSC HU/CM internal malfunction. • DSC HU/CM detected malfunction (input and output device malfunction). • PCM and/or instrument cluster detect a malfunction.

* : Vehicle with TFT LCD display.

Diagnostic procedure

STEP	INSPECTION		ACTION
1	**CONFIRM LASER SENSOR DTC** • Retrieve the DSC HU/CM and laser sensor DTC using the M-MDS. (See 04-02B-6 ON-BOARD DIAGNOSIS [LASER SENSOR].) • Are any DTCs present?	Yes	Go to the applicable DTC inspection. (See 04-02B-6 ON-BOARD DIAGNOSIS [LASER SENSOR].)
		No	Go to the next step.
2	**CONFIRM DSC HU/CM DTC** • Retrieve the DSC HU/CM and laser sensor DTC using the M-MDS. (See 04-02A-7 ON-BOARD DIAGNOSIS [DYNAMIC STABILITY CONTROL (DSC)].) • Are any DTCs present?	Yes	Go to the applicable DTC inspection. (See 04-02A-7 ON-BOARD DIAGNOSIS [DYNAMIC STABILITY CONTROL (DSC)].)
		No	Go to the next step.
3	**CONFIRM PCM DTC** • Retrieve the PCM DTC using the M-MDS. (See 01-02-8 ON-BOARD DIAGNOSTIC TEST [SKYACTIV-G 2.0].) • Are any DTCs present?	Yes	Go to the applicable DTC inspection. (See 01-02-14 DTC TABLE [SKYACTIV-G 2.0].)
		No	Retrieve the instrument cluster DTC using the M-MDS. (See 09-02G-7 DTC INSPECTION [INSTRUMENT CLUSTER].) • If any DTCs are present, go to the applicable DTC inspection. (See 09-02G-10 DTC TABLE [INSTRUMENT CLUSTER].) • If there is not a DTC, replace the instrument cluster. (See 09-22-6 INSTRUMENT CLUSTER REMOVAL/INSTALLATION.)

04-10 GENERAL PROCEDURES

GENERAL PROCEDURES (BRAKE) . . . 04-10–1
Wheel and Tire Installation **04-10–1**
Brake Lines Disconnection. **04-10–1**
Brake Pipe Flare Nut Tightening **04-10–1**
Connector Disconnection. **04-10–1**
DSC Related Parts **04-10–1**
DSC Related Part Sensor
Initialization Procedure **04-10–1**
Tire Pressure Monitoring System
Initialization Procedure **04-10–2**

GENERAL PROCEDURES

GENERAL PROCEDURES (BRAKE)

id041000800100

Wheel and Tire Installation

1. When installing the wheels and tires, tighten the wheel nuts in a criss-cross pattern to the following tightening torque.

   Tightening torque
   108—147 N·m {12—14 Kgf·m, 80—108 ft·lbf}

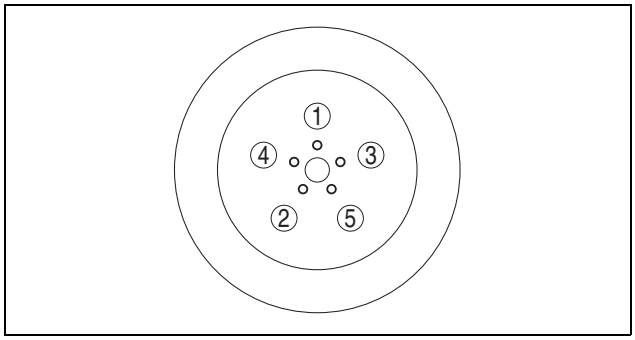

ac5wzw0000037

Brake Lines Disconnection

1. If any brake line has been disconnected during the procedures, add brake fluid, bleed the brakes, and inspect for leakage after the procedure has been completed.

   Caution
   - **Brake fluid will damage painted surfaces. Be careful not to spill any on painted surfaces. If it is spilled, wipe it off immediately.**

Brake Pipe Flare Nut Tightening

1. Tighten the brake pipe flare nut using any commercially available flare nut wrench.

Connector Disconnection

1. Disconnect the negative battery cable before performing any work that requires handling of connectors. (See 01-17A-11 NEGATIVE BATTERY CABLE DISCONNECTION/CONNECTION [SKYACTIV-G 2.0].), (See 01-17A-13 NEGATIVE BATTERY CABLE DISCONNECTION/CONNECTION [SKYACTIV-G 2.0 (WITHOUT i-stop)].), (See 01-17B-9 NEGATIVE BATTERY CABLE DISCONNECTION/CONNECTION [SKYACTIV-D 2.2].)

DSC Related Parts

1. Make sure that there are no DTCs in the DSC memory after working on DSC related parts. If there are any DTCs in the memory, clear them. (See 04-02A-7 ON-BOARD DIAGNOSIS [DYNAMIC STABILITY CONTROL (DSC)].)

DSC Related Part Sensor Initialization Procedure

Warning
- **If the initialization procedure is not completed, the DSC will not operate properly and it might cause an unexpected accident. Therefore, when replacing or removing the following parts, make sure to perform the initialization procedure to insure proper DSC operation.**

1. When replacing or removing the following parts, perform the initialization procedure. (See 04-15-7 DSC RELATED PARTS SENSOR INITIALIZATION PROCEDURE.)
   - DSC HU/CM

GENERAL PROCEDURES

Tire Pressure Monitoring System Initialization Procedure

Caution

- **If the tire pressure monitoring system initialization procedure is performed with the tire pressures not to specification, the system may not operate normally. Therefore, always inspect and adjust the tire pressure of all 4 tires before performing the tire pressure monitoring system initialization procedure.**

Note

- Perform the tire pressure monitoring system initialization when the following operations have been performed: (See 02-12-4 TIRE PRESSURE MONITORING SYSTEM INITIALIZATION PROCEDURE.)
  - Tire pressures have been adjusted
  - Tires or wheels have been replaced
  - Tires have been rotated
  - DSC HU/CM replaced
  - DSC HU/CM connector disconnected
  - Battery replaced
  - Negative battery cable is disconnected

1. Perform the tire pressure monitoring system initialization procedure when the tire pressure monitoring system warning light illuminates. (See 02-12-4 TIRE PRESSURE MONITORING SYSTEM INITIALIZATION PROCEDURE.)

04-11 CONVENTIONAL BRAKE SYSTEM

CONVENTIONAL BRAKE SYSTEM LOCATION INDEX 04-11–2
BRAKE FLUID INSPECTION 04-11–4
BRAKE FLUID AIR BLEEDING 04-11–4
VACUUM LINE INSPECTION 04-11–5
VACUUM HOSE
REMOVAL/INSTALLATION 04-11–5
L.H.D. 04-11–5
R.H.D. 04-11–6
BRAKE PEDAL INSPECTION 04-11–7
Pedal Height Inspection 04-11–7
Pedal Play Inspection 04-11–7
Pedal-to-floor Clearance Inspection . . . 04-11–7
BRAKE PEDAL
REMOVAL/INSTALLATION [L.H.D.] . . . 04-11–8
Brake Pedal Removal Note 04-11–8
Brake Switch Installation Note 04-11–9
BRAKE PEDAL
REMOVAL/INSTALLATION [R.H.D.] . . . 04-11–9
Brake Pedal Removal Note 04-11–10
Brake Switch Installation Note 04-11–10
BRAKE SWITCH INSPECTION 04-11–11
MASTER CYLINDER
REMOVAL/INSTALLATION 04-11–11
Clutch Reserve Hose
Removal Note (MTX) 04-11–13
Clutch Reserve Hose
Installation Note (MTX) 04-11–13
BRAKE FLUID LEVEL
SENSOR INSPECTION 04-11–14
POWER BRAKE UNIT INSPECTION . . . 04-11–14
Without Using SST 04-11–14
Using SST 04-11–15
POWER BRAKE UNIT
REMOVAL/INSTALLATION
[L.H.D.] 04-11–16
POWER BRAKE UNIT
REMOVAL/INSTALLATION
[R.H.D.] 04-11–18
POWER BRAKE UNIT
VACUUM SENSOR
REMOVAL/INSTALLATION 04-11–19
L.H.D. 04-11–19
R.H.D. 04-11–20
VACUUM PUMP INSPECTION 04-11–20
VACUUM PUMP
REMOVAL/INSTALLATION
[SKYACTIV-G 2.0] 04-11–21
Vacuum Pump Removal Note 04-11–22
Vacuum Pump and O-ring
Installation Note 04-11–22
VACUUM PUMP
REMOVAL/INSTALLATION
[SKYACTIV-D 2.2] 04-11–22
Vacuum Pump Removal Note 04-11–23
Vacuum Pump and O-ring
Installation Note 04-11–23
FRONT BRAKE (DISC) INSPECTION . . . 04-11–24
Brake Judder Repair Hints 04-11–24
Disc Plate Thickness Inspection 04-11–26
Disc Pad Thickness Inspection 04-11–26
FRONT BRAKE (DISC)
REMOVAL/INSTALLATION 04-11–27
Disc Pad Installation Note 04-11–28
DISC PAD (FRONT) REPLACEMENT . . . 04-11–28
Disc Pad Installation Note 04-11–29
CALIPER (FRONT)
DISASSEMBLY/ASSEMBLY 04-11–29
Piston Disassembly Note 04-11–30
BRAKE HOSE (FRONT)
REMOVAL/INSTALLATION 04-11–30
REAR BRAKE (DISC) INSPECTION 04-11–31
Brake Judder Repair Hints 04-11–31
Disc Plate Thickness Inspection 04-11–33
Disc Pad Thickness Inspection 04-11–33
REAR BRAKE (DISC)
REMOVAL/INSTALLATION 04-11–34
Caliper Installation Note 04-11–35
Rear Parking Brake
Cable Installation Note 04-11–35
DISC PAD (REAR) REPLACEMENT 04-11–35
CALIPER (REAR)
DISASSEMBLY/ASSEMBLY 04-11–37
Piston Disassembly Note 04-11–37
Dust Seal, Piston Assembly Note 04-11–37
BRAKE HOSE (REAR)
REMOVAL/INSTALLATION 04-11–38

CONVENTIONAL BRAKE SYSTEM

CONVENTIONAL BRAKE SYSTEM LOCATION INDEX

id041100800100

Vehicle front side

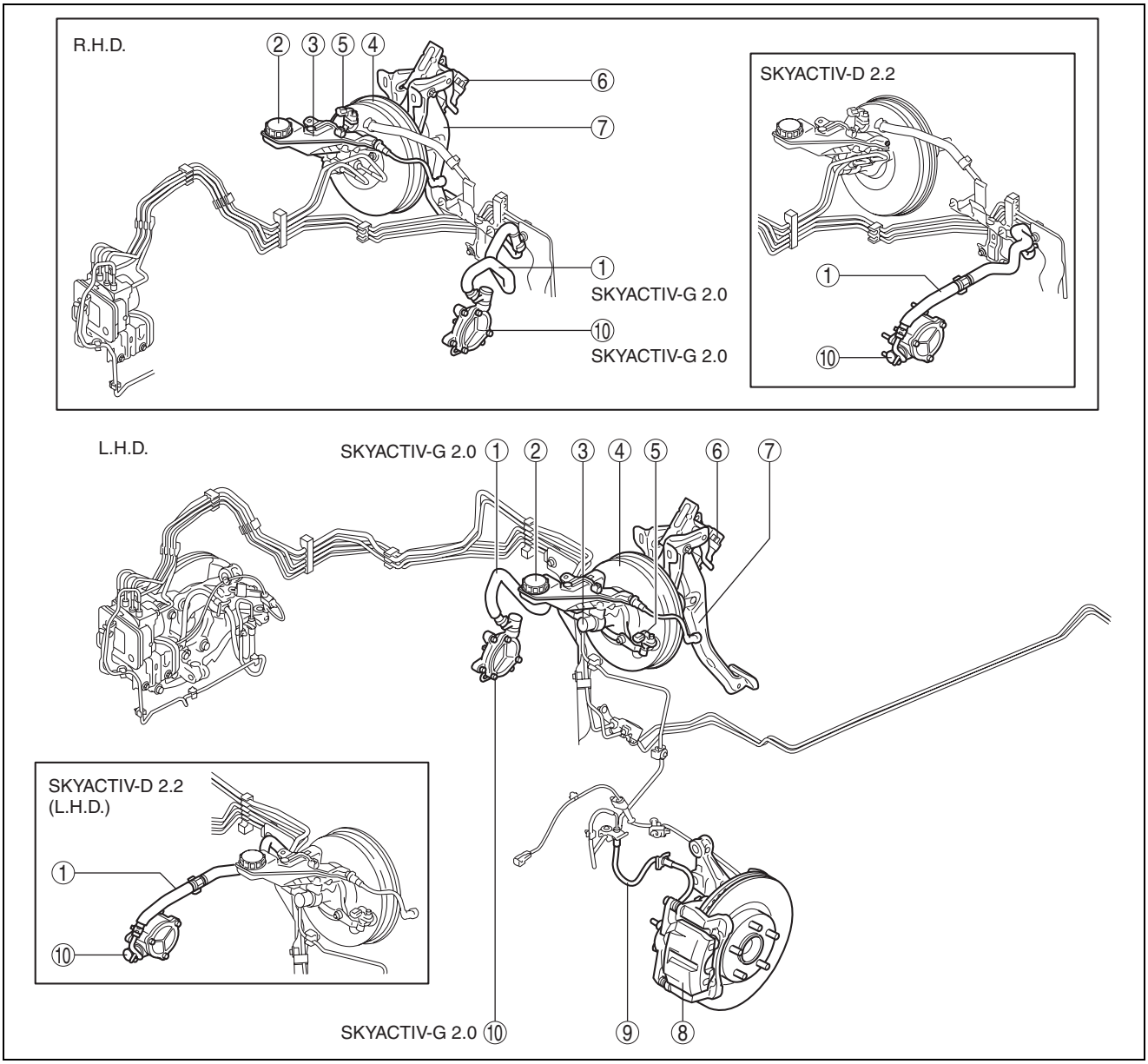

ac5wzw0000084

1	Vacuum line (See 04-11-5 VACUUM LINE INSPECTION.) (See 04-11-5 VACUUM HOSE REMOVAL/INSTALLATION.)
2	Brake fluid (See 04-11-4 BRAKE FLUID INSPECTION.) (See 04-11-4 BRAKE FLUID AIR BLEEDING.)
3	Master cylinder (See 04-11-11 MASTER CYLINDER REMOVAL/INSTALLATION.) (See 04-11-14 BRAKE FLUID LEVEL SENSOR INSPECTION.)
4	Power brake unit (See 04-11-14 POWER BRAKE UNIT INSPECTION.) (See 04-11-16 POWER BRAKE UNIT REMOVAL/INSTALLATION [L.H.D.].) (See 04-11-18 POWER BRAKE UNIT REMOVAL/INSTALLATION [R.H.D.].)
5	Power brake unit vacuum sensor (Vehicles with i-stop) (See 04-11-19 POWER BRAKE UNIT VACUUM SENSOR REMOVAL/INSTALLATION.)
6	Brake switch (See 04-11-11 BRAKE SWITCH INSPECTION.)
7	Brake pedal (See 04-11-7 BRAKE PEDAL INSPECTION.) (See 04-11-8 BRAKE PEDAL REMOVAL/INSTALLATION [L.H.D.].) (See 04-11-9 BRAKE PEDAL REMOVAL/INSTALLATION [R.H.D.].)

CONVENTIONAL BRAKE SYSTEM

8	Front brake (disc) (See 04-11-24 FRONT BRAKE (DISC) INSPECTION.) (See 04-11-27 FRONT BRAKE (DISC) REMOVAL/INSTALLATION.) (See 04-11-28 DISC PAD (FRONT) REPLACEMENT.) (See 04-11-29 CALIPER (FRONT) DISASSEMBLY/ASSEMBLY.)
9	Front brake hose (See 04-11-30 BRAKE HOSE (FRONT) REMOVAL/INSTALLATION.)

10	Vacuum pump (See 04-11-20 VACUUM PUMP INSPECTION.) (See 04-11-21 VACUUM PUMP REMOVAL/INSTALLATION [SKYACTIV-G 2.0].) (See 04-11-22 VACUUM PUMP REMOVAL/INSTALLATION [SKYACTIV-D 2.2].)

Vehicle rear side

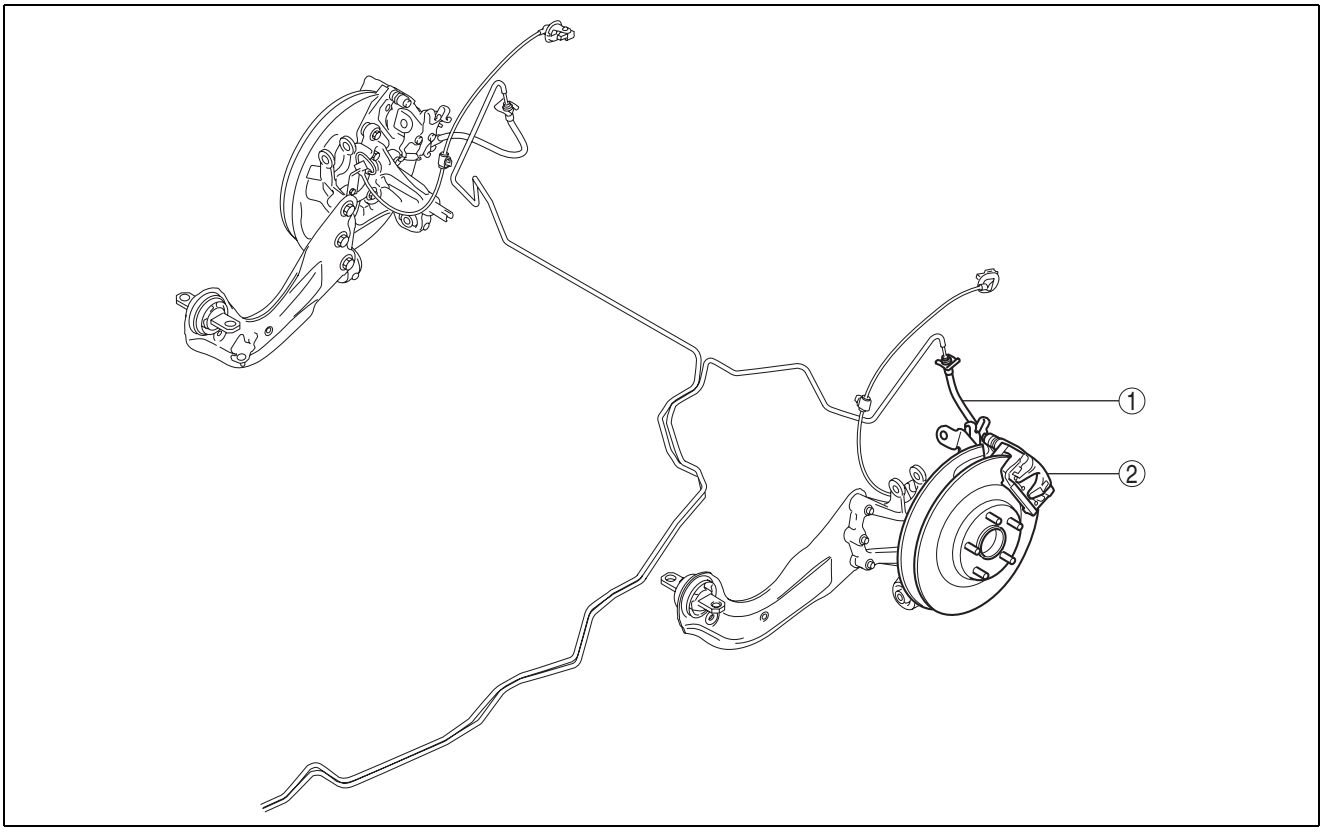

ac5wzw0000242

1	Rear brake hose (See 04-11-38 BRAKE HOSE (REAR) REMOVAL/INSTALLATION.)

2	Rear brake (disc) (See 04-11-31 REAR BRAKE (DISC) INSPECTION.) (See 04-11-34 REAR BRAKE (DISC) REMOVAL/INSTALLATION.) (See 04-11-35 DISC PAD (REAR) REPLACEMENT.) (See 04-11-37 CALIPER (REAR) DISASSEMBLY/ASSEMBLY.)

CONVENTIONAL BRAKE SYSTEM

BRAKE FLUID INSPECTION

id041100815200

1. Verify that the brake fluid level in the brake fluid reserve tank is between the MAX and MIN marks.
   - If the brake fluid level is below the MIN mark, add brake fluid.

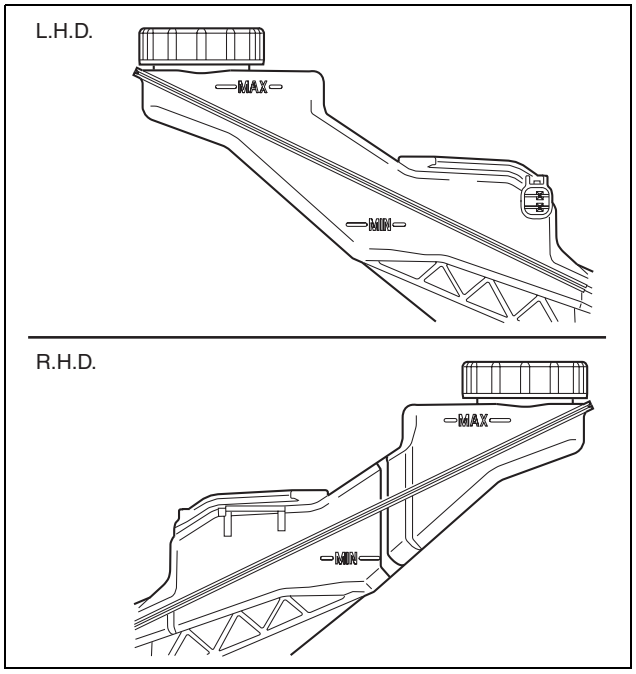

ac5wzw0000021

BRAKE FLUID AIR BLEEDING

id041100815300

Caution
- **Brake fluid will damage painted surfaces. Be careful not to spill any on painted surfaces. If it is spilled, wipe it off immediately.**

Note
- Keep the fluid level in the brake fluid reserve tank at 3/4 full or more during the air bleeding.
- Begin air bleeding with the brake caliper that is furthest from the master cylinder.

Brake fluid type
European (L.H.D. U.K.) specs.: SAE J1703 or FMVSS116 DOT-3 or DOT-4
Australian, China, and General (L.H.D. R.H.D.) specs.: SAE J1703 or FMVSS116 DOT-3

1. Remove the cap from the brake fluid reserved tank and add brake fluid.
2. Remove the bleeder cap on the brake caliper, and attach a vinyl tube to the bleeder screw.
3. Place the other end of the vinyl tube in a clear container and fill the container with fluid during air bleeding.
4. Working with two people, one should pump the brake pedal several times and depress and hold the pedal down.
5. While the brake pedal is depressed, the other should loosen the bleeder screw using a commercially available flare nut wrench, drain out any fluid containing air bubbles, and tighten the bleeder screw.

   Tightening torque
   6.9—9.8 N·m {71—99 kgf·cm, 62—86 in·lbf}

6. Repeat Steps 4 and 5 until no air bubbles are seen.
7. Perform air bleeding as described in the above procedures for all brake calipers.
8. Clean the brake calipers.
9. After air bleeding, inspect the following:
   - Brake operation
   - Fluid leakage
   - Fluid level

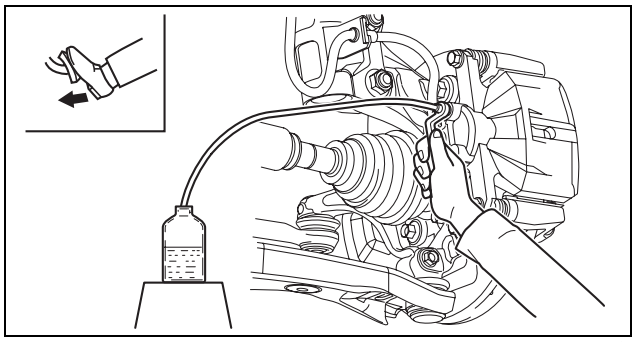

ac5wzw0000218

CONVENTIONAL BRAKE SYSTEM

VACUUM LINE INSPECTION

id041100801500

1. Remove the vacuum hose. (See 04-11-5 VACUUM HOSE REMOVAL/INSTALLATION.)
2. Verify that air can be blown from the power brake unit side of the vacuum hose towards the vacuum pump side, and that air cannot be blown in the opposite direction.

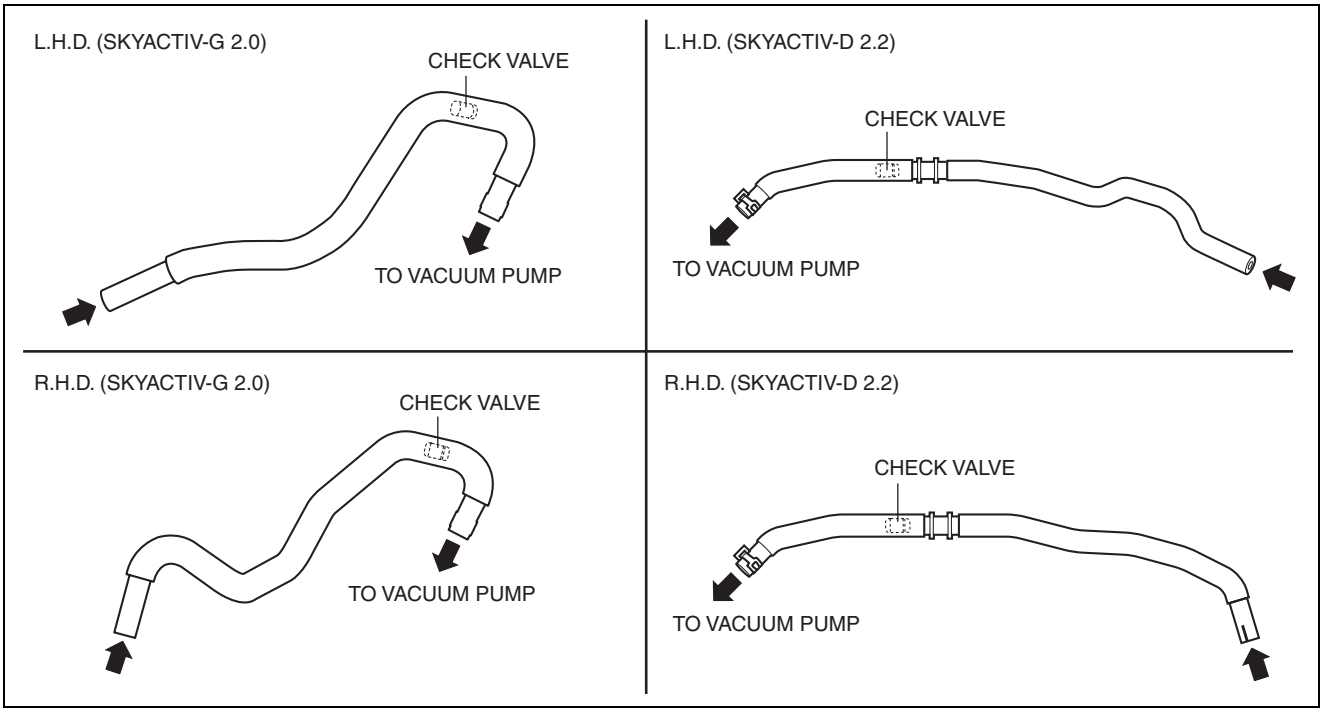

ac5wzw0000020

- If there is any malfunction of the inner check valve, replace it together with the vacuum hose as a single unit.

VACUUM HOSE REMOVAL/INSTALLATION

id041100801600

L.H.D.

1. Remove the engine cover. (SKYACTIV-D 2.2) (See 01-10B-4 ENGINE COVER REMOVAL/INSTALLATION [SKYACTIV-D 2.2].)
2. Pinch open the clamp using pliers and disconnect the vacuum hose.

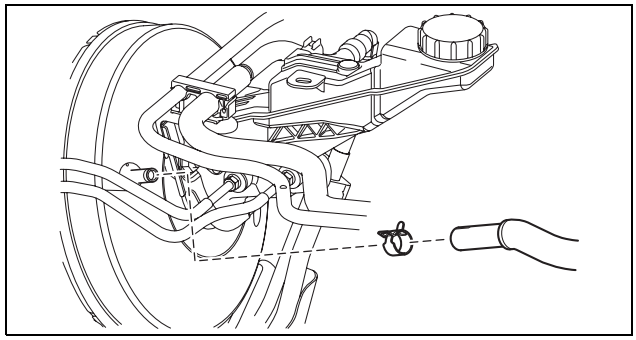

ac5wzw0000021

3. Pinch open the clamp using pliers and disconnect the vacuum hose. (SKYACTIV-G 2.0)

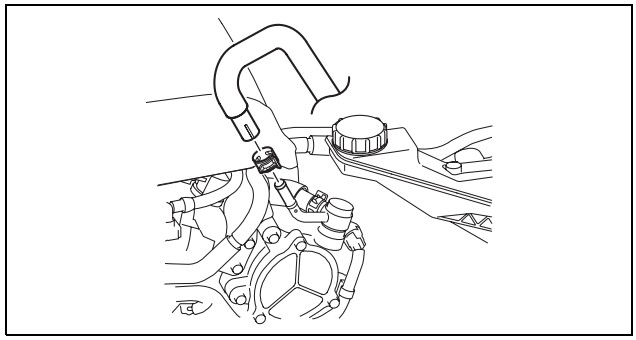

ac5wzw0000021

CONVENTIONAL BRAKE SYSTEM

4. Detach the vacuum hose from the clip. (SKYACTIV-D 2.2)
5. Pinch open the clamp using pliers and disconnect the vacuum hose. (SKYACTIV-D 2.2)
6. Remove the vacuum hose.
7. Install in the reverse order of removal.

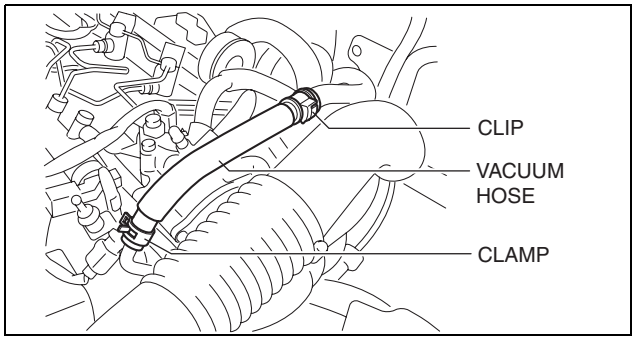

ac5wzw0000450

R.H.D.

1. Remove the engine cover. (SKYACTIV-D 2.2) (See 01-10B-4 ENGINE COVER REMOVAL/INSTALLATION [SKYACTIV-D 2.2].)
2. Pinch open the clamp using pliers and disconnect the vacuum hose.

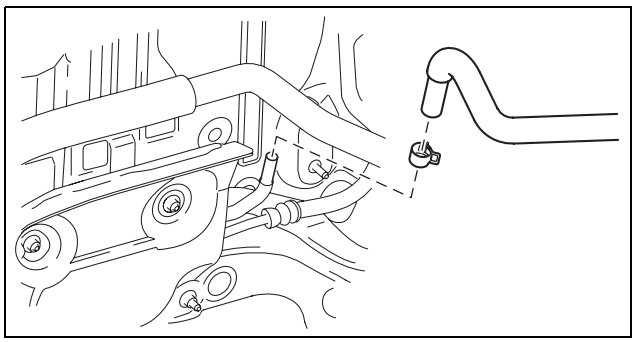
ac5wzw0000021

3. Pinch open the clamp using pliers and disconnect the vacuum hose. (SKYACTIV-G 2.0)

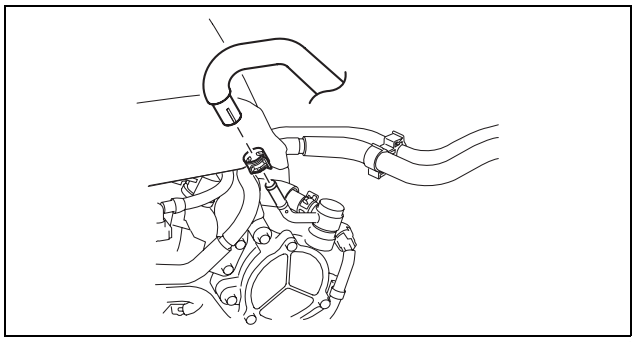
ac5wzw0000021

4. Detach the vacuum hose from the clip. (SKYACTIV-D 2.2)
5. Pinch open the clamp using pliers and disconnect the vacuum hose. (SKYACTIV-D 2.2)
6. Remove the vacuum hose.
7. Install in the reverse order of removal.

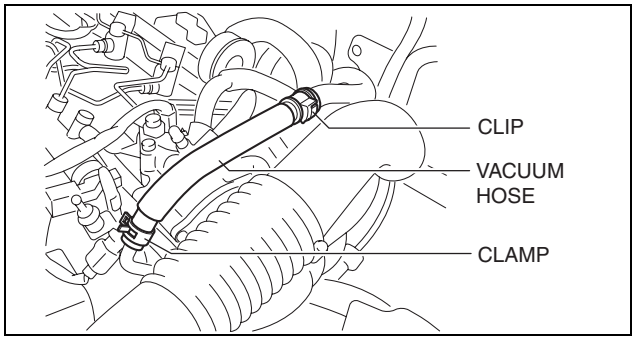

ac5wzw0000450

CONVENTIONAL BRAKE SYSTEM

BRAKE PEDAL INSPECTION

id041100801100

Pedal Height Inspection

1. Measure the distance from the center of the upper surface of the pedal pad to the insulator and verify that it is as specified.
   - If not within the specification, inspect the following items and repair or replace the applicable part if there is any malfunction.
     — Power brake unit installation condition
     — Deformation of or damage to the power brake unit fork
     — Brake pedal installation condition
     — Clevis pin wear
   - If there is no malfunction in the above items, replace the brake pedal.

Brake pedal height (reference value)
134 mm {5.28 in}

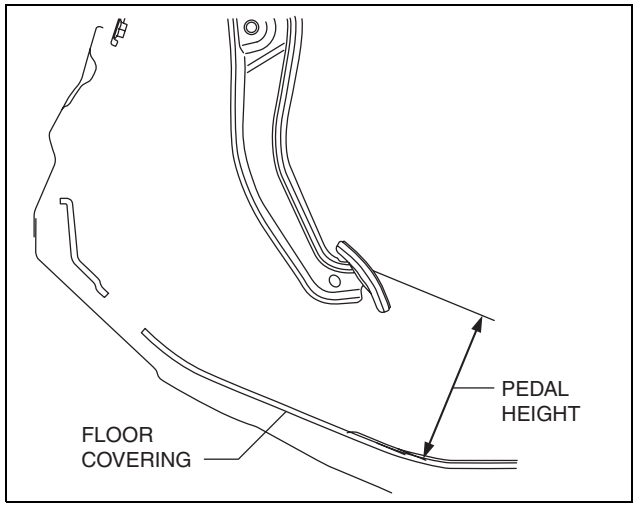

ac5wzw0000149

04

Pedal Play Inspection

1. Pump the pedal several times to release the vacuum in the power brake unit.
2. Gently depress the pedal by hand and measure the pedal play.
   - If not within the specification, inspect the wear of the clevis pin. Replace it if there is any malfunction.

Brake pedal play
3—5 mm {0.12—0.19 in}

Note
- If there is no malfunction in the clevis pin, there is a possibility that the power brake unit has some malfunction. Verify that there are no malfunctions, and replace it if necessary.

Pedal-to-floor Clearance Inspection

1. Start the engine and depress the brake pedal with a force of **147 N {15.0 kgf, 33.0 lbf}**.
2. Measure the distance from the center of the upper surface of the pedal pad to the floor covering and verify that it is as specified.
   - If it is less than the specification, inspect for air in the brake line.

Brake pedal-to-floor clearance (Brake pedal when depressed at 147 N {15.0 kgf, 33.0 lbf})
95 mm {3.7 in} or more

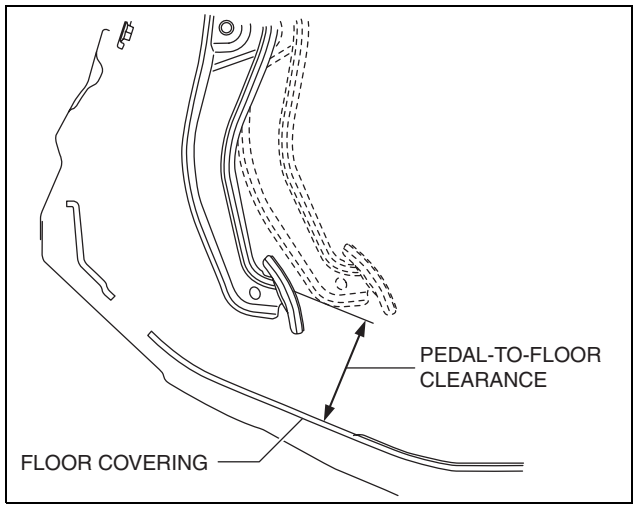

ac5wzw0000149

CONVENTIONAL BRAKE SYSTEM

BRAKE PEDAL REMOVAL/INSTALLATION [R.H.D.]

id041100801252

Caution

- **The clearance between the brake switch and the brake pedal is automatically adjusted to the correct amount when the brake switch is inserted into the installation hole on the brake pedal and rotated to fix in place. If the brake switch is not properly installed, the clearance may be incorrect, causing a brake light malfunction. Therefore, always verify that the brake pedal is properly installed and fully released before installing the brake switch to the pedal.**
- **Once the brake switch clearance has automatically been adjusted, it cannot be adjusted again. Therefore, replace the switch with a new one when replacing the power brake unit or the pedal, or performing any procedure that changes the pedal stroke.**
- **Secure the steering wheel using tape or a cable to prevent the intermediate shaft from rotating after disconnecting the intermediate shaft. If the steering wheel rotates after the intermediate shaft and the steering gear and linkage are disconnected, the internal parts of the clock spring could be damaged.**

1. Disconnect the brake pipes from the master cylinder. (See 04-11-11 MASTER CYLINDER REMOVAL/INSTALLATION.)
2. Disconnect the clutch reserve hose from the master cylinder. (MTX) (See 04-11-11 MASTER CYLINDER REMOVAL/INSTALLATION.)
3. Disconnect the intermediate shaft from the steering gear and linkage. (See 06-13-10 INTERMEDIATE SHAFT REMOVAL/INSTALLATION.)
4. Remove in the order indicated in the table.
5. Install in the reverse order of removal.
6. After installation, add brake fluid, bleed the air, and inspect for fluid leakage. (See 04-11-4 BRAKE FLUID AIR BLEEDING.)

CONVENTIONAL BRAKE SYSTEM

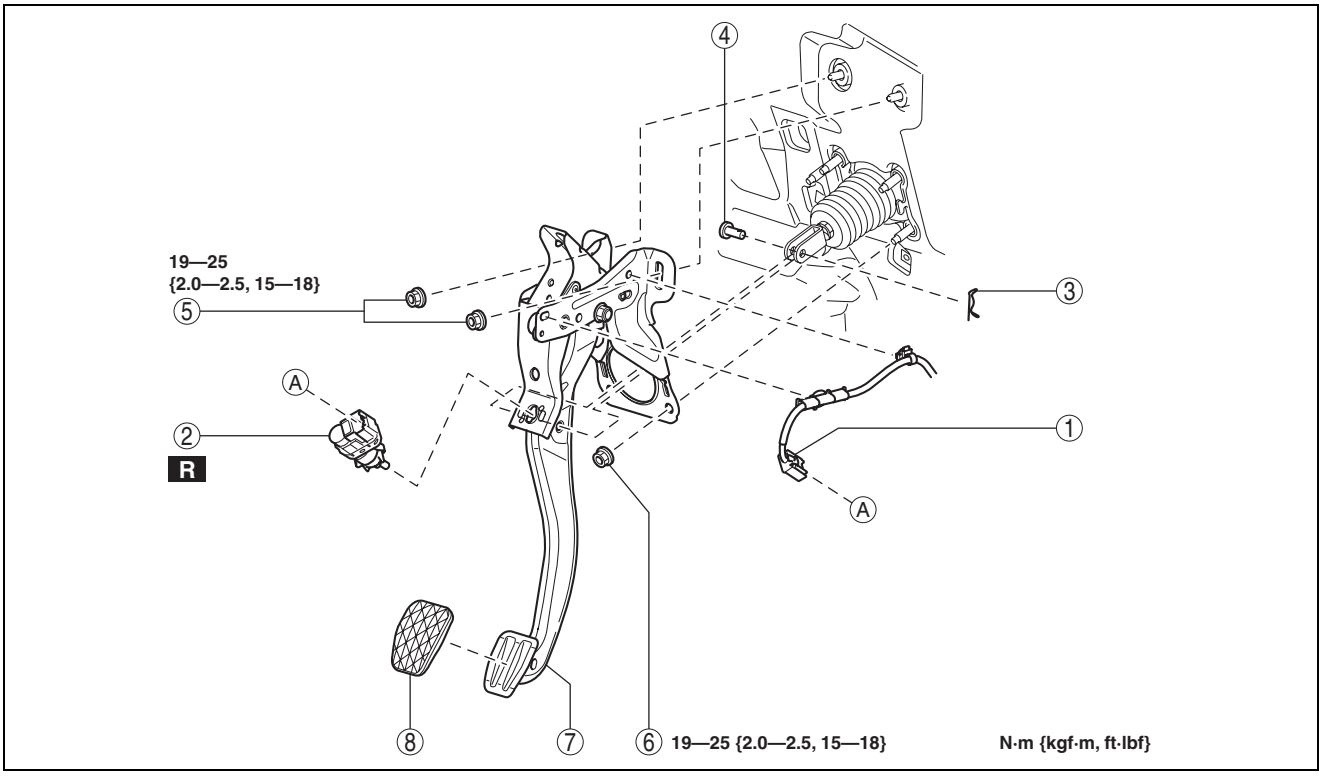

ac5wzw0000020

1	Brake switch connector and wiring harness
2	Brake switch (See 04-11-10 Brake Switch Installation Note.)
3	Spring pin
4	Clevis pin

5	Nut
6	Nut
7	Brake pedal (See 04-11-10 Brake Pedal Removal Note.)
8	Pedal pad

Brake Pedal Removal Note

1. Move the power brake unit to the vehicle front where the power brake unit fork does not interfere with the brake pedal arm.
2. Remove the brake pedal.

Brake Switch Installation Note

1. Inspect the brake pedal. (See 04-11-7 BRAKE PEDAL INSPECTION.)
2. With the brake pedal fully released, insert a new brake switch into the installation hole on the brake pedal.
3. Secure the brake switch by turning it counterclockwise **45**°.

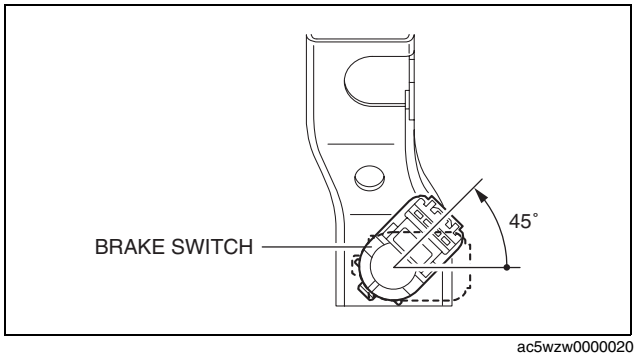

ac5wzw0000020

CONVENTIONAL BRAKE SYSTEM

BRAKE SWITCH INSPECTION

id041100801900

Caution
- **Inspect the brake switch with it installed to the brake pedal, otherwise the brake switch may not operate normally. If the brake switch is removed from the brake pedal, replace the brake switch with a new one.**

1. Remove the lower panel. (See 09-17-35 LOWER PANEL REMOVAL/INSTALLATION.)
2. For L.H.D., remove the front heat duct (LH). (See 07-11-22 FRONT HEAT DUCT REMOVAL/INSTALLATION.)
3. Disconnect the brake switch connector.
4. Verify that the continuity is as indicated in the table.
   - If not as indicated in the table, replace the brake switch. (See 04-11-8 BRAKE PEDAL REMOVAL/INSTALLATION [L.H.D.].) (See 04-11-9 BRAKE PEDAL REMOVAL/INSTALLATION [R.H.D.].)

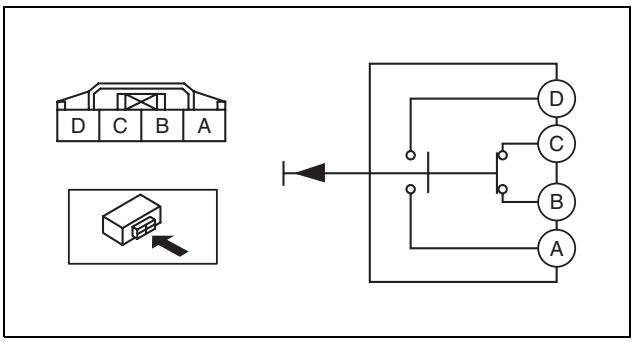

am3uuw0000669

○—○ : Continuity

Condition	Terminal			
	A	B	C	D
When the brake pedal is depressed	○			○
When the brake pedal is not depressed		○	○	

am3zzw0001031

MASTER CYLINDER REMOVAL/INSTALLATION

id041100801300

1. For the L.H.D., remove the battery. (See 01-17B-3 BATTERY REMOVAL/INSTALLATION [SKYACTIV-D 2.2].)
2. For the R.H.D., perform the following procedure:
   (1) Remove the cooler hose (LO) from the clip. (See 07-11-36 REFRIGERANT LINE REMOVAL/INSTALLATION.)

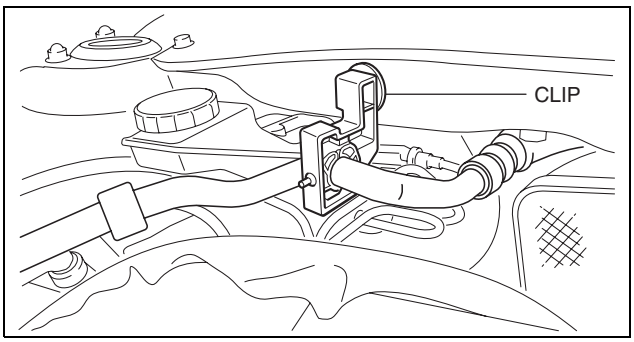

ac5wzw0000252

   (2) Remove the cooler hose (LO) installation nut. (See 07-11-36 REFRIGERANT LINE REMOVAL/INSTALLATION.)
   (3) Move the cooler hose (LO) in the direction of the arrow.
3. Remove in the order indicated in the table.
4. Install in the reverse order of removal.
5. After installation, add brake fluid, bleed the air, and inspect for fluid leakage. (See 04-11-4 BRAKE FLUID AIR BLEEDING.)

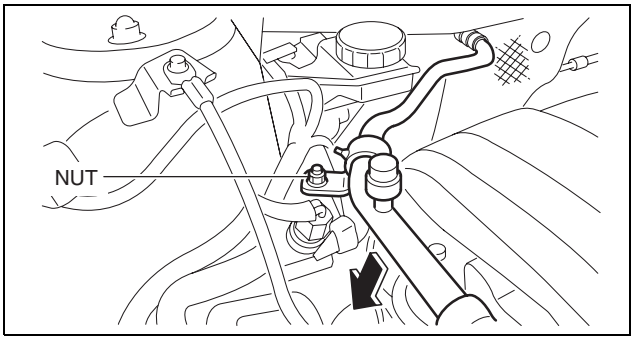

ac5wzw0000252

CONVENTIONAL BRAKE SYSTEM

R.H.D.

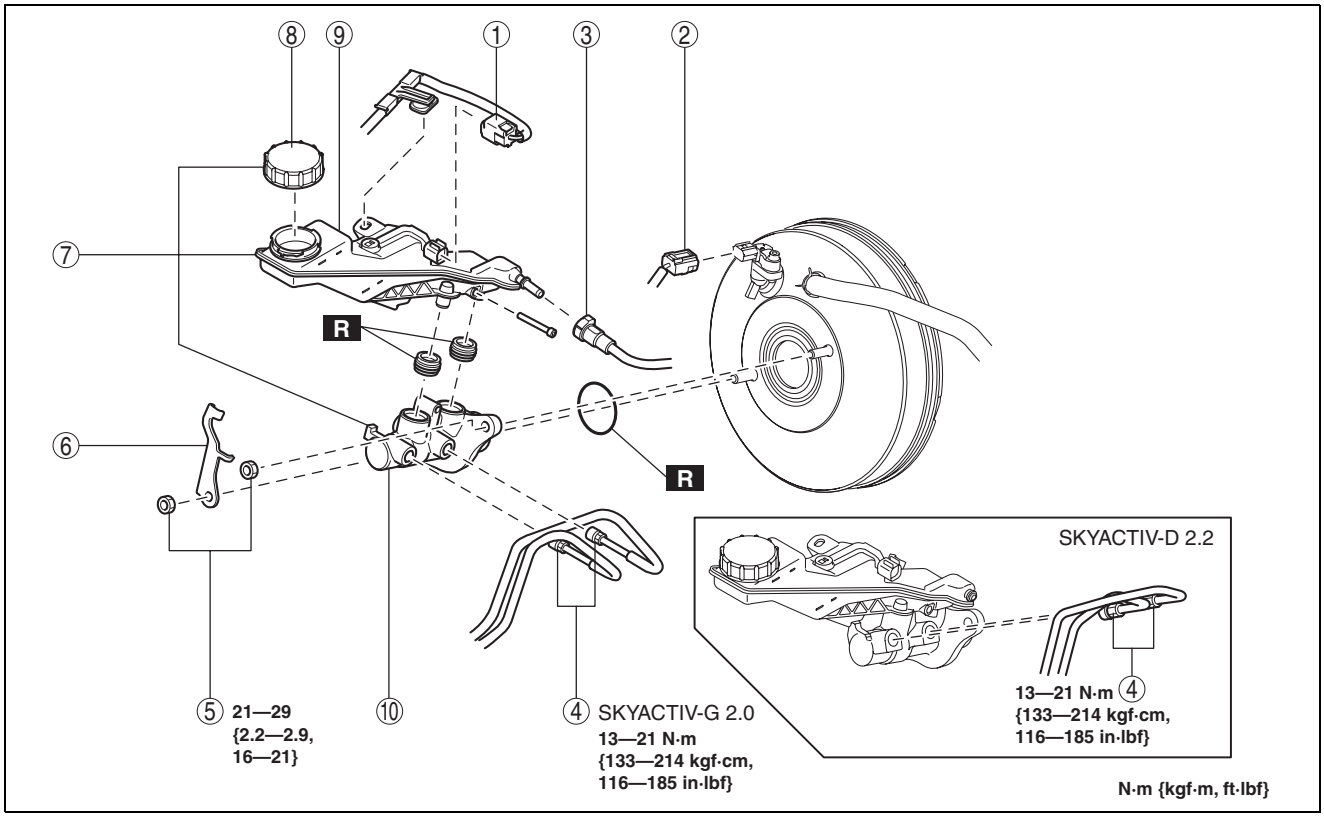

ac5wzw0000020

1	Brake fluid level sensor connector
2	Power brake unit vacuum sensor connector (Vehicles with i-stop)
3	Clutch reserve hose (MTX) (See 04-11-13 Clutch Reserve Hose Removal Note (MTX).) (See 04-11-13 Clutch Reserve Hose Installation Note (MTX).)

4	Brake pipe
5	Nut
6	Bracket
7	Master cylinder
8	Cap
9	Brake fluid reserve tank
10	Cylinder component

Clutch Reserve Hose Removal Note (MTX)

1. Disconnect the clutch reserve hose in the order shown in the figure.

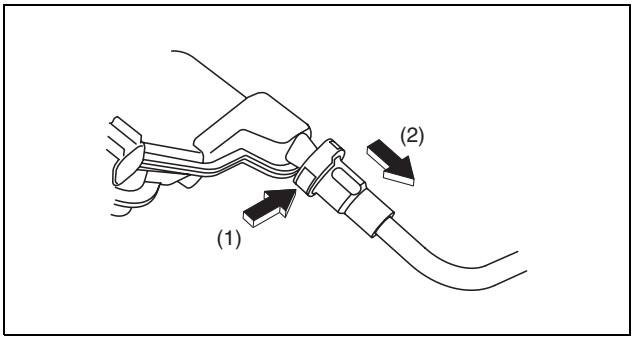

ac5wzw0000252

Clutch Reserve Hose Installation Note (MTX)

1. Insert the clutch reserve hose to the master cylinder.
2. Pull the clutch reserve hose to verify that it does not come off, and reinsert it completely.

CONVENTIONAL BRAKE SYSTEM

BRAKE FLUID LEVEL SENSOR INSPECTION

id041100801400

1. Disconnect the brake fluid level sensor connector from the master cylinder.
2. Inspect for continuity according to fluid level between the brake fluid level sensor terminals.
   - If not as indicated in the table, replace the reserve tank. (See 04-11-11 MASTER CYLINDER REMOVAL/INSTALLATION.)

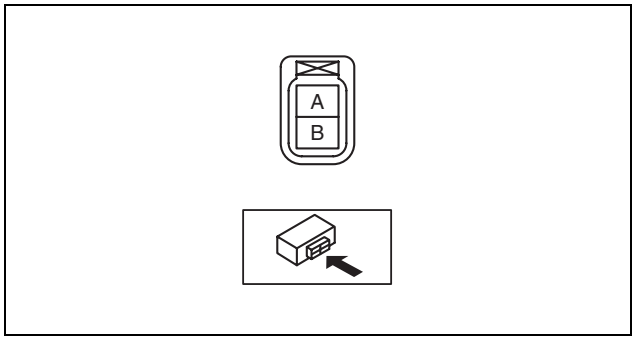

ac5wzw0000024

○—○: Continuity

Condition	Terminal	
	A	B
Above MIN	○	○
Below MIN		

acxuuw00003731

POWER BRAKE UNIT INSPECTION

id041100801700

Note
- The following inspection methods are simple inspection methods to judge the function of the power brake unit.
- If there is any malfunction in the power brake unit, replace the power brake unit as a single unit.

Without Using SST
Operation inspection
1. With the engine stopped, pump the pedal a few times.
2. With the pedal depressed, start the engine.
3. If the pedal moves down slightly immediately after starting the engine, the unit is normal.

Vacuum function inspection
1. Start the engine.
2. Stop the engine after driving the vehicle for **1—2 min**.
3. Depress the pedal with normal force.
4. If the first pedal stroke is long and becomes shorter with subsequent strokes, the unit is normal.
   - If a problem is found, inspect for damage to or improper installation of the check valve and vacuum hose. After repairing, inspect again.

Vacuum loss function inspection
1. Start the engine.
2. Depress the pedal with normal force.
3. With the pedal depressed, stop the engine.
4. Hold the pedal depressed for **approx. 30 s**.
5. If the pedal height does not change during this time, the unit is normal.

CONVENTIONAL BRAKE SYSTEM

Using SST

Note
- When performing the inspection using the **SST**, inspect the brake pipe on the left or right front wheel.
- The following procedure and figures show the inspection for the brake pipe on the left front wheel.

Pre-inspection preparation

1. Remove the clips.
2. Set the splash shield out of the way.

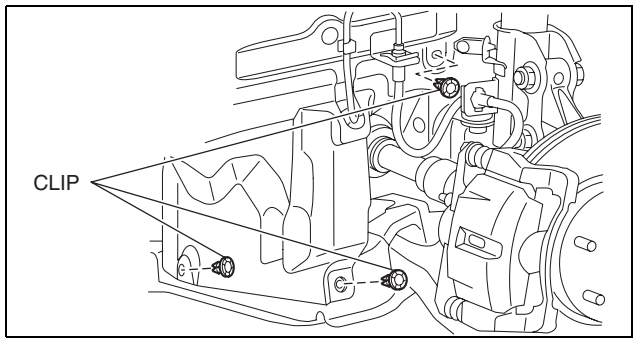

ac5wzw0000021

3. Disconnect the brake pipe from the brake hose.
4. Remove the clip.
5. Remove the brake hose from the bracket.
6. Detach the brake pipe from the pipe holder.

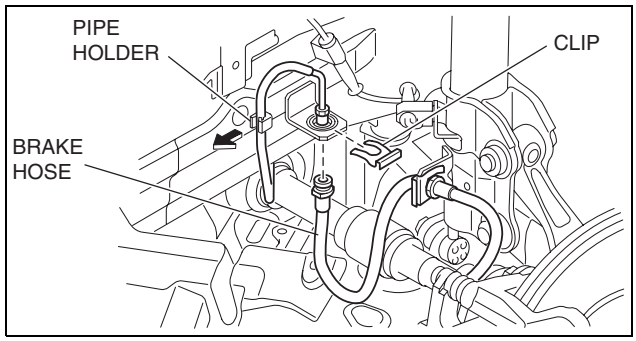

ac5wzw0000021

7. Install the **SST** to the brake pipe as shown in the figure.
8. Bleed the brake line and the **SSTs** of air. Bleed the air form the **SSTs** using bleeder screw A.
9. Install the pedal force gauge to the brake pedal.
10. Connect the vacuum gauge to the vacuum line.

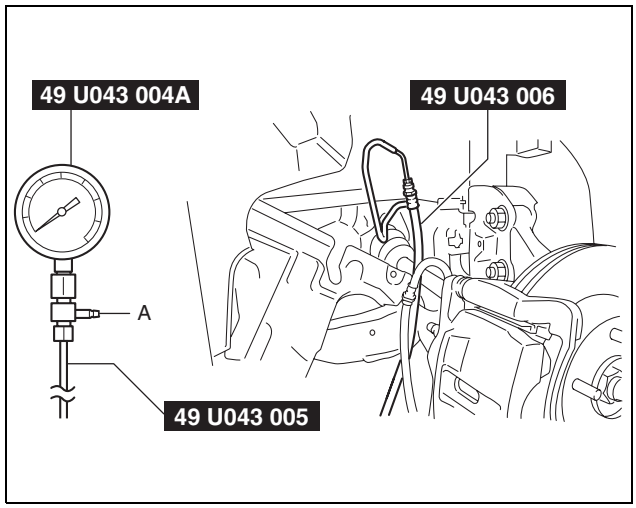

ac5wzw0000021

Vacuum loss inspection

1. Start the engine.
2. Depress the brake pedal with a force of **200 N {20.4 kgf, 45.0 lbf}**.
3. Stop the engine when the vacuum gauge reading reaches **68 kPa {510 mmHg, 20 inHg}** with the pedal depressed.
4. With the engine off, observe the vacuum gauge for **15 s**.
5. If the gauge has dropped **3.3 kPa {25 mmHg, 1.0 inHg}** or less, the unit is normal.

CONVENTIONAL BRAKE SYSTEM

Lack of hydraulic pressure inspection

1. If the pedal force and fluid pressure correlation is within the specification with the engine stopped and a vacuum amount of **0 kPa {0 mmHg, 0 inHg}**, the system is normal.

Master cylinder fluid pressure

Vacuum amount at 0 kPa {0 mmHg, 0 inHg}	
Pedal force	**Fluid pressure**
200 N {20.4 kgf, 45.0 lbf}	630 kPa {6.42 kgf/cm^2, 91.4 psi} or more

Hydraulic pressure inspection

1. Start the engine. Depress the brake pedal when the vacuum reaches **66.7 kPa {500 mmHg, 19.7 inHg}**.
2. At this time, apply the indicated pedal force and if the fluid pressure is within the specification, the unit is normal.

Master cylinder fluid pressure

Vacuum amount at 66.7 kPa {500 mmHg, 19.7 inHg}	
Pedal force	**Fluid pressure**
200 N {20.4 kgf, 45.0 lbf}	6,900 kPa {70.36 kgf/cm^2, 1,001 psi} or more

After-inspection procedure

1. After the inspection, remove the **SSTs**, install the brake hose, clamp, and brake pipe to the original positions, and then bleed the air from the brake line. (See 04-11-30 BRAKE HOSE (FRONT) REMOVAL/INSTALLATION.) (See 04-11-4 BRAKE FLUID AIR BLEEDING.)

CONVENTIONAL BRAKE SYSTEM

POWER BRAKE UNIT REMOVAL/INSTALLATION [R.H.D.]

id041100801852

Caution

- **Once the brake switch clearance has automatically been adjusted, it cannot be adjusted again. Therefore, replace the switch with a new one when replacing the power brake unit or performing any procedure that changes the pedal stroke.**

1. Remove the windshield wiper arm and blade. (See 09-19-3 WINDSHIELD WIPER ARM AND BLADE REMOVAL/INSTALLATION.)
2. Remove the cowl grille. (See 09-16-3 COWL GRILLE REMOVAL/INSTALLATION.)
3. Remove the windshield wiper motor and link. (See 09-19-9 WINDSHIELD WIPER MOTOR AND LINK REMOVAL/INSTALLATION.)
4. Remove the cowl panel. (See 09-10-41 COWL PANEL REMOVAL/INSTALLATION.)
5. Remove the insulator. (See 01-15A-2 EXHAUST SYSTEM REMOVAL/INSTALLATION [SKYACTIV-G 2.0].) (See 01-15B-1 EXHAUST SYSTEM REMOVAL/INSTALLATION [SKYACTIV-D 2.2].)
6. Remove the master cylinder. (See 04-11-11 MASTER CYLINDER REMOVAL/INSTALLATION.)
7. Remove the power brake unit vacuum sensor. (See 04-11-19 POWER BRAKE UNIT VACUUM SENSOR REMOVAL/INSTALLATION.)
8. Remove the washer funnel. (See 09-19-16 WASHER TANK REMOVAL/INSTALLATION.)
9. Disconnect the brake pipes from the DSC HU/CM.

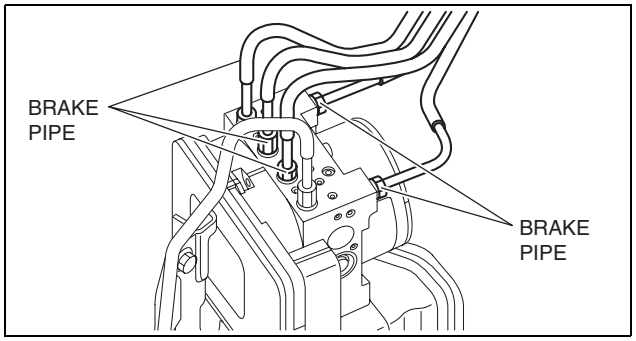

ac5wzw0000228

10. Detach the brake pipe holder from the vehicle.
11. Remove in the order indicated in the table.
12. Install in the reverse order of removal.
13. After installation, add brake fluid, bleed the air, and inspect for fluid leakage. (See 04-11-4 BRAKE FLUID AIR BLEEDING.)
14. Remove the brake switch. (See 04-11-9 BRAKE PEDAL REMOVAL/INSTALLATION [R.H.D.].)
15. Inspect the brake pedal. (See 04-11-7 BRAKE PEDAL INSPECTION.)
16. Install a new brake switch. (See 04-11-9 BRAKE PEDAL REMOVAL/INSTALLATION [R.H.D.].)

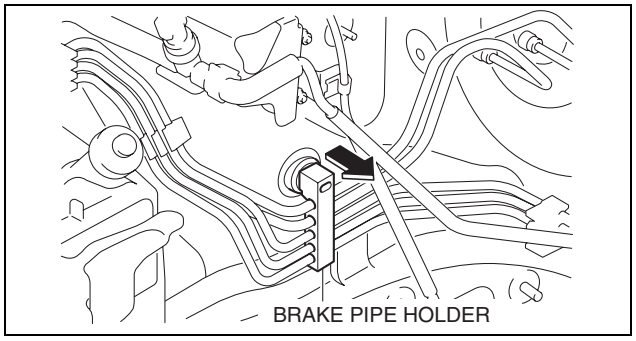

ac5wzw0000253

CONVENTIONAL BRAKE SYSTEM

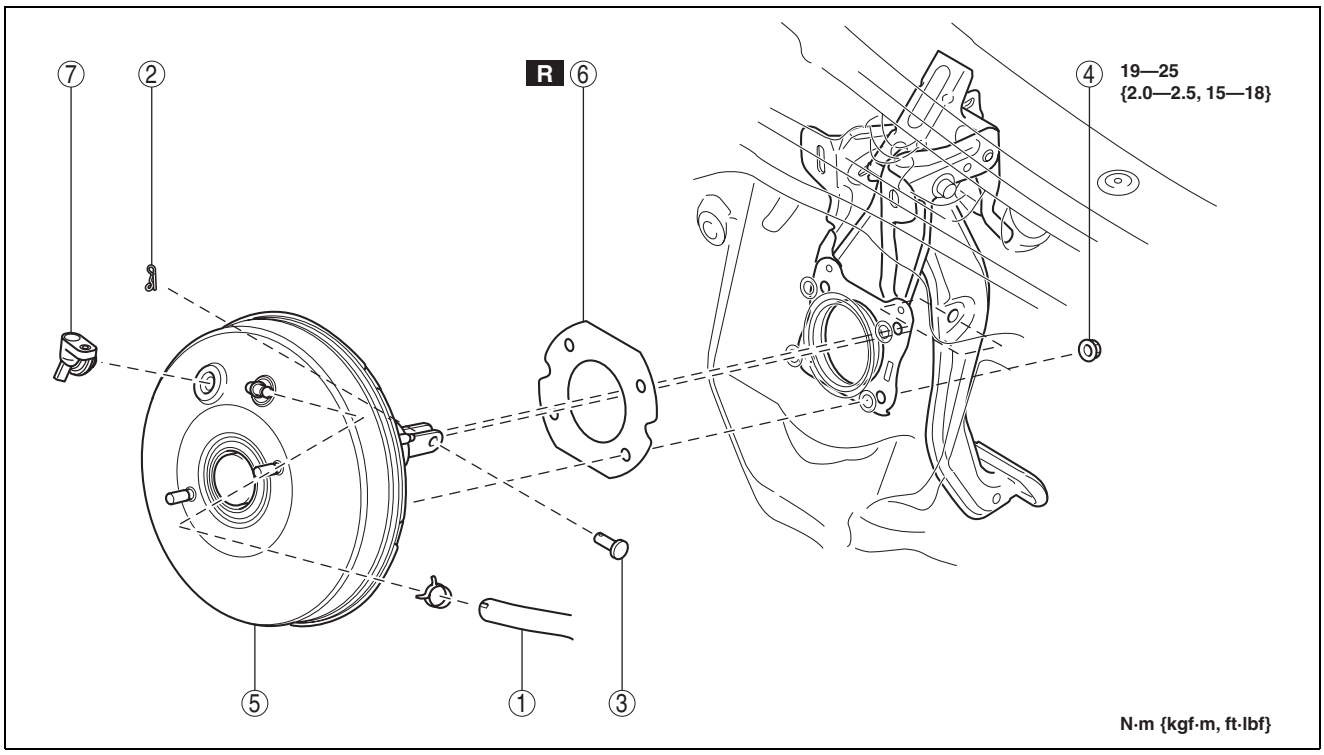

ac5wzw0000021

1	Vacuum hose
2	Snap pin
3	Clevis pin
4	Nut

5	Power brake unit
6	Gasket
7	Power brake unit vacuum sensor joint

POWER BRAKE UNIT VACUUM SENSOR REMOVAL/INSTALLATION

id041100806000

R.H.D.

1. Remove the windshield wiper arm and blade. (See 09-19-3 WINDSHIELD WIPER ARM AND BLADE REMOVAL/INSTALLATION.)
2. Remove the cowl grille. (See 09-16-3 COWL GRILLE REMOVAL/INSTALLATION.)
3. Remove the windshield wiper motor and link. (See 09-19-9 WINDSHIELD WIPER MOTOR AND LINK REMOVAL/INSTALLATION.)
4. Remove the cowl panel. (See 09-10-41 COWL PANEL REMOVAL/INSTALLATION.)
5. Remove in the order indicated in the table.

1	Power brake unit vacuum sensor connector
2	Bolt
3	Power brake unit vacuum sensor

6. Install in the reverse order of removal.

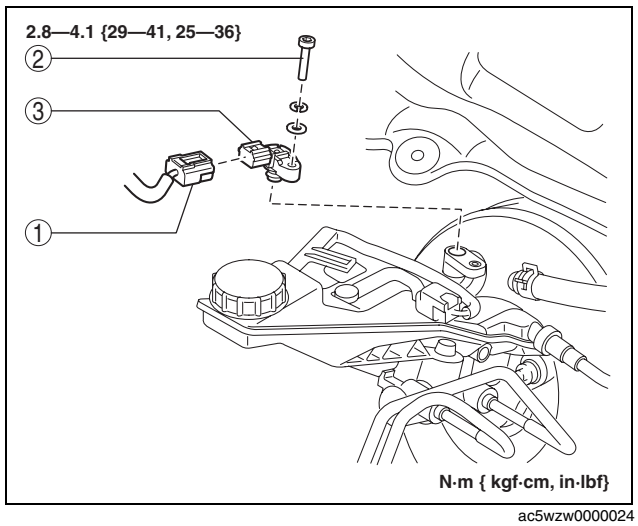

ac5wzw0000024

CONVENTIONAL BRAKE SYSTEM

VACUUM PUMP INSPECTION

id041100811000

1. Remove the engine cover. (SKYACTIV-D 2.2) (See 01-10B-4 ENGINE COVER REMOVAL/INSTALLATION [SKYACTIV-D 2.2])
2. Pinch open the clamp using pliers and disconnect the vacuum hose from the vacuum pump. (See 04-11-5 VACUUM HOSE REMOVAL/INSTALLATION.)
3. Install the vacuum gauge as shown in the figure, then check the vacuum.
4. Warn up the engine.
   - If the pressure is less than the specification, inspect for the following.
     — Malfunction of the vacuum pump
     — Shortage of the lubrication oil pressure

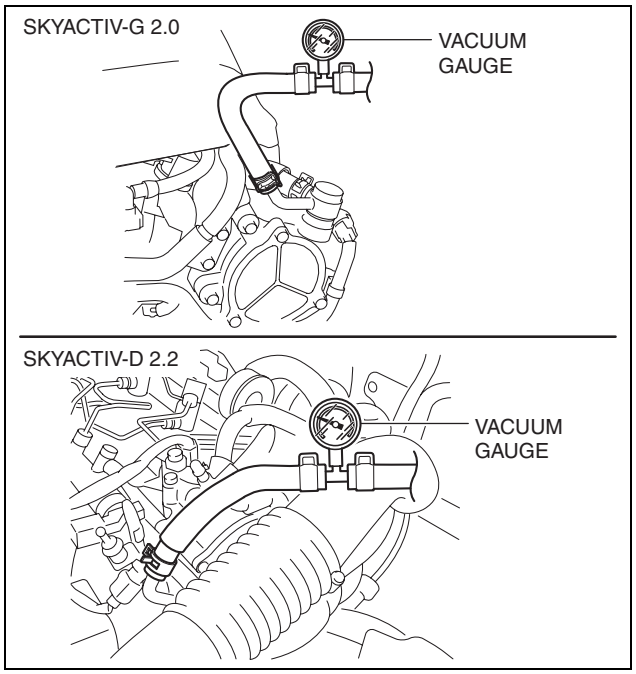

ac5wzw0000442

CONVENTIONAL BRAKE SYSTEM

Vacuum pump vacuum specification (reference value)

Engine type	Measurement condition		Specification
	Engine speed	Change in vacuum amount	Period of time change in vacuum amount condition met
SKYACTIV-G 2.0	While idling (520—700 rpm (reference value))	From 60 kPa {450 mmHg, 18 inHg} to 67 kPa {503 mmHg, 20 inHg}	8 s or less
SKYACTIV-D 2.2			9 s or less

Vacuum pump maximum vacuum specification (reference value)

Engine type	Measurement condition	Specification
SKYACTIV-G 2.0	While idling (no time designation)	93.3 kPa {700 mmHg, 27.6 inHg} or more
SKYACTIV-D 2.2		

5. Install in the reverse order of the removal.

VACUUM PUMP REMOVAL/INSTALLATION [SKYACTIV-G 2.0]

id0411008036q3

1. Remove the plug hole plate. (See 01-10A-6 PLUG HOLE PLATE REMOVAL/INSTALLATION [SKYACTIV-G 2.0].)
2. Remove the battery. (See 01-17A-3 BATTERY REMOVAL/INSTALLATION [SKYACTIV-G 2.0].)
3. Set the PCM wiring harness out of the way.
4. Pinch open the clamp using pliers and disconnect the vacuum hose from the vacuum pump. (See 04-11-5 VACUUM HOSE REMOVAL/INSTALLATION.)
5. Remove in the order shown in the table.
6. Install in the reverse order of removal.

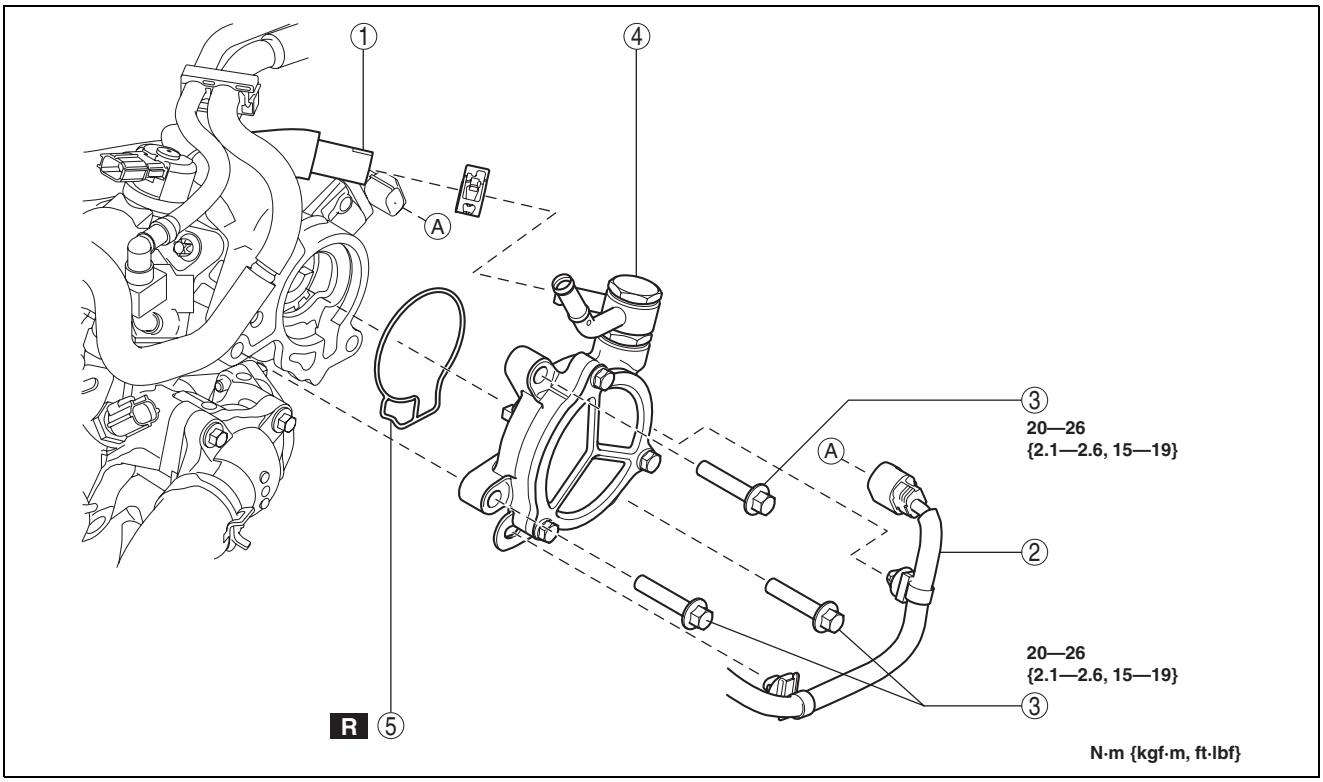

ac5wzw0000021

1	Vacuum hose
2	Exhaust CMP sensor connector and wiring harness
3	Bolt

4	Vacuum pump (See 04-11-22 Vacuum Pump Removal Note.) (See 04-11-22 Vacuum Pump and O-ring Installation Note.)
5	O-ring (See 04-11-22 Vacuum Pump and O-ring Installation Note.)

CONVENTIONAL BRAKE SYSTEM

Vacuum Pump Removal Note

1. When removing the vacuum pump, place a rag under the installation surface of the vacuum pump so that engine oil does not get on other parts.
2. Remove the vacuum pump.

Vacuum Pump and O-ring Installation Note

1. Rotate the vacuum pump by hand to drain the remainder of the engine oil in the vacuum pump.
2. Degrease the O-ring installation groove and installation surface.
3. Install the new O-ring to the vacuum pump.
4. Install the vacuum pump.

VACUUM PUMP REMOVAL/INSTALLATION [SKYACTIV-D 2.2]

id0411008036s8

1. Remove the engine cover. (See 01-10B-4 ENGINE COVER REMOVAL/INSTALLATION [SKYACTIV-D 2.2].)
2. Remove the battery and battery tray. (See 01-17B-3 BATTERY REMOVAL/INSTALLATION [SKYACTIV-D 2.2].)
3. Pinch open the clamp using pliers and disconnect the vacuum hose from the vacuum pump. (See 04-11-5 VACUUM HOSE REMOVAL/INSTALLATION.)
4. Remove the following parts.
   (1) Air cleaner cover (See 01-13B-6 INTAKE-AIR SYSTEM REMOVAL/INSTALLATION [SKYACTIV-D 2.2].)
   (2) Air cleaner element (See 01-13B-6 INTAKE-AIR SYSTEM REMOVAL/INSTALLATION [SKYACTIV-D 2.2].)
   (3) Flesh-air duct (See 01-13B-6 INTAKE-AIR SYSTEM REMOVAL/INSTALLATION [SKYACTIV-D 2.2].)
   (4) Air cleaner case (See 01-13B-6 INTAKE-AIR SYSTEM REMOVAL/INSTALLATION [SKYACTIV-D 2.2].)
   (5) Air hose (See 01-13B-6 INTAKE-AIR SYSTEM REMOVAL/INSTALLATION [SKYACTIV-D 2.2].)
   (6) Air inlet pipe (See 01-13B-6 INTAKE-AIR SYSTEM REMOVAL/INSTALLATION [SKYACTIV-D 2.2].)
5. Remove the turbo charger air outlet hose along with the air intake pipe. (See 01-13B-6 INTAKE-AIR SYSTEM REMOVAL/INSTALLATION [SKYACTIV-D 2.2].)
6. Disconnect the fuel temperature sensor connector.
7. Disconnect the CMP sensor connector.
8. Remove the CMP sensor harness from the lower case.
9. Perform the “BEFORE SERVICE PRECAUTION”. (See 01-14B-6 BEFORE SERVICE PRECAUTION [SKYACTIV-D 2.2].)
10. Remove the water pipe assembly installation bolts, then set the water pipe assembly out of the way. (See 01-14B-46 SUPPLY PUMP REMOVAL/INSTALLATION [SKYACTIV-D 2.2].)
11. Remove the fuel return pipe (supply pump-side). (See 01-14B-46 SUPPLY PUMP REMOVAL/INSTALLATION [SKYACTIV-D 2.2].)
12. Remove the fuel return pipe (fuel injector-side). (See 01-14B-35 FUEL INJECTOR REMOVAL/INSTALLATION [SKYACTIV-D 2.2].)
13. Remove fuel return hose No.1 and fuel return hose No.2. (See 01-14B-46 SUPPLY PUMP REMOVAL/INSTALLATION [SKYACTIV-D 2.2].)
14. Remove the lower case installation bolts, then set the lower case out of the way. (See 01-14B-54 LOWER CASE REMOVAL/INSTALLATION [SKYACTIV-D 2.2].)
15. Remove in the order shown in the table.
16. Install in the reverse order of removal.
17. Perform the “AFTER SERVICE PRECAUTION”. (See 01-14B-7 AFTER SERVICE PRECAUTION [SKYACTIV-D 2.2].)

CONVENTIONAL BRAKE SYSTEM

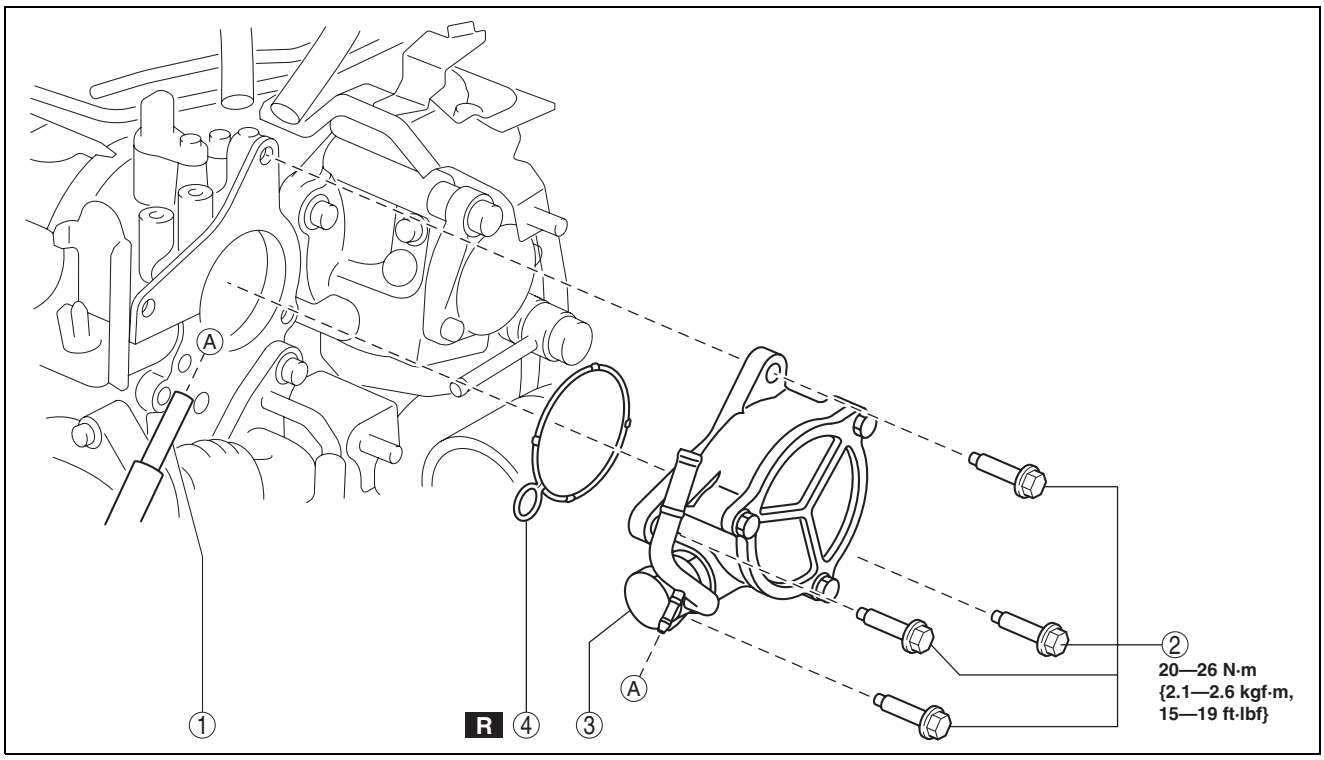

ac5wzw0000442

1	Vacuum tube
2	bolt
3	Bolt

4	Vacuum pump (See 04-11-23 Vacuum Pump Removal Note.) (See 04-11-23 Vacuum Pump and O-ring Installation Note.)
5	O-ring (See 04-11-23 Vacuum Pump and O-ring Installation Note.)

Vacuum Pump Removal Note

1. When removing the vacuum pump, place a rag under the installation surface of the vacuum pump so that engine oil does not get on other parts.
2. Remove the vacuum pump.

Vacuum Pump and O-ring Installation Note

1. Rotate the vacuum pump by hand to drain the remainder of the engine oil in the vacuum pump.
2. Degrease the O-ring installation groove and installation surface.
3. Install the new O-ring to the vacuum pump.
4. Apply a light coat of silicon sealant (TB1217G) as shown in the figure.

Note

- Install the vacuum pump before the applied sealant starts to harden.

5. Install the vacuum pump.

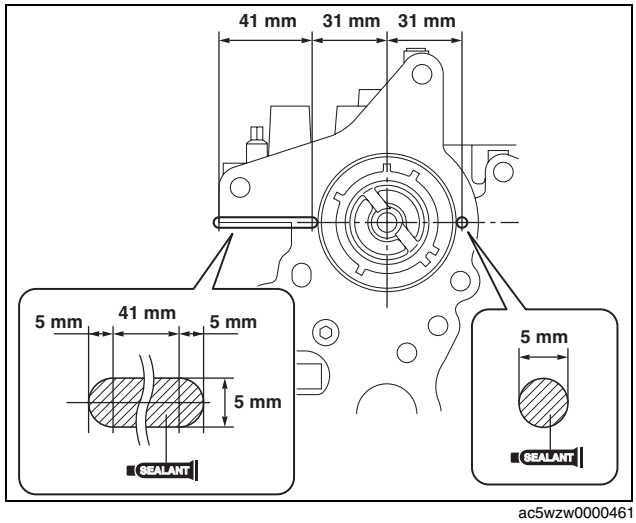

ac5wzw0000461

CONVENTIONAL BRAKE SYSTEM

FRONT BRAKE (DISC) INSPECTION

id041100800800

Brake Judder Repair Hints
Description

1. Brake judder concern has the following 3 characteristics:

Steering wheel vibration

1. The steering wheel vibrates in the rotation direction. This characteristic is most noticeable when applying brakes at a vehicle speed of **100—140 km/h {62.2—86.9 mph}**.

Floor vibration

1. When applying the brakes, the vehicle body shakes back and forth. The seriousness of the shaking is not influenced by vehicle speed.

Brake pedal vibration

1. When applying the brakes, a pulsating force tries to push the brake pad back. The pulsation is transmitted to the brake pedal.
2. The following are the main possible causes of brake judder:

Due to an excessive runout (side-to-side wobble) of the disc plate, the thickness of the disc plate is uneven.

1. If the runout is **more than 0.04 mm {0.002 in}** at the position **10 mm {0.39 in}** from the disc plate edge, uneven wear occurs on the disc plate because the pad contacts the plate unevenly.
2. If the runout is **less than 0.04 mm {0.002 in}**, uneven wear does not occur.

The disc plate is deformed by heat.

1. Repeated panic braking may raise the temperature in some portions of the disc plate by **approx. 1,000 °C {1,832 °F}**. This results in a deformed disc plate.

Due to corrosion, the thickness and friction coefficient of the disc plate change.

1. If the vehicle is parked in damp conditions for a long time, corrosion occurs on the friction surface of the disc plate.
2. The thickness of corrosion is uneven and sometimes appears like a wave pattern, which changes the friction coefficient and causes a reaction force.

CONVENTIONAL BRAKE SYSTEM

Inspection and repair procedure

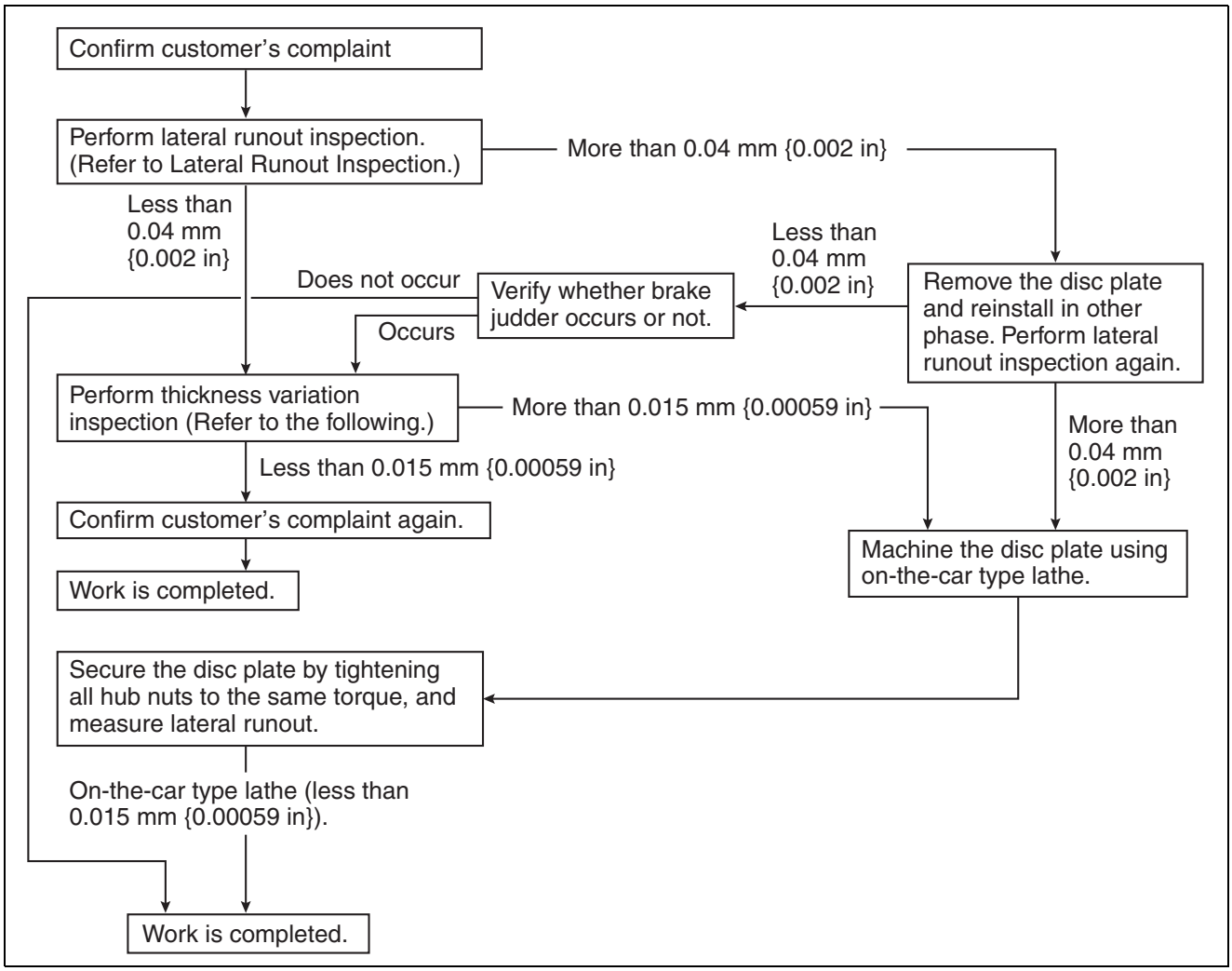

am5ezw0000429

Lateral runout inspection

1. To secure the disc plate and the hub, insert the washer (thickness **10 mm {0.39 in}**, inner diameter **more than 12 mm {0.47 in}**) between each hub bolt and the hub nut, then tighten all the hub nuts.

   Note
   - The component parts of the **SST** (49 B017 001 or 49 G019 003) can be used as a suitable washer.

2. After tightening all the hub nuts to the same torque, put the dial gauge on the friction surface of the disc plate **10 mm {0.39 in}** from the disc plate edge.
3. Rotate the disc plate one time and measure the runout.

   Front disc plate runout limit
   0.04 mm {0.002 in}

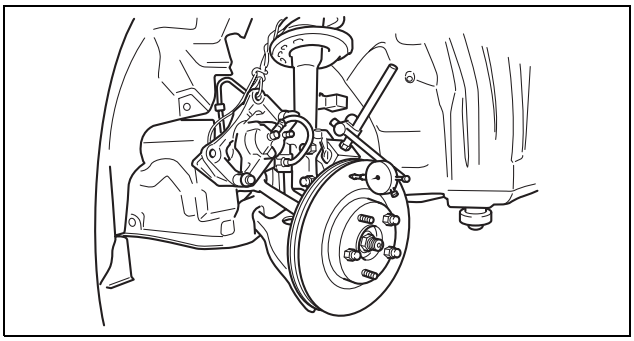

ac5wzw0000019

CONVENTIONAL BRAKE SYSTEM

Thickness variation inspection

1. Clean the disc plate-to-pad friction surface using a brake cleaner.
2. Measure the points indicated in the illustration using a caliper (micrometer).
3. Subtract the minimum value from the maximum, and if the result is not within the specification, machine the disc plate using a lathe.

Thickness variation limit
0.015 mm {0.00059 in}

Warning
- **Do not exceed minimum disc plate thickness.**

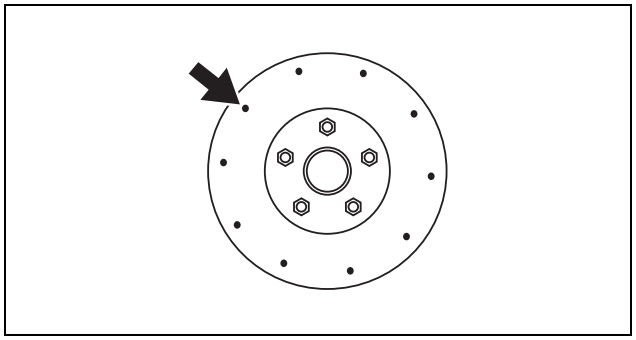
am5ezw0000430

Disc Plate Thickness Inspection

Caution
- **Excessive runout may result if the disc plate is removed from the vehicle then machined. Machine the disc plate while installed on the vehicle.**

1. Measure the thickness of the disc plate.
   - If the thickness is not within the specification, replace the disc plate.

Minimum front disc plate thickness
26.0 mm {1.02 in}

Minimum front disc plate thickness after machining using a brake lathe on-vehicle
26.8 mm {1.06 in}

Disc Pad Thickness Inspection

1. Jack up the front of the vehicle and support it with safety stands.
2. Remove the wheels and tires.
3. Verify the remaining thickness of the pads.

Minimum front disc pad thickness
2.0 mm {0.079 in} min.

4. Replace the pads as a set (right and left wheels) if either one is at or less than the minimum thickness.

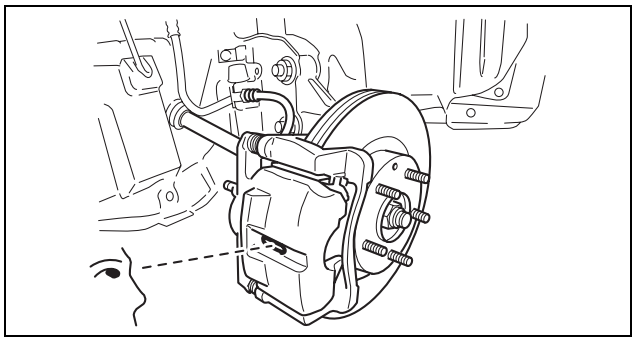
ac5wzw0000019

CONVENTIONAL BRAKE SYSTEM

FRONT BRAKE (DISC) REMOVAL/INSTALLATION

id041100800900

1. Remove in the order indicated in the table.
2. Install in the reverse order of removal.
3. After installation, add brake fluid, bleed the air, and inspect for fluid leakage. (See 04-11-4 BRAKE FLUID AIR BLEEDING.)
4. Depress the brake pedal a few times, rotate the wheel by hand, and verify that the brake does not drag.

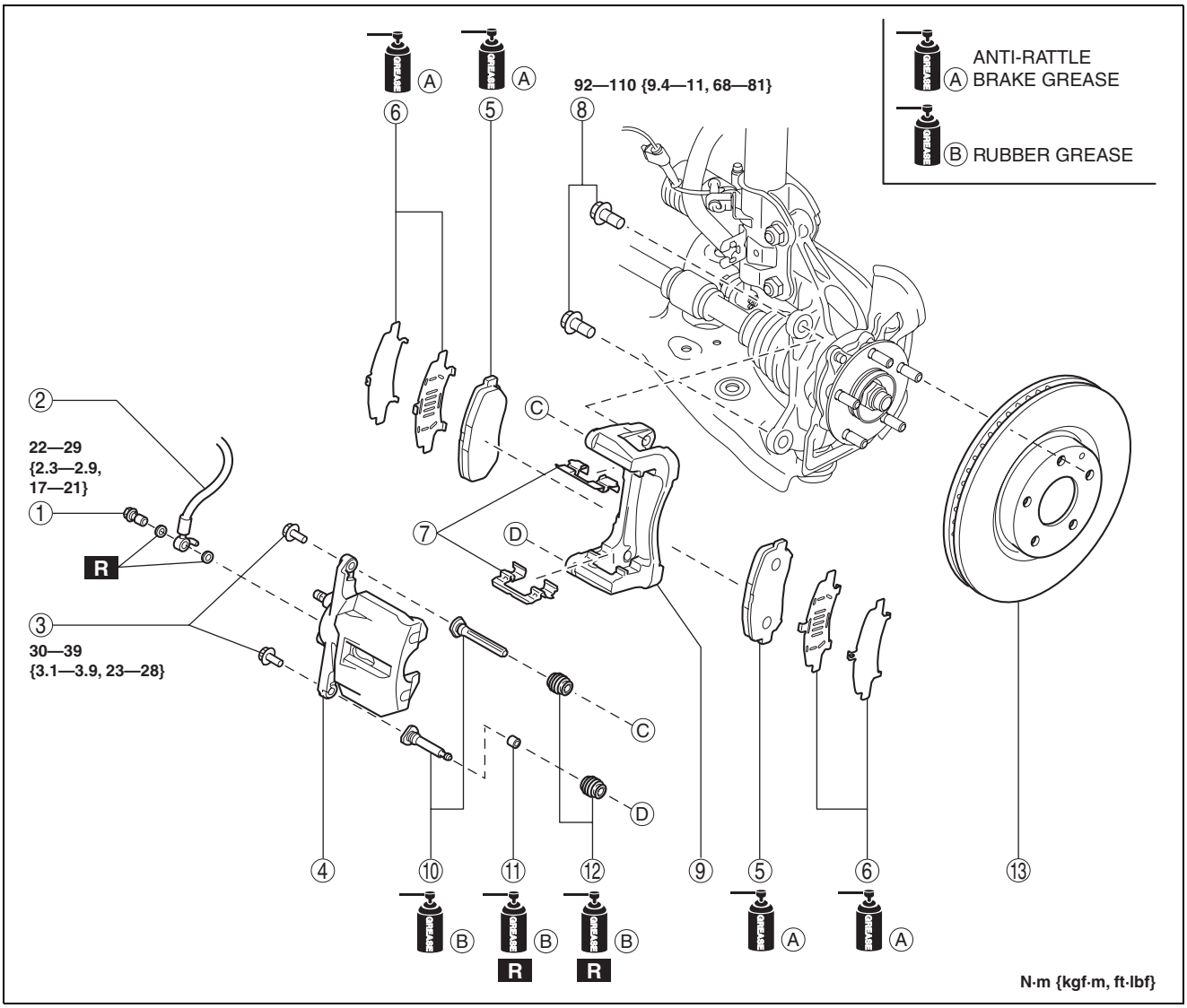

ac5wzw0000252

1	Bolt
2	Brake hose
3	Bolt
4	Caliper (See 04-11-28 Disc Pad Installation Note.)
5	Disc pad (See 04-11-28 Disc Pad Installation Note.)
6	Shim

7	Guide plate
8	Bolt
9	Mounting support
10	Slide pin
11	Bushing
12	Dust boot
13	Disc plate

CONVENTIONAL BRAKE SYSTEM

Disc Pad Installation Note

1. Clean the exposed area of the piston.
2. Push the piston in using the commercially available disc brake expand tool.
3. Install the disc pads to the mounting support.

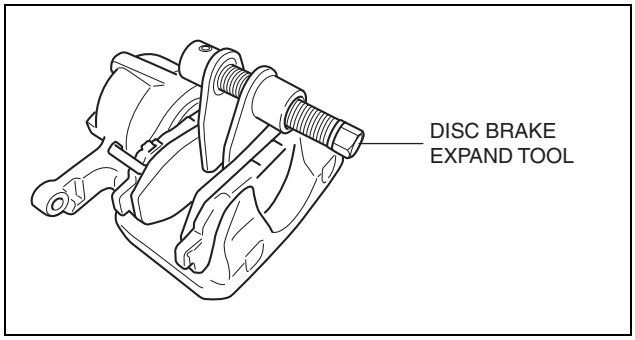

ac5wzw0000252

DISC PAD (FRONT) REPLACEMENT

id041100800700

1. Remove in the order indicated in the table.
2. Install in the reverse order of removal.
3. After installation, depress the brake pedal a few times, rotate the wheel by hand, and verify that the brake does not drag.

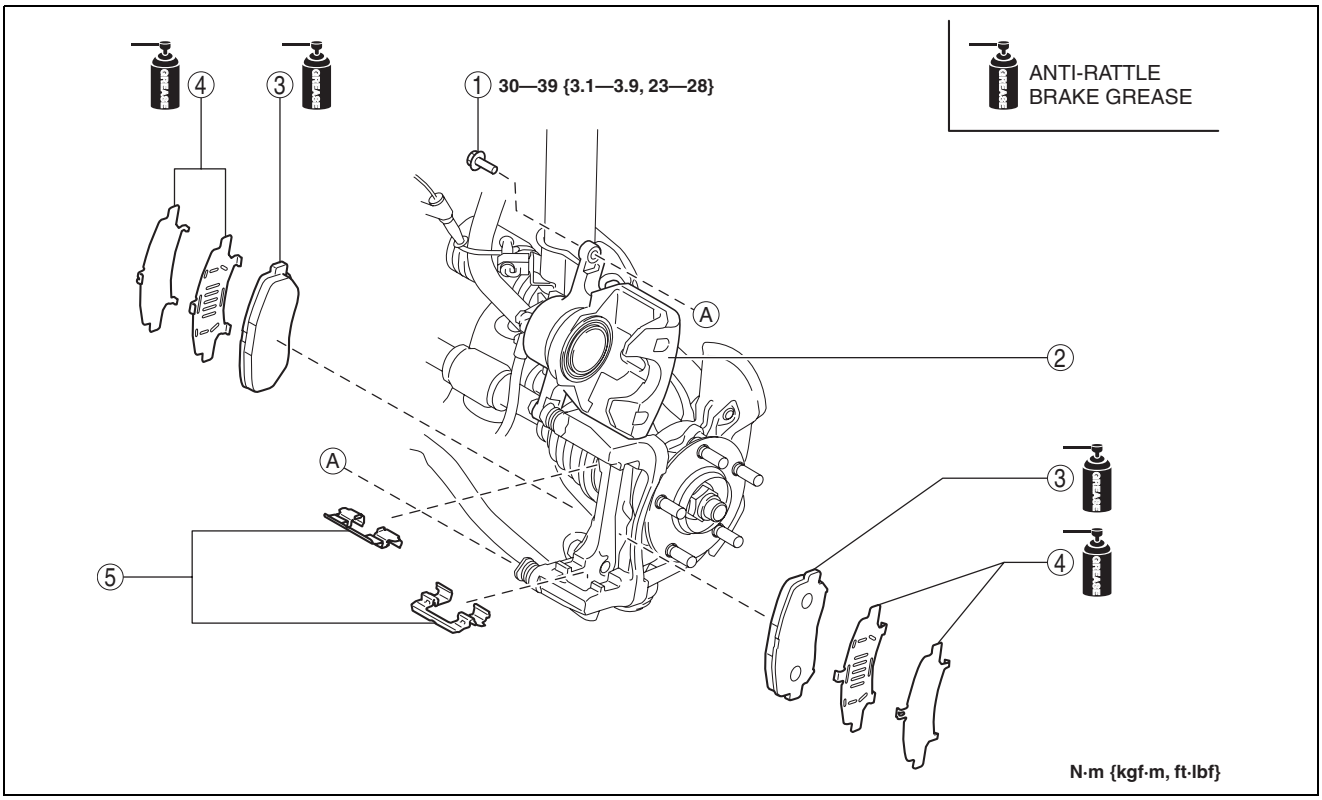

ac5wzw0000252

1	Bolt
2	Caliper
3	Disc pad (See 04-11-29 Disc Pad Installation Note.)

4	Shim
5	Guide plate

CONVENTIONAL BRAKE SYSTEM

Disc Pad Installation Note

1. Clean the exposed area of the piston.
2. Push the piston in using the commercially available disc brake expand tool.
3. Install the disc pads to the mounting support.

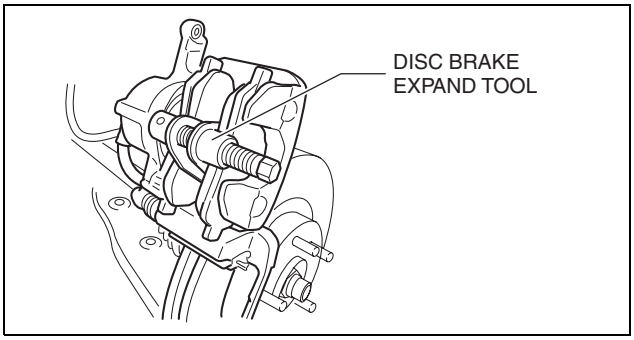

ac5wzw0000252

CALIPER (FRONT) DISASSEMBLY/ASSEMBLY

id041100801000

1. Disassemble in the order indicated in the table.

1	Bleeder cap
2	Bleeder screw
3	Piston (See 04-11-30 Piston Disassembly Note.)
4	Dust seal
5	Piston seal
6	Caliper body

2. Assemble in the reverse order of removal.

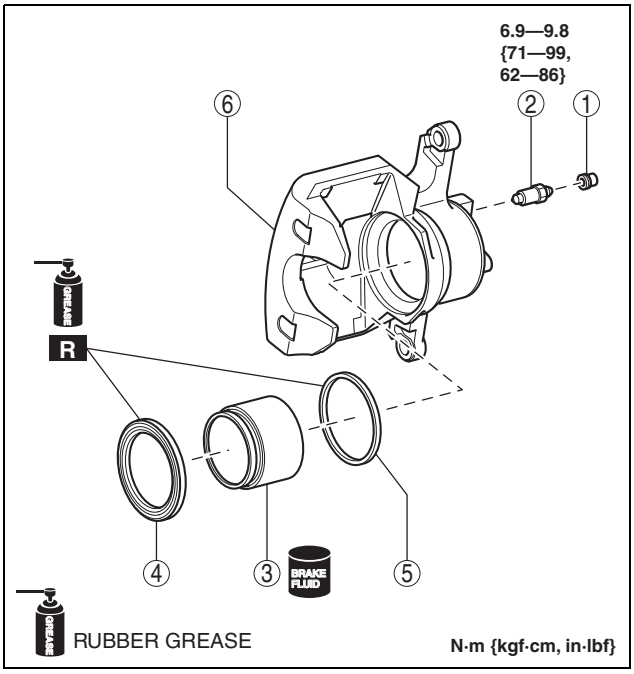

ac5wzw0000020

CONVENTIONAL BRAKE SYSTEM

Piston Disassembly Note

Warning
- **When compressed air is blown into the caliper body, injury to a finger or other part from pinching could result from the piston springing up. When blowing in compressed air, do not place your fingers between the piston and caliper body when performing the work.**

Caution
- **The piston could be damaged if blown out with great force. Blow the compressed air slowly to prevent the piston from suddenly popping out.**

1. Insert a piece of wood in the caliper as shown in the figure and blow compressed air through the hole to remove the piston from the caliper body.

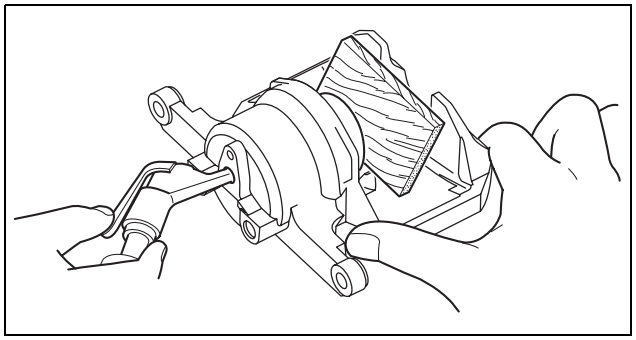

ac5wzw0000020

BRAKE HOSE (FRONT) REMOVAL/INSTALLATION

id041100190300

1. Remove in the order indicated in the table.
2. Install in the reverse order of removal.
3. After installation, add brake fluid, bleed the air, and inspect for fluid leakage. (See 04-11-4 BRAKE FLUID AIR BLEEDING.)

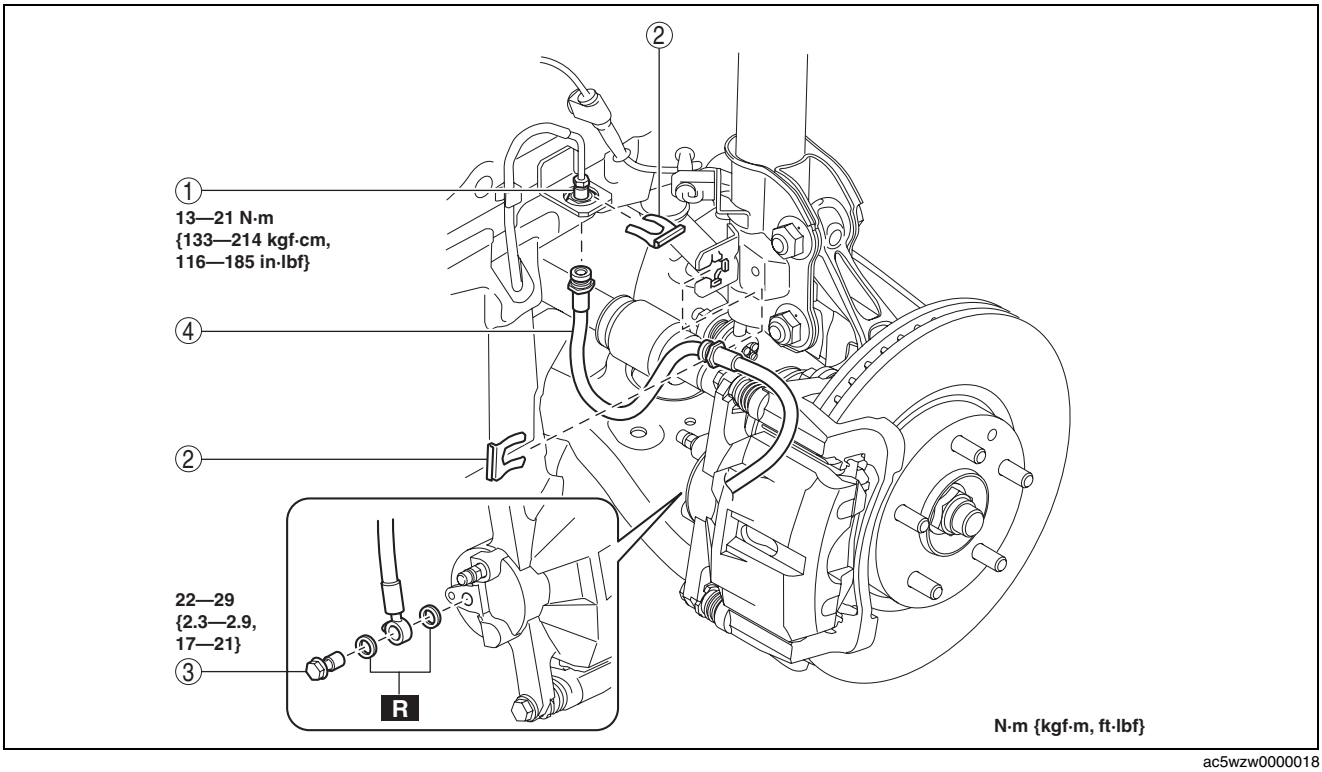

ac5wzw0000018

1	Brake pipe
2	Clip

3	Bolt
4	Brake hose

CONVENTIONAL BRAKE SYSTEM

REAR BRAKE (DISC) INSPECTION

id041100800400

Brake Judder Repair Hints
Description

1. Brake judder concern has the following 3 characteristics:

Steering wheel vibration

1. The steering wheel vibrates in the rotation direction. This characteristic is most noticeable when applying brakes at a vehicle speed of **100—140 km/h {62.2—86.9 mph}**.

Floor vibration

1. When applying the brakes, the vehicle body shakes back and forth. The seriousness of the shaking is not influenced by vehicle speed.

Brake pedal vibration

1. When applying the brakes, a pulsating force tries to push the brake pad back. The pulsation is transmitted to the brake pedal.
2. The following are the main possible causes of brake judder:

Due to an excessive runout (side-to-side wobble) of the disc plate, the thickness of the disc plate is uneven.

1. If the runout is **more than 0.05 mm {0.002 in}** at the position **10 mm {0.39 in}** from the disc plate edge, uneven wear occurs on the disc plate because the pad contacts the plate unevenly.
2. If the runout is **less than 0.05 mm {0.002 in}**, uneven wear does not occur.

The disc plate is deformed by heat.

1. Repeated panic braking may raise the temperature in some portions of the disc plate by **approx. 1,000 °C {1,832 °F}**. This results in a deformed disc plate.

Due to corrosion, the thickness and friction coefficient of the disc plate change.

1. If the vehicle is parked in damp conditions for a long time, corrosion occurs on the friction surface of the disc plate.
2. The thickness of corrosion is uneven and sometimes appears like a wave pattern, which changes the friction coefficient and causes a reaction force.

CONVENTIONAL BRAKE SYSTEM

Inspection and repair procedure

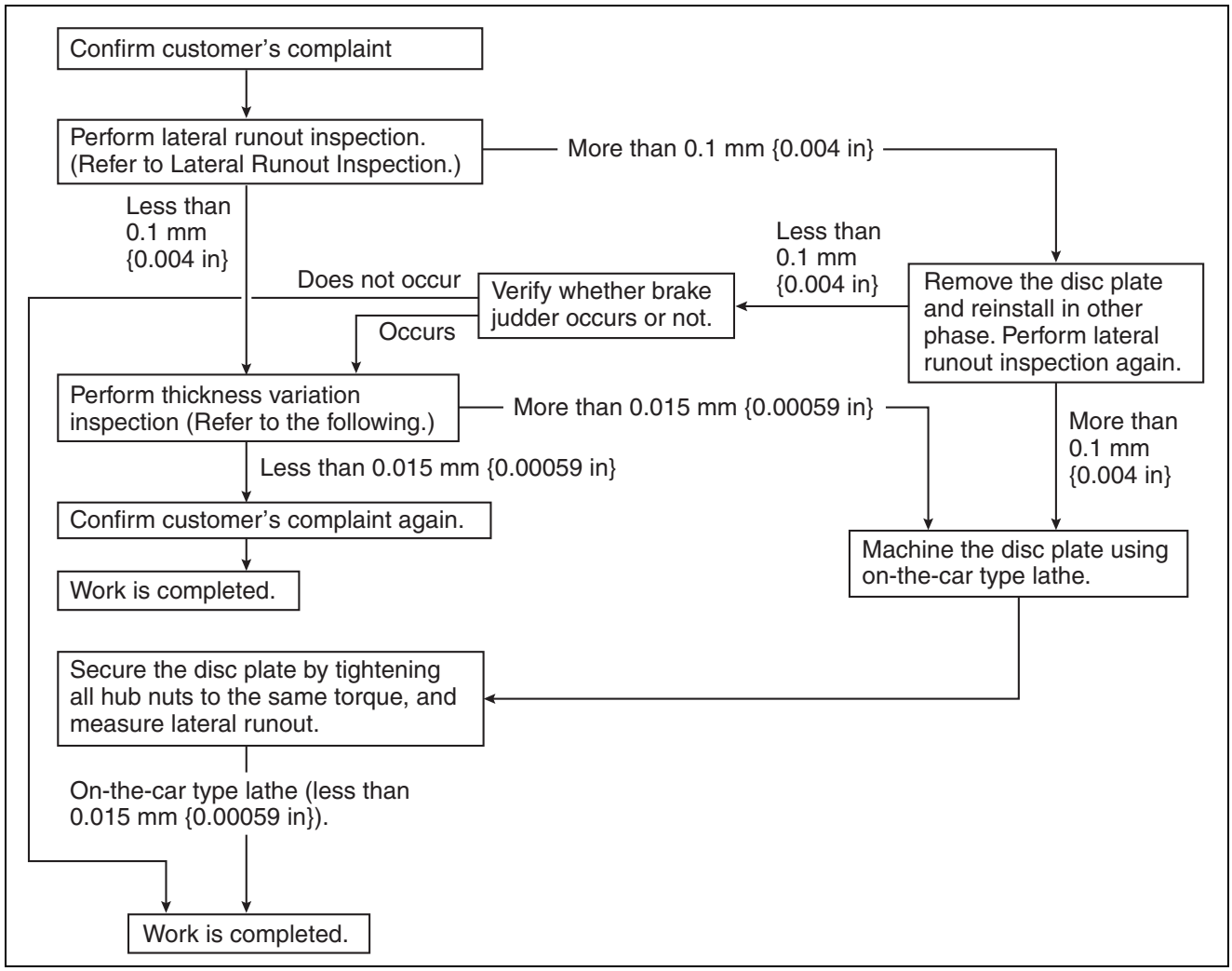

ac5wzw0000018

Lateral runout inspection

1. To secure the disc plate and the hub, insert the washer (thickness **10 mm {0.39 in}**, inner diameter **more than 12 mm {0.47 in}**) between each hub bolt and the hub nut, then tighten all the hub nuts.

   Note
   - The component parts of the **SST** (49 B017 001 or 49 G019 003) can be used as a suitable washer.

2. After tightening all the hub nuts to the same torque, put the dial gauge on the friction surface of the disc plate **10 mm {0.39 in}** from the disc plate edge.
3. Rotate the disc plate one time and measure the runout.

   Rear disc plate runout limit
   0.1 mm {0.004 in}

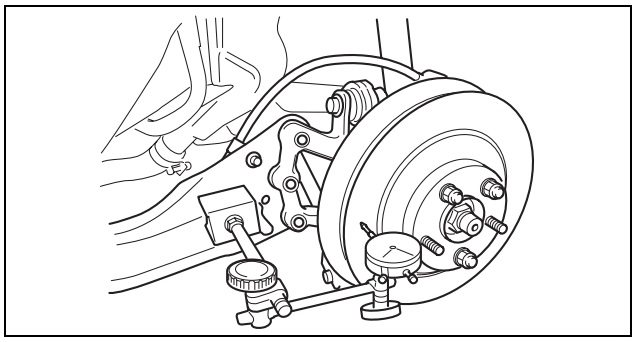

ac5wzw0000218

CONVENTIONAL BRAKE SYSTEM

Thickness variation inspection

1. Clean the disc plate-to-pad friction surface using a brake cleaner.
2. Measure the points indicated in the illustration using a caliper (micrometer).
3. Subtract the minimum value from the maximum, and if the result is not within the specification, machine the disc plate using a lathe.

Thickness variation limit
0.015 mm {0.00059 in}

Warning
- **Do not exceed minimum disc plate thickness.**

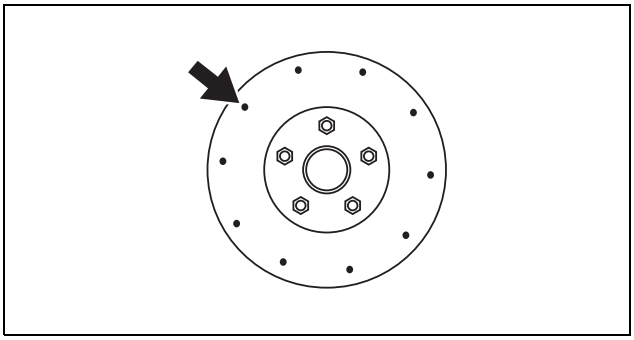
am5ezw0000429

Disc Plate Thickness Inspection

Caution
- **Excessive runout may result if the disc plate is removed from the vehicle then machined. Machine the disc plate while installed on the vehicle.**

1. Measure the thickness of the disc plate.
   - If the thickness is not within the specification, replace the disc plate.

Minimum rear disc plate thickness
8.0 mm {0.31 in}

Minimum rear disc plate thickness after machining using a brake lathe on-vehicle
8.8 mm {0.35 in}

Disc Pad Thickness Inspection

1. Jack up the front of the vehicle and support it with safety stands.
2. Remove the wheels and tires.
3. Verify the remaining thickness of the pads.

Minimum rear disc pad thickness
2.0 mm {0.079 in} min.

4. Replace the pads as a set (right and left wheels) if either one is at or less than the minimum thickness.

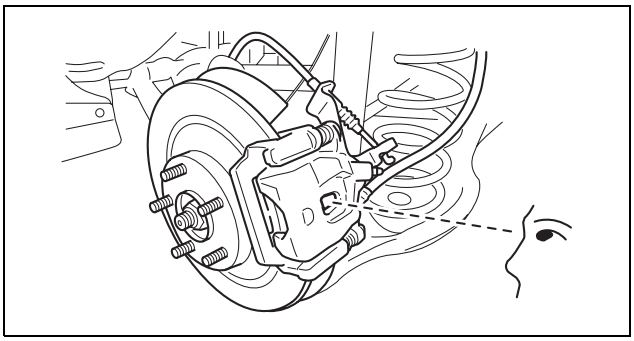
ac5wzw0000018

CONVENTIONAL BRAKE SYSTEM

REAR BRAKE (DISC) REMOVAL/INSTALLATION

id041100800500

1. Loosen the adjusting nut. (See 04-12-2 PARKING BRAKE LEVER ADJUSTMENT.)
2. Remove in the order indicated in the table.
3. Install in the reverse order of removal.
4. After installation, add brake fluid, bleed the air, and inspect for fluid leakage. (See 04-11-4 BRAKE FLUID AIR BLEEDING.)
5. Pump the brake pedal a few times and inspect the following:
   - The disc pad projection is securely installed to the piston groove
   - Parking brake lever stroke
   - Brake drag

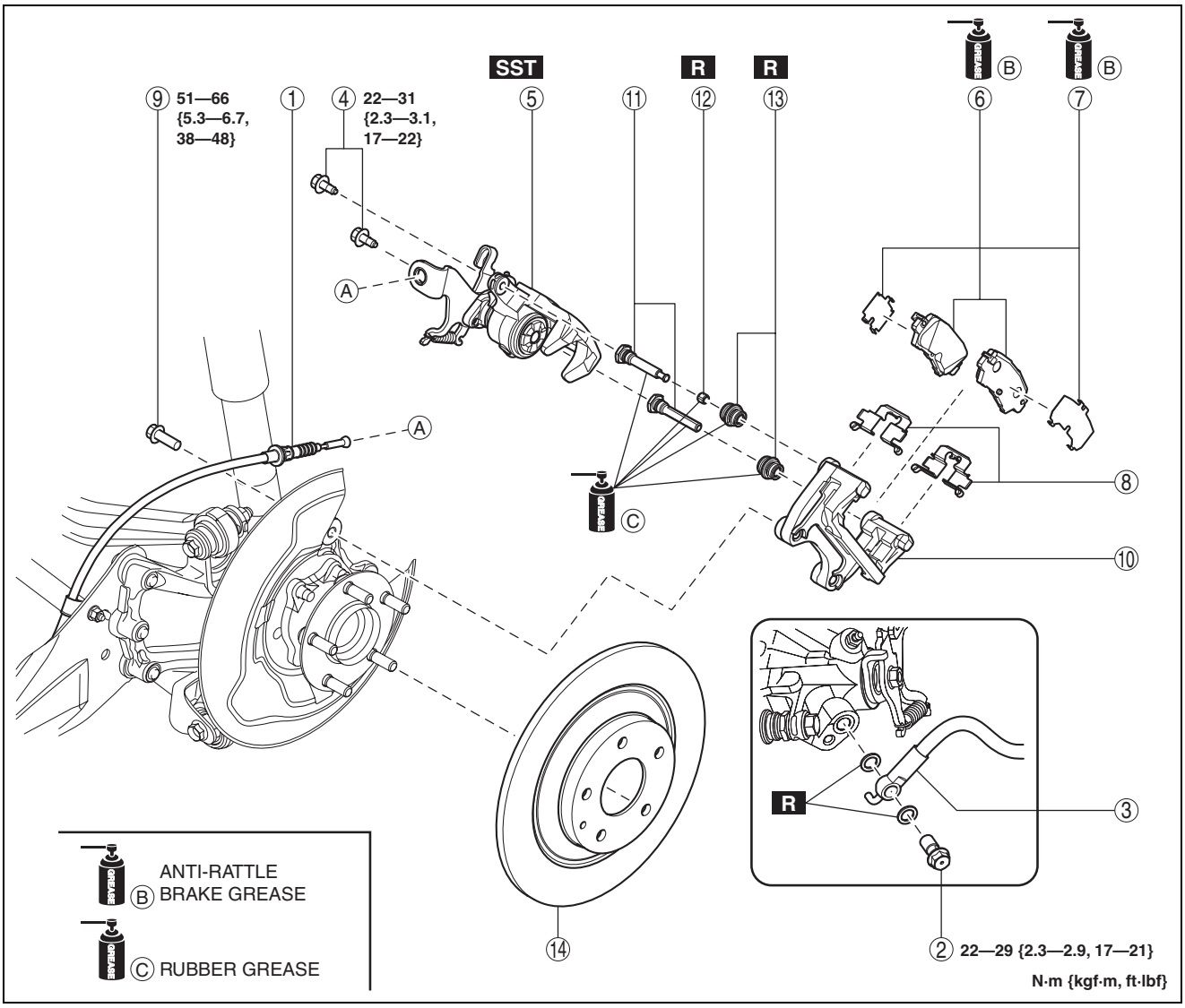

ac5wzw0000245

1	Rear parking brake cable (See 04-11-35 Rear Parking Brake Cable Installation Note.)
2	Bolt
3	Brake hose
4	Bolt
5	Caliper (See 04-11-35 Caliper Installation Note.)
6	Disc pad

7	Shim
8	Guide plate
9	Bolt
10	Mounting support
11	Slide pin
12	Bushing
13	Dust boot
14	Disc plate

CONVENTIONAL BRAKE SYSTEM

Caliper Installation Note

1. Clean the exposed area of the piston.
2. Rotate the piston clockwise slowly using the SST and push the piston completely until the piston grooves are in the position shown in the figure.
3. Install the caliper.

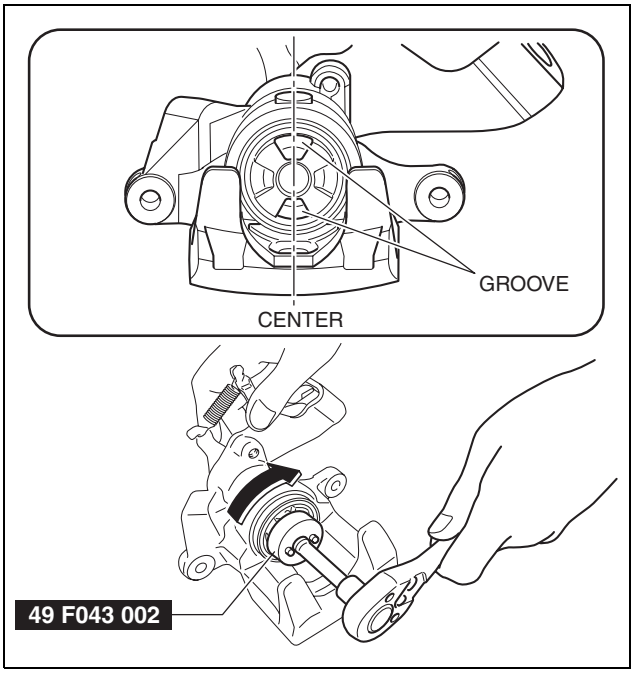

ac5wzw0000019

Rear Parking Brake Cable Installation Note

1. Install the rear parking brake cable to the rear caliper.
2. Verify that the outer end tabs of the rear parking brake cable is securely engaged with the bracket.

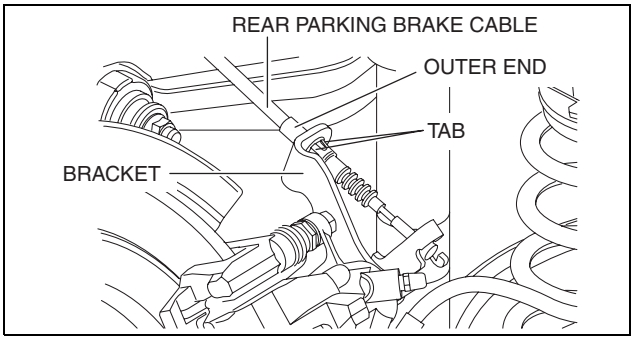

ac5wzw0000025

DISC PAD (REAR) REPLACEMENT

CONVENTIONAL BRAKE SYSTEM

id041100800300

1. Remove in the order indicated in the table.
2. Install in the reverse order of removal.
3. After installation, pump the brake pedal a few times and inspect the following:
   — The disc pad projection is securely installed to the piston groove
   — Parking brake lever stroke
   — Brake drag

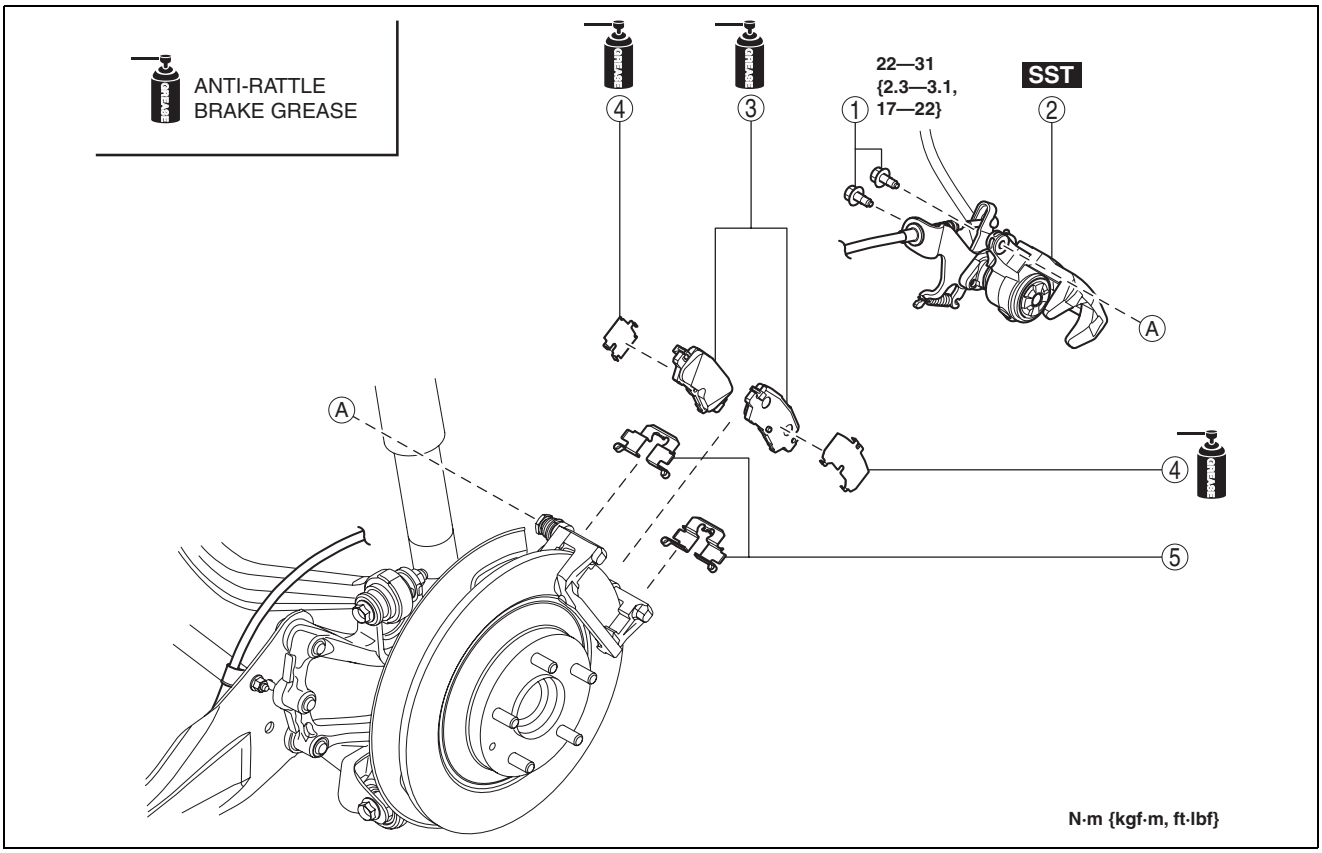

ac5wzw0000228

1	Bolt
2	Caliper (See 04-11-34 REAR BRAKE (DISC) REMOVAL/ INSTALLATION.)
3	Disc pad

4	Shim
5	Guide plate

CONVENTIONAL BRAKE SYSTEM

CALIPER (REAR) DISASSEMBLY/ASSEMBLY

id041100800600

1. Disassemble in the order indicated in the table.

1	Bleeder cap
2	Bleeder screw
3	Piston (See 04-11-37 Piston Disassembly Note.) (See 04-11-37 Dust Seal, Piston Assembly Note.)
4	Dust seal (See 04-11-37 Dust Seal, Piston Assembly Note.)
5	Piston seal
6	Caliper body

2. Assemble in the reverse order of removal.

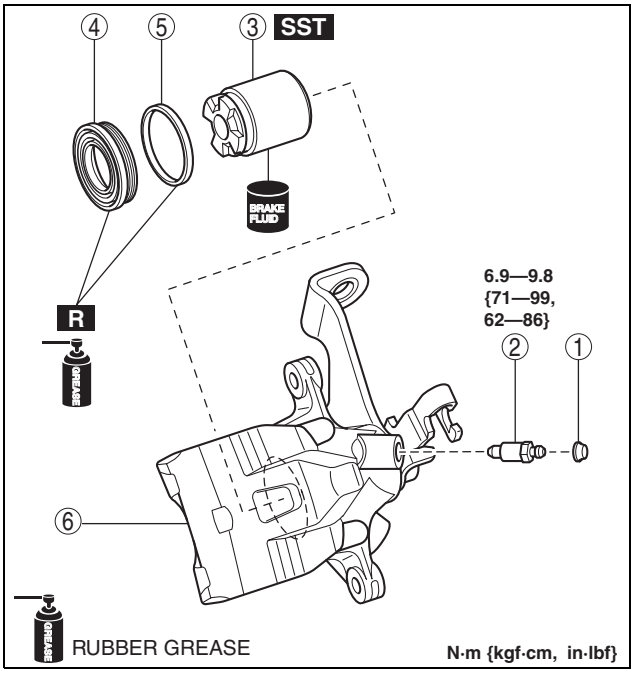

ac5wzw0000245

Piston Disassembly Note

1. Rotate the piston counter-clockwise using the **SST**, remove the piston from the caliper body.

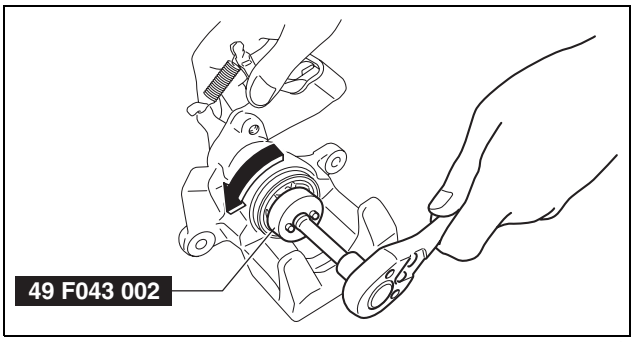

ac5wzw0000019

Dust Seal, Piston Assembly Note

1. Assemble the dust seal to the piston.
2. Assemble the lip of the dust seal to the groove of the caliper body with the dust seal is assembled to the piston as shown in the figure.

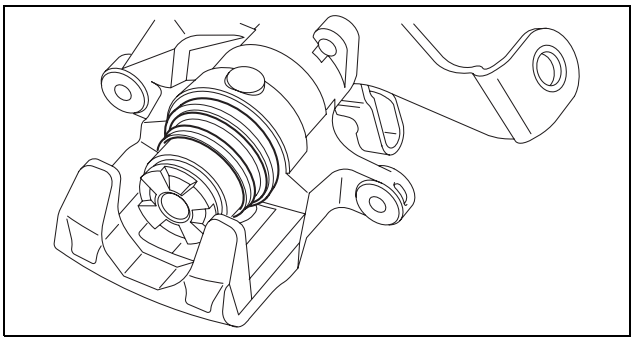

ac5wzw0000019

CONVENTIONAL BRAKE SYSTEM

3. Rotate the piston clockwise using the **SST** slowly and push the piston inwards completely.
4. Verify that the dust seal is installed into the groove of the piston securely.

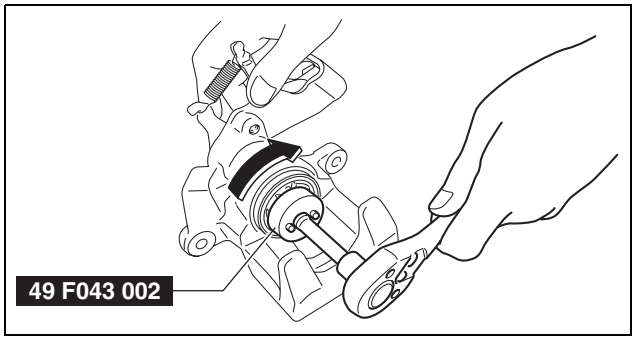

ac5wzw0000019

BRAKE HOSE (REAR) REMOVAL/INSTALLATION

id041100190400

1. Remove in the order indicated in the table.
2. Install in the reverse order of removal.
3. After installation, add brake fluid, bleed the air, and inspect for fluid leakage. (See 04-11-4 BRAKE FLUID AIR BLEEDING.)

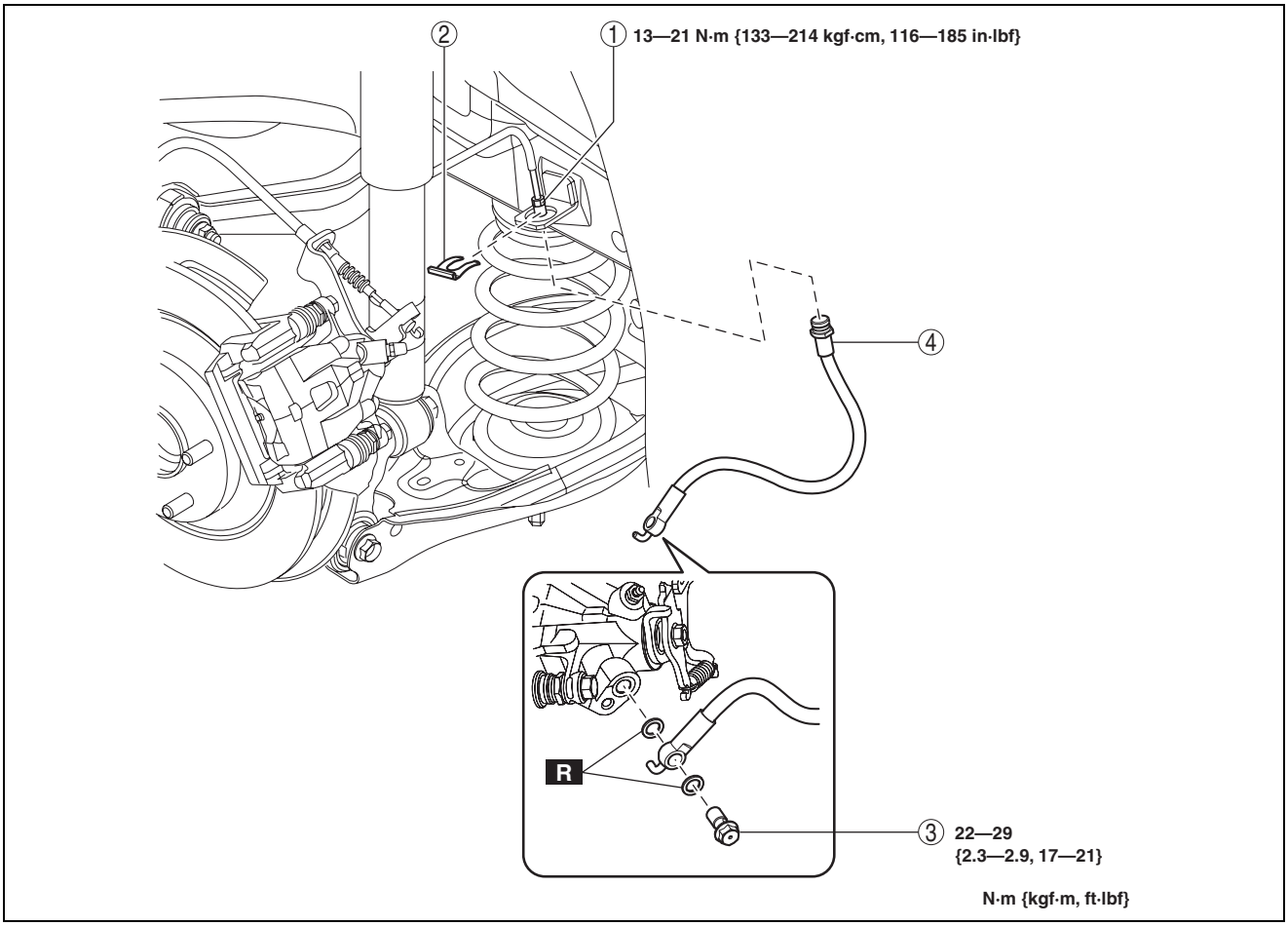

ac5wzw0000018

1	Brake pipe	3	Bolt
2	Clip	4	Brake hose

04-12 PARKING BRAKE SYSTEM

PARKING BRAKE SYSTEM LOCATION INDEX. 04-12–1
PARKING BRAKE LEVER INSPECTION 04-12–2
Stroke Inspection 04-12–2
PARKING BRAKE LEVER ADJUSTMENT 04-12–2
PARKING BRAKE LEVER REMOVAL/INSTALLATION. 04-12–3
FRONT PARKING BRAKE CABLE REMOVAL/INSTALLATION. 04-12–5
REAR PARKING BRAKE CABLE REMOVAL/INSTALLATION 04-12–7
Rear Parking Brake Cable Removal Note 04-12–7
Rear Parking Brake Cable Installation Note 04-12–8
PARKING BRAKE SWITCH INSPECTION 04-12–8

PARKING BRAKE SYSTEM

PARKING BRAKE SYSTEM LOCATION INDEX

id041200800100

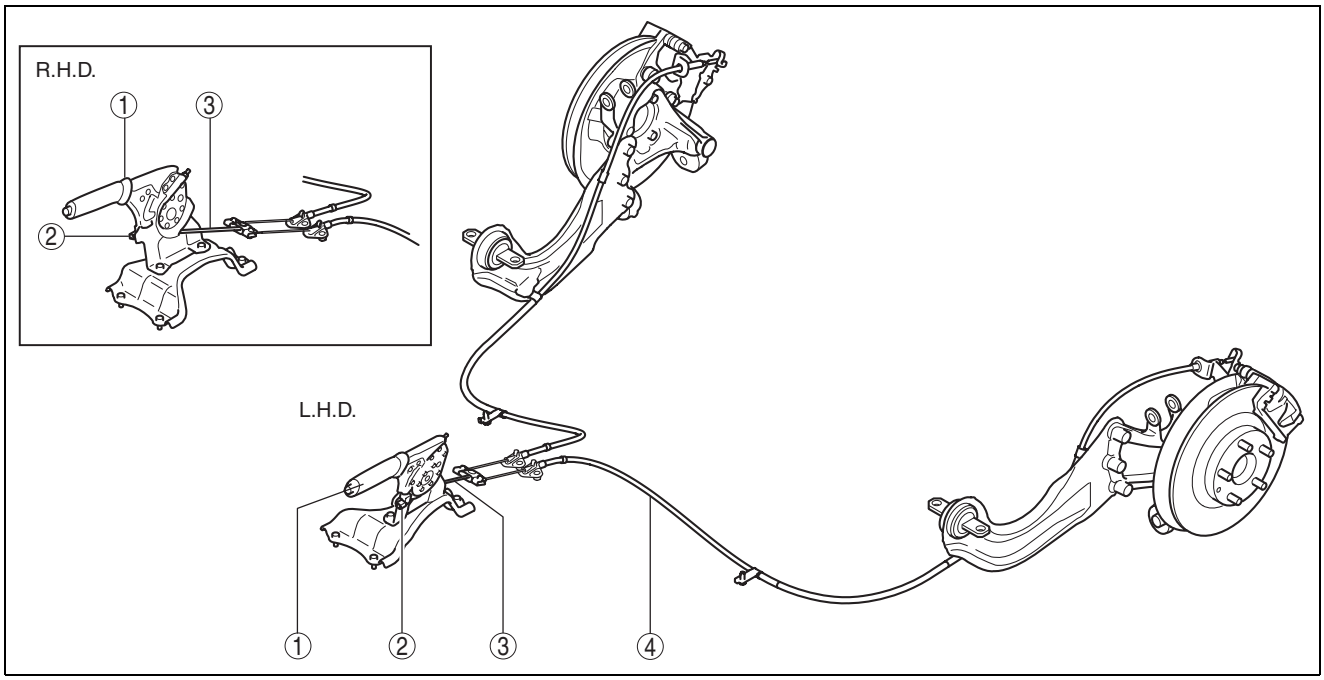

ac5wzw0000022

1	Parking brake lever (See 04-12-2 PARKING BRAKE LEVER INSPECTION.) (See 04-12-2 PARKING BRAKE LEVER ADJUSTMENT.) (See 04-12-3 PARKING BRAKE LEVER REMOVAL/INSTALLATION.)

2	Parking brake switch (See 04-12-8 PARKING BRAKE SWITCH INSPECTION.)
3	Front parking brake cable (See 04-12-5 FRONT PARKING BRAKE CABLE REMOVAL/INSTALLATION.)
4	Rear parking brake cable (See 04-12-7 REAR PARKING BRAKE CABLE REMOVAL/INSTALLATION.)

PARKING BRAKE SYSTEM

PARKING BRAKE LEVER INSPECTION

id041200800900

Stroke Inspection

1. Pump the brake pedal a few times.
2. Pull the parking brake lever two to three times.
3. Inspect the parking brake stroke by slowly pulling at point A **50 mm {2.0 in}** from the end of the parking brake lever with a force of **98 N {10 kgf, 22 lbf}** and counting the number of notches (clicking sound).
   - If not within the specification, adjust the parking brake lever.

Parking brake lever stroke when pulled at 98 N {10 kgf, 22 lbf}
2—3 notches

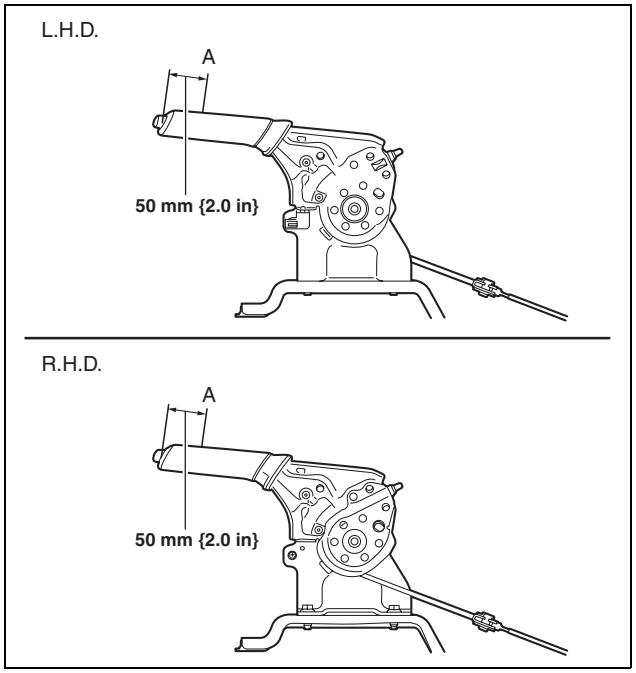

ac5wzw0000024

PARKING BRAKE LEVER ADJUSTMENT

id041200801500

1. Pump the brake pedal a few times.
2. Remove the upper console and put it out of the way. (See 09-17-47 REAR CONSOLE DISASSEMBLY/ASSEMBLY.)
3. Turn the adjusting nut and adjust the parking brake lever.
4. After adjustment, pull the parking brake lever one notch and verify that the parking brake warning light illuminates.
5. Verify that the rear brakes do not drag.

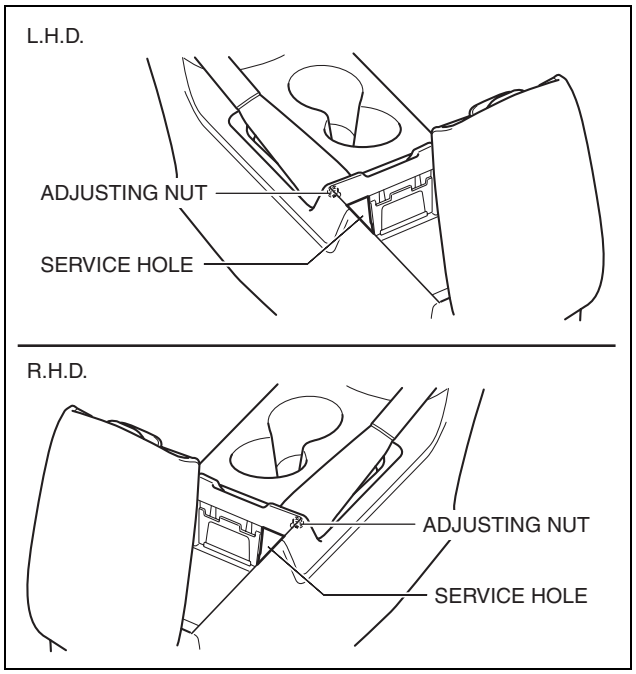

ac5wzw0000023

PARKING BRAKE SYSTEM

PARKING BRAKE LEVER REMOVAL/INSTALLATION

id041200801600

1. Remove the front console box. (See 09-17-40 FRONT CONSOLE BOX REMOVAL/INSTALLATION.)
2. Remove the shift lever knob. (MTX) (See 05-16A-1 MANUAL TRANSAXLE SHIFT MECHANISM REMOVAL/INSTALLATION [C66M-R, C66MX-R].)
3. Remove the shift panel. (See 09-17-42 SHIFT PANEL REMOVAL/INSTALLATION.)
4. Remove the upper panel. (See 09-17-44 UPPER PANEL REMOVAL/INSTALLATION.)
5. Remove in the order indicated in the table.
6. Install in the reverse order of removal.
7. After installation, inspect the parking brake lever stroke. (See 04-12-2 PARKING BRAKE LEVER INSPECTION.)

R.H.D.

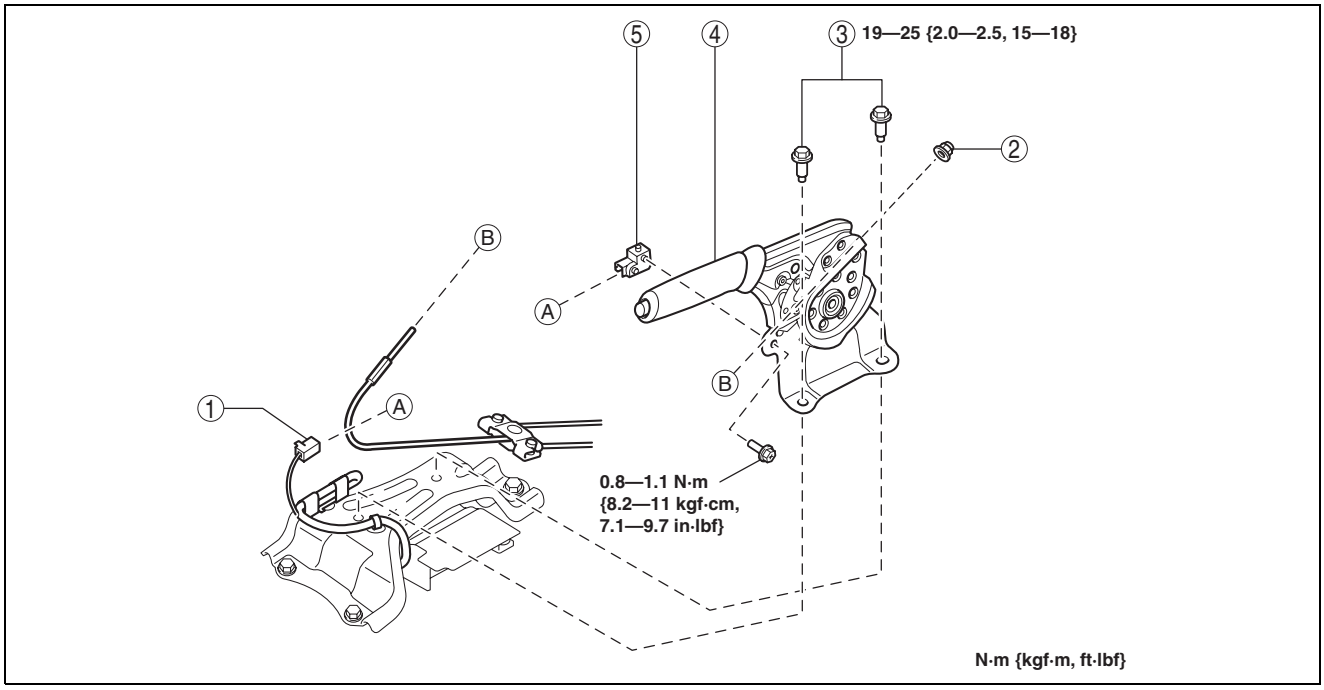

ac5wzw0000024

1	Parking brake switch connector
2	Adjusting nut
3	Bolt

4	Parking brake lever
5	Parking brake switch

PARKING BRAKE SYSTEM

FRONT PARKING BRAKE CABLE REMOVAL/INSTALLATION

id041200801200

1. Remove the front console box. (See 09-17-40 FRONT CONSOLE BOX REMOVAL/INSTALLATION.)
2. Remove the shift lever knob. (MTX) (See 05-16A-1 MANUAL TRANSAXLE SHIFT MECHANISM REMOVAL/INSTALLATION [C66M-R, C66MX-R].)
3. Remove the shift panel. (See 09-17-42 SHIFT PANEL REMOVAL/INSTALLATION.)
4. Remove the upper panel. (See 09-17-44 UPPER PANEL REMOVAL/INSTALLATION.)
5. Remove the rear console. (See 09-17-45 REAR CONSOLE REMOVAL/INSTALLATION.)
6. Remove in the order indicated in the table.
7. Install in the reverse order of removal.
8. After installation, inspect the parking brake lever stroke. (See 04-12-2 PARKING BRAKE LEVER INSPECTION.)

R.H.D.

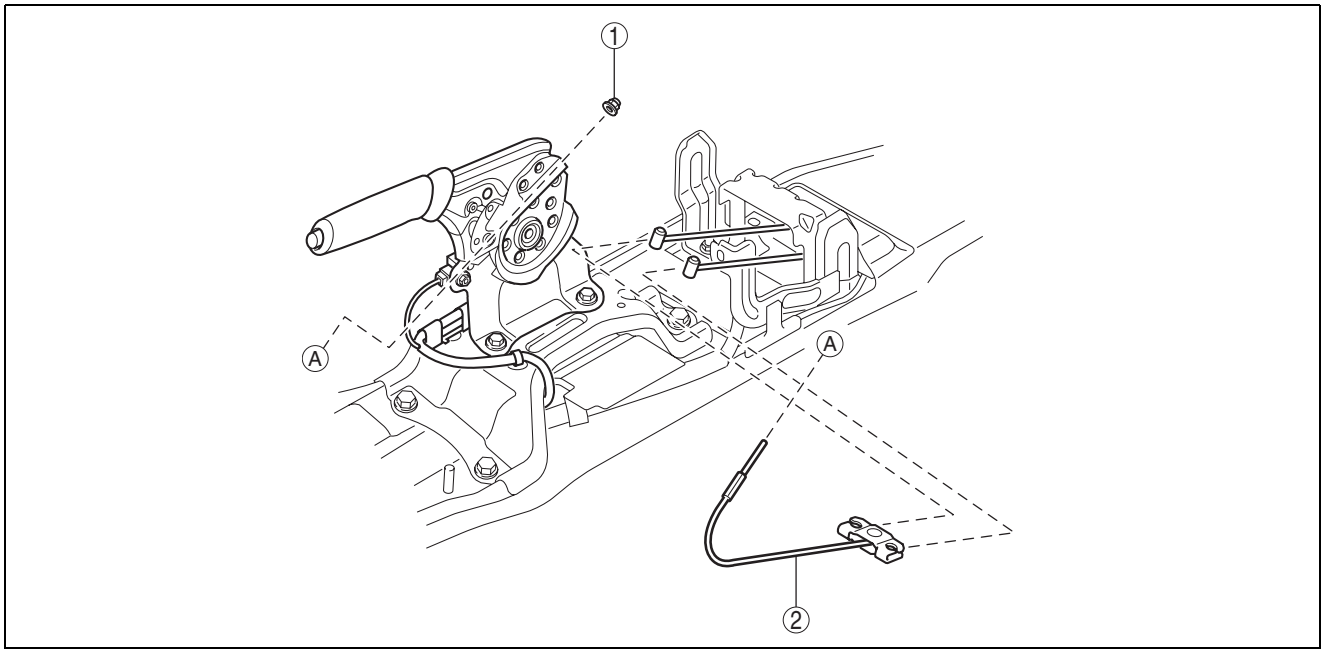

ac5wzw0000022

1	Adjusting nut	2	Front parking brake cable

PARKING BRAKE SYSTEM

REAR PARKING BRAKE CABLE REMOVAL/INSTALLATION

id041200801300

1. Remove the front console box. (See 09-17-40 FRONT CONSOLE BOX REMOVAL/INSTALLATION.)
2. Remove the shift lever knob. (MTX) (See 05-16A-1 MANUAL TRANSAXLE SHIFT MECHANISM REMOVAL/INSTALLATION [C66M-R, C66MX-R].)
3. Remove the shift panel. (See 09-17-42 SHIFT PANEL REMOVAL/INSTALLATION.)
4. Remove the upper panel. (See 09-17-44 UPPER PANEL REMOVAL/INSTALLATION.)
5. Remove the rear console. (See 09-17-45 REAR CONSOLE REMOVAL/INSTALLATION.)
6. Loosen the adjusting nut.
7. Remove the floor under cover No.2. (See 09-16-44 FLOOR UNDER COVER REMOVAL/INSTALLATION.)
8. Remove in the order indicated in the table.
9. Install in the reverse order of removal.
10. After installation, inspect the parking brake lever stroke. (See 04-12-2 PARKING BRAKE LEVER INSPECTION.)

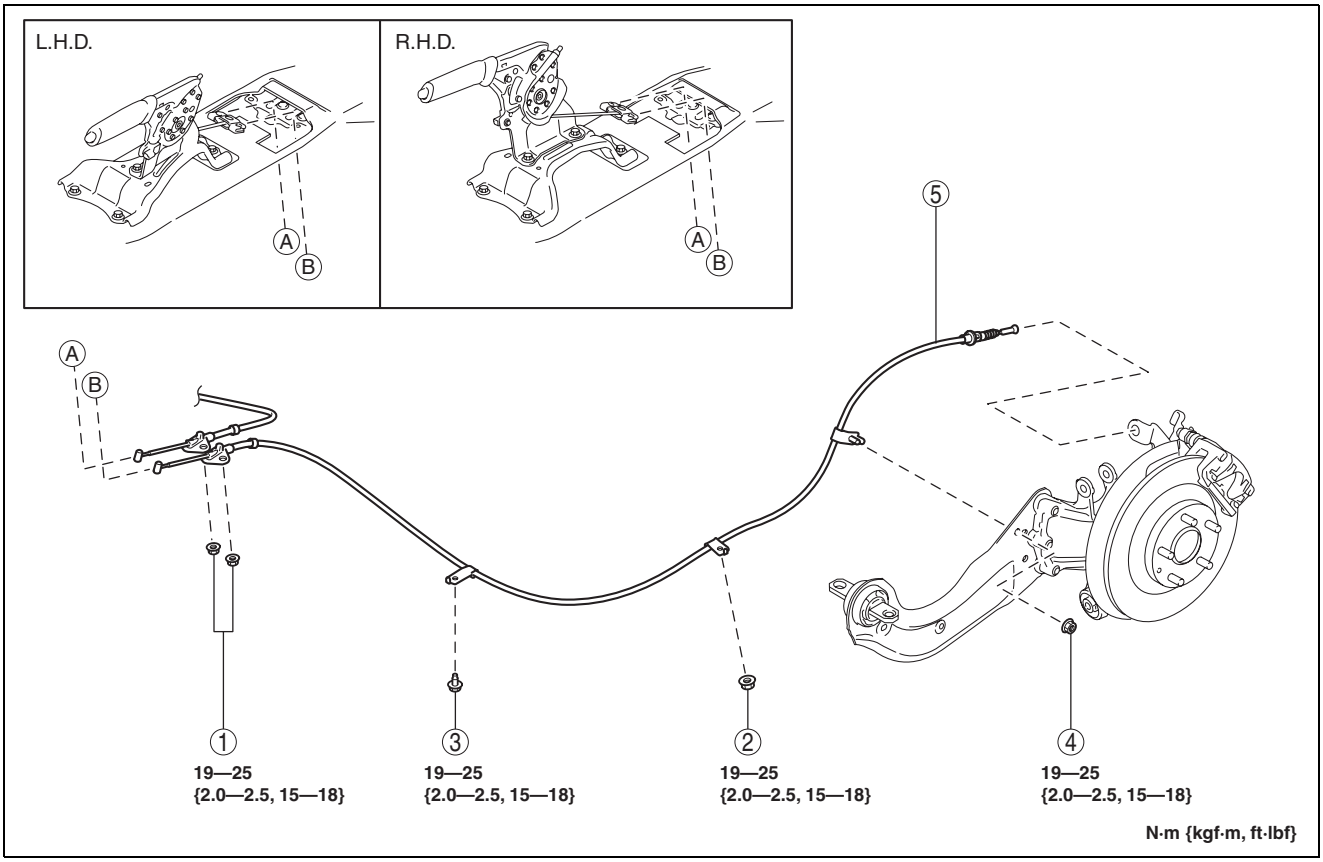

ac5wzw0000023

1	Nut
2	Nut
3	Bolt
4	Nut

5	Rear parking brake cable (See 04-12-7 Rear Parking Brake Cable Removal Note.) (See 04-12-8 Rear Parking Brake Cable Installation Note.)

Rear Parking Brake Cable Removal Note

1. Remove the rear parking brake cable from the front parking brake cable. (See 04-12-5 FRONT PARKING BRAKE CABLE REMOVAL/INSTALLATION.)
2. Remove the rear parking brake cable from the rear caliper.
3. Remove the rear parking brake cable.

PARKING BRAKE SYSTEM

Rear Parking Brake Cable Installation Note

1. Install the rear parking brake cable to the rear caliper.
2. Verify that the outer end tabs of the rear parking brake cable is securely engaged with the bracket.

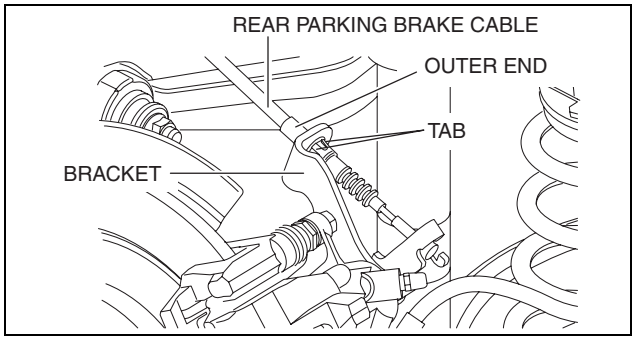

ac5wzw0000025

PARKING BRAKE SWITCH INSPECTION

id041200800700

1. Disconnect the parking brake switch connector.
2. Verify that the continuity is as indicated in the table.
   - If not as indicated in the table, replace the parking brake switch.

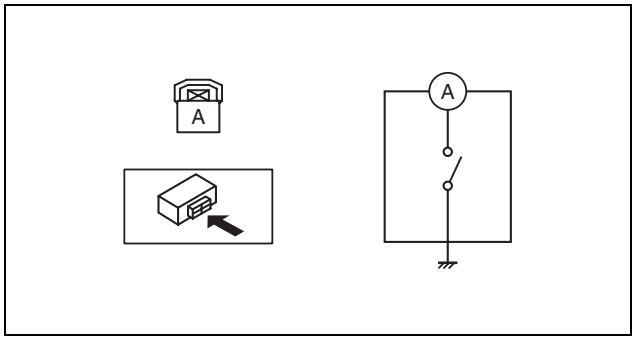

ac5wzw0000023

○—○ : Continuity

Condition	Terminal	
	A	Body ground
Parking brake lever pulled	○—○	
Parking brake lever released		

am5ezw0000433

04-15 DYNAMIC STABILITY CONTROL

DYNAMIC STABILITY CONTROL LOCATION INDEX 04-15–2
DSC HU/CM REMOVAL/INSTALLATION 04-15–4
DSC HU/CM Connector Removal Note 04-15–5
Brake Pipe Removal Note 04-15–6
Brake Pipe Installation Note 04-15–6
DSC HU/CM Connector Installation Note 04-15–6
DSC RELATED PARTS SENSOR INITIALIZATION PROCEDURE 04-15–7
DSC HU/CM INSPECTION 04-15–7
Standard (Reference) 04-15–7
FRONT ABS WHEEL-SPEED SENSOR REMOVAL/INSTALLATION 04-15–9
FRONT ABS WHEEL-SPEED SENSOR INSPECTION 04-15–10
Sensor Output Value Inspection 04-15–10
Installation Visual Inspection 04-15–10
Clearance Inspection 04-15–10
REAR ABS WHEEL-SPEED SENSOR REMOVAL/INSTALLATION 04-15–11
Rear ABS Wheel-speed Sensor Removal Note 04-15–12
REAR ABS WHEEL-SPEED SENSOR INSPECTION [2WD] 04-15–13
Installation Visual Inspection 04-15–13
Clearance Inspection 04-15–13
Sensor Output Value Inspection 04-15–13
REAR ABS WHEEL-SPEED SENSOR INSPECTION [4WD] 04-15–13
Installation Visual Inspection 04-15–13
Clearance Inspection 04-15–13
Sensor Output Value Inspection 04-15–14
BRAKE FLUID PRESSURE SENSOR INSPECTION 04-15–14
TCS OFF SWITCH REMOVAL/INSTALLATION 04-15–15
TCS OFF SWITCH INSPECTION 04-15–15
LASER SENSOR INSPECTION 04-15–16
Simple Inspection 04-15–16
LASER SENSOR REMOVAL/INSTALLATION 04-15–17
Laser Sensor Removal Note 04-15–18
Laser Sensor Installation Note 04-15–18

DYNAMIC STABILITY CONTROL

DYNAMIC STABILITY CONTROL LOCATION INDEX

id041500800500

Vehicle front side

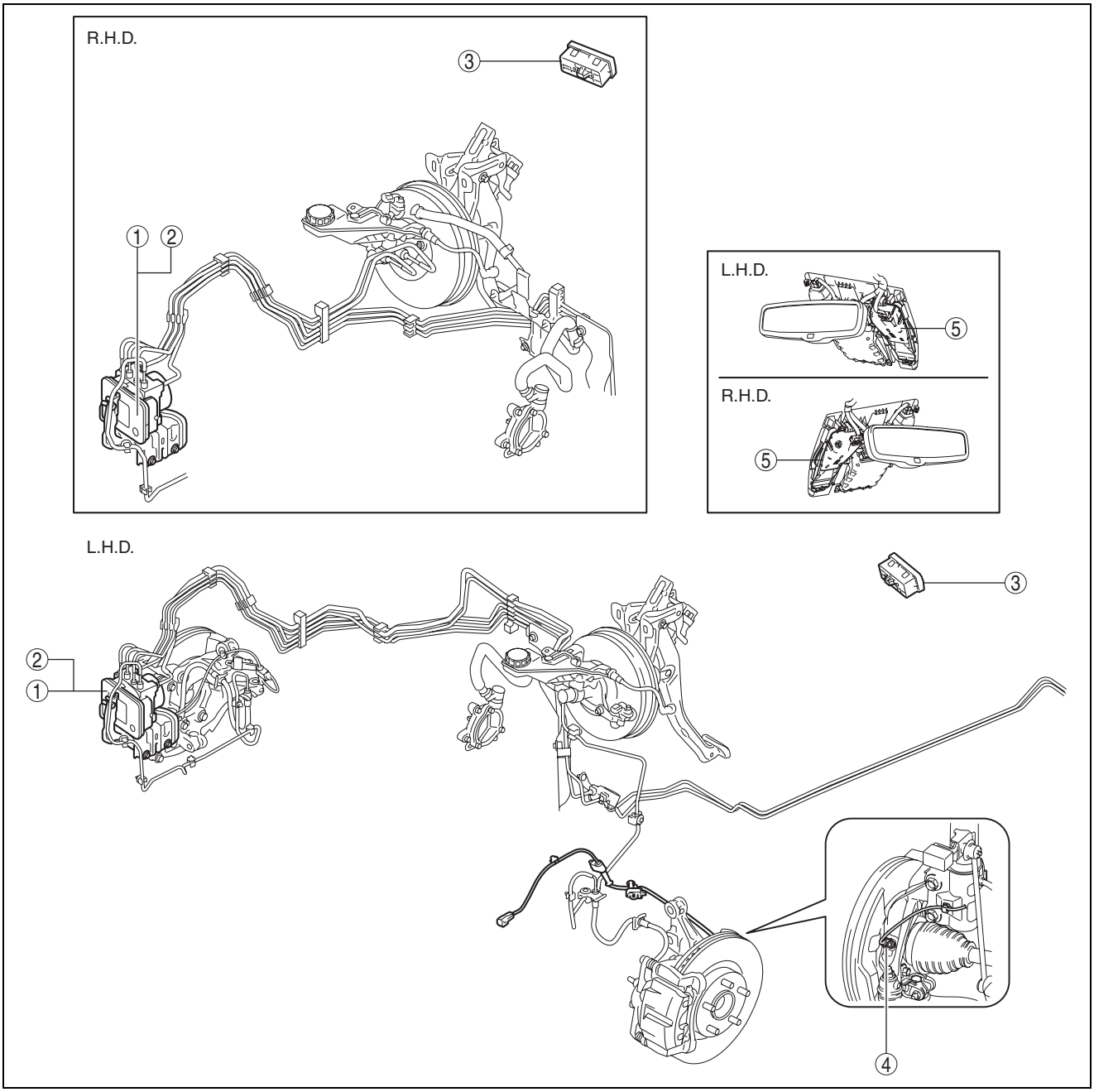

ac5wzw0000085

1	DSC HU/CM (See 04-15-4 DSC HU/CM REMOVAL/INSTALLATION.) (See 04-15-7 DSC RELATED PARTS SENSOR INITIALIZATION PROCEDURE.) (See 04-15-7 DSC HU/CM INSPECTION.)
2	Brake fluid pressure sensor (built-into DSC HU/CM) (See 04-15-14 BRAKE FLUID PRESSURE SENSOR INSPECTION.) (See 04-15-7 DSC RELATED PARTS SENSOR INITIALIZATION PROCEDURE.)

3	TCS OFF switch (See 04-15-15 TCS OFF SWITCH REMOVAL/INSTALLATION.) (See 04-15-15 TCS OFF SWITCH INSPECTION.)
4	Front ABS wheel-speed sensor (See 04-15-9 FRONT ABS WHEEL-SPEED SENSOR REMOVAL/INSTALLATION.) (See 04-15-10 FRONT ABS WHEEL-SPEED SENSOR INSPECTION.)
5	Laser sensor (vehicles with smart city brake support (SCBS)) (See 04-15-16 LASER SENSOR INSPECTION.) (See 04-15-17 LASER SENSOR REMOVAL/INSTALLATION.)

DYNAMIC STABILITY CONTROL

Vehicle rear side

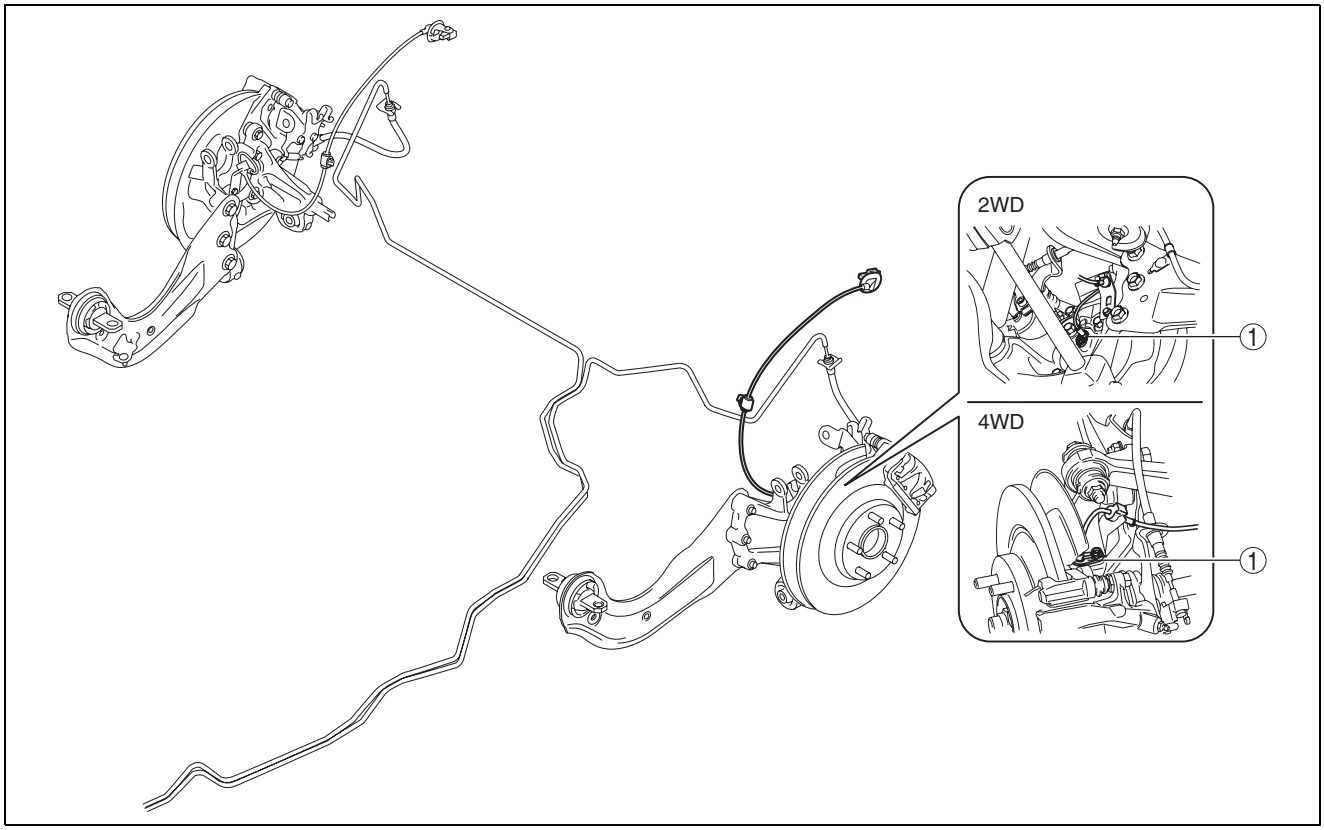

ac5wzw0000085

1	Rear ABS wheel-speed sensor (See 04-15-11 REAR ABS WHEEL-SPEED SENSOR REMOVAL/INSTALLATION.) (See 04-15-13 REAR ABS WHEEL-SPEED SENSOR INSPECTION [2WD].) (See 04-15-13 REAR ABS WHEEL-SPEED SENSOR INSPECTION [4WD].)

DYNAMIC STABILITY CONTROL

DSC HU/CM REMOVAL/INSTALLATION

id041500801000

Warning

- **If the DSC HU/CM configuration is not completed, it could result in an unexpected accident due to the DSC being inoperative. If the DSC HU/CM is replaced, always use the automatic configuration function so that the DSC operation conditions are correct.**
- **If the DSC related parts sensor initialization procedure is not completed, the DSC will not operate properly and it might cause an unexpected accident. Therefore, after replacing or removing the DSC HU/CM, make sure to perform the DSC related parts sensor initialization procedure to insure proper DSC operation.**

Caution

- **The internal parts of the DSC HU/CM could be damaged if dropped. Be careful not to drop the DSC HU/CM. Replace the DSC HU/CM if it is subjected to an impact.**

Note

- When the ignition is switched to ON or the engine is started after the DSC HU/CM have been replaced, the DSC CM reads data from the instrument cluster via CAN communication to perform automatic configuration.
- The DSC HU/CM prior to replacement stores the vehicle specification information.
- A new DSC HU/CM does not store any vehicle specification information.

1. Remove the following parts.
   - Plug hole plate. (SKYACTIV-G 2.0) (See 01-10A-6 PLUG HOLE PLATE REMOVAL/INSTALLATION [SKYACTIV-G 2.0].)
   - Engine cover. (SKYACTIV-D 2.2) (See 01-10B-4 ENGINE COVER REMOVAL/INSTALLATION [SKYACTIV-D 2.2].)
2. Perform the following procedure. (SKYACTIV-D 2.2)
   (1) Disconnect the PCM connector (vehicle front-side).
   (2) Remove the harness blacket from the No.3 engine mount. (See 01-10B-80 ENGINE MOUNT DISASSEMBLY/ASSEMBLY [SKYACTIV-D 2.2].)
   (3) Set the PCM harness out of the way.
3. Remove the bracket.
4. Remove in the order indicated in the table.
5. Install in the reverse order of removal.
6. After installation, add brake fluid, bleed the air, and inspect for fluid leakage. (See 04-11-4 BRAKE FLUID AIR BLEEDING.)
7. Perform the following procedure to implement the DSC HU/CM automatic configuration.
   (1) Switch the ignition ON (engine off) and wait for **10 s or more**.
   (2) Switch the ignition to off and wait for **3 s or more**.
   (3) Switch the ignition ON (engine off) and wait for **3 s or more**.
   (4) The automatic configuration procedure is completed.
8. Perform the DSC related parts sensor initialization procedure. (See 04-15-7 DSC RELATED PARTS SENSOR INITIALIZATION PROCEDURE.)
9. Perform the tire pressure monitoring system initialization procedure. (See 02-12-4 TIRE PRESSURE MONITORING SYSTEM INITIALIZATION PROCEDURE.)
10. Clear the DTCs from the memory. (See 04-02A-7 ON-BOARD DIAGNOSIS [DYNAMIC STABILITY CONTROL (DSC)].)

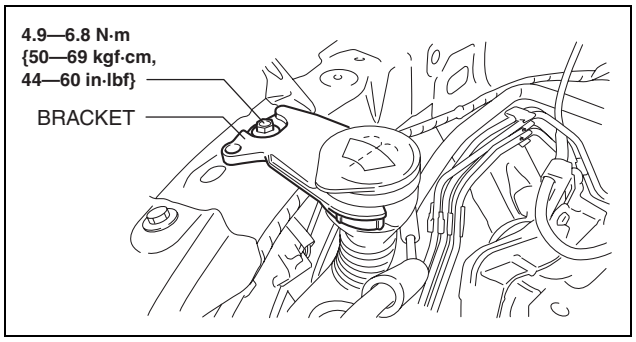

ac5wzw0000022

DYNAMIC STABILITY CONTROL

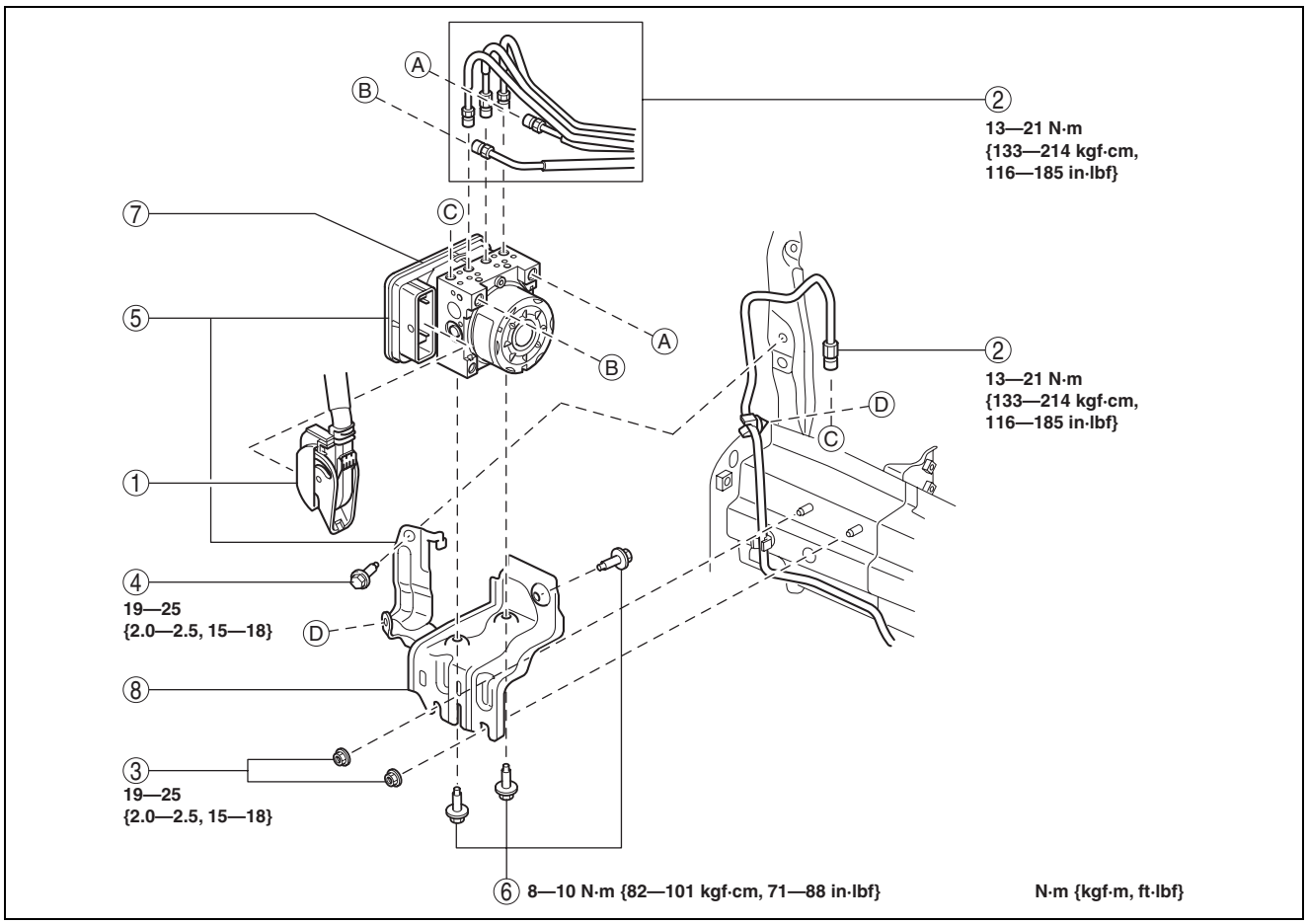

ac5wzw0000307

1	DSC HU/CM connector (See 04-15-5 DSC HU/CM Connector Removal Note.) (See 04-15-6 DSC HU/CM Connector Installation Note.)
2	Brake pipe (See 04-15-6 Brake Pipe Removal Note.) (See 04-15-6 Brake Pipe Installation Note.)
3	Nut

4	Bolt
5	DSC HU/CM component
6	Bolt
7	DSC HU/CM
8	Bracket

DSC HU/CM Connector Removal Note

1. Pull the lock lever down in the direction of the arrow while pressing the tab of the connector cover.
2. Pull the connector toward the vehicle rear and remove it.

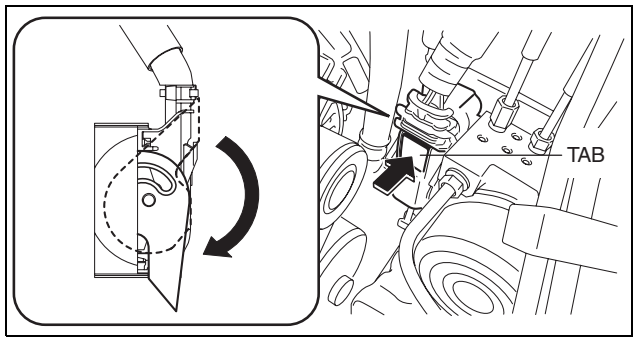

ac5wzw0000023

DYNAMIC STABILITY CONTROL

Brake Pipe Removal Note

1. Place an alignment mark on the brake pipe and DSC HU/CM.
2. Apply protective tape to the connector to prevent brake fluid from entering.
3. Disconnect the brake pipes.

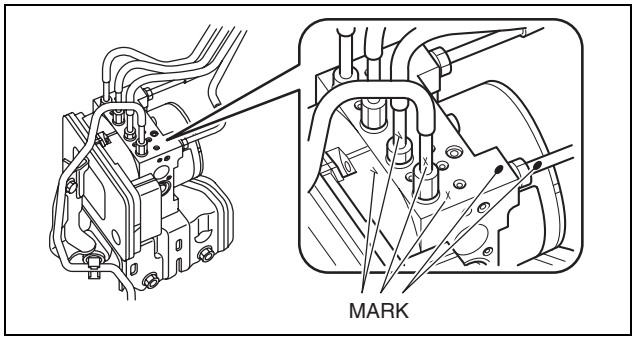

ac5wzw0000023

Brake Pipe Installation Note

1. Align the marks made before removal and install the brake pipe to the DSC HU/CM and brake pipe joint referring to the figure.
2. Tighten the brake pipe to the specified torque using the commercially available flare nut wrench.

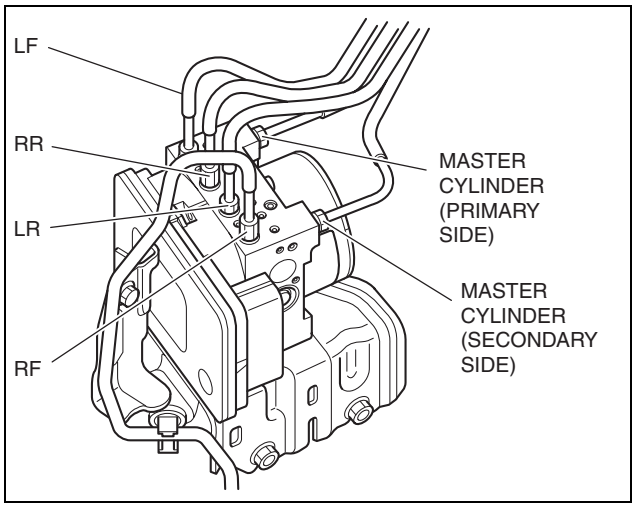

ac5wzw0000253

DSC HU/CM Connector Installation Note

1. Connect the connector and pull the lock lever up in the direction of the arrow.
2. After connecting the connector, verify that the connector cover is completely pushed in.

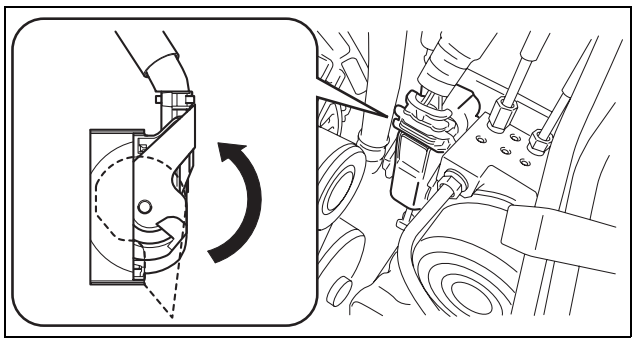

ac5wzw0000023

DYNAMIC STABILITY CONTROL

DSC RELATED PARTS SENSOR INITIALIZATION PROCEDURE

id041500870200

Warning

- **If the initialization procedure is not completed, the DSC will not operate properly and it might cause an unexpected accident. Therefore, after replacing or removing the DSC HU/CM or SAS control module, make sure to perform the initialization procedure to insure proper DSC operation.**

1. Inspect the wheel alignment and the tire pressure.
   - If there is any malfunction, adjust the applicable part.
2. Position the vehicle on level ground.
3. Switch the ignition to off.
4. Connect the M-MDS (IDS) to DLC-2.
5. After the vehicle is identified, select the following items from the initial screen of the IDS.
   1. Select “Chassis”.
   2. Select “ABS/DSC”.
   3. Select “Sensor Initialization”.
6. Then, select an item from the screen menu.
   - “Brake fluid pressure sensor”
   - “Lateral Acceleration Sensor”
   - “Yaw Rate Sensor”
   - “Longitudinal Acceleration Sensor”
7. Perform the procedure according to the directions on the screen.
8. Drive the vehicle.
9. After **5 min or more** of driving, verify that the DSC system is normal.

DSC HU/CM INSPECTION

id041500801100

1. Disconnect the DSC HU/CM connector. (See 04-15-4 DSC HU/CM REMOVAL/INSTALLATION.)
2. Connect the negative battery cable. (See 01-17A-11 NEGATIVE BATTERY CABLE DISCONNECTION/CONNECTION [SKYACTIV-G 2.0].), (See 01-17A-13 NEGATIVE BATTERY CABLE DISCONNECTION/CONNECTION [SKYACTIV-G 2.0 (WITHOUT i-stop)].), (See 01-17B-9 NEGATIVE BATTERY CABLE DISCONNECTION/CONNECTION [SKYACTIV-D 2.2].)
3. Attach the tester lead to the DSC HU/CM wiring harness-side connector and inspect voltage, continuity, or resistance according to the standard (reference) on the table.

Standard (Reference)

DSC HU/CM WIRING HARNESS-SIDE CONNECTOR

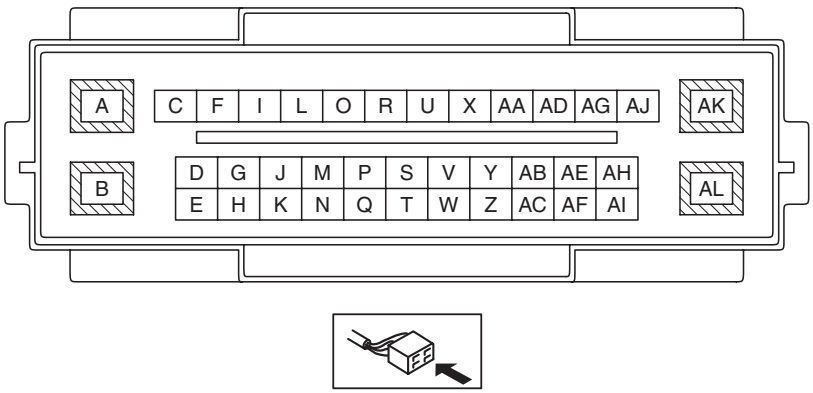

ac5wzw0000000

DYNAMIC STABILITY CONTROL

Terminal	Signal name	Connected to	Measured item	Measured terminal (measurement condition)	Standard	Inspection item(s)
A	Power supply (solenoid operation)	Battery	Voltage	Under any condition	B+	• Wiring harness (A—battery)
B	Power supply (motor operation)	Battery	Voltage	Under any condition	B+	• Wiring harness (B—battery)
C	RF wheel-speed (-)	RF ABS wheel-speed sensor	Continuity	C—RF ABS wheel-speed sensor terminal B	Continuity detected	• Wiring harness (C—RF ABS wheel-speed sensor terminal B)
D	—	—	—	—	—	—
E	—	—	—	—	—	—
F	RF wheel-speed (+)	RF ABS wheel-speed sensor	Continuity	F—RF ABS wheel-speed sensor terminal A	Continuity detected	• Wiring harness (F—RF ABS wheel-speed sensor terminal A)
G	—	—	—	—	—	—
H	—	—	—	—	—	—
I	—	—	—	—	—	—
J	—	—	—	—	—	—
K	—	—	—	—	—	—
L	LR wheel-speed (+)	LR ABS wheel-speed sensor	Continuity	L—LR ABS wheel-speed sensor terminal A	Continuity detected	• Wiring harness (L—LR ABS wheel-speed sensor terminal A)
M	—	—	—	—	—	—
N	—	—	—	—	—	—
O	LR wheel-speed (-)	LR wheel-speed sensor	Continuity	O—LR ABS wheel-speed sensor terminal B	Continuity detected	• Wiring harness (O—LR ABS wheel-speed sensor terminal B)
P	CAN2_L	SAS control module	This terminal is used for communication and cannot be used for malfunction determination during terminal voltage inspection. Perform a DTC inspection.			
Q	Power supply (system)	Ignition switch	Voltage	Ignition switched ON (engine off).	B+	• Wiring harness (Q—ignition switch)
				Switch the ignition to off.	1 V or less	
R	—	—	—	—	—	—
S	CAN2_H	SAS control module	This terminal is used for communication and cannot be used for malfunction determination during terminal voltage inspection. Perform a DTC inspection.			
T	—	—	—	—	—	—
U	—	—	—	—	—	—
V	—	—	—	—	—	—
W	—	—	—	—	—	—
X	RR wheel-speed (-)	RR ABS wheel-speed sensor	Continuity	X—RR ABS wheel-speed sensor terminal B	Continuity detected	• Wiring harness (X—RR ABS wheel-speed sensor terminal B)
Y	—	—	—	—	—	—
Z	—	—	—	—	—	—
AA	RR wheel-speed (+)	RR ABS wheel-speed sensor	Continuity	AA—RR ABS wheel-speed sensor terminal A	Continuity detected	• Wiring harness (AA—RR ABS wheel-speed sensor terminal A)
AB	—	—	—	—	—	—
AC	CAN_L	CAN module	This terminal is used for communication and cannot be used for malfunction determination during terminal voltage inspection. Perform a DTC inspection.			
AD	—	—	—	—	—	—
AE	—	—	—	—	—	—
AF	CAN_H	CAN module	This terminal is used for communication and cannot be used for malfunction determination during terminal voltage inspection. Perform a DTC inspection.			
AG	LF wheel-speed sensor (+)	LF ABS wheel-speed sensor	Continuity	AG—LF ABS wheel-speed sensor terminal A	Continuity detected	• Wiring harness (AG—LF ABS wheel-speed sensor terminal A)
AH	—	—	—	—	—	—

DYNAMIC STABILITY CONTROL

Terminal	Signal name	Connected to	Measured item	Measured terminal (measurement condition)	Standard	Inspection item(s)
AI	Brake light (vehicles with smart city brake support (SCBS))	Brake light relay	Voltage	Brake pedal depressed	B+	• Wiring harness (AI—Brake light relay terminal D)
				Brake pedal released	1 V or less	
AJ	LF wheel-speed sensor (-)	LF wheel-speed sensor	Continuity	AJ—LF ABS wheel-speed sensor terminal B	Continuity detected	• Wiring harness (AJ—LF ABS wheel-speed sensor terminal B)
AK	—	—	—	—	—	—
AL	Ground	Ground point	Continuity	AL—ground point	Continuity detected	• Wiring harness (AL—ground point)

FRONT ABS WHEEL-SPEED SENSOR REMOVAL/INSTALLATION

id041500800300

1. Remove the mudguard. (See 09-16-47 MUDGUARD REMOVAL/INSTALLATION.)
2. Remove in the order indicated in the table.
3. Install in the reverse order of removal.
4. After installation, verify that there is no twisting in the front ABS wheel-speed sensor.

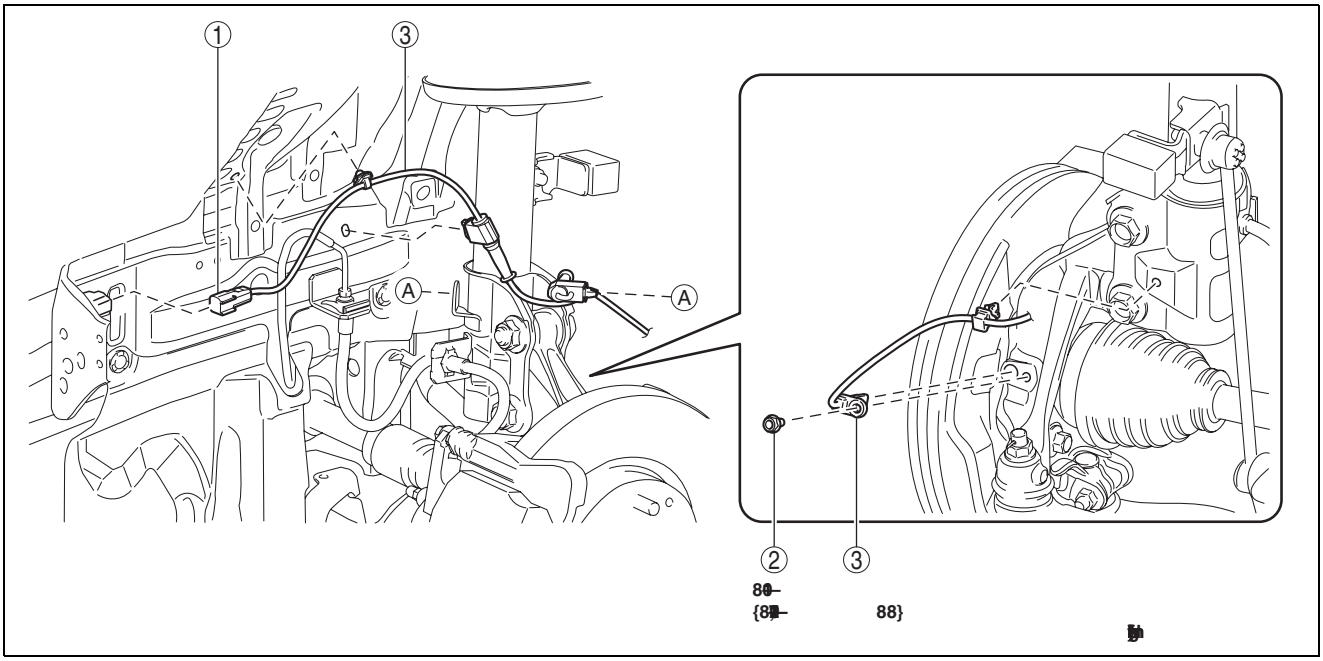

ac5wzw0000022

1	Connector
2	Bolt
3	Front ABS wheel-speed sensor

DYNAMIC STABILITY CONTROL

FRONT ABS WHEEL-SPEED SENSOR INSPECTION

id041500800400

Sensor Output Value Inspection

Caution
- **Resistance inspection using other testers may cause damage to the ABS wheel-speed sensor internal circuit. Be sure to use the M-MDS to inspect the ABS wheel-speed sensor.**

1. Switch the ignition to off.
2. Connect the M-MDS to the DLC-2.
3. Select the following PIDs using the M-MDS:
   - WSPD_SEN_LF (LF wheel-speed sensor)
   - WSPD_SEN_RF (RF wheel-speed sensor)
4. Start the engine and drive the vehicle.
5. Verify that the display of the M-MDS shows the same value as the speedometer.
   - If there is any malfunction, replace the ABS wheel-speed sensor.

Installation Visual Inspection

1. Inspect for the following:
   - If there is any malfunction, replace the part.

(1) Excessive play of the ABS wheel-speed sensor
(2) Deformation of the ABS wheel-speed sensor
(3) Deformation or damage of the ABS sensor rotor

Clearance Inspection

Preparation prior to inspection

1. Remove the ABS wheel-speed sensor. (See 04-15-9 FRONT ABS WHEEL-SPEED SENSOR REMOVAL/INSTALLATION.)
2. Remove the wheel hub and steering knuckle as a single unit. (See 03-11-3 WHEEL HUB, STEERING KNUCKLE REMOVAL/INSTALLATION.)
3. Install the ABS wheel-speed sensor to the removed wheel hub, steering knuckle component, and tighten to the specified torque.

   Tightening torque
   8—10 N·m {82—101 kgf·cm, 71—88 in·lbf}

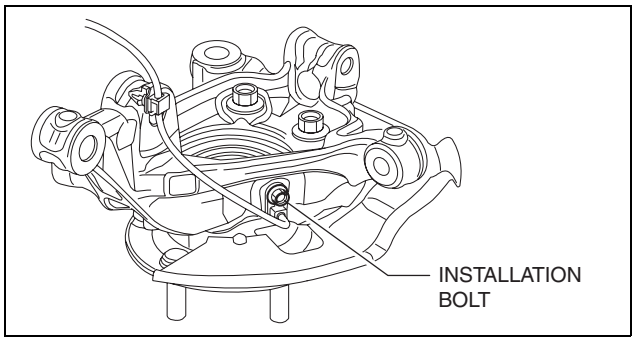

ac5wzw0000085

DYNAMIC STABILITY CONTROL

Clearance Inspection

1. Measure the gap between the ABS sensor rotor and ABS wheel-speed sensor using a feeler gauge.
   - If not within the specification, verify the following items and repair or replace if necessary.
     — Is there deformation or damage to the ABS sensor rotor?
     — Is there deformation or damage to the ABS wheel speed sensor?
     — Is there foreign material adhering?

Clearance
0.87—1.53 mm {0.035—0.060 in}

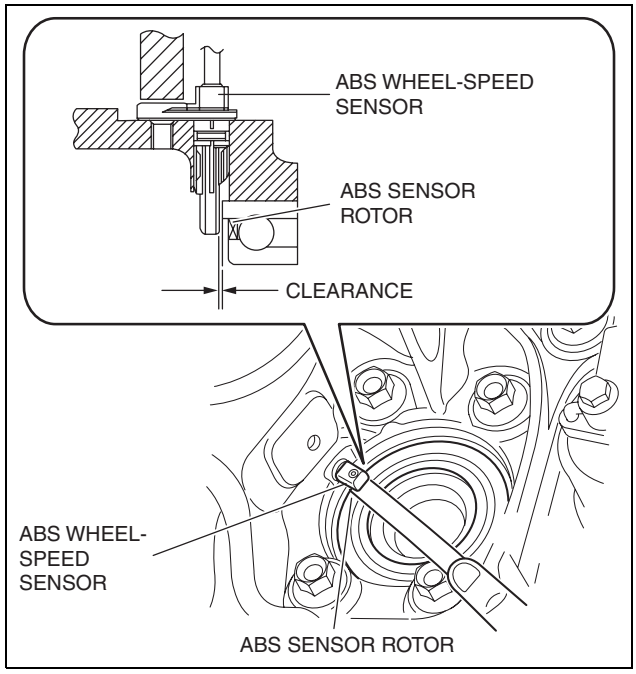

ac5wzw0000229

Servicing after inspection

1. Remove the ABS wheel-speed sensor from the wheel hub, steering knuckle component.
2. Install the wheel hub, steering knuckle component. (See 03-11-3 WHEEL HUB, STEERING KNUCKLE REMOVAL/INSTALLATION.)
3. Install the ABS wheel-speed sensor. (See 04-15-9 FRONT ABS WHEEL-SPEED SENSOR REMOVAL/INSTALLATION.)
4. Inspect the front wheel alignment. (See 02-11-1 FRONT WHEEL ALIGNMENT.)

REAR ABS WHEEL-SPEED SENSOR REMOVAL/INSTALLATION

id041500800100

1. Remove the trunk board. (See 09-17-85 TRUNK BOARD REMOVAL/INSTALLATION.)
2. Remove the trunk end trim. (See 09-17-78 TRUNK END TRIM REMOVAL/INSTALLATION.)
3. Remove the rear scuff plate. (See 09-17-63 REAR SCUFF PLATE REMOVAL/INSTALLATION.)
4. Remove the trunk side trim. (See 09-17-80 TRUNK SIDE TRIM REMOVAL/INSTALLATION.)
5. Disconnect the rear ABS wheel-speed sensor connector.
6. Press the rear ABS wheel-speed sensor tabs and press out the sensor toward the outside of the vehicle.
7. Remove in the order indicated in the table.
8. Install in the reverse order of removal.
9. After installation, verify that there is no twisting in the rear ABS wheel-speed sensor.

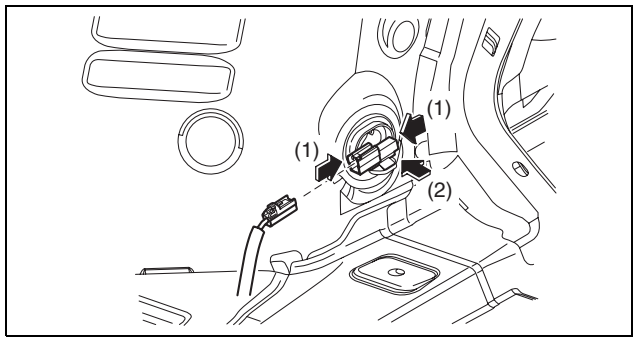

ac5wzw0000022

DYNAMIC STABILITY CONTROL

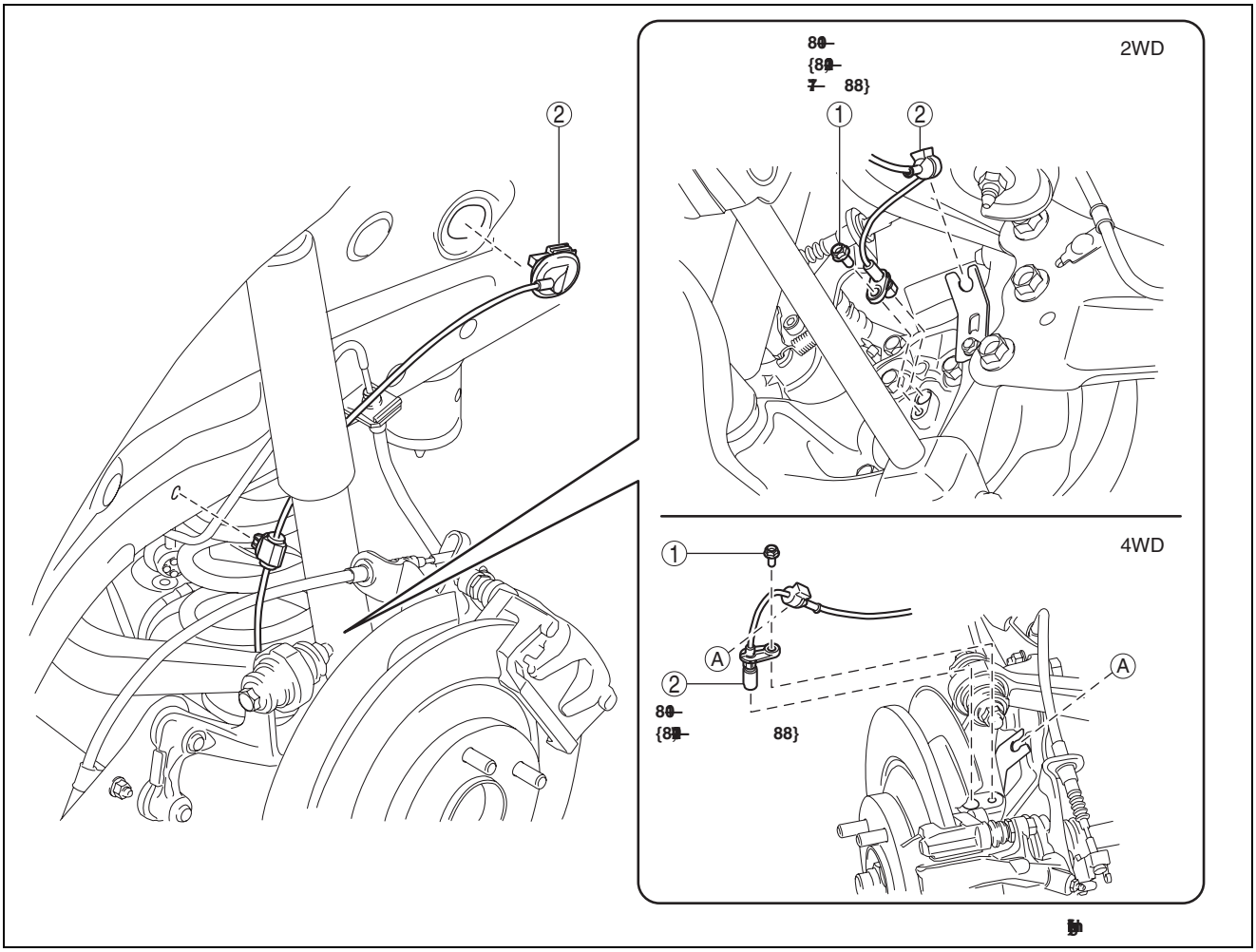

ac5wzw0000022

1	Bolt

2	Rear ABS wheel-speed sensor (See 04-15-12 Rear ABS Wheel-speed Sensor Removal Note.)

Rear ABS Wheel-speed Sensor Removal Note

1. Pull aside the mudguard and remove the rear ABS wheel-speed sensor.

DYNAMIC STABILITY CONTROL

REAR ABS WHEEL-SPEED SENSOR INSPECTION [2WD]

id0415008002a1

Installation Visual Inspection

1. Inspect the following items:
   - If there is any malfunction, replace the applicable part.
   (1) Excessive play of the ABS wheel-speed sensor
   (2) Deformation of the ABS wheel-speed sensor

Clearance Inspection

1. Remove the ABS wheel-speed sensor.
2. Measure the distance between the ABS wheel-speed sensor installation surface and the ABS sensor rotor. This is dimension A.
3. Calculate the clearance between the front ABS wheel-speed sensor and the ABS sensor rotor using the following formula:
   Clearance (mm {in}) = A-14 {0.55}
4. Verify that the clearance between the ABS sensor rotor and the ABS wheel-speed sensor is as indicated below.
   - If there is any malfunction, replace it.

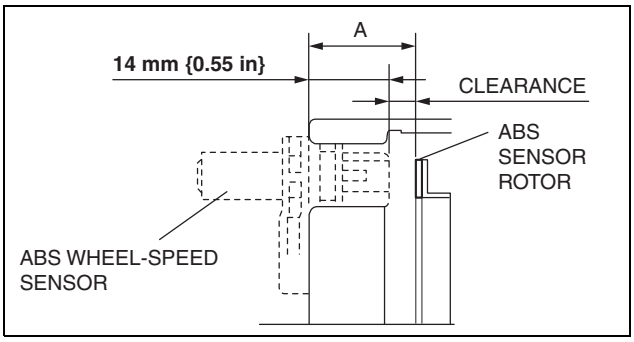

ac5wzw0000228

Clearance
- **0.28—1.17 mm {0.012—0.046 in}**

Sensor Output Value Inspection

1. Switch the ignition to off.
2. Connect the M-MDS to the DLC-2.
3. Select the following PIDs using the M-MDS:
   - WSPD_SEN_LR (LR ABS wheel-speed sensor)
   - WSPD_SEN_RR (RR ABS wheel-speed sensor)
4. Start the engine and drive the vehicle.
5. Verify that the display of the M-MDS shows the same value as the speedometer.
   - If there is any malfunction, replace the ABS wheel-speed sensor.

REAR ABS WHEEL-SPEED SENSOR INSPECTION [4WD]

id0415008002a5

Installation Visual Inspection

1. Inspect the following items:
   - If there is any malfunction, replace the applicable part.
   (1) Excessive play of the ABS wheel-speed sensor
   (2) Deformation of the ABS wheel-speed sensor
   (3) Deformation or damage of the ABS sensor rotor

Clearance Inspection

1. Remove the ABS wheel-speed sensor.
2. Measure the distance between the ABS wheel-speed sensor installation surface and the ABS sensor rotor. This is dimension A.
3. Calculate the clearance between the front ABS wheel-speed sensor and the ABS sensor rotor using the following formula:
   Clearance (mm {in}) = A-34.35 {1.352}
4. Verify that the clearance between the ABS sensor rotor and the ABS wheel-speed sensor is as indicated below.
   - If there is any malfunction, replace it.

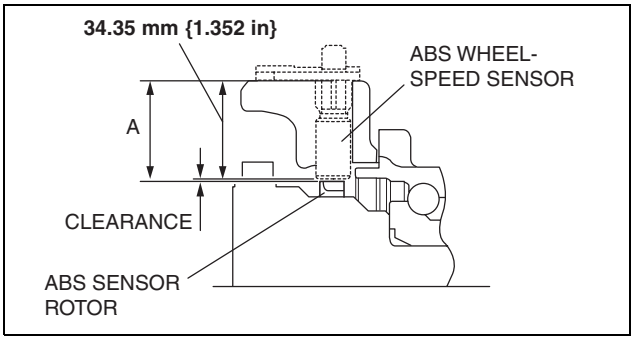

ac5wzw0000228

Clearance
- **0.3—1.4 mm {0.02—0.05 in}**

DYNAMIC STABILITY CONTROL

Sensor Output Value Inspection

1. Switch the ignition to off.
2. Connect the M-MDS to the DLC-2.
3. Select the following PIDs using the M-MDS:
   - WSPD_SEN_LR (LR ABS wheel-speed sensor)
   - WSPD_SEN_RR (RR ABS wheel-speed sensor)
4. Start the engine and drive the vehicle.
5. Verify that the display of the M-MDS shows the same value as the speedometer.
   - If there is any malfunction, replace the ABS wheel-speed sensor.

BRAKE FLUID PRESSURE SENSOR INSPECTION

id041500801500

1. Switch the ignition to off.
2. Remove the clips.
3. Set the splash shield out of the way.

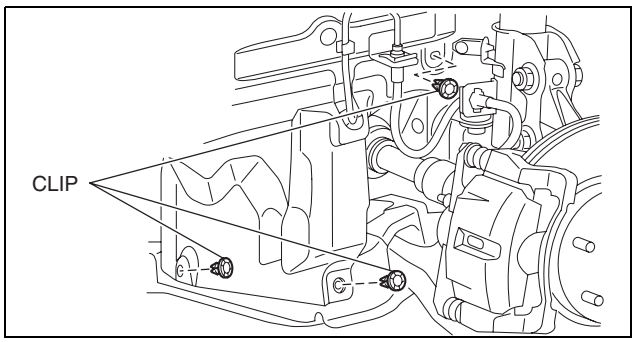

ac5wzw0000021

4. Disconnect the brake pipe from the LF brake hose.
5. Remove the clip.
6. Remove the LF brake hose from the bracket.
7. Detach the brake pipe from the pipe holder.

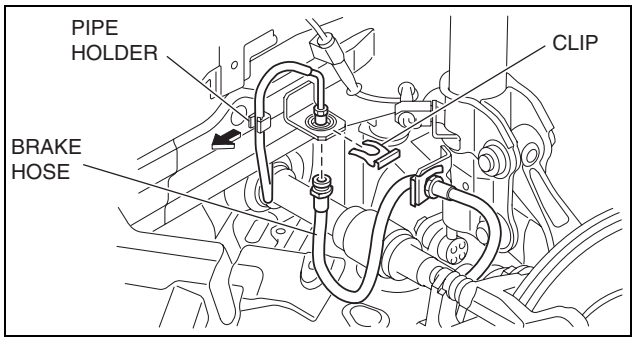

ac5wzw0000021

8. Install the **SST** to the brake pipe as shown in the figure.
9. Bleed the brake line and the **SSTs** of air. Bleed the air form the **SSTs** using bleeder screw A.
10. Connect the M-MDS to the DLC-2.
11. Select the “BRK_F_P_R” PID.
12. Start the engine.
13. Depress the brake pedal, and confirm that the fluid pressure value of the **SST** (Gauge) and the value shown on the M-MDS are equal
    - If the fluid pressures are different, replace the DSC HU/CM. (See 04-15-4 DSC HU/CM REMOVAL/INSTALLATION.)
14. After the inspection, remove the **SSTs**, install the brake hose, clamp, and brake pipe to the original positions, and then bleed the air from the brake line. (See 04-11-30 BRAKE HOSE (FRONT) REMOVAL/INSTALLATION.) (See 04-11-4 BRAKE FLUID AIR BLEEDING.)

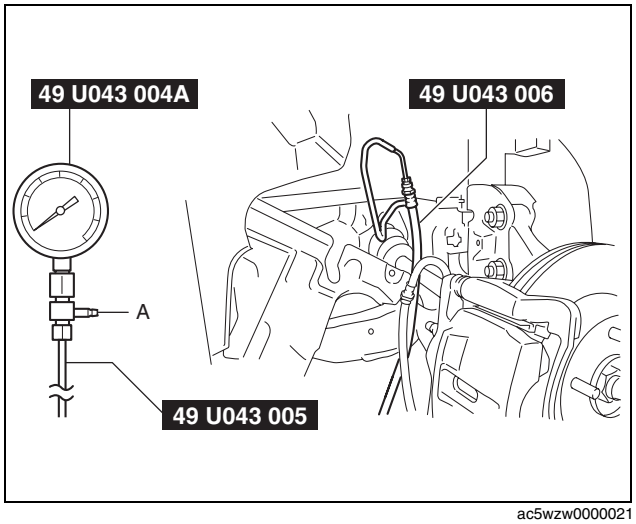

ac5wzw0000021

DYNAMIC STABILITY CONTROL

TCS OFF SWITCH REMOVAL/INSTALLATION

id041500803000

Note
- The TCS OFF switch is integrated with the cluster switch.
- Refer to SWITCH PANEL REMOVAL/INSTALLATION to remove the cluster switch.

1. Remove the cluster switch from the switch panel. (See 09-17-18 SWITCH PANEL REMOVAL/INSTALLATION.)
2. Install in the reverse order of removal.

TCS OFF SWITCH INSPECTION

id041500803100

1. Remove the TCS OFF switch. (See 04-15-15 TCS OFF SWITCH REMOVAL/INSTALLATION.)
2. Verify that the resistance between the TCS OFF switch terminals B and C is as indicated in the table.
   - If not as indicated in the table, replace the TCS OFF switch.

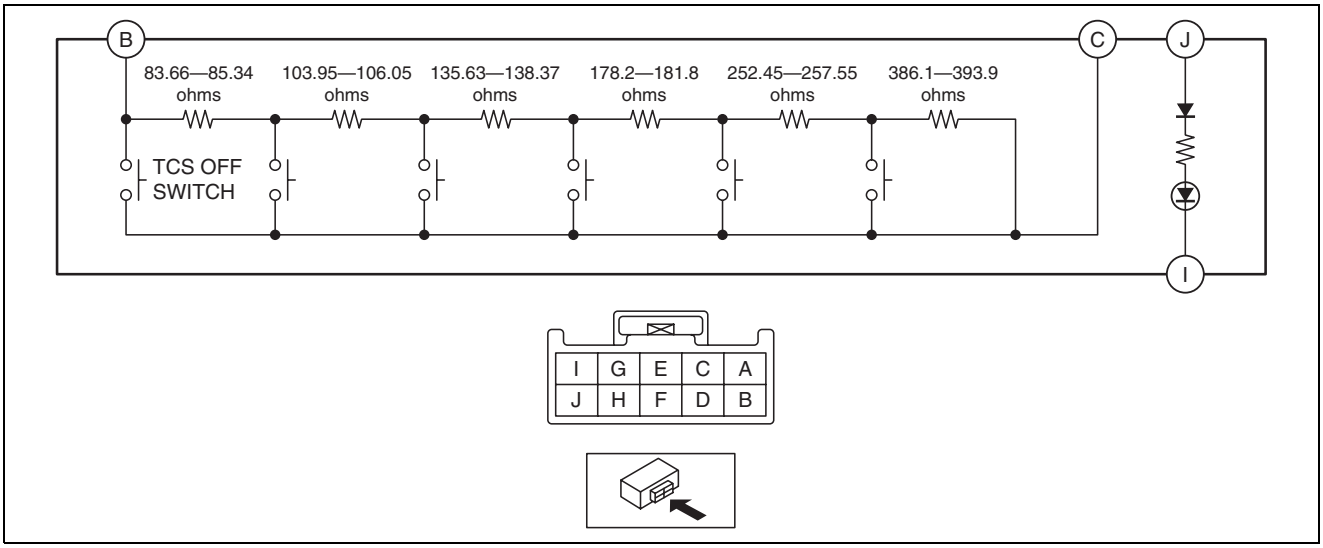

ac5wzw0000024

TCS OFF switch specification

Terminal	Test condition	Resistance (ohms)
B—C	Switch pressed	0
	Switch released	1139.99—1163.01

3. Apply battery voltage to TCS OFF switch terminal J, and connect terminal I to ground.
4. Verify that the LED illuminates.
   - If there is any malfunction, replace the TCS OFF switch.

DYNAMIC STABILITY CONTROL

LASER SENSOR INSPECTION

id041500802700

Simple Inspection

Warning

- **To prevent eye injury, do not peer directly into the laser sensor using optical instruments with a magnification function such as magnifying glasses or microscopic and objective lenses within a distance of 100 mm {3.94 in} from the sensor.**
- **Because a simple reflector held with a hand is required, if heavy material such as a steel plate is used, it could be dropped resulting in an accident. Therefore, use light materials such as a plastic plate or cardboard when making the reflector.**

Caution

- **Perform the work in an area where 6 m or more of space from the front of the vehicle is available.**
- **Remove cargo from the cabin and trunk compartment so that the vehicle is in an unloaded condition.**
- **Adjust the air pressure of each tire to the specified value.**

1. To make the simple reflector, overlap three pieces of commercially available aluminum foil and adhere them to a plastic plate or piece of cardboard with a length of 50 cm or more on one side.

Note

- If two or fewer pieces of aluminum foil are used, near-infrared reflection may weaken and the M-MDS will be unable to measure the correct distance.
- A reflective material or material which facilitates near-infrared light reflection can be substituted for the aluminum foil.

2. Park the vehicle on level ground.
3. Connect the M-MDS to the DLC-2.
4. After vehicle identification, the following can be selected from the IDS initialization screen.
   (1) [Data logger]
   (2) [Module]
   (3) [SCBS]
5. Select “DIST_BMP_TGT” from PID/DATA Monitor Table.
6. **Stand at the position 6 m {20 ft}** from the front end of the front bumper and hold the simple reflector made in Step 1 at a height of **1.5 m {4.9 ft}** from the ground to verify that the M-MDS screen display is at **6 m**.
7. Then, move to the position **4 m {13 ft}** from the front end of the front bumper and hold the simple reflector at a height of **1 m {3 ft}** from the ground to verify that the M-MDS screen display is at **4 m**.

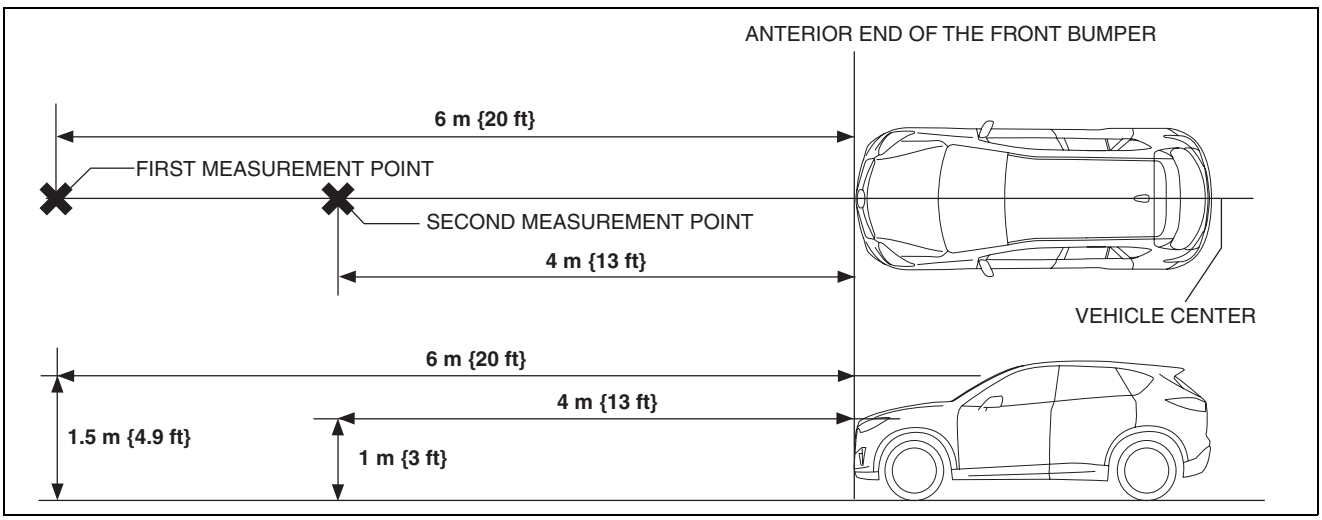

ac5wzw0000455

Note

- The brand emblem of the front bumper indicates the center position at the rear of the vehicle.
- The “DIST_BMP_TGT” monitoring value is displayed in **0.5 m** increments.

DYNAMIC STABILITY CONTROL

8. If there is a malfunction, verify that there is no damage with the laser sensor tab and in the laser sensor installation area of the windshield. (See 04-15-17 LASER SENSOR REMOVAL/INSTALLATION.)
   - If there is a malfunction with the laser sensor tab, replace the laser sensor. (See 04-15-17 LASER SENSOR REMOVAL/INSTALLATION.)
   - If there is a malfunction in the laser sensor installation area of the windshield, replace the windshield. (See 09-12-17 WINDSHIELD REMOVAL.) (See 09-12-19 WINDSHIELD INSTALLATION.)

LASER SENSOR REMOVAL/INSTALLATION

id041500802600

Warning
- **A removed laser sensor will not meet the conditions for a class 1M laser under the IEC 60825-1 specification and therefore eye safety cannot be assured.**
- **To prevent eye injury, do not peer directly into the laser sensor using optical instruments with a magnification function such as magnifying glasses or microscopic and objective lenses within a distance of 100 mm {3.94 in} from the sensor.**

Caution
- **If the laser sensor is installed at an incorrect angle, the laser sensor cannot detect obstructions correctly which could result in an accident. When installing the laser sensor, verify that there is no damage or deformation to the installation part (bracket) and perform the installation correctly.**
- **If the laser sensor (windshield) gets hit, the laser sensor angle could change and the obstructions cannot be detected correctly which could result in an accident. If the laser sensor has been hit, always inspect for DTCs and verify that there is no malfunction in the Smart City Brake Support (SCBS) system.**
- **Do not disassemble the laser sensor because it cannot be disassembled together with the lens. If it has been disassembled, replace the laser sensor.**
- **The internal parts of the laser sensor could be damaged if dropped. Be careful not to drop the laser sensor. Replace the laser sensor if it is subjected to an impact.**

Note
- The laser sensor prior to replacement stores the vehicle specification information.
- A new laser sensor does not store any vehicle specification information.

1. Remove the cover A. (See 09-18-94 FORWARD SENSING CAMERA (FSC) REMOVAL/INSTALLATION.)
2. Remove in the order indicated in the table.
3. Install in the reverse order of removal.

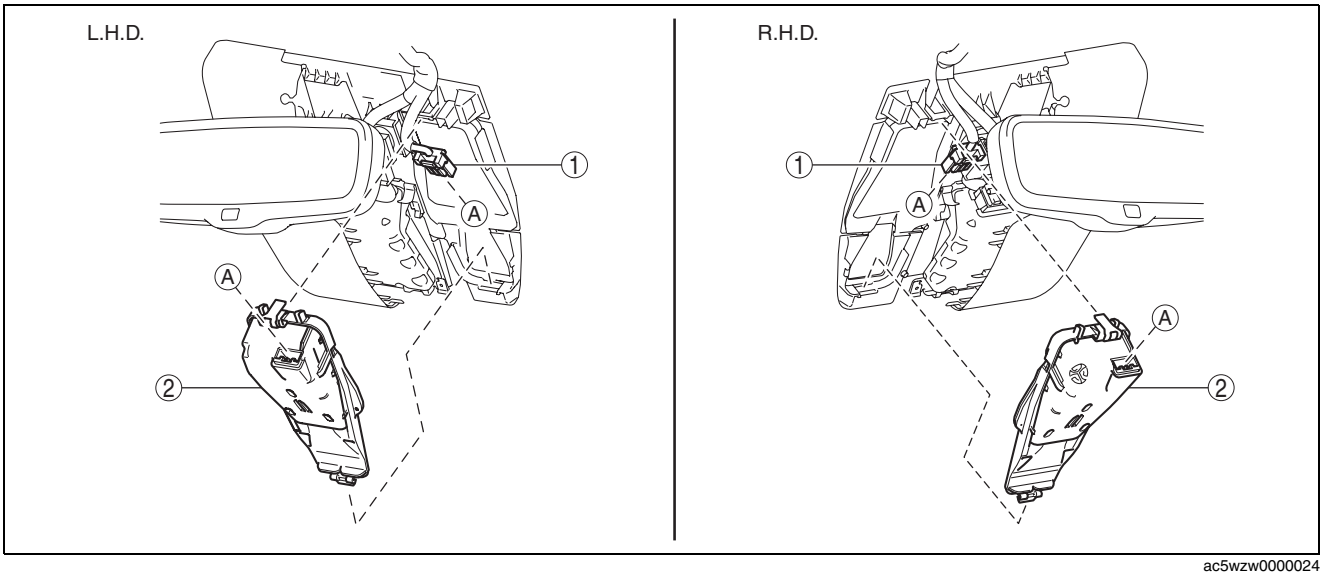

ac5wzw0000024

1	Connector

2	Laser sensor (See 04-15-18 Laser Sensor Removal Note.) (See 04-15-18 Laser Sensor Installation Note.)

DYNAMIC STABILITY CONTROL

Laser Sensor Removal Note

1. Remove the laser sensor in the order shown in the figure.

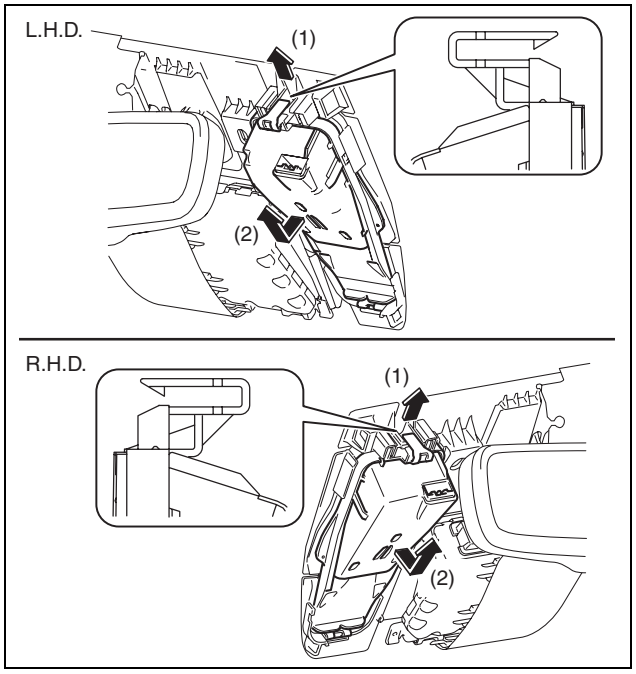

ac5wzw0000024

Laser Sensor Installation Note

1. When installing the laser sensor, listen for a click indicating the laser sensor is securely installed.
2. Make sure that the laser sensor tab is caught properly.

04-50 TECHNICAL DATA

BRAKES TECHNICAL DATA 04-50–1

TECHNICAL DATA

BRAKES TECHNICAL DATA

id045000800100

Item	Specification
Brake fluid type	European (L.H.D. U.K.) specs.: SAE J1703 or FMVSS116 DOT-3 or DOT-4 Australian, China, and General (L.H.D. R.H.D.) specs.: SAE J1703 or FMVSS116 DOT-3
Brake pedal height (reference value)	134 mm {5.28 in}
Brake pedal play	3—5 mm {0.12—0.19 in}
Brake pedal-to-floor clearance (Brake pedal when depressed at 147 N {15.0 kgf, 33.0 lbf})	95 mm {3.7 in} or more
Front disc plate runout limit	0.04 mm {0.002 in}
Minimum front disc plate thickness	26.0 mm {1.02 in}
Minimum front disc plate thickness after machining using a brake lathe on-vehicle	26.8 mm {1.06 in}
Minimum front disc pad thickness	2.0 mm {0.079 in} min.
Rear disc plate runout limit	0.1 mm {0.004 in}
Minimum rear disc plate thickness	8.0 mm {0.31 in}
Minimum rear disc plate thickness after machining using a brake lathe on-vehicle	8.8 mm {0.35 in}
Minimum rear disc pad thickness	2.0 mm {0.079 in} min.
Parking brake lever stroke when pulled at 98 N {10 kgf, 22 lbf}	2—3 notches

Master cylinder fluid pressure

Vacuum amount at 0 kPa {0 mmHg, 0 inHg}	
Pedal force	**Fluid pressure**
200 N {20.4 kgf, 45.0 lbt}	630 kPa {6.42 kgf/cm^2, 91.4 psi} or more

Master cylinder fluid pressure

Vacuum amount at 66.7 kPa {500 mmHg, 19.7 inHg}	
Pedal force	**Fluid pressure**
200 N {20.4 kgf, 45.0 lbt}	6,900 kPa {70.36 kgf/cm^2, 1,001 psi} or more

Vacuum pump vacuum specification (reference value)

Measurement condition		**Specification**
Engine speed	**Change in vacuum amount**	**Period of time change in vacuum amount condition met**
While idling (520—700 rpm (reference value))	From 60 kPa {450 mmHg, 18 inHg} to 67 kPa {503 mmHg, 20 inHg}	8 s or less

Vacuum pump maximum vacuum specification (reference value)

Measurement condition	Specification
While idling (no time designation)	93.3 kPa {700 mmHg, 27.6 inHg} or more

04-60 SERVICE TOOLS

BRAKES SST 04-60–1

SERVICE TOOLS

BRAKES SST

id046000800100

49 F043 002 Wrench 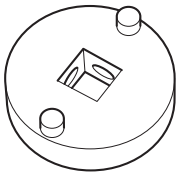	49 U043 004A Oil pressure gauge (Part of 49 U043 0A0A) 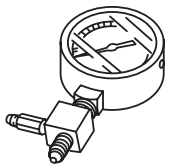	49 U043 005 Joint (Part of 49 U043 0A0A) 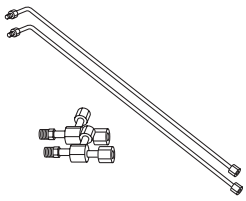
49 U043 006 Hose (Part of 49 U043 0A0A) 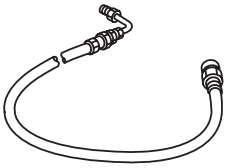	49 U043 0A0A Oil pressure gauge set 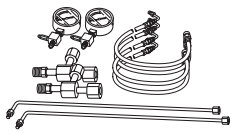	—

TRANSMISSION/TRANSAXLE

05
SECTION

ON-BOARD DIAGNOSTIC [FW6A-EL, FW6AX-EL] 05-02A
ON-BOARD DIAGNOSTIC [GW6A-EL, GW6AX-EL] 05-02B
SYMPTOM TROUBLESHOOTING [FW6A-EL, FW6AX-EL] 05-03A
SYMPTOM TROUBLESHOOTING [GW6A-EL, GW6AX-EL] 05-03B
CLUTCH [C66M-R, C66MX-R] 05-10A
CLUTCH [D66M-R, D66MX-R] 05-10B
MANUAL TRANSAXLE [C66M-R, C66MX-R] 05-15A
MANUAL TRANSAXLE [D66M-R, D66MX-R] 05-15B
MANUAL TRANSAXLE SHIFT MECHANISM [C66M-R, C66MX-R] 05-16A
MANUAL TRANSAXLE SHIFT MECHANISM [D66M-R, D66MX-R] 05-16B
AUTOMATIC TRANSAXLE [FW6A-EL, FW6AX-EL] 05-17A
AUTOMATIC TRANSAXLE [GW6A-EL, GW6AX-EL] 05-17B
AUTOMATIC TRANSAXLE SHIFT MECHANISM 05-18
TECHNICAL DATA 05-50
SERVICE TOOLS 05-60

05-02A ON-BOARD DIAGNOSTIC [FW6A-EL, FW6AX-EL]

ON-BOARD DIAGNOSTIC SYSTEM WIRING DIAGRAM [FW6A-EL, FW6AX-EL] 05-02A–3
ON-BOARD DIAGNOSTIC SYSTEM FOREWORD [FW6A-EL, FW6AX-EL] 05-02A–4
Troubleshooting Procedure 05-02A–4
Repair order form. 05-02A–5
Action for Non-repeatable Malfunction. 05-02A–7
ON-BOARD DIAGNOSTIC SYSTEM DTC INSPECTION [FW6A-EL, FW6AX-EL] 05-02A–7
Reading DTCs Procedure 05-02A–7
Clearing DTCs Procedures 05-02A–9
ON-BOARD DIAGNOSTIC TEST MODE [FW6A-EL, FW6AX-EL] 05-02A–9
Foreword 05-02A–9
ON-BOARD DIAGNOSTIC SYSTEM DTC TABLE [FW6A-EL, FW6AX-EL] 05-02A–11
DTC P0218:00 [FW6A-EL, FW6AX-EL] 05-02A–15
DTC P0500:00 [FW6A-EL, FW6AX-EL] 05-02A–16
DTC P0666:00 [FW6A-EL, FW6AX-EL] 05-02A–17
DTC P0667:00 [FW6A-EL, FW6AX-EL] 05-02A–18
DTC P06B8:00 [FW6A-EL, FW6AX-EL] 05-02A–19
DTC P0706:00 [FW6A-EL, FW6AX-EL] 05-02A–20
DTC P0707:00 [FW6A-EL, FW6AX-EL] 05-02A–21
DTC P0708:00 [FW6A-EL, FW6AX-EL] 05-02A–22
DTC P0711:00 [FW6A-EL, FW6AX-EL] 05-02A–23
DTC P0712:00 [FW6A-EL, FW6AX-EL] 05-02A–24
DTC P0713:00 [FW6A-EL, FW6AX-EL] 05-02A–25
DTC P0716:00 [FW6A-EL, FW6AX-EL] 05-02A–26
DTC P0717:00 [FW6A-EL, FW6AX-EL] 05-02A–27
DTC P0721:00 [FW6A-EL, FW6AX-EL] 05-02A–28
DTC P0722:00 [FW6A-EL, FW6AX-EL] 05-02A–29
DTC P0729:00 [FW6A-EL, FW6AX-EL] 05-02A–30
DTC P0731:00 [FW6A-EL, FW6AX-EL] 05-02A–31
DTC P0732:00 [FW6A-EL, FW6AX-EL] 05-02A–32
DTC P0733:00 [FW6A-EL, FW6AX-EL] 05-02A–33
DTC P0734:00 [FW6A-EL, FW6AX-EL] 05-02A–34
DTC P0735:00 [FW6A-EL, FW6AX-EL] 05-02A–35
DTC P0736:00 [FW6A-EL, FW6AX-EL] 05-02A–36
DTC P0741:00 [FW6A-EL, FW6AX-EL] 05-02A–37
DTC P0743:00 [FW6A-EL, FW6AX-EL] 05-02A–38
DTC P0746:00 [FW6A-EL, FW6AX-EL] 05-02A–39

ON-BOARD DIAGNOSTIC [FW6A-EL, FW6AX-EL]

DTC P0748:00
[FW6A-EL, FW6AX-EL] 05-02A–40
DTC P0751:00
[FW6A-EL, FW6AX-EL] 05-02A–41
DTC P0752:00
[FW6A-EL, FW6AX-EL] 05-02A–43
DTC P0753:00
[FW6A-EL, FW6AX-EL] 05-02A–44
DTC P0756:00
[FW6A-EL, FW6AX-EL] 05-02A–45
DTC P0757:00
[FW6A-EL, FW6AX-EL] 05-02A–46
DTC P0758:00
[FW6A-EL, FW6AX-EL] 05-02A–47
DTC P0761:00
[FW6A-EL, FW6AX-EL] 05-02A–48
DTC P0762:00
[FW6A-EL, FW6AX-EL] 05-02A–49
DTC P0763:00
[FW6A-EL, FW6AX-EL] 05-02A–51
DTC P0766:00
[FW6A-EL, FW6AX-EL] 05-02A–52
DTC P0767:00
[FW6A-EL, FW6AX-EL] 05-02A–53
DTC P0768:00
[FW6A-EL, FW6AX-EL] 05-02A–54
DTC P0771:00
[FW6A-EL, FW6AX-EL] 05-02A–55
DTC P0772:00
[FW6A-EL, FW6AX-EL] 05-02A–56
DTC P0773:00
[FW6A-EL, FW6AX-EL] 05-02A–58
DTC P0780:00
[FW6A-EL, FW6AX-EL] 05-02A–59
DTC P079A:00
[FW6A-EL, FW6AX-EL] 05-02A–60
DTC P0819:00
[FW6A-EL, FW6AX-EL] 05-02A–61
DTC P0842:00
[FW6A-EL, FW6AX-EL] 05-02A–64
DTC P0843:00
[FW6A-EL, FW6AX-EL] 05-02A–65
DTC P0847:00
[FW6A-EL, FW6AX-EL] 05-02A–66
DTC P0848:00
[FW6A-EL, FW6AX-EL] 05-02A–67
DTC P0872:00
[FW6A-EL, FW6AX-EL] 05-02A–69
DTC P0873:00
[FW6A-EL, FW6AX-EL] 05-02A–70
DTC P0877:00
[FW6A-EL, FW6AX-EL] 05-02A–72
DTC P0878:00
[FW6A-EL, FW6AX-EL] 05-02A–73
DTC P0882:00
[FW6A-EL, FW6AX-EL] 05-02A–74
DTC P0883:00
[FW6A-EL, FW6AX-EL] 05-02A–76
DTC P0C2C:00
[FW6A-EL, FW6AX-EL] 05-02A–78
DTC P1728:00
[FW6A-EL, FW6AX-EL] 05-02A–80
DTC P1738:00
[FW6A-EL, FW6AX-EL] 05-02A–81
DTC P1784:00
[FW6A-EL, FW6AX-EL] 05-02A–82
DTC P181F:00
[FW6A-EL, FW6AX-EL] 05-02A–83
DTC P2530:00
[FW6A-EL, FW6AX-EL] 05-02A–87
DTC P2712:00
[FW6A-EL, FW6AX-EL] 05-02A–88
DTC U0073:00, U0100:00,
U0121:00, U0141:00, U0155:00
[FW6A-EL, FW6AX-EL] 05-02A–89
Diagnostic Procedure 05-02A–91
DTC U0074:00
[FW6A-EL, FW6AX-EL] 05-02A–91
DTC U0115:00
[FW6A-EL, FW6AX-EL] 05-02A–92
DTC U0442:00
[FW6A-EL, FW6AX-EL] 05-02A–93
ON-BOARD DIAGNOSTIC SYSTEM
PID/DATA MONITOR INSPECTION
[FW6A-EL, FW6AX-EL] 05-02A–94
ON-BOARD DIAGNOSTIC
SYSTEM SIMULATION INSPECTION
[FW6A-EL, FW6AX-EL] 05-02A–103

ON-BOARD DIAGNOSTIC [FW6A-EL, FW6AX-EL]

ON-BOARD DIAGNOSTIC SYSTEM WIRING DIAGRAM [FW6A-EL, FW6AX-EL]

id050227290000

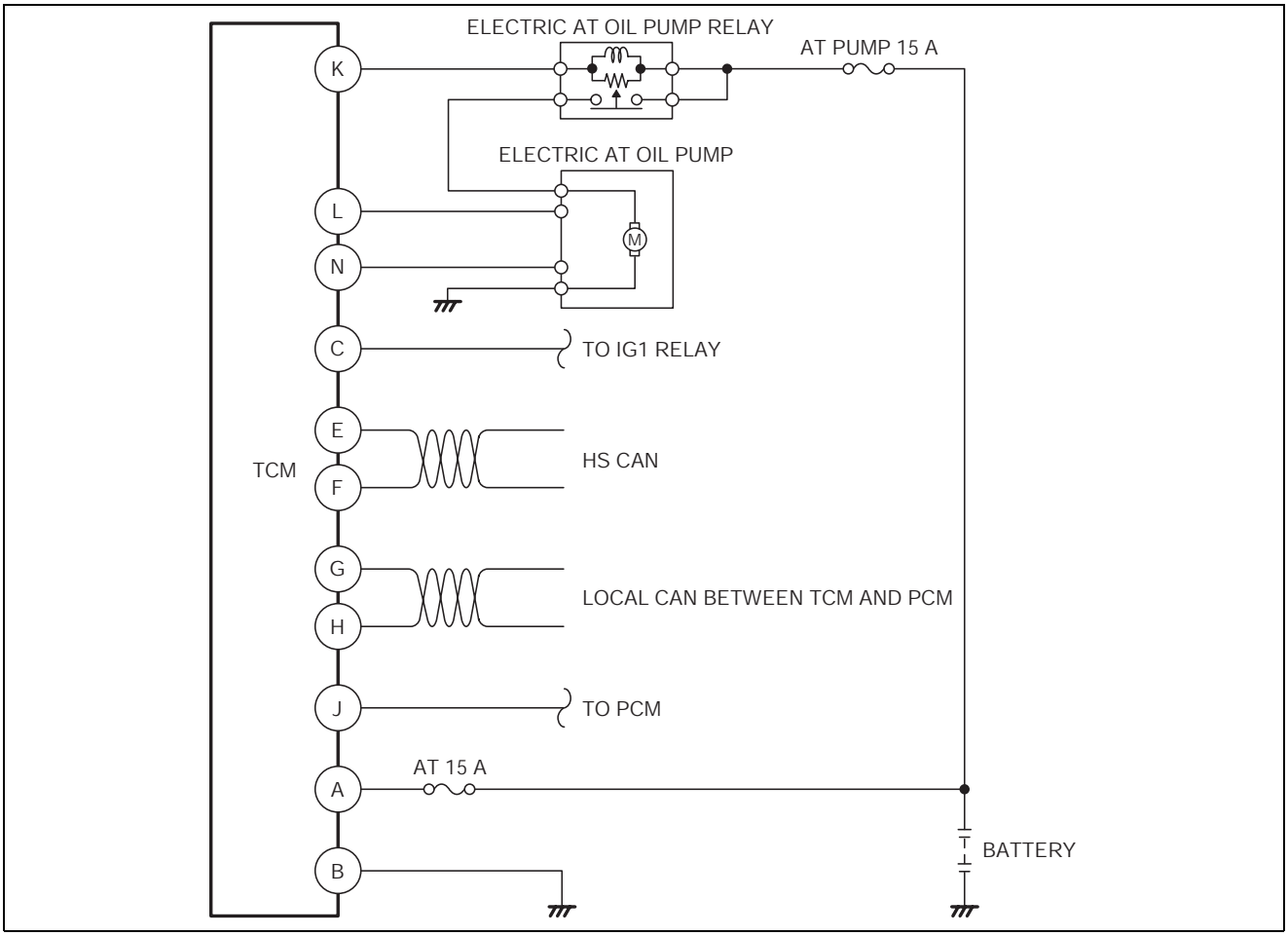

ac5wzw0000239

ON-BOARD DIAGNOSTIC [FW6A-EL, FW6AX-EL]

ON-BOARD DIAGNOSTIC SYSTEM FOREWORD [FW6A-EL, FW6AX-EL]

id050227027300

- If there is any vehicle malfunction complaint lodged by a customer, perform malfunction diagnosis according to the troubleshooting procedure.

Troubleshooting Procedure

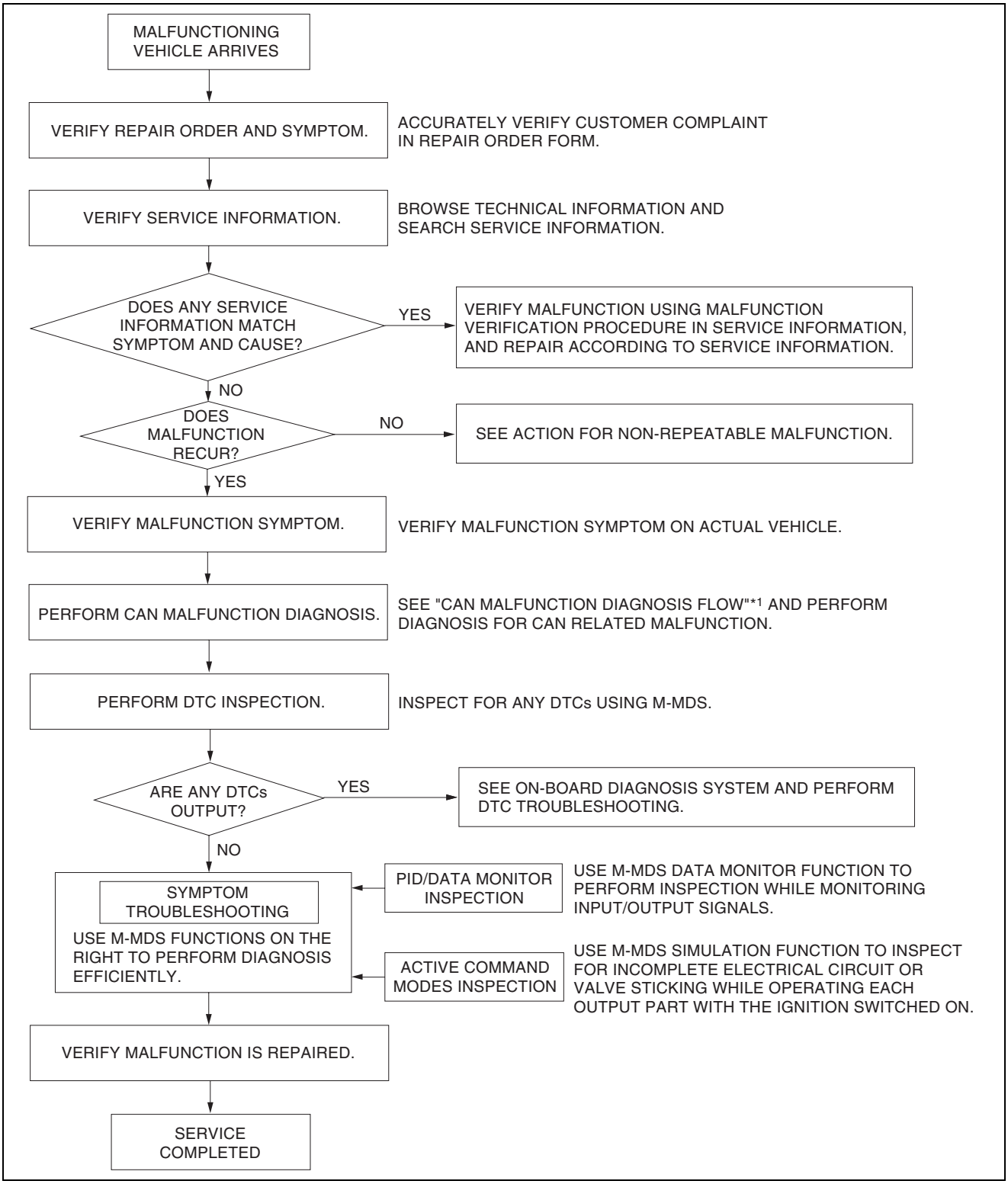

ac5wzw0000404

*1 : 10-02A-3 CONTROLLER AREA NETWORK (CAN) MALFUNCTION DIAGNOSIS FLOW [SKYACTIV-G 2.0 (L.H.D.)]/10-02B-3 CONTROLLER AREA NETWORK (CAN) MALFUNCTION DIAGNOSIS FLOW [SKYACTIV-G 2.0 (R.H.D.)]

Repair order form and malfunction symptom check sheet

	Repair order	Check with customer	Diagnosis	Repair	Explanation to customer
Date/time					
In-charge					

Customer statement (When? What? What time(s)? Where it occurs. Warning light illumination? Can anyone replicate problem?)

Vehicle body number:	Registration date:	Date of malfunction occurrence:	Odometer reading km {mph}
Engine (SOHC/DOHC/RE/DE) (Cab /EGI/ Turbo/ Miller cycle/ LPG/Direct injection)		Transmission (MT/HAT/EC-AT/CVT)	

Environmental conditions				Occurrence frequency	Driving conditions										
Weather	Ambient temp.	Drive scenario	Grade		Fuel	Warm-up condition	Driving operation	Driving posture	Load	Accelerator opening angle	Shift position		Eng RPM	Vehicle speed	Pattern of use
Sunny	-10˚C {14˚F} or less	Depart/arrive	Flat	Once/day	Regular	Cold	When starting	Vehicle stopped	Headlights on	0/8	MT	1	Idle	5 km/h {3 mph}	Work_____%
Cloudy	-10— 0˚C {14—32˚F}	Traffic jam (city)		2-3 times/day	High Oct.	Half-warmed	After starting Re-starting		Exterior lights on	1/8		2	Less than 1,000	10 km/h {6.2 mph}	Minor use_____%
Rain	0—10˚C {32—50˚F}	Standard city street	Upgrade	4-5 times/day	Diesel	Fully warmed	(min. after stopped)	Straight-on driving	A/C on			3	Less than 1,500	20 km/h {12 mph}	Trips_____%
Snow	10—15˚C {50—59˚F}	Suburbs		Many times/day	LPG	N/A	Idling Racing		AUTO ˚C{˚F}	2/8		4	Less than 2,000	30 km/h {19 mph}	Other_____%
High wind	15—20˚C {59—58˚F}	Highway	Down	Once/week	Other	Other	Accel. from stop	Reversing	Blower: 1 step	3/8		5	Less than 2,500	40 km/h {25 mph}	Between ENG. start→Stop:
Wind gusts	20—25˚C {68—77˚F}	Uneven road		2-3 times/week	Fuel gauge	Water temp. gauge	Normal driving Deceleration		Blower: 2 steps			6	Less than 3,000	50 km/h {31 mph}	Distance, time
N/A	25—30˚C {77—86˚F}	Dry road surface	grade	4-5 times/week	F	H	Braking Soft braking		Blower: 3 steps	4/8		N		60 km/h {37 mph}	Approx km
Other	30—35˚C {86—95˚F}	Wet road surface		Once/month			Clutch disengage	Right turn	Blower: 4 steps	5/8		R	Less than 4,000	70 km/h {43 mph}	Approx Hrs.
	35—40˚C {95—104˚F}	Snow bound road	N/A	2-3 times/month			Sudden accel. Light accel.		Power steering lock to lock		AT	P	Less than 4,500	80 km/h {50 mph}	No. of occupants:
	40—45˚C {104—113˚F}	Icy road		4-5 times/month			Shifting (km/h {mph} →	Left turn	Rear defrost on	6/8		R	Less than 5,000	90 km/h {56 mph}	Load condition kg
	45˚C {113˚F} or more								Wipers on	7/8		N	Less than 5,500	100 km/h {62.1 mph}	Other
	N/A								Audio on			D	Less than 6,000	110 km/h {68.4 mph}	
	Other	Other	Other	Other	E	C	km/h {mph}) Other	Other	Other	8/8		S	Less than 6,500	120 km/h {74.6 mph}	
												L		130 km/h {80.8 mph}	
												Hold		140 km/h {87 mph}	
												M		150 km/h {93.2 mph}	
												(km/h {mph})	7,000 or more	160 km/h {99.4 mph}	

DTC, measured data (fuel pressure, intake manifold vacuum, throttle sensor electromotive force, air flow electromotive force, other), maintenance, repair, accident history, installation of commercial devices

ON-BOARD DIAGNOSTIC [FW6A-EL, FW6AX-EL]

Dealer name:	Vehicle body number:	Odometer reading:
Vehicle-in date:	Estimated repair completion date:	Person in-charge:
Subject (Content):		
Audio memory		

	1	2	3	4	5	6	Fuel level
FM1							E F
FM2							
AM							

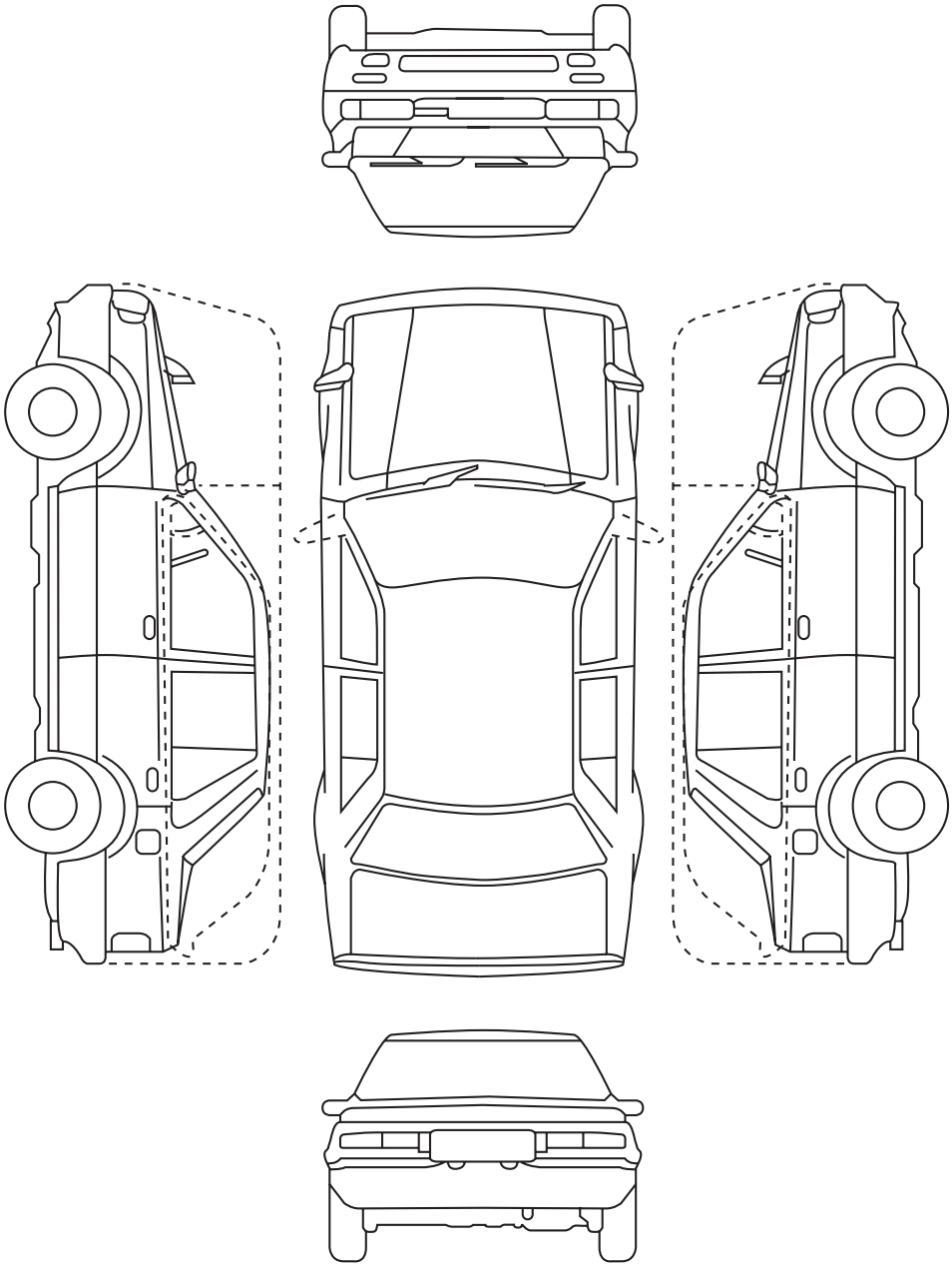

ac5wzw0000306

ON-BOARD DIAGNOSTIC [FW6A-EL, FW6AX-EL]

Action for Non-repeatable Malfunction

- If the malfunction does not recur, verify the malfunction cause by performing the following actions:
  - — Verify that no DTCs are stored. (See 05-02A-7 ON-BOARD DIAGNOSTIC SYSTEM DTC INSPECTION [FW6A-EL, FW6AX-EL].)
  - — Based on the repair order form, attempt to drive the vehicle or perform tests to replicate the malfunction, record the data at that time, and detect the malfunction cause.
- If the malfunction does not recur after the above servicing, explain to the customer that the vehicle is normal.

ON-BOARD DIAGNOSTIC SYSTEM DTC INSPECTION [FW6A-EL, FW6AX-EL]

id050227290100

Reading DTCs Procedure

1. Connect the M-MDS to the DLC-2.
2. After the vehicle is identified, select the following items from the initialization screen of the M-MDS.
   (1) Select “Self Test”.
   (2) Select “Modules”.
   (3) Select “TCM”.

   Note
   - Freeze frame data/snapshot data appears at the top of the help screen when the displayed DTC is selected.

   Freeze frame data
   - The freeze frame data consists of data for vehicle and transaxle control system operation conditions when malfunctions in the transaxle control system are detected and stored in the TCM.
   - Freeze frame data is stored at the instant the malfunction indicator lamp illuminates, and only a part of the DTC data is stored.

   Snapshot data
   - The data for all DTCs currently detected is stored.
     Recorded DTC timing
     - — For DTCs with one drive cycle, data is recorded during the malfunction determination period.
     - — For DTCs with two drive cycles, data is recorded during non-determination (1st diagnosis) periods.
3. Then, select the “Retrieve CMDTCs” and perform procedures according to directions on the M-MDS screen.
4. Verify the DTC according to the directions on the screen.
   - If any DTCs are displayed, perform troubleshooting according to the corresponding DTC inspection.
5. After completion of repairs, clear all DTCs stored in the TCM. (See 05-02A-7 Freeze frame data item table.)

Freeze frame data item table

Note
- Refer to PID/DATA monitor table for confirm the transaxle control system operation status while the TCM does not store the DTC. (See 05-02A-94 ON-BOARD DIAGNOSTIC SYSTEM PID/DATA MONITOR INSPECTION [FW6A-EL, FW6AX-EL].)
- Freeze frame data items are not displayed, according to detected DTC.

—: Not applicable

Freeze frame data item	Unit	Description	Corresponding PID/DATA monitor item
LOAD	%	Calculated engine load	—
ECT	°C {°F}	Engine coolant temperature	ECT
RPM	RPM	Engine speed	RPM
VS	KPH {MPH}	Vehicle speed	VSS
IAT	°C {°F}	Intake air temperature	—
TP	%	Throttle valve position No.1	TP
RUNTM	hh:mm:ss	Time from engine start	—
VPWR	V	Module supply voltage	VPWR
APP_D	%	Accelerator pedal position No.1	—

ON-BOARD DIAGNOSTIC [FW6A-EL, FW6AX-EL]

Snapshot data item table

Note

- Refer to PID/DATA monitor table for confirm the transaxle control system operation status while the TCM does not store the DTC. (See 05-02A-94 ON-BOARD DIAGNOSTIC SYSTEM PID/DATA MONITOR INSPECTION [FW6A-EL, FW6AX-EL].)
- Snapshot data items are not displayed, according to detected DTC.

—: Not applicable

Snapshot data item	Unit	Description	Corresponding PID/DATA monitor item
LOAD	%	Calculated engine load	—
ECT	°C {°F}	Engine coolant temperature	ECT
RPM	RPM	Engine speed	RPM
VSS	KPH {MPH}	Vehicle speed	VSS
IAT	°C {°F}	Intake air temperature	—
EG_RUN_TIME	—	Time from engine start	—
VPWR	V	Module supply voltage	VPWR
APP1	%	Accelerator pedal position No.1	—
GEAR_SEL	1/2/3/4/5/6	Gear shift position	GEAR_SEL
TSS	RPM	Turbine/input shaft speed	TSS
TFT	°C {°F}	ATF temperature	TFT
OSS	RPM	Output shaft speed	OSS
LOCK_UP	Off/SLIP/On	Torque converter (TCC condition)	LOCK_UP
OIL_PRES_SW2	Off/On	Oil pressure switch No.2 condition	OP_SW2
OIL_PRES_SW1	Off/On	Oil pressure switch No.1 condition	OP_SW1
SS_ON_OFF	Off/On	On/off solenoid condition	SS_ON-OFF
TORQUE_DES	Nm	Desired engine torque	TORQUE_DES
APP	%	Accelerator pedal position No.1	—
G_INHIBIT_6	Off/On	6GR is inhibited due to malfunction.	—
G_INHIBIT_5	Off/On	5GR is inhibited due to malfunction.	—
G_INHIBIT_4	Off/On	4GR is inhibited due to malfunction.	—
G_INHIBIT_3	Off/On	3GR is inhibited due to malfunction.	—
G_INHIBIT_2	Off/On	2GR is inhibited due to malfunction.	—
G_INHIBIT_1	Off/On	1GR is inhibited due to malfunction.	—
G_INHIBIT_R	Off/On	R position is inhibited due to malfunction.	—
G_INHIBIT_N	Off/On	N position is inhibited due to malfunction.	—
OIL_PRES_SW4	Off/On	Oil pressure switch No.4 condition	OP_SW4
OIL_PRES_SW3	Off/On	Oil pressure switch No.3 condition	OP_SW3
EOP_RLY	Off/On	Electric AT oil pump relay condition	EOP_RLY
SHIFT_CTRL	DEFAULT/ MANUAL/ C_CONTROL/ HIGH_TEMP/ D_MANUAL/ FAIL_SAFE	Shift control mode	SHIFT_CTRL
SLIP_VALUE	RPM	Actual slip value between TSS and OSS	—
HTM_DIS	km {mile}	Travel distance since determination of ATF high temperature mode	HTM_DIS

ON-BOARD DIAGNOSTIC [FW6A-EL, FW6AX-EL]

Clearing DTCs Procedures

1. Connect the M-MDS to the DLC-2.
2. After the vehicle is identified, select the following items from the initialization screen of the M-MDS.
   (1) Select “Self Test”.
   (2) Select “Modules”.
   (3) Select “TCM”.
3. Verify the DTC according to the directions on the screen.
4. Press the clear button on the DTC screen to clear the DTC.
5. Switch the ignition to off.
6. Switch the ignition to ON (engine off or on) and wait for **5 s or more**.
7. Perform DTC inspection. (See 05-02A-7 Reading DTCs Procedure.)
8. Verify that no DTCs are displayed.

ON-BOARD DIAGNOSTIC TEST MODE [FW6A-EL, FW6AX-EL]

id050227950000

Foreword

- The on-board diagnosis test displays DTCs for locations determined to be malfunctioning based on the operation results from the forced operation of each solenoid and selection of each gear. Therefore, this is an effective mode if DTCs which do not specify the malfunctioning location, such as a gear ratio malfunction, are displayed.
- When the following DTCs displayed, perform the on-board diagnostic test.

DTC No.	Description
P0729:00	6GR incorrect ratio
P0731:00	1GR incorrect ratio
P0732:00	2GR incorrect ratio
P0733:00	3GR incorrect ratio
P0734:00	4GR incorrect ratio
P0735:00	5GR incorrect ratio
P0736:00	Gear reverse incorrect ratio
P0780:00	Gear shifting malfunction
P079A:00	Shift solenoid No.3 stuck off/On/off solenoid stuck on
P1738:00	Automatic transaxle internal malfunction
P1784:00	Hi cut valve stuck off/R-3-5 cut valve stuck on

- When DTCs are displayed by the on-board diagnosis test, perform the instructions in the applicable DTC troubleshooting.

Warning

- **The on-board diagnosis test forcibly changes gears within the driving shift range while the engine is running. Before implementing the on-board diagnosis test, securely apply the parking brake and set the wheel blocks for both the front and rear wheels. Otherwise, the vehicle will move which could cause injury or property damage.**

Note

- The time required to perform the diagnostic is **2 to 3 min**.
- If unsafe actions such as shift operation and brake pedal release are detected before the shift position indicator light flashes, the on-board diagnostic test mode is canceled and the shift position indicator light flashes **5 times**.

1. Apply the parking brake firmly, and set the wheel blocks for both the front and rear wheels.
2. Inspect the ATF level. (See 05-17A-11 AUTOMATIC TRANSAXLE FLUID (ATF) INSPECTION [FW6A-EL, FW6AX-EL].)
3. Connect the M-MDS to the DLC-2.
4. Perform vehicle identification using the M-MDS.
5. Start the engine.
6. After the vehicle is identified, select the following items from the initialization screen of the M-MDS.
   (1) Select “Data Logger”.
   (2) Select “Modules”.
   (3) Select “TCM”.
7. While checking the PID TFT (ATF temperature), warm-up the engine completely and allow the ATF temperature to reach **55 °C {131 °F} or more**.

ON-BOARD DIAGNOSTIC [FW6A-EL, FW6AX-EL]

8. Select the following items from the initialization screen of the M-MDS.
   (1) Select “Self Test”.
   (2) Select “Modules”.
   (3) Select “TCM”.
9. Perform the following steps (1) to (5) with the brake pedal depressed.

Note
- If the on-board diagnosis test is shut down (Shift position indicator light flashes 5 times), resume the procedure from Step 1.

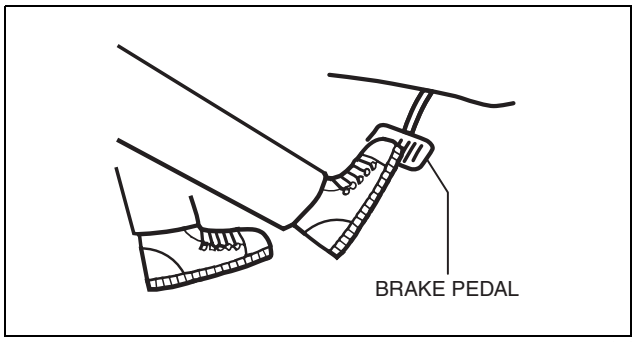

ac5wzw0000404

(1) Shift the selector lever to the R position.

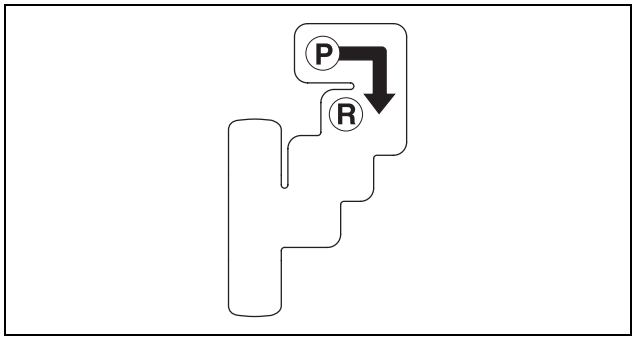

am3uuw0000875

(2) Clear DTCs using the M-MDS and verify that the shift position indicator light flashes 2 times. (See 05-02A-7 ON-BOARD DIAGNOSTIC SYSTEM DTC INSPECTION [FW6A-EL, FW6AX-EL].)

ac5wzw0000239

(3) Within **5 s** after the shift position indicator light flashes 2 times, shift the selector lever to the N position and verify that the shift position indicator light flashes 2 times.

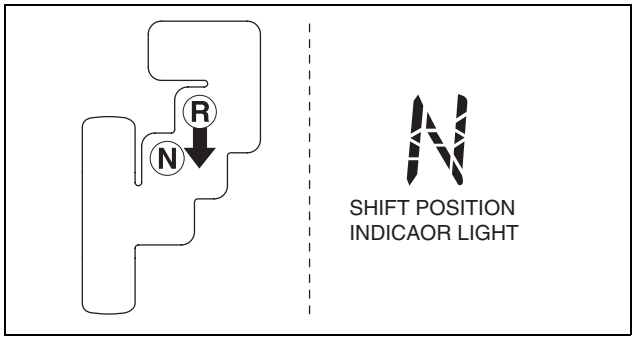

ac5wzw0000239

ON-BOARD DIAGNOSTIC [FW6A-EL, FW6AX-EL]

(4) Within **5 s** after the shift position indicator light flashes 2 times, shift the selector lever to the D position and verify that the shift position indicator light flashes 3 times.

Note
- **Approx. 30 s** is required until the shift position indicator light flashes. In addition, shift shock occurs a few times during stand-by.

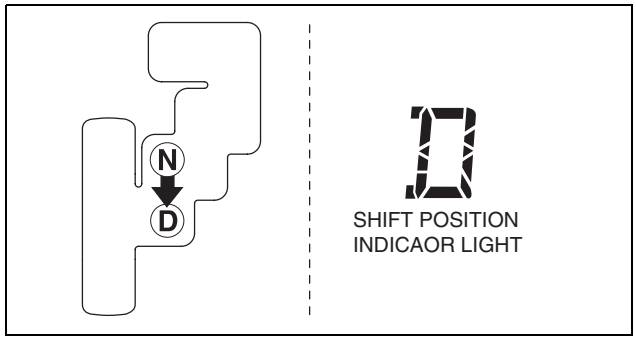

ac5wzw0000239

(5) After the shift position indicator light flashes 3 times, shift the selector lever to the P position.

10. Release the brake pedal.
11. Perform the DTC inspection using the M-MDS. (See 05-02A-7 ON-BOARD DIAGNOSTIC SYSTEM DTC INSPECTION [FW6A-EL, FW6AX-EL].)
    - If any DTCs are displayed, perform troubleshooting according to the corresponding DTC inspection. (See 05-02A-7 ON-BOARD DIAGNOSTIC SYSTEM DTC INSPECTION [FW6A-EL, FW6AX-EL].)

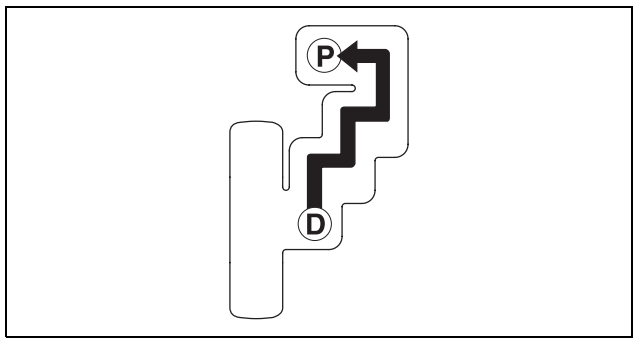

am3uuw0000875

05

ON-BOARD DIAGNOSTIC SYSTEM DTC TABLE [FW6A-EL, FW6AX-EL]

id050227290200

×: Applicable
—: Not applicable

DTC No.	Check engine light	Automatic transaxle warning light	Description	Fail-safe function	Drive cycle	Self test type*1	Memory function	Page
P0218:00	Illuminate	Illuminate	Automatic transaxle protection control	×	1	C	×	(See 05-02A-15 DTC P0218:00 [FW6A-EL, FW6AX-EL].)
P0500:00	Illuminate	—	Vehicle speed signal circuit malfunction	×	1	C	×	(See 05-02A-16 DTC P0500:00 [FW6A-EL, FW6AX-EL].)
P0666:00	Illuminate	Illuminate	ECU internal temperature sensor circuit(s) malfunction	×	2	C	×	(See 05-02A-17 DTC P0666:00 [FW6A-EL, FW6AX-EL].)
P0667:00	Illuminate	Illuminate	ECU internal temperature sensor two-range/ performance problem	×	2	C	×	(See 05-02A-18 DTC P0667:00 [FW6A-EL, FW6AX-EL].)
P06B8:00	Illuminate	—	NVRAM malfunction	—	1	C, O	×	(See 05-02A-19 DTC P06B8:00 [FW6A-EL, FW6AX-EL].)
P0706:00	Illuminate	Illuminate	Transaxle range sensor range/performance problem	×	2	C	×	(See 05-02A-20 DTC P0706:00 [FW6A-EL, FW6AX-EL].)
P0707:00	Illuminate	Illuminate	Transaxle range sensor circuit low input	×	1	C, O	×	(See 05-02A-21 DTC P0707:00 [FW6A-EL, FW6AX-EL].)
P0708:00	Illuminate	Illuminate	Transaxle range sensor circuit high input	×	1	C, O	×	(See 05-02A-22 DTC P0708:00 [FW6A-EL, FW6AX-EL].)
P0711:00	Illuminate	Illuminate	TFT sensor range/ performance problem	×	2	C	×	(See 05-02A-23 DTC P0711:00 [FW6A-EL, FW6AX-EL].)
P0712:00	Illuminate	Illuminate	TFT sensor circuit low input	×	1	C, O	×	(See 05-02A-24 DTC P0712:00 [FW6A-EL, FW6AX-EL].)

ON-BOARD DIAGNOSTIC [FW6A-EL, FW6AX-EL]

DTC No.	Check engine light	Automatic transaxle warning light	Description	Fail-safe function	Drive cycle	Self test type*1	Memory function	Page
P0713:00	Illuminate	Illuminate	TFT sensor circuit high input	×	2	C	×	(See 05-02A-25 DTC P0713:00 [FW6A-EL, FW6AX-EL].)
P0716:00	Illuminate	Illuminate	Turbine/Input shaft speed sensor range/ performance problem	×	1	C	×	(See 05-02A-26 DTC P0716:00 [FW6A-EL, FW6AX-EL].)
P0717:00	Illuminate	Illuminate	Open circuit in turbine/ input shaft speed sensor circuit	×	1	C	×	(See 05-02A-27 DTC P0717:00 [FW6A-EL, FW6AX-EL].)
P0721:00	Illuminate	Illuminate	Output shaft speed sensor range/ performance problem	×	1	C	×	(See 05-02A-28 DTC P0721:00 [FW6A-EL, FW6AX-EL].)
P0722:00	Illuminate	Illuminate	Open circuit in output shaft speed sensor circuit	×	1	C	×	(See 05-02A-29 DTC P0722:00 [FW6A-EL, FW6AX-EL].)
P0729:00	—	—	6GR incorrect ratio	×	2	C	×	(See 05-02A-30 DTC P0729:00 [FW6A-EL, FW6AX-EL].)
P0731:00	—	—	1GR incorrect ratio	×	2	C	×	(See 05-02A-31 DTC P0731:00 [FW6A-EL, FW6AX-EL].)
P0732:00	—	—	2GR incorrect ratio	×	2	C	×	(See 05-02A-32 DTC P0732:00 [FW6A-EL, FW6AX-EL].)
P0733:00	—	—	3GR incorrect ratio	×	2	C	×	(See 05-02A-33 DTC P0733:00 [FW6A-EL, FW6AX-EL].)
P0734:00	—	—	4GR incorrect ratio	×	2	C	×	(See 05-02A-34 DTC P0734:00 [FW6A-EL, FW6AX-EL].)
P0735:00	—	—	5GR incorrect ratio	×	2	C	×	(See 05-02A-35 DTC P0735:00 [FW6A-EL, FW6AX-EL].)
P0736:00	—	Illuminate	Gear reverse incorrect ratio	×	2	C	×	(See 05-02A-36 DTC P0736:00 [FW6A-EL, FW6AX-EL].)
P0741:00	Illuminate	Illuminate	TCC control solenoid stuck off	×	2	C	×	(See 05-02A-37 DTC P0741:00 [FW6A-EL, FW6AX-EL].)
P0743:00	Illuminate	Illuminate	TCC control solenoid circuit malfunction	×	1	C, O	×	(See 05-02A-38 DTC P0743:00 [FW6A-EL, FW6AX-EL].)
P0746:00	Illuminate	Illuminate	Pressure control solenoid stuck off	×	2	C	×	(See 05-02A-39 DTC P0746:00 [FW6A-EL, FW6AX-EL].)
P0748:00	Illuminate	Illuminate	Pressure control solenoid circuit malfunction	×	1	C, O	×	(See 05-02A-40 DTC P0748:00 [FW6A-EL, FW6AX-EL].)
P0751:00	Illuminate	Illuminate	Shift solenoid No.1 stuck off	×	2	C	×	(See 05-02A-41 DTC P0751:00 [FW6A-EL, FW6AX-EL].)
P0752:00	Illuminate	Illuminate	Shift solenoid No.1 stuck on	×	2	C	×	(See 05-02A-43 DTC P0752:00 [FW6A-EL, FW6AX-EL].)
P0753:00	Illuminate	Illuminate	Shift solenoid No.1 circuit malfunction	×	1	C, O	×	(See 05-02A-44 DTC P0753:00 [FW6A-EL, FW6AX-EL].)
P0756:00	Illuminate	Illuminate	Shift solenoid No.2 stuck off	×	2	C	×	(See 05-02A-45 DTC P0756:00 [FW6A-EL, FW6AX-EL].)

ON-BOARD DIAGNOSTIC [FW6A-EL, FW6AX-EL]

DTC No.	Check engine light	Automatic transaxle warning light	Description	Fail-safe function	Drive cycle	Self test type*1	Memory function	Page
P0757:00	Illuminate	Illuminate	Shift solenoid No.2 stuck on	×	2	C	×	(See 05-02A-46 DTC P0757:00 [FW6A-EL, FW6AX-EL].)
P0758:00	Illuminate	Illuminate	Shift solenoid No.2 circuit malfunction	×	1	C, O	×	(See 05-02A-47 DTC P0758:00 [FW6A-EL, FW6AX-EL].)
P0761:00	Illuminate	Illuminate	Shift solenoid No.3 stuck off	×	2	C	×	(See 05-02A-48 DTC P0761:00 [FW6A-EL, FW6AX-EL].)
P0762:00	Illuminate	Illuminate	Shift solenoid No.3 stuck on	×	2	C	×	(See 05-02A-49 DTC P0762:00 [FW6A-EL, FW6AX-EL].)
P0763:00	Illuminate	Illuminate	Shift solenoid No.3 circuit malfunction	×	1	C, O	×	(See 05-02A-51 DTC P0763:00 [FW6A-EL, FW6AX-EL].)
P0766:00	Illuminate	Illuminate	Shift solenoid No.4 stuck off	×	2	C	×	(See 05-02A-52 DTC P0766:00 [FW6A-EL, FW6AX-EL].)
P0767:00	Illuminate	Illuminate	Shift solenoid No.4 stuck on	×	2	C	×	(See 05-02A-53 DTC P0767:00 [FW6A-EL, FW6AX-EL].)
P0768:00	Illuminate	Illuminate	Shift solenoid No.4 circuit malfunction	×	1	C, O	×	(See 05-02A-54 DTC P0768:00 [FW6A-EL, FW6AX-EL].)
P0771:00	Illuminate	Illuminate	On/off solenoid stuck off	×	2	C	×	(See 05-02A-55 DTC P0771:00 [FW6A-EL, FW6AX-EL].)
P0772:00	Illuminate	Illuminate	On/off solenoid stuck on	×	2	C	×	(See 05-02A-56 DTC P0772:00 [FW6A-EL, FW6AX-EL].)
P0773:00	Illuminate	Illuminate	On/off solenoid circuit malfunction	×	1	C, O	×	(See 05-02A-58 DTC P0773:00 [FW6A-EL, FW6AX-EL].)
P0780:00	Illuminate	Illuminate	Gear shifting malfunction	×	2	C	×	(See 05-02A-59 DTC P0780:00 [FW6A-EL, FW6AX-EL].)
P079A:00	Illuminate	Illuminate	Shift solenoid No.3 stuck off/On/off solenoid stuck on	×	2	C	×	(See 05-02A-60 DTC P079A:00 [FW6A-EL, FW6AX-EL].)
P0819:00	—	—	M position switch/Up switch/Down switch signal error	×	1	C	×	(See 05-02A-61 DTC P0819:00 [FW6A-EL, FW6AX-EL].)
P0842:00	Illuminate	Illuminate	Oil pressure switch No.1 stuck on	×	2	C	×	(See 05-02A-64 DTC P0842:00 [FW6A-EL, FW6AX-EL].)
P0843:00	Illuminate	Illuminate	Oil pressure switch No.1 stuck off	×	2	C	×	(See 05-02A-65 DTC P0843:00 [FW6A-EL, FW6AX-EL].)
P0847:00	Illuminate	Illuminate	Oil pressure switch No.2 stuck on	×	2	C	×	(See 05-02A-66 DTC P0847:00 [FW6A-EL, FW6AX-EL].)
P0848:00	Illuminate	Illuminate	Oil pressure switch No.2 stuck off	×	2	C	×	(See 05-02A-67 DTC P0848:00 [FW6A-EL, FW6AX-EL].)
P0872:00	Illuminate	Illuminate	Oil pressure switch No.3 stuck on	×	2	C	×	(See 05-02A-69 DTC P0872:00 [FW6A-EL, FW6AX-EL].)
P0873:00	Illuminate	Illuminate	Oil pressure switch No.3 stuck off	×	2	C	×	(See 05-02A-70 DTC P0873:00 [FW6A-EL, FW6AX-EL].)

ON-BOARD DIAGNOSTIC [FW6A-EL, FW6AX-EL]

DTC No.	Check engine light	Automatic transaxle warning light	Description	Fail-safe function	Drive cycle	Self test type*1	Memory function	Page
P0877:00	Illuminate	Illuminate	Oil pressure switch No.4 stuck on	×	2	C	×	(See 05-02A-72 DTC P0877:00 [FW6A-EL, FW6AX-EL].)
P0878:00	Illuminate	Illuminate	Oil pressure switch No.4 stuck off	×	2	C	×	(See 05-02A-73 DTC P0878:00 [FW6A-EL, FW6AX-EL].)
P0882:00	Illuminate	—	TCM power supply voltage low	×	1	C	×	(See 05-02A-74 DTC P0882:00 [FW6A-EL, FW6AX-EL].)
P0883:00	Illuminate	—	TCM power supply voltage high	×	1	C, O	×	(See 05-02A-76 DTC P0883:00 [FW6A-EL, FW6AX-EL].)
P0C2C:00	—	—	Electric AT oil pump rotation malfunction	×	1	C	×	(See 05-02A-78 DTC P0C2C:00 [FW6A-EL, FW6AX-EL].)
P1728:00	—	—	Clutch slippage	×	2	C	×	(See 05-02A-80 DTC P1728:00 [FW6A-EL, FW6AX-EL].)
P1738:00	—	Illuminate	Automatic transaxle internal malfunction	×	2	C	×	(See 05-02A-81 DTC P1738:00 [FW6A-EL, FW6AX-EL].)
P1784:00	—	Illuminate	Hi cut valve stuck off/R-3-5 cut valve stuck on	×	2	C	×	(See 05-02A-82 DTC P1784:00 [FW6A-EL, FW6AX-EL].)
P181F:00	—	—	Electric AT oil pump/ Electric AT oil pump relay circuit malfunction	×	1	C	×	(See 05-02A-83 DTC P181F:00 [FW6A-EL, FW6AX-EL].)
P2530:00	—	—	Ignition switch: Stuck off	×	1	C	×	(See 05-02A-87 DTC P2530:00 [FW6A-EL, FW6AX-EL].)
P2712:00	—	—	Oil pump shift valve stuck	×	1	C	×	(See 05-02A-88 DTC P2712:00 [FW6A-EL, FW6AX-EL].)
U0073:00	—	—	CAN system communication error (HS CAN)	×	1	C, O	×	(See 05-02A-89 DTC U0073:00, U0100:00, U0121:00, U0141:00, U0155:00 [FW6A-EL, FW6AX-EL].)
U0074:00	—	—	CAN system communication error (local CAN between TCM and PCM)	×	1	C, O	×	(See 05-02A-91 DTC U0074:00 [FW6A-EL, FW6AX-EL].)
U0100:00	Illuminate	—	Communication error to PCM (HS CAN)	×	1	C, O	×	(See 05-02A-89 DTC U0073:00, U0100:00, U0121:00, U0141:00, U0155:00 [FW6A-EL, FW6AX-EL].)
U0115:00	Illuminate	—	Communication error to PCM (local CAN between TCM and PCM)	×	1	C, O	×	(See 05-02A-92 DTC U0115:00 [FW6A-EL, FW6AX-EL].)
U0121:00	Illuminate	—	Communication error to DSC HU/CM	×	1	C, O	×	(See 05-02A-89 DTC U0073:00, U0100:00, U0121:00, U0141:00, U0155:00 [FW6A-EL, FW6AX-EL].)
U0141:00	—	—	Communication error to front body control module (FBCM)	×	1	C, O	×	
U0155:00	Illuminate	—	Communication error to instrument cluster	×	1	C, O	×	
U0442:00	—	—	Invalid data received from PCM (local CAN between TCM and PCM)	×	1	C, O	×	(See 05-02A-93 DTC U0442:00 [FW6A-EL, FW6AX-EL].)

ON-BOARD DIAGNOSTIC [FW6A-EL, FW6AX-EL]

*1 : :C: CMDTC self test, O: KOEO self test

DTC P0218:00 [FW6A-EL, FW6AX-EL]

id050227903700

DTC P0218:00	Automatic transaxle protection control
DETECTION CONDITION	• Under the following conditions, the ATF temperature is **135 °C {275 °F} or more** for **10 s**: — Engine is running. — Battery voltage is **8 V or more**. — TFT sensor related DTC is not recorded. **Diagnostic support note** • The check engine light illuminates if the TCM detects the above malfunction condition during the first drive cycle. • The automatic transaxle warning light illuminates if the TCM detects the above malfunction condition during the first drive cycle. • PENDING CODE is available. • FREEZE FRAME DATA is available. • The DTC is stored in the TCM memory.
FAIL-SAFE FUNCTION	• Inhibits learning control. • Inhibits manual mode. • Inhibits neutral idle control. • Inhibits i-stop control. • Inhibits AAS.
POSSIBLE CAUSE	• Oil cooler malfunction • ATF is more than specified value
SYSTEM WIRING DIAGRAM	—

Diagnostic procedure

STEP	INSPECTION		ACTION
1	**VERIFY FREEZE FRAME DATA/SNAPSHOT DATA HAS BEEN RECORDED** • Has the freeze frame data/snapshot data been recorded on the repair order?	Yes	Go to the next step.
		No	Record the freeze frame data/snapshot data on the repair order, then go to the next step.
2	**VERIFY RELATED SERVICE INFORMATION AVAILABILITY** • Verify related Service Information availability. • Is any related Service Information available?	Yes	Perform repair or diagnosis according to the available Service Information. • If the vehicle is not repaired, go to the next step.
		No	Go to the next step.
3	**INSPECT ATF LEVEL** • Inspect the ATF level. (See 05-17A-11 AUTOMATIC TRANSAXLE FLUID (ATF) INSPECTION [FW6A-EL, FW6AX-EL].) • Is there any malfunction?	Yes	Adjust the ATF level to the specification, then go to Step 5. (See 05-17A-12 AUTOMATIC TRANSAXLE FLUID (ATF) REPLACEMENT [FW6A-EL, FW6AX-EL].)
		No	Go to the next step.
4	**INSPECT OIL COOLER** • Visually inspect the oil cooler. • Is there any malfunction?	Yes	Replace the oil cooler, then go to the next step. (See 05-17A-66 OIL COOLER REMOVAL/INSTALLATION [FW6A-EL, FW6AX-EL].)
		No	Go to the next step.
5	**VERIFY DTC TROUBLESHOOTING COMPLETED** • Clear the DTC using the M-MDS. (See 05-02A-7 ON-BOARD DIAGNOSTIC SYSTEM DTC INSPECTION [FW6A-EL, FW6AX-EL].) • Perform the following procedure to ensure that the DTC has been resolved: 1. Start the engine and wait for **10 s or more**. • Perform the DTC inspection using the M-MDS. (See 05-02A-7 ON-BOARD DIAGNOSTIC SYSTEM DTC INSPECTION [FW6A-EL, FW6AX-EL].) • Are any DTCs present?	Yes	Go to the applicable DTC inspection. (See 05-02A-11 ON-BOARD DIAGNOSTIC SYSTEM DTC TABLE [FW6A-EL, FW6AX-EL].)
		No	DTC troubleshooting completed.

ON-BOARD DIAGNOSTIC [FW6A-EL, FW6AX-EL]

DTC P0500:00 [FW6A-EL, FW6AX-EL]

id050227321400

DTC P0500:00	Vehicle speed signal circuit malfunction
DETECTION CONDITION	• Under the following conditions, the vehicle speed signal input from DSC HU/CM is incorrect for **10 s**: — Engine is running. — Battery voltage is **8 V or more**. — Vehicle speed is **16 km/h {9.9 mph} or more**. — There is no difference in speed between turbine/input shaft speed sensor and output shaft speed sensor. **Diagnostic support note** • The check engine light illuminates if the TCM detects the above malfunction condition during the first drive cycle. • The automatic transaxle warning light does not illuminate. • PENDING CODE is available. • FREEZE FRAME DATA is available. • The DTC is stored in the TCM memory.
FAIL-SAFE FUNCTION	• Inhibits learning control. • Inhibits neutral idle control. • Inhibits i-stop control. • Inhibits AAS.
POSSIBLE CAUSE	• DSC HU/CM DTC is stored. — ABS wheel-speed sensor malfunction
SYSTEM WIRING DIAGRAM	—

Diagnostic procedure

STEP	INSPECTION		ACTION
1	**VERIFY FREEZE FRAME DATA/SNAPSHOT DATA HAS BEEN RECORDED** • Has the freeze frame data/snapshot data been recorded on the repair order?	Yes	Go to the next step.
		No	Record the freeze frame data/snapshot data on the repair order, then go to the next step.
2	**VERIFY RELATED SERVICE INFORMATION AVAILABILITY** • Verify related Service Information availability. • Is any related Service Information available?	Yes	Perform repair or diagnosis according to the available Service Information. • If the vehicle is not repaired, go to the next step.
		No	Go to the next step.
3	**VERIFY STORED DTC IN DSC HU/CM** • Perform the DSC HU/CM DTC inspection using the M-MDS. (See 04-02A-7 ON-BOARD DIAGNOSIS [DYNAMIC STABILITY CONTROL (DSC)].) • Are any DTCs present?	Yes	Go to the applicable DTC inspection. (See 04-02A-7 ON-BOARD DIAGNOSIS [DYNAMIC STABILITY CONTROL (DSC)].)
		No	Go to the next step.
4	**VERIFY DTC TROUBLESHOOTING COMPLETED** • Clear the DTC using the M-MDS. (See 05-02A-7 ON-BOARD DIAGNOSTIC SYSTEM DTC INSPECTION [FW6A-EL, FW6AX-EL].) • Perform the following procedure to ensure that the DTC has been resolved: 1. Drive the vehicle for **10 s or more** under the following conditions: • Battery voltage: **8 V or more** • Vehicle speed: **45 km/h {28 mph} or more** • Perform the DTC inspection using the M-MDS. (See 05-02A-7 ON-BOARD DIAGNOSTIC SYSTEM DTC INSPECTION [FW6A-EL, FW6AX-EL].) • Are any DTCs present?	Yes	Go to the applicable DTC inspection. (See 05-02A-11 ON-BOARD DIAGNOSTIC SYSTEM DTC TABLE [FW6A-EL, FW6AX-EL].)
		No	DTC troubleshooting completed.

ON-BOARD DIAGNOSTIC [FW6A-EL, FW6AX-EL]

DTC P0666:00 [FW6A-EL, FW6AX-EL]

id050227903800

DTC P0666:00	ECU internal temperature sensor circuit(s) malfunction
DETECTION CONDITION	• Under the following condition, there is malfunction in circuits of two or more ECU internal temperature sensors: — Battery voltage is **8 V or more**. • Under the following conditions, one ECU internal temperature sensor has malfunction, with difference in temperature between remaining two ECU internal temperature sensors being **10 °C {18 °F} or more**: — Battery voltage is **8 V or more**. — Soaked for **6 hours or more**. **Diagnostic support note** • The check engine light illuminates if the TCM detects the above malfunction condition in two consecutive drive cycles or in one drive cycle while the DTC for the same malfunction has been stored in the TCM. • The automatic transaxle warning light illuminates if the TCM detects the above malfunction condition in two consecutive drive cycles or in one drive cycle while the DTC for the same malfunction has been stored in the TCM. • PENDING CODE is available. • FREEZE FRAME DATA is available. • The DTC is stored in the TCM memory.
FAIL-SAFE FUNCTION	• Inhibits learning control. • Inhibits neutral idle control. • Inhibits i-stop control.
POSSIBLE CAUSE	• Control valve body malfunction — ECU internal temperature sensor (built-into TCM) malfunction
SYSTEM WIRING DIAGRAM	—

Diagnostic procedure

STEP	INSPECTION		ACTION
1	**VERIFY FREEZE FRAME DATA/SNAPSHOT DATA HAS BEEN RECORDED** • Has the freeze frame data/snapshot data been recorded on the repair order?	Yes	Go to the next step.
		No	Record the freeze frame data/snapshot data on the repair order, then go to the next step.
2	**VERIFY RELATED SERVICE INFORMATION AVAILABILITY** • Verify related Service Information availability. • Is any related Service Information available?	Yes	Perform repair or diagnosis according to the available Service Information. • If the vehicle is not repaired, replace the control valve body. (See 05-17A-67 CONTROL VALVE BODY REMOVAL/INSTALLATION [FW6A-EL, FW6AX-EL].) Go to the next step.
		No	Replace the control valve body, then go to the next step. (See 05-17A-67 CONTROL VALVE BODY REMOVAL/INSTALLATION [FW6A-EL, FW6AX-EL].)
3	**VERIFY DTC TROUBLESHOOTING COMPLETED** • Clear the DTC using the M-MDS. (See 05-02A-7 ON-BOARD DIAGNOSTIC SYSTEM DTC INSPECTION [FW6A-EL, FW6AX-EL].) • Perform the following procedure to ensure that the DTC has been resolved: 1. Start the engine. • Perform the DTC inspection using the M-MDS. (See 05-02A-7 ON-BOARD DIAGNOSTIC SYSTEM DTC INSPECTION [FW6A-EL, FW6AX-EL].) • Are any DTCs present?	Yes	Go to the applicable DTC inspection. (See 05-02A-11 ON-BOARD DIAGNOSTIC SYSTEM DTC TABLE [FW6A-EL, FW6AX-EL].)
		No	DTC troubleshooting completed.

ON-BOARD DIAGNOSTIC [FW6A-EL, FW6AX-EL]

DTC P0667:00 [FW6A-EL, FW6AX-EL]

id050227903900

DTC P0667:00	**ECU internal temperature sensor two-range/performance problem**
DETECTION CONDITION	• Under the following conditions, the difference between ECU internal temperatures of three ECU internal temperature sensors is **10 °C {18 °F} or more**: — Engine is running. — Battery voltage is **8 V or more**. — Soaked for **6 hours or more**. — No malfunction in ECU internal temperature sensor circuit **Diagnostic support note** • The check engine light illuminates if the TCM detects the above malfunction condition in two consecutive drive cycles or in one drive cycle while the DTC for the same malfunction has been stored in the TCM. • The automatic transaxle warning light illuminates if the TCM detects the above malfunction condition in two consecutive drive cycles or in one drive cycle while the DTC for the same malfunction has been stored in the TCM. • PENDING CODE is available. • FREEZE FRAME DATA is available. • The DTC is stored in the TCM memory.
FAIL-SAFE FUNCTION	• Inhibits learning control. • Inhibits neutral idle control. • Inhibits i-stop control.
POSSIBLE CAUSE	• Control valve body malfunction — ECU internal temperature sensor (built-into TCM) malfunction
SYSTEM WIRING DIAGRAM	—

Diagnostic procedure

STEP	INSPECTION		ACTION
1	**VERIFY FREEZE FRAME DATA/SNAPSHOT DATA HAS BEEN RECORDED** • Has the freeze frame data/snapshot data been recorded on the repair order?	Yes	Go to the next step.
		No	Record the freeze frame data/snapshot data on the repair order, then go to the next step.
2	**VERIFY RELATED SERVICE INFORMATION AVAILABILITY** • Verify related Service Information availability. • Is any related Service Information available?	Yes	Perform repair or diagnosis according to the available Service Information. • If the vehicle is not repaired, replace the control valve body. (See 05-17A-67 CONTROL VALVE BODY REMOVAL/INSTALLATION [FW6A-EL, FW6AX-EL].) Go to the next step.
		No	Replace the control valve body, then go to the next step. (See 05-17A-67 CONTROL VALVE BODY REMOVAL/INSTALLATION [FW6A-EL, FW6AX-EL].)
3	**VERIFY DTC TROUBLESHOOTING COMPLETED** • Clear the DTC using the M-MDS. (See 05-02A-7 ON-BOARD DIAGNOSTIC SYSTEM DTC INSPECTION [FW6A-EL, FW6AX-EL].) • Perform the following procedure to ensure that the DTC has been resolved: 1. Soak for **6 hours or more**. 2. Start the engine, and warm it up until the ATF temperature is **60 °C {140 °F} or more**, and the engine coolant temperature is **80 °C {176 °F} or more**. • Perform the DTC inspection using the M-MDS. (See 05-02A-7 ON-BOARD DIAGNOSTIC SYSTEM DTC INSPECTION [FW6A-EL, FW6AX-EL].) • Are any DTCs present?	Yes	Go to the applicable DTC inspection. (See 05-02A-11 ON-BOARD DIAGNOSTIC SYSTEM DTC TABLE [FW6A-EL, FW6AX-EL].)
		No	DTC troubleshooting completed.

ON-BOARD DIAGNOSTIC [FW6A-EL, FW6AX-EL]

DTC P06B8:00 [FW6A-EL, FW6AX-EL]

id050227325000

DTC P06B8:00	NVRAM malfunction
DETECTION CONDITION	• Under the following condition, TCM internal NVRAM data retention/read/write disabled: — Battery voltage is **8 V or more**. **Diagnostic support note** • The check engine light illuminates if the TCM detects the above malfunction condition during the first drive cycle. • The automatic transaxle warning light does not illuminate. • PENDING CODE is available. • FREEZE FRAME DATA is available. • The DTC is stored in the TCM memory.
FAIL-SAFE FUNCTION	—
POSSIBLE CAUSE	• TCM initial learning error • Control valve body malfunction — TCM internal NVRAM malfunction
SYSTEM WIRING DIAGRAM	—

Diagnostic procedure

STEP	INSPECTION		ACTION
1	**VERIFY FREEZE FRAME DATA/SNAPSHOT DATA HAS BEEN RECORDED** • Has the freeze frame data/snapshot data been recorded on the repair order?	Yes	Go to the next step.
		No	Record the freeze frame data/snapshot data on the repair order, then go to the next step.
2	**VERIFY RELATED SERVICE INFORMATION AVAILABILITY** • Verify related Service Information availability. • Is any related Service Information available?	Yes	Perform repair or diagnosis according to the available Service Information. • If the vehicle is not repaired, go to the next step.
		No	Go to the next step.
3	**PERFORM INITIAL LEARNING** • Perform the initial learning. (See 05-17A-74 INITIAL LEARNING [FW6A-EL, FW6AX-EL].) • Clear the DTC using the M-MDS. (See 05-02A-7 ON-BOARD DIAGNOSTIC SYSTEM DTC INSPECTION [FW6A-EL, FW6AX-EL].) • Perform the following procedure to ensure that the DTC has been resolved: 1. Switch the ignition ON (engine off or on). • Perform the DTC inspection using the M-MDS. (See 05-02A-7 ON-BOARD DIAGNOSTIC SYSTEM DTC INSPECTION [FW6A-EL, FW6AX-EL].) • Is the DTC P06B8:00 also present?	Yes	Replace the control valve body, then go to the next step. (See 05-17A-67 CONTROL VALVE BODY REMOVAL/INSTALLATION [FW6A-EL, FW6AX-EL].)
		No	DTC troubleshooting completed.
4	**VERIFY DTC TROUBLESHOOTING COMPLETED** • Clear the DTC using the M-MDS. (See 05-02A-7 ON-BOARD DIAGNOSTIC SYSTEM DTC INSPECTION [FW6A-EL, FW6AX-EL].) • Perform the following procedure to ensure that the DTC has been resolved: 1. Switch the ignition ON (engine off or on). • Perform the DTC inspection using the M-MDS. (See 05-02A-7 ON-BOARD DIAGNOSTIC SYSTEM DTC INSPECTION [FW6A-EL, FW6AX-EL].) • Are any DTCs present?	Yes	Go to the applicable DTC inspection. (See 05-02A-11 ON-BOARD DIAGNOSTIC SYSTEM DTC TABLE [FW6A-EL, FW6AX-EL].)
		No	DTC troubleshooting completed.

ON-BOARD DIAGNOSTIC [FW6A-EL, FW6AX-EL]

DTC P0706:00 [FW6A-EL, FW6AX-EL]

id050227817000

DTC P0706:00	Transaxle range sensor range/performance problem
DETECTION CONDITION	• Under the following condition, pattern identification error in switch condition of transaxle range sensors 1 to 4: — Battery voltage is **8 V or more**. **Diagnostic support note** • The check engine light illuminates if the TCM detects the above malfunction condition in two consecutive drive cycles or in one drive cycle while the DTC for the same malfunction has been stored in the TCM. • The automatic transaxle warning light illuminates if the TCM detects the above malfunction condition in two consecutive drive cycles or in one drive cycle while the DTC for the same malfunction has been stored in the TCM. • PENDING CODE is available. • FREEZE FRAME DATA is available. • The DTC is stored in the TCM memory.
FAIL-SAFE FUNCTION	• Inhibits learning control. • Inhibits manual mode. • Inhibits neutral idle control. • Inhibits i-stop control. • Inhibits AAS.
POSSIBLE CAUSE	• Transaxle range sensor (built-into TCM) malfunction
SYSTEM WIRING DIAGRAM	—

Diagnostic procedure

STEP	INSPECTION		ACTION
1	**VERIFY FREEZE FRAME DATA/SNAPSHOT DATA HAS BEEN RECORDED** • Has the freeze frame data/snapshot data been recorded on the repair order?	Yes	Go to the next step.
		No	Record the freeze frame data/snapshot data on the repair order, then go to the next step.
2	**VERIFY RELATED SERVICE INFORMATION AVAILABILITY** • Verify related Service Information availability. • Is any related Service Information available?	Yes	Perform repair or diagnosis according to the available Service Information. • If the vehicle is not repaired, replace the control valve body. (See 05-17A-67 CONTROL VALVE BODY REMOVAL/ INSTALLATION [FW6A-EL, FW6AX-EL].) Go to the next step.
		No	Replace the control valve body, then go to the next step. (See 05-17A-67 CONTROL VALVE BODY REMOVAL/ INSTALLATION [FW6A-EL, FW6AX-EL].)
3	**VERIFY DTC TROUBLESHOOTING COMPLETED** • Clear the DTC using the M-MDS. (See 05-02A-7 ON-BOARD DIAGNOSTIC SYSTEM DTC INSPECTION [FW6A-EL, FW6AX-EL].) • Perform the following procedure to ensure that the DTC has been resolved: 1. Switch the ignition ON (engine off or on). • Perform the DTC inspection using the M-MDS. (See 05-02A-7 ON-BOARD DIAGNOSTIC SYSTEM DTC INSPECTION [FW6A-EL, FW6AX-EL].) • Are any DTCs present?	Yes	Go to the applicable DTC inspection. (See 05-02A-11 ON-BOARD DIAGNOSTIC SYSTEM DTC TABLE [FW6A-EL, FW6AX-EL].)
		No	DTC troubleshooting completed.

ON-BOARD DIAGNOSTIC [FW6A-EL, FW6AX-EL]

DTC P0707:00 [FW6A-EL, FW6AX-EL]

id050227817100

DTC P0707:00	**Transaxle range sensor circuit low input**
DETECTION CONDITION	• Under the following condition, incorrect voltage in any of transaxle range sensors 1 to 4: — Battery voltage is **8 V or more**. **Diagnostic support note** • The MIL illuminates if the TCM detects the above malfunction condition during the first drive cycle. • The automatic transaxle warning light illuminates if the TCM detects the above malfunction condition during the first drive cycle. • PENDING CODE is available. • FREEZE FRAME DATA is available. • The DTC is stored in the TCM memory.
FAIL-SAFE FUNCTION	• Inhibits learning control. • Inhibits manual mode. • Inhibits neutral idle control. • Inhibits i-stop control. • Inhibits AAS.
POSSIBLE CAUSE	• Transaxle range sensor (built-into TCM) malfunction
SYSTEM WIRING DIAGRAM	—

Diagnostic procedure

STEP	INSPECTION		ACTION
1	**VERIFY FREEZE FRAME DATA/SNAPSHOT DATA HAS BEEN RECORDED** • Has the freeze frame data/snapshot data been recorded on the repair order?	Yes	Go to the next step.
		No	Record the freeze frame data/snapshot data on the repair order, then go to the next step.
2	**VERIFY RELATED SERVICE INFORMATION AVAILABILITY** • Verify related Service Information availability. • Is any related Service Information available?	Yes	Perform repair or diagnosis according to the available Service Information. • If the vehicle is not repaired, replace the control valve body. (See 05-17A-67 CONTROL VALVE BODY REMOVAL/INSTALLATION [FW6A-EL, FW6AX-EL].) Go to the next step.
		No	Replace the control valve body, then go to the next step. (See 05-17A-67 CONTROL VALVE BODY REMOVAL/INSTALLATION [FW6A-EL, FW6AX-EL].)
3	**VERIFY DTC TROUBLESHOOTING COMPLETED** • Clear the DTC using the M-MDS. (See 05-02A-7 ON-BOARD DIAGNOSTIC SYSTEM DTC INSPECTION [FW6A-EL, FW6AX-EL].) • Perform the following procedure to ensure that the DTC has been resolved: 1. Switch the ignition ON (engine off or on). • Perform the DTC inspection using the M-MDS. (See 05-02A-7 ON-BOARD DIAGNOSTIC SYSTEM DTC INSPECTION [FW6A-EL, FW6AX-EL].) • Are any DTCs present?	Yes	Go to the applicable DTC inspection. (See 05-02A-11 ON-BOARD DIAGNOSTIC SYSTEM DTC TABLE [FW6A-EL, FW6AX-EL].)
		No	DTC troubleshooting completed.

ON-BOARD DIAGNOSTIC [FW6A-EL, FW6AX-EL]

DTC P0708:00 [FW6A-EL, FW6AX-EL]

id050227817200

DTC P0708:00	**Transaxle range sensor circuit high input**
DETECTION CONDITION	• Under the following condition, incorrect voltage in any of transaxle range sensors 1 to 4: — Battery voltage is **8 V or more**. **Diagnostic support note** • The MIL illuminates if the TCM detects the above malfunction condition during the first drive cycle. • The automatic transaxle warning light illuminates if the TCM detects the above malfunction condition during the first drive cycle. • PENDING CODE is available. • FREEZE FRAME DATA is available. • The DTC is stored in the TCM memory.
FAIL-SAFE FUNCTION	• Inhibits learning control. • Inhibits manual mode. • Inhibits neutral idle control. • Inhibits i-stop control. • Inhibits AAS.
POSSIBLE CAUSE	• Transaxle range sensor (built-into TCM) malfunction
SYSTEM WIRING DIAGRAM	—

Diagnostic procedure

STEP	INSPECTION		ACTION
1	**VERIFY FREEZE FRAME DATA/SNAPSHOT DATA HAS BEEN RECORDED** • Has the freeze frame data/snapshot data been recorded on the repair order?	Yes	Go to the next step.
		No	Record the freeze frame data/snapshot data on the repair order, then go to the next step.
2	**VERIFY RELATED SERVICE INFORMATION AVAILABILITY** • Verify related Service Information availability. • Is any related Service Information available?	Yes	Perform repair or diagnosis according to the available Service Information. • If the vehicle is not repaired, replace the control valve body. (See 05-17A-67 CONTROL VALVE BODY REMOVAL/ INSTALLATION [FW6A-EL, FW6AX-EL].) Go to the next step.
		No	Replace the control valve body, then go to the next step. (See 05-17A-67 CONTROL VALVE BODY REMOVAL/ INSTALLATION [FW6A-EL, FW6AX-EL].)
3	**VERIFY DTC TROUBLESHOOTING COMPLETED** • Clear the DTC using the M-MDS. (See 05-02A-7 ON-BOARD DIAGNOSTIC SYSTEM DTC INSPECTION [FW6A-EL, FW6AX-EL].) • Perform the following procedure to ensure that the DTC has been resolved: 1. Switch the ignition ON (engine off or on). • Perform the DTC inspection using the M-MDS. (See 05-02A-7 ON-BOARD DIAGNOSTIC SYSTEM DTC INSPECTION [FW6A-EL, FW6AX-EL].) • Are any DTCs present?	Yes	Go to the applicable DTC inspection. (See 05-02A-11 ON-BOARD DIAGNOSTIC SYSTEM DTC TABLE [FW6A-EL, FW6AX-EL].)
		No	DTC troubleshooting completed.

ON-BOARD DIAGNOSTIC [FW6A-EL, FW6AX-EL]

DTC P0711:00 [FW6A-EL, FW6AX-EL]

id050227817300

DTC P0711:00	TFT sensor range/performance problem
DETECTION CONDITION	• Under the following conditions, the ATF temperature is **40 °C {104 °F} or less**: — Certain period has elapsed since engine start. — Battery voltage is **8 V or more**. — ECU internal temperature sensor related DTC is not recorded. — Soaked for **6 hours or more**. — ECU internal temperature increases above specified temperature. **Diagnostic support note** • The check engine light illuminates if the TCM detects the above malfunction condition in two consecutive drive cycles or in one drive cycle while the DTC for the same malfunction has been stored in the TCM. • The automatic transaxle warning light illuminates if the TCM detects the above malfunction condition in two consecutive drive cycles or in one drive cycle while the DTC for the same malfunction has been stored in the TCM. • PENDING CODE is available. • FREEZE FRAME DATA is available. • The DTC is stored in the TCM memory.
FAIL-SAFE FUNCTION	• Inhibits learning control. • Inhibits neutral idle control. • Inhibits i-stop control.
POSSIBLE CAUSE	• TFT sensor malfunction
SYSTEM WIRING DIAGRAM	—

05

Diagnostic procedure

STEP	INSPECTION		ACTION
1	**VERIFY FREEZE FRAME DATA/SNAPSHOT DATA HAS BEEN RECORDED** • Has the freeze frame data/snapshot data been recorded on the repair order?	Yes	Go to the next step.
		No	Record the freeze frame data/snapshot data on the repair order, then go to the next step.
2	**VERIFY RELATED SERVICE INFORMATION AVAILABILITY** • Verify related Service Information availability. • Is any related Service Information available?	Yes	Perform repair or diagnosis according to the available Service Information. • If the vehicle is not repaired, replace the coupler component. (See 05-17A-16 COUPLER COMPONENT REMOVAL/INSTALLATION [FW6A-EL, FW6AX-EL].) Go to the next step.
		No	Replace the coupler component, then go to the next step. (See 05-17A-16 COUPLER COMPONENT REMOVAL/INSTALLATION [FW6A-EL, FW6AX-EL].)
3	**VERIFY DTC TROUBLESHOOTING COMPLETED** • Clear the DTC using the M-MDS. (See 05-02A-7 ON-BOARD DIAGNOSTIC SYSTEM DTC INSPECTION [FW6A-EL, FW6AX-EL].) • Perform the following procedure to ensure that the DTC has been resolved: 1. Soak for **6 hours or more**. 2. Idle the engine. • Perform the DTC inspection using the M-MDS. (See 05-02A-7 ON-BOARD DIAGNOSTIC SYSTEM DTC INSPECTION [FW6A-EL, FW6AX-EL].) • Are any DTCs present?	Yes	Go to the applicable DTC inspection. (See 05-02A-11 ON-BOARD DIAGNOSTIC SYSTEM DTC TABLE [FW6A-EL, FW6AX-EL].)
		No	DTC troubleshooting completed.

ON-BOARD DIAGNOSTIC [FW6A-EL, FW6AX-EL]

DTC P0712:00 [FW6A-EL, FW6AX-EL]

id050227817400

DTC P0712:00	**TFT sensor circuit low input**
DETECTION CONDITION	• Under the following condition, the TFT sensor voltage is **0.12 V or less** for **5 s**: — Battery voltage is **8 V or more**. **Diagnostic support note** • The check engine light illuminates if the TCM detects the above malfunction condition during the first drive cycle. • The automatic transaxle warning light illuminates if the TCM detects the above malfunction condition during the first drive cycle. • PENDING CODE is available. • FREEZE FRAME DATA is available. • The DTC is stored in the TCM memory.
FAIL-SAFE FUNCTION	• Inhibits learning control. • Inhibits neutral idle control. • Inhibits i-stop control.
POSSIBLE CAUSE	• TFT sensor malfunction
SYSTEM WIRING DIAGRAM	—

Diagnostic procedure

STEP	INSPECTION		ACTION
1	**VERIFY FREEZE FRAME DATA/SNAPSHOT DATA HAS BEEN RECORDED** • Has the freeze frame data/snapshot data been recorded on the repair order?	Yes	Go to the next step.
		No	Record the freeze frame data/snapshot data on the repair order, then go to the next step.
2	**VERIFY RELATED SERVICE INFORMATION AVAILABILITY** • Verify related Service Information availability. • Is any related Service Information available?	Yes	Perform repair or diagnosis according to the available Service Information. • If the vehicle is not repaired, replace the coupler component. (See 05-17A-16 COUPLER COMPONENT REMOVAL/ INSTALLATION [FW6A-EL, FW6AX-EL].) Go to the next step.
		No	Replace the coupler component, then go to the next step. (See 05-17A-16 COUPLER COMPONENT REMOVAL/ INSTALLATION [FW6A-EL, FW6AX-EL].)
3	**VERIFY DTC TROUBLESHOOTING COMPLETED** • Clear the DTC using the M-MDS. (See 05-02A-7 ON-BOARD DIAGNOSTIC SYSTEM DTC INSPECTION [FW6A-EL, FW6AX-EL].) • Perform the following procedure to ensure that the DTC has been resolved: 1. Switch the ignition ON (engine off or on) and wait for **5 s or more**. • Perform the DTC inspection using the M-MDS. (See 05-02A-7 ON-BOARD DIAGNOSTIC SYSTEM DTC INSPECTION [FW6A-EL, FW6AX-EL].) • Are any DTCs present?	Yes	Go to the applicable DTC inspection. (See 05-02A-11 ON-BOARD DIAGNOSTIC SYSTEM DTC TABLE [FW6A-EL, FW6AX-EL].)
		No	DTC troubleshooting completed.

ON-BOARD DIAGNOSTIC [FW6A-EL, FW6AX-EL]

DTC P0713:00 [FW6A-EL, FW6AX-EL]

id050227817500

DTC P0713:00	**TFT sensor circuit high input**
DETECTION CONDITION	• Under the following conditions, the ATF temperature is **–40 °C {–40 °F} or less** for **5 s**: — Battery voltage is **8 V or more**. — IAT is **–25 °C {–13 °F} or more**. — IAT sensor related DTC is not recorded. **Diagnostic support note** • The check engine light illuminates if the TCM detects the above malfunction condition in two consecutive drive cycles or in one drive cycle while the DTC for the same malfunction has been stored in the TCM. • The automatic transaxle warning light illuminates if the TCM detects the above malfunction condition in two consecutive drive cycles or in one drive cycle while the DTC for the same malfunction has been stored in the TCM. • PENDING CODE is available. • FREEZE FRAME DATA is available. • The DTC is stored in the TCM memory.
FAIL-SAFE FUNCTION	• Inhibits learning control. • Inhibits neutral idle control. • Inhibits i-stop control.
POSSIBLE CAUSE	• TFT sensor malfunction
SYSTEM WIRING DIAGRAM	—

05

Diagnostic procedure

STEP	INSPECTION		ACTION
1	**CONFIRM IAT SENSOR PENDING CODE/DTC** • Perform the PCM DTC inspection using the M-MDS. (See 01-02-8 ON-BOARD DIAGNOSTIC TEST [SKYACTIV-G 2.0].) • Are IAT sensor pending codes/DTCs present?	Yes	Go to the applicable DTC inspection. (See 01-02-14 DTC TABLE [SKYACTIV-G 2.0].)
		No	Go to the next step.
2	**VERIFY FREEZE FRAME DATA/SNAPSHOT DATA HAS BEEN RECORDED** • Has the freeze frame data/snapshot data been recorded on the repair order?	Yes	Go to the next step.
		No	Record the freeze frame data/snapshot data on the repair order, then go to the next step.
3	**VERIFY RELATED SERVICE INFORMATION AVAILABILITY** • Verify related Service Information availability. • Is any related Service Information available?	Yes	Perform repair or diagnosis according to the available Service Information. • If the vehicle is not repaired, replace the coupler component. (See 05-17A-16 COUPLER COMPONENT REMOVAL/INSTALLATION [FW6A-EL, FW6AX-EL].) Go to the next step.
		No	Replace the coupler component, then go to the next step. (See 05-17A-16 COUPLER COMPONENT REMOVAL/INSTALLATION [FW6A-EL, FW6AX-EL].)
4	**VERIFY DTC TROUBLESHOOTING COMPLETED** • Clear the DTC using the M-MDS. (See 05-02A-7 ON-BOARD DIAGNOSTIC SYSTEM DTC INSPECTION [FW6A-EL, FW6AX-EL].) • Perform the following procedure to ensure that the DTC has been resolved: 1. Switch the ignition to ON (engine off or on) and wait for **5 s or more**. 2. Verify that the IAT is **–25 °C {–13 °F} or more**. • Perform the DTC inspection using the M-MDS. (See 05-02A-7 ON-BOARD DIAGNOSTIC SYSTEM DTC INSPECTION [FW6A-EL, FW6AX-EL].) • Are any DTCs present?	Yes	Go to the applicable DTC inspection. (See 05-02A-11 ON-BOARD DIAGNOSTIC SYSTEM DTC TABLE [FW6A-EL, FW6AX-EL].)
		No	DTC troubleshooting completed.

ON-BOARD DIAGNOSTIC [FW6A-EL, FW6AX-EL]

DTC P0716:00 [FW6A-EL, FW6AX-EL]

id050227904000

DTC P0716:00	Turbine/Input shaft speed sensor range/performance problem
DETECTION CONDITION	• Under the following conditions, the turbine/input shaft speed is **9,000 rpm or more** for **1 s**: — Engine is running. — Battery voltage is **10 V or more**. — Engine speed is **7,500 rpm or less**. **Diagnostic support note** • The check engine light illuminates if the TCM detects the above malfunction condition during the first drive cycle. • The automatic transaxle warning light illuminates if the TCM detects the above malfunction condition during the first drive cycle. • PENDING CODE is available. • FREEZE FRAME DATA is available. • The DTC is stored in the TCM memory.
FAIL-SAFE FUNCTION	• Set to TCC control. • Inhibits learning control. • Inhibits manual mode. • Inhibits neutral idle control. • Inhibits i-stop control. • Inhibits AAS. • Inhibits 5GR and 6GR. • Inhibits shift down when the accelerator pedal is depressed.
POSSIBLE CAUSE	• Turbine/Input shaft speed sensor malfunction
SYSTEM WIRING DIAGRAM	—

Diagnostic procedure

STEP	INSPECTION		ACTION
1	**VERIFY FREEZE FRAME DATA/SNAPSHOT DATA HAS BEEN RECORDED** • Has the freeze frame data/snapshot data been recorded on the repair order?	Yes	Go to the next step.
		No	Record the freeze frame data/snapshot data on the repair order, then go to the next step.
2	**VERIFY RELATED SERVICE INFORMATION AVAILABILITY** • Verify related Service Information availability. • Is any related Service Information available?	Yes	Perform repair or diagnosis according to the available Service Information. • If the vehicle is not repaired, replace the control valve body. (See 05-17A-67 CONTROL VALVE BODY REMOVAL/ INSTALLATION [FW6A-EL, FW6AX-EL].) Go to the next step.
		No	Replace the control valve body, then go to the next step. (See 05-17A-67 CONTROL VALVE BODY REMOVAL/ INSTALLATION [FW6A-EL, FW6AX-EL].)
3	**VERIFY DTC TROUBLESHOOTING COMPLETED** • Clear the DTC using the M-MDS. (See 05-02A-7 ON-BOARD DIAGNOSTIC SYSTEM DTC INSPECTION [FW6A-EL, FW6AX-EL].) • Perform the following procedure to ensure that the DTC has been resolved: 1. Drive the vehicle for **1 s or more** under the following condition: • Vehicle speed: **30 km/h {19 mph} or more** • Perform the DTC inspection using the M-MDS. (See 05-02A-7 ON-BOARD DIAGNOSTIC SYSTEM DTC INSPECTION [FW6A-EL, FW6AX-EL].) • Are any DTCs present?	Yes	Go to the applicable DTC inspection. (See 05-02A-11 ON-BOARD DIAGNOSTIC SYSTEM DTC TABLE [FW6A-EL, FW6AX-EL].)
		No	DTC troubleshooting completed.

ON-BOARD DIAGNOSTIC [FW6A-EL, FW6AX-EL]

DTC P0717:00 [FW6A-EL, FW6AX-EL]

id050227821300

DTC P0717:00	**Open circuit in turbine/input shaft speed sensor circuit**
DETECTION CONDITION	• Under the following conditions, the turbine/input shaft speed sensor signal is not input for **1 s**: — Engine is running. — Battery voltage is **10 V or more**. — Vehicle speed signal related DTC is not recorded. — Vehicle speed is **16 km/h {9.9 mph} or more**. — There is no difference between vehicle speed signal from DSC HU/CM and output shaft speed sensor signal. — DTC U0121:00 is not recorded. **Diagnostic support note** • The check engine light illuminates if the TCM detects the above malfunction condition during the first drive cycle. • The automatic transaxle warning light illuminates if the TCM detects the above malfunction condition during the first drive cycle. • PENDING CODE is available. • FREEZE FRAME DATA is available. • The DTC is stored in the TCM memory.
FAIL-SAFE FUNCTION	• Set to TCC control. • Inhibits learning control. • Inhibits manual mode. • Inhibits neutral idle control. • Inhibits i-stop control. • Inhibits AAS. • Inhibits 5GR and 6GR. • Inhibits shift down when the accelerator pedal is depressed.
POSSIBLE CAUSE	• Turbine/Input shaft speed sensor malfunction
SYSTEM WIRING DIAGRAM	—

Diagnostic procedure

STEP	INSPECTION		ACTION
1	**VERIFY FREEZE FRAME DATA/SNAPSHOT DATA HAS BEEN RECORDED** • Has the freeze frame data/snapshot data been recorded on the repair order?	Yes	Go to the next step.
		No	Record the freeze frame data/snapshot data on the repair order, then go to the next step.
2	**VERIFY RELATED SERVICE INFORMATION AVAILABILITY** • Verify related Service Information availability. • Is any related Service Information available?	Yes	Perform repair or diagnosis according to the available Service Information. • If the vehicle is not repaired, replace the control valve body. (See 05-17A-67 CONTROL VALVE BODY REMOVAL/INSTALLATION [FW6A-EL, FW6AX-EL].) Go to the next step.
		No	Replace the control valve body, then go to the next step. (See 05-17A-67 CONTROL VALVE BODY REMOVAL/INSTALLATION [FW6A-EL, FW6AX-EL].)
3	**VERIFY DTC TROUBLESHOOTING COMPLETED** • Clear the DTC using the M-MDS. (See 05-02A-7 ON-BOARD DIAGNOSTIC SYSTEM DTC INSPECTION [FW6A-EL, FW6AX-EL].) • Perform the following procedure to ensure that the DTC has been resolved: 1. Drive the vehicle for **1 s or more** under the following condition: • Vehicle speed: **16 km/h {9.9 mph} or more** • Perform the DTC inspection using the M-MDS. (See 05-02A-7 ON-BOARD DIAGNOSTIC SYSTEM DTC INSPECTION [FW6A-EL, FW6AX-EL].) • Are any DTCs present?	Yes	Go to the applicable DTC inspection. (See 05-02A-11 ON-BOARD DIAGNOSTIC SYSTEM DTC TABLE [FW6A-EL, FW6AX-EL].)
		No	DTC troubleshooting completed.

ON-BOARD DIAGNOSTIC [FW6A-EL, FW6AX-EL]

DTC P0721:00 [FW6A-EL, FW6AX-EL]

id050227904100

DTC P0721:00	Output shaft speed sensor range/performance problem
DETECTION CONDITION	• Under the following conditions, the output shaft speed is **13,560 rpm or more** for **1 s**: — Engine is running. — Battery voltage is **10 V or more**. • Under the following conditions, the vehicle speed signal from the DSC HU/CM and the output shaft speed sensor signal differ by **520 rpm or more** for **1 s**: — Engine is running. — Battery voltage is **10 V or more**. — Vehicle speed signal related DTC is not recorded. — Vehicle speed is **16 km/h {9.9 mph} or more**. — Vehicle speed signal from DSC HU/CM and turbine/input shaft speed sensor signal do not differ. — Output shaft speed sensor signal is input. — Output shaft speed is **13,560 rpm or less**. **Diagnostic support note** • The check engine light illuminates if the TCM detects the above malfunction condition during the first drive cycle. • The automatic transaxle warning light illuminates if the TCM detects the above malfunction condition during the first drive cycle. • PENDING CODE is available. • FREEZE FRAME DATA is available. • The DTC is stored in the TCM memory.
FAIL-SAFE FUNCTION	• Inhibits learning control. • Inhibits manual mode. • Inhibits neutral idle control. • Inhibits i-stop control. • Inhibits AAS.
POSSIBLE CAUSE	• Output shaft speed sensor malfunction
SYSTEM WIRING DIAGRAM	—

Diagnostic procedure

STEP	INSPECTION		ACTION
1	**CONFIRM DSC HU/CM DTC** • Perform the DSC HU/CM DTC inspection using the M-MDS. (See 04-02A-7 ON-BOARD DIAGNOSIS [DYNAMIC STABILITY CONTROL (DSC)].) • Are any DTCs present?	Yes	Go to the applicable DTC inspection. (See 04-02A-7 ON-BOARD DIAGNOSIS [DYNAMIC STABILITY CONTROL (DSC)].)
		No	Go to the next step.
2	**VERIFY THE INSTRUMENT CLUSTER REPAIR HISTORY** • Does the instrument cluster have a record of replacement?	Yes	Perform the instrument cluster configuration, then go to Step 6. (See 09-22-19 INSTRUMENT CLUSTER CONFIGURATION (USING AS-BUILT DATA).)
		No	Go to the next step.
3	**VERIFY THE AUTOMATIC TRANSMISSION REPAIR HISTORY** • Does the automatic transmission (with control valve body) have a record of replacement?	Yes	Perform the TCM configuration. (See 05-17A-79 TCM CONFIGURATION [FW6A-EL, FW6AX-EL].)
		No	Go to the next step.
4	**VERIFY FREEZE FRAME DATA/SNAPSHOT DATA HAS BEEN RECORDED** • Has the freeze frame data/snapshot data been recorded on the repair order?	Yes	Go to the next step.
		No	Record the freeze frame data/snapshot data on the repair order, then go to the next step.
5	**VERIFY RELATED SERVICE INFORMATION AVAILABILITY** • Verify related Service Information availability. • Is any related Service Information available?	Yes	Perform repair or diagnosis according to the available Service Information. • If the vehicle is not repaired, replace the control valve body. (See 05-17A-67 CONTROL VALVE BODY REMOVAL/INSTALLATION [FW6A-EL, FW6AX-EL].) Go to the next step.
		No	Replace the control valve body, then go to the next step. (See 05-17A-67 CONTROL VALVE BODY REMOVAL/INSTALLATION [FW6A-EL, FW6AX-EL].)

ON-BOARD DIAGNOSTIC [FW6A-EL, FW6AX-EL]

STEP	INSPECTION		ACTION
6	**VERIFY DTC TROUBLESHOOTING COMPLETED** • Clear the DTC using the M-MDS. (See 05-02A-7 ON-BOARD DIAGNOSTIC SYSTEM DTC INSPECTION [FW6A-EL, FW6AX-EL].) • Perform the following procedure to ensure that the DTC has been resolved: 1. Drive the vehicle for **1 s or more** under the following condition: • Vehicle speed: **30 km/h {19 mph} or more** • Perform the DTC inspection using the M-MDS. (See 05-02A-7 ON-BOARD DIAGNOSTIC SYSTEM DTC INSPECTION [FW6A-EL, FW6AX-EL].) • Are any DTCs present?	Yes	Go to the applicable DTC inspection. (See 05-02A-11 ON-BOARD DIAGNOSTIC SYSTEM DTC TABLE [FW6A-EL, FW6AX-EL].)
		No	DTC troubleshooting completed.

DTC P0722:00 [FW6A-EL, FW6AX-EL]

id050227821500

DTC P0722:00	**Open circuit in output shaft speed sensor circuit**
DETECTION CONDITION	• Under the following conditions, the output shaft speed sensor signal is not input for **1 s**: — Engine is running. — Battery voltage is **10 V or more**. — Vehicle speed signal related DTC is not recorded. — Vehicle speed is **16 km/h {9.9 mph} or more**. — There is no difference between vehicle speed signal from DSC HU/CM and output shaft speed sensor signal. — DTC U0121:00 is not recorded. **Diagnostic support note** • The check engine light illuminates if the TCM detects the above malfunction condition during the first drive cycle. • The automatic transaxle warning light illuminates if the TCM detects the above malfunction condition during the first drive cycle. • PENDING CODE is available. • FREEZE FRAME DATA is available. • The DTC is stored in the TCM memory.
FAIL-SAFE FUNCTION	• Inhibits learning control. • Inhibits manual mode. • Inhibits neutral idle control. • Inhibits i-stop control. • Inhibits AAS.
POSSIBLE CAUSE	• Output shaft speed sensor malfunction
SYSTEM WIRING DIAGRAM	—

Diagnostic procedure

STEP	INSPECTION		ACTION
1	**VERIFY FREEZE FRAME DATA/SNAPSHOT DATA HAS BEEN RECORDED** • Has the freeze frame data/snapshot data been recorded on the repair order?	Yes	Go to the next step.
		No	Record the freeze frame data/snapshot data on the repair order, then go to the next step.
2	**VERIFY RELATED SERVICE INFORMATION AVAILABILITY** • Verify related Service Information availability. • Is any related Service Information available?	Yes	Perform repair or diagnosis according to the available Service Information. • If the vehicle is not repaired, replace the control valve body. (See 05-17A-67 CONTROL VALVE BODY REMOVAL/INSTALLATION [FW6A-EL, FW6AX-EL].) Go to the next step.
		No	Replace the control valve body, then go to the next step. (See 05-17A-67 CONTROL VALVE BODY REMOVAL/INSTALLATION [FW6A-EL, FW6AX-EL].)

ON-BOARD DIAGNOSTIC [FW6A-EL, FW6AX-EL]

STEP	INSPECTION		ACTION
3	**VERIFY DTC TROUBLESHOOTING COMPLETED** • Clear the DTC using the M-MDS. (See 05-02A-7 ON-BOARD DIAGNOSTIC SYSTEM DTC INSPECTION [FW6A-EL, FW6AX-EL].) • Perform the following procedure to ensure that the DTC has been resolved: 1. Drive the vehicle for **1 s or more** under the following condition: • Vehicle speed: **16 km/h {9.9 mph} or more** • Perform the DTC inspection using the M-MDS. (See 05-02A-7 ON-BOARD DIAGNOSTIC SYSTEM DTC INSPECTION [FW6A-EL, FW6AX-EL].) • Are any DTCs present?	Yes	Go to the applicable DTC inspection. (See 05-02A-11 ON-BOARD DIAGNOSTIC SYSTEM DTC TABLE [FW6A-EL, FW6AX-EL].)
		No	DTC troubleshooting completed.

DTC P0729:00 [FW6A-EL, FW6AX-EL]

id050227822000

DTC P0729:00	6GR incorrect ratio
DETECTION CONDITION	• In D position, 6GR, the following phenomenon occurs: — Engine speed and turbine/input shaft speed deviates by **600 rpm** for **230 to 1,980 ms** (varies with ATF temperature and ECT) during shift-up. — Engine speed and turbine/input shaft speed deviates by **300 rpm** for **1,500 to 3,900 ms** (varies with ATF temperature) while driving without shifting. **Diagnostic support note** • The check engine light does not illuminate. • The automatic transaxle warning light does not illuminate. • PENDING CODE is available. • FREEZE FRAME DATA is not available. • The DTC is stored in the TCM memory.
FAIL-SAFE FUNCTION	• Inhibits malfunctioning gear. • Limits engine torque. • Inhibits learning control. • Inhibits manual mode. • Inhibits neutral idle control. • Inhibits i-stop control. • Inhibits AAS.
POSSIBLE CAUSE	• ATF is less than specified value • Clutch burnt • Shift solenoid malfunction • ATF leakage from clutch circuit • Control valve body malfunction
SYSTEM WIRING DIAGRAM	—

Diagnostic procedure

STEP	INSPECTION		ACTION
1	**VERIFY THE DTC OUTPUT STATUS** • Are any the following DTCs displayed? — P0738:00, P0746:00, P0751:00, P0752:00, P0756:00, P0757:00, P0761:00, P0762:00, P0766:00, P0767:00, P0771:00, P0772:00, P079A:00, P0842:00, P0843:00, P0847:00, P0848:00, P0872:00, P0873:00, P0877:00, P0878:00, P1784:00	Yes	Go to the applicable DTC inspection. (See 05-02A-11 ON-BOARD DIAGNOSTIC SYSTEM DTC TABLE [FW6A-EL, FW6AX-EL].)
		No	Go to the next step.
2	**INSPECT ATF LEVEL** • Inspect the ATF level. (See 05-17A-11 AUTOMATIC TRANSAXLE FLUID (ATF) INSPECTION [FW6A-EL, FW6AX-EL].) • Is there any malfunction?	Yes	Adjust the ATF level to the specification, then go to the next step. (See 05-17A-12 AUTOMATIC TRANSAXLE FLUID (ATF) REPLACEMENT [FW6A-EL, FW6AX-EL].)
		No	Go to the next step.

ON-BOARD DIAGNOSTIC [FW6A-EL, FW6AX-EL]

STEP	INSPECTION		ACTION
3	**PERFORM ON-BOARD DIAGNOSTIC TEST TO SPECIFY MALFUNCTIONING PART** **Note** • If only DTCs in which the malfunctioning part is not confirmed are displayed as in the following DTCs, all of the diagnosis may not have been completed. In such cases, the malfunction cause can be determined by performing the on-board diagnostic test. • Perform the on-board diagnostic test. (See 05-02A-9 ON-BOARD DIAGNOSTIC TEST MODE [FW6A-EL, FW6AX-EL].) • Are any DTCs present?	Yes	Go to the applicable DTC inspection. (See 05-02A-11 ON-BOARD DIAGNOSTIC SYSTEM DTC TABLE [FW6A-EL, FW6AX-EL].)
		No	ATF amount in Step 2 is correct: • Replace the automatic transaxle. (See 05-17A-28 AUTOMATIC TRANSAXLE REMOVAL/INSTALLATION [FW6A-EL].) (See 05-17A-43 AUTOMATIC TRANSAXLE REMOVAL/INSTALLATION [FW6AX-EL].) ATF amount adjusted in Step 2: • Drive the vehicle to check it, and if there is no problem then the DTC troubleshooting is complete.

DTC P0731:00 [FW6A-EL, FW6AX-EL]

id050227817800

DTC P0731:00	**1GR incorrect ratio**
DETECTION CONDITION	• In D position, 1GR, the following phenomenon occurs: — Speed ratio is **0.75 to 1.2** for **2,000 ms** while vehicle is stopped in D position. — Engine speed and turbine/input shaft speed deviates by **600 rpm** for **230 to 1,980 ms** (varies with ATF temperature and ECT) during shift-up. — Engine speed and turbine/input shaft speed deviates by **300 rpm** for **1,500 to 3,900 ms** (varies with ATF temperature) while driving without shifting. **Diagnostic support note** • The check engine light does not illuminate. • The automatic transaxle warning light does not illuminate. • PENDING CODE is available. • FREEZE FRAME DATA is not available. • The DTC is stored in the TCM memory.
FAIL-SAFE FUNCTION	• Inhibits malfunctioning gear. • Limits engine torque. • Inhibits learning control. • Inhibits manual mode. • Inhibits neutral idle control. • Inhibits i-stop control. • Inhibits AAS.
POSSIBLE CAUSE	• ATF is less than specified value • Clutch burnt • Shift solenoid malfunction • ATF leakage from clutch circuit • Control valve body malfunction
SYSTEM WIRING DIAGRAM	—

Diagnostic procedure

STEP	INSPECTION		ACTION
1	**VERIFY THE DTC OUTPUT STATUS** • Are any the following DTCs displayed? — P0738:00, P0746:00, P0751:00, P0752:00, P0756:00, P0757:00, P0761:00, P0762:00, P0766:00, P0767:00, P0771:00, P0772:00, P079A:00, P0842:00, P0843:00, P0847:00, P0848:00, P0872:00, P0873:00, P0877:00, P0878:00, P1784:00	Yes	Go to the applicable DTC inspection. (See 05-02A-11 ON-BOARD DIAGNOSTIC SYSTEM DTC TABLE [FW6A-EL, FW6AX-EL].)
		No	Go to the next step.
2	**INSPECT ATF LEVEL** • Inspect the ATF level. (See 05-17A-11 AUTOMATIC TRANSAXLE FLUID (ATF) INSPECTION [FW6A-EL, FW6AX-EL].) • Is there any malfunction?	Yes	Adjust the ATF level to the specification, then go to the next step. (See 05-17A-12 AUTOMATIC TRANSAXLE FLUID (ATF) REPLACEMENT [FW6A-EL, FW6AX-EL].)
		No	Go to the next step.

ON-BOARD DIAGNOSTIC [FW6A-EL, FW6AX-EL]

STEP	INSPECTION		ACTION
3	**PERFORM ON-BOARD DIAGNOSTIC TEST TO SPECIFY MALFUNCTIONING PART** **Note** • If only DTCs in which the malfunctioning part is not confirmed are displayed as in the following DTCs, all of the diagnosis may not have been completed. In such cases, the malfunction cause can be determined by performing the on-board diagnostic test. • Perform the on-board diagnostic test. (See 05-02A-9 ON-BOARD DIAGNOSTIC TEST MODE [FW6A-EL, FW6AX-EL].) • Are any DTCs present?	Yes	Go to the applicable DTC inspection. (See 05-02A-11 ON-BOARD DIAGNOSTIC SYSTEM DTC TABLE [FW6A-EL, FW6AX-EL].)
		No	ATF amount in Step 2 is correct: • Replace the automatic transaxle. (See 05-17A-28 AUTOMATIC TRANSAXLE REMOVAL/INSTALLATION [FW6A-EL].) (See 05-17A-43 AUTOMATIC TRANSAXLE REMOVAL/INSTALLATION [FW6AX-EL].) ATF amount adjusted in Step 2: • Drive the vehicle to check it, and if there is no problem then the DTC troubleshooting is complete.

DTC P0732:00 [FW6A-EL, FW6AX-EL]

id050227817900

DTC P0732:00	2GR incorrect ratio
DETECTION CONDITION	• In D position, 2GR, the following phenomenon occurs: — Engine speed and turbine/input shaft speed deviates by **600 rpm** for **230 to 1,980 ms** (varies with ATF temperature and ECT) during shift-up. — Engine speed and turbine/input shaft speed deviates by **300 rpm** for **1,500 to 3,900 ms** (varies with ATF temperature) while driving without shifting. **Diagnostic support note** • The check engine light does not illuminate. • The automatic transaxle warning light does not illuminate. • PENDING CODE is available. • FREEZE FRAME DATA is not available. • The DTC is stored in the TCM memory.
FAIL-SAFE FUNCTION	• Inhibits malfunctioning gear. • Limits engine torque. • Inhibits learning control. • Inhibits manual mode. • Inhibits neutral idle control. • Inhibits i-stop control. • Inhibits AAS.
POSSIBLE CAUSE	• ATF is less than specified value • Clutch burnt • Shift solenoid malfunction • ATF leakage from clutch circuit • Control valve body malfunction
SYSTEM WIRING DIAGRAM	—

Diagnostic procedure

STEP	INSPECTION		ACTION
1	**VERIFY THE DTC OUTPUT STATUS** • Are any the following DTCs displayed? — P0738:00, P0746:00, P0751:00, P0752:00, P0756:00, P0757:00, P0761:00, P0762:00, P0766:00, P0767:00, P0771:00, P0772:00, P079A:00, P0842:00, P0843:00, P0847:00, P0848:00, P0872:00, P0873:00, P0877:00, P0878:00, P1784:00	Yes	Go to the applicable DTC inspection. (See 05-02A-11 ON-BOARD DIAGNOSTIC SYSTEM DTC TABLE [FW6A-EL, FW6AX-EL].)
		No	Go to the next step.
2	**INSPECT ATF LEVEL** • Inspect the ATF level. (See 05-17A-11 AUTOMATIC TRANSAXLE FLUID (ATF) INSPECTION [FW6A-EL, FW6AX-EL].) • Is there any malfunction?	Yes	Adjust the ATF level to the specification, then go to the next step. (See 05-17A-12 AUTOMATIC TRANSAXLE FLUID (ATF) REPLACEMENT [FW6A-EL, FW6AX-EL].)
		No	Go to the next step.

ON-BOARD DIAGNOSTIC [FW6A-EL, FW6AX-EL]

STEP	INSPECTION		ACTION
3	**PERFORM ON-BOARD DIAGNOSTIC TEST TO SPECIFY MALFUNCTIONING PART** **Note** • If only DTCs in which the malfunctioning part is not confirmed are displayed as in the following DTCs, all of the diagnosis may not have been completed. In such cases, the malfunction cause can be determined by performing the on-board diagnostic test. • Perform the on-board diagnostic test. (See 05-02A-9 ON-BOARD DIAGNOSTIC TEST MODE [FW6A-EL, FW6AX-EL].) • Are any DTCs present?	Yes	Go to the applicable DTC inspection. (See 05-02A-11 ON-BOARD DIAGNOSTIC SYSTEM DTC TABLE [FW6A-EL, FW6AX-EL].)
		No	ATF amount in Step 2 is correct: • Replace the automatic transaxle. (See 05-17A-28 AUTOMATIC TRANSAXLE REMOVAL/INSTALLATION [FW6A-EL].) (See 05-17A-43 AUTOMATIC TRANSAXLE REMOVAL/INSTALLATION [FW6AX-EL].) ATF amount adjusted in Step 2: • Drive the vehicle to check it, and if there is no problem then the DTC troubleshooting is complete.

DTC P0733:00 [FW6A-EL, FW6AX-EL]

id050227818000

DTC P0733:00	3GR incorrect ratio
DETECTION CONDITION	• In D position, 3GR, the following phenomenon occurs: — Engine speed and turbine/input shaft speed deviates by **600 rpm** for **230 to 1,980 ms** (varies with ATF temperature and ECT) during shift-up. — Engine speed and turbine/input shaft speed deviates by **300 rpm** for **1,500 to 3,900 ms** (varies with ATF temperature) while driving without shifting. **Diagnostic support note** • The check engine light does not illuminate. • The automatic transaxle warning light does not illuminate. • PENDING CODE is available. • FREEZE FRAME DATA is not available. • The DTC is stored in the TCM memory.
FAIL-SAFE FUNCTION	• Inhibits malfunctioning gear. • Limits engine torque. • Inhibits learning control. • Inhibits manual mode. • Inhibits neutral idle control. • Inhibits i-stop control. • Inhibits AAS.
POSSIBLE CAUSE	• ATF is less than specified value • Clutch burnt • Shift solenoid malfunction • ATF leakage from clutch circuit • Control valve body malfunction
SYSTEM WIRING DIAGRAM	—

Diagnostic procedure

STEP	INSPECTION		ACTION
1	**VERIFY THE DTC OUTPUT STATUS** • Are any the following DTCs displayed? — P0738:00, P0746:00, P0751:00, P0752:00, P0756:00, P0757:00, P0761:00, P0762:00, P0766:00, P0767:00, P0771:00, P0772:00, P079A:00, P0842:00, P0843:00, P0847:00, P0848:00, P0872:00, P0873:00, P0877:00, P0878:00, P1784:00	Yes	Go to the applicable DTC inspection. (See 05-02A-11 ON-BOARD DIAGNOSTIC SYSTEM DTC TABLE [FW6A-EL, FW6AX-EL].)
		No	Go to the next step.
2	**INSPECT ATF LEVEL** • Inspect the ATF level. (See 05-17A-11 AUTOMATIC TRANSAXLE FLUID (ATF) INSPECTION [FW6A-EL, FW6AX-EL].) • Is there any malfunction?	Yes	Adjust the ATF level to the specification, then go to the next step. (See 05-17A-12 AUTOMATIC TRANSAXLE FLUID (ATF) REPLACEMENT [FW6A-EL, FW6AX-EL].)
		No	Go to the next step.

ON-BOARD DIAGNOSTIC [FW6A-EL, FW6AX-EL]

STEP	INSPECTION		ACTION
3	**PERFORM ON-BOARD DIAGNOSTIC TEST TO SPECIFY MALFUNCTIONING PART** **Note** • If only DTCs in which the malfunctioning part is not confirmed are displayed as in the following DTCs, all of the diagnosis may not have been completed. In such cases, the malfunction cause can be determined by performing the on-board diagnostic test. • Perform the on-board diagnostic test. (See 05-02A-9 ON-BOARD DIAGNOSTIC TEST MODE [FW6A-EL, FW6AX-EL].) • Are any DTCs present?	Yes	Go to the applicable DTC inspection. (See 05-02A-11 ON-BOARD DIAGNOSTIC SYSTEM DTC TABLE [FW6A-EL, FW6AX-EL].)
		No	ATF amount in Step 2 is correct: • Replace the automatic transaxle. (See 05-17A-28 AUTOMATIC TRANSAXLE REMOVAL/INSTALLATION [FW6A-EL].) (See 05-17A-43 AUTOMATIC TRANSAXLE REMOVAL/INSTALLATION [FW6AX-EL].) ATF amount adjusted in Step 2: • Drive the vehicle to check it, and if there is no problem then the DTC troubleshooting is complete.

DTC P0734:00 [FW6A-EL, FW6AX-EL]

id050227818100

DTC P0734:00	4GR incorrect ratio
DETECTION CONDITION	• In D position, 4GR, the following phenomenon occurs: — Engine speed and turbine/input shaft speed deviates by **600 rpm** for **230 to 1,980 ms** (varies with ATF temperature and ECT) during shift-up. — Engine speed and turbine/input shaft speed deviates by **300 rpm** for **1,500 to 3,900 ms** (varies with ATF temperature) while driving without shifting. **Diagnostic support note** • The check engine light does not illuminate. • The automatic transaxle warning light does not illuminate. • PENDING CODE is available. • FREEZE FRAME DATA is not available. • The DTC is stored in the TCM memory.
FAIL-SAFE FUNCTION	• Inhibits malfunctioning gear. • Limits engine torque. • Inhibits learning control. • Inhibits manual mode. • Inhibits neutral idle control. • Inhibits i-stop control. • Inhibits AAS.
POSSIBLE CAUSE	• ATF is less than specified value • Clutch burnt • Shift solenoid malfunction • ATF leakage from clutch circuit • Control valve body malfunction
SYSTEM WIRING DIAGRAM	—

Diagnostic procedure

STEP	INSPECTION		ACTION
1	**VERIFY THE DTC OUTPUT STATUS** • Are any the following DTCs displayed? — P0738:00, P0746:00, P0751:00, P0752:00, P0756:00, P0757:00, P0761:00, P0762:00, P0766:00, P0767:00, P0771:00, P0772:00, P079A:00, P0842:00, P0843:00, P0847:00, P0848:00, P0872:00, P0873:00, P0877:00, P0878:00, P1784:00	Yes	Go to the applicable DTC inspection. (See 05-02A-11 ON-BOARD DIAGNOSTIC SYSTEM DTC TABLE [FW6A-EL, FW6AX-EL].)
		No	Go to the next step.
2	**INSPECT ATF LEVEL** • Inspect the ATF level. (See 05-17A-11 AUTOMATIC TRANSAXLE FLUID (ATF) INSPECTION [FW6A-EL, FW6AX-EL].) • Is there any malfunction?	Yes	Adjust the ATF level to the specification, then go to the next step. (See 05-17A-12 AUTOMATIC TRANSAXLE FLUID (ATF) REPLACEMENT [FW6A-EL, FW6AX-EL].)
		No	Go to the next step.

ON-BOARD DIAGNOSTIC [FW6A-EL, FW6AX-EL]

STEP	INSPECTION		ACTION
3	**PERFORM ON-BOARD DIAGNOSTIC TEST TO SPECIFY MALFUNCTIONING PART** **Note** • If only DTCs in which the malfunctioning part is not confirmed are displayed as in the following DTCs, all of the diagnosis may not have been completed. In such cases, the malfunction cause can be determined by performing the on-board diagnostic test. • Perform the on-board diagnostic test. (See 05-02A-9 ON-BOARD DIAGNOSTIC TEST MODE [FW6A-EL, FW6AX-EL].) • Are any DTCs present?	Yes	Go to the applicable DTC inspection. (See 05-02A-11 ON-BOARD DIAGNOSTIC SYSTEM DTC TABLE [FW6A-EL, FW6AX-EL].)
		No	ATF amount in Step 2 is correct: • Replace the automatic transaxle. (See 05-17A-28 AUTOMATIC TRANSAXLE REMOVAL/INSTALLATION [FW6A-EL].) (See 05-17A-43 AUTOMATIC TRANSAXLE REMOVAL/INSTALLATION [FW6AX-EL].) ATF amount adjusted in Step 2: • Drive the vehicle to check it, and if there is no problem then the DTC troubleshooting is complete.

DTC P0735:00 [FW6A-EL, FW6AX-EL]

id050227825100

DTC P0735:00	5GR incorrect ratio
DETECTION CONDITION	• In D position, 5GR, the following phenomenon occurs: — Engine speed and turbine/input shaft speed deviates by **600 rpm** for **230 to 1,980 ms** (varies with ATF temperature and ECT) during shift-up. — Engine speed and turbine/input shaft speed deviates by **300 rpm** for **1,500 to 3,900 ms** (varies with ATF temperature) while driving without shifting. **Diagnostic support note** • The check engine light does not illuminate. • The automatic transaxle warning light does not illuminate. • PENDING CODE is available. • FREEZE FRAME DATA is not available. • The DTC is stored in the TCM memory.
FAIL-SAFE FUNCTION	• Inhibits malfunctioning gear. • Limits engine torque. • Inhibits learning control. • Inhibits manual mode. • Inhibits neutral idle control. • Inhibits i-stop control. • Inhibits AAS.
POSSIBLE CAUSE	• ATF is less than specified value • Clutch burnt • Shift solenoid malfunction • ATF leakage from clutch circuit • Control valve body malfunction
SYSTEM WIRING DIAGRAM	—

Diagnostic procedure

STEP	INSPECTION		ACTION
1	**VERIFY THE DTC OUTPUT STATUS** • Are any the following DTCs displayed? — P0738:00, P0746:00, P0751:00, P0752:00, P0756:00, P0757:00, P0761:00, P0762:00, P0766:00, P0767:00, P0771:00, P0772:00, P079A:00, P0842:00, P0843:00, P0847:00, P0848:00, P0872:00, P0873:00, P0877:00, P0878:00, P1784:00	Yes	Go to the applicable DTC inspection. (See 05-02A-11 ON-BOARD DIAGNOSTIC SYSTEM DTC TABLE [FW6A-EL, FW6AX-EL].)
		No	Go to the next step.
2	**INSPECT ATF LEVEL** • Inspect the ATF level. (See 05-17A-11 AUTOMATIC TRANSAXLE FLUID (ATF) INSPECTION [FW6A-EL, FW6AX-EL].) • Is there any malfunction?	Yes	Adjust the ATF level to the specification, then go to the next step. (See 05-17A-12 AUTOMATIC TRANSAXLE FLUID (ATF) REPLACEMENT [FW6A-EL, FW6AX-EL].)
		No	Go to the next step.

ON-BOARD DIAGNOSTIC [FW6A-EL, FW6AX-EL]

STEP	INSPECTION		ACTION
3	**PERFORM ON-BOARD DIAGNOSTIC TEST TO SPECIFY MALFUNCTIONING PART** **Note** • If only DTCs in which the malfunctioning part is not confirmed are displayed as in the following DTCs, all of the diagnosis may not have been completed. In such cases, the malfunction cause can be determined by performing the on-board diagnostic test. • Perform the on-board diagnostic test. (See 05-02A-9 ON-BOARD DIAGNOSTIC TEST MODE [FW6A-EL, FW6AX-EL].) • Are any DTCs present?	Yes	Go to the applicable DTC inspection. (See 05-02A-11 ON-BOARD DIAGNOSTIC SYSTEM DTC TABLE [FW6A-EL, FW6AX-EL].)
		No	ATF amount in Step 2 is correct: • Replace the automatic transaxle. (See 05-17A-28 AUTOMATIC TRANSAXLE REMOVAL/INSTALLATION [FW6A-EL].) (See 05-17A-43 AUTOMATIC TRANSAXLE REMOVAL/INSTALLATION [FW6AX-EL].) ATF amount adjusted in Step 2: • Drive the vehicle to check it, and if there is no problem then the DTC troubleshooting is complete.

DTC P0736:00 [FW6A-EL, FW6AX-EL]

id050227823200

DTC P0736:00	Gear reverse incorrect ratio
DETECTION CONDITION	• Speed ratio is **0.75 to 1.2** for **2,000 ms** while vehicle is stopped in R position. **Diagnostic support note** • The check engine light does not illuminate. • The automatic transaxle warning light illuminates if the TCM detects the above malfunction condition in two consecutive drive cycles or in one drive cycle while the DTC for the same malfunction has been stored in the TCM. • PENDING CODE is available. • FREEZE FRAME DATA is not available. • The DTC is stored in the TCM memory.
FAIL-SAFE FUNCTION	• Inhibits learning control. • Inhibits neutral idle control. • Inhibits i-stop control.
POSSIBLE CAUSE	• ATF is less than specified value • Clutch burnt • Shift solenoid malfunction • ATF leakage from clutch circuit • Control valve body malfunction
SYSTEM WIRING DIAGRAM	—

Diagnostic procedure

STEP	INSPECTION		ACTION
1	**VERIFY THE DTC OUTPUT STATUS** • Are any the following DTCs displayed? — P0738:00, P0746:00, P0751:00, P0752:00, P0756:00, P0757:00, P0761:00, P0762:00, P0766:00, P0767:00, P0771:00, P0772:00, P079A:00, P0842:00, P0843:00, P0847:00, P0848:00, P0872:00, P0873:00, P0877:00, P0878:00, P1784:00	Yes	Go to the applicable DTC inspection. (See 05-02A-11 ON-BOARD DIAGNOSTIC SYSTEM DTC TABLE [FW6A-EL, FW6AX-EL].)
		No	Go to the next step.
2	**INSPECT ATF LEVEL** • Inspect the ATF level. (See 05-17A-11 AUTOMATIC TRANSAXLE FLUID (ATF) INSPECTION [FW6A-EL, FW6AX-EL].) • Is there any malfunction?	Yes	Adjust the ATF level to the specification, then go to the next step. (See 05-17A-12 AUTOMATIC TRANSAXLE FLUID (ATF) REPLACEMENT [FW6A-EL, FW6AX-EL].)
		No	Go to the next step.

ON-BOARD DIAGNOSTIC [FW6A-EL, FW6AX-EL]

STEP	INSPECTION		ACTION
3	**PERFORM ON-BOARD DIAGNOSTIC TEST TO SPECIFY MALFUNCTIONING PART** **Note** • If only DTCs in which the malfunctioning part is not confirmed are displayed as in the following DTCs, all of the diagnosis may not have been completed. In such cases, the malfunction cause can be determined by performing the on-board diagnostic test. • Perform the on-board diagnostic test. (See 05-02A-9 ON-BOARD DIAGNOSTIC TEST MODE [FW6A-EL, FW6AX-EL].) • Are any DTCs present?	Yes	Go to the applicable DTC inspection. (See 05-02A-11 ON-BOARD DIAGNOSTIC SYSTEM DTC TABLE [FW6A-EL, FW6AX-EL].)
		No	ATF amount in Step 2 is correct: • Replace the automatic transaxle. (See 05-17A-28 AUTOMATIC TRANSAXLE REMOVAL/INSTALLATION [FW6A-EL].) (See 05-17A-43 AUTOMATIC TRANSAXLE REMOVAL/INSTALLATION [FW6AX-EL].) ATF amount adjusted in Step 2: • Drive the vehicle to check it, and if there is no problem then the DTC troubleshooting is complete.

DTC P0741:00 [FW6A-EL, FW6AX-EL]

id050227818200

DTC P0741:00	**TCC control solenoid stuck off**
DETECTION CONDITION	• Under the following conditions, difference in slip amount **over 5 s** compared to target slip amount is **200 rpm or more**, and TCC feedback hydraulic pressure is **200 kPa {2.04 kgf/cm^2, 29.0 psi} or more** occurs: — Battery voltage is **8 V or more**. — Selector lever position is D position. — No electrical malfunction in TCC control solenoid — During TCC or TCC feedback — DTC P0716:00 and P0717:00 are not recorded. **Diagnostic support note** • The check engine light illuminates if the TCM detects the above malfunction condition in two consecutive drive cycles or in one drive cycle while the DTC for the same malfunction has been stored in the TCM. • The automatic transaxle warning light illuminates if the TCM detects the above malfunction condition in two consecutive drive cycles or in one drive cycle while the DTC for the same malfunction has been stored in the TCM. • PENDING CODE is available. • FREEZE FRAME DATA is available. • The DTC is stored in the TCM memory.
FAIL-SAFE FUNCTION	• Inhibits TCC control. • Inhibits learning control. • Inhibits manual mode. • Inhibits neutral idle control. • Inhibits i-stop control. • Inhibits AAS.
POSSIBLE CAUSE	• TCC control solenoid malfunction • ATF leakage from clutch circuit • TCC clutch burnt • Control valve body malfunction
SYSTEM WIRING DIAGRAM	—

ON-BOARD DIAGNOSTIC [FW6A-EL, FW6AX-EL]

Diagnostic procedure

STEP	INSPECTION		ACTION
1	**VERIFY FREEZE FRAME DATA/SNAPSHOT DATA HAS BEEN RECORDED** • Has the freeze frame data/snapshot data been recorded on the repair order?	Yes	Go to the next step.
		No	Record the freeze frame data/snapshot data on the repair order, then go to the next step.
2	**VERIFY RELATED SERVICE INFORMATION AVAILABILITY** • Verify related Service Information availability. • Is any related Service Information available?	Yes	Perform repair or diagnosis according to the available Service Information. • If the vehicle is not repaired, replace the automatic transaxle. (See 05-17A-28 AUTOMATIC TRANSAXLE REMOVAL/INSTALLATION [FW6A-EL].) (See 05-17A-43 AUTOMATIC TRANSAXLE REMOVAL/INSTALLATION [FW6AX-EL].) Go to the next step.
		No	Replace the automatic transaxle, then go to the next step. (See 05-17A-28 AUTOMATIC TRANSAXLE REMOVAL/INSTALLATION [FW6A-EL].) (See 05-17A-43 AUTOMATIC TRANSAXLE REMOVAL/INSTALLATION [FW6AX-EL].)
3	**VERIFY DTC TROUBLESHOOTING COMPLETED** • Clear the DTC using the M-MDS. (See 05-02A-7 ON-BOARD DIAGNOSTIC SYSTEM DTC INSPECTION [FW6A-EL, FW6AX-EL].) • Perform the following procedure to ensure that the DTC has been resolved: 1. Drive the vehicle for **5 s or more** under the following conditions: • Selector lever position: D position • During TCC or TCC feedback • Perform the DTC inspection using the M-MDS. (See 05-02A-7 ON-BOARD DIAGNOSTIC SYSTEM DTC INSPECTION [FW6A-EL, FW6AX-EL].) • Are any DTCs present?	Yes	Go to the applicable DTC inspection. (See 05-02A-11 ON-BOARD DIAGNOSTIC SYSTEM DTC TABLE [FW6A-EL, FW6AX-EL].)
		No	DTC troubleshooting completed.

DTC P0743:00 [FW6A-EL, FW6AX-EL]

id050227822200

DTC P0743:00	TCC control solenoid circuit malfunction
DETECTION CONDITION	• Under the following condition, the TCM detects the TCC control solenoid circuit malfunction: — Battery voltage is **8 V or more**. **Diagnostic support note** • The check engine light illuminates if the TCM detects the above malfunction condition during the first drive cycle. • The automatic transaxle warning light illuminates if the TCM detects the above malfunction condition during the first drive cycle. • PENDING CODE is available. • FREEZE FRAME DATA is available. • The DTC is stored in the TCM memory.
FAIL-SAFE FUNCTION	• Set to emergency mode. • Inhibits learning control. • Inhibits manual mode. • Inhibits neutral idle control. • Inhibits i-stop control. • Inhibits AAS.
POSSIBLE CAUSE	• Short or open circuit in TCC control solenoid circuit • TCC control solenoid malfunction
SYSTEM WIRING DIAGRAM	—

ON-BOARD DIAGNOSTIC [FW6A-EL, FW6AX-EL]

Diagnostic procedure

STEP	INSPECTION		ACTION
1	**VERIFY FREEZE FRAME DATA/SNAPSHOT DATA HAS BEEN RECORDED** • Has the freeze frame data/snapshot data been recorded on the repair order?	Yes	Go to the next step.
		No	Record the freeze frame data/snapshot data on the repair order, then go to the next step.
2	**VERIFY RELATED SERVICE INFORMATION AVAILABILITY** • Verify related Service Information availability. • Is any related Service Information available?	Yes	Perform repair or diagnosis according to the available Service Information. • If the vehicle is not repaired, replace the control valve body. (See 05-17A-67 CONTROL VALVE BODY REMOVAL/ INSTALLATION [FW6A-EL, FW6AX-EL].) Go to the next step.
		No	Replace the control valve body, then go to the next step. (See 05-17A-67 CONTROL VALVE BODY REMOVAL/ INSTALLATION [FW6A-EL, FW6AX-EL].)
3	**VERIFY DTC TROUBLESHOOTING COMPLETED** • Clear the DTC using the M-MDS. (See 05-02A-7 ON-BOARD DIAGNOSTIC SYSTEM DTC INSPECTION [FW6A-EL, FW6AX-EL].) • Perform the following procedure to ensure that the DTC has been resolved: 1. Switch the ignition ON (engine off or on). • Perform the DTC inspection using the M-MDS. (See 05-02A-7 ON-BOARD DIAGNOSTIC SYSTEM DTC INSPECTION [FW6A-EL, FW6AX-EL].) • Are any DTCs present?	Yes	Go to the applicable DTC inspection. (See 05-02A-11 ON-BOARD DIAGNOSTIC SYSTEM DTC TABLE [FW6A-EL, FW6AX-EL].)
		No	DTC troubleshooting completed.

DTC P0746:00 [FW6A-EL, FW6AX-EL]

id050227904200

DTC P0746:00	**Pressure control solenoid stuck off**
DETECTION CONDITION	• Under the following conditions, pressure control solenoid stuck-off detected by combination of gear ratio malfunction and oil pressure switch pattern malfunction: — Engine is running. — Battery voltage is **8 V or more**. — ATF temperature is **20 °C {68 °F} or more**. **Diagnostic support note** • The check engine light illuminates if the TCM detects the above malfunction condition in two consecutive drive cycles or in one drive cycle while the DTC for the same malfunction has been stored in the TCM. • The automatic transaxle warning light illuminates if the TCM detects the above malfunction condition in two consecutive drive cycles or in one drive cycle while the DTC for the same malfunction has been stored in the TCM. • PENDING CODE is available. • FREEZE FRAME DATA is available. • The DTC is stored in the TCM memory.
FAIL-SAFE FUNCTION	• Inhibits malfunctioning gear. • Limits engine torque. • Inhibits learning control. • Inhibits manual mode. • Inhibits neutral idle control. • Inhibits i-stop control. • Inhibits AAS.
POSSIBLE CAUSE	• ATF is less than specified value • Pressure control solenoid malfunction
SYSTEM WIRING DIAGRAM	—

ON-BOARD DIAGNOSTIC [FW6A-EL, FW6AX-EL]

Diagnostic procedure

STEP	INSPECTION		ACTION
1	**VERIFY THE DTC OUTPUT STATUS** • Is the DTC P1738:00 also present?	Yes	Go to the applicable DTC inspection. (See 05-02A-81 DTC P1738:00 [FW6A-EL, FW6AX-EL].)
		No	Go to the next step.
2	**VERIFY FREEZE FRAME DATA/SNAPSHOT DATA HAS BEEN RECORDED** • Has the freeze frame data/snapshot data been recorded on the repair order?	Yes	Go to the next step.
		No	Record the freeze frame data/snapshot data on the repair order, then go to the next step.
3	**VERIFY RELATED SERVICE INFORMATION AVAILABILITY** • Verify related Service Information availability. • Is any related Service Information available?	Yes	Perform repair or diagnosis according to the available Service Information. • If the vehicle is not repaired, go to the next step.
		No	Go to the next step.
4	**INSPECT ATF LEVEL** • Inspect the ATF level. (See 05-17A-11 AUTOMATIC TRANSAXLE FLUID (ATF) INSPECTION [FW6A-EL, FW6AX-EL].) • Is there any malfunction?	Yes	Adjust the ATF level to the specification, then go to the next step. (See 05-17A-12 AUTOMATIC TRANSAXLE FLUID (ATF) REPLACEMENT [FW6A-EL, FW6AX-EL].)
		No	Replace the control valve body, then go to the next step. (See 05-17A-67 CONTROL VALVE BODY REMOVAL/INSTALLATION [FW6A-EL, FW6AX-EL].)
5	**PERFORM ON-BOARD DIAGNOSTIC TEST** • Perform the following procedure to ensure that the DTC has been resolved: 1. Start the engine. 2. Verify that the ATF temperature is **55 °C {131 °F} or more**. • Perform the on-board diagnostic test. (See 05-02A-9 ON-BOARD DIAGNOSTIC TEST MODE [FW6A-EL, FW6AX-EL].) • Are any DTCs present?	Yes	Go to the applicable DTC inspection. (See 05-02A-11 ON-BOARD DIAGNOSTIC SYSTEM DTC TABLE [FW6A-EL, FW6AX-EL].)
		No	Drive the vehicle to check it, and if there is no problem then the DTC troubleshooting is complete.

DTC P0748:00 [FW6A-EL, FW6AX-EL]

id050227904300

DTC P0748:00	**Pressure control solenoid circuit malfunction**
DETECTION CONDITION	• Under the following condition, the TCM detects the pressure control solenoid circuit malfunction: — Battery voltage is **8 V or more**. **Diagnostic support note** • The check engine light illuminates if the TCM detects the above malfunction condition during the first drive cycle. • The automatic transaxle warning light illuminates if the TCM detects the above malfunction condition during the first drive cycle. • PENDING CODE is available. • FREEZE FRAME DATA is available. • The DTC is stored in the TCM memory.
FAIL-SAFE FUNCTION	• Set to emergency mode. • Inhibits learning control. • Inhibits manual mode. • Inhibits neutral idle control. • Inhibits i-stop control. • Inhibits AAS.
POSSIBLE CAUSE	• Short or open circuit in pressure control solenoid circuit • Pressure control solenoid malfunction
SYSTEM WIRING DIAGRAM	—

ON-BOARD DIAGNOSTIC [FW6A-EL, FW6AX-EL]

Diagnostic procedure

STEP	INSPECTION		ACTION
1	**VERIFY FREEZE FRAME DATA/SNAPSHOT DATA HAS BEEN RECORDED** • Has the freeze frame data/snapshot data been recorded on the repair order?	Yes	Go to the next step.
		No	Record the freeze frame data/snapshot data on the repair order, then go to the next step.
2	**VERIFY RELATED SERVICE INFORMATION AVAILABILITY** • Verify related Service Information availability. • Is any related Service Information available?	Yes	Perform repair or diagnosis according to the available Service Information. • If the vehicle is not repaired, replace the control valve body. (See 05-17A-67 CONTROL VALVE BODY REMOVAL/ INSTALLATION [FW6A-EL, FW6AX-EL].) Go to the next step.
		No	Replace the control valve body, then go to the next step. (See 05-17A-67 CONTROL VALVE BODY REMOVAL/ INSTALLATION [FW6A-EL, FW6AX-EL].)
3	**VERIFY DTC TROUBLESHOOTING COMPLETED** • Clear the DTC using the M-MDS. (See 05-02A-7 ON-BOARD DIAGNOSTIC SYSTEM DTC INSPECTION [FW6A-EL, FW6AX-EL].) • Perform the following procedure to ensure that the DTC has been resolved: 1. Switch the ignition ON (engine off or on). • Perform the DTC inspection using the M-MDS. (See 05-02A-7 ON-BOARD DIAGNOSTIC SYSTEM DTC INSPECTION [FW6A-EL, FW6AX-EL].) • Are any DTCs present?	Yes	Go to the applicable DTC inspection. (See 05-02A-11 ON-BOARD DIAGNOSTIC SYSTEM DTC TABLE [FW6A-EL, FW6AX-EL].)
		No	DTC troubleshooting completed.

DTC P0751:00 [FW6A-EL, FW6AX-EL]

id050227818600

DTC P0751:00	**Shift solenoid No.1 stuck off**
DETECTION CONDITION	• Under the following conditions, shift solenoid No.1 stuck-off detected by combination of gear ratio malfunction and oil pressure switch pattern malfunction: — Engine is running. — Battery voltage is **8 V or more**. — ATF temperature is **20 °C {68 °F} or more**. **Diagnostic support note** • The check engine light illuminates if the TCM detects the above malfunction condition in two consecutive drive cycles or in one drive cycle while the DTC for the same malfunction has been stored in the TCM. • The automatic transaxle warning light illuminates if the TCM detects the above malfunction condition in two consecutive drive cycles or in one drive cycle while the DTC for the same malfunction has been stored in the TCM. • PENDING CODE is available. • FREEZE FRAME DATA is available. • The DTC is stored in the TCM memory.
FAIL-SAFE FUNCTION	• Inhibits malfunctioning gear. • Limits engine torque. • Inhibits learning control. • Inhibits manual mode. • Inhibits neutral idle control. • Inhibits i-stop control. • Inhibits AAS.
POSSIBLE CAUSE	• ATF is less than specified value • Shift solenoid No.1 malfunction • Control valve body malfunction
SYSTEM WIRING DIAGRAM	—

ON-BOARD DIAGNOSTIC [FW6A-EL, FW6AX-EL]

Diagnostic procedure

STEP	INSPECTION		ACTION
1	**VERIFY THE DTC OUTPUT STATUS** • Is the DTC P1738:00 also present?	Yes	Go to the applicable DTC inspection. (See 05-02A-81 DTC P1738:00 [FW6A-EL, FW6AX-EL].)
		No	Go to the next step.
2	**VERIFY FREEZE FRAME DATA/SNAPSHOT DATA HAS BEEN RECORDED** • Has the freeze frame data/snapshot data been recorded on the repair order?	Yes	Go to the next step.
		No	Record the freeze frame data/snapshot data on the repair order, then go to the next step.
3	**VERIFY RELATED SERVICE INFORMATION AVAILABILITY** • Verify related Service Information availability. • Is any related Service Information available?	Yes	Perform repair or diagnosis according to the available Service Information. • If the vehicle is not repaired, go to the next step.
		No	Go to the next step.
4	**INSPECT ATF LEVEL** • Inspect the ATF level. (See 05-17A-11 AUTOMATIC TRANSAXLE FLUID (ATF) INSPECTION [FW6A-EL, FW6AX-EL].) • Is there any malfunction?	Yes	Adjust the ATF level to the specification, then go to the next step. (See 05-17A-12 AUTOMATIC TRANSAXLE FLUID (ATF) REPLACEMENT [FW6A-EL, FW6AX-EL].)
		No	Replace the control valve body, then go to the next step. (See 05-17A-67 CONTROL VALVE BODY REMOVAL/INSTALLATION [FW6A-EL, FW6AX-EL].)
5	**PERFORM ON-BOARD DIAGNOSTIC TEST** • Perform the following procedure to ensure that the DTC has been resolved: 1. Start the engine. 2. Verify that the ATF temperature is **55 °C {131 °F} or more**. • Perform the on-board diagnostic test. (See 05-02A-9 ON-BOARD DIAGNOSTIC TEST MODE [FW6A-EL, FW6AX-EL].) • Are any the following DTCs displayed? — P0751:00, P0843:00	Yes	ATF amount in Step 4 is correct: • Replace the automatic transaxle, then drive the vehicle to check it, and if there is no problem then the DTC troubleshooting is complete. (See 05-17A-28 AUTOMATIC TRANSAXLE REMOVAL/INSTALLATION [FW6A-EL].) (See 05-17A-43 AUTOMATIC TRANSAXLE REMOVAL/INSTALLATION [FW6AX-EL].) ATF amount adjusted in Step 4: • Replace the control valve body, then go to the next step. (See 05-17A-67 CONTROL VALVE BODY REMOVAL/INSTALLATION [FW6A-EL, FW6AX-EL].)
		No	No DTCs are displayed: • Drive the vehicle to check it, and if there is no problem then the DTC troubleshooting is complete. If a DTC other than the one indicated on the left is displayed: • Go to the applicable DTC inspection. (See 05-02A-11 ON-BOARD DIAGNOSTIC SYSTEM DTC TABLE [FW6A-EL, FW6AX-EL])
6	**RE-PERFORM ON-BOARD DIAGNOSTIC TEST** • Perform the following procedure to ensure that the DTC has been resolved: 1. Start the engine. 2. Verify that the ATF temperature is **55 °C {131 °F} or more**. • Perform the on-board diagnostic test. (See 05-02A-9 ON-BOARD DIAGNOSTIC TEST MODE [FW6A-EL, FW6AX-EL].) • Are any DTCs present?	Yes	Go to the applicable DTC inspection. (See 05-02A-11 ON-BOARD DIAGNOSTIC SYSTEM DTC TABLE [FW6A-EL, FW6AX-EL].)
		No	DTC troubleshooting completed.

ON-BOARD DIAGNOSTIC [FW6A-EL, FW6AX-EL]

DTC P0752:00 [FW6A-EL, FW6AX-EL]

id050227818700

DTC P0752:00	**Shift solenoid No.1 stuck on**
DETECTION CONDITION	• Under the following conditions, shift solenoid No.1 stuck-on detected by combination of gear ratio malfunction and oil pressure switch pattern malfunction: — Engine is running. — Battery voltage is **8 V or more**. — ATF temperature is **20 °C {68 °F} or more**. **Diagnostic support note** • The check engine light illuminates if the TCM detects the above malfunction condition in two consecutive drive cycles or in one drive cycle while the DTC for the same malfunction has been stored in the TCM. • The automatic transaxle warning light illuminates if the TCM detects the above malfunction condition in two consecutive drive cycles or in one drive cycle while the DTC for the same malfunction has been stored in the TCM. • PENDING CODE is available. • FREEZE FRAME DATA is available. • The DTC is stored in the TCM memory.
FAIL-SAFE FUNCTION	• Inhibits malfunctioning gear. • Limits engine torque. • Inhibits learning control. • Inhibits manual mode. • Inhibits neutral idle control. • Inhibits i-stop control. • Inhibits AAS.
POSSIBLE CAUSE	• Shift solenoid No.1 malfunction
SYSTEM WIRING DIAGRAM	—

Diagnostic procedure

STEP	INSPECTION		ACTION
1	**VERIFY THE DTC OUTPUT STATUS** • Is the DTC P1738:00 also present?	Yes	Go to the applicable DTC inspection. (See 05-02A-81 DTC P1738:00 [FW6A-EL, FW6AX-EL].)
		No	Go to the next step.
2	**VERIFY FREEZE FRAME DATA/SNAPSHOT DATA HAS BEEN RECORDED** • Has the freeze frame data/snapshot data been recorded on the repair order?	Yes	Go to the next step.
		No	Record the freeze frame data/snapshot data on the repair order, then go to the next step.
3	**VERIFY RELATED SERVICE INFORMATION AVAILABILITY** • Verify related Service Information availability. • Is any related Service Information available?	Yes	Perform repair or diagnosis according to the available Service Information. • If the vehicle is not repaired, go to the next step.
		No	Go to the next step.
4	**PERFORM ON-BOARD DIAGNOSTIC TEST** • Perform the following procedure to ensure that the DTC has been resolved: 1. Start the engine. 2. Verify that the ATF temperature is **55 °C {131 °F} or more**. • Perform the on-board diagnostic test. (See 05-02A-9 ON-BOARD DIAGNOSTIC TEST MODE [FW6A-EL, FW6AX-EL].) • Are P0752:00 present?	Yes	Replace the control valve body, then go to the next step. (See 05-17A-67 CONTROL VALVE BODY REMOVAL/INSTALLATION [FW6A-EL, FW6AX-EL])
		No	No DTCs are displayed: • Drive the vehicle to check it, and if there is no problem then the DTC troubleshooting is complete. If a DTC other than the one indicated on the left is displayed: • Go to the applicable DTC inspection. (See 05-02A-11 ON-BOARD DIAGNOSTIC SYSTEM DTC TABLE [FW6A-EL, FW6AX-EL])
5	**RE-PERFORM ON-BOARD DIAGNOSTIC TEST** • Perform the following procedure to ensure that the DTC has been resolved: 1. Start the engine. 2. Verify that the ATF temperature is **55 °C {131 °F} or more**. • Perform the on-board diagnostic test. (See 05-02A-9 ON-BOARD DIAGNOSTIC TEST MODE [FW6A-EL, FW6AX-EL].) • Are any DTCs present?	Yes	Go to the applicable DTC inspection. (See 05-02A-11 ON-BOARD DIAGNOSTIC SYSTEM DTC TABLE [FW6A-EL, FW6AX-EL].)
		No	DTC troubleshooting completed.

ON-BOARD DIAGNOSTIC [FW6A-EL, FW6AX-EL]

DTC P0753:00 [FW6A-EL, FW6AX-EL]

id050227818800

DTC P0753:00	**Shift solenoid No.1 circuit malfunction**
DETECTION CONDITION	• Under the following condition, the TCM detects the shift solenoid No.1 circuit malfunction: — Battery voltage is **8 V or more**. **Diagnostic support note** • The check engine light illuminates if the TCM detects the above malfunction condition during the first drive cycle. • The automatic transaxle warning light illuminates if the TCM detects the above malfunction condition during the first drive cycle. • PENDING CODE is available. • FREEZE FRAME DATA is available. • The DTC is stored in the TCM memory.
FAIL-SAFE FUNCTION	• Set to emergency mode. • Inhibits learning control. • Inhibits manual mode. • Inhibits neutral idle control. • Inhibits i-stop control. • Inhibits AAS.
POSSIBLE CAUSE	• Short or open circuit in shift solenoid No.1 circuit • Shift solenoid No.1 malfunction
SYSTEM WIRING DIAGRAM	—

Diagnostic procedure

STEP	INSPECTION		ACTION
1	**VERIFY FREEZE FRAME DATA/SNAPSHOT DATA HAS BEEN RECORDED** • Has the freeze frame data/snapshot data been recorded on the repair order?	Yes	Go to the next step.
		No	Record the freeze frame data/snapshot data on the repair order, then go to the next step.
2	**VERIFY RELATED SERVICE INFORMATION AVAILABILITY** • Verify related Service Information availability. • Is any related Service Information available?	Yes	Perform repair or diagnosis according to the available Service Information. • If the vehicle is not repaired, replace the control valve body. (See 05-17A-67 CONTROL VALVE BODY REMOVAL/ INSTALLATION [FW6A-EL, FW6AX-EL].) Go to the next step.
		No	Replace the control valve body, then go to the next step. (See 05-17A-67 CONTROL VALVE BODY REMOVAL/ INSTALLATION [FW6A-EL, FW6AX-EL].)
3	**VERIFY DTC TROUBLESHOOTING COMPLETED** • Clear the DTC using the M-MDS. (See 05-02A-7 ON-BOARD DIAGNOSTIC SYSTEM DTC INSPECTION [FW6A-EL, FW6AX-EL].) • Perform the following procedure to ensure that the DTC has been resolved: 1. Switch the ignition ON (engine off or on). • Perform the DTC inspection using the M-MDS. (See 05-02A-7 ON-BOARD DIAGNOSTIC SYSTEM DTC INSPECTION [FW6A-EL, FW6AX-EL].) • Are any DTCs present?	Yes	Go to the applicable DTC inspection. (See 05-02A-11 ON-BOARD DIAGNOSTIC SYSTEM DTC TABLE [FW6A-EL, FW6AX-EL].)
		No	DTC troubleshooting completed.

ON-BOARD DIAGNOSTIC [FW6A-EL, FW6AX-EL]

DTC P0756:00 [FW6A-EL, FW6AX-EL]

id050227818900

DTC P0756:00	**Shift solenoid No.2 stuck off**
DETECTION CONDITION	• Under the following conditions, shift solenoid No.2 stuck-off detected by combination of gear ratio malfunction and oil pressure switch pattern malfunction: — Engine is running. — Battery voltage is **8 V or more**. — ATF temperature is **20 °C {68 °F} or more**. **Diagnostic support note** • The check engine light illuminates if the TCM detects the above malfunction condition in two consecutive drive cycles or in one drive cycle while the DTC for the same malfunction has been stored in the TCM. • The automatic transaxle warning light illuminates if the TCM detects the above malfunction condition in two consecutive drive cycles or in one drive cycle while the DTC for the same malfunction has been stored in the TCM. • PENDING CODE is available. • FREEZE FRAME DATA is available. • The DTC is stored in the TCM memory.
FAIL-SAFE FUNCTION	• Inhibits malfunctioning gear. • Limits engine torque. • Inhibits learning control. • Inhibits manual mode. • Inhibits neutral idle control. • Inhibits i-stop control. • Inhibits AAS.
POSSIBLE CAUSE	• ATF is less than specified value • Shift solenoid No.2 malfunction
SYSTEM WIRING DIAGRAM	—

Diagnostic procedure

STEP	INSPECTION		ACTION
1	**VERIFY THE DTC OUTPUT STATUS** • Is the DTC P1738:00 also present?	Yes	Go to the applicable DTC inspection. (See 05-02A-81 DTC P1738:00 [FW6A-EL, FW6AX-EL].)
		No	Go to the next step.
2	**VERIFY FREEZE FRAME DATA/SNAPSHOT DATA HAS BEEN RECORDED** • Has the freeze frame data/snapshot data been recorded on the repair order?	Yes	Go to the next step.
		No	Record the freeze frame data/snapshot data on the repair order, then go to the next step.
3	**VERIFY RELATED SERVICE INFORMATION AVAILABILITY** • Verify related Service Information availability. • Is any related Service Information available?	Yes	Perform repair or diagnosis according to the available Service Information. • If the vehicle is not repaired, go to the next step.
		No	Go to the next step.
4	**INSPECT ATF LEVEL** • Inspect the ATF level. (See 05-17A-11 AUTOMATIC TRANSAXLE FLUID (ATF) INSPECTION [FW6A-EL, FW6AX-EL].) • Is there any malfunction?	Yes	Adjust the ATF level to the specification, then go to the next step. (See 05-17A-12 AUTOMATIC TRANSAXLE FLUID (ATF) REPLACEMENT [FW6A-EL, FW6AX-EL].)
		No	Replace the control valve body, then go to the next step. (See 05-17A-67 CONTROL VALVE BODY REMOVAL/INSTALLATION [FW6A-EL, FW6AX-EL].)

ON-BOARD DIAGNOSTIC [FW6A-EL, FW6AX-EL]

STEP	INSPECTION		ACTION
5	**PERFORM ON-BOARD DIAGNOSTIC TEST** • Perform the following procedure to ensure that the DTC has been resolved: 1. Start the engine. 2. Verify that the ATF temperature is **55 °C {131 °F} or more**. • Perform the on-board diagnostic test. (See 05-02A-9 ON-BOARD DIAGNOSTIC TEST MODE [FW6A-EL, FW6AX-EL].) • Are any the following DTCs displayed? — P0756:00, P0848:00	Yes	ATF amount in Step 4 is correct: • Replace the automatic transaxle, then drive the vehicle to check it, and if there is no problem then the DTC troubleshooting is complete. (See 05-17A-28 AUTOMATIC TRANSAXLE REMOVAL/INSTALLATION [FW6A-EL].) (See 05-17A-43 AUTOMATIC TRANSAXLE REMOVAL/INSTALLATION [FW6AX-EL].) ATF amount adjusted in Step 4: • Replace the control valve body, then go to the next step. (See 05-17A-67 CONTROL VALVE BODY REMOVAL/INSTALLATION [FW6A-EL, FW6AX-EL].)
		No	No DTCs are displayed: • Drive the vehicle to check it, and if there is no problem then the DTC troubleshooting is complete. If a DTC other than the one indicated on the left is displayed: • Go to the applicable DTC inspection. (See 05-02A-11 ON-BOARD DIAGNOSTIC SYSTEM DTC TABLE [FW6A-EL, FW6AX-EL])
6	**RE-PERFORM ON-BOARD DIAGNOSTIC TEST** • Perform the following procedure to ensure that the DTC has been resolved: 1. Start the engine. 2. Verify that the ATF temperature is **55 °C {131 °F} or more**. • Perform the on-board diagnostic test. (See 05-02A-9 ON-BOARD DIAGNOSTIC TEST MODE [FW6A-EL, FW6AX-EL].) • Are any DTCs present?	Yes	Go to the applicable DTC inspection. (See 05-02A-11 ON-BOARD DIAGNOSTIC SYSTEM DTC TABLE [FW6A-EL, FW6AX-EL].)
		No	DTC troubleshooting completed.

DTC P0757:00 [FW6A-EL, FW6AX-EL]

id050227819000

DTC P0757:00	**Shift solenoid No.2 stuck on**
DETECTION CONDITION	• Under the following conditions, shift solenoid No.2 stuck-on detected by combination of gear ratio malfunction and oil pressure switch pattern malfunction: — Engine is running. — Battery voltage is **8 V or more**. — ATF temperature is **20 °C {68 °F} or more**. **Diagnostic support note** • The check engine light illuminates if the TCM detects the above malfunction condition in two consecutive drive cycles or in one drive cycle while the DTC for the same malfunction has been stored in the TCM. • The automatic transaxle warning light illuminates if the TCM detects the above malfunction condition in two consecutive drive cycles or in one drive cycle while the DTC for the same malfunction has been stored in the TCM. • PENDING CODE is available. • FREEZE FRAME DATA is available. • The DTC is stored in the TCM memory.
FAIL-SAFE FUNCTION	• Inhibits malfunctioning gear. • Limits engine torque. • Inhibits learning control. • Inhibits manual mode. • Inhibits neutral idle control. • Inhibits i-stop control. • Inhibits AAS.
POSSIBLE CAUSE	• Shift solenoid No.2 malfunction
SYSTEM WIRING DIAGRAM	—

ON-BOARD DIAGNOSTIC [FW6A-EL, FW6AX-EL]

Diagnostic procedure

STEP	INSPECTION		ACTION
1	**VERIFY THE DTC OUTPUT STATUS** • Is the DTC P1738:00 also present?	Yes	Go to the applicable DTC inspection. (See 05-02A-81 DTC P1738:00 [FW6A-EL, FW6AX-EL].)
		No	Go to the next step.
2	**VERIFY FREEZE FRAME DATA/SNAPSHOT DATA HAS BEEN RECORDED** • Has the freeze frame data/snapshot data been recorded on the repair order?	Yes	Go to the next step.
		No	Record the freeze frame data/snapshot data on the repair order, then go to the next step.
3	**VERIFY RELATED SERVICE INFORMATION AVAILABILITY** • Verify related Service Information availability. • Is any related Service Information available?	Yes	Perform repair or diagnosis according to the available Service Information. • If the vehicle is not repaired, go to the next step.
		No	Go to the next step.
4	**PERFORM ON-BOARD DIAGNOSTIC TEST** • Perform the following procedure to ensure that the DTC has been resolved: 1. Start the engine. 2. Verify that the ATF temperature is **55 °C {131 °F} or more**. • Perform the on-board diagnostic test. (See 05-02A-9 ON-BOARD DIAGNOSTIC TEST MODE [FW6A-EL, FW6AX-EL].) • Are P0757:00 present?	Yes	Replace the control valve body, then go to the next step. (See 05-17A-67 CONTROL VALVE BODY REMOVAL/INSTALLATION [FW6A-EL, FW6AX-EL])
		No	No DTCs are displayed: • Drive the vehicle to check it, and if there is no problem then the DTC troubleshooting is complete. If a DTC other than the one indicated on the left is displayed: • Go to the applicable DTC inspection. (See 05-02A-11 ON-BOARD DIAGNOSTIC SYSTEM DTC TABLE [FW6A-EL, FW6AX-EL])
5	**RE-PERFORM ON-BOARD DIAGNOSTIC TEST** • Perform the following procedure to ensure that the DTC has been resolved: 1. Start the engine. 2. Verify that the ATF temperature is **55 °C {131 °F} or more**. • Perform the on-board diagnostic test. (See 05-02A-9 ON-BOARD DIAGNOSTIC TEST MODE [FW6A-EL, FW6AX-EL].) • Are any DTCs present?	Yes	Go to the applicable DTC inspection. (See 05-02A-11 ON-BOARD DIAGNOSTIC SYSTEM DTC TABLE [FW6A-EL, FW6AX-EL].)
		No	DTC troubleshooting completed.

DTC P0758:00 [FW6A-EL, FW6AX-EL]

id050227819100

DTC P0758:00	**Shift solenoid No.2 circuit malfunction**
DETECTION CONDITION	• Under the following condition, the TCM detects the shift solenoid No.2 circuit malfunction: — Battery voltage is **8 V or more**. **Diagnostic support note** • The check engine light illuminates if the TCM detects the above malfunction condition during the first drive cycle. • The automatic transaxle warning light illuminates if the TCM detects the above malfunction condition during the first drive cycle. • PENDING CODE is available. • FREEZE FRAME DATA is available. • The DTC is stored in the TCM memory.
FAIL-SAFE FUNCTION	• Set to emergency mode. • Inhibits learning control. • Inhibits manual mode. • Inhibits neutral idle control. • Inhibits i-stop control. • Inhibits AAS.
POSSIBLE CAUSE	• Short or open circuit in shift solenoid No.2 circuit • Shift solenoid No.2 malfunction
SYSTEM WIRING DIAGRAM	—

ON-BOARD DIAGNOSTIC [FW6A-EL, FW6AX-EL]

Diagnostic procedure

STEP	INSPECTION		ACTION
1	**VERIFY FREEZE FRAME DATA/SNAPSHOT DATA HAS BEEN RECORDED** • Has the freeze frame data/snapshot data been recorded on the repair order?	Yes	Go to the next step.
		No	Record the freeze frame data/snapshot data on the repair order, then go to the next step.
2	**VERIFY RELATED SERVICE INFORMATION AVAILABILITY** • Verify related Service Information availability. • Is any related Service Information available?	Yes	Perform repair or diagnosis according to the available Service Information. • If the vehicle is not repaired, replace the control valve body. (See 05-17A-67 CONTROL VALVE BODY REMOVAL/ INSTALLATION [FW6A-EL, FW6AX-EL].) Go to the next step.
		No	Replace the control valve body, then go to the next step. (See 05-17A-67 CONTROL VALVE BODY REMOVAL/ INSTALLATION [FW6A-EL, FW6AX-EL].)
3	**VERIFY DTC TROUBLESHOOTING COMPLETED** • Clear the DTC using the M-MDS. (See 05-02A-7 ON-BOARD DIAGNOSTIC SYSTEM DTC INSPECTION [FW6A-EL, FW6AX-EL].) • Perform the following procedure to ensure that the DTC has been resolved: 1. Switch the ignition ON (engine off or on). • Perform the DTC inspection using the M-MDS. (See 05-02A-7 ON-BOARD DIAGNOSTIC SYSTEM DTC INSPECTION [FW6A-EL, FW6AX-EL].) • Are any DTCs present?	Yes	Go to the applicable DTC inspection. (See 05-02A-11 ON-BOARD DIAGNOSTIC SYSTEM DTC TABLE [FW6A-EL, FW6AX-EL].)
		No	DTC troubleshooting completed.

DTC P0761:00 [FW6A-EL, FW6AX-EL]

id050227819200

DTC P0761:00	**Shift solenoid No.3 stuck off**
DETECTION CONDITION	• Under the following conditions, shift solenoid No.3 stuck-off detected by combination of gear ratio malfunction and oil pressure switch pattern malfunction: — Engine is running. — Battery voltage is **8 V or more**. — ATF temperature is **20 °C {68 °F} or more**. **Diagnostic support note** • The check engine light illuminates if the TCM detects the above malfunction condition in two consecutive drive cycles or in one drive cycle while the DTC for the same malfunction has been stored in the TCM. • The automatic transaxle warning light illuminates if the TCM detects the above malfunction condition in two consecutive drive cycles or in one drive cycle while the DTC for the same malfunction has been stored in the TCM. • PENDING CODE is available. • FREEZE FRAME DATA is available. • The DTC is stored in the TCM memory.
FAIL-SAFE FUNCTION	• Inhibits malfunctioning gear. • Limits engine torque. • Inhibits learning control. • Inhibits manual mode. • Inhibits neutral idle control. • Inhibits i-stop control. • Inhibits AAS.
POSSIBLE CAUSE	• Shift solenoid No.3 malfunction
SYSTEM WIRING DIAGRAM	—

ON-BOARD DIAGNOSTIC [FW6A-EL, FW6AX-EL]

Diagnostic procedure

STEP	INSPECTION		ACTION
1	**VERIFY THE DTC OUTPUT STATUS** • Is the DTC P1738:00 also present?	Yes	Go to the applicable DTC inspection. (See 05-02A-81 DTC P1738:00 [FW6A-EL, FW6AX-EL].)
		No	Go to the next step.
2	**VERIFY FREEZE FRAME DATA/SNAPSHOT DATA HAS BEEN RECORDED** • Has the freeze frame data/snapshot data been recorded on the repair order?	Yes	Go to the next step.
		No	Record the freeze frame data/snapshot data on the repair order, then go to the next step.
3	**VERIFY RELATED SERVICE INFORMATION AVAILABILITY** • Verify related Service Information availability. • Is any related Service Information available?	Yes	Perform repair or diagnosis according to the available Service Information. • If the vehicle is not repaired, go to the next step.
		No	Go to the next step.
4	**PERFORM ON-BOARD DIAGNOSTIC TEST** • Perform the following procedure to ensure that the DTC has been resolved: 1. Start the engine. 2. Verify that the ATF temperature is **55 °C {131 °F} or more**. • Perform the on-board diagnostic test. (See 05-02A-9 ON-BOARD DIAGNOSTIC TEST MODE [FW6A-EL, FW6AX-EL].) • Are P0761:00 present?	Yes	Replace the control valve body, then go to the next step. (See 05-17A-67 CONTROL VALVE BODY REMOVAL/INSTALLATION [FW6A-EL, FW6AX-EL])
		No	No DTCs are displayed: • Drive the vehicle to check it, and if there is no problem then the DTC troubleshooting is complete. If a DTC other than the one indicated on the left is displayed: • Go to the applicable DTC inspection. (See 05-02A-11 ON-BOARD DIAGNOSTIC SYSTEM DTC TABLE [FW6A-EL, FW6AX-EL])
5	**RE-PERFORM ON-BOARD DIAGNOSTIC TEST** • Perform the following procedure to ensure that the DTC has been resolved: 1. Start the engine. 2. Verify that the ATF temperature is **55 °C {131 °F} or more**. • Perform the on-board diagnostic test. (See 05-02A-9 ON-BOARD DIAGNOSTIC TEST MODE [FW6A-EL, FW6AX-EL].) • Are any DTCs present?	Yes	Go to the applicable DTC inspection. (See 05-02A-11 ON-BOARD DIAGNOSTIC SYSTEM DTC TABLE [FW6A-EL, FW6AX-EL].)
		No	DTC troubleshooting completed.

DTC P0762:00 [FW6A-EL, FW6AX-EL]

id050227819300

DTC P0762:00	**Shift solenoid No.3 stuck on**
DETECTION CONDITION	• Under the following conditions, shift solenoid No.3 stuck-on detected by combination of gear ratio malfunction and oil pressure switch pattern malfunction: — Engine is running. — Battery voltage is **8 V or more**. — ATF temperature is **20 °C {68 °F} or more**. **Diagnostic support note** • The check engine light illuminates if the TCM detects the above malfunction condition in two consecutive drive cycles or in one drive cycle while the DTC for the same malfunction has been stored in the TCM. • The automatic transaxle warning light illuminates if the TCM detects the above malfunction condition in two consecutive drive cycles or in one drive cycle while the DTC for the same malfunction has been stored in the TCM. • PENDING CODE is available. • FREEZE FRAME DATA is available. • The DTC is stored in the TCM memory.
FAIL-SAFE FUNCTION	• Inhibits malfunctioning gear. • Limits engine torque. • Inhibits learning control. • Inhibits manual mode. • Inhibits neutral idle control. • Inhibits i-stop control. • Inhibits AAS.
POSSIBLE CAUSE	• ATF is less than specified value • Shift solenoid No.3 malfunction • Control valve body malfunction
SYSTEM WIRING DIAGRAM	—

ON-BOARD DIAGNOSTIC [FW6A-EL, FW6AX-EL]

Diagnostic procedure

STEP	INSPECTION		ACTION
1	**VERIFY THE DTC OUTPUT STATUS** • Is the DTC P1738:00 also present?	Yes	Go to the applicable DTC inspection. (See 05-02A-81 DTC P1738:00 [FW6A-EL, FW6AX-EL].)
		No	Go to the next step.
2	**VERIFY FREEZE FRAME DATA/SNAPSHOT DATA HAS BEEN RECORDED** • Has the freeze frame data/snapshot data been recorded on the repair order?	Yes	Go to the next step.
		No	Record the freeze frame data/snapshot data on the repair order, then go to the next step.
3	**VERIFY RELATED SERVICE INFORMATION AVAILABILITY** • Verify related Service Information availability. • Is any related Service Information available?	Yes	Perform repair or diagnosis according to the available Service Information. • If the vehicle is not repaired, go to the next step.
		No	Go to the next step.
4	**INSPECT ATF LEVEL** • Inspect the ATF level. (See 05-17A-11 AUTOMATIC TRANSAXLE FLUID (ATF) INSPECTION [FW6A-EL, FW6AX-EL].) • Is there any malfunction?	Yes	Adjust the ATF level to the specification, then go to the next step. (See 05-17A-12 AUTOMATIC TRANSAXLE FLUID (ATF) REPLACEMENT [FW6A-EL, FW6AX-EL].)
		No	Replace the control valve body, then go to the next step. (See 05-17A-67 CONTROL VALVE BODY REMOVAL/INSTALLATION [FW6A-EL, FW6AX-EL].)
5	**PERFORM ON-BOARD DIAGNOSTIC TEST** • Perform the following procedure to ensure that the DTC has been resolved: 1. Start the engine. 2. Verify that the ATF temperature is **55 °C {131 °F} or more**. • Perform the on-board diagnostic test. (See 05-02A-9 ON-BOARD DIAGNOSTIC TEST MODE [FW6A-EL, FW6AX-EL].) • Are any the following DTCs displayed? — P0762:00, P0873:00	Yes	ATF amount in Step 4 is correct: • Replace the automatic transaxle, then drive the vehicle to check it, and if there is no problem then the DTC troubleshooting is complete. (See 05-17A-28 AUTOMATIC TRANSAXLE REMOVAL/INSTALLATION [FW6A-EL].) (See 05-17A-43 AUTOMATIC TRANSAXLE REMOVAL/INSTALLATION [FW6AX-EL].) ATF amount adjusted in Step 4: • Replace the control valve body, then go to the next step. (See 05-17A-67 CONTROL VALVE BODY REMOVAL/INSTALLATION [FW6A-EL, FW6AX-EL].)
		No	No DTCs are displayed: • Drive the vehicle to check it, and if there is no problem then the DTC troubleshooting is complete. If a DTC other than the one indicated on the left is displayed: • Go to the applicable DTC inspection. (See 05-02A-11 ON-BOARD DIAGNOSTIC SYSTEM DTC TABLE [FW6A-EL, FW6AX-EL])
6	**RE-PERFORM ON-BOARD DIAGNOSTIC TEST** • Perform the following procedure to ensure that the DTC has been resolved: 1. Start the engine. 2. Verify that the ATF temperature is **55 °C {131 °F} or more**. • Perform the on-board diagnostic test. (See 05-02A-9 ON-BOARD DIAGNOSTIC TEST MODE [FW6A-EL, FW6AX-EL].) • Are any DTCs present?	Yes	Go to the applicable DTC inspection. (See 05-02A-11 ON-BOARD DIAGNOSTIC SYSTEM DTC TABLE [FW6A-EL, FW6AX-EL].)
		No	DTC troubleshooting completed.

ON-BOARD DIAGNOSTIC [FW6A-EL, FW6AX-EL]

DTC P0763:00 [FW6A-EL, FW6AX-EL]

id050227819400

DTC P0763:00	**Shift solenoid No.3 circuit malfunction**
DETECTION CONDITION	• Under the following condition, the TCM detects the shift solenoid No.3 circuit malfunction: — Battery voltage is **8 V or more**. **Diagnostic support note** • The check engine light illuminates if the TCM detects the above malfunction condition during the first drive cycle. • The automatic transaxle warning light illuminates if the TCM detects the above malfunction condition during the first drive cycle. • PENDING CODE is available. • FREEZE FRAME DATA is available. • The DTC is stored in the TCM memory.
FAIL-SAFE FUNCTION	• Set to emergency mode. • Inhibits learning control. • Inhibits manual mode. • Inhibits neutral idle control. • Inhibits i-stop control. • Inhibits AAS.
POSSIBLE CAUSE	• Short or open circuit in shift solenoid No.3 circuit • Shift solenoid No.3 malfunction
SYSTEM WIRING DIAGRAM	—

Diagnostic procedure

STEP	INSPECTION		ACTION
1	**VERIFY FREEZE FRAME DATA/SNAPSHOT DATA HAS BEEN RECORDED** • Has the freeze frame data/snapshot data been recorded on the repair order?	Yes	Go to the next step.
		No	Record the freeze frame data/snapshot data on the repair order, then go to the next step.
2	**VERIFY RELATED SERVICE INFORMATION AVAILABILITY** • Verify related Service Information availability. • Is any related Service Information available?	Yes	Perform repair or diagnosis according to the available Service Information. • If the vehicle is not repaired, replace the control valve body. (See 05-17A-67 CONTROL VALVE BODY REMOVAL/ INSTALLATION [FW6A-EL, FW6AX-EL].) Go to the next step.
		No	Replace the control valve body, then go to the next step. (See 05-17A-67 CONTROL VALVE BODY REMOVAL/ INSTALLATION [FW6A-EL, FW6AX-EL].)
3	**VERIFY DTC TROUBLESHOOTING COMPLETED** • Clear the DTC using the M-MDS. (See 05-02A-7 ON-BOARD DIAGNOSTIC SYSTEM DTC INSPECTION [FW6A-EL, FW6AX-EL].) • Perform the following procedure to ensure that the DTC has been resolved: 1. Switch the ignition ON (engine off or on). • Perform the DTC inspection using the M-MDS. (See 05-02A-7 ON-BOARD DIAGNOSTIC SYSTEM DTC INSPECTION [FW6A-EL, FW6AX-EL].) • Are any DTCs present?	Yes	Go to the applicable DTC inspection. (See 05-02A-11 ON-BOARD DIAGNOSTIC SYSTEM DTC TABLE [FW6A-EL, FW6AX-EL].)
		No	DTC troubleshooting completed.

ON-BOARD DIAGNOSTIC [FW6A-EL, FW6AX-EL]

DTC P0766:00 [FW6A-EL, FW6AX-EL]

id050227819500

DTC P0766:00	**Shift solenoid No.4 stuck off**
DETECTION CONDITION	• Under the following conditions, shift solenoid No.4 stuck-off detected by combination of gear ratio malfunction and oil pressure switch pattern malfunction: — Engine is running. — Battery voltage is **8 V or more**. — ATF temperature is **20 °C {68 °F} or more**. **Diagnostic support note** • The check engine light illuminates if the TCM detects the above malfunction condition in two consecutive drive cycles or in one drive cycle while the DTC for the same malfunction has been stored in the TCM. • The automatic transaxle warning light illuminates if the TCM detects the above malfunction condition in two consecutive drive cycles or in one drive cycle while the DTC for the same malfunction has been stored in the TCM. • PENDING CODE is available. • FREEZE FRAME DATA is available. • The DTC is stored in the TCM memory.
FAIL-SAFE FUNCTION	• Inhibits malfunctioning gear. • Limits engine torque. • Inhibits learning control. • Inhibits manual mode. • Inhibits neutral idle control. • Inhibits i-stop control. • Inhibits AAS.
POSSIBLE CAUSE	• Shift solenoid No.4 malfunction
SYSTEM WIRING DIAGRAM	—

Diagnostic procedure

STEP	INSPECTION		ACTION
1	**VERIFY THE DTC OUTPUT STATUS** • Is the DTC P1738:00 also present?	Yes	Go to the applicable DTC inspection. (See 05-02A-81 DTC P1738:00 [FW6A-EL, FW6AX-EL].)
		No	Go to the next step.
2	**VERIFY FREEZE FRAME DATA/SNAPSHOT DATA HAS BEEN RECORDED** • Has the freeze frame data/snapshot data been recorded on the repair order?	Yes	Go to the next step.
		No	Record the freeze frame data/snapshot data on the repair order, then go to the next step.
3	**VERIFY RELATED SERVICE INFORMATION AVAILABILITY** • Verify related Service Information availability. • Is any related Service Information available?	Yes	Perform repair or diagnosis according to the available Service Information. • If the vehicle is not repaired, go to the next step.
		No	Go to the next step.
4	**PERFORM ON-BOARD DIAGNOSTIC TEST** • Perform the following procedure to ensure that the DTC has been resolved: 1. Start the engine. 2. Verify that the ATF temperature is **55 °C {131 °F} or more**. • Perform the on-board diagnostic test. (See 05-02A-9 ON-BOARD DIAGNOSTIC TEST MODE [FW6A-EL, FW6AX-EL].) • Are P0766:00 present?	Yes	Replace the control valve body, then go to the next step. (See 05-17A-67 CONTROL VALVE BODY REMOVAL/INSTALLATION [FW6A-EL, FW6AX-EL])
		No	No DTCs are displayed: • Drive the vehicle to check it, and if there is no problem then the DTC troubleshooting is complete. If a DTC other than the one indicated on the left is displayed: • Go to the applicable DTC inspection. (See 05-02A-11 ON-BOARD DIAGNOSTIC SYSTEM DTC TABLE [FW6A-EL, FW6AX-EL])
5	**RE-PERFORM ON-BOARD DIAGNOSTIC TEST** • Perform the following procedure to ensure that the DTC has been resolved: 1. Start the engine. 2. Verify that the ATF temperature is **55 °C {131 °F} or more**. • Perform the on-board diagnostic test. (See 05-02A-9 ON-BOARD DIAGNOSTIC TEST MODE [FW6A-EL, FW6AX-EL].) • Are any DTCs present?	Yes	Go to the applicable DTC inspection. (See 05-02A-11 ON-BOARD DIAGNOSTIC SYSTEM DTC TABLE [FW6A-EL, FW6AX-EL].)
		No	DTC troubleshooting completed.

ON-BOARD DIAGNOSTIC [FW6A-EL, FW6AX-EL]

DTC P0767:00 [FW6A-EL, FW6AX-EL]

id050227819600

DTC P0767:00	**Shift solenoid No.4 stuck on**
DETECTION CONDITION	• Under the following conditions, shift solenoid No.4 stuck-on detected by combination of gear ratio malfunction and oil pressure switch pattern malfunction: — Engine is running. — Battery voltage is **8 V or more**. — ATF temperature is **20 °C {68 °F} or more**. **Diagnostic support note** • The check engine light illuminates if the TCM detects the above malfunction condition in two consecutive drive cycles or in one drive cycle while the DTC for the same malfunction has been stored in the TCM. • The automatic transaxle warning light illuminates if the TCM detects the above malfunction condition in two consecutive drive cycles or in one drive cycle while the DTC for the same malfunction has been stored in the TCM. • PENDING CODE is available. • FREEZE FRAME DATA is available. • The DTC is stored in the TCM memory.
FAIL-SAFE FUNCTION	• Inhibits malfunctioning gear. • Limits engine torque. • Inhibits learning control. • Inhibits manual mode. • Inhibits neutral idle control. • Inhibits i-stop control. • Inhibits AAS.
POSSIBLE CAUSE	• ATF is less than specified value • Shift solenoid No.4 malfunction
SYSTEM WIRING DIAGRAM	—

Diagnostic procedure

STEP	INSPECTION		ACTION
1	**VERIFY THE DTC OUTPUT STATUS** • Is the DTC P1738:00 also present?	Yes	Go to the applicable DTC inspection. (See 05-02A-81 DTC P1738:00 [FW6A-EL, FW6AX-EL].)
		No	Go to the next step.
2	**VERIFY FREEZE FRAME DATA/SNAPSHOT DATA HAS BEEN RECORDED** • Has the freeze frame data/snapshot data been recorded on the repair order?	Yes	Go to the next step.
		No	Record the freeze frame data/snapshot data on the repair order, then go to the next step.
3	**VERIFY RELATED SERVICE INFORMATION AVAILABILITY** • Verify related Service Information availability. • Is any related Service Information available?	Yes	Perform repair or diagnosis according to the available Service Information. • If the vehicle is not repaired, go to the next step.
		No	Go to the next step.
4	**INSPECT ATF LEVEL** • Inspect the ATF level. (See 05-17A-11 AUTOMATIC TRANSAXLE FLUID (ATF) INSPECTION [FW6A-EL, FW6AX-EL].) • Is there any malfunction?	Yes	Adjust the ATF level to the specification, then go to the next step. (See 05-17A-12 AUTOMATIC TRANSAXLE FLUID (ATF) REPLACEMENT [FW6A-EL, FW6AX-EL].)
		No	Replace the control valve body, then go to the next step. (See 05-17A-67 CONTROL VALVE BODY REMOVAL/INSTALLATION [FW6A-EL, FW6AX-EL].)

ON-BOARD DIAGNOSTIC [FW6A-EL, FW6AX-EL]

STEP	INSPECTION		ACTION
5	**PERFORM ON-BOARD DIAGNOSTIC TEST** • Perform the following procedure to ensure that the DTC has been resolved: 1. Start the engine. 2. Verify that the ATF temperature is **55 °C {131 °F} or more**. • Perform the on-board diagnostic test. (See 05-02A-9 ON-BOARD DIAGNOSTIC TEST MODE [FW6A-EL, FW6AX-EL].) • Are any the following DTCs displayed? — P0767:00, P0878:00	Yes	ATF amount in Step 4 is correct: • Replace the automatic transaxle, then drive the vehicle to check it, and if there is no problem then the DTC troubleshooting is complete. (See 05-17A-28 AUTOMATIC TRANSAXLE REMOVAL/INSTALLATION [FW6A-EL].) (See 05-17A-43 AUTOMATIC TRANSAXLE REMOVAL/INSTALLATION [FW6AX-EL].) ATF amount adjusted in Step 4: • Replace the control valve body, then go to the next step. (See 05-17A-67 CONTROL VALVE BODY REMOVAL/INSTALLATION [FW6A-EL, FW6AX-EL].)
		No	No DTCs are displayed: • Drive the vehicle to check it, and if there is no problem then the DTC troubleshooting is complete. If a DTC other than the one indicated on the left is displayed: • Go to the applicable DTC inspection. (See 05-02A-11 ON-BOARD DIAGNOSTIC SYSTEM DTC TABLE [FW6A-EL, FW6AX-EL])
6	**RE-PERFORM ON-BOARD DIAGNOSTIC TEST** • Perform the following procedure to ensure that the DTC has been resolved: 1. Start the engine. 2. Verify that the ATF temperature is **55 °C {131 °F} or more**. • Perform the on-board diagnostic test. (See 05-02A-9 ON-BOARD DIAGNOSTIC TEST MODE [FW6A-EL, FW6AX-EL].) • Are any DTCs present?	Yes	Go to the applicable DTC inspection. (See 05-02A-11 ON-BOARD DIAGNOSTIC SYSTEM DTC TABLE [FW6A-EL, FW6AX-EL].)
		No	DTC troubleshooting completed.

DTC P0768:00 [FW6A-EL, FW6AX-EL]

id050227819700

DTC P0768:00	**Shift solenoid No.4 circuit malfunction**
DETECTION CONDITION	• Under the following condition, the TCM detects the shift solenoid No.4 circuit malfunction: — Battery voltage is **8 V or more**. **Diagnostic support note** • The check engine light illuminates if the TCM detects the above malfunction condition during the first drive cycle. • The automatic transaxle warning light illuminates if the TCM detects the above malfunction condition during the first drive cycle. • PENDING CODE is available. • FREEZE FRAME DATA is available. • The DTC is stored in the TCM memory.
FAIL-SAFE FUNCTION	• Set to emergency mode. • Inhibits learning control. • Inhibits manual mode. • Inhibits neutral idle control. • Inhibits i-stop control. • Inhibits AAS.
POSSIBLE CAUSE	• Short or open circuit in shift solenoid No.4 circuit • Shift solenoid No.4 malfunction
SYSTEM WIRING DIAGRAM	—

ON-BOARD DIAGNOSTIC [FW6A-EL, FW6AX-EL]

Diagnostic procedure

STEP	INSPECTION		ACTION
1	**VERIFY FREEZE FRAME DATA/SNAPSHOT DATA HAS BEEN RECORDED** • Has the freeze frame data/snapshot data been recorded on the repair order?	Yes	Go to the next step.
		No	Record the freeze frame data/snapshot data on the repair order, then go to the next step.
2	**VERIFY RELATED SERVICE INFORMATION AVAILABILITY** • Verify related Service Information availability. • Is any related Service Information available?	Yes	Perform repair or diagnosis according to the available Service Information. • If the vehicle is not repaired, replace the control valve body. (See 05-17A-67 CONTROL VALVE BODY REMOVAL/ INSTALLATION [FW6A-EL, FW6AX-EL].) Go to the next step.
		No	Replace the control valve body, then go to the next step. (See 05-17A-67 CONTROL VALVE BODY REMOVAL/ INSTALLATION [FW6A-EL, FW6AX-EL].)
3	**VERIFY DTC TROUBLESHOOTING COMPLETED** • Clear the DTC using the M-MDS. (See 05-02A-7 ON-BOARD DIAGNOSTIC SYSTEM DTC INSPECTION [FW6A-EL, FW6AX-EL].) • Perform the following procedure to ensure that the DTC has been resolved: 1. Switch the ignition ON (engine off or on). • Perform the DTC inspection using the M-MDS. (See 05-02A-7 ON-BOARD DIAGNOSTIC SYSTEM DTC INSPECTION [FW6A-EL, FW6AX-EL].) • Are any DTCs present?	Yes	Go to the applicable DTC inspection. (See 05-02A-11 ON-BOARD DIAGNOSTIC SYSTEM DTC TABLE [FW6A-EL, FW6AX-EL].)
		No	DTC troubleshooting completed.

DTC P0771:00 [FW6A-EL, FW6AX-EL]

id050227819800

DTC P0771:00	**On/off solenoid stuck off**
DETECTION CONDITION	• Under the following conditions, on/off solenoid stuck-off detected by combination of gear ratio malfunction and oil pressure switch pattern malfunction: — Engine is running. — Battery voltage is **8 V or more**. — ATF temperature is **20 °C {68 °F} or more**. **Diagnostic support note** • The check engine light illuminates if the TCM detects the above malfunction condition in two consecutive drive cycles or in one drive cycle while the DTC for the same malfunction has been stored in the TCM. • The automatic transaxle warning light illuminates if the TCM detects the above malfunction condition in two consecutive drive cycles or in one drive cycle while the DTC for the same malfunction has been stored in the TCM. • PENDING CODE is available. • FREEZE FRAME DATA is available. • The DTC is stored in the TCM memory.
FAIL-SAFE FUNCTION	• Inhibits malfunctioning gear. • Limits engine torque. • Inhibits learning control. • Inhibits manual mode. • Inhibits neutral idle control. • Inhibits i-stop control. • Inhibits AAS.
POSSIBLE CAUSE	• On/off solenoid malfunction
SYSTEM WIRING DIAGRAM	—

ON-BOARD DIAGNOSTIC [FW6A-EL, FW6AX-EL]

Diagnostic procedure

STEP	INSPECTION		ACTION
1	**VERIFY THE DTC OUTPUT STATUS** • Is the DTC P1738:00 also present?	Yes	Go to the applicable DTC inspection. (See 05-02A-81 DTC P1738:00 [FW6A-EL, FW6AX-EL].)
		No	Go to the next step.
2	**VERIFY FREEZE FRAME DATA/SNAPSHOT DATA HAS BEEN RECORDED** • Has the freeze frame data/snapshot data been recorded on the repair order?	Yes	Go to the next step.
		No	Record the freeze frame data/snapshot data on the repair order, then go to the next step.
3	**VERIFY RELATED SERVICE INFORMATION AVAILABILITY** • Verify related Service Information availability. • Is any related Service Information available?	Yes	Perform repair or diagnosis according to the available Service Information. • If the vehicle is not repaired, go to the next step.
		No	Go to the next step.
4	**PERFORM ON-BOARD DIAGNOSTIC TEST** • Perform the following procedure to ensure that the DTC has been resolved: 1. Start the engine. 2. Verify that the ATF temperature is **55 °C {131 °F} or more**. • Perform the on-board diagnostic test. (See 05-02A-9 ON-BOARD DIAGNOSTIC TEST MODE [FW6A-EL, FW6AX-EL].) • Are P0771:00 present?	Yes	Replace the control valve body, then go to the next step. (See 05-17A-67 CONTROL VALVE BODY REMOVAL/INSTALLATION [FW6A-EL, FW6AX-EL].)
		No	No DTCs are displayed: • Drive the vehicle to check it, and if there is no problem then the DTC troubleshooting is complete. If a DTC other than the one indicated on the left is displayed: • Go to the applicable DTC inspection. (See 05-02A-11 ON-BOARD DIAGNOSTIC SYSTEM DTC TABLE [FW6A-EL, FW6AX-EL].)
5	**RE-PERFORM ON-BOARD DIAGNOSTIC TEST** • Perform the following procedure to ensure that the DTC has been resolved: 1. Start the engine. 2. Verify that the ATF temperature is **55 °C {131 °F} or more**. • Perform the on-board diagnostic test. (See 05-02A-9 ON-BOARD DIAGNOSTIC TEST MODE [FW6A-EL, FW6AX-EL].) • Are any DTCs present?	Yes	Go to the applicable DTC inspection. (See 05-02A-11 ON-BOARD DIAGNOSTIC SYSTEM DTC TABLE [FW6A-EL, FW6AX-EL].)
		No	DTC troubleshooting completed.

DTC P0772:00 [FW6A-EL, FW6AX-EL]

id050227819900

DTC P0772:00	On/off solenoid stuck on
DETECTION CONDITION	• Under the following conditions, on/off solenoid stuck-on detected by combination of gear ratio malfunction and oil pressure switch pattern malfunction: — Engine is running. — Battery voltage is **8 V or more**. — ATF temperature is **20 °C {68 °F} or more**. **Diagnostic support note** • The check engine light illuminates if the TCM detects the above malfunction condition in two consecutive drive cycles or in one drive cycle while the DTC for the same malfunction has been stored in the TCM. • The automatic transaxle warning light illuminates if the TCM detects the above malfunction condition in two consecutive drive cycles or in one drive cycle while the DTC for the same malfunction has been stored in the TCM. • PENDING CODE is available. • FREEZE FRAME DATA is available. • The DTC is stored in the TCM memory.
FAIL-SAFE FUNCTION	• Inhibits malfunctioning gear. • Limits engine torque. • Inhibits learning control. • Inhibits manual mode. • Inhibits neutral idle control. • Inhibits i-stop control. • Inhibits AAS.
POSSIBLE CAUSE	• ATF is less than specified value • On/off solenoid malfunction • Control valve body malfunction
SYSTEM WIRING DIAGRAM	—

ON-BOARD DIAGNOSTIC [FW6A-EL, FW6AX-EL]

Diagnostic procedure

STEP	INSPECTION		ACTION
1	**VERIFY THE DTC OUTPUT STATUS** • Is the DTC P1738:00 also present?	Yes	Go to the applicable DTC inspection. (See 05-02A-81 DTC P1738:00 [FW6A-EL, FW6AX-EL].)
		No	Go to the next step.
2	**VERIFY FREEZE FRAME DATA/SNAPSHOT DATA HAS BEEN RECORDED** • Has the freeze frame data/snapshot data been recorded on the repair order?	Yes	Go to the next step.
		No	Record the freeze frame data/snapshot data on the repair order, then go to the next step.
3	**VERIFY RELATED SERVICE INFORMATION AVAILABILITY** • Verify related Service Information availability. • Is any related Service Information available?	Yes	Perform repair or diagnosis according to the available Service Information. • If the vehicle is not repaired, go to the next step.
		No	Go to the next step.
4	**INSPECT ATF LEVEL** • Inspect the ATF level. (See 05-17A-11 AUTOMATIC TRANSAXLE FLUID (ATF) INSPECTION [FW6A-EL, FW6AX-EL].) • Is there any malfunction?	Yes	Adjust the ATF level to the specification, then go to the next step. (See 05-17A-12 AUTOMATIC TRANSAXLE FLUID (ATF) REPLACEMENT [FW6A-EL, FW6AX-EL].)
		No	Replace the on/off solenoid, then go to the next step. (See 05-17A-25 ON/OFF SOLENOID REMOVAL/INSTALLATION [FW6A-EL, FW6AX-EL].)
5	**PERFORM ON-BOARD DIAGNOSTIC TEST** • Perform the following procedure to ensure that the DTC has been resolved: 1. Start the engine. 2. Verify that the ATF temperature is **55 °C {131 °F} or more**. • Perform the on-board diagnostic test. (See 05-02A-9 ON-BOARD DIAGNOSTIC TEST MODE [FW6A-EL, FW6AX-EL].) • Are any DTCs present?	Yes	ATF amount in Step 4 is correct • Replace the automatic transaxle, then drive the vehicle to check it, and if there is no problem then the DTC troubleshooting is complete. (See 05-17A-28 AUTOMATIC TRANSAXLE REMOVAL/INSTALLATION [FW6A-EL].) (See 05-17A-43 AUTOMATIC TRANSAXLE REMOVAL/INSTALLATION [FW6AX-EL].) ATF amount adjusted in Step 4: • Replace the control valve body, then go to the next step. (See 05-17A-67 CONTROL VALVE BODY REMOVAL/INSTALLATION [FW6A-EL, FW6AX-EL].)
		No	Drive the vehicle to check it, and if there is no problem then the DTC troubleshooting is complete.
6	**RE-PERFORM ON-BOARD DIAGNOSTIC TEST** • Perform the following procedure to ensure that the DTC has been resolved: 1. Start the engine. 2. Verify that the ATF temperature is **55 °C {131 °F} or more**. • Perform the on-board diagnostic test. (See 05-02A-9 ON-BOARD DIAGNOSTIC TEST MODE [FW6A-EL, FW6AX-EL].) • Are any DTCs present?	Yes	Go to the applicable DTC inspection. (See 05-02A-11 ON-BOARD DIAGNOSTIC SYSTEM DTC TABLE [FW6A-EL, FW6AX-EL].)
		No	DTC troubleshooting completed.

ON-BOARD DIAGNOSTIC [FW6A-EL, FW6AX-EL]

DTC P0773:00 [FW6A-EL, FW6AX-EL]

id050227820000

DTC P0773:00	On/off solenoid circuit malfunction
DETECTION CONDITION	• Under the following condition, the TCM detects the on/off solenoid circuit malfunction: — Battery voltage is **8 V or more**. **Diagnostic support note** • The check engine light illuminates if the TCM detects the above malfunction condition during the first drive cycle. • The automatic transaxle warning light illuminates if the TCM detects the above malfunction condition during the first drive cycle. • PENDING CODE is available. • FREEZE FRAME DATA is available. • The DTC is stored in the TCM memory.
FAIL-SAFE FUNCTION	• Set to emergency mode. • Inhibits learning control. • Inhibits manual mode. • Inhibits neutral idle control. • Inhibits i-stop control. • Inhibits AAS.
POSSIBLE CAUSE	• Short or open circuit in on/off solenoid circuit • On/off solenoid malfunction
SYSTEM WIRING DIAGRAM	—

Diagnostic procedure

STEP	INSPECTION		ACTION
1	**VERIFY FREEZE FRAME DATA/SNAPSHOT DATA HAS BEEN RECORDED** • Has the freeze frame data/snapshot data been recorded on the repair order?	Yes	Go to the next step.
		No	Record the freeze frame data/snapshot data on the repair order, then go to the next step.
2	**VERIFY RELATED SERVICE INFORMATION AVAILABILITY** • Verify related Service Information availability. • Is any related Service Information available?	Yes	Perform repair or diagnosis according to the available Service Information. • If the vehicle is not repaired, replace the on/off solenoid. (See 05-17A-25 ON/OFF SOLENOID REMOVAL/ INSTALLATION [FW6A-EL, FW6AX-EL].) Go to the next step.
		No	Replace the on/off solenoid, then go to the next step. (See 05-17A-25 ON/OFF SOLENOID REMOVAL/ INSTALLATION [FW6A-EL, FW6AX-EL].)
3	**VERIFY DTC TROUBLESHOOTING COMPLETED** • Clear the DTC using the M-MDS. (See 05-02A-7 ON-BOARD DIAGNOSTIC SYSTEM DTC INSPECTION [FW6A-EL, FW6AX-EL].) • Perform the following procedure to ensure that the DTC has been resolved: 1. Switch the ignition ON (engine off or on). • Perform the DTC inspection using the M-MDS. (See 05-02A-7 ON-BOARD DIAGNOSTIC SYSTEM DTC INSPECTION [FW6A-EL, FW6AX-EL].) • Are any DTCs present?	Yes	Go to the applicable DTC inspection. (See 05-02A-11 ON-BOARD DIAGNOSTIC SYSTEM DTC TABLE [FW6A-EL, FW6AX-EL].)
		No	DTC troubleshooting completed.

ON-BOARD DIAGNOSTIC [FW6A-EL, FW6AX-EL]

DTC P0780:00 [FW6A-EL, FW6AX-EL]

id050227824500

DTC P0780:00	Gear shifting malfunction
DETECTION CONDITION	• Under the following conditions, the gear shifting inhibited: — Engine is running. — Battery voltage is **8 V or more**. **Diagnostic support note** • The check engine light illuminates if the TCM detects the above malfunction condition in two consecutive drive cycles or in one drive cycle while the DTC for the same malfunction has been stored in the TCM. • The automatic transaxle warning light illuminates if the TCM detects the above malfunction condition in two consecutive drive cycles or in one drive cycle while the DTC for the same malfunction has been stored in the TCM. • PENDING CODE is available. • FREEZE FRAME DATA is available. • The DTC is stored in the TCM memory.
FAIL-SAFE FUNCTION	• Inhibits learning control. • Inhibits manual mode. • Inhibits neutral idle control. • Inhibits i-stop control. • Inhibits AAS.
POSSIBLE CAUSE	• ATF is less than specified value • On/off solenoid malfunction • Pressure control solenoid malfunction • Shift solenoid malfunction • Oil pressure switch circuit malfunction • Oil pressure switch malfunction • Clutch slippage • ATF leakage from clutch circuit • Control valve body malfunction
SYSTEM WIRING DIAGRAM	—

Diagnostic procedure

STEP	INSPECTION		ACTION
1	**VERIFY THE DTC OUTPUT STATUS** • Are any the following DTCs displayed? — P0738:00, P0746:00, P0751:00, P0752:00, P0756:00, P0757:00, P0761:00, P0762:00, P0766:00, P0767:00, P0771:00, P0772:00, P079A:00, P0842:00, P0843:00, P0847:00, P0848:00, P0872:00, P0873:00, P0877:00, P0878:00, P1784:00	Yes	Go to the applicable DTC inspection. (See 05-02A-11 ON-BOARD DIAGNOSTIC SYSTEM DTC TABLE [FW6A-EL, FW6AX-EL].)
		No	Go to the next step.
2	**INSPECT ATF LEVEL** • Inspect the ATF level. (See 05-17A-11 AUTOMATIC TRANSAXLE FLUID (ATF) INSPECTION [FW6A-EL, FW6AX-EL].) • Is there any malfunction?	Yes	Adjust the ATF level to the specification, then go to the next step. (See 05-17A-12 AUTOMATIC TRANSAXLE FLUID (ATF) REPLACEMENT [FW6A-EL, FW6AX-EL].)
		No	Go to the next step.
3	**PERFORM ON-BOARD DIAGNOSTIC TEST TO SPECIFY MALFUNCTIONING PART** **Note** • If only DTCs in which the malfunctioning part is not confirmed are displayed as in the following DTCs, all of the diagnosis may not have been completed. In such cases, the malfunction cause can be determined by performing the on-board diagnostic test. • Perform the on-board diagnostic test. (See 05-02A-9 ON-BOARD DIAGNOSTIC TEST MODE [FW6A-EL, FW6AX-EL].) • Are any DTCs present?	Yes	Go to the applicable DTC inspection. (See 05-02A-11 ON-BOARD DIAGNOSTIC SYSTEM DTC TABLE [FW6A-EL, FW6AX-EL].)
		No	ATF amount in Step 2 is correct: • Replace the automatic transaxle. (See 05-17A-28 AUTOMATIC TRANSAXLE REMOVAL/INSTALLATION [FW6A-EL].) (See 05-17A-43 AUTOMATIC TRANSAXLE REMOVAL/INSTALLATION [FW6AX-EL].) ATF amount adjusted in Step 2: • Drive the vehicle to check it, and if there is no problem then the DTC troubleshooting is complete.

ON-BOARD DIAGNOSTIC [FW6A-EL, FW6AX-EL]

DTC P079A:00 [FW6A-EL, FW6AX-EL]

id050227904400

DTC P079A:00	Shift solenoid No.3 stuck off/On/off solenoid stuck on
DETECTION CONDITION	• Under the following conditions, shift solenoid No.3 stuck-off or on/off solenoid stuck-on detected by combination of gear ratio malfunction and oil pressure switch pattern malfunction: — Engine is running. — Battery voltage is **8 V or more**. — ATF temperature is **20 °C {68 °F} or more**. **Diagnostic support note** • The check engine light illuminates if the TCM detects the above malfunction condition in two consecutive drive cycles or in one drive cycle while the DTC for the same malfunction has been stored in the TCM. • The automatic transaxle warning light illuminates if the TCM detects the above malfunction condition in two consecutive drive cycles or in one drive cycle while the DTC for the same malfunction has been stored in the TCM. • PENDING CODE is available. • FREEZE FRAME DATA is available. • The DTC is stored in the TCM memory.
FAIL-SAFE FUNCTION	• Inhibits malfunctioning gear. • Limits engine torque. • Inhibits learning control. • Inhibits manual mode. • Inhibits neutral idle control. • Inhibits i-stop control. • Inhibits AAS.
POSSIBLE CAUSE	• ATF is less than specified value • Shift solenoid No.3 malfunction • On/off solenoid malfunction • Control valve body malfunction
SYSTEM WIRING DIAGRAM	—

Diagnostic procedure

STEP	INSPECTION		ACTION
1	**VERIFY THE DTC OUTPUT STATUS** • Are any the following DTCs displayed? — P0762:00, P0772:00, P1738:00	Yes	Go to the applicable DTC inspection. (See 05-02A-49 DTC P0762:00 [FW6A-EL, FW6AX-EL].) (See 05-02A-56 DTC P0772:00 [FW6A-EL, FW6AX-EL].) (See 05-02A-81 DTC P1738:00 [FW6A-EL, FW6AX-EL].)
		No	Go to the next step.
2	**INSPECT ATF LEVEL** • Inspect the ATF level. (See 05-17A-11 AUTOMATIC TRANSAXLE FLUID (ATF) INSPECTION [FW6A-EL, FW6AX-EL].) • Is there any malfunction?	Yes	Adjust the ATF level to the specification, then go to the next step. (See 05-17A-12 AUTOMATIC TRANSAXLE FLUID (ATF) REPLACEMENT [FW6A-EL, FW6AX-EL].)
		No	Go to the next step.
3	**PERFORM ON-BOARD DIAGNOSTIC TEST TO SPECIFY MALFUNCTIONING PART** **Note** • If only DTCs in which the malfunctioning part is not confirmed are displayed as in the following DTCs, all of the diagnosis may not have been completed. In such cases, the malfunction cause can be determined by performing the on-board diagnostic test. • Perform the on-board diagnostic test. (See 05-02A-9 ON-BOARD DIAGNOSTIC TEST MODE [FW6A-EL, FW6AX-EL].) • Are any DTCs present?	Yes	Go to the applicable DTC inspection. (See 05-02A-11 ON-BOARD DIAGNOSTIC SYSTEM DTC TABLE [FW6A-EL, FW6AX-EL].)
		No	ATF amount in Step 2 is correct: • Replace the automatic transaxle. (See 05-17A-28 AUTOMATIC TRANSAXLE REMOVAL/INSTALLATION [FW6A-EL].) (See 05-17A-43 AUTOMATIC TRANSAXLE REMOVAL/INSTALLATION [FW6AX-EL].) ATF amount adjusted in Step 2: • Drive the vehicle to check it, and if there is no problem then the DTC troubleshooting is complete.

ON-BOARD DIAGNOSTIC [FW6A-EL, FW6AX-EL]

DTC P0819:00 [FW6A-EL, FW6AX-EL]

id050227822400

DTC P0819:00	**M position switch/Up switch/Down switch signal error**
DETECTION CONDITION	• Under the following conditions, any of (1) to (4) conditions occurs for **1 s**: — Engine is running. — Battery voltage is **8 V or more**. — Transaxle range sensor related DTC is not recorded. (1) M position switch signal is on even though forward oil pressure switch is on in any position other than D position. (2) M position switch signal is off even though up or down switch signal is on in D position. (3) Up switch signal is on even though M position switch signal is off in any position other than D position. (4) Down switch signal is on even though M position switch signal is off in any position other than D position. **Diagnostic support note** • The check engine light does not illuminate. • The automatic transaxle warning light does not illuminate. • PENDING CODE is available. • FREEZE FRAME DATA is not available. • The DTC is stored in the TCM memory.
FAIL-SAFE FUNCTION	• Inhibits manual mode.
POSSIBLE CAUSE	• Instrument cluster DTC is stored. • Selector lever component connector or terminals malfunction • Selector lever component malfunction — M position switch malfunction — Up switch malfunction — Down switch malfunction • Open circuit in wiring harness between selector lever component terminal J and body ground • Instrument cluster connector or terminals malfunction • Short to ground in wiring harness between the following terminals: — Selector lever component terminal E—Instrument cluster terminal H — Selector lever component terminal C—Instrument cluster terminal F — Selector lever component terminal D—Instrument cluster terminal G • Short to power supply in wiring harness between the following terminals: — Selector lever component terminal E—Instrument cluster terminal H — Selector lever component terminal C—Instrument cluster terminal F — Selector lever component terminal D—Instrument cluster terminal G • Open circuit in wiring harness between the following terminals: — Selector lever component terminal E—Instrument cluster terminal H — Selector lever component terminal C—Instrument cluster terminal F — Selector lever component terminal D—Instrument cluster terminal G • Instrument cluster malfunction

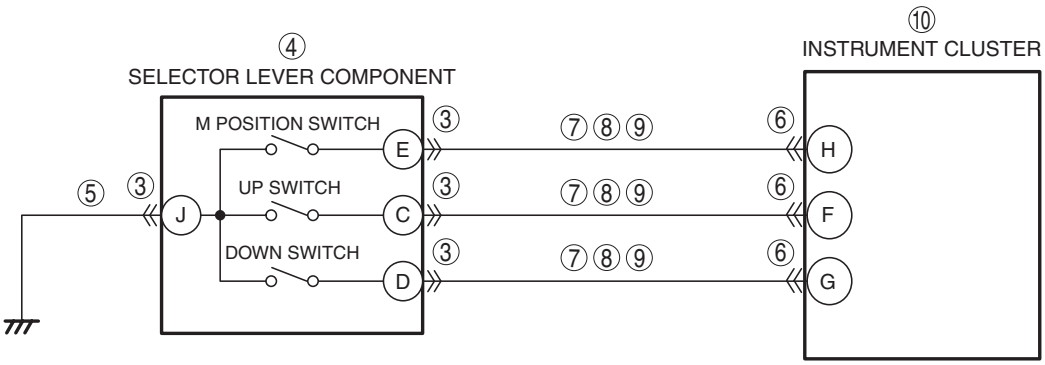

SELECTOR LEVER COMPONENT WIRING HARNESS-SIDE CONNECTOR

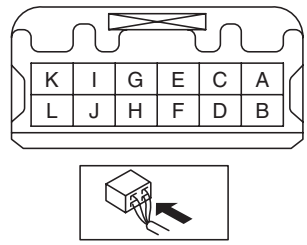

INSTRUMENT CLUSTER WIRING HARNESS-SIDE CONNECTOR

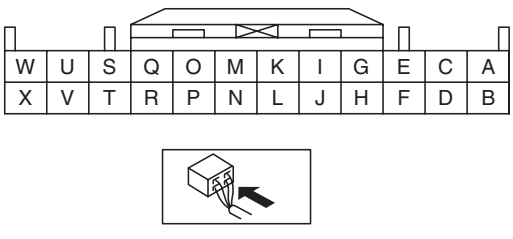

ON-BOARD DIAGNOSTIC [FW6A-EL, FW6AX-EL]

Diagnostic procedure

STEP	INSPECTION		ACTION
1	**VERIFY RELATED SERVICE INFORMATION AVAILABILITY** • Verify related Service Information availability. • Is any related Service Information available?	Yes	Perform repair or diagnosis according to the available Service Information. • If the vehicle is not repaired, go to the next step.
		No	Go to the next step.
2	**CONFIRM INSTRUMENT CLUSTER DTC** • Perform the instrument cluster DTC inspection using the M-MDS. (See 09-02G-7 DTC INSPECTION [INSTRUMENT CLUSTER].) • Are any DTCs present?	Yes	Go to the applicable DTC inspection. (See 09-02G-10 DTC TABLE [INSTRUMENT CLUSTER].)
		No	Go to the next step.
3	**INSPECT SELECTOR LEVER COMPONENT CONNECTOR CONDITION** • Switch the ignition to off. • Disconnect the selector lever component connector. • Inspect for poor connection (such as damaged/pulled-out pins, corrosion). • Is there any malfunction?	Yes	Repair or replace the connector and/or terminals, then go to Step 11.
		No	Go to the next step.
4	**INSPECT SELECTOR LEVER COMPONENT** • Inspect the M position switch, up switch and down switch. (See 05-17A-13 M POSITION SWITCH INSPECTION [FW6A-EL, FW6AX-EL].) (See 05-17A-14 UP SWITCH INSPECTION [FW6A-EL, FW6AX-EL].) (See 05-17A-15 DOWN SWITCH INSPECTION [FW6A-EL, FW6AX-EL].) • Is there any malfunction?	Yes	Replace the selector lever component, then go to Step 11. (See 05-18-2 AUTOMATIC TRANSAXLE SHIFT MECHANISM REMOVAL/INSTALLATION.)
		No	Go to the next step.
5	**INSPECT SELECTOR LEVER COMPONENT GROUND CIRCUIT FOR OPEN CIRCUIT** • Verify that the selector lever component connector is disconnected. • Inspect for continuity between selector lever component terminal J (wiring harness-side) and body ground. • Is there continuity?	Yes	Go to the next step.
		No	Repair or replace the wiring harness for a possible open circuit, then go to Step 11.
6	**INSPECT INSTRUMENT CLUSTER CONNECTOR CONDITION** • Disconnect the instrument cluster connector. • Inspect for poor connection (such as damaged/pulled-out pins, corrosion). • Is there any malfunction?	Yes	Repair or replace the connector and/or terminals, then go to Step 11.
		No	Go to the next step.
7	**INSPECT SELECTOR LEVER COMPONENT CIRCUIT FOR SHORT TO GROUND** • Verify that the selector lever component and instrument cluster connectors are disconnected. • Inspect for continuity between the following terminals (wiring harness-side) and body ground: — Selector lever component terminal E — Selector lever component terminal C — Selector lever component terminal D • Is there continuity?	Yes	Repair or replace the wiring harness for a possible short to ground, then go to Step 11.
		No	Go to the next step.
8	**INSPECT SELECTOR LEVER COMPONENT CIRCUIT FOR SHORT TO POWER SUPPLY** • Verify that the selector lever component and instrument cluster connectors are disconnected. • Switch the ignition ON (engine on). • Measure the voltage at the following terminals (wiring harness-side): — Selector lever component terminal E — Selector lever component terminal C — Selector lever component terminal D • Is the voltage **0 V**?	Yes	Go to the next step.
		No	Repair or replace the wiring harness for a possible short to power supply, then go to Step 11.

ON-BOARD DIAGNOSTIC [FW6A-EL, FW6AX-EL]

STEP	INSPECTION		ACTION
9	**INSPECT SELECTOR LEVER COMPONENT CIRCUIT FOR OPEN CIRCUIT** • Verify that the selector lever component and instrument cluster connectors are disconnected. • Switch the ignition to off. • Inspect for continuity between the following terminals (wiring harness-side): — Selector lever component terminal E— Instrument cluster terminal H — Selector lever component terminal C— Instrument cluster terminal F — Selector lever component terminal D— Instrument cluster terminal G • Is there continuity?	Yes	Go to the next step.
		No	Repair or replace the wiring harness for a possible open circuit, then go to Step 11.
10	**INSPECT INSTRUMENT CLUSTER** • Inspect the instrument cluster. (See 09-22-11 INSTRUMENT CLUSTER INSPECTION.) • Is there any malfunction?	Yes	Replace the instrument cluster, then go to the next step. (See 09-22-6 INSTRUMENT CLUSTER REMOVAL/INSTALLATION.)
		No	Go to the next step.
11	**VERIFY DTC TROUBLESHOOTING COMPLETED** • Make sure to reconnect all disconnected connectors. • Clear the DTC using the M-MDS. (See 05-02A-7 ON-BOARD DIAGNOSTIC SYSTEM DTC INSPECTION [FW6A-EL, FW6AX-EL].) • Perform the following procedure to ensure that the DTC has been resolved: 1. Verify that the battery voltage is **8 V or more**. 2. Drive the vehicle for **1 s or more** under the following condition: • Selector lever position: Except D position 3. Drive the vehicle for **1 s or more** under the following conditions: • Selector lever position: D position • Up switch: On 4. Drive the vehicle for **1 s or more** under the following conditions: • Selector lever position: D position • Down switch: On • Perform the DTC inspection using the M-MDS. (See 05-02A-7 ON-BOARD DIAGNOSTIC SYSTEM DTC INSPECTION [FW6A-EL, FW6AX-EL].) • Are any DTCs present?	Yes	Go to the applicable DTC inspection. (See 05-02A-11 ON-BOARD DIAGNOSTIC SYSTEM DTC TABLE [FW6A-EL, FW6AX-EL].)
		No	DTC troubleshooting completed.

ON-BOARD DIAGNOSTIC [FW6A-EL, FW6AX-EL]

DTC P0842:00 [FW6A-EL, FW6AX-EL]

id050227822600

DTC P0842:00	**Oil pressure switch No.1 stuck on**
DETECTION CONDITION	• Under the following conditions, oil pressure switch No.1 stuck-on detected by combination of gear ratio malfunction and oil pressure switch pattern malfunction: — Engine is running. — Battery voltage is **8 V or more**. — ATF temperature is **20 °C {68 °F} or more**. **Diagnostic support note** • The check engine light illuminates if the TCM detects the above malfunction condition in two consecutive drive cycles or in one drive cycle while the DTC for the same malfunction has been stored in the TCM. • The automatic transaxle warning light illuminates if the TCM detects the above malfunction condition in two consecutive drive cycles or in one drive cycle while the DTC for the same malfunction has been stored in the TCM. • PENDING CODE is available. • FREEZE FRAME DATA is available. • The DTC is stored in the TCM memory.
FAIL-SAFE FUNCTION	• Limits engine torque. • Inhibits learning control. • Inhibits manual mode. • Inhibits neutral idle control. • Inhibits i-stop control. • Inhibits AAS.
POSSIBLE CAUSE	• Oil pressure switch No.1 malfunction
SYSTEM WIRING DIAGRAM	—

Diagnostic procedure

STEP	INSPECTION		ACTION
1	**VERIFY THE DTC OUTPUT STATUS** • Is the DTC P1738:00 also present?	Yes	Go to the applicable DTC inspection. (See 05-02A-81 DTC P1738:00 [FW6A-EL, FW6AX-EL].)
		No	Go to the next step.
2	**VERIFY FREEZE FRAME DATA/SNAPSHOT DATA HAS BEEN RECORDED** • Has the freeze frame data/snapshot data been recorded on the repair order?	Yes	Go to the next step.
		No	Record the freeze frame data/snapshot data on the repair order, then go to the next step.
3	**VERIFY RELATED SERVICE INFORMATION AVAILABILITY** • Verify related Service Information availability. • Is any related Service Information available?	Yes	Perform repair or diagnosis according to the available Service Information. • If the vehicle is not repaired, go to the next step.
		No	Go to the next step.
4	**PERFORM ON-BOARD DIAGNOSTIC TEST** • Perform the following procedure to ensure that the DTC has been resolved: 1. Start the engine. 2. Verify that the ATF temperature is **55 °C {131 °F} or more**. • Perform the on-board diagnostic test. (See 05-02A-9 ON-BOARD DIAGNOSTIC TEST MODE [FW6A-EL, FW6AX-EL].) • Are P0842:00 present?	Yes	Replace the oil pressure switch No.1, then go to the next step. (See 05-17A-20 OIL PRESSURE SWITCH REMOVAL/INSTALLATION [FW6A-EL, FW6AX-EL])
		No	No DTCs are displayed: • Drive the vehicle to check it, and if there is no problem then the DTC troubleshooting is complete. If a DTC other than the one indicated on the left is displayed: • Go to the applicable DTC inspection. (See 05-02A-11 ON-BOARD DIAGNOSTIC SYSTEM DTC TABLE [FW6A-EL, FW6AX-EL].)
5	**RE-PERFORM ON-BOARD DIAGNOSTIC TEST** • Perform the following procedure to ensure that the DTC has been resolved: 1. Start the engine. 2. Verify that the ATF temperature is **55 °C {131 °F} or more**. • Perform the on-board diagnostic test. (See 05-02A-9 ON-BOARD DIAGNOSTIC TEST MODE [FW6A-EL, FW6AX-EL].) • Are any DTCs present?	Yes	Go to the applicable DTC inspection. (See 05-02A-11 ON-BOARD DIAGNOSTIC SYSTEM DTC TABLE [FW6A-EL, FW6AX-EL].)
		No	DTC troubleshooting completed.

ON-BOARD DIAGNOSTIC [FW6A-EL, FW6AX-EL]

DTC P0843:00 [FW6A-EL, FW6AX-EL]

id050227822700

DTC P0843:00	**Oil pressure switch No.1 stuck off**
DETECTION CONDITION	• Under the following conditions, oil pressure switch No.1 stuck-off detected by combination of gear ratio malfunction and oil pressure switch pattern malfunction: — Engine is running. — Battery voltage is **8 V or more**. — ATF temperature is **20 °C {68 °F} or more**. **Diagnostic support note** • The check engine light illuminates if the TCM detects the above malfunction condition in two consecutive drive cycles or in one drive cycle while the DTC for the same malfunction has been stored in the TCM. • The automatic transaxle warning light illuminates if the TCM detects the above malfunction condition in two consecutive drive cycles or in one drive cycle while the DTC for the same malfunction has been stored in the TCM. • PENDING CODE is available. • FREEZE FRAME DATA is available. • The DTC is stored in the TCM memory.
FAIL-SAFE FUNCTION	• Inhibits malfunctioning gear. • Limits engine torque. • Inhibits learning control. • Inhibits manual mode. • Inhibits neutral idle control. • Inhibits i-stop control. • Inhibits AAS.
POSSIBLE CAUSE	• ATF is less than specified value • Oil pressure switch No.1 malfunction
SYSTEM WIRING DIAGRAM	—

Diagnostic procedure

STEP	INSPECTION		ACTION
1	**VERIFY THE DTC OUTPUT STATUS** • Is the DTC P1738:00 also present?	Yes	Go to the applicable DTC inspection. (See 05-02A-81 DTC P1738:00 [FW6A-EL, FW6AX-EL].)
		No	Go to the next step.
2	**VERIFY FREEZE FRAME DATA/SNAPSHOT DATA HAS BEEN RECORDED** • Has the freeze frame data/snapshot data been recorded on the repair order?	Yes	Go to the next step.
		No	Record the freeze frame data/snapshot data on the repair order, then go to the next step.
3	**VERIFY RELATED SERVICE INFORMATION AVAILABILITY** • Verify related Service Information availability. • Is any related Service Information available?	Yes	Perform repair or diagnosis according to the available Service Information. • If the vehicle is not repaired, go to the next step.
		No	Go to the next step.
4	**VERIFY THAT DTC IS PRESENT** • Clear the DTC using the M-MDS. (See 05-02A-7 ON-BOARD DIAGNOSTIC SYSTEM DTC INSPECTION [FW6A-EL, FW6AX-EL].) • Perform the following procedure to ensure that the DTC has been resolved: 1. Start the engine. 2. Verify that the ATF temperature is **20 °C {68 °F} or more**. • Perform the DTC inspection using the M-MDS. (See 05-02A-7 ON-BOARD DIAGNOSTIC SYSTEM DTC INSPECTION [FW6A-EL, FW6AX-EL].) • Is the DTC P0843:00 or P0878:00 present?	Yes	Go to the next step.
		No	DTC troubleshooting completed.
5	**INSPECT ATF LEVEL** • Inspect the ATF level. (See 05-17A-11 AUTOMATIC TRANSAXLE FLUID (ATF) INSPECTION [FW6A-EL, FW6AX-EL].) • Is there any malfunction?	Yes	Adjust the ATF level to the specification, then go to Step 7. (See 05-17A-12 AUTOMATIC TRANSAXLE FLUID (ATF) REPLACEMENT [FW6A-EL, FW6AX-EL].)
		No	DTC P0843:00 and P0878:00 are displayed in Step 4: • Repair or replace the wiring harness between TCM and oil pressure switch A, then go to Step 7. Only DTC P0843:00 is displayed in Step 4: • Go to the next step.

ON-BOARD DIAGNOSTIC [FW6A-EL, FW6AX-EL]

STEP	INSPECTION		ACTION
6	**INSPECT OIL PRESSURE SWITCH A CONNECTOR AND OIL PRESSURE SWITCH NO.1 CIRCUIT** • Visually inspect for poor connection and open circuit. • Is there any malfunction?	Yes	Repair or replace the wiring harness between TCM and oil pressure switch A, then go to the next step.
		No	Replace the oil pressure switch A, then go to the next step. (See 05-17A-20 OIL PRESSURE SWITCH REMOVAL/ INSTALLATION [FW6A-EL, FW6AX-EL].)
7	**PERFORM ON-BOARD DIAGNOSTIC TEST** • Perform the following procedure to ensure that the DTC has been resolved: 1. Start the engine. 2. Verify that the ATF temperature is **55 °C {131 °F} or more**. • Perform the on-board diagnostic test. (See 05-02A-9 ON-BOARD DIAGNOSTIC TEST MODE [FW6A-EL, FW6AX-EL].) • Are any DTCs present?	Yes	ATF amount in Step 5 is correct • Replace the automatic transaxle, then drive the vehicle to check it, and if there is no problem then the DTC troubleshooting is complete. (See 05-17A-28 AUTOMATIC TRANSAXLE REMOVAL/ INSTALLATION [FW6A-EL].) (See 05-17A-43 AUTOMATIC TRANSAXLE REMOVAL/ INSTALLATION [FW6AX-EL].) ATF amount adjusted in Step 5: • Replace the control valve body, then go to the next step. (See 05-17A-67 CONTROL VALVE BODY REMOVAL/ INSTALLATION [FW6A-EL, FW6AX-EL].)
		No	Drive the vehicle to check it, and if there is no problem then the DTC troubleshooting is complete.
8	**RE-PERFORM ON-BOARD DIAGNOSTIC TEST** • Perform the following procedure to ensure that the DTC has been resolved: 1. Start the engine. 2. Verify that the ATF temperature is **55 °C {131 °F} or more**. • Perform the on-board diagnostic test. (See 05-02A-9 ON-BOARD DIAGNOSTIC TEST MODE [FW6A-EL, FW6AX-EL].) • Are any DTCs present?	Yes	Go to the applicable DTC inspection. (See 05-02A-11 ON-BOARD DIAGNOSTIC SYSTEM DTC TABLE [FW6A-EL, FW6AX-EL].)
		No	DTC troubleshooting completed.

DTC P0847:00 [FW6A-EL, FW6AX-EL]

id050227904500

DTC P0847:00	**Oil pressure switch No.2 stuck on**
DETECTION CONDITION	• Under the following conditions, oil pressure switch No.2 stuck-on detected by combination of gear ratio malfunction and oil pressure switch pattern malfunction: — Engine is running. — Battery voltage is **8 V or more**. — ATF temperature is **20 °C {68 °F} or more**. **Diagnostic support note** • The check engine light illuminates if the TCM detects the above malfunction condition in two consecutive drive cycles or in one drive cycle while the DTC for the same malfunction has been stored in the TCM. • The automatic transaxle warning light illuminates if the TCM detects the above malfunction condition in two consecutive drive cycles or in one drive cycle while the DTC for the same malfunction has been stored in the TCM. • PENDING CODE is available. • FREEZE FRAME DATA is available. • The DTC is stored in the TCM memory.
FAIL-SAFE FUNCTION	• Limits engine torque. • Inhibits learning control. • Inhibits manual mode. • Inhibits neutral idle control. • Inhibits i-stop control. • Inhibits AAS.
POSSIBLE CAUSE	• Oil pressure switch No.2 malfunction
SYSTEM WIRING DIAGRAM	—

ON-BOARD DIAGNOSTIC [FW6A-EL, FW6AX-EL]

Diagnostic procedure

STEP	INSPECTION		ACTION
1	**VERIFY THE DTC OUTPUT STATUS** • Is the DTC P1738:00 also present?	Yes	Go to the applicable DTC inspection. (See 05-02A-81 DTC P1738:00 [FW6A-EL, FW6AX-EL].)
		No	Go to the next step.
2	**VERIFY FREEZE FRAME DATA/SNAPSHOT DATA HAS BEEN RECORDED** • Has the freeze frame data/snapshot data been recorded on the repair order?	Yes	Go to the next step.
		No	Record the freeze frame data/snapshot data on the repair order, then go to the next step.
3	**VERIFY RELATED SERVICE INFORMATION AVAILABILITY** • Verify related Service Information availability. • Is any related Service Information available?	Yes	Perform repair or diagnosis according to the available Service Information. • If the vehicle is not repaired, go to the next step.
		No	Go to the next step.
4	**PERFORM ON-BOARD DIAGNOSTIC TEST** • Perform the following procedure to ensure that the DTC has been resolved: 1. Start the engine. 2. Verify that the ATF temperature is **55 °C {131 °F} or more**. • Perform the on-board diagnostic test. (See 05-02A-9 ON-BOARD DIAGNOSTIC TEST MODE [FW6A-EL, FW6AX-EL].) • Are P0847:00 present?	Yes	Replace the oil pressure switch No.2, then go to the next step. (See 05-17A-20 OIL PRESSURE SWITCH REMOVAL/INSTALLATION [FW6A-EL, FW6AX-EL])
		No	No DTCs are displayed: • Drive the vehicle to check it, and if there is no problem then the DTC troubleshooting is complete. If a DTC other than the one indicated on the left is displayed: • Go to the applicable DTC inspection. (See 05-02A-11 ON-BOARD DIAGNOSTIC SYSTEM DTC TABLE [FW6A-EL, FW6AX-EL].)
5	**RE-PERFORM ON-BOARD DIAGNOSTIC TEST** • Perform the following procedure to ensure that the DTC has been resolved: 1. Start the engine. 2. Verify that the ATF temperature is **55 °C {131 °F} or more**. • Perform the on-board diagnostic test. (See 05-02A-9 ON-BOARD DIAGNOSTIC TEST MODE [FW6A-EL, FW6AX-EL].) • Are any DTCs present?	Yes	Go to the applicable DTC inspection. (See 05-02A-11 ON-BOARD DIAGNOSTIC SYSTEM DTC TABLE [FW6A-EL, FW6AX-EL].)
		No	DTC troubleshooting completed.

DTC P0848:00 [FW6A-EL, FW6AX-EL]

id050227904600

DTC P0848:00	**Oil pressure switch No.2 stuck off**
DETECTION CONDITION	• Under the following conditions, oil pressure switch No.2 stuck-off detected by combination of gear ratio malfunction and oil pressure switch pattern malfunction: — Engine is running. — Battery voltage is **8 V or more**. — ATF temperature is **20 °C {68 °F} or more**. **Diagnostic support note** • The check engine light illuminates if the TCM detects the above malfunction condition in two consecutive drive cycles or in one drive cycle while the DTC for the same malfunction has been stored in the TCM. • The automatic transaxle warning light illuminates if the TCM detects the above malfunction condition in two consecutive drive cycles or in one drive cycle while the DTC for the same malfunction has been stored in the TCM. • PENDING CODE is available. • FREEZE FRAME DATA is available. • The DTC is stored in the TCM memory.
FAIL-SAFE FUNCTION	• Inhibits malfunctioning gear. • Limits engine torque. • Inhibits learning control. • Inhibits manual mode. • Inhibits neutral idle control. • Inhibits i-stop control. • Inhibits AAS.
POSSIBLE CAUSE	• ATF is less than specified value • Oil pressure switch No.2 malfunction
SYSTEM WIRING DIAGRAM	—

ON-BOARD DIAGNOSTIC [FW6A-EL, FW6AX-EL]

Diagnostic procedure

STEP	INSPECTION		ACTION
1	**VERIFY THE DTC OUTPUT STATUS** • Is the DTC P1738:00 also present?	Yes	Go to the applicable DTC inspection. (See 05-02A-81 DTC P1738:00 [FW6A-EL, FW6AX-EL].)
		No	Go to the next step.
2	**VERIFY FREEZE FRAME DATA/SNAPSHOT DATA HAS BEEN RECORDED** • Has the freeze frame data/snapshot data been recorded on the repair order?	Yes	Go to the next step.
		No	Record the freeze frame data/snapshot data on the repair order, then go to the next step.
3	**VERIFY RELATED SERVICE INFORMATION AVAILABILITY** • Verify related Service Information availability. • Is any related Service Information available?	Yes	Perform repair or diagnosis according to the available Service Information. • If the vehicle is not repaired, go to the next step.
		No	Go to the next step.
4	**VERIFY THAT DTC IS PRESENT** • Clear the DTC using the M-MDS. (See 05-02A-7 ON-BOARD DIAGNOSTIC SYSTEM DTC INSPECTION [FW6A-EL, FW6AX-EL].) • Perform the following procedure to ensure that the DTC has been resolved: 1. Start the engine. 2. Verify that the ATF temperature is **20 °C {68 °F} or more**. • Perform the DTC inspection using the M-MDS. (See 05-02A-7 ON-BOARD DIAGNOSTIC SYSTEM DTC INSPECTION [FW6A-EL, FW6AX-EL].) • Is the DTC P0848:00 or P0873:00 present?	Yes	Go to the next step.
		No	DTC troubleshooting completed.
5	**INSPECT ATF LEVEL** • Inspect the ATF level. (See 05-17A-11 AUTOMATIC TRANSAXLE FLUID (ATF) INSPECTION [FW6A-EL, FW6AX-EL].) • Is there any malfunction?	Yes	Adjust the ATF level to the specification, then go to Step 7. (See 05-17A-12 AUTOMATIC TRANSAXLE FLUID (ATF) REPLACEMENT [FW6A-EL, FW6AX-EL].)
		No	DTC P0848:00 and P0873:00 are displayed in Step 4: • Repair or replace the wiring harness between TCM and oil pressure switch B, then go to Step 7. Only DTC P0848:00 is displayed in Step 4: • Go to the next step.
6	**INSPECT OIL PRESSURE SWITCH B CONNECTOR AND OIL PRESSURE SWITCH NO.2 CIRCUIT** • Visually inspect for poor connection and open circuit. • Is there any malfunction?	Yes	Repair or replace the wiring harness between TCM and oil pressure switch B, then go to the next step.
		No	Replace the oil pressure switch B, then go to the next step. (See 05-17A-20 OIL PRESSURE SWITCH REMOVAL/INSTALLATION [FW6A-EL, FW6AX-EL].)
7	**PERFORM ON-BOARD DIAGNOSTIC TEST** • Perform the following procedure to ensure that the DTC has been resolved: 1. Start the engine. 2. Verify that the ATF temperature is **55 °C {131 °F} or more**. • Perform the on-board diagnostic test. (See 05-02A-9 ON-BOARD DIAGNOSTIC TEST MODE [FW6A-EL, FW6AX-EL].) • Are any DTCs present?	Yes	ATF amount in Step 5 is correct • Replace the automatic transaxle, then drive the vehicle to check it, and if there is no problem then the DTC troubleshooting is complete. (See 05-17A-28 AUTOMATIC TRANSAXLE REMOVAL/INSTALLATION [FW6A-EL].) (See 05-17A-43 AUTOMATIC TRANSAXLE REMOVAL/INSTALLATION [FW6AX-EL].) ATF amount adjusted in Step 5: • Replace the control valve body, then go to the next step. (See 05-17A-67 CONTROL VALVE BODY REMOVAL/INSTALLATION [FW6A-EL, FW6AX-EL].)
		No	Drive the vehicle to check it, and if there is no problem then the DTC troubleshooting is complete.
8	**RE-PERFORM ON-BOARD DIAGNOSTIC TEST** • Perform the following procedure to ensure that the DTC has been resolved: 1. Start the engine. 2. Verify that the ATF temperature is **55 °C {131 °F} or more**. • Perform the on-board diagnostic test. (See 05-02A-9 ON-BOARD DIAGNOSTIC TEST MODE [FW6A-EL, FW6AX-EL].) • Are any DTCs present?	Yes	Go to the applicable DTC inspection. (See 05-02A-11 ON-BOARD DIAGNOSTIC SYSTEM DTC TABLE [FW6A-EL, FW6AX-EL].)
		No	DTC troubleshooting completed.

ON-BOARD DIAGNOSTIC [FW6A-EL, FW6AX-EL]

DTC P0872:00 [FW6A-EL, FW6AX-EL]

id050227904700

DTC P0872:00	**Oil pressure switch No.3 stuck on**
DETECTION CONDITION	• Under the following conditions, oil pressure switch No.3 stuck-on detected by combination of gear ratio malfunction and oil pressure switch pattern malfunction: — Engine is running. — Battery voltage is **8 V or more**. — ATF temperature is **20 °C {68 °F} or more**. **Diagnostic support note** • The check engine light illuminates if the TCM detects the above malfunction condition in two consecutive drive cycles or in one drive cycle while the DTC for the same malfunction has been stored in the TCM. • The automatic transaxle warning light illuminates if the TCM detects the above malfunction condition in two consecutive drive cycles or in one drive cycle while the DTC for the same malfunction has been stored in the TCM. • PENDING CODE is available. • FREEZE FRAME DATA is available. • The DTC is stored in the TCM memory.
FAIL-SAFE FUNCTION	• Limits engine torque. • Inhibits learning control. • Inhibits manual mode. • Inhibits neutral idle control. • Inhibits i-stop control. • Inhibits AAS.
POSSIBLE CAUSE	• Oil pressure switch No.3 malfunction
SYSTEM WIRING DIAGRAM	—

Diagnostic procedure

STEP	INSPECTION		ACTION
1	**VERIFY THE DTC OUTPUT STATUS** • Is the DTC P1738:00 also present?	Yes	Go to the applicable DTC inspection. (See 05-02A-81 DTC P1738:00 [FW6A-EL, FW6AX-EL].)
		No	Go to the next step.
2	**VERIFY FREEZE FRAME DATA/SNAPSHOT DATA HAS BEEN RECORDED** • Has the freeze frame data/snapshot data been recorded on the repair order?	Yes	Go to the next step.
		No	Record the freeze frame data/snapshot data on the repair order, then go to the next step.
3	**VERIFY RELATED SERVICE INFORMATION AVAILABILITY** • Verify related Service Information availability. • Is any related Service Information available?	Yes	Perform repair or diagnosis according to the available Service Information. • If the vehicle is not repaired, go to the next step.
		No	Go to the next step.
4	**PERFORM ON-BOARD DIAGNOSTIC TEST** • Perform the following procedure to ensure that the DTC has been resolved: 1. Start the engine. 2. Verify that the ATF temperature is **55 °C {131 °F} or more**. • Perform the on-board diagnostic test. (See 05-02A-9 ON-BOARD DIAGNOSTIC TEST MODE [FW6A-EL, FW6AX-EL].) • Are P0872:00 present?	Yes	Replace the oil pressure switch No.3, then go to the next step. (See 05-17A-20 OIL PRESSURE SWITCH REMOVAL/INSTALLATION [FW6A-EL, FW6AX-EL])
		No	No DTCs are displayed: • Drive the vehicle to check it, and if there is no problem then the DTC troubleshooting is complete. If a DTC other than the one indicated on the left is displayed: • Go to the applicable DTC inspection. (See 05-02A-11 ON-BOARD DIAGNOSTIC SYSTEM DTC TABLE [FW6A-EL, FW6AX-EL].)
5	**RE-PERFORM ON-BOARD DIAGNOSTIC TEST** • Perform the following procedure to ensure that the DTC has been resolved: 1. Start the engine. 2. Verify that the ATF temperature is **55 °C {131 °F} or more**. • Perform the on-board diagnostic test. (See 05-02A-9 ON-BOARD DIAGNOSTIC TEST MODE [FW6A-EL, FW6AX-EL].) • Are any DTCs present?	Yes	Go to the applicable DTC inspection. (See 05-02A-11 ON-BOARD DIAGNOSTIC SYSTEM DTC TABLE [FW6A-EL, FW6AX-EL].)
		No	DTC troubleshooting completed.

ON-BOARD DIAGNOSTIC [FW6A-EL, FW6AX-EL]

DTC P0873:00 [FW6A-EL, FW6AX-EL]

id050227904800

DTC P0873:00	**Oil pressure switch No.3 stuck off**
DETECTION CONDITION	• Under the following conditions, oil pressure switch No.3 stuck-off detected by combination of gear ratio malfunction and oil pressure switch pattern malfunction: — Engine is running. — Battery voltage is **8 V or more**. — ATF temperature is **20 °C {68 °F} or more**. **Diagnostic support note** • The check engine light illuminates if the TCM detects the above malfunction condition in two consecutive drive cycles or in one drive cycle while the DTC for the same malfunction has been stored in the TCM. • The automatic transaxle warning light illuminates if the TCM detects the above malfunction condition in two consecutive drive cycles or in one drive cycle while the DTC for the same malfunction has been stored in the TCM. • PENDING CODE is available. • FREEZE FRAME DATA is available. • The DTC is stored in the TCM memory.
FAIL-SAFE FUNCTION	• Inhibits malfunctioning gear. • Limits engine torque. • Inhibits learning control. • Inhibits manual mode. • Inhibits neutral idle control. • Inhibits i-stop control. • Inhibits AAS.
POSSIBLE CAUSE	• ATF is less than specified value • Oil pressure switch No.3 malfunction
SYSTEM WIRING DIAGRAM	—

Diagnostic procedure

STEP	INSPECTION		ACTION
1	**VERIFY THE DTC OUTPUT STATUS** • Is the DTC P1738:00 also present?	Yes	Go to the applicable DTC inspection. (See 05-02A-81 DTC P1738:00 [FW6A-EL, FW6AX-EL].)
		No	Go to the next step.
2	**VERIFY FREEZE FRAME DATA/SNAPSHOT DATA HAS BEEN RECORDED** • Has the freeze frame data/snapshot data been recorded on the repair order?	Yes	Go to the next step.
		No	Record the freeze frame data/snapshot data on the repair order, then go to the next step.
3	**VERIFY RELATED SERVICE INFORMATION AVAILABILITY** • Verify related Service Information availability. • Is any related Service Information available?	Yes	Perform repair or diagnosis according to the available Service Information. • If the vehicle is not repaired, go to the next step.
		No	Go to the next step.
4	**VERIFY THAT DTC IS PRESENT** • Clear the DTC using the M-MDS. (See 05-02A-7 ON-BOARD DIAGNOSTIC SYSTEM DTC INSPECTION [FW6A-EL, FW6AX-EL].) • Perform the following procedure to ensure that the DTC has been resolved: 1. Start the engine. 2. Verify that the ATF temperature is **20 °C {68 °F} or more**. • Perform the DTC inspection using the M-MDS. (See 05-02A-7 ON-BOARD DIAGNOSTIC SYSTEM DTC INSPECTION [FW6A-EL, FW6AX-EL].) • Is the DTC P0848:00 or P0873:00 present?	Yes	Go to the next step.
		No	DTC troubleshooting completed.

ON-BOARD DIAGNOSTIC [FW6A-EL, FW6AX-EL]

STEP	INSPECTION		ACTION
5	**INSPECT ATF LEVEL** • Inspect the ATF level. (See 05-17A-11 AUTOMATIC TRANSAXLE FLUID (ATF) INSPECTION [FW6A-EL, FW6AX-EL].) • Is there any malfunction?	Yes	Adjust the ATF level to the specification, then go to Step 7. (See 05-17A-12 AUTOMATIC TRANSAXLE FLUID (ATF) REPLACEMENT [FW6A-EL, FW6AX-EL].)
		No	DTC P0848:00 and P0873:00 are displayed in Step 4: • Repair or replace the wiring harness between TCM and oil pressure switch B, then go to Step 7. Only DTC P0873:00 is displayed in Step 4: • Go to the next step.
6	**INSPECT OIL PRESSURE SWITCH B CONNECTOR AND OIL PRESSURE SWITCH NO.3 CIRCUIT** • Visually inspect for poor connection and open circuit. • Is there any malfunction?	Yes	Repair or replace the wiring harness between TCM and oil pressure switch B, then go to the next step.
		No	Replace the oil pressure switch B, then go to the next step. (See 05-17A-20 OIL PRESSURE SWITCH REMOVAL/INSTALLATION [FW6A-EL, FW6AX-EL].)
7	**PERFORM ON-BOARD DIAGNOSTIC TEST** • Perform the following procedure to ensure that the DTC has been resolved: 1. Start the engine. 2. Verify that the ATF temperature is **55 °C {131 °F} or more**. • Perform the on-board diagnostic test. (See 05-02A-9 ON-BOARD DIAGNOSTIC TEST MODE [FW6A-EL, FW6AX-EL].) • Are any DTCs present?	Yes	ATF amount in Step 5 is correct • Replace the automatic transaxle, then drive the vehicle to check it, and if there is no problem then the DTC troubleshooting is complete. (See 05-17A-28 AUTOMATIC TRANSAXLE REMOVAL/INSTALLATION [FW6A-EL].) (See 05-17A-43 AUTOMATIC TRANSAXLE REMOVAL/INSTALLATION [FW6AX-EL].) ATF amount adjusted in Step 5: • Replace the control valve body, then go to the next step. (See 05-17A-67 CONTROL VALVE BODY REMOVAL/INSTALLATION [FW6A-EL, FW6AX-EL].)
		No	Drive the vehicle to check it, and if there is no problem then the DTC troubleshooting is complete.
8	**RE-PERFORM ON-BOARD DIAGNOSTIC TEST** • Perform the following procedure to ensure that the DTC has been resolved: 1. Start the engine. 2. Verify that the ATF temperature is **55 °C {131 °F} or more**. • Perform the on-board diagnostic test. (See 05-02A-9 ON-BOARD DIAGNOSTIC TEST MODE [FW6A-EL, FW6AX-EL].) • Are any DTCs present?	Yes	Go to the applicable DTC inspection. (See 05-02A-11 ON-BOARD DIAGNOSTIC SYSTEM DTC TABLE [FW6A-EL, FW6AX-EL].)
		No	DTC troubleshooting completed.

ON-BOARD DIAGNOSTIC [FW6A-EL, FW6AX-EL]

DTC P0877:00 [FW6A-EL, FW6AX-EL]

id050227904900

DTC P0877:00	**Oil pressure switch No.4 stuck on**
DETECTION CONDITION	• Under the following conditions, oil pressure switch No.4 stuck-on detected by combination of gear ratio malfunction and oil pressure switch pattern malfunction: — Engine is running. — Battery voltage is **8 V or more**. — ATF temperature is **20 °C {68 °F} or more**. **Diagnostic support note** • The check engine light illuminates if the TCM detects the above malfunction condition in two consecutive drive cycles or in one drive cycle while the DTC for the same malfunction has been stored in the TCM. • The automatic transaxle warning light illuminates if the TCM detects the above malfunction condition in two consecutive drive cycles or in one drive cycle while the DTC for the same malfunction has been stored in the TCM. • PENDING CODE is available. • FREEZE FRAME DATA is available. • The DTC is stored in the TCM memory.
FAIL-SAFE FUNCTION	• Limits engine torque. • Inhibits learning control. • Inhibits manual mode. • Inhibits neutral idle control. • Inhibits i-stop control. • Inhibits AAS.
POSSIBLE CAUSE	• Oil pressure switch No.4 malfunction
SYSTEM WIRING DIAGRAM	—

Diagnostic procedure

STEP	INSPECTION		ACTION
1	**VERIFY THE DTC OUTPUT STATUS** • Is the DTC P1738:00 also present?	Yes	Go to the applicable DTC inspection. (See 05-02A-81 DTC P1738:00 [FW6A-EL, FW6AX-EL].)
		No	Go to the next step.
2	**VERIFY FREEZE FRAME DATA/SNAPSHOT DATA HAS BEEN RECORDED** • Has the freeze frame data/snapshot data been recorded on the repair order?	Yes	Go to the next step.
		No	Record the freeze frame data/snapshot data on the repair order, then go to the next step.
3	**VERIFY RELATED SERVICE INFORMATION AVAILABILITY** • Verify related Service Information availability. • Is any related Service Information available?	Yes	Perform repair or diagnosis according to the available Service Information. • If the vehicle is not repaired, go to the next step.
		No	Go to the next step.
4	**PERFORM ON-BOARD DIAGNOSTIC TEST** • Perform the following procedure to ensure that the DTC has been resolved: 1. Start the engine. 2. Verify that the ATF temperature is **55 °C {131 °F} or more**. • Perform the on-board diagnostic test. (See 05-02A-9 ON-BOARD DIAGNOSTIC TEST MODE [FW6A-EL, FW6AX-EL].) • Are P0877:00 present?	Yes	Replace the oil pressure switch No.4, then go to the next step. (See 05-17A-20 OIL PRESSURE SWITCH REMOVAL/INSTALLATION [FW6A-EL, FW6AX-EL])
		No	No DTCs are displayed: • Drive the vehicle to check it, and if there is no problem then the DTC troubleshooting is complete. If a DTC other than the one indicated on the left is displayed: • Go to the applicable DTC inspection. (See 05-02A-11 ON-BOARD DIAGNOSTIC SYSTEM DTC TABLE [FW6A-EL, FW6AX-EL].)
5	**RE-PERFORM ON-BOARD DIAGNOSTIC TEST** • Perform the following procedure to ensure that the DTC has been resolved: 1. Start the engine. 2. Verify that the ATF temperature is **55 °C {131 °F} or more**. • Perform the on-board diagnostic test. (See 05-02A-9 ON-BOARD DIAGNOSTIC TEST MODE [FW6A-EL, FW6AX-EL].) • Are any DTCs present?	Yes	Go to the applicable DTC inspection. (See 05-02A-11 ON-BOARD DIAGNOSTIC SYSTEM DTC TABLE [FW6A-EL, FW6AX-EL].)
		No	DTC troubleshooting completed.

ON-BOARD DIAGNOSTIC [FW6A-EL, FW6AX-EL]

DTC P0878:00 [FW6A-EL, FW6AX-EL]

id050227905000

DTC P0878:00	**Oil pressure switch No.4 stuck off**
DETECTION CONDITION	• Under the following conditions, oil pressure switch No.4 stuck-off detected by combination of gear ratio malfunction and oil pressure switch pattern malfunction: — Engine is running. — Battery voltage is **8 V or more**. — ATF temperature is **20 °C {68 °F} or more**. **Diagnostic support note** • The check engine light illuminates if the TCM detects the above malfunction condition in two consecutive drive cycles or in one drive cycle while the DTC for the same malfunction has been stored in the TCM. • The automatic transaxle warning light illuminates if the TCM detects the above malfunction condition in two consecutive drive cycles or in one drive cycle while the DTC for the same malfunction has been stored in the TCM. • PENDING CODE is available. • FREEZE FRAME DATA is available. • The DTC is stored in the TCM memory.
FAIL-SAFE FUNCTION	• Inhibits malfunctioning gear. • Limits engine torque. • Inhibits learning control. • Inhibits manual mode. • Inhibits neutral idle control. • Inhibits i-stop control. • Inhibits AAS.
POSSIBLE CAUSE	• ATF is less than specified value • Oil pressure switch No.4 malfunction
SYSTEM WIRING DIAGRAM	—

Diagnostic procedure

STEP	INSPECTION		ACTION
1	**VERIFY THE DTC OUTPUT STATUS** • Is the DTC P1738:00 also present?	Yes	Go to the applicable DTC inspection. (See 05-02A-81 DTC P1738:00 [FW6A-EL, FW6AX-EL].)
		No	Go to the next step.
2	**VERIFY FREEZE FRAME DATA/SNAPSHOT DATA HAS BEEN RECORDED** • Has the freeze frame data/snapshot data been recorded on the repair order?	Yes	Go to the next step.
		No	Record the freeze frame data/snapshot data on the repair order, then go to the next step.
3	**VERIFY RELATED SERVICE INFORMATION AVAILABILITY** • Verify related Service Information availability. • Is any related Service Information available?	Yes	Perform repair or diagnosis according to the available Service Information. • If the vehicle is not repaired, go to the next step.
		No	Go to the next step.
4	**VERIFY THAT DTC IS PRESENT** • Clear the DTC using the M-MDS. (See 05-02A-7 ON-BOARD DIAGNOSTIC SYSTEM DTC INSPECTION [FW6A-EL, FW6AX-EL].) • Perform the following procedure to ensure that the DTC has been resolved: 1. Start the engine. 2. Verify that the ATF temperature is **20 °C {68 °F} or more**. • Perform the DTC inspection using the M-MDS. (See 05-02A-7 ON-BOARD DIAGNOSTIC SYSTEM DTC INSPECTION [FW6A-EL, FW6AX-EL].) • Is the DTC P0843:00 or P0878:00 present?	Yes	Go to the next step.
		No	DTC troubleshooting completed.
5	**INSPECT ATF LEVEL** • Inspect the ATF level. (See 05-17A-11 AUTOMATIC TRANSAXLE FLUID (ATF) INSPECTION [FW6A-EL, FW6AX-EL].) • Is there any malfunction?	Yes	Adjust the ATF level to the specification, then go to Step 7. (See 05-17A-12 AUTOMATIC TRANSAXLE FLUID (ATF) REPLACEMENT [FW6A-EL, FW6AX-EL].)
		No	DTC P0843:00 and P0878:00 are displayed in Step 4: • Repair or replace the wiring harness between TCM and oil pressure switch A, then go to Step 7. Only DTC P0878:00 is displayed in Step 4: • Go to the next step.

ON-BOARD DIAGNOSTIC [FW6A-EL, FW6AX-EL]

STEP	INSPECTION		ACTION
6	**INSPECT OIL PRESSURE SWITCH A CONNECTOR AND OIL PRESSURE SWITCH NO.4 CIRCUIT** • Visually inspect for poor connection and open circuit. • Is there any malfunction?	Yes	Repair or replace the wiring harness between TCM and oil pressure switch A, then go to the next step.
		No	Replace the oil pressure switch A, then go to the next step. (See 05-17A-20 OIL PRESSURE SWITCH REMOVAL/ INSTALLATION [FW6A-EL, FW6AX-EL].)
7	**PERFORM ON-BOARD DIAGNOSTIC TEST** • Perform the following procedure to ensure that the DTC has been resolved: 1. Start the engine. 2. Verify that the ATF temperature is **55 °C {131 °F} or more**. • Perform the on-board diagnostic test. (See 05-02A-9 ON-BOARD DIAGNOSTIC TEST MODE [FW6A-EL, FW6AX-EL].) • Are any DTCs present?	Yes	ATF amount in Step 5 is correct • Replace the automatic transaxle, then drive the vehicle to check it, and if there is no problem then the DTC troubleshooting is complete. (See 05-17A-28 AUTOMATIC TRANSAXLE REMOVAL/ INSTALLATION [FW6A-EL].) (See 05-17A-43 AUTOMATIC TRANSAXLE REMOVAL/ INSTALLATION [FW6AX-EL].) ATF amount adjusted in Step 5: • Replace the control valve body, then go to the next step. (See 05-17A-67 CONTROL VALVE BODY REMOVAL/ INSTALLATION [FW6A-EL, FW6AX-EL].)
		No	Drive the vehicle to check it, and if there is no problem then the DTC troubleshooting is complete.
8	**RE-PERFORM ON-BOARD DIAGNOSTIC TEST** • Perform the following procedure to ensure that the DTC has been resolved: 1. Start the engine. 2. Verify that the ATF temperature is **55 °C {131 °F} or more**. • Perform the on-board diagnostic test. (See 05-02A-9 ON-BOARD DIAGNOSTIC TEST MODE [FW6A-EL, FW6AX-EL].) • Are any DTCs present?	Yes	Go to the applicable DTC inspection. (See 05-02A-11 ON-BOARD DIAGNOSTIC SYSTEM DTC TABLE [FW6A-EL, FW6AX-EL].)
		No	DTC troubleshooting completed.

DTC P0882:00 [FW6A-EL, FW6AX-EL]

id050227823100

DTC P0882:00	**TCM power supply voltage low**
DETECTION CONDITION	• Under the following conditions, the TCM power supply voltage is **8—10.5 V or less** (varies with ATF temperature): — **5 s or more** has elapsed or battery voltage exceeds **11 V or more** for **0.2 s** since engine speed increases –**200 rpm or more** of target idle speed. — Selector lever position is D or R position. **Diagnostic support note** • The check engine light illuminates if the TCM detects the above malfunction condition during the first drive cycle. • The automatic transaxle warning light does not illuminate. • PENDING CODE is available. • FREEZE FRAME DATA is available. • The DTC is stored in the TCM memory.
FAIL-SAFE FUNCTION	• Set to emergency mode. • Inhibits learning control. • Inhibits manual mode. • Inhibits neutral idle control. • Inhibits i-stop control. • Inhibits AAS.
POSSIBLE CAUSE	• PCM DTC is stored. • Battery malfunction • Generator malfunction • TCM connector or terminals malfunction • TCM power supply circuit malfunction — Short to ground in wiring harness between TCM 15 A fuse and TCM terminal 1A — TCM 15 A fuse malfunction — Open circuit in wiring harness between battery positive terminal and TCM terminal 1A
SYSTEM WIRING DIAGRAM	—

ON-BOARD DIAGNOSTIC [FW6A-EL, FW6AX-EL]

Diagnostic procedure

STEP	INSPECTION		ACTION
1	**VERIFY FREEZE FRAME DATA/SNAPSHOT DATA HAS BEEN RECORDED** • Has the freeze frame data/snapshot data been recorded on the repair order?	Yes	Go to the next step.
		No	Record the freeze frame data/snapshot data on the repair order, then go to the next step.
2	**VERIFY RELATED SERVICE INFORMATION AVAILABILITY** • Verify related Service Information availability. • Is any related Service Information available?	Yes	Perform repair or diagnosis according to the available Service Information. • If the vehicle is not repaired, go to the next step.
		No	Go to the next step.
3	**CONFIRM PCM DTC** • Perform the PCM DTC inspection using the M-MDS. (See 01-02-8 ON-BOARD DIAGNOSTIC TEST [SKYACTIV-G 2.0].) • Are any DTCs present?	Yes	Go to the applicable DTC inspection. (See 01-02-14 DTC TABLE [SKYACTIV-G 2.0].)
		No	Go to the next step.
4	**INSPECT BATTERY** • Inspect the battery. (See 01-17A-7 BATTERY INSPECTION [SKYACTIV-G 2.0].) (See 01-17A-8 BATTERY INSPECTION [SKYACTIV-G 2.0 (WITHOUT i-stop)].) • Is there any malfunction?	Yes	Recharge or replace the battery, then go to Step 8. (See 01-17A-9 BATTERY RECHARGING [SKYACTIV-G 2.0].) (See 01-17A-10 BATTERY RECHARGING [SKYACTIV-G 2.0 (WITHOUT i-stop)].) (See 01-17A-3 BATTERY REMOVAL/INSTALLATION [SKYACTIV-G 2.0].)
		No	Go to the next step.
5	**INSPECT GENERATOR** • Inspect the generator. (See 01-17A-19 GENERATOR INSPECTION [SKYACTIV-G 2.0].) • Is there any malfunction?	Yes	Replace the generator, then go to Step 8. (See 01-17A-17 GENERATOR REMOVAL/INSTALLATION [SKYACTIV-G 2.0].)
		No	Go to the next step.
6	**INSPECT TCM CONNECTOR AND TERMINALS** • Switch the ignition to off. • Disconnect the TCM connector. • Visually inspect the TCM connector and terminals. • Is there any malfunction?	Yes	Repair or replace the connector and/or terminals, then go to Step 8.
		No	Go to the next step.
7	**INSPECT TCM POWER SUPPLY CIRCUIT** • Make sure to reconnect all disconnected connectors. • Access the PID VPWR using the M-MDS. (See 05-02A-94 ON-BOARD DIAGNOSTIC SYSTEM PID/DATA MONITOR INSPECTION [FW6A-EL, FW6AX-EL].) • Is the PID value **B+**?	Yes	Go to the next step.
		No	Inspect the TCM 15 A fuse. • If the fuse is blown: — Repair or replace the wiring harness for a possible short to ground. — Replace the malfunctioning fuse. • If the fuse is deteriorated: — Replace the malfunctioning fuse. • If the fuse is normal: — Repair or replace the wiring harness for a possible open circuit. Go to the next step.
8	**VERIFY DTC TROUBLESHOOTING COMPLETED** • Make sure to reconnect all disconnected connectors. • Clear the DTC using the M-MDS. (See 05-02A-7 ON-BOARD DIAGNOSTIC SYSTEM DTC INSPECTION [FW6A-EL, FW6AX-EL].) • Perform the following procedure to ensure that the DTC has been resolved: 1. Drive the vehicle for **5 s or more** under the following condition: • Selector lever position: D or R position • Perform the DTC inspection using the M-MDS. (See 05-02A-7 ON-BOARD DIAGNOSTIC SYSTEM DTC INSPECTION [FW6A-EL, FW6AX-EL].) • Are any DTCs present?	Yes	Go to the applicable DTC inspection. (See 05-02A-11 ON-BOARD DIAGNOSTIC SYSTEM DTC TABLE [FW6A-EL, FW6AX-EL].)
		No	DTC troubleshooting completed.

ON-BOARD DIAGNOSTIC [FW6A-EL, FW6AX-EL]

DTC P0883:00 [FW6A-EL, FW6AX-EL]

id050227820100

DTC P0883:00	**TCM power supply voltage high**
DETECTION CONDITION	• TCM power supply voltage is **18 V or more** for **5 s**. **Diagnostic support note** • The check engine light illuminates if the TCM detects the above malfunction condition during the first drive cycle. • The automatic transaxle warning light does not illuminate. • PENDING CODE is available. • FREEZE FRAME DATA is available. • The DTC is stored in the TCM memory.
FAIL-SAFE FUNCTION	• Set to emergency mode. • Inhibits learning control. • Inhibits manual mode. • Inhibits neutral idle control. • Inhibits i-stop control. • Inhibits AAS.
POSSIBLE CAUSE	• PCM DTC is stored. • Battery malfunction • Generator malfunction
SYSTEM WIRING DIAGRAM	—

Diagnostic procedure

STEP	INSPECTION		ACTION
1	**VERIFY FREEZE FRAME DATA/SNAPSHOT DATA HAS BEEN RECORDED** • Has the freeze frame data/snapshot data been recorded on the repair order?	Yes	Go to the next step.
		No	Record the freeze frame data/snapshot data on the repair order, then go to the next step.
2	**VERIFY RELATED SERVICE INFORMATION AVAILABILITY** • Verify related Service Information availability. • Is any related Service Information available?	Yes	Perform repair or diagnosis according to the available Service Information. • If the vehicle is not repaired, go to the next step.
		No	Go to the next step.
3	**CONFIRM PCM DTC** • Perform the PCM DTC inspection using the M-MDS. (See 01-02-8 ON-BOARD DIAGNOSTIC TEST [SKYACTIV-G 2.0].) • Are any DTCs present?	Yes	Go to the applicable DTC inspection. (See 01-02-14 DTC TABLE [SKYACTIV-G 2.0].)
		No	Go to the next step.
4	**INSPECT BATTERY** • Inspect the battery. (See 01-17A-7 BATTERY INSPECTION [SKYACTIV-G 2.0].) (See 01-17A-8 BATTERY INSPECTION [SKYACTIV-G 2.0 (WITHOUT i-stop)].) • Is there any malfunction?	Yes	Replace the battery, then go to Step 6. (See 01-17A-3 BATTERY REMOVAL/INSTALLATION [SKYACTIV-G 2.0].)
		No	Go to the next step.
5	**INSPECT GENERATOR** • Inspect the generator. (See 01-17A-19 GENERATOR INSPECTION [SKYACTIV-G 2.0].) • Is there any malfunction?	Yes	Replace the generator, then go to the next step. (See 01-17A-17 GENERATOR REMOVAL/INSTALLATION [SKYACTIV-G 2.0].)
		No	Go to the next step.

ON-BOARD DIAGNOSTIC [FW6A-EL, FW6AX-EL]

STEP	INSPECTION		ACTION
6	**VERIFY DTC TROUBLESHOOTING COMPLETED** • Clear the DTC using the M-MDS. (See 05-02A-7 ON-BOARD DIAGNOSTIC SYSTEM DTC INSPECTION [FW6A-EL, FW6AX-EL].) • Perform the following procedure to ensure that the DTC has been resolved: 1. Switch the ignition ON (engine off or on) and wait for **5 s or more**. • Perform the DTC inspection using the M-MDS. (See 05-02A-7 ON-BOARD DIAGNOSTIC SYSTEM DTC INSPECTION [FW6A-EL, FW6AX-EL].) • Are any DTCs present?	Yes	Go to the applicable DTC inspection. (See 05-02A-11 ON-BOARD DIAGNOSTIC SYSTEM DTC TABLE [FW6A-EL, FW6AX-EL].)
		No	DTC troubleshooting completed.

ON-BOARD DIAGNOSTIC [FW6A-EL, FW6AX-EL]

DTC P0C2C:00 [FW6A-EL, FW6AX-EL]

id050227832600

DTC P0C2C:00	**Electric AT oil pump rotation malfunction**
DETECTION CONDITION	• The actual electric AT oil pump rotation speed under the following conditions is **100 rpm or less** for a continuous **10 s**: — Electric AT oil pump rotation speed command value is **500 rpm or more**. — Electric AT oil pump relay is ON. — DTC P181F:00 is not recorded. **Diagnostic support note** • The MIL does not illuminate. • The shift position indicator light does not illuminate. • PENDING CODE is available. • FREEZE FRAME DATA is not available. • The DTC is stored in the TCM memory.
FAIL-SAFE FUNCTION	• Inhibits i-stop control.
POSSIBLE CAUSE	• Electric AT oil pump connector or terminals malfunction • TCM connector or terminals malfunction • Short to ground in wiring harness between electric AT oil pump terminal B and TCM terminal N • Short to power supply in wiring harness between electric AT oil pump terminal B and TCM terminal N • Open circuit in wiring harness between electric AT oil pump terminal B and TCM terminal N • Electric AT oil pump malfunction

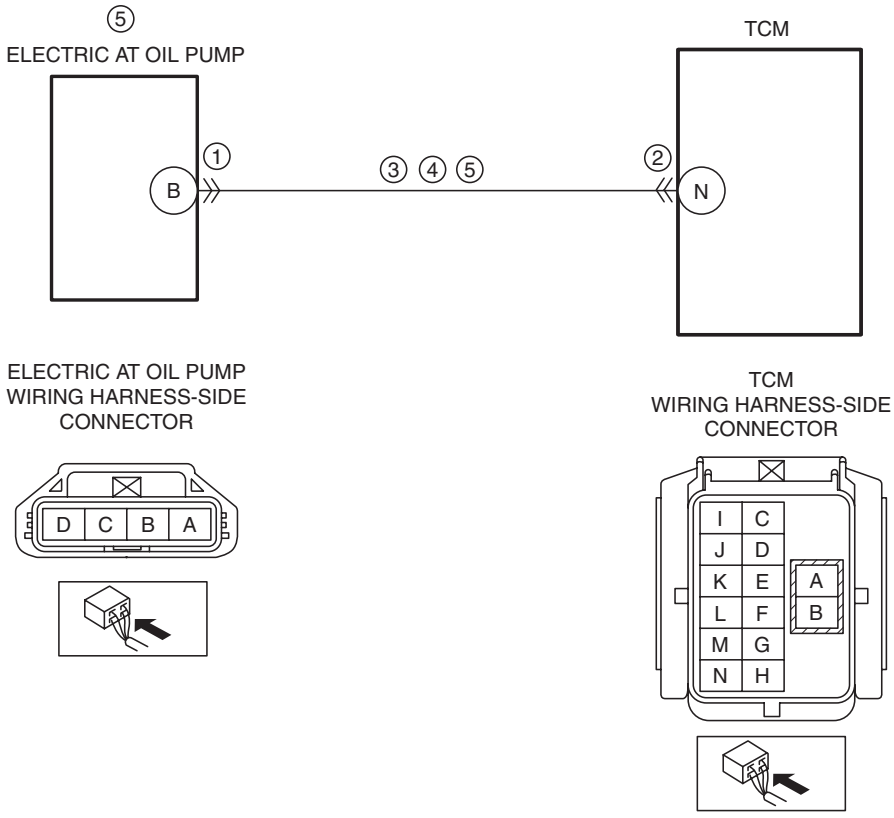

Diagnostic procedure

STEP	INSPECTION		ACTION
1	**VERIFY RELATED SERVICE INFORMATION AVAILABILITY** • Verify related Service Information availability. • Is any related Service Information available?	Yes	Perform repair or diagnosis according to the available Service Information. • If the vehicle is not repaired, go to the next step.
		No	Go to the next step.
2	**INSPECT ELECTRIC AT OIL PUMP CONNECTOR CONDITION** • Switch the ignition to off. • Disconnect the electric AT oil pump connector. • Inspect for poor connection (such as damaged/ pulled-out pins, corrosion). • Is there any malfunction?	Yes	Repair or replace the connector and/or terminals, then go to Step 7.
		No	Go to the next step.

ON-BOARD DIAGNOSTIC [FW6A-EL, FW6AX-EL]

STEP	INSPECTION		ACTION
3	**INSPECT TCM CONNECTOR CONDITION** • Disconnect the TCM connector. • Visually inspect the TCM connector and terminals. • Is there any malfunction?	Yes	Repair or replace the connector and/or terminals, then go to Step 7.
		No	Go to the next step.
4	**INSPECT ELECTRIC AT OIL PUMP CIRCUIT FOR SHORT TO GROUND** • Verify that the electric AT oil pump and TCM connectors are disconnected. • Inspect for continuity between electric AT oil pump terminal B (wiring harness-side) and body ground. • Is there continuity?	Yes	Repair or replace the wiring harness for a possible short to ground, then go to Step 7.
		No	Go to the next step.
5	**INSPECT ELECTRIC AT OIL PUMP CIRCUIT FOR SHORT TO POWER SUPPLY** • Verify that the electric AT oil pump and TCM connectors are disconnected. • Switch the ignition ON (engine on). • Measure the voltage at the electric AT oil pump terminal B (wiring harness-side). • Is the voltage **0 V**?	Yes	Go to the next step.
		No	Repair or replace the wiring harness for a possible short to power supply, then go to Step 7.
6	**INSPECT ELECTRIC AT OIL PUMP CIRCUIT FOR OPEN CIRCUIT** • Verify that the electric AT oil pump and TCM connectors are disconnected. • Switch the ignition to off. • Visually inspect the wiring harness between electric AT oil pump terminal B (wiring harness-side) and TCM terminal N (wiring harness-side). • Is there any malfunction?	Yes	Repair or replace the wiring harness for a possible open circuit, then go to the next step.
		No	Replace the electric AT oil pump, then go to the next step. (See 05-17A-27 ELECTRIC AT OIL PUMP REMOVAL/ INSTALLATION [FW6A-EL, FW6AX-EL].)
7	**VERIFY DTC TROUBLESHOOTING COMPLETED** • Make sure to reconnect all disconnected connectors. • Clear the DTC using the M-MDS. (See 05-02A-7 ON-BOARD DIAGNOSTIC SYSTEM DTC INSPECTION [FW6A-EL, FW6AX-EL].) • Perform the following procedure to ensure that the DTC has been resolved: 1. Operates the i-stop. • Perform the DTC inspection using the M-MDS. (See 05-02A-7 ON-BOARD DIAGNOSTIC SYSTEM DTC INSPECTION [FW6A-EL, FW6AX-EL].) • Are any DTCs present?	Yes	Go to the applicable DTC inspection. (See 05-02A-11 ON-BOARD DIAGNOSTIC SYSTEM DTC TABLE [FW6A-EL, FW6AX-EL].)
		No	DTC troubleshooting completed.

ON-BOARD DIAGNOSTIC [FW6A-EL, FW6AX-EL]

DTC P1728:00 [FW6A-EL, FW6AX-EL]

id050227905100

DTC P1728:00	Clutch slippage
DETECTION CONDITION	• Under the following conditions, turbine/input shaft speed suddenly increases **300 rpm or more** for **1,450 ms**: — Engine is running. — Battery voltage is **8 V or more**. — Vehicle speed is **5 km/h {3 mph} or more**. — There is no difference between vehicle speed signal from DSC HU/CM and output shaft speed sensor signal. — Not shifting — Selector lever position is D position. — Turbine/Input shaft speed is **1,200 rpm or more**. — Oil pressure switch pattern (1st—6th) is normal. **Diagnostic support note** • The check engine light does not illuminate. • The automatic transaxle warning light does not illuminate. • PENDING CODE is available. • FREEZE FRAME DATA is not available. • The DTC is stored in the TCM memory.
FAIL-SAFE FUNCTION	• Inhibits malfunctioning gear. • Limits engine torque. • Maximizes the line pressure. • Inhibits learning control. • Inhibits manual mode. • Inhibits neutral idle control. • Inhibits i-stop control. • Inhibits AAS.
POSSIBLE CAUSE	• ATF is less than specified value • Clutch slippage
SYSTEM WIRING DIAGRAM	—

Diagnostic procedure

STEP	INSPECTION		ACTION
1	**VERIFY RELATED SERVICE INFORMATION AVAILABILITY** • Verify related Service Information availability. • Is any related Service Information available?	Yes	Perform repair or diagnosis according to the available Service Information. • If the vehicle is not repaired, go to the next step.
		No	Go to the next step.
2	**INSPECT ATF LEVEL** • Inspect the ATF level. (See 05-17A-11 AUTOMATIC TRANSAXLE FLUID (ATF) INSPECTION [FW6A-EL, FW6AX-EL].) • Is there any malfunction?	Yes	Adjust the ATF level to the specification, then go to the next step. (See 05-17A-12 AUTOMATIC TRANSAXLE FLUID (ATF) REPLACEMENT [FW6A-EL, FW6AX-EL].)
		No	Replace the automatic transaxle, then go to the next step. (See 05-17A-28 AUTOMATIC TRANSAXLE REMOVAL/INSTALLATION [FW6A-EL].) (See 05-17A-43 AUTOMATIC TRANSAXLE REMOVAL/INSTALLATION [FW6AX-EL].)
3	**VERIFY DTC TROUBLESHOOTING COMPLETED** • Clear the DTC using the M-MDS. (See 05-02A-7 ON-BOARD DIAGNOSTIC SYSTEM DTC INSPECTION [FW6A-EL, FW6AX-EL].) • Perform the following procedure to ensure that the DTC has been resolved: 1. Drive the vehicle without shifting for **20 min or more** under the following conditions: • Vehicle speed: **5 km/h {3 mph} or more** • Selector lever position: D position • Perform the DTC inspection using the M-MDS. (See 05-02A-7 ON-BOARD DIAGNOSTIC SYSTEM DTC INSPECTION [FW6A-EL, FW6AX-EL].) • Are any DTCs present?	Yes	ATF amount in Step 2 is correct • Go to the applicable DTC inspection. (See 05-02A-11 ON-BOARD DIAGNOSTIC SYSTEM DTC TABLE [FW6A-EL, FW6AX-EL].) ATF amount adjusted in Step 2: • Replace the automatic transaxle, then drive the vehicle to check it, and if there is no problem then the DTC troubleshooting is complete. (See 05-17A-28 AUTOMATIC TRANSAXLE REMOVAL/INSTALLATION [FW6A-EL].) (See 05-17A-43 AUTOMATIC TRANSAXLE REMOVAL/INSTALLATION [FW6AX-EL].)
		No	DTC troubleshooting completed.

ON-BOARD DIAGNOSTIC [FW6A-EL, FW6AX-EL]

DTC P1738:00 [FW6A-EL, FW6AX-EL]

id050227578400

DTC P1738:00	**Automatic transaxle internal malfunction**
DETECTION CONDITION	• Malfunction location cannot be determined based on combination of gear ratio malfunction and oil pressure switch pattern malfunction. **Diagnostic support note** • The check engine light does not illuminate. • The automatic transaxle warning light illuminates if the TCM detects the above malfunction condition in two consecutive drive cycles or in one drive cycle while the DTC for the same malfunction has been stored in the TCM. • PENDING CODE is available. • FREEZE FRAME DATA is not available. • The DTC is stored in the TCM memory.
FAIL-SAFE FUNCTION	• Inhibits learning control. • Inhibits manual mode. • Inhibits neutral idle control. • Inhibits i-stop control. • Inhibits AAS.
POSSIBLE CAUSE	• ATF is less than specified value • Automatic transaxle internal malfunction
SYSTEM WIRING DIAGRAM	—

Diagnostic procedure

STEP	INSPECTION		ACTION
1	**INSPECT ATF LEVEL** • Inspect the ATF level. (See 05-17A-11 AUTOMATIC TRANSAXLE FLUID (ATF) INSPECTION [FW6A-EL, FW6AX-EL].) • Is there any malfunction?	Yes	Adjust the ATF level to the specification, then go to the next step. (See 05-17A-12 AUTOMATIC TRANSAXLE FLUID (ATF) REPLACEMENT [FW6A-EL, FW6AX-EL].)
		No	Replace the automatic transaxle. (See 05-17A-28 AUTOMATIC TRANSAXLE REMOVAL/INSTALLATION [FW6A-EL].) (See 05-17A-43 AUTOMATIC TRANSAXLE REMOVAL/INSTALLATION [FW6AX-EL].)
2	**PERFORM ON-BOARD DIAGNOSTIC TEST TO SPECIFY MALFUNCTIONING PART** **Note** • If only DTCs in which the malfunctioning part is not confirmed are displayed as in the following DTCs, all of the diagnosis may not have been completed. In such cases, the malfunction cause can be determined by performing the on-board diagnostic test. • Perform the on-board diagnostic test. (See 05-02A-9 ON-BOARD DIAGNOSTIC TEST MODE [FW6A-EL, FW6AX-EL].) • Are any DTCs present?	Yes	Replace the automatic transaxle. (See 05-17A-28 AUTOMATIC TRANSAXLE REMOVAL/INSTALLATION [FW6A-EL].) (See 05-17A-43 AUTOMATIC TRANSAXLE REMOVAL/INSTALLATION [FW6AX-EL].)
		No	Drive the vehicle for **10 min or more**. DTCs are displayed: • Replace the automatic transaxle. (See 05-17A-28 AUTOMATIC TRANSAXLE REMOVAL/INSTALLATION [FW6A-EL].) (See 05-17A-43 AUTOMATIC TRANSAXLE REMOVAL/INSTALLATION [FW6AX-EL].) No DTCs are displayed: • DTC troubleshooting completed.

ON-BOARD DIAGNOSTIC [FW6A-EL, FW6AX-EL]

DTC P1784:00 [FW6A-EL, FW6AX-EL]

id050227905200

DTC P1784:00	**Hi cut valve stuck off/R-3-5 cut valve stuck on**
DETECTION CONDITION	• Under the following conditions, hi cut valve stuck-off or R-3-5 cut valve stuck-on detected by combination of gear ratio malfunction and oil pressure switch pattern malfunction: — Engine is running. — Battery voltage is **8 V or more**. — ATF temperature is **20 °C {68 °F} or more**. **Diagnostic support note** • The check engine light does not illuminate. • The automatic transaxle warning light illuminates if the TCM detects the above malfunction condition in two consecutive drive cycles or in one drive cycle while the DTC for the same malfunction has been stored in the TCM. • PENDING CODE is available. • FREEZE FRAME DATA is not available. • The DTC is stored in the TCM memory.
FAIL-SAFE FUNCTION	• Inhibits malfunctioning gear. • Limits engine torque. • Inhibits learning control. • Inhibits neutral idle control. • Inhibits i-stop control.
POSSIBLE CAUSE	• ATF is less than specified value • Hi cut valve malfunction • R-3-5 cut valve malfunction • Clutch burnt
SYSTEM WIRING DIAGRAM	—

Diagnostic procedure

STEP	INSPECTION		ACTION
1	**VERIFY RELATED SERVICE INFORMATION AVAILABILITY** • Verify related Service Information availability. • Is any related Service Information available?	Yes	Perform repair or diagnosis according to the available Service Information. • If the vehicle is not repaired, go to the next step.
		No	Go to the next step.
2	**INSPECT ATF LEVEL** • Inspect the ATF level. (See 05-17A-11 AUTOMATIC TRANSAXLE FLUID (ATF) INSPECTION [FW6A-EL, FW6AX-EL].) • Is there any malfunction?	Yes	Adjust the ATF level to the specification, then go to the next step. (See 05-17A-12 AUTOMATIC TRANSAXLE FLUID (ATF) REPLACEMENT [FW6A-EL, FW6AX-EL].)
		No	Replace the automatic transaxle. (See 05-17A-28 AUTOMATIC TRANSAXLE REMOVAL/INSTALLATION [FW6A-EL].) (See 05-17A-43 AUTOMATIC TRANSAXLE REMOVAL/INSTALLATION [FW6AX-EL].)
3	**PERFORM STALL TEST TO VERIFY THAT DTC** • Clear the DTC using the M-MDS. (See 05-02A-7 ON-BOARD DIAGNOSTIC SYSTEM DTC INSPECTION [FW6A-EL, FW6AX-EL].) • Perform the stall test in the reverse (R) position. (See 05-17A-4 MECHANICAL SYSTEM TEST [FW6A-EL, FW6AX-EL].) • Perform the DTC inspection using the M-MDS. (See 05-02A-7 ON-BOARD DIAGNOSTIC SYSTEM DTC INSPECTION [FW6A-EL, FW6AX-EL].) • Are any DTCs present?	Yes	Replace the automatic transaxle. (See 05-17A-28 AUTOMATIC TRANSAXLE REMOVAL/INSTALLATION [FW6A-EL].) (See 05-17A-43 AUTOMATIC TRANSAXLE REMOVAL/INSTALLATION [FW6AX-EL].)
		No	Go to the next step.

ON-BOARD DIAGNOSTIC [FW6A-EL, FW6AX-EL]

STEP	INSPECTION		ACTION
4	**PERFORM ON-BOARD DIAGNOSTIC TEST** • Perform the on-board diagnostic test. (See 05-02A-9 ON-BOARD DIAGNOSTIC TEST MODE [FW6A-EL, FW6AX-EL].) • Are any DTCs present?	Yes	Replace the automatic transaxle. (See 05-17A-28 AUTOMATIC TRANSAXLE REMOVAL/INSTALLATION [FW6A-EL].) (See 05-17A-43 AUTOMATIC TRANSAXLE REMOVAL/INSTALLATION [FW6AX-EL].)
		No	Drive the vehicle for **10 min or more**. DTCs are displayed: • Replace the automatic transaxle. (See 05-17A-28 AUTOMATIC TRANSAXLE REMOVAL/INSTALLATION [FW6A-EL].) (See 05-17A-43 AUTOMATIC TRANSAXLE REMOVAL/INSTALLATION [FW6AX-EL].) No DTCs are displayed: • DTC troubleshooting completed.

DTC P181F:00 [FW6A-EL, FW6AX-EL]

id050227960600

DTC P181F:00	**Electric AT oil pump/Electric AT oil pump relay circuit malfunction**
DETECTION CONDITION	• If the TCM detects any of the following conditions for a continuous **5 s**: — Electric AT oil pump circuit has a malfunction. — Electric AT oil pump relay circuit has a malfunction. **Diagnostic support note** • The MIL does not illuminate. • The shift position indicator light does not illuminate. • PENDING CODE is available. • FREEZE FRAME DATA is not available. • The DTC is stored in the TCM memory.
FAIL-SAFE FUNCTION	• Inhibits i-stop control.
POSSIBLE CAUSE	• Electric AT oil pump relay malfunction • Short to ground in wiring harness between electric AT oil pump relay terminal A and electric AT oil pump relay terminal D • Open circuit in wiring harness between electric AT oil pump relay terminal A and electric AT oil pump relay terminal D • Electric AT oil pump connector or terminals malfunction • Open circuit in wiring harness between electric AT oil pump terminal A and body ground • Short to ground or open circuit in wiring harness between battery positive terminal and electric AT oil pump terminal D • TCM connector or terminals malfunction • Short to ground in wiring harness between the following terminals: — Electric AT oil pump relay terminal E—TCM terminal K — Electric AT oil pump terminal C—TCM terminal L • Short to power supply in wiring harness between electric AT oil pump terminal C and TCM terminal L • Open circuit in wiring harness between the following terminals: — Electric AT oil pump relay terminal E—TCM terminal K — Electric AT oil pump terminal C—TCM terminal L • Electric AT oil pump malfunction • TCM malfunction

ON-BOARD DIAGNOSTIC [FW6A-EL, FW6AX-EL]

DTC P181F:00	Electric AT oil pump/Electric AT oil pump relay circuit malfunction

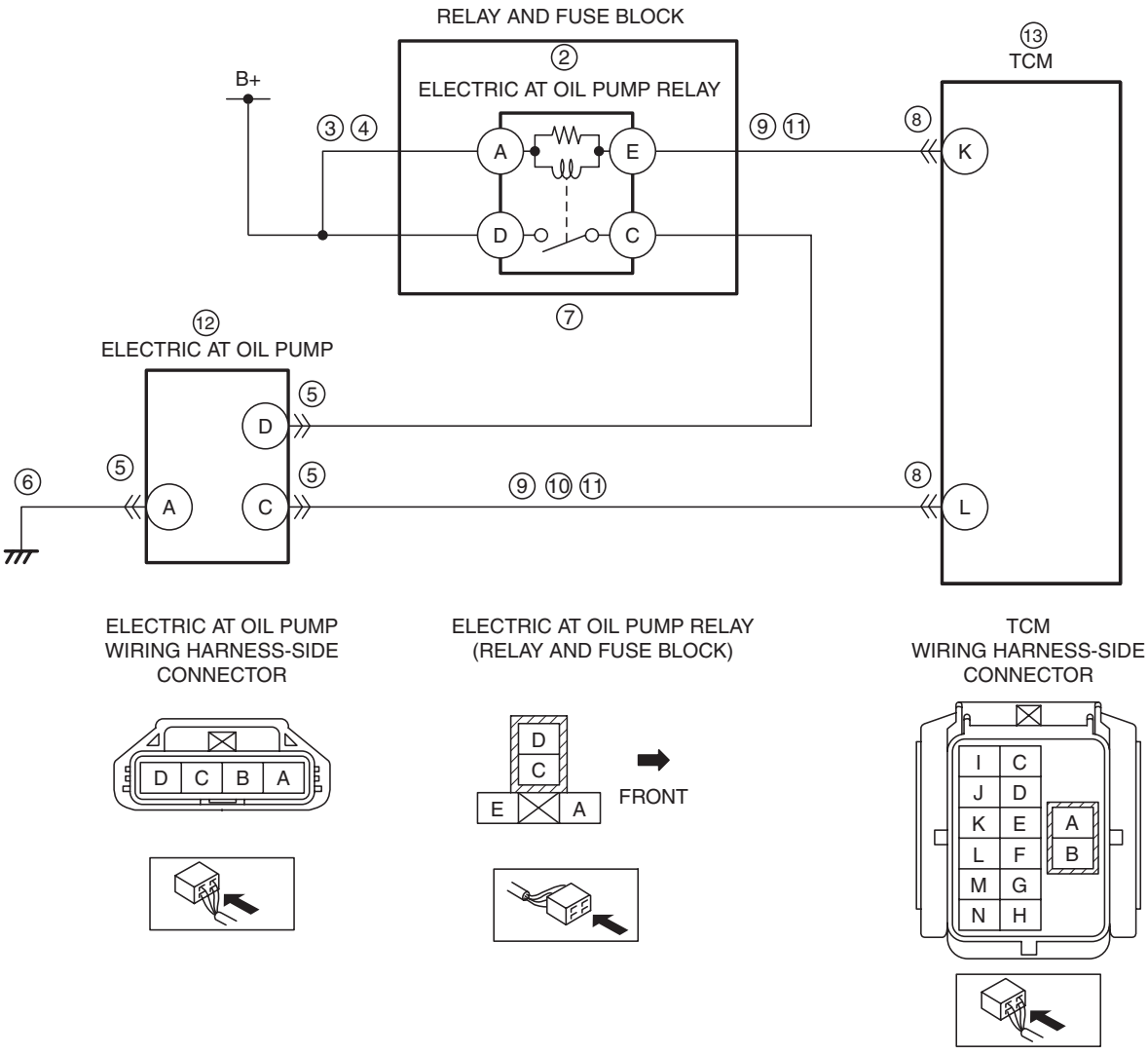

Diagnostic procedure

STEP	INSPECTION		ACTION
1	**VERIFY RELATED SERVICE INFORMATION AVAILABILITY** • Verify related Service Information availability. • Is any related Service Information available?	Yes	Perform repair or diagnosis according to the available Service Information. • If the vehicle is not repaired, go to the next step.
		No	Go to the next step.
2	**INSPECT ELECTRIC AT OIL PUMP RELAY** • Switch the ignition to off. • Remove the electric AT oil pump relay. (See 09-21-28 RELAY LOCATION.) • Inspect the electric AT oil pump relay. (See 09-21-29 RELAY INSPECTION.) • Is there any malfunction?	Yes	Replace the electric AT oil pump relay, then go to Step 13. (See 09-21-28 RELAY LOCATION.)
		No	Go to the next step.
3	**INSPECT ELECTRIC AT OIL PUMP RELAY CIRCUIT FOR SHORT TO GROUND** • Verify that the electric AT oil pump relay is removed. • Inspect for continuity between electric AT oil pump relay terminal A (wiring harness-side) and body ground. • Is there continuity?	Yes	Repair or replace the wiring harness for a possible short to ground, then go to Step 13.
		No	Go to the next step.

ON-BOARD DIAGNOSTIC [FW6A-EL, FW6AX-EL]

STEP	INSPECTION		ACTION
4	**INSPECT ELECTRIC AT OIL PUMP RELAY CIRCUIT FOR OPEN CIRCUIT** • Verify that the electric AT oil pump relay is removed. • Inspect for continuity between electric AT oil pump relay terminal A (wiring harness-side) and electric AT oil pump relay terminal D (wiring harness-side). • Is there continuity?	Yes	Install the electric AT oil pump relay, then go to the next step. (See 09-21-28 RELAY LOCATION.)
		No	Repair or replace the wiring harness for a possible open circuit, then go to Step 13.
5	**INSPECT ELECTRIC AT OIL PUMP CONNECTOR CONDITION** • Disconnect the electric AT oil pump connector. • Inspect for poor connection (such as damaged/pulled-out pins, corrosion). • Is there any malfunction	Yes	Repair or replace the connector and/or terminals, then go to Step 13.
		No	Go to the next step.
6	**INSPECT ELECTRIC AT OIL PUMP GROUND CIRCUIT FOR OPEN CIRCUIT** • Verify that the electric AT oil pump connector is disconnected. • Inspect for continuity between electric AT oil pump terminal A (wiring harness-side) and body ground. • Is there continuity?	Yes	Go to the next step.
		No	Repair or replace the wiring harness for a possible open circuit, then go to Step 13.
7	**INSPECT ELECTRIC AT OIL PUMP POWER SUPPLY CIRCUIT FOR SHORT TO GROUND AND OPEN CIRCUIT** • Verify that the electric AT oil pump connector is disconnected. • Switch the electric AT oil pump relay to ON using the simulation item EOP_RLY. (See 05-02A-103 ON-BOARD DIAGNOSTIC SYSTEM SIMULATION INSPECTION [FW6A-EL, FW6AX-EL].) • Measure the voltage at the electric AT oil pump terminal D (wiring harness-side). • Is the voltage **0 V**?	Yes	Repair or replace the wiring harness for a possible short to ground or open circuit, then go to Step 13.
		No	Go to the next step.
8	**INSPECT TCM CONNECTOR CONDITION** • Disconnect the TCM connector. • Visually inspect the TCM connector and terminals. • Is there any malfunction?	Yes	Repair or replace the connector and/or terminals, then go to Step 13.
		No	Go to the next step.
9	**INSPECT ELECTRIC AT OIL PUMP CIRCUIT FOR SHORT TO GROUND** • Verify that the electric AT oil pump and TCM connectors are disconnected. • Inspect for continuity between the following terminals (wiring harness-side) and body ground: — Electric AT oil pump relay terminal E — Electric AT oil pump terminal C • Is there continuity?	Yes	Repair or replace the wiring harness for a possible short to ground, then go to Step 13.
		No	Go to the next step.
10	**INSPECT ELECTRIC AT OIL PUMP CIRCUIT FOR SHORT TO POWER SUPPLY** • Verify that the electric AT oil pump and TCM connectors are disconnected. • Switch the ignition ON (engine on). • Measure the voltage at the electric AT oil pump terminal C (wiring harness-side). • Is the voltage **0 V**?	Yes	Go to the next step.
		No	Repair or replace the wiring harness for a possible short to power supply, then go to Step 13.

ON-BOARD DIAGNOSTIC [FW6A-EL, FW6AX-EL]

STEP	INSPECTION		ACTION
11	**INSPECT ELECTRIC AT OIL PUMP CIRCUIT FOR OPEN CIRCUIT** • Verify that the electric AT oil pump and TCM connectors are disconnected. • Switch the ignition to off. • Visually inspect the wiring harness between the following terminals (wiring harness-side): — Electric AT oil pump relay terminal E—TCM terminal K — Electric AT oil pump terminal C—TCM terminal L • Is there any malfunction?	Yes	Repair or replace the wiring harness for a possible open circuit, then go to the next step.
		No	Go to the next step.
12	**INSPECT ELECTRIC AT OIL PUMP** • Remove the electric AT oil pump. (See 05-17A-27 ELECTRIC AT OIL PUMP REMOVAL/INSTALLATION [FW6A-EL, FW6AX-EL].) • Verify that the resistance according to the following: — Between electric AT oil pump terminal D and A: **Approx. 18.2 Kilohms** — Between electric AT oil pump terminal C and A: **Approx. 21.5 Kilohms** • Is the resistance normal?	Yes	Go to the next step.
		No	Replace the electric AT oil pump, then go to the next step. (See 05-17A-27 ELECTRIC AT OIL PUMP REMOVAL/ INSTALLATION [FW6A-EL, FW6AX-EL].)
13	**VERIFY DTC TROUBLESHOOTING COMPLETED** • Make sure to reconnect all disconnected connectors. • Clear the DTC using the M-MDS. (See 05-02A-7 ON-BOARD DIAGNOSTIC SYSTEM DTC INSPECTION [FW6A-EL, FW6AX-EL].) • Perform the following procedure to ensure that the DTC has been resolved: 1. Operates the i-stop. • Perform the DTC inspection using the M-MDS. (See 05-02A-7 ON-BOARD DIAGNOSTIC SYSTEM DTC INSPECTION [FW6A-EL, FW6AX-EL].) • Is the DTC P181F:00 present?	Yes	Replace the control valve body, then go to the next step. (See 05-17A-67 CONTROL VALVE BODY REMOVAL/ INSTALLATION [FW6A-EL, FW6AX-EL].)
		No	Go to the next step.
14	**VERIFY NO DTC HAS BEEN PRESENTED** • Are any DTCs present?	Yes	Go to the applicable DTC inspection. (See 05-02A-11 ON-BOARD DIAGNOSTIC SYSTEM DTC TABLE [FW6A-EL, FW6AX-EL].)
		No	DTC troubleshooting completed.

ON-BOARD DIAGNOSTIC [FW6A-EL, FW6AX-EL]

DTC P2530:00 [FW6A-EL, FW6AX-EL]

id050227310000

DTC P2530:00	**Ignition switch stuck off**
DETECTION CONDITION	• If the IG ON time count of the instrument cluster proceeds **5 s** under the following condition: — Ignition switch signal off
FAIL-SAFE FUNCTION	—
POSSIBLE CAUSE	• Start stop unit malfunction — Ignition switch signal output stuck off • Wiring harness malfunction — Short or open signal in ignition switch — Ignition switch signal terminal (start stop unit terminal 1B) malfunction • Control valve body malfunction — Ignition switch signal terminal (start stop unit terminal 1B) pin deformity
SYSTEM WIRING DIAGRAM	—

Diagnostic procedure

STEP	INSPECTION		ACTION
1	**VERIFY FREEZE FRAME DATA/SNAPSHOT DATA HAS BEEN RECORDED** • Has the freeze frame data/snapshot data been recorded on the repair order?	Yes	Go to the next step.
		No	Record the freeze frame data/snapshot data on the repair order, then go to the next step.
2	**VERIFY RELATED SERVICE INFORMATION AVAILABILITY** • Verify related Service Information availability. • Is any related Service Information available?	Yes	Perform repair or diagnosis according to the available Service Information. • If the vehicle is not repaired, go to the next step.
		No	Go to the next step.
3	**VERIFY STORED DTC IN START STOP UNIT** • Perform the start stop unit DTC inspection using the M-MDS. (See 09-02C-6 DTC INSPECTION [START STOP UNIT].) • Are any DTCs present?	Yes	Go to the applicable DTC inspection. (See 09-02C-8 DTC TABLE [START STOP UNIT].)
		No	Go to the next step.
4	**INSPECT THE IGNITION CIRCUIT FOR OPEN CIRCUIT** • Switch the ignition to off. • Disconnect the negative battery cable. • Verify that the following connector are disconnected. — IG1 relay — Start stop unit • Inspect for continuity between the following terminals (wiring harness-side): — IG1 relay terminal C—Start stop unit terminal 1B • Is there continuity?	Yes	Go to the next step.
		No	Repair or replace the wiring harness for a possible open circuit, then go to Step 6.
5	**VERIFY THE ENGINE START** • Reconnect all disconnected connectors. • Reconnect the negative battery cable. • Does the engine start normally?	Yes	Replace the control valve body, then go to the next step. (See 05-17A-67 CONTROL VALVE BODY REMOVAL/ INSTALLATION [FW6A-EL, FW6AX-EL].)
		No	Replace the start stop unit, then go to the next step. (See 09-14-54 START STOP UNIT REMOVAL/ INSTALLATION.)

ON-BOARD DIAGNOSTIC [FW6A-EL, FW6AX-EL]

STEP	INSPECTION		ACTION
6	**VERIFY DTC TROUBLESHOOTING COMPLETED** • Clear the DTC using the M-MDS. (See 05-02A-7 ON-BOARD DIAGNOSTIC SYSTEM DTC INSPECTION [FW6A-EL, FW6AX-EL].) • Perform the following procedure to ensure that the DTC has been resolved: 1. Switch the ignition ON (engine off or on) and wait for **10 s or more**. 2. Switch the ignition to off. • Perform the DTC inspection using the M-MDS. (See 05-02A-7 ON-BOARD DIAGNOSTIC SYSTEM DTC INSPECTION [FW6A-EL, FW6AX-EL].) • Are any DTCs present?	Yes	Go to the applicable DTC inspection. (See 05-02A-11 ON-BOARD DIAGNOSTIC SYSTEM DTC TABLE [FW6A-EL, FW6AX-EL].)
		No	DTC troubleshooting completed.

DTC P2712:00 [FW6A-EL, FW6AX-EL]

id050227960500

DTC P2712:00	**Oil pump shift valve stuck**
DETECTION CONDITION	• Under the following conditions, oil pressure switch No.1 OFF output continues for **10 s**: — DTC P0753:00, P0C2C:00 and P181F:00 are not recorded. — During i-stop operation — Selector lever position is D or N position. — During electric AT oil pump operation — Oil pressure switch, low clutch and transaxle range sensor are normal. — Rate of speed change normal **Diagnostic support note** • The MIL does not illuminate. • The shift position indicator light does not illuminate. • PENDING CODE is available. • FREEZE FRAME DATA is not available. • The DTC is stored in the TCM memory.
FAIL-SAFE FUNCTION	• Inhibits i-stop control.
POSSIBLE CAUSE	• Oil pump shift valve stuck
SYSTEM WIRING DIAGRAM	—

ON-BOARD DIAGNOSTIC [FW6A-EL, FW6AX-EL]

Diagnostic procedure

STEP	INSPECTION		ACTION
1	**VERIFY RELATED SERVICE INFORMATION AVAILABILITY** • Verify related Service Information availability. • Is any related Service Information available?	Yes	Perform repair or diagnosis according to the available Service Information. • If the vehicle is not repaired, replace the control valve body. (See 05-17A-67 CONTROL VALVE BODY REMOVAL/ INSTALLATION [FW6A-EL, FW6AX-EL].)
		No	Replace the control valve body, then go to the next step. (See 05-17A-67 CONTROL VALVE BODY REMOVAL/ INSTALLATION [FW6A-EL, FW6AX-EL].)
2	**VERIFY DTC TROUBLESHOOTING COMPLETED** • Clear the DTC using the M-MDS. (See 05-02A-7 ON-BOARD DIAGNOSTIC SYSTEM DTC INSPECTION [FW6A-EL, FW6AX-EL].) • Perform the following procedure to ensure that the DTC has been resolved: 1. Operates the i-stop. • Perform the DTC inspection using the M-MDS. (See 05-02A-7 ON-BOARD DIAGNOSTIC SYSTEM DTC INSPECTION [FW6A-EL, FW6AX-EL].) • Are any DTCs present?	Yes	Go to the applicable DTC inspection. (See 05-02A-11 ON-BOARD DIAGNOSTIC SYSTEM DTC TABLE [FW6A-EL, FW6AX-EL].)
		No	DTC troubleshooting completed.

05

DTC U0073:00, U0100:00, U0121:00, U0141:00, U0155:00 [FW6A-EL, FW6AX-EL]

id050227905500

DTC U0073:00	CAN system communication error (HS CAN)
DETECTION CONDITION	• Under the following condition, a communication error (HS CAN) occurs: — Battery voltage is **10 V or more**. **Diagnostic support note** • The check engine light does not illuminate. • The automatic transaxle warning light does not illuminate. • PENDING CODE is available. • FREEZE FRAME DATA is not available. • The DTC is stored in the TCM memory.
FAIL-SAFE FUNCTION	• Inhibits learning control. • Inhibits neutral idle control. • Inhibits i-stop control. • Inhibits AAS.
POSSIBLE CAUSE	• CAN bus communication line malfunction (HS CAN) • TCM malfunction
SYSTEM WIRING DIAGRAM	—

ON-BOARD DIAGNOSTIC [FW6A-EL, FW6AX-EL]

DTC U0100:00	Communication error to PCM (HS CAN)
DETECTION CONDITION	• Under the following condition, the TCM cannot receive the signal from PCM (HS CAN): — Battery voltage is **10 V or more**. **Diagnostic support note** • The check engine light illuminates if the TCM detects the above malfunction condition during the first drive cycle. • The automatic transaxle warning light does not illuminate. • PENDING CODE is available. • FREEZE FRAME DATA is available. • The DTC is stored in the TCM memory.
FAIL-SAFE FUNCTION	• Inhibits learning control. • Inhibits neutral idle control. • Inhibits i-stop control. • Inhibits AAS.
POSSIBLE CAUSE	• CAN communication line between PCM and TCM malfunction (HS CAN) • TCM malfunction
SYSTEM WIRING DIAGRAM	—

DTC U0121:00	Communication error to DSC HU/CM
DETECTION CONDITION	• Under the following condition, the TCM cannot receive the signal from DSC HU/CM: — Battery voltage is **10 V or more**. **Diagnostic support note** • The check engine light illuminates if the TCM detects the above malfunction condition during the first drive cycle. • The automatic transaxle warning light does not illuminate. • PENDING CODE is available. • FREEZE FRAME DATA is available. • The DTC is stored in the TCM memory.
FAIL-SAFE FUNCTION	• Inhibits learning control. • Inhibits neutral idle control. • Inhibits i-stop control. • Inhibits AAS.
POSSIBLE CAUSE	• CAN communication line between TCM and DSC HU/CM malfunction • TCM malfunction
SYSTEM WIRING DIAGRAM	—

DTC U0141:00	Communication error to front body control module (FBCM)
DETECTION CONDITION	• Under the following condition, the TCM cannot receive the signal from front body control module (FBCM): — Battery voltage is **10 V or more**. **Diagnostic support note** • The check engine light does not illuminate. • The automatic transaxle warning light does not illuminate. • PENDING CODE is available. • FREEZE FRAME DATA is not available. • The DTC is stored in the TCM memory.
FAIL-SAFE FUNCTION	• Inhibits learning control. • Inhibits neutral idle control. • Inhibits i-stop control.
POSSIBLE CAUSE	• CAN communication line between TCM and front body control module (FBCM) malfunction • TCM malfunction
SYSTEM WIRING DIAGRAM	—

ON-BOARD DIAGNOSTIC [FW6A-EL, FW6AX-EL]

DTC U0155:00	**Communication error to instrument cluster**
DETECTION CONDITION	• Under the following condition, the TCM cannot receive the signal from instrument cluster: — Battery voltage is **10 V or more**. **Diagnostic support note** • The check engine light illuminates if the TCM detects the above malfunction condition during the first drive cycle. • The automatic transaxle warning light does not illuminate. • PENDING CODE is available. • FREEZE FRAME DATA is available. • The DTC is stored in the TCM memory.
FAIL-SAFE FUNCTION	• Inhibits learning control. • Inhibits manual mode. • Inhibits neutral idle control. • Inhibits i-stop control.
POSSIBLE CAUSE	• CAN communication line between TCM and instrument cluster malfunction • TCM malfunction
SYSTEM WIRING DIAGRAM	—

Diagnostic Procedure

- Inspect according to the diagnostic procedure in ON-BOARD DIAGNOSTIC [MULTIPLEX COMMUNICATION SYSTEM]. (See 10-02A-1 FOREWORD [SKYACTIV-G 2.0 (L.H.D.)].) (See 10-02B-1 FOREWORD [SKYACTIV-G 2.0 (R.H.D.)].)

DTC U0074:00 [FW6A-EL, FW6AX-EL]

id050227908000

DTC U0074:00	**CAN system communication error (local CAN between TCM and PCM)**
DETECTION CONDITION	• Under the following condition, a communication error (local CAN between TCM and PCM) occurs: — Battery voltage is **10 V or more**. **Diagnostic support note** • The check engine light does not illuminate. • The automatic transaxle warning light does not illuminate. • PENDING CODE is available. • FREEZE FRAME DATA is not available. • The DTC is stored in the TCM memory.
FAIL-SAFE FUNCTION	• Set to TCC control. • Inhibits learning control. • Inhibits manual mode. • Inhibits neutral idle control. • Inhibits i-stop control. • Inhibits AAS. • Inhibits 5GR and 6GR. • Inhibits shift down when the accelerator pedal is depressed.
POSSIBLE CAUSE	• CAN communication line between TCM and PCM (local CAN between TCM and PCM) malfunction • PCM DTC is stored. • TCM malfunction
SYSTEM WIRING DIAGRAM	—

ON-BOARD DIAGNOSTIC [FW6A-EL, FW6AX-EL]

Diagnostic procedure

STEP	INSPECTION		ACTION
1	**VERIFY RELATED SERVICE INFORMATION AVAILABILITY** • Verify related Service Information availability. • Is any related Service Information available?	Yes	Perform repair or diagnosis according to the available Service Information. • If the vehicle is not repaired, go to the next step.
		No	Go to the next step.
2	**CONFIRM PCM DTC** • Perform the PCM DTC inspection using the M-MDS. (See 01-02-8 ON-BOARD DIAGNOSTIC TEST [SKYACTIV-G 2.0].) • Are any DTCs present?	Yes	DTC U0074:00 is displayed: • CAN communication line can be considered the cause. — Repair or replace the wiring harness between TCM and PCM. DTC other than U0074:00 is displayed: • Go to the applicable DTC inspection. (See 01-02-14 DTC TABLE [SKYACTIV-G 2.0].)
		No	Go to the next step.
3	**VERIFY DTC TROUBLESHOOTING COMPLETED** • Clear the DTC using the M-MDS. (See 05-02A-7 ON-BOARD DIAGNOSTIC SYSTEM DTC INSPECTION [FW6A-EL, FW6AX-EL].) • Perform the following procedure to ensure that the DTC has been resolved: — Switch the ignition ON (engine off or on). • Perform the DTC inspection using the M-MDS. (See 05-02A-7 ON-BOARD DIAGNOSTIC SYSTEM DTC INSPECTION [FW6A-EL, FW6AX-EL].) • Is the same DTC present?	Yes	Replace the control valve body, then go to the next step. (See 05-17A-67 CONTROL VALVE BODY REMOVAL/INSTALLATION [FW6A-EL, FW6AX-EL].)
		No	Go to the next step.
4	**VERIFY NO DTC HAS BEEN PRESENTED** • Are any DTCs present?	Yes	Go to the applicable DTC inspection. (See 05-02A-11 ON-BOARD DIAGNOSTIC SYSTEM DTC TABLE [FW6A-EL, FW6AX-EL].)
		No	DTC troubleshooting completed.

DTC U0115:00 [FW6A-EL, FW6AX-EL]

id050227908100

DTC U0115:00	**Communication error to PCM (local CAN between TCM and PCM)**
DETECTION CONDITION	• Under the following condition, the TCM cannot receive the signal from PCM (local CAN between TCM and PCM): — Battery voltage is **10 V or more**. **Diagnostic support note** • The check engine light illuminates if the TCM detects the above malfunction condition during the first drive cycle. • The automatic transaxle warning light does not illuminate. • PENDING CODE is available. • FREEZE FRAME DATA is available. • The DTC is stored in the TCM memory.
FAIL-SAFE FUNCTION	• Set to TCC control. • Inhibits learning control. • Inhibits manual mode. • Inhibits neutral idle control. • Inhibits i-stop control. • Inhibits AAS. • Inhibits 5GR and 6GR. • Inhibits shift down when the accelerator pedal is depressed.
POSSIBLE CAUSE	• PCM DTC is stored. • PCM malfunction • TCM malfunction
SYSTEM WIRING DIAGRAM	—

ON-BOARD DIAGNOSTIC [FW6A-EL, FW6AX-EL]

Diagnostic procedure

STEP	INSPECTION		ACTION
1	**VERIFY FREEZE FRAME DATA/SNAPSHOT DATA HAS BEEN RECORDED** • Has the freeze frame data/snapshot data been recorded on the repair order?	Yes	Go to the next step.
		No	Record the freeze frame data/snapshot data on the repair order, then go to the next step.
2	**VERIFY RELATED SERVICE INFORMATION AVAILABILITY** • Verify related Service Information availability. • Is any related Service Information available?	Yes	Perform repair or diagnosis according to the available Service Information. • If the vehicle is not repaired, go to the next step.
		No	Go to the next step.
3	**CONFIRM PCM DTC** • Perform the PCM DTC inspection using the M-MDS. (See 01-02-8 ON-BOARD DIAGNOSTIC TEST [SKYACTIV-G 2.0].) • Are any DTCs present?	Yes	Go to the applicable DTC inspection. (See 01-02-14 DTC TABLE [SKYACTIV-G 2.0].)
		No	PCM can be considered the cause. • Replace the PCM, then go to the next step. (See 01-40-10 PCM REMOVAL/INSTALLATION [SKYACTIV-G 2.0].)
4	**VERIFY DTC TROUBLESHOOTING COMPLETED** • Clear the DTC using the M-MDS. (See 05-02A-7 ON-BOARD DIAGNOSTIC SYSTEM DTC INSPECTION [FW6A-EL, FW6AX-EL].) • Perform the following procedure to ensure that the DTC has been resolved: — Switch the ignition ON (engine off or on). • Perform the DTC inspection using the M-MDS. (See 05-02A-7 ON-BOARD DIAGNOSTIC SYSTEM DTC INSPECTION [FW6A-EL, FW6AX-EL].) • Is the same DTC present?	Yes	Replace the control valve body, then go to the next step. (See 05-17A-67 CONTROL VALVE BODY REMOVAL/INSTALLATION [FW6A-EL, FW6AX-EL].)
		No	Go to the next step.
5	**VERIFY NO DTC HAS BEEN PRESENTED** • Are any DTCs present?	Yes	Go to the applicable DTC inspection. (See 05-02A-11 ON-BOARD DIAGNOSTIC SYSTEM DTC TABLE [FW6A-EL, FW6AX-EL].)
		No	DTC troubleshooting completed.

DTC U0442:00 [FW6A-EL, FW6AX-EL]

id050227905300

DTC U0442:00	**Invalid data received from PCM (local CAN between TCM and PCM)**
DETECTION CONDITION	• Under the following condition, the TCM detects the invalid PCM signal for **0.5 s**: — Battery voltage is **10 V or more**. **Diagnostic support note** • The check engine light does not illuminate. • The automatic transaxle warning light does not illuminate. • PENDING CODE is available. • FREEZE FRAME DATA is not available. • The DTC is stored in the TCM memory.
FAIL-SAFE FUNCTION	• Set to TCC control. • Inhibits learning control. • Inhibits manual mode. • Inhibits neutral idle control. • Inhibits 5GR and 6GR. • Inhibits shift down when the accelerator pedal is depressed.
POSSIBLE CAUSE	• PCM DTC is stored.
SYSTEM WIRING DIAGRAM	—

ON-BOARD DIAGNOSTIC [FW6A-EL, FW6AX-EL]

Diagnostic procedure

STEP	INSPECTION		ACTION
1	**VERIFY RELATED SERVICE INFORMATION AVAILABILITY** • Verify related Service Information availability. • Is any related Service Information available?	Yes	Perform repair or diagnosis according to the available Service Information. • If the vehicle is not repaired, go to the next step.
		No	Go to the next step.
2	**CONFIRM PCM DTC** • Perform the PCM DTC inspection using the M-MDS. (See 01-02-8 ON-BOARD DIAGNOSTIC TEST [SKYACTIV-G 2.0].) • Are any DTCs present?	Yes	Go to the applicable DTC inspection. (See 01-02-14 DTC TABLE [SKYACTIV-G 2.0].)
		No	Go to the next step.
3	**VERIFY DTC TROUBLESHOOTING COMPLETED** • Clear the DTC using the M-MDS. (See 05-02A-7 ON-BOARD DIAGNOSTIC SYSTEM DTC INSPECTION [FW6A-EL, FW6AX-EL].) • Perform the following procedure to ensure that the DTC has been resolved: 1. Start the engine and warm it up completely. 2. Drive the vehicle for a while under the following conditions: • Selector lever position: D position • Perform the DTC inspection using the M-MDS. (See 05-02A-7 ON-BOARD DIAGNOSTIC SYSTEM DTC INSPECTION [FW6A-EL, FW6AX-EL].) • Are any DTCs present?	Yes	Go to the applicable DTC inspection. (See 05-02A-11 ON-BOARD DIAGNOSTIC SYSTEM DTC TABLE [FW6A-EL, FW6AX-EL].)
		No	DTC troubleshooting completed.

ON-BOARD DIAGNOSTIC SYSTEM PID/DATA MONITOR INSPECTION [FW6A-EL, FW6AX-EL]

id050227290300

1. Connect the M-MDS to the DLC-2.
2. After the vehicle is identified, select the following items from the initialization screen of the M-MDS.
   (1) Select “Data Logger”.
   (2) Select “Modules”.
   (3) Select “TCM”.
3. Select the applicable PID from the PID table.
4. Verify the PID data according to the directions on the screen.

Note

- The PID data screen function is used for monitoring the calculated value of input/output signals in the module. Therefore, if the monitored value of the output parts is not within the specification, it is necessary to inspect the monitored value of input parts corresponding to the applicable output part control. In addition, because the system does not display an output part malfunction as an abnormality in the monitored value, it is necessary to inspect the output parts individually.
- When detecting DTCs, PIDs related to a malfunctioning system may not display even if the module is normal. Therefore, if a PID is not displayed, it is necessary to verify the DTC, perform malfunction diagnosis of the DTC that was detected, and do repairs.

ON-BOARD DIAGNOSTIC [FW6A-EL, FW6AX-EL]

PID/DATA monitor item table (Reference)

—: Not applicable

Item	Unit/ Condition	Test condition	Specification (Reference)	Output part name
DGP_DIS_1	km {mile}	Displays the traveled distance since the differential protection control operated due to excessive rotation difference between left/right drive wheels.		—
DGP_DIS_2	km {mile}	Displays the traveled distance since the DGP_MAX_DIF is updated.		—
DGP_MAX_DIF	RPM	Displays the maximum rotation difference since the differential protection control operated due to excessive rotation difference between left/right drive wheels.		—
DGP_SPD	KPH {MPH}	Displays the vehicle speed with trailing wheels since the differential protection control operated due to excessive rotation difference between left/right drive wheels.		—
ECT	°C {°F}	Displays the ECT.		ECT sensor
ECU_A	°C {°F}	Displays the ECU internal temperature A.		ECU internal temperature sensor A
ECU_B	°C {°F}	Displays the ECU internal temperature B.		ECU internal temperature sensor B
ECU_C	°C {°F}	Displays the ECU internal temperature C.		ECU internal temperature sensor C
EOP_DUTY	%	Displays the drive duty ratio for electric AT oil pump.		Electric AT oil pump
EOP_RLY	Off/On	Electric AT oil pump relay stopped	Off	Electric AT oil pump relay
		Electric AT oil pump relay operating	On	
GEAR_RA	Ratio	Selector lever in 1GR at D position	Approx. 3.5526	• Shift solenoid No.1 • Shift solenoid No.2 • Shift solenoid No.3 • Shift solenoid No.4
		Selector lever in 2GR at D position	Approx. 2.0228	
		Selector lever in 3GR at D position	Approx. 1.4522	
		Selector lever in 4GR at D position	Approx. 1.0000	
		Selector lever in 5GR at D position	Approx. 0.7084	
		Selector lever in 6GR at D position	Approx. 0.5993	
GEAR_SEL	1/2/3/4/5/6	Selector lever in 1GR at D position	1	• Shift solenoid No.1 • Shift solenoid No.2 • Shift solenoid No.3 • Shift solenoid No.4
		Selector lever in 2GR at D position	2	
		Selector lever in 3GR at D position	3	
		Selector lever in 4GR at D position	4	
		Selector lever in 5GR at D position	5	
		Selector lever in 6GR at D position	6	
HI_TEMP	—	Displays the ATF high temperature mode determination amount. (ATF temperature 132 °C {270 °F} or more)		—
HTM_CNT	—	Displays the ATF high temperature mode determination amount. (ATF temperature 132 °C {270 °F} or more)		—
HTM_DIS	km {mile}	Displays the traveled distance after determining the ATF high temperature mode. (ATF temperature 132 °C {270 °F} or more)		—
LINEDES	kPa {kgf/cm^2, psi}	Idle at P position after warm-up	Approx. 500 kPa {5.10 kgf/cm^2, 72.5 psi}	—
LN_C_CLUTCH	kPa {kgf/cm^2, psi}	Displays the hydraulic control learning value data.		—
LN_O_CLUTCH	kPa {kgf/cm^2, psi}	Displays the hydraulic control learning value data.		—
LN_OV_SCOPE	—	Displays the hydraulic control learning value data.		—
LN_T_CLUTCH	kPa {kgf/cm^2, psi}	Displays the hydraulic control learning value data.		—

ON-BOARD DIAGNOSTIC [FW6A-EL, FW6AX-EL]

Item	Unit/ Condition	Test condition	Specification (Reference)	Output part name
LOCK_UP	OFF/SLIP/ON	OFF: • Except below SLIP: • "SLIP" is displayed during TCC control with the difference between the engine speed and turbine shaft speed less than the control value. • Resets while TCC control is stopped or if the difference between the engine speed and turbine/shaft speed is the specification or more. ON: • "ON" is displayed during TCC control and there is almost no difference between the engine speed and turbine shaft speed*. • Resets while TCC control is stopped or if the difference between the engine speed and turbine shaft speed is the specification or more. *: The TCC controls the TCC hydraulic pressure to suppress hydraulic pressure loss and transaxle vibration due to TCC clutch engagement. Therefore, normally, there is a difference between the engine speed and turbine shaft speed. Because the TCC hydraulic pressure is increased by the fail-safe and TCC is performed while the ATF is hot, there is almost no difference.		—
LONGI_ACCEL	—	Displays the acceleration calculated from the drive wheels.		—
OP_SW1	Off/On	Selector lever at P position	Off	Oil pressure switch No.1
		Selector lever at R position	Off	
		Selector lever at N position	Off	
		Selector lever in 1GR at D position	On	
		Selector lever in 2GR at D position	On	
		Selector lever in 3GR at D position	On	
		Selector lever in 4GR at D position	On	
		Selector lever in 5GR at D position	Off	
		Selector lever in 6GR at D position	Off	
OP_SW1_OFF	kPa {kgf/cm^2, psi}	After performing on-board diagnostic test mode	More than 50 kPa {0.51 kgf/cm^2, 7.3 psi} (0 kPa {0 kgf/cm^2, 0 psi} before performing on-board diagnostic test mode)	Oil pressure switch No.1
OP_SW1_ON	kPa {kgf/cm^2, psi}	After performing on-board diagnostic test mode	Less than 320 kPa {3.26 kgf/cm^2, 46.4 psi} (0 kPa {0 kgf/cm^2, 0 psi} before performing on-board diagnostic test mode)	Oil pressure switch No.1
OP_SW2	Off/On	Selector lever at P position	Off	Oil pressure switch No.2
		Selector lever at R position	Off	
		Selector lever at N position	Off	
		Selector lever in 1GR at D position	Off	
		Selector lever in 2GR at D position	On	
		Selector lever in 3GR at D position	Off	
		Selector lever in 4GR at D position	Off	
		Selector lever in 5GR at D position	Off	
		Selector lever in 6GR at D position	On	
OP_SW2_OFF	kPa {kgf/cm^2, psi}	After performing on-board diagnostic test mode	More than 50 kPa {0.51 kgf/cm^2, psi} (0 kPa {0 kgf/cm^2, 0 psi} before performing on-board diagnostic test mode)	Oil pressure switch No.2
OP_SW2_ON	kPa {kgf/cm^2, psi}	After performing on-board diagnostic test mode	Less than 260 kPa {2.65 kgf/cm^2, 37.7 psi} (0 kPa {0 kgf/cm^2, 0 psi} before performing on-board diagnostic test mode)	Oil pressure switch No.2

ON-BOARD DIAGNOSTIC [FW6A-EL, FW6AX-EL]

Item	Unit/ Condition	Test condition	Specification (Reference)	Output part name
OP_SW3	Off/On	Selector lever at P position	Off	Oil pressure switch No.3
		Selector lever at R position	On	
		Selector lever at N position	Off	
		Selector lever in 1GR at D position	Off	
		Selector lever in 2GR at D position	Off	
		Selector lever in 3GR at D position	On	
		Selector lever in 4GR at D position	Off	
		Selector lever in 5GR at D position	On	
		Selector lever in 6GR at D position	Off	
OP_SW3_OFF	kPa {kgf/cm^2, psi}	After performing on-board diagnostic test mode	More than 50 kPa {0.51 kgf/cm^2, 7.3 psi} (0 kPa {0 kgf/cm^2, 0 psi} before performing on-board diagnostic test mode)	Oil pressure switch No.3
OP_SW3_ON	kPa {kgf/cm^2, psi}	After performing on-board diagnostic test mode	Less than 215 kPa {2.19 kgf/cm^2, 31.2 psi} (0 kPa {0 kgf/cm^2, 0 psi} before performing on-board diagnostic test mode)	Oil pressure switch No.3
OP_SW4	Off/On	Selector lever at P position	Off	Oil pressure switch No.4
		Selector lever at R position	Off	
		Selector lever at N position	Off	
		Selector lever in 1GR at D position	Off	
		Selector lever in 2GR at D position	Off	
		Selector lever in 3GR at D position	Off	
		Selector lever in 4GR at D position	On	
		Selector lever in 5GR at D position	On	
		Selector lever in 6GR at D position	On	
OP_SW4_OFF	kPa {kgf/cm^2, psi}	After performing on-board diagnostic test mode	More than 50 kPa {0.51 kgf/cm^2, 7.3 psi} (0 kPa {0 kgf/cm^2, 0 psi} before performing on-board diagnostic test mode)	Oil pressure switch No.4
OP_SW4_ON	kPa {kgf/cm^2, psi}	After performing on-board diagnostic test mode	Less than 260 kPa {2.65 kgf/cm^2, 37.7 psi} (0 kPa {0 kgf/cm^2, 0 psi} before performing on-board diagnostic test mode)	Oil pressure switch No.4
OSS	RPM	Vehicle stopped	0 RPM	Output shaft speed sensor
		Vehicle speed 30 km/h {19 mph} in 3GR at D position	Approx. 1000 RPM	
PUMP_SPEED	RPM	• Vehicle stopped at D position • During i-stop control	200—2,000 RPM	—
RPM	RPM	Displays the engine speed.		PCM
SHIFT_CTRL	DEFAULT/ MANUAL/ C_CONTROL / HIGH_TEMP/ D_MANUAL/ FAIL_SAFE	D position normal mode	DEFAULT	—
		M position manual mode	MANUAL	
		Cruise control (cruise control system)	C_CONTROL	
		Automatic transaxle protection mode (ATF high temperature mode)	HIGH_TEMP	
		D position direct mode	D_MANUAL	
		Fail-safe mode	FAIL_SAFE	
SS_ON-OFF	Off/On	On/off solenoid is off.	Off	On/off solenoid
		On/off solenoid is on.	On	

ON-BOARD DIAGNOSTIC [FW6A-EL, FW6AX-EL]

Item	Unit/ Condition	Test condition	Specification (Reference)	Output part name
SS1	A	Vehicle stopped at P position	Approx. 0 A	Shift solenoid No.1
		Vehicle stopped at R position	Approx. 0 A	
		Vehicle stopped at N position	Approx. 0 A	
		Driving in D position 1GR	Approx. 1 A	
		Driving in D position 2GR	Approx. 1 A	
		Driving in D position 3GR	Approx. 1 A	
		Driving in D position 4GR	Approx. 1 A	
		Driving in D position 5GR	Approx. 0 A	
		Driving in D position 6GR	Approx. 0 A	
SS1_C	A	Vehicle stopped at P position	0 A	Shift solenoid No.1
		Vehicle stopped at R position	0 A	
		Vehicle stopped at N position	0 A	
		Driving in D position 1GR	1 A	
		Driving in D position 2GR	1 A	
		Driving in D position 3GR	1 A	
		Driving in D position 4GR	1 A	
		Driving in D position 5GR	0 A	
		Driving in D position 6GR	0 A	
SS2	A	Vehicle stopped at P position	Approx. 0 A	Shift solenoid No.2
		Vehicle stopped at R position	Approx. 0 A	
		Vehicle stopped at N position	Approx. 0 A	
		Driving in D position 1GR	Approx. 0 A	
		Driving in D position 2GR	Approx. 1 A	
		Driving in D position 3GR	Approx. 0 A	
		Driving in D position 4GR	Approx. 0 A	
		Driving in D position 5GR	Approx. 0 A	
		Driving in D position 6GR	Approx. 1 A	
SS2_C	A	Vehicle stopped at P position	0 A	Shift solenoid No.2
		Vehicle stopped at R position	0 A	
		Vehicle stopped at N position	0 A	
		Driving in D position 1GR	0 A	
		Driving in D position 2GR	1 A	
		Driving in D position 3GR	0 A	
		Driving in D position 4GR	0 A	
		Driving in D position 5GR	0 A	
		Driving in D position 6GR	1 A	
SS3	A	Vehicle stopped at P position	Approx. 1 A	Shift solenoid No.3
		Vehicle stopped at R position	Approx. 0 A	
		Vehicle stopped at N position	Approx. 1 A	
		Driving in D position 1GR	Approx. 1 A	
		Driving in D position 2GR	Approx. 1 A	
		Driving in D position 3GR	Approx. 0 A	
		Driving in D position 4GR	Approx. 1 A	
		Driving in D position 5GR	Approx. 0 A	
		Driving in D position 6GR	Approx. 1 A	
SS3_C	A	Vehicle stopped at P position	1 A	Shift solenoid No.3
		Vehicle stopped at R position	0 A	
		Vehicle stopped at N position	1 A	
		Driving in D position 1GR	1 A	
		Driving in D position 2GR	1 A	
		Driving in D position 3GR	0 A	
		Driving in D position 4GR	1 A	
		Driving in D position 5GR	0 A	
		Driving in D position 6GR	1 A	

ON-BOARD DIAGNOSTIC [FW6A-EL, FW6AX-EL]

Item	Unit/ Condition	Test condition	Specification (Reference)	Output part name
SS4	A	Vehicle stopped at P position	Approx. 0 A	Shift solenoid No.4
		Vehicle stopped at R position	Approx. 0 A	
		Vehicle stopped at N position	Approx. 0 A	
		Driving in D position 1GR	Approx. 0 A	
		Driving in D position 2GR	Approx. 1 A	
		Driving in D position 3GR	Approx. 1 A	
		Driving in D position 4GR	Approx. 0 A	
		Driving in D position 5GR	Approx. 0 A	
		Driving in D position 6GR	Approx. 0 A	
SS4_C	A	Vehicle stopped at P position	0 A	Shift solenoid No.4
		Vehicle stopped at R position	0 A	
		Vehicle stopped at N position	0 A	
		Driving in D position 1GR	0 A	
		Driving in D position 2GR	1 A	
		Driving in D position 3GR	1 A	
		Driving in D position 4GR	0 A	
		Driving in D position 5GR	0 A	
		Driving in D position 6GR	0 A	
SSLU	A	Vehicle stopped at P position	Approx. 0 A	TCC control solenoid
		Vehicle stopped at R position	Approx. 0 A	
		Vehicle stopped at N position	Approx. 0 A	
		Under the following conditions: • Driving in D position 1GR • Accelerator pedal opening angle is approx. 10 %	Approx. 430 mA	
		Under the following conditions: • Driving in D position 2GR • Accelerator pedal opening angle is approx. 10 %	Approx. 430 mA	
		Under the following conditions: • Driving in D position 3GR • Accelerator pedal opening angle is approx. 10 %	Approx. 430 mA	
		Under the following conditions: • Driving in D position 4GR • Accelerator pedal opening angle is approx. 10 %	Approx. 430 mA	
		Under the following conditions: • Driving in D position 5GR • Accelerator pedal opening angle is approx. 10 %	Approx. 430 mA	
		Under the following conditions: • Driving in D position 6GR • Accelerator pedal opening angle is approx. 10 %	Approx. 430 mA	

ON-BOARD DIAGNOSTIC [FW6A-EL, FW6AX-EL]

Item	Unit/ Condition	Test condition	Specification (Reference)	Output part name
SSLU_C	A	Vehicle stopped at P position	0 A	TCC control solenoid
		Vehicle stopped at R position	0 A	
		Vehicle stopped at N position	0 A	
		Under the following conditions: • Driving in D position 1GR • Accelerator pedal opening angle is approx. 10 %	Approx. 430 mA	
		Under the following conditions: • Driving in D position 2GR • Accelerator pedal opening angle is approx. 10 %	Approx. 430 mA	
		Under the following conditions: • Driving in D position 3GR • Accelerator pedal opening angle is approx. 10 %	Approx. 430 mA	
		Under the following conditions: • Driving in D position 4GR • Accelerator pedal opening angle is approx. 10 %	Approx. 430 mA	
		Under the following conditions: • Driving in D position 5GR • Accelerator pedal opening angle is approx. 10 %	Approx. 430 mA	
		Under the following conditions: • Driving in D position 6GR • Accelerator pedal opening angle is approx. 10 %	Approx. 430 mA	
SSLU_PRES	kPa {kgf/cm^2, psi}	Vehicle stopped at P position	0 kPa {0 kgf/cm^2, 0 psi}	TCC control solenoid
		Vehicle stopped at R position	0 kPa {0 kgf/cm^2, 0 psi}	
		Vehicle stopped at N position	0 kPa {0 kgf/cm^2, 0 psi}	
		Under the following conditions: • Driving in D position 1GR • Accelerator pedal opening angle is approx. 10 %	Approx. 360 kPa {3.67 kgf/cm^2, 52.2 psi}	
		Under the following conditions: • Driving in D position 2GR • Accelerator pedal opening angle is approx. 10 %	Approx. 360 kPa {3.67 kgf/cm^2, 52.2 psi}	
		Under the following conditions: • Driving in D position 3GR • Accelerator pedal opening angle is approx. 10 %	Approx. 360 kPa {3.67 kgf/cm^2, 52.2 psi}	
		Under the following conditions: • Driving in D position 4GR • Accelerator pedal opening angle is approx. 10 %	Approx. 360 kPa {3.67 kgf/cm^2, 52.2 psi}	
		Under the following conditions: • Driving in D position 5GR • Accelerator pedal opening angle is approx. 10 %	Approx. 360 kPa {3.67 kgf/cm^2, 52.2 psi}	
		Under the following conditions: • Driving in D position 6GR • Accelerator pedal opening angle is approx. 10 %	Approx. 360 kPa {3.67 kgf/cm^2, 52.2 psi}	

ON-BOARD DIAGNOSTIC [FW6A-EL, FW6AX-EL]

Item	Unit/ Condition	Test condition	Specification (Reference)	Output part name
SSP	A	Vehicle stopped at P position	Approx. 980 mA	Pressure control solenoid
		Vehicle stopped at R position	Approx. 930 mA	
		Vehicle stopped at N position	Approx. 980 mA	
		Under the following conditions: • Driving in D position 1GR • Accelerator pedal opening angle is approx. 10 %	Approx. 400—800 mA	
		Under the following conditions: • Driving in D position 2GR • Accelerator pedal opening angle is approx. 10 %	Approx. 400—800 mA	
		Under the following conditions: • Driving in D position 3GR • Accelerator pedal opening angle is approx. 10 %	Approx. 400—800 mA	
		Under the following conditions: • Driving in D position 4GR • Accelerator pedal opening angle is approx. 10 %	Approx. 400—800 mA	
		Under the following conditions: • Driving in D position 5GR • Accelerator pedal opening angle is approx. 10 %	Approx. 400—800 mA	
		Under the following conditions: • Driving in D position 6GR • Accelerator pedal opening angle is approx. 10 %	Approx. 400—800 mA	
SSP_C	A	Vehicle stopped at P position	Approx. 980 mA	Pressure control solenoid
		Vehicle stopped at R position	Approx. 930 mA	
		Vehicle stopped at N position	Approx. 980 mA	
		Under the following conditions: • Driving in D position 1GR • Accelerator pedal opening angle is approx. 10 %	Approx. 400—800 mA	
		Under the following conditions: • Driving in D position 2GR • Accelerator pedal opening angle is approx. 10 %	Approx. 400—800 mA	
		Under the following conditions: • Driving in D position 3GR • Accelerator pedal opening angle is approx. 10 %	Approx. 400—800 mA	
		Under the following conditions: • Driving in D position 4GR • Accelerator pedal opening angle is approx. 10 %	Approx. 400—800 mA	
		Under the following conditions: • Driving in D position 5GR • Accelerator pedal opening angle is approx. 10 %	Approx. 400—800 mA	
		Under the following conditions: • Driving in D position 6GR • Accelerator pedal opening angle is approx. 10 %	Approx. 400—800 mA	

ON-BOARD DIAGNOSTIC [FW6A-EL, FW6AX-EL]

ON-BOARD DIAGNOSTIC SYSTEM SIMULATION INSPECTION [FW6A-EL, FW6AX-EL]

id050227290400

1. Connect the M-MDS to the DLC-2.
2. After the vehicle is identified, select the following items from the initialization screen of the M-MDS.
   (1) Select “Data Logger”.
   (2) Select “Modules”.
   (3) Select “TCM”.
3. Select the simulation items from the PID table.
4. Perform the active command modes function, inspect the operations for each parts.
   - If the operation of output parts cannot be verified after the active command mode inspection is performed, this could indicate the possibility of an open or short circuit, sticking, or operation malfunction in the output parts.

Simulation item table

Item	Description	Unit/Condition	Operation condition
EOP	Electric AT oil pump condition	Off/On	Under the following conditions: • Vehicle stopped • Accelerator pedal fully closed
EOP_DUTY	Electric AT oil pump duty cycle	%	Under the following conditions: • Vehicle stopped • Accelerator pedal fully closed
EOP_RLY	Electric AT oil pump relay condition	Off/On	Under the following conditions: • Vehicle stopped • Accelerator pedal fully closed
SS_ON-OFF	On/off solenoid condition	Off/On	Under the following conditions: • Vehicle stopped • Idling at P or N position
SS1_C	Shift solenoid No.1 target current	A	Under the following conditions: • Vehicle stopped • Idling at P or N position
SS2_C	Shift solenoid No.2 target current	A	Under the following conditions: • Vehicle stopped • Idling at P or N position
SS3_C	Shift solenoid No.3 target current	A	Under the following conditions: • Vehicle stopped • Idling at P or N position
SS4_C	Shift solenoid No.4 target current	A	Under the following conditions: • Vehicle stopped • Idling at P or N position
SSLU_C	TCC control solenoid target current	A	Under the following conditions: • ATF temperature (PID: TFT) is 20 °C {68 °F} or more. • Output shaft speed (PID: OSS) is 10 rpm or more. • Turbine/input shaft speed (PID: TSS) is 1,000 rpm or more. • Brake pedal released
SSP_C	Pressure control solenoid target current	A	Idling at P or N position

05-02B ON-BOARD DIAGNOSTIC [GW6A-EL, GW6AX-EL]

ON-BOARD DIAGNOSTIC SYSTEM WIRING DIAGRAM [GW6A-EL, GW6AX-EL] 05-02B–2
ON-BOARD DIAGNOSTIC SYSTEM FOREWORD [GW6A-EL, GW6AX-EL] 05-02B–3
Troubleshooting Procedure 05-02B–3
Repair order form 05-02B–4
Action for Non-repeatable Malfunction 05-02B–6
ON-BOARD DIAGNOSTIC SYSTEM DTC INSPECTION [GW6A-EL, GW6AX-EL] 05-02B–6
Reading DTCs Procedure 05-02B–6
Clearing DTCs Procedures 05-02B–8
ON-BOARD DIAGNOSTIC TEST MODE [GW6A-EL, GW6AX-EL] 05-02B–8
Foreword 05-02B–8
ON-BOARD DIAGNOSTIC SYSTEM DTC TABLE [GW6A-EL, GW6AX-EL] 05-02B–10
DTC P0218:00 [GW6A-EL, GW6AX-EL] 05-02B–14
DTC P0500:00 [GW6A-EL, GW6AX-EL] 05-02B–15
DTC P0666:00 [GW6A-EL, GW6AX-EL] 05-02B–16
DTC P0667:00 [GW6A-EL, GW6AX-EL] 05-02B–17
DTC P06B8:00 [GW6A-EL, GW6AX-EL] 05-02B–18
DTC P0706:00 [GW6A-EL, GW6AX-EL] 05-02B–19
DTC P0707:00 [GW6A-EL, GW6AX-EL] 05-02B–20
DTC P0708:00 [GW6A-EL, GW6AX-EL] 05-02B–21
DTC P0711:00 [GW6A-EL, GW6AX-EL] 05-02B–22
DTC P0712:00 [GW6A-EL, GW6AX-EL] 05-02B–23
DTC P0713:00 [GW6A-EL, GW6AX-EL] 05-02B–24
DTC P0716:00 [GW6A-EL, GW6AX-EL] 05-02B–25
DTC P0717:00 [GW6A-EL, GW6AX-EL] 05-02B–26
DTC P0721:00 [GW6A-EL, GW6AX-EL] 05-02B–27
DTC P0722:00 [GW6A-EL, GW6AX-EL] 05-02B–28
DTC P0729:00 [GW6A-EL, GW6AX-EL] 05-02B–29
DTC P0731:00 [GW6A-EL, GW6AX-EL] 05-02B–30
DTC P0732:00 [GW6A-EL, GW6AX-EL] 05-02B–31
DTC P0733:00 [GW6A-EL, GW6AX-EL] 05-02B–32
DTC P0734:00 [GW6A-EL, GW6AX-EL] 05-02B–33
DTC P0735:00 [GW6A-EL, GW6AX-EL] 05-02B–34
DTC P0736:00 [GW6A-EL, GW6AX-EL] 05-02B–35
DTC P0741:00 [GW6A-EL, GW6AX-EL] 05-02B–36
DTC P0743:00 [GW6A-EL, GW6AX-EL] 05-02B–37
DTC P0746:00 [GW6A-EL, GW6AX-EL] 05-02B–38
DTC P0748:00 [GW6A-EL, GW6AX-EL] 05-02B–39
DTC P0751:00 [GW6A-EL, GW6AX-EL] 05-02B–40
DTC P0752:00 [GW6A-EL, GW6AX-EL] 05-02B–42
DTC P0753:00 [GW6A-EL, GW6AX-EL] 05-02B–43
DTC P0756:00 [GW6A-EL, GW6AX-EL] 05-02B–44
DTC P0757:00 [GW6A-EL, GW6AX-EL] 05-02B–45
DTC P0758:00 [GW6A-EL, GW6AX-EL] 05-02B–46
DTC P0761:00 [GW6A-EL, GW6AX-EL] 05-02B–47
DTC P0762:00 [GW6A-EL, GW6AX-EL] 05-02B–48
DTC P0763:00 [GW6A-EL, GW6AX-EL] 05-02B–50
DTC P0766:00 [GW6A-EL, GW6AX-EL] 05-02B–51
DTC P0767:00 [GW6A-EL, GW6AX-EL] 05-02B–52
DTC P0768:00 [GW6A-EL, GW6AX-EL] 05-02B–53
DTC P0771:00 [GW6A-EL, GW6AX-EL] 05-02B–54
DTC P0772:00 [GW6A-EL, GW6AX-EL] 05-02B–55
DTC P0773:00 [GW6A-EL, GW6AX-EL] 05-02B–57
DTC P0780:00 [GW6A-EL, GW6AX-EL] 05-02B–58
DTC P079A:00 [GW6A-EL, GW6AX-EL] 05-02B–59
DTC P0819:00 [GW6A-EL, GW6AX-EL] 05-02B–60
DTC P0842:00 [GW6A-EL, GW6AX-EL] 05-02B–63
DTC P0843:00 [GW6A-EL, GW6AX-EL] 05-02B–64
DTC P0847:00 [GW6A-EL, GW6AX-EL] 05-02B–65
DTC P0848:00 [GW6A-EL, GW6AX-EL] 05-02B–66
DTC P0872:00 [GW6A-EL, GW6AX-EL] 05-02B–68
DTC P0873:00 [GW6A-EL, GW6AX-EL] 05-02B–69
DTC P0877:00 [GW6A-EL, GW6AX-EL] 05-02B–71
DTC P0878:00 [GW6A-EL, GW6AX-EL] 05-02B–72

ON-BOARD DIAGNOSTIC [GW6A-EL, GW6AX-EL]

DTC P0882:00
[GW6A-EL, GW6AX-EL] 05-02B–73
DTC P0883:00
[GW6A-EL, GW6AX-EL] 05-02B–75
DTC P0C2C:00
[GW6A-EL, GW6AX-EL] 05-02B–76
DTC P1728:00
[GW6A-EL, GW6AX-EL] 05-02B–78
DTC P1738:00
[GW6A-EL, GW6AX-EL] 05-02B–79
DTC P1784:00
[GW6A-EL, GW6AX-EL] 05-02B–80
DTC P181F:00
[GW6A-EL, GW6AX-EL] 05-02B–81
DTC P2530:00
[GW6A-EL, GW6AX-EL] 05-02B–85
DTC P2712:00
[GW6A-EL, GW6AX-EL] 05-02B–86
DTC U0073:00, U0100:00, U0121:00, U0141:00, U0155:00
[GW6A-EL, GW6AX-EL] 05-02B–87
Diagnostic Procedure **05-02B–89**
DTC U0074:00
[GW6A-EL, GW6AX-EL] 05-02B–89
DTC U0115:00
[GW6A-EL, GW6AX-EL] 05-02B–90
DTC U0442:00
[GW6A-EL, GW6AX-EL] 05-02B–91
ON-BOARD DIAGNOSTIC SYSTEM PID/DATA MONITOR INSPECTION
[GW6A-EL, GW6AX-EL] 05-02B–92
ON-BOARD DIAGNOSTIC SYSTEM SIMULATION INSPECTION
[GW6A-EL, GW6AX-EL] 05-02B–101

ON-BOARD DIAGNOSTIC [GW6A-EL, GW6AX-EL]

ON-BOARD DIAGNOSTIC SYSTEM WIRING DIAGRAM [GW6A-EL, GW6AX-EL]

id050230290000

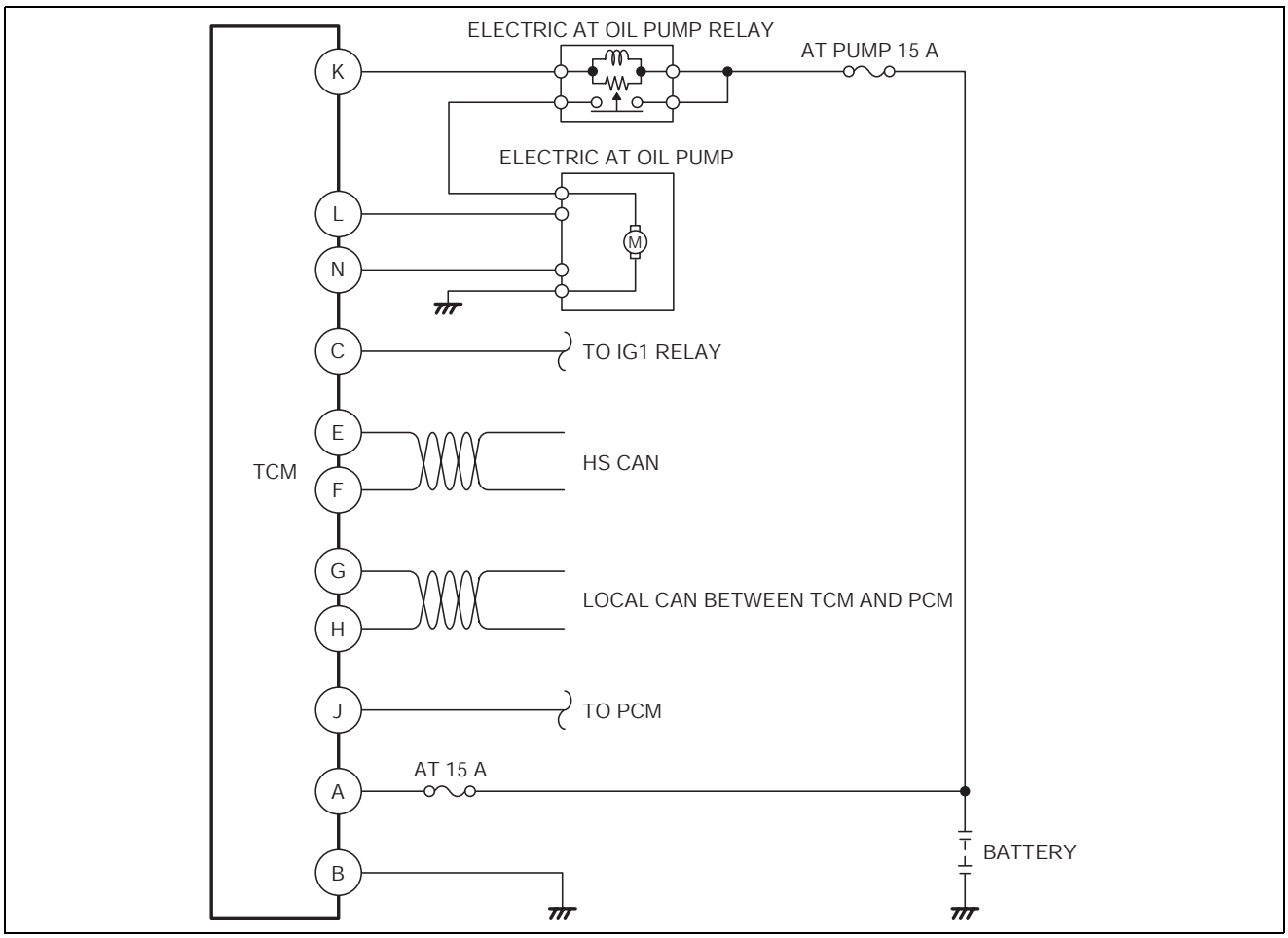

ac5wzw0000239

ON-BOARD DIAGNOSTIC [GW6A-EL, GW6AX-EL]

ON-BOARD DIAGNOSTIC SYSTEM FOREWORD [GW6A-EL, GW6AX-EL]

id050230027300

- If there is any vehicle malfunction complaint lodged by a customer, perform malfunction diagnosis according to the troubleshooting procedure.

Troubleshooting Procedure

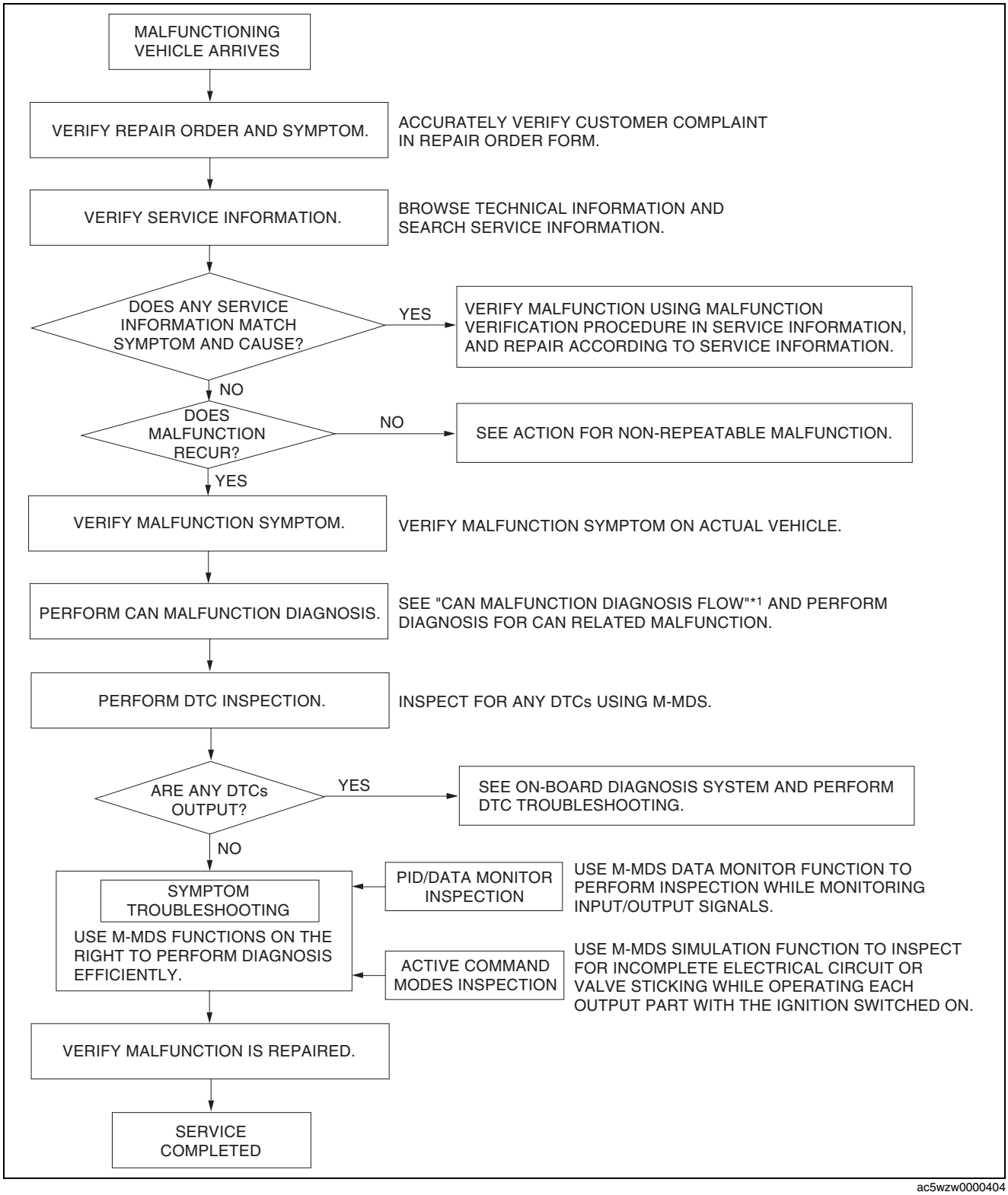

ac5wzw0000404

*1 : 10-02C-3 CONTROLLER AREA NETWORK (CAN) MALFUNCTION DIAGNOSIS FLOW [SKYACTIV-D 2.2 (L.H.D.)]/10-02D-3 CONTROLLER AREA NETWORK (CAN) MALFUNCTION DIAGNOSIS FLOW [SKYACTIV-D 2.2 (R.H.D.)]

ON-BOARD DIAGNOSTIC [GW6A-EL, GW6AX-EL]

Repair order form

Repair order form and malfunction symptom check sheet

	Repair order	Check with customer	Diagnosis	Repair	Explanation to customer
Date/time					
In-charge					

Customer statement (When? What? What time(s)? Where it occurs. Warning light illumination? Can anyone replicate problem?)

Vehicle body number: | Registration date: | Date of malfunction occurrence: | Odometer reading km {mph}

Engine (SOHC/DOHC/RE/DE) (Cab /EGI/ Turbo/ Miller cycle/ LPG/Direct injection) | Transmission (MT/HAT/EC-AT/CVT)

Environmental conditions					Driving conditions								
Weather	Ambient temp.	Drive scenario	Grade	Occurrence frequency	Fuel	Warm-up condition	Driving operation	Driving posture	Load	Accelerator opening angle	Shift position	Eng RPM	Vehicle speed	Pattern of use
Sunny	-10°C {14°F} or less	Depart/arrive	Flat	Once/day	Regular	Cold	When starting	Vehicle stopped	Headlights on	0/8	1	Idle	5 km/h {3 mph}	Work ____ %
Cloudy	-10— 0°C {14—32°F}	Traffic jam (city)		2-3 times/day	High Oct.	Half-warmed	After starting		Exterior lights on	1/8	2	Less than 1,000	10 km/h {6.2 mph}	Minor use ____ %
	0—10°C {32—50°F}	Standard city street	Upgrade	4-5 times/day			Re-starting	Straight-on driving	A/C on		3	Less than 1,500	20 km/h {12 mph}	Trips ____ %
	10—15°C {50—59°F}	Suburbs		Many times/day	Diesel	Fully warmed	(min. after stopped)		AUTO °C{°F}	2/8	4	Less than 2,000	30 km/h {19 mph}	Other ____ %
Rain	15—20°C {59—58°F}						Idling				5	Less than 2,500	40 km/h {25 mph}	
		Highway	Down	Once/week	LPG	N/A	Racing	Reversing	Blower: 1 step	3/8	6		50 km/h {31 mph}	Between ENG. start→Stop:
Snow	20—25°C {68—77°F}						Accel. from stop		Blower: 2 steps		N	Less than 3,000	60 km/h {37 mph}	Distance, km
	25—30°C {77—86°F}	Uneven road		2-3 times/week	Other	Other	Normal driving		Blower: 3 steps	4/8	R		70 km/h {43 mph}	Approx Hrs.
High wind	30—35°C {86—95°F}	Dry road surface	grade	4-5 times/week	Fuel gauge	Water temp. gauge	Deceleration		Blower: 4 steps	5/8	P	Less than 4,000	80 km/h {50 mph}	No. of occupants:
Wind gusts	35—40(0°C {95—104°F}	Wet road surface		Once/month	F	H	Braking	Right turn	Power steering lock to lock		R	Less than 4,500	90 km/h {56 mph}	Load condition kg
	40—45°C {104—113°F}	Snow bound road	N/A	2-3 times/month			Soft braking				N		100 km/h {62.1 mph}	Other
N/A	45°C {113°F} or more	Icy road		4-5 times/month			Clutch disengage		Rear defrost on	6/8	D	Less than 5,000	110 km/h {68.4 mph}	
	N/A				E	C	Sudden accel.	Left turn			S	Less than 5,500	120 km/h {74.6 mph}	
Other	Other	Other	Other	Other			Light accel.		Wipers on	7/8	AT L	Less than 6,000	130 km/h {80.8 mph}	
							Shifting				Hold		140 km/h {87 mph}	
							(km/h {mph}) →		Audio on		M	Less than 6,500	150 km/h {93.2 mph}	
							km/h {mph})	Other	Other	8/8	(km/h {mph})	7,000 or more	160 km/h {99.4 mph}	

DTC, measured data (fuel pressure, intake manifold vacuum, throttle sensor electromotive force, air flow electromotive force, other), maintenance, repair, accident history, installation of commercial devices

ac5wzw0000376

ON-BOARD DIAGNOSTIC [GW6A-EL, GW6AX-EL]

Dealer name:	Vehicle body number:	Odometer reading:
Vehicle-in date:	Estimated repair completion date:	Person in-charge:
Subject (Content):		

Audio memory

	1	2	3	4	5	6	Fuel level
FM1							E F
FM2							
AM							

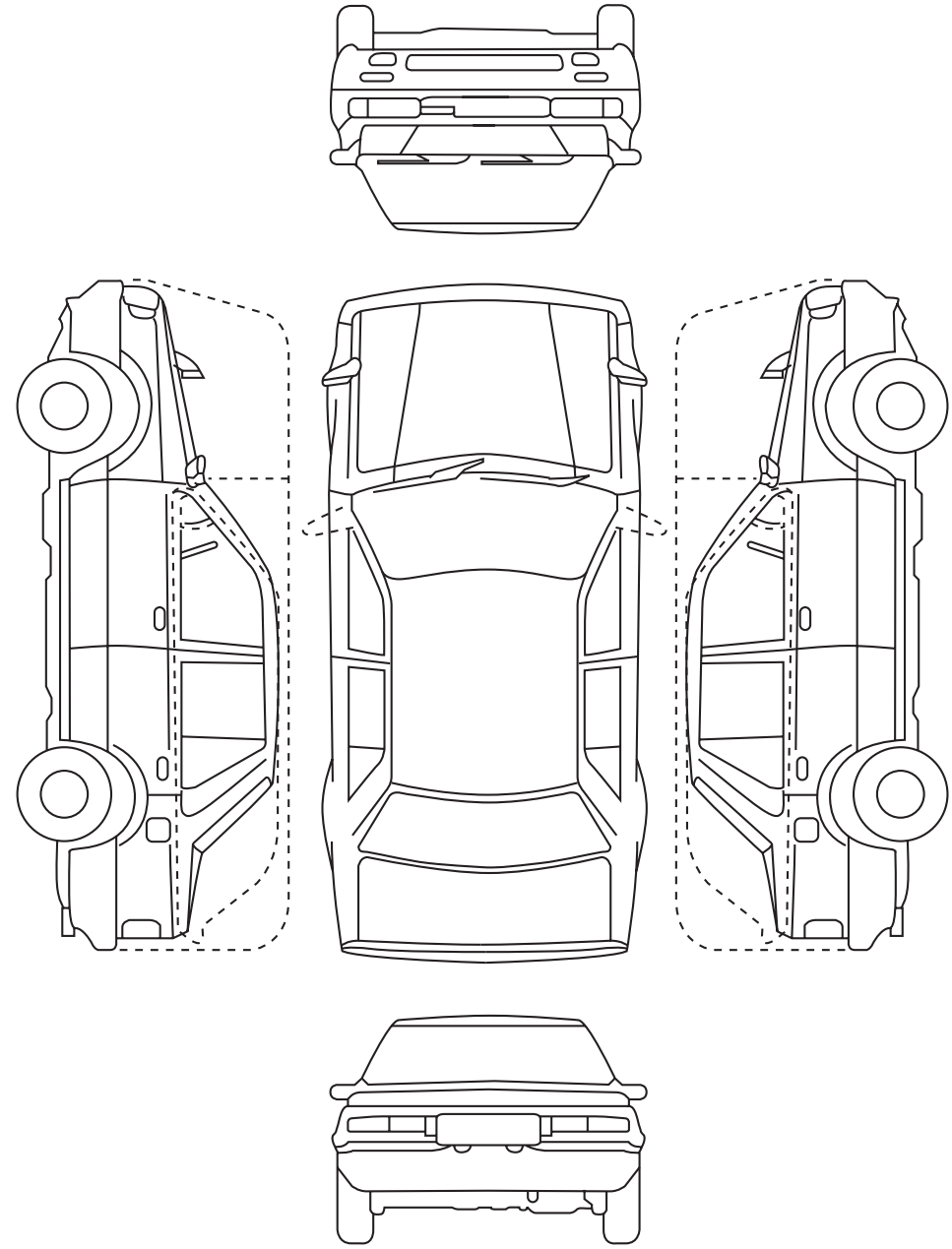

ac5wzw0000306

ON-BOARD DIAGNOSTIC [GW6A-EL, GW6AX-EL]

Action for Non-repeatable Malfunction

- If the malfunction does not recur, verify the malfunction cause by performing the following actions:
  - — Verify that no DTCs are stored. (See 05-02B-6 ON-BOARD DIAGNOSTIC SYSTEM DTC INSPECTION [GW6A-EL, GW6AX-EL].)
  - — Based on the repair order form, attempt to drive the vehicle or perform tests to replicate the malfunction, record the data at that time, and detect the malfunction cause.
- If the malfunction does not recur after the above servicing, explain to the customer that the vehicle is normal.

ON-BOARD DIAGNOSTIC SYSTEM DTC INSPECTION [GW6A-EL, GW6AX-EL]

id050230290100

Reading DTCs Procedure

1. Connect the M-MDS to the DLC-2.
2. After the vehicle is identified, select the following items from the initialization screen of the M-MDS.
   (1) Select “Self Test”.
   (2) Select “Modules”.
   (3) Select “TCM”.

   Note
   - Freeze frame data/snapshot data appears at the top of the help screen when the displayed DTC is selected.

   Freeze frame data
   - The freeze frame data consists of data for vehicle and transaxle control system operation conditions when malfunctions in the transaxle control system are detected and stored in the TCM.
   - Freeze frame data is stored at the instant the malfunction indicator lamp illuminates, and only a part of the DTC data is stored.

   Snapshot data
   - The data for all DTCs currently detected is stored.
     Recorded DTC timing
     - — For DTCs with one drive cycle, data is recorded during the malfunction determination period.
     - — For DTCs with two drive cycles, data is recorded during non-determination (1st diagnosis) periods.
3. Then, select the “Retrieve CMDTCs” and perform procedures according to directions on the M-MDS screen.
4. Verify the DTC according to the directions on the screen.
   - If any DTCs are displayed, perform troubleshooting according to the corresponding DTC inspection.
5. After completion of repairs, clear all DTCs stored in the TCM. (See 05-02B-6 Freeze frame data item table.)

Freeze frame data item table

Note
- Refer to PID/DATA monitor table for confirm the transaxle control system operation status while the TCM does not store the DTC. (See 05-02B-92 ON-BOARD DIAGNOSTIC SYSTEM PID/DATA MONITOR INSPECTION [GW6A-EL, GW6AX-EL].)
- Freeze frame data items are not displayed, according to detected DTC.

—: Not applicable

Freeze frame data item	Unit	Description	Corresponding PID/DATA monitor item
LOAD	%	Calculated engine load	—
ECT	°C {°F}	Engine coolant temperature	ECT
RPM	RPM	Engine speed	RPM
VS	KPH {MPH}	Vehicle speed	VSS
IAT	°C {°F}	Intake air temperature	—
TP	%	Throttle valve position No.1	TP
RUNTM	hh:mm:ss	Time from engine start	—
VPWR	V	Module supply voltage	VPWR
APP_D	%	Accelerator pedal position No.1	—

ON-BOARD DIAGNOSTIC [GW6A-EL, GW6AX-EL]

Snapshot data item table

Note

- Refer to PID/DATA monitor table for confirm the transaxle control system operation status while the TCM does not store the DTC. (See 05-02B-92 ON-BOARD DIAGNOSTIC SYSTEM PID/DATA MONITOR INSPECTION [GW6A-EL, GW6AX-EL].)
- Snapshot data items are not displayed, according to detected DTC.

—: Not applicable

Snapshot data item	Unit	Description	Corresponding PID/DATA monitor item
LOAD	%	Calculated engine load	—
ECT	°C {°F}	Engine coolant temperature	ECT
RPM	RPM	Engine speed	RPM
VSS	KPH {MPH}	Vehicle speed	VSS
IAT	°C {°F}	Intake air temperature	—
EG_RUN_TIME	—	Time from engine start	—
VPWR	V	Module supply voltage	VPWR
APP1	%	Accelerator pedal position No.1	—
GEAR_SEL	1/2/3/4/5/6	Gear shift position	GEAR_SEL
TSS	RPM	Turbine/input shaft speed	TSS
TFT	°C {°F}	ATF temperature	TFT
OSS	RPM	Output shaft speed	OSS
LOCK_UP	Off/SLIP/On	Torque converter (TCC condition)	LOCK_UP
OIL_PRES_SW2	Off/On	Oil pressure switch No.2 condition	OP_SW2
OIL_PRES_SW1	Off/On	Oil pressure switch No.1 condition	OP_SW1
SS_ON_OFF	Off/On	On/off solenoid condition	SS_ON-OFF
TORQUE_DES	Nm	Desired engine torque	TORQUE_DES
APP	%	Accelerator pedal position No.1	—
G_INHIBIT_6	Off/On	6GR is inhibited due to malfunction.	—
G_INHIBIT_5	Off/On	5GR is inhibited due to malfunction.	—
G_INHIBIT_4	Off/On	4GR is inhibited due to malfunction.	—
G_INHIBIT_3	Off/On	3GR is inhibited due to malfunction.	—
G_INHIBIT_2	Off/On	2GR is inhibited due to malfunction.	—
G_INHIBIT_1	Off/On	1GR is inhibited due to malfunction.	—
G_INHIBIT_R	Off/On	R position is inhibited due to malfunction.	—
G_INHIBIT_N	Off/On	N position is inhibited due to malfunction.	—
OIL_PRES_SW4	Off/On	Oil pressure switch No.4 condition	OP_SW4
OIL_PRES_SW3	Off/On	Oil pressure switch No.3 condition	OP_SW3
EOP_RLY	Off/On	Electric AT oil pump relay condition	EOP_RLY
SHIFT_CTRL	DEFAULT/ MANUAL/ C_CONTROL/ HIGH_TEMP/ D_MANUAL/ FAIL_SAFE	Shift control mode	SHIFT_CTRL
SLIP_VALUE	RPM	Actual slip value between TSS and OSS	—
HTM_DIS	km {mile}	Travel distance since determination of ATF high temperature mode	HTM_DIS

ON-BOARD DIAGNOSTIC [GW6A-EL, GW6AX-EL]

Clearing DTCs Procedures

1. Connect the M-MDS to the DLC-2.
2. After the vehicle is identified, select the following items from the initialization screen of the M-MDS.
   (1) Select “Self Test”.
   (2) Select “Modules”.
   (3) Select “TCM”.
3. Verify the DTC according to the directions on the screen.
4. Press the clear button on the DTC screen to clear the DTC.
5. Switch the ignition to off.
6. Switch the ignition to ON (engine off or on) and wait for **5 s or more**.
7. Perform DTC inspection. (See 05-02B-6 Reading DTCs Procedure.)
8. Verify that no DTCs are displayed.

ON-BOARD DIAGNOSTIC TEST MODE [GW6A-EL, GW6AX-EL]

id050230950000

Foreword

- The on-board diagnosis test displays DTCs for locations determined to be malfunctioning based on the operation results from the forced operation of each solenoid and selection of each gear. Therefore, this is an effective mode if DTCs which do not specify the malfunctioning location, such as a gear ratio malfunction, are displayed.
- When the following DTCs displayed, perform the on-board diagnostic test.

DTC No.	Description
P0729:00	6GR incorrect ratio
P0731:00	1GR incorrect ratio
P0732:00	2GR incorrect ratio
P0733:00	3GR incorrect ratio
P0734:00	4GR incorrect ratio
P0735:00	5GR incorrect ratio
P0736:00	Gear reverse incorrect ratio
P0780:00	Gear shifting malfunction
P079A:00	Shift solenoid No.3 stuck off/On/off solenoid stuck on
P1738:00	Automatic transaxle internal malfunction
P1784:00	Hi cut valve stuck off/R-3-5 cut valve stuck on

- When DTCs are displayed by the on-board diagnosis test, perform the instructions in the applicable DTC troubleshooting.

Warning

- **The on-board diagnosis test forcibly changes gears within the driving shift range while the engine is running. Before implementing the on-board diagnosis test, securely apply the parking brake and set the wheel blocks for both the front and rear wheels. Otherwise, the vehicle will move which could cause injury or property damage.**

Note

- The time required to perform the diagnostic is **2 to 3 min**.
- If unsafe actions such as shift operation and brake pedal release are detected before the shift position indicator light flashes, the on-board diagnostic test mode is canceled and the shift position indicator light flashes **5 times**.

1. Apply the parking brake firmly, and set the wheel blocks for both the front and rear wheels.
2. Inspect the ATF level. (See 05-17B-11 AUTOMATIC TRANSAXLE FLUID (ATF) INSPECTION [GW6A-EL, GW6AX-EL].)
3. Connect the M-MDS to the DLC-2.
4. Perform vehicle identification using the M-MDS.
5. Start the engine.
6. After the vehicle is identified, select the following items from the initialization screen of the M-MDS.
   (1) Select “Data Logger”.
   (2) Select “Modules”.
   (3) Select “TCM”.
7. While checking the PID TFT (ATF temperature), warm-up the engine completely and allow the ATF temperature to reach **55 °C {131 °F} or more**.

ON-BOARD DIAGNOSTIC [GW6A-EL, GW6AX-EL]

8. Select the following items from the initialization screen of the M-MDS.
   (1) Select “Self Test”.
   (2) Select “Modules”.
   (3) Select “TCM”.
9. Perform the following steps (1) to (5) with the brake pedal depressed.

Note
- If the on-board diagnosis test is shut down (Shift position indicator light flashes 5 times), resume the procedure from Step 1.

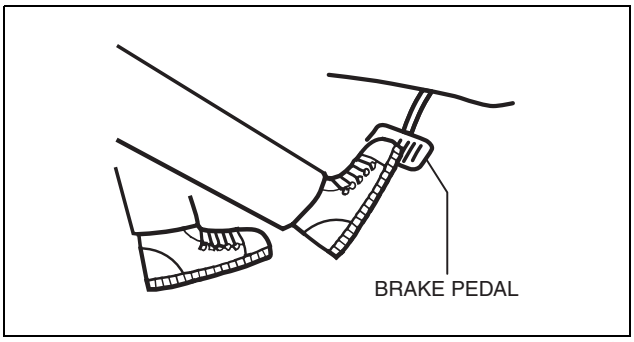

ac5wzw0000404

(1) Shift the selector lever to the R position.

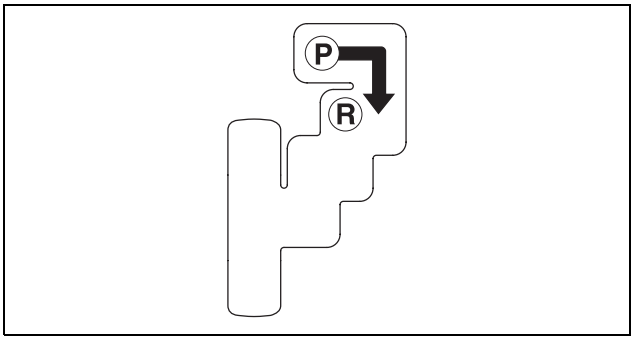

am3uuw0000875

(2) Clear DTCs using the M-MDS and verify that the shift position indicator light flashes 2 times. (See 05-02B-6 ON-BOARD DIAGNOSTIC SYSTEM DTC INSPECTION [GW6A-EL, GW6AX-EL].)

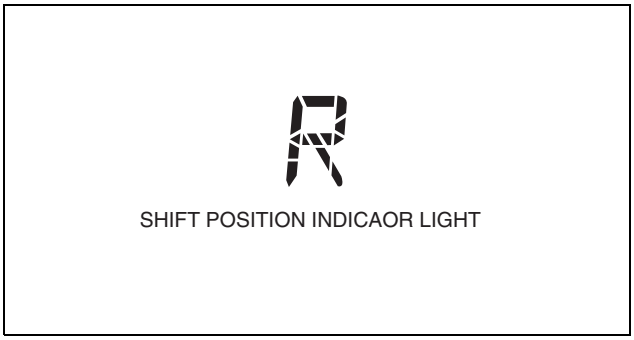

ac5wzw0000239

(3) Within **5 s** after the shift position indicator light flashes 2 times, shift the selector lever to the N position and verify that the shift position indicator light flashes 2 times.

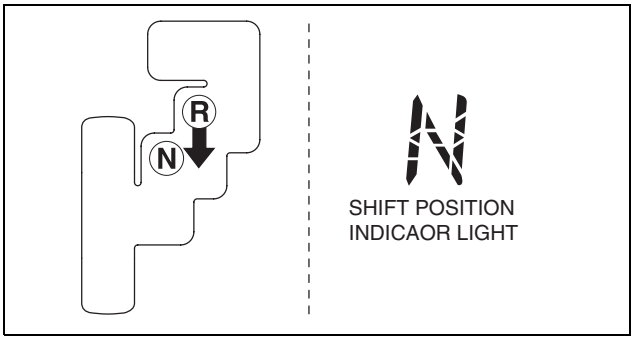

ac5wzw0000239

ON-BOARD DIAGNOSTIC [GW6A-EL, GW6AX-EL]

(4) Within **5 s** after the shift position indicator light flashes 2 times, shift the selector lever to the D position and verify that the shift position indicator light flashes 3 times.

Note
- **Approx. 30 s** is required until the shift position indicator light flashes. In addition, shift shock occurs a few times during stand-by.

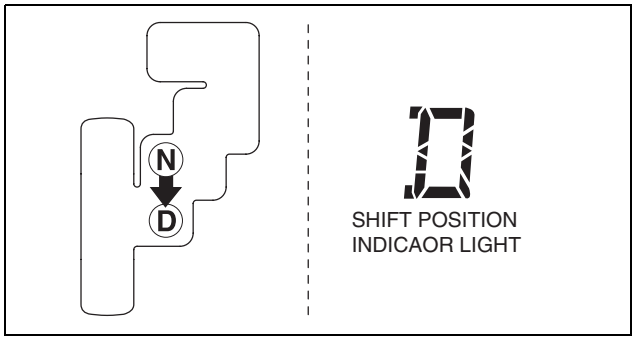

ac5wzw0000239

(5) After the shift position indicator light flashes 3 times, shift the selector lever to the P position.

10. Release the brake pedal.
11. Perform the DTC inspection using the M-MDS. (See 05-02B-6 ON-BOARD DIAGNOSTIC SYSTEM DTC INSPECTION [GW6A-EL, GW6AX-EL].)
    - If any DTCs are displayed, perform troubleshooting according to the corresponding DTC inspection. (See 05-02B-6 ON-BOARD DIAGNOSTIC SYSTEM DTC INSPECTION [GW6A-EL, GW6AX-EL].)

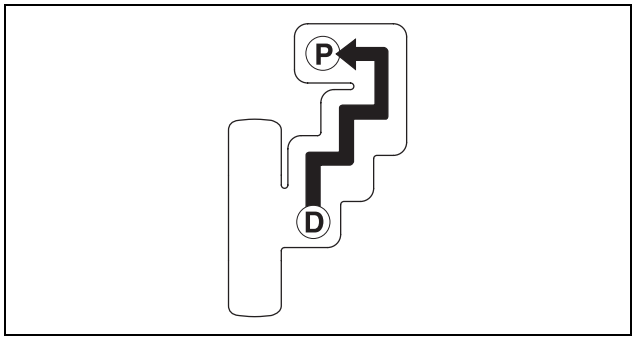

am3uuw0000875

ON-BOARD DIAGNOSTIC SYSTEM DTC TABLE [GW6A-EL, GW6AX-EL]

id050230290200

×: Applicable
—: Not applicable

DTC No.	Check engine light	Automatic transaxle warning light	Description	Fail-safe function	Drive cycle	Self test type*1	Memory function	Page
P0218:00	Illuminate	Illuminate	Automatic transaxle protection control	×	1	C	×	(See 05-02B-14 DTC P0218:00 [GW6A-EL, GW6AX-EL].)
P0500:00	Illuminate	—	Vehicle speed signal circuit malfunction	×	1	C	×	(See 05-02B-15 DTC P0500:00 [GW6A-EL, GW6AX-EL].)
P0666:00	Illuminate	Illuminate	ECU internal temperature sensor circuit(s) malfunction	×	2	C	×	(See 05-02B-16 DTC P0666:00 [GW6A-EL, GW6AX-EL].)
P0667:00	Illuminate	Illuminate	ECU internal temperature sensor two-range/ performance problem	×	2	C	×	(See 05-02B-17 DTC P0667:00 [GW6A-EL, GW6AX-EL].)
P06B8:00	Illuminate	—	NVRAM malfunction	—	1	C, O	×	(See 05-02B-18 DTC P06B8:00 [GW6A-EL, GW6AX-EL].)
P0706:00	Illuminate	Illuminate	Transaxle range sensor range/performance problem	×	2	C	×	(See 05-02B-19 DTC P0706:00 [GW6A-EL, GW6AX-EL].)
P0707:00	Illuminate	Illuminate	Transaxle range sensor circuit low input	×	1	C, O	×	(See 05-02B-20 DTC P0707:00 [GW6A-EL, GW6AX-EL].)
P0708:00	Illuminate	Illuminate	Transaxle range sensor circuit high input	×	1	C, O	×	(See 05-02B-21 DTC P0708:00 [GW6A-EL, GW6AX-EL].)
P0711:00	Illuminate	Illuminate	TFT sensor range/ performance problem	×	2	C	×	(See 05-02B-22 DTC P0711:00 [GW6A-EL, GW6AX-EL].)
P0712:00	Illuminate	Illuminate	TFT sensor circuit low input	×	1	C, O	×	(See 05-02B-23 DTC P0712:00 [GW6A-EL, GW6AX-EL].)

ON-BOARD DIAGNOSTIC [GW6A-EL, GW6AX-EL]

DTC No.	Check engine light	Automatic transaxle warning light	Description	Fail-safe function	Drive cycle	Self test type*1	Memory function	Page
P0713:00	Illuminate	Illuminate	TFT sensor circuit high input	×	2	C	×	(See 05-02B-24 DTC P0713:00 [GW6A-EL, GW6AX-EL].)
P0716:00	Illuminate	Illuminate	Turbine/Input shaft speed sensor range/ performance problem	×	1	C	×	(See 05-02B-25 DTC P0716:00 [GW6A-EL, GW6AX-EL].)
P0717:00	Illuminate	Illuminate	Open circuit in turbine/ input shaft speed sensor circuit	×	1	C	×	(See 05-02B-26 DTC P0717:00 [GW6A-EL, GW6AX-EL].)
P0721:00	Illuminate	Illuminate	Output shaft speed sensor range/ performance problem	×	1	C	×	(See 05-02B-27 DTC P0721:00 [GW6A-EL, GW6AX-EL].)
P0722:00	Illuminate	Illuminate	Open circuit in output shaft speed sensor circuit	×	1	C	×	(See 05-02B-28 DTC P0722:00 [GW6A-EL, GW6AX-EL].)
P0729:00	—	—	6GR incorrect ratio	×	2	C	×	(See 05-02B-29 DTC P0729:00 [GW6A-EL, GW6AX-EL].)
P0731:00	—	—	1GR incorrect ratio	×	2	C	×	(See 05-02B-30 DTC P0731:00 [GW6A-EL, GW6AX-EL].)
P0732:00	—	—	2GR incorrect ratio	×	2	C	×	(See 05-02B-31 DTC P0732:00 [GW6A-EL, GW6AX-EL].)
P0733:00	—	—	3GR incorrect ratio	×	2	C	×	(See 05-02B-32 DTC P0733:00 [GW6A-EL, GW6AX-EL].)
P0734:00	—	—	4GR incorrect ratio	×	2	C	×	(See 05-02B-33 DTC P0734:00 [GW6A-EL, GW6AX-EL].)
P0735:00	—	—	5GR incorrect ratio	×	2	C	×	(See 05-02B-34 DTC P0735:00 [GW6A-EL, GW6AX-EL].)
P0736:00	—	Illuminate	Gear reverse incorrect ratio	×	2	C	×	(See 05-02B-35 DTC P0736:00 [GW6A-EL, GW6AX-EL].)
P0741:00	Illuminate	Illuminate	TCC control solenoid stuck off	×	2	C	×	(See 05-02B-36 DTC P0741:00 [GW6A-EL, GW6AX-EL].)
P0743:00	Illuminate	Illuminate	TCC control solenoid circuit malfunction	×	1	C, O	×	(See 05-02B-37 DTC P0743:00 [GW6A-EL, GW6AX-EL].)
P0746:00	Illuminate	Illuminate	Pressure control solenoid stuck off	×	2	C	×	(See 05-02B-38 DTC P0746:00 [GW6A-EL, GW6AX-EL].)
P0748:00	Illuminate	Illuminate	Pressure control solenoid circuit malfunction	×	1	C, O	×	(See 05-02B-39 DTC P0748:00 [GW6A-EL, GW6AX-EL].)
P0751:00	Illuminate	Illuminate	Shift solenoid No.1 stuck off	×	2	C	×	(See 05-02B-40 DTC P0751:00 [GW6A-EL, GW6AX-EL].)
P0752:00	Illuminate	Illuminate	Shift solenoid No.1 stuck on	×	2	C	×	(See 05-02B-42 DTC P0752:00 [GW6A-EL, GW6AX-EL].)
P0753:00	Illuminate	Illuminate	Shift solenoid No.1 circuit malfunction	×	1	C, O	×	(See 05-02B-43 DTC P0753:00 [GW6A-EL, GW6AX-EL].)
P0756:00	Illuminate	Illuminate	Shift solenoid No.2 stuck off	×	2	C	×	(See 05-02B-44 DTC P0756:00 [GW6A-EL, GW6AX-EL].)

ON-BOARD DIAGNOSTIC [GW6A-EL, GW6AX-EL]

DTC No.	Check engine light	Automatic transaxle warning light	Description	Fail-safe function	Drive cycle	Self test type*1	Memory function	Page
P0757:00	Illuminate	Illuminate	Shift solenoid No.2 stuck on	×	2	C	×	(See 05-02B-45 DTC P0757:00 [GW6A-EL, GW6AX-EL].)
P0758:00	Illuminate	Illuminate	Shift solenoid No.2 circuit malfunction	×	1	C, O	×	(See 05-02B-46 DTC P0758:00 [GW6A-EL, GW6AX-EL].)
P0761:00	Illuminate	Illuminate	Shift solenoid No.3 stuck off	×	2	C	×	(See 05-02B-47 DTC P0761:00 [GW6A-EL, GW6AX-EL].)
P0762:00	Illuminate	Illuminate	Shift solenoid No.3 stuck on	×	2	C	×	(See 05-02B-48 DTC P0762:00 [GW6A-EL, GW6AX-EL].)
P0763:00	Illuminate	Illuminate	Shift solenoid No.3 circuit malfunction	×	1	C, O	×	(See 05-02B-50 DTC P0763:00 [GW6A-EL, GW6AX-EL].)
P0766:00	Illuminate	Illuminate	Shift solenoid No.4 stuck off	×	2	C	×	(See 05-02B-51 DTC P0766:00 [GW6A-EL, GW6AX-EL].)
P0767:00	Illuminate	Illuminate	Shift solenoid No.4 stuck on	×	2	C	×	(See 05-02B-52 DTC P0767:00 [GW6A-EL, GW6AX-EL].)
P0768:00	Illuminate	Illuminate	Shift solenoid No.4 circuit malfunction	×	1	C, O	×	(See 05-02B-53 DTC P0768:00 [GW6A-EL, GW6AX-EL].)
P0771:00	Illuminate	Illuminate	On/off solenoid stuck off	×	2	C	×	(See 05-02B-54 DTC P0771:00 [GW6A-EL, GW6AX-EL].)
P0772:00	Illuminate	Illuminate	On/off solenoid stuck on	×	2	C	×	(See 05-02B-55 DTC P0772:00 [GW6A-EL, GW6AX-EL].)
P0773:00	Illuminate	Illuminate	On/off solenoid circuit malfunction	×	1	C, O	×	(See 05-02B-57 DTC P0773:00 [GW6A-EL, GW6AX-EL].)
P0780:00	Illuminate	Illuminate	Gear shifting malfunction	×	2	C	×	(See 05-02B-58 DTC P0780:00 [GW6A-EL, GW6AX-EL].)
P079A:00	Illuminate	Illuminate	Shift solenoid No.3 stuck off/On/off solenoid stuck on	×	2	C	×	(See 05-02B-59 DTC P079A:00 [GW6A-EL, GW6AX-EL].)
P0819:00	—	—	M position switch/Up switch/Down switch signal error	×	1	C	×	(See 05-02B-60 DTC P0819:00 [GW6A-EL, GW6AX-EL].)
P0842:00	Illuminate	Illuminate	Oil pressure switch No.1 stuck on	×	2	C	×	(See 05-02B-63 DTC P0842:00 [GW6A-EL, GW6AX-EL].)
P0843:00	Illuminate	Illuminate	Oil pressure switch No.1 stuck off	×	2	C	×	(See 05-02B-64 DTC P0843:00 [GW6A-EL, GW6AX-EL].)
P0847:00	Illuminate	Illuminate	Oil pressure switch No.2 stuck on	×	2	C	×	(See 05-02B-65 DTC P0847:00 [GW6A-EL, GW6AX-EL].)
P0848:00	Illuminate	Illuminate	Oil pressure switch No.2 stuck off	×	2	C	×	(See 05-02B-66 DTC P0848:00 [GW6A-EL, GW6AX-EL].)
P0872:00	Illuminate	Illuminate	Oil pressure switch No.3 stuck on	×	2	C	×	(See 05-02B-68 DTC P0872:00 [GW6A-EL, GW6AX-EL].)
P0873:00	Illuminate	Illuminate	Oil pressure switch No.3 stuck off	×	2	C	×	(See 05-02B-69 DTC P0873:00 [GW6A-EL, GW6AX-EL].)

ON-BOARD DIAGNOSTIC [GW6A-EL, GW6AX-EL]

DTC No.	Check engine light	Automatic transaxle warning light	Description	Fail-safe function	Drive cycle	Self test type*1	Memory function	Page
P0877:00	Illuminate	Illuminate	Oil pressure switch No.4 stuck on	×	2	C	×	(See 05-02B-71 DTC P0877:00 [GW6A-EL, GW6AX-EL].)
P0878:00	Illuminate	Illuminate	Oil pressure switch No.4 stuck off	×	2	C	×	(See 05-02B-72 DTC P0878:00 [GW6A-EL, GW6AX-EL].)
P0882:00	Illuminate	—	TCM power supply voltage low	×	1	C	×	(See 05-02B-73 DTC P0882:00 [GW6A-EL, GW6AX-EL].)
P0883:00	Illuminate	—	TCM power supply voltage high	×	1	C, O	×	(See 05-02B-75 DTC P0883:00 [GW6A-EL, GW6AX-EL].)
P0C2C:00	—	—	Electric AT oil pump rotation malfunction	×	1	C	×	(See 05-02B-76 DTC P0C2C:00 [GW6A-EL, GW6AX-EL].)
P1728:00	—	—	Clutch slippage	×	2	C	×	(See 05-02B-78 DTC P1728:00 [GW6A-EL, GW6AX-EL].)
P1738:00	—	Illuminate	Automatic transaxle internal malfunction	×	2	C	×	(See 05-02B-79 DTC P1738:00 [GW6A-EL, GW6AX-EL].)
P1784:00	—	Illuminate	Hi cut valve stuck off/R-3-5 cut valve stuck on	×	2	C	×	(See 05-02B-80 DTC P1784:00 [GW6A-EL, GW6AX-EL].)
P181F:00	—	—	Electric AT oil pump/ Electric AT oil pump relay circuit malfunction	×	1	C	×	(See 05-02B-81 DTC P181F:00 [GW6A-EL, GW6AX-EL].)
P2530:00	—	—	Ignition switch: Stuck off	×	1	C	×	(See 05-02B-85 DTC P2530:00 [GW6A-EL, GW6AX-EL].)
P2712:00	—	—	Oil pump shift valve stuck	×	1	C	×	(See 05-02B-86 DTC P2712:00 [GW6A-EL, GW6AX-EL].)
U0073:00	—	—	CAN system communication error (HS CAN)	×	1	C, O	×	(See 05-02B-87 DTC U0073:00, U0100:00, U0121:00, U0141:00, U0155:00 [GW6A-EL, GW6AX-EL].)
U0074:00	—	—	CAN system communication error (local CAN between TCM and PCM)	×	1	C, O	×	(See 05-02B-89 DTC U0074:00 [GW6A-EL, GW6AX-EL].)
U0100:00	Illuminate	—	Communication error to PCM (HS CAN)	×	1	C, O	×	(See 05-02B-87 DTC U0073:00, U0100:00, U0121:00, U0141:00, U0155:00 [GW6A-EL, GW6AX-EL].)
U0115:00	Illuminate	—	Communication error to PCM (local CAN between TCM and PCM)	×	1	C, O	×	(See 05-02B-90 DTC U0115:00 [GW6A-EL, GW6AX-EL].)
U0121:00	Illuminate	—	Communication error to DSC HU/CM	×	1	C, O	×	(See 05-02B-87 DTC U0073:00, U0100:00, U0121:00, U0141:00, U0155:00 [GW6A-EL, GW6AX-EL].)
U0141:00	—	—	Communication error to front body control module (FBCM)	×	1	C, O	×	
U0155:00	Illuminate	—	Communication error to instrument cluster	×	1	C, O	×	
U0442:00	—	—	Invalid data received from PCM (local CAN between TCM and PCM)	×	1	C, O	×	(See 05-02B-91 DTC U0442:00 [GW6A-EL, GW6AX-EL].)

ON-BOARD DIAGNOSTIC [GW6A-EL, GW6AX-EL]

*1 : :C: CMDTC self test, O: KOEO self test

DTC P0218:00 [GW6A-EL, GW6AX-EL]

id050230903700

DTC P0218:00	Automatic transaxle protection control
DETECTION CONDITION	• Under the following conditions, the ATF temperature is **135 °C {275 °F} or more** for **10 s**: — Engine is running. — Battery voltage is **8 V or more**. — TFT sensor related DTC is not recorded. **Diagnostic support note** • The check engine light illuminates if the TCM detects the above malfunction condition during the first drive cycle. • The automatic transaxle warning light illuminates if the TCM detects the above malfunction condition during the first drive cycle. • PENDING CODE is available. • FREEZE FRAME DATA is available. • The DTC is stored in the TCM memory.
FAIL-SAFE FUNCTION	• Inhibits learning control. • Inhibits manual mode. • Inhibits neutral idle control. • Inhibits i-stop control. • Inhibits AAS.
POSSIBLE CAUSE	• Oil cooler malfunction • ATF is more than specified value
SYSTEM WIRING DIAGRAM	—

Diagnostic procedure

STEP	INSPECTION		ACTION
1	**VERIFY FREEZE FRAME DATA/SNAPSHOT DATA HAS BEEN RECORDED** • Has the freeze frame data/snapshot data been recorded on the repair order?	Yes	Go to the next step.
		No	Record the freeze frame data/snapshot data on the repair order, then go to the next step.
2	**VERIFY RELATED SERVICE INFORMATION AVAILABILITY** • Verify related Service Information availability. • Is any related Service Information available?	Yes	Perform repair or diagnosis according to the available Service Information. • If the vehicle is not repaired, go to the next step.
		No	Go to the next step.
3	**INSPECT ATF LEVEL** • Inspect the ATF level. (See 05-17B-11 AUTOMATIC TRANSAXLE FLUID (ATF) INSPECTION [GW6A-EL, GW6AX-EL].) • Is there any malfunction?	Yes	Adjust the ATF level to the specification, then go to Step 5. (See 05-17B-12 AUTOMATIC TRANSAXLE FLUID (ATF) REPLACEMENT [GW6A-EL, GW6AX-EL].)
		No	Go to the next step.
4	**INSPECT OIL COOLER** • Visually inspect the oil cooler. • Is there any malfunction?	Yes	Replace the oil cooler, then go to the next step. (See 05-17B-71 OIL COOLER REMOVAL/INSTALLATION [GW6A-EL, GW6AX-EL].)
		No	Go to the next step.
5	**VERIFY DTC TROUBLESHOOTING COMPLETED** • Clear the DTC using the M-MDS. (See 05-02B-6 ON-BOARD DIAGNOSTIC SYSTEM DTC INSPECTION [GW6A-EL, GW6AX-EL].) • Perform the following procedure to ensure that the DTC has been resolved: 1. Start the engine and wait for **10 s or more**. • Perform the DTC inspection using the M-MDS. (See 05-02B-6 ON-BOARD DIAGNOSTIC SYSTEM DTC INSPECTION [GW6A-EL, GW6AX-EL].) • Are any DTCs present?	Yes	Go to the applicable DTC inspection. (See 05-02B-10 ON-BOARD DIAGNOSTIC SYSTEM DTC TABLE [GW6A-EL, GW6AX-EL].)
		No	DTC troubleshooting completed.

ON-BOARD DIAGNOSTIC [GW6A-EL, GW6AX-EL]

DTC P0500:00 [GW6A-EL, GW6AX-EL]

id050230321400

DTC P0500:00	Vehicle speed signal circuit malfunction
DETECTION CONDITION	• Under the following conditions, the vehicle speed signal input from DSC HU/CM is incorrect for **10 s**: — Engine is running. — Battery voltage is **8 V or more**. — Vehicle speed is **16 km/h {9.9 mph} or more**. — There is no difference in speed between turbine/input shaft speed sensor and output shaft speed sensor. **Diagnostic support note** • The check engine light illuminates if the TCM detects the above malfunction condition during the first drive cycle. • The automatic transaxle warning light does not illuminate. • PENDING CODE is available. • FREEZE FRAME DATA is available. • The DTC is stored in the TCM memory.
FAIL-SAFE FUNCTION	• Inhibits learning control. • Inhibits neutral idle control. • Inhibits i-stop control. • Inhibits AAS.
POSSIBLE CAUSE	• DSC HU/CM DTC is stored. — ABS wheel-speed sensor malfunction
SYSTEM WIRING DIAGRAM	—

Diagnostic procedure

STEP	INSPECTION		ACTION
1	**VERIFY FREEZE FRAME DATA/SNAPSHOT DATA HAS BEEN RECORDED** • Has the freeze frame data/snapshot data been recorded on the repair order?	Yes	Go to the next step.
		No	Record the freeze frame data/snapshot data on the repair order, then go to the next step.
2	**VERIFY RELATED SERVICE INFORMATION AVAILABILITY** • Verify related Service Information availability. • Is any related Service Information available?	Yes	Perform repair or diagnosis according to the available Service Information. • If the vehicle is not repaired, go to the next step.
		No	Go to the next step.
3	**VERIFY STORED DTC IN DSC HU/CM** • Perform the DSC HU/CM DTC inspection using the M-MDS. (See 04-02A-7 ON-BOARD DIAGNOSIS [DYNAMIC STABILITY CONTROL (DSC)].) • Are any DTCs present?	Yes	Go to the applicable DTC inspection. (See 04-02A-7 ON-BOARD DIAGNOSIS [DYNAMIC STABILITY CONTROL (DSC)].)
		No	Go to the next step.
4	**VERIFY DTC TROUBLESHOOTING COMPLETED** • Clear the DTC using the M-MDS. (See 05-02B-6 ON-BOARD DIAGNOSTIC SYSTEM DTC INSPECTION [GW6A-EL, GW6AX-EL].) • Perform the following procedure to ensure that the DTC has been resolved: 1. Drive the vehicle for **10 s or more** under the following conditions: • Battery voltage: **8 V or more** • Vehicle speed: **45 km/h {28 mph} or more** • Perform the DTC inspection using the M-MDS. (See 05-02B-6 ON-BOARD DIAGNOSTIC SYSTEM DTC INSPECTION [GW6A-EL, GW6AX-EL].) • Are any DTCs present?	Yes	Go to the applicable DTC inspection. (See 05-02B-10 ON-BOARD DIAGNOSTIC SYSTEM DTC TABLE [GW6A-EL, GW6AX-EL].)
		No	DTC troubleshooting completed.

ON-BOARD DIAGNOSTIC [GW6A-EL, GW6AX-EL]

DTC P0666:00 [GW6A-EL, GW6AX-EL]

id050230903800

DTC P0666:00	ECU internal temperature sensor circuit(s) malfunction
DETECTION CONDITION	• Under the following condition, there is malfunction in circuits of two or more ECU internal temperature sensors: — Battery voltage is **8 V or more**. • Under the following conditions, one ECU internal temperature sensor has malfunction, with difference in temperature between remaining two ECU internal temperature sensors being **10 °C {18 °F} or more**: — Battery voltage is **8 V or more**. — Soaked for **6 hours or more**. **Diagnostic support note** • The check engine light illuminates if the TCM detects the above malfunction condition in two consecutive drive cycles or in one drive cycle while the DTC for the same malfunction has been stored in the TCM. • The automatic transaxle warning light illuminates if the TCM detects the above malfunction condition in two consecutive drive cycles or in one drive cycle while the DTC for the same malfunction has been stored in the TCM. • PENDING CODE is available. • FREEZE FRAME DATA is available. • The DTC is stored in the TCM memory.
FAIL-SAFE FUNCTION	• Inhibits learning control. • Inhibits neutral idle control. • Inhibits i-stop control.
POSSIBLE CAUSE	• Control valve body malfunction — ECU internal temperature sensor (built-into TCM) malfunction
SYSTEM WIRING DIAGRAM	—

Diagnostic procedure

STEP	INSPECTION		ACTION
1	**VERIFY FREEZE FRAME DATA/SNAPSHOT DATA HAS BEEN RECORDED** • Has the freeze frame data/snapshot data been recorded on the repair order?	Yes	Go to the next step.
		No	Record the freeze frame data/snapshot data on the repair order, then go to the next step.
2	**VERIFY RELATED SERVICE INFORMATION AVAILABILITY** • Verify related Service Information availability. • Is any related Service Information available?	Yes	Perform repair or diagnosis according to the available Service Information. • If the vehicle is not repaired, replace the control valve body. (See 05-17B-81 CONTROL VALVE BODY REMOVAL/ INSTALLATION [GW6A-EL, GW6AX-EL].) Go to the next step.
		No	Replace the control valve body, then go to the next step. (See 05-17B-81 CONTROL VALVE BODY REMOVAL/ INSTALLATION [GW6A-EL, GW6AX-EL].)
3	**VERIFY DTC TROUBLESHOOTING COMPLETED** • Clear the DTC using the M-MDS. (See 05-02B-6 ON-BOARD DIAGNOSTIC SYSTEM DTC INSPECTION [GW6A-EL, GW6AX-EL].) • Perform the following procedure to ensure that the DTC has been resolved: 1. Start the engine. • Perform the DTC inspection using the M-MDS. (See 05-02B-6 ON-BOARD DIAGNOSTIC SYSTEM DTC INSPECTION [GW6A-EL, GW6AX-EL].) • Are any DTCs present?	Yes	Go to the applicable DTC inspection. (See 05-02B-10 ON-BOARD DIAGNOSTIC SYSTEM DTC TABLE [GW6A-EL, GW6AX-EL].)
		No	DTC troubleshooting completed.

ON-BOARD DIAGNOSTIC [GW6A-EL, GW6AX-EL]

DTC P0667:00 [GW6A-EL, GW6AX-EL]

id050230903900

DTC P0667:00	ECU internal temperature sensor two-range/performance problem
DETECTION CONDITION	• Under the following conditions, the difference between ECU internal temperatures of three ECU internal temperature sensors is **10 °C {18 °F} or more**: — Engine is running. — Battery voltage is **8 V or more**. — Soaked for **6 hours or more**. — No malfunction in ECU internal temperature sensor circuit **Diagnostic support note** • The check engine light illuminates if the TCM detects the above malfunction condition in two consecutive drive cycles or in one drive cycle while the DTC for the same malfunction has been stored in the TCM. • The automatic transaxle warning light illuminates if the TCM detects the above malfunction condition in two consecutive drive cycles or in one drive cycle while the DTC for the same malfunction has been stored in the TCM. • PENDING CODE is available. • FREEZE FRAME DATA is available. • The DTC is stored in the TCM memory.
FAIL-SAFE FUNCTION	• Inhibits learning control. • Inhibits neutral idle control. • Inhibits i-stop control.
POSSIBLE CAUSE	• Control valve body malfunction — ECU internal temperature sensor (built-into TCM) malfunction
SYSTEM WIRING DIAGRAM	—

Diagnostic procedure

STEP	INSPECTION		ACTION
1	**VERIFY FREEZE FRAME DATA/SNAPSHOT DATA HAS BEEN RECORDED** • Has the freeze frame data/snapshot data been recorded on the repair order?	Yes	Go to the next step.
		No	Record the freeze frame data/snapshot data on the repair order, then go to the next step.
2	**VERIFY RELATED SERVICE INFORMATION AVAILABILITY** • Verify related Service Information availability. • Is any related Service Information available?	Yes	Perform repair or diagnosis according to the available Service Information. • If the vehicle is not repaired, replace the control valve body. (See 05-17B-81 CONTROL VALVE BODY REMOVAL/INSTALLATION [GW6A-EL, GW6AX-EL].) Go to the next step.
		No	Replace the control valve body, then go to the next step. (See 05-17B-81 CONTROL VALVE BODY REMOVAL/INSTALLATION [GW6A-EL, GW6AX-EL].)
3	**VERIFY DTC TROUBLESHOOTING COMPLETED** • Clear the DTC using the M-MDS. (See 05-02B-6 ON-BOARD DIAGNOSTIC SYSTEM DTC INSPECTION [GW6A-EL, GW6AX-EL].) • Perform the following procedure to ensure that the DTC has been resolved: 1. Soak for **6 hours or more**. 2. Start the engine, and warm it up until the ATF temperature is **60 °C {140 °F} or more**, and the engine coolant temperature is **80 °C {176 °F} or more**. • Perform the DTC inspection using the M-MDS. (See 05-02B-6 ON-BOARD DIAGNOSTIC SYSTEM DTC INSPECTION [GW6A-EL, GW6AX-EL].) • Are any DTCs present?	Yes	Go to the applicable DTC inspection. (See 05-02B-10 ON-BOARD DIAGNOSTIC SYSTEM DTC TABLE [GW6A-EL, GW6AX-EL].)
		No	DTC troubleshooting completed.

ON-BOARD DIAGNOSTIC [GW6A-EL, GW6AX-EL]

DTC P06B8:00 [GW6A-EL, GW6AX-EL]

id050230325000

DTC P06B8:00	NVRAM malfunction
DETECTION CONDITION	• Under the following condition, TCM internal NVRAM data retention/read/write disabled: — Battery voltage is **8 V or more**. **Diagnostic support note** • The check engine light illuminates if the TCM detects the above malfunction condition during the first drive cycle. • The automatic transaxle warning light does not illuminate. • PENDING CODE is available. • FREEZE FRAME DATA is available. • The DTC is stored in the TCM memory.
FAIL-SAFE FUNCTION	—
POSSIBLE CAUSE	• TCM initial learning error • Control valve body malfunction — TCM internal NVRAM malfunction
SYSTEM WIRING DIAGRAM	—

Diagnostic procedure

STEP	INSPECTION		ACTION
1	**VERIFY FREEZE FRAME DATA/SNAPSHOT DATA HAS BEEN RECORDED** • Has the freeze frame data/snapshot data been recorded on the repair order?	Yes	Go to the next step.
		No	Record the freeze frame data/snapshot data on the repair order, then go to the next step.
2	**VERIFY RELATED SERVICE INFORMATION AVAILABILITY** • Verify related Service Information availability. • Is any related Service Information available?	Yes	Perform repair or diagnosis according to the available Service Information. • If the vehicle is not repaired, go to the next step.
		No	Go to the next step.
3	**PERFORM INITIAL LEARNING** • Perform the initial learning. (See 05-17B-93 INITIAL LEARNING [GW6A-EL, GW6AX-EL].) • Clear the DTC using the M-MDS. (See 05-02B-6 ON-BOARD DIAGNOSTIC SYSTEM DTC INSPECTION [GW6A-EL, GW6AX-EL].) • Perform the following procedure to ensure that the DTC has been resolved: 1. Switch the ignition ON (engine off or on). • Perform the DTC inspection using the M-MDS. (See 05-02B-6 ON-BOARD DIAGNOSTIC SYSTEM DTC INSPECTION [GW6A-EL, GW6AX-EL].) • Is the DTC P06B8:00 also present?	Yes	Replace the control valve body, then go to the next step. (See 05-17B-81 CONTROL VALVE BODY REMOVAL/INSTALLATION [GW6A-EL, GW6AX-EL].)
		No	DTC troubleshooting completed.
4	**VERIFY DTC TROUBLESHOOTING COMPLETED** • Clear the DTC using the M-MDS. (See 05-02B-6 ON-BOARD DIAGNOSTIC SYSTEM DTC INSPECTION [GW6A-EL, GW6AX-EL].) • Perform the following procedure to ensure that the DTC has been resolved: 1. Switch the ignition ON (engine off or on). • Perform the DTC inspection using the M-MDS. (See 05-02B-6 ON-BOARD DIAGNOSTIC SYSTEM DTC INSPECTION [GW6A-EL, GW6AX-EL].) • Are any DTCs present?	Yes	Go to the applicable DTC inspection. (See 05-02B-10 ON-BOARD DIAGNOSTIC SYSTEM DTC TABLE [GW6A-EL, GW6AX-EL].)
		No	DTC troubleshooting completed.

ON-BOARD DIAGNOSTIC [GW6A-EL, GW6AX-EL]

DTC P0706:00 [GW6A-EL, GW6AX-EL]

id050230817000

DTC P0706:00	Transaxle range sensor range/performance problem
DETECTION CONDITION	• Under the following condition, pattern identification error in switch condition of transaxle range sensors 1 to 4: — Battery voltage is **8 V or more**. **Diagnostic support note** • The check engine light illuminates if the TCM detects the above malfunction condition in two consecutive drive cycles or in one drive cycle while the DTC for the same malfunction has been stored in the TCM. • The automatic transaxle warning light illuminates if the TCM detects the above malfunction condition in two consecutive drive cycles or in one drive cycle while the DTC for the same malfunction has been stored in the TCM. • PENDING CODE is available. • FREEZE FRAME DATA is available. • The DTC is stored in the TCM memory.
FAIL-SAFE FUNCTION	• Inhibits learning control. • Inhibits manual mode. • Inhibits neutral idle control. • Inhibits i-stop control. • Inhibits AAS.
POSSIBLE CAUSE	• Transaxle range sensor (built-into TCM) malfunction
SYSTEM WIRING DIAGRAM	—

Diagnostic procedure

STEP	INSPECTION		ACTION
1	**VERIFY FREEZE FRAME DATA/SNAPSHOT DATA HAS BEEN RECORDED** • Has the freeze frame data/snapshot data been recorded on the repair order?	Yes	Go to the next step.
		No	Record the freeze frame data/snapshot data on the repair order, then go to the next step.
2	**VERIFY RELATED SERVICE INFORMATION AVAILABILITY** • Verify related Service Information availability. • Is any related Service Information available?	Yes	Perform repair or diagnosis according to the available Service Information. • If the vehicle is not repaired, replace the control valve body. (See 05-17B-81 CONTROL VALVE BODY REMOVAL/INSTALLATION [GW6A-EL, GW6AX-EL].) Go to the next step.
		No	Replace the control valve body, then go to the next step. (See 05-17B-81 CONTROL VALVE BODY REMOVAL/INSTALLATION [GW6A-EL, GW6AX-EL].)
3	**VERIFY DTC TROUBLESHOOTING COMPLETED** • Clear the DTC using the M-MDS. (See 05-02B-6 ON-BOARD DIAGNOSTIC SYSTEM DTC INSPECTION [GW6A-EL, GW6AX-EL].) • Perform the following procedure to ensure that the DTC has been resolved: 1. Switch the ignition ON (engine off or on). • Perform the DTC inspection using the M-MDS. (See 05-02B-6 ON-BOARD DIAGNOSTIC SYSTEM DTC INSPECTION [GW6A-EL, GW6AX-EL].) • Are any DTCs present?	Yes	Go to the applicable DTC inspection. (See 05-02B-10 ON-BOARD DIAGNOSTIC SYSTEM DTC TABLE [GW6A-EL, GW6AX-EL].)
		No	DTC troubleshooting completed.

ON-BOARD DIAGNOSTIC [GW6A-EL, GW6AX-EL]

DTC P0707:00 [GW6A-EL, GW6AX-EL]

id050230817100

DTC P0707:00	**Transaxle range sensor circuit low input**
DETECTION CONDITION	• Under the following condition, incorrect voltage in any of transaxle range sensors 1 to 4: — Battery voltage is **8 V or more**. **Diagnostic support note** • The MIL illuminates if the TCM detects the above malfunction condition during the first drive cycle. • The automatic transaxle warning light illuminates if the TCM detects the above malfunction condition during the first drive cycle. • PENDING CODE is available. • FREEZE FRAME DATA is available. • The DTC is stored in the TCM memory.
FAIL-SAFE FUNCTION	• Inhibits learning control. • Inhibits manual mode. • Inhibits neutral idle control. • Inhibits i-stop control. • Inhibits AAS.
POSSIBLE CAUSE	• Transaxle range sensor (built-into TCM) malfunction
SYSTEM WIRING DIAGRAM	—

Diagnostic procedure

STEP	INSPECTION		ACTION
1	**VERIFY FREEZE FRAME DATA/SNAPSHOT DATA HAS BEEN RECORDED** • Has the freeze frame data/snapshot data been recorded on the repair order?	Yes	Go to the next step.
		No	Record the freeze frame data/snapshot data on the repair order, then go to the next step.
2	**VERIFY RELATED SERVICE INFORMATION AVAILABILITY** • Verify related Service Information availability. • Is any related Service Information available?	Yes	Perform repair or diagnosis according to the available Service Information. • If the vehicle is not repaired, replace the control valve body. (See 05-17B-81 CONTROL VALVE BODY REMOVAL/ INSTALLATION [GW6A-EL, GW6AX-EL].) Go to the next step.
		No	Replace the control valve body, then go to the next step. (See 05-17B-81 CONTROL VALVE BODY REMOVAL/ INSTALLATION [GW6A-EL, GW6AX-EL].)
3	**VERIFY DTC TROUBLESHOOTING COMPLETED** • Clear the DTC using the M-MDS. (See 05-02B-6 ON-BOARD DIAGNOSTIC SYSTEM DTC INSPECTION [GW6A-EL, GW6AX-EL].) • Perform the following procedure to ensure that the DTC has been resolved: 1. Switch the ignition ON (engine off or on). • Perform the DTC inspection using the M-MDS. (See 05-02B-6 ON-BOARD DIAGNOSTIC SYSTEM DTC INSPECTION [GW6A-EL, GW6AX-EL].) • Are any DTCs present?	Yes	Go to the applicable DTC inspection. (See 05-02B-10 ON-BOARD DIAGNOSTIC SYSTEM DTC TABLE [GW6A-EL, GW6AX-EL].)
		No	DTC troubleshooting completed.

ON-BOARD DIAGNOSTIC [GW6A-EL, GW6AX-EL]

DTC P0708:00 [GW6A-EL, GW6AX-EL]

id050230817200

DTC P0708:00	**Transaxle range sensor circuit high input**
DETECTION CONDITION	• Under the following condition, incorrect voltage in any of transaxle range sensors 1 to 4: — Battery voltage is **8 V or more**. **Diagnostic support note** • The MIL illuminates if the TCM detects the above malfunction condition during the first drive cycle. • The automatic transaxle warning light illuminates if the TCM detects the above malfunction condition during the first drive cycle. • PENDING CODE is available. • FREEZE FRAME DATA is available. • The DTC is stored in the TCM memory.
FAIL-SAFE FUNCTION	• Inhibits learning control. • Inhibits manual mode. • Inhibits neutral idle control. • Inhibits i-stop control. • Inhibits AAS.
POSSIBLE CAUSE	• Transaxle range sensor (built-into TCM) malfunction
SYSTEM WIRING DIAGRAM	—

Diagnostic procedure

STEP	INSPECTION		ACTION
1	**VERIFY FREEZE FRAME DATA/SNAPSHOT DATA HAS BEEN RECORDED** • Has the freeze frame data/snapshot data been recorded on the repair order?	Yes	Go to the next step.
		No	Record the freeze frame data/snapshot data on the repair order, then go to the next step.
2	**VERIFY RELATED SERVICE INFORMATION AVAILABILITY** • Verify related Service Information availability. • Is any related Service Information available?	Yes	Perform repair or diagnosis according to the available Service Information. • If the vehicle is not repaired, replace the control valve body. (See 05-17B-81 CONTROL VALVE BODY REMOVAL/ INSTALLATION [GW6A-EL, GW6AX-EL].) Go to the next step.
		No	Replace the control valve body, then go to the next step. (See 05-17B-81 CONTROL VALVE BODY REMOVAL/ INSTALLATION [GW6A-EL, GW6AX-EL].)
3	**VERIFY DTC TROUBLESHOOTING COMPLETED** • Clear the DTC using the M-MDS. (See 05-02B-6 ON-BOARD DIAGNOSTIC SYSTEM DTC INSPECTION [GW6A-EL, GW6AX-EL].) • Perform the following procedure to ensure that the DTC has been resolved: 1. Switch the ignition ON (engine off or on). • Perform the DTC inspection using the M-MDS. (See 05-02B-6 ON-BOARD DIAGNOSTIC SYSTEM DTC INSPECTION [GW6A-EL, GW6AX-EL].) • Are any DTCs present?	Yes	Go to the applicable DTC inspection. (See 05-02B-10 ON-BOARD DIAGNOSTIC SYSTEM DTC TABLE [GW6A-EL, GW6AX-EL].)
		No	DTC troubleshooting completed.

ON-BOARD DIAGNOSTIC [GW6A-EL, GW6AX-EL]

DTC P0711:00 [GW6A-EL, GW6AX-EL]

id050230817300

DTC P0711:00	TFT sensor range/performance problem
DETECTION CONDITION	• Under the following conditions, the ATF temperature is **40 °C {104 °F} or less**: — Certain period has elapsed since engine start. — Battery voltage is **8 V or more**. — ECU internal temperature sensor related DTC is not recorded. — Soaked for **6 hours or more**. — ECU internal temperature increases above specified temperature. **Diagnostic support note** • The check engine light illuminates if the TCM detects the above malfunction condition in two consecutive drive cycles or in one drive cycle while the DTC for the same malfunction has been stored in the TCM. • The automatic transaxle warning light illuminates if the TCM detects the above malfunction condition in two consecutive drive cycles or in one drive cycle while the DTC for the same malfunction has been stored in the TCM. • PENDING CODE is available. • FREEZE FRAME DATA is available. • The DTC is stored in the TCM memory.
FAIL-SAFE FUNCTION	• Inhibits learning control. • Inhibits neutral idle control. • Inhibits i-stop control.
POSSIBLE CAUSE	• TFT sensor malfunction
SYSTEM WIRING DIAGRAM	—

Diagnostic procedure

STEP	INSPECTION		ACTION
1	**VERIFY FREEZE FRAME DATA/SNAPSHOT DATA HAS BEEN RECORDED** • Has the freeze frame data/snapshot data been recorded on the repair order?	Yes	Go to the next step.
		No	Record the freeze frame data/snapshot data on the repair order, then go to the next step.
2	**VERIFY RELATED SERVICE INFORMATION AVAILABILITY** • Verify related Service Information availability. • Is any related Service Information available?	Yes	Perform repair or diagnosis according to the available Service Information. • If the vehicle is not repaired, replace the coupler component. (See 05-17B-17 COUPLER COMPONENT REMOVAL/ INSTALLATION [GW6A-EL, GW6AX-EL].) Go to the next step.
		No	Replace the coupler component, then go to the next step. (See 05-17B-17 COUPLER COMPONENT REMOVAL/ INSTALLATION [GW6A-EL, GW6AX-EL].)
3	**VERIFY DTC TROUBLESHOOTING COMPLETED** • Clear the DTC using the M-MDS. (See 05-02B-6 ON-BOARD DIAGNOSTIC SYSTEM DTC INSPECTION [GW6A-EL, GW6AX-EL].) • Perform the following procedure to ensure that the DTC has been resolved: 1. Soak for **6 hours or more**. 2. Idle the engine. • Perform the DTC inspection using the M-MDS. (See 05-02B-6 ON-BOARD DIAGNOSTIC SYSTEM DTC INSPECTION [GW6A-EL, GW6AX-EL].) • Are any DTCs present?	Yes	Go to the applicable DTC inspection. (See 05-02B-10 ON-BOARD DIAGNOSTIC SYSTEM DTC TABLE [GW6A-EL, GW6AX-EL].)
		No	DTC troubleshooting completed.

ON-BOARD DIAGNOSTIC [GW6A-EL, GW6AX-EL]

DTC P0712:00 [GW6A-EL, GW6AX-EL]

id050230817400

DTC P0712:00	**TFT sensor circuit low input**
DETECTION CONDITION	• Under the following condition, the TFT sensor voltage is **0.12 V or less** for **5 s**: — Battery voltage is **8 V or more**. **Diagnostic support note** • The check engine light illuminates if the TCM detects the above malfunction condition during the first drive cycle. • The automatic transaxle warning light illuminates if the TCM detects the above malfunction condition during the first drive cycle. • PENDING CODE is available. • FREEZE FRAME DATA is available. • The DTC is stored in the TCM memory.
FAIL-SAFE FUNCTION	• Inhibits learning control. • Inhibits neutral idle control. • Inhibits i-stop control.
POSSIBLE CAUSE	• TFT sensor malfunction
SYSTEM WIRING DIAGRAM	—

Diagnostic procedure

STEP	INSPECTION		ACTION
1	**VERIFY FREEZE FRAME DATA/SNAPSHOT DATA HAS BEEN RECORDED** • Has the freeze frame data/snapshot data been recorded on the repair order?	Yes	Go to the next step.
		No	Record the freeze frame data/snapshot data on the repair order, then go to the next step.
2	**VERIFY RELATED SERVICE INFORMATION AVAILABILITY** • Verify related Service Information availability. • Is any related Service Information available?	Yes	Perform repair or diagnosis according to the available Service Information. • If the vehicle is not repaired, replace the coupler component. (See 05-17B-17 COUPLER COMPONENT REMOVAL/ INSTALLATION [GW6A-EL, GW6AX-EL].) Go to the next step.
		No	Replace the coupler component, then go to the next step. (See 05-17B-17 COUPLER COMPONENT REMOVAL/ INSTALLATION [GW6A-EL, GW6AX-EL].)
3	**VERIFY DTC TROUBLESHOOTING COMPLETED** • Clear the DTC using the M-MDS. (See 05-02B-6 ON-BOARD DIAGNOSTIC SYSTEM DTC INSPECTION [GW6A-EL, GW6AX-EL].) • Perform the following procedure to ensure that the DTC has been resolved: 1. Switch the ignition ON (engine off or on) and wait for **5 s or more**. • Perform the DTC inspection using the M-MDS. (See 05-02B-6 ON-BOARD DIAGNOSTIC SYSTEM DTC INSPECTION [GW6A-EL, GW6AX-EL].) • Are any DTCs present?	Yes	Go to the applicable DTC inspection. (See 05-02B-10 ON-BOARD DIAGNOSTIC SYSTEM DTC TABLE [GW6A-EL, GW6AX-EL].)
		No	DTC troubleshooting completed.

ON-BOARD DIAGNOSTIC [GW6A-EL, GW6AX-EL]

DTC P0713:00 [GW6A-EL, GW6AX-EL]

id050230817500

DTC P0713:00	TFT sensor circuit high input
DETECTION CONDITION	• Under the following conditions, the ATF temperature is **–40 °C {–40 °F} or less** for **5 s**: — Battery voltage is **8 V or more**. — IAT is **–25 °C {–13 °F} or more**. — IAT sensor related DTC is not recorded. **Diagnostic support note** • The check engine light illuminates if the TCM detects the above malfunction condition in two consecutive drive cycles or in one drive cycle while the DTC for the same malfunction has been stored in the TCM. • The automatic transaxle warning light illuminates if the TCM detects the above malfunction condition in two consecutive drive cycles or in one drive cycle while the DTC for the same malfunction has been stored in the TCM. • PENDING CODE is available. • FREEZE FRAME DATA is available. • The DTC is stored in the TCM memory.
FAIL-SAFE FUNCTION	• Inhibits learning control. • Inhibits neutral idle control. • Inhibits i-stop control.
POSSIBLE CAUSE	• TFT sensor malfunction
SYSTEM WIRING DIAGRAM	—

Diagnostic procedure

STEP	INSPECTION		ACTION
1	**CONFIRM IAT SENSOR PENDING CODE/DTC** • Perform the PCM DTC inspection using the M-MDS. • Are IAT sensor pending codes/DTCs present?	Yes	Go to the applicable DTC inspection.
		No	Go to the next step.
2	**VERIFY FREEZE FRAME DATA/SNAPSHOT DATA HAS BEEN RECORDED** • Has the freeze frame data/snapshot data been recorded on the repair order?	Yes	Go to the next step.
		No	Record the freeze frame data/snapshot data on the repair order, then go to the next step.
3	**VERIFY RELATED SERVICE INFORMATION AVAILABILITY** • Verify related Service Information availability. • Is any related Service Information available?	Yes	Perform repair or diagnosis according to the available Service Information. • If the vehicle is not repaired, replace the coupler component. (See 05-17B-17 COUPLER COMPONENT REMOVAL/INSTALLATION [GW6A-EL, GW6AX-EL].) Go to the next step.
		No	Replace the coupler component, then go to the next step. (See 05-17B-17 COUPLER COMPONENT REMOVAL/INSTALLATION [GW6A-EL, GW6AX-EL].)
4	**VERIFY DTC TROUBLESHOOTING COMPLETED** • Clear the DTC using the M-MDS. (See 05-02B-6 ON-BOARD DIAGNOSTIC SYSTEM DTC INSPECTION [GW6A-EL, GW6AX-EL].) • Perform the following procedure to ensure that the DTC has been resolved: 1. Switch the ignition to ON (engine off or on) and wait for **5 s or more**. 2. Verify that the IAT is **–25 °C {–13 °F} or more**. • Perform the DTC inspection using the M-MDS. (See 05-02B-6 ON-BOARD DIAGNOSTIC SYSTEM DTC INSPECTION [GW6A-EL, GW6AX-EL].) • Are any DTCs present?	Yes	Go to the applicable DTC inspection. (See 05-02B-10 ON-BOARD DIAGNOSTIC SYSTEM DTC TABLE [GW6A-EL, GW6AX-EL].)
		No	DTC troubleshooting completed.

ON-BOARD DIAGNOSTIC [GW6A-EL, GW6AX-EL]

DTC P0716:00 [GW6A-EL, GW6AX-EL]

id050230904000

DTC P0716:00	**Turbine/Input shaft speed sensor range/performance problem**
DETECTION CONDITION	• Under the following conditions, the turbine/input shaft speed is **9,000 rpm or more** for **1 s**: — Engine is running. — Battery voltage is **10 V or more**. — Engine speed is **7,500 rpm or less**. **Diagnostic support note** • The check engine light illuminates if the TCM detects the above malfunction condition during the first drive cycle. • The automatic transaxle warning light illuminates if the TCM detects the above malfunction condition during the first drive cycle. • PENDING CODE is available. • FREEZE FRAME DATA is available. • The DTC is stored in the TCM memory.
FAIL-SAFE FUNCTION	• Set to TCC control. • Inhibits learning control. • Inhibits manual mode. • Inhibits neutral idle control. • Inhibits i-stop control. • Inhibits AAS. • Inhibits 5GR and 6GR. • Inhibits shift down when the accelerator pedal is depressed.
POSSIBLE CAUSE	• Turbine/Input shaft speed sensor malfunction
SYSTEM WIRING DIAGRAM	—

Diagnostic procedure

STEP	INSPECTION		ACTION
1	**VERIFY FREEZE FRAME DATA/SNAPSHOT DATA HAS BEEN RECORDED** • Has the freeze frame data/snapshot data been recorded on the repair order?	Yes	Go to the next step.
		No	Record the freeze frame data/snapshot data on the repair order, then go to the next step.
2	**VERIFY RELATED SERVICE INFORMATION AVAILABILITY** • Verify related Service Information availability. • Is any related Service Information available?	Yes	Perform repair or diagnosis according to the available Service Information. • If the vehicle is not repaired, replace the control valve body. (See 05-17B-81 CONTROL VALVE BODY REMOVAL/INSTALLATION [GW6A-EL, GW6AX-EL].) Go to the next step.
		No	Replace the control valve body, then go to the next step. (See 05-17B-81 CONTROL VALVE BODY REMOVAL/INSTALLATION [GW6A-EL, GW6AX-EL].)
3	**VERIFY DTC TROUBLESHOOTING COMPLETED** • Clear the DTC using the M-MDS. (See 05-02B-6 ON-BOARD DIAGNOSTIC SYSTEM DTC INSPECTION [GW6A-EL, GW6AX-EL].) • Perform the following procedure to ensure that the DTC has been resolved: 1. Drive the vehicle for **1 s or more** under the following condition: • Vehicle speed: **30 km/h {19 mph} or more** • Perform the DTC inspection using the M-MDS. (See 05-02B-6 ON-BOARD DIAGNOSTIC SYSTEM DTC INSPECTION [GW6A-EL, GW6AX-EL].) • Are any DTCs present?	Yes	Go to the applicable DTC inspection. (See 05-02B-10 ON-BOARD DIAGNOSTIC SYSTEM DTC TABLE [GW6A-EL, GW6AX-EL].)
		No	DTC troubleshooting completed.

ON-BOARD DIAGNOSTIC [GW6A-EL, GW6AX-EL]

DTC P0717:00 [GW6A-EL, GW6AX-EL]

id050230821300

DTC P0717:00	Open circuit in turbine/input shaft speed sensor circuit
DETECTION CONDITION	• Under the following conditions, the turbine/input shaft speed sensor signal is not input for **1 s**: — Engine is running. — Battery voltage is **10 V or more**. — Vehicle speed signal related DTC is not recorded. — Vehicle speed is **16 km/h {9.9 mph} or more**. — There is no difference between vehicle speed signal from DSC HU/CM and output shaft speed sensor signal. — DTC U0121:00 is not recorded. **Diagnostic support note** • The check engine light illuminates if the TCM detects the above malfunction condition during the first drive cycle. • The automatic transaxle warning light illuminates if the TCM detects the above malfunction condition during the first drive cycle. • PENDING CODE is available. • FREEZE FRAME DATA is available. • The DTC is stored in the TCM memory.
FAIL-SAFE FUNCTION	• Set to TCC control. • Inhibits learning control. • Inhibits manual mode. • Inhibits neutral idle control. • Inhibits i-stop control. • Inhibits AAS. • Inhibits 5GR and 6GR. • Inhibits shift down when the accelerator pedal is depressed.
POSSIBLE CAUSE	• Turbine/Input shaft speed sensor malfunction
SYSTEM WIRING DIAGRAM	—

Diagnostic procedure

STEP	INSPECTION		ACTION
1	**VERIFY FREEZE FRAME DATA/SNAPSHOT DATA HAS BEEN RECORDED** • Has the freeze frame data/snapshot data been recorded on the repair order?	Yes	Go to the next step.
		No	Record the freeze frame data/snapshot data on the repair order, then go to the next step.
2	**VERIFY RELATED SERVICE INFORMATION AVAILABILITY** • Verify related Service Information availability. • Is any related Service Information available?	Yes	Perform repair or diagnosis according to the available Service Information. • If the vehicle is not repaired, replace the control valve body. (See 05-17B-81 CONTROL VALVE BODY REMOVAL/INSTALLATION [GW6A-EL, GW6AX-EL].) Go to the next step.
		No	Replace the control valve body, then go to the next step. (See 05-17B-81 CONTROL VALVE BODY REMOVAL/INSTALLATION [GW6A-EL, GW6AX-EL].)
3	**VERIFY DTC TROUBLESHOOTING COMPLETED** • Clear the DTC using the M-MDS. (See 05-02B-6 ON-BOARD DIAGNOSTIC SYSTEM DTC INSPECTION [GW6A-EL, GW6AX-EL].) • Perform the following procedure to ensure that the DTC has been resolved: 1. Drive the vehicle for **1 s or more** under the following condition: • Vehicle speed: **16 km/h {9.9 mph} or more** • Perform the DTC inspection using the M-MDS. (See 05-02B-6 ON-BOARD DIAGNOSTIC SYSTEM DTC INSPECTION [GW6A-EL, GW6AX-EL].) • Are any DTCs present?	Yes	Go to the applicable DTC inspection. (See 05-02B-10 ON-BOARD DIAGNOSTIC SYSTEM DTC TABLE [GW6A-EL, GW6AX-EL].)
		No	DTC troubleshooting completed.

ON-BOARD DIAGNOSTIC [GW6A-EL, GW6AX-EL]

DTC P0721:00 [GW6A-EL, GW6AX-EL]

id050230904100

DTC P0721:00	Output shaft speed sensor range/performance problem
DETECTION CONDITION	• Under the following conditions, the output shaft speed is **13,560 rpm or more** for **1 s**: — Engine is running. — Battery voltage is **10 V or more**. • Under the following conditions, the vehicle speed signal from the DSC HU/CM and the output shaft speed sensor signal differ by **520 rpm or more** for **1 s**: — Engine is running. — Battery voltage is **10 V or more**. — Vehicle speed signal related DTC is not recorded. — Vehicle speed is **16 km/h {9.9 mph} or more**. — Vehicle speed signal from DSC HU/CM and turbine/input shaft speed sensor signal do not differ. — Output shaft speed sensor signal is input. — Output shaft speed is **13,560 rpm or less**. **Diagnostic support note** • The check engine light illuminates if the TCM detects the above malfunction condition during the first drive cycle. • The automatic transaxle warning light illuminates if the TCM detects the above malfunction condition during the first drive cycle. • PENDING CODE is available. • FREEZE FRAME DATA is available. • The DTC is stored in the TCM memory.
FAIL-SAFE FUNCTION	• Inhibits learning control. • Inhibits manual mode. • Inhibits neutral idle control. • Inhibits i-stop control. • Inhibits AAS.
POSSIBLE CAUSE	• Output shaft speed sensor malfunction
SYSTEM WIRING DIAGRAM	—

Diagnostic procedure

STEP	INSPECTION		ACTION
1	**CONFIRM DSC HU/CM DTC** • Perform the DSC HU/CM DTC inspection using the M-MDS. (See 04-02A-7 ON-BOARD DIAGNOSIS [DYNAMIC STABILITY CONTROL (DSC)].) • Are any DTCs present?	Yes	Go to the applicable DTC inspection. (See 04-02A-7 ON-BOARD DIAGNOSIS [DYNAMIC STABILITY CONTROL (DSC)].)
		No	Go to the next step.
2	**VERIFY THE INSTRUMENT CLUSTER REPAIR HISTORY** • Does the instrument cluster have a record of replacement?	Yes	Perform the instrument cluster configuration, then go to Step 6. (See 09-22-19 INSTRUMENT CLUSTER CONFIGURATION (USING AS-BUILT DATA).)
		No	Go to the next step.
3	**VERIFY THE AUTOMATIC TRANSMISSION REPAIR HISTORY** • Does the automatic transmission (with control valve body) have a record of replacement?	Yes	Perform the TCM configuration. (See 05-17B-98 TCM CONFIGURATION [GW6A-EL, GW6AX-EL].)
		No	Go to the next step.
4	**VERIFY FREEZE FRAME DATA/SNAPSHOT DATA HAS BEEN RECORDED** • Has the freeze frame data/snapshot data been recorded on the repair order?	Yes	Go to the next step.
		No	Record the freeze frame data/snapshot data on the repair order, then go to the next step.
5	**VERIFY RELATED SERVICE INFORMATION AVAILABILITY** • Verify related Service Information availability. • Is any related Service Information available?	Yes	Perform repair or diagnosis according to the available Service Information. • If the vehicle is not repaired, replace the control valve body. (See 05-17B-81 CONTROL VALVE BODY REMOVAL/INSTALLATION [GW6A-EL, GW6AX-EL].) Go to the next step.
		No	Replace the control valve body, then go to the next step. (See 05-17B-81 CONTROL VALVE BODY REMOVAL/INSTALLATION [GW6A-EL, GW6AX-EL].)

ON-BOARD DIAGNOSTIC [GW6A-EL, GW6AX-EL]

STEP	INSPECTION		ACTION
6	**VERIFY DTC TROUBLESHOOTING COMPLETED** • Clear the DTC using the M-MDS. (See 05-02B-6 ON-BOARD DIAGNOSTIC SYSTEM DTC INSPECTION [GW6A-EL, GW6AX-EL].) • Perform the following procedure to ensure that the DTC has been resolved: 1. Drive the vehicle for **1 s or more** under the following condition: • Vehicle speed: **30 km/h {19 mph} or more** • Perform the DTC inspection using the M-MDS. (See 05-02B-6 ON-BOARD DIAGNOSTIC SYSTEM DTC INSPECTION [GW6A-EL, GW6AX-EL].) • Are any DTCs present?	Yes	Go to the applicable DTC inspection. (See 05-02B-10 ON-BOARD DIAGNOSTIC SYSTEM DTC TABLE [GW6A-EL, GW6AX-EL].)
		No	DTC troubleshooting completed.

DTC P0722:00 [GW6A-EL, GW6AX-EL]

id050230821500

DTC P0722:00	Open circuit in output shaft speed sensor circuit
DETECTION CONDITION	• Under the following conditions, the output shaft speed sensor signal is not input for **1 s**: — Engine is running. — Battery voltage is **10 V or more**. — Vehicle speed signal related DTC is not recorded. — Vehicle speed is **16 km/h {9.9 mph} or more**. — There is no difference between vehicle speed signal from DSC HU/CM and output shaft speed sensor signal. — DTC U0121:00 is not recorded. **Diagnostic support note** • The check engine light illuminates if the TCM detects the above malfunction condition during the first drive cycle. • The automatic transaxle warning light illuminates if the TCM detects the above malfunction condition during the first drive cycle. • PENDING CODE is available. • FREEZE FRAME DATA is available. • The DTC is stored in the TCM memory.
FAIL-SAFE FUNCTION	• Inhibits learning control. • Inhibits manual mode. • Inhibits neutral idle control. • Inhibits i-stop control. • Inhibits AAS.
POSSIBLE CAUSE	• Output shaft speed sensor malfunction
SYSTEM WIRING DIAGRAM	—

Diagnostic procedure

STEP	INSPECTION		ACTION
1	**VERIFY FREEZE FRAME DATA/SNAPSHOT DATA HAS BEEN RECORDED** • Has the freeze frame data/snapshot data been recorded on the repair order?	Yes	Go to the next step.
		No	Record the freeze frame data/snapshot data on the repair order, then go to the next step.
2	**VERIFY RELATED SERVICE INFORMATION AVAILABILITY** • Verify related Service Information availability. • Is any related Service Information available?	Yes	Perform repair or diagnosis according to the available Service Information. • If the vehicle is not repaired, replace the control valve body. (See 05-17B-81 CONTROL VALVE BODY REMOVAL/INSTALLATION [GW6A-EL, GW6AX-EL].) Go to the next step.
		No	Replace the control valve body, then go to the next step. (See 05-17B-81 CONTROL VALVE BODY REMOVAL/INSTALLATION [GW6A-EL, GW6AX-EL].)

ON-BOARD DIAGNOSTIC [GW6A-EL, GW6AX-EL]

STEP	INSPECTION		ACTION
3	**VERIFY DTC TROUBLESHOOTING COMPLETED** • Clear the DTC using the M-MDS. (See 05-02B-6 ON-BOARD DIAGNOSTIC SYSTEM DTC INSPECTION [GW6A-EL, GW6AX-EL].) • Perform the following procedure to ensure that the DTC has been resolved: 1. Drive the vehicle for **1 s or more** under the following condition: • Vehicle speed: **16 km/h {9.9 mph} or more** • Perform the DTC inspection using the M-MDS. (See 05-02B-6 ON-BOARD DIAGNOSTIC SYSTEM DTC INSPECTION [GW6A-EL, GW6AX-EL].) • Are any DTCs present?	Yes	Go to the applicable DTC inspection. (See 05-02B-10 ON-BOARD DIAGNOSTIC SYSTEM DTC TABLE [GW6A-EL, GW6AX-EL].)
		No	DTC troubleshooting completed.

DTC P0729:00 [GW6A-EL, GW6AX-EL]

id050230822000

DTC P0729:00	**6GR incorrect ratio**
DETECTION CONDITION	• In D position, 6GR, the following phenomenon occurs: — Engine speed and turbine/input shaft speed deviates by **600 rpm** for **230 to 1,980 ms** (varies with ATF temperature and ECT) during shift-up. — Engine speed and turbine/input shaft speed deviates by **300 rpm** for **1,500 to 3,900 ms** (varies with ATF temperature) while driving without shifting. **Diagnostic support note** • The check engine light does not illuminate. • The automatic transaxle warning light does not illuminate. • PENDING CODE is available. • FREEZE FRAME DATA is not available. • The DTC is stored in the TCM memory.
FAIL-SAFE FUNCTION	• Inhibits malfunctioning gear. • Limits engine torque. • Inhibits learning control. • Inhibits manual mode. • Inhibits neutral idle control. • Inhibits i-stop control. • Inhibits AAS.
POSSIBLE CAUSE	• ATF is less than specified value • Clutch burnt • Shift solenoid malfunction • ATF leakage from clutch circuit • Control valve body malfunction
SYSTEM WIRING DIAGRAM	—

Diagnostic procedure

STEP	INSPECTION		ACTION
1	**VERIFY THE DTC OUTPUT STATUS** • Are any the following DTCs displayed? — P0738:00, P0746:00, P0751:00, P0752:00, P0756:00, P0757:00, P0761:00, P0762:00, P0766:00, P0767:00, P0771:00, P0772:00, P079A:00, P0842:00, P0843:00, P0847:00, P0848:00, P0872:00, P0873:00, P0877:00, P0878:00, P1784:00	Yes	Go to the applicable DTC inspection. (See 05-02B-10 ON-BOARD DIAGNOSTIC SYSTEM DTC TABLE [GW6A-EL, GW6AX-EL].)
		No	Go to the next step.
2	**INSPECT ATF LEVEL** • Inspect the ATF level. (See 05-17B-11 AUTOMATIC TRANSAXLE FLUID (ATF) INSPECTION [GW6A-EL, GW6AX-EL].) • Is there any malfunction?	Yes	Adjust the ATF level to the specification, then go to the next step. (See 05-17B-12 AUTOMATIC TRANSAXLE FLUID (ATF) REPLACEMENT [GW6A-EL, GW6AX-EL].)
		No	Go to the next step.

ON-BOARD DIAGNOSTIC [GW6A-EL, GW6AX-EL]

STEP	INSPECTION		ACTION
3	**PERFORM ON-BOARD DIAGNOSTIC TEST TO SPECIFY MALFUNCTIONING PART** **Note** • If only DTCs in which the malfunctioning part is not confirmed are displayed as in the following DTCs, all of the diagnosis may not have been completed. In such cases, the malfunction cause can be determined by performing the on-board diagnostic test. • Perform the on-board diagnostic test. (See 05-02B-8 ON-BOARD DIAGNOSTIC TEST MODE [GW6A-EL, GW6AX-EL].) • Are any DTCs present?	Yes	Go to the applicable DTC inspection. (See 05-02B-10 ON-BOARD DIAGNOSTIC SYSTEM DTC TABLE [GW6A-EL, GW6AX-EL].)
		No	ATF amount in Step 2 is correct: • Replace the automatic transaxle. (See 05-17B-29 AUTOMATIC TRANSAXLE REMOVAL/INSTALLATION [GW6A-EL].) (See 05-17B-47 AUTOMATIC TRANSAXLE REMOVAL/INSTALLATION [GW6AX-EL].) ATF amount adjusted in Step 2: • Drive the vehicle to check it, and if there is no problem then the DTC troubleshooting is complete.

DTC P0731:00 [GW6A-EL, GW6AX-EL]

id050230817800

DTC P0731:00	1GR incorrect ratio
DETECTION CONDITION	• In D position, 1GR, the following phenomenon occurs: — Speed ratio is **0.75 to 1.2** for **2,000 ms** while vehicle is stopped in D position. — Engine speed and turbine/input shaft speed deviates by **600 rpm** for **230 to 1,980 ms** (varies with ATF temperature and ECT) during shift-up. — Engine speed and turbine/input shaft speed deviates by **300 rpm** for **1,500 to 3,900 ms** (varies with ATF temperature) while driving without shifting. **Diagnostic support note** • The check engine light does not illuminate. • The automatic transaxle warning light does not illuminate. • PENDING CODE is available. • FREEZE FRAME DATA is not available. • The DTC is stored in the TCM memory.
FAIL-SAFE FUNCTION	• Inhibits malfunctioning gear. • Limits engine torque. • Inhibits learning control. • Inhibits manual mode. • Inhibits neutral idle control. • Inhibits i-stop control. • Inhibits AAS.
POSSIBLE CAUSE	• ATF is less than specified value • Clutch burnt • Shift solenoid malfunction • ATF leakage from clutch circuit • Control valve body malfunction
SYSTEM WIRING DIAGRAM	—

Diagnostic procedure

STEP	INSPECTION		ACTION
1	**VERIFY THE DTC OUTPUT STATUS** • Are any the following DTCs displayed? — P0738:00, P0746:00, P0751:00, P0752:00, P0756:00, P0757:00, P0761:00, P0762:00, P0766:00, P0767:00, P0771:00, P0772:00, P079A:00, P0842:00, P0843:00, P0847:00, P0848:00, P0872:00, P0873:00, P0877:00, P0878:00, P1784:00	Yes	Go to the applicable DTC inspection. (See 05-02B-10 ON-BOARD DIAGNOSTIC SYSTEM DTC TABLE [GW6A-EL, GW6AX-EL].)
		No	Go to the next step.
2	**INSPECT ATF LEVEL** • Inspect the ATF level. (See 05-17B-11 AUTOMATIC TRANSAXLE FLUID (ATF) INSPECTION [GW6A-EL, GW6AX-EL].) • Is there any malfunction?	Yes	Adjust the ATF level to the specification, then go to the next step. (See 05-17B-12 AUTOMATIC TRANSAXLE FLUID (ATF) REPLACEMENT [GW6A-EL, GW6AX-EL].)
		No	Go to the next step.

ON-BOARD DIAGNOSTIC [GW6A-EL, GW6AX-EL]

STEP	INSPECTION		ACTION
3	**PERFORM ON-BOARD DIAGNOSTIC TEST TO SPECIFY MALFUNCTIONING PART** **Note** • If only DTCs in which the malfunctioning part is not confirmed are displayed as in the following DTCs, all of the diagnosis may not have been completed. In such cases, the malfunction cause can be determined by performing the on-board diagnostic test. • Perform the on-board diagnostic test. (See 05-02B-8 ON-BOARD DIAGNOSTIC TEST MODE [GW6A-EL, GW6AX-EL].) • Are any DTCs present?	Yes	Go to the applicable DTC inspection. (See 05-02B-10 ON-BOARD DIAGNOSTIC SYSTEM DTC TABLE [GW6A-EL, GW6AX-EL].)
		No	ATF amount in Step 2 is correct: • Replace the automatic transaxle. (See 05-17B-29 AUTOMATIC TRANSAXLE REMOVAL/INSTALLATION [GW6A-EL].) (See 05-17B-47 AUTOMATIC TRANSAXLE REMOVAL/INSTALLATION [GW6AX-EL].) ATF amount adjusted in Step 2: • Drive the vehicle to check it, and if there is no problem then the DTC troubleshooting is complete.

DTC P0732:00 [GW6A-EL, GW6AX-EL]

id050230817900

DTC P0732:00	2GR incorrect ratio
DETECTION CONDITION	• In D position, 2GR, the following phenomenon occurs: — Engine speed and turbine/input shaft speed deviates by **600 rpm** for **230 to 1,980 ms** (varies with ATF temperature and ECT) during shift-up. — Engine speed and turbine/input shaft speed deviates by **300 rpm** for **1,500 to 3,900 ms** (varies with ATF temperature) while driving without shifting. **Diagnostic support note** • The check engine light does not illuminate. • The automatic transaxle warning light does not illuminate. • PENDING CODE is available. • FREEZE FRAME DATA is not available. • The DTC is stored in the TCM memory.
FAIL-SAFE FUNCTION	• Inhibits malfunctioning gear. • Limits engine torque. • Inhibits learning control. • Inhibits manual mode. • Inhibits neutral idle control. • Inhibits i-stop control. • Inhibits AAS.
POSSIBLE CAUSE	• ATF is less than specified value • Clutch burnt • Shift solenoid malfunction • ATF leakage from clutch circuit • Control valve body malfunction
SYSTEM WIRING DIAGRAM	—

Diagnostic procedure

STEP	INSPECTION		ACTION
1	**VERIFY THE DTC OUTPUT STATUS** • Are any the following DTCs displayed? — P0738:00, P0746:00, P0751:00, P0752:00, P0756:00, P0757:00, P0761:00, P0762:00, P0766:00, P0767:00, P0771:00, P0772:00, P079A:00, P0842:00, P0843:00, P0847:00, P0848:00, P0872:00, P0873:00, P0877:00, P0878:00, P1784:00	Yes	Go to the applicable DTC inspection. (See 05-02B-10 ON-BOARD DIAGNOSTIC SYSTEM DTC TABLE [GW6A-EL, GW6AX-EL].)
		No	Go to the next step.
2	**INSPECT ATF LEVEL** • Inspect the ATF level. (See 05-17B-11 AUTOMATIC TRANSAXLE FLUID (ATF) INSPECTION [GW6A-EL, GW6AX-EL].) • Is there any malfunction?	Yes	Adjust the ATF level to the specification, then go to the next step. (See 05-17B-12 AUTOMATIC TRANSAXLE FLUID (ATF) REPLACEMENT [GW6A-EL, GW6AX-EL].)
		No	Go to the next step.

ON-BOARD DIAGNOSTIC [GW6A-EL, GW6AX-EL]

STEP	INSPECTION		ACTION
3	**PERFORM ON-BOARD DIAGNOSTIC TEST TO SPECIFY MALFUNCTIONING PART** **Note** • If only DTCs in which the malfunctioning part is not confirmed are displayed as in the following DTCs, all of the diagnosis may not have been completed. In such cases, the malfunction cause can be determined by performing the on-board diagnostic test. • Perform the on-board diagnostic test. (See 05-02B-8 ON-BOARD DIAGNOSTIC TEST MODE [GW6A-EL, GW6AX-EL].) • Are any DTCs present?	Yes	Go to the applicable DTC inspection. (See 05-02B-10 ON-BOARD DIAGNOSTIC SYSTEM DTC TABLE [GW6A-EL, GW6AX-EL].)
		No	ATF amount in Step 2 is correct: • Replace the automatic transaxle. (See 05-17B-29 AUTOMATIC TRANSAXLE REMOVAL/INSTALLATION [GW6A-EL].) (See 05-17B-47 AUTOMATIC TRANSAXLE REMOVAL/INSTALLATION [GW6AX-EL].) ATF amount adjusted in Step 2: • Drive the vehicle to check it, and if there is no problem then the DTC troubleshooting is complete.

DTC P0733:00 [GW6A-EL, GW6AX-EL]

id050230818000

DTC P0733:00	3GR incorrect ratio
DETECTION CONDITION	• In D position, 3GR, the following phenomenon occurs: — Engine speed and turbine/input shaft speed deviates by **600 rpm** for **230 to 1,980 ms** (varies with ATF temperature and ECT) during shift-up. — Engine speed and turbine/input shaft speed deviates by **300 rpm** for **1,500 to 3,900 ms** (varies with ATF temperature) while driving without shifting. **Diagnostic support note** • The check engine light does not illuminate. • The automatic transaxle warning light does not illuminate. • PENDING CODE is available. • FREEZE FRAME DATA is not available. • The DTC is stored in the TCM memory.
FAIL-SAFE FUNCTION	• Inhibits malfunctioning gear. • Limits engine torque. • Inhibits learning control. • Inhibits manual mode. • Inhibits neutral idle control. • Inhibits i-stop control. • Inhibits AAS.
POSSIBLE CAUSE	• ATF is less than specified value • Clutch burnt • Shift solenoid malfunction • ATF leakage from clutch circuit • Control valve body malfunction
SYSTEM WIRING DIAGRAM	—

Diagnostic procedure

STEP	INSPECTION		ACTION
1	**VERIFY THE DTC OUTPUT STATUS** • Are any the following DTCs displayed? — P0738:00, P0746:00, P0751:00, P0752:00, P0756:00, P0757:00, P0761:00, P0762:00, P0766:00, P0767:00, P0771:00, P0772:00, P079A:00, P0842:00, P0843:00, P0847:00, P0848:00, P0872:00, P0873:00, P0877:00, P0878:00, P1784:00	Yes	Go to the applicable DTC inspection. (See 05-02B-10 ON-BOARD DIAGNOSTIC SYSTEM DTC TABLE [GW6A-EL, GW6AX-EL].)
		No	Go to the next step.
2	**INSPECT ATF LEVEL** • Inspect the ATF level. (See 05-17B-11 AUTOMATIC TRANSAXLE FLUID (ATF) INSPECTION [GW6A-EL, GW6AX-EL].) • Is there any malfunction?	Yes	Adjust the ATF level to the specification, then go to the next step. (See 05-17B-12 AUTOMATIC TRANSAXLE FLUID (ATF) REPLACEMENT [GW6A-EL, GW6AX-EL].)
		No	Go to the next step.

ON-BOARD DIAGNOSTIC [GW6A-EL, GW6AX-EL]

STEP	INSPECTION		ACTION
3	**PERFORM ON-BOARD DIAGNOSTIC TEST TO SPECIFY MALFUNCTIONING PART** **Note** • If only DTCs in which the malfunctioning part is not confirmed are displayed as in the following DTCs, all of the diagnosis may not have been completed. In such cases, the malfunction cause can be determined by performing the on-board diagnostic test. • Perform the on-board diagnostic test. (See 05-02B-8 ON-BOARD DIAGNOSTIC TEST MODE [GW6A-EL, GW6AX-EL].) • Are any DTCs present?	Yes	Go to the applicable DTC inspection. (See 05-02B-10 ON-BOARD DIAGNOSTIC SYSTEM DTC TABLE [GW6A-EL, GW6AX-EL].)
		No	ATF amount in Step 2 is correct: • Replace the automatic transaxle. (See 05-17B-29 AUTOMATIC TRANSAXLE REMOVAL/INSTALLATION [GW6A-EL].) (See 05-17B-47 AUTOMATIC TRANSAXLE REMOVAL/INSTALLATION [GW6AX-EL].) ATF amount adjusted in Step 2: • Drive the vehicle to check it, and if there is no problem then the DTC troubleshooting is complete.

DTC P0734:00 [GW6A-EL, GW6AX-EL]

id050230818100

DTC P0734:00	4GR incorrect ratio
DETECTION CONDITION	• In D position, 4GR, the following phenomenon occurs: — Engine speed and turbine/input shaft speed deviates by **600 rpm** for **230 to 1,980 ms** (varies with ATF temperature and ECT) during shift-up. — Engine speed and turbine/input shaft speed deviates by **300 rpm** for **1,500 to 3,900 ms** (varies with ATF temperature) while driving without shifting. **Diagnostic support note** • The check engine light does not illuminate. • The automatic transaxle warning light does not illuminate. • PENDING CODE is available. • FREEZE FRAME DATA is not available. • The DTC is stored in the TCM memory.
FAIL-SAFE FUNCTION	• Inhibits malfunctioning gear. • Limits engine torque. • Inhibits learning control. • Inhibits manual mode. • Inhibits neutral idle control. • Inhibits i-stop control. • Inhibits AAS.
POSSIBLE CAUSE	• ATF is less than specified value • Clutch burnt • Shift solenoid malfunction • ATF leakage from clutch circuit • Control valve body malfunction
SYSTEM WIRING DIAGRAM	—

Diagnostic procedure

STEP	INSPECTION		ACTION
1	**VERIFY THE DTC OUTPUT STATUS** • Are any the following DTCs displayed? — P0738:00, P0746:00, P0751:00, P0752:00, P0756:00, P0757:00, P0761:00, P0762:00, P0766:00, P0767:00, P0771:00, P0772:00, P079A:00, P0842:00, P0843:00, P0847:00, P0848:00, P0872:00, P0873:00, P0877:00, P0878:00, P1784:00	Yes	Go to the applicable DTC inspection. (See 05-02B-10 ON-BOARD DIAGNOSTIC SYSTEM DTC TABLE [GW6A-EL, GW6AX-EL].)
		No	Go to the next step.
2	**INSPECT ATF LEVEL** • Inspect the ATF level. (See 05-17B-11 AUTOMATIC TRANSAXLE FLUID (ATF) INSPECTION [GW6A-EL, GW6AX-EL].) • Is there any malfunction?	Yes	Adjust the ATF level to the specification, then go to the next step. (See 05-17B-12 AUTOMATIC TRANSAXLE FLUID (ATF) REPLACEMENT [GW6A-EL, GW6AX-EL].)
		No	Go to the next step.

ON-BOARD DIAGNOSTIC [GW6A-EL, GW6AX-EL]

STEP	INSPECTION		ACTION
3	**PERFORM ON-BOARD DIAGNOSTIC TEST TO SPECIFY MALFUNCTIONING PART** **Note** • If only DTCs in which the malfunctioning part is not confirmed are displayed as in the following DTCs, all of the diagnosis may not have been completed. In such cases, the malfunction cause can be determined by performing the on-board diagnostic test. • Perform the on-board diagnostic test. (See 05-02B-8 ON-BOARD DIAGNOSTIC TEST MODE [GW6A-EL, GW6AX-EL].) • Are any DTCs present?	Yes	Go to the applicable DTC inspection. (See 05-02B-10 ON-BOARD DIAGNOSTIC SYSTEM DTC TABLE [GW6A-EL, GW6AX-EL].)
		No	ATF amount in Step 2 is correct: • Replace the automatic transaxle. (See 05-17B-29 AUTOMATIC TRANSAXLE REMOVAL/INSTALLATION [GW6A-EL].) (See 05-17B-47 AUTOMATIC TRANSAXLE REMOVAL/INSTALLATION [GW6AX-EL].) ATF amount adjusted in Step 2: • Drive the vehicle to check it, and if there is no problem then the DTC troubleshooting is complete.

DTC P0735:00 [GW6A-EL, GW6AX-EL]

id050230825100

DTC P0735:00	5GR incorrect ratio
DETECTION CONDITION	• In D position, 5GR, the following phenomenon occurs: — Engine speed and turbine/input shaft speed deviates by **600 rpm** for **230 to 1,980 ms** (varies with ATF temperature and ECT) during shift-up. — Engine speed and turbine/input shaft speed deviates by **300 rpm** for **1,500 to 3,900 ms** (varies with ATF temperature) while driving without shifting. **Diagnostic support note** • The check engine light does not illuminate. • The automatic transaxle warning light does not illuminate. • PENDING CODE is available. • FREEZE FRAME DATA is not available. • The DTC is stored in the TCM memory.
FAIL-SAFE FUNCTION	• Inhibits malfunctioning gear. • Limits engine torque. • Inhibits learning control. • Inhibits manual mode. • Inhibits neutral idle control. • Inhibits i-stop control. • Inhibits AAS.
POSSIBLE CAUSE	• ATF is less than specified value • Clutch burnt • Shift solenoid malfunction • ATF leakage from clutch circuit • Control valve body malfunction
SYSTEM WIRING DIAGRAM	—

Diagnostic procedure

STEP	INSPECTION		ACTION
1	**VERIFY THE DTC OUTPUT STATUS** • Are any the following DTCs displayed? — P0738:00, P0746:00, P0751:00, P0752:00, P0756:00, P0757:00, P0761:00, P0762:00, P0766:00, P0767:00, P0771:00, P0772:00, P079A:00, P0842:00, P0843:00, P0847:00, P0848:00, P0872:00, P0873:00, P0877:00, P0878:00, P1784:00	Yes	Go to the applicable DTC inspection. (See 05-02B-10 ON-BOARD DIAGNOSTIC SYSTEM DTC TABLE [GW6A-EL, GW6AX-EL].)
		No	Go to the next step.
2	**INSPECT ATF LEVEL** • Inspect the ATF level. (See 05-17B-11 AUTOMATIC TRANSAXLE FLUID (ATF) INSPECTION [GW6A-EL, GW6AX-EL].) • Is there any malfunction?	Yes	Adjust the ATF level to the specification, then go to the next step. (See 05-17B-12 AUTOMATIC TRANSAXLE FLUID (ATF) REPLACEMENT [GW6A-EL, GW6AX-EL].)
		No	Go to the next step.

ON-BOARD DIAGNOSTIC [GW6A-EL, GW6AX-EL]

STEP	INSPECTION		ACTION
3	**PERFORM ON-BOARD DIAGNOSTIC TEST TO SPECIFY MALFUNCTIONING PART** **Note** • If only DTCs in which the malfunctioning part is not confirmed are displayed as in the following DTCs, all of the diagnosis may not have been completed. In such cases, the malfunction cause can be determined by performing the on-board diagnostic test. • Perform the on-board diagnostic test. (See 05-02B-8 ON-BOARD DIAGNOSTIC TEST MODE [GW6A-EL, GW6AX-EL].) • Are any DTCs present?	Yes	Go to the applicable DTC inspection. (See 05-02B-10 ON-BOARD DIAGNOSTIC SYSTEM DTC TABLE [GW6A-EL, GW6AX-EL].)
		No	ATF amount in Step 2 is correct: • Replace the automatic transaxle. (See 05-17B-29 AUTOMATIC TRANSAXLE REMOVAL/INSTALLATION [GW6A-EL].) (See 05-17B-47 AUTOMATIC TRANSAXLE REMOVAL/INSTALLATION [GW6AX-EL].) ATF amount adjusted in Step 2: • Drive the vehicle to check it, and if there is no problem then the DTC troubleshooting is complete.

DTC P0736:00 [GW6A-EL, GW6AX-EL]

id050230823200

DTC P0736:00	**Gear reverse incorrect ratio**
DETECTION CONDITION	• Speed ratio is **0.75 to 1.2** for **2,000 ms** while vehicle is stopped in R position. **Diagnostic support note** • The check engine light does not illuminate. • The automatic transaxle warning light illuminates if the TCM detects the above malfunction condition in two consecutive drive cycles or in one drive cycle while the DTC for the same malfunction has been stored in the TCM. • PENDING CODE is available. • FREEZE FRAME DATA is not available. • The DTC is stored in the TCM memory.
FAIL-SAFE FUNCTION	• Inhibits learning control. • Inhibits neutral idle control. • Inhibits i-stop control.
POSSIBLE CAUSE	• ATF is less than specified value • Clutch burnt • Shift solenoid malfunction • ATF leakage from clutch circuit • Control valve body malfunction
SYSTEM WIRING DIAGRAM	—

Diagnostic procedure

STEP	INSPECTION		ACTION
1	**VERIFY THE DTC OUTPUT STATUS** • Are any the following DTCs displayed? — P0738:00, P0746:00, P0751:00, P0752:00, P0756:00, P0757:00, P0761:00, P0762:00, P0766:00, P0767:00, P0771:00, P0772:00, P079A:00, P0842:00, P0843:00, P0847:00, P0848:00, P0872:00, P0873:00, P0877:00, P0878:00, P1784:00	Yes	Go to the applicable DTC inspection. (See 05-02B-10 ON-BOARD DIAGNOSTIC SYSTEM DTC TABLE [GW6A-EL, GW6AX-EL].)
		No	Go to the next step.
2	**INSPECT ATF LEVEL** • Inspect the ATF level. (See 05-17B-11 AUTOMATIC TRANSAXLE FLUID (ATF) INSPECTION [GW6A-EL, GW6AX-EL].) • Is there any malfunction?	Yes	Adjust the ATF level to the specification, then go to the next step. (See 05-17B-12 AUTOMATIC TRANSAXLE FLUID (ATF) REPLACEMENT [GW6A-EL, GW6AX-EL].)
		No	Go to the next step.

ON-BOARD DIAGNOSTIC [GW6A-EL, GW6AX-EL]

STEP	INSPECTION		ACTION
3	**PERFORM ON-BOARD DIAGNOSTIC TEST TO SPECIFY MALFUNCTIONING PART** **Note** • If only DTCs in which the malfunctioning part is not confirmed are displayed as in the following DTCs, all of the diagnosis may not have been completed. In such cases, the malfunction cause can be determined by performing the on-board diagnostic test. • Perform the on-board diagnostic test. (See 05-02B-8 ON-BOARD DIAGNOSTIC TEST MODE [GW6A-EL, GW6AX-EL].) • Are any DTCs present?	Yes	Go to the applicable DTC inspection. (See 05-02B-10 ON-BOARD DIAGNOSTIC SYSTEM DTC TABLE [GW6A-EL, GW6AX-EL].)
		No	ATF amount in Step 2 is correct: • Replace the automatic transaxle. (See 05-17B-29 AUTOMATIC TRANSAXLE REMOVAL/INSTALLATION [GW6A-EL].) (See 05-17B-47 AUTOMATIC TRANSAXLE REMOVAL/INSTALLATION [GW6AX-EL].) ATF amount adjusted in Step 2: • Drive the vehicle to check it, and if there is no problem then the DTC troubleshooting is complete.

DTC P0741:00 [GW6A-EL, GW6AX-EL]

id050230818200

DTC P0741:00	TCC control solenoid stuck off
DETECTION CONDITION	• Under the following conditions, difference in slip amount **over 5 s** compared to target slip amount is **200 rpm or more**, and TCC feedback hydraulic pressure is **200 kPa {2.04 kgf/cm^2, 29.0 psi} or more** occurs: — Battery voltage is **8 V or more**. — Selector lever position is D position. — No electrical malfunction in TCC control solenoid — During TCC or TCC feedback — DTC P0716:00 and P0717:00 are not recorded. **Diagnostic support note** • The check engine light illuminates if the TCM detects the above malfunction condition in two consecutive drive cycles or in one drive cycle while the DTC for the same malfunction has been stored in the TCM. • The automatic transaxle warning light illuminates if the TCM detects the above malfunction condition in two consecutive drive cycles or in one drive cycle while the DTC for the same malfunction has been stored in the TCM. • PENDING CODE is available. • FREEZE FRAME DATA is available. • The DTC is stored in the TCM memory.
FAIL-SAFE FUNCTION	• Inhibits TCC control. • Inhibits learning control. • Inhibits manual mode. • Inhibits neutral idle control. • Inhibits i-stop control. • Inhibits AAS.
POSSIBLE CAUSE	• TCC control solenoid malfunction • ATF leakage from clutch circuit • TCC clutch burnt • Control valve body malfunction
SYSTEM WIRING DIAGRAM	—

ON-BOARD DIAGNOSTIC [GW6A-EL, GW6AX-EL]

Diagnostic procedure

STEP	INSPECTION		ACTION
1	**VERIFY FREEZE FRAME DATA/SNAPSHOT DATA HAS BEEN RECORDED** • Has the freeze frame data/snapshot data been recorded on the repair order?	Yes	Go to the next step.
		No	Record the freeze frame data/snapshot data on the repair order, then go to the next step.
2	**VERIFY RELATED SERVICE INFORMATION AVAILABILITY** • Verify related Service Information availability. • Is any related Service Information available?	Yes	Perform repair or diagnosis according to the available Service Information. • If the vehicle is not repaired, replace the automatic transaxle. (See 05-17B-29 AUTOMATIC TRANSAXLE REMOVAL/INSTALLATION [GW6A-EL].) (See 05-17B-47 AUTOMATIC TRANSAXLE REMOVAL/INSTALLATION [GW6AX-EL].) Go to the next step.
		No	Replace the automatic transaxle, then go to the next step. (See 05-17B-29 AUTOMATIC TRANSAXLE REMOVAL/INSTALLATION [GW6A-EL].) (See 05-17B-47 AUTOMATIC TRANSAXLE REMOVAL/INSTALLATION [GW6AX-EL].)
3	**VERIFY DTC TROUBLESHOOTING COMPLETED** • Clear the DTC using the M-MDS. (See 05-02B-6 ON-BOARD DIAGNOSTIC SYSTEM DTC INSPECTION [GW6A-EL, GW6AX-EL].) • Perform the following procedure to ensure that the DTC has been resolved: 1. Drive the vehicle for **5 s or more** under the following conditions: • Selector lever position: D position • During TCC or TCC feedback • Perform the DTC inspection using the M-MDS. (See 05-02B-6 ON-BOARD DIAGNOSTIC SYSTEM DTC INSPECTION [GW6A-EL, GW6AX-EL].) • Are any DTCs present?	Yes	Go to the applicable DTC inspection. (See 05-02B-10 ON-BOARD DIAGNOSTIC SYSTEM DTC TABLE [GW6A-EL, GW6AX-EL].)
		No	DTC troubleshooting completed.

05

DTC P0743:00 [GW6A-EL, GW6AX-EL]

id050230822200

DTC P0743:00	TCC control solenoid circuit malfunction
DETECTION CONDITION	• Under the following condition, the TCM detects the TCC control solenoid circuit malfunction: — Battery voltage is **8 V or more**. **Diagnostic support note** • The check engine light illuminates if the TCM detects the above malfunction condition during the first drive cycle. • The automatic transaxle warning light illuminates if the TCM detects the above malfunction condition during the first drive cycle. • PENDING CODE is available. • FREEZE FRAME DATA is available. • The DTC is stored in the TCM memory.
FAIL-SAFE FUNCTION	• Set to emergency mode. • Inhibits learning control. • Inhibits manual mode. • Inhibits neutral idle control. • Inhibits i-stop control. • Inhibits AAS.
POSSIBLE CAUSE	• Short or open circuit in TCC control solenoid circuit • TCC control solenoid malfunction
SYSTEM WIRING DIAGRAM	—

ON-BOARD DIAGNOSTIC [GW6A-EL, GW6AX-EL]

Diagnostic procedure

STEP	INSPECTION		ACTION
1	**VERIFY FREEZE FRAME DATA/SNAPSHOT DATA HAS BEEN RECORDED** • Has the freeze frame data/snapshot data been recorded on the repair order?	Yes	Go to the next step.
		No	Record the freeze frame data/snapshot data on the repair order, then go to the next step.
2	**VERIFY RELATED SERVICE INFORMATION AVAILABILITY** • Verify related Service Information availability. • Is any related Service Information available?	Yes	Perform repair or diagnosis according to the available Service Information. • If the vehicle is not repaired, replace the control valve body. (See 05-17B-81 CONTROL VALVE BODY REMOVAL/ INSTALLATION [GW6A-EL, GW6AX-EL].) Go to the next step.
		No	Replace the control valve body, then go to the next step. (See 05-17B-81 CONTROL VALVE BODY REMOVAL/ INSTALLATION [GW6A-EL, GW6AX-EL].)
3	**VERIFY DTC TROUBLESHOOTING COMPLETED** • Clear the DTC using the M-MDS. (See 05-02B-6 ON-BOARD DIAGNOSTIC SYSTEM DTC INSPECTION [GW6A-EL, GW6AX-EL].) • Perform the following procedure to ensure that the DTC has been resolved: 1. Switch the ignition ON (engine off or on). • Perform the DTC inspection using the M-MDS. (See 05-02B-6 ON-BOARD DIAGNOSTIC SYSTEM DTC INSPECTION [GW6A-EL, GW6AX-EL].) • Are any DTCs present?	Yes	Go to the applicable DTC inspection. (See 05-02B-10 ON-BOARD DIAGNOSTIC SYSTEM DTC TABLE [GW6A-EL, GW6AX-EL].)
		No	DTC troubleshooting completed.

DTC P0746:00 [GW6A-EL, GW6AX-EL]

id050230904200

DTC P0746:00	**Pressure control solenoid stuck off**
DETECTION CONDITION	• Under the following conditions, pressure control solenoid stuck-off detected by combination of gear ratio malfunction and oil pressure switch pattern malfunction: — Engine is running. — Battery voltage is **8 V or more**. — ATF temperature is **20 °C {68 °F} or more**. **Diagnostic support note** • The check engine light illuminates if the TCM detects the above malfunction condition in two consecutive drive cycles or in one drive cycle while the DTC for the same malfunction has been stored in the TCM. • The automatic transaxle warning light illuminates if the TCM detects the above malfunction condition in two consecutive drive cycles or in one drive cycle while the DTC for the same malfunction has been stored in the TCM. • PENDING CODE is available. • FREEZE FRAME DATA is available. • The DTC is stored in the TCM memory.
FAIL-SAFE FUNCTION	• Inhibits malfunctioning gear. • Limits engine torque. • Inhibits learning control. • Inhibits manual mode. • Inhibits neutral idle control. • Inhibits i-stop control. • Inhibits AAS.
POSSIBLE CAUSE	• ATF is less than specified value • Pressure control solenoid malfunction
SYSTEM WIRING DIAGRAM	—

ON-BOARD DIAGNOSTIC [GW6A-EL, GW6AX-EL]

Diagnostic procedure

STEP	INSPECTION		ACTION
1	**VERIFY THE DTC OUTPUT STATUS** • Is the DTC P1738:00 also present?	Yes	Go to the applicable DTC inspection. (See 05-02B-79 DTC P1738:00 [GW6A-EL, GW6AX-EL].)
		No	Go to the next step.
2	**VERIFY FREEZE FRAME DATA/SNAPSHOT DATA HAS BEEN RECORDED** • Has the freeze frame data/snapshot data been recorded on the repair order?	Yes	Go to the next step.
		No	Record the freeze frame data/snapshot data on the repair order, then go to the next step.
3	**VERIFY RELATED SERVICE INFORMATION AVAILABILITY** • Verify related Service Information availability. • Is any related Service Information available?	Yes	Perform repair or diagnosis according to the available Service Information. • If the vehicle is not repaired, go to the next step.
		No	Go to the next step.
4	**INSPECT ATF LEVEL** • Inspect the ATF level. (See 05-17B-11 AUTOMATIC TRANSAXLE FLUID (ATF) INSPECTION [GW6A-EL, GW6AX-EL].) • Is there any malfunction?	Yes	Adjust the ATF level to the specification, then go to the next step. (See 05-17B-12 AUTOMATIC TRANSAXLE FLUID (ATF) REPLACEMENT [GW6A-EL, GW6AX-EL].)
		No	Replace the control valve body, then go to the next step. (See 05-17B-81 CONTROL VALVE BODY REMOVAL/INSTALLATION [GW6A-EL, GW6AX-EL].)
5	**PERFORM ON-BOARD DIAGNOSTIC TEST** • Perform the following procedure to ensure that the DTC has been resolved: 1. Start the engine. 2. Verify that the ATF temperature is **55 °C {131 °F} or more**. • Perform the on-board diagnostic test. (See 05-02B-8 ON-BOARD DIAGNOSTIC TEST MODE [GW6A-EL, GW6AX-EL].) • Are any DTCs present?	Yes	Go to the applicable DTC inspection. (See 05-02B-10 ON-BOARD DIAGNOSTIC SYSTEM DTC TABLE [GW6A-EL, GW6AX-EL].)
		No	Drive the vehicle to check it, and if there is no problem then the DTC troubleshooting is complete.

DTC P0748:00 [GW6A-EL, GW6AX-EL]

id050230904300

DTC P0748:00	**Pressure control solenoid circuit malfunction**
DETECTION CONDITION	• Under the following condition, the TCM detects the pressure control solenoid circuit malfunction: — Battery voltage is **8 V or more**. **Diagnostic support note** • The check engine light illuminates if the TCM detects the above malfunction condition during the first drive cycle. • The automatic transaxle warning light illuminates if the TCM detects the above malfunction condition during the first drive cycle. • PENDING CODE is available. • FREEZE FRAME DATA is available. • The DTC is stored in the TCM memory.
FAIL-SAFE FUNCTION	• Set to emergency mode. • Inhibits learning control. • Inhibits manual mode. • Inhibits neutral idle control. • Inhibits i-stop control. • Inhibits AAS.
POSSIBLE CAUSE	• Short or open circuit in pressure control solenoid circuit • Pressure control solenoid malfunction
SYSTEM WIRING DIAGRAM	—

ON-BOARD DIAGNOSTIC [GW6A-EL, GW6AX-EL]

Diagnostic procedure

STEP	INSPECTION		ACTION
1	**VERIFY FREEZE FRAME DATA/SNAPSHOT DATA HAS BEEN RECORDED** • Has the freeze frame data/snapshot data been recorded on the repair order?	Yes	Go to the next step.
		No	Record the freeze frame data/snapshot data on the repair order, then go to the next step.
2	**VERIFY RELATED SERVICE INFORMATION AVAILABILITY** • Verify related Service Information availability. • Is any related Service Information available?	Yes	Perform repair or diagnosis according to the available Service Information. • If the vehicle is not repaired, replace the control valve body. (See 05-17B-81 CONTROL VALVE BODY REMOVAL/ INSTALLATION [GW6A-EL, GW6AX-EL].) Go to the next step.
		No	Replace the control valve body, then go to the next step. (See 05-17B-81 CONTROL VALVE BODY REMOVAL/ INSTALLATION [GW6A-EL, GW6AX-EL].)
3	**VERIFY DTC TROUBLESHOOTING COMPLETED** • Clear the DTC using the M-MDS. (See 05-02B-6 ON-BOARD DIAGNOSTIC SYSTEM DTC INSPECTION [GW6A-EL, GW6AX-EL].) • Perform the following procedure to ensure that the DTC has been resolved: 1. Switch the ignition ON (engine off or on). • Perform the DTC inspection using the M-MDS. (See 05-02B-6 ON-BOARD DIAGNOSTIC SYSTEM DTC INSPECTION [GW6A-EL, GW6AX-EL].) • Are any DTCs present?	Yes	Go to the applicable DTC inspection. (See 05-02B-10 ON-BOARD DIAGNOSTIC SYSTEM DTC TABLE [GW6A-EL, GW6AX-EL].)
		No	DTC troubleshooting completed.

DTC P0751:00 [GW6A-EL, GW6AX-EL]

id050230818600

DTC P0751:00	**Shift solenoid No.1 stuck off**
DETECTION CONDITION	• Under the following conditions, shift solenoid No.1 stuck-off detected by combination of gear ratio malfunction and oil pressure switch pattern malfunction: — Engine is running. — Battery voltage is **8 V or more**. — ATF temperature is **20 °C {68 °F} or more**. **Diagnostic support note** • The check engine light illuminates if the TCM detects the above malfunction condition in two consecutive drive cycles or in one drive cycle while the DTC for the same malfunction has been stored in the TCM. • The automatic transaxle warning light illuminates if the TCM detects the above malfunction condition in two consecutive drive cycles or in one drive cycle while the DTC for the same malfunction has been stored in the TCM. • PENDING CODE is available. • FREEZE FRAME DATA is available. • The DTC is stored in the TCM memory.
FAIL-SAFE FUNCTION	• Inhibits malfunctioning gear. • Limits engine torque. • Inhibits learning control. • Inhibits manual mode. • Inhibits neutral idle control. • Inhibits i-stop control. • Inhibits AAS.
POSSIBLE CAUSE	• ATF is less than specified value • Shift solenoid No.1 malfunction • Control valve body malfunction
SYSTEM WIRING DIAGRAM	—

ON-BOARD DIAGNOSTIC [GW6A-EL, GW6AX-EL]

Diagnostic procedure

STEP	INSPECTION		ACTION
1	**VERIFY THE DTC OUTPUT STATUS** • Is the DTC P1738:00 also present?	Yes	Go to the applicable DTC inspection. (See 05-02B-79 DTC P1738:00 [GW6A-EL, GW6AX-EL].)
		No	Go to the next step.
2	**VERIFY FREEZE FRAME DATA/SNAPSHOT DATA HAS BEEN RECORDED** • Has the freeze frame data/snapshot data been recorded on the repair order?	Yes	Go to the next step.
		No	Record the freeze frame data/snapshot data on the repair order, then go to the next step.
3	**VERIFY RELATED SERVICE INFORMATION AVAILABILITY** • Verify related Service Information availability. • Is any related Service Information available?	Yes	Perform repair or diagnosis according to the available Service Information. • If the vehicle is not repaired, go to the next step.
		No	Go to the next step.
4	**INSPECT ATF LEVEL** • Inspect the ATF level. (See 05-17B-11 AUTOMATIC TRANSAXLE FLUID (ATF) INSPECTION [GW6A-EL, GW6AX-EL].) • Is there any malfunction?	Yes	Adjust the ATF level to the specification, then go to the next step. (See 05-17B-12 AUTOMATIC TRANSAXLE FLUID (ATF) REPLACEMENT [GW6A-EL, GW6AX-EL].)
		No	Replace the control valve body, then go to the next step. (See 05-17B-81 CONTROL VALVE BODY REMOVAL/INSTALLATION [GW6A-EL, GW6AX-EL].)
5	**PERFORM ON-BOARD DIAGNOSTIC TEST** • Perform the following procedure to ensure that the DTC has been resolved: 1. Start the engine. 2. Verify that the ATF temperature is **55 °C {131 °F} or more**. • Perform the on-board diagnostic test. (See 05-02B-8 ON-BOARD DIAGNOSTIC TEST MODE [GW6A-EL, GW6AX-EL].) • Are any the following DTCs displayed? — P0751:00, P0843:00	Yes	ATF amount in Step 4 is correct: • Replace the automatic transaxle, then drive the vehicle to check it, and if there is no problem then the DTC troubleshooting is complete. (See 05-17B-29 AUTOMATIC TRANSAXLE REMOVAL/INSTALLATION [GW6A-EL].) (See 05-17B-47 AUTOMATIC TRANSAXLE REMOVAL/INSTALLATION [GW6AX-EL].) ATF amount adjusted in Step 4: • Replace the control valve body, then go to the next step. (See 05-17B-81 CONTROL VALVE BODY REMOVAL/INSTALLATION [GW6A-EL, GW6AX-EL].)
		No	No DTCs are displayed: • Drive the vehicle to check it, and if there is no problem then the DTC troubleshooting is complete. If a DTC other than the one indicated on the left is displayed: • Go to the applicable DTC inspection. (See 05-02B-10 ON-BOARD DIAGNOSTIC SYSTEM DTC TABLE [GW6A-EL, GW6AX-EL])
6	**RE-PERFORM ON-BOARD DIAGNOSTIC TEST** • Perform the following procedure to ensure that the DTC has been resolved: 1. Start the engine. 2. Verify that the ATF temperature is **55 °C {131 °F} or more**. • Perform the on-board diagnostic test. (See 05-02B-8 ON-BOARD DIAGNOSTIC TEST MODE [GW6A-EL, GW6AX-EL].) • Are any DTCs present?	Yes	Go to the applicable DTC inspection. (See 05-02B-10 ON-BOARD DIAGNOSTIC SYSTEM DTC TABLE [GW6A-EL, GW6AX-EL].)
		No	DTC troubleshooting completed.

ON-BOARD DIAGNOSTIC [GW6A-EL, GW6AX-EL]

DTC P0752:00 [GW6A-EL, GW6AX-EL]

id050230818700

DTC P0752:00	**Shift solenoid No.1 stuck on**
DETECTION CONDITION	• Under the following conditions, shift solenoid No.1 stuck-on detected by combination of gear ratio malfunction and oil pressure switch pattern malfunction: — Engine is running. — Battery voltage is **8 V or more**. — ATF temperature is **20 °C {68 °F} or more**. **Diagnostic support note** • The check engine light illuminates if the TCM detects the above malfunction condition in two consecutive drive cycles or in one drive cycle while the DTC for the same malfunction has been stored in the TCM. • The automatic transaxle warning light illuminates if the TCM detects the above malfunction condition in two consecutive drive cycles or in one drive cycle while the DTC for the same malfunction has been stored in the TCM. • PENDING CODE is available. • FREEZE FRAME DATA is available. • The DTC is stored in the TCM memory.
FAIL-SAFE FUNCTION	• Inhibits malfunctioning gear. • Limits engine torque. • Inhibits learning control. • Inhibits manual mode. • Inhibits neutral idle control. • Inhibits i-stop control. • Inhibits AAS.
POSSIBLE CAUSE	• Shift solenoid No.1 malfunction
SYSTEM WIRING DIAGRAM	—

Diagnostic procedure

STEP	INSPECTION		ACTION
1	**VERIFY THE DTC OUTPUT STATUS** • Is the DTC P1738:00 also present?	Yes	Go to the applicable DTC inspection. (See 05-02B-79 DTC P1738:00 [GW6A-EL, GW6AX-EL].)
		No	Go to the next step.
2	**VERIFY FREEZE FRAME DATA/SNAPSHOT DATA HAS BEEN RECORDED** • Has the freeze frame data/snapshot data been recorded on the repair order?	Yes	Go to the next step.
		No	Record the freeze frame data/snapshot data on the repair order, then go to the next step.
3	**VERIFY RELATED SERVICE INFORMATION AVAILABILITY** • Verify related Service Information availability. • Is any related Service Information available?	Yes	Perform repair or diagnosis according to the available Service Information. • If the vehicle is not repaired, go to the next step.
		No	Go to the next step.
4	**PERFORM ON-BOARD DIAGNOSTIC TEST** • Perform the following procedure to ensure that the DTC has been resolved: 1. Start the engine. 2. Verify that the ATF temperature is **55 °C {131 °F} or more**. • Perform the on-board diagnostic test. (See 05-02B-8 ON-BOARD DIAGNOSTIC TEST MODE [GW6A-EL, GW6AX-EL].) • Are P0752:00 present?	Yes	Replace the control valve body, then go to the next step. (See 05-17B-81 CONTROL VALVE BODY REMOVAL/INSTALLATION [GW6A-EL, GW6AX-EL])
		No	No DTCs are displayed: • Drive the vehicle to check it, and if there is no problem then the DTC troubleshooting is complete. If a DTC other than the one indicated on the left is displayed: • Go to the applicable DTC inspection. (See 05-02B-10 ON-BOARD DIAGNOSTIC SYSTEM DTC TABLE [GW6A-EL, GW6AX-EL])
5	**RE-PERFORM ON-BOARD DIAGNOSTIC TEST** • Perform the following procedure to ensure that the DTC has been resolved: 1. Start the engine. 2. Verify that the ATF temperature is **55 °C {131 °F} or more**. • Perform the on-board diagnostic test. (See 05-02B-8 ON-BOARD DIAGNOSTIC TEST MODE [GW6A-EL, GW6AX-EL].) • Are any DTCs present?	Yes	Go to the applicable DTC inspection. (See 05-02B-10 ON-BOARD DIAGNOSTIC SYSTEM DTC TABLE [GW6A-EL, GW6AX-EL].)
		No	DTC troubleshooting completed.

ON-BOARD DIAGNOSTIC [GW6A-EL, GW6AX-EL]

DTC P0753:00 [GW6A-EL, GW6AX-EL]

id050230818800

DTC P0753:00	**Shift solenoid No.1 circuit malfunction**
DETECTION CONDITION	• Under the following condition, the TCM detects the shift solenoid No.1 circuit malfunction: — Battery voltage is **8 V or more**. **Diagnostic support note** • The check engine light illuminates if the TCM detects the above malfunction condition during the first drive cycle. • The automatic transaxle warning light illuminates if the TCM detects the above malfunction condition during the first drive cycle. • PENDING CODE is available. • FREEZE FRAME DATA is available. • The DTC is stored in the TCM memory.
FAIL-SAFE FUNCTION	• Set to emergency mode. • Inhibits learning control. • Inhibits manual mode. • Inhibits neutral idle control. • Inhibits i-stop control. • Inhibits AAS.
POSSIBLE CAUSE	• Short or open circuit in shift solenoid No.1 circuit • Shift solenoid No.1 malfunction
SYSTEM WIRING DIAGRAM	—

Diagnostic procedure

STEP	INSPECTION		ACTION
1	**VERIFY FREEZE FRAME DATA/SNAPSHOT DATA HAS BEEN RECORDED** • Has the freeze frame data/snapshot data been recorded on the repair order?	Yes	Go to the next step.
		No	Record the freeze frame data/snapshot data on the repair order, then go to the next step.
2	**VERIFY RELATED SERVICE INFORMATION AVAILABILITY** • Verify related Service Information availability. • Is any related Service Information available?	Yes	Perform repair or diagnosis according to the available Service Information. • If the vehicle is not repaired, replace the control valve body. (See 05-17B-81 CONTROL VALVE BODY REMOVAL/INSTALLATION [GW6A-EL, GW6AX-EL].) Go to the next step.
		No	Replace the control valve body, then go to the next step. (See 05-17B-81 CONTROL VALVE BODY REMOVAL/INSTALLATION [GW6A-EL, GW6AX-EL].)
3	**VERIFY DTC TROUBLESHOOTING COMPLETED** • Clear the DTC using the M-MDS. (See 05-02B-6 ON-BOARD DIAGNOSTIC SYSTEM DTC INSPECTION [GW6A-EL, GW6AX-EL].) • Perform the following procedure to ensure that the DTC has been resolved: 1. Switch the ignition ON (engine off or on). • Perform the DTC inspection using the M-MDS. (See 05-02B-6 ON-BOARD DIAGNOSTIC SYSTEM DTC INSPECTION [GW6A-EL, GW6AX-EL].) • Are any DTCs present?	Yes	Go to the applicable DTC inspection. (See 05-02B-10 ON-BOARD DIAGNOSTIC SYSTEM DTC TABLE [GW6A-EL, GW6AX-EL].)
		No	DTC troubleshooting completed.

ON-BOARD DIAGNOSTIC [GW6A-EL, GW6AX-EL]

DTC P0756:00 [GW6A-EL, GW6AX-EL]

id050230818900

DTC P0756:00	**Shift solenoid No.2 stuck off**
DETECTION CONDITION	• Under the following conditions, shift solenoid No.2 stuck-off detected by combination of gear ratio malfunction and oil pressure switch pattern malfunction: — Engine is running. — Battery voltage is **8 V or more**. — ATF temperature is **20 °C {68 °F} or more**. **Diagnostic support note** • The check engine light illuminates if the TCM detects the above malfunction condition in two consecutive drive cycles or in one drive cycle while the DTC for the same malfunction has been stored in the TCM. • The automatic transaxle warning light illuminates if the TCM detects the above malfunction condition in two consecutive drive cycles or in one drive cycle while the DTC for the same malfunction has been stored in the TCM. • PENDING CODE is available. • FREEZE FRAME DATA is available. • The DTC is stored in the TCM memory.
FAIL-SAFE FUNCTION	• Inhibits malfunctioning gear. • Limits engine torque. • Inhibits learning control. • Inhibits manual mode. • Inhibits neutral idle control. • Inhibits i-stop control. • Inhibits AAS.
POSSIBLE CAUSE	• ATF is less than specified value • Shift solenoid No.2 malfunction
SYSTEM WIRING DIAGRAM	—

Diagnostic procedure

STEP	INSPECTION		ACTION
1	**VERIFY THE DTC OUTPUT STATUS** • Is the DTC P1738:00 also present?	Yes	Go to the applicable DTC inspection. (See 05-02B-79 DTC P1738:00 [GW6A-EL, GW6AX-EL].)
		No	Go to the next step.
2	**VERIFY FREEZE FRAME DATA/SNAPSHOT DATA HAS BEEN RECORDED** • Has the freeze frame data/snapshot data been recorded on the repair order?	Yes	Go to the next step.
		No	Record the freeze frame data/snapshot data on the repair order, then go to the next step.
3	**VERIFY RELATED SERVICE INFORMATION AVAILABILITY** • Verify related Service Information availability. • Is any related Service Information available?	Yes	Perform repair or diagnosis according to the available Service Information. • If the vehicle is not repaired, go to the next step.
		No	Go to the next step.
4	**INSPECT ATF LEVEL** • Inspect the ATF level. (See 05-17B-11 AUTOMATIC TRANSAXLE FLUID (ATF) INSPECTION [GW6A-EL, GW6AX-EL].) • Is there any malfunction?	Yes	Adjust the ATF level to the specification, then go to the next step. (See 05-17B-12 AUTOMATIC TRANSAXLE FLUID (ATF) REPLACEMENT [GW6A-EL, GW6AX-EL].)
		No	Replace the control valve body, then go to the next step. (See 05-17B-81 CONTROL VALVE BODY REMOVAL/INSTALLATION [GW6A-EL, GW6AX-EL].)

ON-BOARD DIAGNOSTIC [GW6A-EL, GW6AX-EL]

STEP	INSPECTION		ACTION
5	**PERFORM ON-BOARD DIAGNOSTIC TEST** • Perform the following procedure to ensure that the DTC has been resolved: 1. Start the engine. 2. Verify that the ATF temperature is **55 °C {131 °F} or more**. • Perform the on-board diagnostic test. (See 05-02B-8 ON-BOARD DIAGNOSTIC TEST MODE [GW6A-EL, GW6AX-EL].) • Are any the following DTCs displayed? — P0756:00, P0848:00	Yes	ATF amount in Step 4 is correct: • Replace the automatic transaxle, then drive the vehicle to check it, and if there is no problem then the DTC troubleshooting is complete. (See 05-17B-29 AUTOMATIC TRANSAXLE REMOVAL/INSTALLATION [GW6A-EL].) (See 05-17B-47 AUTOMATIC TRANSAXLE REMOVAL/INSTALLATION [GW6AX-EL].) ATF amount adjusted in Step 4: • Replace the control valve body, then go to the next step. (See 05-17B-81 CONTROL VALVE BODY REMOVAL/INSTALLATION [GW6A-EL, GW6AX-EL].)
		No	No DTCs are displayed: • Drive the vehicle to check it, and if there is no problem then the DTC troubleshooting is complete. If a DTC other than the one indicated on the left is displayed: • Go to the applicable DTC inspection. (See 05-02B-10 ON-BOARD DIAGNOSTIC SYSTEM DTC TABLE [GW6A-EL, GW6AX-EL])
6	**RE-PERFORM ON-BOARD DIAGNOSTIC TEST** • Perform the following procedure to ensure that the DTC has been resolved: 1. Start the engine. 2. Verify that the ATF temperature is **55 °C {131 °F} or more**. • Perform the on-board diagnostic test. (See 05-02B-8 ON-BOARD DIAGNOSTIC TEST MODE [GW6A-EL, GW6AX-EL].) • Are any DTCs present?	Yes	Go to the applicable DTC inspection. (See 05-02B-10 ON-BOARD DIAGNOSTIC SYSTEM DTC TABLE [GW6A-EL, GW6AX-EL].)
		No	DTC troubleshooting completed.

05

DTC P0757:00 [GW6A-EL, GW6AX-EL]

id050230819000

DTC P0757:00	**Shift solenoid No.2 stuck on**
DETECTION CONDITION	• Under the following conditions, shift solenoid No.2 stuck-on detected by combination of gear ratio malfunction and oil pressure switch pattern malfunction: — Engine is running. — Battery voltage is **8 V or more**. — ATF temperature is **20 °C {68 °F} or more**. **Diagnostic support note** • The check engine light illuminates if the TCM detects the above malfunction condition in two consecutive drive cycles or in one drive cycle while the DTC for the same malfunction has been stored in the TCM. • The automatic transaxle warning light illuminates if the TCM detects the above malfunction condition in two consecutive drive cycles or in one drive cycle while the DTC for the same malfunction has been stored in the TCM. • PENDING CODE is available. • FREEZE FRAME DATA is available. • The DTC is stored in the TCM memory.
FAIL-SAFE FUNCTION	• Inhibits malfunctioning gear. • Limits engine torque. • Inhibits learning control. • Inhibits manual mode. • Inhibits neutral idle control. • Inhibits i-stop control. • Inhibits AAS.
POSSIBLE CAUSE	• Shift solenoid No.2 malfunction
SYSTEM WIRING DIAGRAM	—

ON-BOARD DIAGNOSTIC [GW6A-EL, GW6AX-EL]

Diagnostic procedure

STEP	INSPECTION		ACTION
1	**VERIFY THE DTC OUTPUT STATUS** • Is the DTC P1738:00 also present?	Yes	Go to the applicable DTC inspection. (See 05-02B-79 DTC P1738:00 [GW6A-EL, GW6AX-EL].)
		No	Go to the next step.
2	**VERIFY FREEZE FRAME DATA/SNAPSHOT DATA HAS BEEN RECORDED** • Has the freeze frame data/snapshot data been recorded on the repair order?	Yes	Go to the next step.
		No	Record the freeze frame data/snapshot data on the repair order, then go to the next step.
3	**VERIFY RELATED SERVICE INFORMATION AVAILABILITY** • Verify related Service Information availability. • Is any related Service Information available?	Yes	Perform repair or diagnosis according to the available Service Information. • If the vehicle is not repaired, go to the next step.
		No	Go to the next step.
4	**PERFORM ON-BOARD DIAGNOSTIC TEST** • Perform the following procedure to ensure that the DTC has been resolved: 1. Start the engine. 2. Verify that the ATF temperature is **55 °C {131 °F} or more**. • Perform the on-board diagnostic test. (See 05-02B-8 ON-BOARD DIAGNOSTIC TEST MODE [GW6A-EL, GW6AX-EL].) • Are P0757:00 present?	Yes	Replace the control valve body, then go to the next step. (See 05-17B-81 CONTROL VALVE BODY REMOVAL/ INSTALLATION [GW6A-EL, GW6AX-EL])
		No	No DTCs are displayed: • Drive the vehicle to check it, and if there is no problem then the DTC troubleshooting is complete. If a DTC other than the one indicated on the left is displayed: • Go to the applicable DTC inspection. (See 05-02B-10 ON-BOARD DIAGNOSTIC SYSTEM DTC TABLE [GW6A-EL, GW6AX-EL])
5	**RE-PERFORM ON-BOARD DIAGNOSTIC TEST** • Perform the following procedure to ensure that the DTC has been resolved: 1. Start the engine. 2. Verify that the ATF temperature is **55 °C {131 °F} or more**. • Perform the on-board diagnostic test. (See 05-02B-8 ON-BOARD DIAGNOSTIC TEST MODE [GW6A-EL, GW6AX-EL].) • Are any DTCs present?	Yes	Go to the applicable DTC inspection. (See 05-02B-10 ON-BOARD DIAGNOSTIC SYSTEM DTC TABLE [GW6A-EL, GW6AX-EL].)
		No	DTC troubleshooting completed.

DTC P0758:00 [GW6A-EL, GW6AX-EL]

id050230819100

DTC P0758:00	**Shift solenoid No.2 circuit malfunction**
DETECTION CONDITION	• Under the following condition, the TCM detects the shift solenoid No.2 circuit malfunction: — Battery voltage is **8 V or more**. **Diagnostic support note** • The check engine light illuminates if the TCM detects the above malfunction condition during the first drive cycle. • The automatic transaxle warning light illuminates if the TCM detects the above malfunction condition during the first drive cycle. • PENDING CODE is available. • FREEZE FRAME DATA is available. • The DTC is stored in the TCM memory.
FAIL-SAFE FUNCTION	• Set to emergency mode. • Inhibits learning control. • Inhibits manual mode. • Inhibits neutral idle control. • Inhibits i-stop control. • Inhibits AAS.
POSSIBLE CAUSE	• Short or open circuit in shift solenoid No.2 circuit • Shift solenoid No.2 malfunction
SYSTEM WIRING DIAGRAM	—

ON-BOARD DIAGNOSTIC [GW6A-EL, GW6AX-EL]

Diagnostic procedure

STEP	INSPECTION		ACTION
1	**VERIFY FREEZE FRAME DATA/SNAPSHOT DATA HAS BEEN RECORDED** • Has the freeze frame data/snapshot data been recorded on the repair order?	Yes	Go to the next step.
		No	Record the freeze frame data/snapshot data on the repair order, then go to the next step.
2	**VERIFY RELATED SERVICE INFORMATION AVAILABILITY** • Verify related Service Information availability. • Is any related Service Information available?	Yes	Perform repair or diagnosis according to the available Service Information. • If the vehicle is not repaired, replace the control valve body. (See 05-17B-81 CONTROL VALVE BODY REMOVAL/ INSTALLATION [GW6A-EL, GW6AX-EL].) Go to the next step.
		No	Replace the control valve body, then go to the next step. (See 05-17B-81 CONTROL VALVE BODY REMOVAL/ INSTALLATION [GW6A-EL, GW6AX-EL].)
3	**VERIFY DTC TROUBLESHOOTING COMPLETED** • Clear the DTC using the M-MDS. (See 05-02B-6 ON-BOARD DIAGNOSTIC SYSTEM DTC INSPECTION [GW6A-EL, GW6AX-EL].) • Perform the following procedure to ensure that the DTC has been resolved: 1. Switch the ignition ON (engine off or on). • Perform the DTC inspection using the M-MDS. (See 05-02B-6 ON-BOARD DIAGNOSTIC SYSTEM DTC INSPECTION [GW6A-EL, GW6AX-EL].) • Are any DTCs present?	Yes	Go to the applicable DTC inspection. (See 05-02B-10 ON-BOARD DIAGNOSTIC SYSTEM DTC TABLE [GW6A-EL, GW6AX-EL].)
		No	DTC troubleshooting completed.

DTC P0761:00 [GW6A-EL, GW6AX-EL]

id050230819200

DTC P0761:00	**Shift solenoid No.3 stuck off**
DETECTION CONDITION	• Under the following conditions, shift solenoid No.3 stuck-off detected by combination of gear ratio malfunction and oil pressure switch pattern malfunction: — Engine is running. — Battery voltage is **8 V or more**. — ATF temperature is **20 °C {68 °F} or more**. **Diagnostic support note** • The check engine light illuminates if the TCM detects the above malfunction condition in two consecutive drive cycles or in one drive cycle while the DTC for the same malfunction has been stored in the TCM. • The automatic transaxle warning light illuminates if the TCM detects the above malfunction condition in two consecutive drive cycles or in one drive cycle while the DTC for the same malfunction has been stored in the TCM. • PENDING CODE is available. • FREEZE FRAME DATA is available. • The DTC is stored in the TCM memory.
FAIL-SAFE FUNCTION	• Inhibits malfunctioning gear. • Limits engine torque. • Inhibits learning control. • Inhibits manual mode. • Inhibits neutral idle control. • Inhibits i-stop control. • Inhibits AAS.
POSSIBLE CAUSE	• Shift solenoid No.3 malfunction
SYSTEM WIRING DIAGRAM	—

ON-BOARD DIAGNOSTIC [GW6A-EL, GW6AX-EL]

Diagnostic procedure

STEP	INSPECTION		ACTION
1	**VERIFY THE DTC OUTPUT STATUS** • Is the DTC P1738:00 also present?	Yes	Go to the applicable DTC inspection. (See 05-02B-79 DTC P1738:00 [GW6A-EL, GW6AX-EL].)
		No	Go to the next step.
2	**VERIFY FREEZE FRAME DATA/SNAPSHOT DATA HAS BEEN RECORDED** • Has the freeze frame data/snapshot data been recorded on the repair order?	Yes	Go to the next step.
		No	Record the freeze frame data/snapshot data on the repair order, then go to the next step.
3	**VERIFY RELATED SERVICE INFORMATION AVAILABILITY** • Verify related Service Information availability. • Is any related Service Information available?	Yes	Perform repair or diagnosis according to the available Service Information. • If the vehicle is not repaired, go to the next step.
		No	Go to the next step.
4	**PERFORM ON-BOARD DIAGNOSTIC TEST** • Perform the following procedure to ensure that the DTC has been resolved: 1. Start the engine. 2. Verify that the ATF temperature is **55 °C {131 °F} or more**. • Perform the on-board diagnostic test. (See 05-02B-8 ON-BOARD DIAGNOSTIC TEST MODE [GW6A-EL, GW6AX-EL].) • Are P0761:00 present?	Yes	Replace the control valve body, then go to the next step. (See 05-17B-81 CONTROL VALVE BODY REMOVAL/ INSTALLATION [GW6A-EL, GW6AX-EL])
		No	No DTCs are displayed: • Drive the vehicle to check it, and if there is no problem then the DTC troubleshooting is complete. If a DTC other than the one indicated on the left is displayed: • Go to the applicable DTC inspection. (See 05-02B-10 ON-BOARD DIAGNOSTIC SYSTEM DTC TABLE [GW6A-EL, GW6AX-EL])
5	**RE-PERFORM ON-BOARD DIAGNOSTIC TEST** • Perform the following procedure to ensure that the DTC has been resolved: 1. Start the engine. 2. Verify that the ATF temperature is **55 °C {131 °F} or more**. • Perform the on-board diagnostic test. (See 05-02B-8 ON-BOARD DIAGNOSTIC TEST MODE [GW6A-EL, GW6AX-EL].) • Are any DTCs present?	Yes	Go to the applicable DTC inspection. (See 05-02B-10 ON-BOARD DIAGNOSTIC SYSTEM DTC TABLE [GW6A-EL, GW6AX-EL].)
		No	DTC troubleshooting completed.

DTC P0762:00 [GW6A-EL, GW6AX-EL]

id050230819300

DTC P0762:00	**Shift solenoid No.3 stuck on**
DETECTION CONDITION	• Under the following conditions, shift solenoid No.3 stuck-on detected by combination of gear ratio malfunction and oil pressure switch pattern malfunction: — Engine is running. — Battery voltage is **8 V or more**. — ATF temperature is **20 °C {68 °F} or more**. **Diagnostic support note** • The check engine light illuminates if the TCM detects the above malfunction condition in two consecutive drive cycles or in one drive cycle while the DTC for the same malfunction has been stored in the TCM. • The automatic transaxle warning light illuminates if the TCM detects the above malfunction condition in two consecutive drive cycles or in one drive cycle while the DTC for the same malfunction has been stored in the TCM. • PENDING CODE is available. • FREEZE FRAME DATA is available. • The DTC is stored in the TCM memory.
FAIL-SAFE FUNCTION	• Inhibits malfunctioning gear. • Limits engine torque. • Inhibits learning control. • Inhibits manual mode. • Inhibits neutral idle control. • Inhibits i-stop control. • Inhibits AAS.
POSSIBLE CAUSE	• ATF is less than specified value • Shift solenoid No.3 malfunction • Control valve body malfunction
SYSTEM WIRING DIAGRAM	—

ON-BOARD DIAGNOSTIC [GW6A-EL, GW6AX-EL]

Diagnostic procedure

STEP	INSPECTION		ACTION
1	**VERIFY THE DTC OUTPUT STATUS** • Is the DTC P1738:00 also present?	Yes	Go to the applicable DTC inspection. (See 05-02B-79 DTC P1738:00 [GW6A-EL, GW6AX-EL].)
		No	Go to the next step.
2	**VERIFY FREEZE FRAME DATA/SNAPSHOT DATA HAS BEEN RECORDED** • Has the freeze frame data/snapshot data been recorded on the repair order?	Yes	Go to the next step.
		No	Record the freeze frame data/snapshot data on the repair order, then go to the next step.
3	**VERIFY RELATED SERVICE INFORMATION AVAILABILITY** • Verify related Service Information availability. • Is any related Service Information available?	Yes	Perform repair or diagnosis according to the available Service Information. • If the vehicle is not repaired, go to the next step.
		No	Go to the next step.
4	**INSPECT ATF LEVEL** • Inspect the ATF level. (See 05-17B-11 AUTOMATIC TRANSAXLE FLUID (ATF) INSPECTION [GW6A-EL, GW6AX-EL].) • Is there any malfunction?	Yes	Adjust the ATF level to the specification, then go to the next step. (See 05-17B-12 AUTOMATIC TRANSAXLE FLUID (ATF) REPLACEMENT [GW6A-EL, GW6AX-EL].)
		No	Replace the control valve body, then go to the next step. (See 05-17B-81 CONTROL VALVE BODY REMOVAL/INSTALLATION [GW6A-EL, GW6AX-EL].)
5	**PERFORM ON-BOARD DIAGNOSTIC TEST** • Perform the following procedure to ensure that the DTC has been resolved: 1. Start the engine. 2. Verify that the ATF temperature is **55 °C {131 °F} or more**. • Perform the on-board diagnostic test. (See 05-02B-8 ON-BOARD DIAGNOSTIC TEST MODE [GW6A-EL, GW6AX-EL].) • Are any the following DTCs displayed? — P0762:00, P0873:00	Yes	ATF amount in Step 4 is correct: • Replace the automatic transaxle, then drive the vehicle to check it, and if there is no problem then the DTC troubleshooting is complete. (See 05-17B-29 AUTOMATIC TRANSAXLE REMOVAL/INSTALLATION [GW6A-EL].) (See 05-17B-47 AUTOMATIC TRANSAXLE REMOVAL/INSTALLATION [GW6AX-EL].) ATF amount adjusted in Step 4: • Replace the control valve body, then go to the next step. (See 05-17B-81 CONTROL VALVE BODY REMOVAL/INSTALLATION [GW6A-EL, GW6AX-EL].)
		No	No DTCs are displayed: • Drive the vehicle to check it, and if there is no problem then the DTC troubleshooting is complete. If a DTC other than the one indicated on the left is displayed: • Go to the applicable DTC inspection. (See 05-02B-10 ON-BOARD DIAGNOSTIC SYSTEM DTC TABLE [GW6A-EL, GW6AX-EL])
6	**RE-PERFORM ON-BOARD DIAGNOSTIC TEST** • Perform the following procedure to ensure that the DTC has been resolved: 1. Start the engine. 2. Verify that the ATF temperature is **55 °C {131 °F} or more**. • Perform the on-board diagnostic test. (See 05-02B-8 ON-BOARD DIAGNOSTIC TEST MODE [GW6A-EL, GW6AX-EL].) • Are any DTCs present?	Yes	Go to the applicable DTC inspection. (See 05-02B-10 ON-BOARD DIAGNOSTIC SYSTEM DTC TABLE [GW6A-EL, GW6AX-EL].)
		No	DTC troubleshooting completed.

ON-BOARD DIAGNOSTIC [GW6A-EL, GW6AX-EL]

DTC P0763:00 [GW6A-EL, GW6AX-EL]

id050230819400

DTC P0763:00	**Shift solenoid No.3 circuit malfunction**
DETECTION CONDITION	• Under the following condition, the TCM detects the shift solenoid No.3 circuit malfunction: — Battery voltage is **8 V or more**. **Diagnostic support note** • The check engine light illuminates if the TCM detects the above malfunction condition during the first drive cycle. • The automatic transaxle warning light illuminates if the TCM detects the above malfunction condition during the first drive cycle. • PENDING CODE is available. • FREEZE FRAME DATA is available. • The DTC is stored in the TCM memory.
FAIL-SAFE FUNCTION	• Set to emergency mode. • Inhibits learning control. • Inhibits manual mode. • Inhibits neutral idle control. • Inhibits i-stop control. • Inhibits AAS.
POSSIBLE CAUSE	• Short or open circuit in shift solenoid No.3 circuit • Shift solenoid No.3 malfunction
SYSTEM WIRING DIAGRAM	—

Diagnostic procedure

STEP	INSPECTION		ACTION
1	**VERIFY FREEZE FRAME DATA/SNAPSHOT DATA HAS BEEN RECORDED** • Has the freeze frame data/snapshot data been recorded on the repair order?	Yes	Go to the next step.
		No	Record the freeze frame data/snapshot data on the repair order, then go to the next step.
2	**VERIFY RELATED SERVICE INFORMATION AVAILABILITY** • Verify related Service Information availability. • Is any related Service Information available?	Yes	Perform repair or diagnosis according to the available Service Information. • If the vehicle is not repaired, replace the control valve body. (See 05-17B-81 CONTROL VALVE BODY REMOVAL/ INSTALLATION [GW6A-EL, GW6AX-EL].) Go to the next step.
		No	Replace the control valve body, then go to the next step. (See 05-17B-81 CONTROL VALVE BODY REMOVAL/ INSTALLATION [GW6A-EL, GW6AX-EL].)
3	**VERIFY DTC TROUBLESHOOTING COMPLETED** • Clear the DTC using the M-MDS. (See 05-02B-6 ON-BOARD DIAGNOSTIC SYSTEM DTC INSPECTION [GW6A-EL, GW6AX-EL].) • Perform the following procedure to ensure that the DTC has been resolved: 1. Switch the ignition ON (engine off or on). • Perform the DTC inspection using the M-MDS. (See 05-02B-6 ON-BOARD DIAGNOSTIC SYSTEM DTC INSPECTION [GW6A-EL, GW6AX-EL].) • Are any DTCs present?	Yes	Go to the applicable DTC inspection. (See 05-02B-10 ON-BOARD DIAGNOSTIC SYSTEM DTC TABLE [GW6A-EL, GW6AX-EL].)
		No	DTC troubleshooting completed.

ON-BOARD DIAGNOSTIC [GW6A-EL, GW6AX-EL]

DTC P0766:00 [GW6A-EL, GW6AX-EL]

id050230819500

DTC P0766:00	**Shift solenoid No.4 stuck off**
DETECTION CONDITION	• Under the following conditions, shift solenoid No.4 stuck-off detected by combination of gear ratio malfunction and oil pressure switch pattern malfunction: — Engine is running. — Battery voltage is **8 V or more**. — ATF temperature is **20 °C {68 °F} or more**. **Diagnostic support note** • The check engine light illuminates if the TCM detects the above malfunction condition in two consecutive drive cycles or in one drive cycle while the DTC for the same malfunction has been stored in the TCM. • The automatic transaxle warning light illuminates if the TCM detects the above malfunction condition in two consecutive drive cycles or in one drive cycle while the DTC for the same malfunction has been stored in the TCM. • PENDING CODE is available. • FREEZE FRAME DATA is available. • The DTC is stored in the TCM memory.
FAIL-SAFE FUNCTION	• Inhibits malfunctioning gear. • Limits engine torque. • Inhibits learning control. • Inhibits manual mode. • Inhibits neutral idle control. • Inhibits i-stop control. • Inhibits AAS.
POSSIBLE CAUSE	• Shift solenoid No.4 malfunction
SYSTEM WIRING DIAGRAM	—

Diagnostic procedure

STEP	INSPECTION		ACTION
1	**VERIFY THE DTC OUTPUT STATUS** • Is the DTC P1738:00 also present?	Yes	Go to the applicable DTC inspection. (See 05-02B-79 DTC P1738:00 [GW6A-EL, GW6AX-EL].)
		No	Go to the next step.
2	**VERIFY FREEZE FRAME DATA/SNAPSHOT DATA HAS BEEN RECORDED** • Has the freeze frame data/snapshot data been recorded on the repair order?	Yes	Go to the next step.
		No	Record the freeze frame data/snapshot data on the repair order, then go to the next step.
3	**VERIFY RELATED SERVICE INFORMATION AVAILABILITY** • Verify related Service Information availability. • Is any related Service Information available?	Yes	Perform repair or diagnosis according to the available Service Information. • If the vehicle is not repaired, go to the next step.
		No	Go to the next step.
4	**PERFORM ON-BOARD DIAGNOSTIC TEST** • Perform the following procedure to ensure that the DTC has been resolved: 1. Start the engine. 2. Verify that the ATF temperature is **55 °C {131 °F} or more**. • Perform the on-board diagnostic test. (See 05-02B-8 ON-BOARD DIAGNOSTIC TEST MODE [GW6A-EL, GW6AX-EL].) • Are P0766:00 present?	Yes	Replace the control valve body, then go to the next step. (See 05-17B-81 CONTROL VALVE BODY REMOVAL/INSTALLATION [GW6A-EL, GW6AX-EL])
		No	No DTCs are displayed: • Drive the vehicle to check it, and if there is no problem then the DTC troubleshooting is complete. If a DTC other than the one indicated on the left is displayed: • Go to the applicable DTC inspection. (See 05-02B-10 ON-BOARD DIAGNOSTIC SYSTEM DTC TABLE [GW6A-EL, GW6AX-EL])
5	**RE-PERFORM ON-BOARD DIAGNOSTIC TEST** • Perform the following procedure to ensure that the DTC has been resolved: 1. Start the engine. 2. Verify that the ATF temperature is **55 °C {131 °F} or more**. • Perform the on-board diagnostic test. (See 05-02B-8 ON-BOARD DIAGNOSTIC TEST MODE [GW6A-EL, GW6AX-EL].) • Are any DTCs present?	Yes	Go to the applicable DTC inspection. (See 05-02B-10 ON-BOARD DIAGNOSTIC SYSTEM DTC TABLE [GW6A-EL, GW6AX-EL].)
		No	DTC troubleshooting completed.

ON-BOARD DIAGNOSTIC [GW6A-EL, GW6AX-EL]

DTC P0767:00 [GW6A-EL, GW6AX-EL]

id050230819600

DTC P0767:00	**Shift solenoid No.4 stuck on**
DETECTION CONDITION	• Under the following conditions, shift solenoid No.4 stuck-on detected by combination of gear ratio malfunction and oil pressure switch pattern malfunction: — Engine is running. — Battery voltage is **8 V or more**. — ATF temperature is **20 °C {68 °F} or more**. **Diagnostic support note** • The check engine light illuminates if the TCM detects the above malfunction condition in two consecutive drive cycles or in one drive cycle while the DTC for the same malfunction has been stored in the TCM. • The automatic transaxle warning light illuminates if the TCM detects the above malfunction condition in two consecutive drive cycles or in one drive cycle while the DTC for the same malfunction has been stored in the TCM. • PENDING CODE is available. • FREEZE FRAME DATA is available. • The DTC is stored in the TCM memory.
FAIL-SAFE FUNCTION	• Inhibits malfunctioning gear. • Limits engine torque. • Inhibits learning control. • Inhibits manual mode. • Inhibits neutral idle control. • Inhibits i-stop control. • Inhibits AAS.
POSSIBLE CAUSE	• ATF is less than specified value • Shift solenoid No.4 malfunction
SYSTEM WIRING DIAGRAM	—

Diagnostic procedure

STEP	INSPECTION		ACTION
1	**VERIFY THE DTC OUTPUT STATUS** • Is the DTC P1738:00 also present?	Yes	Go to the applicable DTC inspection. (See 05-02B-79 DTC P1738:00 [GW6A-EL, GW6AX-EL].)
		No	Go to the next step.
2	**VERIFY FREEZE FRAME DATA/SNAPSHOT DATA HAS BEEN RECORDED** • Has the freeze frame data/snapshot data been recorded on the repair order?	Yes	Go to the next step.
		No	Record the freeze frame data/snapshot data on the repair order, then go to the next step.
3	**VERIFY RELATED SERVICE INFORMATION AVAILABILITY** • Verify related Service Information availability. • Is any related Service Information available?	Yes	Perform repair or diagnosis according to the available Service Information. • If the vehicle is not repaired, go to the next step.
		No	Go to the next step.
4	**INSPECT ATF LEVEL** • Inspect the ATF level. (See 05-17B-11 AUTOMATIC TRANSAXLE FLUID (ATF) INSPECTION [GW6A-EL, GW6AX-EL].) • Is there any malfunction?	Yes	Adjust the ATF level to the specification, then go to the next step. (See 05-17B-12 AUTOMATIC TRANSAXLE FLUID (ATF) REPLACEMENT [GW6A-EL, GW6AX-EL].)
		No	Replace the control valve body, then go to the next step. (See 05-17B-81 CONTROL VALVE BODY REMOVAL/INSTALLATION [GW6A-EL, GW6AX-EL].)

ON-BOARD DIAGNOSTIC [GW6A-EL, GW6AX-EL]

STEP	INSPECTION		ACTION
5	**PERFORM ON-BOARD DIAGNOSTIC TEST** • Perform the following procedure to ensure that the DTC has been resolved: 1. Start the engine. 2. Verify that the ATF temperature is **55 °C {131 °F} or more**. • Perform the on-board diagnostic test. (See 05-02B-8 ON-BOARD DIAGNOSTIC TEST MODE [GW6A-EL, GW6AX-EL].) • Are any the following DTCs displayed? — P0767:00, P0878:00	Yes	ATF amount in Step 4 is correct: • Replace the automatic transaxle, then drive the vehicle to check it, and if there is no problem then the DTC troubleshooting is complete. (See 05-17B-29 AUTOMATIC TRANSAXLE REMOVAL/INSTALLATION [GW6A-EL].) (See 05-17B-47 AUTOMATIC TRANSAXLE REMOVAL/INSTALLATION [GW6AX-EL].) ATF amount adjusted in Step 4: • Replace the control valve body, then go to the next step. (See 05-17B-81 CONTROL VALVE BODY REMOVAL/INSTALLATION [GW6A-EL, GW6AX-EL].)
		No	No DTCs are displayed: • Drive the vehicle to check it, and if there is no problem then the DTC troubleshooting is complete. If a DTC other than the one indicated on the left is displayed: • Go to the applicable DTC inspection. (See 05-02B-10 ON-BOARD DIAGNOSTIC SYSTEM DTC TABLE [GW6A-EL, GW6AX-EL])
6	**RE-PERFORM ON-BOARD DIAGNOSTIC TEST** • Perform the following procedure to ensure that the DTC has been resolved: 1. Start the engine. 2. Verify that the ATF temperature is **55 °C {131 °F} or more**. • Perform the on-board diagnostic test. (See 05-02B-8 ON-BOARD DIAGNOSTIC TEST MODE [GW6A-EL, GW6AX-EL].) • Are any DTCs present?	Yes	Go to the applicable DTC inspection. (See 05-02B-10 ON-BOARD DIAGNOSTIC SYSTEM DTC TABLE [GW6A-EL, GW6AX-EL].)
		No	DTC troubleshooting completed.

05

DTC P0768:00 [GW6A-EL, GW6AX-EL]

id050230819700

DTC P0768:00	**Shift solenoid No.4 circuit malfunction**
DETECTION CONDITION	• Under the following condition, the TCM detects the shift solenoid No.4 circuit malfunction: — Battery voltage is **8 V or more**. **Diagnostic support note** • The check engine light illuminates if the TCM detects the above malfunction condition during the first drive cycle. • The automatic transaxle warning light illuminates if the TCM detects the above malfunction condition during the first drive cycle. • PENDING CODE is available. • FREEZE FRAME DATA is available. • The DTC is stored in the TCM memory.
FAIL-SAFE FUNCTION	• Set to emergency mode. • Inhibits learning control. • Inhibits manual mode. • Inhibits neutral idle control. • Inhibits i-stop control. • Inhibits AAS.
POSSIBLE CAUSE	• Short or open circuit in shift solenoid No.4 circuit • Shift solenoid No.4 malfunction
SYSTEM WIRING DIAGRAM	—

ON-BOARD DIAGNOSTIC [GW6A-EL, GW6AX-EL]

Diagnostic procedure

STEP	INSPECTION		ACTION
1	**VERIFY FREEZE FRAME DATA/SNAPSHOT DATA HAS BEEN RECORDED** • Has the freeze frame data/snapshot data been recorded on the repair order?	Yes	Go to the next step.
		No	Record the freeze frame data/snapshot data on the repair order, then go to the next step.
2	**VERIFY RELATED SERVICE INFORMATION AVAILABILITY** • Verify related Service Information availability. • Is any related Service Information available?	Yes	Perform repair or diagnosis according to the available Service Information. • If the vehicle is not repaired, replace the control valve body. (See 05-17B-81 CONTROL VALVE BODY REMOVAL/ INSTALLATION [GW6A-EL, GW6AX-EL].) Go to the next step.
		No	Replace the control valve body, then go to the next step. (See 05-17B-81 CONTROL VALVE BODY REMOVAL/ INSTALLATION [GW6A-EL, GW6AX-EL].)
3	**VERIFY DTC TROUBLESHOOTING COMPLETED** • Clear the DTC using the M-MDS. (See 05-02B-6 ON-BOARD DIAGNOSTIC SYSTEM DTC INSPECTION [GW6A-EL, GW6AX-EL].) • Perform the following procedure to ensure that the DTC has been resolved: 1. Switch the ignition ON (engine off or on). • Perform the DTC inspection using the M-MDS. (See 05-02B-6 ON-BOARD DIAGNOSTIC SYSTEM DTC INSPECTION [GW6A-EL, GW6AX-EL].) • Are any DTCs present?	Yes	Go to the applicable DTC inspection. (See 05-02B-10 ON-BOARD DIAGNOSTIC SYSTEM DTC TABLE [GW6A-EL, GW6AX-EL].)
		No	DTC troubleshooting completed.

DTC P0771:00 [GW6A-EL, GW6AX-EL]

id050230819800

DTC P0771:00	**On/off solenoid stuck off**
DETECTION CONDITION	• Under the following conditions, on/off solenoid stuck-off detected by combination of gear ratio malfunction and oil pressure switch pattern malfunction: — Engine is running. — Battery voltage is **8 V or more**. — ATF temperature is **20 °C {68 °F} or more**. **Diagnostic support note** • The check engine light illuminates if the TCM detects the above malfunction condition in two consecutive drive cycles or in one drive cycle while the DTC for the same malfunction has been stored in the TCM. • The automatic transaxle warning light illuminates if the TCM detects the above malfunction condition in two consecutive drive cycles or in one drive cycle while the DTC for the same malfunction has been stored in the TCM. • PENDING CODE is available. • FREEZE FRAME DATA is available. • The DTC is stored in the TCM memory.
FAIL-SAFE FUNCTION	• Inhibits malfunctioning gear. • Limits engine torque. • Inhibits learning control. • Inhibits manual mode. • Inhibits neutral idle control. • Inhibits i-stop control. • Inhibits AAS.
POSSIBLE CAUSE	• On/off solenoid malfunction
SYSTEM WIRING DIAGRAM	—

ON-BOARD DIAGNOSTIC [GW6A-EL, GW6AX-EL]

Diagnostic procedure

STEP	INSPECTION		ACTION
1	**VERIFY THE DTC OUTPUT STATUS** • Is the DTC P1738:00 also present?	Yes	Go to the applicable DTC inspection. (See 05-02B-79 DTC P1738:00 [GW6A-EL, GW6AX-EL].)
		No	Go to the next step.
2	**VERIFY FREEZE FRAME DATA/SNAPSHOT DATA HAS BEEN RECORDED** • Has the freeze frame data/snapshot data been recorded on the repair order?	Yes	Go to the next step.
		No	Record the freeze frame data/snapshot data on the repair order, then go to the next step.
3	**VERIFY RELATED SERVICE INFORMATION AVAILABILITY** • Verify related Service Information availability. • Is any related Service Information available?	Yes	Perform repair or diagnosis according to the available Service Information. • If the vehicle is not repaired, go to the next step.
		No	Go to the next step.
4	**PERFORM ON-BOARD DIAGNOSTIC TEST** • Perform the following procedure to ensure that the DTC has been resolved: 1. Start the engine. 2. Verify that the ATF temperature is **55 °C {131 °F} or more**. • Perform the on-board diagnostic test. (See 05-02B-8 ON-BOARD DIAGNOSTIC TEST MODE [GW6A-EL, GW6AX-EL].) • Are P0771:00 present?	Yes	Replace the control valve body, then go to the next step. (See 05-17B-81 CONTROL VALVE BODY REMOVAL/ INSTALLATION [GW6A-EL, GW6AX-EL].)
		No	No DTCs are displayed: • Drive the vehicle to check it, and if there is no problem then the DTC troubleshooting is complete. If a DTC other than the one indicated on the left is displayed: • Go to the applicable DTC inspection. (See 05-02B-10 ON-BOARD DIAGNOSTIC SYSTEM DTC TABLE [GW6A-EL, GW6AX-EL].)
5	**RE-PERFORM ON-BOARD DIAGNOSTIC TEST** • Perform the following procedure to ensure that the DTC has been resolved: 1. Start the engine. 2. Verify that the ATF temperature is **55 °C {131 °F} or more**. • Perform the on-board diagnostic test. (See 05-02B-8 ON-BOARD DIAGNOSTIC TEST MODE [GW6A-EL, GW6AX-EL].) • Are any DTCs present?	Yes	Go to the applicable DTC inspection. (See 05-02B-10 ON-BOARD DIAGNOSTIC SYSTEM DTC TABLE [GW6A-EL, GW6AX-EL].)
		No	DTC troubleshooting completed.

DTC P0772:00 [GW6A-EL, GW6AX-EL]

id050230819900

DTC P0772:00	On/off solenoid stuck on
DETECTION CONDITION	• Under the following conditions, on/off solenoid stuck-on detected by combination of gear ratio malfunction and oil pressure switch pattern malfunction: — Engine is running. — Battery voltage is **8 V or more**. — ATF temperature is **20 °C {68 °F} or more**. **Diagnostic support note** • The check engine light illuminates if the TCM detects the above malfunction condition in two consecutive drive cycles or in one drive cycle while the DTC for the same malfunction has been stored in the TCM. • The automatic transaxle warning light illuminates if the TCM detects the above malfunction condition in two consecutive drive cycles or in one drive cycle while the DTC for the same malfunction has been stored in the TCM. • PENDING CODE is available. • FREEZE FRAME DATA is available. • The DTC is stored in the TCM memory.
FAIL-SAFE FUNCTION	• Inhibits malfunctioning gear. • Limits engine torque. • Inhibits learning control. • Inhibits manual mode. • Inhibits neutral idle control. • Inhibits i-stop control. • Inhibits AAS.
POSSIBLE CAUSE	• ATF is less than specified value • On/off solenoid malfunction • Control valve body malfunction
SYSTEM WIRING DIAGRAM	—

ON-BOARD DIAGNOSTIC [GW6A-EL, GW6AX-EL]

Diagnostic procedure

STEP	INSPECTION		ACTION
1	**VERIFY THE DTC OUTPUT STATUS** • Is the DTC P1738:00 also present?	Yes	Go to the applicable DTC inspection. (See 05-02B-79 DTC P1738:00 [GW6A-EL, GW6AX-EL].)
		No	Go to the next step.
2	**VERIFY FREEZE FRAME DATA/SNAPSHOT DATA HAS BEEN RECORDED** • Has the freeze frame data/snapshot data been recorded on the repair order?	Yes	Go to the next step.
		No	Record the freeze frame data/snapshot data on the repair order, then go to the next step.
3	**VERIFY RELATED SERVICE INFORMATION AVAILABILITY** • Verify related Service Information availability. • Is any related Service Information available?	Yes	Perform repair or diagnosis according to the available Service Information. • If the vehicle is not repaired, go to the next step.
		No	Go to the next step.
4	**INSPECT ATF LEVEL** • Inspect the ATF level. (See 05-17B-11 AUTOMATIC TRANSAXLE FLUID (ATF) INSPECTION [GW6A-EL, GW6AX-EL].) • Is there any malfunction?	Yes	Adjust the ATF level to the specification, then go to the next step. (See 05-17B-12 AUTOMATIC TRANSAXLE FLUID (ATF) REPLACEMENT [GW6A-EL, GW6AX-EL].)
		No	Replace the on/off solenoid, then go to the next step. (See 05-17B-25 ON/OFF SOLENOID REMOVAL/INSTALLATION [GW6A-EL, GW6AX-EL].)
5	**PERFORM ON-BOARD DIAGNOSTIC TEST** • Perform the following procedure to ensure that the DTC has been resolved: 1. Start the engine. 2. Verify that the ATF temperature is **55 °C {131 °F} or more**. • Perform the on-board diagnostic test. (See 05-02B-8 ON-BOARD DIAGNOSTIC TEST MODE [GW6A-EL, GW6AX-EL].) • Are any DTCs present?	Yes	ATF amount in Step 4 is correct • Replace the automatic transaxle, then drive the vehicle to check it, and if there is no problem then the DTC troubleshooting is complete. (See 05-17B-29 AUTOMATIC TRANSAXLE REMOVAL/INSTALLATION [GW6A-EL].) (See 05-17B-47 AUTOMATIC TRANSAXLE REMOVAL/INSTALLATION [GW6AX-EL].) ATF amount adjusted in Step 4: • Replace the control valve body, then go to the next step. (See 05-17B-81 CONTROL VALVE BODY REMOVAL/INSTALLATION [GW6A-EL, GW6AX-EL].)
		No	Drive the vehicle to check it, and if there is no problem then the DTC troubleshooting is complete.
6	**RE-PERFORM ON-BOARD DIAGNOSTIC TEST** • Perform the following procedure to ensure that the DTC has been resolved: 1. Start the engine. 2. Verify that the ATF temperature is **55 °C {131 °F} or more**. • Perform the on-board diagnostic test. (See 05-02B-8 ON-BOARD DIAGNOSTIC TEST MODE [GW6A-EL, GW6AX-EL].) • Are any DTCs present?	Yes	Go to the applicable DTC inspection. (See 05-02B-10 ON-BOARD DIAGNOSTIC SYSTEM DTC TABLE [GW6A-EL, GW6AX-EL].)
		No	DTC troubleshooting completed.

ON-BOARD DIAGNOSTIC [GW6A-EL, GW6AX-EL]

DTC P0773:00 [GW6A-EL, GW6AX-EL]

id050230820000

DTC P0773:00	**On/off solenoid circuit malfunction**
DETECTION CONDITION	• Under the following condition, the TCM detects the on/off solenoid circuit malfunction: — Battery voltage is **8 V or more**. **Diagnostic support note** • The check engine light illuminates if the TCM detects the above malfunction condition during the first drive cycle. • The automatic transaxle warning light illuminates if the TCM detects the above malfunction condition during the first drive cycle. • PENDING CODE is available. • FREEZE FRAME DATA is available. • The DTC is stored in the TCM memory.
FAIL-SAFE FUNCTION	• Set to emergency mode. • Inhibits learning control. • Inhibits manual mode. • Inhibits neutral idle control. • Inhibits i-stop control. • Inhibits AAS.
POSSIBLE CAUSE	• Short or open circuit in on/off solenoid circuit • On/off solenoid malfunction
SYSTEM WIRING DIAGRAM	—

Diagnostic procedure

STEP	INSPECTION		ACTION
1	**VERIFY FREEZE FRAME DATA/SNAPSHOT DATA HAS BEEN RECORDED** • Has the freeze frame data/snapshot data been recorded on the repair order?	Yes	Go to the next step.
		No	Record the freeze frame data/snapshot data on the repair order, then go to the next step.
2	**VERIFY RELATED SERVICE INFORMATION AVAILABILITY** • Verify related Service Information availability. • Is any related Service Information available?	Yes	Perform repair or diagnosis according to the available Service Information. • If the vehicle is not repaired, replace the on/off solenoid. (See 05-17B-25 ON/OFF SOLENOID REMOVAL/INSTALLATION [GW6A-EL, GW6AX-EL].) Go to the next step.
		No	Replace the on/off solenoid, then go to the next step. (See 05-17B-25 ON/OFF SOLENOID REMOVAL/INSTALLATION [GW6A-EL, GW6AX-EL].)
3	**VERIFY DTC TROUBLESHOOTING COMPLETED** • Clear the DTC using the M-MDS. (See 05-02B-6 ON-BOARD DIAGNOSTIC SYSTEM DTC INSPECTION [GW6A-EL, GW6AX-EL].) • Perform the following procedure to ensure that the DTC has been resolved: 1. Switch the ignition ON (engine off or on). • Perform the DTC inspection using the M-MDS. (See 05-02B-6 ON-BOARD DIAGNOSTIC SYSTEM DTC INSPECTION [GW6A-EL, GW6AX-EL].) • Are any DTCs present?	Yes	Go to the applicable DTC inspection. (See 05-02B-10 ON-BOARD DIAGNOSTIC SYSTEM DTC TABLE [GW6A-EL, GW6AX-EL].)
		No	DTC troubleshooting completed.

ON-BOARD DIAGNOSTIC [GW6A-EL, GW6AX-EL]

DTC P0780:00 [GW6A-EL, GW6AX-EL]

id050230824500

DTC P0780:00	Gear shifting malfunction
DETECTION CONDITION	• Under the following conditions, the gear shifting inhibited: — Engine is running. — Battery voltage is **8 V or more**. **Diagnostic support note** • The check engine light illuminates if the TCM detects the above malfunction condition in two consecutive drive cycles or in one drive cycle while the DTC for the same malfunction has been stored in the TCM. • The automatic transaxle warning light illuminates if the TCM detects the above malfunction condition in two consecutive drive cycles or in one drive cycle while the DTC for the same malfunction has been stored in the TCM. • PENDING CODE is available. • FREEZE FRAME DATA is available. • The DTC is stored in the TCM memory.
FAIL-SAFE FUNCTION	• Inhibits learning control. • Inhibits manual mode. • Inhibits neutral idle control. • Inhibits i-stop control. • Inhibits AAS.
POSSIBLE CAUSE	• ATF is less than specified value • On/off solenoid malfunction • Pressure control solenoid malfunction • Shift solenoid malfunction • Oil pressure switch circuit malfunction • Oil pressure switch malfunction • Clutch slippage • ATF leakage from clutch circuit • Control valve body malfunction
SYSTEM WIRING DIAGRAM	—

Diagnostic procedure

STEP	INSPECTION		ACTION
1	**VERIFY THE DTC OUTPUT STATUS** • Are any the following DTCs displayed? — P0738:00, P0746:00, P0751:00, P0752:00, P0756:00, P0757:00, P0761:00, P0762:00, P0766:00, P0767:00, P0771:00, P0772:00, P079A:00, P0842:00, P0843:00, P0847:00, P0848:00, P0872:00, P0873:00, P0877:00, P0878:00, P1784:00	Yes	Go to the applicable DTC inspection. (See 05-02B-10 ON-BOARD DIAGNOSTIC SYSTEM DTC TABLE [GW6A-EL, GW6AX-EL].)
		No	Go to the next step.
2	**INSPECT ATF LEVEL** • Inspect the ATF level. (See 05-17B-11 AUTOMATIC TRANSAXLE FLUID (ATF) INSPECTION [GW6A-EL, GW6AX-EL].) • Is there any malfunction?	Yes	Adjust the ATF level to the specification, then go to the next step. (See 05-17B-12 AUTOMATIC TRANSAXLE FLUID (ATF) REPLACEMENT [GW6A-EL, GW6AX-EL].)
		No	Go to the next step.
3	**PERFORM ON-BOARD DIAGNOSTIC TEST TO SPECIFY MALFUNCTIONING PART** **Note** • If only DTCs in which the malfunctioning part is not confirmed are displayed as in the following DTCs, all of the diagnosis may not have been completed. In such cases, the malfunction cause can be determined by performing the on-board diagnostic test. • Perform the on-board diagnostic test. (See 05-02B-8 ON-BOARD DIAGNOSTIC TEST MODE [GW6A-EL, GW6AX-EL].) • Are any DTCs present?	Yes	Go to the applicable DTC inspection. (See 05-02B-10 ON-BOARD DIAGNOSTIC SYSTEM DTC TABLE [GW6A-EL, GW6AX-EL].)
		No	ATF amount in Step 2 is correct: • Replace the automatic transaxle. (See 05-17B-29 AUTOMATIC TRANSAXLE REMOVAL/INSTALLATION [GW6A-EL].) (See 05-17B-47 AUTOMATIC TRANSAXLE REMOVAL/INSTALLATION [GW6AX-EL].) ATF amount adjusted in Step 2: • Drive the vehicle to check it, and if there is no problem then the DTC troubleshooting is complete.

ON-BOARD DIAGNOSTIC [GW6A-EL, GW6AX-EL]

DTC P079A:00 [GW6A-EL, GW6AX-EL]

id050230904400

DTC P079A:00	Shift solenoid No.3 stuck off/On/off solenoid stuck on
DETECTION CONDITION	• Under the following conditions, shift solenoid No.3 stuck-off or on/off solenoid stuck-on detected by combination of gear ratio malfunction and oil pressure switch pattern malfunction: — Engine is running. — Battery voltage is **8 V or more**. — ATF temperature is **20 °C {68 °F} or more**. **Diagnostic support note** • The check engine light illuminates if the TCM detects the above malfunction condition in two consecutive drive cycles or in one drive cycle while the DTC for the same malfunction has been stored in the TCM. • The automatic transaxle warning light illuminates if the TCM detects the above malfunction condition in two consecutive drive cycles or in one drive cycle while the DTC for the same malfunction has been stored in the TCM. • PENDING CODE is available. • FREEZE FRAME DATA is available. • The DTC is stored in the TCM memory.
FAIL-SAFE FUNCTION	• Inhibits malfunctioning gear. • Limits engine torque. • Inhibits learning control. • Inhibits manual mode. • Inhibits neutral idle control. • Inhibits i-stop control. • Inhibits AAS.
POSSIBLE CAUSE	• ATF is less than specified value • Shift solenoid No.3 malfunction • On/off solenoid malfunction • Control valve body malfunction
SYSTEM WIRING DIAGRAM	—

Diagnostic procedure

STEP	INSPECTION		ACTION
1	**VERIFY THE DTC OUTPUT STATUS** • Are any the following DTCs displayed? — P0762:00, P0772:00, P1738:00	Yes	Go to the applicable DTC inspection. (See 05-02B-48 DTC P0762:00 [GW6A-EL, GW6AX-EL].) (See 05-02B-55 DTC P0772:00 [GW6A-EL, GW6AX-EL].) (See 05-02B-79 DTC P1738:00 [GW6A-EL, GW6AX-EL].)
		No	Go to the next step.
2	**INSPECT ATF LEVEL** • Inspect the ATF level. (See 05-17B-11 AUTOMATIC TRANSAXLE FLUID (ATF) INSPECTION [GW6A-EL, GW6AX-EL].) • Is there any malfunction?	Yes	Adjust the ATF level to the specification, then go to the next step. (See 05-17B-12 AUTOMATIC TRANSAXLE FLUID (ATF) REPLACEMENT [GW6A-EL, GW6AX-EL].)
		No	Go to the next step.
3	**PERFORM ON-BOARD DIAGNOSTIC TEST TO SPECIFY MALFUNCTIONING PART** **Note** • If only DTCs in which the malfunctioning part is not confirmed are displayed as in the following DTCs, all of the diagnosis may not have been completed. In such cases, the malfunction cause can be determined by performing the on-board diagnostic test. • Perform the on-board diagnostic test. (See 05-02B-8 ON-BOARD DIAGNOSTIC TEST MODE [GW6A-EL, GW6AX-EL].) • Are any DTCs present?	Yes	Go to the applicable DTC inspection. (See 05-02B-10 ON-BOARD DIAGNOSTIC SYSTEM DTC TABLE [GW6A-EL, GW6AX-EL].)
		No	ATF amount in Step 2 is correct: • Replace the automatic transaxle. (See 05-17B-29 AUTOMATIC TRANSAXLE REMOVAL/INSTALLATION [GW6A-EL].) (See 05-17B-47 AUTOMATIC TRANSAXLE REMOVAL/INSTALLATION [GW6AX-EL].) ATF amount adjusted in Step 2: • Drive the vehicle to check it, and if there is no problem then the DTC troubleshooting is complete.

ON-BOARD DIAGNOSTIC [GW6A-EL, GW6AX-EL]

DTC P0819:00 [GW6A-EL, GW6AX-EL]

id050230822400

DTC P0819:00	**M position switch/Up switch/Down switch signal error**
DETECTION CONDITION	• Under the following conditions, any of (1) to (4) conditions occurs for **1 s**: — Engine is running. — Battery voltage is **8 V or more**. — Transaxle range sensor related DTC is not recorded. (1) M position switch signal is on even though forward oil pressure switch is on in any position other than D position. (2) M position switch signal is off even though up or down switch signal is on in D position. (3) Up switch signal is on even though M position switch signal is off in any position other than D position. (4) Down switch signal is on even though M position switch signal is off in any position other than D position. **Diagnostic support note** • The check engine light does not illuminate. • The automatic transaxle warning light does not illuminate. • PENDING CODE is available. • FREEZE FRAME DATA is not available. • The DTC is stored in the TCM memory.
FAIL-SAFE FUNCTION	• Inhibits manual mode.
POSSIBLE CAUSE	• Instrument cluster DTC is stored. • Selector lever component connector or terminals malfunction • Selector lever component malfunction — M position switch malfunction — Up switch malfunction — Down switch malfunction • Open circuit in wiring harness between selector lever component terminal J and body ground • Instrument cluster connector or terminals malfunction • Short to ground in wiring harness between the following terminals: — Selector lever component terminal E—Instrument cluster terminal H — Selector lever component terminal C—Instrument cluster terminal F — Selector lever component terminal D—Instrument cluster terminal G • Short to power supply in wiring harness between the following terminals: — Selector lever component terminal E—Instrument cluster terminal H — Selector lever component terminal C—Instrument cluster terminal F — Selector lever component terminal D—Instrument cluster terminal G • Open circuit in wiring harness between the following terminals: — Selector lever component terminal E—Instrument cluster terminal H — Selector lever component terminal C—Instrument cluster terminal F — Selector lever component terminal D—Instrument cluster terminal G • Instrument cluster malfunction

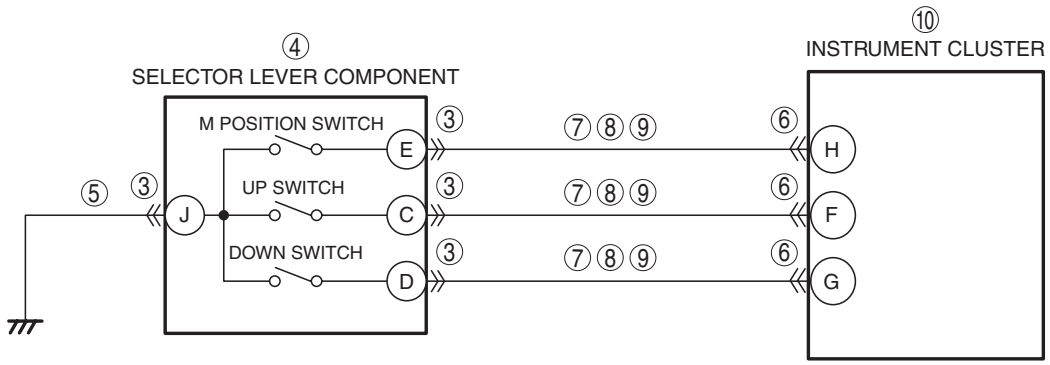

SELECTOR LEVER COMPONENT WIRING HARNESS-SIDE CONNECTOR

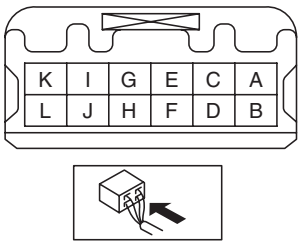

INSTRUMENT CLUSTER WIRING HARNESS-SIDE CONNECTOR

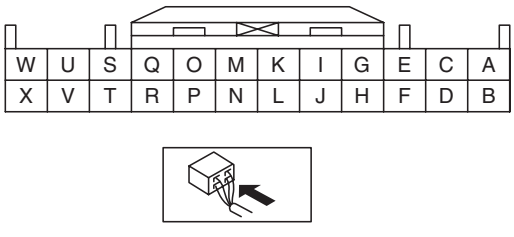

ON-BOARD DIAGNOSTIC [GW6A-EL, GW6AX-EL]

Diagnostic procedure

STEP	INSPECTION		ACTION
1	**VERIFY RELATED SERVICE INFORMATION AVAILABILITY** • Verify related Service Information availability. • Is any related Service Information available?	Yes	Perform repair or diagnosis according to the available Service Information. • If the vehicle is not repaired, go to the next step.
		No	Go to the next step.
2	**CONFIRM INSTRUMENT CLUSTER DTC** • Perform the instrument cluster DTC inspection using the M-MDS. (See 09-02G-7 DTC INSPECTION [INSTRUMENT CLUSTER].) • Are any DTCs present?	Yes	Go to the applicable DTC inspection. (See 09-02G-10 DTC TABLE [INSTRUMENT CLUSTER].)
		No	Go to the next step.
3	**INSPECT SELECTOR LEVER COMPONENT CONNECTOR CONDITION** • Switch the ignition to off. • Disconnect the selector lever component connector. • Inspect for poor connection (such as damaged/ pulled-out pins, corrosion). • Is there any malfunction?	Yes	Repair or replace the connector and/or terminals, then go to Step 11.
		No	Go to the next step.
4	**INSPECT SELECTOR LEVER COMPONENT** • Inspect the M position switch, up switch and down switch. (See 05-17B-14 M POSITION SWITCH INSPECTION [GW6A-EL, GW6AX-EL].) (See 05-17B-15 UP SWITCH INSPECTION [GW6A-EL, GW6AX-EL].) (See 05-17B-16 DOWN SWITCH INSPECTION [GW6A-EL, GW6AX-EL].) • Is there any malfunction?	Yes	Replace the selector lever component, then go to Step 11. (See 05-18-2 AUTOMATIC TRANSAXLE SHIFT MECHANISM REMOVAL/INSTALLATION.)
		No	Go to the next step.
5	**INSPECT SELECTOR LEVER COMPONENT GROUND CIRCUIT FOR OPEN CIRCUIT** • Verify that the selector lever component connector is disconnected. • Inspect for continuity between selector lever component terminal J (wiring harness-side) and body ground. • Is there continuity?	Yes	Go to the next step.
		No	Repair or replace the wiring harness for a possible open circuit, then go to Step 11.
6	**INSPECT INSTRUMENT CLUSTER CONNECTOR CONDITION** • Disconnect the instrument cluster connector. • Inspect for poor connection (such as damaged/ pulled-out pins, corrosion). • Is there any malfunction?	Yes	Repair or replace the connector and/or terminals, then go to Step 11.
		No	Go to the next step.
7	**INSPECT SELECTOR LEVER COMPONENT CIRCUIT FOR SHORT TO GROUND** • Verify that the selector lever component and instrument cluster connectors are disconnected. • Inspect for continuity between the following terminals (wiring harness-side) and body ground: — Selector lever component terminal E — Selector lever component terminal C — Selector lever component terminal D • Is there continuity?	Yes	Repair or replace the wiring harness for a possible short to ground, then go to Step 11.
		No	Go to the next step.
8	**INSPECT SELECTOR LEVER COMPONENT CIRCUIT FOR SHORT TO POWER SUPPLY** • Verify that the selector lever component and instrument cluster connectors are disconnected. • Switch the ignition ON (engine on). • Measure the voltage at the following terminals (wiring harness-side): — Selector lever component terminal E — Selector lever component terminal C — Selector lever component terminal D • Is the voltage **0 V**?	Yes	Go to the next step.
		No	Repair or replace the wiring harness for a possible short to power supply, then go to Step 11.

ON-BOARD DIAGNOSTIC [GW6A-EL, GW6AX-EL]

STEP	INSPECTION		ACTION
9	**INSPECT SELECTOR LEVER COMPONENT CIRCUIT FOR OPEN CIRCUIT** • Verify that the selector lever component and instrument cluster connectors are disconnected. • Switch the ignition to off. • Inspect for continuity between the following terminals (wiring harness-side): — Selector lever component terminal E— Instrument cluster terminal H — Selector lever component terminal C— Instrument cluster terminal F — Selector lever component terminal D— Instrument cluster terminal G • Is there continuity?	Yes	Go to the next step.
		No	Repair or replace the wiring harness for a possible open circuit, then go to Step 11.
10	**INSPECT INSTRUMENT CLUSTER** • Inspect the instrument cluster. (See 09-22-11 INSTRUMENT CLUSTER INSPECTION.) • Is there any malfunction?	Yes	Replace the instrument cluster, then go to the next step. (See 09-22-6 INSTRUMENT CLUSTER REMOVAL/INSTALLATION.)
		No	Go to the next step.
11	**VERIFY DTC TROUBLESHOOTING COMPLETED** • Make sure to reconnect all disconnected connectors. • Clear the DTC using the M-MDS. (See 05-02B-6 ON-BOARD DIAGNOSTIC SYSTEM DTC INSPECTION [GW6A-EL, GW6AX-EL].) • Perform the following procedure to ensure that the DTC has been resolved: 1. Verify that the battery voltage is **8 V or more**. 2. Drive the vehicle for **1 s or more** under the following condition: • Selector lever position: Except D position 3. Drive the vehicle for **1 s or more** under the following conditions: • Selector lever position: D position • Up switch: On 4. Drive the vehicle for **1 s or more** under the following conditions: • Selector lever position: D position • Down switch: On • Perform the DTC inspection using the M-MDS. (See 05-02B-6 ON-BOARD DIAGNOSTIC SYSTEM DTC INSPECTION [GW6A-EL, GW6AX-EL].) • Are any DTCs present?	Yes	Go to the applicable DTC inspection. (See 05-02B-10 ON-BOARD DIAGNOSTIC SYSTEM DTC TABLE [GW6A-EL, GW6AX-EL].)
		No	DTC troubleshooting completed.

ON-BOARD DIAGNOSTIC [GW6A-EL, GW6AX-EL]

DTC P0842:00 [GW6A-EL, GW6AX-EL]

id050230822600

DTC P0842:00	**Oil pressure switch No.1 stuck on**
DETECTION CONDITION	• Under the following conditions, oil pressure switch No.1 stuck-on detected by combination of gear ratio malfunction and oil pressure switch pattern malfunction: — Engine is running. — Battery voltage is **8 V or more**. — ATF temperature is **20 °C {68 °F} or more**. **Diagnostic support note** • The check engine light illuminates if the TCM detects the above malfunction condition in two consecutive drive cycles or in one drive cycle while the DTC for the same malfunction has been stored in the TCM. • The automatic transaxle warning light illuminates if the TCM detects the above malfunction condition in two consecutive drive cycles or in one drive cycle while the DTC for the same malfunction has been stored in the TCM. • PENDING CODE is available. • FREEZE FRAME DATA is available. • The DTC is stored in the TCM memory.
FAIL-SAFE FUNCTION	• Limits engine torque. • Inhibits learning control. • Inhibits manual mode. • Inhibits neutral idle control. • Inhibits i-stop control. • Inhibits AAS.
POSSIBLE CAUSE	• Oil pressure switch No.1 malfunction
SYSTEM WIRING DIAGRAM	—

Diagnostic procedure

STEP	INSPECTION		ACTION
1	**VERIFY THE DTC OUTPUT STATUS** • Is the DTC P1738:00 also present?	Yes	Go to the applicable DTC inspection. (See 05-02B-79 DTC P1738:00 [GW6A-EL, GW6AX-EL].)
		No	Go to the next step.
2	**VERIFY FREEZE FRAME DATA/SNAPSHOT DATA HAS BEEN RECORDED** • Has the freeze frame data/snapshot data been recorded on the repair order?	Yes	Go to the next step.
		No	Record the freeze frame data/snapshot data on the repair order, then go to the next step.
3	**VERIFY RELATED SERVICE INFORMATION AVAILABILITY** • Verify related Service Information availability. • Is any related Service Information available?	Yes	Perform repair or diagnosis according to the available Service Information. • If the vehicle is not repaired, go to the next step.
		No	Go to the next step.
4	**PERFORM ON-BOARD DIAGNOSTIC TEST** • Perform the following procedure to ensure that the DTC has been resolved: 1. Start the engine. 2. Verify that the ATF temperature is **55 °C {131 °F} or more**. • Perform the on-board diagnostic test. (See 05-02B-8 ON-BOARD DIAGNOSTIC TEST MODE [GW6A-EL, GW6AX-EL].) • Are P0842:00 present?	Yes	Replace the oil pressure switch No.1, then go to the next step. (See 05-17B-20 OIL PRESSURE SWITCH REMOVAL/INSTALLATION [GW6A-EL, GW6AX-EL])
		No	No DTCs are displayed: • Drive the vehicle to check it, and if there is no problem then the DTC troubleshooting is complete. If a DTC other than the one indicated on the left is displayed: • Go to the applicable DTC inspection. (See 05-02B-10 ON-BOARD DIAGNOSTIC SYSTEM DTC TABLE [GW6A-EL, GW6AX-EL].)
5	**RE-PERFORM ON-BOARD DIAGNOSTIC TEST** • Perform the following procedure to ensure that the DTC has been resolved: 1. Start the engine. 2. Verify that the ATF temperature is **55 °C {131 °F} or more**. • Perform the on-board diagnostic test. (See 05-02B-8 ON-BOARD DIAGNOSTIC TEST MODE [GW6A-EL, GW6AX-EL].) • Are any DTCs present?	Yes	Go to the applicable DTC inspection. (See 05-02B-10 ON-BOARD DIAGNOSTIC SYSTEM DTC TABLE [GW6A-EL, GW6AX-EL].)
		No	DTC troubleshooting completed.

ON-BOARD DIAGNOSTIC [GW6A-EL, GW6AX-EL]

DTC P0843:00 [GW6A-EL, GW6AX-EL]

id050230822700

DTC P0843:00	Oil pressure switch No.1 stuck off
DETECTION CONDITION	• Under the following conditions, oil pressure switch No.1 stuck-off detected by combination of gear ratio malfunction and oil pressure switch pattern malfunction: — Engine is running. — Battery voltage is **8 V or more**. — ATF temperature is **20 °C {68 °F} or more**. **Diagnostic support note** • The check engine light illuminates if the TCM detects the above malfunction condition in two consecutive drive cycles or in one drive cycle while the DTC for the same malfunction has been stored in the TCM. • The automatic transaxle warning light illuminates if the TCM detects the above malfunction condition in two consecutive drive cycles or in one drive cycle while the DTC for the same malfunction has been stored in the TCM. • PENDING CODE is available. • FREEZE FRAME DATA is available. • The DTC is stored in the TCM memory.
FAIL-SAFE FUNCTION	• Inhibits malfunctioning gear. • Limits engine torque. • Inhibits learning control. • Inhibits manual mode. • Inhibits neutral idle control. • Inhibits i-stop control. • Inhibits AAS.
POSSIBLE CAUSE	• ATF is less than specified value • Oil pressure switch No.1 malfunction
SYSTEM WIRING DIAGRAM	—

Diagnostic procedure

STEP	INSPECTION		ACTION
1	**VERIFY THE DTC OUTPUT STATUS** • Is the DTC P1738:00 also present?	Yes	Go to the applicable DTC inspection. (See 05-02B-79 DTC P1738:00 [GW6A-EL, GW6AX-EL].)
		No	Go to the next step.
2	**VERIFY FREEZE FRAME DATA/SNAPSHOT DATA HAS BEEN RECORDED** • Has the freeze frame data/snapshot data been recorded on the repair order?	Yes	Go to the next step.
		No	Record the freeze frame data/snapshot data on the repair order, then go to the next step.
3	**VERIFY RELATED SERVICE INFORMATION AVAILABILITY** • Verify related Service Information availability. • Is any related Service Information available?	Yes	Perform repair or diagnosis according to the available Service Information. • If the vehicle is not repaired, go to the next step.
		No	Go to the next step.
4	**VERIFY THAT DTC IS PRESENT** • Clear the DTC using the M-MDS. (See 05-02B-6 ON-BOARD DIAGNOSTIC SYSTEM DTC INSPECTION [GW6A-EL, GW6AX-EL].) • Perform the following procedure to ensure that the DTC has been resolved: 1. Start the engine. 2. Verify that the ATF temperature is **20 °C {68 °F} or more**. • Perform the DTC inspection using the M-MDS. (See 05-02B-6 ON-BOARD DIAGNOSTIC SYSTEM DTC INSPECTION [GW6A-EL, GW6AX-EL].) • Is the DTC P0843:00 or P0878:00 present?	Yes	Go to the next step.
		No	DTC troubleshooting completed.
5	**INSPECT ATF LEVEL** • Inspect the ATF level. (See 05-17B-11 AUTOMATIC TRANSAXLE FLUID (ATF) INSPECTION [GW6A-EL, GW6AX-EL].) • Is there any malfunction?	Yes	Adjust the ATF level to the specification, then go to Step 7. (See 05-17B-12 AUTOMATIC TRANSAXLE FLUID (ATF) REPLACEMENT [GW6A-EL, GW6AX-EL].)
		No	DTC P0843:00 and P0878:00 are displayed in Step 4: • Repair or replace the wiring harness between TCM and oil pressure switch A, then go to Step 7. Only DTC P0843:00 is displayed in Step 4: • Go to the next step.

ON-BOARD DIAGNOSTIC [GW6A-EL, GW6AX-EL]

STEP	INSPECTION		ACTION
6	**INSPECT OIL PRESSURE SWITCH A CONNECTOR AND OIL PRESSURE SWITCH NO.1 CIRCUIT** • Visually inspect for poor connection and open circuit. • Is there any malfunction?	Yes	Repair or replace the wiring harness between TCM and oil pressure switch A, then go to the next step.
		No	Replace the oil pressure switch A, then go to the next step. (See 05-17B-20 OIL PRESSURE SWITCH REMOVAL/ INSTALLATION [GW6A-EL, GW6AX-EL].)
7	**PERFORM ON-BOARD DIAGNOSTIC TEST** • Perform the following procedure to ensure that the DTC has been resolved: 1. Start the engine. 2. Verify that the ATF temperature is **55 °C {131 °F} or more**. • Perform the on-board diagnostic test. (See 05-02B-8 ON-BOARD DIAGNOSTIC TEST MODE [GW6A-EL, GW6AX-EL].) • Are any DTCs present?	Yes	ATF amount in Step 5 is correct • Replace the automatic transaxle, then drive the vehicle to check it, and if there is no problem then the DTC troubleshooting is complete. (See 05-17B-29 AUTOMATIC TRANSAXLE REMOVAL/ INSTALLATION [GW6A-EL].) (See 05-17B-47 AUTOMATIC TRANSAXLE REMOVAL/ INSTALLATION [GW6AX-EL].) ATF amount adjusted in Step 5: • Replace the control valve body, then go to the next step. (See 05-17B-81 CONTROL VALVE BODY REMOVAL/ INSTALLATION [GW6A-EL, GW6AX-EL].)
		No	Drive the vehicle to check it, and if there is no problem then the DTC troubleshooting is complete.
8	**RE-PERFORM ON-BOARD DIAGNOSTIC TEST** • Perform the following procedure to ensure that the DTC has been resolved: 1. Start the engine. 2. Verify that the ATF temperature is **55 °C {131 °F} or more**. • Perform the on-board diagnostic test. (See 05-02B-8 ON-BOARD DIAGNOSTIC TEST MODE [GW6A-EL, GW6AX-EL].) • Are any DTCs present?	Yes	Go to the applicable DTC inspection. (See 05-02B-10 ON-BOARD DIAGNOSTIC SYSTEM DTC TABLE [GW6A-EL, GW6AX-EL].)
		No	DTC troubleshooting completed.

DTC P0847:00 [GW6A-EL, GW6AX-EL]

id050230904500

DTC P0847:00	**Oil pressure switch No.2 stuck on**
DETECTION CONDITION	• Under the following conditions, oil pressure switch No.2 stuck-on detected by combination of gear ratio malfunction and oil pressure switch pattern malfunction: — Engine is running. — Battery voltage is **8 V or more**. — ATF temperature is **20 °C {68 °F} or more**. **Diagnostic support note** • The check engine light illuminates if the TCM detects the above malfunction condition in two consecutive drive cycles or in one drive cycle while the DTC for the same malfunction has been stored in the TCM. • The automatic transaxle warning light illuminates if the TCM detects the above malfunction condition in two consecutive drive cycles or in one drive cycle while the DTC for the same malfunction has been stored in the TCM. • PENDING CODE is available. • FREEZE FRAME DATA is available. • The DTC is stored in the TCM memory.
FAIL-SAFE FUNCTION	• Limits engine torque. • Inhibits learning control. • Inhibits manual mode. • Inhibits neutral idle control. • Inhibits i-stop control. • Inhibits AAS.
POSSIBLE CAUSE	• Oil pressure switch No.2 malfunction
SYSTEM WIRING DIAGRAM	—

ON-BOARD DIAGNOSTIC [GW6A-EL, GW6AX-EL]

Diagnostic procedure

STEP	INSPECTION		ACTION
1	**VERIFY THE DTC OUTPUT STATUS** • Is the DTC P1738:00 also present?	Yes	Go to the applicable DTC inspection. (See 05-02B-79 DTC P1738:00 [GW6A-EL, GW6AX-EL].)
		No	Go to the next step.
2	**VERIFY FREEZE FRAME DATA/SNAPSHOT DATA HAS BEEN RECORDED** • Has the freeze frame data/snapshot data been recorded on the repair order?	Yes	Go to the next step.
		No	Record the freeze frame data/snapshot data on the repair order, then go to the next step.
3	**VERIFY RELATED SERVICE INFORMATION AVAILABILITY** • Verify related Service Information availability. • Is any related Service Information available?	Yes	Perform repair or diagnosis according to the available Service Information. • If the vehicle is not repaired, go to the next step.
		No	Go to the next step.
4	**PERFORM ON-BOARD DIAGNOSTIC TEST** • Perform the following procedure to ensure that the DTC has been resolved: 1. Start the engine. 2. Verify that the ATF temperature is **55 °C {131 °F} or more**. • Perform the on-board diagnostic test. (See 05-02B-8 ON-BOARD DIAGNOSTIC TEST MODE [GW6A-EL, GW6AX-EL].) • Are P0847:00 present?	Yes	Replace the oil pressure switch No.2, then go to the next step. (See 05-17B-20 OIL PRESSURE SWITCH REMOVAL/INSTALLATION [GW6A-EL, GW6AX-EL])
		No	No DTCs are displayed: • Drive the vehicle to check it, and if there is no problem then the DTC troubleshooting is complete. If a DTC other than the one indicated on the left is displayed: • Go to the applicable DTC inspection. (See 05-02B-10 ON-BOARD DIAGNOSTIC SYSTEM DTC TABLE [GW6A-EL, GW6AX-EL].)
5	**RE-PERFORM ON-BOARD DIAGNOSTIC TEST** • Perform the following procedure to ensure that the DTC has been resolved: 1. Start the engine. 2. Verify that the ATF temperature is **55 °C {131 °F} or more**. • Perform the on-board diagnostic test. (See 05-02B-8 ON-BOARD DIAGNOSTIC TEST MODE [GW6A-EL, GW6AX-EL].) • Are any DTCs present?	Yes	Go to the applicable DTC inspection. (See 05-02B-10 ON-BOARD DIAGNOSTIC SYSTEM DTC TABLE [GW6A-EL, GW6AX-EL].)
		No	DTC troubleshooting completed.

DTC P0848:00 [GW6A-EL, GW6AX-EL]

id050230904600

DTC P0848:00	**Oil pressure switch No.2 stuck off**
DETECTION CONDITION	• Under the following conditions, oil pressure switch No.2 stuck-off detected by combination of gear ratio malfunction and oil pressure switch pattern malfunction: — Engine is running. — Battery voltage is **8 V or more**. — ATF temperature is **20 °C {68 °F} or more**. **Diagnostic support note** • The check engine light illuminates if the TCM detects the above malfunction condition in two consecutive drive cycles or in one drive cycle while the DTC for the same malfunction has been stored in the TCM. • The automatic transaxle warning light illuminates if the TCM detects the above malfunction condition in two consecutive drive cycles or in one drive cycle while the DTC for the same malfunction has been stored in the TCM. • PENDING CODE is available. • FREEZE FRAME DATA is available. • The DTC is stored in the TCM memory.
FAIL-SAFE FUNCTION	• Inhibits malfunctioning gear. • Limits engine torque. • Inhibits learning control. • Inhibits manual mode. • Inhibits neutral idle control. • Inhibits i-stop control. • Inhibits AAS.
POSSIBLE CAUSE	• ATF is less than specified value • Oil pressure switch No.2 malfunction
SYSTEM WIRING DIAGRAM	—

ON-BOARD DIAGNOSTIC [GW6A-EL, GW6AX-EL]

Diagnostic procedure

STEP	INSPECTION		ACTION
1	**VERIFY THE DTC OUTPUT STATUS** • Is the DTC P1738:00 also present?	Yes	Go to the applicable DTC inspection. (See 05-02B-79 DTC P1738:00 [GW6A-EL, GW6AX-EL].)
		No	Go to the next step.
2	**VERIFY FREEZE FRAME DATA/SNAPSHOT DATA HAS BEEN RECORDED** • Has the freeze frame data/snapshot data been recorded on the repair order?	Yes	Go to the next step.
		No	Record the freeze frame data/snapshot data on the repair order, then go to the next step.
3	**VERIFY RELATED SERVICE INFORMATION AVAILABILITY** • Verify related Service Information availability. • Is any related Service Information available?	Yes	Perform repair or diagnosis according to the available Service Information. • If the vehicle is not repaired, go to the next step.
		No	Go to the next step.
4	**VERIFY THAT DTC IS PRESENT** • Clear the DTC using the M-MDS. (See 05-02B-6 ON-BOARD DIAGNOSTIC SYSTEM DTC INSPECTION [GW6A-EL, GW6AX-EL].) • Perform the following procedure to ensure that the DTC has been resolved: 1. Start the engine. 2. Verify that the ATF temperature is **20 °C {68 °F} or more**. • Perform the DTC inspection using the M-MDS. (See 05-02B-6 ON-BOARD DIAGNOSTIC SYSTEM DTC INSPECTION [GW6A-EL, GW6AX-EL].) • Is the DTC P0848:00 or P0873:00 present?	Yes	Go to the next step.
		No	DTC troubleshooting completed.
5	**INSPECT ATF LEVEL** • Inspect the ATF level. (See 05-17B-11 AUTOMATIC TRANSAXLE FLUID (ATF) INSPECTION [GW6A-EL, GW6AX-EL].) • Is there any malfunction?	Yes	Adjust the ATF level to the specification, then go to Step 7. (See 05-17B-12 AUTOMATIC TRANSAXLE FLUID (ATF) REPLACEMENT [GW6A-EL, GW6AX-EL].)
		No	DTC P0848:00 and P0873:00 are displayed in Step 4: • Repair or replace the wiring harness between TCM and oil pressure switch B, then go to Step 7. Only DTC P0848:00 is displayed in Step 4: • Go to the next step.
6	**INSPECT OIL PRESSURE SWITCH B CONNECTOR AND OIL PRESSURE SWITCH NO.2 CIRCUIT** • Visually inspect for poor connection and open circuit. • Is there any malfunction?	Yes	Repair or replace the wiring harness between TCM and oil pressure switch B, then go to the next step.
		No	Replace the oil pressure switch B, then go to the next step. (See 05-17B-20 OIL PRESSURE SWITCH REMOVAL/INSTALLATION [GW6A-EL, GW6AX-EL].)
7	**PERFORM ON-BOARD DIAGNOSTIC TEST** • Perform the following procedure to ensure that the DTC has been resolved: 1. Start the engine. 2. Verify that the ATF temperature is **55 °C {131 °F} or more**. • Perform the on-board diagnostic test. (See 05-02B-8 ON-BOARD DIAGNOSTIC TEST MODE [GW6A-EL, GW6AX-EL].) • Are any DTCs present?	Yes	ATF amount in Step 5 is correct • Replace the automatic transaxle, then drive the vehicle to check it, and if there is no problem then the DTC troubleshooting is complete. (See 05-17B-29 AUTOMATIC TRANSAXLE REMOVAL/INSTALLATION [GW6A-EL].) (See 05-17B-47 AUTOMATIC TRANSAXLE REMOVAL/INSTALLATION [GW6AX-EL].) ATF amount adjusted in Step 5: • Replace the control valve body, then go to the next step. (See 05-17B-81 CONTROL VALVE BODY REMOVAL/INSTALLATION [GW6A-EL, GW6AX-EL].)
		No	Drive the vehicle to check it, and if there is no problem then the DTC troubleshooting is complete.
8	**RE-PERFORM ON-BOARD DIAGNOSTIC TEST** • Perform the following procedure to ensure that the DTC has been resolved: 1. Start the engine. 2. Verify that the ATF temperature is **55 °C {131 °F} or more**. • Perform the on-board diagnostic test. (See 05-02B-8 ON-BOARD DIAGNOSTIC TEST MODE [GW6A-EL, GW6AX-EL].) • Are any DTCs present?	Yes	Go to the applicable DTC inspection. (See 05-02B-10 ON-BOARD DIAGNOSTIC SYSTEM DTC TABLE [GW6A-EL, GW6AX-EL].)
		No	DTC troubleshooting completed.

ON-BOARD DIAGNOSTIC [GW6A-EL, GW6AX-EL]

DTC P0872:00 [GW6A-EL, GW6AX-EL]

id050230904700

DTC P0872:00	Oil pressure switch No.3 stuck on
DETECTION CONDITION	• Under the following conditions, oil pressure switch No.3 stuck-on detected by combination of gear ratio malfunction and oil pressure switch pattern malfunction: — Engine is running. — Battery voltage is **8 V or more**. — ATF temperature is **20 °C {68 °F} or more**. **Diagnostic support note** • The check engine light illuminates if the TCM detects the above malfunction condition in two consecutive drive cycles or in one drive cycle while the DTC for the same malfunction has been stored in the TCM. • The automatic transaxle warning light illuminates if the TCM detects the above malfunction condition in two consecutive drive cycles or in one drive cycle while the DTC for the same malfunction has been stored in the TCM. • PENDING CODE is available. • FREEZE FRAME DATA is available. • The DTC is stored in the TCM memory.
FAIL-SAFE FUNCTION	• Limits engine torque. • Inhibits learning control. • Inhibits manual mode. • Inhibits neutral idle control. • Inhibits i-stop control. • Inhibits AAS.
POSSIBLE CAUSE	• Oil pressure switch No.3 malfunction
SYSTEM WIRING DIAGRAM	—

Diagnostic procedure

STEP	INSPECTION		ACTION
1	**VERIFY THE DTC OUTPUT STATUS** • Is the DTC P1738:00 also present?	Yes	Go to the applicable DTC inspection. (See 05-02B-79 DTC P1738:00 [GW6A-EL, GW6AX-EL].)
		No	Go to the next step.
2	**VERIFY FREEZE FRAME DATA/SNAPSHOT DATA HAS BEEN RECORDED** • Has the freeze frame data/snapshot data been recorded on the repair order?	Yes	Go to the next step.
		No	Record the freeze frame data/snapshot data on the repair order, then go to the next step.
3	**VERIFY RELATED SERVICE INFORMATION AVAILABILITY** • Verify related Service Information availability. • Is any related Service Information available?	Yes	Perform repair or diagnosis according to the available Service Information. • If the vehicle is not repaired, go to the next step.
		No	Go to the next step.
4	**PERFORM ON-BOARD DIAGNOSTIC TEST** • Perform the following procedure to ensure that the DTC has been resolved: 1. Start the engine. 2. Verify that the ATF temperature is **55 °C {131 °F} or more**. • Perform the on-board diagnostic test. (See 05-02B-8 ON-BOARD DIAGNOSTIC TEST MODE [GW6A-EL, GW6AX-EL].) • Are P0872:00 present?	Yes	Replace the oil pressure switch No.3, then go to the next step. (See 05-17B-20 OIL PRESSURE SWITCH REMOVAL/INSTALLATION [GW6A-EL, GW6AX-EL])
		No	No DTCs are displayed: • Drive the vehicle to check it, and if there is no problem then the DTC troubleshooting is complete. If a DTC other than the one indicated on the left is displayed: • Go to the applicable DTC inspection. (See 05-02B-10 ON-BOARD DIAGNOSTIC SYSTEM DTC TABLE [GW6A-EL, GW6AX-EL].)
5	**RE-PERFORM ON-BOARD DIAGNOSTIC TEST** • Perform the following procedure to ensure that the DTC has been resolved: 1. Start the engine. 2. Verify that the ATF temperature is **55 °C {131 °F} or more**. • Perform the on-board diagnostic test. (See 05-02B-8 ON-BOARD DIAGNOSTIC TEST MODE [GW6A-EL, GW6AX-EL].) • Are any DTCs present?	Yes	Go to the applicable DTC inspection. (See 05-02B-10 ON-BOARD DIAGNOSTIC SYSTEM DTC TABLE [GW6A-EL, GW6AX-EL].)
		No	DTC troubleshooting completed.

ON-BOARD DIAGNOSTIC [GW6A-EL, GW6AX-EL]

DTC P0873:00 [GW6A-EL, GW6AX-EL]

id050230904800

DTC P0873:00	Oil pressure switch No.3 stuck off
DETECTION CONDITION	• Under the following conditions, oil pressure switch No.3 stuck-off detected by combination of gear ratio malfunction and oil pressure switch pattern malfunction: — Engine is running. — Battery voltage is **8 V or more**. — ATF temperature is **20 °C {68 °F} or more**. **Diagnostic support note** • The check engine light illuminates if the TCM detects the above malfunction condition in two consecutive drive cycles or in one drive cycle while the DTC for the same malfunction has been stored in the TCM. • The automatic transaxle warning light illuminates if the TCM detects the above malfunction condition in two consecutive drive cycles or in one drive cycle while the DTC for the same malfunction has been stored in the TCM. • PENDING CODE is available. • FREEZE FRAME DATA is available. • The DTC is stored in the TCM memory.
FAIL-SAFE FUNCTION	• Inhibits malfunctioning gear. • Limits engine torque. • Inhibits learning control. • Inhibits manual mode. • Inhibits neutral idle control. • Inhibits i-stop control. • Inhibits AAS.
POSSIBLE CAUSE	• ATF is less than specified value • Oil pressure switch No.3 malfunction
SYSTEM WIRING DIAGRAM	—

Diagnostic procedure

STEP	INSPECTION		ACTION
1	**VERIFY THE DTC OUTPUT STATUS** • Is the DTC P1738:00 also present?	Yes	Go to the applicable DTC inspection. (See 05-02B-79 DTC P1738:00 [GW6A-EL, GW6AX-EL].)
		No	Go to the next step.
2	**VERIFY FREEZE FRAME DATA/SNAPSHOT DATA HAS BEEN RECORDED** • Has the freeze frame data/snapshot data been recorded on the repair order?	Yes	Go to the next step.
		No	Record the freeze frame data/snapshot data on the repair order, then go to the next step.
3	**VERIFY RELATED SERVICE INFORMATION AVAILABILITY** • Verify related Service Information availability. • Is any related Service Information available?	Yes	Perform repair or diagnosis according to the available Service Information. • If the vehicle is not repaired, go to the next step.
		No	Go to the next step.
4	**VERIFY THAT DTC IS PRESENT** • Clear the DTC using the M-MDS. (See 05-02B-6 ON-BOARD DIAGNOSTIC SYSTEM DTC INSPECTION [GW6A-EL, GW6AX-EL].) • Perform the following procedure to ensure that the DTC has been resolved: 1. Start the engine. 2. Verify that the ATF temperature is **20 °C {68 °F} or more**. • Perform the DTC inspection using the M-MDS. (See 05-02B-6 ON-BOARD DIAGNOSTIC SYSTEM DTC INSPECTION [GW6A-EL, GW6AX-EL].) • Is the DTC P0848:00 or P0873:00 present?	Yes	Go to the next step.
		No	DTC troubleshooting completed.

ON-BOARD DIAGNOSTIC [GW6A-EL, GW6AX-EL]

STEP	INSPECTION		ACTION
5	**INSPECT ATF LEVEL** • Inspect the ATF level. (See 05-17B-11 AUTOMATIC TRANSAXLE FLUID (ATF) INSPECTION [GW6A-EL, GW6AX-EL].) • Is there any malfunction?	Yes	Adjust the ATF level to the specification, then go to Step 7. (See 05-17B-12 AUTOMATIC TRANSAXLE FLUID (ATF) REPLACEMENT [GW6A-EL, GW6AX-EL].)
		No	DTC P0848:00 and P0873:00 are displayed in Step 4: • Repair or replace the wiring harness between TCM and oil pressure switch B, then go to Step 7. Only DTC P0873:00 is displayed in Step 4: • Go to the next step.
6	**INSPECT OIL PRESSURE SWITCH B CONNECTOR AND OIL PRESSURE SWITCH NO.3 CIRCUIT** • Visually inspect for poor connection and open circuit. • Is there any malfunction?	Yes	Repair or replace the wiring harness between TCM and oil pressure switch B, then go to the next step.
		No	Replace the oil pressure switch B, then go to the next step. (See 05-17B-20 OIL PRESSURE SWITCH REMOVAL/INSTALLATION [GW6A-EL, GW6AX-EL].)
7	**PERFORM ON-BOARD DIAGNOSTIC TEST** • Perform the following procedure to ensure that the DTC has been resolved: 1. Start the engine. 2. Verify that the ATF temperature is **55 °C {131 °F} or more**. • Perform the on-board diagnostic test. (See 05-02B-8 ON-BOARD DIAGNOSTIC TEST MODE [GW6A-EL, GW6AX-EL].) • Are any DTCs present?	Yes	ATF amount in Step 5 is correct • Replace the automatic transaxle, then drive the vehicle to check it, and if there is no problem then the DTC troubleshooting is complete. (See 05-17B-29 AUTOMATIC TRANSAXLE REMOVAL/INSTALLATION [GW6A-EL].) (See 05-17B-47 AUTOMATIC TRANSAXLE REMOVAL/INSTALLATION [GW6AX-EL].) ATF amount adjusted in Step 5: • Replace the control valve body, then go to the next step. (See 05-17B-81 CONTROL VALVE BODY REMOVAL/INSTALLATION [GW6A-EL, GW6AX-EL].)
		No	Drive the vehicle to check it, and if there is no problem then the DTC troubleshooting is complete.
8	**RE-PERFORM ON-BOARD DIAGNOSTIC TEST** • Perform the following procedure to ensure that the DTC has been resolved: 1. Start the engine. 2. Verify that the ATF temperature is **55 °C {131 °F} or more**. • Perform the on-board diagnostic test. (See 05-02B-8 ON-BOARD DIAGNOSTIC TEST MODE [GW6A-EL, GW6AX-EL].) • Are any DTCs present?	Yes	Go to the applicable DTC inspection. (See 05-02B-10 ON-BOARD DIAGNOSTIC SYSTEM DTC TABLE [GW6A-EL, GW6AX-EL].)
		No	DTC troubleshooting completed.

ON-BOARD DIAGNOSTIC [GW6A-EL, GW6AX-EL]

DTC P0877:00 [GW6A-EL, GW6AX-EL]

id050230904900

DTC P0877:00	**Oil pressure switch No.4 stuck on**
DETECTION CONDITION	• Under the following conditions, oil pressure switch No.4 stuck-on detected by combination of gear ratio malfunction and oil pressure switch pattern malfunction: — Engine is running. — Battery voltage is **8 V or more**. — ATF temperature is **20 °C {68 °F} or more**. **Diagnostic support note** • The check engine light illuminates if the TCM detects the above malfunction condition in two consecutive drive cycles or in one drive cycle while the DTC for the same malfunction has been stored in the TCM. • The automatic transaxle warning light illuminates if the TCM detects the above malfunction condition in two consecutive drive cycles or in one drive cycle while the DTC for the same malfunction has been stored in the TCM. • PENDING CODE is available. • FREEZE FRAME DATA is available. • The DTC is stored in the TCM memory.
FAIL-SAFE FUNCTION	• Limits engine torque. • Inhibits learning control. • Inhibits manual mode. • Inhibits neutral idle control. • Inhibits i-stop control. • Inhibits AAS.
POSSIBLE CAUSE	• Oil pressure switch No.4 malfunction
SYSTEM WIRING DIAGRAM	—

05

Diagnostic procedure

STEP	INSPECTION		ACTION
1	**VERIFY THE DTC OUTPUT STATUS** • Is the DTC P1738:00 also present?	Yes	Go to the applicable DTC inspection. (See 05-02B-79 DTC P1738:00 [GW6A-EL, GW6AX-EL].)
		No	Go to the next step.
2	**VERIFY FREEZE FRAME DATA/SNAPSHOT DATA HAS BEEN RECORDED** • Has the freeze frame data/snapshot data been recorded on the repair order?	Yes	Go to the next step.
		No	Record the freeze frame data/snapshot data on the repair order, then go to the next step.
3	**VERIFY RELATED SERVICE INFORMATION AVAILABILITY** • Verify related Service Information availability. • Is any related Service Information available?	Yes	Perform repair or diagnosis according to the available Service Information. • If the vehicle is not repaired, go to the next step.
		No	Go to the next step.
4	**PERFORM ON-BOARD DIAGNOSTIC TEST** • Perform the following procedure to ensure that the DTC has been resolved: 1. Start the engine. 2. Verify that the ATF temperature is **55 °C {131 °F} or more**. • Perform the on-board diagnostic test. (See 05-02B-8 ON-BOARD DIAGNOSTIC TEST MODE [GW6A-EL, GW6AX-EL].) • Are P0877:00 present?	Yes	Replace the oil pressure switch No.4, then go to the next step. (See 05-17B-20 OIL PRESSURE SWITCH REMOVAL/INSTALLATION [GW6A-EL, GW6AX-EL])
		No	No DTCs are displayed: • Drive the vehicle to check it, and if there is no problem then the DTC troubleshooting is complete. If a DTC other than the one indicated on the left is displayed: • Go to the applicable DTC inspection. (See 05-02B-10 ON-BOARD DIAGNOSTIC SYSTEM DTC TABLE [GW6A-EL, GW6AX-EL].)
5	**RE-PERFORM ON-BOARD DIAGNOSTIC TEST** • Perform the following procedure to ensure that the DTC has been resolved: 1. Start the engine. 2. Verify that the ATF temperature is **55 °C {131 °F} or more**. • Perform the on-board diagnostic test. (See 05-02B-8 ON-BOARD DIAGNOSTIC TEST MODE [GW6A-EL, GW6AX-EL].) • Are any DTCs present?	Yes	Go to the applicable DTC inspection. (See 05-02B-10 ON-BOARD DIAGNOSTIC SYSTEM DTC TABLE [GW6A-EL, GW6AX-EL].)
		No	DTC troubleshooting completed.

ON-BOARD DIAGNOSTIC [GW6A-EL, GW6AX-EL]

DTC P0878:00 [GW6A-EL, GW6AX-EL]

id050230905000

DTC P0878:00	Oil pressure switch No.4 stuck off
DETECTION CONDITION	• Under the following conditions, oil pressure switch No.4 stuck-off detected by combination of gear ratio malfunction and oil pressure switch pattern malfunction: — Engine is running. — Battery voltage is **8 V or more**. — ATF temperature is **20 °C {68 °F} or more**. **Diagnostic support note** • The check engine light illuminates if the TCM detects the above malfunction condition in two consecutive drive cycles or in one drive cycle while the DTC for the same malfunction has been stored in the TCM. • The automatic transaxle warning light illuminates if the TCM detects the above malfunction condition in two consecutive drive cycles or in one drive cycle while the DTC for the same malfunction has been stored in the TCM. • PENDING CODE is available. • FREEZE FRAME DATA is available. • The DTC is stored in the TCM memory.
FAIL-SAFE FUNCTION	• Inhibits malfunctioning gear. • Limits engine torque. • Inhibits learning control. • Inhibits manual mode. • Inhibits neutral idle control. • Inhibits i-stop control. • Inhibits AAS.
POSSIBLE CAUSE	• ATF is less than specified value • Oil pressure switch No.4 malfunction
SYSTEM WIRING DIAGRAM	—

Diagnostic procedure

STEP	INSPECTION		ACTION
1	**VERIFY THE DTC OUTPUT STATUS** • Is the DTC P1738:00 also present?	Yes	Go to the applicable DTC inspection. (See 05-02B-79 DTC P1738:00 [GW6A-EL, GW6AX-EL].)
		No	Go to the next step.
2	**VERIFY FREEZE FRAME DATA/SNAPSHOT DATA HAS BEEN RECORDED** • Has the freeze frame data/snapshot data been recorded on the repair order?	Yes	Go to the next step.
		No	Record the freeze frame data/snapshot data on the repair order, then go to the next step.
3	**VERIFY RELATED SERVICE INFORMATION AVAILABILITY** • Verify related Service Information availability. • Is any related Service Information available?	Yes	Perform repair or diagnosis according to the available Service Information. • If the vehicle is not repaired, go to the next step.
		No	Go to the next step.
4	**VERIFY THAT DTC IS PRESENT** • Clear the DTC using the M-MDS. (See 05-02B-6 ON-BOARD DIAGNOSTIC SYSTEM DTC INSPECTION [GW6A-EL, GW6AX-EL].) • Perform the following procedure to ensure that the DTC has been resolved: 1. Start the engine. 2. Verify that the ATF temperature is **20 °C {68 °F} or more**. • Perform the DTC inspection using the M-MDS. (See 05-02B-6 ON-BOARD DIAGNOSTIC SYSTEM DTC INSPECTION [GW6A-EL, GW6AX-EL].) • Is the DTC P0843:00 or P0878:00 present?	Yes	Go to the next step.
		No	DTC troubleshooting completed.
5	**INSPECT ATF LEVEL** • Inspect the ATF level. (See 05-17B-11 AUTOMATIC TRANSAXLE FLUID (ATF) INSPECTION [GW6A-EL, GW6AX-EL].) • Is there any malfunction?	Yes	Adjust the ATF level to the specification, then go to Step 7. (See 05-17B-12 AUTOMATIC TRANSAXLE FLUID (ATF) REPLACEMENT [GW6A-EL, GW6AX-EL].)
		No	DTC P0843:00 and P0878:00 are displayed in Step 4: • Repair or replace the wiring harness between TCM and oil pressure switch A, then go to Step 7. Only DTC P0878:00 is displayed in Step 4: • Go to the next step.

ON-BOARD DIAGNOSTIC [GW6A-EL, GW6AX-EL]

STEP	INSPECTION		ACTION
6	**INSPECT OIL PRESSURE SWITCH A CONNECTOR AND OIL PRESSURE SWITCH NO.4 CIRCUIT** • Visually inspect for poor connection and open circuit. • Is there any malfunction?	Yes	Repair or replace the wiring harness between TCM and oil pressure switch A, then go to the next step.
		No	Replace the oil pressure switch A, then go to the next step. (See 05-17B-20 OIL PRESSURE SWITCH REMOVAL/ INSTALLATION [GW6A-EL, GW6AX-EL].)
7	**PERFORM ON-BOARD DIAGNOSTIC TEST** • Perform the following procedure to ensure that the DTC has been resolved: 1. Start the engine. 2. Verify that the ATF temperature is **55 °C {131 °F} or more**. • Perform the on-board diagnostic test. (See 05-02B-8 ON-BOARD DIAGNOSTIC TEST MODE [GW6A-EL, GW6AX-EL].) • Are any DTCs present?	Yes	ATF amount in Step 5 is correct • Replace the automatic transaxle, then drive the vehicle to check it, and if there is no problem then the DTC troubleshooting is complete. (See 05-17B-29 AUTOMATIC TRANSAXLE REMOVAL/ INSTALLATION [GW6A-EL].) (See 05-17B-47 AUTOMATIC TRANSAXLE REMOVAL/ INSTALLATION [GW6AX-EL].) ATF amount adjusted in Step 5: • Replace the control valve body, then go to the next step. (See 05-17B-81 CONTROL VALVE BODY REMOVAL/ INSTALLATION [GW6A-EL, GW6AX-EL].)
		No	Drive the vehicle to check it, and if there is no problem then the DTC troubleshooting is complete.
8	**RE-PERFORM ON-BOARD DIAGNOSTIC TEST** • Perform the following procedure to ensure that the DTC has been resolved: 1. Start the engine. 2. Verify that the ATF temperature is **55 °C {131 °F} or more**. • Perform the on-board diagnostic test. (See 05-02B-8 ON-BOARD DIAGNOSTIC TEST MODE [GW6A-EL, GW6AX-EL].) • Are any DTCs present?	Yes	Go to the applicable DTC inspection. (See 05-02B-10 ON-BOARD DIAGNOSTIC SYSTEM DTC TABLE [GW6A-EL, GW6AX-EL].)
		No	DTC troubleshooting completed.

05

DTC P0882:00 [GW6A-EL, GW6AX-EL]

id050230823100

DTC P0882:00	TCM power supply voltage low
DETECTION CONDITION	• Under the following conditions, the TCM power supply voltage is **8—10.5 V or less** (varies with ATF temperature): — **5 s or more** has elapsed or battery voltage exceeds **11 V or more** for **0.2 s** since engine speed increases –**200 rpm or more** of target idle speed. — Selector lever position is D or R position. **Diagnostic support note** • The check engine light illuminates if the TCM detects the above malfunction condition during the first drive cycle. • The automatic transaxle warning light does not illuminate. • PENDING CODE is available. • FREEZE FRAME DATA is available. • The DTC is stored in the TCM memory.
FAIL-SAFE FUNCTION	• Set to emergency mode. • Inhibits learning control. • Inhibits manual mode. • Inhibits neutral idle control. • Inhibits i-stop control. • Inhibits AAS.
POSSIBLE CAUSE	• PCM DTC is stored. • Battery malfunction • Generator malfunction • TCM connector or terminals malfunction • TCM power supply circuit malfunction — Short to ground in wiring harness between TCM 15 A fuse and TCM terminal 1A — TCM 15 A fuse malfunction — Open circuit in wiring harness between battery positive terminal and TCM terminal 1A
SYSTEM WIRING DIAGRAM	—

ON-BOARD DIAGNOSTIC [GW6A-EL, GW6AX-EL]

Diagnostic procedure

STEP	INSPECTION		ACTION
1	**VERIFY FREEZE FRAME DATA/SNAPSHOT DATA HAS BEEN RECORDED** • Has the freeze frame data/snapshot data been recorded on the repair order?	Yes	Go to the next step.
		No	Record the freeze frame data/snapshot data on the repair order, then go to the next step.
2	**VERIFY RELATED SERVICE INFORMATION AVAILABILITY** • Verify related Service Information availability. • Is any related Service Information available?	Yes	Perform repair or diagnosis according to the available Service Information. • If the vehicle is not repaired, go to the next step.
		No	Go to the next step.
3	**CONFIRM PCM DTC** • Perform the PCM DTC inspection using the M-MDS. • Are any DTCs present?	Yes	Go to the applicable DTC inspection.
		No	Go to the next step.
4	**INSPECT BATTERY** • Inspect the battery. (See 01-17B-6 BATTERY INSPECTION [SKYACTIV-D 2.2].) • Is there any malfunction?	Yes	Recharge or replace the battery, then go to Step 8. (See 01-17B-8 BATTERY RECHARGING [SKYACTIV-D 2.2].) (See 01-17B-3 BATTERY REMOVAL/INSTALLATION [SKYACTIV-D 2.2].)
		No	Go to the next step.
5	**INSPECT GENERATOR** • Inspect the generator. (See 01-17B-16 GENERATOR INSPECTION [SKYACTIV-D 2.2].) • Is there any malfunction?	Yes	Replace the generator, then go to Step 8. (See 01-17B-14 GENERATOR REMOVAL/INSTALLATION [SKYACTIV-D 2.2].)
		No	Go to the next step.
6	**INSPECT TCM CONNECTOR AND TERMINALS** • Switch the ignition to off. • Disconnect the TCM connector. • Visually inspect the TCM connector and terminals. • Is there any malfunction?	Yes	Repair or replace the connector and/or terminals, then go to Step 8.
		No	Go to the next step.
7	**INSPECT TCM POWER SUPPLY CIRCUIT** • Make sure to reconnect all disconnected connectors. • Access the PID VPWR using the M-MDS. (See 05-02B-92 ON-BOARD DIAGNOSTIC SYSTEM PID/DATA MONITOR INSPECTION [GW6A-EL, GW6AX-EL].) • Is the PID value **B+**?	Yes	Go to the next step.
		No	Inspect the TCM 15 A fuse. • If the fuse is blown: — Repair or replace the wiring harness for a possible short to ground. — Replace the malfunctioning fuse. • If the fuse is deteriorated: — Replace the malfunctioning fuse. • If the fuse is normal: — Repair or replace the wiring harness for a possible open circuit. Go to the next step.
8	**VERIFY DTC TROUBLESHOOTING COMPLETED** • Make sure to reconnect all disconnected connectors. • Clear the DTC using the M-MDS. (See 05-02B-6 ON-BOARD DIAGNOSTIC SYSTEM DTC INSPECTION [GW6A-EL, GW6AX-EL].) • Perform the following procedure to ensure that the DTC has been resolved: 1. Drive the vehicle for **5 s or more** under the following condition: • Selector lever position: D or R position • Perform the DTC inspection using the M-MDS. (See 05-02B-6 ON-BOARD DIAGNOSTIC SYSTEM DTC INSPECTION [GW6A-EL, GW6AX-EL].) • Are any DTCs present?	Yes	Go to the applicable DTC inspection. (See 05-02B-10 ON-BOARD DIAGNOSTIC SYSTEM DTC TABLE [GW6A-EL, GW6AX-EL].)
		No	DTC troubleshooting completed.

ON-BOARD DIAGNOSTIC [GW6A-EL, GW6AX-EL]

DTC P0883:00 [GW6A-EL, GW6AX-EL]

id050230820100

DTC P0883:00	**TCM power supply voltage high**
DETECTION CONDITION	• TCM power supply voltage is **18 V or more** for **5 s**. **Diagnostic support note** • The check engine light illuminates if the TCM detects the above malfunction condition during the first drive cycle. • The automatic transaxle warning light does not illuminate. • PENDING CODE is available. • FREEZE FRAME DATA is available. • The DTC is stored in the TCM memory.
FAIL-SAFE FUNCTION	• Set to emergency mode. • Inhibits learning control. • Inhibits manual mode. • Inhibits neutral idle control. • Inhibits i-stop control. • Inhibits AAS.
POSSIBLE CAUSE	• PCM DTC is stored. • Battery malfunction • Generator malfunction
SYSTEM WIRING DIAGRAM	—

Diagnostic procedure

STEP	INSPECTION		ACTION
1	**VERIFY FREEZE FRAME DATA/SNAPSHOT DATA HAS BEEN RECORDED** • Has the freeze frame data/snapshot data been recorded on the repair order?	Yes	Go to the next step.
		No	Record the freeze frame data/snapshot data on the repair order, then go to the next step.
2	**VERIFY RELATED SERVICE INFORMATION AVAILABILITY** • Verify related Service Information availability. • Is any related Service Information available?	Yes	Perform repair or diagnosis according to the available Service Information. • If the vehicle is not repaired, go to the next step.
		No	Go to the next step.
3	**CONFIRM PCM DTC** • Perform the PCM DTC inspection using the M-MDS. • Are any DTCs present?	Yes	Go to the applicable DTC inspection.
		No	Go to the next step.
4	**INSPECT BATTERY** • Inspect the battery. (See 01-17B-6 BATTERY INSPECTION [SKYACTIV-D 2.2].) • Is there any malfunction?	Yes	Replace the battery, then go to Step 6. (See 01-17B-3 BATTERY REMOVAL/INSTALLATION [SKYACTIV-D 2.2].)
		No	Go to the next step.
5	**INSPECT GENERATOR** • Inspect the generator. (See 01-17B-16 GENERATOR INSPECTION [SKYACTIV-D 2.2].) • Is there any malfunction?	Yes	Replace the generator, then go to the next step. (See 01-17B-14 GENERATOR REMOVAL/INSTALLATION [SKYACTIV-D 2.2].)
		No	Go to the next step.
6	**VERIFY DTC TROUBLESHOOTING COMPLETED** • Clear the DTC using the M-MDS. (See 05-02B-6 ON-BOARD DIAGNOSTIC SYSTEM DTC INSPECTION [GW6A-EL, GW6AX-EL].) • Perform the following procedure to ensure that the DTC has been resolved: 1. Switch the ignition ON (engine off or on) and wait for **5 s or more**. • Perform the DTC inspection using the M-MDS. (See 05-02B-6 ON-BOARD DIAGNOSTIC SYSTEM DTC INSPECTION [GW6A-EL, GW6AX-EL].) • Are any DTCs present?	Yes	Go to the applicable DTC inspection. (See 05-02B-10 ON-BOARD DIAGNOSTIC SYSTEM DTC TABLE [GW6A-EL, GW6AX-EL].)
		No	DTC troubleshooting completed.

ON-BOARD DIAGNOSTIC [GW6A-EL, GW6AX-EL]

DTC P0C2C:00 [GW6A-EL, GW6AX-EL]

id050230832600

DTC P0C2C:00	Electric AT oil pump rotation malfunction
DETECTION CONDITION	• The actual electric AT oil pump rotation speed under the following conditions is **100 rpm or less** for a continuous **10 s**: — Electric AT oil pump rotation speed command value is **500 rpm or more**. — Electric AT oil pump relay is ON. — DTC P181F:00 is not recorded. **Diagnostic support note** • The MIL does not illuminate. • The shift position indicator light does not illuminate. • PENDING CODE is available. • FREEZE FRAME DATA is not available. • The DTC is stored in the TCM memory.
FAIL-SAFE FUNCTION	• Inhibits i-stop control.
POSSIBLE CAUSE	• Electric AT oil pump connector or terminals malfunction • TCM connector or terminals malfunction • Short to ground in wiring harness between electric AT oil pump terminal B and TCM terminal N • Short to power supply in wiring harness between electric AT oil pump terminal B and TCM terminal N • Open circuit in wiring harness between electric AT oil pump terminal B and TCM terminal N • Electric AT oil pump malfunction

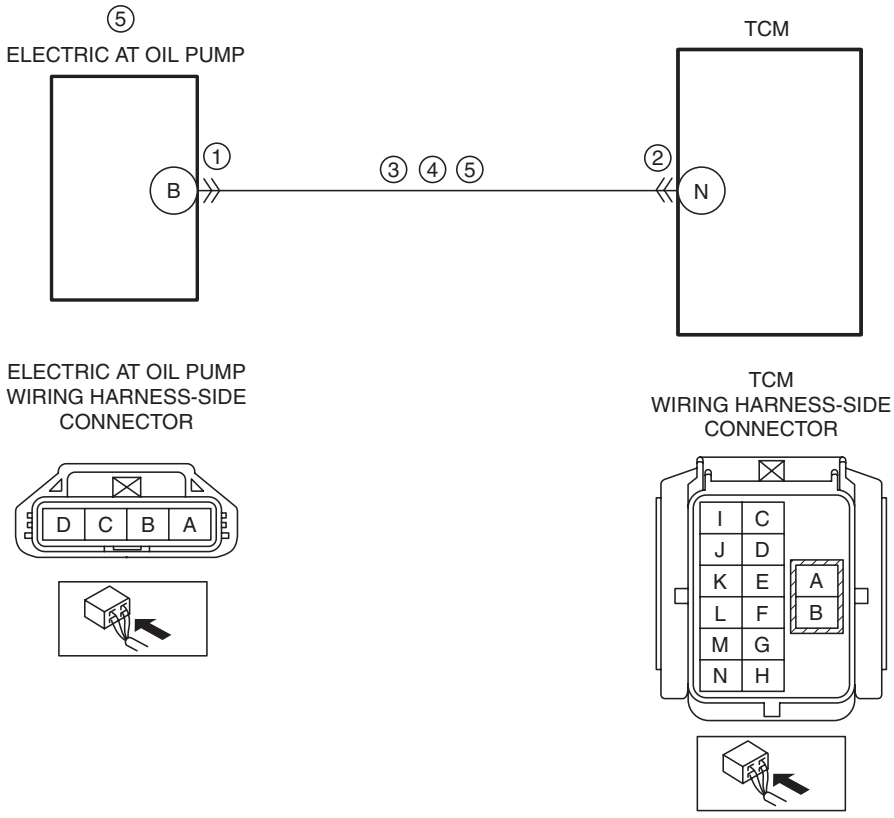

Diagnostic procedure

STEP	INSPECTION		ACTION
1	**VERIFY RELATED SERVICE INFORMATION AVAILABILITY** • Verify related Service Information availability. • Is any related Service Information available?	Yes	Perform repair or diagnosis according to the available Service Information. • If the vehicle is not repaired, go to the next step.
		No	Go to the next step.
2	**INSPECT ELECTRIC AT OIL PUMP CONNECTOR CONDITION** • Switch the ignition to off. • Disconnect the electric AT oil pump connector. • Inspect for poor connection (such as damaged/ pulled-out pins, corrosion). • Is there any malfunction?	Yes	Repair or replace the connector and/or terminals, then go to Step 7.
		No	Go to the next step.

ON-BOARD DIAGNOSTIC [GW6A-EL, GW6AX-EL]

STEP	INSPECTION		ACTION
3	**INSPECT TCM CONNECTOR CONDITION** • Disconnect the TCM connector. • Visually inspect the TCM connector and terminals. • Is there any malfunction?	Yes	Repair or replace the connector and/or terminals, then go to Step 7.
		No	Go to the next step.
4	**INSPECT ELECTRIC AT OIL PUMP CIRCUIT FOR SHORT TO GROUND** • Verify that the electric AT oil pump and TCM connectors are disconnected. • Inspect for continuity between electric AT oil pump terminal B (wiring harness-side) and body ground. • Is there continuity?	Yes	Repair or replace the wiring harness for a possible short to ground, then go to Step 7.
		No	Go to the next step.
5	**INSPECT ELECTRIC AT OIL PUMP CIRCUIT FOR SHORT TO POWER SUPPLY** • Verify that the electric AT oil pump and TCM connectors are disconnected. • Switch the ignition ON (engine on). • Measure the voltage at the electric AT oil pump terminal B (wiring harness-side). • Is the voltage **0 V**?	Yes	Go to the next step.
		No	Repair or replace the wiring harness for a possible short to power supply, then go to Step 7.
6	**INSPECT ELECTRIC AT OIL PUMP CIRCUIT FOR OPEN CIRCUIT** • Verify that the electric AT oil pump and TCM connectors are disconnected. • Switch the ignition to off. • Visually inspect the wiring harness between electric AT oil pump terminal B (wiring harness-side) and TCM terminal N (wiring harness-side). • Is there any malfunction?	Yes	Repair or replace the wiring harness for a possible open circuit, then go to the next step.
		No	Replace the electric AT oil pump, then go to the next step. (See 05-17B-28 ELECTRIC AT OIL PUMP REMOVAL/INSTALLATION [GW6A-EL, GW6AX-EL].)
7	**VERIFY DTC TROUBLESHOOTING COMPLETED** • Make sure to reconnect all disconnected connectors. • Clear the DTC using the M-MDS. (See 05-02B-6 ON-BOARD DIAGNOSTIC SYSTEM DTC INSPECTION [GW6A-EL, GW6AX-EL].) • Perform the following procedure to ensure that the DTC has been resolved: 1. Operates the i-stop. • Perform the DTC inspection using the M-MDS. (See 05-02B-6 ON-BOARD DIAGNOSTIC SYSTEM DTC INSPECTION [GW6A-EL, GW6AX-EL].) • Are any DTCs present?	Yes	Go to the applicable DTC inspection. (See 05-02B-10 ON-BOARD DIAGNOSTIC SYSTEM DTC TABLE [GW6A-EL, GW6AX-EL].)
		No	DTC troubleshooting completed.

ON-BOARD DIAGNOSTIC [GW6A-EL, GW6AX-EL]

DTC P1728:00 [GW6A-EL, GW6AX-EL]

id050230905100

DTC P1728:00	Clutch slippage
DETECTION CONDITION	• Under the following conditions, turbine/input shaft speed suddenly increases **300 rpm or more** for **1,450 ms**: — Engine is running. — Battery voltage is **8 V or more**. — Vehicle speed is **5 km/h {3 mph} or more**. — There is no difference between vehicle speed signal from DSC HU/CM and output shaft speed sensor signal. — Not shifting — Selector lever position is D position. — Turbine/Input shaft speed is **1,200 rpm or more**. — Oil pressure switch pattern (1st—6th) is normal. **Diagnostic support note** • The check engine light does not illuminate. • The automatic transaxle warning light does not illuminate. • PENDING CODE is available. • FREEZE FRAME DATA is not available. • The DTC is stored in the TCM memory.
FAIL-SAFE FUNCTION	• Inhibits malfunctioning gear. • Limits engine torque. • Maximizes the line pressure. • Inhibits learning control. • Inhibits manual mode. • Inhibits neutral idle control. • Inhibits i-stop control. • Inhibits AAS.
POSSIBLE CAUSE	• ATF is less than specified value • Clutch slippage
SYSTEM WIRING DIAGRAM	—

Diagnostic procedure

STEP	INSPECTION		ACTION
1	**VERIFY RELATED SERVICE INFORMATION AVAILABILITY** • Verify related Service Information availability. • Is any related Service Information available?	Yes	Perform repair or diagnosis according to the available Service Information. • If the vehicle is not repaired, go to the next step.
		No	Go to the next step.
2	**INSPECT ATF LEVEL** • Inspect the ATF level. (See 05-17B-11 AUTOMATIC TRANSAXLE FLUID (ATF) INSPECTION [GW6A-EL, GW6AX-EL].) • Is there any malfunction?	Yes	Adjust the ATF level to the specification, then go to the next step. (See 05-17B-12 AUTOMATIC TRANSAXLE FLUID (ATF) REPLACEMENT [GW6A-EL, GW6AX-EL].)
		No	Replace the automatic transaxle, then go to the next step. (See 05-17B-29 AUTOMATIC TRANSAXLE REMOVAL/INSTALLATION [GW6A-EL].) (See 05-17B-47 AUTOMATIC TRANSAXLE REMOVAL/INSTALLATION [GW6AX-EL].)
3	**VERIFY DTC TROUBLESHOOTING COMPLETED** • Clear the DTC using the M-MDS. (See 05-02B-6 ON-BOARD DIAGNOSTIC SYSTEM DTC INSPECTION [GW6A-EL, GW6AX-EL].) • Perform the following procedure to ensure that the DTC has been resolved: 1. Drive the vehicle without shifting for **20 min or more** under the following conditions: • Vehicle speed: **5 km/h {3 mph} or more** • Selector lever position: D position • Perform the DTC inspection using the M-MDS. (See 05-02B-6 ON-BOARD DIAGNOSTIC SYSTEM DTC INSPECTION [GW6A-EL, GW6AX-EL].) • Are any DTCs present?	Yes	ATF amount in Step 2 is correct • Go to the applicable DTC inspection. (See 05-02B-10 ON-BOARD DIAGNOSTIC SYSTEM DTC TABLE [GW6A-EL, GW6AX-EL].) ATF amount adjusted in Step 2: • Replace the automatic transaxle, then drive the vehicle to check it, and if there is no problem then the DTC troubleshooting is complete. (See 05-17B-29 AUTOMATIC TRANSAXLE REMOVAL/INSTALLATION [GW6A-EL].) (See 05-17B-47 AUTOMATIC TRANSAXLE REMOVAL/INSTALLATION [GW6AX-EL].)
		No	DTC troubleshooting completed.

ON-BOARD DIAGNOSTIC [GW6A-EL, GW6AX-EL]

DTC P1738:00 [GW6A-EL, GW6AX-EL]

id050230578400

DTC P1738:00	**Automatic transaxle internal malfunction**
DETECTION CONDITION	• Malfunction location cannot be determined based on combination of gear ratio malfunction and oil pressure switch pattern malfunction. **Diagnostic support note** • The check engine light does not illuminate. • The automatic transaxle warning light illuminates if the TCM detects the above malfunction condition in two consecutive drive cycles or in one drive cycle while the DTC for the same malfunction has been stored in the TCM. • PENDING CODE is available. • FREEZE FRAME DATA is not available. • The DTC is stored in the TCM memory.
FAIL-SAFE FUNCTION	• Inhibits learning control. • Inhibits manual mode. • Inhibits neutral idle control. • Inhibits i-stop control. • Inhibits AAS.
POSSIBLE CAUSE	• ATF is less than specified value • Automatic transaxle internal malfunction
SYSTEM WIRING DIAGRAM	—

Diagnostic procedure

STEP	INSPECTION		ACTION
1	**INSPECT ATF LEVEL** • Inspect the ATF level. (See 05-17B-11 AUTOMATIC TRANSAXLE FLUID (ATF) INSPECTION [GW6A-EL, GW6AX-EL].) • Is there any malfunction?	Yes	Adjust the ATF level to the specification, then go to the next step. (See 05-17B-12 AUTOMATIC TRANSAXLE FLUID (ATF) REPLACEMENT [GW6A-EL, GW6AX-EL].)
		No	Replace the automatic transaxle. (See 05-17B-29 AUTOMATIC TRANSAXLE REMOVAL/INSTALLATION [GW6A-EL].) (See 05-17B-47 AUTOMATIC TRANSAXLE REMOVAL/INSTALLATION [GW6AX-EL].)
2	**PERFORM ON-BOARD DIAGNOSTIC TEST TO SPECIFY MALFUNCTIONING PART** **Note** • If only DTCs in which the malfunctioning part is not confirmed are displayed as in the following DTCs, all of the diagnosis may not have been completed. In such cases, the malfunction cause can be determined by performing the on-board diagnostic test. • Perform the on-board diagnostic test. (See 05-02B-8 ON-BOARD DIAGNOSTIC TEST MODE [GW6A-EL, GW6AX-EL].) • Are any DTCs present?	Yes	Replace the automatic transaxle. (See 05-17B-29 AUTOMATIC TRANSAXLE REMOVAL/INSTALLATION [GW6A-EL].) (See 05-17B-47 AUTOMATIC TRANSAXLE REMOVAL/INSTALLATION [GW6AX-EL].)
		No	Drive the vehicle for **10 min or more**. DTCs are displayed: • Replace the automatic transaxle. (See 05-17B-29 AUTOMATIC TRANSAXLE REMOVAL/INSTALLATION [GW6A-EL].) (See 05-17B-47 AUTOMATIC TRANSAXLE REMOVAL/INSTALLATION [GW6AX-EL].) No DTCs are displayed: • DTC troubleshooting completed.

ON-BOARD DIAGNOSTIC [GW6A-EL, GW6AX-EL]

DTC P1784:00 [GW6A-EL, GW6AX-EL]

id050230905200

DTC P1784:00	**Hi cut valve stuck off/R-3-5 cut valve stuck on**
DETECTION CONDITION	• Under the following conditions, hi cut valve stuck-off or R-3-5 cut valve stuck-on detected by combination of gear ratio malfunction and oil pressure switch pattern malfunction: — Engine is running. — Battery voltage is **8 V or more**. — ATF temperature is **20 °C {68 °F} or more**. **Diagnostic support note** • The check engine light does not illuminate. • The automatic transaxle warning light illuminates if the TCM detects the above malfunction condition in two consecutive drive cycles or in one drive cycle while the DTC for the same malfunction has been stored in the TCM. • PENDING CODE is available. • FREEZE FRAME DATA is not available. • The DTC is stored in the TCM memory.
FAIL-SAFE FUNCTION	• Inhibits malfunctioning gear. • Limits engine torque. • Inhibits learning control. • Inhibits neutral idle control. • Inhibits i-stop control.
POSSIBLE CAUSE	• ATF is less than specified value • Hi cut valve malfunction • R-3-5 cut valve malfunction • Clutch burnt
SYSTEM WIRING DIAGRAM	—

Diagnostic procedure

STEP	INSPECTION		ACTION
1	**VERIFY RELATED SERVICE INFORMATION AVAILABILITY** • Verify related Service Information availability. • Is any related Service Information available?	Yes	Perform repair or diagnosis according to the available Service Information. • If the vehicle is not repaired, go to the next step.
		No	Go to the next step.
2	**INSPECT ATF LEVEL** • Inspect the ATF level. (See 05-17B-11 AUTOMATIC TRANSAXLE FLUID (ATF) INSPECTION [GW6A-EL, GW6AX-EL].) • Is there any malfunction?	Yes	Adjust the ATF level to the specification, then go to the next step. (See 05-17B-12 AUTOMATIC TRANSAXLE FLUID (ATF) REPLACEMENT [GW6A-EL, GW6AX-EL].)
		No	Replace the automatic transaxle. (See 05-17B-29 AUTOMATIC TRANSAXLE REMOVAL/INSTALLATION [GW6A-EL].) (See 05-17B-47 AUTOMATIC TRANSAXLE REMOVAL/INSTALLATION [GW6AX-EL].)
3	**PERFORM STALL TEST TO VERIFY THAT DTC** • Clear the DTC using the M-MDS. (See 05-02B-6 ON-BOARD DIAGNOSTIC SYSTEM DTC INSPECTION [GW6A-EL, GW6AX-EL].) • Perform the stall test in the reverse (R) position. (See 05-17B-4 MECHANICAL SYSTEM TEST [GW6A-EL, GW6AX-EL].) • Perform the DTC inspection using the M-MDS. (See 05-02B-6 ON-BOARD DIAGNOSTIC SYSTEM DTC INSPECTION [GW6A-EL, GW6AX-EL].) • Are any DTCs present?	Yes	Replace the automatic transaxle. (See 05-17B-29 AUTOMATIC TRANSAXLE REMOVAL/INSTALLATION [GW6A-EL].) (See 05-17B-47 AUTOMATIC TRANSAXLE REMOVAL/INSTALLATION [GW6AX-EL].)
		No	Go to the next step.

ON-BOARD DIAGNOSTIC [GW6A-EL, GW6AX-EL]

STEP	INSPECTION		ACTION
4	**PERFORM ON-BOARD DIAGNOSTIC TEST** • Perform the on-board diagnostic test. (See 05-02B-8 ON-BOARD DIAGNOSTIC TEST MODE [GW6A-EL, GW6AX-EL].) • Are any DTCs present?	Yes	Replace the automatic transaxle. (See 05-17B-29 AUTOMATIC TRANSAXLE REMOVAL/INSTALLATION [GW6A-EL].) (See 05-17B-47 AUTOMATIC TRANSAXLE REMOVAL/INSTALLATION [GW6AX-EL].)
		No	Drive the vehicle for **10 min or more**. DTCs are displayed: • Replace the automatic transaxle. (See 05-17B-29 AUTOMATIC TRANSAXLE REMOVAL/INSTALLATION [GW6A-EL].) (See 05-17B-47 AUTOMATIC TRANSAXLE REMOVAL/INSTALLATION [GW6AX-EL].) No DTCs are displayed: • DTC troubleshooting completed.

DTC P181F:00 [GW6A-EL, GW6AX-EL]

id050230960600

DTC P181F:00	**Electric AT oil pump/Electric AT oil pump relay circuit malfunction**
DETECTION CONDITION	• If the TCM detects any of the following conditions for a continuous **5 s**: — Electric AT oil pump circuit has a malfunction. — Electric AT oil pump relay circuit has a malfunction. **Diagnostic support note** • The MIL does not illuminate. • The shift position indicator light does not illuminate. • PENDING CODE is available. • FREEZE FRAME DATA is not available. • The DTC is stored in the TCM memory.
FAIL-SAFE FUNCTION	• Inhibits i-stop control.
POSSIBLE CAUSE	• Electric AT oil pump relay malfunction • Short to ground in wiring harness between electric AT oil pump relay terminal A and electric AT oil pump relay terminal D • Open circuit in wiring harness between electric AT oil pump relay terminal A and electric AT oil pump relay terminal D • Electric AT oil pump connector or terminals malfunction • Open circuit in wiring harness between electric AT oil pump terminal A and body ground • Short to ground or open circuit in wiring harness between battery positive terminal and electric AT oil pump terminal D • TCM connector or terminals malfunction • Short to ground in wiring harness between the following terminals: — Electric AT oil pump relay terminal E—TCM terminal K — Electric AT oil pump terminal C—TCM terminal L • Short to power supply in wiring harness between electric AT oil pump terminal C and TCM terminal L • Open circuit in wiring harness between the following terminals: — Electric AT oil pump relay terminal E—TCM terminal K — Electric AT oil pump terminal C—TCM terminal L • Electric AT oil pump malfunction • TCM malfunction

ON-BOARD DIAGNOSTIC [GW6A-EL, GW6AX-EL]

DTC P181F:00	Electric AT oil pump/Electric AT oil pump relay circuit malfunction

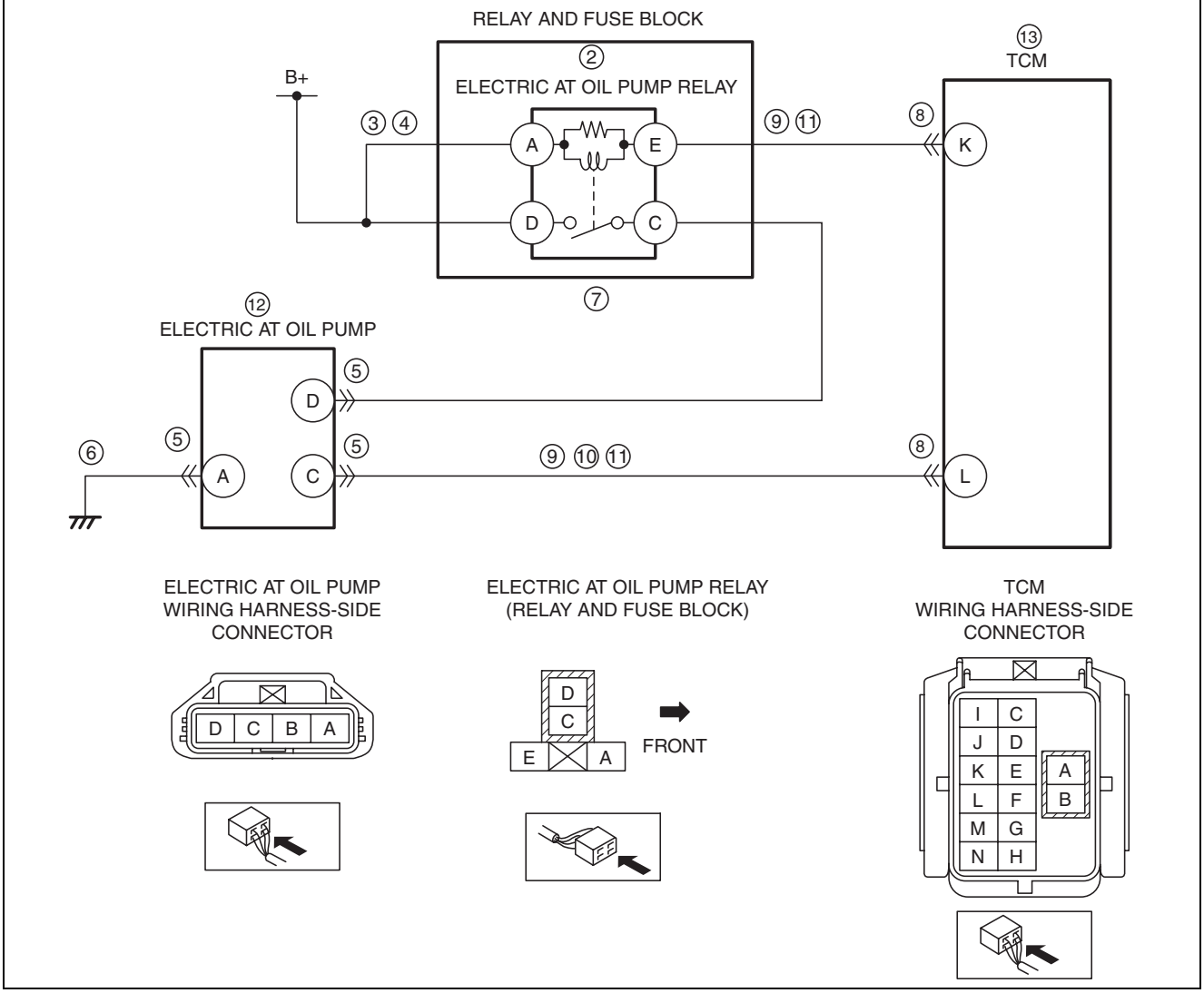

Diagnostic procedure

STEP	INSPECTION		ACTION
1	**VERIFY RELATED SERVICE INFORMATION AVAILABILITY** • Verify related Service Information availability. • Is any related Service Information available?	Yes	Perform repair or diagnosis according to the available Service Information. • If the vehicle is not repaired, go to the next step.
		No	Go to the next step.
2	**INSPECT ELECTRIC AT OIL PUMP RELAY** • Switch the ignition to off. • Remove the electric AT oil pump relay. (See 09-21-28 RELAY LOCATION.) • Inspect the electric AT oil pump relay. (See 09-21-29 RELAY INSPECTION.) • Is there any malfunction?	Yes	Replace the electric AT oil pump relay, then go to Step 13. (See 09-21-28 RELAY LOCATION.)
		No	Go to the next step.
3	**INSPECT ELECTRIC AT OIL PUMP RELAY CIRCUIT FOR SHORT TO GROUND** • Verify that the electric AT oil pump relay is removed. • Inspect for continuity between electric AT oil pump relay terminal A (wiring harness-side) and body ground. • Is there continuity?	Yes	Repair or replace the wiring harness for a possible short to ground, then go to Step 13.
		No	Go to the next step.

ON-BOARD DIAGNOSTIC [GW6A-EL, GW6AX-EL]

STEP	INSPECTION		ACTION
4	**INSPECT ELECTRIC AT OIL PUMP RELAY CIRCUIT FOR OPEN CIRCUIT** • Verify that the electric AT oil pump relay is removed. • Inspect for continuity between electric AT oil pump relay terminal A (wiring harness-side) and electric AT oil pump relay terminal D (wiring harness-side). • Is there continuity?	Yes	Install the electric AT oil pump relay, then go to the next step. (See 09-21-28 RELAY LOCATION.)
		No	Repair or replace the wiring harness for a possible open circuit, then go to Step 13.
5	**INSPECT ELECTRIC AT OIL PUMP CONNECTOR CONDITION** • Disconnect the electric AT oil pump connector. • Inspect for poor connection (such as damaged/pulled-out pins, corrosion). • Is there any malfunction	Yes	Repair or replace the connector and/or terminals, then go to Step 13.
		No	Go to the next step.
6	**INSPECT ELECTRIC AT OIL PUMP GROUND CIRCUIT FOR OPEN CIRCUIT** • Verify that the electric AT oil pump connector is disconnected. • Inspect for continuity between electric AT oil pump terminal A (wiring harness-side) and body ground. • Is there continuity?	Yes	Go to the next step.
		No	Repair or replace the wiring harness for a possible open circuit, then go to Step 13.
7	**INSPECT ELECTRIC AT OIL PUMP POWER SUPPLY CIRCUIT FOR SHORT TO GROUND AND OPEN CIRCUIT** • Verify that the electric AT oil pump connector is disconnected. • Switch the electric AT oil pump relay to ON using the simulation item EOP_RLY. (See 05-02B-101 ON-BOARD DIAGNOSTIC SYSTEM SIMULATION INSPECTION [GW6A-EL, GW6AX-EL].) • Measure the voltage at the electric AT oil pump terminal D (wiring harness-side). • Is the voltage **0 V**?	Yes	Repair or replace the wiring harness for a possible short to ground or open circuit, then go to Step 13.
		No	Go to the next step.
8	**INSPECT TCM CONNECTOR CONDITION** • Disconnect the TCM connector. • Visually inspect the TCM connector and terminals. • Is there any malfunction?	Yes	Repair or replace the connector and/or terminals, then go to Step 13.
		No	Go to the next step.
9	**INSPECT ELECTRIC AT OIL PUMP CIRCUIT FOR SHORT TO GROUND** • Verify that the electric AT oil pump and TCM connectors are disconnected. • Inspect for continuity between the following terminals (wiring harness-side) and body ground: — Electric AT oil pump relay terminal E — Electric AT oil pump terminal C • Is there continuity?	Yes	Repair or replace the wiring harness for a possible short to ground, then go to Step 13.
		No	Go to the next step.
10	**INSPECT ELECTRIC AT OIL PUMP CIRCUIT FOR SHORT TO POWER SUPPLY** • Verify that the electric AT oil pump and TCM connectors are disconnected. • Switch the ignition ON (engine on). • Measure the voltage at the electric AT oil pump terminal C (wiring harness-side). • Is the voltage **0 V**?	Yes	Go to the next step.
		No	Repair or replace the wiring harness for a possible short to power supply, then go to Step 13.

ON-BOARD DIAGNOSTIC [GW6A-EL, GW6AX-EL]

STEP	INSPECTION		ACTION
11	**INSPECT ELECTRIC AT OIL PUMP CIRCUIT FOR OPEN CIRCUIT** • Verify that the electric AT oil pump and TCM connectors are disconnected. • Switch the ignition to off. • Visually inspect the wiring harness between the following terminals (wiring harness-side): — Electric AT oil pump relay terminal E—TCM terminal K — Electric AT oil pump terminal C—TCM terminal L • Is there any malfunction?	Yes	Repair or replace the wiring harness for a possible open circuit, then go to the next step.
		No	Go to the next step.
12	**INSPECT ELECTRIC AT OIL PUMP** • Remove the electric AT oil pump. (See 05-17B-28 ELECTRIC AT OIL PUMP REMOVAL/INSTALLATION [GW6A-EL, GW6AX-EL].) • Verify that the resistance according to the following: — Between electric AT oil pump terminal D and A: **Approx. 18.2 Kilohms** — Between electric AT oil pump terminal C and A: **Approx. 21.5 Kilohms** • Is the resistance normal?	Yes	Go to the next step.
		No	Replace the electric AT oil pump, then go to the next step. (See 05-17B-28 ELECTRIC AT OIL PUMP REMOVAL/ INSTALLATION [GW6A-EL, GW6AX-EL].)
13	**VERIFY DTC TROUBLESHOOTING COMPLETED** • Make sure to reconnect all disconnected connectors. • Clear the DTC using the M-MDS. (See 05-02B-6 ON-BOARD DIAGNOSTIC SYSTEM DTC INSPECTION [GW6A-EL, GW6AX-EL].) • Perform the following procedure to ensure that the DTC has been resolved: 1. Operates the i-stop. • Perform the DTC inspection using the M-MDS. (See 05-02B-6 ON-BOARD DIAGNOSTIC SYSTEM DTC INSPECTION [GW6A-EL, GW6AX-EL].) • Is the DTC P181F:00 present?	Yes	Replace the control valve body, then go to the next step. (See 05-17B-81 CONTROL VALVE BODY REMOVAL/ INSTALLATION [GW6A-EL, GW6AX-EL].)
		No	Go to the next step.
14	**VERIFY NO DTC HAS BEEN PRESENTED** • Are any DTCs present?	Yes	Go to the applicable DTC inspection. (See 05-02B-10 ON-BOARD DIAGNOSTIC SYSTEM DTC TABLE [GW6A-EL, GW6AX-EL].)
		No	DTC troubleshooting completed.

ON-BOARD DIAGNOSTIC [GW6A-EL, GW6AX-EL]

DTC P2530:00 [GW6A-EL, GW6AX-EL]

id050230310000

DTC P2530:00	**Ignition switch stuck off**
DETECTION CONDITION	• If the IG ON time count of the instrument cluster proceeds **5 s** under the following condition: — Ignition switch signal off
FAIL-SAFE FUNCTION	—
POSSIBLE CAUSE	• Start stop unit malfunction — Ignition switch signal output stuck off • Wiring harness malfunction — Short or open signal in ignition switch — Ignition switch signal terminal (start stop unit terminal 1B) malfunction • Control valve body malfunction — Ignition switch signal terminal (start stop unit terminal 1B) pin deformity
SYSTEM WIRING DIAGRAM	—

Diagnostic procedure

STEP	INSPECTION		ACTION
1	**VERIFY FREEZE FRAME DATA/SNAPSHOT DATA HAS BEEN RECORDED** • Has the freeze frame data/snapshot data been recorded on the repair order?	Yes	Go to the next step.
		No	Record the freeze frame data/snapshot data on the repair order, then go to the next step.
2	**VERIFY RELATED SERVICE INFORMATION AVAILABILITY** • Verify related Service Information availability. • Is any related Service Information available?	Yes	Perform repair or diagnosis according to the available Service Information. • If the vehicle is not repaired, go to the next step.
		No	Go to the next step.
3	**VERIFY STORED DTC IN START STOP UNIT** • Perform the start stop unit DTC inspection using the M-MDS. (See 09-02C-6 DTC INSPECTION [START STOP UNIT].) • Are any DTCs present?	Yes	Go to the applicable DTC inspection. (See 09-02C-8 DTC TABLE [START STOP UNIT].)
		No	Go to the next step.
4	**INSPECT THE IGNITION CIRCUIT FOR OPEN CIRCUIT** • Switch the ignition to off. • Disconnect the negative battery cable. • Verify that the following connector are disconnected. — IG1 relay — Start stop unit • Inspect for continuity between the following terminals (wiring harness-side): — IG1 relay terminal C—Start stop unit terminal 1B • Is there continuity?	Yes	Go to the next step.
		No	Repair or replace the wiring harness for a possible open circuit, then go to Step 6.
5	**VERIFY THE ENGINE START** • Reconnect all disconnected connectors. • Reconnect the negative battery cable. • Does the engine start normally?	Yes	Replace the control valve body, then go to the next step. (See 05-17B-81 CONTROL VALVE BODY REMOVAL/ INSTALLATION [GW6A-EL, GW6AX-EL].)
		No	Replace the start stop unit, then go to the next step. (See 09-14-54 START STOP UNIT REMOVAL/ INSTALLATION.)

ON-BOARD DIAGNOSTIC [GW6A-EL, GW6AX-EL]

STEP	INSPECTION		ACTION
6	**VERIFY DTC TROUBLESHOOTING COMPLETED** • Clear the DTC using the M-MDS. (See 05-02B-6 ON-BOARD DIAGNOSTIC SYSTEM DTC INSPECTION [GW6A-EL, GW6AX-EL].) • Perform the following procedure to ensure that the DTC has been resolved: 1. Switch the ignition ON (engine off or on) and wait for **10 s or more**. 2. Switch the ignition to off. • Perform the DTC inspection using the M-MDS. (See 05-02B-6 ON-BOARD DIAGNOSTIC SYSTEM DTC INSPECTION [GW6A-EL, GW6AX-EL].) • Are any DTCs present?	Yes	Go to the applicable DTC inspection. (See 05-02B-10 ON-BOARD DIAGNOSTIC SYSTEM DTC TABLE [GW6A-EL, GW6AX-EL].)
		No	DTC troubleshooting completed.

DTC P2712:00 [GW6A-EL, GW6AX-EL]

id050230960500

DTC P2712:00	**Oil pump shift valve stuck**
DETECTION CONDITION	• Under the following conditions, oil pressure switch No.1 OFF output continues for **10 s**: — DTC P0753:00, P0C2C:00 and P181F:00 are not recorded. — During i-stop operation — Selector lever position is D or N position. — During electric AT oil pump operation — Oil pressure switch, low clutch and transaxle range sensor are normal. — Rate of speed change normal **Diagnostic support note** • The MIL does not illuminate. • The shift position indicator light does not illuminate. • PENDING CODE is available. • FREEZE FRAME DATA is not available. • The DTC is stored in the TCM memory.
FAIL-SAFE FUNCTION	• Inhibits i-stop control.
POSSIBLE CAUSE	• Oil pump shift valve stuck
SYSTEM WIRING DIAGRAM	—

ON-BOARD DIAGNOSTIC [GW6A-EL, GW6AX-EL]

Diagnostic procedure

STEP	INSPECTION		ACTION
1	**VERIFY RELATED SERVICE INFORMATION AVAILABILITY** • Verify related Service Information availability. • Is any related Service Information available?	Yes	Perform repair or diagnosis according to the available Service Information. • If the vehicle is not repaired, replace the control valve body. (See 05-17B-81 CONTROL VALVE BODY REMOVAL/ INSTALLATION [GW6A-EL, GW6AX-EL].)
		No	Replace the control valve body, then go to the next step. (See 05-17B-81 CONTROL VALVE BODY REMOVAL/ INSTALLATION [GW6A-EL, GW6AX-EL].)
2	**VERIFY DTC TROUBLESHOOTING COMPLETED** • Clear the DTC using the M-MDS. (See 05-02B-6 ON-BOARD DIAGNOSTIC SYSTEM DTC INSPECTION [GW6A-EL, GW6AX-EL].) • Perform the following procedure to ensure that the DTC has been resolved: 1. Operates the i-stop. • Perform the DTC inspection using the M-MDS. (See 05-02B-6 ON-BOARD DIAGNOSTIC SYSTEM DTC INSPECTION [GW6A-EL, GW6AX-EL].) • Are any DTCs present?	Yes	Go to the applicable DTC inspection. (See 05-02B-10 ON-BOARD DIAGNOSTIC SYSTEM DTC TABLE [GW6A-EL, GW6AX-EL].)
		No	DTC troubleshooting completed.

05

DTC U0073:00, U0100:00, U0121:00, U0141:00, U0155:00 [GW6A-EL, GW6AX-EL]

id050230905500

DTC U0073:00	CAN system communication error (HS CAN)
DETECTION CONDITION	• Under the following condition, a communication error (HS CAN) occurs: — Battery voltage is **10 V or more**. **Diagnostic support note** • The check engine light does not illuminate. • The automatic transaxle warning light does not illuminate. • PENDING CODE is available. • FREEZE FRAME DATA is not available. • The DTC is stored in the TCM memory.
FAIL-SAFE FUNCTION	• Inhibits learning control. • Inhibits neutral idle control. • Inhibits i-stop control. • Inhibits AAS.
POSSIBLE CAUSE	• CAN bus communication line malfunction (HS CAN) • TCM malfunction
SYSTEM WIRING DIAGRAM	—

ON-BOARD DIAGNOSTIC [GW6A-EL, GW6AX-EL]

DTC U0100:00	Communication error to PCM (HS CAN)
DETECTION CONDITION	• Under the following condition, the TCM cannot receive the signal from PCM (HS CAN): — Battery voltage is **10 V or more**. **Diagnostic support note** • The check engine light illuminates if the TCM detects the above malfunction condition during the first drive cycle. • The automatic transaxle warning light does not illuminate. • PENDING CODE is available. • FREEZE FRAME DATA is available. • The DTC is stored in the TCM memory.
FAIL-SAFE FUNCTION	• Inhibits learning control. • Inhibits neutral idle control. • Inhibits i-stop control. • Inhibits AAS.
POSSIBLE CAUSE	• CAN communication line between PCM and TCM malfunction (HS CAN) • TCM malfunction
SYSTEM WIRING DIAGRAM	—

DTC U0121:00	Communication error to DSC HU/CM
DETECTION CONDITION	• Under the following condition, the TCM cannot receive the signal from DSC HU/CM: — Battery voltage is **10 V or more**. **Diagnostic support note** • The check engine light illuminates if the TCM detects the above malfunction condition during the first drive cycle. • The automatic transaxle warning light does not illuminate. • PENDING CODE is available. • FREEZE FRAME DATA is available. • The DTC is stored in the TCM memory.
FAIL-SAFE FUNCTION	• Inhibits learning control. • Inhibits neutral idle control. • Inhibits i-stop control. • Inhibits AAS.
POSSIBLE CAUSE	• CAN communication line between TCM and DSC HU/CM malfunction • TCM malfunction
SYSTEM WIRING DIAGRAM	—

DTC U0141:00	Communication error to front body control module (FBCM)
DETECTION CONDITION	• Under the following condition, the TCM cannot receive the signal from front body control module (FBCM): — Battery voltage is **10 V or more**. **Diagnostic support note** • The check engine light does not illuminate. • The automatic transaxle warning light does not illuminate. • PENDING CODE is available. • FREEZE FRAME DATA is not available. • The DTC is stored in the TCM memory.
FAIL-SAFE FUNCTION	• Inhibits learning control. • Inhibits neutral idle control. • Inhibits i-stop control.
POSSIBLE CAUSE	• CAN communication line between TCM and front body control module (FBCM) malfunction • TCM malfunction
SYSTEM WIRING DIAGRAM	—

ON-BOARD DIAGNOSTIC [GW6A-EL, GW6AX-EL]

DTC U0155:00	**Communication error to instrument cluster**
DETECTION CONDITION	• Under the following condition, the TCM cannot receive the signal from instrument cluster: — Battery voltage is **10 V or more**. **Diagnostic support note** • The check engine light illuminates if the TCM detects the above malfunction condition during the first drive cycle. • The automatic transaxle warning light does not illuminate. • PENDING CODE is available. • FREEZE FRAME DATA is available. • The DTC is stored in the TCM memory.
FAIL-SAFE FUNCTION	• Inhibits learning control. • Inhibits manual mode. • Inhibits neutral idle control. • Inhibits i-stop control.
POSSIBLE CAUSE	• CAN communication line between TCM and instrument cluster malfunction • TCM malfunction
SYSTEM WIRING DIAGRAM	—

Diagnostic Procedure

- Inspect according to the diagnostic procedure in ON-BOARD DIAGNOSTIC [MULTIPLEX COMMUNICATION SYSTEM]. (See 10-02C-1 FOREWORD [SKYACTIV-D 2.2 (L.H.D.)].) (See 10-02D-1 FOREWORD [SKYACTIV-D 2.2 (R.H.D.)].)

05

DTC U0074:00 [GW6A-EL, GW6AX-EL]

id050230908000

DTC U0074:00	**CAN system communication error (local CAN between TCM and PCM)**
DETECTION CONDITION	• Under the following condition, a communication error (local CAN between TCM and PCM) occurs: — Battery voltage is **10 V or more**. **Diagnostic support note** • The check engine light does not illuminate. • The automatic transaxle warning light does not illuminate. • PENDING CODE is available. • FREEZE FRAME DATA is not available. • The DTC is stored in the TCM memory.
FAIL-SAFE FUNCTION	• Set to TCC control. • Inhibits learning control. • Inhibits manual mode. • Inhibits neutral idle control. • Inhibits i-stop control. • Inhibits AAS. • Inhibits 5GR and 6GR. • Inhibits shift down when the accelerator pedal is depressed.
POSSIBLE CAUSE	• CAN communication line between TCM and PCM (local CAN between TCM and PCM) malfunction • PCM DTC is stored. • TCM malfunction
SYSTEM WIRING DIAGRAM	—

ON-BOARD DIAGNOSTIC [GW6A-EL, GW6AX-EL]

Diagnostic procedure

STEP	INSPECTION		ACTION
1	**VERIFY RELATED SERVICE INFORMATION AVAILABILITY** • Verify related Service Information availability. • Is any related Service Information available?	Yes	Perform repair or diagnosis according to the available Service Information. • If the vehicle is not repaired, go to the next step.
		No	Go to the next step.
2	**CONFIRM PCM DTC** • Perform the PCM DTC inspection using the M-MDS. • Are any DTCs present?	Yes	DTC U0074:00 is displayed: • CAN communication line can be considered the cause. — Repair or replace the wiring harness between TCM and PCM. DTC other than U0074:00 is displayed: • Go to the applicable DTC inspection.
		No	Go to the next step.
3	**VERIFY DTC TROUBLESHOOTING COMPLETED** • Clear the DTC using the M-MDS. (See 05-02B-6 ON-BOARD DIAGNOSTIC SYSTEM DTC INSPECTION [GW6A-EL, GW6AX-EL].) • Perform the following procedure to ensure that the DTC has been resolved: — Switch the ignition ON (engine off or on). • Perform the DTC inspection using the M-MDS. (See 05-02B-6 ON-BOARD DIAGNOSTIC SYSTEM DTC INSPECTION [GW6A-EL, GW6AX-EL].) • Is the same DTC present?	Yes	Replace the control valve body, then go to the next step. (See 05-17B-81 CONTROL VALVE BODY REMOVAL/INSTALLATION [GW6A-EL, GW6AX-EL].)
		No	Go to the next step.
4	**VERIFY NO DTC HAS BEEN PRESENTED** • Are any DTCs present?	Yes	Go to the applicable DTC inspection. (See 05-02B-10 ON-BOARD DIAGNOSTIC SYSTEM DTC TABLE [GW6A-EL, GW6AX-EL].)
		No	DTC troubleshooting completed.

DTC U0115:00 [GW6A-EL, GW6AX-EL]

id050230908100

DTC U0115:00	**Communication error to PCM (local CAN between TCM and PCM)**
DETECTION CONDITION	• Under the following condition, the TCM cannot receive the signal from PCM (local CAN between TCM and PCM): — Battery voltage is **10 V or more**. **Diagnostic support note** • The check engine light illuminates if the TCM detects the above malfunction condition during the first drive cycle. • The automatic transaxle warning light does not illuminate. • PENDING CODE is available. • FREEZE FRAME DATA is available. • The DTC is stored in the TCM memory.
FAIL-SAFE FUNCTION	• Set to TCC control. • Inhibits learning control. • Inhibits manual mode. • Inhibits neutral idle control. • Inhibits i-stop control. • Inhibits AAS. • Inhibits 5GR and 6GR. • Inhibits shift down when the accelerator pedal is depressed.
POSSIBLE CAUSE	• PCM DTC is stored. • PCM malfunction • TCM malfunction
SYSTEM WIRING DIAGRAM	—

ON-BOARD DIAGNOSTIC [GW6A-EL, GW6AX-EL]

Diagnostic procedure

STEP	INSPECTION		ACTION
1	**VERIFY FREEZE FRAME DATA/SNAPSHOT DATA HAS BEEN RECORDED** • Has the freeze frame data/snapshot data been recorded on the repair order?	Yes	Go to the next step.
		No	Record the freeze frame data/snapshot data on the repair order, then go to the next step.
2	**VERIFY RELATED SERVICE INFORMATION AVAILABILITY** • Verify related Service Information availability. • Is any related Service Information available?	Yes	Perform repair or diagnosis according to the available Service Information. • If the vehicle is not repaired, go to the next step.
		No	Go to the next step.
3	**CONFIRM PCM DTC** • Perform the PCM DTC inspection using the M-MDS. • Are any DTCs present?	Yes	Go to the applicable DTC inspection.
		No	PCM can be considered the cause. • Replace the PCM, then go to the next step.
4	**VERIFY DTC TROUBLESHOOTING COMPLETED** • Clear the DTC using the M-MDS. (See 05-02B-6 ON-BOARD DIAGNOSTIC SYSTEM DTC INSPECTION [GW6A-EL, GW6AX-EL].) • Perform the following procedure to ensure that the DTC has been resolved: — Switch the ignition ON (engine off or on). • Perform the DTC inspection using the M-MDS. (See 05-02B-6 ON-BOARD DIAGNOSTIC SYSTEM DTC INSPECTION [GW6A-EL, GW6AX-EL].) • Is the same DTC present?	Yes	Replace the control valve body, then go to the next step. (See 05-17B-81 CONTROL VALVE BODY REMOVAL/INSTALLATION [GW6A-EL, GW6AX-EL].)
		No	Go to the next step.
5	**VERIFY NO DTC HAS BEEN PRESENTED** • Are any DTCs present?	Yes	Go to the applicable DTC inspection. (See 05-02B-10 ON-BOARD DIAGNOSTIC SYSTEM DTC TABLE [GW6A-EL, GW6AX-EL].)
		No	DTC troubleshooting completed.

DTC U0442:00 [GW6A-EL, GW6AX-EL]

id050230905300

DTC U0442:00	**Invalid data received from PCM (local CAN between TCM and PCM)**
DETECTION CONDITION	• Under the following condition, the TCM detects the invalid PCM signal for **0.5 s**: — Battery voltage is **10 V or more**. **Diagnostic support note** • The check engine light does not illuminate. • The automatic transaxle warning light does not illuminate. • PENDING CODE is available. • FREEZE FRAME DATA is not available. • The DTC is stored in the TCM memory.
FAIL-SAFE FUNCTION	• Set to TCC control. • Inhibits learning control. • Inhibits manual mode. • Inhibits neutral idle control. • Inhibits 5GR and 6GR. • Inhibits shift down when the accelerator pedal is depressed.
POSSIBLE CAUSE	• PCM DTC is stored.
SYSTEM WIRING DIAGRAM	—

ON-BOARD DIAGNOSTIC [GW6A-EL, GW6AX-EL]

Diagnostic procedure

STEP	INSPECTION		ACTION
1	**VERIFY RELATED SERVICE INFORMATION AVAILABILITY** • Verify related Service Information availability. • Is any related Service Information available?	Yes	Perform repair or diagnosis according to the available Service Information. • If the vehicle is not repaired, go to the next step.
		No	Go to the next step.
2	**CONFIRM PCM DTC** • Perform the PCM DTC inspection using the M-MDS. • Are any DTCs present?	Yes	Go to the applicable DTC inspection.
		No	Go to the next step.
3	**VERIFY DTC TROUBLESHOOTING COMPLETED** • Clear the DTC using the M-MDS. (See 05-02B-6 ON-BOARD DIAGNOSTIC SYSTEM DTC INSPECTION [GW6A-EL, GW6AX-EL].) • Perform the following procedure to ensure that the DTC has been resolved: 1. Start the engine and warm it up completely. 2. Drive the vehicle for a while under the following conditions: • Selector lever position: D position • Perform the DTC inspection using the M-MDS. (See 05-02B-6 ON-BOARD DIAGNOSTIC SYSTEM DTC INSPECTION [GW6A-EL, GW6AX-EL].) • Are any DTCs present?	Yes	Go to the applicable DTC inspection. (See 05-02B-10 ON-BOARD DIAGNOSTIC SYSTEM DTC TABLE [GW6A-EL, GW6AX-EL].)
		No	DTC troubleshooting completed.

ON-BOARD DIAGNOSTIC SYSTEM PID/DATA MONITOR INSPECTION [GW6A-EL, GW6AX-EL]

id050230290300

1. Connect the M-MDS to the DLC-2.
2. After the vehicle is identified, select the following items from the initialization screen of the M-MDS.
   (1) Select “Data Logger”.
   (2) Select “Modules”.
   (3) Select “TCM”.
3. Select the applicable PID from the PID table.
4. Verify the PID data according to the directions on the screen.

Note

- The PID data screen function is used for monitoring the calculated value of input/output signals in the module. Therefore, if the monitored value of the output parts is not within the specification, it is necessary to inspect the monitored value of input parts corresponding to the applicable output part control. In addition, because the system does not display an output part malfunction as an abnormality in the monitored value, it is necessary to inspect the output parts individually.
- When detecting DTCs, PIDs related to a malfunctioning system may not display even if the module is normal. Therefore, if a PID is not displayed, it is necessary to verify the DTC, perform malfunction diagnosis of the DTC that was detected, and do repairs.

ON-BOARD DIAGNOSTIC [GW6A-EL, GW6AX-EL]

PID/DATA monitor item table (Reference)

—: Not applicable

Item	Unit/ Condition	Test condition	Specification (Reference)	Output part name
DGP_DIS_1	km {mile}	Displays the traveled distance since the differential protection control operated due to excessive rotation difference between left/right drive wheels.		—
DGP_DIS_2	km {mile}	Displays the traveled distance since the DGP_MAX_DIF is updated.		—
DGP_MAX_DIF	RPM	Displays the maximum rotation difference since the differential protection control operated due to excessive rotation difference between left/right drive wheels.		—
DGP_SPD	KPH {MPH}	Displays the vehicle speed with trailing wheels since the differential protection control operated due to excessive rotation difference between left/right drive wheels.		—
ECT	°C {°F}	Displays the ECT.		ECT sensor
ECU_A	°C {°F}	Displays the ECU internal temperature A.		ECU internal temperature sensor A
ECU_B	°C {°F}	Displays the ECU internal temperature B.		ECU internal temperature sensor B
ECU_C	°C {°F}	Displays the ECU internal temperature C.		ECU internal temperature sensor C
EOP_DUTY	%	Displays the drive duty ratio for electric AT oil pump.		Electric AT oil pump
EOP_RLY	Off/On	Electric AT oil pump relay stopped	Off	Electric AT oil pump relay
		Electric AT oil pump relay operating	On	
GEAR_RA	Ratio	Selector lever in 1GR at D position	Approx. 3.4872	• Shift solenoid No.1 • Shift solenoid No.2 • Shift solenoid No.3 • Shift solenoid No.4
		Selector lever in 2GR at D position	Approx. 1.9929	
		Selector lever in 3GR at D position	Approx. 1.4499	
		Selector lever in 4GR at D position	Approx. 1.0000	
		Selector lever in 5GR at D position	Approx. 0.7073	
		Selector lever in 6GR at D position	Approx. 0.6008	
GEAR_SEL	1/2/3/4/5/6	Selector lever in 1GR at D position	1	• Shift solenoid No.1 • Shift solenoid No.2 • Shift solenoid No.3 • Shift solenoid No.4
		Selector lever in 2GR at D position	2	
		Selector lever in 3GR at D position	3	
		Selector lever in 4GR at D position	4	
		Selector lever in 5GR at D position	5	
		Selector lever in 6GR at D position	6	
HI_TEMP	—	Displays the ATF high temperature mode determination amount. (ATF temperature 132 °C {270 °F} or more)		—
HTM_CNT	—	Displays the ATF high temperature mode determination amount. (ATF temperature 132 °C {270 °F} or more)		—
HTM_DIS	km {mile}	Displays the traveled distance after determining the ATF high temperature mode. (ATF temperature 132 °C {270 °F} or more)		—
LINEDES	kPa {kgf/cm^2, psi}	Idle at P position after warm-up	Approx. 500 kPa {5.10 kgf/cm^2, 72.5 psi}	—
LN_C_CLUTCH	kPa {kgf/cm^2, psi}	Displays the hydraulic control learning value data.		—
LN_O_CLUTCH	kPa {kgf/cm^2, psi}	Displays the hydraulic control learning value data.		—
LN_OV_SCOPE	—	Displays the hydraulic control learning value data.		—
LN_T_CLUTCH	kPa {kgf/cm^2, psi}	Displays the hydraulic control learning value data.		—

ON-BOARD DIAGNOSTIC [GW6A-EL, GW6AX-EL]

Item	Unit/ Condition	Test condition	Specification (Reference)	Output part name
LOCK_UP	OFF/SLIP/ON	OFF: • Except below SLIP: • "SLIP" is displayed during TCC control with the difference between the engine speed and turbine shaft speed less than the control value. • Resets while TCC control is stopped or if the difference between the engine speed and turbine/shaft speed is the specification or more. ON: • "ON" is displayed during TCC control and there is almost no difference between the engine speed and turbine shaft speed*. • Resets while TCC control is stopped or if the difference between the engine speed and turbine shaft speed is the specification or more. *: The TCC controls the TCC hydraulic pressure to suppress hydraulic pressure loss and transaxle vibration due to TCC clutch engagement. Therefore, normally, there is a difference between the engine speed and turbine shaft speed. Because the TCC hydraulic pressure is increased by the fail-safe and TCC is performed while the ATF is hot, there is almost no difference.		—
LONGI_ACCEL	—	Displays the acceleration calculated from the drive wheels.		—
OP_SW1	Off/On	Selector lever at P position	Off	Oil pressure switch No.1
		Selector lever at R position	Off	
		Selector lever at N position	Off	
		Selector lever in 1GR at D position	On	
		Selector lever in 2GR at D position	On	
		Selector lever in 3GR at D position	On	
		Selector lever in 4GR at D position	On	
		Selector lever in 5GR at D position	Off	
		Selector lever in 6GR at D position	Off	
OP_SW1_OFF	kPa {kgf/cm^2, psi}	After performing on-board diagnostic test mode	More than 50 kPa {0.51 kgf/cm^2, 7.3 psi} (0 kPa {0 kgf/cm^2, 0 psi} before performing on-board diagnostic test mode)	Oil pressure switch No.1
OP_SW1_ON	kPa {kgf/cm^2, psi}	After performing on-board diagnostic test mode	Less than 320 kPa {3.26 kgf/cm^2, 46.4 psi} (0 kPa {0 kgf/cm^2, 0 psi} before performing on-board diagnostic test mode)	Oil pressure switch No.1
OP_SW2	Off/On	Selector lever at P position	Off	Oil pressure switch No.2
		Selector lever at R position	Off	
		Selector lever at N position	Off	
		Selector lever in 1GR at D position	Off	
		Selector lever in 2GR at D position	On	
		Selector lever in 3GR at D position	Off	
		Selector lever in 4GR at D position	Off	
		Selector lever in 5GR at D position	Off	
		Selector lever in 6GR at D position	On	
OP_SW2_OFF	kPa {kgf/cm^2, psi}	After performing on-board diagnostic test mode	More than 50 kPa {0.51 kgf/cm^2, psi} (0 kPa {0 kgf/cm^2, 0 psi} before performing on-board diagnostic test mode)	Oil pressure switch No.2
OP_SW2_ON	kPa {kgf/cm^2, psi}	After performing on-board diagnostic test mode	Less than 260 kPa {2.65 kgf/cm^2, 37.7 psi} (0 kPa {0 kgf/cm^2, 0 psi} before performing on-board diagnostic test mode)	Oil pressure switch No.2

ON-BOARD DIAGNOSTIC [GW6A-EL, GW6AX-EL]

Item	Unit/ Condition	Test condition	Specification (Reference)	Output part name
OP_SW3	Off/On	Selector lever at P position	Off	Oil pressure switch No.3
		Selector lever at R position	On	
		Selector lever at N position	Off	
		Selector lever in 1GR at D position	Off	
		Selector lever in 2GR at D position	Off	
		Selector lever in 3GR at D position	On	
		Selector lever in 4GR at D position	Off	
		Selector lever in 5GR at D position	On	
		Selector lever in 6GR at D position	Off	
OP_SW3_OFF	kPa {kgf/cm^2, psi}	After performing on-board diagnostic test mode	More than 50 kPa {0.51 kgf/cm^2, 7.3 psi} (0 kPa {0 kgf/cm^2, 0 psi} before performing on-board diagnostic test mode)	Oil pressure switch No.3
OP_SW3_ON	kPa {kgf/cm^2, psi}	After performing on-board diagnostic test mode	Less than 215 kPa {2.19 kgf/cm^2, 31.2 psi} (0 kPa {0 kgf/cm^2, 0 psi} before performing on-board diagnostic test mode)	Oil pressure switch No.3
OP_SW4	Off/On	Selector lever at P position	Off	Oil pressure switch No.4
		Selector lever at R position	Off	
		Selector lever at N position	Off	
		Selector lever in 1GR at D position	Off	
		Selector lever in 2GR at D position	Off	
		Selector lever in 3GR at D position	Off	
		Selector lever in 4GR at D position	On	
		Selector lever in 5GR at D position	On	
		Selector lever in 6GR at D position	On	
OP_SW4_OFF	kPa {kgf/cm^2, psi}	After performing on-board diagnostic test mode	More than 50 kPa {0.51 kgf/cm^2, 7.3 psi} (0 kPa {0 kgf/cm^2, 0 psi} before performing on-board diagnostic test mode)	Oil pressure switch No.4
OP_SW4_ON	kPa {kgf/cm^2, psi}	After performing on-board diagnostic test mode	Less than 260 kPa {2.65 kgf/cm^2, 37.7 psi} (0 kPa {0 kgf/cm^2, 0 psi} before performing on-board diagnostic test mode)	Oil pressure switch No.4
OSS	RPM	Vehicle stopped	0 RPM	Output shaft speed sensor
		Vehicle speed 30 km/h {19 mph} in 3GR at D position	Approx. 1000 RPM	
PUMP_SPEED	RPM	• Vehicle stopped at D position • During i-stop control	200—2,000 RPM	—
RPM	RPM	Displays the engine speed.		PCM
SHIFT_CTRL	DEFAULT/ MANUAL/ C_CONTROL / HIGH_TEMP/ D_MANUAL/ FAIL_SAFE	D position normal mode	DEFAULT	—
		M position manual mode	MANUAL	
		Cruise control (cruise control system)	C_CONTROL	
		Automatic transaxle protection mode (ATF high temperature mode)	HIGH_TEMP	
		D position direct mode	D_MANUAL	
		Fail-safe mode	FAIL_SAFE	
SS_ON-OFF	Off/On	On/off solenoid is off.	Off	On/off solenoid
		On/off solenoid is on.	On	

ON-BOARD DIAGNOSTIC [GW6A-EL, GW6AX-EL]

Item	Unit/ Condition	Test condition	Specification (Reference)	Output part name
SS1	A	Vehicle stopped at P position	Approx. 0 A	Shift solenoid No.1
		Vehicle stopped at R position	Approx. 0 A	
		Vehicle stopped at N position	Approx. 0 A	
		Driving in D position 1GR	Approx. 1 A	
		Driving in D position 2GR	Approx. 1 A	
		Driving in D position 3GR	Approx. 1 A	
		Driving in D position 4GR	Approx. 1 A	
		Driving in D position 5GR	Approx. 0 A	
		Driving in D position 6GR	Approx. 0 A	
SS1_C	A	Vehicle stopped at P position	0 A	Shift solenoid No.1
		Vehicle stopped at R position	0 A	
		Vehicle stopped at N position	0 A	
		Driving in D position 1GR	1 A	
		Driving in D position 2GR	1 A	
		Driving in D position 3GR	1 A	
		Driving in D position 4GR	1 A	
		Driving in D position 5GR	0 A	
		Driving in D position 6GR	0 A	
SS2	A	Vehicle stopped at P position	Approx. 0 A	Shift solenoid No.2
		Vehicle stopped at R position	Approx. 0 A	
		Vehicle stopped at N position	Approx. 0 A	
		Driving in D position 1GR	Approx. 0 A	
		Driving in D position 2GR	Approx. 1 A	
		Driving in D position 3GR	Approx. 0 A	
		Driving in D position 4GR	Approx. 0 A	
		Driving in D position 5GR	Approx. 0 A	
		Driving in D position 6GR	Approx. 1 A	
SS2_C	A	Vehicle stopped at P position	0 A	Shift solenoid No.2
		Vehicle stopped at R position	0 A	
		Vehicle stopped at N position	0 A	
		Driving in D position 1GR	0 A	
		Driving in D position 2GR	1 A	
		Driving in D position 3GR	0 A	
		Driving in D position 4GR	0 A	
		Driving in D position 5GR	0 A	
		Driving in D position 6GR	1 A	
SS3	A	Vehicle stopped at P position	Approx. 1 A	Shift solenoid No.3
		Vehicle stopped at R position	Approx. 0 A	
		Vehicle stopped at N position	Approx. 1 A	
		Driving in D position 1GR	Approx. 1 A	
		Driving in D position 2GR	Approx. 1 A	
		Driving in D position 3GR	Approx. 0 A	
		Driving in D position 4GR	Approx. 1 A	
		Driving in D position 5GR	Approx. 0 A	
		Driving in D position 6GR	Approx. 1 A	
SS3_C	A	Vehicle stopped at P position	1 A	Shift solenoid No.3
		Vehicle stopped at R position	0 A	
		Vehicle stopped at N position	1 A	
		Driving in D position 1GR	1 A	
		Driving in D position 2GR	1 A	
		Driving in D position 3GR	0 A	
		Driving in D position 4GR	1 A	
		Driving in D position 5GR	0 A	
		Driving in D position 6GR	1 A	

ON-BOARD DIAGNOSTIC [GW6A-EL, GW6AX-EL]

Item	Unit/ Condition	Test condition	Specification (Reference)	Output part name
SS4	A	Vehicle stopped at P position	Approx. 0 A	Shift solenoid No.4
		Vehicle stopped at R position	Approx. 0 A	
		Vehicle stopped at N position	Approx. 0 A	
		Driving in D position 1GR	Approx. 0 A	
		Driving in D position 2GR	Approx. 1 A	
		Driving in D position 3GR	Approx. 1 A	
		Driving in D position 4GR	Approx. 0 A	
		Driving in D position 5GR	Approx. 0 A	
		Driving in D position 6GR	Approx. 0 A	
SS4_C	A	Vehicle stopped at P position	0 A	Shift solenoid No.4
		Vehicle stopped at R position	0 A	
		Vehicle stopped at N position	0 A	
		Driving in D position 1GR	0 A	
		Driving in D position 2GR	1 A	
		Driving in D position 3GR	1 A	
		Driving in D position 4GR	0 A	
		Driving in D position 5GR	0 A	
		Driving in D position 6GR	0 A	
SSLU	A	Vehicle stopped at P position	Approx. 0 A	TCC control solenoid
		Vehicle stopped at R position	Approx. 0 A	
		Vehicle stopped at N position	Approx. 0 A	
		Under the following conditions: • Driving in D position 1GR • Accelerator pedal opening angle is approx. 10 %	Approx. 430 mA	
		Under the following conditions: • Driving in D position 2GR • Accelerator pedal opening angle is approx. 10 %	Approx. 430 mA	
		Under the following conditions: • Driving in D position 3GR • Accelerator pedal opening angle is approx. 10 %	Approx. 430 mA	
		Under the following conditions: • Driving in D position 4GR • Accelerator pedal opening angle is approx. 10 %	Approx. 430 mA	
		Under the following conditions: • Driving in D position 5GR • Accelerator pedal opening angle is approx. 10 %	Approx. 430 mA	
		Under the following conditions: • Driving in D position 6GR • Accelerator pedal opening angle is approx. 10 %	Approx. 430 mA	

ON-BOARD DIAGNOSTIC [GW6A-EL, GW6AX-EL]

Item	Unit/ Condition	Test condition	Specification (Reference)	Output part name
SSLU_C	A	Vehicle stopped at P position	0 A	TCC control solenoid
		Vehicle stopped at R position	0 A	
		Vehicle stopped at N position	0 A	
		Under the following conditions: • Driving in D position 1GR • Accelerator pedal opening angle is approx. 10 %	Approx. 430 mA	
		Under the following conditions: • Driving in D position 2GR • Accelerator pedal opening angle is approx. 10 %	Approx. 430 mA	
		Under the following conditions: • Driving in D position 3GR • Accelerator pedal opening angle is approx. 10 %	Approx. 430 mA	
		Under the following conditions: • Driving in D position 4GR • Accelerator pedal opening angle is approx. 10 %	Approx. 430 mA	
		Under the following conditions: • Driving in D position 5GR • Accelerator pedal opening angle is approx. 10 %	Approx. 430 mA	
		Under the following conditions: • Driving in D position 6GR • Accelerator pedal opening angle is approx. 10 %	Approx. 430 mA	
SSLU_PRES	kPa {kgf/cm^2, psi}	Vehicle stopped at P position	0 kPa {0 kgf/cm^2, 0 psi}	TCC control solenoid
		Vehicle stopped at R position	0 kPa {0 kgf/cm^2, 0 psi}	
		Vehicle stopped at N position	0 kPa {0 kgf/cm^2, 0 psi}	
		Under the following conditions: • Driving in D position 1GR • Accelerator pedal opening angle is approx. 10 %	Approx. 360 kPa {3.67 kgf/cm^2, 52.2 psi}	
		Under the following conditions: • Driving in D position 2GR • Accelerator pedal opening angle is approx. 10 %	Approx. 360 kPa {3.67 kgf/cm^2, 52.2 psi}	
		Under the following conditions: • Driving in D position 3GR • Accelerator pedal opening angle is approx. 10 %	Approx. 360 kPa {3.67 kgf/cm^2, 52.2 psi}	
		Under the following conditions: • Driving in D position 4GR • Accelerator pedal opening angle is approx. 10 %	Approx. 360 kPa {3.67 kgf/cm^2, 52.2 psi}	
		Under the following conditions: • Driving in D position 5GR • Accelerator pedal opening angle is approx. 10 %	Approx. 360 kPa {3.67 kgf/cm^2, 52.2 psi}	
		Under the following conditions: • Driving in D position 6GR • Accelerator pedal opening angle is approx. 10 %	Approx. 360 kPa {3.67 kgf/cm^2, 52.2 psi}	

ON-BOARD DIAGNOSTIC [GW6A-EL, GW6AX-EL]

Item	Unit/ Condition	Test condition	Specification (Reference)	Output part name
SSP	A	Vehicle stopped at P position	Approx. 980 mA	Pressure control solenoid
		Vehicle stopped at R position	Approx. 930 mA	
		Vehicle stopped at N position	Approx. 980 mA	
		Under the following conditions: • Driving in D position 1GR • Accelerator pedal opening angle is approx. 10 %	Approx. 400—800 mA	
		Under the following conditions: • Driving in D position 2GR • Accelerator pedal opening angle is approx. 10 %	Approx. 400—800 mA	
		Under the following conditions: • Driving in D position 3GR • Accelerator pedal opening angle is approx. 10 %	Approx. 400—800 mA	
		Under the following conditions: • Driving in D position 4GR • Accelerator pedal opening angle is approx. 10 %	Approx. 400—800 mA	
		Under the following conditions: • Driving in D position 5GR • Accelerator pedal opening angle is approx. 10 %	Approx. 400—800 mA	
		Under the following conditions: • Driving in D position 6GR • Accelerator pedal opening angle is approx. 10 %	Approx. 400—800 mA	
SSP_C	A	Vehicle stopped at P position	Approx. 980 mA	Pressure control solenoid
		Vehicle stopped at R position	Approx. 930 mA	
		Vehicle stopped at N position	Approx. 980 mA	
		Under the following conditions: • Driving in D position 1GR • Accelerator pedal opening angle is approx. 10 %	Approx. 400—800 mA	
		Under the following conditions: • Driving in D position 2GR • Accelerator pedal opening angle is approx. 10 %	Approx. 400—800 mA	
		Under the following conditions: • Driving in D position 3GR • Accelerator pedal opening angle is approx. 10 %	Approx. 400—800 mA	
		Under the following conditions: • Driving in D position 4GR • Accelerator pedal opening angle is approx. 10 %	Approx. 400—800 mA	
		Under the following conditions: • Driving in D position 5GR • Accelerator pedal opening angle is approx. 10 %	Approx. 400—800 mA	
		Under the following conditions: • Driving in D position 6GR • Accelerator pedal opening angle is approx. 10 %	Approx. 400—800 mA	

ON-BOARD DIAGNOSTIC [GW6A-EL, GW6AX-EL]

Item	Unit/ Condition	Test condition	Specification (Reference)	Output part name
SSP_PRES	kPa {kgf/cm^2, psi}	Vehicle stopped at P position	Approx. 45 kPa {0.46 kgf/cm^2, 6.5 psi}	Pressure control solenoid
		Vehicle stopped at R position	Approx. 80 kPa {0.82 kgf/cm^2, 12 psi}	
		Vehicle stopped at N position	Approx. 45 kPa {0.46 kgf/cm^2, 6.5 psi}	
		Under the following conditions: • Driving in D position 1GR • Accelerator pedal opening angle is approx. 10 %	130—460 kPa {1.33—4.69 kgf/cm^2, 18.9—66.7 psi}	
		Under the following conditions: • Driving in D position 2GR • Accelerator pedal opening angle is approx. 10 %	130—460 kPa {1.33—4.69 kgf/cm^2, 18.9—66.7 psi}	
		Under the following conditions: • Driving in D position 3GR • Accelerator pedal opening angle is approx. 10 %	130—460 kPa {1.33—4.69 kgf/cm^2, 18.9—66.7 psi}	
		Under the following conditions: • Driving in D position 4GR • Accelerator pedal opening angle is approx. 10 %	130—460 kPa {1.33—4.69 kgf/cm^2, 18.9—66.7 psi}	
		Under the following conditions: • Driving in D position 5GR • Accelerator pedal opening angle is approx. 10 %	130—460 kPa {1.33—4.69 kgf/cm^2, 18.9—66.7 psi}	
		Under the following conditions: • Driving in D position 6GR • Accelerator pedal opening angle is approx. 10 %	130—460 kPa {1.33—4.69 kgf/cm^2, 18.9—66.7 psi}	
TFT	°C {°F}	Displays the ATF temperature.		TFT sensor
THOP	%	Accelerator pedal fully released	Approx. 22 %	PCM
		Accelerator pedal fully depressed	Approx. 91 %	
TORQUE_ACT	Nm	Displays the actual engine torque.		—
TORQUE_DES	Nm	Displays the desired engine torque.		—
TR	P/ SHIFT_DOWN/SHIFT_UP/ M/D/N/R	Selector lever at P position	P	Transaxle range sensor
		Selector lever at M position (–) side position	SHIFT_DOWN	
		Selector lever at M position (+) side position	SHIFT_UP	
		Selector lever at M position	M	
		Selector lever at D position	D	
		Selector lever at N position	N	
		Selector lever at R position	R	
TSS	RPM	Vehicle stopped at D position	0 RPM	Turbine/input shaft speed sensor
		Engine speed 1,000 rpm at P position	900—1,100 RPM	
UPSHIFT_REV	Off/On	Shift-up due to engine request is not recorded. (Shift up request can be reset by clearing the DTCs.)	Off	—
		Shift-up due to engine request is recorded.	On	
VPWR	V	Displays the TCM power supply voltage.		• Battery • TCM
VSS	KPH {MPH}	Displays the vehicle speed.		Output shaft speed sensor

ON-BOARD DIAGNOSTIC [GW6A-EL, GW6AX-EL]

ON-BOARD DIAGNOSTIC SYSTEM SIMULATION INSPECTION [GW6A-EL, GW6AX-EL]

id050230290400

1. Connect the M-MDS to the DLC-2.
2. After the vehicle is identified, select the following items from the initialization screen of the M-MDS.
   (1) Select “Data Logger”.
   (2) Select “Modules”.
   (3) Select “TCM”.
3. Select the simulation items from the PID table.
4. Perform the active command modes function, inspect the operations for each parts.
   - If the operation of output parts cannot be verified after the active command mode inspection is performed, this could indicate the possibility of an open or short circuit, sticking, or operation malfunction in the output parts.

Simulation item table

Item	Description	Unit/Condition	Operation condition
EOP	Electric AT oil pump condition	Off/On	Under the following conditions: • Vehicle stopped • Accelerator pedal fully closed
EOP_DUTY	Electric AT oil pump duty cycle	%	Under the following conditions: • Vehicle stopped • Accelerator pedal fully closed
EOP_RLY	Electric AT oil pump relay condition	Off/On	Under the following conditions: • Vehicle stopped • Accelerator pedal fully closed
SS_ON-OFF	On/off solenoid condition	Off/On	Under the following conditions: • Vehicle stopped • Idling at P or N position
SS1_C	Shift solenoid No.1 target current	A	Under the following conditions: • Vehicle stopped • Idling at P or N position
SS2_C	Shift solenoid No.2 target current	A	Under the following conditions: • Vehicle stopped • Idling at P or N position
SS3_C	Shift solenoid No.3 target current	A	Under the following conditions: • Vehicle stopped • Idling at P or N position
SS4_C	Shift solenoid No.4 target current	A	Under the following conditions: • Vehicle stopped • Idling at P or N position
SSLU_C	TCC control solenoid target current	A	Under the following conditions: • ATF temperature (PID: TFT) is 20 °C {68 °F} or more. • Output shaft speed (PID: OSS) is 10 rpm or more. • Turbine/input shaft speed (PID: TSS) is 1,000 rpm or more. • Brake pedal released
SSP_C	Pressure control solenoid target current	A	Idling at P or N position

05-03A SYMPTOM TROUBLESHOOTING [FW6A-EL, FW6AX-EL]

AUTOMATIC TRANSAXLE CONTROL SYSTEM WIRING DIAGRAM [FW6A-EL, FW6AX-EL] 05-03A–2
FOREWORD [FW6A-EL, FW6AX-EL] . . 05-03A–3
Troubleshooting Procedure 05-03A–3
Repair order form. 05-03A–4
Action for Non-repeatable Malfunction. 05-03A–6
SYMPTOM TROUBLESHOOTING ITEM TABLE [FW6A-EL, FW6AX-EL] 05-03A–6
QUICK DIAGNOSIS CHART [FW6A-EL, FW6AX-EL] 05-03A–8
VEHICLE DOES NOT MOVE IN D, M OR R POSITION [FW6A-EL, FW6AX-EL] 05-03A–9
VEHICLE MOVES IN P POSITION, OR PARKING GEAR DOES NOT DISENGAGE WHEN P IS DISENGAGED [FW6A-EL, FW6AX-EL] 05-03A–10
EXCESSIVE CREEP [FW6A-EL, FW6AX-EL] 05-03A–10
NO CREEP AT ALL [FW6A-EL, FW6AX-EL] 05-03A–10
LOW MAXIMUM SPEED AND POOR ACCELERATION [FW6A-EL, FW6AX-EL] 05-03A–11
NO SHIFTING [FW6A-EL, FW6AX-EL] 05-03A–12
DOES NOT SHIFT TO 5GR OR 6GR [FW6A-EL, FW6AX-EL] 05-03A–13
ABNORMAL SHIFTING [FW6A-EL, FW6AX-EL] 05-03A–14
FREQUENT SHIFTING [FW6A-EL, FW6AX-EL] 05-03A–14
SHIFT POINT IS HIGH OR LOW [FW6A-EL, FW6AX-EL] 05-03A–15
NO KICKDOWN [FW6A-EL, FW6AX-EL] 05-03A–15
ENGINE FLARES UP OR SLIPS WHEN UPSHIFTING OR DOWNSHIFTING [FW6A-EL, FW6AX-EL] 05-03A–16
JUDDER UPON TORQUE CONVERTER CLUTCH (TCC) OPERATION [FW6A-EL, FW6AX-EL] 05-03A–16
EXCESSIVE SHIFT SHOCK FROM N TO D OR N TO R POSITION [FW6A-EL, FW6AX-EL] 05-03A–17
EXCESSIVE SHIFT SHOCK IS FELT WHEN UPSHIFTING AND DOWNSHIFTING [FW6A-EL, FW6AX-EL] 05-03A–17
EXCESSIVE SHIFT SHOCK ON TORQUE CONVERTER CLUTCH (TCC) [FW6A-EL, FW6AX-EL] 05-03A–18
NOISE OCCURS AT IDLE WHEN VEHICLE IS STOPPED IN ALL POSITIONS [FW6A-EL, FW6AX-EL]. . . 05-03A–18
NOISE OCCURS AT IDLE WHEN VEHICLE IS STOPPED IN D, M OR R POSITION [FW6A-EL, FW6AX-EL] 05-03A–19
TRANSAXLE OVERHEATS [FW6A-EL, FW6AX-EL] 05-03A–19
ENGINE STALLS WHEN SHIFTED TO D, M OR R POSITION [FW6A-EL, FW6AX-EL] 05-03A–20
STARTER DOES NOT WORK [FW6A-EL, FW6AX-EL] 05-03A–21
GEAR POSITION INDICATOR DOES NOT ILLUMINATE IN M POSITION [FW6A-EL, FW6AX-EL] 05-03A–21
GEAR POSITION INDICATOR ILLUMINATES IN P, R, N AND D POSITIONS [FW6A-EL, FW6AX-EL] 05-03A–22
M POSITION INDICATOR LIGHT DOES NOT ILLUMINATE IN M POSITION/M POSITION INDICATOR LIGHT ILLUMINATES IN D POSITION [FW6A-EL, FW6AX-EL] 05-03A–22
ATF SEEPING FROM AUTOMATIC TRANSAXLE [FW6A-EL, FW6AX-EL] 05-03A–23

SYMPTOM TROUBLESHOOTING [FW6A-EL, FW6AX-EL]

AUTOMATIC TRANSAXLE CONTROL SYSTEM WIRING DIAGRAM [FW6A-EL, FW6AX-EL]

id050317100000

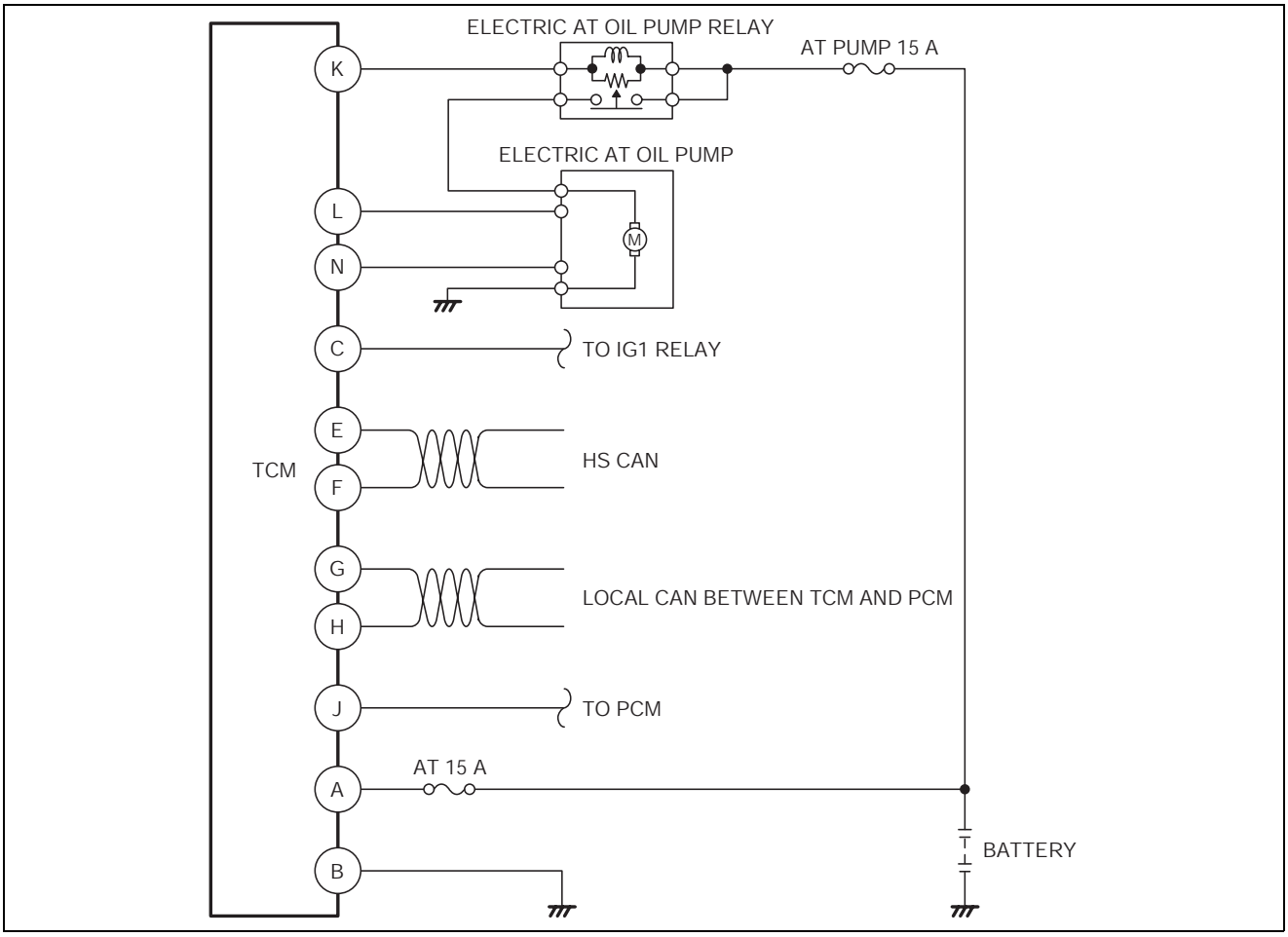

ac5wzw0000239

SYMPTOM TROUBLESHOOTING [FW6A-EL, FW6AX-EL]

FOREWORD [FW6A-EL, FW6AX-EL]

id050317100100

- If there is any vehicle malfunction complaint lodged by a customer, perform malfunction diagnosis according to the troubleshooting procedure.

Troubleshooting Procedure

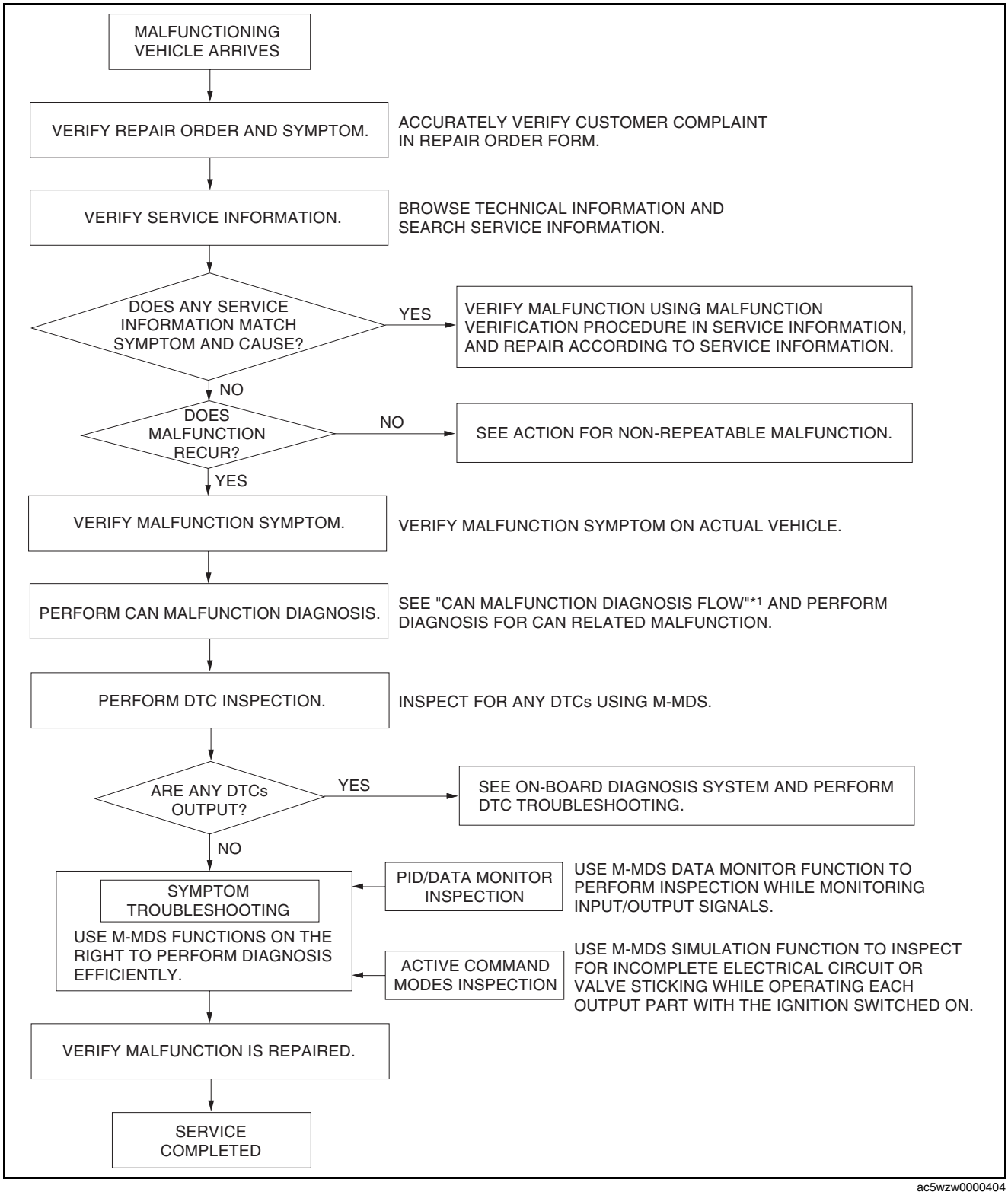

ac5wzw0000404

*1 : 10-02A-3 CONTROLLER AREA NETWORK (CAN) MALFUNCTION DIAGNOSIS FLOW [SKYACTIV-G 2.0 (L.H.D.)]/10-02B-3 CONTROLLER AREA NETWORK (CAN) MALFUNCTION DIAGNOSIS FLOW [SKYACTIV-G 2.0 (R.H.D.)]

SYMPTOM TROUBLESHOOTING [FW6A-EL, FW6AX-EL]

Repair order form

Repair order form and malfunction symptom check sheet

	Repair order	Check with customer	Diagnosis	Repair	Explanation to customer
Date/time					
In-charge					

Customer statement (When? What? What time(s)? Where it occurs. Warning light illumination? Can anyone replicate problem?)

Vehicle body number: | Registration date: | Date of malfunction occurrence: | Odometer reading km {mph}

Engine (SOHC/DOHC/RE/DE) (Cab /EGI/ Turbo/ Miller cycle/ LPG/Direct injection) | Transmission (MT/HAT/EC-AT/CVT)

Driving conditions

Environmental conditions					Driving conditions								
Weather	Ambient temp.	Drive scenario	Grade	Occurrence frequency	Fuel	Warm-up condition	Driving operation	Driving posture	Load	Accelerator opening angle	Shift position	Eng RPM	Vehicle speed	Pattern of use
Sunny Cloudy Rain Snow High wind Wind gusts N/A Other	-10°C {14°F} or less -10—0°C {14—32°F} 0—10°C {32—50°F} 10—15°C {50—59°F} 15—20°C {59—58°F} 20—25°C {68—77°F} 25—30°C {77—86°F} 30—35°C {86—95°F} 35—40{0°C {95—104°F} 40—45°C {104—113°F} 45°C {113°F} or more N/A Other	Depart/arrive Traffic jam (city) Standard city street Suburbs Highway Uneven road Dry road surface Wet road surface Snow bound road Icy road Other	Flat Upgrade Down grade N/A Other	Once/day 2-3 times/day 4-5 times/day Many times/day Once/week 2-3 times/week 4-5 times/week Once/month 2-3 times/month 4-5 times/month Other	Regular High Oct. Diesel LPG Other Fuel gauge F E	Cold Half-warmed Fully warmed N/A Other Water temp. gauge H C	When starting After starting Re-starting (min. after stopped) Idling Racing Accel. from stop Normal driving Deceleration Braking Soft braking Clutch disengage Sudden accel. Light accel. Shifting (km/h {mph} → km/h {mph}) Other	Vehicle stopped Straight-on driving Reversing Right turn Left turn Other	Headlights on Exterior lights on A/C on AUTO °C{°F} Blower: 1 step Blower: 2 steps Blower: 3 steps Blower: 4 steps Power steering lock to lock Rear defrost on Wipers on Audio on Other	0/8 1/8 2/8 3/8 4/8 5/8 6/8 7/8 8/8	MT: 1 2 3 4 5 6 N R AT: P R N D S L Hold M (km/h {mph})	Idle Less than 1,000 Less than 1,500 Less than 2,000 Less than 2,500 Less than 3,000 Less than 4,000 Less than 4,500 Less than 5,000 Less than 5,500 Less than 6,000 Less than 6,500 7,000 or more	5 km/h {3 mph} 10 km/h {6.2 mph} 20 km/h {12 mph} 30 km/h {19 mph} 40 km/h {25 mph} 50 km/h {31 mph} 60 km/h {37 mph} 70 km/h {43 mph} 80 km/h {50 mph} 90 km/h {56 mph} 100 km/h {62.1 mph} 110 km/h {68.4 mph} 120 km/h {74.6 mph} 130 km/h {80.8 mph} 140 km/h {87 mph} 150 km/h {93.2 mph} 160 km/h {99.4 mph}	Work_____% Minor use_____% Trips_____% Other_____% Between ENG. start→Stop: Distance, time Approx km Approx Hrs. No. of occupants: Load condition kg Other

DTC, measured data (fuel pressure, intake manifold vacuum, throttle sensor electromotive force, air flow electromotive force, other), maintenance, repair, accident history, installation of commercial devices

ac5wzw0000306

SYMPTOM TROUBLESHOOTING [FW6A-EL, FW6AX-EL]

Dealer name:	Vehicle body number:	Odometer reading:
Vehicle-in date:	Estimated repair completion date:	Person in-charge:
Subject (Content):		
Audio memory		

	1	2	3	4	5	6	Fuel level
FM1							E F
FM2							
AM							

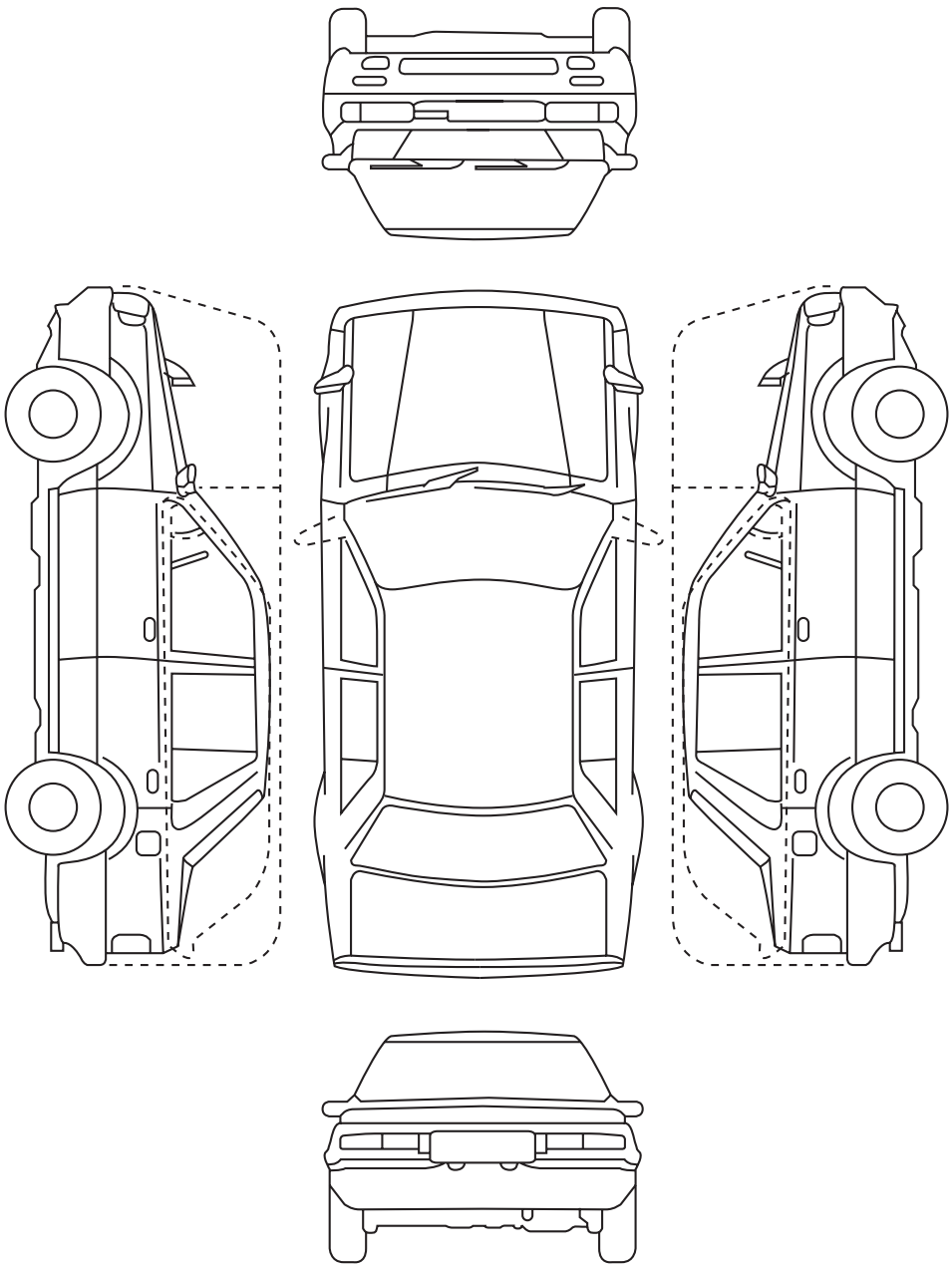

ac5wzw0000306

SYMPTOM TROUBLESHOOTING [FW6A-EL, FW6AX-EL]

Action for Non-repeatable Malfunction

- If the malfunction does not recur, verify the malfunction cause by performing the following actions:
  - — Verify that no DTCs are stored. (See 05-02A-7 ON-BOARD DIAGNOSTIC SYSTEM DTC INSPECTION [FW6A-EL, FW6AX-EL].)
  - — Based on the repair order form, attempt to drive the vehicle or perform tests to replicate the malfunction, record the data at that time, and detect the malfunction cause.
- If the malfunction does not recur after the above servicing, explain to the customer that the vehicle is normal.

SYMPTOM TROUBLESHOOTING ITEM TABLE [FW6A-EL, FW6AX-EL]

id050317100300

- Use the chart below to verify the symptoms of the trouble in order to diagnose the appropriate area.

Note

- If a tire of a different diameter from the standard tire is installed, the TCM determines that the driving mode is the AAS mode, and may change to a different shift timing from the normal timing.

Troubleshooting item	Description	Page
Vehicle does not move in D, M or R position	• Vehicle does not move when accelerator pedal is depressed. • The engine revs up but the vehicle does not move even though the accelerator pedal is depressed. • Tires are locked and do not move even though the accelerator pedal is depressed.	(See 05-03A-9 VEHICLE DOES NOT MOVE IN D, M OR R POSITION [FW6A-EL, FW6AX-EL].)
Vehicle moves in P position, or parking gear does not disengage when P is disengaged	• Vehicle rolls when on a downward slope in P position. • Vehicle does not move in D, M and R position when accelerator pedal is depressed, and engine remains in stalled condition.	(See 05-03A-10 VEHICLE MOVES IN P POSITION, OR PARKING GEAR DOES NOT DISENGAGE WHEN P IS DISENGAGED [FW6A-EL, FW6AX-EL].)
Excessive creep	• Vehicle accelerates in D and R position when accelerator pedal is not depressed.	(See 05-03A-10 EXCESSIVE CREEP [FW6A-EL, FW6AX-EL].)
No creep at all	• Vehicle does not move in D, M or R position when idling on flat paved road.	(See 05-03A-10 NO CREEP AT ALL [FW6A-EL, FW6AX-EL].)
Low maximum speed and poor acceleration	• Vehicle acceleration is poor at start. • Delayed acceleration when accelerator pedal is depressed while driving.	(See 05-03A-11 LOW MAXIMUM SPEED AND POOR ACCELERATION [FW6A-EL, FW6AX-EL].)
No shifting	• Single shift position only. • Sometimes shifts correctly.	(See 05-03A-12 NO SHIFTING [FW6A-EL, FW6AX-EL].)
Does not shift to 5GR or 6GR	• Vehicle does not upshift from 4GR to 5GR or 5GR to 6GR even though vehicle speed is increased. • At a vehicle speed range where the transaxle should shift up to 5GR and 6GR gears in D position based on the shift pattern, the transaxle does not shift to 5GR and 6GR gears by gradually releasing the accelerator pedal.	(See 05-03A-13 DOES NOT SHIFT TO 5GR OR 6GR [FW6A-EL, FW6AX-EL].)
Abnormal shifting	• Shifts incorrectly (incorrect shift pattern).	(See 05-03A-14 ABNORMAL SHIFTING [FW6A-EL, FW6AX-EL].)
Frequent shifting	• Downshifting occurs suddenly even when accelerator pedal is depressed slightly in D position.	(See 05-03A-14 FREQUENT SHIFTING [FW6A-EL, FW6AX-EL].)
Shift point is high or low	• Shift point considerably different from automatic shift diagram. • Shift delays when accelerating. • Shift occurs suddenly when accelerating and engine speed does not increase.	(See 05-03A-15 SHIFT POINT IS HIGH OR LOW [FW6A-EL, FW6AX-EL].)
No kickdown	• Does not downshift when accelerator pedal is fully depressed within kickdown range.	(See 05-03A-15 NO KICKDOWN [FW6A-EL, FW6AX-EL].)

SYMPTOM TROUBLESHOOTING [FW6A-EL, FW6AX-EL]

Troubleshooting item	Description	Page
Engine flares up or slips when upshifting or downshifting	• When accelerator pedal is depressed, engine speed increases normally but vehicle speed increases slowly. • When accelerator pedal is depressed while driving, engine speed increases but vehicle speed does not.	(See 05-03A-16 ENGINE FLARES UP OR SLIPS WHEN UPSHIFTING OR DOWNSHIFTING [FW6A-EL, FW6AX-EL].)
Judder upon torque converter clutch (TCC) operation	• Vehicle jolts when TCC is engaged.	(See 05-03A-16 JUDDER UPON TORQUE CONVERTER CLUTCH (TCC) OPERATION [FW6A-EL, FW6AX-EL].)
Excessive shift shock from N to D or N to R position	• Strong shock is felt when shifting from N to D or N to R position at idle.	(See 05-03A-17 EXCESSIVE SHIFT SHOCK FROM N TO D OR N TO R POSITION [FW6A-EL, FW6AX-EL].)
Excessive shift shock is felt when upshifting and downshifting	• Excessive shift shock is felt when depressing accelerator pedal to accelerate at upshifting. • During cruising, excessive shift shock is felt when depressing accelerator pedal at downshifting.	(See 05-03A-17 EXCESSIVE SHIFT SHOCK IS FELT WHEN UPSHIFTING AND DOWNSHIFTING [FW6A-EL, FW6AX-EL].)
Excessive shift shock on torque converter clutch (TCC)	• Strong shock is felt when TCC is engaged.	(See 05-03A-18 EXCESSIVE SHIFT SHOCK ON TORQUE CONVERTER CLUTCH (TCC) [FW6A-EL, FW6AX-EL].)
Noise occurs at idle when vehicle is stopped in all positions	• Transaxle is noisy in all positions when vehicle idling.	(See 05-03A-18 NOISE OCCURS AT IDLE WHEN VEHICLE IS STOPPED IN ALL POSITIONS [FW6A-EL, FW6AX-EL].)
Noise occurs at idle when vehicle is stopped in D, M or R position	• Transaxle is noisy in driving positions when vehicle is idling.	(See 05-03A-19 NOISE OCCURS AT IDLE WHEN VEHICLE IS STOPPED IN D, M OR R POSITION [FW6A-EL, FW6AX-EL].)
Transaxle overheats	• Burnt smell emitted from the transaxle. • Smoke is emitted from the transaxle.	(See 05-03A-19 TRANSAXLE OVERHEATS [FW6A-EL, FW6AX-EL].)
Engine stalls when shifted to D, M or R position	• Engine stalls when shifting from N or P position to D, M or R position at idle.	(See 05-03A-20 ENGINE STALLS WHEN SHIFTED TO D, M OR R POSITION [FW6A-EL, FW6AX-EL].)
Starter does not work	• Starter does not work even when in P or N position.	(See 05-03A-21 STARTER DOES NOT WORK [FW6A-EL, FW6AX-EL].)
Gear position indicator does not illuminate in M position	• Gear position indicator in instrument cluster does not illuminate in M position with the ignition is ON (engine off or on).	(See 05-03A-21 GEAR POSITION INDICATOR DOES NOT ILLUMINATE IN M POSITION [FW6A-EL, FW6AX-EL].)
Gear position indicator illuminates in P, R, N and D positions	• Gear position indicator in instrument cluster illuminates in P, R, N and D positions with the ignition is ON (engine off or on).	(See 05-03A-22 GEAR POSITION INDICATOR ILLUMINATES IN P, R, N AND D POSITIONS [FW6A-EL, FW6AX-EL].)
M position indicator light does not illuminate in M position/M position indicator light illuminates in D position	• M position indicator light in instrument cluster does not illuminate in M position or M position indicator light in instrument cluster in P, R, N and D positions with the ignition is ON (engine off or on).	(See 05-03A-22 M POSITION INDICATOR LIGHT DOES NOT ILLUMINATE IN M POSITION/M POSITION INDICATOR LIGHT ILLUMINATES IN D POSITION [FW6A-EL, FW6AX-EL].)
ATF seeping from automatic transaxle	• ATF is seeping from the automatic transaxle case. • Foreign matter mixed with ATF is in the automatic transaxle case.	(See 05-03A-23 ATF SEEPING FROM AUTOMATIC TRANSAXLE [FW6A-EL, FW6AX-EL].)

SYMPTOM TROUBLESHOOTING [FW6A-EL, FW6AX-EL]

QUICK DIAGNOSIS CHART [FW6A-EL, FW6AX-EL]

id050317100400

X: APPLIED

SYMPTOM \ CAUSE OF TROUBLE	ECT SENSOR MALFUNCTION	CKP SENSOR MALFUNCTION	MAF SENSOR MALFUNCTION	NOT WITHIN IDLE SPEED SPECIFICATION	ENGINE CONTROL SYSTEM MALFUNCTION	IMMOBILIZER SYSTEM OPERATING OR SYSTEM MALFUNCTION	INSTRUMENT CLUSTER MALFUNCTION	BARO SENSOR MALFUNCTION	IAT SENSOR MALFUNCTION	TIRE MALFUNCTION (DIAMETER, PRESSURE OTHER THAN STANDARD)	LOW-G (XY) SENSOR MALFUNCTION	APP SENSOR MALFUNCTION	BRAKE SWITCH MALFUNCTION	OIL PUMP MALFUNCTION	TORQUE CONVERTER OPERATING MALFUNCTION	PARKING MECHANISM MALFUNCTION	MANUAL SHAFT STUCK	SEALING DETERIORATION AND DAMAGE	INCORRECT INSTALLATION OF ATX EXTERNAL PART	POOR INSTALLATION OR WORN OF ENGINE MOUNT, SUSPENSION	ATF MALFUNCTION	OIL COOLER MALFUNCTION	CONTROL VALVE BODY MALFUNCTION	TCC PISTON MALFUNCTION
VEHICLE DOES NOT MOVE IN D, M OR R POSITION															X	X	X							
VEHICLE MOVES IN P POSITION, OR PARKING GEAR DOES NOT DISENGAGE WHEN P IS DISENGAGED																X								
EXCESSIVE CREEP				X																				
NO CREEP AT ALL				X																				
LOW MAXIMUM SPEED AND POOR ACCELERATION		X	X		X							X												
NO SHIFTING		X	X					X	X	X	X	X	X											
DOES NOT SHIFT TO 5GR OR 6GR		X	X					X	X	X	X	X												
ABNORMAL SHIFTING	X	X	X					X	X	X	X	X	X											
FREQUENT SHIFTING											X	X												
SHIFT POINT IS HIGH OR LOW	X							X	X	X	X	X	X											
NO KICKDOWN												X												
ENGINE FLARES UP OR SLIPS WHEN UPSHIFTING OR DOWNSHIFTING		X	X									X												
JUDDER UPON TORQUE CONVERTER CLUTCH (TCC) OPERATION		X										X			X									
EXCESSIVE SHIFT SHOCK FROM N TO D OR N TO R POSITION		X		X								X								X				
EXCESSIVE SHIFT SHOCK IS FELT WHEN UPSHIFTING AND DOWNSHIFTING												X								X				
EXCESSIVE SHIFT SHOCK ON TORQUE CONVERTER CLUTCH (TCC)		X										X			X									
NOISE OCCURS AT IDLE WHEN VEHICLE IS STOPPED IN ALL POSITIONS					X									X	X									
NOISE OCCURS AT IDLE WHEN VEHICLE IS STOPPED IN D, M OR R POSITION					X										X									
TRANSAXLE OVERHEATS	X	X										X	X								X	X	X	
ENGINE STALLS WHEN SHIFTED TO D, M OR R POSITION				X											X									X
STARTER DOES NOT WORK					X	X																		
GEAR POSITION INDICATOR DOES NOT ILLUMINATE IN M POSITION							X														X			
GEAR POSITION INDICATOR ILLUMINATES IN P, R, N AND D POSITIONS							X																	
M POSITION INDICATOR LIGHT DOES NOT ILLUMINATE IN M POSITION/ M POSITION INDICATOR LIGHT ILLUMINATES IN D POSITION							X																	
ATF SEEPING FROM AUTOMATIC TRANSAXLE																		X	X					

ac5wzw0000489

SYMPTOM TROUBLESHOOTING [FW6A-EL, FW6AX-EL]

VEHICLE DOES NOT MOVE IN D, M OR R POSITION [FW6A-EL, FW6AX-EL]

id050317100500

TROUBLESHOOTING ITEM	Vehicle does not move in D, M or R position
DESCRIPTION	• Vehicle does not move when accelerator pedal is depressed. • The engine revs up but the vehicle does not move even though the accelerator pedal is depressed. • Tires are locked and do not move even though the accelerator pedal is depressed.
POSSIBLE CAUSE	1. Improper operation of parking mechanism 2. Manual shaft (manual valve) stuck 3. Torque converter malfunction

Diagnostic procedure

STEP	INSPECTION		ACTION
1	**INSPECT PARKING MECHANISM FOR MALFUNCTION** • When the vehicle is stopped on a flat, level road and the engine is off, does the vehicle move when pushed? (In D, N or R position with the brake pedal released.)	Yes	Go to the next step.
		No	Replace the parking mechanism. (See 05-17A-28 AUTOMATIC TRANSAXLE REMOVAL/INSTALLATION [FW6A-EL].) (See 05-17A-43 AUTOMATIC TRANSAXLE REMOVAL/INSTALLATION [FW6AX-EL].)
2	**VERIFY IF MALFUNCTION CAUSE IS MANUAL SHAFT OR TORQUE CONVERTER** • Move the vehicle to a level surface and apply the parking brake. • Disconnect the negative battery cable. (See 01-17A-11 NEGATIVE BATTERY CABLE DISCONNECTION/CONNECTION [SKYACTIV-G 2.0].) (See 01-17A-13 NEGATIVE BATTERY CABLE DISCONNECTION/CONNECTION [SKYACTIV-G 2.0 (WITHOUT i-stop)].) • Remove the battery component (ex: battery, battery tray and PCM component). (See 01-17A-3 BATTERY REMOVAL/INSTALLATION [SKYACTIV-G 2.0].) • Remove the air cleaner component. (See 01-13A-6 INTAKE-AIR SYSTEM REMOVAL/INSTALLATION [SKYACTIV-G 2.0].) • Can the manual shaft be rotated by hand? 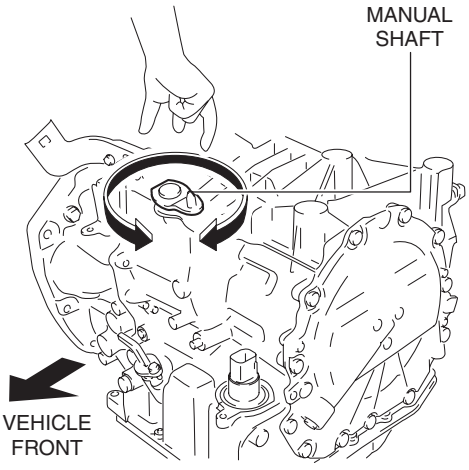 	Yes	Replace the automatic transaxle. (See 05-17A-28 AUTOMATIC TRANSAXLE REMOVAL/INSTALLATION [FW6A-EL].) (See 05-17A-43 AUTOMATIC TRANSAXLE REMOVAL/INSTALLATION [FW6AX-EL].)
		No	Replace the control valve body. (See 05-17A-67 CONTROL VALVE BODY REMOVAL/INSTALLATION [FW6A-EL, FW6AX-EL].)

SYMPTOM TROUBLESHOOTING [FW6A-EL, FW6AX-EL]

VEHICLE MOVES IN P POSITION, OR PARKING GEAR DOES NOT DISENGAGE WHEN P IS DISENGAGED [FW6A-EL, FW6AX-EL]

id050317100600

TROUBLESHOOTING ITEM	Vehicle moves in P position, or parking gear does not disengage when P is disengaged
DESCRIPTION	• Vehicle rolls when on a downward slope in P position. • Vehicle does not move in D, M and R position when accelerator pedal is depressed, and engine remains in stalled condition.
POSSIBLE CAUSE	1. Parking mechanism malfunction

Diagnostic procedure

STEP	INSPECTION		ACTION
1	**INSPECT PARKING MECHANISM FOR MALFUNCTION** • When the vehicle is stopped on a flat, level road and the engine is off, does the vehicle move when pushed? (In D, N or R position with the brake pedal released.)	Yes	Symptom troubleshooting is completed.
		No	Replace the parking mechanism. (See 05-17A-28 AUTOMATIC TRANSAXLE REMOVAL/INSTALLATION [FW6A-EL].) (See 05-17A-43 AUTOMATIC TRANSAXLE REMOVAL/INSTALLATION [FW6AX-EL].)

EXCESSIVE CREEP [FW6A-EL, FW6AX-EL]

id050317100700

TROUBLESHOOTING ITEM	Excessive creep
DESCRIPTION	• Vehicle accelerates in D and R position when accelerator pedal is not depressed.
POSSIBLE CAUSE	1. Not within idle speed specification

Diagnostic procedure

STEP	INSPECTION		ACTION
1	**INSPECT ENGINE CONTROL SYSTEM FOR MALFUNCTION** • Perform the symptom troubleshooting “NO.9 FAST IDLE/RUNS ON”. (See 01-03-51 NO.9 FAST IDLE/RUNS ON [SKYACTIV-G 2.0].) • Is there any malfunction?	Yes	Repair or replace any malfunctioning parts according to the inspection result.
		No	Symptom troubleshooting is completed.

NO CREEP AT ALL [FW6A-EL, FW6AX-EL]

id050317100800

TROUBLESHOOTING ITEM	No creep at all
DESCRIPTION	• Vehicle does not move in D, M or R position when idling on flat paved road.
POSSIBLE CAUSE	1. Not within idle speed specification

Diagnostic procedure

STEP	INSPECTION		ACTION
1	**INSPECT ENGINE CONTROL SYSTEM FOR MALFUNCTION** • Perform the symptom troubleshooting “NO.9 FAST IDLE/RUNS ON”. (See 01-03-51 NO.9 FAST IDLE/RUNS ON [SKYACTIV-G 2.0].) • Is there any malfunction?	Yes	Repair or replace any malfunctioning parts according to the inspection result.
		No	Go to the next step.
2	**VERIFY IF MALFUNCTION CAUSE IS TORQUE CONVERTER** • Is the same level compared to a vehicle of the same model?	Yes	Symptom troubleshooting is completed.
		No	Replace the automatic transaxle. (See 05-17A-28 AUTOMATIC TRANSAXLE REMOVAL/INSTALLATION [FW6A-EL].) (See 05-17A-43 AUTOMATIC TRANSAXLE REMOVAL/INSTALLATION [FW6AX-EL].)

SYMPTOM TROUBLESHOOTING [FW6A-EL, FW6AX-EL]

LOW MAXIMUM SPEED AND POOR ACCELERATION [FW6A-EL, FW6AX-EL]

id050317100900

TROUBLESHOOTING ITEM	**Low maximum speed and poor acceleration**
DESCRIPTION	• Vehicle acceleration is poor at start. • Delayed acceleration when accelerator pedal is depressed while driving.
POSSIBLE CAUSE	• Engine control system malfunction • Signal malfunction — APP sensor malfunction — CKP sensor malfunction — MAF sensor malfunction

Diagnostic procedure

STEP	INSPECTION		ACTION
1	**INSPECT ENGINE CONTROL SYSTEM FOR MALFUNCTION** • Perform the symptom troubleshooting “NO.12 LACK/LOSS OF POWER-ACCELERATION/ CRUISE”. (See 01-03-68 NO.12 LACK/LOSS OF POWER-ACCELERATION/CRUISE [SKYACTIV-G 2.0].) • Is there any malfunction?	Yes	Repair or replace any malfunctioning parts according to the inspection result.
		No	Go to the next step.
2	**INSPECT SIGNAL PARTS FOR MALFUNCTION** • Inspect the value at the following PCM PIDs using the M-MDS. (See 01-02-8 ON-BOARD DIAGNOSTIC TEST [SKYACTIV-G 2.0].) — APP (APP sensor) — MAF (MAF sensor) — RPM (CKP sensor) • Is there any malfunction?	Yes	Repair or replace any malfunctioning parts according to the inspection result.
		No	Explain to the customer that the vehicle is not malfunctioning and they should keep an eye on it.

SYMPTOM TROUBLESHOOTING [FW6A-EL, FW6AX-EL]

NO SHIFTING [FW6A-EL, FW6AX-EL]

id050317101000

TROUBLESHOOTING ITEM	**No shifting**
DESCRIPTION	• Single shift position only. • Sometimes shifts correctly.
POSSIBLE CAUSE	1. Signal malfunction — APP sensor malfunction — BARO sensor malfunction — Brake switch malfunction — CKP sensor malfunction — IAT sensor No.1 malfunction — MAF sensor malfunction 2. Low-G (XY) sensor (built into SAS control module) malfunction **Note** • If a tire of a different diameter from the standard tire is installed, the TCM determines that the driving mode is the AAS mode, and may change to a different shift timing from the normal timing.

Diagnostic procedure

STEP	INSPECTION		ACTION
1	**INSPECT SIGNAL PARTS FOR MALFUNCTION** • Inspect the value at the following PCM PIDs using the M-MDS. (See 01-02-8 ON-BOARD DIAGNOSTIC TEST [SKYACTIV-G 2.0].) — APP (APP sensor) — BARO (BARO sensor) — BOO (Brake switch) — IAT (IAT sensor No.1) — MAF (MAF sensor) — RPM (CKP sensor) • Is there any malfunction?	Yes	Repair or replace any malfunctioning parts according to the inspection result.
		No	Go to the next step.
2	**VERIFY IF MALFUNCTION CAUSE IS LOW-G (XY) SENSOR** • Is there any malfunction?	Yes	Replace the SAS control module. (See 08-10-20 SAS CONTROL MODULE REMOVAL/INSTALLATION.)
		No	Symptom troubleshooting is completed.

SYMPTOM TROUBLESHOOTING [FW6A-EL, FW6AX-EL]

DOES NOT SHIFT TO 5GR OR 6GR [FW6A-EL, FW6AX-EL]

id050317101100

TROUBLESHOOTING ITEM	Does not shift to 5GR or 6GR
DESCRIPTION	• Vehicle does not upshift from 4GR to 5GR or 5GR to 6GR even though vehicle speed is increased. • At a vehicle speed range where the transaxle should shift up to 5GR and 6GR gears in D position based on the shift pattern, the transaxle does not shift to 5GR and 6GR gears by gradually releasing the accelerator pedal.
POSSIBLE CAUSE	1. Signal malfunction — APP sensor malfunction — BARO sensor malfunction — CKP sensor malfunction — IAT sensor No.1 malfunction — MAF sensor malfunction 2. Low-G (XY) sensor (built into SAS control module) malfunction **Note** • If a tire of a different diameter from the standard tire is installed, the TCM determines that the driving mode is the AAS mode, and may change to a different shift timing from the normal timing.

Diagnostic procedure

STEP	INSPECTION		ACTION
1	**INSPECT SIGNAL PARTS FOR MALFUNCTION** • Inspect the value at the following PCM PIDs using the M-MDS. (See 01-02-8 ON-BOARD DIAGNOSTIC TEST [SKYACTIV-G 2.0].) — APP (APP sensor) — BARO (BARO sensor) — IAT (IAT sensor No.1) — MAF (MAF sensor) — RPM (CKP sensor) • Is there any malfunction?	Yes	Repair or replace any malfunctioning parts according to the inspection result.
		No	Go to the next step.
2	**VERIFY IF MALFUNCTION CAUSE IS LOW-G (XY) SENSOR** • Is there any malfunction?	Yes	Replace the SAS control module. (See 08-10-20 SAS CONTROL MODULE REMOVAL/INSTALLATION.)
		No	Symptom troubleshooting is completed.

SYMPTOM TROUBLESHOOTING [FW6A-EL, FW6AX-EL]

ABNORMAL SHIFTING [FW6A-EL, FW6AX-EL]

id050317101200

TROUBLESHOOTING ITEM	Abnormal shifting
DESCRIPTION	• Shifts incorrectly (incorrect shift pattern).
POSSIBLE CAUSE	1. Signal malfunction — APP sensor malfunction — BARO sensor malfunction — Brake switch malfunction — CKP sensor malfunction — ECT sensor No.1 malfunction — IAT sensor No.1 malfunction — MAF sensor malfunction 2. Low-G (XY) sensor (built into SAS control module) malfunction **Note** • If a tire of a different diameter from the standard tire is installed, the TCM determines that the driving mode is the AAS mode, and may change to a different shift timing from the normal timing.

Diagnostic procedure

STEP	INSPECTION		ACTION
1	**INSPECT SIGNAL PARTS FOR MALFUNCTION** • Inspect the value at the following PCM PIDs using the M-MDS. (See 01-02-8 ON-BOARD DIAGNOSTIC TEST [SKYACTIV-G 2.0].) — APP (APP sensor) — BARO (BARO sensor) — BOO (Brake switch) — ECT (ECT sensor No.1) — IAT (IAT sensor No.1) — MAF (MAF sensor) — RPM (CKP sensor) • Is there any malfunction?	Yes	Repair or replace any malfunctioning parts according to the inspection result.
		No	Go to the next step.
2	**VERIFY IF MALFUNCTION CAUSE IS LOW-G (XY) SENSOR** • Is there any malfunction?	Yes	Replace the SAS control module. (See 08-10-20 SAS CONTROL MODULE REMOVAL/INSTALLATION.)
		No	Symptom troubleshooting is completed.

FREQUENT SHIFTING [FW6A-EL, FW6AX-EL]

id050317101300

TROUBLESHOOTING ITEM	Frequent shifting
DESCRIPTION	• Downshifting occurs suddenly even when accelerator pedal is depressed slightly in D position.
POSSIBLE CAUSE	1. Signal malfunction — APP sensor malfunction 2. Low-G (XY) sensor (built into SAS control module) malfunction

Diagnostic procedure

STEP	INSPECTION		ACTION
1	**INSPECT SIGNAL PARTS FOR MALFUNCTION** • Inspect the value at the following PCM PID using the M-MDS. (See 01-02-8 ON-BOARD DIAGNOSTIC TEST [SKYACTIV-G 2.0].) — APP (APP sensor) • Is there any malfunction?	Yes	Repair or replace any malfunctioning parts according to the inspection result.
		No	Go to the next step.
2	**VERIFY IF MALFUNCTION CAUSE LOW-G (XY) SENSOR** • Is there any malfunction?	Yes	Replace the SAS control module. (See 08-10-20 SAS CONTROL MODULE REMOVAL/INSTALLATION.)
		No	Symptom troubleshooting is completed.

SYMPTOM TROUBLESHOOTING [FW6A-EL, FW6AX-EL]

SHIFT POINT IS HIGH OR LOW [FW6A-EL, FW6AX-EL]

id050317101400

TROUBLESHOOTING ITEM	Shift point is high or low
DESCRIPTION	• Shift point considerably different from automatic shift diagram. • Shift delays when accelerating. • Shift occurs suddenly when accelerating and engine speed does not increase.
POSSIBLE CAUSE	1. Signal malfunction — APP sensor malfunction — BARO sensor malfunction — Brake switch malfunction — ECT sensor No.1 malfunction — IAT sensor No.1 malfunction 2. Low-G (XY) sensor (built into SAS control module) malfunction **Note** • If a tire of a different diameter from the standard tire is installed, the TCM determines that the driving mode is the AAS mode, and may change to a different shift timing from the normal timing.

Diagnostic procedure

STEP	INSPECTION		ACTION
1	**INSPECT SIGNAL PARTS FOR MALFUNCTION** • Inspect the value at the following PCM PIDs using the M-MDS. (See 01-02-8 ON-BOARD DIAGNOSTIC TEST [SKYACTIV-G 2.0].) — APP (APP sensor) — BARO (BARO sensor) — BOO (Brake switch) — ECT (ECT sensor No.1) — IAT (IAT sensor No.1) • Is there any malfunction?	Yes	Repair or replace any malfunctioning parts according to the inspection result.
		No	Go to the next step.
2	**VERIFY IF MALFUNCTION CAUSE IS LOW-G (XY) SENSOR** • Is there any malfunction?	Yes	Replace the SAS control module. (See 08-10-20 SAS CONTROL MODULE REMOVAL/INSTALLATION.)
		No	Symptom troubleshooting is completed.

NO KICKDOWN [FW6A-EL, FW6AX-EL]

id050317101600

TROUBLESHOOTING ITEM	No kickdown
DESCRIPTION	• Does not downshift when accelerator pedal is fully depressed within kickdown range.
POSSIBLE CAUSE	1. Signal malfunction — APP sensor malfunction

Diagnostic procedure

STEP	INSPECTION		ACTION
1	**INSPECT SIGNAL PARTS FOR MALFUNCTION** • Inspect the value at the following PCM PID using the M-MDS. (See 01-02-8 ON-BOARD DIAGNOSTIC TEST [SKYACTIV-G 2.0].) — APP (APP sensor) • Is there any malfunction?	Yes	Repair or replace any malfunctioning parts according to the inspection result.
		No	Symptom troubleshooting is completed.

SYMPTOM TROUBLESHOOTING [FW6A-EL, FW6AX-EL]

ENGINE FLARES UP OR SLIPS WHEN UPSHIFTING OR DOWNSHIFTING [FW6A-EL, FW6AX-EL]

id050317101700

TROUBLESHOOTING ITEM	Engine flares up or slips when upshifting or downshifting
DESCRIPTION	• When accelerator pedal is depressed, engine speed increases normally but vehicle speed increases slowly. • When accelerator pedal is depressed while driving, engine speed increases but vehicle speed does not.
POSSIBLE CAUSE	1. Signal malfunction — APP sensor malfunction — CKP sensor malfunction — MAF sensor malfunction 2. Learning is not performed

Diagnostic procedure

STEP	INSPECTION		ACTION
1	**VERIFY MALFUNCTION SYMPTOM** • Is the malfunction symptom at the same level compared to a vehicle of the same model?	Yes	Symptom troubleshooting is completed.
		No	Go to the next step.
2	**INSPECT SIGNAL PARTS FOR MALFUNCTION** • Inspect the value at the following PCM PIDs using the M-MDS. (See 01-02-8 ON-BOARD DIAGNOSTIC TEST [SKYACTIV-G 2.0].) — APP (APP sensor) — MAF (MAF sensor) — RPM (CKP sensor) • Is there any malfunction?	Yes	Repair or replace any malfunctioning parts according to the inspection result.
		No	Symptom troubleshooting is completed.

JUDDER UPON TORQUE CONVERTER CLUTCH (TCC) OPERATION [FW6A-EL, FW6AX-EL]

id050317101900

TROUBLESHOOTING ITEM	Judder upon torque converter clutch (TCC) operation
DESCRIPTION	• Vehicle jolts when TCC is engaged.
POSSIBLE CAUSE	1. Signal malfunction — APP sensor malfunction — CKP sensor malfunction 2. Torque converter malfunction

Diagnostic procedure

STEP	INSPECTION		ACTION
1	**VERIFY MALFUNCTION SYMPTOM** • Is the malfunction symptom at the same level compared to a vehicle of the same model?	Yes	Symptom troubleshooting is completed.
		No	Go to the next step.
2	**INSPECT SIGNAL PARTS FOR MALFUNCTION** • Inspect the value at the following PCM PIDs using the M-MDS. (See 01-02-8 ON-BOARD DIAGNOSTIC TEST [SKYACTIV-G 2.0].) — APP (APP sensor) — RPM (CKP sensor) • Is there any malfunction?	Yes	Repair or replace any malfunctioning parts according to the inspection result.
		No	Replace the automatic transaxle. (See 05-17A-28 AUTOMATIC TRANSAXLE REMOVAL/INSTALLATION [FW6A-EL].) (See 05-17A-43 AUTOMATIC TRANSAXLE REMOVAL/INSTALLATION [FW6AX-EL].)

SYMPTOM TROUBLESHOOTING [FW6A-EL, FW6AX-EL]

EXCESSIVE SHIFT SHOCK FROM N TO D OR N TO R POSITION [FW6A-EL, FW6AX-EL]

id050317102000

TROUBLESHOOTING ITEM	Excessive shift shock from N to D or N to R position
DESCRIPTION	• Strong shock is felt when shifting from N to D or N to R position at idle.
POSSIBLE CAUSE	1. Not within idle speed specification 2. Signal malfunction — APP sensor malfunction — CKP sensor malfunction 3. Poor installation or worn of engine mount, suspension

Diagnostic procedure

STEP	INSPECTION		ACTION
1	**VERIFY MALFUNCTION SYMPTOM** • Is the malfunction symptom (shift shock/shifting time) at the same level compared to a vehicle of the same model?	Yes	Symptom troubleshooting is completed.
		No	Go to the next step.
2	**PERFORM ON-BOARD DIAGNOSTIC TO VERIFY HYDRAULIC PRESSURE SWITCH OPERATION PRESSURE** • Is the operation pressure normal?	Yes	Go to the next step.
		No	Replace the control valve body. (See 05-17A-67 CONTROL VALVE BODY REMOVAL/INSTALLATION [FW6A-EL, FW6AX-EL].)
3	**INSPECT ENGINE CONTROL SYSTEM FOR MALFUNCTION** • Perform the symptom troubleshooting “NO.9 FAST IDLE/RUNS ON”. (See 01-03-51 NO.9 FAST IDLE/RUNS ON [SKYACTIV-G 2.0].) • Is there any malfunction?	Yes	Repair or replace any malfunctioning parts according to the inspection result.
		No	Go to the next step.
4	**INSPECT SIGNAL PARTS FOR MALFUNCTION** • Inspect the value at the following PCM PIDs using the M-MDS. (See 01-02-8 ON-BOARD DIAGNOSTIC TEST [SKYACTIV-G 2.0].) — APP (APP sensor) — RPM (CKP sensor) • Is there any malfunction?	Yes	Repair or replace any malfunctioning parts according to the inspection result.
		No	Go to the next step.
5	**INSPECT ENGINE MOUNT/SUSPENSION FOR POOR TIGHTENING** • Is there any malfunction?	Yes	Repair or replace any malfunctioning parts according to the inspection result. (See 01-10A-105 ENGINE REMOVAL/INSTALLATION [SKYACTIV-G 2.0].)
		No	Symptom troubleshooting is completed.

EXCESSIVE SHIFT SHOCK IS FELT WHEN UPSHIFTING AND DOWNSHIFTING [FW6A-EL, FW6AX-EL]

id050317102100

TROUBLESHOOTING ITEM	Excessive shift shock is felt when upshifting and downshifting
DESCRIPTION	• Excessive shift shock is felt when depressing accelerator pedal to accelerate at upshifting. • During cruising, excessive shift shock is felt when depressing accelerator pedal at downshifting.
POSSIBLE CAUSE	1. Signal malfunction — APP sensor malfunction 2. Poor installation or worn of engine mount, suspension

Diagnostic procedure

STEP	INSPECTION		ACTION
1	**VERIFY MALFUNCTION SYMPTOM** • Is the malfunction symptom (shift shock/shifting time) at the same level compared to a vehicle of the same model?	Yes	Symptom troubleshooting is completed.
		No	Go to the next step.
2	**PERFORM ON-BOARD DIAGNOSTIC TO VERIFY HYDRAULIC PRESSURE SWITCH OPERATION PRESSURE** • Is the operation pressure normal?	Yes	Go to the next step.
		No	Replace the control valve body. (See 05-17A-67 CONTROL VALVE BODY REMOVAL/INSTALLATION [FW6A-EL, FW6AX-EL].)

SYMPTOM TROUBLESHOOTING [FW6A-EL, FW6AX-EL]

STEP	INSPECTION		ACTION
3	**INSPECT SIGNAL PARTS FOR MALFUNCTION** • Inspect the value at the following PCM PID using the M-MDS. (See 01-02-8 ON-BOARD DIAGNOSTIC TEST [SKYACTIV-G 2.0].) — APP (APP sensor) • Is there any malfunction?	Yes	Repair or replace any malfunctioning parts according to the inspection result.
		No	Go to the next step.
4	**INSPECT ENGINE MOUNT/SUSPENSION FOR POOR TIGHTENING** • Is there any malfunction?	Yes	Repair or replace any malfunctioning parts according to the inspection result. (See 05-02A-11 ON-BOARD DIAGNOSTIC SYSTEM DTC TABLE [FW6A-EL, FW6AX-EL].)
		No	Symptom troubleshooting is completed.

EXCESSIVE SHIFT SHOCK ON TORQUE CONVERTER CLUTCH (TCC) [FW6A-EL, FW6AX-EL]

id050317102200

TROUBLESHOOTING ITEM	Excessive shift shock on torque converter clutch (TCC)
DESCRIPTION	• Strong shock is felt when TCC is engaged.
POSSIBLE CAUSE	1. Signal malfunction — APP sensor malfunction — CKP sensor malfunction 2. Torque converter malfunction

Diagnostic procedure

STEP	INSPECTION		ACTION
1	**INSPECT SIGNAL PARTS FOR MALFUNCTION** • Inspect the value at the following PCM PIDs using the M-MDS. (See 01-02-8 ON-BOARD DIAGNOSTIC TEST [SKYACTIV-G 2.0].) — APP (APP sensor) — RPM (CKP sensor) • Is there any malfunction?	Yes	Repair or replace any malfunctioning parts according to the inspection result.
		No	Replace the automatic transaxle. (See 05-17A-28 AUTOMATIC TRANSAXLE REMOVAL/INSTALLATION [FW6A-EL].) (See 05-17A-43 AUTOMATIC TRANSAXLE REMOVAL/INSTALLATION [FW6AX-EL].)

NOISE OCCURS AT IDLE WHEN VEHICLE IS STOPPED IN ALL POSITIONS [FW6A-EL, FW6AX-EL]

id050317102300

TROUBLESHOOTING ITEM	Noise occurs at idle when vehicle is stopped in all positions
DESCRIPTION	• Transaxle is noisy in all positions when vehicle idling.
POSSIBLE CAUSE	1. Engine control system malfunction 2. Automatic transaxle internal parts malfunction — Oil pump malfunction — Torque converter internal parts malfunction

Diagnostic procedure

STEP	INSPECTION		ACTION
1	**VERIFY IF MALFUNCTION CAUSE IS ENGINE CONTROL SYSTEM OR TORQUE CONVERTER** • Inspect the engine condition. • Is there any malfunction?	Yes	Go to the appropriate symptom troubleshooting. (See 01-03-5 SYMPTOM DIAGNOSTIC INDEX [SKYACTIV-G 2.0].)
		No	Replace the automatic transaxle. (See 05-17A-28 AUTOMATIC TRANSAXLE REMOVAL/INSTALLATION [FW6A-EL].) (See 05-17A-43 AUTOMATIC TRANSAXLE REMOVAL/INSTALLATION [FW6AX-EL].)

SYMPTOM TROUBLESHOOTING [FW6A-EL, FW6AX-EL]

NOISE OCCURS AT IDLE WHEN VEHICLE IS STOPPED IN D, M OR R POSITION [FW6A-EL, FW6AX-EL]

id050317102400

TROUBLESHOOTING ITEM	**Noise occurs at idle when vehicle is stopped in D, M or R position**
DESCRIPTION	• Transaxle is noisy in driving positions when vehicle is idling.
POSSIBLE CAUSE	1. Engine control system malfunction 2. Automatic transaxle internal parts malfunction — Torque converter internal parts malfunction

Diagnostic procedure

STEP	INSPECTION		ACTION
1	**VERIFY IF MALFUNCTION CAUSE IS ENGINE CONTROL SYSTEM OR TORQUE CONVERTER** • Inspect the engine condition. • Is there any malfunction?	Yes	Go to the appropriate symptom troubleshooting. (See 01-03-5 SYMPTOM DIAGNOSTIC INDEX [SKYACTIV-G 2.0].)
		No	Replace the automatic transaxle. (See 05-17A-28 AUTOMATIC TRANSAXLE REMOVAL/INSTALLATION [FW6A-EL].) (See 05-17A-43 AUTOMATIC TRANSAXLE REMOVAL/INSTALLATION [FW6AX-EL].)

TRANSAXLE OVERHEATS [FW6A-EL, FW6AX-EL]

id050317102600

TROUBLESHOOTING ITEM	**Transaxle overheats**
DESCRIPTION	• Burnt smell emitted from the transaxle. • Smoke is emitted from the transaxle.
POSSIBLE CAUSE	1. Signal malfunction — APP sensor malfunction — Brake switch malfunction — CKP sensor malfunction — ECT sensor No.1 malfunction 2. ATF malfunction 3. Oil cooler malfunction 4. Control valve body malfunction

Diagnostic procedure

STEP	INSPECTION		ACTION
1	**INSPECT SIGNAL PARTS FOR MALFUNCTION** • Inspect the value at the following PCM PIDs using the M-MDS. (See 01-02-8 ON-BOARD DIAGNOSTIC TEST [SKYACTIV-G 2.0].) — APP (APP sensor) — BOO (Brake switch) — ECT (ECT sensor No.1) — RPM (CKP sensor) • Is there any malfunction?	Yes	Repair or replace any malfunctioning parts according to the inspection result.
		No	Go to the next step.
2	**INSPECT ATF LEVEL** • Inspect the ATF level. (See 05-17A-11 AUTOMATIC TRANSAXLE FLUID (ATF) INSPECTION [FW6A-EL, FW6AX-EL].) • Is there any malfunction?	Yes	Adjust the ATF level to the specification. (See 05-17A-12 AUTOMATIC TRANSAXLE FLUID (ATF) REPLACEMENT [FW6A-EL, FW6AX-EL].)
		No	Go to the next step.
3	**VISUALLY INSPECT OIL COOLER** • Visually inspect the oil cooler. • Is there any malfunction?	Yes	Repair or replace any malfunctioning parts according to the inspection result. (See 05-17A-66 OIL COOLER REMOVAL/INSTALLATION [FW6A-EL, FW6AX-EL].)
		No	Go to the next step.

SYMPTOM TROUBLESHOOTING [FW6A-EL, FW6AX-EL]

STEP	INSPECTION		ACTION
4	**VERIFY IF MALFUNCTION CAUSE IS CONTROL VALVE BODY** • Inspect the value at the following TCM PIDs using the M-MDS. (See 05-02A-94 ON-BOARD DIAGNOSTIC SYSTEM PID/DATA MONITOR INSPECTION [FW6A-EL, FW6AX-EL].) — ECU_A — ECU_B — ECU_C — GEAR_SEL — LINEDES — OP_SW1 — OP_SW2 — OP_SW3 — OP_SW4 — OSS — SS1 — SS2 — SS3 — SS4 — SSLU — SSLU_PRES — SSP — SSP_PRES — TR — TSS — VSS • Is there any malfunction?	Yes	Replace the control valve body, then go to the next step. (See 05-17A-67 CONTROL VALVE BODY REMOVAL/ INSTALLATION [FW6A-EL, FW6AX-EL].)
		No	Symptom troubleshooting is completed.

ENGINE STALLS WHEN SHIFTED TO D, M OR R POSITION [FW6A-EL, FW6AX-EL]

id050317102700

TROUBLESHOOTING ITEM	Engine stalls when shifted to D, M or R position
DESCRIPTION	• Engine stalls when shifting from N or P position to D, M or R position at idle.
POSSIBLE CAUSE	1. Not within idle speed specification 2. TCC piston malfunction (solenoid drive circuit, hydraulic passage blockage, poor operation) — Output solenoid valve malfunction (stuck) • TCC control solenoid 3. Torque converter malfunction

Diagnostic procedure

STEP	INSPECTION		ACTION
1	**VERIFY IF MALFUNCTION CAUSE IS ENGINE CONTROL SYSTEM OR TORQUE CONVERTER** • Perform the symptom troubleshooting “NO.5 ENGINE STALLS-AFTER START/AT IDLE” and “NO.10 LOW IDLE/STALLS DURING DECELERATION”. (See 01-03-31 NO.5 ENGINE STALLS-AFTER START/AT IDLE [SKYACTIV-G 2.0].) (See 01-03-54 NO.10 LOW IDLE/STALLS DURING DECELERATION [SKYACTIV-G 2.0].) • Is there any malfunction?	Yes	Repair or replace any malfunctioning parts according to the inspection result.
		No	Replace the automatic transaxle. (See 05-17A-28 AUTOMATIC TRANSAXLE REMOVAL/ INSTALLATION [FW6A-EL].) (See 05-17A-43 AUTOMATIC TRANSAXLE REMOVAL/ INSTALLATION [FW6AX-EL].)

SYMPTOM TROUBLESHOOTING [FW6A-EL, FW6AX-EL]

STARTER DOES NOT WORK [FW6A-EL, FW6AX-EL]

id050317102900

TROUBLESHOOTING ITEM	Starter does not work
DESCRIPTION	• Starter does not work even when in P or N position.
POSSIBLE CAUSE	1. Wiring harness between TCM terminal J and PCM terminal 2BD malfunction 2. Wiring harness between TCM terminal J, start stop unit terminal 1F and LF control unit terminal K malfunction (Vehicle with advanced keyless entry system) 3. Immobilizer system operating or system malfunction 4. Engine control system malfunction

Diagnostic procedure

STEP	INSPECTION		ACTION
1	**INSPECT WIRING HARNESS BETWEEN TCM AND PCM** • Switch the ignition to off. • Disconnect the PCM connector. • Disconnect the TCM connector. • Visually inspect for pin deformity, open circuit, or wiring harness non-insulation between TCM terminal J and PCM terminal 2BD. • Is there any malfunction?	Yes	Repair or replace any malfunctioning parts according to the inspection result.
		No	Vehicle without advanced keyless entry system: • Go to step3. Vehicle with advanced keyless entry system: • Go to the next step.
2	**INSPECT WIRING HARNESS BETWEEN TCM, START STOP UNIT AND LF CONTROL UNIT** • Switch the ignition to off. • Disconnect the start stop unit connector. • Disconnect the TCM connector. • Disconnect the LF control unit connector. • Visually inspect for pin deformity, open circuit, or wiring harness non-insulation between TCM terminal J, start stop unit terminal 1F and LF control unit terminal K. • Is there any malfunction?	Yes	Repair or replace any malfunctioning parts according to the inspection result.
		No	Go to the next step.
3	**INSPECT IMMOBILIZER SYSTEM AND ENGINE CONTROL SYSTEM FOR MALFUNCTION** • Perform the symptom troubleshooting “NO.3 WILL NOT CRANK”. (See 01-03-19 NO.3 WILL NOT CRANK [SKYACTIV-G 2.0].) • Is there any malfunction?	Yes	Repair or replace any malfunctioning parts according to the inspection result.
		No	Symptom troubleshooting is completed.

GEAR POSITION INDICATOR DOES NOT ILLUMINATE IN M POSITION [FW6A-EL, FW6AX-EL]

id050317103400

TROUBLESHOOTING ITEM	Gear position indicator does not illuminate in M position
DESCRIPTION	• Gear position indicator in instrument cluster does not illuminate in M position with the ignition is ON (engine off or on).
POSSIBLE CAUSE	1. Instrument cluster malfunction **Note** • When the ATF temperature is **132 °C {270 °F} or more**, gear fixing is inhibited, the gear position indicator is turned off, and he control is changed to the automatic shift control.

Diagnostic procedure

STEP	INSPECTION		ACTION
1	**INSPECT INSTRUMENT CLUSTER FOR MALFUNCTION** • Inspect the instrument cluster. (See 09-22-11 INSTRUMENT CLUSTER INSPECTION.) • Is there any malfunction?	Yes	Replace the instrument cluster. (See 09-22-6 INSTRUMENT CLUSTER REMOVAL/INSTALLATION.)
		No	Symptom troubleshooting is completed.

SYMPTOM TROUBLESHOOTING [FW6A-EL, FW6AX-EL]

GEAR POSITION INDICATOR ILLUMINATES IN P, R, N AND D POSITIONS [FW6A-EL, FW6AX-EL]

id050317103500

TROUBLESHOOTING ITEM	Gear position indicator illuminates in P, R, N and D positions
DESCRIPTION	• Gear position indicator in instrument cluster illuminates in P, R, N and D positions with the ignition is ON (engine off or on).
POSSIBLE CAUSE	1. Instrument cluster malfunction

Diagnostic procedure

STEP	INSPECTION		ACTION
1	**INSPECT INSTRUMENT CLUSTER FOR MALFUNCTION** • Inspect the instrument cluster. (See 09-22-11 INSTRUMENT CLUSTER INSPECTION.) • Is there any malfunction?	Yes	Replace the instrument cluster. (See 09-22-6 INSTRUMENT CLUSTER REMOVAL/INSTALLATION.)
		No	Symptom troubleshooting is completed.

M POSITION INDICATOR LIGHT DOES NOT ILLUMINATE IN M POSITION/M POSITION INDICATOR LIGHT ILLUMINATES IN D POSITION [FW6A-EL, FW6AX-EL]

id050317103200

TROUBLESHOOTING ITEM	M position indicator light does not illuminate in M position/M position indicator light illuminates in D position
DESCRIPTION	• M position indicator light in instrument cluster does not illuminate in M position or M position indicator light in instrument cluster in P, R, N and D positions with the ignition is ON (engine off or on).
POSSIBLE CAUSE	1. Instrument cluster malfunction

Diagnostic procedure

STEP	INSPECTION		ACTION
1	**INSPECT INSTRUMENT CLUSTER FOR MALFUNCTION** • Inspect the instrument cluster. (See 09-22-11 INSTRUMENT CLUSTER INSPECTION.) • Is there any malfunction?	Yes	Replace the instrument cluster. (See 09-22-6 INSTRUMENT CLUSTER REMOVAL/INSTALLATION.)
		No	Symptom troubleshooting is completed.

SYMPTOM TROUBLESHOOTING [FW6A-EL, FW6AX-EL]

ATF SEEPING FROM AUTOMATIC TRANSAXLE [FW6A-EL, FW6AX-EL]

id050317103800

TROUBLESHOOTING ITEM	**ATF seeping from automatic transaxle**
DESCRIPTION	• ATF is seeping from the automatic transaxle case. • Foreign matter mixed with ATF is in the automatic transaxle case.
POSSIBLE CAUSE	**Note** • ATF seeping radiates from ATF leak source. • Identify the type of seeping oil referring to “SERVICE CAUTIONS, Oil Leakage Inspection” in the general information. (See 00-00-13 SERVICE CAUTIONS.) • To prevent misdiagnosis, remove any grease or dirt from the seep location and verify the location of the seeping after driving the vehicle. • ATF leakage from the following locations — Oil pan (Part of drain plug etc.) — Converter housing (Part of torque converter etc.) — End cover — Oil cooler — Oil seal (differential) — Oil seal (control valve body) — Oil seal (manual shaft) — Dipstick — Line pressure detection port — Air breather

Diagnostic procedure

STEP	INSPECTION		ACTION
1	**VERIFY IF THE MALFUNCTION CAUSE IS ATF LEAKAGE FROM THE FOLLOWING LOCATIONS** • Verify if ATF is leaking from the locations described above. • Is there ATF seeping from a location?	Yes	Verify the installation and damage condition of the part at the location where the ATF is seeping and repair or replace the malfunctioning part.
		No	Symptom troubleshooting is completed.

05-03B SYMPTOM TROUBLESHOOTING [GW6A-EL, GW6AX-EL]

AUTOMATIC TRANSAXLE CONTROL SYSTEM WIRING DIAGRAM [GW6A-EL, GW6AX-EL] 05-03B–2
FOREWORD [GW6A-EL, GW6AX-EL] 05-03B–3
Troubleshooting Procedure 05-03B–3
Repair order form 05-03B–4
Action for Non-repeatable Malfunction 05-03B–6
SYMPTOM TROUBLESHOOTING ITEM TABLE [GW6A-EL, GW6AX-EL] 05-03B–6
QUICK DIAGNOSIS CHART [GW6A-EL, GW6AX-EL] 05-03B–8
VEHICLE DOES NOT MOVE IN D, M OR R POSITION [GW6A-EL, GW6AX-EL] 05-03B–9
VEHICLE MOVES IN P POSITION, OR PARKING GEAR DOES NOT DISENGAGE WHEN P IS DISENGAGED [GW6A-EL, GW6AX-EL] 05-03B–10
EXCESSIVE CREEP [GW6A-EL, GW6AX-EL] 05-03B–10
NO CREEP AT ALL [GW6A-EL, GW6AX-EL] 05-03B–10
LOW MAXIMUM SPEED AND POOR ACCELERATION [GW6A-EL, GW6AX-EL] 05-03B–11
NO SHIFTING [GW6A-EL, GW6AX-EL] 05-03B–11
DOES NOT SHIFT TO 5GR OR 6GR [GW6A-EL, GW6AX-EL] 05-03B–12
ABNORMAL SHIFTING [GW6A-EL, GW6AX-EL] 05-03B–13
FREQUENT SHIFTING [GW6A-EL, GW6AX-EL] 05-03B–13
SHIFT POINT IS HIGH OR LOW [GW6A-EL, GW6AX-EL] 05-03B–14
NO KICKDOWN [GW6A-EL, GW6AX-EL] 05-03B–14
ENGINE FLARES UP OR SLIPS WHEN UPSHIFTING OR DOWNSHIFTING [GW6A-EL, GW6AX-EL] 05-03B–15
JUDDER UPON TORQUE CONVERTER CLUTCH (TCC) OPERATION [GW6A-EL, GW6AX-EL] 05-03B–15
EXCESSIVE SHIFT SHOCK FROM N TO D OR N TO R POSITION [GW6A-EL, GW6AX-EL] 05-03B–16
EXCESSIVE SHIFT SHOCK IS FELT WHEN UPSHIFTING AND DOWNSHIFTING [GW6A-EL, GW6AX-EL] 05-03B–16
EXCESSIVE SHIFT SHOCK ON TORQUE CONVERTER CLUTCH (TCC) [GW6A-EL, GW6AX-EL] 05-03B–17
NOISE OCCURS AT IDLE WHEN VEHICLE IS STOPPED IN ALL POSITIONS [GW6A-EL, GW6AX-EL] 05-03B–17
NOISE OCCURS AT IDLE WHEN VEHICLE IS STOPPED IN D, M OR R POSITION [GW6A-EL, GW6AX-EL] . . . 05-03B–18
TRANSAXLE OVERHEATS [GW6A-EL, GW6AX-EL] 05-03B–18
ENGINE STALLS WHEN SHIFTED TO D, M OR R POSITION [GW6A-EL, GW6AX-EL] 05-03B–19
STARTER DOES NOT WORK [GW6A-EL, GW6AX-EL] 05-03B–20
GEAR POSITION INDICATOR DOES NOT ILLUMINATE IN M POSITION [GW6A-EL, GW6AX-EL] 05-03B–20
GEAR POSITION INDICATOR ILLUMINATES IN P, R, N AND D POSITIONS [GW6A-EL, GW6AX-EL] 05-03B–21
M POSITION INDICATOR LIGHT DOES NOT ILLUMINATE IN M POSITION/M POSITION INDICATOR LIGHT ILLUMINATES IN D POSITION [GW6A-EL, GW6AX-EL] 05-03B–21
ATF SEEPING FROM AUTOMATIC TRANSAXLE [GW6A-EL, GW6AX-EL] 05-03B–22

SYMPTOM TROUBLESHOOTING [GW6A-EL, GW6AX-EL]

AUTOMATIC TRANSAXLE CONTROL SYSTEM WIRING DIAGRAM [GW6A-EL, GW6AX-EL]

id050320100000

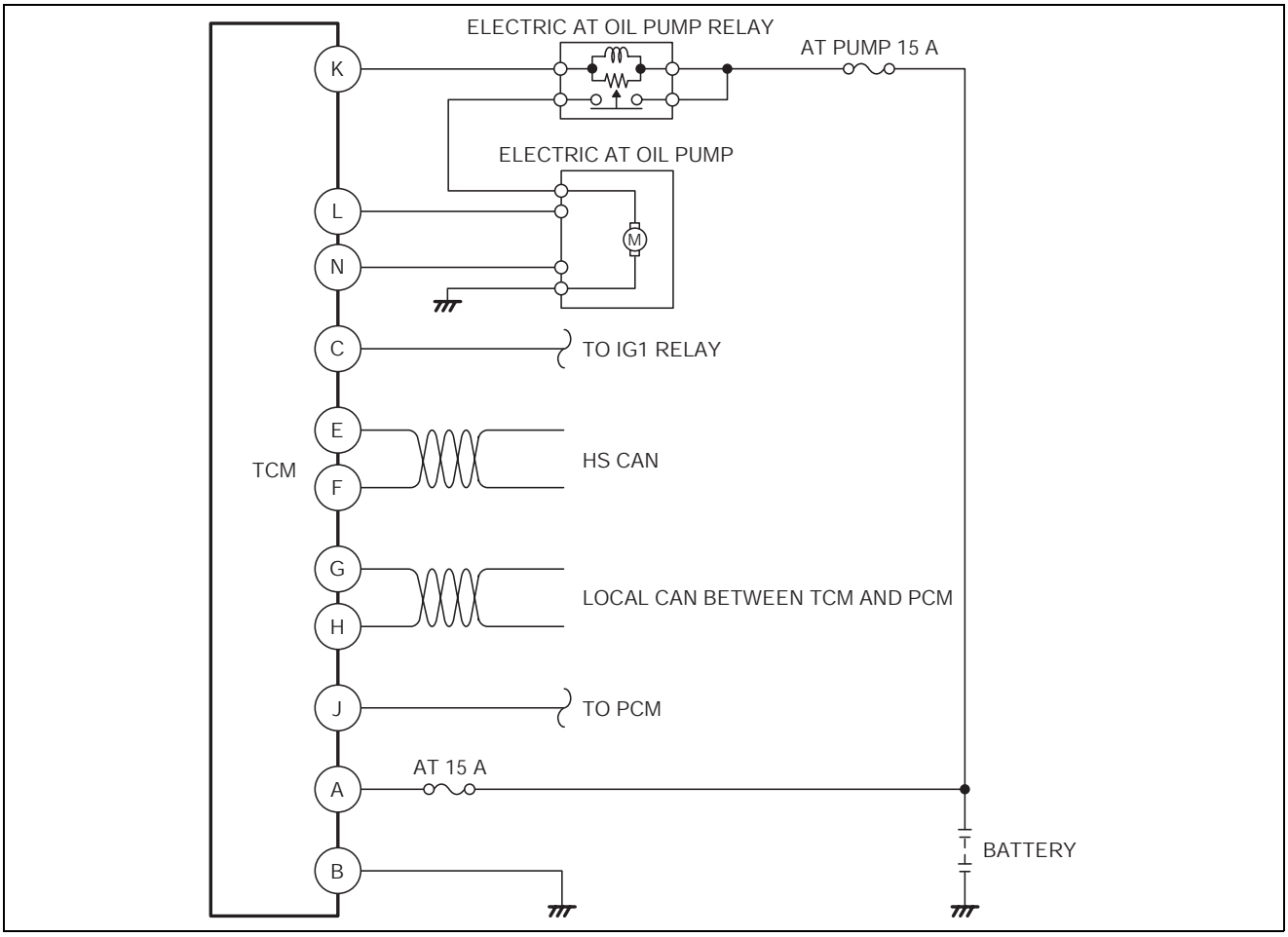

ac5wzw0000239

SYMPTOM TROUBLESHOOTING [GW6A-EL, GW6AX-EL]

FOREWORD [GW6A-EL, GW6AX-EL]

id050320100100

- If there is any vehicle malfunction complaint lodged by a customer, perform malfunction diagnosis according to the troubleshooting procedure.

Troubleshooting Procedure

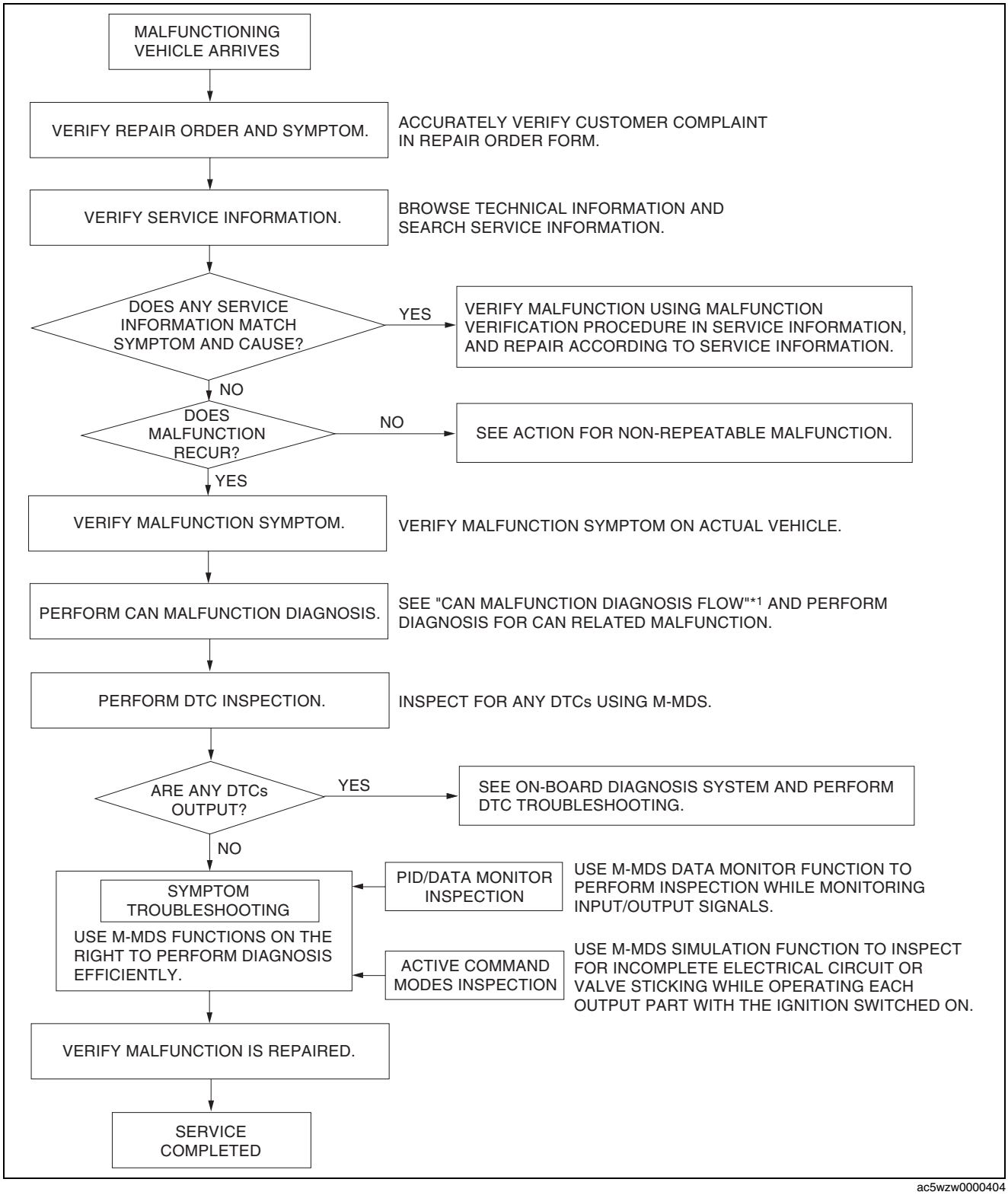

ac5wzw0000404

*1 : 10-02C-3 CONTROLLER AREA NETWORK (CAN) MALFUNCTION DIAGNOSIS FLOW [SKYACTIV-D 2.2 (L.H.D.)]/10-02D-3 CONTROLLER AREA NETWORK (CAN) MALFUNCTION DIAGNOSIS FLOW [SKYACTIV-D 2.2 (R.H.D.)]

SYMPTOM TROUBLESHOOTING [GW6A-EL, GW6AX-EL]

Repair order form

Repair order form and malfunction symptom check sheet

	Repair order	Check with customer	Diagnosis	Repair	Explanation to customer
Date/time					
In-charge					

Customer statement (When? What? What time(s)? Where it occurs. Warning light illumination? Can anyone replicate problem?)

Vehicle body number: | Registration date: | Date of malfunction occurrence: | Odometer reading km {mph}

Engine (SOHC/DOHC/RE/DE) (Cab /EGI/ Turbo/ Miller cycle/ LPG/Direct injection) | Transmission (MT/HAT/EC-AT/CVT)

Environmental conditions

Weather	Ambient temp.	Drive scenario	Grade	Occurrence frequency
Sunny Cloudy Rain Snow High wind Wind gusts N/A Other	-10°C {14°F} or less -10—0°C {14—32°F} 0—10°C {32—50°F} 10—15°C {50—59°F} 15—20°C {59—68°F} 20—25°C {68—77°F} 25—30°C {77—86°F} 30—35°C {86—95°F} 35—40°C {95—104°F} 40—45°C {104—113°F} or more 45°C {113°F} N/A Other	Depart/arrive Traffic jam (city) Standard city street Suburbs Highway Uneven road Dry road surface Wet road surface Snow bound road Icy road Other	Flat Upgrade Down grade N/A Other	Once/day 2-3 times/day 4-5 times/day Many times/day Once/week 2-3 times/week 4-5 times/week Once/month 2-3 times/month 4-5 times/month Other

Driving conditions

Fuel	Warm-up condition	Driving operation	Driving posture	Load	Accelerator opening angle	Shift position	Eng RPM	Vehicle speed	Pattern of use
Regular High Oct. Diesel LPG Other Fuel gauge F E	Cold Half-warmed Fully warmed N/A Other Water temp. gauge H C	When starting After starting Re-starting (min. after stopped) Idling Racing Accel. from stop Normal driving Deceleration Braking Soft braking Clutch disengage Sudden accel. Light accel. Shifting (km/h {mph} → km/h {mph}) Other	Vehicle stopped Straight-on driving Reversing Right turn Left turn Other	Headlights on Exterior lights on A/C on AUTO °C{°F} Blower: 1 step Blower: 2 steps Blower: 3 steps Blower: 4 steps Power steering lock to lock Rear defrost on Wipers on Audio on Other	0/8 1/8 2/8 3/8 4/8 5/8 6/8 7/8 8/8	MT: 1 2 3 4 5 6 R N AT: P R N D S L Hold M (km/h {mph})	Idle Less than 1,000 Less than 1,500 Less than 2,000 Less than 2,500 Less than 3,000 Less than 4,000 Less than 4,500 Less than 5,000 Less than 5,500 Less than 6,000 Less than 6,500 7,000 or more	5 km/h {3 mph} 10 km/h {6.2 mph} 20 km/h {12 mph} 30 km/h {19 mph} 40 km/h {25 mph} 50 km/h {31 mph} 60 km/h {37 mph} 70 km/h {43 mph} 80 km/h {50 mph} 90 km/h {56 mph} 100 km/h {62.1 mph} 110 km/h {68.4 mph} 120 km/h {74.6 mph} 130 km/h {80.8 mph} 140 km/h {87 mph} 150 km/h {93.2 mph} 160 km/h {99.4 mph}	Work____% Minor use____% Trips____% Other____% Between ENG. start→Stop: Distance, time km Approx Hrs. Approx No. of occupants: Load condition kg Other

DTC, measured data (fuel pressure, intake manifold vacuum, throttle sensor electromotive force, air flow electromotive force, other), maintenance, repair, accident history, installation of commercial devices

ac5wzw0000306

SYMPTOM TROUBLESHOOTING [GW6A-EL, GW6AX-EL]

Dealer name:	Vehicle body number:	Odometer reading:
Vehicle-in date:	Estimated repair completion date:	Person in-charge:
Subject (Content):		
Audio memory		

	1	2	3	4	5	6	Fuel level
FM1							E F
FM2							
AM							

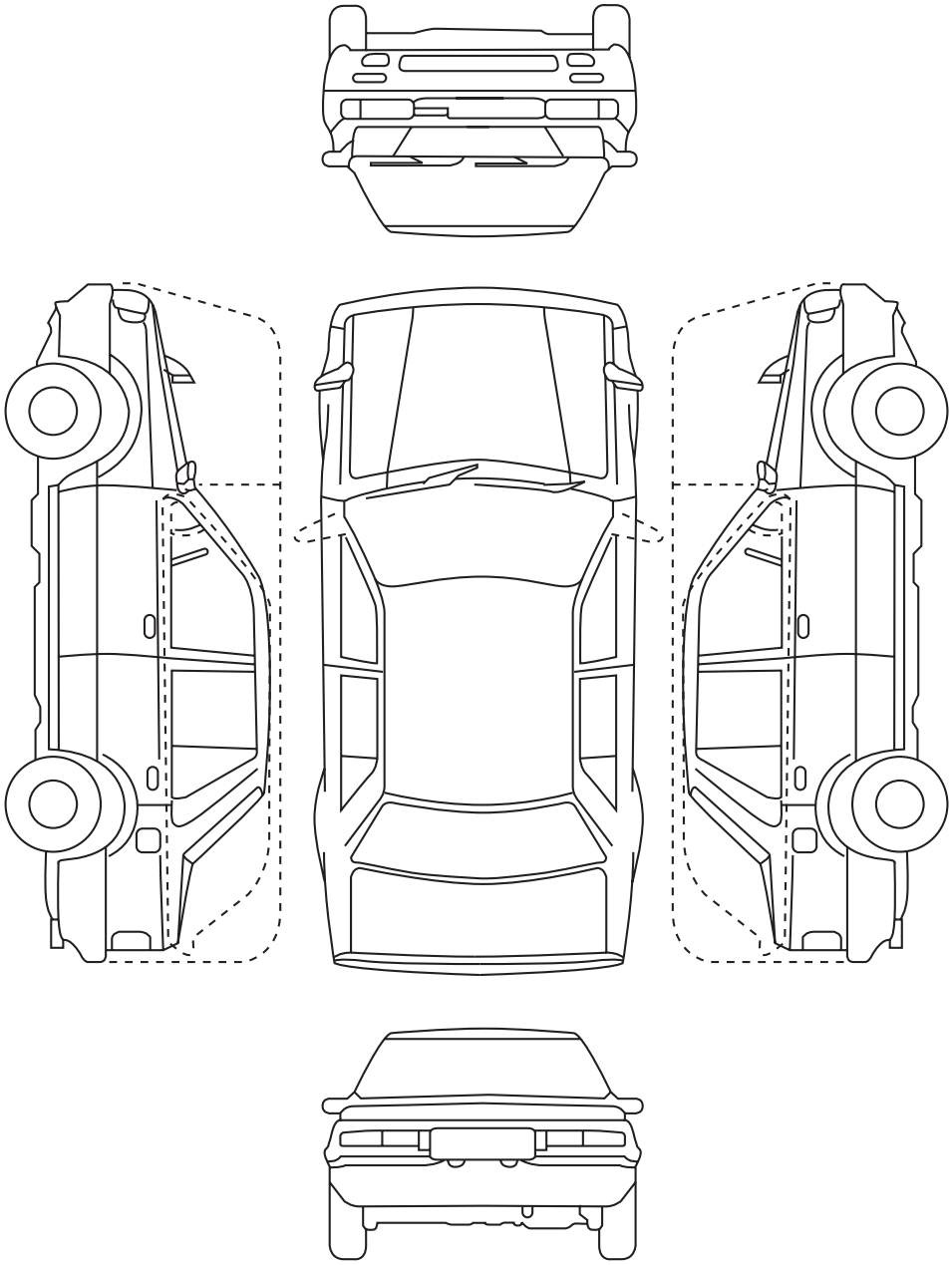

ac5wzw0000306

SYMPTOM TROUBLESHOOTING [GW6A-EL, GW6AX-EL]

Action for Non-repeatable Malfunction

- If the malfunction does not recur, verify the malfunction cause by performing the following actions:
  - — Verify that no DTCs are stored. (See 05-02B-6 ON-BOARD DIAGNOSTIC SYSTEM DTC INSPECTION [GW6A-EL, GW6AX-EL].)
  - — Based on the repair order form, attempt to drive the vehicle or perform tests to replicate the malfunction, record the data at that time, and detect the malfunction cause.
- If the malfunction does not recur after the above servicing, explain to the customer that the vehicle is normal.

SYMPTOM TROUBLESHOOTING ITEM TABLE [GW6A-EL, GW6AX-EL]

id050320100300

- Use the chart below to verify the symptoms of the trouble in order to diagnose the appropriate area.

Note

- If a tire of a different diameter from the standard tire is installed, the TCM determines that the driving mode is the AAS mode, and may change to a different shift timing from the normal timing.

Troubleshooting item	Description	Page
Vehicle does not move in D, M or R position	• Vehicle does not move when accelerator pedal is depressed. • The engine revs up but the vehicle does not move even though the accelerator pedal is depressed. • Tires are locked and do not move even though the accelerator pedal is depressed.	(See 05-03B-9 VEHICLE DOES NOT MOVE IN D, M OR R POSITION [GW6A-EL, GW6AX-EL].)
Vehicle moves in P position, or parking gear does not disengage when P is disengaged	• Vehicle rolls when on a downward slope in P position. • Vehicle does not move in D, M and R position when accelerator pedal is depressed, and engine remains in stalled condition.	(See 05-03B-10 VEHICLE MOVES IN P POSITION, OR PARKING GEAR DOES NOT DISENGAGE WHEN P IS DISENGAGED [GW6A-EL, GW6AX-EL].)
Excessive creep	• Vehicle accelerates in D and R position when accelerator pedal is not depressed.	(See 05-03B-10 EXCESSIVE CREEP [GW6A-EL, GW6AX-EL].)
No creep at all	• Vehicle does not move in D, M or R position when idling on flat paved road.	(See 05-03B-10 NO CREEP AT ALL [GW6A-EL, GW6AX-EL].)
Low maximum speed and poor acceleration	• Vehicle acceleration is poor at start. • Delayed acceleration when accelerator pedal is depressed while driving.	(See 05-03B-11 LOW MAXIMUM SPEED AND POOR ACCELERATION [GW6A-EL, GW6AX-EL].)
No shifting	• Single shift position only. • Sometimes shifts correctly.	(See 05-03B-11 NO SHIFTING [GW6A-EL, GW6AX-EL].)
Does not shift to 5GR or 6GR	• Vehicle does not upshift from 4GR to 5GR or 5GR to 6GR even though vehicle speed is increased. • At a vehicle speed range where the transaxle should shift up to 5GR and 6GR gears in D position based on the shift pattern, the transaxle does not shift to 5GR and 6GR gears by gradually releasing the accelerator pedal.	(See 05-03B-12 DOES NOT SHIFT TO 5GR OR 6GR [GW6A-EL, GW6AX-EL].)
Abnormal shifting	• Shifts incorrectly (incorrect shift pattern).	(See 05-03B-13 ABNORMAL SHIFTING [GW6A-EL, GW6AX-EL].)
Frequent shifting	• Downshifting occurs suddenly even when accelerator pedal is depressed slightly in D position.	(See 05-03B-13 FREQUENT SHIFTING [GW6A-EL, GW6AX-EL].)
Shift point is high or low	• Shift point considerably different from automatic shift diagram. • Shift delays when accelerating. • Shift occurs suddenly when accelerating and engine speed does not increase.	(See 05-03B-14 SHIFT POINT IS HIGH OR LOW [GW6A-EL, GW6AX-EL].)
No kickdown	• Does not downshift when accelerator pedal is fully depressed within kickdown range.	(See 05-03B-14 NO KICKDOWN [GW6A-EL, GW6AX-EL].)

SYMPTOM TROUBLESHOOTING [GW6A-EL, GW6AX-EL]

Troubleshooting item	Description	Page
Engine flares up or slips when upshifting or downshifting	• When accelerator pedal is depressed, engine speed increases normally but vehicle speed increases slowly. • When accelerator pedal is depressed while driving, engine speed increases but vehicle speed does not.	(See 05-03B-15 ENGINE FLARES UP OR SLIPS WHEN UPSHIFTING OR DOWNSHIFTING [GW6A-EL, GW6AX-EL].)
Judder upon torque converter clutch (TCC) operation	• Vehicle jolts when TCC is engaged.	(See 05-03B-15 JUDDER UPON TORQUE CONVERTER CLUTCH (TCC) OPERATION [GW6A-EL, GW6AX-EL].)
Excessive shift shock from N to D or N to R position	• Strong shock is felt when shifting from N to D or N to R position at idle.	(See 05-03B-16 EXCESSIVE SHIFT SHOCK FROM N TO D OR N TO R POSITION [GW6A-EL, GW6AX-EL].)
Excessive shift shock is felt when upshifting and downshifting	• Excessive shift shock is felt when depressing accelerator pedal to accelerate at upshifting. • During cruising, excessive shift shock is felt when depressing accelerator pedal at downshifting.	(See 05-03B-16 EXCESSIVE SHIFT SHOCK IS FELT WHEN UPSHIFTING AND DOWNSHIFTING [GW6A-EL, GW6AX-EL].)
Excessive shift shock on torque converter clutch (TCC)	• Strong shock is felt when TCC is engaged.	(See 05-03B-17 EXCESSIVE SHIFT SHOCK ON TORQUE CONVERTER CLUTCH (TCC) [GW6A-EL, GW6AX-EL].)
Noise occurs at idle when vehicle is stopped in all positions	• Transaxle is noisy in all positions when vehicle idling.	(See 05-03B-17 NOISE OCCURS AT IDLE WHEN VEHICLE IS STOPPED IN ALL POSITIONS [GW6A-EL, GW6AX-EL].)
Noise occurs at idle when vehicle is stopped in D, M or R position	• Transaxle is noisy in driving positions when vehicle is idling.	(See 05-03B-18 NOISE OCCURS AT IDLE WHEN VEHICLE IS STOPPED IN D, M OR R POSITION [GW6A-EL, GW6AX-EL].)
Transaxle overheats	• Burnt smell emitted from the transaxle. • Smoke is emitted from the transaxle.	(See 05-03B-18 TRANSAXLE OVERHEATS [GW6A-EL, GW6AX-EL].)
Engine stalls when shifted to D, M or R position	• Engine stalls when shifting from N or P position to D, M or R position at idle.	(See 05-03B-19 ENGINE STALLS WHEN SHIFTED TO D, M OR R POSITION [GW6A-EL, GW6AX-EL].)
Starter does not work	• Starter does not work even when in P or N position.	(See 05-03B-20 STARTER DOES NOT WORK [GW6A-EL, GW6AX-EL].)
Gear position indicator does not illuminate in M position	• Gear position indicator in instrument cluster does not illuminate in M position with the ignition is ON (engine off or on).	(See 05-03B-20 GEAR POSITION INDICATOR DOES NOT ILLUMINATE IN M POSITION [GW6A-EL, GW6AX-EL].)
Gear position indicator illuminates in P, R, N and D positions	• Gear position indicator in instrument cluster illuminates in P, R, N and D positions with the ignition is ON (engine off or on).	(See 05-03B-21 GEAR POSITION INDICATOR ILLUMINATES IN P, R, N AND D POSITIONS [GW6A-EL, GW6AX-EL].)
M position indicator light does not illuminate in M position/M position indicator light illuminates in D position	• M position indicator light in instrument cluster does not illuminate in M position or M position indicator light in instrument cluster in P, R, N and D positions with the ignition is ON (engine off or on).	(See 05-03B-21 M POSITION INDICATOR LIGHT DOES NOT ILLUMINATE IN M POSITION/M POSITION INDICATOR LIGHT ILLUMINATES IN D POSITION [GW6A-EL, GW6AX-EL].)
ATF seeping from automatic transaxle	• ATF is seeping from the automatic transaxle case. • Foreign matter mixed with ATF is in the automatic transaxle case.	(See 05-03B-22 ATF SEEPING FROM AUTOMATIC TRANSAXLE [GW6A-EL, GW6AX-EL].)

SYMPTOM TROUBLESHOOTING [GW6A-EL, GW6AX-EL]

QUICK DIAGNOSIS CHART [GW6A-EL, GW6AX-EL]

id050320100400

X: APPLIED

SYMPTOM \ CAUSE OF TROUBLE	ECT SENSOR MALFUNCTION	CKP SENSOR MALFUNCTION	MAF SENSOR MALFUNCTION	NOT WITHIN IDLE SPEED SPECIFICATION	ENGINE CONTROL SYSTEM MALFUNCTION	IMMOBILIZER SYSTEM OPERATING OR SYSTEM MALFUNCTION	INSTRUMENT CLUSTER MALFUNCTION	BARO SENSOR MALFUNCTION	IAT SENSOR MALFUNCTION	TIRE MALFUNCTION (DIAMETER, PRESSURE OTHER THAN STANDARD)	LOW-G (XY) SENSOR MALFUNCTION	APP SENSOR MALFUNCTION	BRAKE SWITCH MALFUNCTION	OIL PUMP MALFUNCTION	TORQUE CONVERTER OPERATING MALFUNCTION	PARKING MECHANISM MALFUNCTION	MANUAL SHAFT STUCK	SEALING DETERIORATION AND DAMAGE	INCORRECT INSTALLATION OF ATX EXTERNAL PART	POOR INSTALLATION OR WORN OF ENGINE MOUNT, SUSPENSION	ATF MALFUNCTION	OIL COOLER MALFUNCTION	CONTROL VALVE BODY MALFUNCTION	TCC PISTON MALFUNCTION
VEHICLE DOES NOT MOVE IN D, M OR R POSITION															X	X	X							
VEHICLE MOVES IN P POSITION, OR PARKING GEAR DOES NOT DISENGAGE WHEN P IS DISENGAGED																X								
EXCESSIVE CREEP				X																				
NO CREEP AT ALL				X																				
LOW MAXIMUM SPEED AND POOR ACCELERATION		X	X		X							X												
NO SHIFTING		X	X					X	X	X	X	X	X											
DOES NOT SHIFT TO 5GR OR 6GR		X	X					X	X	X	X	X												
ABNORMAL SHIFTING	X	X	X					X	X	X	X	X	X											
FREQUENT SHIFTING											X	X												
SHIFT POINT IS HIGH OR LOW	X							X	X	X	X	X	X											
NO KICKDOWN												X												
ENGINE FLARES UP OR SLIPS WHEN UPSHIFTING OR DOWNSHIFTING		X	X									X												
JUDDER UPON TORQUE CONVERTER CLUTCH (TCC) OPERATION		X										X			X									
EXCESSIVE SHIFT SHOCK FROM N TO D OR N TO R POSITION		X		X								X								X				
EXCESSIVE SHIFT SHOCK IS FELT WHEN UPSHIFTING AND DOWNSHIFTING												X								X				
EXCESSIVE SHIFT SHOCK ON TORQUE CONVERTER CLUTCH (TCC)		X										X			X									
NOISE OCCURS AT IDLE WHEN VEHICLE IS STOPPED IN ALL POSITIONS					X									X	X									
NOISE OCCURS AT IDLE WHEN VEHICLE IS STOPPED IN D, M OR R POSITION					X										X									
TRANSAXLE OVERHEATS	X	X										X	X								X	X	X	
ENGINE STALLS WHEN SHIFTED TO D, M OR R POSITION				X											X									X
STARTER DOES NOT WORK					X	X																		
GEAR POSITION INDICATOR DOES NOT ILLUMINATE IN M POSITION							X														X			
GEAR POSITION INDICATOR ILLUMINATES IN P, R, N AND D POSITIONS							X																	
M POSITION INDICATOR LIGHT DOES NOT ILLUMINATE IN M POSITION/ M POSITION INDICATOR LIGHT ILLUMINATES IN D POSITION							X																	
ATF SEEPING FROM AUTOMATIC TRANSAXLE																		X	X					

ac5wzw0000239

SYMPTOM TROUBLESHOOTING [GW6A-EL, GW6AX-EL]

VEHICLE DOES NOT MOVE IN D, M OR R POSITION [GW6A-EL, GW6AX-EL]

id050320100500

TROUBLESHOOTING ITEM	Vehicle does not move in D, M or R position
DESCRIPTION	• Vehicle does not move when accelerator pedal is depressed. • The engine revs up but the vehicle does not move even though the accelerator pedal is depressed. • Tires are locked and do not move even though the accelerator pedal is depressed.
POSSIBLE CAUSE	1. Improper operation of parking mechanism 2. Manual shaft (manual valve) stuck 3. Torque converter malfunction

Diagnostic procedure

STEP	INSPECTION		ACTION
1	**INSPECT PARKING MECHANISM FOR MALFUNCTION** • When the vehicle is stopped on a flat, level road and the engine is off, does the vehicle move when pushed? (In D, N or R position with the brake pedal released.)	Yes	Go to the next step.
		No	Replace the parking mechanism. (See 05-17B-29 AUTOMATIC TRANSAXLE REMOVAL/INSTALLATION [GW6A-EL].) (See 05-17B-47 AUTOMATIC TRANSAXLE REMOVAL/INSTALLATION [GW6AX-EL].)
2	**VERIFY IF MALFUNCTION CAUSE IS MANUAL SHAFT OR TORQUE CONVERTER** • Move the vehicle to a level surface and apply the parking brake. • Disconnect the negative battery cable. (See 01-17B-9 NEGATIVE BATTERY CABLE DISCONNECTION/CONNECTION [SKYACTIV-D 2.2].) • Remove the battery component (ex: battery, battery tray and PCM component). (See 01-17B-3 BATTERY REMOVAL/INSTALLATION [SKYACTIV-D 2.2].) • Remove the air cleaner component. (See 01-13B-6 INTAKE-AIR SYSTEM REMOVAL/INSTALLATION [SKYACTIV-D 2.2].) • Can the manual shaft be rotated by hand? 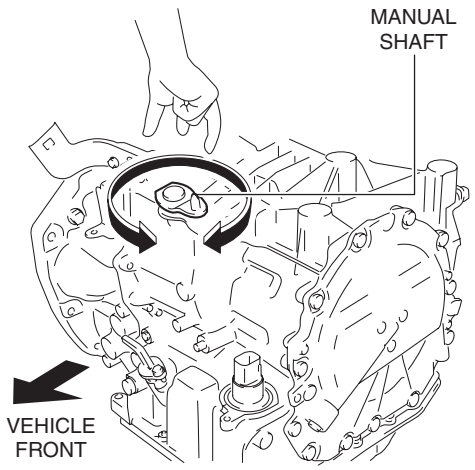 	Yes	Replace the automatic transaxle. (See 05-17B-29 AUTOMATIC TRANSAXLE REMOVAL/INSTALLATION [GW6A-EL].) (See 05-17B-47 AUTOMATIC TRANSAXLE REMOVAL/INSTALLATION [GW6AX-EL].)
		No	Replace the control valve body. (See 05-17B-81 CONTROL VALVE BODY REMOVAL/INSTALLATION [GW6A-EL, GW6AX-EL].)

SYMPTOM TROUBLESHOOTING [GW6A-EL, GW6AX-EL]

VEHICLE MOVES IN P POSITION, OR PARKING GEAR DOES NOT DISENGAGE WHEN P IS DISENGAGED [GW6A-EL, GW6AX-EL]

id050320100600

TROUBLESHOOTING ITEM	Vehicle moves in P position, or parking gear does not disengage when P is disengaged
DESCRIPTION	• Vehicle rolls when on a downward slope in P position. • Vehicle does not move in D, M and R position when accelerator pedal is depressed, and engine remains in stalled condition.
POSSIBLE CAUSE	1. Parking mechanism malfunction

Diagnostic procedure

STEP	INSPECTION		ACTION
1	**INSPECT PARKING MECHANISM FOR MALFUNCTION** • When the vehicle is stopped on a flat, level road and the engine is off, does the vehicle move when pushed? (In D, N or R position with the brake pedal released.)	Yes	Symptom troubleshooting is completed.
		No	Replace the parking mechanism. (See 05-17B-29 AUTOMATIC TRANSAXLE REMOVAL/INSTALLATION [GW6A-EL].) (See 05-17B-47 AUTOMATIC TRANSAXLE REMOVAL/INSTALLATION [GW6AX-EL].)

EXCESSIVE CREEP [GW6A-EL, GW6AX-EL]

id050320100700

TROUBLESHOOTING ITEM	Excessive creep
DESCRIPTION	• Vehicle accelerates in D and R position when accelerator pedal is not depressed.
POSSIBLE CAUSE	1. Not within idle speed specification

Diagnostic procedure

STEP	INSPECTION		ACTION
1	**INSPECT ENGINE CONTROL SYSTEM FOR MALFUNCTION** • Perform the symptom troubleshooting “NO.9 FAST IDLE/RUNS ON”. • Is there any malfunction?	Yes	Repair or replace any malfunctioning parts according to the inspection result.
		No	Symptom troubleshooting is completed.

NO CREEP AT ALL [GW6A-EL, GW6AX-EL]

id050320100800

TROUBLESHOOTING ITEM	No creep at all
DESCRIPTION	• Vehicle does not move in D, M or R position when idling on flat paved road.
POSSIBLE CAUSE	1. Not within idle speed specification

Diagnostic procedure

STEP	INSPECTION		ACTION
1	**INSPECT ENGINE CONTROL SYSTEM FOR MALFUNCTION** • Perform the symptom troubleshooting “NO.9 FAST IDLE/RUNS ON”. • Is there any malfunction?	Yes	Repair or replace any malfunctioning parts according to the inspection result.
		No	Go to the next step.
2	**VERIFY IF MALFUNCTION CAUSE IS TORQUE CONVERTER** • Is the same level compared to a vehicle of the same model?	Yes	Symptom troubleshooting is completed.
		No	Replace the automatic transaxle. (See 05-17B-29 AUTOMATIC TRANSAXLE REMOVAL/INSTALLATION [GW6A-EL].) (See 05-17B-47 AUTOMATIC TRANSAXLE REMOVAL/INSTALLATION [GW6AX-EL].)

SYMPTOM TROUBLESHOOTING [GW6A-EL, GW6AX-EL]

LOW MAXIMUM SPEED AND POOR ACCELERATION [GW6A-EL, GW6AX-EL]

id050320100900

TROUBLESHOOTING ITEM	Low maximum speed and poor acceleration
DESCRIPTION	• Vehicle acceleration is poor at start. • Delayed acceleration when accelerator pedal is depressed while driving.
POSSIBLE CAUSE	• Engine control system malfunction • Signal malfunction — APP sensor malfunction — CKP sensor malfunction — MAF sensor malfunction

Diagnostic procedure

STEP	INSPECTION		ACTION
1	**INSPECT ENGINE CONTROL SYSTEM FOR MALFUNCTION** • Perform the symptom troubleshooting “NO.12 LACK/LOSS OF POWER-ACCELERATION/ CRUISE”. • Is there any malfunction?	Yes	Repair or replace any malfunctioning parts according to the inspection result.
		No	Go to the next step.
2	**INSPECT SIGNAL PARTS FOR MALFUNCTION** • Inspect the value at the following PCM PIDs using the M-MDS. — APP (APP sensor) — MAF (MAF sensor) — RPM (CKP sensor) • Is there any malfunction?	Yes	Repair or replace any malfunctioning parts according to the inspection result.
		No	Explain to the customer that the vehicle is not malfunctioning and they should keep an eye on it.

NO SHIFTING [GW6A-EL, GW6AX-EL]

id050320101000

TROUBLESHOOTING ITEM	No shifting
DESCRIPTION	• Single shift position only. • Sometimes shifts correctly.
POSSIBLE CAUSE	1. Signal malfunction — APP sensor malfunction — BARO sensor malfunction — Brake switch malfunction — CKP sensor malfunction — IAT sensor No.1 malfunction — MAF sensor malfunction 2. Low-G (XY) sensor (built into SAS control module) malfunction **Note** • If a tire of a different diameter from the standard tire is installed, the TCM determines that the driving mode is the AAS mode, and may change to a different shift timing from the normal timing.

Diagnostic procedure

STEP	INSPECTION		ACTION
1	**INSPECT SIGNAL PARTS FOR MALFUNCTION** • Inspect the value at the following PCM PIDs using the M-MDS. — APP (APP sensor) — BARO (BARO sensor) — BOO (Brake switch) — IAT (IAT sensor No.1) — MAF (MAF sensor) — RPM (CKP sensor) • Is there any malfunction?	Yes	Repair or replace any malfunctioning parts according to the inspection result.
		No	Go to the next step.
2	**VERIFY IF MALFUNCTION CAUSE IS LOW-G (XY) SENSOR** • Is there any malfunction?	Yes	Replace the SAS control module. (See 08-10-20 SAS CONTROL MODULE REMOVAL/ INSTALLATION.)
		No	Symptom troubleshooting is completed.

SYMPTOM TROUBLESHOOTING [GW6A-EL, GW6AX-EL]

DOES NOT SHIFT TO 5GR OR 6GR [GW6A-EL, GW6AX-EL]

id050320101100

TROUBLESHOOTING ITEM	Does not shift to 5GR or 6GR
DESCRIPTION	• Vehicle does not upshift from 4GR to 5GR or 5GR to 6GR even though vehicle speed is increased. • At a vehicle speed range where the transaxle should shift up to 5GR and 6GR gears in D position based on the shift pattern, the transaxle does not shift to 5GR and 6GR gears by gradually releasing the accelerator pedal.
POSSIBLE CAUSE	1. Signal malfunction — APP sensor malfunction — BARO sensor malfunction — CKP sensor malfunction — IAT sensor No.1 malfunction — MAF sensor malfunction 2. Low-G (XY) sensor (built into SAS control module) malfunction **Note** • If a tire of a different diameter from the standard tire is installed, the TCM determines that the driving mode is the AAS mode, and may change to a different shift timing from the normal timing.

Diagnostic procedure

STEP	INSPECTION		ACTION
1	**INSPECT SIGNAL PARTS FOR MALFUNCTION** • Inspect the value at the following PCM PIDs using the M-MDS. — APP (APP sensor) — BARO (BARO sensor) — IAT (IAT sensor No.1) — MAF (MAF sensor) — RPM (CKP sensor) • Is there any malfunction?	Yes	Repair or replace any malfunctioning parts according to the inspection result.
		No	Go to the next step.
2	**VERIFY IF MALFUNCTION CAUSE IS LOW-G (XY) SENSOR** • Is there any malfunction?	Yes	Replace the SAS control module. (See 08-10-20 SAS CONTROL MODULE REMOVAL/INSTALLATION.)
		No	Symptom troubleshooting is completed.

SYMPTOM TROUBLESHOOTING [GW6A-EL, GW6AX-EL]

ABNORMAL SHIFTING [GW6A-EL, GW6AX-EL]

id050320101200

TROUBLESHOOTING ITEM	Abnormal shifting
DESCRIPTION	• Shifts incorrectly (incorrect shift pattern).
POSSIBLE CAUSE	1. Signal malfunction — APP sensor malfunction — BARO sensor malfunction — Brake switch malfunction — CKP sensor malfunction — ECT sensor No.1 malfunction — IAT sensor No.1 malfunction — MAF sensor malfunction 2. Low-G (XY) sensor (built into SAS control module) malfunction **Note** • If a tire of a different diameter from the standard tire is installed, the TCM determines that the driving mode is the AAS mode, and may change to a different shift timing from the normal timing.

Diagnostic procedure

STEP	INSPECTION		ACTION
1	**INSPECT SIGNAL PARTS FOR MALFUNCTION** • Inspect the value at the following PCM PIDs using the M-MDS. — APP (APP sensor) — BARO (BARO sensor) — BOO (Brake switch) — ECT (ECT sensor No.1) — IAT (IAT sensor No.1) — MAF (MAF sensor) — RPM (CKP sensor) • Is there any malfunction?	Yes	Repair or replace any malfunctioning parts according to the inspection result.
		No	Go to the next step.
2	**VERIFY IF MALFUNCTION CAUSE IS LOW-G (XY) SENSOR** • Is there any malfunction?	Yes	Replace the SAS control module. (See 08-10-20 SAS CONTROL MODULE REMOVAL/ INSTALLATION.)
		No	Symptom troubleshooting is completed.

FREQUENT SHIFTING [GW6A-EL, GW6AX-EL]

id050320101300

TROUBLESHOOTING ITEM	Frequent shifting
DESCRIPTION	• Downshifting occurs suddenly even when accelerator pedal is depressed slightly in D position.
POSSIBLE CAUSE	1. Signal malfunction — APP sensor malfunction 2. Low-G (XY) sensor (built into SAS control module) malfunction

Diagnostic procedure

STEP	INSPECTION		ACTION
1	**INSPECT SIGNAL PARTS FOR MALFUNCTION** • Inspect the value at the following PCM PID using the M-MDS. — APP (APP sensor) • Is there any malfunction?	Yes	Repair or replace any malfunctioning parts according to the inspection result.
		No	Go to the next step.
2	**VERIFY IF MALFUNCTION CAUSE LOW-G (XY) SENSOR** • Is there any malfunction?	Yes	Replace the SAS control module. (See 08-10-20 SAS CONTROL MODULE REMOVAL/ INSTALLATION.)
		No	Symptom troubleshooting is completed.

SYMPTOM TROUBLESHOOTING [GW6A-EL, GW6AX-EL]

SHIFT POINT IS HIGH OR LOW [GW6A-EL, GW6AX-EL]

id050320101400

TROUBLESHOOTING ITEM	Shift point is high or low
DESCRIPTION	• Shift point considerably different from automatic shift diagram. • Shift delays when accelerating. • Shift occurs suddenly when accelerating and engine speed does not increase.
POSSIBLE CAUSE	1. Signal malfunction — APP sensor malfunction — BARO sensor malfunction — Brake switch malfunction — ECT sensor No.1 malfunction — IAT sensor No.1 malfunction 2. Low-G (XY) sensor (built into SAS control module) malfunction **Note** • If a tire of a different diameter from the standard tire is installed, the TCM determines that the driving mode is the AAS mode, and may change to a different shift timing from the normal timing.

Diagnostic procedure

STEP	INSPECTION		ACTION
1	**INSPECT SIGNAL PARTS FOR MALFUNCTION** • Inspect the value at the following PCM PIDs using the M-MDS. — APP (APP sensor) — BARO (BARO sensor) — BOO (Brake switch) — ECT (ECT sensor No.1) — IAT (IAT sensor No.1) • Is there any malfunction?	Yes	Repair or replace any malfunctioning parts according to the inspection result.
		No	Go to the next step.
2	**VERIFY IF MALFUNCTION CAUSE IS LOW-G (XY) SENSOR** • Is there any malfunction?	Yes	Replace the SAS control module. (See 08-10-20 SAS CONTROL MODULE REMOVAL/INSTALLATION.)
		No	Symptom troubleshooting is completed.

NO KICKDOWN [GW6A-EL, GW6AX-EL]

id050320101600

TROUBLESHOOTING ITEM	No kickdown
DESCRIPTION	• Does not downshift when accelerator pedal is fully depressed within kickdown range.
POSSIBLE CAUSE	1. Signal malfunction — APP sensor malfunction

Diagnostic procedure

STEP	INSPECTION		ACTION
1	**INSPECT SIGNAL PARTS FOR MALFUNCTION** • Inspect the value at the following PCM PID using the M-MDS. — APP (APP sensor) • Is there any malfunction?	Yes	Repair or replace any malfunctioning parts according to the inspection result.
		No	Symptom troubleshooting is completed.

SYMPTOM TROUBLESHOOTING [GW6A-EL, GW6AX-EL]

ENGINE FLARES UP OR SLIPS WHEN UPSHIFTING OR DOWNSHIFTING [GW6A-EL, GW6AX-EL]

id050320101700

TROUBLESHOOTING ITEM	Engine flares up or slips when upshifting or downshifting
DESCRIPTION	• When accelerator pedal is depressed, engine speed increases normally but vehicle speed increases slowly. • When accelerator pedal is depressed while driving, engine speed increases but vehicle speed does not.
POSSIBLE CAUSE	1. Signal malfunction — APP sensor malfunction — CKP sensor malfunction — MAF sensor malfunction 2. Learning is not performed

Diagnostic procedure

STEP	INSPECTION		ACTION
1	**VERIFY MALFUNCTION SYMPTOM** • Is the malfunction symptom at the same level compared to a vehicle of the same model?	Yes	Symptom troubleshooting is completed.
		No	Go to the next step.
2	**INSPECT SIGNAL PARTS FOR MALFUNCTION** • Inspect the value at the following PCM PIDs using the M-MDS. — APP (APP sensor) — MAF (MAF sensor) — RPM (CKP sensor) • Is there any malfunction?	Yes	Repair or replace any malfunctioning parts according to the inspection result.
		No	Symptom troubleshooting is completed.

05

JUDDER UPON TORQUE CONVERTER CLUTCH (TCC) OPERATION [GW6A-EL, GW6AX-EL]

id050320101900

TROUBLESHOOTING ITEM	Judder upon torque converter clutch (TCC) operation
DESCRIPTION	• Vehicle jolts when TCC is engaged.
POSSIBLE CAUSE	1. Signal malfunction — APP sensor malfunction — CKP sensor malfunction 2. Torque converter malfunction

Diagnostic procedure

STEP	INSPECTION		ACTION
1	**VERIFY MALFUNCTION SYMPTOM** • Is the malfunction symptom at the same level compared to a vehicle of the same model?	Yes	Symptom troubleshooting is completed.
		No	Go to the next step.
2	**INSPECT SIGNAL PARTS FOR MALFUNCTION** • Inspect the value at the following PCM PIDs using the M-MDS. — APP (APP sensor) — RPM (CKP sensor) • Is there any malfunction?	Yes	Repair or replace any malfunctioning parts according to the inspection result.
		No	Replace the automatic transaxle. (See 05-17B-29 AUTOMATIC TRANSAXLE REMOVAL/INSTALLATION [GW6A-EL].) (See 05-17B-47 AUTOMATIC TRANSAXLE REMOVAL/INSTALLATION [GW6AX-EL].)

SYMPTOM TROUBLESHOOTING [GW6A-EL, GW6AX-EL]

EXCESSIVE SHIFT SHOCK FROM N TO D OR N TO R POSITION [GW6A-EL, GW6AX-EL]

id050320102000

TROUBLESHOOTING ITEM	Excessive shift shock from N to D or N to R position
DESCRIPTION	• Strong shock is felt when shifting from N to D or N to R position at idle.
POSSIBLE CAUSE	1. Not within idle speed specification 2. Signal malfunction — APP sensor malfunction — CKP sensor malfunction 3. Poor installation or worn of engine mount, suspension

Diagnostic procedure

STEP	INSPECTION		ACTION
1	**VERIFY MALFUNCTION SYMPTOM** • Is the malfunction symptom (shift shock/shifting time) at the same level compared to a vehicle of the same model?	Yes	Symptom troubleshooting is completed.
		No	Go to the next step.
2	**PERFORM ON-BOARD DIAGNOSTIC TO VERIFY HYDRAULIC PRESSURE SWITCH OPERATION PRESSURE** • Is the operation pressure normal?	Yes	Go to the next step.
		No	Replace the control valve body. (See 05-17B-81 CONTROL VALVE BODY REMOVAL/INSTALLATION [GW6A-EL, GW6AX-EL].)
3	**INSPECT ENGINE CONTROL SYSTEM FOR MALFUNCTION** • Perform the symptom troubleshooting “NO.9 FAST IDLE/RUNS ON”. • Is there any malfunction?	Yes	Repair or replace any malfunctioning parts according to the inspection result.
		No	Go to the next step.
4	**INSPECT SIGNAL PARTS FOR MALFUNCTION** • Inspect the value at the following PCM PIDs using the M-MDS. — APP (APP sensor) — RPM (CKP sensor) • Is there any malfunction?	Yes	Repair or replace any malfunctioning parts according to the inspection result.
		No	Go to the next step.
5	**INSPECT ENGINE MOUNT/SUSPENSION FOR POOR TIGHTENING** • Is there any malfunction?	Yes	Repair or replace any malfunctioning parts according to the inspection result. (See 01-10B-98 ENGINE REMOVAL/INSTALLATION [SKYACTIV-D 2.2].)
		No	Symptom troubleshooting is completed.

EXCESSIVE SHIFT SHOCK IS FELT WHEN UPSHIFTING AND DOWNSHIFTING [GW6A-EL, GW6AX-EL]

id050320102100

TROUBLESHOOTING ITEM	Excessive shift shock is felt when upshifting and downshifting
DESCRIPTION	• Excessive shift shock is felt when depressing accelerator pedal to accelerate at upshifting. • During cruising, excessive shift shock is felt when depressing accelerator pedal at downshifting.
POSSIBLE CAUSE	1. Signal malfunction — APP sensor malfunction 2. Poor installation or worn of engine mount, suspension

Diagnostic procedure

STEP	INSPECTION		ACTION
1	**VERIFY MALFUNCTION SYMPTOM** • Is the malfunction symptom (shift shock/shifting time) at the same level compared to a vehicle of the same model?	Yes	Symptom troubleshooting is completed.
		No	Go to the next step.
2	**PERFORM ON-BOARD DIAGNOSTIC TO VERIFY HYDRAULIC PRESSURE SWITCH OPERATION PRESSURE** • Is the operation pressure normal?	Yes	Go to the next step.
		No	Replace the control valve body. (See 05-17B-81 CONTROL VALVE BODY REMOVAL/INSTALLATION [GW6A-EL, GW6AX-EL].)
3	**INSPECT SIGNAL PARTS FOR MALFUNCTION** • Inspect the value at the following PCM PID using the M-MDS. — APP (APP sensor) • Is there any malfunction?	Yes	Repair or replace any malfunctioning parts according to the inspection result.
		No	Go to the next step.

SYMPTOM TROUBLESHOOTING [GW6A-EL, GW6AX-EL]

STEP	INSPECTION		ACTION
4	**INSPECT ENGINE MOUNT/SUSPENSION FOR POOR TIGHTENING** • Is there any malfunction?	Yes	Repair or replace any malfunctioning parts according to the inspection result. (See 05-02B-10 ON-BOARD DIAGNOSTIC SYSTEM DTC TABLE [GW6A-EL, GW6AX-EL].)
		No	Symptom troubleshooting is completed.

EXCESSIVE SHIFT SHOCK ON TORQUE CONVERTER CLUTCH (TCC) [GW6A-EL, GW6AX-EL]

id050320102200

TROUBLESHOOTING ITEM	Excessive shift shock on torque converter clutch (TCC)
DESCRIPTION	• Strong shock is felt when TCC is engaged.
POSSIBLE CAUSE	1. Signal malfunction — APP sensor malfunction — CKP sensor malfunction 2. Torque converter malfunction

Diagnostic procedure

STEP	INSPECTION		ACTION
1	**INSPECT SIGNAL PARTS FOR MALFUNCTION** • Inspect the value at the following PCM PIDs using the M-MDS. — APP (APP sensor) — RPM (CKP sensor) • Is there any malfunction?	Yes	Repair or replace any malfunctioning parts according to the inspection result.
		No	Replace the automatic transaxle. (See 05-17B-29 AUTOMATIC TRANSAXLE REMOVAL/INSTALLATION [GW6A-EL].) (See 05-17B-47 AUTOMATIC TRANSAXLE REMOVAL/INSTALLATION [GW6AX-EL].)

05

NOISE OCCURS AT IDLE WHEN VEHICLE IS STOPPED IN ALL POSITIONS [GW6A-EL, GW6AX-EL]

id050320102300

TROUBLESHOOTING ITEM	Noise occurs at idle when vehicle is stopped in all positions
DESCRIPTION	• Transaxle is noisy in all positions when vehicle idling.
POSSIBLE CAUSE	1. Engine control system malfunction 2. Automatic transaxle internal parts malfunction — Oil pump malfunction — Torque converter internal parts malfunction

Diagnostic procedure

STEP	INSPECTION		ACTION
1	**VERIFY IF MALFUNCTION CAUSE IS ENGINE CONTROL SYSTEM OR TORQUE CONVERTER** • Inspect the engine condition. • Is there any malfunction?	Yes	Go to the appropriate symptom troubleshooting.
		No	Replace the automatic transaxle. (See 05-17B-29 AUTOMATIC TRANSAXLE REMOVAL/INSTALLATION [GW6A-EL].) (See 05-17B-47 AUTOMATIC TRANSAXLE REMOVAL/INSTALLATION [GW6AX-EL].)

SYMPTOM TROUBLESHOOTING [GW6A-EL, GW6AX-EL]

NOISE OCCURS AT IDLE WHEN VEHICLE IS STOPPED IN D, M OR R POSITION [GW6A-EL, GW6AX-EL]

id050320102400

TROUBLESHOOTING ITEM	**Noise occurs at idle when vehicle is stopped in D, M or R position**
DESCRIPTION	• Transaxle is noisy in driving positions when vehicle is idling.
POSSIBLE CAUSE	1. Engine control system malfunction 2. Automatic transaxle internal parts malfunction — Torque converter internal parts malfunction

Diagnostic procedure

STEP	INSPECTION		ACTION
1	**VERIFY IF MALFUNCTION CAUSE IS ENGINE CONTROL SYSTEM OR TORQUE CONVERTER** • Inspect the engine condition. • Is there any malfunction?	Yes	Go to the appropriate symptom troubleshooting.
		No	Replace the automatic transaxle. (See 05-17B-29 AUTOMATIC TRANSAXLE REMOVAL/INSTALLATION [GW6A-EL].) (See 05-17B-47 AUTOMATIC TRANSAXLE REMOVAL/INSTALLATION [GW6AX-EL].)

TRANSAXLE OVERHEATS [GW6A-EL, GW6AX-EL]

id050320102600

TROUBLESHOOTING ITEM	**Transaxle overheats**
DESCRIPTION	• Burnt smell emitted from the transaxle. • Smoke is emitted from the transaxle.
POSSIBLE CAUSE	1. Signal malfunction — APP sensor malfunction — Brake switch malfunction — CKP sensor malfunction — ECT sensor No.1 malfunction 2. ATF malfunction 3. Oil cooler malfunction 4. Control valve body malfunction

Diagnostic procedure

STEP	INSPECTION		ACTION
1	**INSPECT SIGNAL PARTS FOR MALFUNCTION** • Inspect the value at the following PCM PIDs using the M-MDS. — APP (APP sensor) — BOO (Brake switch) — ECT (ECT sensor No.1) — RPM (CKP sensor) • Is there any malfunction?	Yes	Repair or replace any malfunctioning parts according to the inspection result.
		No	Go to the next step.
2	**INSPECT ATF LEVEL** • Inspect the ATF level. (See 05-17B-11 AUTOMATIC TRANSAXLE FLUID (ATF) INSPECTION [GW6A-EL, GW6AX-EL].) • Is there any malfunction?	Yes	Adjust the ATF level to the specification. (See 05-17B-12 AUTOMATIC TRANSAXLE FLUID (ATF) REPLACEMENT [GW6A-EL, GW6AX-EL].)
		No	Go to the next step.
3	**VISUALLY INSPECT OIL COOLER** • Visually inspect the oil cooler. • Is there any malfunction?	Yes	Repair or replace any malfunctioning parts according to the inspection result. (See 05-17B-71 OIL COOLER REMOVAL/INSTALLATION [GW6A-EL, GW6AX-EL].)
		No	Go to the next step.

SYMPTOM TROUBLESHOOTING [GW6A-EL, GW6AX-EL]

STEP	INSPECTION		ACTION
4	**VERIFY IF MALFUNCTION CAUSE IS CONTROL VALVE BODY** • Inspect the value at the following TCM PIDs using the M-MDS. (See 05-02B-92 ON-BOARD DIAGNOSTIC SYSTEM PID/DATA MONITOR INSPECTION [GW6A-EL, GW6AX-EL].) — ECU_A — ECU_B — ECU_C — GEAR_SEL — LINEDES — OP_SW1 — OP_SW2 — OP_SW3 — OP_SW4 — OSS — SS1 — SS2 — SS3 — SS4 — SSLU — SSLU_PRES — SSP — SSP_PRES — TR — TSS — VSS • Is there any malfunction?	Yes	Replace the control valve body, then go to the next step. (See 05-17B-81 CONTROL VALVE BODY REMOVAL/ INSTALLATION [GW6A-EL, GW6AX-EL].)
		No	Symptom troubleshooting is completed.

ENGINE STALLS WHEN SHIFTED TO D, M OR R POSITION [GW6A-EL, GW6AX-EL]

id050320102700

TROUBLESHOOTING ITEM	Engine stalls when shifted to D, M or R position
DESCRIPTION	• Engine stalls when shifting from N or P position to D, M or R position at idle.
POSSIBLE CAUSE	1. Not within idle speed specification 2. TCC piston malfunction (solenoid drive circuit, hydraulic passage blockage, poor operation) — Output solenoid valve malfunction (stuck) • TCC control solenoid 3. Torque converter malfunction

Diagnostic procedure

STEP	INSPECTION		ACTION
1	**VERIFY IF MALFUNCTION CAUSE IS ENGINE CONTROL SYSTEM OR TORQUE CONVERTER** • Perform the symptom troubleshooting “NO.5 ENGINE STALLS-AFTER START/AT IDLE” and “NO.10 LOW IDLE/STALLS DURING DECELERATION”. • Is there any malfunction?	Yes	Repair or replace any malfunctioning parts according to the inspection result.
		No	Replace the automatic transaxle. (See 05-17B-29 AUTOMATIC TRANSAXLE REMOVAL/ INSTALLATION [GW6A-EL].) (See 05-17B-47 AUTOMATIC TRANSAXLE REMOVAL/ INSTALLATION [GW6AX-EL].)

SYMPTOM TROUBLESHOOTING [GW6A-EL, GW6AX-EL]

STARTER DOES NOT WORK [GW6A-EL, GW6AX-EL]

id050320102900

TROUBLESHOOTING ITEM	Starter does not work
DESCRIPTION	• Starter does not work even when in P or N position.
POSSIBLE CAUSE	1. Wiring harness between TCM terminal J and PCM terminal 2AI malfunction 2. Wiring harness between TCM terminal J, start stop unit terminal 1F and LF control unit terminal K malfunction (Vehicle with advanced keyless entry system) 3. Immobilizer system operating or system malfunction 4. Engine control system malfunction

Diagnostic procedure

STEP	INSPECTION		ACTION
1	**INSPECT WIRING HARNESS BETWEEN TCM AND PCM** • Switch the ignition to off. • Disconnect the PCM connector. • Disconnect the TCM connector. • Visually inspect for pin deformity, open circuit, or wiring harness non-insulation between TCM terminal J and PCM terminal 2AI. • Is there any malfunction?	Yes	Repair or replace any malfunctioning parts according to the inspection result.
		No	Vehicle without advanced keyless entry system: • Go to step3. Vehicle with advanced keyless entry system: • Go to the next step.
2	**INSPECT WIRING HARNESS BETWEEN TCM, START STOP UNIT AND LF CONTROL UNIT** • Switch the ignition to off. • Disconnect the start stop unit connector. • Disconnect the TCM connector. • Disconnect the LF control unit connector. • Visually inspect for pin deformity, open circuit, or wiring harness non-insulation between TCM terminal J, start stop unit terminal 1F and LF control unit terminal K. • Is there any malfunction?	Yes	Repair or replace any malfunctioning parts according to the inspection result.
		No	Go to the next step.
3	**INSPECT IMMOBILIZER SYSTEM AND ENGINE CONTROL SYSTEM FOR MALFUNCTION** • Perform the symptom troubleshooting “NO.3 WILL NOT CRANK”. • Is there any malfunction?	Yes	Repair or replace any malfunctioning parts according to the inspection result.
		No	Symptom troubleshooting is completed.

GEAR POSITION INDICATOR DOES NOT ILLUMINATE IN M POSITION [GW6A-EL, GW6AX-EL]

id050320103400

TROUBLESHOOTING ITEM	Gear position indicator does not illuminate in M position
DESCRIPTION	• Gear position indicator in instrument cluster does not illuminate in M position with the ignition is ON (engine off or on).
POSSIBLE CAUSE	1. Instrument cluster malfunction **Note** • When the ATF temperature is **132 °C {270 °F} or more**, gear fixing is inhibited, the gear position indicator is turned off, and he control is changed to the automatic shift control.

Diagnostic procedure

STEP	INSPECTION		ACTION
1	**INSPECT INSTRUMENT CLUSTER FOR MALFUNCTION** • Inspect the instrument cluster. (See 09-22-11 INSTRUMENT CLUSTER INSPECTION.) • Is there any malfunction?	Yes	Replace the instrument cluster. (See 09-22-6 INSTRUMENT CLUSTER REMOVAL/INSTALLATION.)
		No	Symptom troubleshooting is completed.

SYMPTOM TROUBLESHOOTING [GW6A-EL, GW6AX-EL]

GEAR POSITION INDICATOR ILLUMINATES IN P, R, N AND D POSITIONS [GW6A-EL, GW6AX-EL]

id050320103500

TROUBLESHOOTING ITEM	Gear position indicator illuminates in P, R, N and D positions
DESCRIPTION	• Gear position indicator in instrument cluster illuminates in P, R, N and D positions with the ignition is ON (engine off or on).
POSSIBLE CAUSE	1. Instrument cluster malfunction

Diagnostic procedure

STEP	INSPECTION		ACTION
1	**INSPECT INSTRUMENT CLUSTER FOR MALFUNCTION** • Inspect the instrument cluster. (See 09-22-11 INSTRUMENT CLUSTER INSPECTION.) • Is there any malfunction?	Yes	Replace the instrument cluster. (See 09-22-6 INSTRUMENT CLUSTER REMOVAL/INSTALLATION.)
		No	Symptom troubleshooting is completed.

M POSITION INDICATOR LIGHT DOES NOT ILLUMINATE IN M POSITION/M POSITION INDICATOR LIGHT ILLUMINATES IN D POSITION [GW6A-EL, GW6AX-EL]

id050320103200

TROUBLESHOOTING ITEM	M position indicator light does not illuminate in M position/M position indicator light illuminates in D position
DESCRIPTION	• M position indicator light in instrument cluster does not illuminate in M position or M position indicator light in instrument cluster in P, R, N and D positions with the ignition is ON (engine off or on).
POSSIBLE CAUSE	1. Instrument cluster malfunction

Diagnostic procedure

STEP	INSPECTION		ACTION
1	**INSPECT INSTRUMENT CLUSTER FOR MALFUNCTION** • Inspect the instrument cluster. (See 09-22-11 INSTRUMENT CLUSTER INSPECTION.) • Is there any malfunction?	Yes	Replace the instrument cluster. (See 09-22-6 INSTRUMENT CLUSTER REMOVAL/INSTALLATION.)
		No	Symptom troubleshooting is completed.

SYMPTOM TROUBLESHOOTING [GW6A-EL, GW6AX-EL]

ATF SEEPING FROM AUTOMATIC TRANSAXLE [GW6A-EL, GW6AX-EL]

id050320103800

TROUBLESHOOTING ITEM	**ATF seeping from automatic transaxle**
DESCRIPTION	• ATF is seeping from the automatic transaxle case. • Foreign matter mixed with ATF is in the automatic transaxle case.
POSSIBLE CAUSE	**Note** • ATF seeping radiates from ATF leak source. • Identify the type of seeping oil referring to “SERVICE CAUTIONS, Oil Leakage Inspection” in the general information. (See 00-00-13 SERVICE CAUTIONS.) • To prevent misdiagnosis, remove any grease or dirt from the seep location and verify the location of the seeping after driving the vehicle. • ATF leakage from the following locations — Oil pan (Part of drain plug etc.) — Converter housing (Part of torque converter etc.) — End cover — Oil cooler — Oil seal (differential) — Oil seal (control valve body) — Oil seal (manual shaft) — Dipstick — Line pressure detection port — Air breather

Diagnostic procedure

STEP	INSPECTION		ACTION
1	**VERIFY IF THE MALFUNCTION CAUSE IS ATF LEAKAGE FROM THE FOLLOWING LOCATIONS** • Verify if ATF is leaking from the locations described above. • Is there ATF seeping from a location?	Yes	Verify the installation and damage condition of the part at the location where the ATF is seeping and repair or replace the malfunctioning part.
		No	Symptom troubleshooting is completed.

05-10A CLUTCH [C66M-R, C66MX-R]

CLUTCH LOCATION INDEX [C66M-R, C66MX-R] 05-10A–2
CLUTCH FLUID INSPECTION [C66M-R, C66MX-R] 05-10A–3
CLUTCH FLUID LEAKAGE INSPECTION [C66M-R, C66MX-R]. . . . 05-10A–4
CLUTCH FLUID REPLACEMENT/AIR BLEEDING [C66M-R, C66MX-R] 05-10A–5
CLUTCH PEDAL INSPECTION [C66M-R, C66MX-R] 05-10A–6
Pedal Inspection Preparation 05-10A–6
Pedal Height Inspection 05-10A–6
Pedal Free Play Inspection 05-10A–7
Pedal Full Stroke Inspection. 05-10A–7
Clutch Disengagement Point Inspection 05-10A–8
CLUTCH PEDAL REMOVAL/INSTALLATION [C66M-R, C66MX-R] 05-10A–8
Removal 05-10A–8
Installation 05-10A–11
CLUTCH PEDAL POSITION SWITCH REMOVAL/INSTALLATION [C66M-R, C66MX-R] 05-10A–13
STARTER INTERLOCK SWITCH REMOVAL/INSTALLATION [C66M-R, C66MX-R] 05-10A–14
CLUTCH MASTER CYLINDER REMOVAL/INSTALLATION [C66M-R, C66MX-R] 05-10A–17
Removal 05-10A–17
Installation 05-10A–19
CLUTCH STROKE SENSOR REMOVAL/INSTALLATION [C66M-R, C66MX-R]. 05-10A–21
CLUTCH PIPE AND HOSE REMOVAL/INSTALLATION [C66M-R, C66MX-R]. 05-10A–21
CLUTCH RELEASE CYLINDER REMOVAL/INSTALLATION [C66M-R, C66MX-R]. 05-10A–24
CLUTCH UNIT REMOVAL/INSTALLATION [C66M-R, C66MX-R]. 05-10A–25
Clutch Cover and Disc Removal Note 05-10A–26
Pilot Bearing Removal Note 05-10A–26
Flywheel Removal Note 05-10A–26
Flywheel Installation Note 05-10A–27
Pilot Bearing Installation Note 05-10A–27
Clutch Disc and Cover Installation Note 05-10A–27
CLUTCH RELEASE COLLAR INSPECTION [C66M-R, C66MX-R] 05-10A–28
Operation Inspection 05-10A–28
CLUTCH COVER INSPECTION [C66M-R, C66MX-R]. 05-10A–28
CLUTCH DISC INSPECTION [C66M-R, C66MX-R]. 05-10A–29
PILOT BEARING INSPECTION [C66M-R, C66MX-R]. 05-10A–30
FLYWHEEL INSPECTION [C66M-R, C66MX-R]. 05-10A–30

CLUTCH [C66M-R, C66MX-R]

CLUTCH LOCATION INDEX [C66M-R, C66MX-R]

id0510mc156300

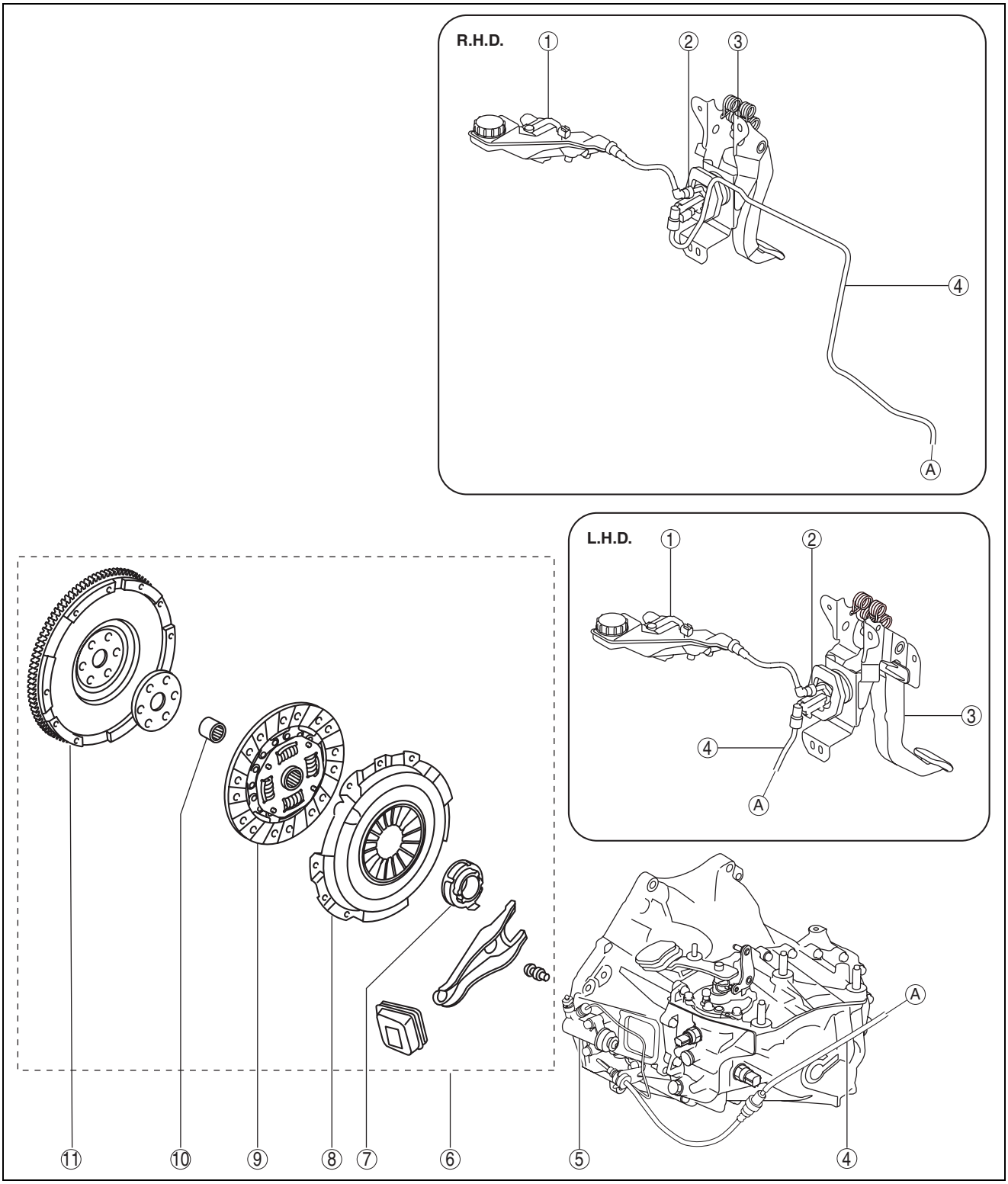

ac5wzw0000245

CLUTCH [C66M-R, C66MX-R]

1	Reserve tank (See 05-10A-3 CLUTCH FLUID INSPECTION [C66M-R, C66MX-R].) (See 05-10A-5 CLUTCH FLUID REPLACEMENT/ AIR BLEEDING [C66M-R, C66MX-R].)
2	Clutch master cylinder (See 05-10A-17 CLUTCH MASTER CYLINDER REMOVAL/INSTALLATION [C66M-R, C66MX-R].)
3	Clutch pedal (See 05-10A-6 CLUTCH PEDAL INSPECTION [C66M-R, C66MX-R].) (See 05-10A-8 CLUTCH PEDAL REMOVAL/ INSTALLATION [C66M-R, C66MX-R].) (See 05-10A-13 CLUTCH PEDAL POSITION SWITCH REMOVAL/INSTALLATION [C66M-R, C66MX-R].) (See 05-10A-14 STARTER INTERLOCK SWITCH REMOVAL/INSTALLATION [C66M-R, C66MX-R].)
4	Clutch pipe and hose (See 05-10A-4 CLUTCH FLUID LEAKAGE INSPECTION [C66M-R, C66MX-R].) (See 05-10A-21 CLUTCH PIPE AND HOSE REMOVAL/INSTALLATION [C66M-R, C66MX-R].)
5	Clutch release cylinder (See 05-10A-24 CLUTCH RELEASE CYLINDER REMOVAL/INSTALLATION [C66M-R, C66MX-R].)
6	Clutch unit (See 05-10A-25 CLUTCH UNIT REMOVAL/ INSTALLATION [C66M-R, C66MX-R].)
7	Clutch release collar (See 05-10A-25 CLUTCH UNIT REMOVAL/ INSTALLATION [C66M-R, C66MX-R].) (See 05-10A-28 CLUTCH RELEASE COLLAR INSPECTION [C66M-R, C66MX-R].)
8	Clutch cover (See 05-10A-25 CLUTCH UNIT REMOVAL/ INSTALLATION [C66M-R, C66MX-R].) (See 05-10A-28 CLUTCH COVER INSPECTION [C66M-R, C66MX-R].)
9	Clutch disc (See 05-10A-25 CLUTCH UNIT REMOVAL/ INSTALLATION [C66M-R, C66MX-R].) (See 05-10A-29 CLUTCH DISC INSPECTION [C66M-R, C66MX-R].)
10	Pilot bearing (See 05-10A-25 CLUTCH UNIT REMOVAL/ INSTALLATION [C66M-R, C66MX-R].) (See 05-10A-30 PILOT BEARING INSPECTION [C66M-R, C66MX-R].)
11	Flywheel (See 05-10A-25 CLUTCH UNIT REMOVAL/ INSTALLATION [C66M-R, C66MX-R].) (See 05-10A-30 FLYWHEEL INSPECTION [C66M-R, C66MX-R].)

05

CLUTCH FLUID INSPECTION [C66M-R, C66MX-R]

id0510mc156400

Note
- A common reserve tank is used for the clutch system and brake system.

1. Verify that the clutch fluid is between the MIN mark and the MAX mark.
   - If fluid level is lower than MIN mark, perform the following procedure:
     1. Verify that there is no fluid leakage. (See 05-10A-4 CLUTCH FLUID LEAKAGE INSPECTION [C66M-R, C66MX-R].)
     2. Add fluid to the level between MIN mark and the MAX mark.

Clutch fluid
European (L.H.D. U.K.) specs.: SAE J1703 or FMVSS116 DOT-3 or DOT-4
Australian and General (L.H.D. R.H.D.) specs.: SAE J1703 or FMVSS116 DOT-3

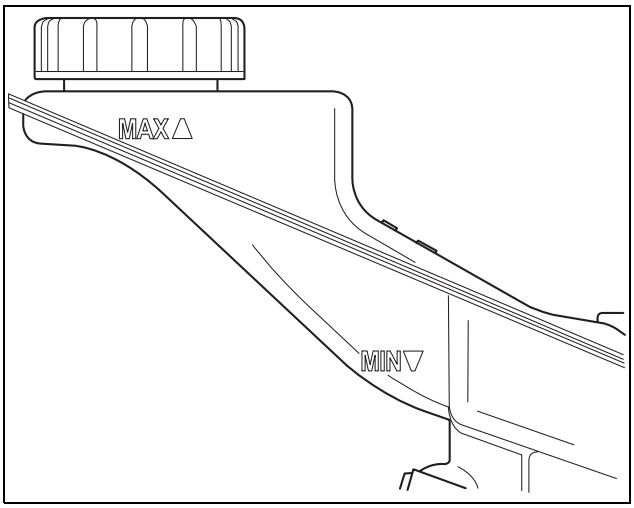

am3uuw0000824

CLUTCH [C66M-R, C66MX-R]

CLUTCH FLUID LEAKAGE INSPECTION [C66M-R, C66MX-R]

id0510mc158400

Caution
- **Do not allow clutch fluid to get on a painted surface. Clutch fluid contains properties which can dissolve the paint. If clutch fluid gets on a painted surface, wash it off with water immediately and wipe the area off completely.**

1. Verify reserve tank cap is on tight.
2. Pump the clutch pedal a few times.
3. Inspect for the clutch fluid leakage at the points indicated in the figure.

L.H.D.

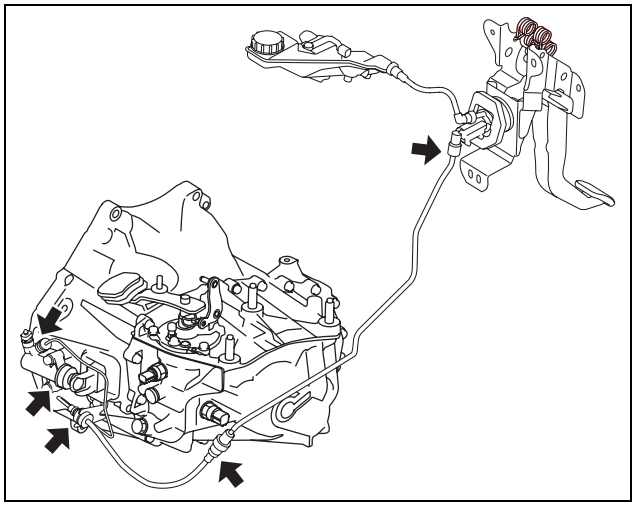

ac5wzw0000283

R.H.D.

Note
- If there is clutch fluid leakage from the piston in the clutch release cylinder, there is clutch fluid in the boot of clutch release cylinder.

- If there is clutch fluid leakage, repair or replace the malfunctioning location.

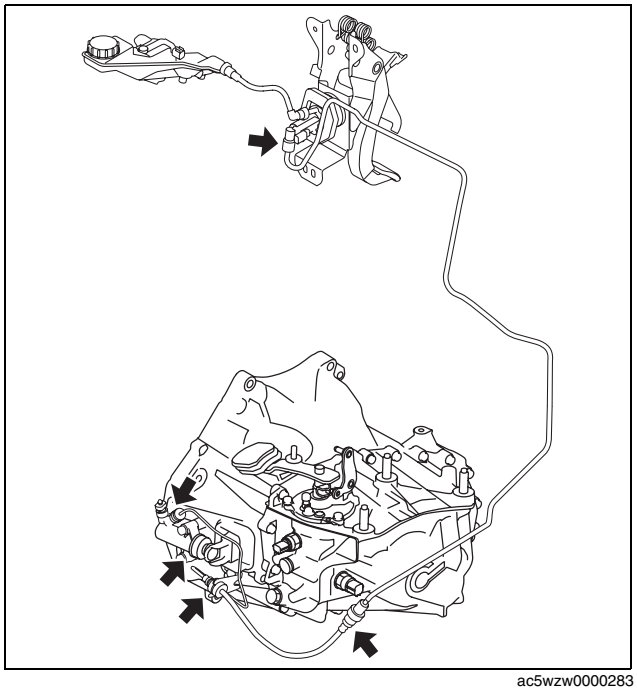

ac5wzw0000283

CLUTCH [C66M-R, C66MX-R]

CLUTCH FLUID REPLACEMENT/AIR BLEEDING [C66M-R, C66MX-R]

id0510mc166800

Caution
- **Do not allow clutch fluid to get on a painted surface. Clutch fluid contains properties which can dissolve the paint. If clutch fluid gets on a painted surface, wash it off with water immediately and wipe the area off completely.**
- **Do not mix different types of clutch fluid, otherwise the clutch may not operate normally.**
- **Do not reuse old clutch fluid, otherwise the clutch may not operate normally.**

Note
- A common reserve tank is used for the clutch system and brake system.

1. Remove the front under cover No.2. (See 09-16-41 FRONT UNDER COVER No.2 REMOVAL/INSTALLATION.)
2. Remove the reserve tank cap.
3. Drain the clutch fluid from bleeder screw.
4. Add new clutch fluid to the MAX mark of the reserve tank.

Clutch fluid
European (L.H.D. U.K.) specs.: SAE J1703 or FMVSS116 DOT-3 or DOT-4
Australian and General (L.H.D. R.H.D.) specs.: SAE J1703 or FMVSS116 DOT-3

5. Bleed the air from the clutch system.

Caution
- **Keep the clutch fluid level in the reserve tank at 3/4 full or more during air bleeding.**

(1) Connect a vinyl tube to the bleeder screw.
(2) Place the other end of the vinyl tube in a clear container, and fill clutch fluid in the container during air bleeding.
(3) Working with two people, one loosens the bleeder screw.
(4) The other person depresses the clutch pedal to full stroke taking approx. 3 s or more, and then holding the pedal depressed.
(5) After waiting approx. 5 s or more, tighten the bleeder screw.
(6) Return the clutch pedal slowly taking 3 s or more while suppressing the spring force.
(7) Wait approx. 5 s or more.
(8) Continue to perform air bleeding (Steps (3) - (7)) until no air comes from the vinyl tube.
(9) Fill the reserve tank to MAX mark with the clutch fluid.

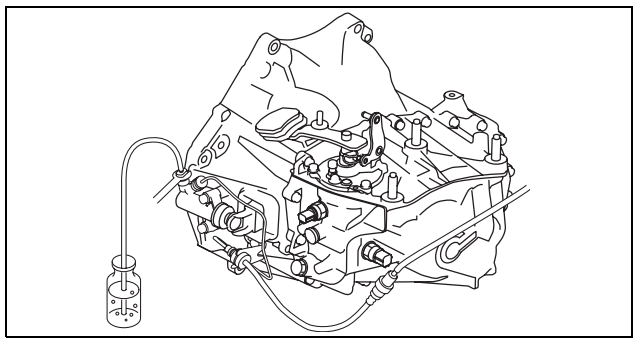

ac5wzw0000283

Clutch fluid
European (L.H.D. U.K.) specs.: SAE J1703 or FMVSS116 DOT-3 or DOT-4
Australian and General (L.H.D. R.H.D.) specs.: SAE J1703 or FMVSS116 DOT-3

6. Install the reserve tank cap.
7. Install the front under cover No.2. (See 09-16-41 FRONT UNDER COVER No.2 REMOVAL/INSTALLATION.)

CLUTCH [C66M-R, C66MX-R]

CLUTCH PEDAL INSPECTION [C66M-R, C66MX-R]

id0510mc156600

Note

- For the clutch pedal inspection, note the following and measure each inspection location.
  - — Measure the center of the upper surface of the pedal pad for each inspection.
  - — If the distance from the pedal pad to the floor covering is measured, measure the shortest distance from the center of the upper surface of the pedal pad to the floor covering.

Pedal Inspection Preparation

1. Verify that the clutch fluid is between the MIN mark and the MAX mark.
2. Verify that there is no clutch fluid leakage. (See 05-10A-4 CLUTCH FLUID LEAKAGE INSPECTION [C66M-R, C66MX-R].)

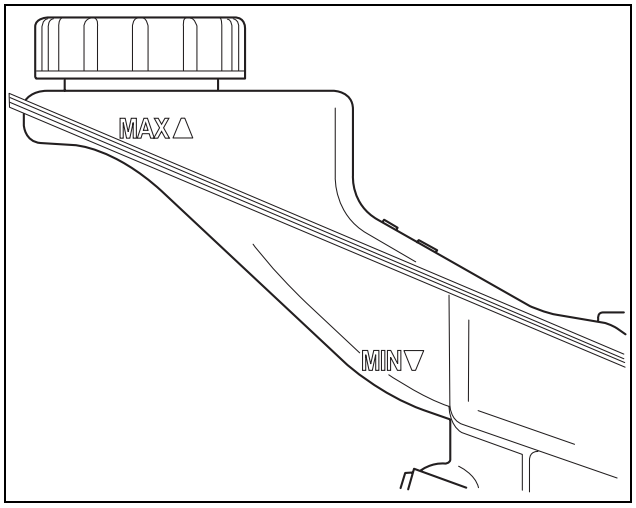

am3uuw0000824

Pedal Height Inspection

1. Perform “Pedal Inspection Preparation”. (See 05-10A-6 Pedal Inspection Preparation.)
2. Measure the pedal height with the clutch pedal released as shown in the figure.

   Pedal height (reference value)
   150 mm {5.91 in}

   - If it is not the specification, replace the clutch pedal. (See 05-10A-8 CLUTCH PEDAL REMOVAL/INSTALLATION [C66M-R, C66MX-R].)

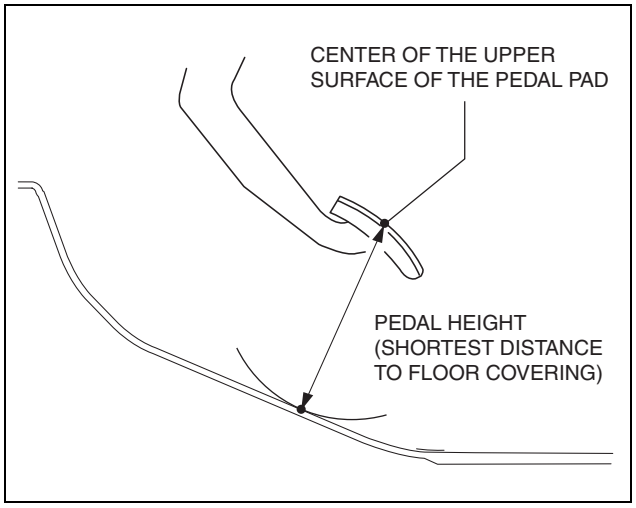

ac5uuw00000697

CLUTCH [C66M-R, C66MX-R]

Pedal Free Play Inspection

1. Perform “Pedal Inspection Preparation”. (See 05-10A-6 Pedal Inspection Preparation.)
2. Depress the clutch pedal by hand until clutch resistance is felt, and measure the pedal free play as shown in the figure.

   Pedal free play (reference value)
   10 mm {0.39 in} or less

   - If it exceeds the specification, replace the clutch pedal. (See 05-10A-8 CLUTCH PEDAL REMOVAL/INSTALLATION [C66M-R, C66MX-R].)

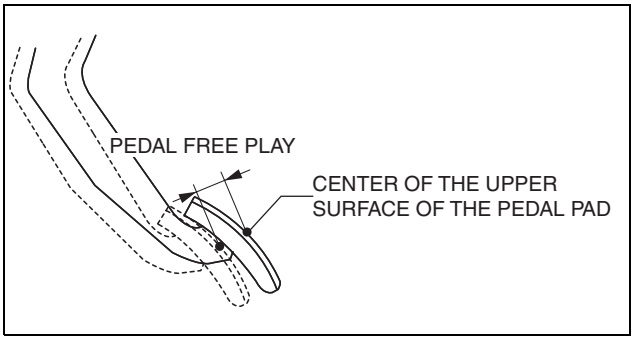

am5uuw0000369

Pedal Full Stroke Inspection

1. Perform “Pedal Inspection Preparation”. (See 05-10A-6 Pedal Inspection Preparation.)
2. Depress the clutch pedal from the released condition to the full depression position, and measure the pedal full stroke as shown in the figure.

   Pedal full stroke (reference value)
   146 mm {5.75 in}

   - If it is not the specification, replace the clutch pedal. (See 05-10A-8 CLUTCH PEDAL REMOVAL/INSTALLATION [C66M-R, C66MX-R].)

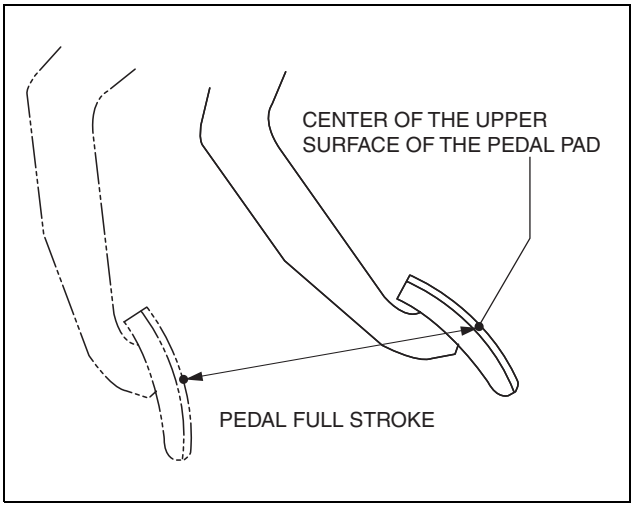

ac5uuw00000698

CLUTCH [C66M-R, C66MX-R]

Clutch Disengagement Point Inspection

Warning
- **When performing the following procedure, make sure that the area around the vehicle is free of people or objects as the vehicle might move suddenly.**

1. Perform “Pedal Inspection Preparation”. (See 05-10A-6 Pedal Inspection Preparation.)
2. Verify that the pedal height is normal. (See 05-10A-6 Pedal Height Inspection.)
3. Verify that the pedal free play is normal. (See 05-10A-7 Pedal Free Play Inspection.)
4. Verify that the pedal full stroke is normal. (See 05-10A-7 Pedal Full Stroke Inspection.)
5. Apply the parking brake and fix the front and rear wheels with wheel chocks.
6. Start the engine.
7. With the clutch pedal depressed, move the shift lever to the position just before engaging the reverse gear. (Do not shift completely to reverse position)
8. Gradually release the clutch pedal and then hold it at the point where the sound of gear-grinding begins (clutch disengagement point).
9. Measure distance A as shown in the figure when the clutch pedal is at the clutch disengagement point.

   Distance A (reference value)
   82 mm {3.2 in} or more

   - If it is less than the specification, bleed the air from the clutch system. (See 05-10A-5 CLUTCH FLUID REPLACEMENT/AIR BLEEDING [C66M-R, C66MX-R].)

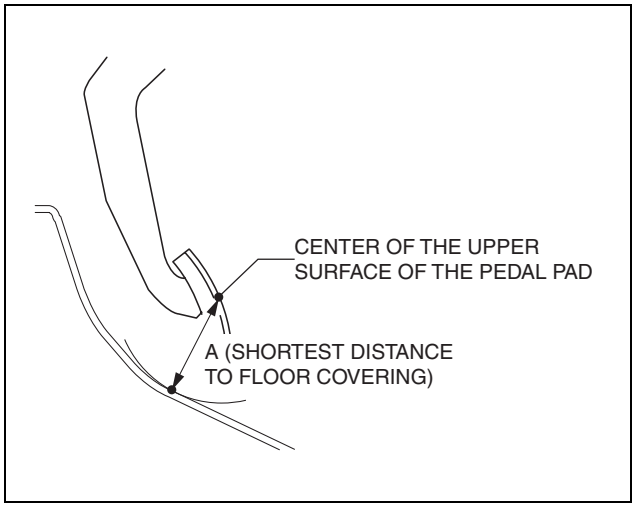

ac5uuw00000699

CLUTCH PEDAL REMOVAL/INSTALLATION [C66M-R, C66MX-R]

id0510mc156700

Caution
- **Secure the steering wheel using tape or a cable to prevent the steering shaft from rotating after disconnecting the steering shaft. If the steering wheel rotates after the steering shaft and the steering gear and linkage are disconnected, the internal parts of the clock spring could be damaged.**
- **Do not allow clutch fluid to get on a painted surface. Clutch fluid contains properties which can dissolve the paint. If clutch fluid gets on a painted surface, wash it off with water immediately and wipe the area off completely.**

Removal

1. Disconnect the negative battery cable. (See 01-17A-11 NEGATIVE BATTERY CABLE DISCONNECTION/CONNECTION [SKYACTIV-G 2.0].) (See 01-17A-13 NEGATIVE BATTERY CABLE DISCONNECTION/CONNECTION [SKYACTIV-G 2.0 (WITHOUT i-stop)].)
2. Remove the air cleaner component. (ex: air cleaner, air hose) (L.H.D.) (See 01-13A-6 INTAKE-AIR SYSTEM REMOVAL/INSTALLATION [SKYACTIV-G 2.0].)
3. Remove the battery component. (ex: battery, battery tray and PCM component) (L.H.D.) (See 01-17A-3 BATTERY REMOVAL/INSTALLATION [SKYACTIV-G 2.0].)
4. Remove the bracket from the steering shaft. (See 06-13-4 STEERING WHEEL AND COLUMN REMOVAL/INSTALLATION.)
5. Remove the clutch pedal position switch. (See 05-10A-13 CLUTCH PEDAL POSITION SWITCH REMOVAL/INSTALLATION [C66M-R, C66MX-R].)
6. Remove the starter interlock switch. (See 05-10A-14 STARTER INTERLOCK SWITCH REMOVAL/INSTALLATION [C66M-R, C66MX-R].)
7. Remove the joint cover. (See 06-13-4 STEERING WHEEL AND COLUMN REMOVAL/INSTALLATION.)
8. Disconnect the steering shaft from steering gear. (See 06-13-4 STEERING WHEEL AND COLUMN REMOVAL/INSTALLATION.)
9. Remove the insulator. (R.H.D.) (See 01-15A-2 EXHAUST SYSTEM REMOVAL/INSTALLATION [SKYACTIV-G 2.0].)

CLUTCH [C66M-R, C66MX-R]

10. Disconnect the clutch pipe and hose No.1 from clutch master cylinder, and plug it to avoid clutch fluid leakage. (See 05-10A-21 CLUTCH PIPE AND HOSE REMOVAL/INSTALLATION [C66M-R, C66MX-R].)
11. Disconnect the clutch reserve hose from clutch master cylinder, and plug it to avoid clutch fluid leakage. (See 05-10A-21 CLUTCH PIPE AND HOSE REMOVAL/INSTALLATION [C66M-R, C66MX-R].)
12. Remove in the order indicated in the table.

R.H.D.

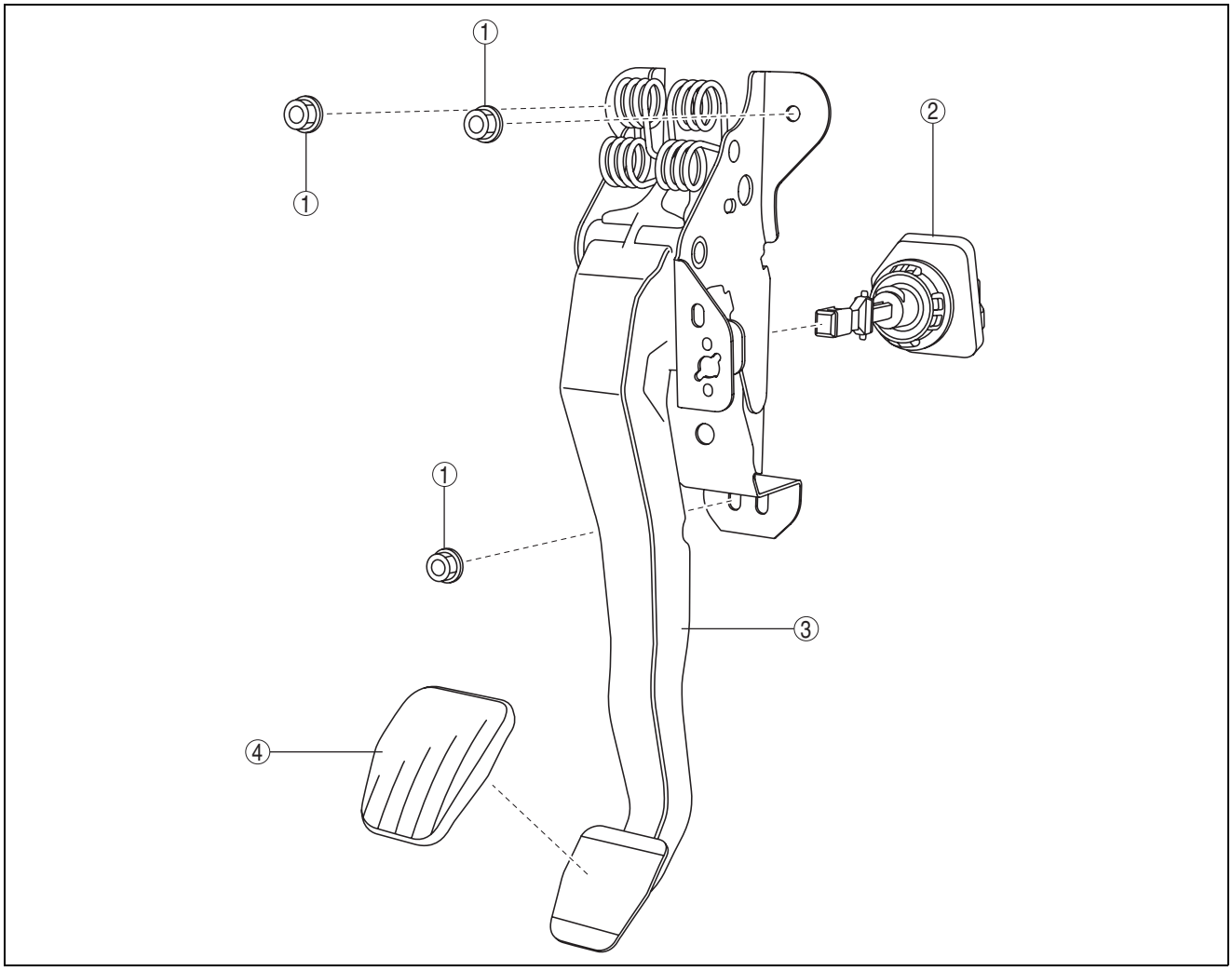

ac5wzw0000129

1	Nut
2	Clutch master cylinder (See 05-10A-17 CLUTCH MASTER CYLINDER REMOVAL/INSTALLATION [C66M-R, C66MX-R].)

3	Clutch pedal
4	Pedal pad

CLUTCH [C66M-R, C66MX-R]

Installation

1. Install in the order indicated in the table.

R.H.D.

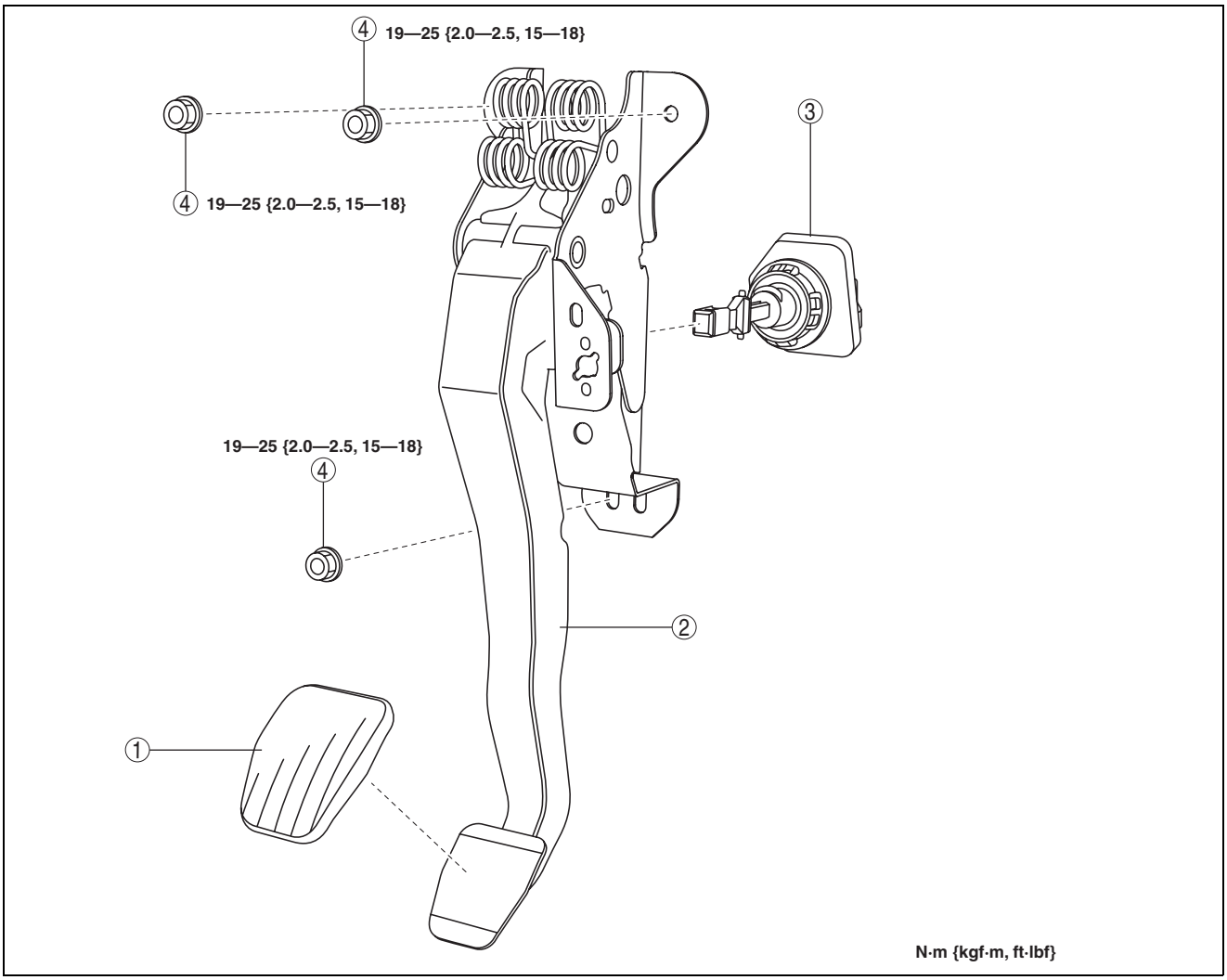

ac5wzw0000129

1	Pedal pad
2	Clutch pedal

3	Clutch master cylinder (See 05-10A-17 CLUTCH MASTER CYLINDER REMOVAL/INSTALLATION [C66M-R, C66MX-R].)
4	Nut

2. Connect the clutch reserve hose to clutch master cylinder. (See 05-10A-21 CLUTCH PIPE AND HOSE REMOVAL/INSTALLATION [C66M-R, C66MX-R].)
3. Connect the clutch pipe and hose No.1 to clutch master cylinder. (See 05-10A-21 CLUTCH PIPE AND HOSE REMOVAL/INSTALLATION [C66M-R, C66MX-R].)
4. Connect the steering shaft. (See 06-13-4 STEERING WHEEL AND COLUMN REMOVAL/INSTALLATION.)
5. Install the joint cover. (See 06-13-4 STEERING WHEEL AND COLUMN REMOVAL/INSTALLATION.)
6. Bleed the air from the clutch system. (See 05-10A-5 CLUTCH FLUID REPLACEMENT/AIR BLEEDING [C66M-R, C66MX-R].)
7. Inspect the clutch pedal. (See 05-10A-6 CLUTCH PEDAL INSPECTION [C66M-R, C66MX-R].)
8. Install a new starter interlock switch. (See 05-10A-14 STARTER INTERLOCK SWITCH REMOVAL/INSTALLATION [C66M-R, C66MX-R].)
9. Install a new clutch pedal position switch. (See 05-10A-13 CLUTCH PEDAL POSITION SWITCH REMOVAL/INSTALLATION [C66M-R, C66MX-R].)
10. Install the insulator. (R.H.D.) (See 01-15A-2 EXHAUST SYSTEM REMOVAL/INSTALLATION [SKYACTIV-G 2.0].)
11. Install the bracket to the steering shaft. (See 06-13-4 STEERING WHEEL AND COLUMN REMOVAL/INSTALLATION.)
12. Install the battery component. (ex: battery, battery tray and PCM component) (L.H.D.) (See 01-17A-3 BATTERY REMOVAL/INSTALLATION [SKYACTIV-G 2.0].)

CLUTCH [C66M-R, C66MX-R]

13. Install the air cleaner component. (ex: air cleaner, air hose) (L.H.D.) (See 01-13A-6 INTAKE-AIR SYSTEM REMOVAL/INSTALLATION [SKYACTIV-G 2.0].)
14. Connect the negative battery cable. (See 01-17A-11 NEGATIVE BATTERY CABLE DISCONNECTION/CONNECTION [SKYACTIV-G 2.0].) (See 01-17A-13 NEGATIVE BATTERY CABLE DISCONNECTION/CONNECTION [SKYACTIV-G 2.0 (WITHOUT i-stop)].)
15. Fully depress the clutch pedal, and verify that the engine starts.

CLUTCH PEDAL POSITION SWITCH REMOVAL/INSTALLATION [C66M-R, C66MX-R]

id0510mc160000

1. Disconnect the negative battery cable. (See 01-17A-11 NEGATIVE BATTERY CABLE DISCONNECTION/CONNECTION [SKYACTIV-G 2.0].) (See 01-17A-13 NEGATIVE BATTERY CABLE DISCONNECTION/CONNECTION [SKYACTIV-G 2.0 (WITHOUT i-stop)].)
2. Disconnect the clutch pedal position switch connector.
3. Rotate the clutch pedal position switch 45° counterclockwise.

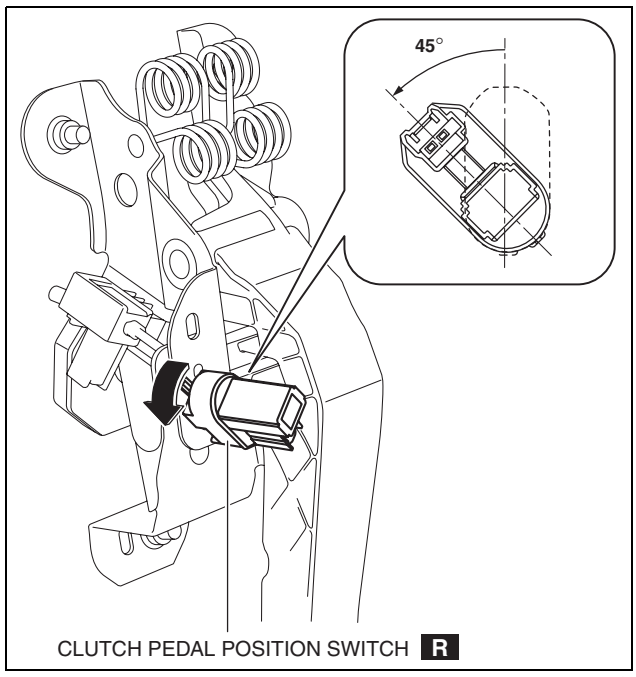

ac5wzw0000319

4. Remove the clutch pedal position switch from the clutch pedal.
5. Insert a new clutch pedal position switch into the clutch pedal hole until the switch stops.

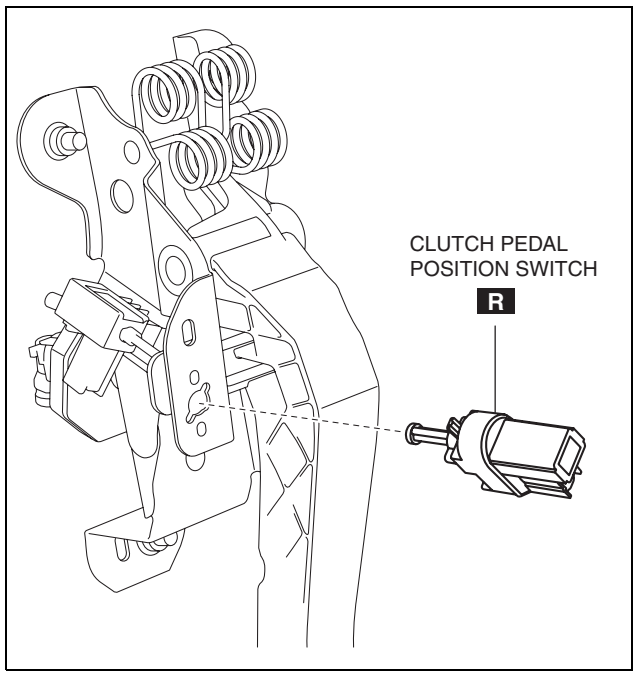

ac5uuw00000723

CLUTCH [C66M-R, C66MX-R]

6. Rotate the clutch pedal position switch 45° clockwise.
7. Verify that the clutch pedal position switch is locked securely.
8. Install in the reverse order of removal.

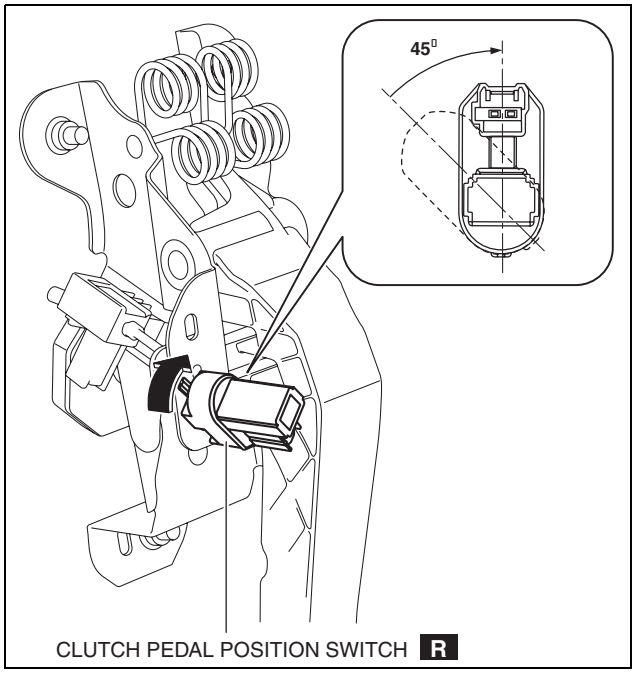

ac5wzw0000319

STARTER INTERLOCK SWITCH REMOVAL/INSTALLATION [C66M-R, C66MX-R]

id0510mc160100

1. Disconnect the negative battery cable. (See 01-17A-11 NEGATIVE BATTERY CABLE DISCONNECTION/CONNECTION [SKYACTIV-G 2.0].) (See 01-17A-13 NEGATIVE BATTERY CABLE DISCONNECTION/CONNECTION [SKYACTIV-G 2.0 (WITHOUT i-stop)].)
2. Disconnect the starter interlock switch connector.
3. Remove the starter interlock switch using the following procedure:
   (1) Detach hook A in the direction of the arrow shown in the figure.

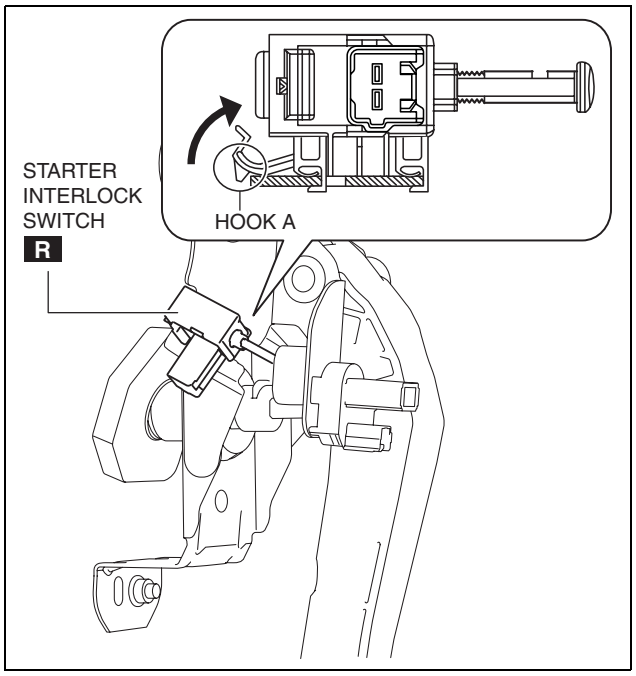

ac5uuw00000725

CLUTCH [C66M-R, C66MX-R]

(2) Slide the starter interlock switch in the direction of the arrow shown in the figure.

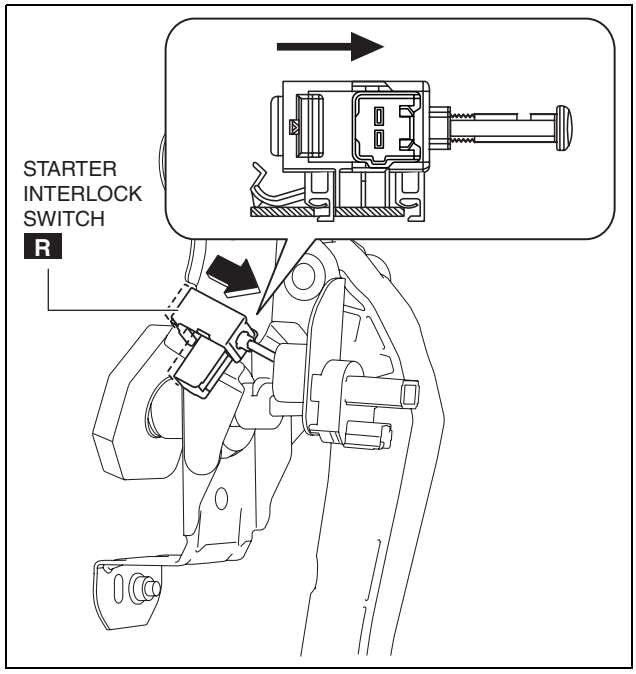

ac5uuw00000726

(3) Remove the starter interlock switch from the clutch pedal.

4. Install the starter interlock switch using the following procedure:

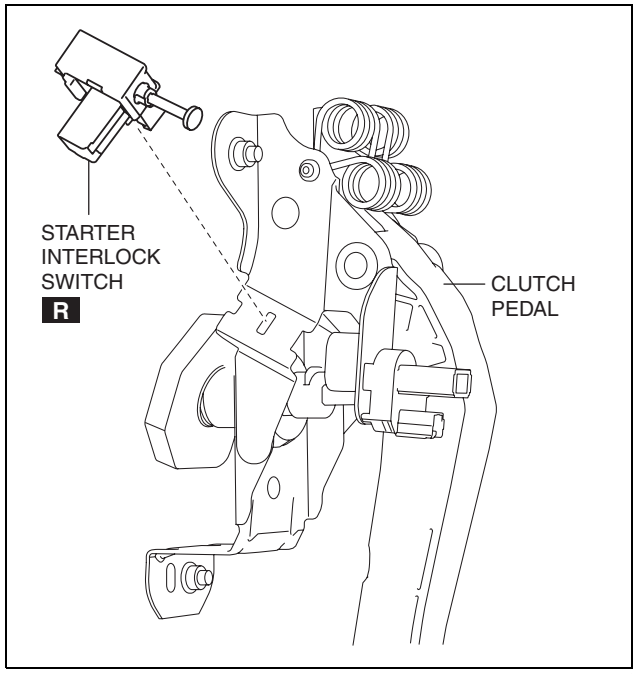

ac5wzw0000331

CLUTCH [C66M-R, C66MX-R]

(1) Insert hook B of a new starter interlock switch into the clutch pedal hole.

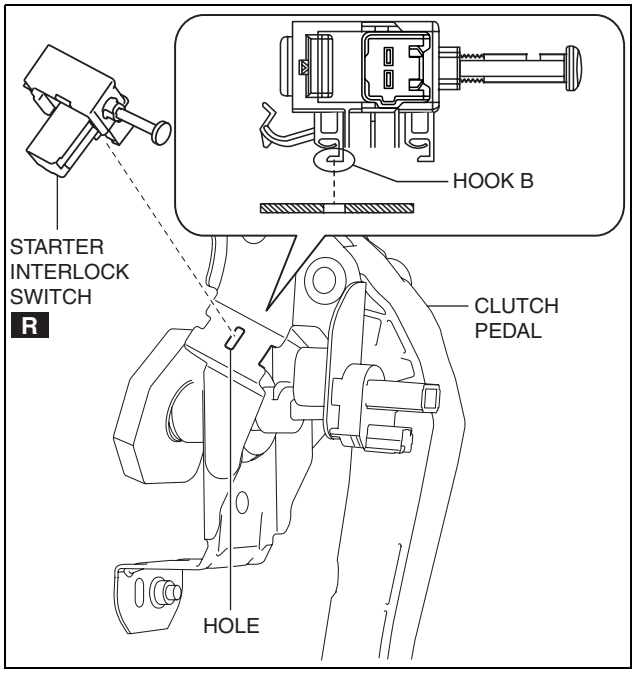

ac5uuw00000728

(2) While pressing the starter interlock switch against the clutch pedal, slide the starter interlock switch until hook A is locked in the direction of the arrow shown in the figure.

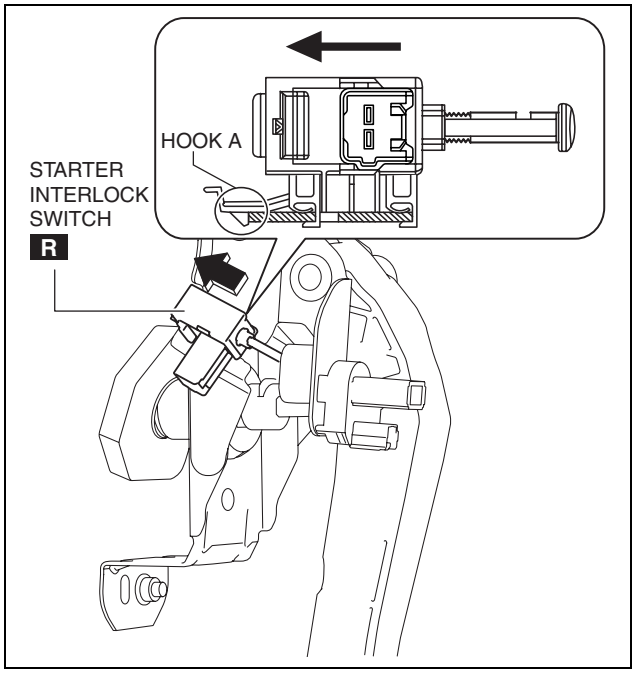

ac5uuw00000729

CLUTCH [C66M-R, C66MX-R]

5. Fully depress the clutch pedal in the direction of arrow, and verify that a click sound from the starter interlock switch is heard.
6. Install in the reverse order of removal.
7. Fully depress the clutch pedal, and verify that the engine starts.

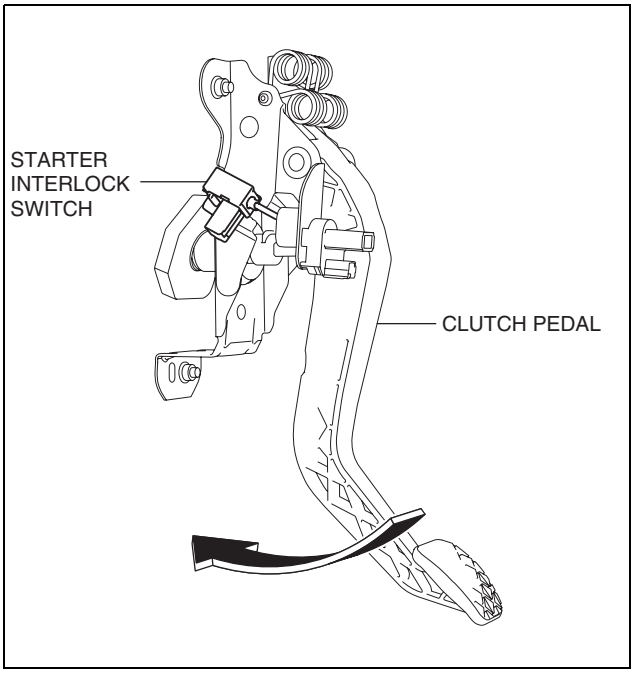

ac5uuw00000730

CLUTCH MASTER CYLINDER REMOVAL/INSTALLATION [C66M-R, C66MX-R]

id0510mc156800

05

Caution

- **Secure the steering wheel using tape or a cable to prevent the steering shaft from rotating after disconnecting the steering shaft. If the steering wheel rotates after the steering shaft and the steering gear and linkage are disconnected, the internal parts of the clock spring could be damaged.**
- **Do not allow clutch fluid to get on a painted surface. Clutch fluid contains properties which can dissolve the paint. If clutch fluid gets on a painted surface, wash it off with water immediately and wipe the area off completely.**

Removal

1. Disconnect the negative battery cable. (See 01-17A-11 NEGATIVE BATTERY CABLE DISCONNECTION/CONNECTION [SKYACTIV-G 2.0].) (See 01-17A-13 NEGATIVE BATTERY CABLE DISCONNECTION/CONNECTION [SKYACTIV-G 2.0 (WITHOUT i-stop)].)
2. Remove the air cleaner component. (ex: air cleaner, air hose) (L.H.D.) (See 01-13A-6 INTAKE-AIR SYSTEM REMOVAL/INSTALLATION [SKYACTIV-G 2.0].)
3. Remove the battery component. (ex: battery, battery tray and PCM component) (L.H.D.) (See 01-17A-3 BATTERY REMOVAL/INSTALLATION [SKYACTIV-G 2.0].)
4. Remove the bracket from the steering shaft. (See 06-13-4 STEERING WHEEL AND COLUMN REMOVAL/INSTALLATION.)
5. Remove the clutch pedal position switch. (See 05-10A-13 CLUTCH PEDAL POSITION SWITCH REMOVAL/INSTALLATION [C66M-R, C66MX-R].)
6. Remove the starter interlock switch. (See 05-10A-14 STARTER INTERLOCK SWITCH REMOVAL/INSTALLATION [C66M-R, C66MX-R].)
7. Remove the joint cover. (See 06-13-4 STEERING WHEEL AND COLUMN REMOVAL/INSTALLATION.)
8. Disconnect the steering shaft from steering gear. (See 06-13-4 STEERING WHEEL AND COLUMN REMOVAL/INSTALLATION.)
9. Remove the insulator. (R.H.D.) (See 01-15A-2 EXHAUST SYSTEM REMOVAL/INSTALLATION [SKYACTIV-G 2.0].)
10. Disconnect the clutch pipe and hose No.1 from clutch master cylinder, and plug it to avoid clutch fluid leakage. (See 05-10A-21 CLUTCH PIPE AND HOSE REMOVAL/INSTALLATION [C66M-R, C66MX-R].)
11. Disconnect the clutch reserve hose from clutch master cylinder, and plug it to avoid clutch fluid leakage. (See 05-10A-21 CLUTCH PIPE AND HOSE REMOVAL/INSTALLATION [C66M-R, C66MX-R].)

CLUTCH [C66M-R, C66MX-R]

12. Remove the clutch master cylinder using the following procedure:
    (1) Remove the clutch pedal and the clutch master cylinder as a single unit.

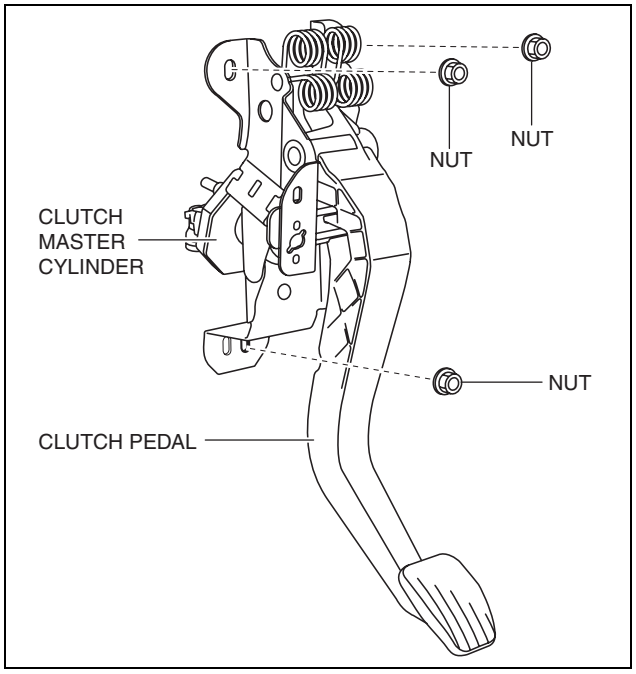

ac5uuw00000703

    (2) Rotate the clutch master cylinder in the direction of the arrow shown in the figure to disconnect the clutch master cylinder (body) and clutch pedal.

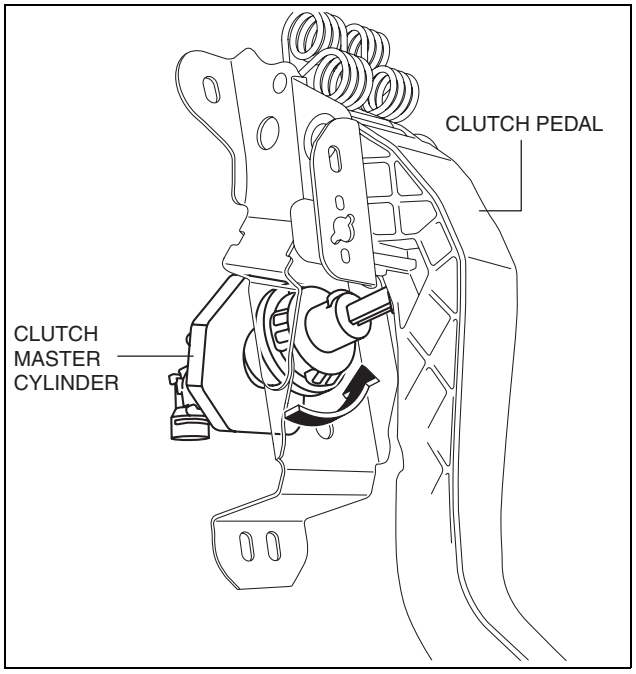

ac5uuw00000704

CLUTCH [C66M-R, C66MX-R]

(3) Disengage the tabs of the push rod and remove the master cylinder.

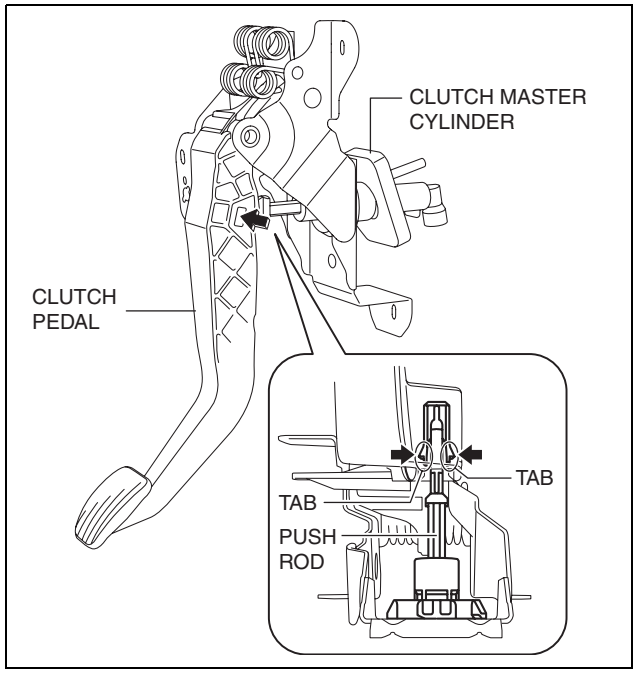

ac5uuw00000705

Installation

1. Install the clutch master cylinder using the following procedure:
   (1) Engage the tabs of the push rod with the clutch pedal as shown in the figure.

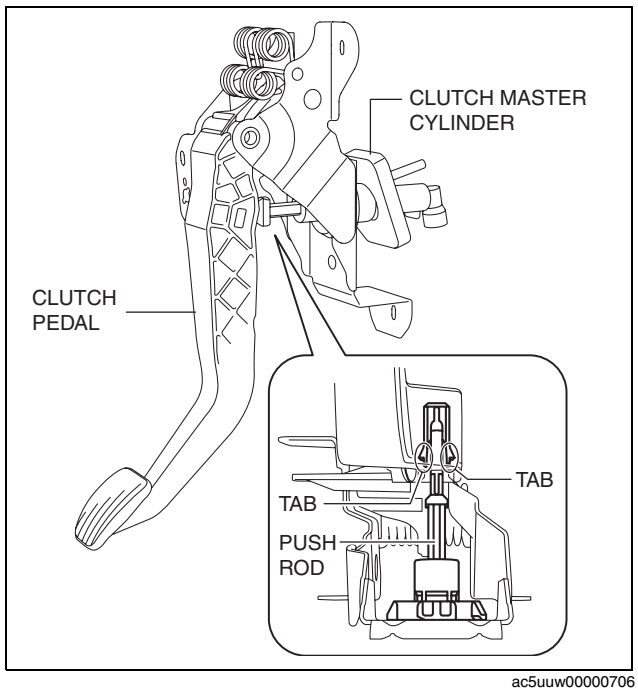

ac5uuw00000706

CLUTCH [C66M-R, C66MX-R]

(2) Rotate the clutch master cylinder in the direction shown until it stops.

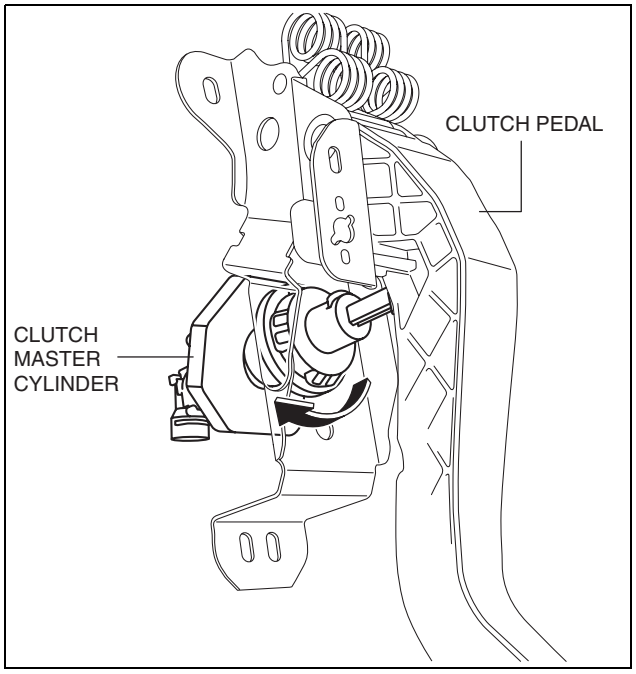

ac5uuw00000707

(3) Install the clutch pedal and the clutch master cylinder as a single unit.

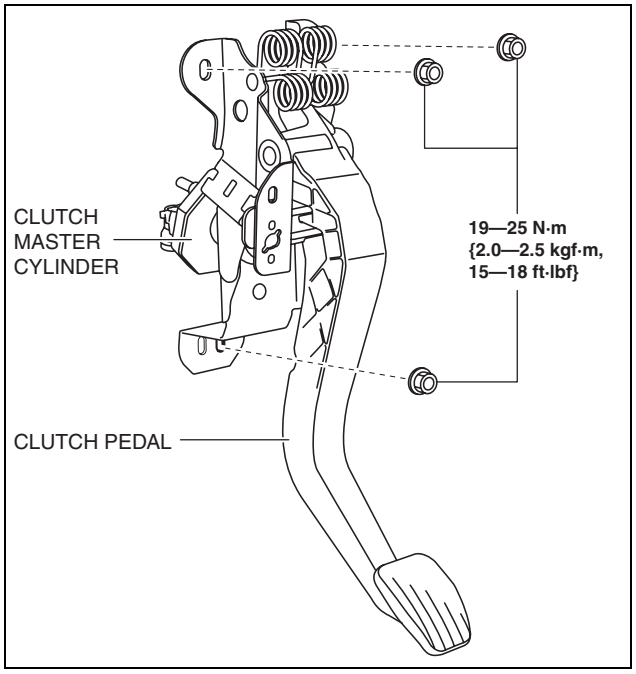

ac5wzw0000462

2. Connect the clutch reserve hose to clutch master cylinder. (See 05-10A-21 CLUTCH PIPE AND HOSE REMOVAL/INSTALLATION [C66M-R, C66MX-R].)
3. Connect the clutch pipe and hose No.1 to clutch master cylinder. (See 05-10A-21 CLUTCH PIPE AND HOSE REMOVAL/INSTALLATION [C66M-R, C66MX-R].)
4. Connect the steering shaft. (See 06-13-4 STEERING WHEEL AND COLUMN REMOVAL/INSTALLATION.)
5. Install the joint cover. (See 06-13-4 STEERING WHEEL AND COLUMN REMOVAL/INSTALLATION.)
6. Bleed the air from the clutch system. (See 05-10A-5 CLUTCH FLUID REPLACEMENT/AIR BLEEDING [C66M-R, C66MX-R].)
7. Inspect the clutch pedal. (See 05-10A-6 CLUTCH PEDAL INSPECTION [C66M-R, C66MX-R].)
8. Install a new starter interlock switch. (See 05-10A-14 STARTER INTERLOCK SWITCH REMOVAL/INSTALLATION [C66M-R, C66MX-R].)
9. Install a new clutch pedal position switch. (See 05-10A-13 CLUTCH PEDAL POSITION SWITCH REMOVAL/INSTALLATION [C66M-R, C66MX-R].)
10. Install the insulator. (R.H.D.) (See 01-15A-2 EXHAUST SYSTEM REMOVAL/INSTALLATION [SKYACTIV-G 2.0].)
11. Install the bracket to the steering shaft (See 06-13-4 STEERING WHEEL AND COLUMN REMOVAL/INSTALLATION.)
12. Install the battery component. (ex: battery, battery tray and PCM component) (L.H.D.) (See 01-17A-3 BATTERY REMOVAL/INSTALLATION [SKYACTIV-G 2.0].)
13. Install the air cleaner component. (ex: air cleaner, air hose) (L.H.D.) (See 01-13A-6 INTAKE-AIR SYSTEM REMOVAL/INSTALLATION [SKYACTIV-G 2.0].)
14. Connect the negative battery cable. (See 01-17A-11 NEGATIVE BATTERY CABLE DISCONNECTION/CONNECTION [SKYACTIV-G 2.0].) (See 01-17A-13 NEGATIVE BATTERY CABLE DISCONNECTION/CONNECTION [SKYACTIV-G 2.0 (WITHOUT i-stop)].)
15. Fully depress the clutch pedal, and verify that the engine starts.

CLUTCH [C66M-R, C66MX-R]

CLUTCH STROKE SENSOR REMOVAL/INSTALLATION [C66M-R, C66MX-R]

id0510mc156900

Note
- The clutch stroke sensor is equipped only on vehicles with i-stop.
- The clutch stroke sensor is built into the clutch master cylinder.

1. Replace the clutch master cylinder. (See 05-10A-17 CLUTCH MASTER CYLINDER REMOVAL/INSTALLATION [C66M-R, C66MX-R].)

CLUTCH PIPE AND HOSE REMOVAL/INSTALLATION [C66M-R, C66MX-R]

id0510mc157000

Caution
- **Do not allow clutch fluid to get on a painted surface. Clutch fluid contains properties which can dissolve the paint. If clutch fluid gets on a painted surface, wash it off with water immediately and wipe the area off completely.**

1. Disconnect the negative battery cable. (See 01-17A-11 NEGATIVE BATTERY CABLE DISCONNECTION/CONNECTION [SKYACTIV-G 2.0].) (See 01-17A-13 NEGATIVE BATTERY CABLE DISCONNECTION/CONNECTION [SKYACTIV-G 2.0 (WITHOUT i-stop)].)
2. Remove the air cleaner component. (ex: air cleaner, air hose) (See 01-13A-6 INTAKE-AIR SYSTEM REMOVAL/INSTALLATION [SKYACTIV-G 2.0].)
3. Remove the battery component. (ex: battery, battery tray and PCM component) (See 01-17A-3 BATTERY REMOVAL/INSTALLATION [SKYACTIV-G 2.0].)
4. Remove the insulator. (R.H.D.) (See 01-15A-2 EXHAUST SYSTEM REMOVAL/INSTALLATION [SKYACTIV-G 2.0].)
5. Disconnect the vacuum pipe and bracket. (R.H.D.)

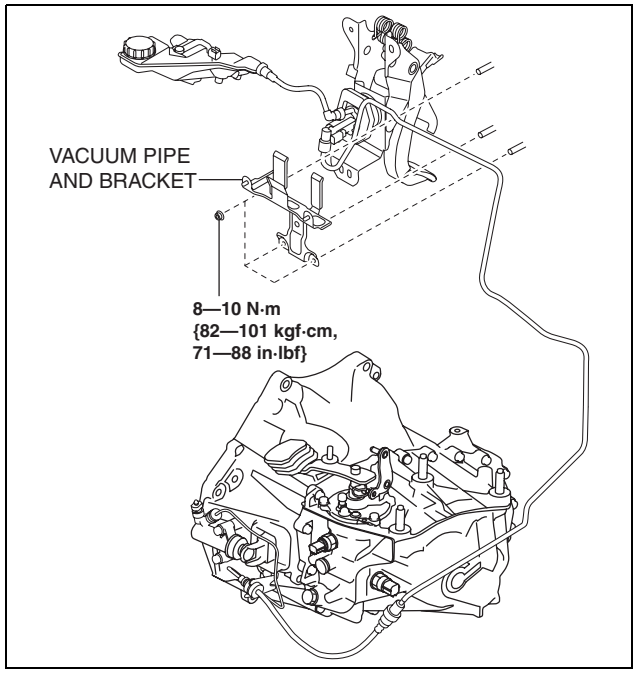

ac5wzw0000282

CLUTCH [C66M-R, C66MX-R]

6. Remove the clutch reserve hose while pressing the point indicated by the arrow in the figure.
7. Remove the clutch pipe and hose using the following procedure:

L.H.D.

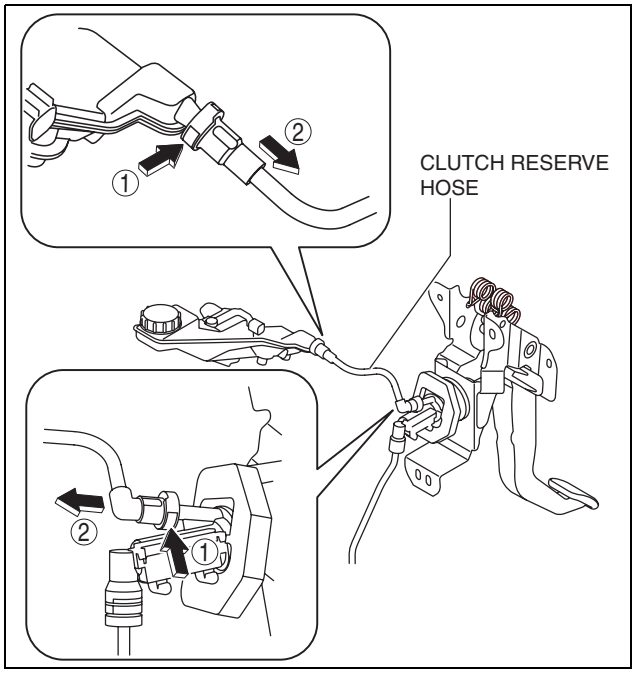

ac5uuw00000709

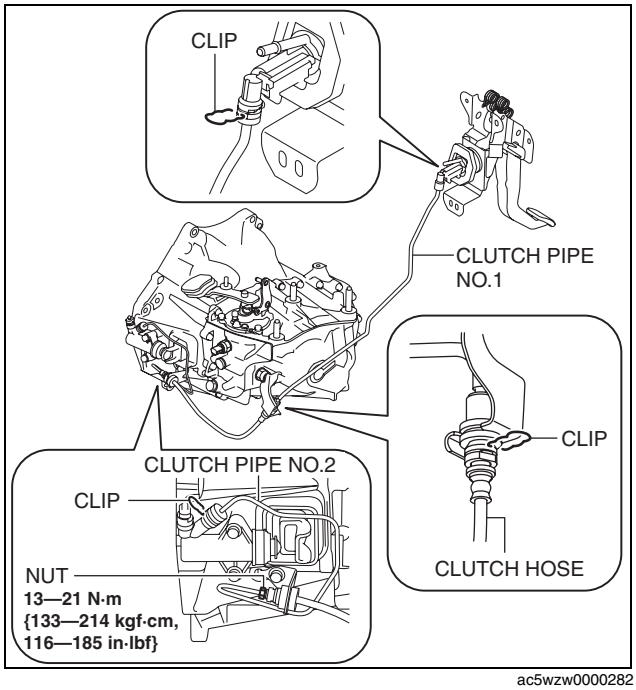

ac5wzw0000282

CLUTCH [C66M-R, C66MX-R]

R.H.D.

(1) Lift the connector clip.
(2) Pull out the clutch pipe and hose connector straight to detach it.
(3) Remove the clutch pipe and hose.

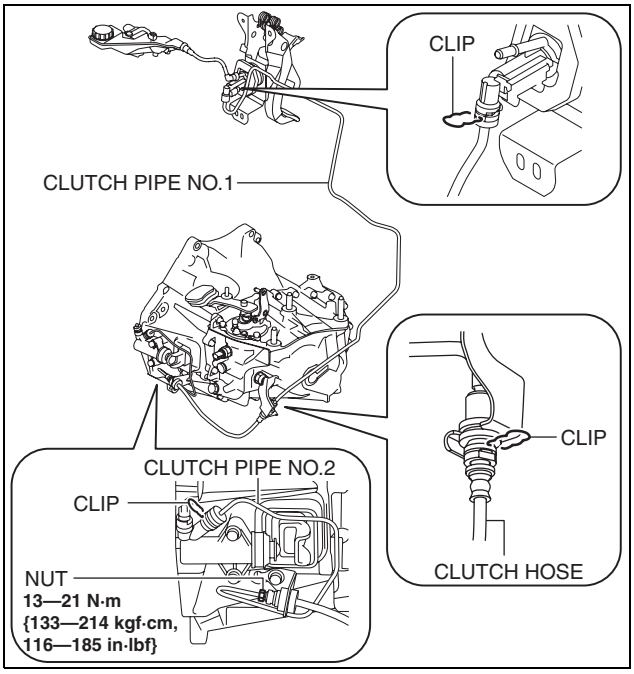

ac5wzw0000245

8. Verify that the seal ring is installed to the clutch pipe and hose connector.

Caution
- **When removing the clutch pipe and hose, the seal ring for the clutch pipe and hose could remain on the receiving area of the connector. If the clutch pipe and hose is assembled under this condition, it could cause clutch fluid leakage from the connector.**

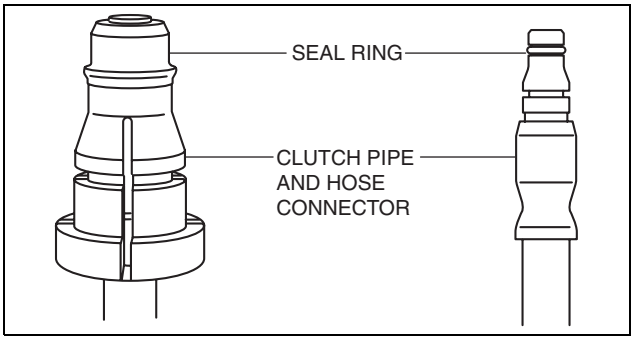

am5ezw0000544

9. Install the clutch pipe and hose.
(1) Press in the connector clip.
(2) Insert the clutch pipe and hose connector straight.

Note
- When the connector is engaged, a click sound is heard.

(3) Install the clutch pipe and hose.
10. Insert the clutch reserve hose connector straight.

Note
- When the connector is engaged, a click sound is heard.

11. Pull each engagement of the clutch reserve hose and clutch pipe and hose, verify that they are engaged, and then press all of them again.
12. Install in the reverse order of removal.
13. Bleed the air from the clutch system. (See 05-10A-5 CLUTCH FLUID REPLACEMENT/AIR BLEEDING [C66M-R, C66MX-R].)

CLUTCH [C66M-R, C66MX-R]

CLUTCH RELEASE CYLINDER REMOVAL/INSTALLATION [C66M-R, C66MX-R]

id0510mc157100

Caution

- **Do not allow clutch fluid to get on a painted surface. Clutch fluid contains properties which can dissolve the paint. If clutch fluid gets on a painted surface, wash it off with water immediately and wipe the area off completely.**

1. Remove the front under cover No.2. (See 09-16-41 FRONT UNDER COVER No.2 REMOVAL/INSTALLATION.)
2. Disconnect the clutch pipe and hose No.2 from clutch release cylinder, and plug it to avoid clutch fluid leakage. (See 05-10A-21 CLUTCH PIPE AND HOSE REMOVAL/INSTALLATION [C66M-R, C66MX-R].)
3. Remove the clutch release cylinder.
4. Install in the reverse order of removal.
5. Bleed the air from the clutch system. (See 05-10A-5 CLUTCH FLUID REPLACEMENT/AIR BLEEDING [C66M-R, C66MX-R].)

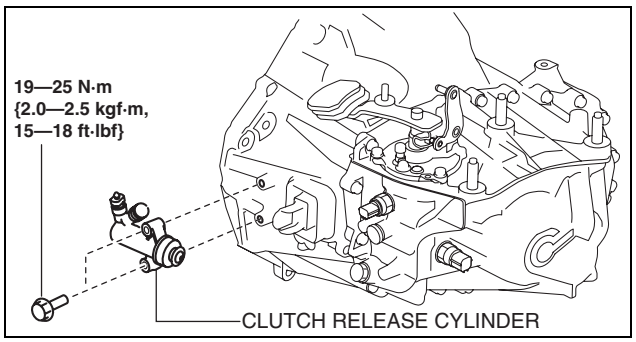

ac5wzw0000282

CLUTCH [C66M-R, C66MX-R]

CLUTCH UNIT REMOVAL/INSTALLATION [C66M-R, C66MX-R]

id0510mc157200

1. Disconnect the negative battery cable. (See 01-17A-11 NEGATIVE BATTERY CABLE DISCONNECTION/CONNECTION [SKYACTIV-G 2.0].) (See 01-17A-13 NEGATIVE BATTERY CABLE DISCONNECTION/CONNECTION [SKYACTIV-G 2.0 (WITHOUT i-stop)].)
2. Remove the MTX. (See 05-15A-4 MANUAL TRANSAXLE REMOVAL/INSTALLATION [C66M-R].) (See 05-15A-18 MANUAL TRANSAXLE REMOVAL/INSTALLATION [C66MX-R].)
3. Remove in the order indicated in the table.
4. Install in the reverse order of removal.
5. Add the specified amount of specified transaxle oil. (See MANUAL TRANSAXLE OIL REPLACEMENT [C66M-R].)

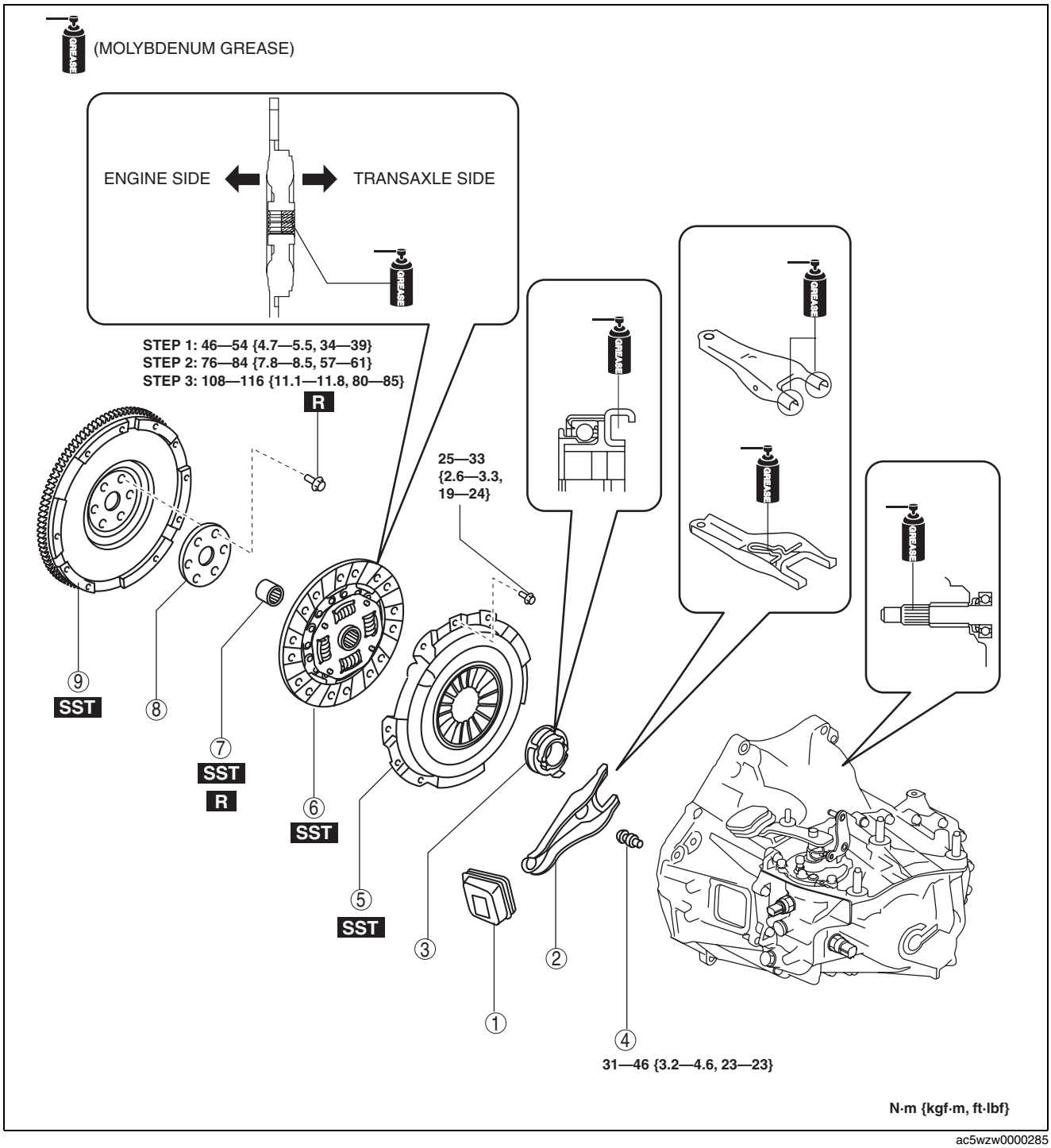

ac5wzw0000285

1	Boot
2	Clutch release fork

3	Clutch release collar
4	Pivot pin

CLUTCH [C66M-R, C66MX-R]

5	Clutch cover (See 05-10A-26 Clutch Cover and Disc Removal Note.) (See 05-10A-27 Clutch Disc and Cover Installation Note.)
6	Clutch disc (See 05-10A-26 Clutch Cover and Disc Removal Note.) (See 05-10A-27 Clutch Disc and Cover Installation Note.)
7	Pilot bearing (See 05-10A-26 Pilot Bearing Removal Note.) (See 05-10A-27 Pilot Bearing Installation Note.)
8	Plate
9	Flywheel (See 05-10A-26 Flywheel Removal Note.) (See 05-10A-27 Flywheel Installation Note.)

Clutch Cover and Disc Removal Note

1. Hold the clutch unit using the **SST**.
2. Loosen each bolt one turn at a time in a crisscross pattern until spring tension is released.
3. Remove the clutch cover and disc.

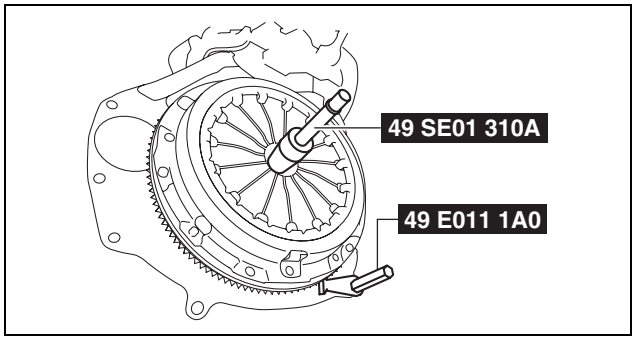

am3uuw0000826

Pilot Bearing Removal Note

Note
- The pilot bearing does not need to be removed unless you are replacing it.

1. Use the **SST** to remove the pilot bearing.

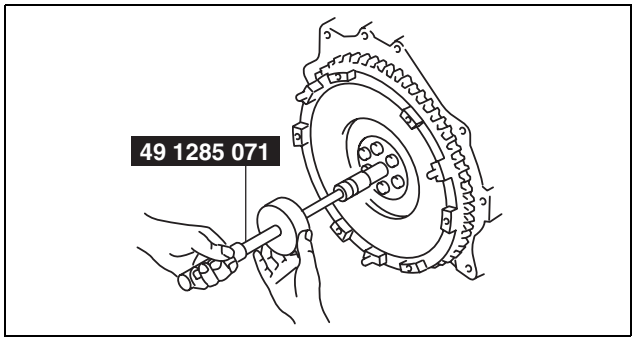

am3uuw0000208

Flywheel Removal Note

1. Hold the flywheel using the **SST**.
2. Remove the lock bolts, and remove the plate and the flywheel.
3. Inspect for oil leakage from the crankshaft rear oil seal.
   - If there is any malfunction, replace the crankshaft rear oil seal. (See 01-10A-89 REAR OIL SEAL REPLACEMENT [SKYACTIV-G 2.0].)

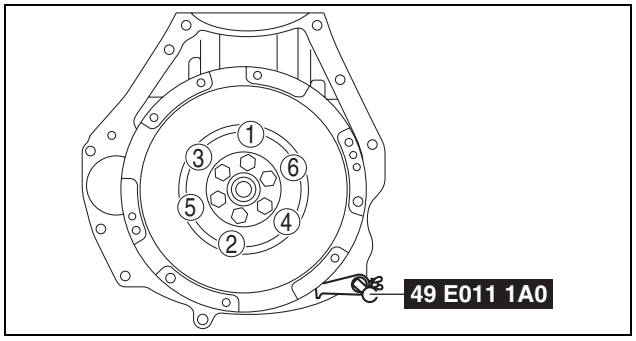

am3uuw0000826

CLUTCH [C66M-R, C66MX-R]

Flywheel Installation Note

1. Clean the crankshaft thread holes.
2. Install the flywheel and the plate to the crankshaft, and temporarily tighten a new lock bolts.
3. Hold the flywheel using the **SST**.
4. Tighten the lock bolts completely in the order shown in the figure in the following 3 steps.

Tightening torque
Step 1: 46—54 N·m {4.7—5.5 kgf·m, 34—39 ft·lbf}
Step 2: 76—84 N·m {7.8—8.5 kgf·m, 57—61 ft·lbf}
Step 3: 108—116 N·m {11.1—11.8 kgf·m, 80—85 ft·lbf}

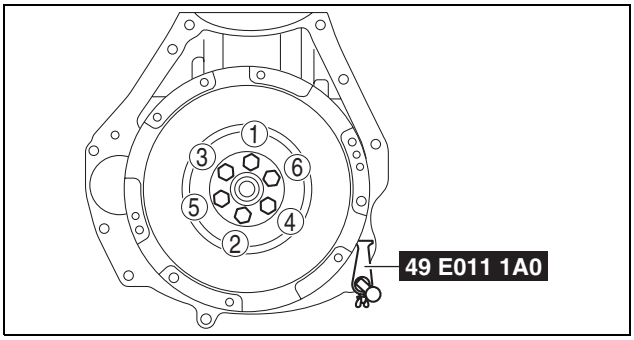

am3uuw0000826

Pilot Bearing Installation Note

1. Install new pilot bearing to the specified position using the following tools.

Tool
Snap-on brand millimeter size bushing driver set (A160M) adapter A160M7 (20—22 mm)
- **Use the adapter with the 20 mm side of the A160M7 (20—22 mm) facing the pilot bearing side.**

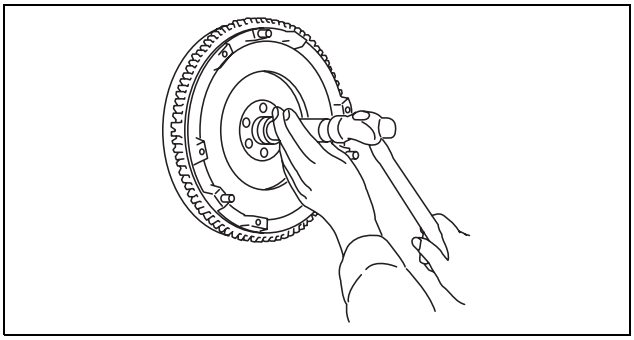
am3uuw0000208

Substitution tool
Outer diameter: 21 mm {0.83 in}
Inner diameter: 19 mm {0.75 in}

Standard position
Distance A of pilot bearing from crankshaft end: 1.5—2.5 mm {0.060—0.098 in}

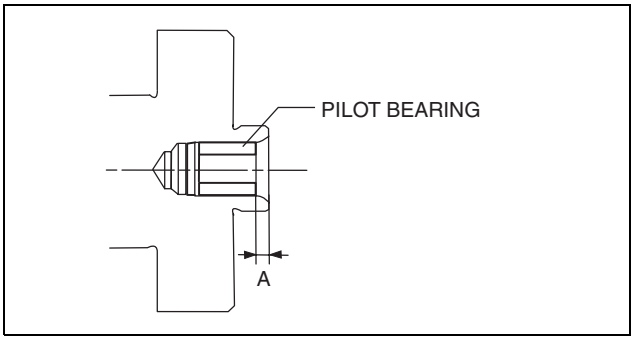

am3uuw0000826

Clutch Disc and Cover Installation Note

1. Hold the clutch disc position using the **SST**.

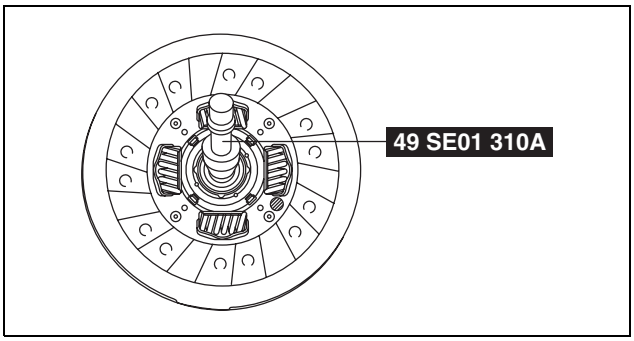

am3uuw0000208

CLUTCH [C66M-R, C66MX-R]

2. Hold the clutch unit using the **SST**.
3. Tighten the bolts in Min. 2 stages.

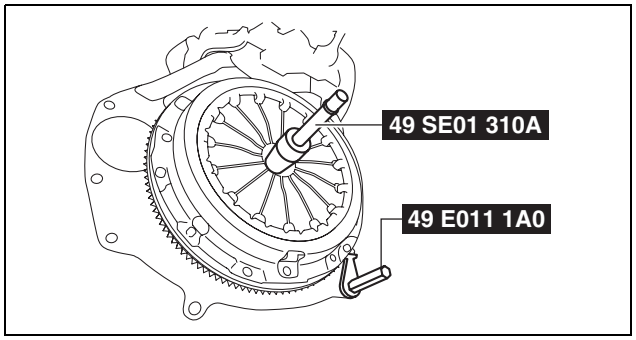

am3uuw0000826

(1) Temporarily tighten the bolts in the order shown in the figure.
(2) Tighten the bolts completely in the order shown in the figure and install the clutch disc and cover.

Tightening torque
25—33 N·m {2.6—3.3 kgf·m, 19—24 ft·lbf}

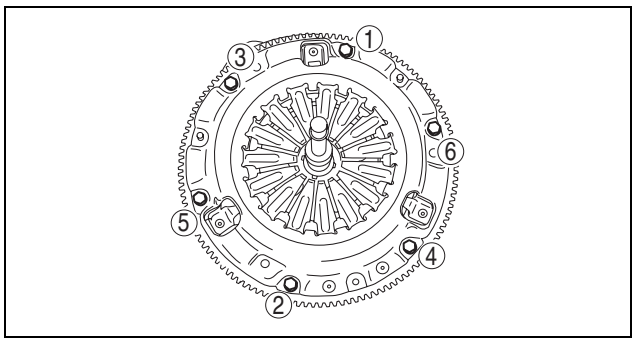

am3uuw0000826

4. Remove the **SST**s.

CLUTCH RELEASE COLLAR INSPECTION [C66M-R, C66MX-R]

id0510mc157300

Caution
- **Do not clean the clutch release collar with cleaning fluids or a steam cleaner because it is filled with grease.**

Operation Inspection

1. Turn the collar while applying force in the axial direction, and inspect for sticking, excessive resistance, and an abnormal noise.
   - If there is any malfunction, replace the clutch release collar. (See 05-10A-25 CLUTCH UNIT REMOVAL/INSTALLATION [C66M-R, C66MX-R].)

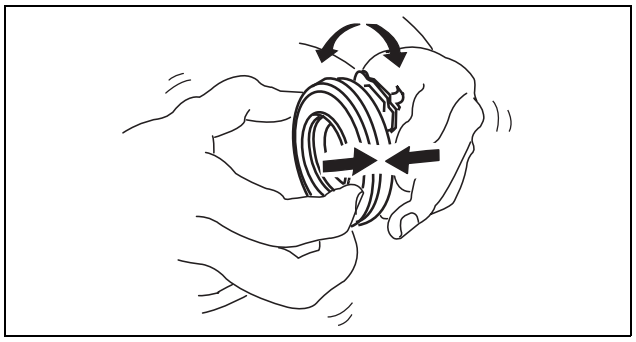
am3uuw0000209

CLUTCH COVER INSPECTION [C66M-R, C66MX-R]

id0510mc157400

1. Remove the clutch cover. (See 05-10A-25 CLUTCH UNIT REMOVAL/INSTALLATION [C66M-R, C66MX-R].)
2. Perform the following procedures to inspect the clutch cover.
   - If it exceeds the maximum specification, replace the clutch cover. (See 05-10A-25 CLUTCH UNIT REMOVAL/INSTALLATION [C66M-R, C66MX-R].)

(1) Measure the wear of the diaphragm spring fingers.

Clutch cover diaphragm spring fingers maximum depth
0.6 mm {0.02 in}

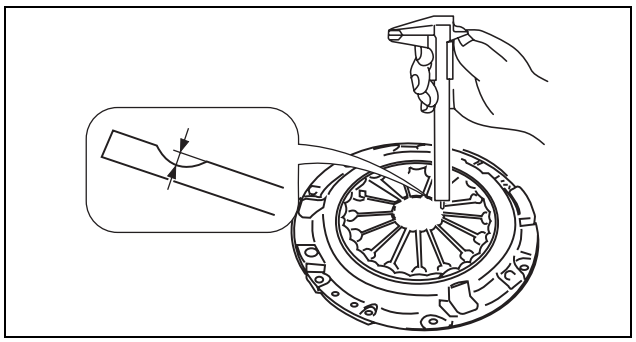
am5uuw0000364

CLUTCH [C66M-R, C66MX-R]

(2) Measure the flatness of the pressure plate with a straight edge and a feeler gauge.

Maximum clearance of flatness of the pressure plate
0.3 mm {0.01 in}

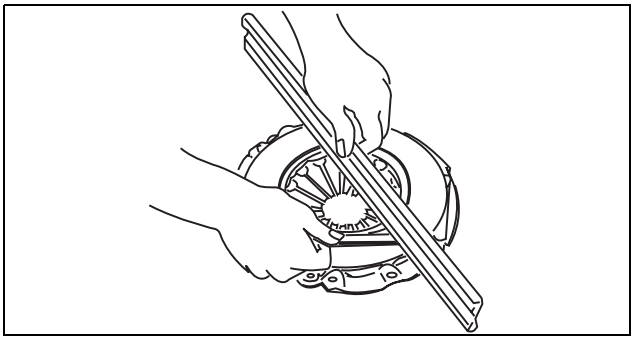
am3uuw0000209

(3) Inspect the diaphragm spring fingers for the degree of uniformity in their height.
1) Install the clutch cover. (See 05-10A-25 CLUTCH UNIT REMOVAL/INSTALLATION [C66M-R, C66MX-R].)
2) When checking the diaphragm spring fingers, mount a dial gauge on the cylinder block.
3) Rotate the flywheel and check for misaligned diaphragm spring fingers.

Clutch cover diaphragm spring fingers maximum height difference
1.0 mm {0.039 in}

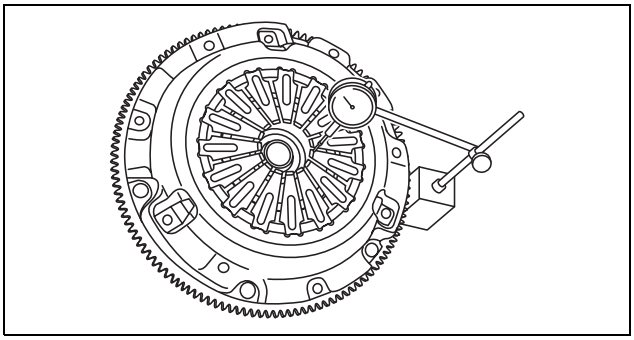
am3uuw0000209

CLUTCH DISC INSPECTION [C66M-R, C66MX-R]

id0510mc157500

1. Inspect the lining surface for discoloration and grease adhesion.
2. Inspect the torsion spring for weakness and the rivets for looseness.
3. Using a vernier caliper, measure the depth between the lining surface and the rivet head.

Minimum clutch disc thickness
0.3 mm {0.01 in}

- If it is less than the minimum specification, replace the clutch disc. (See 05-10A-25 CLUTCH UNIT REMOVAL/INSTALLATION [C66M-R, C66MX-R].)

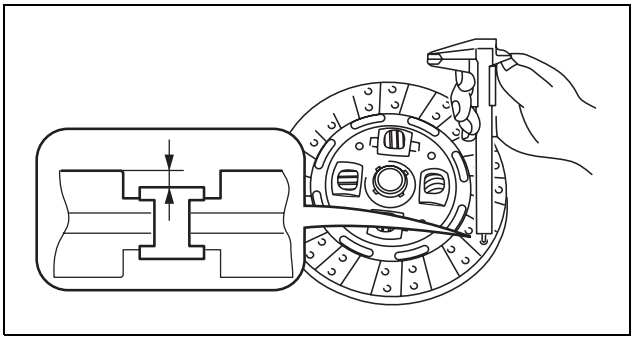
am5uuw0000364

4. Measure the clutch disc runout using a dial gauge.

Maximum clutch disc runout
0.7 mm {0.03 in}

- If it exceeds the maximum specification, replace the clutch disc. (See 05-10A-25 CLUTCH UNIT REMOVAL/INSTALLATION [C66M-R, C66MX-R].)

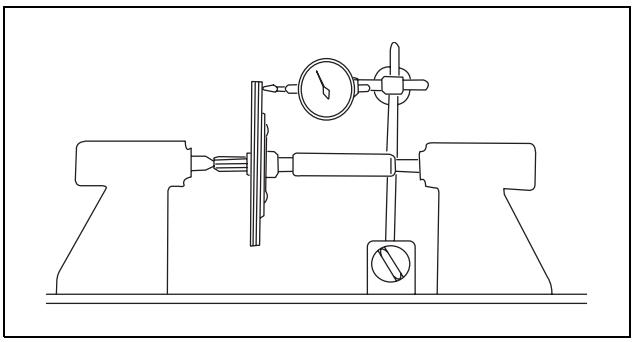
am3uuw0000209

CLUTCH [C66M-R, C66MX-R]

PILOT BEARING INSPECTION [C66M-R, C66MX-R]

id0510mc157600

1. Without removing the pilot bearing, turn the bearing while applying force in the axial direction.
   - If there is any malfunction, replace the pilot bearing. (See 05-10A-25 CLUTCH UNIT REMOVAL/INSTALLATION [C66M-R, C66MX-R].)

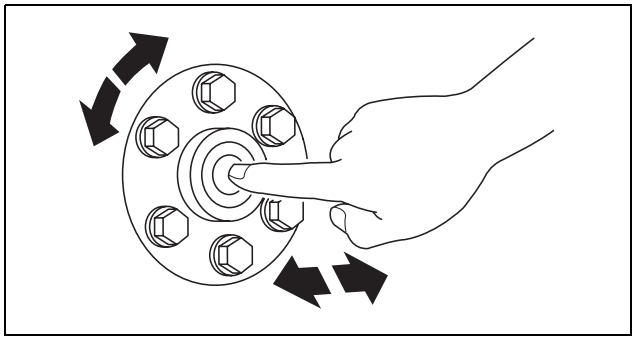

am3uuw0000207

FLYWHEEL INSPECTION [C66M-R, C66MX-R]

id0510mc157700

1. Remove the flywheel. (See 05-10A-25 CLUTCH UNIT REMOVAL/INSTALLATION [C66M-R, C66MX-R].)
2. Perform the following procedures to inspect the flywheel.
   - If there is any malfunction or it exceeds the maximum specification, replace the flywheel. (See 05-10A-25 CLUTCH UNIT REMOVAL/INSTALLATION [C66M-R, C66MX-R].)

   (1) Inspect the surface that contacts the clutch disc for scratches, nicks, and discoloration.
      - Correct slight scratches and discoloration using sandpaper.

   (2) Inspect the ring gear teeth for damage and wear.

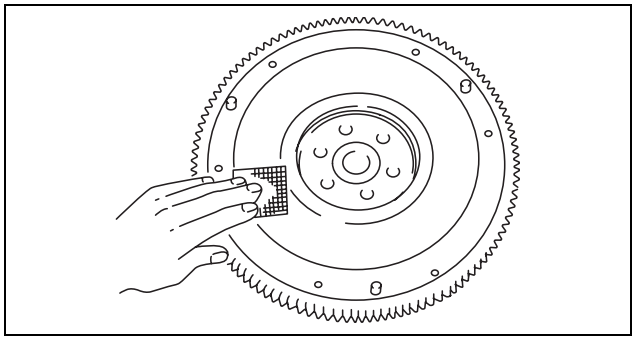

am3uuw0000207

   (3) Inspect the runout of the surface that contacts the clutch disc.
      1) Install the flywheel. (See 05-10A-25 CLUTCH UNIT REMOVAL/INSTALLATION [C66M-R, C66MX-R].)
      2) Measure the runout of the surface that contacts the clutch disc using a dial gauge.

Flywheel maximum runout
0.1 mm {0.004 in}

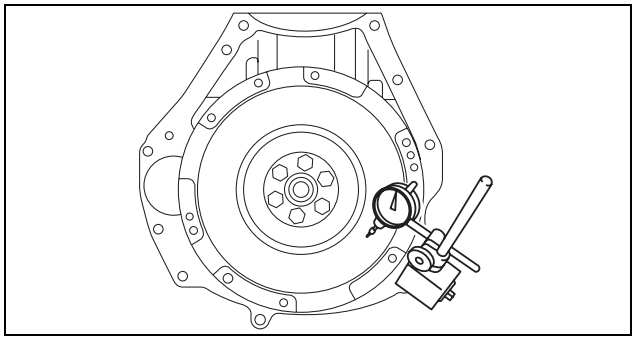

am3uuw0000826

05-10B CLUTCH [D66M-R, D66MX-R]

CLUTCH LOCATION INDEX [D66M-R, D66MX-R] 05-10B–2
CLUTCH FLUID INSPECTION [D66M-R, D66MX-R] 05-10B–3
CLUTCH FLUID LEAKAGE INSPECTION [D66M-R, D66MX-R]. . . . 05-10B–4
CLUTCH FLUID REPLACEMENT/AIR BLEEDING [D66M-R, D66MX-R] 05-10B–5
CLUTCH PEDAL INSPECTION [D66M-R, D66MX-R] 05-10B–6
Pedal Inspection Preparation 05-10B–6
Pedal Height Inspection 05-10B–6
Pedal Free Play Inspection 05-10B–7
Pedal Full Stroke Inspection. 05-10B–7
Clutch Disengagement Point Inspection 05-10B–8
CLUTCH PEDAL REMOVAL/INSTALLATION [D66M-R, D66MX-R] 05-10B–8
Removal 05-10B–8
Installation 05-10B–11
CLUTCH PEDAL POSITION SWITCH REMOVAL/INSTALLATION [D66M-R, D66MX-R]. 05-10B–13
STARTER INTERLOCK SWITCH REMOVAL/INSTALLATION [D66M-R, D66MX-R]. 05-10B–14
CLUTCH MASTER CYLINDER REMOVAL/INSTALLATION [D66M-R, D66MX-R]. 05-10B–17
Removal 05-10B–17
Installation 05-10B–19
CLUTCH STROKE SENSOR REMOVAL/INSTALLATION [D66M-R, D66MX-R]. 05-10B–21
CLUTCH PIPE AND HOSE REMOVAL/INSTALLATION [D66M-R, D66MX-R]. 05-10B–21
CLUTCH RELEASE CYLINDER REMOVAL/INSTALLATION [D66M-R, D66MX-R]. 05-10B–24

CLUTCH [D66M-R, D66MX-R]

CLUTCH LOCATION INDEX [D66M-R, D66MX-R]

id0510mf156300

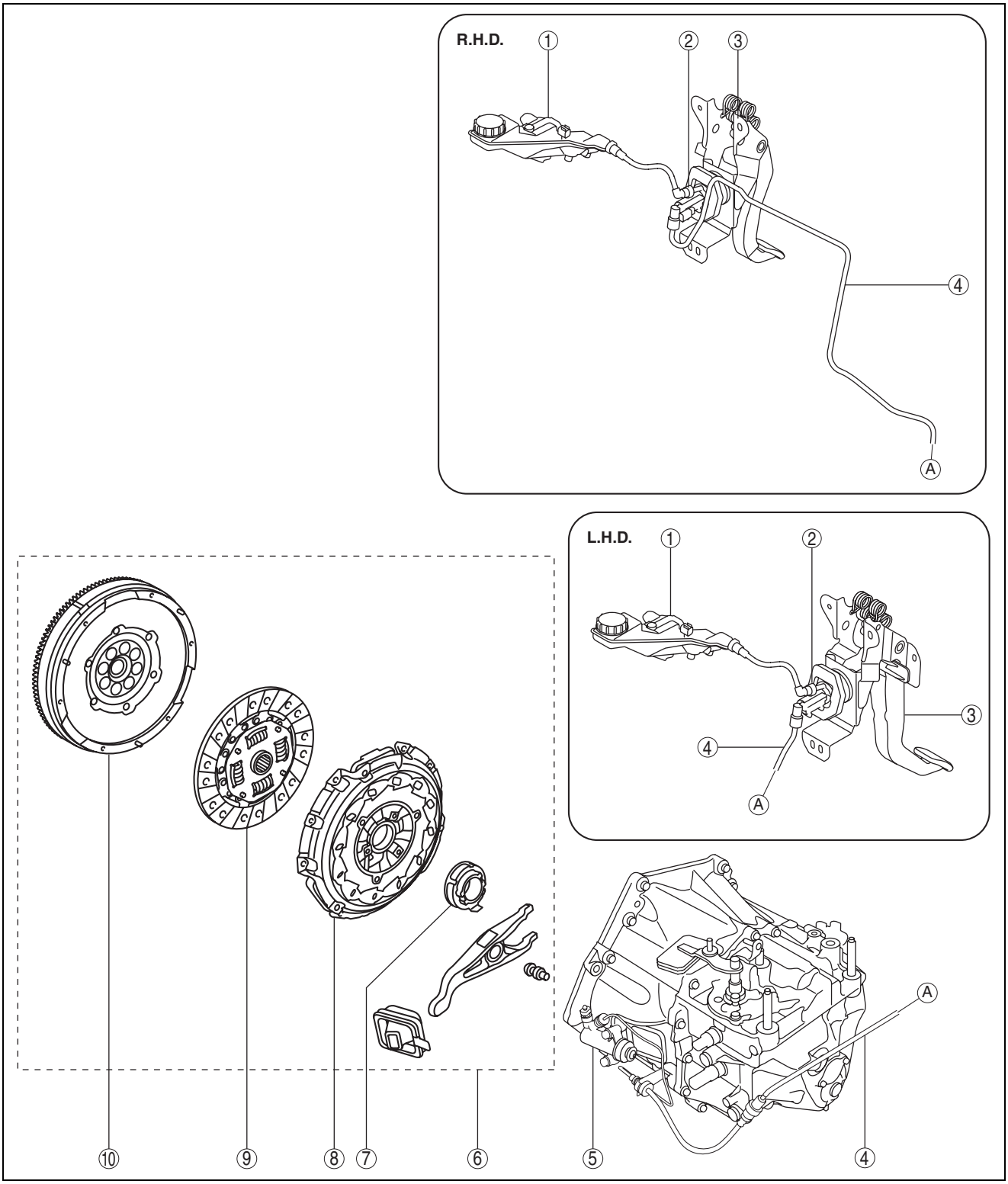

ac5wzw0000342

CLUTCH [D66M-R, D66MX-R]

1	Reserve tank (See 05-10B-3 CLUTCH FLUID INSPECTION [D66M-R, D66MX-R].) (See 05-10B-5 CLUTCH FLUID REPLACEMENT/ AIR BLEEDING [D66M-R, D66MX-R].)
2	Clutch master cylinder (See 05-10B-17 CLUTCH MASTER CYLINDER REMOVAL/INSTALLATION [D66M-R, D66MX-R].)
3	Clutch pedal (See 05-10B-6 CLUTCH PEDAL INSPECTION [D66M-R, D66MX-R].) (See 05-10B-8 CLUTCH PEDAL REMOVAL/ INSTALLATION [D66M-R, D66MX-R].) (See 05-10B-13 CLUTCH PEDAL POSITION SWITCH REMOVAL/INSTALLATION [D66M-R, D66MX-R].) (See 05-10B-14 STARTER INTERLOCK SWITCH REMOVAL/INSTALLATION [D66M-R, D66MX-R].)
4	Clutch pipe and hose (See 05-10B-4 CLUTCH FLUID LEAKAGE INSPECTION [D66M-R, D66MX-R].) (See 05-10B-21 CLUTCH PIPE AND HOSE REMOVAL/INSTALLATION [D66M-R, D66MX-R].)
5	Clutch release cylinder (See 05-10B-24 CLUTCH RELEASE CYLINDER REMOVAL/INSTALLATION [D66M-R, D66MX-R].)
6	Clutch unit
7	Clutch release collar
8	Clutch cover
9	Clutch disc
10	Dual-mass flywheel

CLUTCH FLUID INSPECTION [D66M-R, D66MX-R]

id0510mf156400

05

Note
- A common reserve tank is used for the clutch system and brake system.

1. Verify that the clutch fluid is between the MIN mark and the MAX mark.
   - If fluid level is lower than MIN mark, perform the following procedure:
     1. Verify that there is no fluid leakage. (See 05-10B-4 CLUTCH FLUID LEAKAGE INSPECTION [D66M-R, D66MX-R].)
     2. Add fluid to the level between MIN mark and the MAX mark.

Clutch fluid
SAE J1703 or FMVSS116 DOT-3 or DOT-4

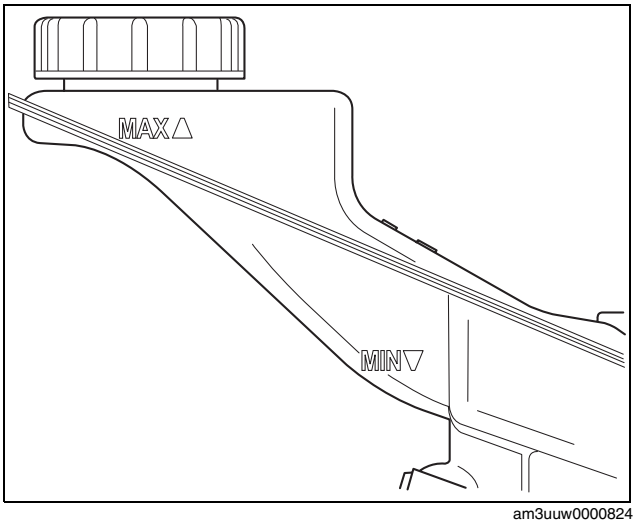

am3uuw0000824

CLUTCH [D66M-R, D66MX-R]

CLUTCH FLUID LEAKAGE INSPECTION [D66M-R, D66MX-R]

id0510mf158400

Caution

- **Do not allow clutch fluid to get on a painted surface. Clutch fluid contains properties which can dissolve the paint. If clutch fluid gets on a painted surface, wash it off with water immediately and wipe the area off completely.**

1. Verify reserve tank cap is on tight.
2. Pump the clutch pedal a few times.
3. Inspect for the clutch fluid leakage at the points indicated in the figure.

L.H.D.

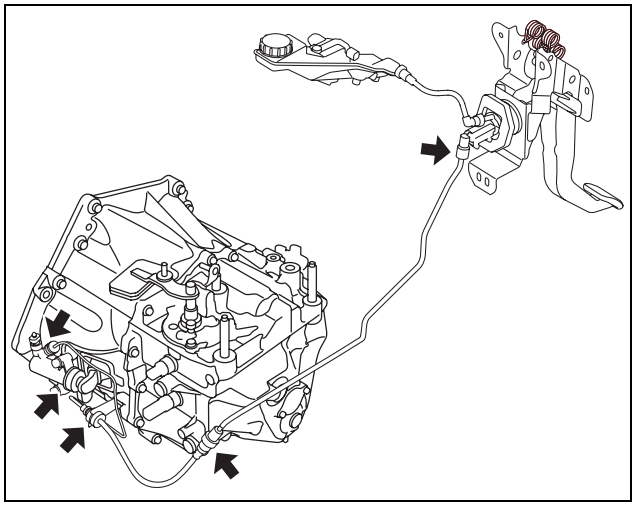

ac5wzw0000342

R.H.D.

Note

- If there is clutch fluid leakage from the piston in the clutch release cylinder, there is clutch fluid in the boot of clutch release cylinder.

- If there is clutch fluid leakage, repair or replace the malfunctioning location.

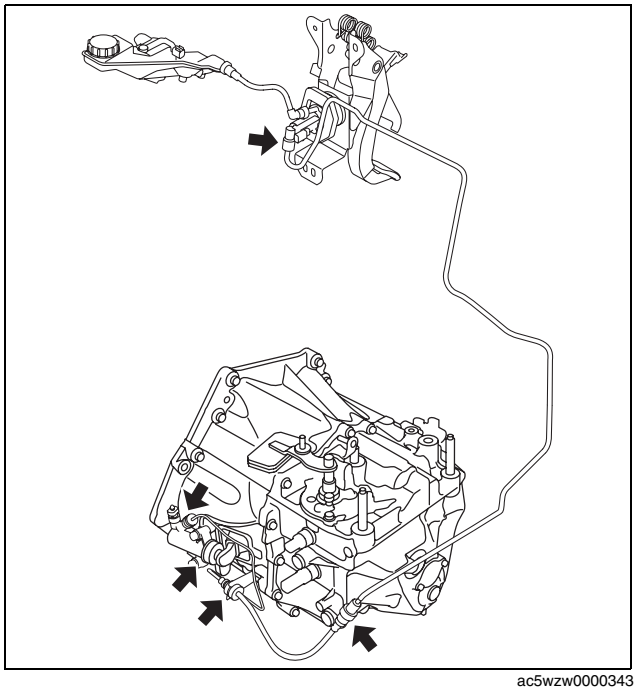

ac5wzw0000343

CLUTCH [D66M-R, D66MX-R]

CLUTCH FLUID REPLACEMENT/AIR BLEEDING [D66M-R, D66MX-R]

id0510mf166800

Caution
- **Do not allow clutch fluid to get on a painted surface. Clutch fluid contains properties which can dissolve the paint. If clutch fluid gets on a painted surface, wash it off with water immediately and wipe the area off completely.**
- **Do not mix different types of clutch fluid, otherwise the clutch may not operate normally.**
- **Do not reuse old clutch fluid, otherwise the clutch may not operate normally.**

Note
- A common reserve tank is used for the clutch system and brake system.

1. Remove the front under cover No.2. (See 09-16-41 FRONT UNDER COVER No.2 REMOVAL/INSTALLATION.)
2. Remove the reserve tank cap.
3. Drain the clutch fluid from bleeder screw.
4. Add new clutch fluid to the MAX mark of the reserve tank.

Clutch fluid
SAE J1703 or FMVSS116 DOT-3 or DOT-4

5. Bleed the air from the clutch system.

Caution
- **Keep the clutch fluid level in the reserve tank at 3/4 full or more during air bleeding.**

(1) Connect a vinyl tube to the bleeder screw.
(2) Place the other end of the vinyl tube in a clear container, and fill clutch fluid in the container during air bleeding.
(3) Working with two people, one loosens the bleeder screw.
(4) The other person depresses the clutch pedal to full stroke taking approx. 3 s or more, and then holding the pedal depressed.
(5) After waiting approx. 5 s or more, tighten the bleeder screw.
(6) Return the clutch pedal slowly taking 3 s or more while suppressing the spring force.
(7) Wait approx. 5 s or more.
(8) Continue to perform air bleeding (Steps (3) - (7)) until no air comes from the vinyl tube.
(9) Fill the reserve tank to MAX mark with the clutch fluid.

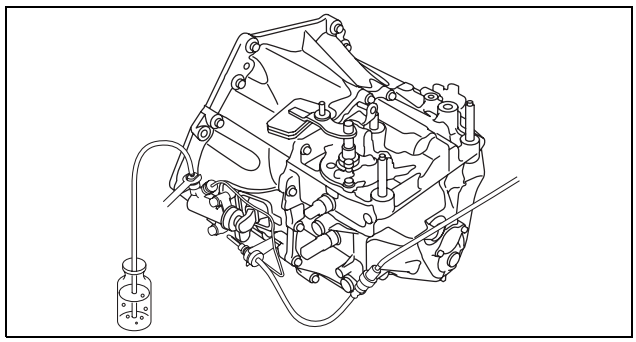

ac5wzw0000343

Clutch fluid
SAE J1703 or FMVSS116 DOT-3 or DOT-4

6. Install the reserve tank cap.
7. Install the front under cover No.2. (See 09-16-41 FRONT UNDER COVER No.2 REMOVAL/INSTALLATION.)

CLUTCH [D66M-R, D66MX-R]

CLUTCH PEDAL INSPECTION [D66M-R, D66MX-R]

id0510mf156600

Note

- For the clutch pedal inspection, note the following and measure each inspection location.
  - — Measure the center of the upper surface of the pedal pad for each inspection.
  - — If the distance from the pedal pad to the floor covering is measured, measure the shortest distance from the center of the upper surface of the pedal pad to the floor covering.

Pedal Inspection Preparation

1. Verify that the clutch fluid is between the MIN mark and the MAX mark.
2. Verify that there is no clutch fluid leakage. (See 05-10B-4 CLUTCH FLUID LEAKAGE INSPECTION [D66M-R, D66MX-R].)

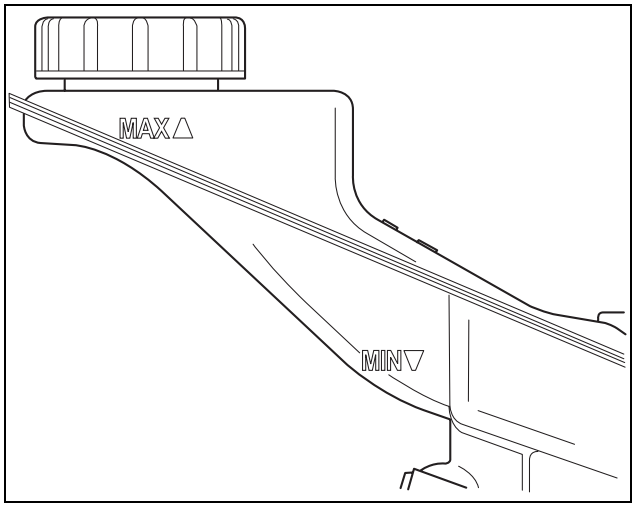

am3uuw0000824

Pedal Height Inspection

1. Perform “Pedal Inspection Preparation”. (See 05-10B-6 Pedal Inspection Preparation.)
2. Measure the pedal height with the clutch pedal released as shown in the figure.

   Pedal height (reference value)
   153.8 mm {6.055 in}

   - If it is not the specification, replace the clutch pedal. (See 05-10B-8 CLUTCH PEDAL REMOVAL/INSTALLATION [D66M-R, D66MX-R].)

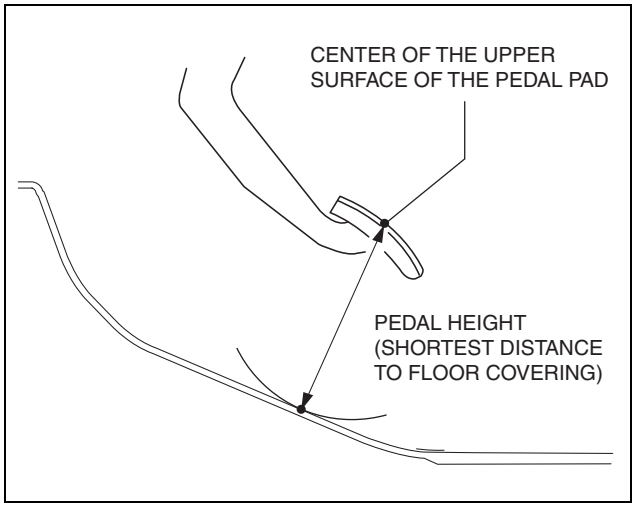

ac5uuw00000697

CLUTCH [D66M-R, D66MX-R]

Pedal Free Play Inspection

1. Perform “Pedal Inspection Preparation”. (See 05-10B-6 Pedal Inspection Preparation.)
2. Depress the clutch pedal by hand until clutch resistance is felt, and measure the pedal free play as shown in the figure.

   Pedal free play (reference value)
   10 mm {0.39 in} or less

   - If it exceeds the specification, replace the clutch pedal. (See 05-10B-8 CLUTCH PEDAL REMOVAL/INSTALLATION [D66M-R, D66MX-R].)

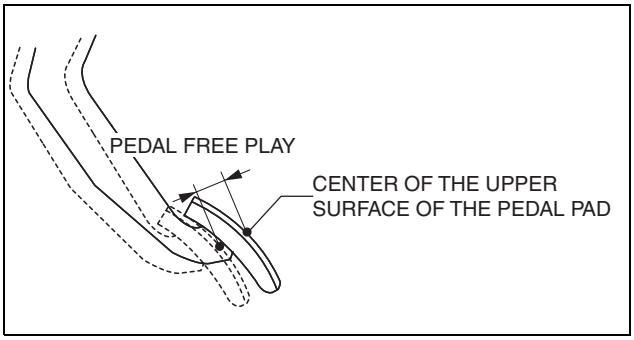

am5uuw0000369

Pedal Full Stroke Inspection

1. Perform “Pedal Inspection Preparation”. (See 05-10B-6 Pedal Inspection Preparation.)
2. Depress the clutch pedal from the released condition to the full depression position, and measure the pedal full stroke as shown in the figure.

   Pedal full stroke (reference value)
   150.3 mm {5.917 in}

   - If it is not the specification, replace the clutch pedal. (See 05-10B-8 CLUTCH PEDAL REMOVAL/INSTALLATION [D66M-R, D66MX-R].)

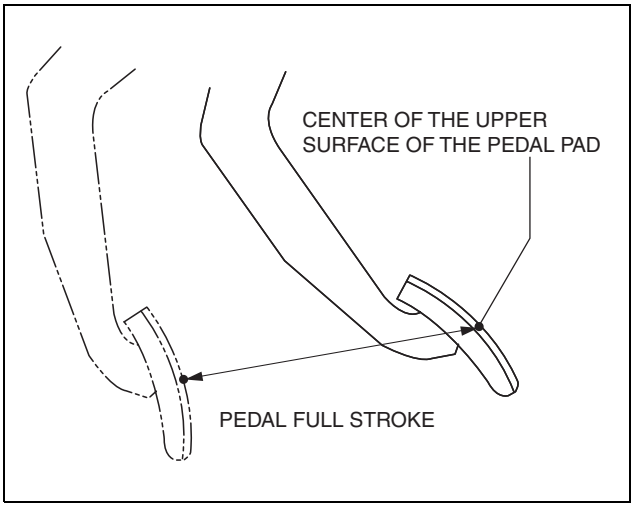

ac5uuw00000698

CLUTCH [D66M-R, D66MX-R]

Clutch Disengagement Point Inspection

Warning
- **When performing the following procedure, make sure that the area around the vehicle is free of people or objects as the vehicle might move suddenly.**

1. Perform “Pedal Inspection Preparation”. (See 05-10B-6 Pedal Inspection Preparation.)
2. Verify that the pedal height is normal. (See 05-10B-6 Pedal Height Inspection.)
3. Verify that the pedal free play is normal. (See 05-10B-7 Pedal Free Play Inspection.)
4. Verify that the pedal full stroke is normal. (See 05-10B-7 Pedal Full Stroke Inspection.)
5. Apply the parking brake and fix the front and rear wheels with wheel chocks.
6. Start the engine.
7. With the clutch pedal depressed, move the shift lever to the position just before engaging the reverse gear. (Do not shift completely to reverse position)
8. Gradually release the clutch pedal and then hold it at the point where the sound of gear-grinding begins (clutch disengagement point).
9. Measure distance A as shown in the figure when the clutch pedal is at the clutch disengagement point.

   Distance A (reference value)
   82 mm {3.2 in} or more

   - If it is less than the specification, bleed the air from the clutch system. (See 05-10B-5 CLUTCH FLUID REPLACEMENT/AIR BLEEDING [D66M-R, D66MX-R].)

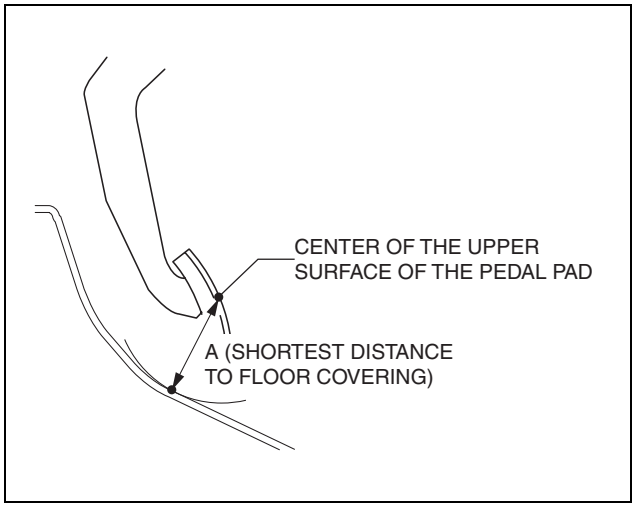

ac5uuw00000699

CLUTCH PEDAL REMOVAL/INSTALLATION [D66M-R, D66MX-R]

id0510mf156700

Caution
- **Secure the steering wheel using tape or a cable to prevent the steering shaft from rotating after disconnecting the steering shaft. If the steering wheel rotates after the steering shaft and the steering gear and linkage are disconnected, the internal parts of the clock spring could be damaged.**
- **Do not allow clutch fluid to get on a painted surface. Clutch fluid contains properties which can dissolve the paint. If clutch fluid gets on a painted surface, wash it off with water immediately and wipe the area off completely.**

Removal

1. Disconnect the negative battery cable. (See 01-17B-9 NEGATIVE BATTERY CABLE DISCONNECTION/CONNECTION [SKYACTIV-D 2.2].)
2. Remove the air cleaner component. (ex: air cleaner, air hose) (L.H.D.) (See 01-13B-6 INTAKE-AIR SYSTEM REMOVAL/INSTALLATION [SKYACTIV-D 2.2].)
3. Remove the battery component. (ex: battery, battery tray) (L.H.D.) (See 01-17B-3 BATTERY REMOVAL/INSTALLATION [SKYACTIV-D 2.2].)
4. Remove the bracket from the steering shaft. (See 06-13-4 STEERING WHEEL AND COLUMN REMOVAL/INSTALLATION.)
5. Remove the clutch pedal position switch. (See 05-10B-13 CLUTCH PEDAL POSITION SWITCH REMOVAL/INSTALLATION [D66M-R, D66MX-R].)
6. Remove the starter interlock switch. (See 05-10B-14 STARTER INTERLOCK SWITCH REMOVAL/INSTALLATION [D66M-R, D66MX-R].)
7. Remove the joint cover. (See 06-13-4 STEERING WHEEL AND COLUMN REMOVAL/INSTALLATION.)
8. Disconnect the steering shaft from steering gear. (See 06-13-4 STEERING WHEEL AND COLUMN REMOVAL/INSTALLATION.)
9. Remove the front under cover No.2. (See 09-16-41 FRONT UNDER COVER No.2 REMOVAL/INSTALLATION.)

CLUTCH [D66M-R, D66MX-R]

10. Remove the insulator. (R.H.D.) (See 01-15B-1 EXHAUST SYSTEM REMOVAL/INSTALLATION [SKYACTIV-D 2.2].)
11. Disconnect the clutch pipe and hose No.1 from clutch master cylinder, and plug it to avoid clutch fluid leakage. (See 05-10B-21 CLUTCH PIPE AND HOSE REMOVAL/INSTALLATION [D66M-R, D66MX-R].)
12. Disconnect the clutch reserve hose from clutch master cylinder, and plug it to avoid clutch fluid leakage. (See 05-10B-21 CLUTCH PIPE AND HOSE REMOVAL/INSTALLATION [D66M-R, D66MX-R].)
13. Remove in the order indicated in the table.

R.H.D.

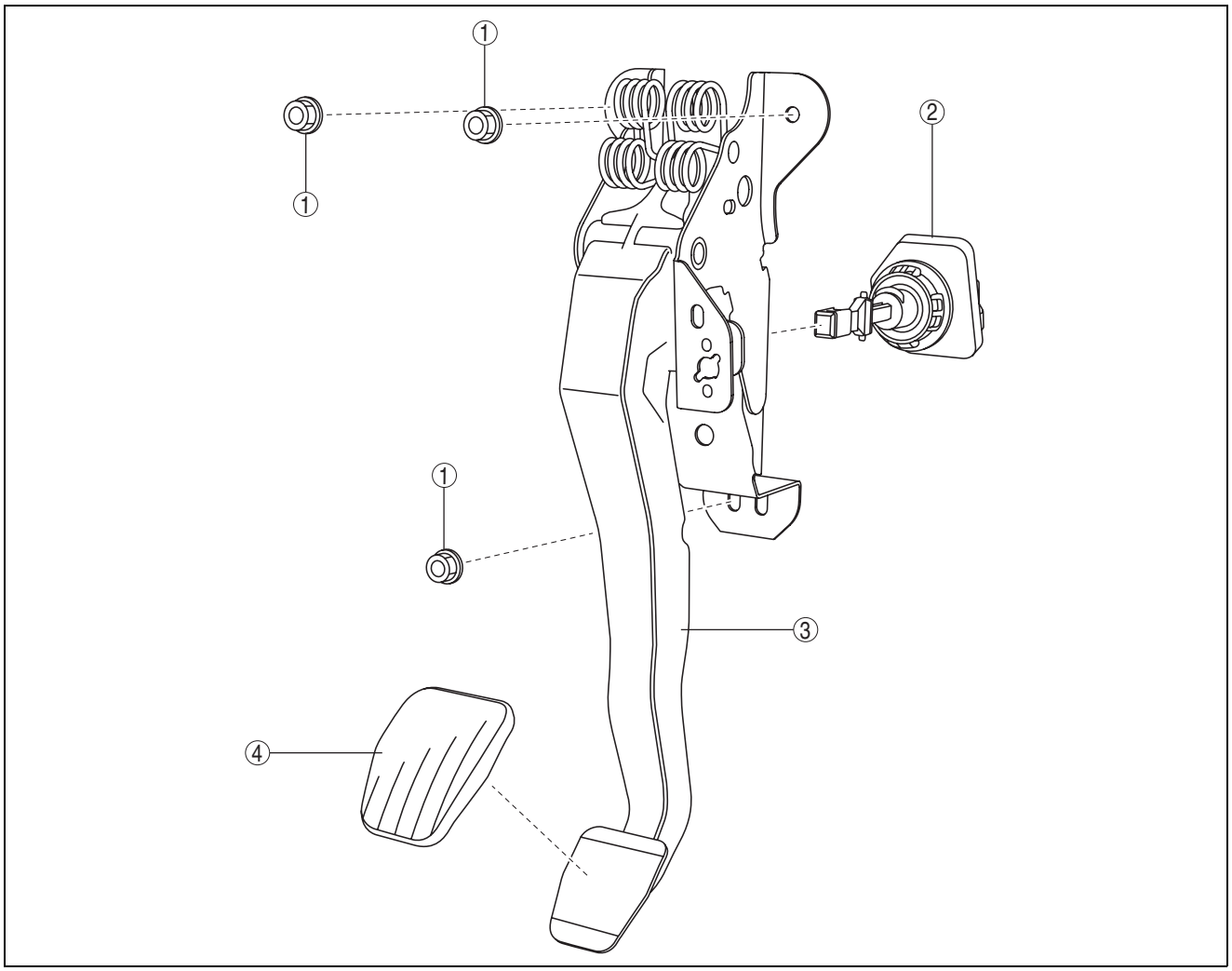

ac5wzw0000129

1	Nut
2	Clutch master cylinder (See 05-10B-17 CLUTCH MASTER CYLINDER REMOVAL/INSTALLATION [D66M-R, D66MX-R].)
3	Clutch pedal
4	Pedal pad

Installation

1. Install in the order indicated in the table.

CLUTCH [D66M-R, D66MX-R]

R.H.D.

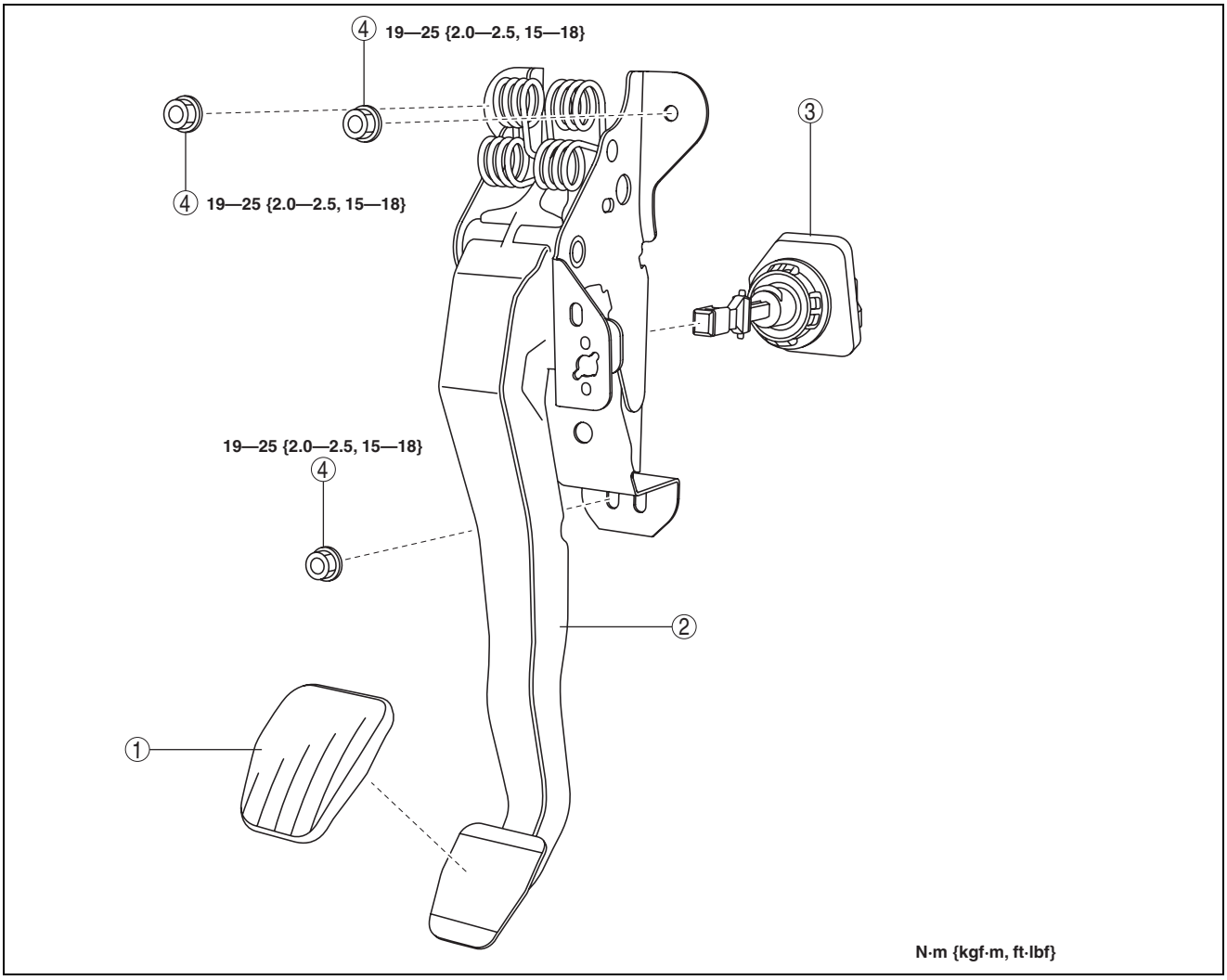

ac5wzw0000129

1	Pedal pad
2	Clutch pedal

3	Clutch master cylinder (See 05-10B-17 CLUTCH MASTER CYLINDER REMOVAL/INSTALLATION [D66M-R, D66MX-R].)
4	Nut

2. Connect the clutch reserve hose to clutch master cylinder. (See 05-10B-21 CLUTCH PIPE AND HOSE REMOVAL/INSTALLATION [D66M-R, D66MX-R].)
3. Connect the clutch pipe and hose No.1 to clutch master cylinder. (See 05-10B-21 CLUTCH PIPE AND HOSE REMOVAL/INSTALLATION [D66M-R, D66MX-R].)
4. Connect the steering shaft. (See 06-13-4 STEERING WHEEL AND COLUMN REMOVAL/INSTALLATION.)
5. Install the joint cover. (See 06-13-4 STEERING WHEEL AND COLUMN REMOVAL/INSTALLATION.)
6. Bleed the air from the clutch system. (See 05-10B-5 CLUTCH FLUID REPLACEMENT/AIR BLEEDING [D66M-R, D66MX-R].)
7. Inspect the clutch pedal. (See 05-10B-6 CLUTCH PEDAL INSPECTION [D66M-R, D66MX-R].)
8. Install a new starter interlock switch. (See 05-10B-14 STARTER INTERLOCK SWITCH REMOVAL/INSTALLATION [D66M-R, D66MX-R].)
9. Install a new clutch pedal position switch. (See 05-10B-13 CLUTCH PEDAL POSITION SWITCH REMOVAL/INSTALLATION [D66M-R, D66MX-R].)
10. Install the insulator. (R.H.D.) (See 01-15B-1 EXHAUST SYSTEM REMOVAL/INSTALLATION [SKYACTIV-D 2.2].)
11. Install the front under cover No.2. (See 09-16-41 FRONT UNDER COVER No.2 REMOVAL/INSTALLATION.)
12. Install the bracket to the steering shaft. (See 06-13-4 STEERING WHEEL AND COLUMN REMOVAL/INSTALLATION.)
13. Install the battery component. (ex: battery, battery tray) (L.H.D.) (See 01-17B-3 BATTERY REMOVAL/INSTALLATION [SKYACTIV-D 2.2].)

CLUTCH [D66M-R, D66MX-R]

14. Install the air cleaner component. (ex: air cleaner, air hose) (L.H.D.) (See 01-13B-6 INTAKE-AIR SYSTEM REMOVAL/INSTALLATION [SKYACTIV-D 2.2].)
15. Connect the negative battery cable. (See 01-17B-9 NEGATIVE BATTERY CABLE DISCONNECTION/CONNECTION [SKYACTIV-D 2.2].)
16. Fully depress the clutch pedal, and verify that the engine starts.

CLUTCH PEDAL POSITION SWITCH REMOVAL/INSTALLATION [D66M-R, D66MX-R]

id0510mf160000

1. Disconnect the negative battery cable. (See 01-17B-9 NEGATIVE BATTERY CABLE DISCONNECTION/CONNECTION [SKYACTIV-D 2.2].)
2. Disconnect the clutch pedal position switch connector.
3. Rotate the clutch pedal position switch 45° counterclockwise.

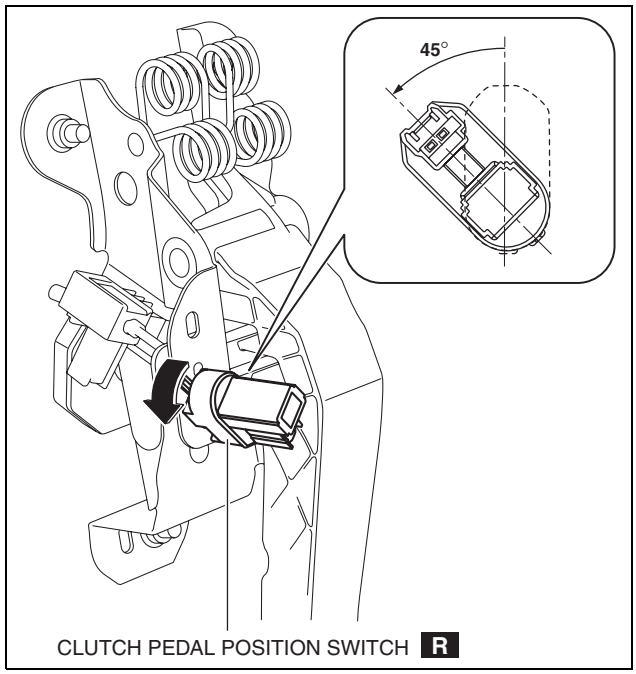

ac5wzw0000515

4. Remove the clutch pedal position switch from the clutch pedal.
5. Insert a new clutch pedal position switch into the clutch pedal hole until the switch stops.

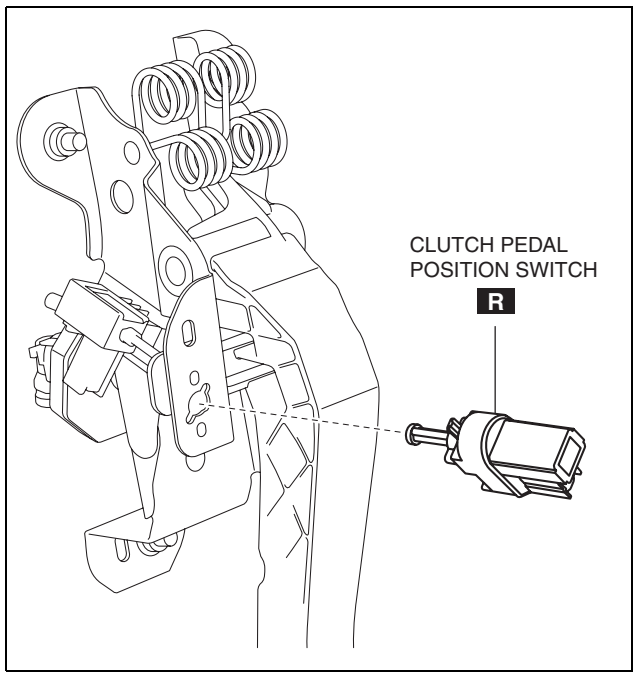

ac5uuw00000723

CLUTCH [D66M-R, D66MX-R]

6. Rotate the clutch pedal position switch 45° clockwise.
7. Verify that the clutch pedal position switch is locked securely.
8. Install in the reverse order of removal.

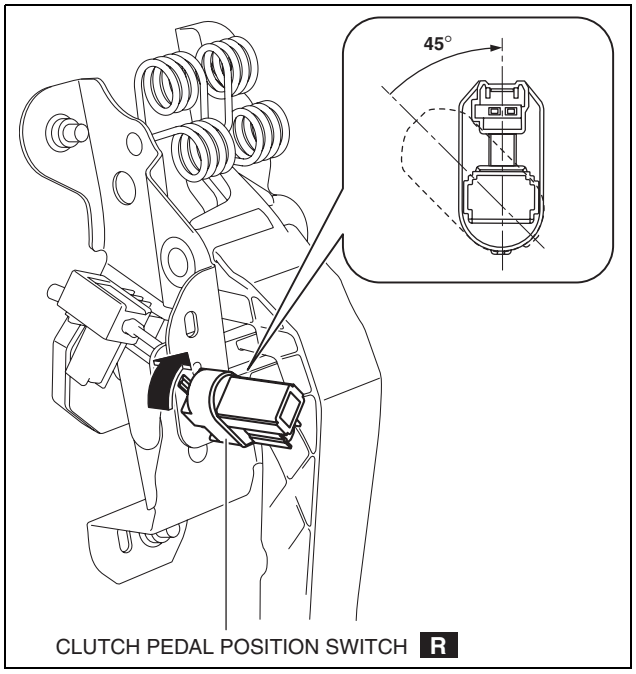

ac5wzw0000515

STARTER INTERLOCK SWITCH REMOVAL/INSTALLATION [D66M-R, D66MX-R]

id0510mf160100

1. Disconnect the negative battery cable. (See 01-17B-9 NEGATIVE BATTERY CABLE DISCONNECTION/CONNECTION [SKYACTIV-D 2.2].)
2. Disconnect the starter interlock switch connector.
3. Remove the starter interlock switch using the following procedure:
   (1) Detach hook A in the direction of the arrow shown in the figure.

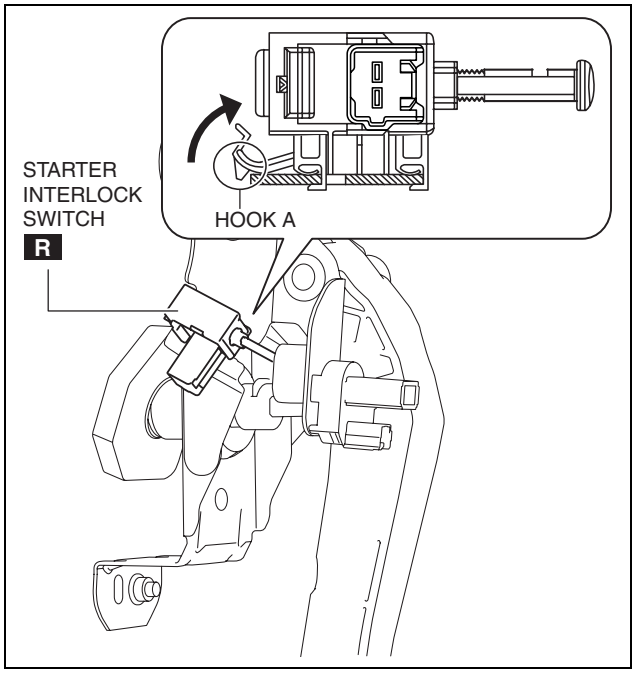

ac5uuw00000725

CLUTCH [D66M-R, D66MX-R]

(2) Slide the starter interlock switch in the direction of the arrow shown in the figure.

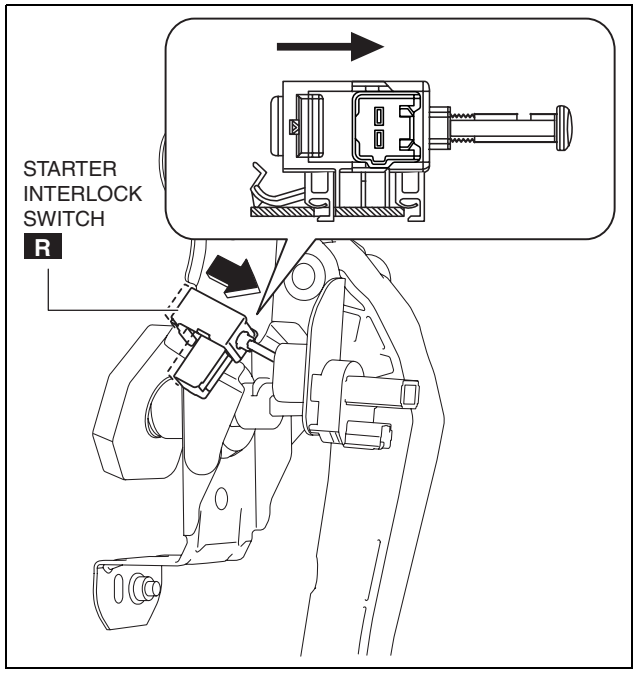

ac5uuw00000726

(3) Remove the starter interlock switch from the clutch pedal.

4. Install the starter interlock switch using the following procedure:

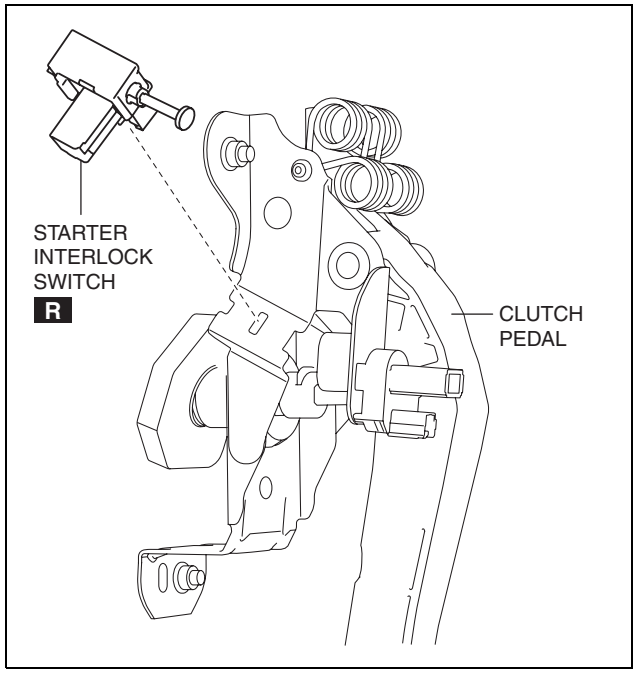

ac5wzw0000533

CLUTCH [D66M-R, D66MX-R]

(1) Insert hook B of a new starter interlock switch into the clutch pedal hole.

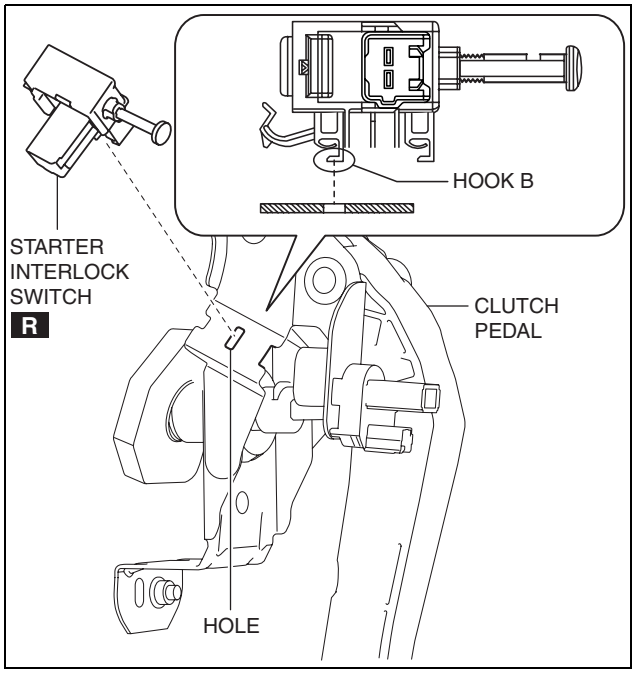

ac5uuw00000728

(2) While pressing the starter interlock switch against the clutch pedal, slide the starter interlock switch until hook A is locked in the direction of the arrow shown in the figure.

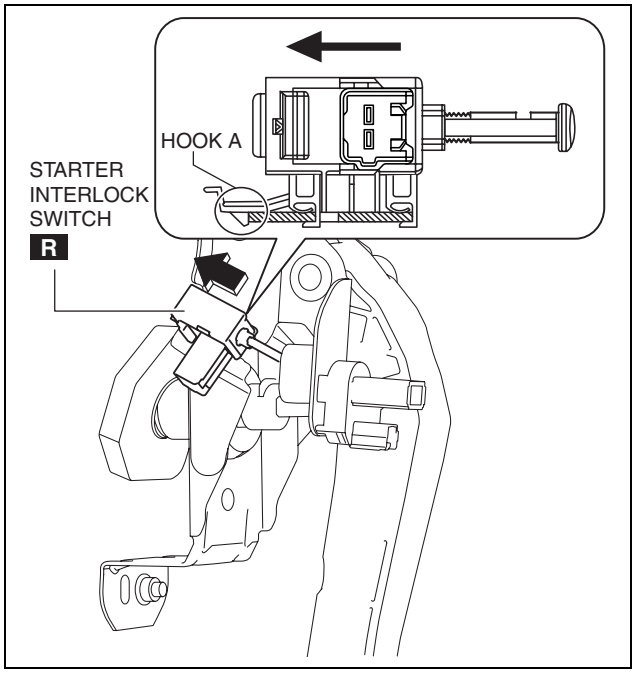

ac5uuw00000729

CLUTCH [D66M-R, D66MX-R]

5. Fully depress the clutch pedal in the direction of arrow, and verify that a click sound from the starter interlock switch is heard.
6. Install in the reverse order of removal.
7. Fully depress the clutch pedal, and verify that the engine starts.

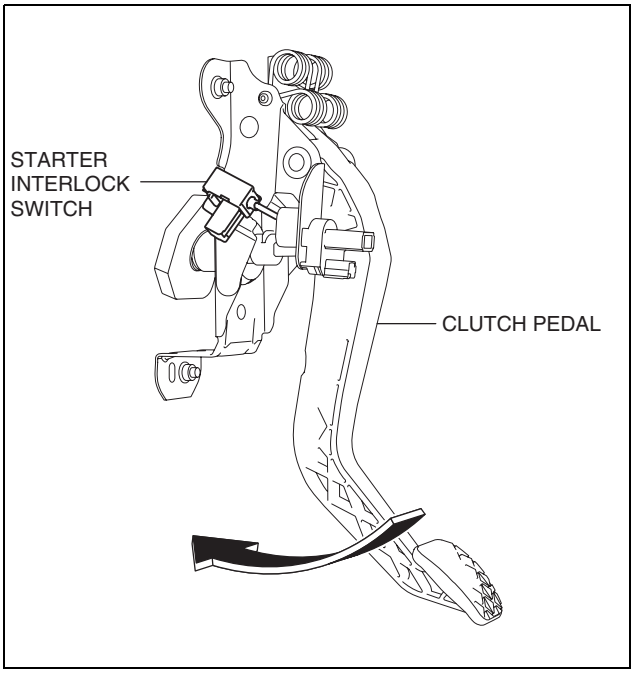

ac5uuw00000730

CLUTCH MASTER CYLINDER REMOVAL/INSTALLATION [D66M-R, D66MX-R]

id0510mf156800

05

Caution

- **Secure the steering wheel using tape or a cable to prevent the steering shaft from rotating after disconnecting the steering shaft. If the steering wheel rotates after the steering shaft and the steering gear and linkage are disconnected, the internal parts of the clock spring could be damaged.**
- **Do not allow clutch fluid to get on a painted surface. Clutch fluid contains properties which can dissolve the paint. If clutch fluid gets on a painted surface, wash it off with water immediately and wipe the area off completely.**

Removal

1. Disconnect the negative battery cable. (See 01-17B-9 NEGATIVE BATTERY CABLE DISCONNECTION/CONNECTION [SKYACTIV-D 2.2].)
2. Remove the air cleaner component. (ex: air cleaner, air hose) (L.H.D.) (See 01-13B-6 INTAKE-AIR SYSTEM REMOVAL/INSTALLATION [SKYACTIV-D 2.2].)
3. Remove the battery component. (ex: battery, battery tray) (L.H.D.) (See 01-17B-3 BATTERY REMOVAL/INSTALLATION [SKYACTIV-D 2.2].)
4. Remove the bracket from the steering shaft. (See 06-13-4 STEERING WHEEL AND COLUMN REMOVAL/INSTALLATION.)
5. Remove the clutch pedal position switch. (See 05-10B-13 CLUTCH PEDAL POSITION SWITCH REMOVAL/INSTALLATION [D66M-R, D66MX-R].)
6. Remove the starter interlock switch. (See 05-10B-14 STARTER INTERLOCK SWITCH REMOVAL/INSTALLATION [D66M-R, D66MX-R].)
7. Remove the joint cover. (See 06-13-4 STEERING WHEEL AND COLUMN REMOVAL/INSTALLATION.)
8. Disconnect the steering shaft from steering gear. (See 06-13-4 STEERING WHEEL AND COLUMN REMOVAL/INSTALLATION.)
9. Remove the front under cover No.2. (See 09-16-41 FRONT UNDER COVER No.2 REMOVAL/INSTALLATION.)
10. Remove the insulator. (R.H.D.) (See 01-15B-1 EXHAUST SYSTEM REMOVAL/INSTALLATION [SKYACTIV-D 2.2].)
11. Disconnect the clutch pipe and hose No.1 from clutch master cylinder, and plug it to avoid clutch fluid leakage. (See 05-10B-21 CLUTCH PIPE AND HOSE REMOVAL/INSTALLATION [D66M-R, D66MX-R].)
12. Disconnect the clutch reserve hose from clutch master cylinder, and plug it to avoid clutch fluid leakage. (See 05-10B-21 CLUTCH PIPE AND HOSE REMOVAL/INSTALLATION [D66M-R, D66MX-R].)

CLUTCH [D66M-R, D66MX-R]

13. Remove the clutch master cylinder using the following procedure:
    (1) Remove the clutch pedal and the clutch master cylinder as a single unit.

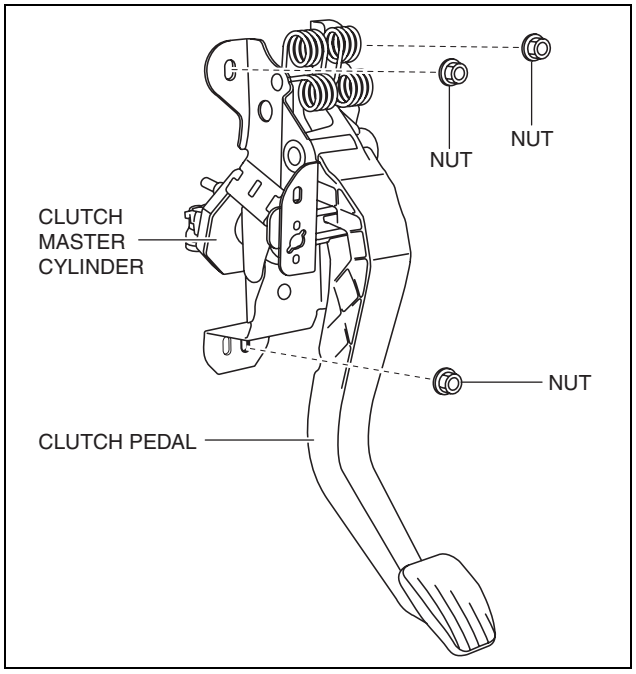

ac5uuw00000703

    (2) Rotate the clutch master cylinder in the direction of the arrow shown in the figure to disconnect the clutch master cylinder (body) and clutch pedal.

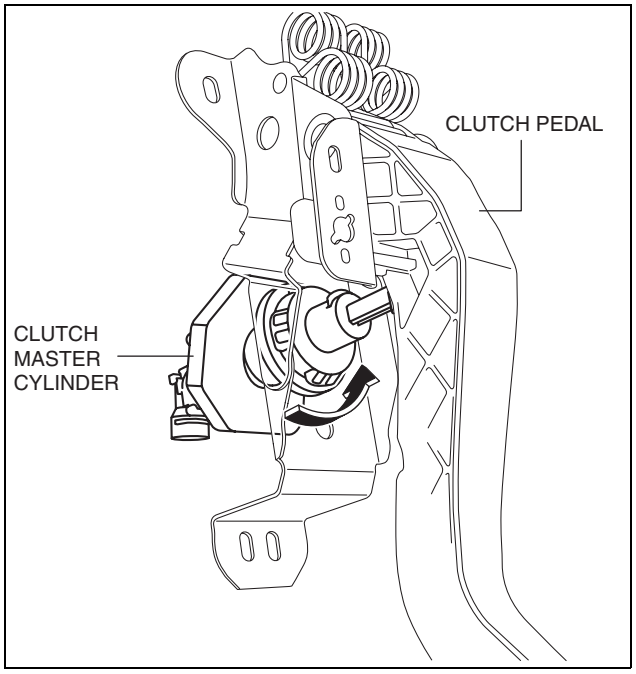

ac5uuw00000704

CLUTCH [D66M-R, D66MX-R]

(3) Disengage the tabs of the push rod and remove the master cylinder.

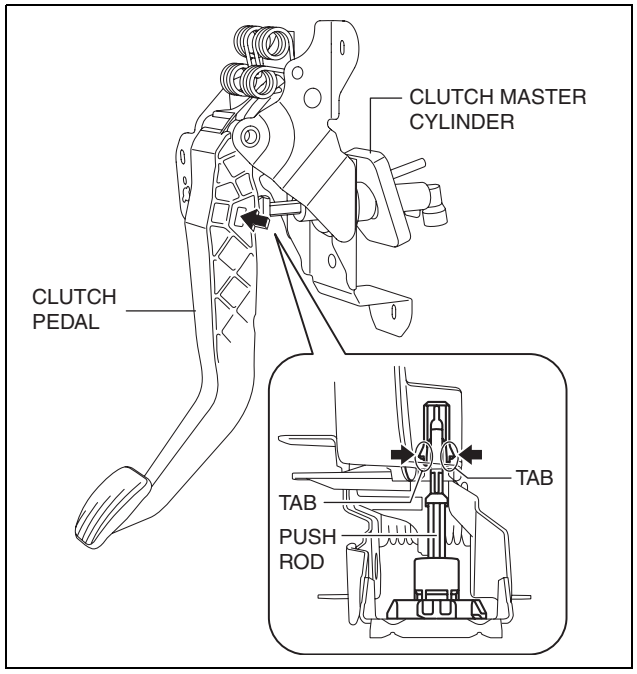

ac5uuw00000705

Installation

1. Install the clutch master cylinder using the following procedure:
   (1) Engage the tabs of the push rod with the clutch pedal as shown in the figure.

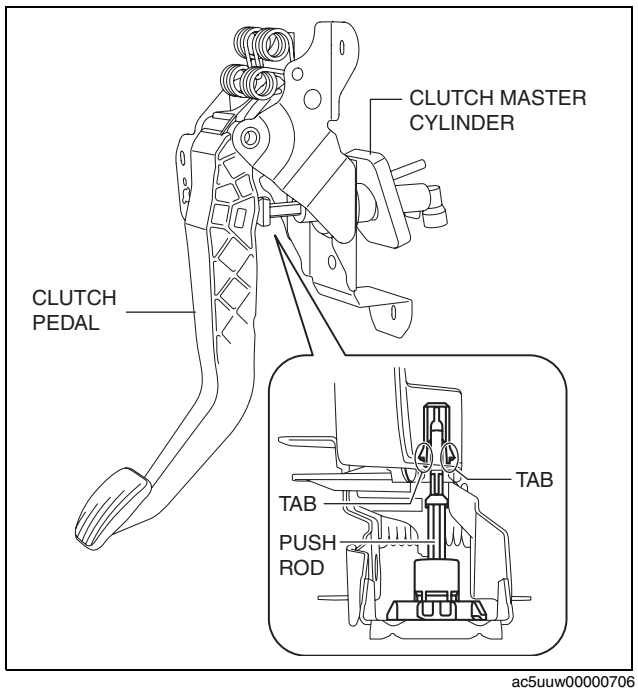

ac5uuw00000706

CLUTCH [D66M-R, D66MX-R]

(2) Rotate the clutch master cylinder in the direction shown until it stops.

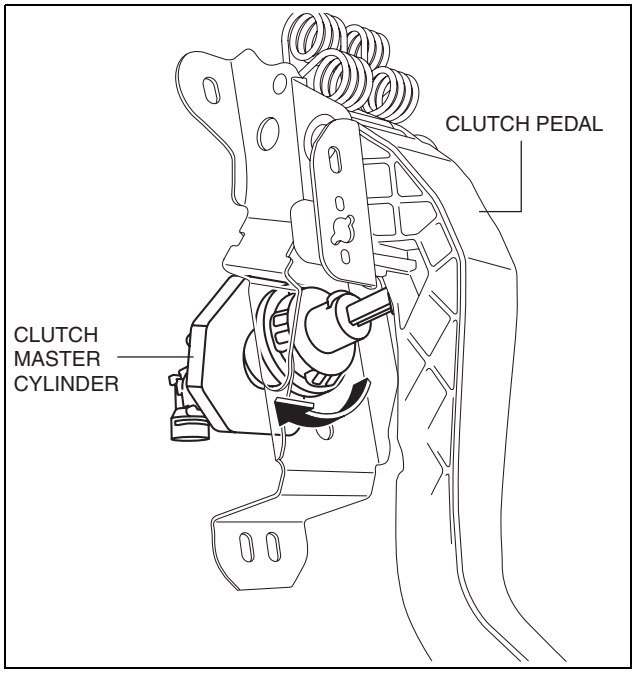

ac5uuw00000707

(3) Install the clutch pedal and the clutch master cylinder as a single unit.

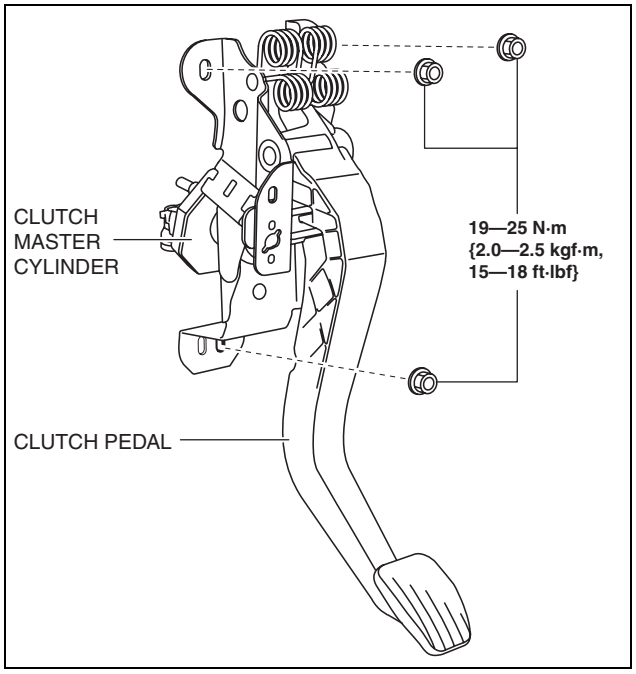

ac5wzw0000462

2. Connect the clutch reserve hose to clutch master cylinder. (See 05-10B-21 CLUTCH PIPE AND HOSE REMOVAL/INSTALLATION [D66M-R, D66MX-R].)
3. Connect the clutch pipe and hose No.1 to clutch master cylinder. (See 05-10B-21 CLUTCH PIPE AND HOSE REMOVAL/INSTALLATION [D66M-R, D66MX-R].)
4. Connect the steering shaft. (See 06-13-4 STEERING WHEEL AND COLUMN REMOVAL/INSTALLATION.)
5. Install the joint cover. (See 06-13-4 STEERING WHEEL AND COLUMN REMOVAL/INSTALLATION.)
6. Bleed the air from the clutch system. (See 05-10B-5 CLUTCH FLUID REPLACEMENT/AIR BLEEDING [D66M-R, D66MX-R].)
7. Inspect the clutch pedal. (See 05-10B-6 CLUTCH PEDAL INSPECTION [D66M-R, D66MX-R].)
8. Install a new starter interlock switch. (See 05-10B-14 STARTER INTERLOCK SWITCH REMOVAL/INSTALLATION [D66M-R, D66MX-R].)
9. Install a new clutch pedal position switch. (See 05-10B-13 CLUTCH PEDAL POSITION SWITCH REMOVAL/INSTALLATION [D66M-R, D66MX-R].)
10. Install the insulator. (R.H.D.) (See 01-15B-1 EXHAUST SYSTEM REMOVAL/INSTALLATION [SKYACTIV-D 2.2].)
11. Install the front under cover No.2. (See 09-16-41 FRONT UNDER COVER No.2 REMOVAL/INSTALLATION.)
12. Install the bracket to the steering shaft. (See 06-13-4 STEERING WHEEL AND COLUMN REMOVAL/INSTALLATION.)
13. Install the battery component. (ex: battery, battery tray) (L.H.D.) (See 01-17B-3 BATTERY REMOVAL/INSTALLATION [SKYACTIV-D 2.2].)
14. Install the air cleaner component. (ex: air cleaner, air hose) (L.H.D.) (See 01-13B-6 INTAKE-AIR SYSTEM REMOVAL/INSTALLATION [SKYACTIV-D 2.2].)
15. Connect the negative battery cable. (See 01-17B-9 NEGATIVE BATTERY CABLE DISCONNECTION/CONNECTION [SKYACTIV-D 2.2].)
16. Fully depress the clutch pedal, and verify that the engine starts.

CLUTCH [D66M-R, D66MX-R]

CLUTCH STROKE SENSOR REMOVAL/INSTALLATION [D66M-R, D66MX-R]

id0510mf156900

Note
- The clutch stroke sensor is equipped only on vehicles with i-stop.
- The clutch stroke sensor is built into the clutch master cylinder.

1. Replace the clutch master cylinder. (See 05-10B-17 CLUTCH MASTER CYLINDER REMOVAL/INSTALLATION [D66M-R, D66MX-R].)

CLUTCH PIPE AND HOSE REMOVAL/INSTALLATION [D66M-R, D66MX-R]

id0510mf157000

Caution
- **Do not allow clutch fluid to get on a painted surface. Clutch fluid contains properties which can dissolve the paint. If clutch fluid gets on a painted surface, wash it off with water immediately and wipe the area off completely.**

1. Disconnect the negative battery cable. (See 01-17B-9 NEGATIVE BATTERY CABLE DISCONNECTION/CONNECTION [SKYACTIV-D 2.2].)
2. Remove the air cleaner component. (ex: air cleaner, air hose) (See 01-13B-6 INTAKE-AIR SYSTEM REMOVAL/INSTALLATION [SKYACTIV-D 2.2].)
3. Remove the battery component. (ex: battery, battery tray) (See 01-17B-3 BATTERY REMOVAL/INSTALLATION [SKYACTIV-D 2.2].)
4. Remove the insulator. (R.H.D.) (See 01-15B-1 EXHAUST SYSTEM REMOVAL/INSTALLATION [SKYACTIV-D 2.2].)
5. Disconnect the vacuum pipe and bracket.(R.H.D.)

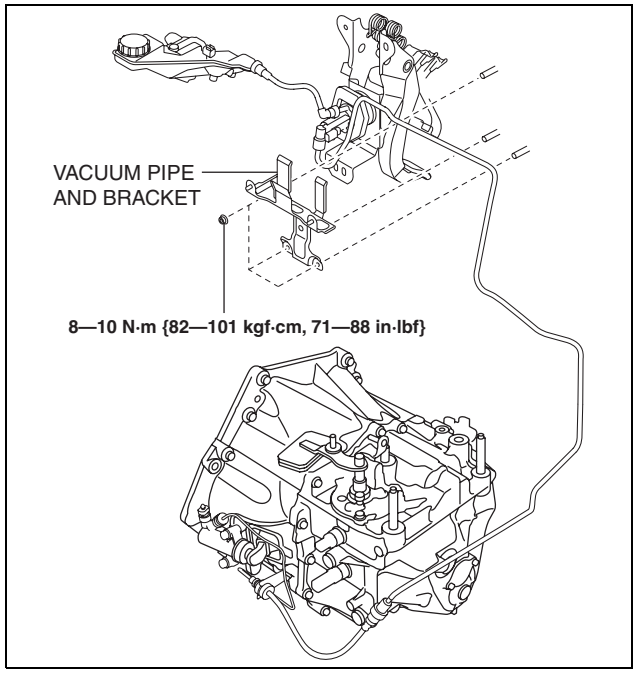

ac5wzw0000342

CLUTCH [D66M-R, D66MX-R]

6. Remove the clutch reserve hose while pressing the point indicated by the arrow in the figure.
7. Remove the clutch pipe and hose (No.1 and No.2) using the following procedure:

L.H.D.

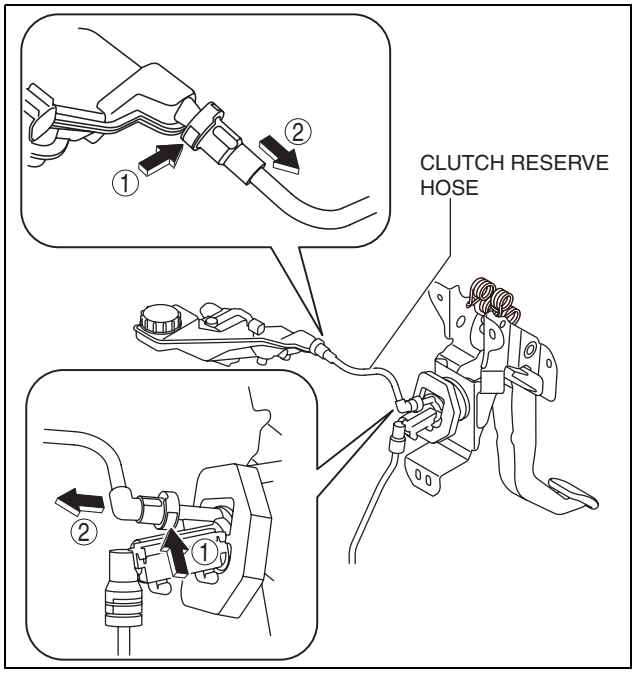

ac5uuw00000709

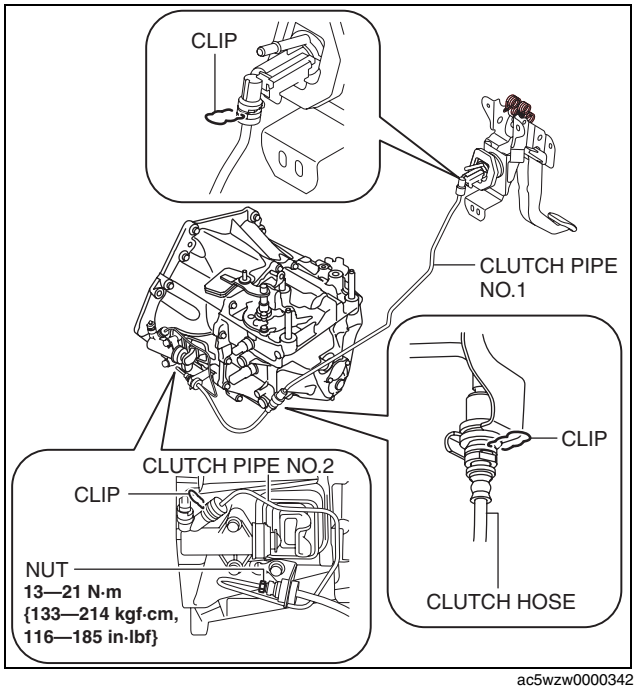

ac5wzw0000342

CLUTCH [D66M-R, D66MX-R]

R.H.D.

(1) Lift the connector clip.
(2) Pull out the clutch pipe and hose (No.1 and No.2) connector straight to detach it.
(3) Remove the clutch pipe and hose (No.1 and No.2).

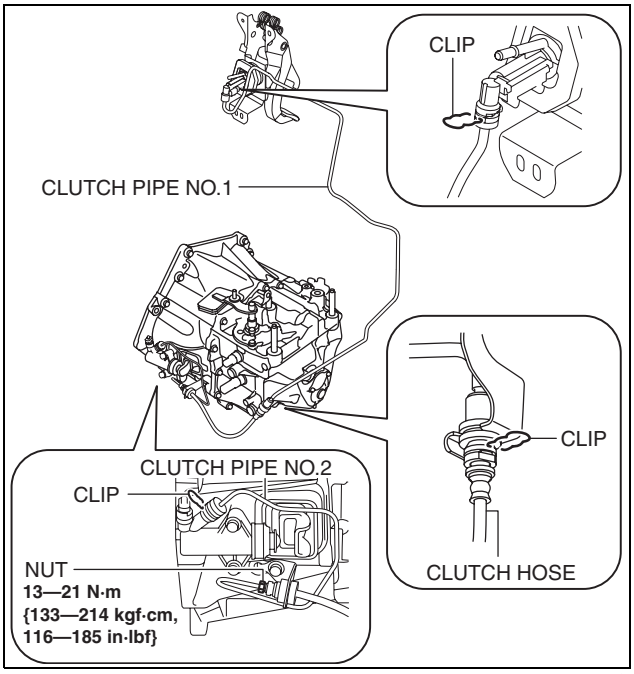

ac5wzw0000342

8. Verify that the seal ring is installed to the clutch pipe and hose connector.

Caution
- **When removing the clutch pipe and hose, the seal ring for the clutch pipe and hose could remain on the receiving area of the connector. If the clutch pipe and hose is assembled under this condition, it could cause clutch fluid leakage from the connector.**

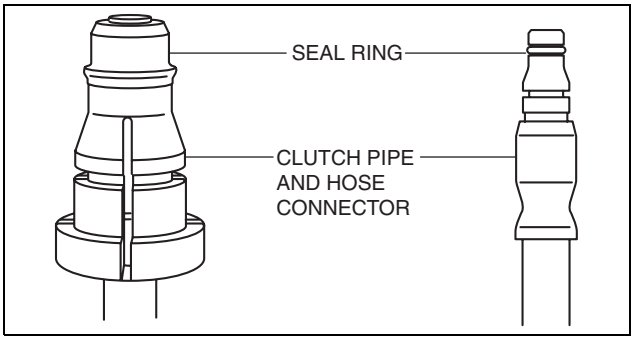

am5ezw0000544

9. Install the clutch pipe and hose (No.1 and No.2).
   (1) Press in the connector clip.
   (2) Insert the clutch pipe and hose (No.1 and No.2) connector straight.

Note
- When the connector is engaged, a click sound is heard.

   (3) Install the clutch pipe and hose (No.1 and No.2).
10. Insert the clutch reserve hose connector straight.

Note
- When the connector is engaged, a click sound is heard.

11. Pull each engagement of the clutch reserve hose and clutch pipe and hose No.1 and 2, verify that they are engaged, and then press all of them again.
12. Install in the reverse order of removal.
13. Bleed the air from the clutch system. (See 05-10B-5 CLUTCH FLUID REPLACEMENT/AIR BLEEDING [D66M-R, D66MX-R].)

CLUTCH [D66M-R, D66MX-R]

CLUTCH RELEASE CYLINDER REMOVAL/INSTALLATION [D66M-R, D66MX-R]

id0510mf157100

Caution

- **Do not allow clutch fluid to get on a painted surface. Clutch fluid contains properties which can dissolve the paint. If clutch fluid gets on a painted surface, wash it off with water immediately and wipe the area off completely.**

1. Remove the front under cover No.2. (See 09-16-41 FRONT UNDER COVER No.2 REMOVAL/INSTALLATION.)
2. Disconnect the clutch pipe and hose No.2 from clutch release cylinder, and plug it to avoid clutch fluid leakage. (See 05-10B-21 CLUTCH PIPE AND HOSE REMOVAL/INSTALLATION [D66M-R, D66MX-R].)
3. Remove the clutch release cylinder.
4. Install in the reverse order of removal.
5. Bleed the air from the clutch system. (See 05-10B-5 CLUTCH FLUID REPLACEMENT/AIR BLEEDING [D66M-R, D66MX-R].)

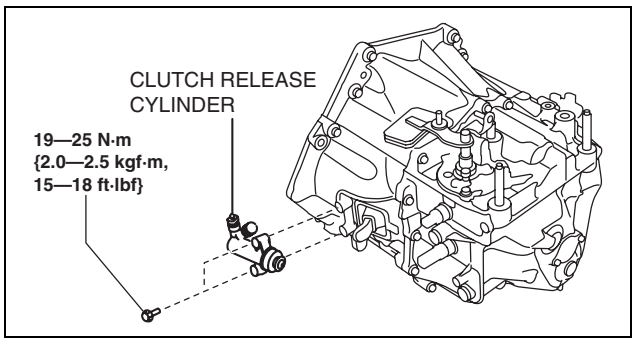

ac5wzw0000342

05-15A MANUAL TRANSAXLE [C66M-R, C66MX-R]

MANUAL TRANSAXLE LOCATION INDEX [C66M-R, C66MX-R] 05-15A–1
MANUAL TRANSAXLE OIL INSPECTION [C66M-R, C66MX-R]. . . . 05-15A–2
MANUAL TRANSAXLE OIL REPLACEMENT [C66M-R, C66MX-R] 05-15A–2
NEUTRAL SWITCH REMOVAL/INSTALLATION [C66M-R, C66MX-R] 05-15A–2
BACK-UP LIGHT SWITCH REMOVAL/INSTALLATION [C66M-R, C66MX-R] 05-15A–3
MANUAL TRANSAXLE REMOVAL/INSTALLATION [C66M-R] 05-15A–4
Removal 05-15A–4
Installation 05-15A–11
MANUAL TRANSAXLE REMOVAL/INSTALLATION [C66MX-R] 05-15A–18
Removal 05-15A–18
Installation 05-15A–26
INSPECTION AFTER MANUAL TRANSAXLE OVERHAUL [C66M-R, C66MX-R]. 05-15A–31
OIL SEAL (DIFFERENTIAL) REPLACEMENT [C66M-R, C66MX-R]. 05-15A–32

MANUAL TRANSAXLE [C66M-R, C66MX-R]

MANUAL TRANSAXLE LOCATION INDEX [C66M-R, C66MX-R]

id0515ma159400

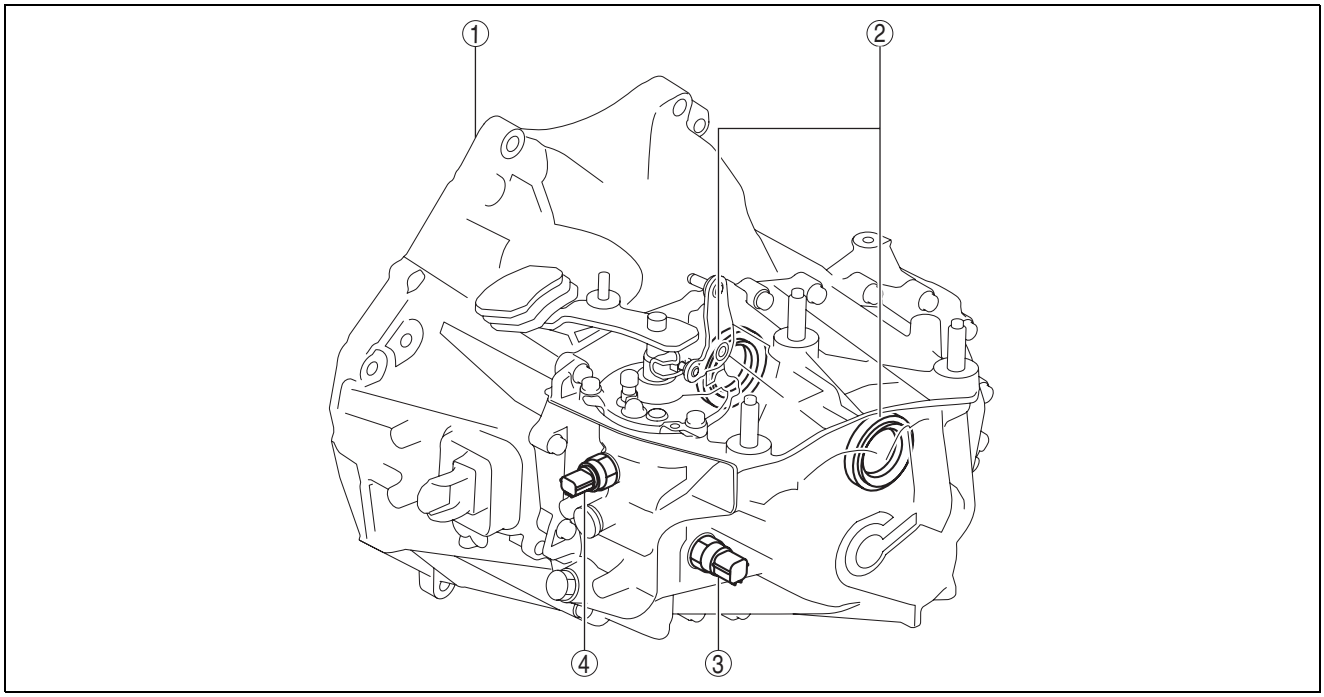

ac5wzw0000283

1	Manual transaxle (See 05-15A-2 MANUAL TRANSAXLE OIL INSPECTION [C66M-R, C66MX-R].) (See 05-15A-2 MANUAL TRANSAXLE OIL REPLACEMENT [C66M-R, C66MX-R].) (See 05-15A-4 MANUAL TRANSAXLE REMOVAL/INSTALLATION [C66M-R].) (See 05-15A-18 MANUAL TRANSAXLE REMOVAL/INSTALLATION [C66MX-R].)

2	Oil seal (differential) (See 05-15A-32 OIL SEAL (DIFFERENTIAL) REPLACEMENT [C66M-R, C66MX-R].)
3	Back-up light switch (See 05-15A-3 BACK-UP LIGHT SWITCH REMOVAL/INSTALLATION [C66M-R, C66MX-R].)
4	Neutral switch (See 05-15A-2 NEUTRAL SWITCH REMOVAL/INSTALLATION [C66M-R, C66MX-R].)

MANUAL TRANSAXLE [C66M-R, C66MX-R]

MANUAL TRANSAXLE OIL INSPECTION [C66M-R, C66MX-R]

id0515ma159600

1. Park the vehicle on level ground.
2. Remove the front under cover No.2. (See 09-16-41 FRONT UNDER COVER No.2 REMOVAL/INSTALLATION.)
3. Remove the oil level plug and gasket.
4. Verify that the manual transaxle oil is near the brim of the plug port.
   - When the manual transaxle oil level is lower than the lower limit, add manual transaxle oil.

   Manual transaxle oil grade
   API service GL-4
   Manual transaxle oil viscosity
   SAE 75W-80

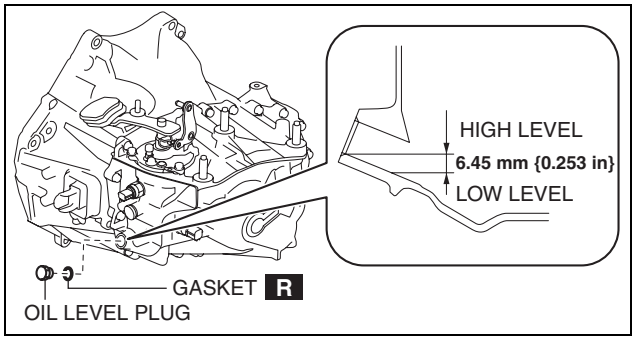

ac5wzw0000283

5. Install a new gasket and the oil level plug.

   Tightening torque
   39—59 N·m {4.0—6.0 kgf·m, 29—43 ft·lbf}

6. Install the front under cover No.2. (See 09-16-41 FRONT UNDER COVER No.2 REMOVAL/INSTALLATION.)

MANUAL TRANSAXLE OIL REPLACEMENT [C66M-R, C66MX-R]

id0515ma159700

1. Park the vehicle on level ground.
2. Remove the front under cover No.2. (See 09-16-41 FRONT UNDER COVER No.2 REMOVAL/INSTALLATION.)
3. Remove the drain plug and gasket, and drain the manual transaxle oil.
4. Install a new gasket and the drain plug.

   Tightening torque
   39—59 N·m {4.0—6.0 kgf·m, 29—43 ft·lbf}

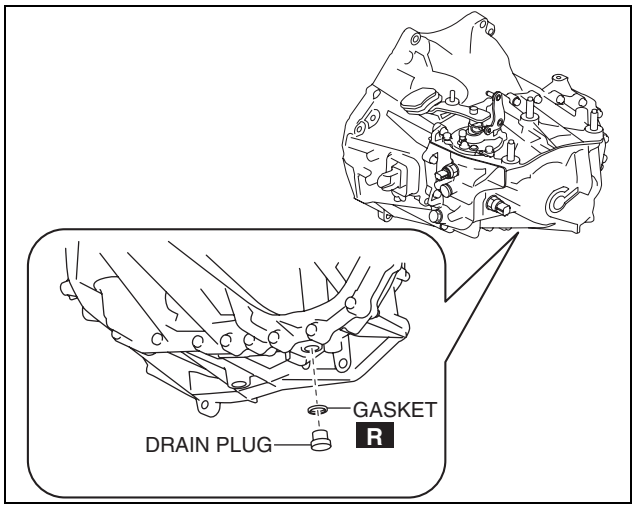

ac5wzw0000283

5. Remove the oil level plug and gasket.
6. Add the specified manual transaxle oil through the oil level plug port.

   Manual transaxle oil grade
   API service GL-4
   Manual transaxle oil viscosity
   SAE 75W-80
   Manual transaxle oil capacity (approx. quantity)
   1.65 L {1.74 US qt, 1.45 Imp qt}

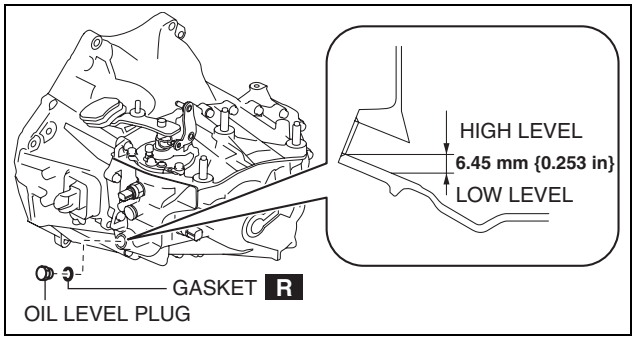

ac5wzw0000283

7. Install a new gasket and the oil level plug.

   Tightening torque
   39—59 N·m {4.0—6.0 kgf·m, 29—43 ft·lbf}

8. Install the front under cover No.2. (See 09-16-41 FRONT UNDER COVER No.2 REMOVAL/INSTALLATION.)

NEUTRAL SWITCH REMOVAL/INSTALLATION [C66M-R, C66MX-R]

id0515ma159800

1. Disconnect the negative battery cable. (See 01-17A-11 NEGATIVE BATTERY CABLE DISCONNECTION/

MANUAL TRANSAXLE [C66M-R, C66MX-R]

CONNECTION [SKYACTIV-G 2.0].) (See 01-17A-13 NEGATIVE BATTERY CABLE DISCONNECTION/ CONNECTION [SKYACTIV-G 2.0 (WITHOUT i-stop)].)
2. Remove the air cleaner component. (ex: air cleaner, air hose) (See 01-13A-6 INTAKE-AIR SYSTEM REMOVAL/INSTALLATION [SKYACTIV-G 2.0].)
3. Remove in the order indicated in the table.
4. Install in the reverse order of removal.

1	Neutral switch connector
2	Neutral switch
3	Gasket

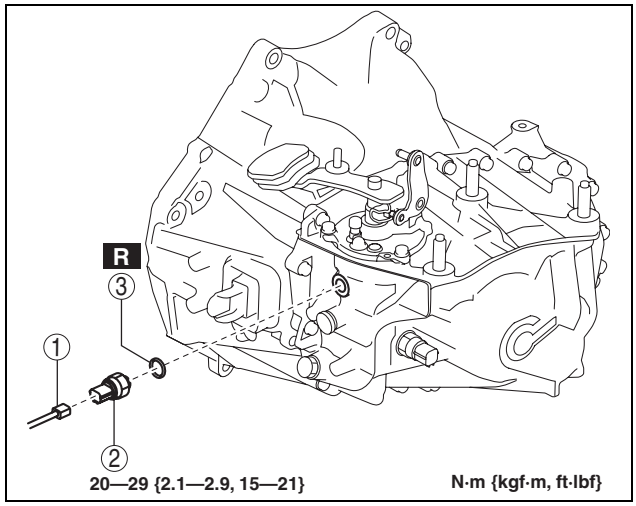

ac5wzw0000283

BACK-UP LIGHT SWITCH REMOVAL/INSTALLATION [C66M-R, C66MX-R]

id0515ma159900

1. Disconnect the negative battery cable. (See 01-17A-11 NEGATIVE BATTERY CABLE DISCONNECTION/ CONNECTION [SKYACTIV-G 2.0].) (See 01-17A-13 NEGATIVE BATTERY CABLE DISCONNECTION/ CONNECTION [SKYACTIV-G 2.0 (WITHOUT i-stop)].)
2. Remove the air cleaner component. (ex: air cleaner, air hose) (See 01-13A-6 INTAKE-AIR SYSTEM REMOVAL/INSTALLATION [SKYACTIV-G 2.0].)
3. Remove in the order indicated in the table.
4. Install in the reverse order of removal.

1	Back-up light switch connector
2	Back-up light switch
3	Gasket

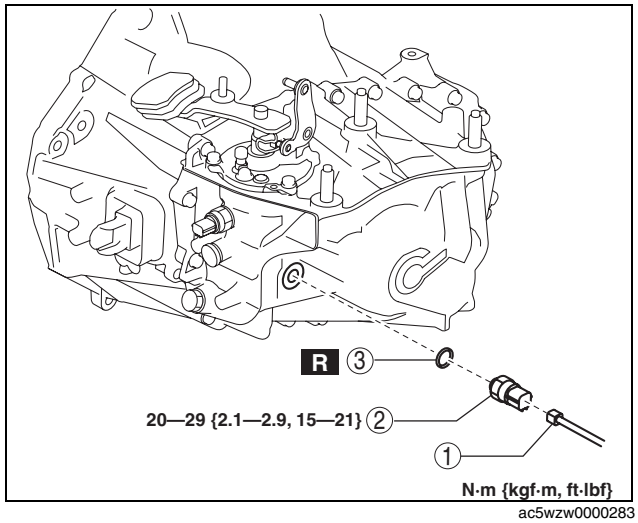

ac5wzw0000283

MANUAL TRANSAXLE [C66M-R, C66MX-R]

MANUAL TRANSAXLE REMOVAL/INSTALLATION [C66M-R]

id0515ma1600m8

Removal

1. Disconnect the negative battery cable. (See 01-17A-11 NEGATIVE BATTERY CABLE DISCONNECTION/CONNECTION [SKYACTIV-G 2.0].) (See 01-17A-13 NEGATIVE BATTERY CABLE DISCONNECTION/CONNECTION [SKYACTIV-G 2.0 (WITHOUT i-stop)].)
2. Remove the plug hole plate. (See 01-10A-6 PLUG HOLE PLATE REMOVAL/INSTALLATION [SKYACTIV-G 2.0].)
3. Remove the front under cover No.2. (See 09-16-41 FRONT UNDER COVER No.2 REMOVAL/INSTALLATION.)
4. Remove the front under cover No.1. (See 09-16-40 FRONT UNDER COVER No.1 REMOVAL/INSTALLATION.)
5. Remove the splash shield. (See 09-16-49 SPLASH SHIELD REMOVAL/INSTALLATION.)
6. Drain the manual transaxle oil. (See 05-15A-2 MANUAL TRANSAXLE OIL REPLACEMENT [C66M-R, C66MX-R].)
7. Disconnect and/or remove the following parts in the engine compartment.
   (1) Remove the air cleaner component. (ex: air cleaner, air hose) (See 01-13A-6 INTAKE-AIR SYSTEM REMOVAL/INSTALLATION [SKYACTIV-G 2.0].)
   (2) Remove the battery component. (ex: battery, battery tray and PCM component) (See 01-17A-3 BATTERY REMOVAL/INSTALLATION [SKYACTIV-G 2.0].)
   (3) Disconnect the control cable from MTX. (See 05-16A-1 MANUAL TRANSAXLE SHIFT MECHANISM REMOVAL/INSTALLATION [C66M-R, C66MX-R].)
   (4) Remove the control cable bracket from MTX.

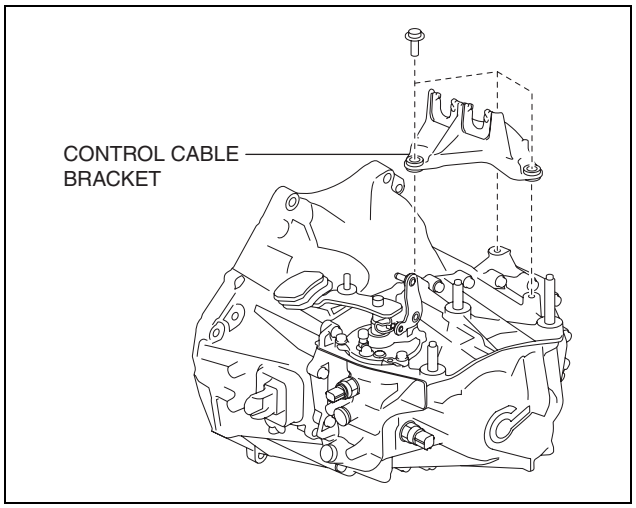

ac5wzw0000283

   (5) Remove the bolt shown in the figure, and set the ground cable aside.

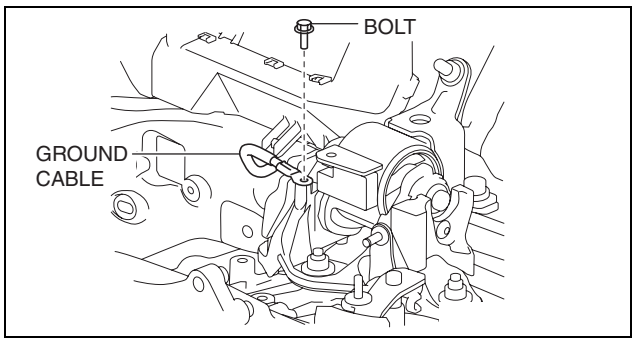

ac5uuw00000732

   (6) Remove the bracket from the MTX and the exhaust manifold.
   (7) Disconnect the neutral switch connector from MTX. (See 05-15A-2 NEUTRAL SWITCH REMOVAL/INSTALLATION [C66M-R, C66MX-R].)
   (8) Disconnect the back-up light switch connector from MTX. (See 05-15A-3 BACK-UP LIGHT SWITCH REMOVAL/INSTALLATION [C66M-R, C66MX-R].)

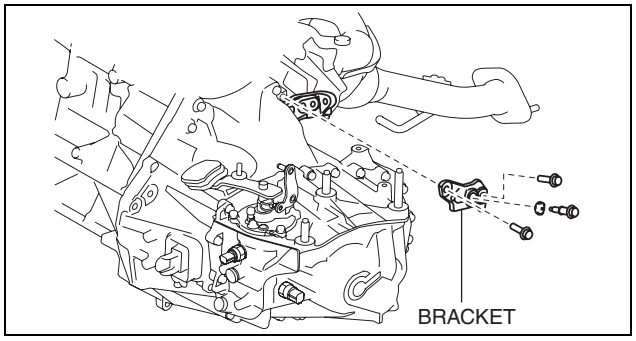

ac5wzw0000284

MANUAL TRANSAXLE [C66M-R, C66MX-R]

(9) Disconnect the lower radiator hose clip and the brackets from the MTX, and set the wiring harness aside.

8. Disconnect and/or remove the following parts related to the suspension and axle.
   (1) Remove the front tires. (See 03-10-1 GENERAL PROCEDURES (FRONT AND REAR AXLES).)
   (2) Disconnect the clip securing the brake hose from the shock absorber. (See 04-11-30 BRAKE HOSE (FRONT) REMOVAL/INSTALLATION.)
   (3) Disconnect the ABS wheel-speed sensors from the steering knuckles. (See 04-15-9 FRONT ABS WHEEL-SPEED SENSOR REMOVAL/INSTALLATION.)
   (4) Disconnect the tie-rod end ball joints from the steering knuckles. (See 02-13-15 FRONT CROSSMEMBER REMOVAL/INSTALLATION.)
   (5) Disconnect the stabilizer control links from the stabilizer. (See 02-13-10 FRONT STABILIZER REMOVAL/INSTALLATION.)
   (6) Disconnect the front lower arms from the steering knuckles. (See 02-13-15 FRONT CROSSMEMBER REMOVAL/INSTALLATION.)

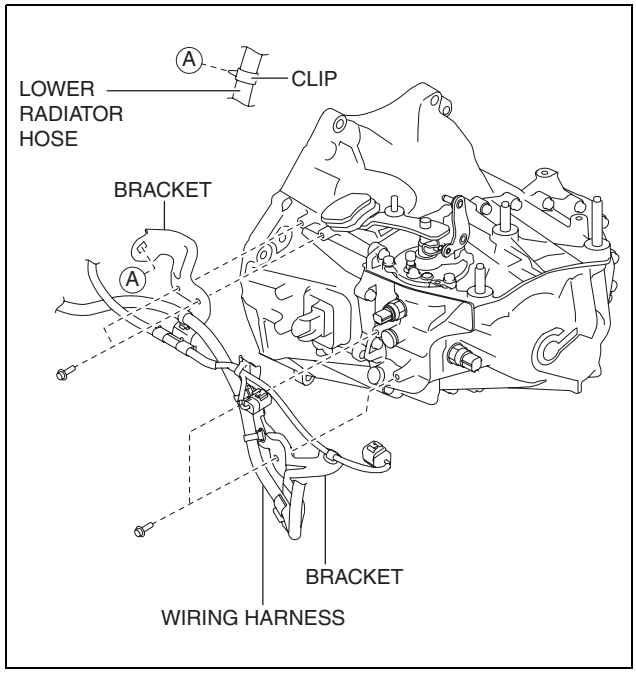

ac5wzw0000284

   (7) Disconnect the drive shaft (LH) from the MTX. (See 03-13-3 FRONT DRIVE SHAFT REMOVAL/INSTALLATION.)
   (8) Disconnect the drive shaft (RH) from the MTX. (See 03-13-3 FRONT DRIVE SHAFT REMOVAL/INSTALLATION.)
9. Disconnect and/or remove the following parts from the underside of the vehicle.
   (1) Remove the clutch release cylinder with the clutch pipe still connected and set it out of the way. (See 05-10A-24 CLUTCH RELEASE CYLINDER REMOVAL/INSTALLATION [C66M-R, C66MX-R].)
   (2) Remove the starter. (See 01-19A-2 STARTER REMOVAL/INSTALLATION [SKYACTIV-G 2.0].)
   (3) Remove the front crossmember component and No.1 engine mount rubber as a single unit. (See 02-13-15 FRONT CROSSMEMBER REMOVAL/INSTALLATION.)
   (4) Remove the bracket plate and No.1 engine mount bracket from the MTX.
10. Install the **SST** using the following procedure.

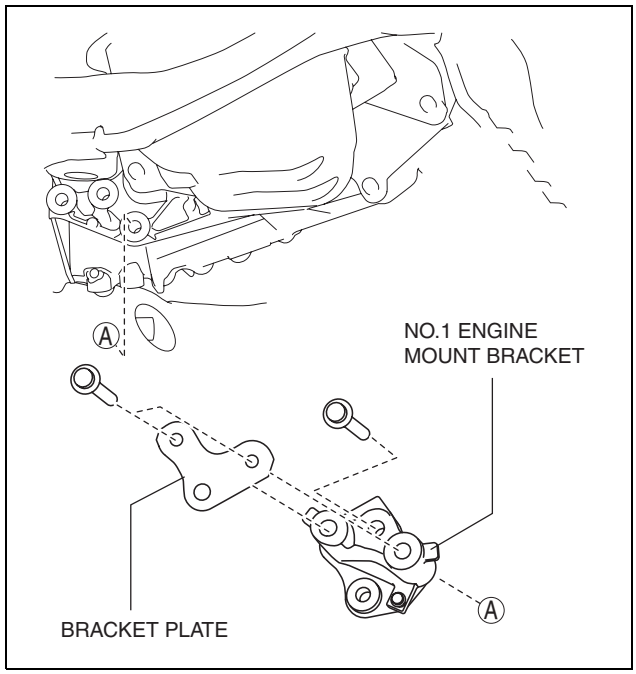

ac5uuw00000735

MANUAL TRANSAXLE [C66M-R, C66MX-R]

Caution
- **Refer to the SST instruction manual for the basic handing procedure.**

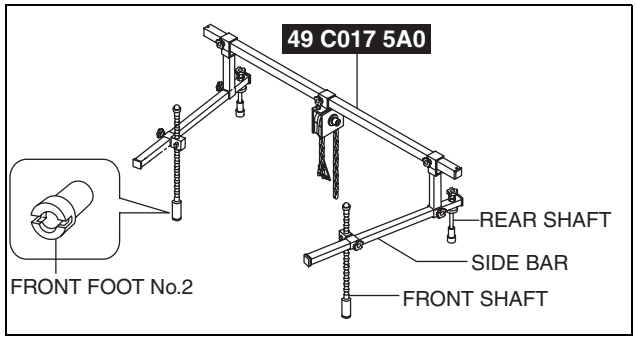

am3uuw0000884

(1) Install one front foot No.2 to each of the left and right front shafts of the **SST**.
(2) Remove the windshield wiper arm and blade. (See 09-19-3 WINDSHIELD WIPER ARM AND BLADE REMOVAL/INSTALLATION.)
(3) Remove the cowl grille. (See 09-16-3 COWL GRILLE REMOVAL/INSTALLATION.)
(4) Remove the cowl panel. (See 09-10-41 COWL PANEL REMOVAL/INSTALLATION.)
(5) Protect the positions shown in the figure using tape.

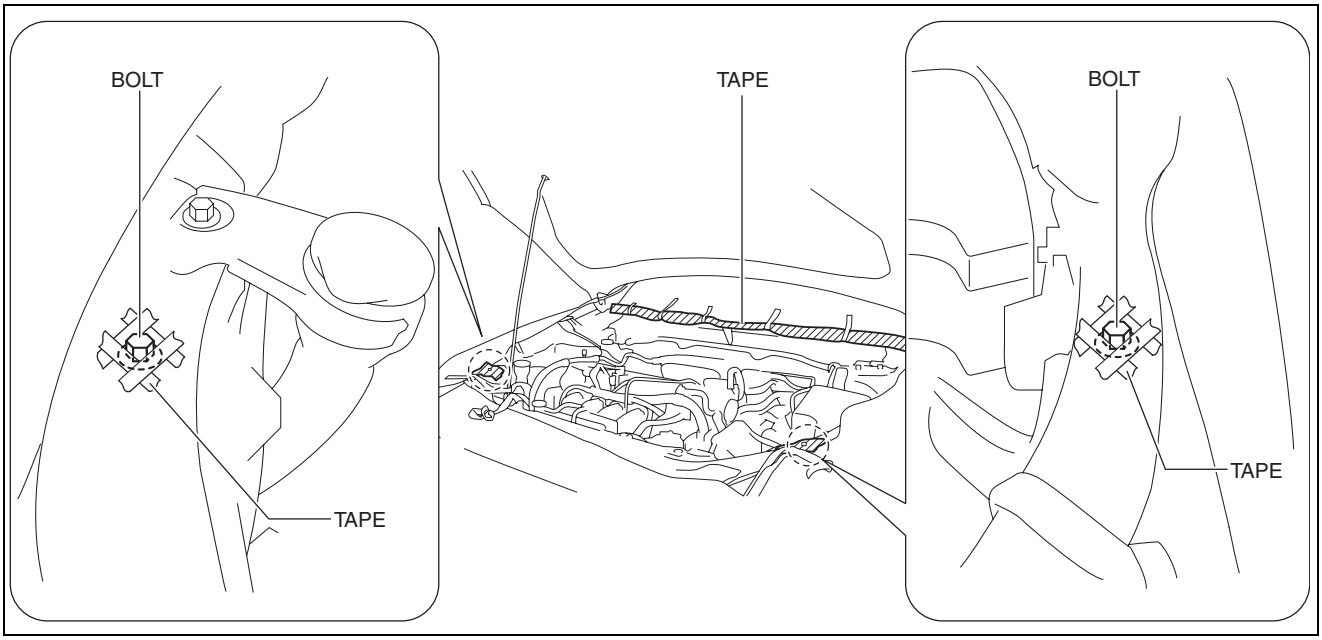

ac5wzw0000284

(6) To enable to install the **SST**, disconnect the clip shown in the figure and set the wiring harness aside.
(7) Install the **SST** using **part number 99794 1025** or an **M10 × 1.25**, length **25 mm {0.98 in}** bolt as shown in the figure.

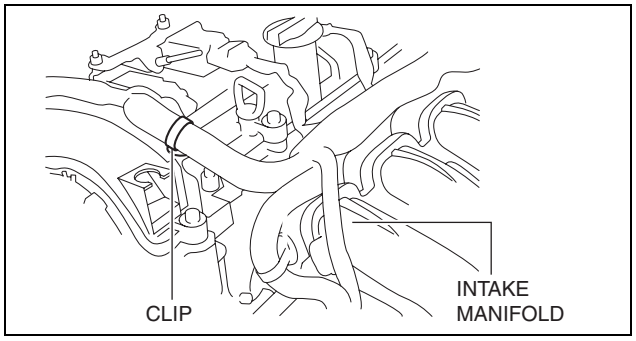

am3uuw0000822

MANUAL TRANSAXLE [C66M-R, C66MX-R]

Engine front side

Tightening torque
38—51 N·m {3.9—5.2 kgf·m, 29—37 ft·lbf}

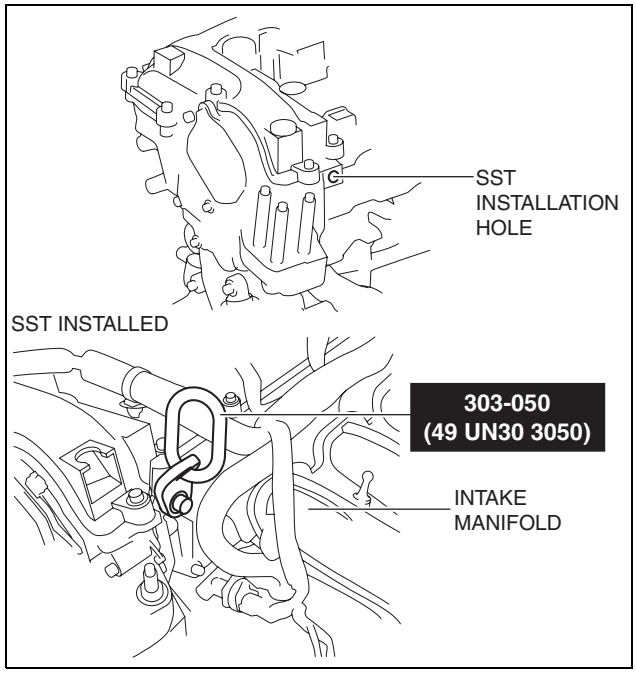

Engine rear side

Tightening torque
38—51 N·m {3.9—5.2 kgf·m, 29—37 ft·lbf}

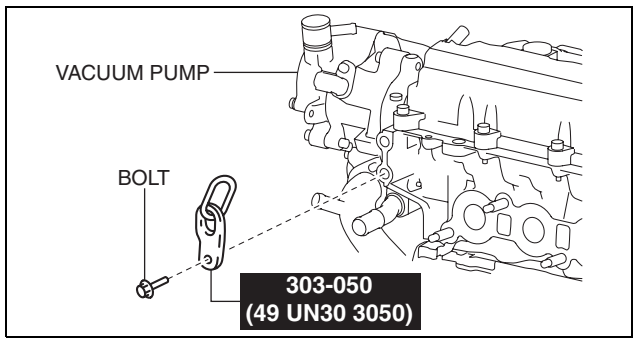

am3uuw0000822

(8) As shown in the figure, set the rear shafts of the **SST** to the left and right shock absorber nuts.

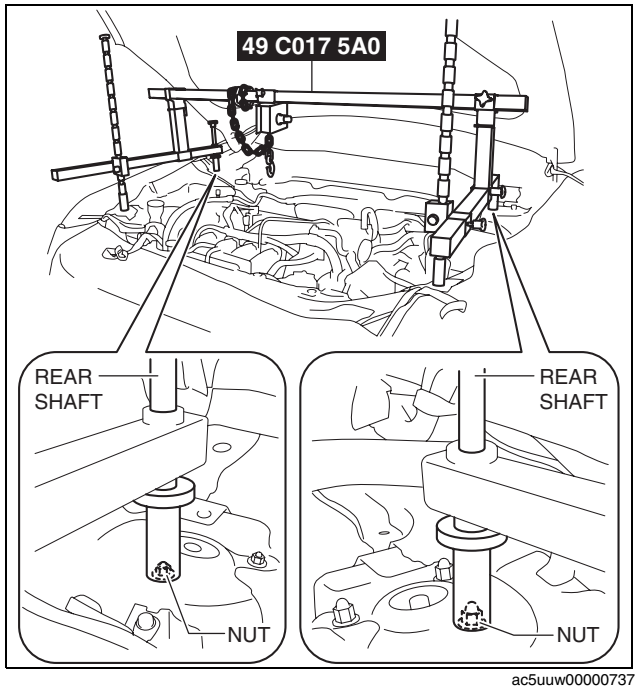

ac5uuw00000737

MANUAL TRANSAXLE [C66M-R, C66MX-R]

(9) As shown in the figure, set the front shafts of the **SST** to the left and right bolts.

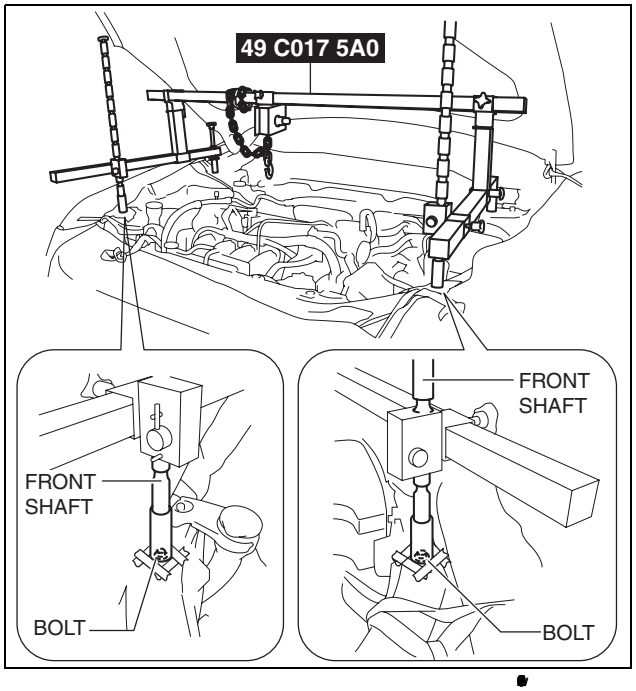

(10) When assembling the **SST (49 L017 5A0)**, disconnect the fuel hose from the clip shown in the figure to prevent interference between the fuel hose and **SST**.

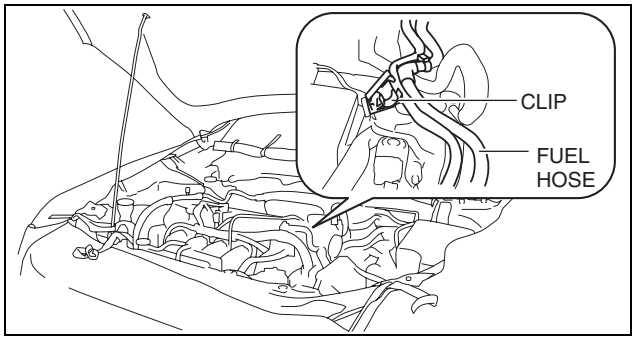

ac5uuw00000739

(11) Install the **SST (49 L017 5A0)** to the **SST (49 C017 5A0)** as shown in the figure.

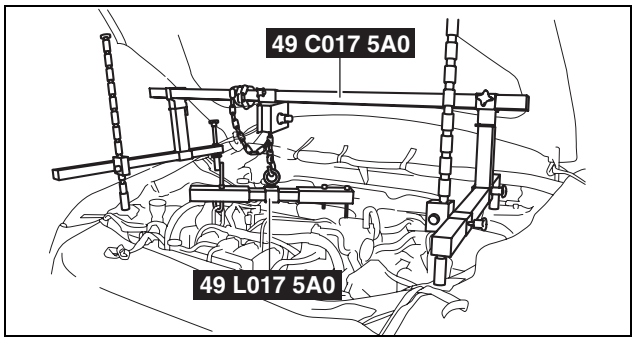

ac5uuw00000740

MANUAL TRANSAXLE [C66M-R, C66MX-R]

(12)Install the **SST (49 L017 5A0)** to the **SST (49 UN30 3050)** with the hook of the **SST (49 L017 5A0)** facing outward.
(13)Adjust the height of the left and right side bars so that they are leveled, then tighten each part of the **SST**.
(14)Apply tension to the chain to secure the engine.

11. Remove in the order indicated in the table.

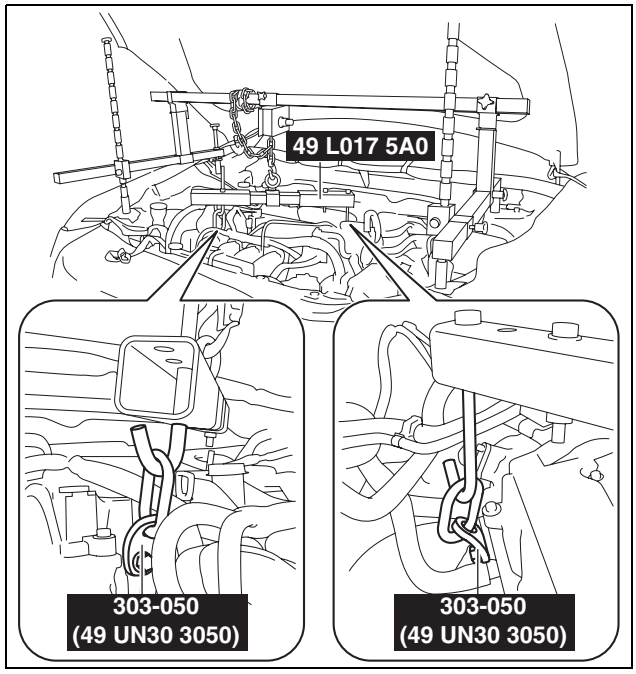

ac5uuw00000741

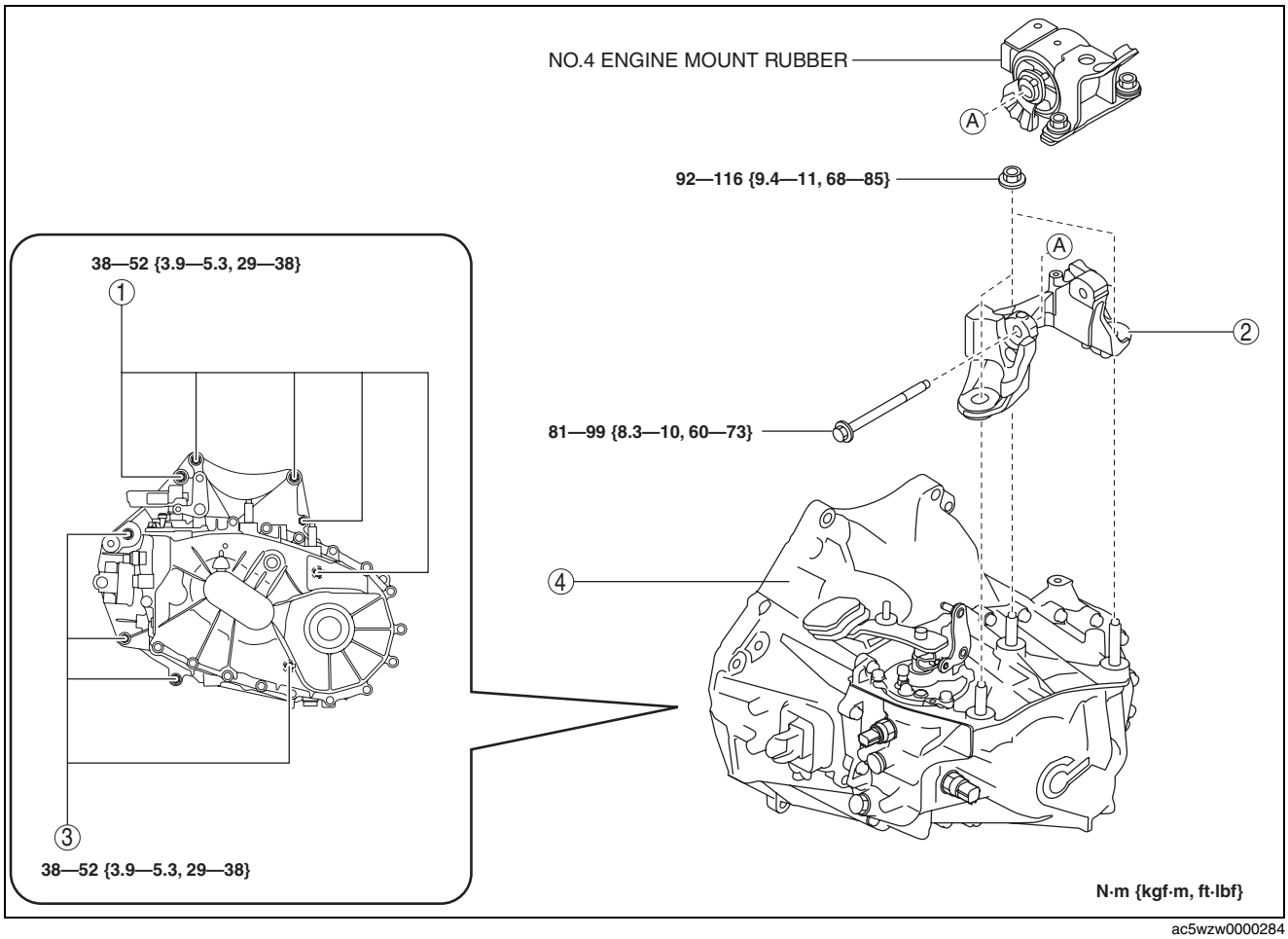

ac5wzw0000284

1	Transaxle mounting bolt (upper side)
2	No.4 engine mount bracket (See 05-15A-10 No.4 Engine mount bracket removal note.)

3	Transaxle mounting bolt (lower side) (See 05-15A-10 Transaxle mounting bolt removal note.)
4	MTX

MANUAL TRANSAXLE [C66M-R, C66MX-R]

No.4 Engine mount bracket removal note

Caution
- **A slot has been adopted for the No.4 engine mount bracket installation hole. If the No.4 engine mount bracket is deviated from the original position when installing the No.4 engine mount, engine noise or vibration could increase. When removing the No.4 engine mount, place alignment marks on the No.4 engine mount bracket so that they can be assembled to the same positions as before removal.**

1. Place alignment marks on the locations shown in the figure so that they can be assembled to the same positions as before removal.

   Note
   - Paint so that the outline of the nut is framed on the bracket side.

2. Remove the No.4 engine mount bracket.

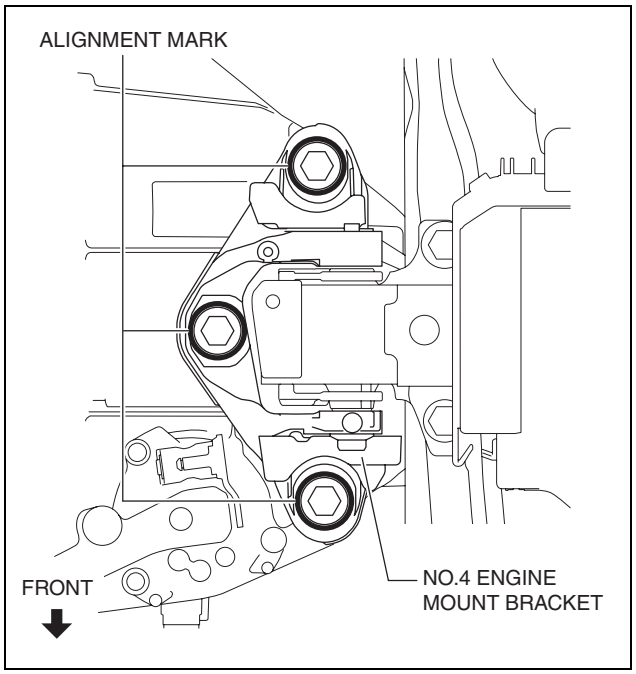

ac5uuw00000743

Transaxle mounting bolt removal note

Warning
- **Remove the MTX carefully, holding it steady. If the MTX falls it could be damaged or cause injury.**

1. Adjust the **SST** and lean the engine toward the MTX.

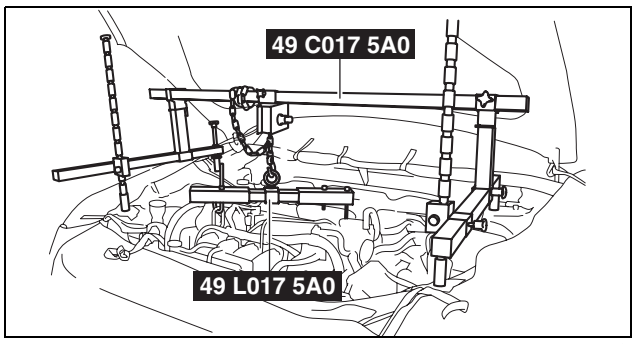

ac5uuw00000740

2. Support the MTX on a jack.

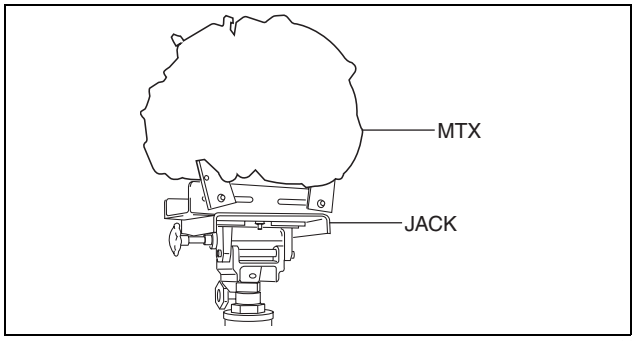

ac5uuw00000744

MANUAL TRANSAXLE [C66M-R, C66MX-R]

3. Remove the transaxle mounting bolts (lower side).
4. Remove the MTX.

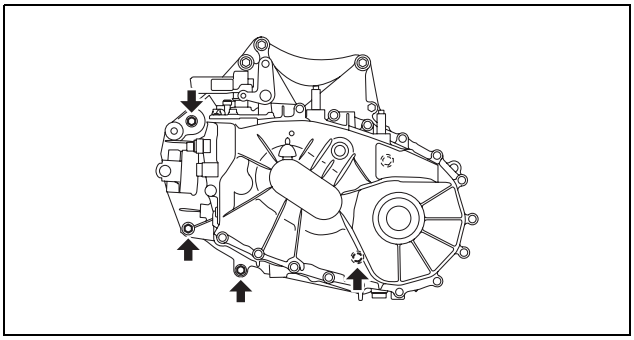
ac5uuw00000745

Installation

Warning
- **Install the MTX carefully, holding it steady. If the MTX falls it could be damaged or cause injury.**

1. Set the MTX on a jack and lift into place.

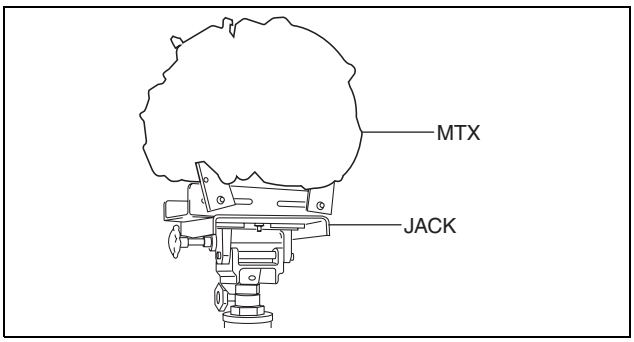

ac5uuw00000744

2. Install the MTX to the engine, and tighten the Transaxle mounting bolts.

Tightening torque
38—52 N·m {3.9—5.3 kgf·m, 29—38 ft·lbf}

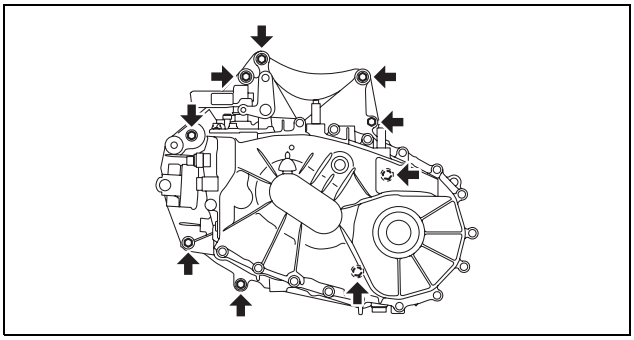
am3uuw0000822

3. Tighten the stud bolts for the MTX.

Note
- If the No.4 engine mount bracket nut is loosened, tighten the stud bolts for the MTX because they may be loosened.

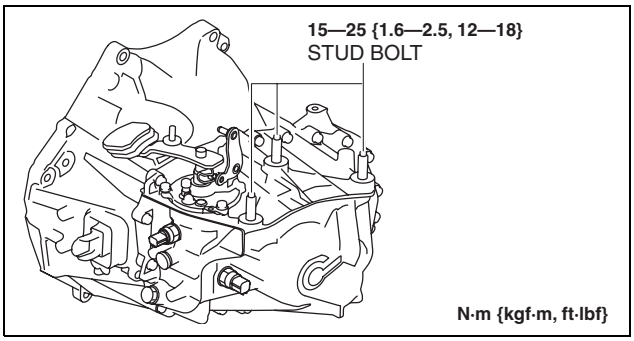

ac5wzw0000284

MANUAL TRANSAXLE [C66M-R, C66MX-R]

4. Install the No.4 engine mount bracket to No.4 engine mount rubber, and temporarily tighten the installation bolt.

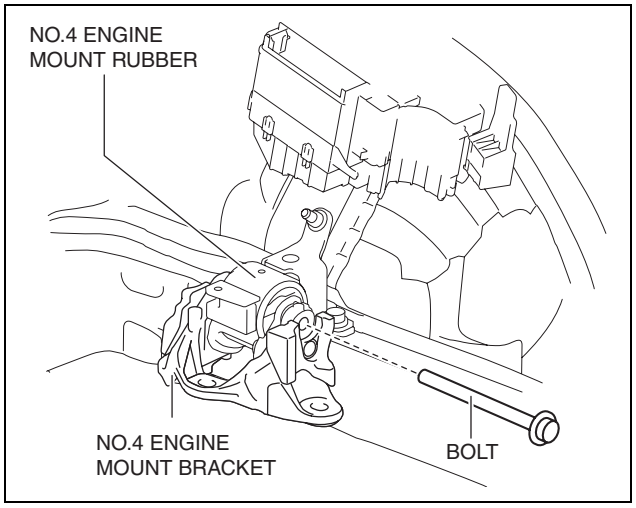

ac5uuw00000747

5. Pull up the MTX using the **SST**s, pass the MTX stud bolts through the No.4 engine mount bracket, and temporarily tighten the No.4 engine mount installation nuts.

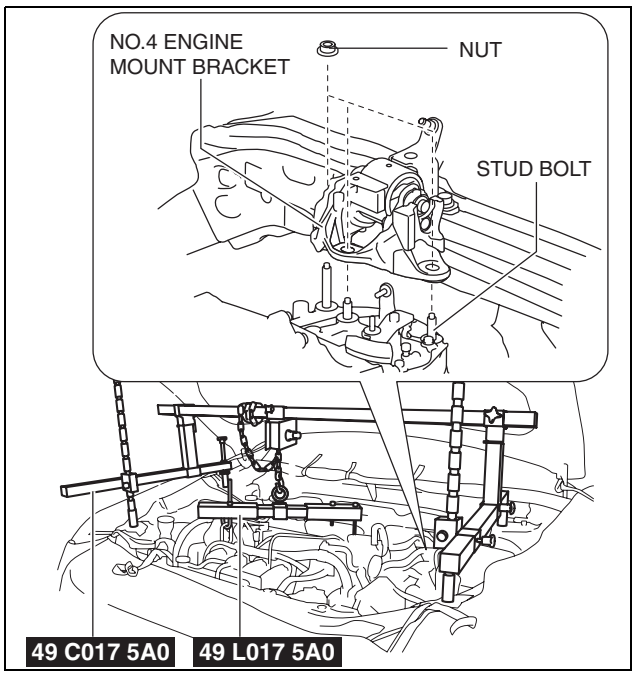

ac5uuw00000748

MANUAL TRANSAXLE [C66M-R, C66MX-R]

6. Install the No.1 engine mount bracket and bracket plate to the MTX, and temporarily tighten the installation bolts.
7. Install the front crossmember component and No.1 engine mount rubber as a single unit. (See 02-13-15 FRONT CROSSMEMBER REMOVAL/INSTALLATION.)

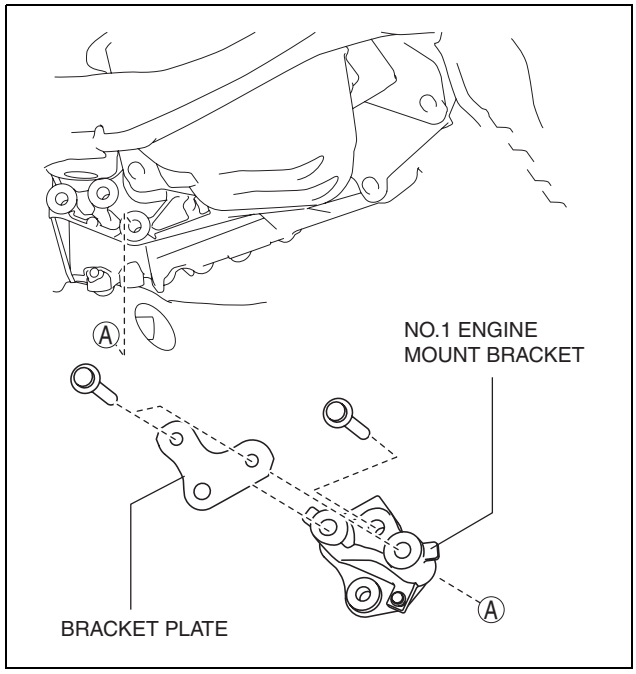

ac5uuw00000735

8. Temporarily tighten the No.1 engine mount rubber installation bolts.

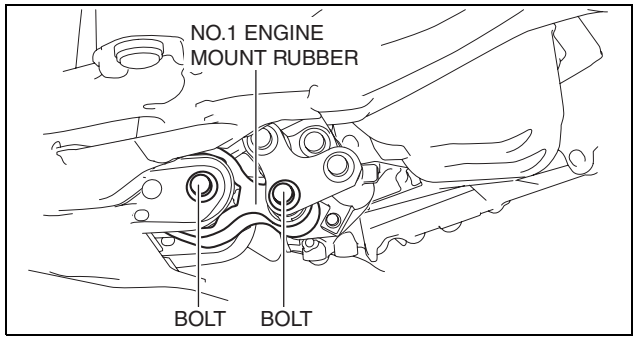

ac5uuw00000749

MANUAL TRANSAXLE [C66M-R, C66MX-R]

9. Align the alignment marks on the No.4 engine mount bracket and nuts, and temporarily tighten the nuts shown in the figure.

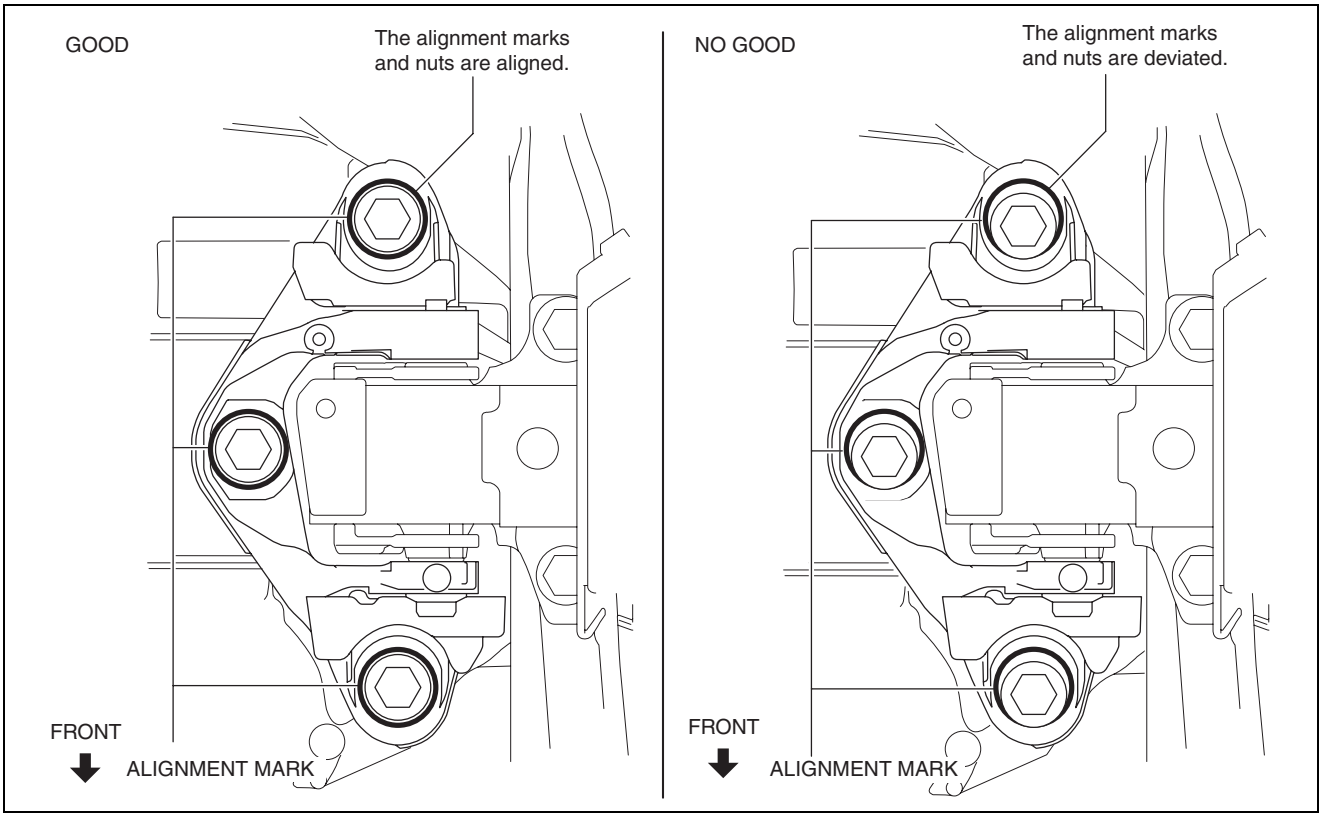

ac5uuw00000750

10. Tighten the No.4 engine mount bracket installation nuts and bolt in the order shown in the figure.

No.	Tightening torque
1, 2, 3	92—116 N·m {9.4—11 kgf·m, 68—85 ft·lbf}
4	81—99 N·m {8.3—10 kgf·m, 60—73 ft·lbf}

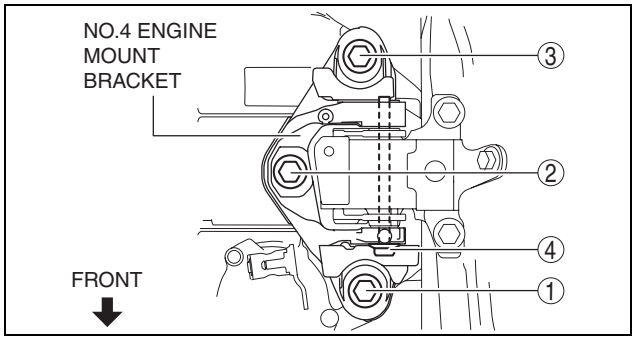

ac5uuw00000751

11. Tighten the No.1 engine mount bracket and bracket plate installation bolts in the order shown in the figure.

Tightening torque
84—98 N·m {8.6—9.9 kgf·m, 62—72 ft·lbf}

12. Remove the **SST (49 C017 5A0)**.

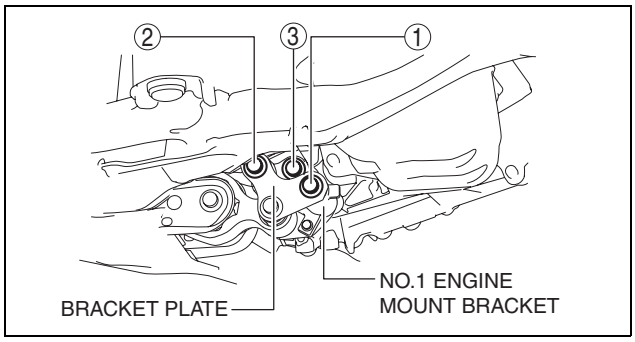

ac5uuw00000752

MANUAL TRANSAXLE [C66M-R, C66MX-R]

13. Tighten the No.1 engine mount rubber installation bolts.

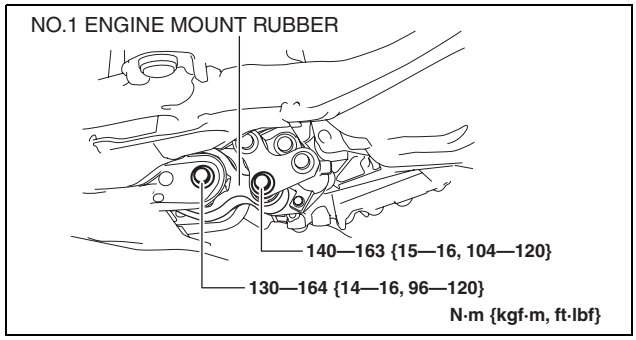

ac5uuw00000753

14. Connect and/or Install the following parts to the underside of the vehicle.
    (1) Install the starter. (See 01-19A-2 STARTER REMOVAL/INSTALLATION [SKYACTIV-G 2.0].)
    (2) Install the clutch release cylinder to the MTX. (See 05-10A-24 CLUTCH RELEASE CYLINDER REMOVAL/INSTALLATION [C66M-R, C66MX-R].)
15. Connect and/or Install the following parts related to the suspension and axle.
    (1) Connect the drive shaft (RH) to the MTX. (See 03-13-3 FRONT DRIVE SHAFT REMOVAL/INSTALLATION.)
    (2) Connect the drive shaft (LH) to the MTX. (See 03-13-3 FRONT DRIVE SHAFT REMOVAL/INSTALLATION.)
    (3) Connect the front lower arms to the steering knuckles. (See 02-13-15 FRONT CROSSMEMBER REMOVAL/INSTALLATION.)
    (4) Connect the stabilizer control links to the stabilizer. (See 02-13-10 FRONT STABILIZER REMOVAL/INSTALLATION.)
    (5) Connect the tie-rod end ball joints to the steering knuckles. (See 02-13-15 FRONT CROSSMEMBER REMOVAL/INSTALLATION.)
    (6) Connect the ABS wheel-speed sensors to the steering knuckles. (See 04-15-9 FRONT ABS WHEEL-SPEED SENSOR REMOVAL/INSTALLATION.)
    (7) Connect the clip securing the brake hose to the shock absorber. (See 04-11-30 BRAKE HOSE (FRONT) REMOVAL/INSTALLATION.)
    (8) Install the front tires. (See 03-10-1 GENERAL PROCEDURES (FRONT AND REAR AXLES).)
16. Connect and/or install the following parts in the engine compartment.
    (1) Install the fuel hose to the clip shown in the figure.

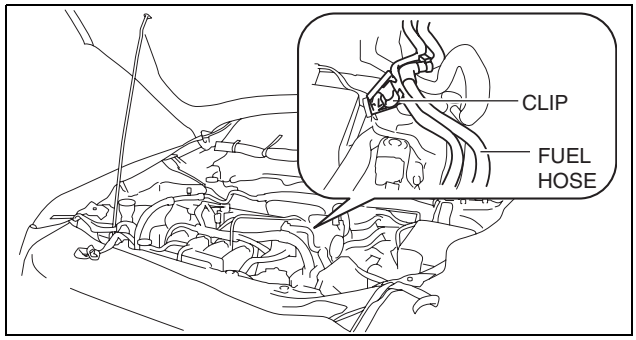

ac5uuw00000739

    (2) Connect the clip shown in the figure.
    (3) Install the cowl panel. (See 09-10-41 COWL PANEL REMOVAL/INSTALLATION.)
    (4) Install the cowl grille. (See 09-16-3 COWL GRILLE REMOVAL/INSTALLATION.)
    (5) Install the windshield wiper arm and blade. (See 09-19-3 WINDSHIELD WIPER ARM AND BLADE REMOVAL/INSTALLATION.)

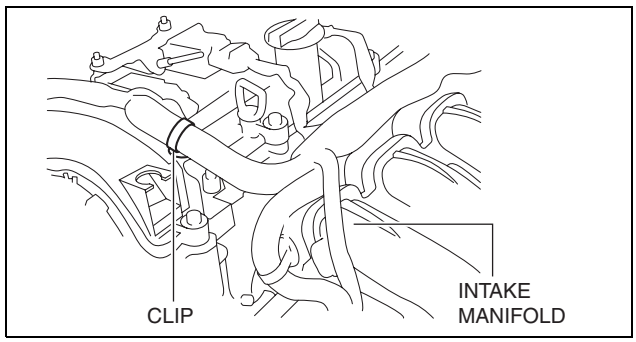

am3uuw0000822

MANUAL TRANSAXLE [C66M-R, C66MX-R]

(6) Install the lower radiator hose clip and bracket to the MTX.
(7) Connect the back-up light switch connector.(See 05-15A-3 BACK-UP LIGHT SWITCH REMOVAL/INSTALLATION [C66M-R, C66MX-R].)
(8) Connect the neutral switch connector. (See 05-15A-2 NEUTRAL SWITCH REMOVAL/INSTALLATION [C66M-R, C66MX-R].)

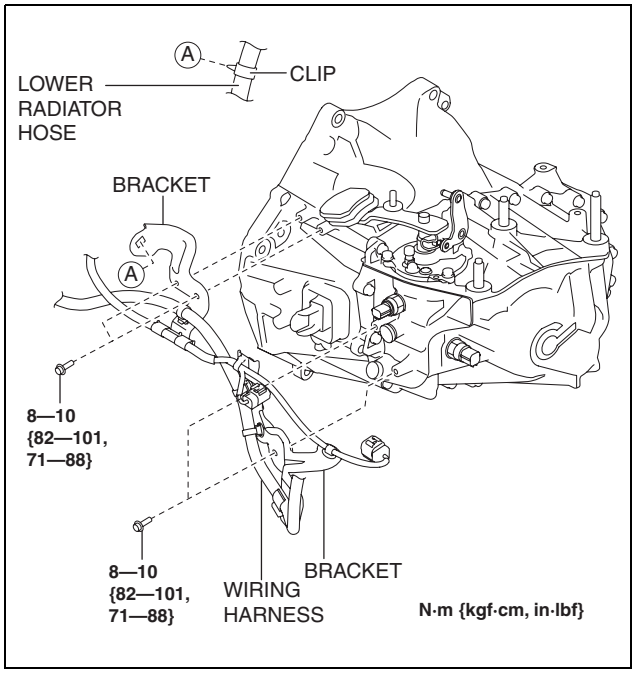

ac5wzw0000284

(9) Install the bracket to the MTX and the exhaust manifold using the following procedure:
1) Tighten the bolt A.

Tightening torque
19—25 N·m {2.0—2.5 kgf·m, 15—18 ft·lbf}

2) Temporarily tighten the bolt B and C.
3) Tighten the bolt B.

Tightening torque
38—51 N·m {3.9—5.2 kgf·m, 29—37 ft·lbf}

4) Tighten the bolt C.

Tightening torque
38—51 N·m {3.9—5.2 kgf·m, 29—37 ft·lbf}

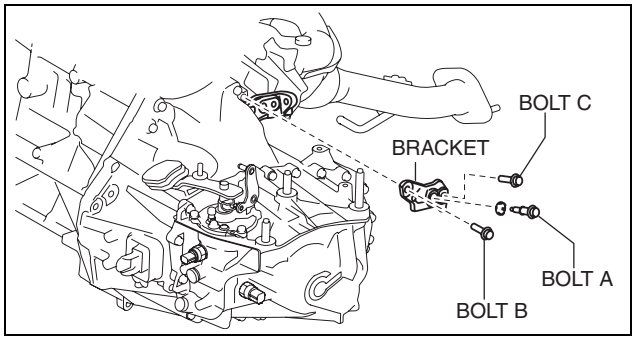

ac5wzw0000245

(10) Connect the ground cable to the No.4 engine mount bracket.

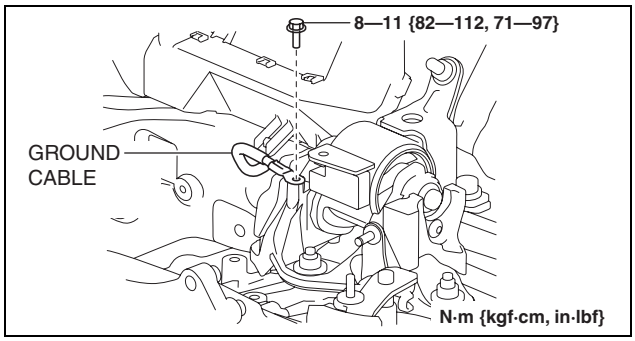

ac5uuw00000756

MANUAL TRANSAXLE [C66M-R, C66MX-R]

(11)Install the control cable bracket to the MTX.
(12)Connect the control cable to the MTX. (See 05-16A-1 MANUAL TRANSAXLE SHIFT MECHANISM REMOVAL/INSTALLATION [C66M-R, C66MX-R].)
(13)Install the battery component. (ex: battery, battery tray and PCM component) (See 01-17A-3 BATTERY REMOVAL/INSTALLATION [SKYACTIV-G 2.0].)
(14)Install the air cleaner component. (ex: air cleaner, air hose) (See 01-13A-6 INTAKE-AIR SYSTEM REMOVAL/INSTALLATION [SKYACTIV-G 2.0].)

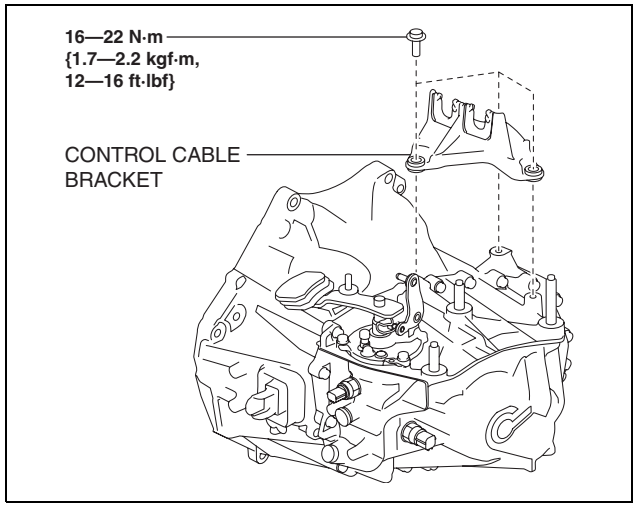

ac5wzw0000284

17. Install the splash shield. (See 09-16-49 SPLASH SHIELD REMOVAL/INSTALLATION.)
18. Install the front under cover No.1. (See 09-16-40 FRONT UNDER COVER No.1 REMOVAL/INSTALLATION.)
19. Add the specified amount of specified transaxle oil. (See 05-15A-2 MANUAL TRANSAXLE OIL REPLACEMENT [C66M-R, C66MX-R].)
20. Install the front under cover No.2. (See 09-16-41 FRONT UNDER COVER No.2 REMOVAL/INSTALLATION.)
21. Connect the negative battery cable. (See 01-17A-11 NEGATIVE BATTERY CABLE DISCONNECTION/CONNECTION [SKYACTIV-G 2.0].) (See 01-17A-13 NEGATIVE BATTERY CABLE DISCONNECTION/CONNECTION [SKYACTIV-G 2.0 (WITHOUT i-stop)].)
22. Install the plug hole plate. (See 01-10A-6 PLUG HOLE PLATE REMOVAL/INSTALLATION [SKYACTIV-G 2.0].)
23. If the MTX is overhauled, perform the “INSPECTION AFTER MANUAL TRANSAXLE OVERHAUL”. (See 05-15A-31 INSPECTION AFTER MANUAL TRANSAXLE OVERHAUL [C66M-R, C66MX-R].)

MANUAL TRANSAXLE [C66M-R, C66MX-R]

MANUAL TRANSAXLE REMOVAL/INSTALLATION [C66MX-R]

id0515ma1600m9

Removal

1. Disconnect the negative battery cable. (See 01-17A-11 NEGATIVE BATTERY CABLE DISCONNECTION/CONNECTION [SKYACTIV-G 2.0].) (See 01-17A-13 NEGATIVE BATTERY CABLE DISCONNECTION/CONNECTION [SKYACTIV-G 2.0 (WITHOUT i-stop)].)
2. Remove the plug hole plate. (See 01-10A-6 PLUG HOLE PLATE REMOVAL/INSTALLATION [SKYACTIV-G 2.0].)
3. Remove the front under cover No.2. (See 09-16-41 FRONT UNDER COVER No.2 REMOVAL/INSTALLATION.)
4. Remove the front under cover No.1. (See 09-16-40 FRONT UNDER COVER No.1 REMOVAL/INSTALLATION.)
5. Remove the splash shield. (See 09-16-49 SPLASH SHIELD REMOVAL/INSTALLATION.)
6. Drain the manual transaxle oil. (See MANUAL TRANSAXLE OIL REPLACEMENT [C66M-R].)
7. Disconnect and/or remove the following parts in the engine compartment.
   (1) Remove the air cleaner component. (ex: air cleaner, air hose) (See 01-13A-6 INTAKE-AIR SYSTEM REMOVAL/INSTALLATION [SKYACTIV-G 2.0].)
   (2) Remove the battery component. (ex: battery, battery tray and PCM component) (See 01-17A-3 BATTERY REMOVAL/INSTALLATION [SKYACTIV-G 2.0].)
   (3) Disconnect the control cable from MTX. (See 05-16A-1 MANUAL TRANSAXLE SHIFT MECHANISM REMOVAL/INSTALLATION [C66M-R, C66MX-R].)
   (4) Remove the control cable bracket from MTX.

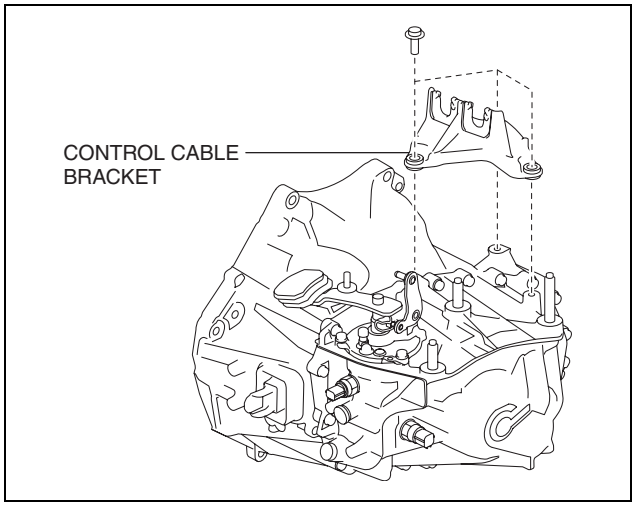

ac5wzw0000284

   (5) Remove the bolt shown in the figure, and set the ground cable aside.
   (6) Remove the insulator. (See 01-15A-2 EXHAUST SYSTEM REMOVAL/INSTALLATION [SKYACTIV-G 2.0].)
   (7) Disconnect the neutral switch connector from MTX. (See 05-15A-2 NEUTRAL SWITCH REMOVAL/INSTALLATION [C66M-R, C66MX-R].)
   (8) Disconnect the back-up light switch connector from MTX. (See 05-15A-3 BACK-UP LIGHT SWITCH REMOVAL/INSTALLATION [C66M-R, C66MX-R].)

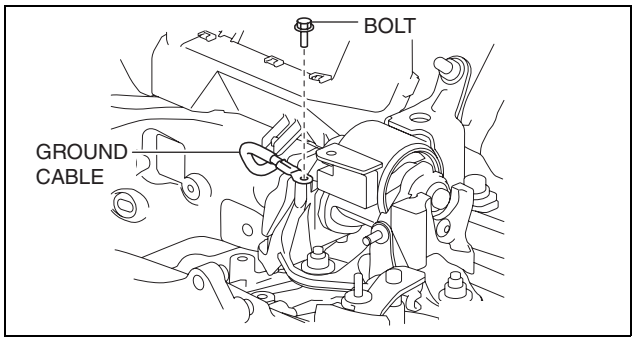

ac5uuw00000732

MANUAL TRANSAXLE [C66M-R, C66MX-R]

(9) Disconnect the lower radiator hose clip and the brackets from the MTX, and set the wiring harness aside.

8. Disconnect and/or remove the following parts related to the suspension and axle.
   (1) Remove the front tires. (See 03-10-1 GENERAL PROCEDURES (FRONT AND REAR AXLES).)
   (2) Disconnect the clip securing the brake hose from the shock absorber. (See 04-11-30 BRAKE HOSE (FRONT) REMOVAL/INSTALLATION.)
   (3) Disconnect the ABS wheel-speed sensors from the steering knuckles. (See 04-15-9 FRONT ABS WHEEL-SPEED SENSOR REMOVAL/INSTALLATION.)
   (4) Disconnect the tie-rod end ball joints from the steering knuckles. (See 02-13-15 FRONT CROSSMEMBER REMOVAL/INSTALLATION.)
   (5) Disconnect the stabilizer control links from the stabilizer. (See 02-13-10 FRONT STABILIZER REMOVAL/INSTALLATION.)
   (6) Disconnect the front lower arms from the steering knuckles. (See 02-13-15 FRONT CROSSMEMBER REMOVAL/INSTALLATION.)
   (7) Disconnect the drive shaft (LH) from the MTX. (See 03-13-3 FRONT DRIVE SHAFT REMOVAL/INSTALLATION.)
   (8) Remove the drive shaft (RH). (See 03-13-3 FRONT DRIVE SHAFT REMOVAL/INSTALLATION.)
9. Disconnect and/or remove the following parts from the underside of the vehicle.
   (1) Remove the clutch release cylinder with the clutch pipe still connected and set it out of the way. (See 05-10A-24 CLUTCH RELEASE CYLINDER REMOVAL/INSTALLATION [C66M-R, C66MX-R].)
   (2) Remove the starter. (See 01-19A-2 STARTER REMOVAL/INSTALLATION [SKYACTIV-G 2.0].)
   (3) Remove the brace bar. (See 01-15A-2 EXHAUST SYSTEM REMOVAL/INSTALLATION [SKYACTIV-G 2.0].)
   (4) Remove the tunnel member. (See 01-15A-2 EXHAUST SYSTEM REMOVAL/INSTALLATION [SKYACTIV-G 2.0].).
   (5) Remove the propeller shaft. (See 03-15-2 PROPELLER SHAFT REMOVAL/INSTALLATION.)
   (6) Remove the front crossmember component and No.1 engine mount rubber as a single unit. (See 02-13-15 FRONT CROSSMEMBER REMOVAL/INSTALLATION.)
   (7) Remove the exhaust manifold. (See 01-15A-2 EXHAUST SYSTEM REMOVAL/INSTALLATION [SKYACTIV-G 2.0].)
   (8) Remove the bracket from the MTX.
   (9) Remove the transfer. (See 03-16A-4 TRANSFER REMOVAL/INSTALLATION [C66MX-R].)

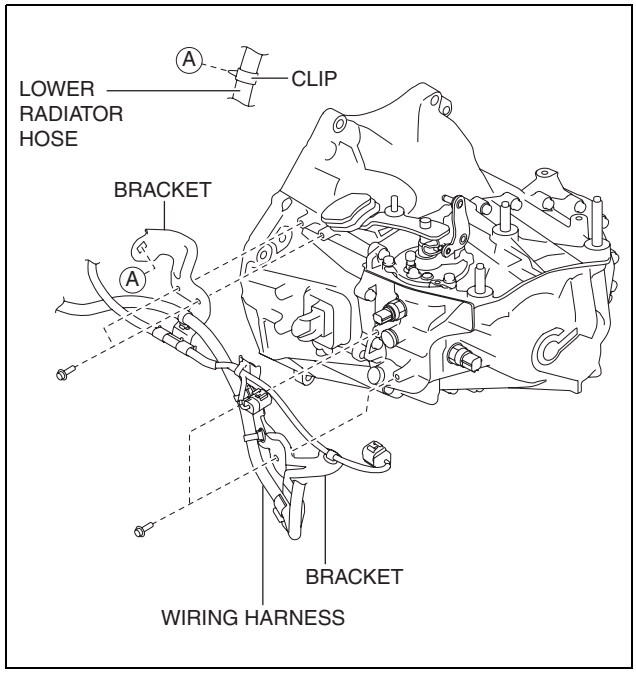

ac5wzw0000284

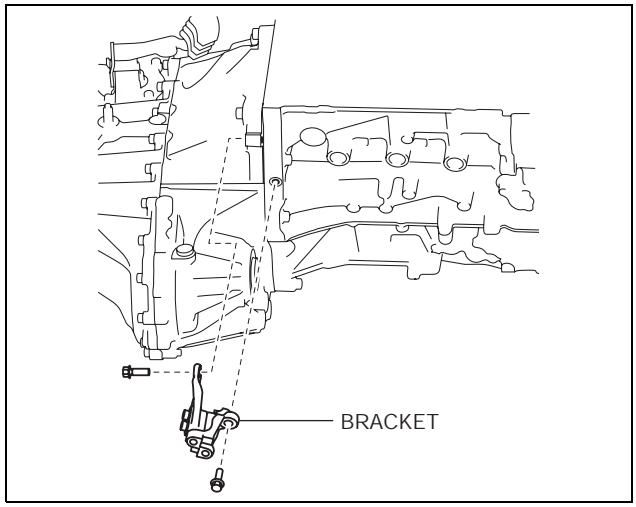

ac5wzw0000154

05

MANUAL TRANSAXLE [C66M-R, C66MX-R]

(10)Remove the No.1 engine mount bracket from the MTX.

10. Install the **SST** using the following procedure:

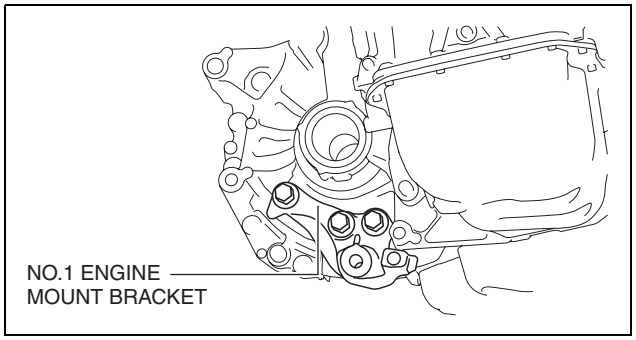

ac5wzw0000130

Caution

- **Refer to the SST instruction manual for the basic handing procedure.**

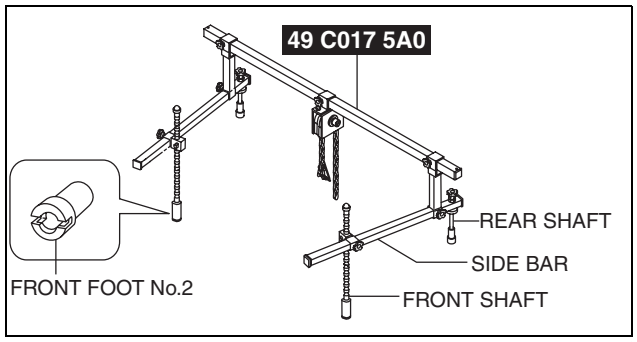

am3uuw0000884

(1) Install one front foot No.2 to each of the left and right front shafts of the **SST**.
(2) Remove the windshield wiper arm and blade. (See 09-19-3 WINDSHIELD WIPER ARM AND BLADE REMOVAL/INSTALLATION.)
(3) Remove the cowl grille. (See 09-16-3 COWL GRILLE REMOVAL/INSTALLATION.)
(4) Remove the cowl panel. (See 09-10-41 COWL PANEL REMOVAL/INSTALLATION.)
(5) Protect the positions shown in the figure using tape.

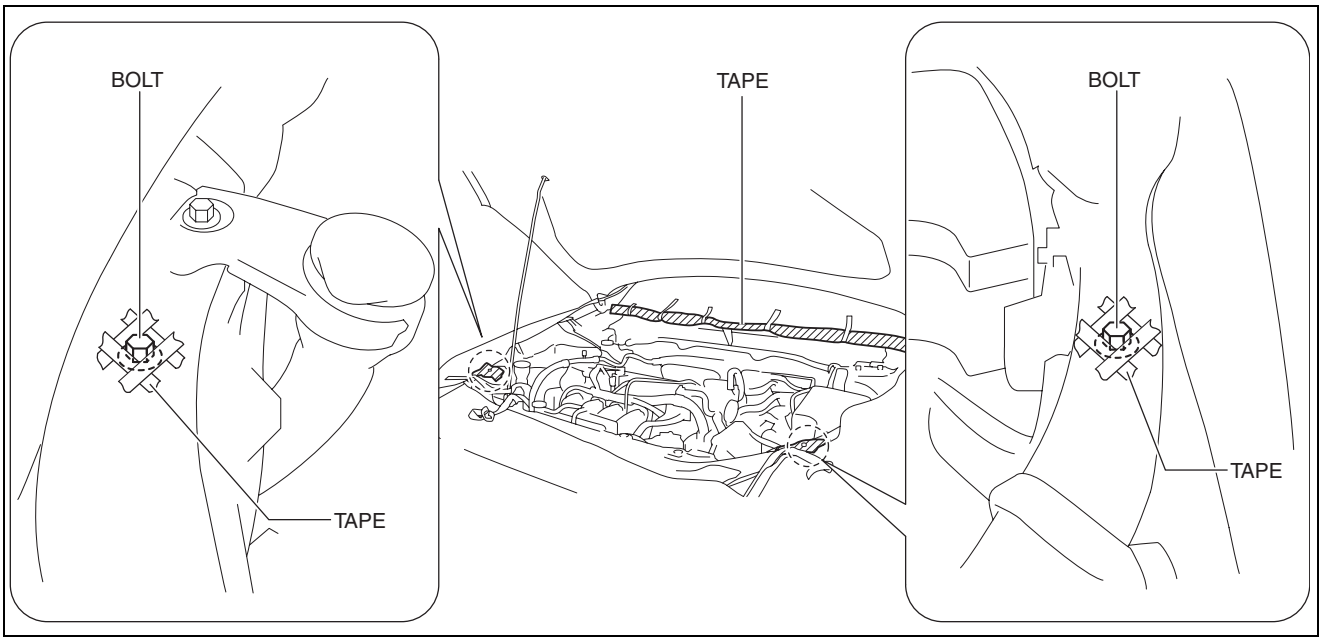

ac5wzw0000285

MANUAL TRANSAXLE [C66M-R, C66MX-R]

(6) To enable to install the **SST**, disconnect the clip shown in the figure and set the wiring harness aside.
(7) Install the **SST** using **part number 99794 1025** or an **M10** × **1.25**, length **25 mm {0.98 in}** bolt as shown in the figure.

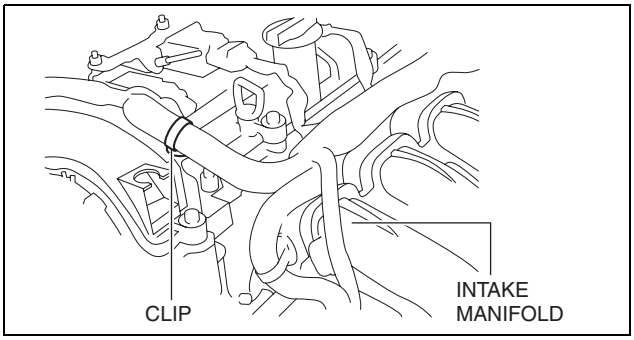

am3uuw0000822

Engine front side

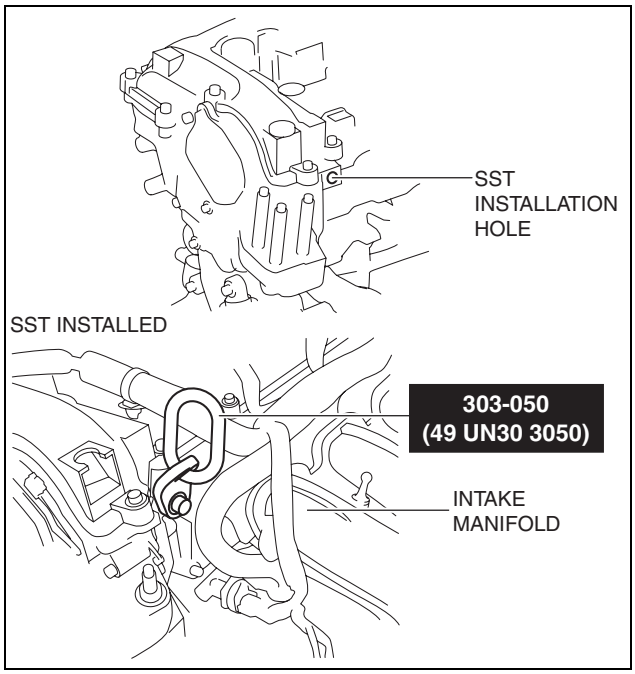

Tightening torque
38—51 N·m {3.9—5.2 kgf·m, 29—37 ft·lbf}

Engine rear side

Tightening torque
38—51 N·m {3.9—5.2 kgf·m, 29—37 ft·lbf}

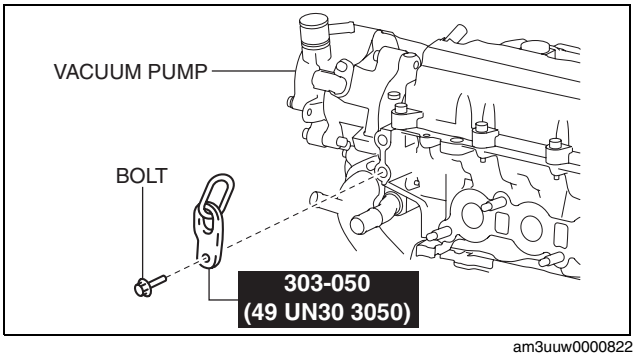

am3uuw0000822

MANUAL TRANSAXLE [C66M-R, C66MX-R]

(8) As shown in the figure, set the rear shafts of the **SST** to the left and right shock absorber nuts.

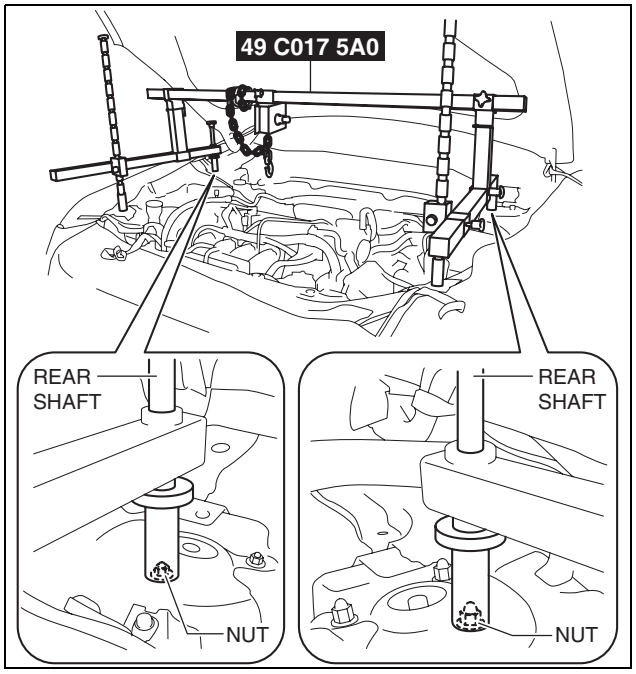

ac5uuw00000737

(9) As shown in the figure, set the front shafts of the **SST** to the left and right bolts.

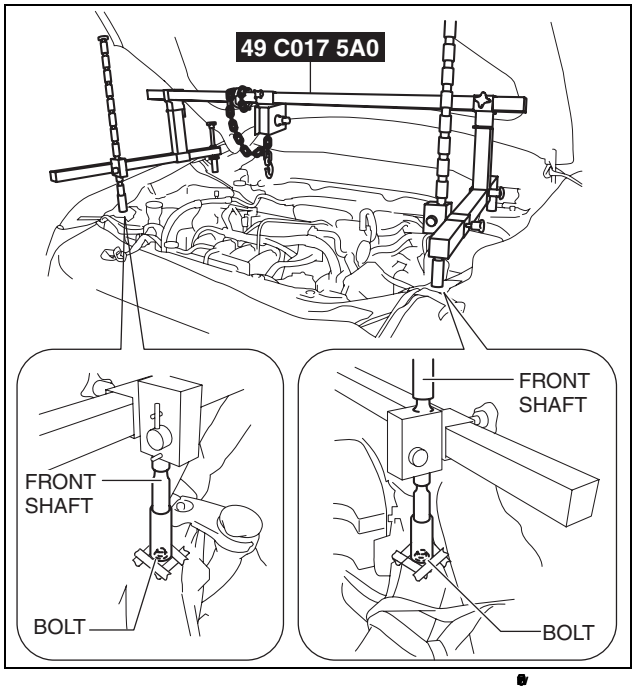

(10) When assembling the **SST (49 L017 5A0)**, disconnect the fuel hose from the clip shown in the figure to prevent interference between the fuel hose and **SST**.

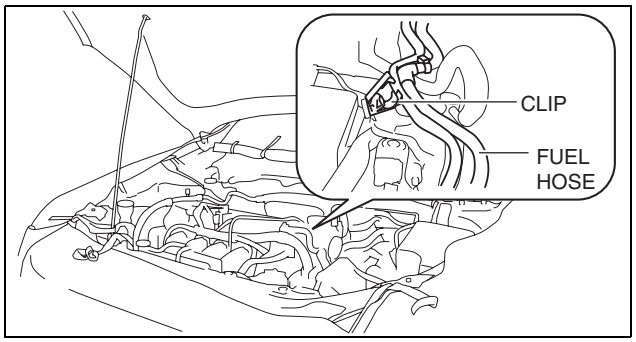

ac5uuw00000739

MANUAL TRANSAXLE [C66M-R, C66MX-R]

(11)Install the **SST (49 L017 5A0)** to the **SST (49 C017 5A0)** as shown in the figure.

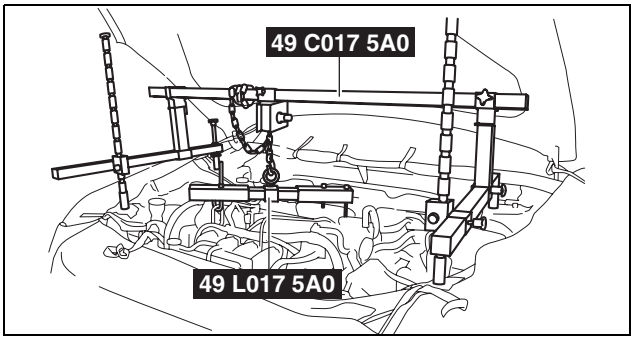

ac5uuw00000740

(12)Install the **SST (49 L017 5A0)** to the **SST (49 UN30 3050)** with the hook of the **SST (49 L017 5A0)** facing outward.
(13)Adjust the height of the left and right side bars so that they are leveled, then tighten each part of the **SST**.
(14)Apply tension to the chain to secure the engine.

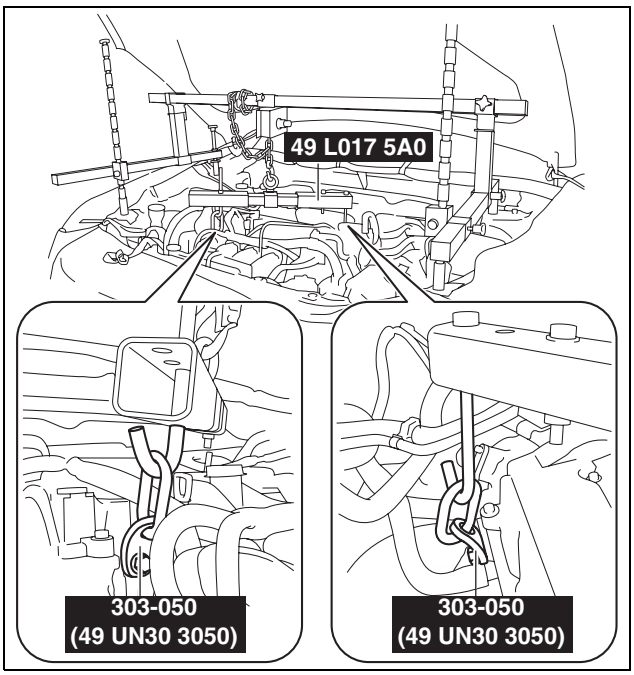

ac5uuw00000741

MANUAL TRANSAXLE [C66M-R, C66MX-R]

11. Remove in the order indicated in the table.

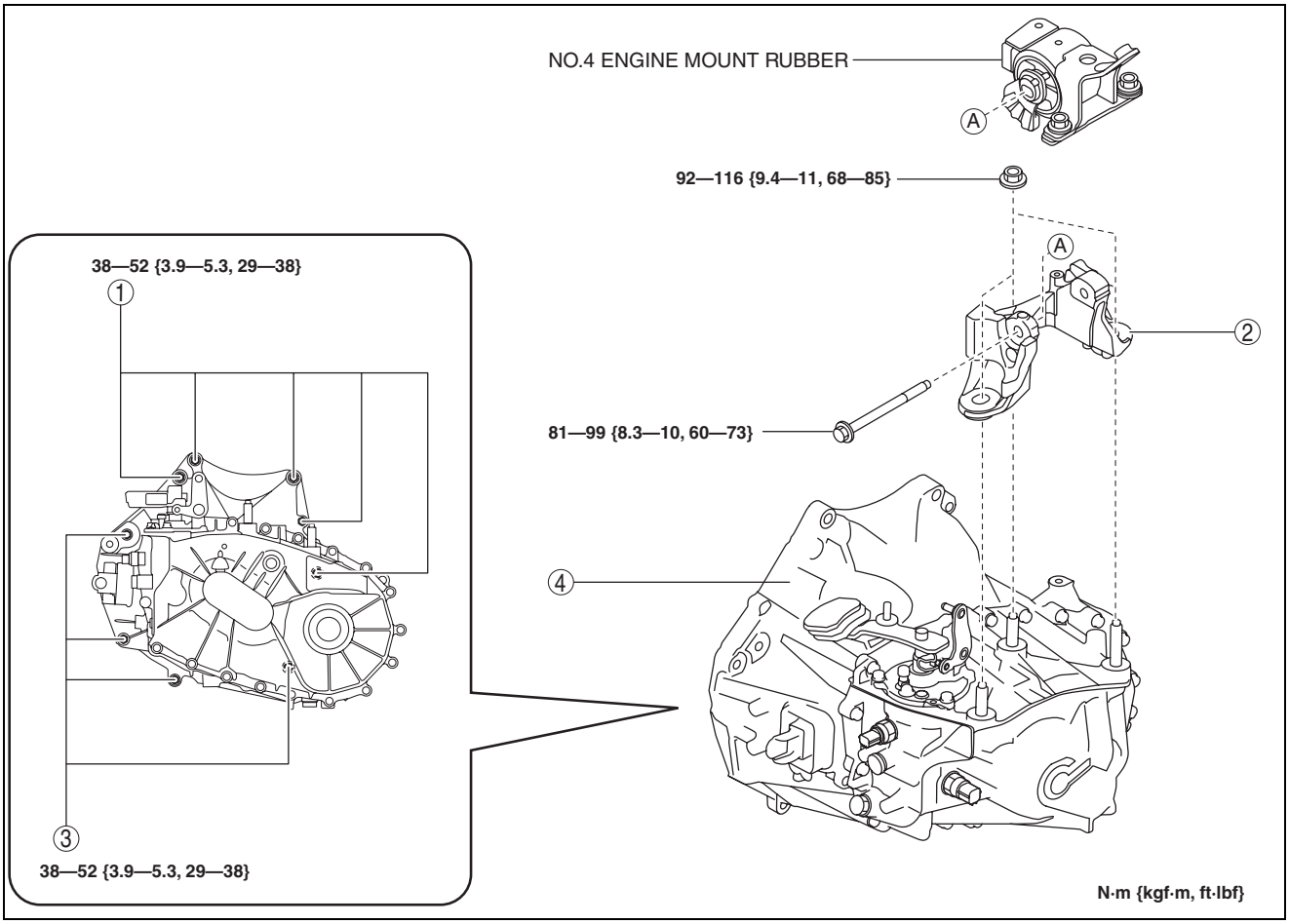

ac5wzw0000285

1	Transaxle mounting bolt (upper side)
2	No.4 engine mount bracket (See 05-15A-25 No.4 Engine mount bracket removal note.)
3	Transaxle mounting bolt (lower side) (See 05-15A-25 Transaxle mounting bolt removal note.)
4	MTX

MANUAL TRANSAXLE [C66M-R, C66MX-R]

No.4 Engine mount bracket removal note

Caution
- **A slot has been adopted for the No.4 engine mount bracket installation hole. If the No.4 engine mount bracket is deviated from the original position when installing the No.4 engine mount, engine noise or vibration could increase. When removing the No.4 engine mount, place alignment marks on the No.4 engine mount bracket so that they can be assembled to the same positions as before removal.**

1. Place alignment marks on the locations shown in the figure so that they can be assembled to the same positions as before removal.

   Note
   - Paint so that the outline of the nut is framed on the bracket side.

2. Remove the No.4 engine mount bracket.

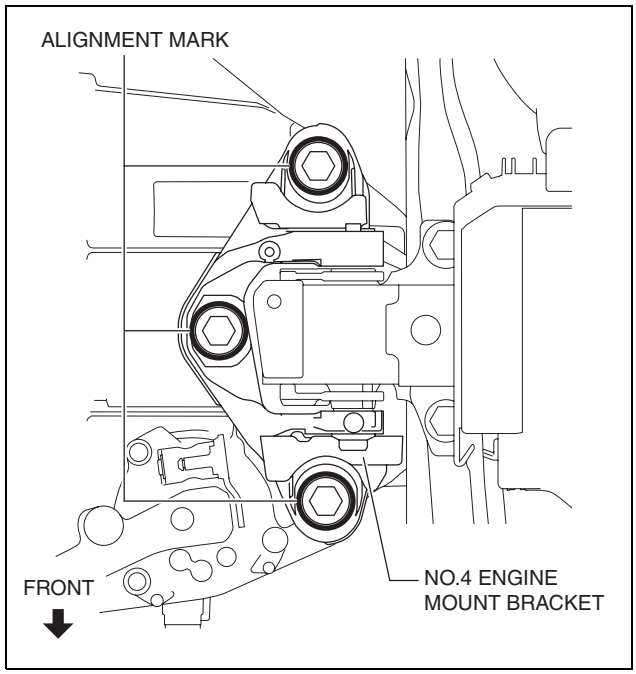

ac5uuw00000743

Transaxle mounting bolt removal note

Warning
- **Remove the MTX carefully, holding it steady. If the MTX falls it could be damaged or cause injury.**

1. Adjust the **SST** and lean the engine toward the MTX.

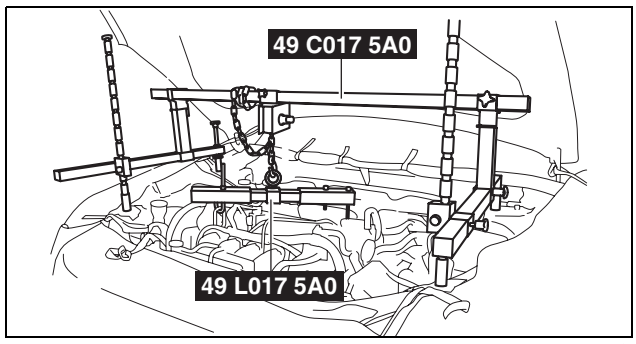

ac5uuw00000740

2. Support the MTX on a jack.

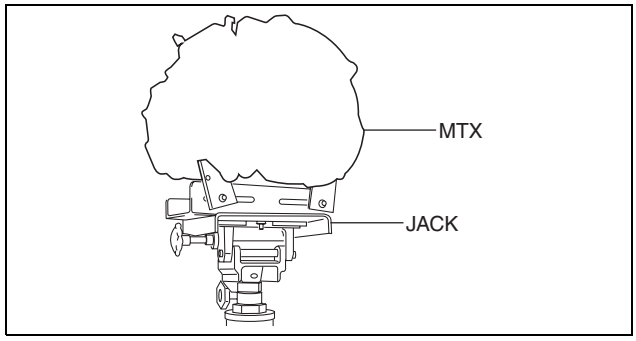

ac5uuw00000744

MANUAL TRANSAXLE [C66M-R, C66MX-R]

3. Remove the transaxle mounting bolts (lower side).
4. Remove the MTX.

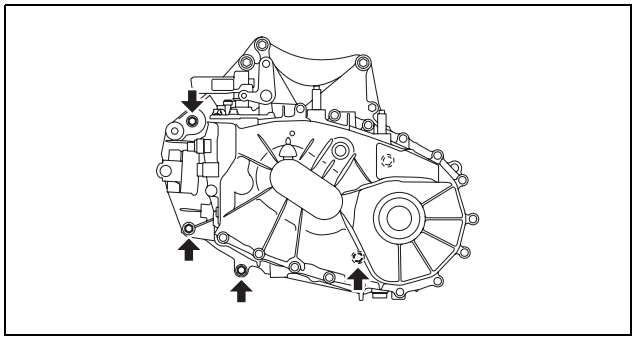
ac5uuw00000745

Installation

Warning
- **Install the MTX carefully, holding it steady. If the MTX falls it could be damaged or cause injury.**

1. Set the MTX on a jack and lift into place.

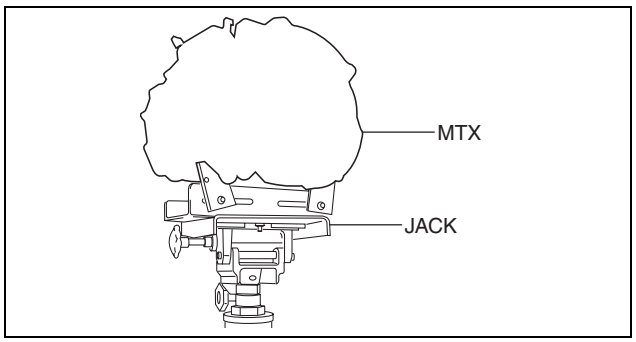

ac5uuw00000744

2. Install the MTX to the engine, and tighten the Transaxle mounting bolts.

Tightening torque
38—52 N·m {3.9—5.3 kgf·m, 29—38 ft·lbf}

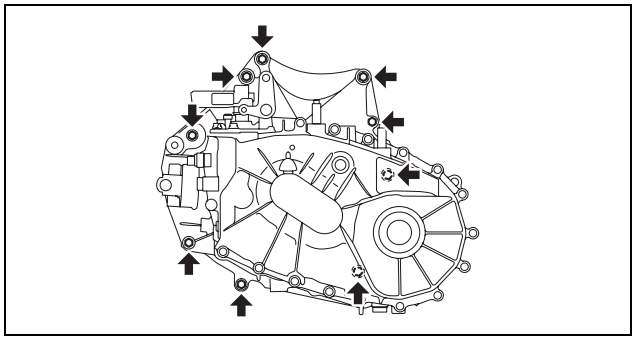
am3uuw0000822

3. Tighten the stud bolts for the MTX.

Note
- If the No.4 engine mount bracket nut is loosened, tighten the stud bolts for the MTX because they may be loosened.

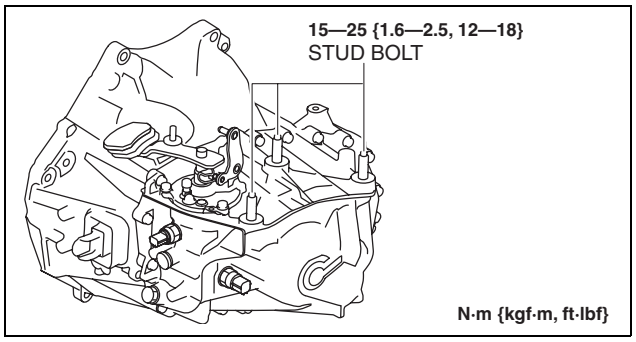

ac5wzw0000285

MANUAL TRANSAXLE [C66M-R, C66MX-R]

4. Install the No.4 engine mount bracket to No.4 engine mount rubber, and temporarily tighten the installation bolt.

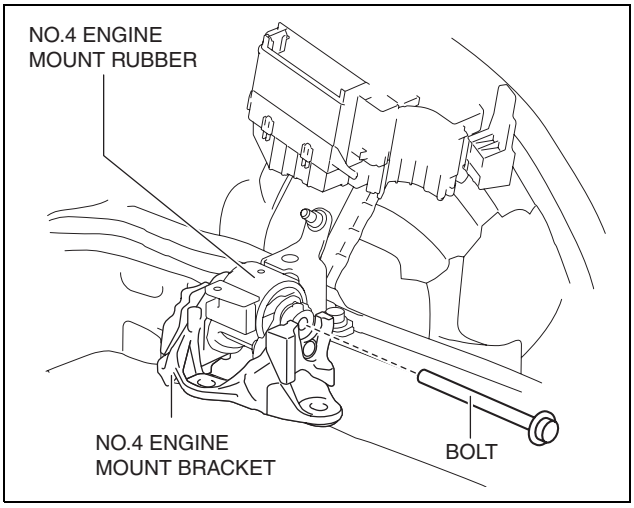

ac5uuw00000747

5. Pull up the MTX using the **SST**s, pass the MTX stud bolts through the No.4 engine mount bracket, and temporarily tighten the No.4 engine mount installation nuts.

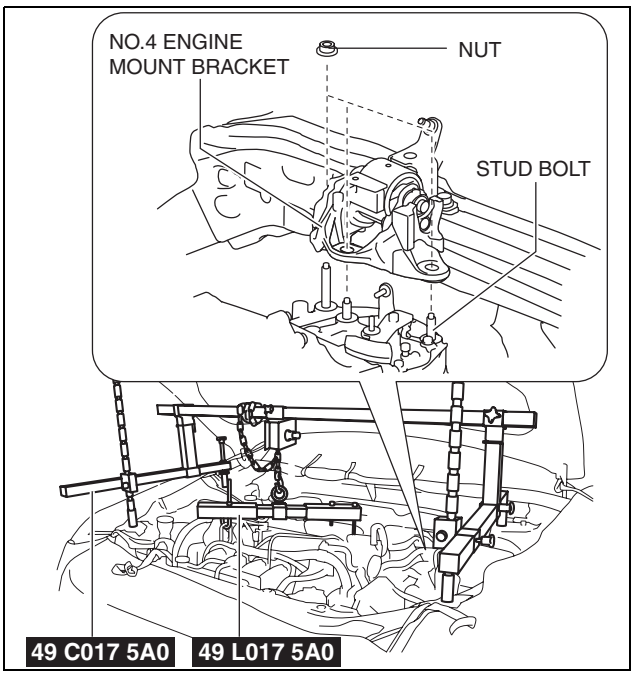

ac5uuw00000748

6. Install the No.1 engine mount bracket and tighten the bolts in the order shown in the figure.

   Tightening torque
   131—153 N·m {14—15 kgf·m, 97—112 ft·lbf}

7. Install the transfer. (See 03-16A-4 TRANSFER REMOVAL/INSTALLATION [C66MX-R].)

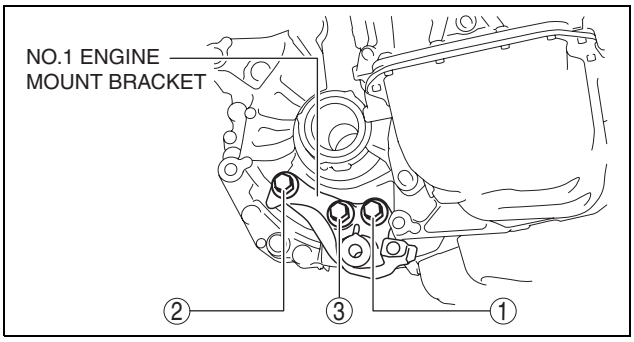

ac5wzw0000130

MANUAL TRANSAXLE [C66M-R, C66MX-R]

8. Install the bracket to the MTX and tighten the bolts in the order shown in the figure.
9. Install the exhaust manifold. (See 01-15A-2 EXHAUST SYSTEM REMOVAL/INSTALLATION [SKYACTIV-G 2.0].)
10. Install the front crossmember component and No.1 engine mount rubber as a single unit. (See 02-13-15 FRONT CROSSMEMBER REMOVAL/INSTALLATION.)

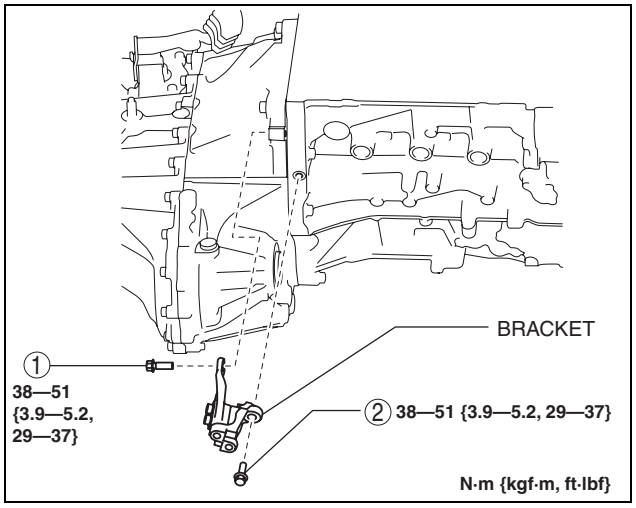

ac5wzw0000463

11. Install the bracket plate, and temporarily tighten the No.1 engine mount rubber installation bolts.
12. Align the alignment marks on the No.4 engine mount bracket and nuts, and temporarily tighten the nuts shown in the figure.

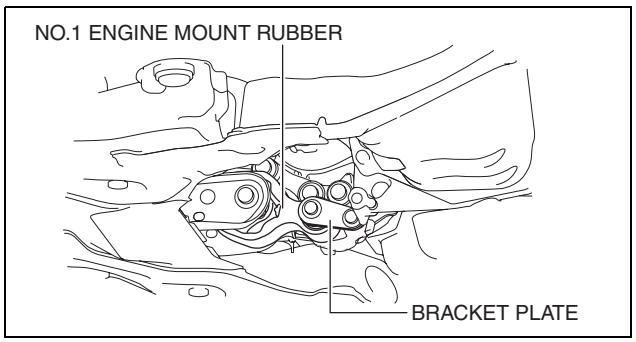

ac5wzw0000130

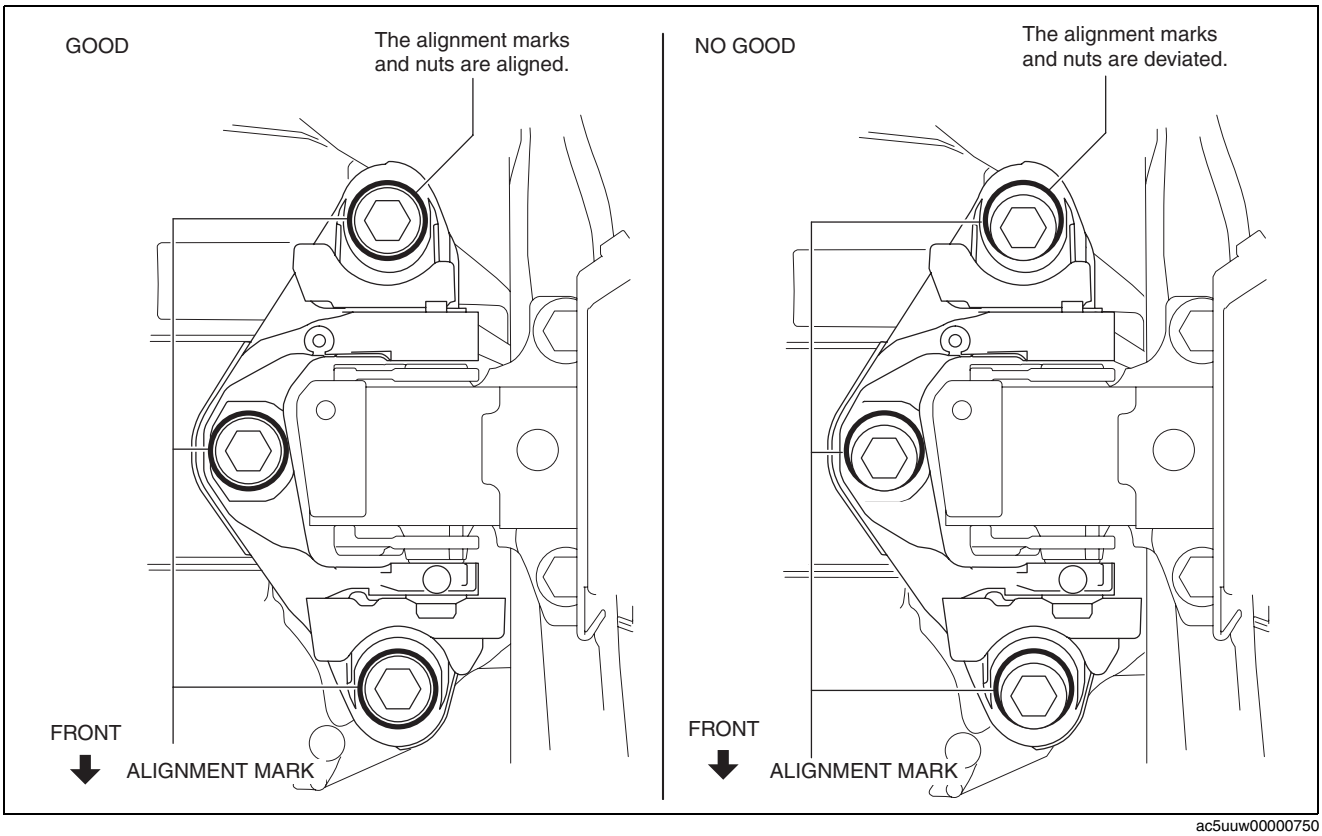

ac5uuw00000750

MANUAL TRANSAXLE [C66M-R, C66MX-R]

13. Tighten the No.4 engine mount bracket installation nuts and bolt in the order shown in the figure.

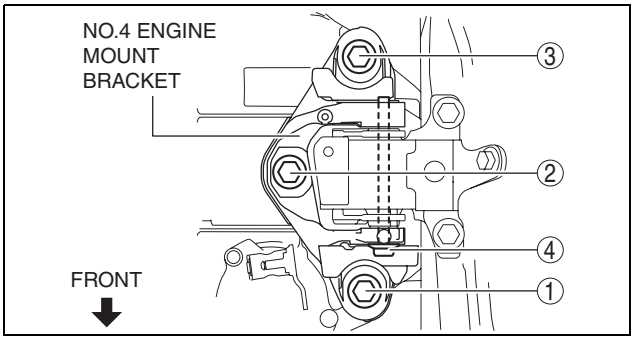

ac5wzw0000130

No.	Tightening torque
1, 2, 3	92—116 N·m {9.4—11 kgf·m, 68—85 ft·lbf}
4	81—99 N·m {8.3—10 kgf·m, 60—73 ft·lbf}

14. Remove the **SST (49 C017 5A0)**.
15. Install the propeller shaft. (See 03-15-2 PROPELLER SHAFT REMOVAL/INSTALLATION.)
16. Tighten the No.1 engine mount rubber installation bolts.
17. Connect and/or Install the following parts to the underside of the vehicle.
    (1) Install the tunnel member. (See 01-15A-2 EXHAUST SYSTEM REMOVAL/INSTALLATION [SKYACTIV-G 2.0].).
    (2) Install the brace bar. (See 01-15A-2 EXHAUST SYSTEM REMOVAL/INSTALLATION [SKYACTIV-G 2.0].)
    (3) Install the starter. (See 01-19A-2 STARTER REMOVAL/INSTALLATION [SKYACTIV-G 2.0].)
    (4) Install the clutch release cylinder to the MTX. (See 05-10A-24 CLUTCH RELEASE CYLINDER REMOVAL/INSTALLATION [C66M-R, C66MX-R].)

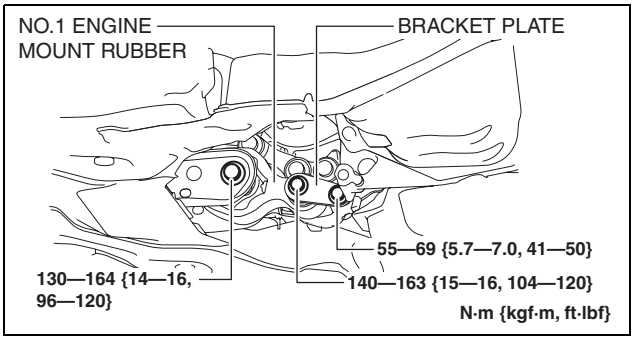

ac5wzw0000131

18. Connect and/or Install the following parts related to the suspension and axle.
    (1) Install the drive shaft (RH). (See 03-13-3 FRONT DRIVE SHAFT REMOVAL/INSTALLATION.)
    (2) Connect the drive shaft (LH) to the MTX. (See 03-13-3 FRONT DRIVE SHAFT REMOVAL/INSTALLATION.)
    (3) Connect the front lower arms to the steering knuckles. (See 02-13-15 FRONT CROSSMEMBER REMOVAL/INSTALLATION.)
    (4) Connect the stabilizer control links to the stabilizer. (See 02-13-10 FRONT STABILIZER REMOVAL/INSTALLATION.)
    (5) Connect the tie-rod end ball joints to the steering knuckles. (See 02-13-15 FRONT CROSSMEMBER REMOVAL/INSTALLATION.)
    (6) Connect the ABS wheel-speed sensors to the steering knuckles. (See 04-15-9 FRONT ABS WHEEL-SPEED SENSOR REMOVAL/INSTALLATION.)
    (7) Connect the clip securing the brake hose to the shock absorber. (See 04-11-30 BRAKE HOSE (FRONT) REMOVAL/INSTALLATION.)
    (8) Install the front tires. (See 03-10-1 GENERAL PROCEDURES (FRONT AND REAR AXLES).)
19. Connect and/or install the following parts in the engine compartment.
    (1) Install the fuel hose to the clip shown in the figure.

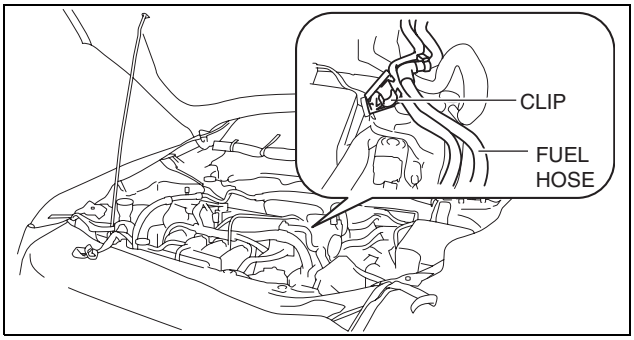

ac5uuw00000739

MANUAL TRANSAXLE [C66M-R, C66MX-R]

(2) Connect the clip shown in the figure.
(3) Install the cowl panel. (See 09-10-41 COWL PANEL REMOVAL/INSTALLATION.)
(4) Install the cowl grille. (See 09-16-3 COWL GRILLE REMOVAL/INSTALLATION.)
(5) Install the windshield wiper arm and blade. (See 09-19-3 WINDSHIELD WIPER ARM AND BLADE REMOVAL/INSTALLATION.)

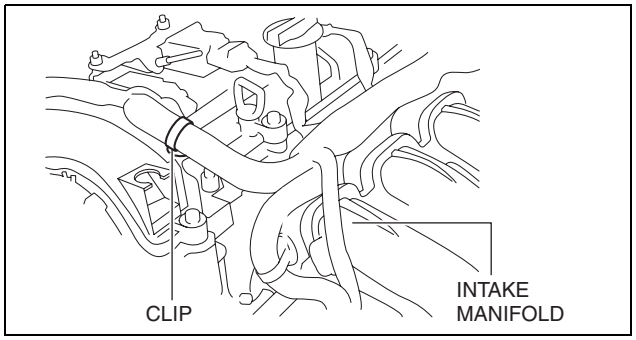

am3uuw0000822

(6) Install the lower radiator hose clip and bracket to the MTX.
(7) Connect the back-up light switch connector. (See 05-15A-3 BACK-UP LIGHT SWITCH REMOVAL/INSTALLATION [C66M-R, C66MX-R].)
(8) Connect the neutral switch connector. (See 05-15A-2 NEUTRAL SWITCH REMOVAL/INSTALLATION [C66M-R, C66MX-R].)

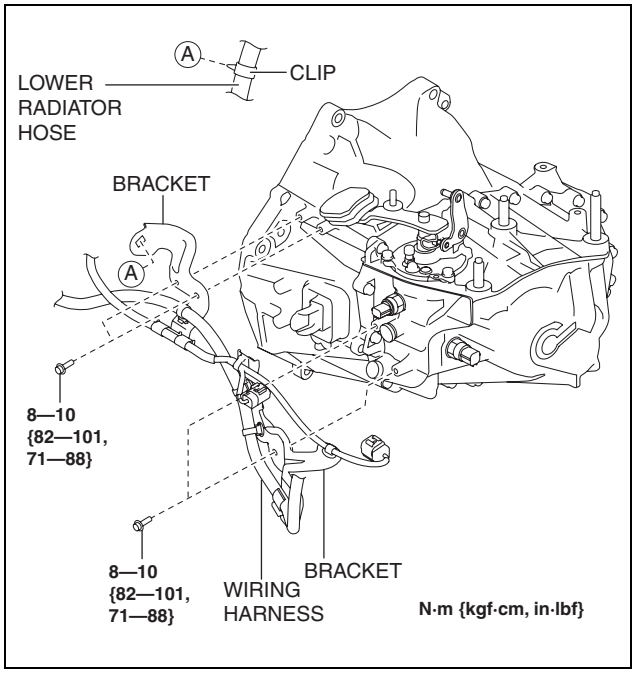

ac5wzw0000285

(9) Connect the ground cable to the No.4 engine mount bracket.

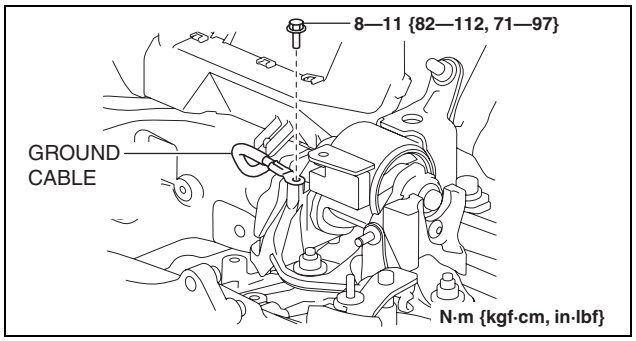

ac5uuw00000756

MANUAL TRANSAXLE [C66M-R, C66MX-R]

(10)Install the control cable bracket to the MTX.
(11)Connect the control cable to the MTX. (See 05-16A-1 MANUAL TRANSAXLE SHIFT MECHANISM REMOVAL/INSTALLATION [C66M-R, C66MX-R].)
(12)Install the battery component. (ex: battery, battery tray and PCM component) (See 01-17A-3 BATTERY REMOVAL/INSTALLATION [SKYACTIV-G 2.0].)
(13)Install the air cleaner component. (ex: air cleaner, air hose) (See 01-13A-6 INTAKE-AIR SYSTEM REMOVAL/INSTALLATION [SKYACTIV-G 2.0].)

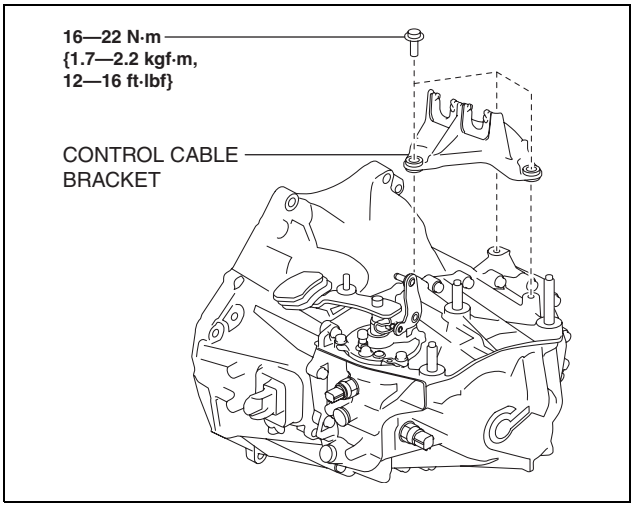

ac5wzw0000285

20. Install the splash shield. (See 09-16-49 SPLASH SHIELD REMOVAL/INSTALLATION.)
21. Install the front under cover No.1. (See 09-16-40 FRONT UNDER COVER No.1 REMOVAL/INSTALLATION.)
22. Add the specified amount of specified transaxle oil. (See MANUAL TRANSAXLE OIL REPLACEMENT [C66M-R].)
23. Install the front under cover No.2. (See 09-16-41 FRONT UNDER COVER No.2 REMOVAL/INSTALLATION.)
24. Connect the negative battery cable. (See 01-17A-11 NEGATIVE BATTERY CABLE DISCONNECTION/CONNECTION [SKYACTIV-G 2.0].) (See 01-17A-13 NEGATIVE BATTERY CABLE DISCONNECTION/CONNECTION [SKYACTIV-G 2.0 (WITHOUT i-stop)].)
25. Install the plug hole plate. (See 01-10A-6 PLUG HOLE PLATE REMOVAL/INSTALLATION [SKYACTIV-G 2.0].)
26. If the MTX is overhauled, perform the “INSPECTION AFTER MANUAL TRANSAXLE OVERHAUL”. (See 05-15A-31 INSPECTION AFTER MANUAL TRANSAXLE OVERHAUL [C66M-R, C66MX-R].)

05

INSPECTION AFTER MANUAL TRANSAXLE OVERHAUL [C66M-R, C66MX-R]

id0515ma159500

1. After warming up the engine, drive the vehicle and inspect the following items:
   (1) No abnormal noise in each shift position.
   (2) Smooth shift operation when shifting gears.
   (3) No gear slipout after shifting gears.
   (4) Back-up light switch operates correctly.

MANUAL TRANSAXLE [C66M-R, C66MX-R]

OIL SEAL (DIFFERENTIAL) REPLACEMENT [C66M-R, C66MX-R]

id0515ma160100

1. Remove the front under cover No.2. (See 09-16-41 FRONT UNDER COVER No.2 REMOVAL/INSTALLATION.)
2. Drain the manual transaxle oil. (See MANUAL TRANSAXLE OIL REPLACEMENT [C66M-R].)
3. Disconnect the drive shaft (LH) from the MTX. (See 03-13-3 FRONT DRIVE SHAFT REMOVAL/INSTALLATION.)
4. Disconnect the drive shaft (RH) from the MTX. (2WD) (See 03-13-3 FRONT DRIVE SHAFT REMOVAL/INSTALLATION.)
5. Remove the drive shaft (RH). (4WD) (See 03-13-3 FRONT DRIVE SHAFT REMOVAL/INSTALLATION.)
6. Remove the front crossmember component and No.1 engine mount rubber as a single unit. (See 02-13-15 FRONT CROSSMEMBER REMOVAL/INSTALLATION.)
7. Remove the exhaust manifold. (4WD) (See 01-15A-2 EXHAUST SYSTEM REMOVAL/INSTALLATION [SKYACTIV-G 2.0].)
8. Remove the transfer. (4WD) (See 03-16A-4 TRANSFER REMOVAL/INSTALLATION [C66MX-R].)
9. Remove the oil seal (LH).
10. Remove the oil seal (RH).

2WD

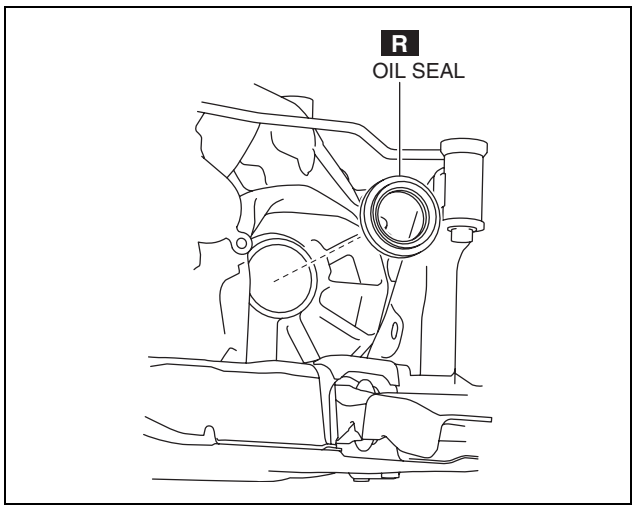

ac5uuw00000758

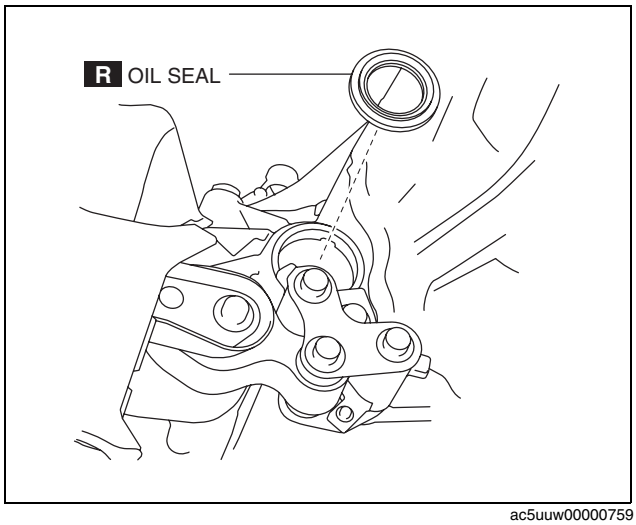

ac5uuw00000759

4WD

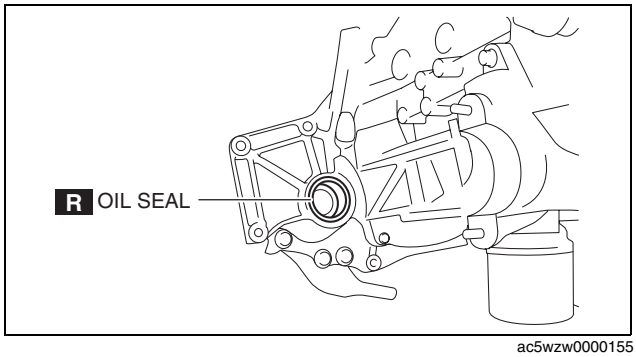

ac5wzw0000155

MANUAL TRANSAXLE [C66M-R, C66MX-R]

11. Using the **SST**s and a hammer, tap a new oil seal (LH) in evenly until the **SST**s contacts the transaxle case.
12. Using the **SST**s and a hammer, tap a new oil seal (RH) in evenly until the **SST**s contacts the transaxle case.

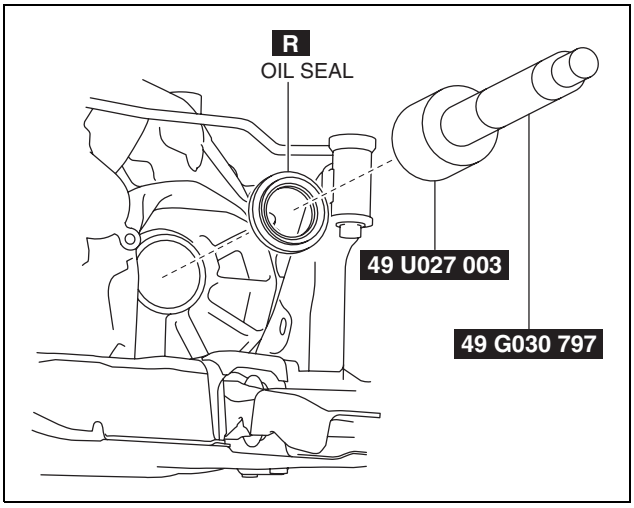

ac5uuw00000760

2WD
4WD

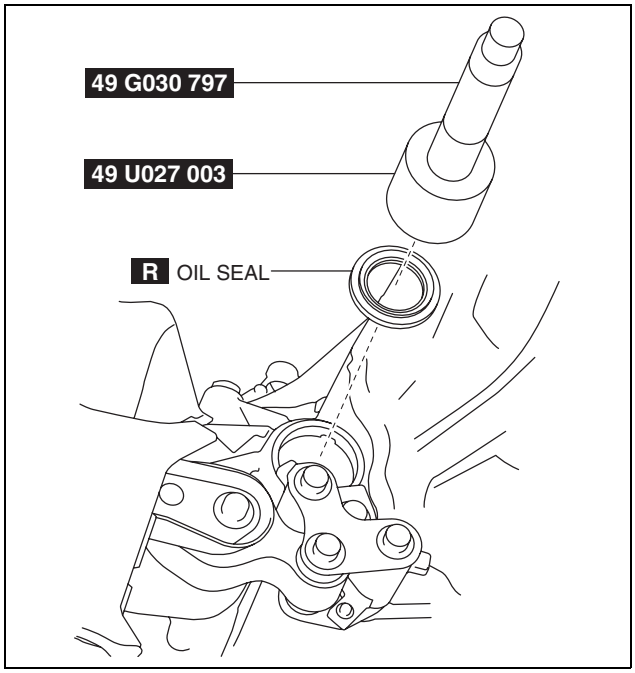

ac5uuw00000761

13. Coat the lip of each oil seal with transaxle oil.
14. Install in the reverse order of removal.
15. Add the specified amount of specified transaxle oil. (See MANUAL TRANSAXLE OIL REPLACEMENT [C66M-R].)

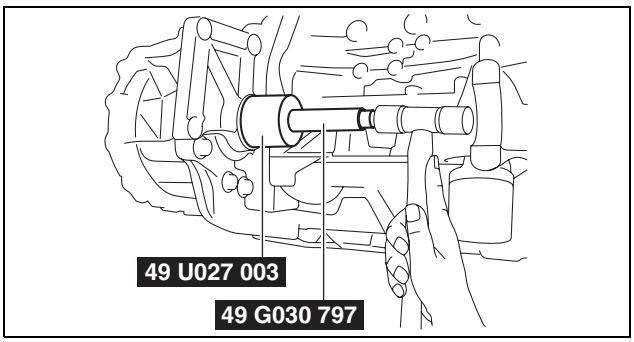

ac5wzw0000155

05-15B MANUAL TRANSAXLE [D66M-R, D66MX-R]

MANUAL TRANSAXLE LOCATION INDEX [D66M-R, D66MX-R] 05-15B–1
MANUAL TRANSAXLE OIL INSPECTION [D66M-R, D66MX-R]. . . . 05-15B–2
MANUAL TRANSAXLE OIL REPLACEMENT [D66M-R, D66MX-R] 05-15B–2
NEUTRAL SWITCH REMOVAL/INSTALLATION [D66M-R, D66MX-R] 05-15B–2
BACK-UP LIGHT SWITCH REMOVAL/INSTALLATION [D66M-R, D66MX-R] 05-15B–3
MANUAL TRANSAXLE REMOVAL/INSTALLATION [D66M-R] 05-15B–4
Removal 05-15B–4
Installation 05-15B–12
MANUAL TRANSAXLE REMOVAL/INSTALLATION [D66MX-R] 05-15B–18
Removal 05-15B–18
Installation 05-15B–25
INSPECTION AFTER MANUAL TRANSAXLE OVERHAUL [D66M-R, D66MX-R]. 05-15B–29
OIL SEAL (DIFFERENTIAL) REPLACEMENT [D66M-R, D66MX-R]. 05-15B–30

MANUAL TRANSAXLE [D66M-R, D66MX-R]

MANUAL TRANSAXLE LOCATION INDEX [D66M-R, D66MX-R]

id0515md159400

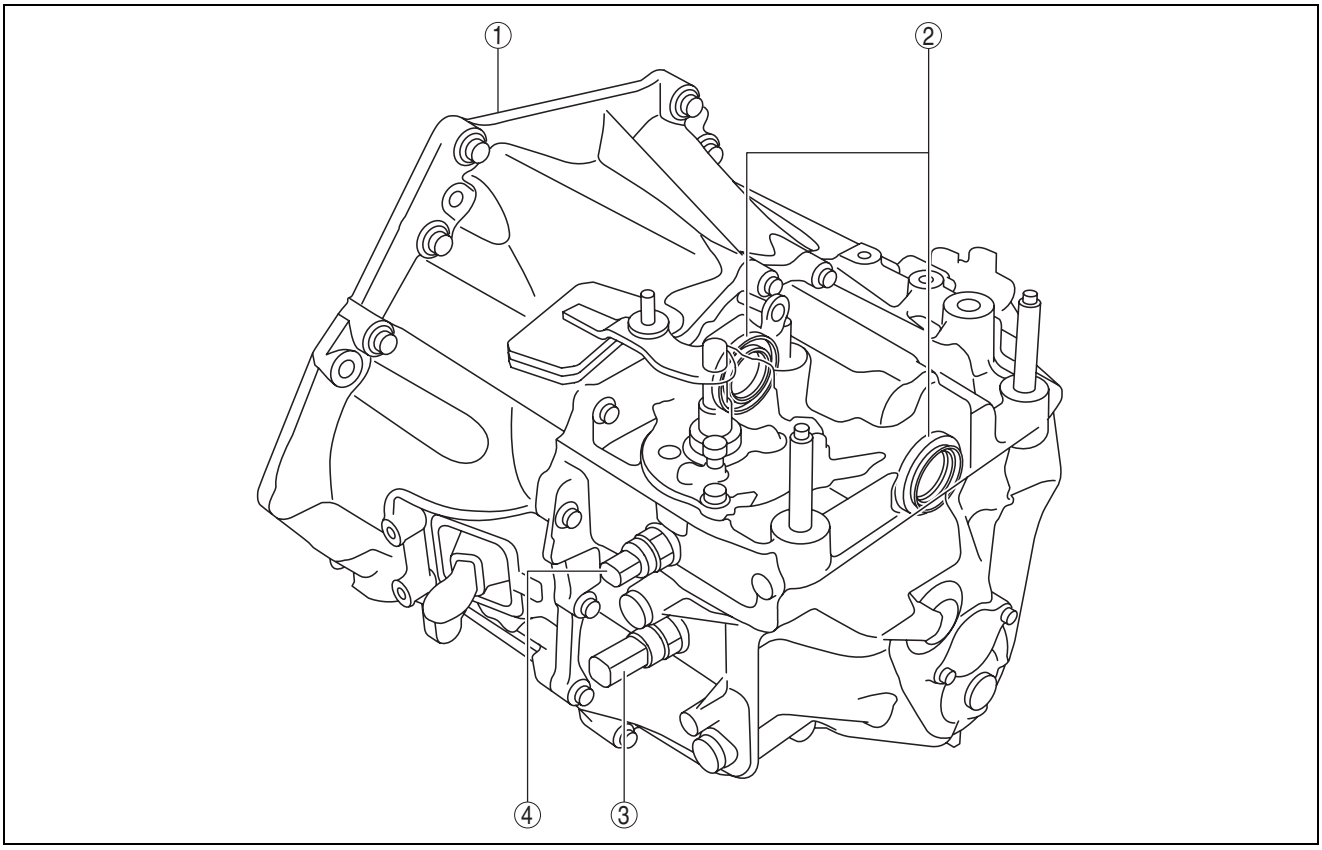

ac5wzw0000343

1	Manual transaxle (See 05-15B-2 MANUAL TRANSAXLE OIL INSPECTION [D66M-R, D66MX-R].) (See 05-15B-2 MANUAL TRANSAXLE OIL REPLACEMENT [D66M-R, D66MX-R].) (See 05-15B-4 MANUAL TRANSAXLE REMOVAL/INSTALLATION [D66M-R].) (See 05-15B-18 MANUAL TRANSAXLE REMOVAL/INSTALLATION [D66MX-R].)

2	Oil seal (differential) (See 05-15B-30 OIL SEAL (DIFFERENTIAL) REPLACEMENT [D66M-R, D66MX-R].)
3	Back-up light switch (See 05-15B-3 BACK-UP LIGHT SWITCH REMOVAL/INSTALLATION [D66M-R, D66MX-R].)
4	Neutral switch (See 05-15B-2 NEUTRAL SWITCH REMOVAL/INSTALLATION [D66M-R, D66MX-R].)

MANUAL TRANSAXLE [D66M-R, D66MX-R]

MANUAL TRANSAXLE OIL INSPECTION [D66M-R, D66MX-R]

id0515md159600

1. Park the vehicle on level ground.
2. Remove the front under cover No.2. (See 09-16-41 FRONT UNDER COVER No.2 REMOVAL/INSTALLATION.)
3. Remove the oil level plug and gasket.
4. Verify that the manual transaxle oil is near the brim of the plug port.
   - When the manual transaxle oil level is lower than the lower limit, add manual transaxle oil.

   Manual transaxle oil grade
   API service GL-4
   Manual transaxle oil viscosity
   SAE 75W-80

5. Install a new gasket and the oil level plug.

   Tightening torque
   39—59 N·m {4.0—6.0 kgf·m, 29—43 ft·lbf}

6. Install the front under cover No.2. (See 09-16-41 FRONT UNDER COVER No.2 REMOVAL/INSTALLATION.)

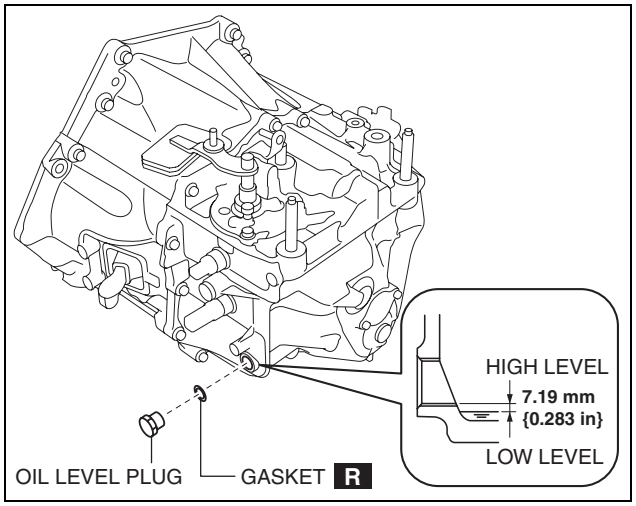

ac5wzw0000343

MANUAL TRANSAXLE OIL REPLACEMENT [D66M-R, D66MX-R]

id0515md159700

1. Park the vehicle on level ground.
2. Remove the front under cover No.2. (See 09-16-41 FRONT UNDER COVER No.2 REMOVAL/INSTALLATION.)
3. Remove the drain plug and gasket, and drain the manual transaxle oil.
4. Install a new gasket and the drain plug.

   Tightening torque
   39—59 N·m {4.0—6.0 kgf·m, 29—43 ft·lbf}

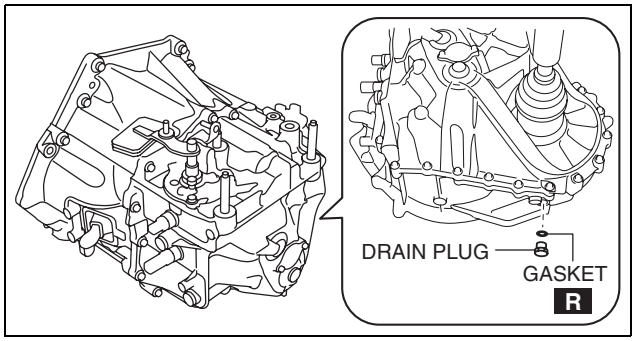

ac5wzw0000343

5. Remove the oil level plug and gasket.
6. Add the specified manual transaxle oil through the oil level plug port.

   Manual transaxle oil grade
   API service GL-4
   Manual transaxle oil viscosity
   SAE 75W-80
   Manual transaxle oil capacity (approx. quantity)
   2.40 L {2.54 US qt, 2.11 Imp qt}

7. Install a new gasket and the oil level plug.

   Tightening torque
   39—59 N·m {4.0—6.0 kgf·m, 29—43 ft·lbf}

8. Install the front under cover No.2. (See 09-16-41 FRONT UNDER COVER No.2 REMOVAL/INSTALLATION.)

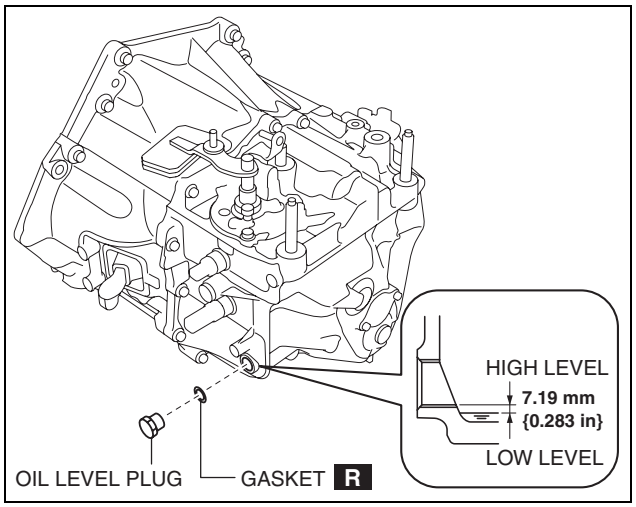

ac5wzw0000343

NEUTRAL SWITCH REMOVAL/INSTALLATION [D66M-R, D66MX-R]

id0515md159800

1. Disconnect the negative battery cable. (See 01-17B-9 NEGATIVE BATTERY CABLE DISCONNECTION/

MANUAL TRANSAXLE [D66M-R, D66MX-R]

CONNECTION [SKYACTIV-D 2.2].)
2. Remove the air cleaner component. (ex: air cleaner, air hose) (See 01-13B-6 INTAKE-AIR SYSTEM REMOVAL/INSTALLATION [SKYACTIV-D 2.2].)
3. Remove in the order indicated in the table.
4. Install in the reverse order of removal.

1	Neutral switch connector
2	Neutral switch
3	Gasket

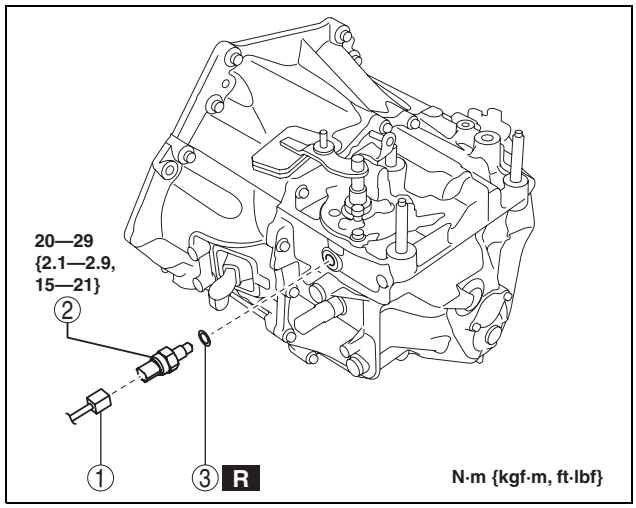

ac5wzw0000343

BACK-UP LIGHT SWITCH REMOVAL/INSTALLATION [D66M-R, D66MX-R]

id0515md159900

1. Disconnect the negative battery cable. (See 01-17B-9 NEGATIVE BATTERY CABLE DISCONNECTION/ CONNECTION [SKYACTIV-D 2.2].)
2. Remove the air cleaner component. (ex: air cleaner, air hose) (See 01-13B-6 INTAKE-AIR SYSTEM REMOVAL/INSTALLATION [SKYACTIV-D 2.2].)
3. Remove in the order indicated in the table.
4. Install in the reverse order of removal.

1	Back-up light switch connector
2	Back-up light switch
3	Gasket

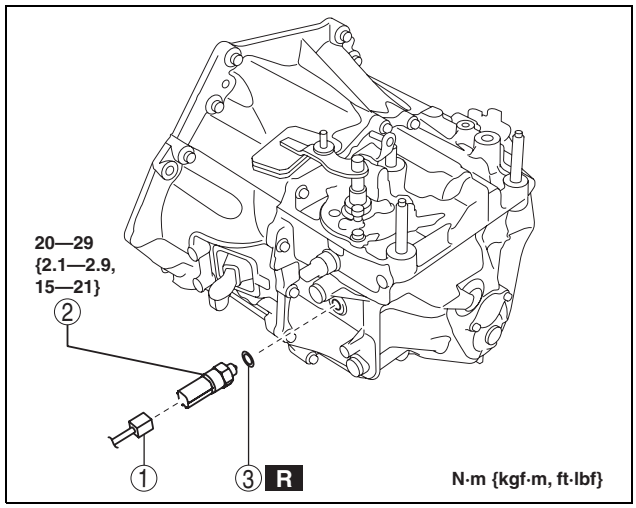

ac5wzw0000343

MANUAL TRANSAXLE [D66M-R, D66MX-R]

MANUAL TRANSAXLE REMOVAL/INSTALLATION [D66M-R]

id0515md1600mb

Removal

1. Disconnect the negative battery cable. (See 01-17B-9 NEGATIVE BATTERY CABLE DISCONNECTION/CONNECTION [SKYACTIV-D 2.2].)
2. Remove the engine cover. (See 01-10B-4 ENGINE COVER REMOVAL/INSTALLATION [SKYACTIV-D 2.2].)
3. Remove the front under cover No.2. (See 09-16-41 FRONT UNDER COVER No.2 REMOVAL/INSTALLATION.)
4. Remove the front under cover No.1. (See 09-16-40 FRONT UNDER COVER No.1 REMOVAL/INSTALLATION.)
5. Remove the splash shield. (See 09-16-49 SPLASH SHIELD REMOVAL/INSTALLATION.)
6. Drain the manual transaxle oil. (See 05-15B-2 MANUAL TRANSAXLE OIL REPLACEMENT [D66M-R, D66MX-R].)
7. Disconnect and/or remove the following parts in the engine compartment.
   (1) Remove the air cleaner component. (ex: air cleaner, air hose) (See 01-13B-6 INTAKE-AIR SYSTEM REMOVAL/INSTALLATION [SKYACTIV-D 2.2].)
   (2) Remove the battery component. (ex: battery, battery tray) (See 01-17B-3 BATTERY REMOVAL/INSTALLATION [SKYACTIV-D 2.2].)
   (3) Disconnect the control cable from the MTX. (See 05-16B-1 MANUAL TRANSAXLE SHIFT MECHANISM REMOVAL/INSTALLATION [D66M-R, D66MX-R].)
   (4) Remove the control cable bracket from the MTX.

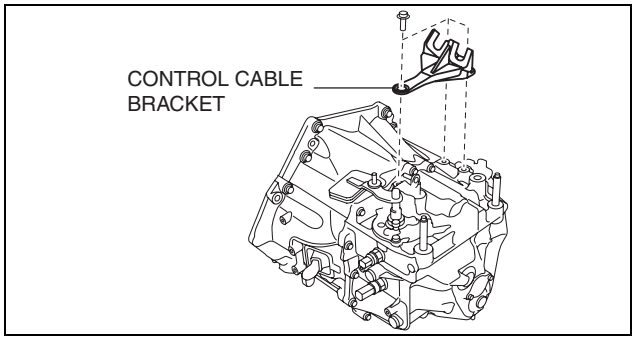

ac5wzw0000343

   (5) Remove the solenoid valve component from the MTX with the hose still connected, and set it out of the way.

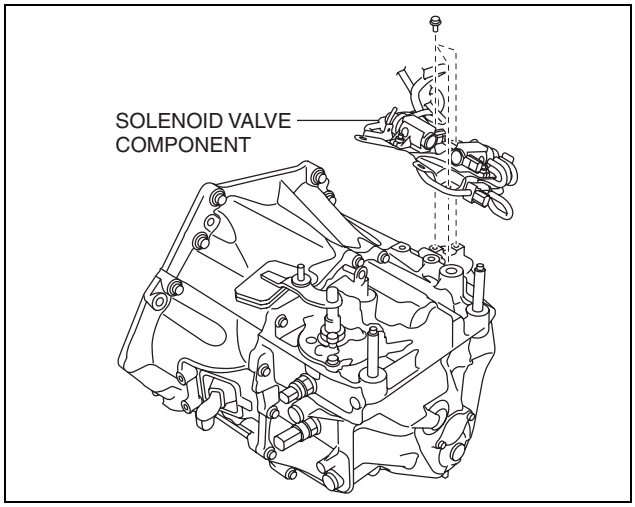

ac5wzw0000347

   (6) Remove the bolt shown in the figure, and set the ground cable aside.
   (7) Drain the engine coolant. (See 01-12B-4 ENGINE COOLANT REPLACEMENT [SKYACTIV-D 2.2].)
   (8) Remove the EGR cooler. (See 01-16B-12 EGR COOLER REMOVAL/INSTALLATION [SKYACTIV-D 2.2].)
   (9) Disconnect the neutral switch connector from the MTX. (See 05-15B-2 NEUTRAL SWITCH REMOVAL/INSTALLATION [D66M-R, D66MX-R].)

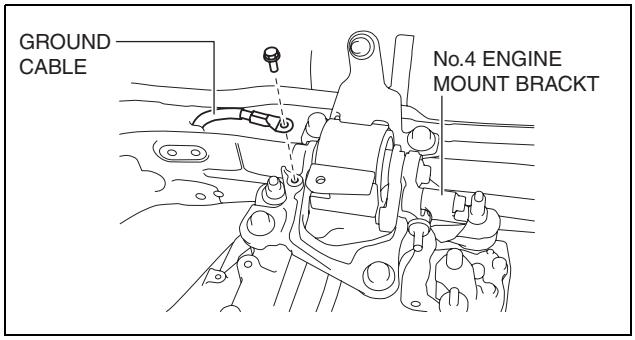

ac5wzw0000344

MANUAL TRANSAXLE [D66M-R, D66MX-R]

(10)Disconnect the back-up light switch connector from the MTX. (See 05-15B-3 BACK-UP LIGHT SWITCH REMOVAL/INSTALLATION [D66M-R, D66MX-R].)
(11)Disconnect the wiring harness from the MTX, and set the wiring harness aside.

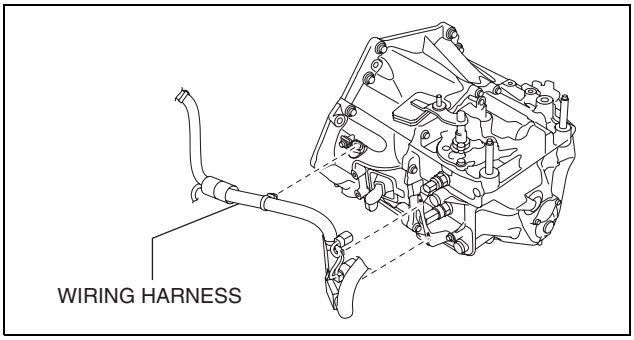

ac5wzw0000344

(12)Remove the brackets from the MTX.

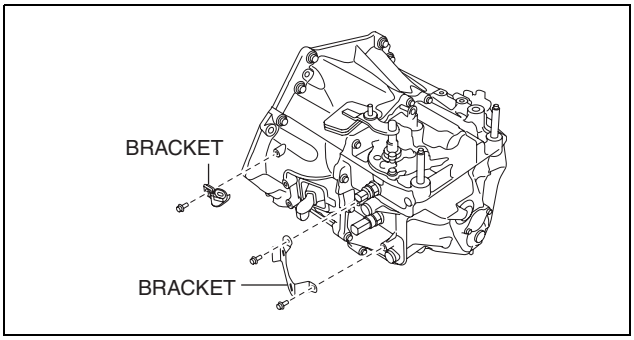

ac5wzw0000344

8. Disconnect and/or remove the following parts related to the suspension and axle.
   (1) Remove the front tires. (See 03-10-1 GENERAL PROCEDURES (FRONT AND REAR AXLES).)
   (2) Disconnect the clip securing the brake hose from the shock absorber. (See 04-11-30 BRAKE HOSE (FRONT) REMOVAL/INSTALLATION.)
   (3) Disconnect the ABS wheel-speed sensors from the steering knuckles. (See 04-15-9 FRONT ABS WHEEL-SPEED SENSOR REMOVAL/INSTALLATION.)
   (4) Disconnect the tie-rod end ball joints from the steering knuckles. (See 02-13-15 FRONT CROSSMEMBER REMOVAL/INSTALLATION.)
   (5) Disconnect the stabilizer control links from the stabilizer. (See 02-13-10 FRONT STABILIZER REMOVAL/INSTALLATION.)
   (6) Disconnect the front lower arms from the steering knuckles. (See 02-13-15 FRONT CROSSMEMBER REMOVAL/INSTALLATION.)
   (7) Disconnect the drive shaft (LH) from the MTX. (See 03-13-3 FRONT DRIVE SHAFT REMOVAL/INSTALLATION.)
   (8) Disconnect the drive shaft (RH) from the MTX. (See 03-13-3 FRONT DRIVE SHAFT REMOVAL/INSTALLATION.)
   (9) Remove the seal rubber.
9. Disconnect and/or remove the following parts from the underside of the vehicle.
   (1) Remove the clutch release cylinder with the clutch pipe still connected and set it out of the way. (See 05-10B-24 CLUTCH RELEASE CYLINDER REMOVAL/INSTALLATION [D66M-R, D66MX-R].)
   (2) Remove the starter. (See 01-19B-2 STARTER REMOVAL/INSTALLATION [SKYACTIV-D 2.2].)
   (3) Remove the front crossmember component and No.1 engine mount rubber as a single unit. (See 02-13-15 FRONT CROSSMEMBER REMOVAL/INSTALLATION.)

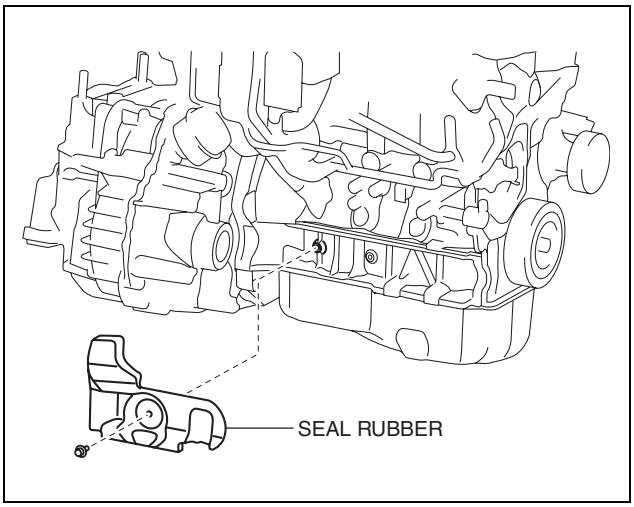

ac5wzw0000344

MANUAL TRANSAXLE [D66M-R, D66MX-R]

(4) Remove the bracket plate and No.1 engine mount bracket from the MTX.

10. Install the **SST** using the following procedure.

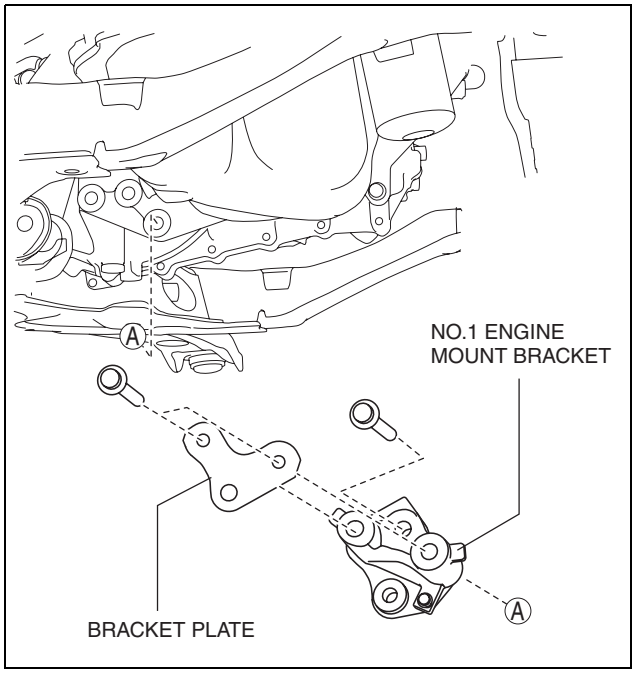

ac5wzw0000344

Caution

- **Refer to the SST instruction manual for the basic handing procedure.**

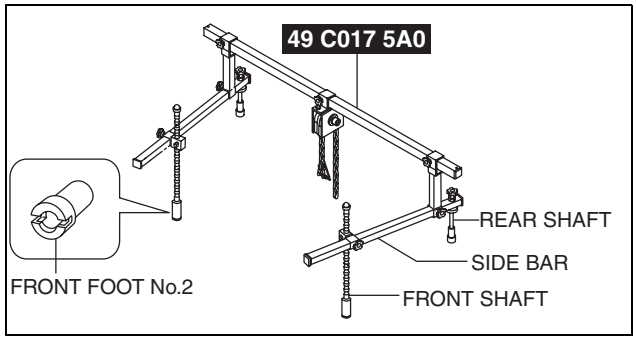

am3uuw0000884

(1) Install one front foot No.2 to each of the left and right front shafts of the **SST**.

MANUAL TRANSAXLE [D66M-R, D66MX-R]

(2) Protect the positions shown in the figure using tape.

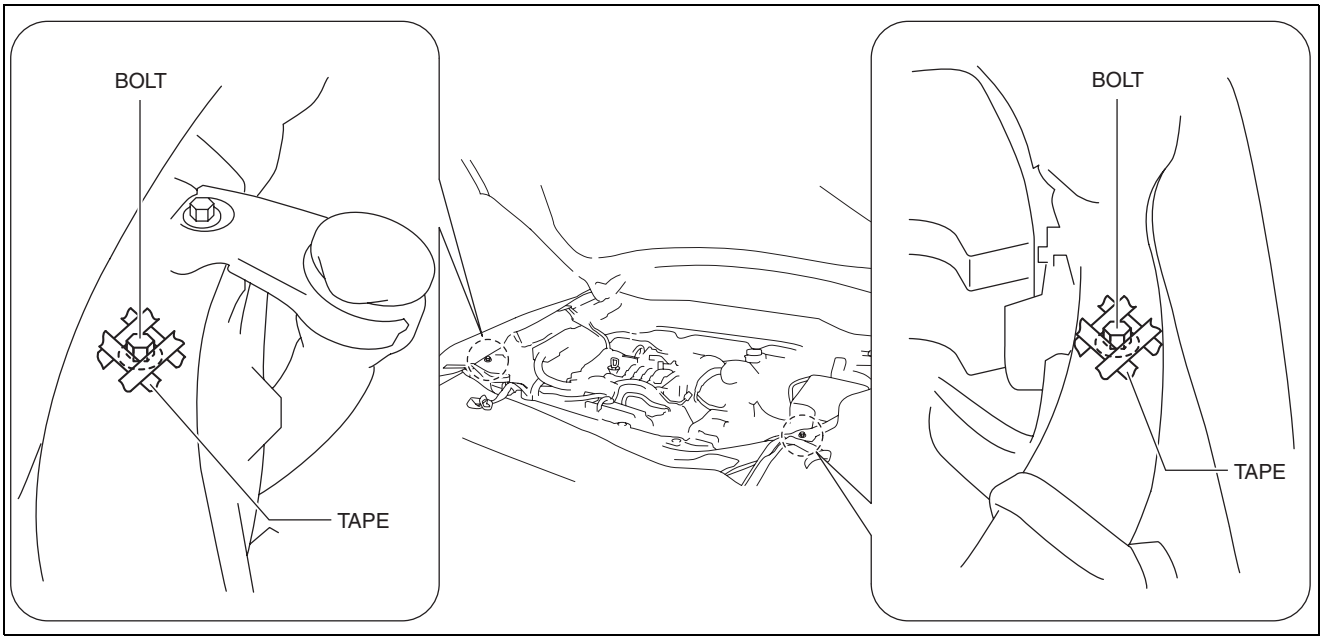

ac5wzw0000459

(3) Remove the engine cover adapter.

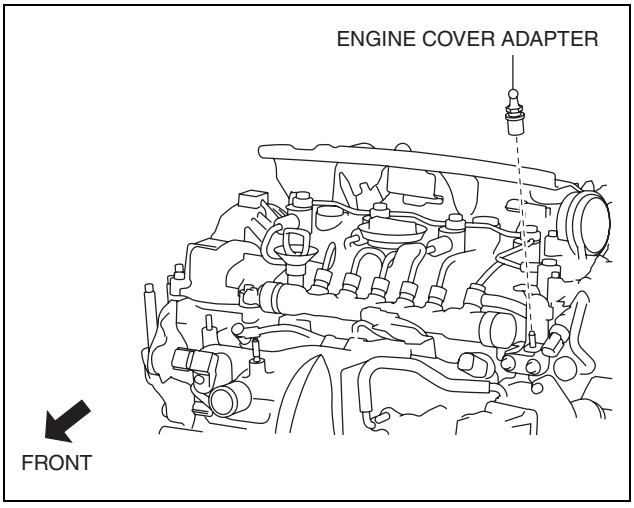

ac5wzw0000344

(4) Install the **SST** to the position shown in the figure using the following bolt and washer.

Bolt: part number 99794 1025 or an M10 × 1.25, length 25 mm {0.98 in}
Washer: approx. 3 mm {0.1 in} thickness
Tightening torque
38—51 N·m {3.9—5.2 kgf·m, 29—37 ft·lbf}

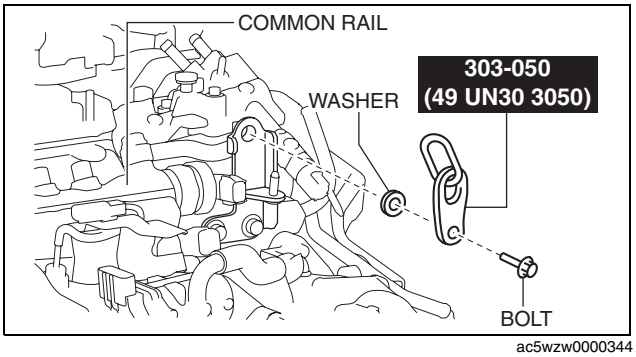

ac5wzw0000344

MANUAL TRANSAXLE [D66M-R, D66MX-R]

(5) Install the **SST** to the position shown in the figure using the following bolt.

Bolt: part number 99794 1025 or an M10 × 1.25, length 25 mm {0.98 in}
Tightening torque
38—51 N·m {3.9—5.2 kgf·m, 29—37 ft·lbf}

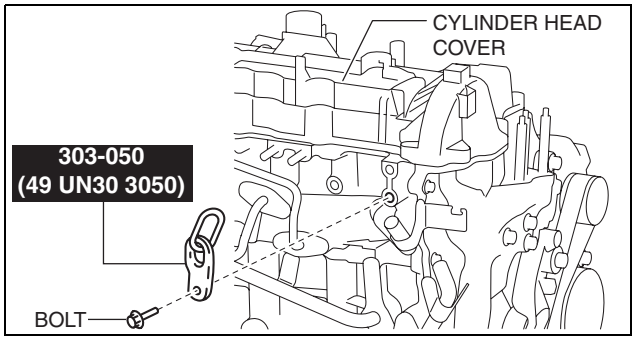

ac5wzw0000344

(6) As shown in the figure, set the rear shafts of the **SST** to the left and right shock absorber nuts.

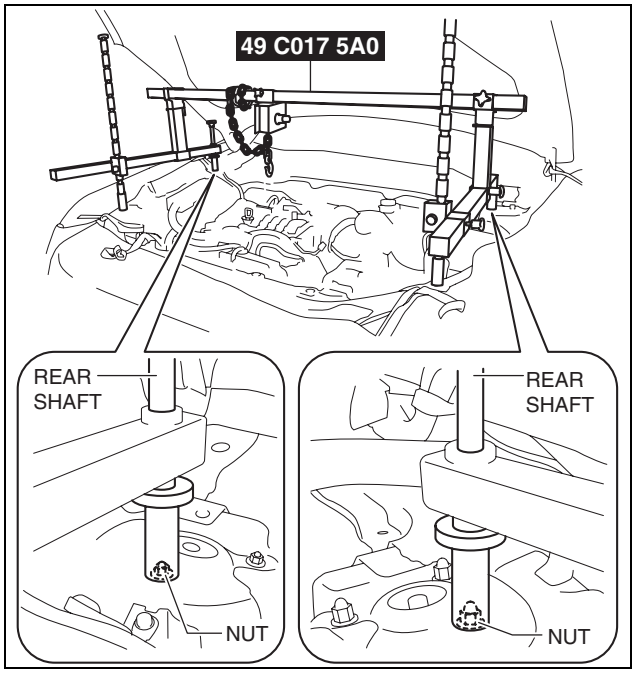

ac5wzw0000344

(7) As shown in the figure, set the front shafts of the **SST** to the left and right bolts.

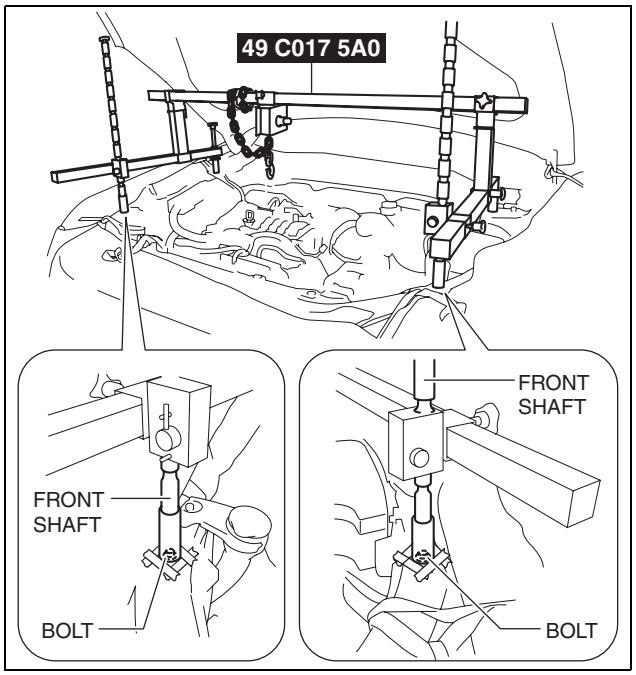

ac5wzw0000345

MANUAL TRANSAXLE [D66M-R, D66MX-R]

(8) Install the **SST (49 L017 5A0)** to the **SST (49 C017 5A0)** as shown in the figure.

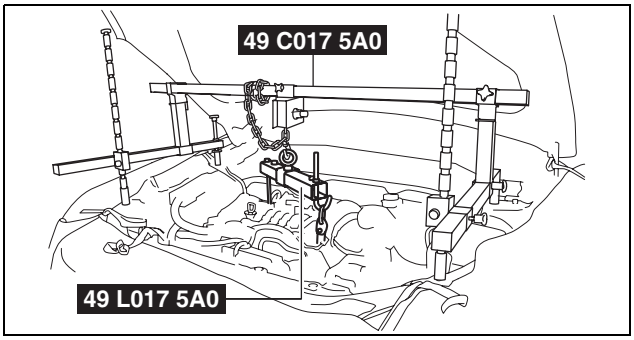

ac5wzw0000345

(9) Install the **SST (49 L017 5A0)** to the **SST (49 UN30 3050)** with the hook of the **SST (49 L017 5A0)** facing outward.
(10) Adjust the height of the left and right side bars so that they are leveled, then tighten each part of the **SST**.
(11) Apply tension to the chain to secure the engine.

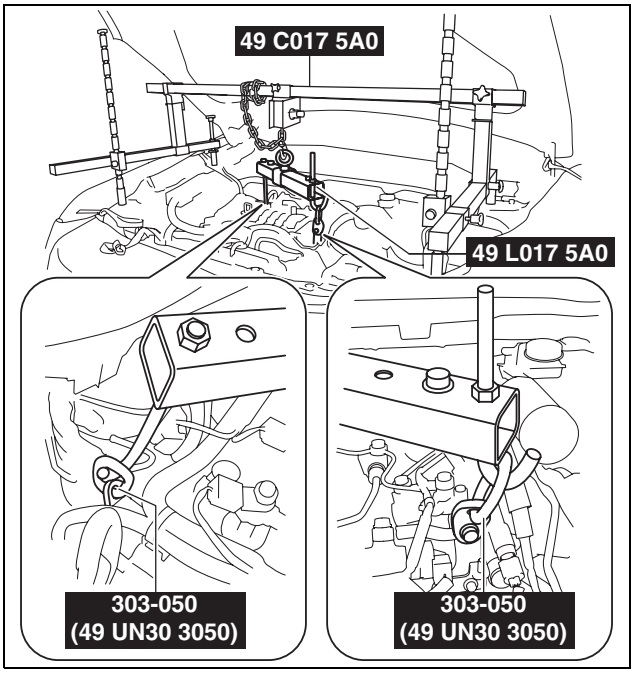

ac5wzw0000345

MANUAL TRANSAXLE [D66M-R, D66MX-R]

11. Remove in the order indicated in the table.

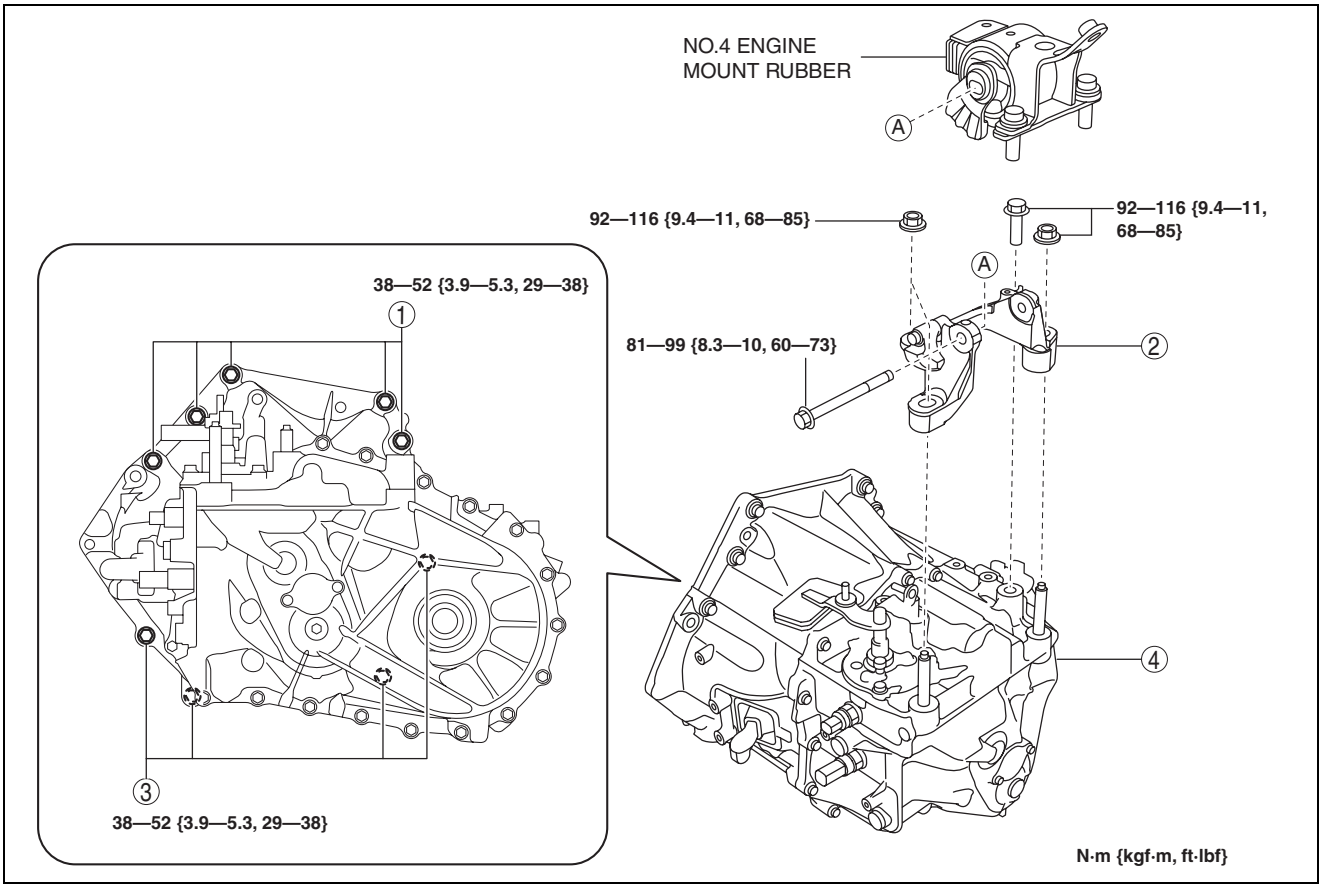

ac5wzw0000345

1	Transaxle mounting bolt (upper side)
2	No.4 engine mount bracket (See 05-15B-11 No.4 Engine mount bracket removal note.)
3	Transaxle mounting bolt (lower side) (See 05-15B-11 Transaxle mounting bolt removal note.)
4	MTX

MANUAL TRANSAXLE [D66M-R, D66MX-R]

No.4 Engine mount bracket removal note

Caution

- **A slot has been adopted for the No.4 engine mount bracket installation hole. If the No.4 engine mount bracket is deviated from the original position when installing the No.4 engine mount, engine noise or vibration could increase. When removing the No.4 engine mount, place alignment marks on the No.4 engine mount bracket so that they can be assembled to the same positions as before removal.**

1. Place alignment marks on the locations shown in the figure so that they can be assembled to the same positions as before removal.

   Note

   - Paint so that the outline of the nut is framed on the bracket side.

2. Remove the No.4 engine mount bracket.

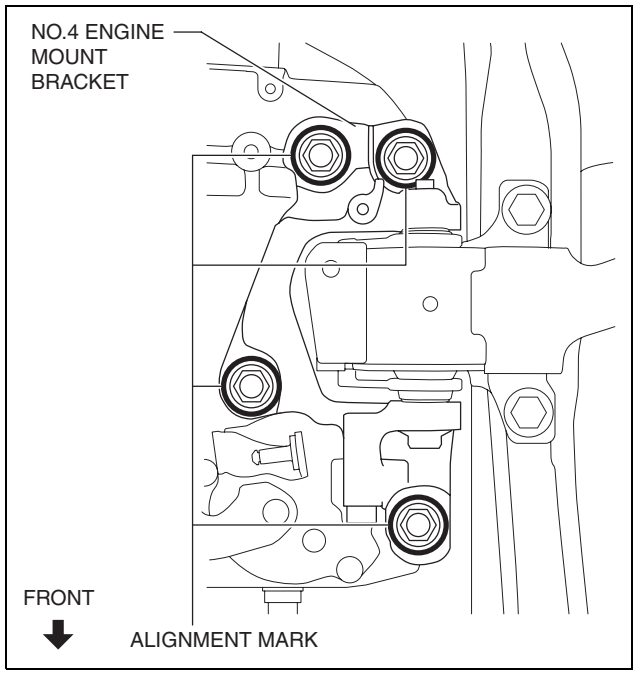

ac5wzw0000345

Transaxle mounting bolt removal note

Warning

- **Remove the MTX carefully, holding it steady. If the MTX falls it could be damaged or cause injury.**

1. Adjust the **SST** and lean the engine toward the MTX.

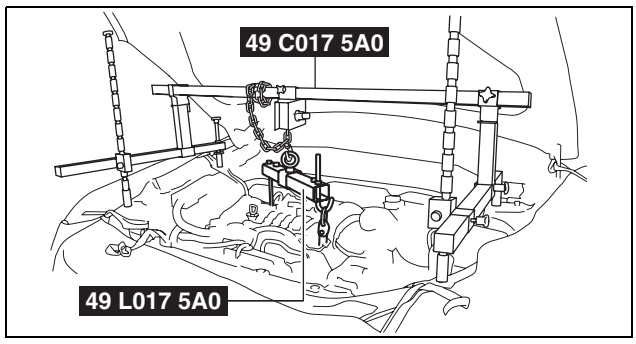

ac5wzw0000345

2. Support the MTX on a jack.

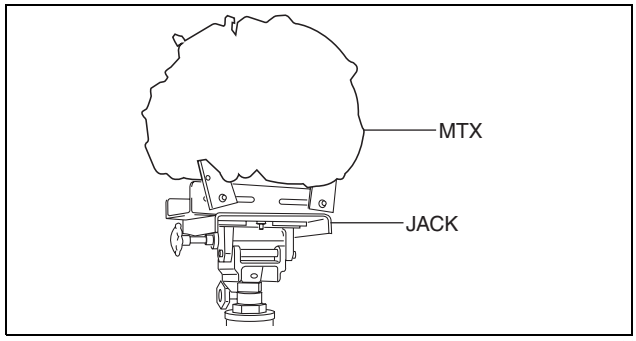

ac5uuw00000744

MANUAL TRANSAXLE [D66M-R, D66MX-R]

3. Remove the transaxle mounting bolts (lower side).
4. Remove the MTX.

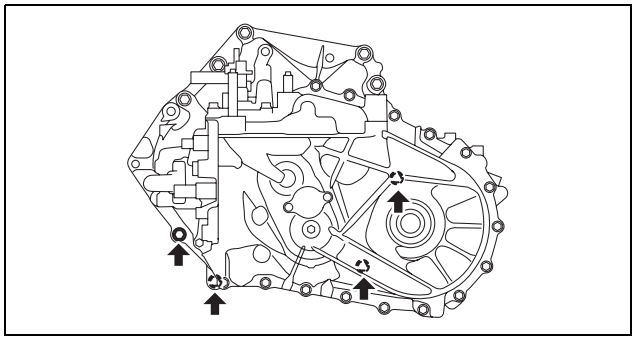
ac5wzw0000345

Installation

Warning
- **Install the MTX carefully, holding it steady. If the MTX falls it could be damaged or cause injury.**

1. Set the MTX on a jack and lift into place.

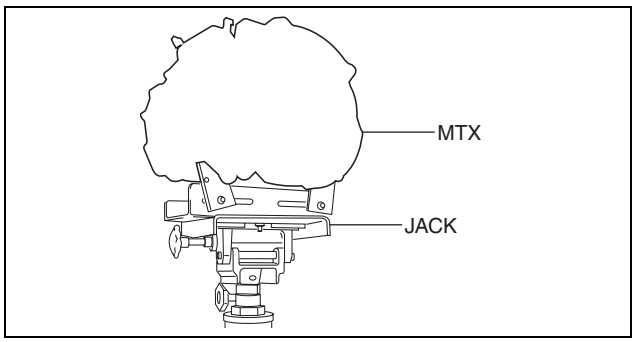

ac5uuw00000744

2. Install the MTX to the engine, and tighten the transaxle mounting bolts.

Tightening torque
38—52 N·m {3.9—5.3 kgf·m, 29—38 ft·lbf}

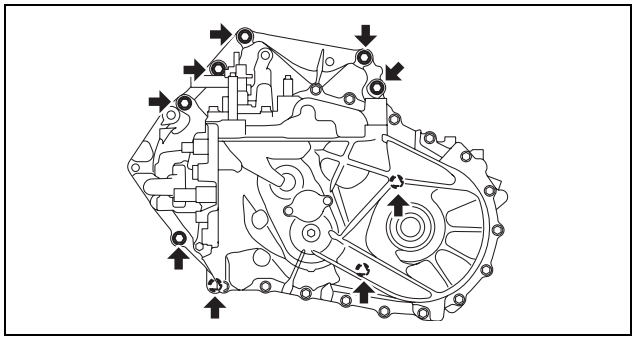
ac5wzw0000345

3. Tighten the stud bolts for the MTX.

Note
- If the No.4 engine mount bracket nut is loosened, tighten the stud bolts for the MTX because they may be loosened.

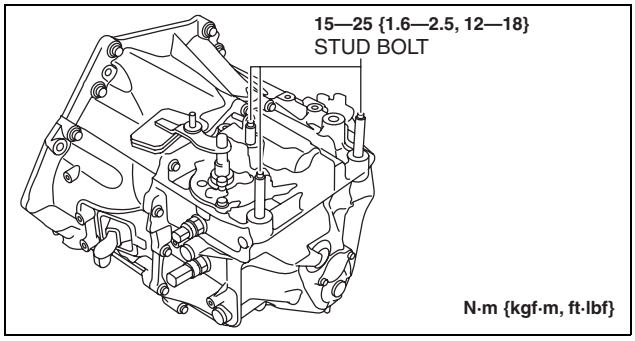

ac5wzw0000345

MANUAL TRANSAXLE [D66M-R, D66MX-R]

4. Install the No.4 engine mount bracket to No.4 engine mount rubber, and temporarily tighten the installation bolt.

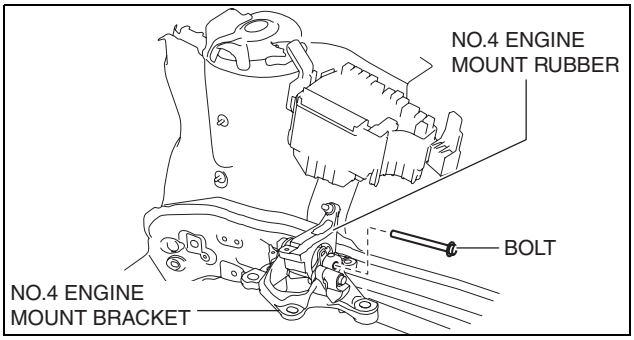

ac5wzw0000345

5. Pull up the MTX using the **SST**s, pass the MTX stud bolts through the No.4 engine mount bracket, and temporarily tighten the No.4 engine mount installation nuts and bolt.

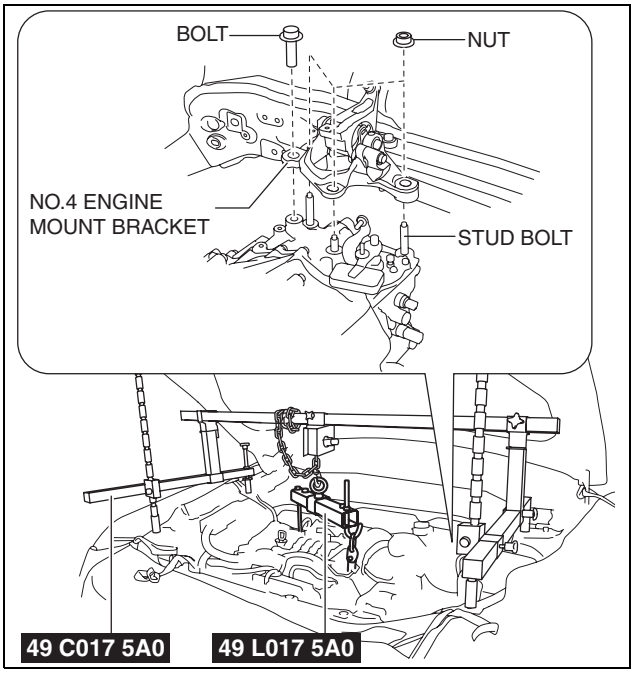

ac5wzw0000345

6. Install the No.1 engine mount bracket and bracket plate to the MTX, and temporarily tighten the installation bolts.
7. Install the front crossmember component and No.1 engine mount rubber as a single unit. (See 02-13-15 FRONT CROSSMEMBER REMOVAL/ INSTALLATION.)

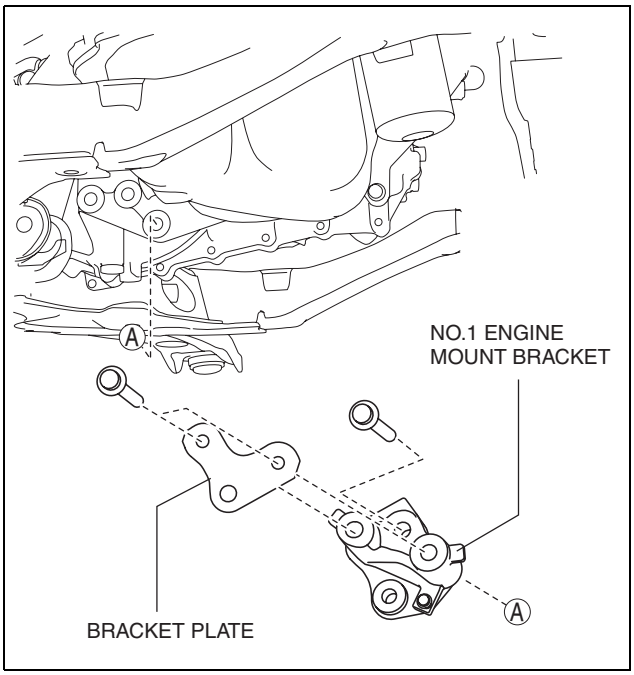

ac5wzw0000344

MANUAL TRANSAXLE [D66M-R, D66MX-R]

8. Temporarily tighten the No.1 engine mount rubber installation bolts.
9. Align the alignment marks on the No.4 engine mount bracket and nuts, and temporarily tighten the nuts shown in the figure.

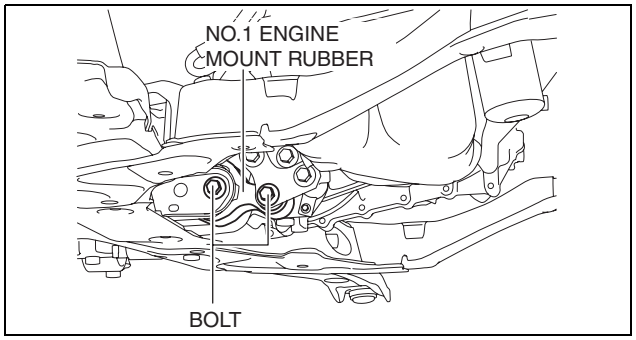

ac5wzw0000346

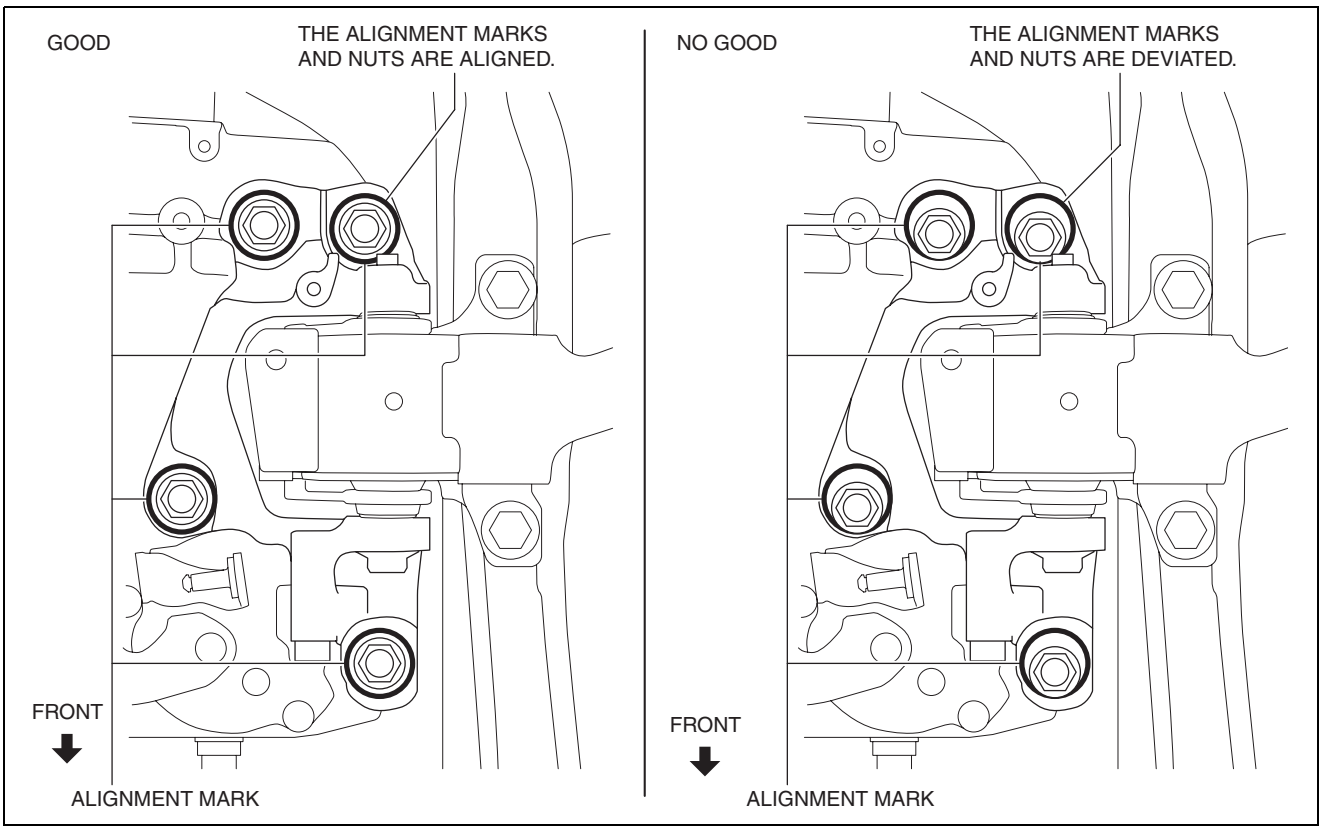

ac5wzw0000346

10. Tighten the No.4 engine mount bracket installation nuts and bolt in the order shown in the figure.

No.	Tightening torque
1	92—116 N·m {9.4—11 kgf·m, 68—85 ft·lbf}
2	81—99 N·m {8.3—10 kgf·m, 60—73 ft·lbf}

11. Remove the **SST (49 C017 5A0)**.

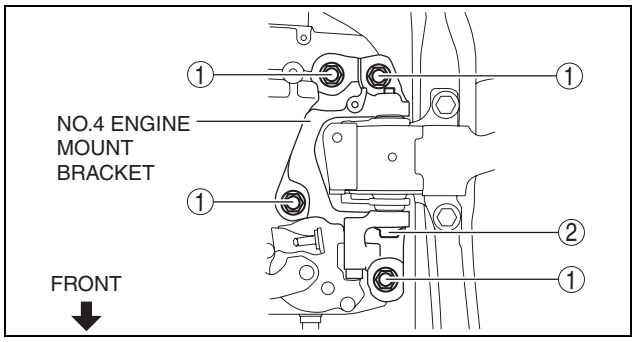

ac5wzw0000346

MANUAL TRANSAXLE [D66M-R, D66MX-R]

12. Tighten the No.1 engine mount bracket and bracket plate installation bolts in the order shown in the figure.

    Tightening torque
    131—153 N·m {14—15 kgf·m, 97—112 ft·lbf}

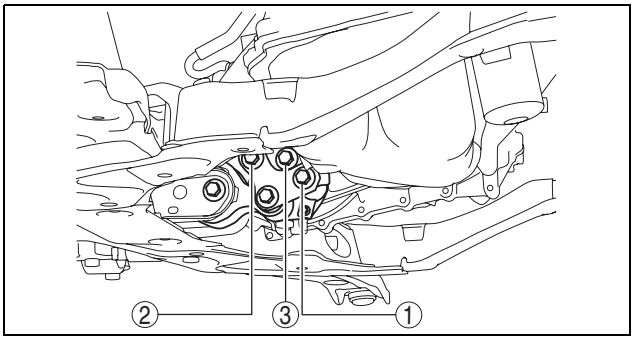

ac5wzw0000346

13. Tighten the No.1 engine mount rubber installation bolts.
14. Connect and/or Install the following parts to the underside of the vehicle.
    (1) Install the starter. (See 01-19B-2 STARTER REMOVAL/INSTALLATION [SKYACTIV-D 2.2].)
    (2) Install the clutch release cylinder to the MTX. (See 05-10B-24 CLUTCH RELEASE CYLINDER REMOVAL/INSTALLATION [D66M-R, D66MX-R].)
15. Connect and/or Install the following parts related to the suspension and axle.
    (1) Install the seal rubber.
    (2) Connect the drive shaft (RH) to the MTX. (See 03-13-3 FRONT DRIVE SHAFT REMOVAL/INSTALLATION.)
    (3) Connect the drive shaft (LH) to the MTX. (See 03-13-3 FRONT DRIVE SHAFT REMOVAL/INSTALLATION.)
    (4) Connect the front lower arms to the steering knuckles. (See 02-13-15 FRONT CROSSMEMBER REMOVAL/INSTALLATION.)
    (5) Connect the stabilizer control links to the stabilizer. (See 02-13-10 FRONT STABILIZER REMOVAL/INSTALLATION.)
    (6) Connect the tie-rod end ball joints to the steering knuckles. (See 02-13-15 FRONT CROSSMEMBER REMOVAL/INSTALLATION.)
    (7) Connect the ABS wheel-speed sensors to the steering knuckles. (See 04-15-9 FRONT ABS WHEEL-SPEED SENSOR REMOVAL/INSTALLATION.)
    (8) Connect the clip securing the brake hose to the shock absorber. (See 04-11-30 BRAKE HOSE (FRONT) REMOVAL/INSTALLATION.)
    (9) Install the front tires. (See 03-10-1 GENERAL PROCEDURES (FRONT AND REAR AXLES).)
16. Connect and/or install the following parts in the engine compartment.

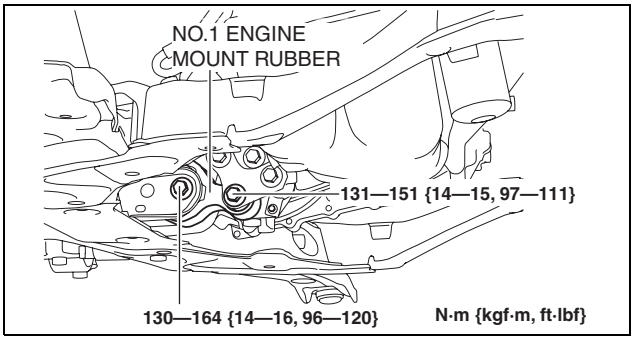

ac5wzw0000346

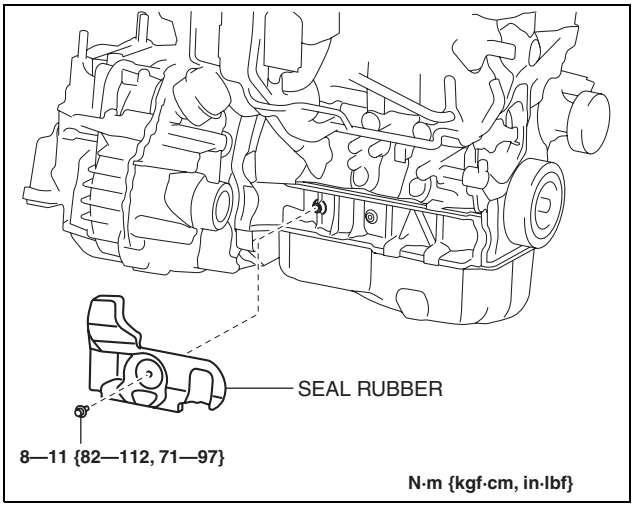

ac5wzw0000346

MANUAL TRANSAXLE [D66M-R, D66MX-R]

(1) Install the engine cover adapter.

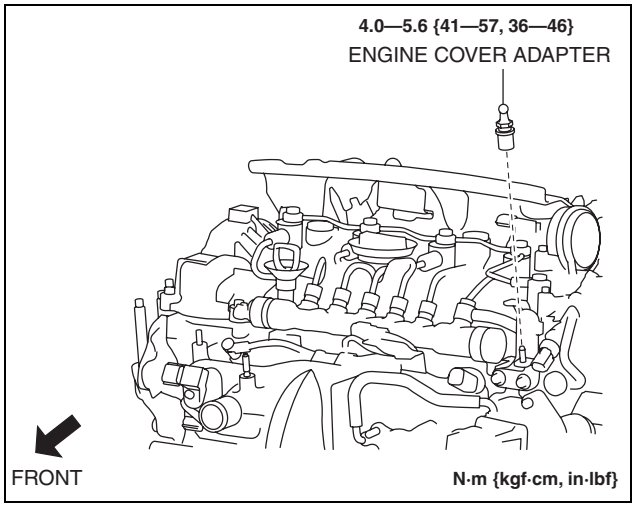

ac5wzw0000346

(2) Install the brackets to the MTX.

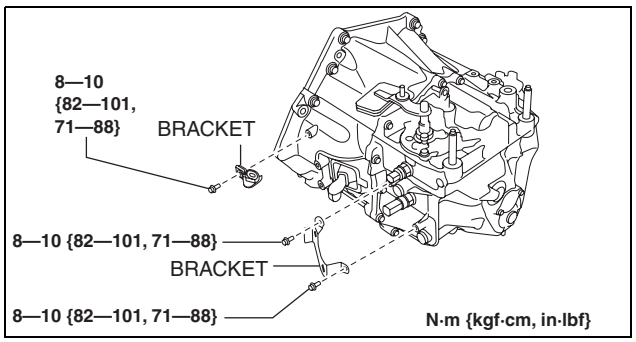

ac5wzw0000346

(3) Connect the wiring harness to the MTX.
(4) Connect the back-up light switch connector.(See 05-15B-3 BACK-UP LIGHT SWITCH REMOVAL/INSTALLATION [D66M-R, D66MX-R].)
(5) Connect the neutral switch connector. (See 05-15B-2 NEUTRAL SWITCH REMOVAL/INSTALLATION [D66M-R, D66MX-R].)
(6) Install the EGR cooler. (See 01-16B-12 EGR COOLER REMOVAL/INSTALLATION [SKYACTIV-D 2.2].)

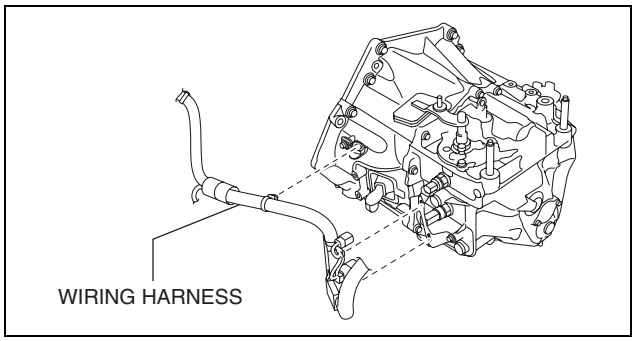

ac5wzw0000344

(7) Connect the ground cable to the No.4 engine mount bracket.

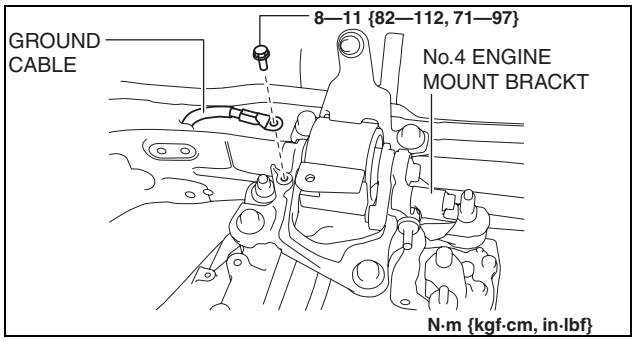

ac5wzw0000346

MANUAL TRANSAXLE [D66M-R, D66MX-R]

(8) Install the solenoid valve component to the MTX.

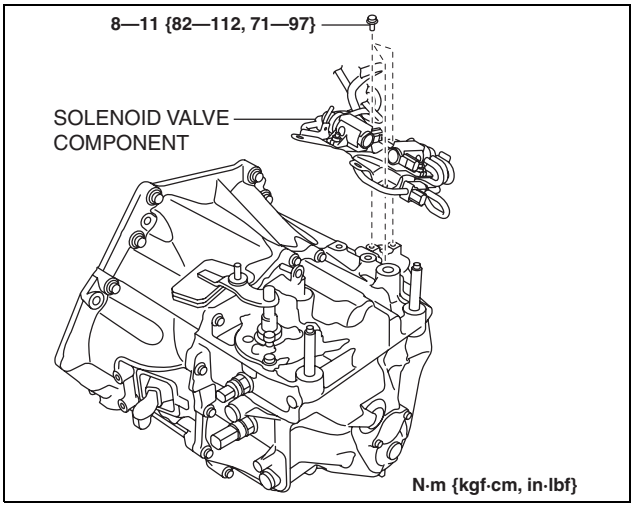

ac5wzw0000514

(9) Install the control cable bracket to the MTX.
(10) Connect the control cable to the MTX. (See 05-16B-1 MANUAL TRANSAXLE SHIFT MECHANISM REMOVAL/INSTALLATION [D66M-R, D66MX-R].)
(11) Install the battery component. (ex: battery, battery tray) (See 01-17B-3 BATTERY REMOVAL/INSTALLATION [SKYACTIV-D 2.2].)
(12) Install the air cleaner component. (ex: air cleaner, air hose) (See 01-13B-6 INTAKE-AIR SYSTEM REMOVAL/INSTALLATION [SKYACTIV-D 2.2].)

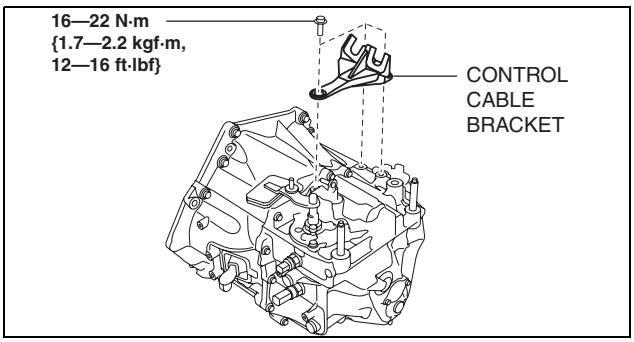

ac5wzw0000346

17. Install the splash shield. (See 09-16-49 SPLASH SHIELD REMOVAL/INSTALLATION.)
18. Install the front under cover No.1. (See 09-16-40 FRONT UNDER COVER No.1 REMOVAL/INSTALLATION.)
19. Refill the engine coolant. (See 01-12B-4 ENGINE COOLANT REPLACEMENT [SKYACTIV-D 2.2].)
20. Add the specified amount of specified transaxle oil. (See 05-15B-2 MANUAL TRANSAXLE OIL REPLACEMENT [D66M-R, D66MX-R].)
21. Install the front under cover No.2. (See 09-16-41 FRONT UNDER COVER No.2 REMOVAL/INSTALLATION.)
22. Connect the negative battery cable. (See 01-17B-9 NEGATIVE BATTERY CABLE DISCONNECTION/CONNECTION [SKYACTIV-D 2.2].)
23. Install the engine cover. (See 01-10B-4 ENGINE COVER REMOVAL/INSTALLATION [SKYACTIV-D 2.2].)
24. If the MTX is overhauled, perform the “INSPECTION AFTER MANUAL TRANSAXLE OVERHAUL”. (See 05-15B-29 INSPECTION AFTER MANUAL TRANSAXLE OVERHAUL [D66M-R, D66MX-R].)

MANUAL TRANSAXLE [D66M-R, D66MX-R]

MANUAL TRANSAXLE REMOVAL/INSTALLATION [D66MX-R]

id0515md1600mc

Removal

1. Disconnect the negative battery cable. (See 01-17B-9 NEGATIVE BATTERY CABLE DISCONNECTION/CONNECTION [SKYACTIV-D 2.2].)
2. Remove the engine cover. (See 01-10B-4 ENGINE COVER REMOVAL/INSTALLATION [SKYACTIV-D 2.2].)
3. Remove the front under cover No.2. (See 09-16-41 FRONT UNDER COVER No.2 REMOVAL/INSTALLATION.)
4. Remove the front under cover No.1. (See 09-16-40 FRONT UNDER COVER No.1 REMOVAL/INSTALLATION.)
5. Remove the splash shield. (See 09-16-49 SPLASH SHIELD REMOVAL/INSTALLATION.)
6. Drain the manual transaxle oil. (See 05-15B-2 MANUAL TRANSAXLE OIL REPLACEMENT [D66M-R, D66MX-R].)
7. Disconnect and/or remove the following parts in the engine compartment.
   (1) Remove the air cleaner component. (ex: air cleaner, air hose) (See 01-13B-6 INTAKE-AIR SYSTEM REMOVAL/INSTALLATION [SKYACTIV-D 2.2].)
   (2) Remove the battery component. (ex: battery, battery tray) (See 01-17B-3 BATTERY REMOVAL/INSTALLATION [SKYACTIV-D 2.2].)
   (3) Disconnect the control cable from the MTX. (See 05-16B-1 MANUAL TRANSAXLE SHIFT MECHANISM REMOVAL/INSTALLATION [D66M-R, D66MX-R].)
   (4) Remove the control cable bracket from the MTX.

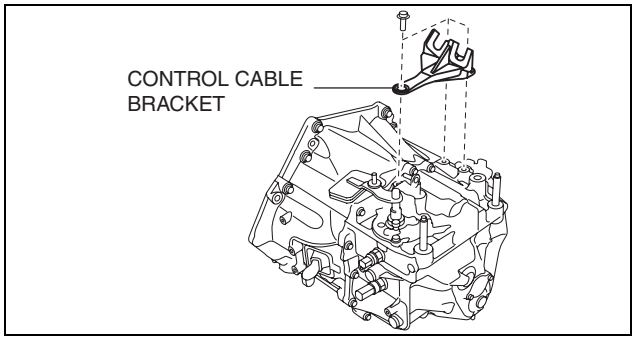

ac5wzw0000347

   (5) Remove the solenoid valve component from the MTX with the hose still connected, and set it out of the way.

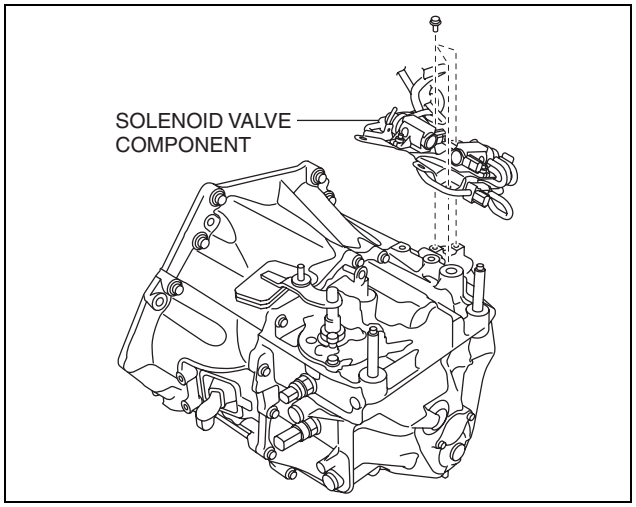

ac5wzw0000347

   (6) Remove the bolt shown in the figure, and set the ground cable aside.
   (7) Drain the engine coolant. (See 01-12B-4 ENGINE COOLANT REPLACEMENT [SKYACTIV-D 2.2].)
   (8) Remove the EGR cooler. (See 01-16B-12 EGR COOLER REMOVAL/INSTALLATION [SKYACTIV-D 2.2].)
   (9) Disconnect the neutral switch connector from the MTX. (See 05-15B-2 NEUTRAL SWITCH REMOVAL/INSTALLATION [D66M-R, D66MX-R].)

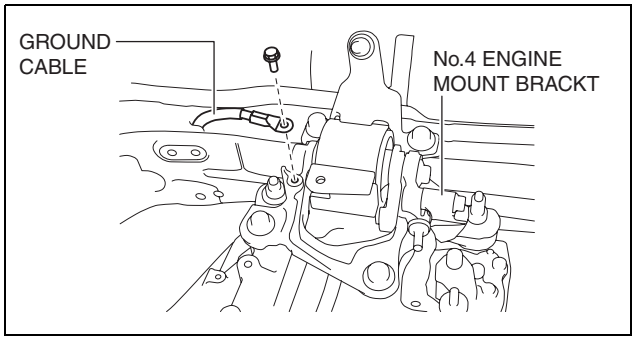

ac5wzw0000347

MANUAL TRANSAXLE [D66M-R, D66MX-R]

(10)Disconnect the back-up light switch connector from the MTX. (See 05-15B-3 BACK-UP LIGHT SWITCH REMOVAL/INSTALLATION [D66M-R, D66MX-R].)
(11)Disconnect the wiring harness from the MTX, and set the wiring harness aside.

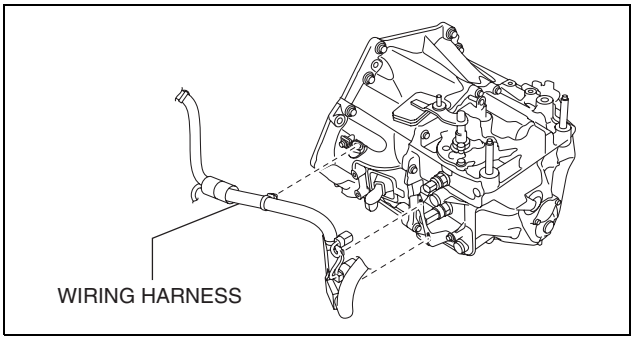

ac5wzw0000347

(12)Remove the brackets from the MTX.

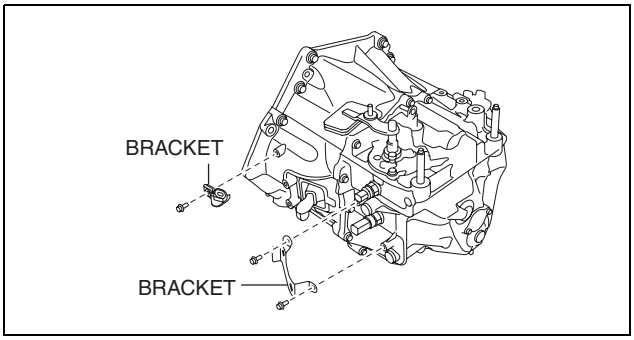

ac5wzw0000347

8. Disconnect and/or remove the following parts related to the suspension and axle.
   (1) Remove the front tires. (See 03-10-1 GENERAL PROCEDURES (FRONT AND REAR AXLES).)
   (2) Disconnect the clip securing the brake hose from the shock absorber. (See 04-11-30 BRAKE HOSE (FRONT) REMOVAL/INSTALLATION.)
   (3) Disconnect the ABS wheel-speed sensors from the steering knuckles. (See 04-15-9 FRONT ABS WHEEL-SPEED SENSOR REMOVAL/INSTALLATION.)
   (4) Disconnect the tie-rod end ball joints from the steering knuckles. (See 02-13-15 FRONT CROSSMEMBER REMOVAL/INSTALLATION.)
   (5) Disconnect the stabilizer control links from the stabilizer. (See 02-13-10 FRONT STABILIZER REMOVAL/INSTALLATION.)
   (6) Disconnect the front lower arms from the steering knuckles. (See 02-13-15 FRONT CROSSMEMBER REMOVAL/INSTALLATION.)
   (7) Disconnect the drive shaft (LH) from the MTX. (See 03-13-3 FRONT DRIVE SHAFT REMOVAL/INSTALLATION.)
   (8) Remove the drive shaft (RH) from the MTX. (See 03-13-3 FRONT DRIVE SHAFT REMOVAL/INSTALLATION.)
9. Disconnect and/or remove the following parts from the underside of the vehicle.
   (1) Remove the clutch release cylinder with the clutch pipe still connected and set it out of the way. (See 05-10B-24 CLUTCH RELEASE CYLINDER REMOVAL/INSTALLATION [D66M-R, D66MX-R].)
   (2) Remove the starter. (See 01-19B-2 STARTER REMOVAL/INSTALLATION [SKYACTIV-D 2.2].)
   (3) Remove the brace bar. (See 01-15B-1 EXHAUST SYSTEM REMOVAL/INSTALLATION [SKYACTIV-D 2.2].)
   (4) Remove the tunnel member. (See 01-15B-1 EXHAUST SYSTEM REMOVAL/INSTALLATION [SKYACTIV-D 2.2].).
   (5) Remove the propeller shaft. (See 03-15-2 PROPELLER SHAFT REMOVAL/INSTALLATION.)
   (6) Remove the front crossmember component and No.1 engine mount rubber as a single unit. (See 02-13-15 FRONT CROSSMEMBER REMOVAL/INSTALLATION.)
   (7) Remove the transfer. (See 03-16A-6 TRANSFER REMOVAL/INSTALLATION [D66MX-R].)
   (8) Remove the No.1 engine mount bracket from the MTX.
10. Install the **SST** using the following procedure:

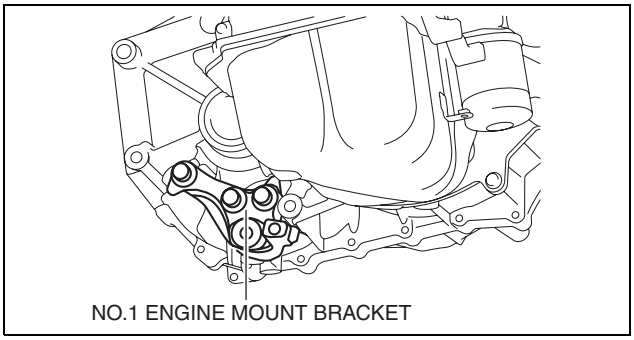

ac5wzw0000347

MANUAL TRANSAXLE [D66M-R, D66MX-R]

Caution
- **Refer to the SST instruction manual for the basic handing procedure.**

(1) Install one front foot No.2 to each of the left and right front shafts of the **SST**.
(2) Protect the positions shown in the figure using tape.

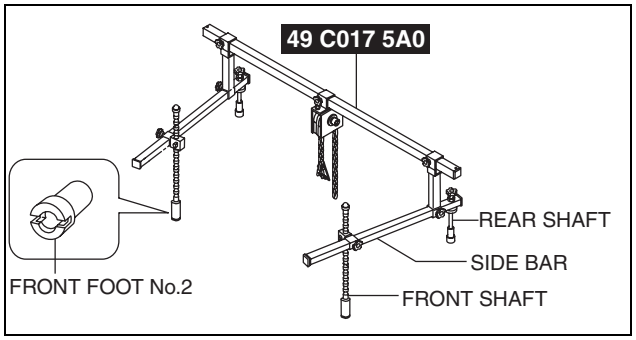

am3uuw0000884

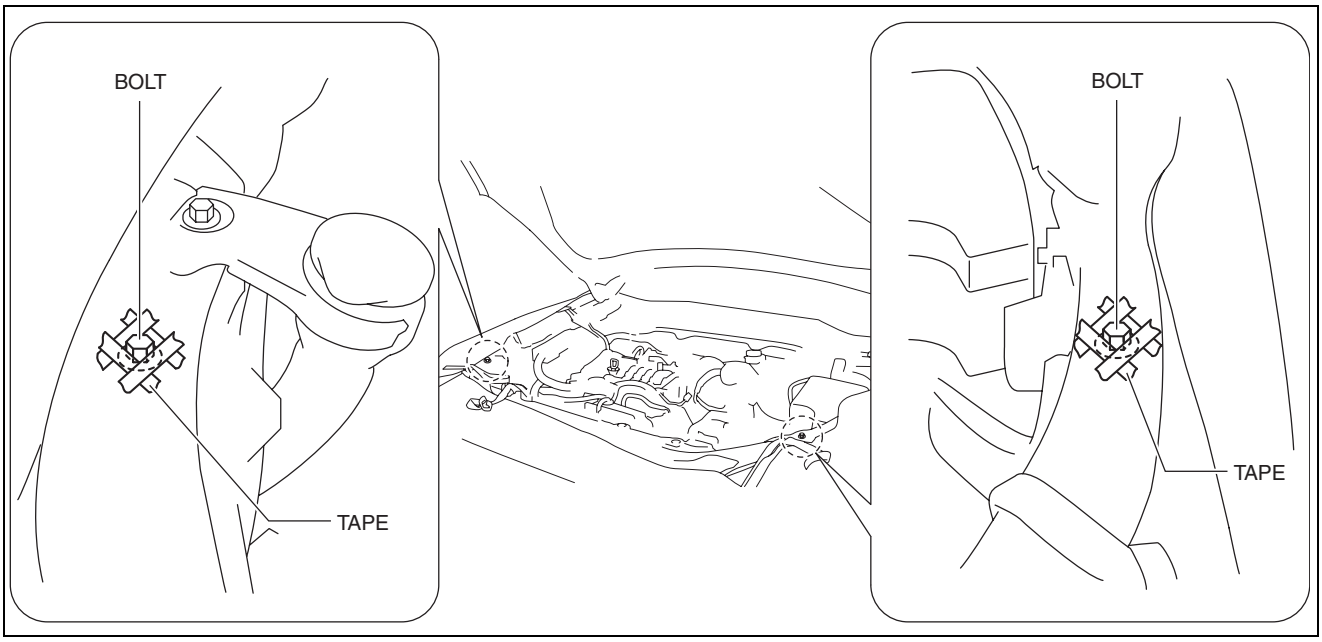

ac5wzw0000459

(3) Remove the engine cover adapter.

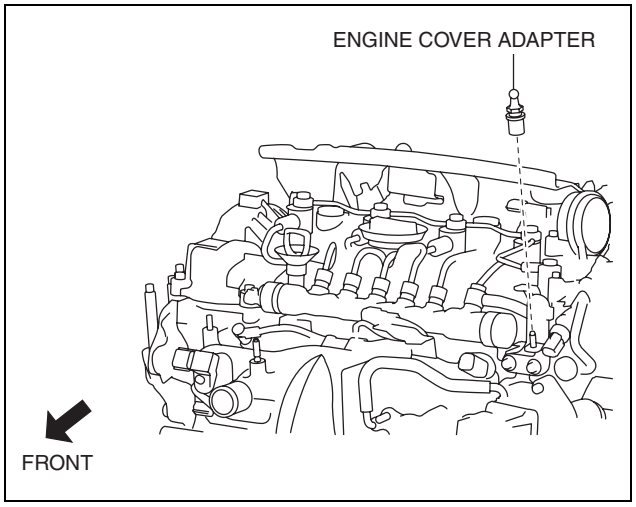

ac5wzw0000347

MANUAL TRANSAXLE [D66M-R, D66MX-R]

(4) Install the **SST** to the position shown in the figure using the following bolt and washer.

Bolt: part number 99794 1025 or an M10 × 1.25, length 25 mm {0.98 in}
Washer: approx. 3 mm {0.1 in} thickness
Tightening torque
38—51 N·m {3.9—5.2 kgf·m, 29—37 ft·lbf}

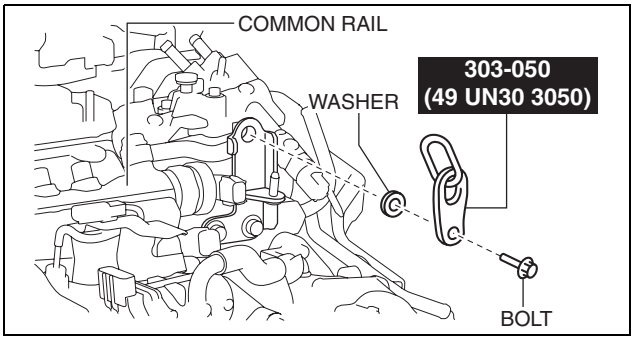

ac5wzw0000344

(5) Install the **SST** to the position shown in the figure using the following bolt.

Bolt: part number 99794 1025 or an M10 × 1.25, length 25 mm {0.98 in}
Tightening torque
38—51 N·m {3.9—5.2 kgf·m, 29—37 ft·lbf}

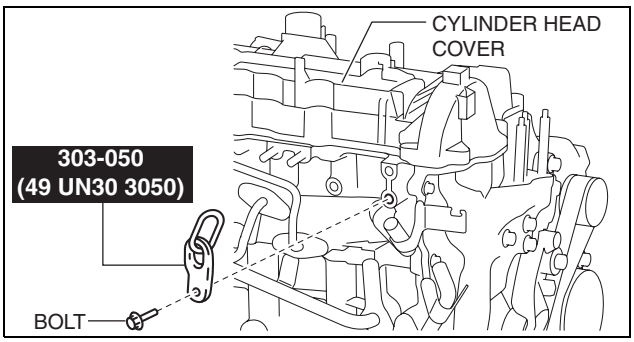

ac5wzw0000347

(6) As shown in the figure, set the rear shafts of the **SST** to the left and right shock absorber nuts.

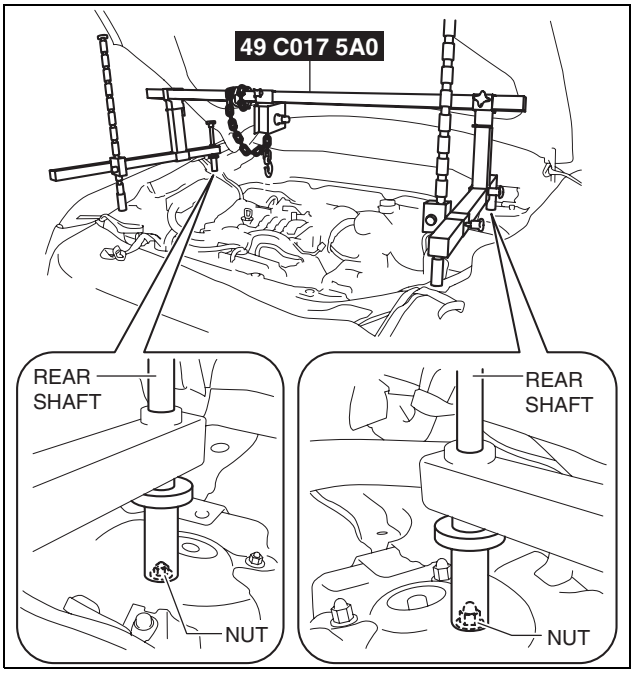

ac5wzw0000348

05

MANUAL TRANSAXLE [D66M-R, D66MX-R]

(7) As shown in the figure, set the front shafts of the **SST** to the left and right bolts.

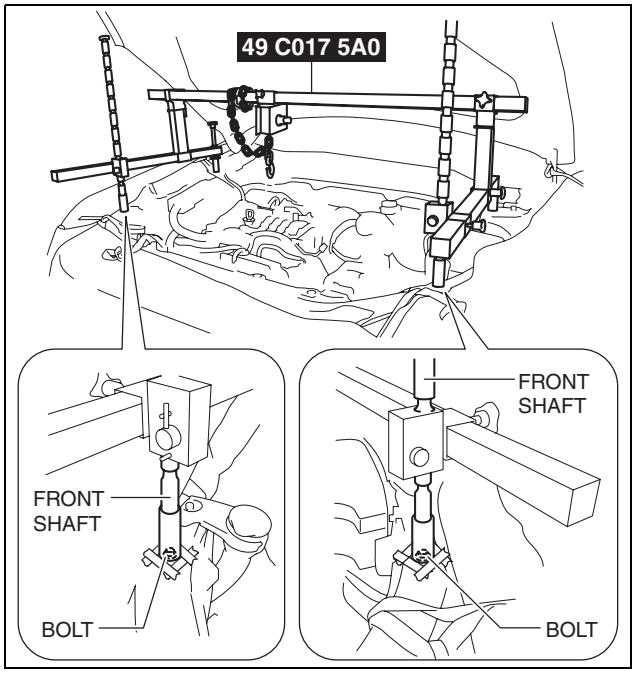

ac5wzw0000348

(8) Install the **SST (49 L017 5A0)** to the **SST (49 C017 5A0)** as shown in the figure.

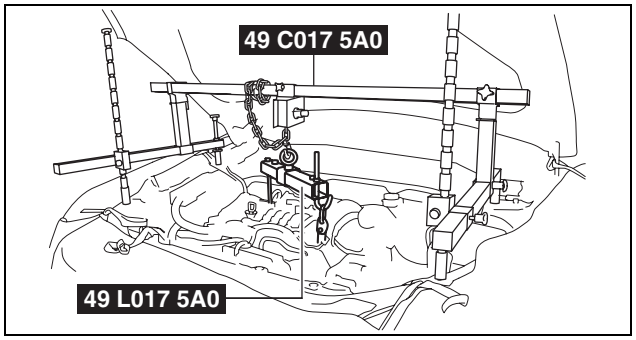

ac5wzw0000348

(9) Install the **SST (49 L017 5A0)** to the **SST (49 UN30 3050)** with the hook of the **SST (49 L017 5A0)** facing outward.
(10) Adjust the height of the left and right side bars so that they are leveled, then tighten each part of the **SST**.
(11) Apply tension to the chain to secure the engine.

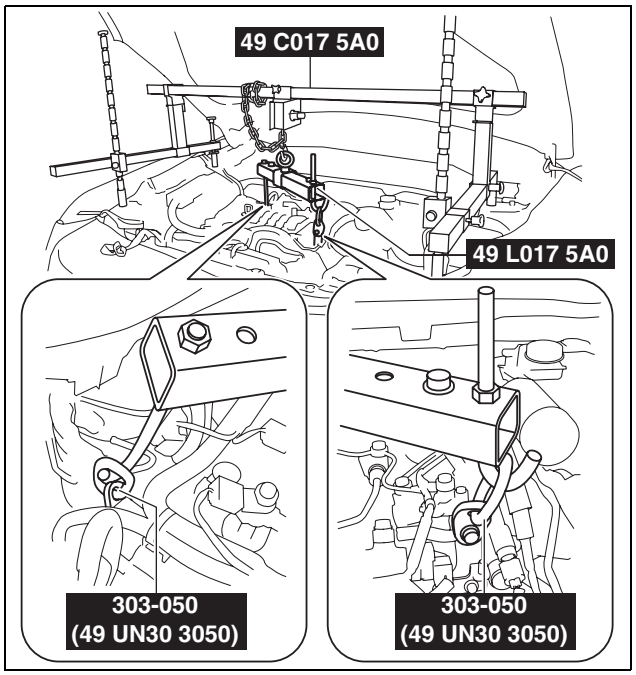

ac5wzw0000348

MANUAL TRANSAXLE [D66M-R, D66MX-R]

11. Remove in the order indicated in the table.

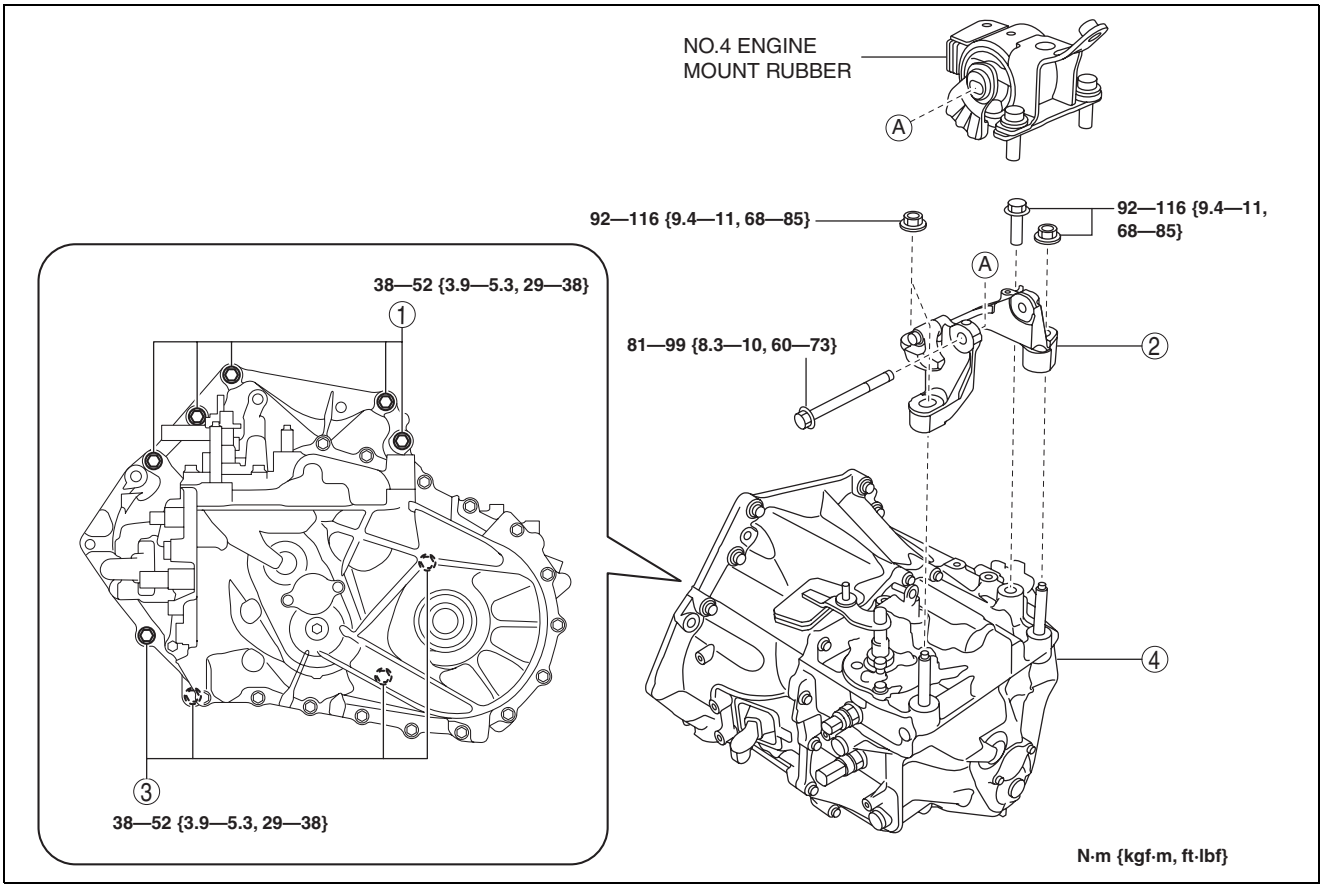

ac5wzw0000348

1	Transaxle mounting bolt (upper side)
2	No.4 engine mount bracket (See 05-15B-24 No.4 Engine mount bracket removal note.)
3	Transaxle mounting bolt (lower side) (See 05-15B-24 Transaxle mounting bolt removal note.)
4	MTX

MANUAL TRANSAXLE [D66M-R, D66MX-R]

No.4 Engine mount bracket removal note

Caution
- **A slot has been adopted for the No.4 engine mount bracket installation hole. If the No.4 engine mount bracket is deviated from the original position when installing the No.4 engine mount, engine noise or vibration could increase. When removing the No.4 engine mount, place alignment marks on the No.4 engine mount bracket so that they can be assembled to the same positions as before removal.**

1. Place alignment marks on the locations shown in the figure so that they can be assembled to the same positions as before removal.

   Note
   - Paint so that the outline of the nut is framed on the bracket side.

2. Remove the No.4 engine mount bracket.

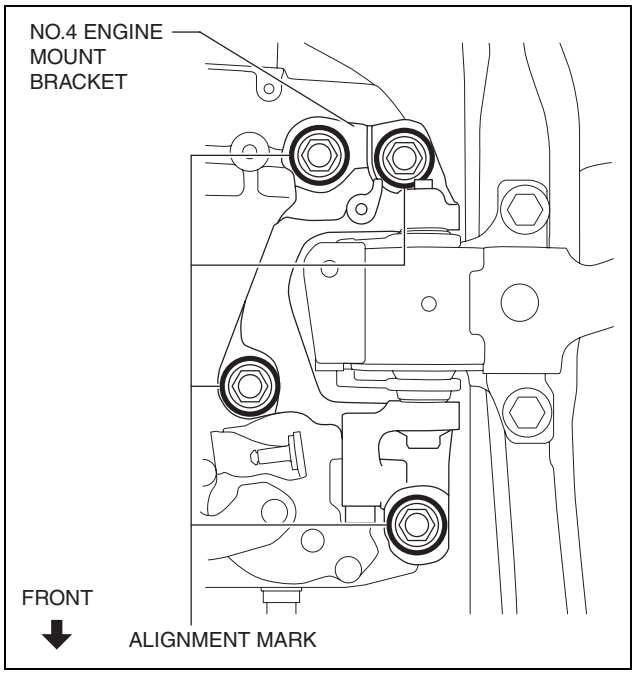

ac5wzw0000348

Transaxle mounting bolt removal note

Warning
- **Remove the MTX carefully, holding it steady. If the MTX falls it could be damaged or cause injury.**

1. Adjust the **SST** and lean the engine toward the MTX.

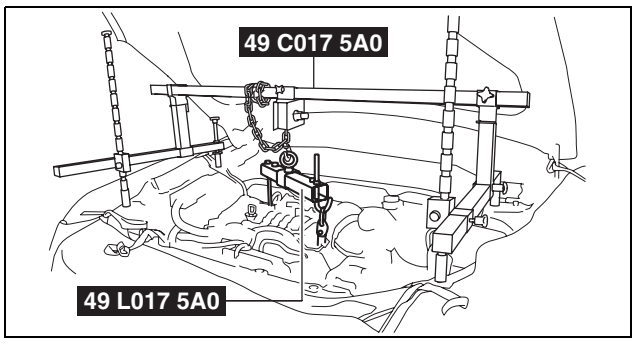

ac5wzw0000348

2. Support the MTX on a jack.

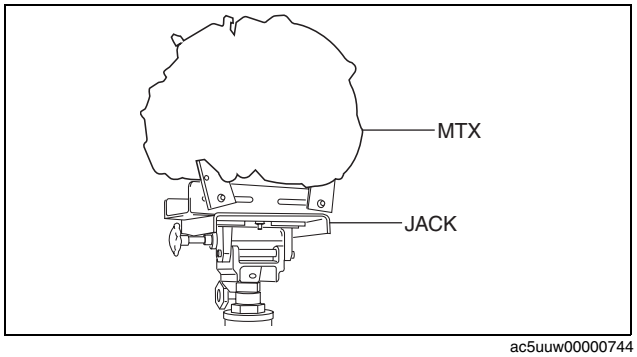

ac5uuw00000744

MANUAL TRANSAXLE [D66M-R, D66MX-R]

3. Remove the transaxle mounting bolts (lower side).
4. Remove the MTX.

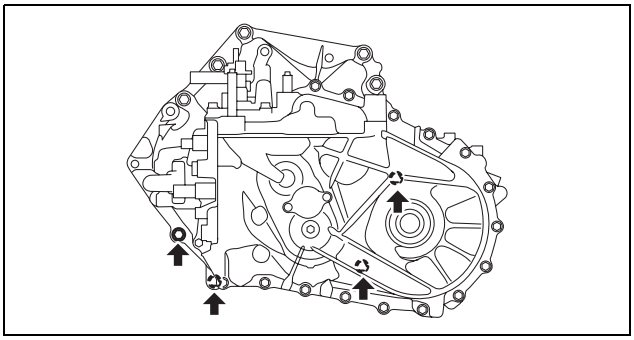
ac5wzw0000348

Installation

Warning
- **Install the MTX carefully, holding it steady. If the MTX falls it could be damaged or cause injury.**

1. Set the MTX on a jack and lift into place.

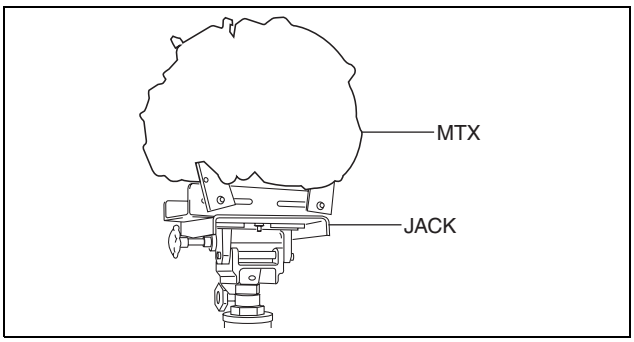

ac5uuw00000744

2. Install the MTX to the engine, and tighten the transaxle mounting bolts.

Tightening torque
38—52 N·m {3.9—5.3 kgf·m, 29—38 ft·lbf}

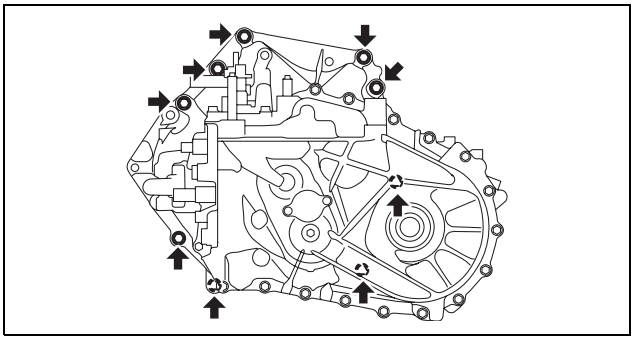
ac5wzw0000348

3. Tighten the stud bolts for the MTX.

Note
- If the No.4 engine mount bracket nut is loosened, tighten the stud bolts for the MTX because they may be loosened.

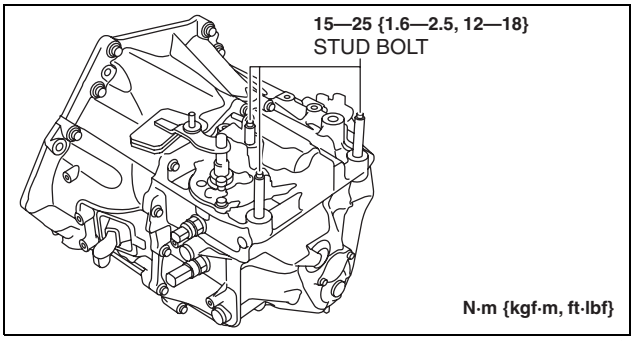

ac5wzw0000348

MANUAL TRANSAXLE [D66M-R, D66MX-R]

4. Install the No.4 engine mount bracket to No.4 engine mount rubber, and temporarily tighten the installation bolt.

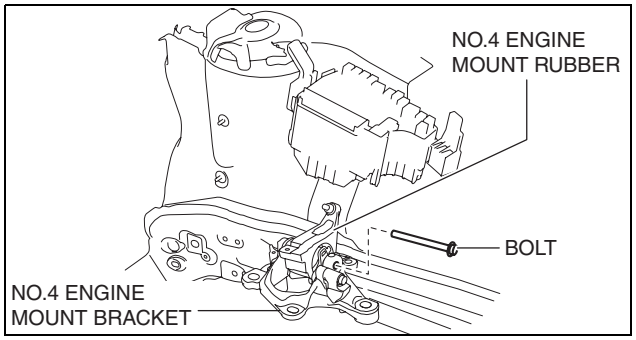

ac5wzw0000348

5. Pull up the MTX using the **SST**s, pass the MTX stud bolts through the No.4 engine mount bracket, and temporarily tighten the No.4 engine mount installation nuts.

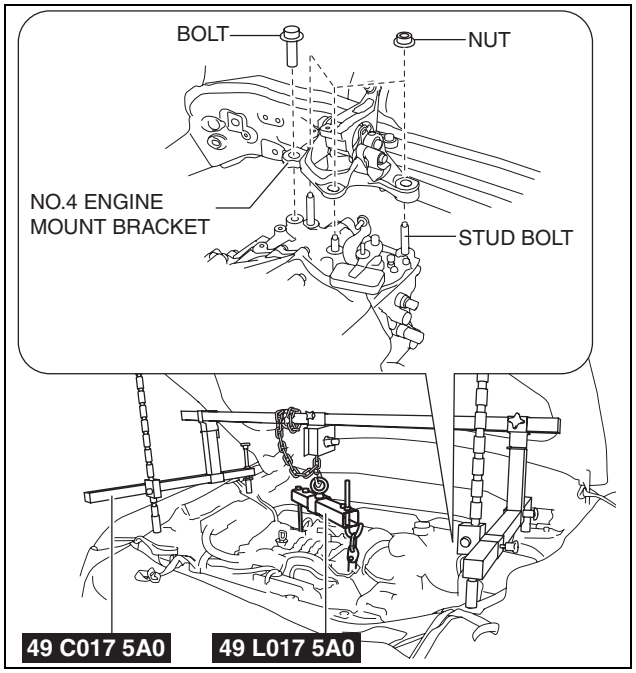

ac5wzw0000349

6. Install the No.1 engine mount bracket and tighten the bolts in the order shown in the figure.

   Tightening torque
   131—153 N·m {14—15 kgf·m, 97—112 ft·lbf}

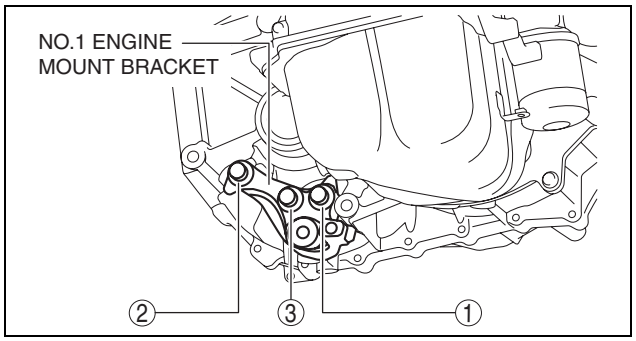

ac5wzw0000349

7. Install the transfer. (See 03-16A-6 TRANSFER REMOVAL/INSTALLATION [D66MX-R].)
8. Install the front crossmember component and No.1 engine mount rubber as a single unit. (See 02-13-15 FRONT CROSSMEMBER REMOVAL/INSTALLATION.)

9. Install the bracket plate, and temporarily tighten the No.1 engine mount rubber installation bolts.

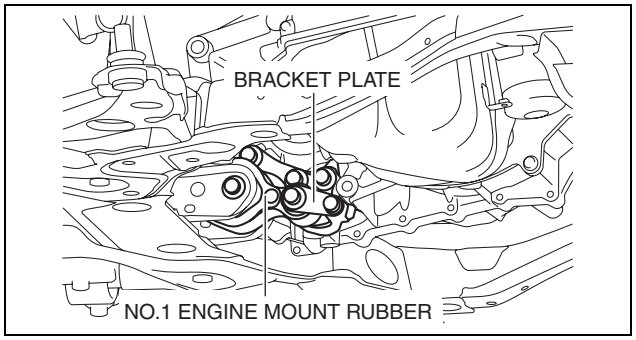

ac5wzw0000349

MANUAL TRANSAXLE [D66M-R, D66MX-R]

10. Align the alignment marks on the No.4 engine mount bracket and nuts, and temporarily tighten the nuts shown in the figure.

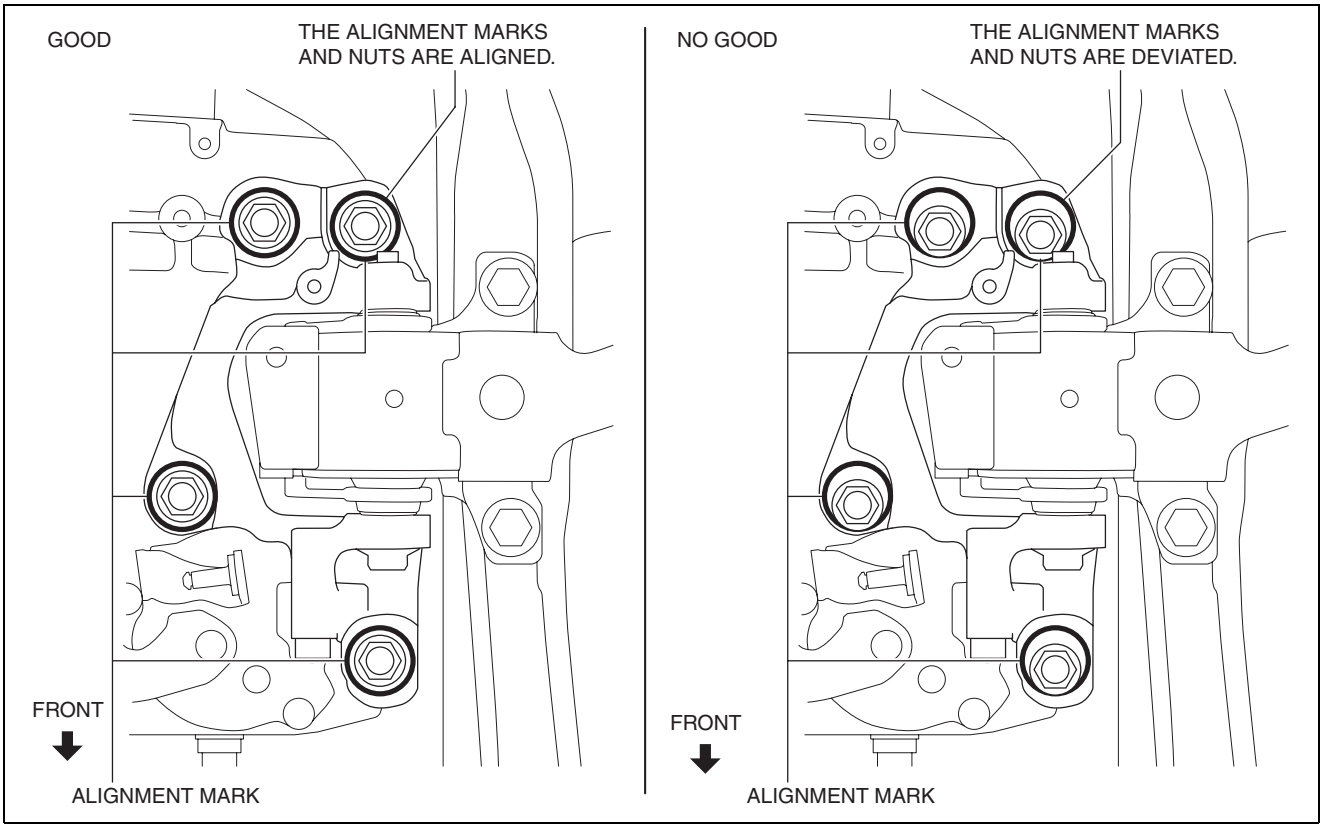

ac5wzw0000349

11. Tighten the No.4 engine mount bracket installation nuts and bolt in the order shown in the figure.

No.	Tightening torque
1	92—116 N·m {9.4—11 kgf·m, 68—85 ft·lbf}
2	81—99 N·m {8.3—10 kgf·m, 60—73 ft·lbf}

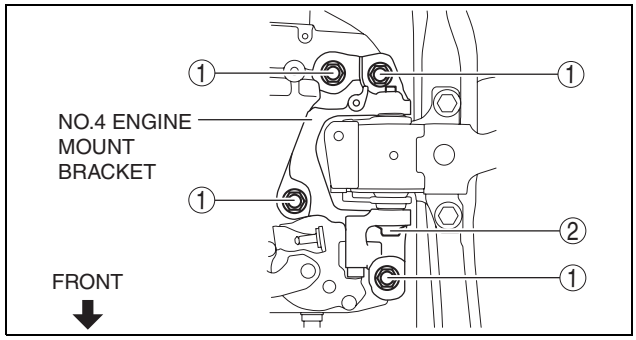

ac5wzw0000349

12. Remove the **SST (49 C017 5A0)**.
13. Install the propeller shaft. (See 03-15-2 PROPELLER SHAFT REMOVAL/INSTALLATION.)
14. Tighten the No.1 engine mount rubber installation bolts.
15. Connect and/or Install the following parts to the underside of the vehicle.
    (1) Install the tunnel member. (See 01-15B-1 EXHAUST SYSTEM REMOVAL/INSTALLATION [SKYACTIV-D 2.2].).
    (2) Install the brace bar. (See 01-15B-1 EXHAUST SYSTEM REMOVAL/INSTALLATION [SKYACTIV-D 2.2].)
    (3) Install the starter. (See 01-19B-2 STARTER REMOVAL/INSTALLATION [SKYACTIV-D 2.2].)
    (4) Install the clutch release cylinder to the MTX. (See 05-10B-24 CLUTCH RELEASE CYLINDER REMOVAL/INSTALLATION [D66M-R, D66MX-R].)

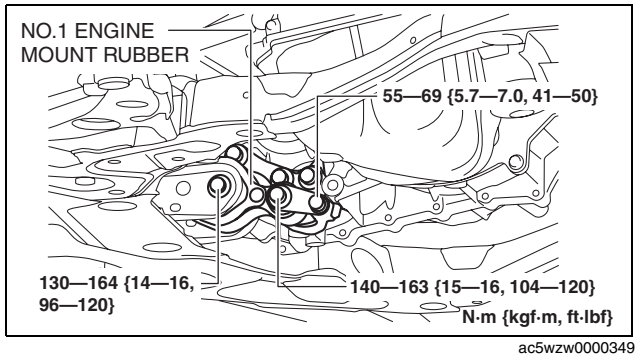

ac5wzw0000349

MANUAL TRANSAXLE [D66M-R, D66MX-R]

16. Connect and/or Install the following parts related to the suspension and axle.
    (1) Install the drive shaft (RH) to the MTX. (See 03-13-3 FRONT DRIVE SHAFT REMOVAL/INSTALLATION.)
    (2) Connect the drive shaft (LH) to the MTX. (See 03-13-3 FRONT DRIVE SHAFT REMOVAL/INSTALLATION.)
    (3) Connect the front lower arms to the steering knuckles. (See 02-13-15 FRONT CROSSMEMBER REMOVAL/INSTALLATION.)
    (4) Connect the stabilizer control links to the stabilizer. (See 02-13-10 FRONT STABILIZER REMOVAL/INSTALLATION.)
    (5) Connect the tie-rod end ball joints to the steering knuckles. (See 02-13-15 FRONT CROSSMEMBER REMOVAL/INSTALLATION.)
    (6) Connect the ABS wheel-speed sensors to the steering knuckles. (See 04-15-9 FRONT ABS WHEEL-SPEED SENSOR REMOVAL/INSTALLATION.)
    (7) Connect the clip securing the brake hose to the shock absorber. (See 04-11-30 BRAKE HOSE (FRONT) REMOVAL/INSTALLATION.)
    (8) Install the front tires. (See 03-10-1 GENERAL PROCEDURES (FRONT AND REAR AXLES).)
17. Connect and/or install the following parts in the engine compartment.
    (1) Install the engine cover adapter.

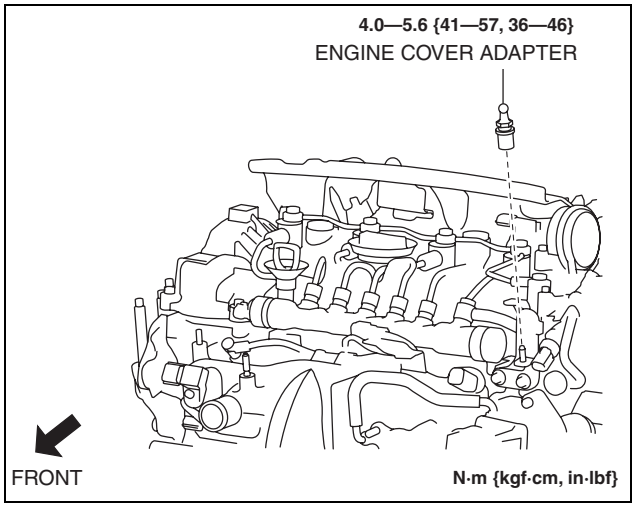

ac5wzw0000349

    (2) Install the brackets to the MTX.

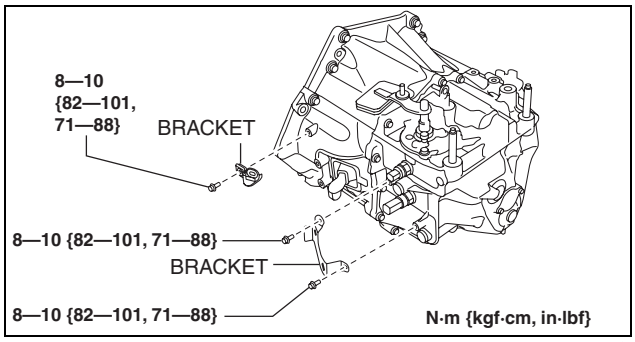

ac5wzw0000349

    (3) Connect the wiring harness to the MTX.
    (4) Connect the back-up light switch connector. (See 05-15B-3 BACK-UP LIGHT SWITCH REMOVAL/INSTALLATION [D66M-R, D66MX-R].)
    (5) Connect the neutral switch connector. (See 05-15B-2 NEUTRAL SWITCH REMOVAL/INSTALLATION [D66M-R, D66MX-R].)
    (6) Install the EGR cooler. (See 01-16B-12 EGR COOLER REMOVAL/INSTALLATION [SKYACTIV-D 2.2].)

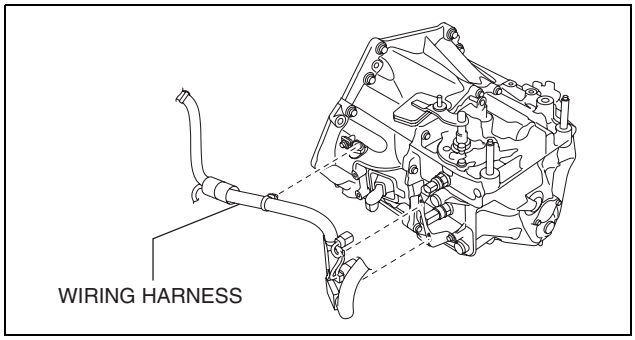

ac5wzw0000347

MANUAL TRANSAXLE [D66M-R, D66MX-R]

(7) Connect the ground cable to the No.4 engine mount bracket.

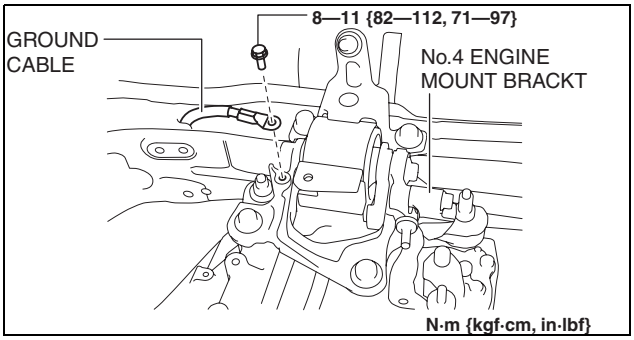

ac5wzw0000349

(8) Install the solenoid valve component to the MTX.

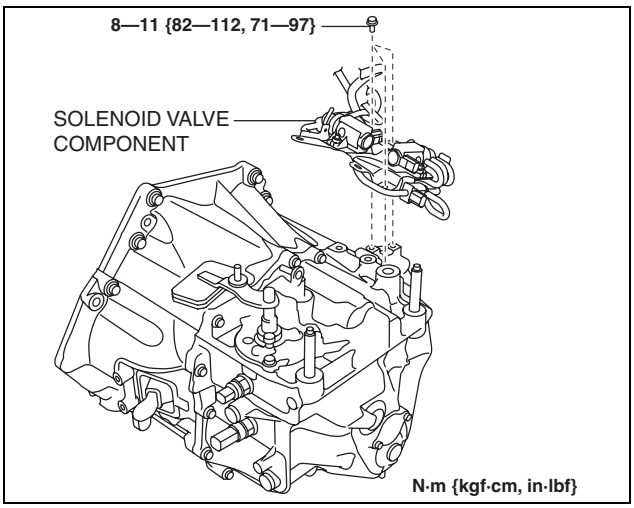

ac5wzw0000343

(9) Install the control cable bracket to the MTX.
(10) Connect the control cable to the MTX. (See 05-16B-1 MANUAL TRANSAXLE SHIFT MECHANISM REMOVAL/INSTALLATION [D66M-R, D66MX-R].)
(11) Install the battery component. (ex: battery, battery tray) (See 01-17B-3 BATTERY REMOVAL/INSTALLATION [SKYACTIV-D 2.2].)
(12) Install the air cleaner component. (ex: air cleaner, air hose) (See 01-13B-6 INTAKE-AIR SYSTEM REMOVAL/INSTALLATION [SKYACTIV-D 2.2].)

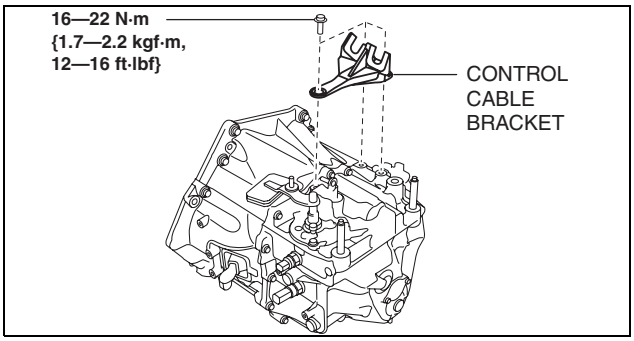

ac5wzw0000349

18. Install the splash shield. (See 09-16-49 SPLASH SHIELD REMOVAL/INSTALLATION.)
19. Install the front under cover No.1. (See 09-16-40 FRONT UNDER COVER No.1 REMOVAL/INSTALLATION.)
20. Refill the engine coolant. (See 01-12B-4 ENGINE COOLANT REPLACEMENT [SKYACTIV-D 2.2].)
21. Add the specified amount of specified transaxle oil. (See 05-15B-2 MANUAL TRANSAXLE OIL REPLACEMENT [D66M-R, D66MX-R].)
22. Install the front under cover No.2. (See 09-16-41 FRONT UNDER COVER No.2 REMOVAL/INSTALLATION.)
23. Connect the negative battery cable. (See 01-17B-9 NEGATIVE BATTERY CABLE DISCONNECTION/CONNECTION [SKYACTIV-D 2.2].)
24. Install the plug hole plate. (See 01-10B-4 ENGINE COVER REMOVAL/INSTALLATION [SKYACTIV-D 2.2].)
25. If the MTX is overhauled, perform the “INSPECTION AFTER MANUAL TRANSAXLE OVERHAUL”. (See 05-15B-29 INSPECTION AFTER MANUAL TRANSAXLE OVERHAUL [D66M-R, D66MX-R].)

INSPECTION AFTER MANUAL TRANSAXLE OVERHAUL [D66M-R, D66MX-R]

id0515md159500

1. After warming up the engine, drive the vehicle and inspect the following items:
   (1) No abnormal noise in each shift position.
   (2) Smooth shift operation when shifting gears.
   (3) No gear slipout after shifting gears.
   (4) Back-up light switch operates correctly.

MANUAL TRANSAXLE [D66M-R, D66MX-R]

OIL SEAL (DIFFERENTIAL) REPLACEMENT [D66M-R, D66MX-R]

id0515md160100

1. Remove the front under cover No.2. (See 09-16-41 FRONT UNDER COVER No.2 REMOVAL/INSTALLATION.)
2. Drain the manual transaxle oil. (See 05-15B-2 MANUAL TRANSAXLE OIL REPLACEMENT [D66M-R, D66MX-R].)
3. Disconnect the drive shaft (LH) from the MTX. (See 03-13-3 FRONT DRIVE SHAFT REMOVAL/INSTALLATION.)
4. Disconnect the drive shaft (RH) from the MTX. (2WD) (See 03-13-3 FRONT DRIVE SHAFT REMOVAL/INSTALLATION.)
5. Remove the drive shaft (RH). (4WD) (See 03-13-3 FRONT DRIVE SHAFT REMOVAL/INSTALLATION.)
6. Remove the front crossmember component and No.1 engine mount rubber as a single unit. (4WD) (See 02-13-15 FRONT CROSSMEMBER REMOVAL/INSTALLATION.)
7. Remove the transfer. (4WD) (See 03-16A-6 TRANSFER REMOVAL/INSTALLATION [D66MX-R].)
8. Remove the oil seal (LH).
9. Remove the oil seal (RH).

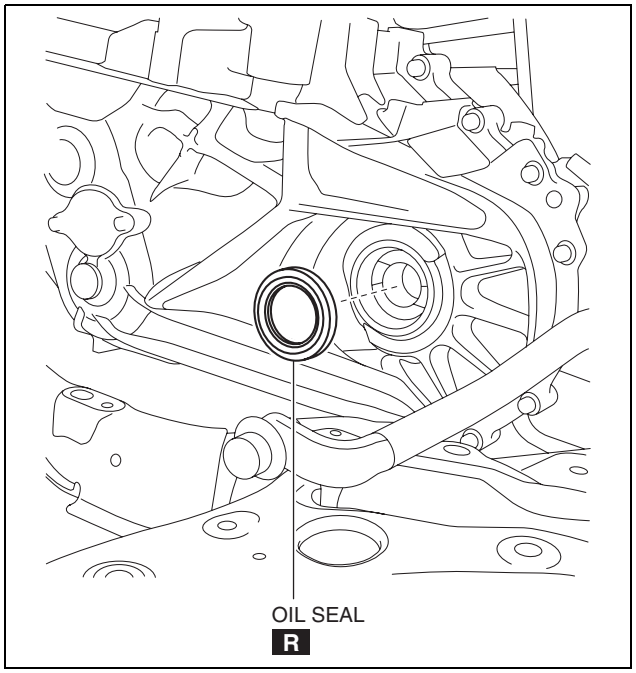

ac5wzw0000350

2WD

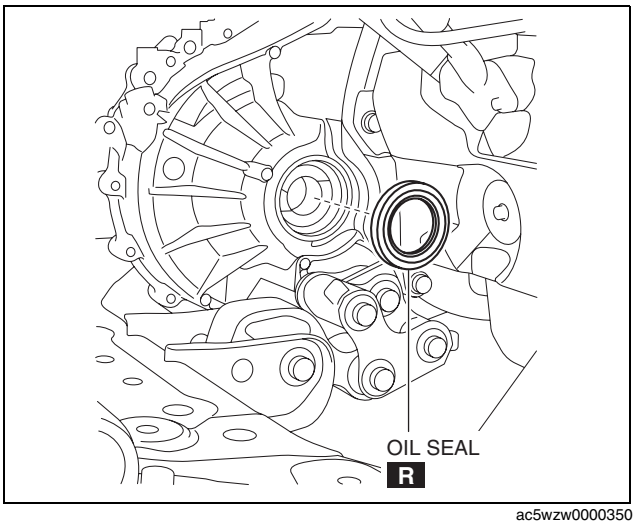

ac5wzw0000350

MANUAL TRANSAXLE [D66M-R, D66MX-R]

4WD

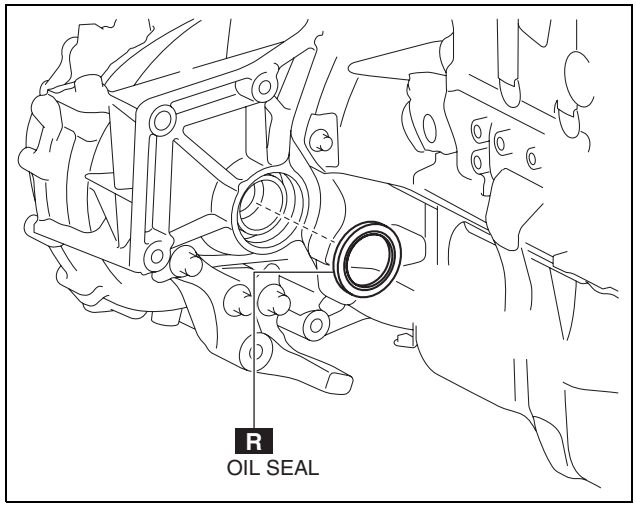

ac5wzw0000350

10. Using the **SST**s and a hammer, tap a new oil seal (LH) in evenly until the **SST**s contacts the transaxle case.
11. Using the **SST**s and a hammer, tap a new oil seal (RH) in evenly until the **SST**s contacts the transaxle case.

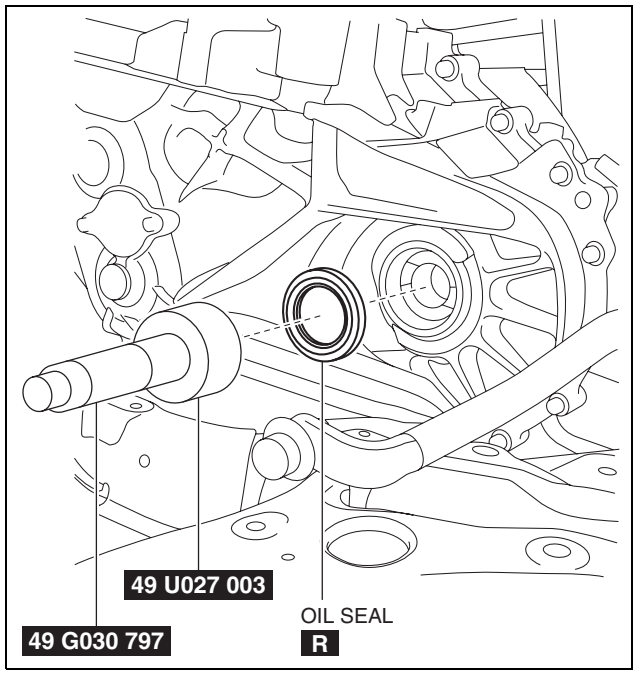

ac5wzw0000350

2WD

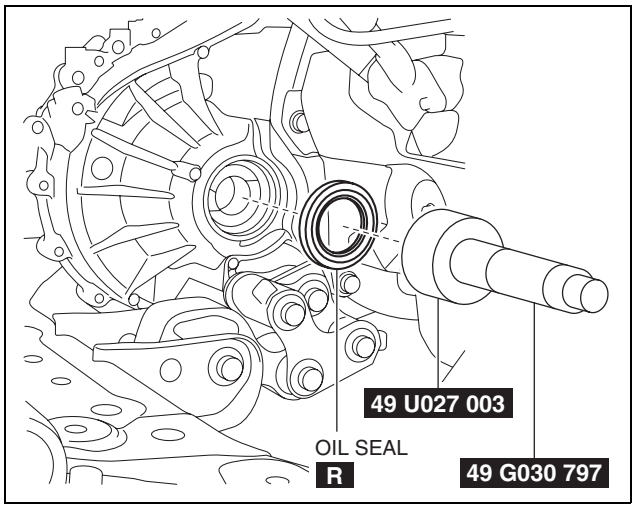

ac5wzw0000350

MANUAL TRANSAXLE [D66M-R, D66MX-R]

4WD

12. Coat the lip of each oil seal with transaxle oil.
13. Install in the reverse order of removal.
14. Add the specified amount of specified transaxle oil. (See 05-15B-2 MANUAL TRANSAXLE OIL REPLACEMENT [D66M-R, D66MX-R].)

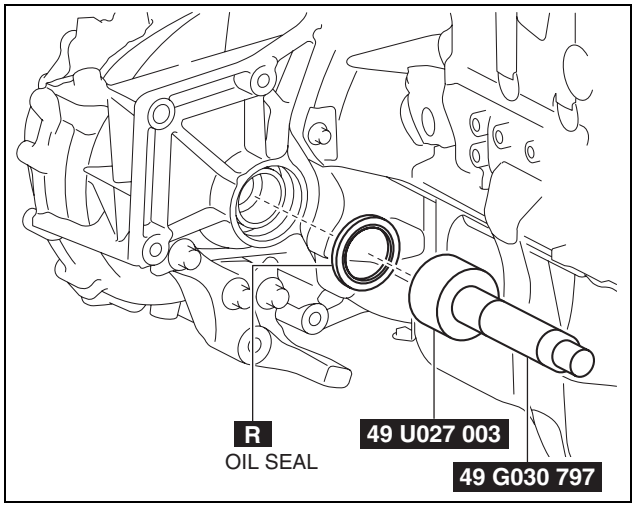

ac5wzw0000350

05-16A MANUAL TRANSAXLE SHIFT MECHANISM [C66M-R, C66MX-R]

MANUAL TRANSAXLE SHIFT MECHANISM LOCATION INDEX [C66M-R, C66MX-R] 05-16A–1

MANUAL TRANSAXLE SHIFT MECHANISM REMOVAL/INSTALLATION [C66M-R, C66MX-R]. 05-16A–1

MANUAL TRANSAXLE SHIFT MECHANISM [C66M-R, C66MX-R]

MANUAL TRANSAXLE SHIFT MECHANISM LOCATION INDEX [C66M-R, C66MX-R]

id0516c8160600

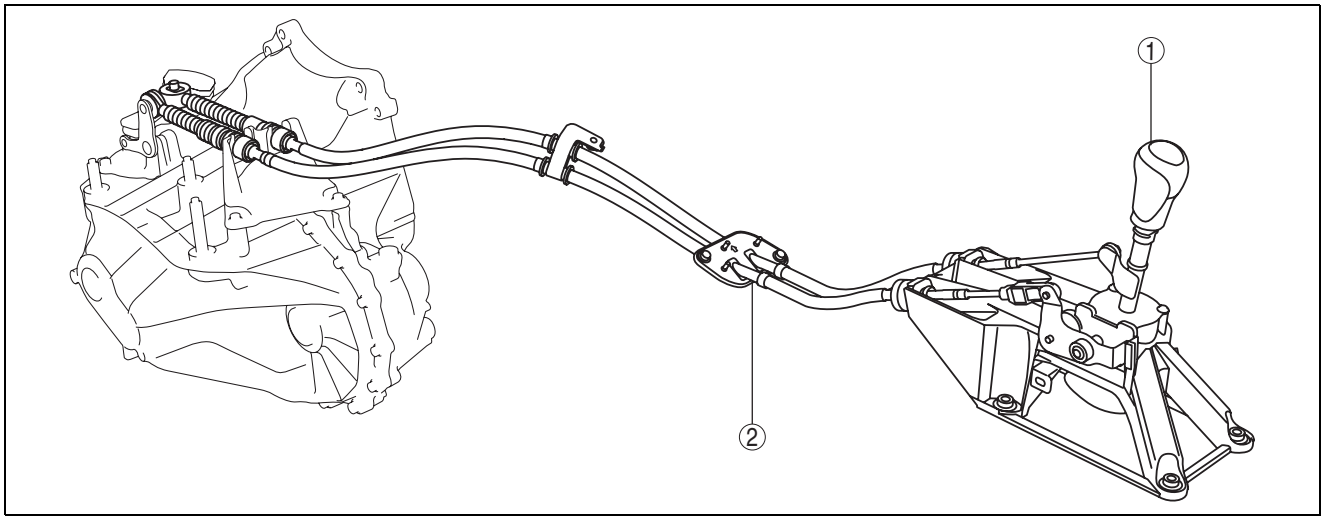

ac5wzw0000285

1	Shift lever (See 05-16A-1 MANUAL TRANSAXLE SHIFT MECHANISM REMOVAL/INSTALLATION [C66M-R, C66MX-R].)
2	Control cable (See 05-16A-1 MANUAL TRANSAXLE SHIFT MECHANISM REMOVAL/INSTALLATION [C66M-R, C66MX-R].)

MANUAL TRANSAXLE SHIFT MECHANISM REMOVAL/INSTALLATION [C66M-R, C66MX-R]

id0516c8160800

1. Disconnect the negative battery cable. (See 01-17A-11 NEGATIVE BATTERY CABLE DISCONNECTION/CONNECTION [SKYACTIV-G 2.0].) (See 01-17A-13 NEGATIVE BATTERY CABLE DISCONNECTION/CONNECTION [SKYACTIV-G 2.0 (WITHOUT i-stop)].)
2. Remove the shift lever using the following procedure:
   (1) Remove the upper panel. (See 09-17-44 UPPER PANEL REMOVAL/INSTALLATION.)
   (2) Remove the shift lever knob.
   (3) Remove the shift panel. (See 09-17-42 SHIFT PANEL REMOVAL/INSTALLATION.)
   (4) Remove the side wall. (See 09-17-49 SIDE WALL REMOVAL/INSTALLATION.)
   (5) Remove the rear console. (See 09-17-45 REAR CONSOLE REMOVAL/INSTALLATION.)

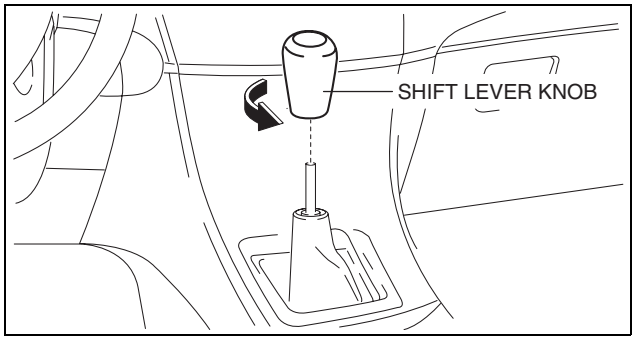

ac5wzw0000463

MANUAL TRANSAXLE SHIFT MECHANISM [C66M-R, C66MX-R]

(6) Press the tabs on the control cable as shown in the figure and disconnect the shift lever from the control cable.

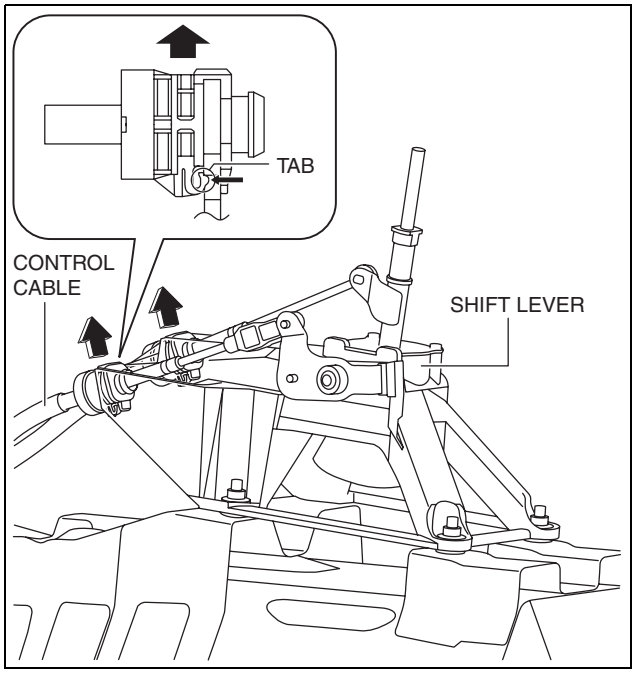

ac5uuw00000763

(7) Disconnect the control cable end from shift lever as shown in the figure.

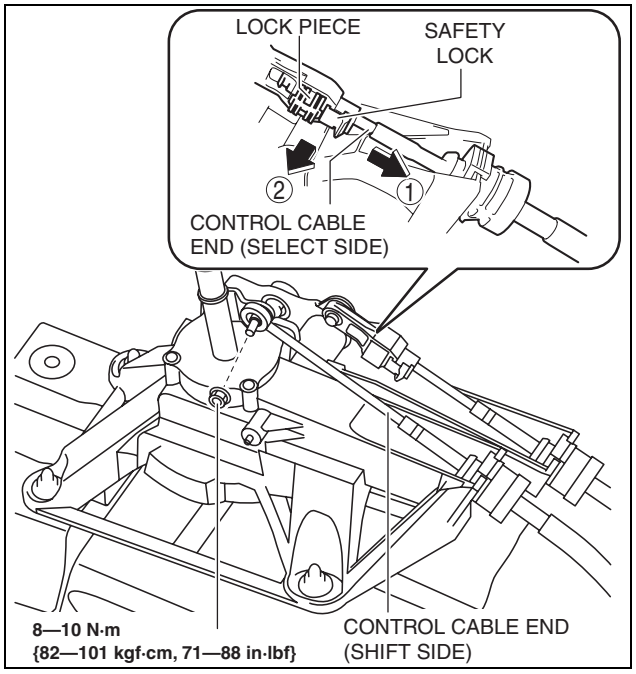

(8) Disconnect the connector from shift lever as shown in the figure.

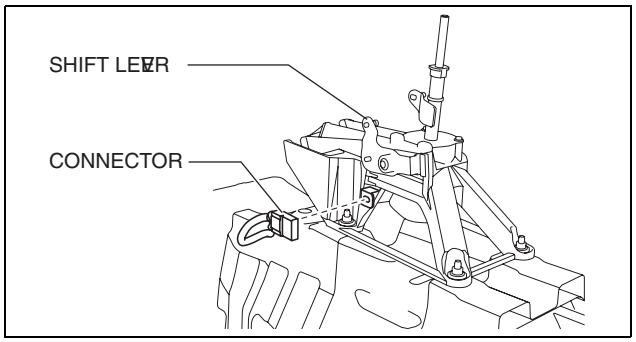

MANUAL TRANSAXLE SHIFT MECHANISM [C66M-R, C66MX-R]

(9) Remove the shift lever.

3. Remove the control cable using the following procedure:
   (1) Remove the air cleaner component. (ex: air cleaner, air hose) (See 01-13A-6 INTAKE-AIR SYSTEM REMOVAL/INSTALLATION [SKYACTIV-G 2.0].)
   (2) Remove the battery component. (ex: battery, battery tray and PCM component) (See 01-17A-3 BATTERY REMOVAL/INSTALLATION [SKYACTIV-G 2.0].)

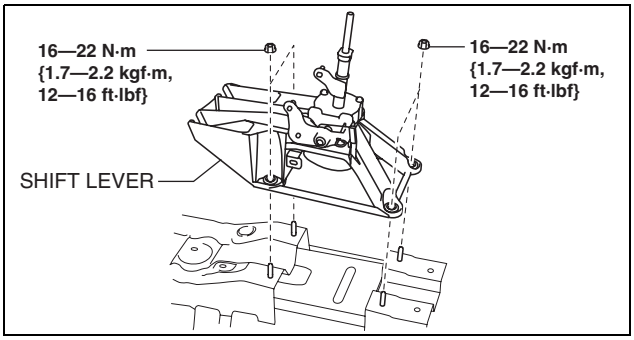

ac5uuw00000766

   (3) Remove the control cable end from the MTX.
      1) Pull the lock pin in the direction of the arrow shown in the figure and release the control cable end (MTX side) lock.
      2) Remove the control cable end from the MTX.

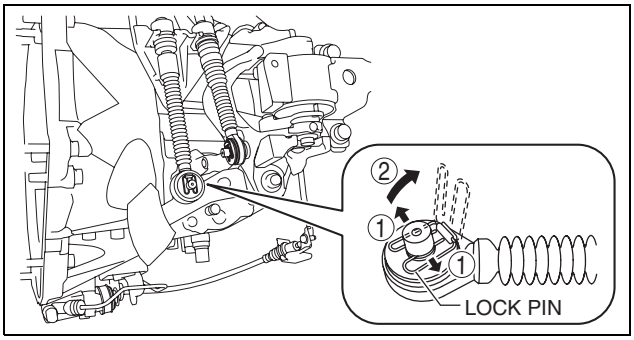

ac5uuw00000767

   (4) Press the tabs on the control cable and disconnect the control cable from the bracket.

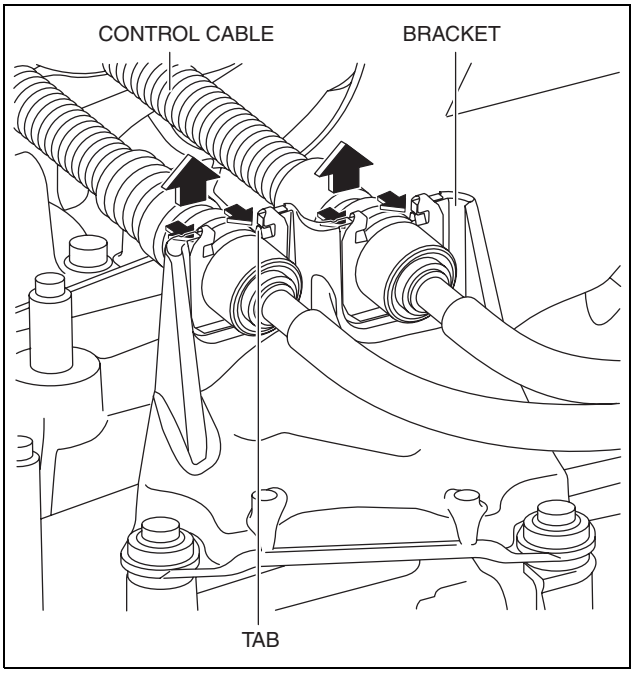

ac5wzw0000463

05

MANUAL TRANSAXLE SHIFT MECHANISM [C66M-R, C66MX-R]

(5) Remove the fastening nut for the control cable.

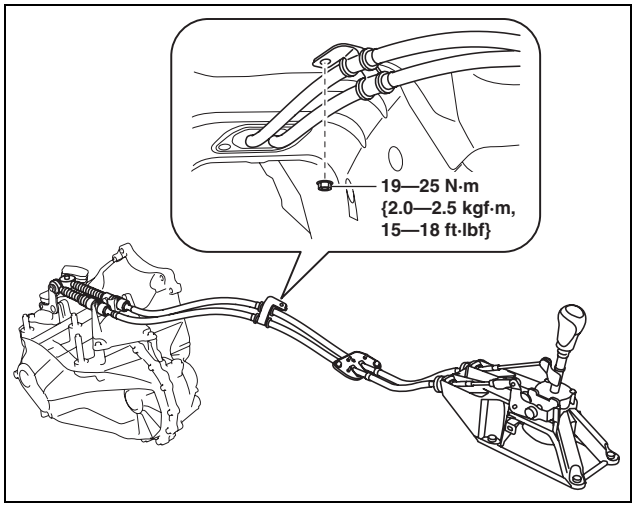

ac5uuw00000769

(6) Remove the fastening nuts for the grommet.

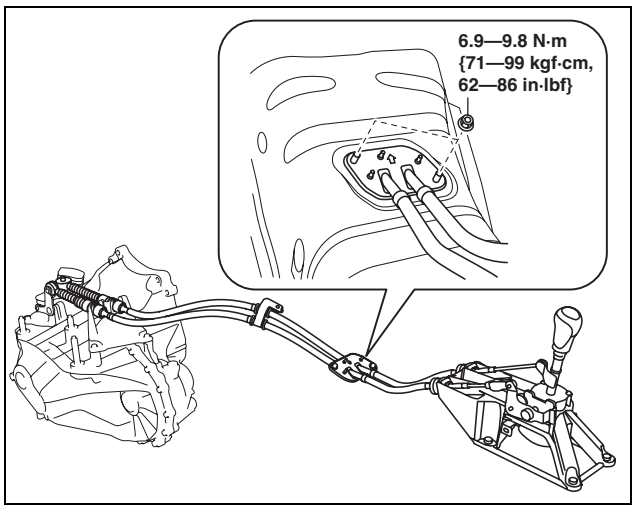

ac5uuw00000770

(7) Remove the control cable.

4. Make sure that the shift lever (transaxle side) is in neutral position.
5. Install in the reverse order of removal.

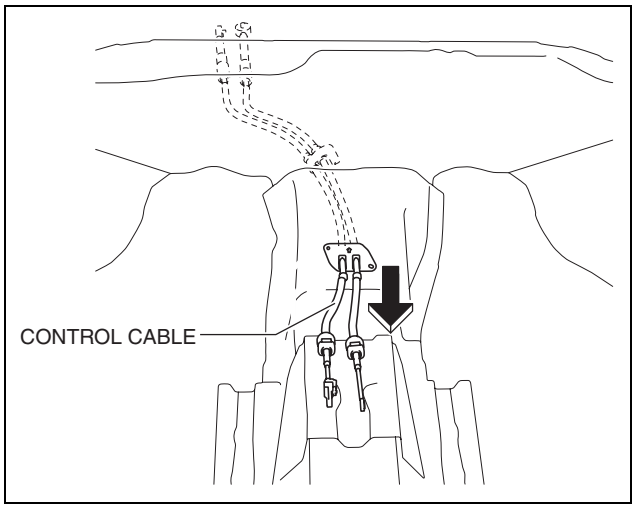

ac5uuw00000771

05-16B MANUAL TRANSAXLE SHIFT MECHANISM [D66M-R, D66MX-R]

MANUAL TRANSAXLE SHIFT MECHANISM LOCATION INDEX [D66M-R, D66MX-R] 05-16B–1

MANUAL TRANSAXLE SHIFT MECHANISM REMOVAL/INSTALLATION [D66M-R, D66MX-R] 05-16B–1

MANUAL TRANSAXLE SHIFT MECHANISM [D66M-R, D66MX-R]

MANUAL TRANSAXLE SHIFT MECHANISM LOCATION INDEX [D66M-R, D66MX-R]

id0516cb160600

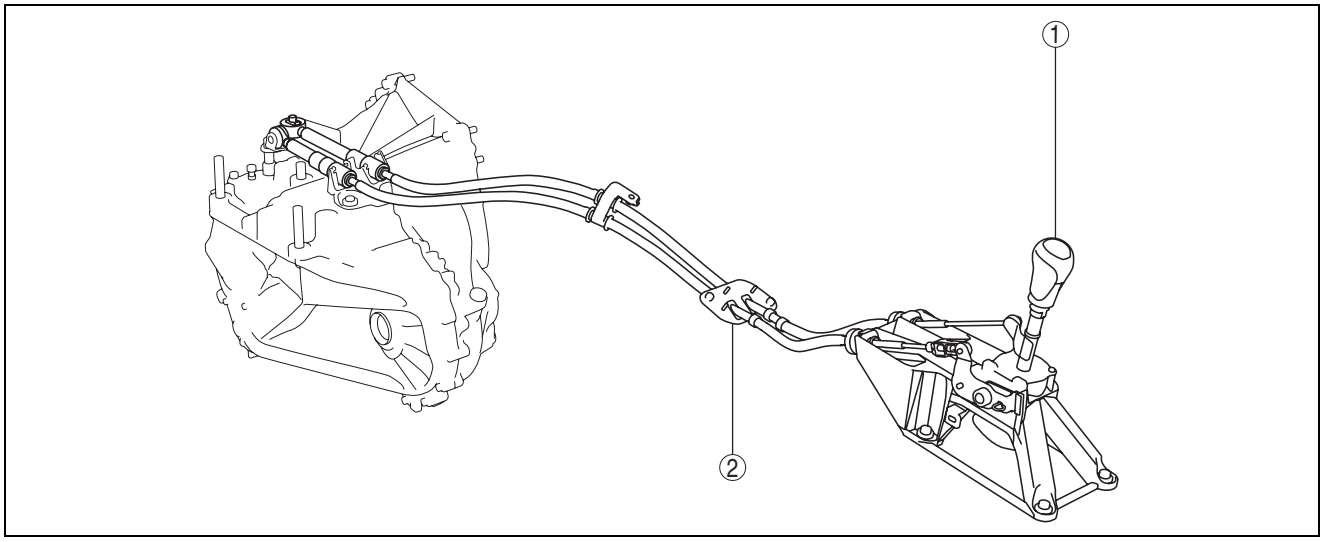

ac5wzw0000350

1	Shift lever (See 05-16B-1 MANUAL TRANSAXLE SHIFT MECHANISM REMOVAL/INSTALLATION [D66M-R, D66MX-R].)
2	Control cable (See 05-16B-1 MANUAL TRANSAXLE SHIFT MECHANISM REMOVAL/INSTALLATION [D66M-R, D66MX-R].)

MANUAL TRANSAXLE SHIFT MECHANISM REMOVAL/INSTALLATION [D66M-R, D66MX-R]

id0516cb160800

1. Disconnect the negative battery cable. (See 01-17B-9 NEGATIVE BATTERY CABLE DISCONNECTION/CONNECTION [SKYACTIV-D 2.2].)
2. Remove the shift lever using the following procedure:
   (1) Remove the upper panel. (See 09-17-44 UPPER PANEL REMOVAL/INSTALLATION.)
   (2) Remove the shift lever knob.
   (3) Remove the shift panel. (See 09-17-42 SHIFT PANEL REMOVAL/INSTALLATION.)
   (4) Remove the side wall. (See 09-17-49 SIDE WALL REMOVAL/INSTALLATION.)
   (5) Remove the rear console. (See 09-17-45 REAR CONSOLE REMOVAL/INSTALLATION.)

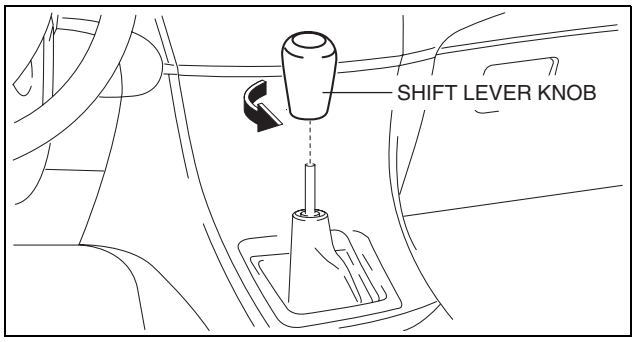

ac5wzw0000459

MANUAL TRANSAXLE SHIFT MECHANISM [D66M-R, D66MX-R]

(6) Press the tabs on the control cable as shown in the figure and disconnect the shift lever from the control cable.

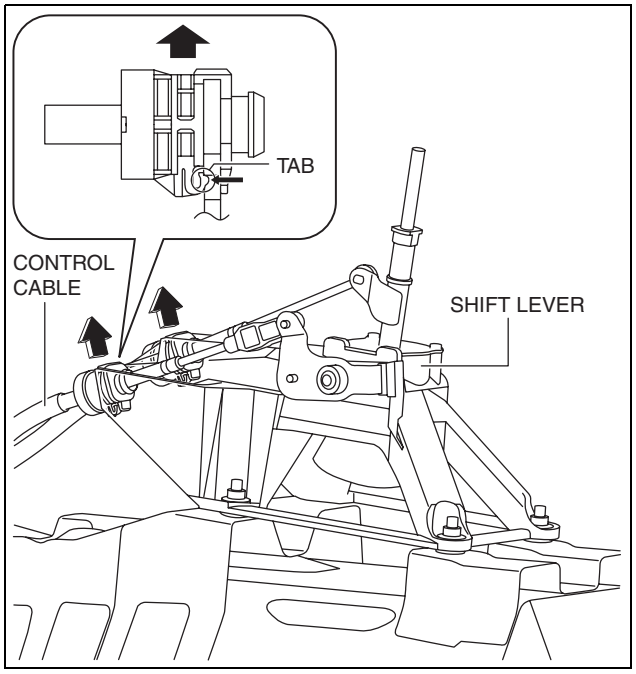

ac5uuw00000763

(7) Disconnect the control cable end from shift lever as shown in the figure.

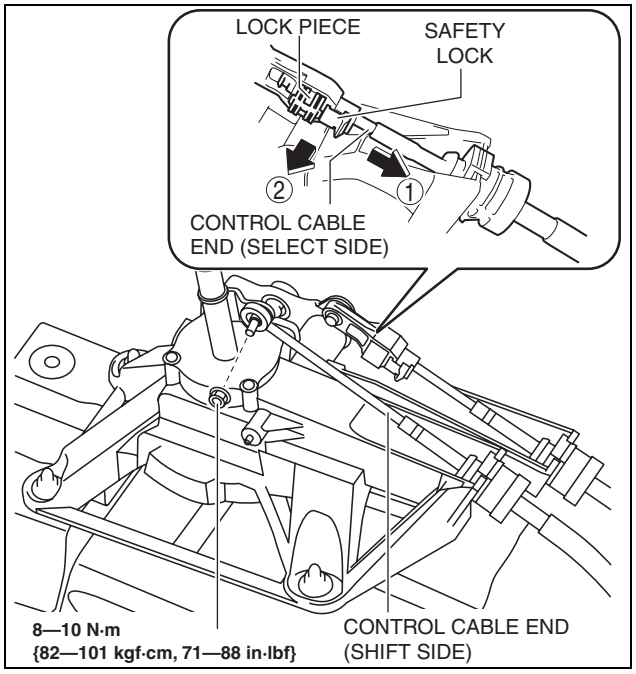

(8) Disconnect the connector from shift lever as shown in the figure.

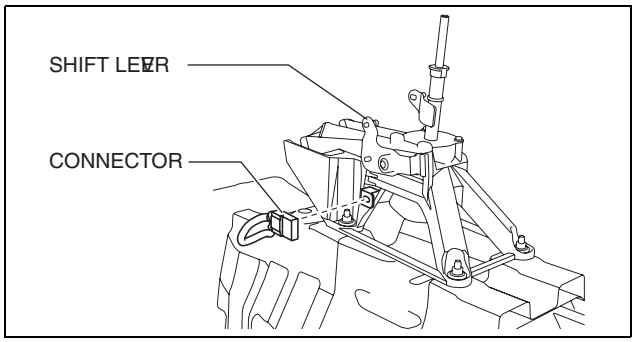

MANUAL TRANSAXLE SHIFT MECHANISM [D66M-R, D66MX-R]

(9) Remove the shift lever.

3. Remove the control cable using the following procedure:
   (1) Remove the air cleaner component. (ex: air cleaner, air hose) (See 01-13B-6 INTAKE-AIR SYSTEM REMOVAL/INSTALLATION [SKYACTIV-D 2.2].)
   (2) Remove the battery component. (ex: battery, battery tray) (See 01-17B-3 BATTERY REMOVAL/INSTALLATION [SKYACTIV-D 2.2].)

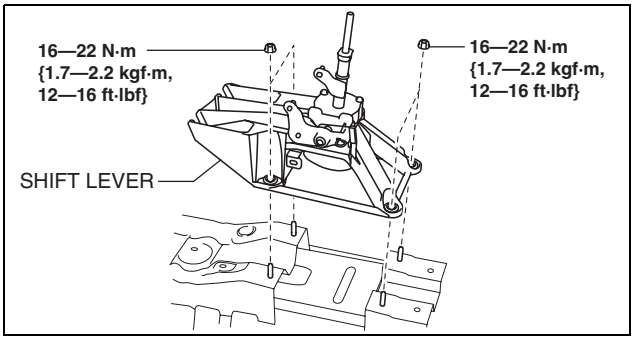

ac5uuw00000766

   (3) Remove the control cable end from the MTX.
      1) Pull the lock pin in the direction of the arrow shown in the figure and release the control cable end (MTX side) lock.
      2) Remove the control cable end from the MTX.

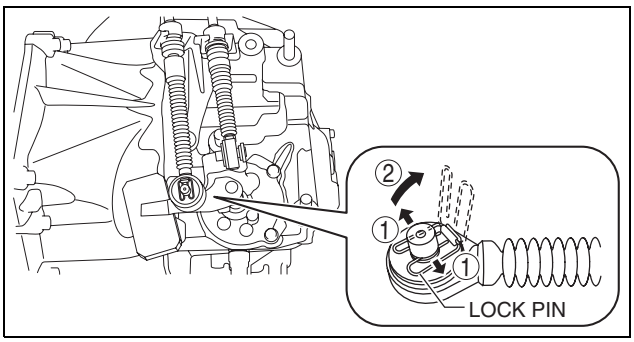

ac5wzw0000350

   (4) Press the tabs on the control cable and disconnect the control cable from the bracket.

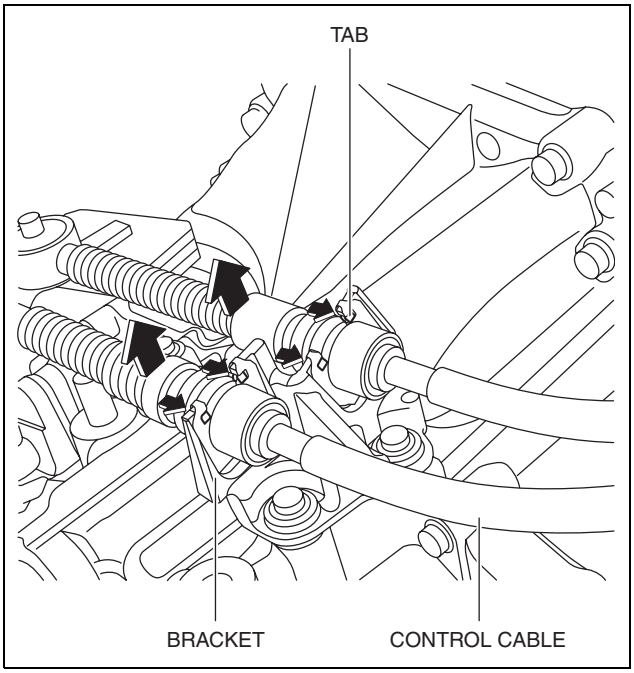

ac5wzw0000350

05

MANUAL TRANSAXLE SHIFT MECHANISM [D66M-R, D66MX-R]

(5) Remove the fastening nut for the control cable.

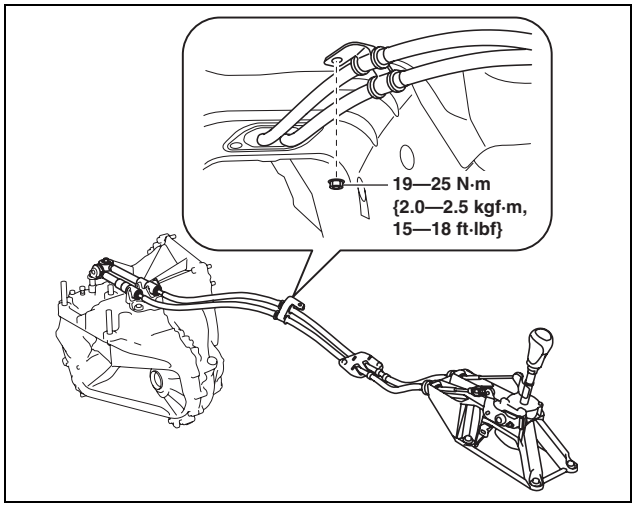

ac5wzw0000350

(6) Remove the fastening nuts for the grommet.

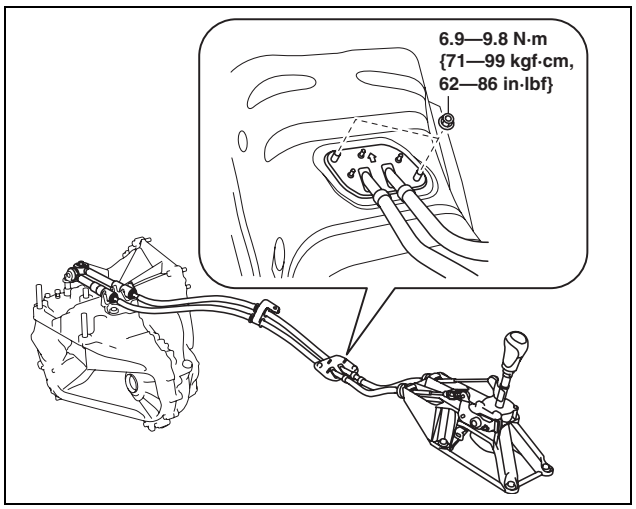

ac5wzw0000351

(7) Remove the control cable.

4. Make sure that the shift lever (transaxle side) is in neutral position.
5. Install in the reverse order of removal.

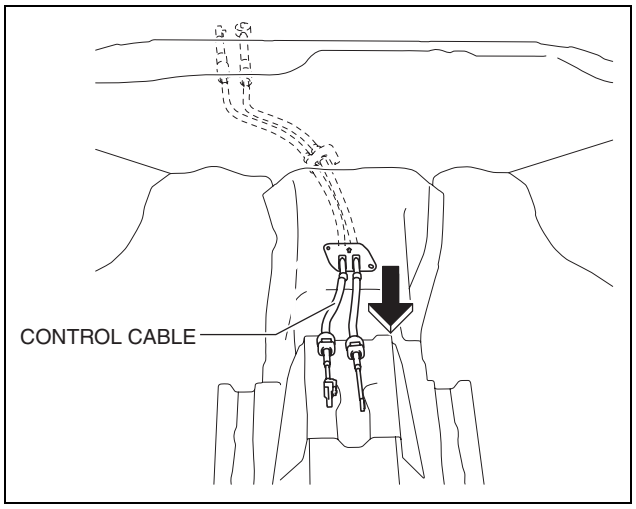

ac5uuw00000771

05-17A AUTOMATIC TRANSAXLE [FW6A-EL, FW6AX-EL]

AUTOMATIC TRANSAXLE LOCATION INDEX [FW6A-EL, FW6AX-EL] 05-17A–2
MECHANICAL SYSTEM TEST [FW6A-EL, FW6AX-EL] 05-17A–4
Mechanical system test preparation 05-17A–4
Line pressure test 05-17A–4
Stall test 05-17A–7
Time lag test 05-17A–8
ROAD TEST [FW6A-EL, FW6AX-EL] ... 05-17A–9
Road test preparation 05-17A–9
Shift diagram (D position, normal mode) 05-17A–9
D position test 05-17A–9
M position test 05-17A–10
P position test 05-17A–11
AUTOMATIC TRANSAXLE FLUID (ATF) INSPECTION [FW6A-EL, FW6AX-EL] 05-17A–11
ATF level inspection 05-17A–11
AUTOMATIC TRANSAXLE FLUID (ATF) REPLACEMENT [FW6A-EL, FW6AX-EL] 05-17A–12
AUTOMATIC TRANSAXLE FLUID (ATF) ADJUSTMENT [FW6A-EL, FW6AX-EL] 05-17A–12
M POSITION SWITCH INSPECTION [FW6A-EL, FW6AX-EL] 05-17A–13
Continuity Inspection 05-17A–13
M POSITION SWITCH REMOVAL/INSTALLATION [FW6A-EL, FW6AX-EL] 05-17A–14
UP SWITCH INSPECTION [FW6A-EL, FW6AX-EL] 05-17A–14
Continuity Inspection 05-17A–14
UP SWITCH REMOVAL/INSTALLATION [FW6A-EL, FW6AX-EL] 05-17A–14
DOWN SWITCH INSPECTION [FW6A-EL, FW6AX-EL] 05-17A–15
Continuity Inspection 05-17A–15
DOWN SWITCH REMOVAL/INSTALLATION [FW6A-EL, FW6AX-EL] 05-17A–15
COUPLER COMPONENT REMOVAL/INSTALLATION [FW6A-EL, FW6AX-EL] 05-17A–16
OIL PRESSURE SWITCH REMOVAL/INSTALLATION [FW6A-EL, FW6AX-EL] 05-17A–20
Oil Pressure Switch A 05-17A–20
Oil Pressure Switch B 05-17A–22
ON/OFF SOLENOID REMOVAL/INSTALLATION [FW6A-EL, FW6AX-EL] 05-17A–25
ELECTRIC AT OIL PUMP REMOVAL/INSTALLATION [FW6A-EL, FW6AX-EL] 05-17A–27
Electric AT Oil Pump Installation Note 05-17A–28
AUTOMATIC TRANSAXLE REMOVAL/INSTALLATION [FW6A-EL] 05-17A–28
Removal 05-17A–28
Installation 05-17A–37
AUTOMATIC TRANSAXLE REMOVAL/INSTALLATION [FW6AX-EL] 05-17A–43
Removal 05-17A–43
Installation 05-17A–53
DRIVE PLATE REMOVAL/INSTALLATION [FW6A-EL, FW6AX-EL] 05-17A–59
Drive Plate Installation Bolts Removal Note 05-17A–59
Drive Plate Installation Bolts Installation Note 05-17A–60
OIL SEAL (DIFFERENTIAL) REPLACEMENT [FW6A-EL, FW6AX-EL] 05-17A–60
Transaxle Case Side 05-17A–60
Converter housing Side (FW6A-EL) ... 05-17A–61
Converter housing Side (FW6AX-EL) .. 05-17A–62
OIL SEAL (CONTROL VALVE BODY) REPLACEMENT [FW6A-EL, FW6AX-EL] 05-17A–63
OIL COOLER REMOVAL/INSTALLATION [FW6A-EL, FW6AX-EL] 05-17A–66
Water Hose Installation Note 05-17A–67
CONTROL VALVE BODY REMOVAL/INSTALLATION [FW6A-EL, FW6AX-EL] 05-17A–67
On-Vehicle Removal 05-17A–67
On-Vehicle Installation 05-17A–70
INITIAL LEARNING [FW6A-EL, FW6AX-EL] 05-17A–74
Introduction 05-17A–74
Using M-MDS 05-17A–74
Not Using of M-MDS 05-17A–76
TCM CONFIGURATION [FW6A-EL, FW6AX-EL] 05-17A–79

AUTOMATIC TRANSAXLE [FW6A-EL, FW6AX-EL]

AUTOMATIC TRANSAXLE LOCATION INDEX [FW6A-EL, FW6AX-EL]

id0517h2118200

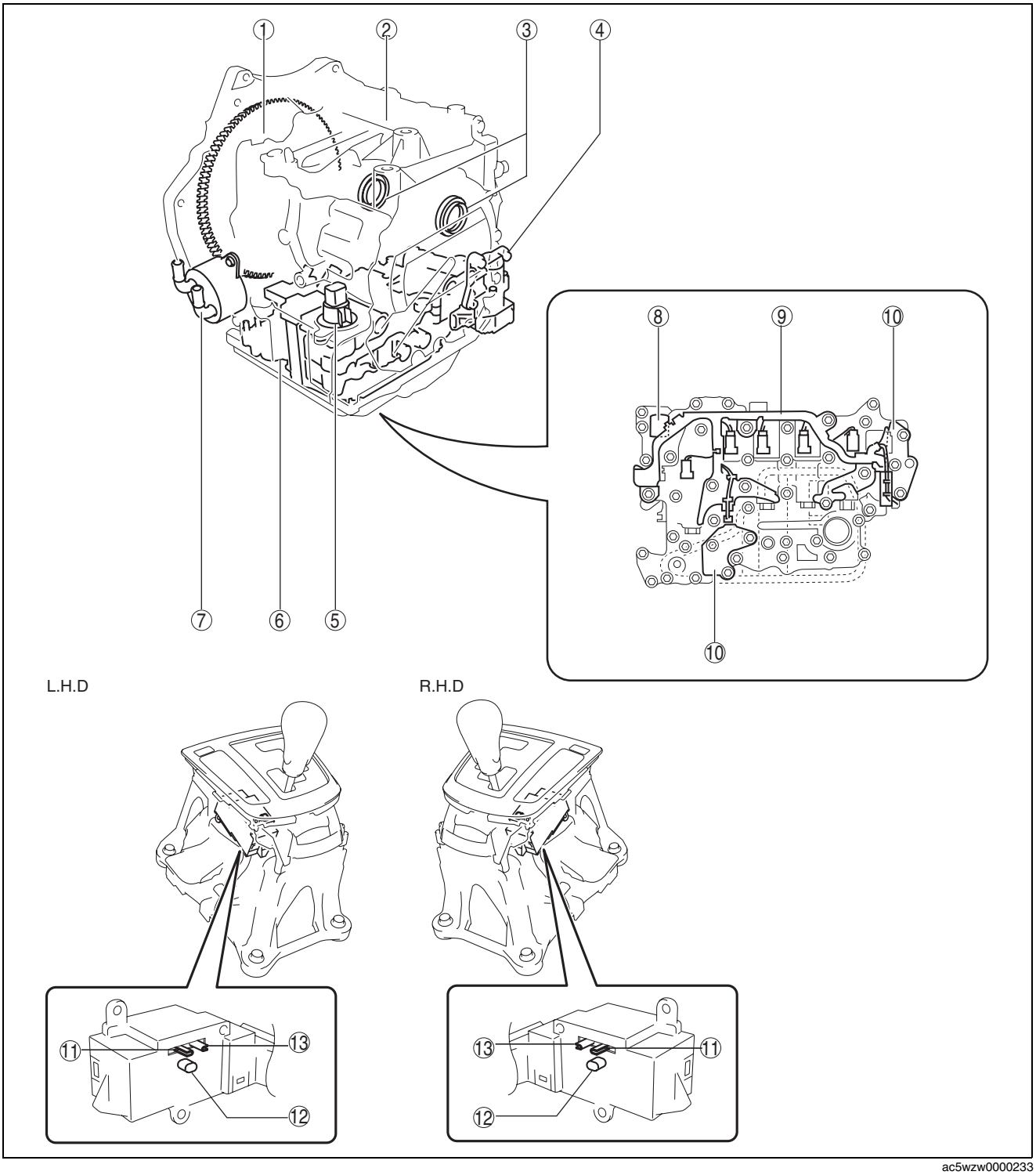

ac5wzw0000233

AUTOMATIC TRANSAXLE [FW6A-EL, FW6AX-EL]

1	Drive plate (See 05-17A-59 DRIVE PLATE REMOVAL/INSTALLATION [FW6A-EL, FW6AX-EL].)
2	Automatic transaxle (See 05-17A-4 MECHANICAL SYSTEM TEST [FW6A-EL, FW6AX-EL].) (See 05-17A-9 ROAD TEST [FW6A-EL, FW6AX-EL].) (See 05-17A-11 AUTOMATIC TRANSAXLE FLUID (ATF) INSPECTION [FW6A-EL, FW6AX-EL].) (See 05-17A-12 AUTOMATIC TRANSAXLE FLUID (ATF) REPLACEMENT [FW6A-EL, FW6AX-EL].) (See 05-17A-12 AUTOMATIC TRANSAXLE FLUID (ATF) ADJUSTMENT [FW6A-EL, FW6AX-EL].) (See 05-17A-74 INITIAL LEARNING [FW6A-EL, FW6AX-EL].) (See 05-17A-28 AUTOMATIC TRANSAXLE REMOVAL/INSTALLATION [FW6A-EL].) (See 05-17A-43 AUTOMATIC TRANSAXLE REMOVAL/INSTALLATION [FW6AX-EL] .)
3	Oil seal (differential) (See 05-17A-60 OIL SEAL (DIFFERENTIAL) REPLACEMENT [FW6A-EL, FW6AX-EL].)
4	Electric AT oil pump (if equipped) (See 05-17A-27 ELECTRIC AT OIL PUMP REMOVAL/INSTALLATION [FW6A-EL, FW6AX-EL].)
5	Oil seal (control valve body) (See 05-17A-63 OIL SEAL (CONTROL VALVE BODY) REPLACEMENT [FW6A-EL, FW6AX-EL].)
6	Control valve body (See 05-17A-67 CONTROL VALVE BODY REMOVAL/INSTALLATION [FW6A-EL, FW6AX-EL].) (See 05-17A-79 TCM CONFIGURATION [FW6A-EL, FW6AX-EL].)
7	Oil cooler (See 05-17A-66 OIL COOLER REMOVAL/INSTALLATION [FW6A-EL, FW6AX-EL].)
8	ON/OFF solenoid (See 05-17A-25 ON/OFF SOLENOID REMOVAL/INSTALLATION [FW6A-EL, FW6AX-EL].)
9	Coupler component (See 05-17A-16 COUPLER COMPONENT REMOVAL/INSTALLATION [FW6A-EL, FW6AX-EL].)
10	Oil pressure switch (See 05-17A-20 OIL PRESSURE SWITCH REMOVAL/INSTALLATION [FW6A-EL, FW6AX-EL].)
11	Down switch (See 05-17A-15 DOWN SWITCH INSPECTION [FW6A-EL, FW6AX-EL].) (See 05-17A-15 DOWN SWITCH REMOVAL/INSTALLATION [FW6A-EL, FW6AX-EL].)
12	M position switch (See 05-17A-13 M POSITION SWITCH INSPECTION [FW6A-EL, FW6AX-EL].) (See 05-17A-14 M POSITION SWITCH REMOVAL/INSTALLATION [FW6A-EL, FW6AX-EL].)
13	Up switch (See 05-17A-14 UP SWITCH INSPECTION [FW6A-EL, FW6AX-EL].) (See 05-17A-14 UP SWITCH REMOVAL/INSTALLATION [FW6A-EL, FW6AX-EL].)

AUTOMATIC TRANSAXLE [FW6A-EL, FW6AX-EL]

MECHANICAL SYSTEM TEST [FW6A-EL, FW6AX-EL]

id0517h2118300

Mechanical system test preparation

1. Apply the parking brake firmly, and set the wheel blocks for both the front and rear wheels.
2. Inspect the engine coolant level. (See 01-12A-3 ENGINE COOLANT LEVEL INSPECTION [SKYACTIV-G 2.0].)
3. Inspect the engine oil level. (See 01-11A-3 ENGINE OIL LEVEL INSPECTION [SKYACTIV-G 2.0].)
4. Inspect the ATF level. (See 05-17A-11 AUTOMATIC TRANSAXLE FLUID (ATF) INSPECTION [FW6A-EL, FW6AX-EL].)
5. Inspect the ignition timing. (See 01-10A-4 ENGINE TUNE-UP [SKYACTIV-G 2.0].)
6. Inspect the idle speed. (See 01-10A-4 ENGINE TUNE-UP [SKYACTIV-G 2.0].)
7. Verify that no DTCs are stored.

Line pressure test

1. Perform the mechanical system test preparation. (See 05-17A-4 Mechanical system test preparation.)
2. Remove the air cleaner component. (See 01-13A-6 INTAKE-AIR SYSTEM REMOVAL/INSTALLATION [SKYACTIV-G 2.0].)
3. Remove the harness bracket.
4. Remove the pressure detection square head plug.

Warning

- **Do not remove the square head plug when the ATF temperature is high. Otherwise, ATF could overflow and cause severe burns or serious injury. Remove the square head plug when the transaxle and ATF temperatures are low.**

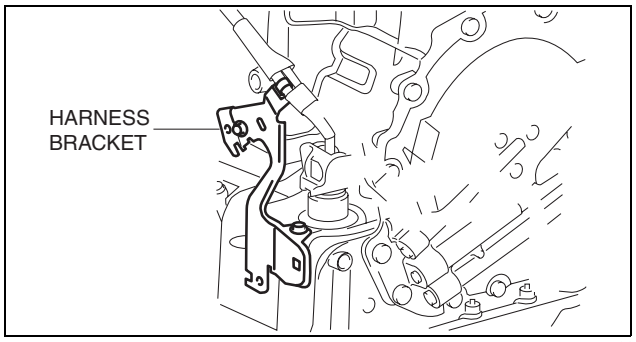

ac5uuw00000211

Note

- Use a suitable oil pressure gauge that corresponds to the line pressure because the maximum scale value differs depending on the oil pressure gauge.

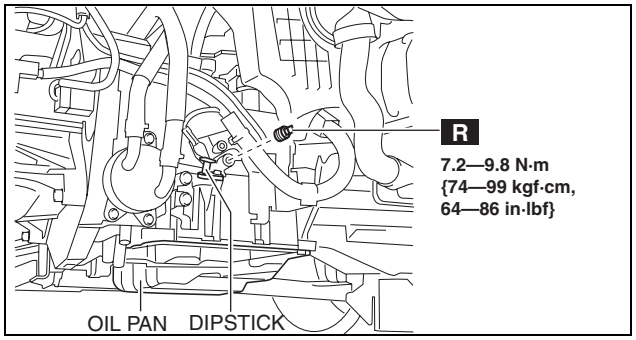

ac5wzw0000459

AUTOMATIC TRANSAXLE [FW6A-EL, FW6AX-EL]

5. Install **SSTs (49 D019 908, 49 D019 909, 49 D019 910,** 49 D019 911, 49 D019 913) to the line pressure detection port as shown in the figure.

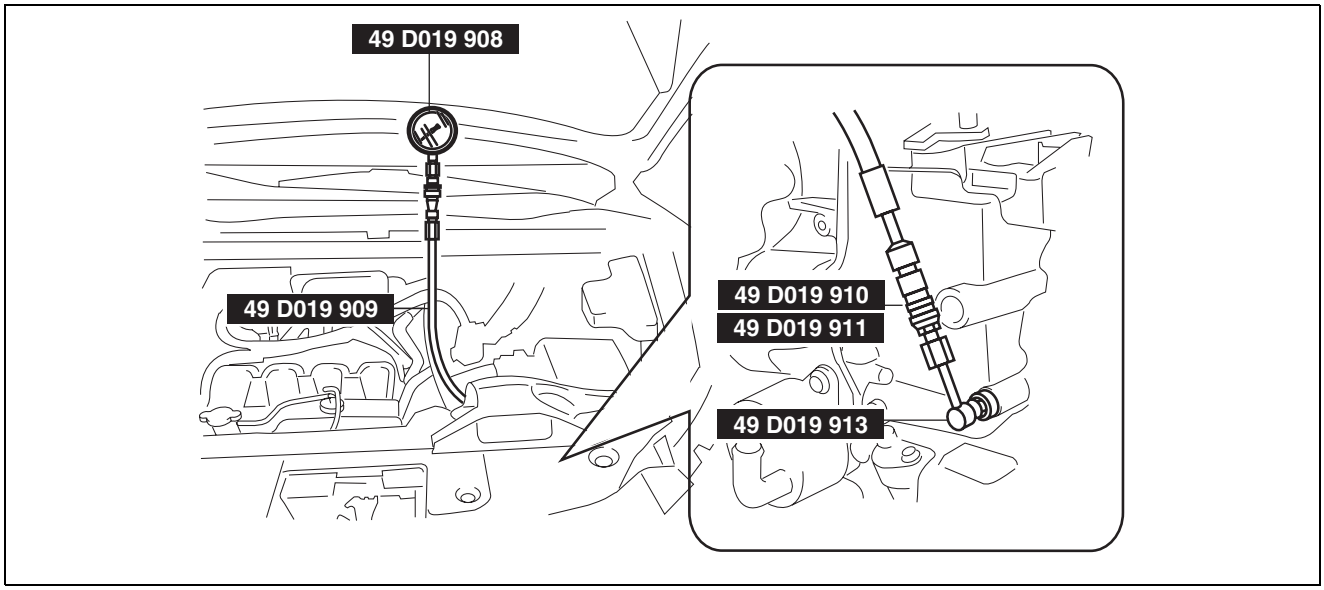

ac5wzw0000242

6. Install the air cleaner component. (See 01-13A-6 INTAKE-AIR SYSTEM REMOVAL/INSTALLATION [SKYACTIV-G 2.0].)
7. Start the engine.
8. Warm up the engine until the ATF temperature is **60—70 °C {140—158 °F}**.
9. Shift the selector lever to the D position.
10. Measure the line pressure while idling in D position.
11. Measure the line pressures while idling in the M (1st gear) and R positions using the same procedure.
12. Stop the engine.
13. Change the low-pressure gauge (49 D019 908) to the high-pressure gauge (49 D019 907).
14. Start the engine.
15. Measure the line pressure while stalling in D position.
    (1) Strongly depress the brake pedal with the left foot.
    (2) Shift the selector lever to the D position.

Caution
- **To prevent damage to the transaxle, measure the line pressure while stalling (Step (3)—(4)) within 5 s.**

    (3) Slowly depress the accelerator pedal fully with the right foot all the way down.
    (4) Read the line pressure quickly while stalling, and remove the right foot from the accelerator pedal.
    (5) Shift the selector lever to the N position and idle for **1 min or more**.

AUTOMATIC TRANSAXLE [FW6A-EL, FW6AX-EL]

16. Measure the line pressure while stalling for positions other than D in the same procedure.
    - If there is any malfunction, one of the following causes may have occurred:

Condition		Possible cause
Lower than specification	Lower in R, D, and M (1GR) position	• Oil pump wear • ATF leakage from oil pump, control valve body, and transaxle case • Pressure regulator valve sticking • Pressure control solenoid malfunction • Solenoid reducing valve sticking
	Lower in D and M (1GR) position	• ATF leakage from low clutch hydraulic circuit
	Lower in R and M (1GR) position	• ATF leakage from low and reverse brake hydraulic circuit
	Lower in R position	• ATF leakage from R-3-5 brake hydraulic circuit
Higher than specification	Higher in R, D, and M (1GR) position	• Pressure regulator valve sticking • Pressure control solenoid malfunction

Line pressure

Measurement conditions		Specification (kPa {kgf/cm^2, psi})
Idling	R position	**500—700 {5.10—7.13, 72.6—101.0}**
	D and M (1GR) position	**330—470 {3.37—4.79, 47.9—68.1}**
Stalling	R position	**1,790—2,100 {18.26—21.41, 259.7—304.5}**
	D and M (1GR) position	**970—1,170 {9.90—11.93, 141.0—169.6}**

17. Stop the engine.
18. Remove the air cleaner component. (See 01-13A-6 INTAKE-AIR SYSTEM REMOVAL/INSTALLATION [SKYACTIV-G 2.0].)
19. Remove the **SSTs**.

Warning
- **If the SST is removed when the ATF temperature is high, ATF could overflow and cause severe burns or serious injury. Remove the SST when the transaxle and ATF temperatures are low.**

20. Install a new square head plug.

Note
- Do not reuse the square head plug because a sealant coating has been applied.

Tightening torque
7.2—9.8 N·m {74—99 kgf·cm, 64—86 in·lbf}

21. Install the harness bracket.

Tightening torque
8—10 N·m {82—101 kgf·cm, 71—88 in·lbf}

22. Install the air cleaner component. (See 01-13A-6 INTAKE-AIR SYSTEM REMOVAL/INSTALLATION [SKYACTIV-G 2.0].)

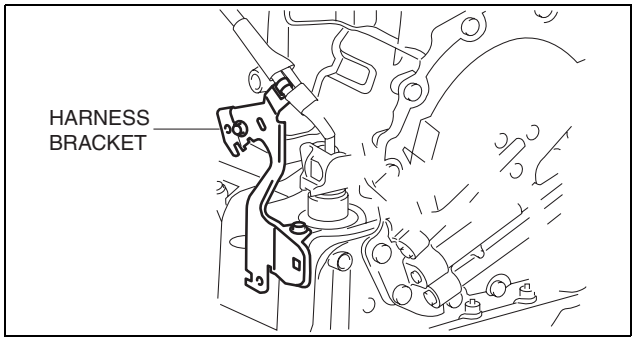

ac5uuw00000211

AUTOMATIC TRANSAXLE [FW6A-EL, FW6AX-EL]

Stall test

1. Perform the mechanical system test preparation. (See 05-17A-4 Mechanical system test preparation.)
2. Apply the parking brake firmly, and set the wheel blocks for both the front and rear wheels.
3. Start the engine.
4. Measure the stall speed in the D position.
   (1) Strongly depress the brake pedal with the left foot.
   (2) Shift the selector lever to the D position.

   Caution
   - **To prevent damage to the transaxle, measure the stall speed (Step (3)—(4)) within 5 s.**

   (3) Slowly depress the accelerator pedal fully with the right foot all the way down.
   (4) Read the engine speed quickly when the speed is stabilized, and remove the right foot from the accelerator pedal.
   (5) Shift the selector lever to the N position and idle for **1 min or more**.
5. Measure the stall speed in the M (1st gear) and R positions using the same procedure.
   - If there is any malfunction, one of the following causes may have occurred:

Condition		Possible cause	
Higher than specification	Higher in R, D, and M (1GR) position	Line pressure is low	• Oil pump wear • ATF leakage from oil pump, control valve body, and transaxle case • Pressure regulator valve sticking • TR control valve sticking • Pressure control solenoid operation malfunction
		• Low and reverse brake slippage, and damage of one-way clutch	
	Higher in D and M (1GR) position	• Low clutch slippage • One-way clutch damage	
	Higher in R position	Perform road test to determine whether problem is in R-3-5 brake or low and reverse brake • Engine brake operates in M (1GR) position — R-3-5 brake slippage • Engine braking does not operate in M (1GR) position — Low and reverse brake slippage	
Lower than specification	Lower in R, D, and M (1GR) position	• Engine malfunction • One-way clutch slippage in torque converter	

Stall speed

Measurement conditions	Standard value (rpm)
R position	1,700—2,200
D position	1,900—2,600
M position	

AUTOMATIC TRANSAXLE [FW6A-EL, FW6AX-EL]

Time lag test

1. Perform the mechanical system test preparation. (See 05-17A-4 Mechanical system test preparation.)
2. Apply the parking brake firmly, and set the wheel blocks for both the front and rear wheels.
3. Start the engine.
4. Measure the time lag from the N position to the D position.
   (1) Shift the selector lever from the N position to the D position with the brake pedal depressed.
   (2) Measure the time until the shift shock is felt firmly after shifting.
5. Measure the time lag from the N position to the R position using the same procedure.
   - If there is any malfunction, one of the following causes may have occurred:

Condition		Possible cause
N to D selected	Longer than specification	• Line pressure is low • Low clutch slippage • ATF leakage from low clutch hydraulic circuit • ATF leakage from low and reverse brake hydraulic circuit • Shift solenoid No.1 operation malfunction • Shift solenoid No.4 operation malfunction
	Shorter than specification	• Line pressure is high • N-D accumulator operation malfunction • Shift solenoid No.1 operation malfunction • Shift solenoid No.4 operation malfunction
N to R selected	Longer than specification	• Line pressure is low • Low and Reverse brake slippage • R-3-5 brake slippage • ATF leakage from R-3-5 brake hydraulic circuit • ATF leakage from low and reverse brake hydraulic circuit • Shift solenoid No.3 operation malfunction • Shift solenoid No.4 operation malfunction
	Shorter than specification	• Line pressure is high • N-R accumulator operation malfunction • Shift solenoid No.3 operation malfunction • Shift solenoid No.4 operation malfunction

Time lag

Measurement conditions	Specification (s)
N to D selected	0.4—0.7
N to R selected	

AUTOMATIC TRANSAXLE [FW6A-EL, FW6AX-EL]

ROAD TEST [FW6A-EL, FW6AX-EL]

id0517h2118400

Warning
- **When performing a road test, always verify the safety of the surrounding area before performing the test.**

Note
- When performing a road test requiring speeds which exceed the legal speed limit, use a dynamometer.

Road test preparation
1. Inspect the engine coolant level. (See 01-12A-3 ENGINE COOLANT LEVEL INSPECTION [SKYACTIV-G 2.0].)
2. Inspect the engine oil level. (See 01-11A-3 ENGINE OIL LEVEL INSPECTION [SKYACTIV-G 2.0].)
3. Inspect the ATF level. (See 05-17A-11 AUTOMATIC TRANSAXLE FLUID (ATF) INSPECTION [FW6A-EL, FW6AX-EL].)
4. Inspect the ignition timing. (See 01-10A-4 ENGINE TUNE-UP [SKYACTIV-G 2.0].)
5. Inspect the idle speed. (See 01-10A-4 ENGINE TUNE-UP [SKYACTIV-G 2.0].)
6. Verify that no DTCs are stored.

Shift diagram (D position, normal mode)

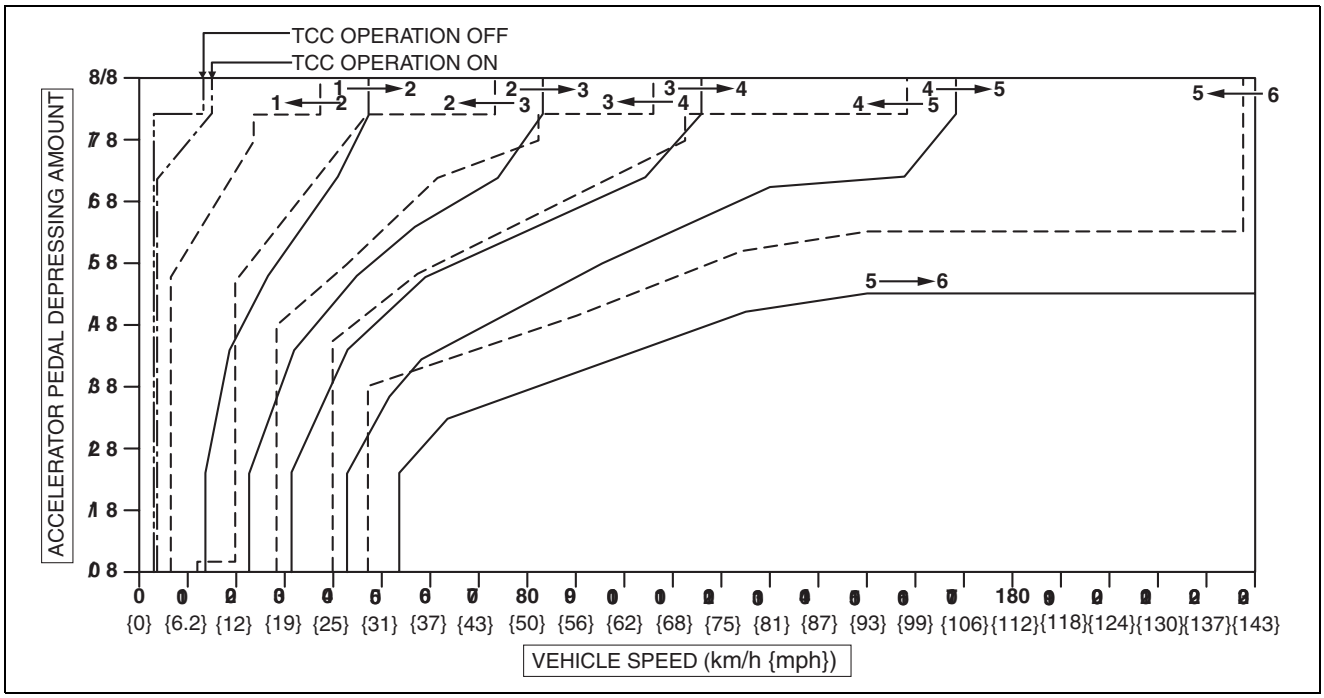

ac5wzw0000091

D position test
1. Perform road test preparations. (See 05-17A-9 Road test preparation.)
2. Warm up the transaxle.
3. Select D position.
4. Inspect the shift point for the D position in normal mode.
   - If there is any malfunction, refer to symptom troubleshooting and verify the malfunction symptom.
   (1) Depress the accelerator pedal and start the vehicle, and verify that the gears shift from 1st to 2nd, 2nd to 3rd, 3rd to 4th, 4th to 5th, and 5th to 6th. In addition, verify that the vehicle speed corresponds to the shift point when shifting.
   (2) Release the accelerator pedal while driving in 6th gear, and verify that the gears shift from 6th to 5th, 5th to 4th, 4th to 3rd, 3rd to 2nd, and 2nd to 1st. In addition, verify that the vehicle speed corresponds to the shift point when shifting.

AUTOMATIC TRANSAXLE [FW6A-EL, FW6AX-EL]

Note
- When the accelerator pedal is fully released quickly, shifting is not performed according to the shift pattern because the gear being used may be maintained.
- When decelerating by strongly depressing the brake pedal, shifting is not performed according to the shift pattern because the shift-down point may be at high vehicle speed.

(3) Kick down while driving in 6th, 5th, 4th, 3rd, and 2nd gears, and verify that the gears shift from 6th to 5th, 5th to 4th, 4th to 3rd, 3rd to 2nd, and 2nd to 1st. In addition, verify that the vehicle speed limit for kicking down corresponds to the shift point.
(4) Verify that the shift shock is minimal, shifting is smooth and timely, and there is no abnormal noise or slip.

Shift point

Position/mode		Accelerator pedal depression amount	Shift	Vehicle speed (km/h {mph})	Turbine rotation speed (rpm)
D	NORMAL	8/8	$D_1 \rightarrow D_2$	47—52 {30—32}	5,850—6,600
			$D_2 \rightarrow D_3$	82—89 {51—55}	5,850—6,400
			$D_3 \rightarrow D_4$	113—122 {71—75}	5,850—6,300
			$D_4 \rightarrow D_5$	166—175 {103—108}	5,900—6,200
		4/8	$D_1 \rightarrow D_2$	19—26 {12—16}	2,300—3,400
			$D_2 \rightarrow D_3$	31—46 {20—28}	2,200—3,350
			$D_3 \rightarrow D_4$	40—63 {25—39}	2,100—3,250
			$D_4 \rightarrow D_5$	61—88 {38—54}	2,150—3,150
		0/8	$D_6 \rightarrow D_5$	44—50 {28—31}	950—1,050
			$D_5 \rightarrow D_4$	37—42 {23—26}	950—1,050
			$D_4 \rightarrow D_3$	26—31 {17—19}	900—1,100
			$D_3 \rightarrow D_2$	9—14 {6—8}	500—750
			$D_2 \rightarrow D_1$	4—9 {3—5}	250—650
		Kickdown (8/8)	$D_5 \rightarrow D_4$	154—163 {96—101}	3,900—4,100
			$D_4 \rightarrow D_3$	101—110 {63—68}	3,600—3,900
			$D_3 \rightarrow D_2$	69—77 {43—47}	3,600—3,950
			$D_2 \rightarrow D_1$	35—40 {22—24}	2,500—2,850

M position test

1. Perform road test preparations. (See 05-17A-9 Road test preparation.)
2. Warm up the transaxle.
3. Select the M position.
4. Inspect the shift point for the M position.
   - If there is any malfunction, refer to symptom troubleshooting and verify the malfunction symptom.
   (1) Perform the shift operation while driving and verify that the gears can be shifted.
   (2) Release the accelerator pedal while driving in 6th gear, and verify that the gears shift from 6th to 5th, 5th to 4th, 4th to 3rd, 3rd to 2nd, and 2nd to 1st. In addition, verify that the vehicle speed corresponds to the shift point when shifting.
   (3) Release the accelerator pedal while driving and verify that the engine braking operates in all gears.
   (4) Verify that the shift shock is minimal, shifting is smooth and timely, and there is no abnormal noise or slip.

Shift point

Position/mode	Accelerator pedal depression amount	Shift	Vehicle speed (km/h {mph})	Turbine rotation speed (rpm)
M	0/8	$M_6 \rightarrow M_5$	44—50 {28—31}	950—1,050
		$M_5 \rightarrow M_4$	37—42 {23—26}	950—1,050
		$M_4 \rightarrow M_3$	26—31 {17—19}	900—1,100
		$M_3 \rightarrow M_2$	9—14 {6—8}	500—750
		$M_2 \rightarrow M_1$	4—9 {3—5}	250—650

5. Inspect 2nd gear fixed mode.
   (1) While the vehicle is stopped or the vehicle speed is **10 km/h {6.2 mph} or less**, operate the selector lever toward + to shift to 2nd gear.
   (2) Verify that the gear is fixed in 2nd gear.
   (3) Release the accelerator pedal while driving and verify that the engine braking operates.
   (4) Perform the shift operation while driving and verify that the gears can be shifted.

AUTOMATIC TRANSAXLE [FW6A-EL, FW6AX-EL]

P position test

1. Park the vehicle on a gentle slope and shift the selector lever to the P position.
2. Release the brake and verify that the vehicle does not move.
   - If there is any malfunction, inspect the parking mechanism in the transaxle.

AUTOMATIC TRANSAXLE FLUID (ATF) INSPECTION [FW6A-EL, FW6AX-EL]

id0517h2118500

Caution

- **If the ATF level is not within the specification or ATF is not adhering to the dipstick after warming up the engine, do not drive the vehicle. Otherwise, the transaxle could be damaged.**

ATF level inspection

1. Remove the dipstick securing bolt.
2. Connect the M-MDS to the DLC-2 and display the PID TFT.
3. Warm up the engine until the ATF temperature is 50 °C {122 °F}.
4. Remove the dipstick and wipe ATF off using a nylon cloth while leaving the engine idling.
5. Insert the dipstick and pull it out again.
6. Verify that the ATF is adhering between L and F on the dipstick.

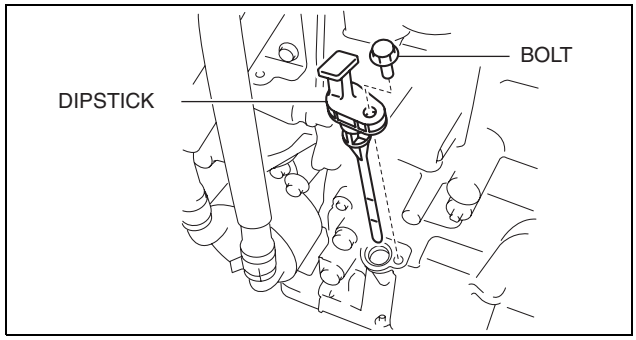

ac5wzw0000234

- If ATF is not adhering between L and F on the dipstick, adjust the ATF level. (See 05-17A-12 AUTOMATIC TRANSAXLE FLUID (ATF) ADJUSTMENT [FW6A-EL, FW6AX-EL].)

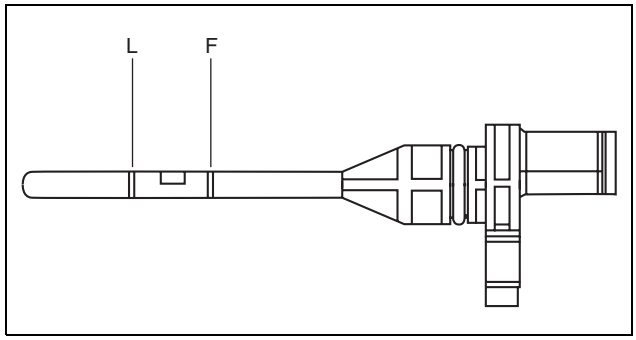

aaxjjw00010212

Note

- The ATF color is blue.
- Only use ATF FZ for the FW6A-EL, FW6AX-EL.

ATF type
ATF FZ

7. Insert the dipstick and install the securing bolt.

Tightening torque
8—11 N·m {82—112 kgf·cm, 71—97 in·lbf}

AUTOMATIC TRANSAXLE [FW6A-EL, FW6AX-EL]

AUTOMATIC TRANSAXLE FLUID (ATF) REPLACEMENT [FW6A-EL, FW6AX-EL]

id0517h2118600

Warning
- **Do not perform the servicing while the ATF is hot. Otherwise, it could cause severe burns or serious injury.**

1. Remove the front under cover No.2. (See 09-16-41 FRONT UNDER COVER No.2 REMOVAL/INSTALLATION.)
2. Remove the dipstick securing bolt.
3. Remove the dipstick.
4. Remove the drain plug and washer, and drain the ATF.
5. Install a new washer and drain plug.

Tightening torque
30—41 N·m {3.1—4.1 kgf·m, 23—30 ft·lbf}

6. Add ATF from the dipstick installation hole.

Note
- The ATF color is blue.
- Only use ATF FZ for the FW6A-EL, FW6AX-EL.

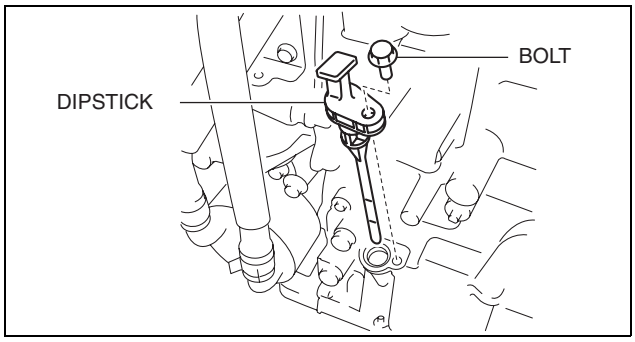

ac5wzw0000234

ATF type
ATF FZ
Resupply amount (Reference)
ATF is drained from drain plug: 3.5—4.9 L {3.7—5.1 US qt, 3.1—4.3 Imp qt}

7. Adjust the ATF level. (See 05-17A-12 AUTOMATIC TRANSAXLE FLUID (ATF) ADJUSTMENT [FW6A-EL, FW6AX-EL].)
8. Insert the dipstick and install the securing bolt.

Tightening torque
8—11 N·m {82—112 kgf·cm, 71—97 in·lbf}

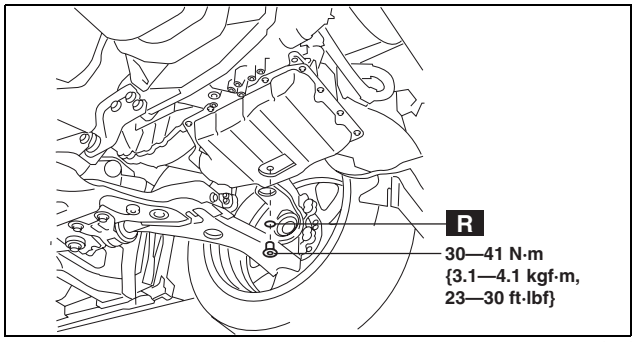

am3zzw0001264

9. Install the front under cover No.2. (See 09-16-41 FRONT UNDER COVER No.2 REMOVAL/INSTALLATION.)

AUTOMATIC TRANSAXLE FLUID (ATF) ADJUSTMENT [FW6A-EL, FW6AX-EL]

id0517h2119300

Caution
- **Only adjust the ATF level when the ATF temperature is 45—55 °C {113—131 °F}. If the ATF level is incorrect, it could damage the transaxle.**
- **Do not add ATF over the specification. Otherwise, the transaxle performance could be reduced and ATF could leak.**

1. Remove the dipstick securing bolt.
2. Remove the dipstick.
3. Adjust the ATF level.
   (1) Connect the M-MDS to the DLC-2 and display the PID TFT.
   (2) Warm up the engine until the ATF temperature is **50 °C {122 °F}**.
   (3) Remove the dipstick and wipe the ATF off using a rag while leaving the engine idling.
   (4) Insert the dipstick and pull it out again.
   (5) Verify that ATF is adhering to the central marker area on the dipstick.
      - If ATF is not adhering to the central marker area on the dipstick, adjust the ATF level to the central marker area.

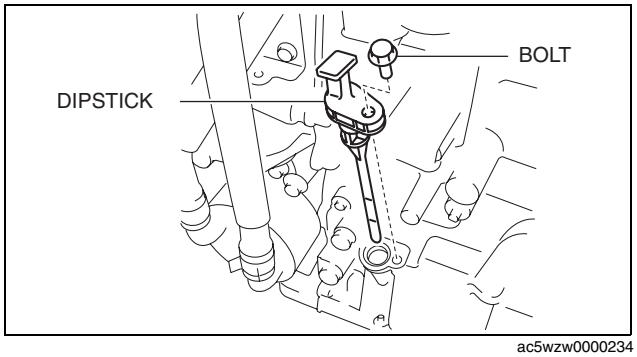

ac5wzw0000234

AUTOMATIC TRANSAXLE [FW6A-EL, FW6AX-EL]

Note
- The ATF color is blue.
- Only use ATF FZ for the FW6A-EL, FW6AX-EL.

ATF type
ATF FZ

4. Insert the dipstick and install the securing bolt.

Tightening torque
8—11 N·m {82—112 kgf·cm, 71—97 in·lbf}

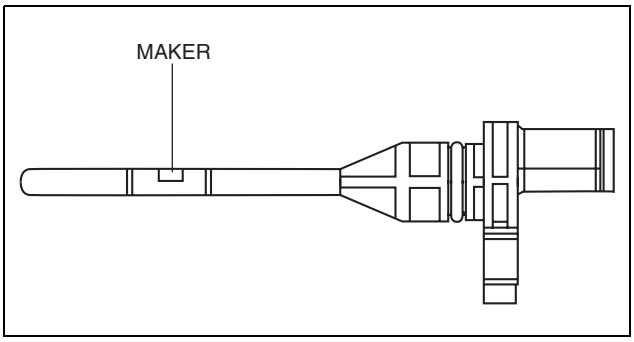

am3uuw0000839

M POSITION SWITCH INSPECTION [FW6A-EL, FW6AX-EL]

id0517h2500000

Continuity Inspection

Note
- The M position switch is built into the selector lever component.

1. Disconnect the negative battery cable. (See 01-17A-11 NEGATIVE BATTERY CABLE DISCONNECTION/ CONNECTION [SKYACTIV-G 2.0].) (See 01-17A-13 NEGATIVE BATTERY CABLE DISCONNECTION/ CONNECTION [SKYACTIV-G 2.0 (WITHOUT i-stop)].)
2. Remove the front console. (See 09-17-50 FRONT CONSOLE REMOVAL/INSTALLATION.)
3. Disconnect the selector lever component connector.

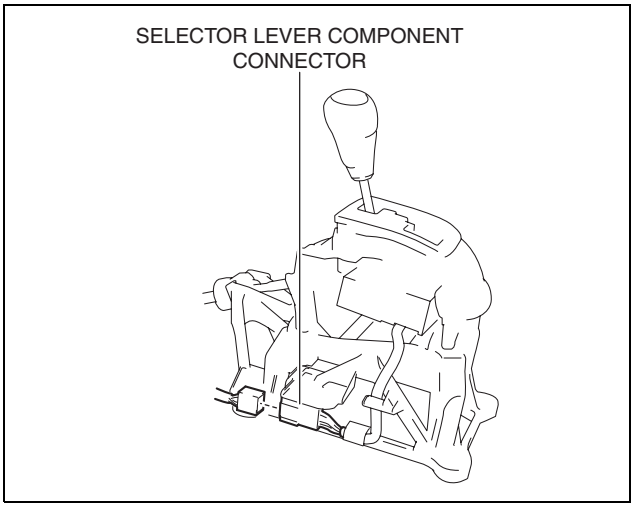

ac5wzw0000078

4. Verify that the continuity between selector lever component terminals E and J.
   - If not as verified, replace the selector lever component. (See 05-18-2 AUTOMATIC TRANSAXLE SHIFT MECHANISM REMOVAL/INSTALLATION.)

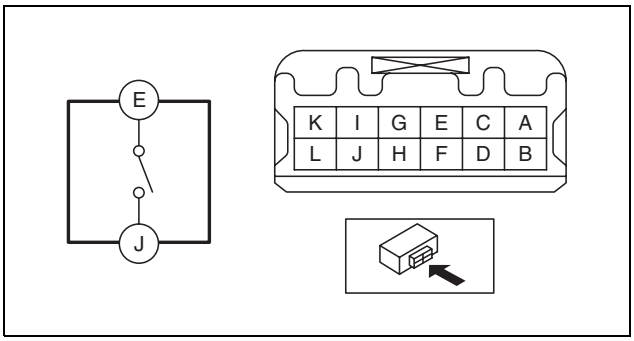

ac5wzw0000078

M position switch specification

Test condition	Continuity
Selector lever is in the M position.	Continuity
Selector lever is not in the M position.	No continuity

AUTOMATIC TRANSAXLE [FW6A-EL, FW6AX-EL]

M POSITION SWITCH REMOVAL/INSTALLATION [FW6A-EL, FW6AX-EL]

id0517h2100000

Note
- The M position switch is built into the selector lever component.

1. If the M position switch is replaced, replace the selector lever component. (See 05-18-2 AUTOMATIC TRANSAXLE SHIFT MECHANISM REMOVAL/INSTALLATION.)

UP SWITCH INSPECTION [FW6A-EL, FW6AX-EL]

id0517h2600500

Continuity Inspection

Note
- The up switch is built into the selector lever component.

1. Disconnect the negative battery cable. (See 01-17A-11 NEGATIVE BATTERY CABLE DISCONNECTION/CONNECTION [SKYACTIV-G 2.0].) (See 01-17A-13 NEGATIVE BATTERY CABLE DISCONNECTION/CONNECTION [SKYACTIV-G 2.0 (WITHOUT i-stop)].)
2. Remove the front console. (See 09-17-50 FRONT CONSOLE REMOVAL/INSTALLATION.)
3. Disconnect the selector lever component connector.

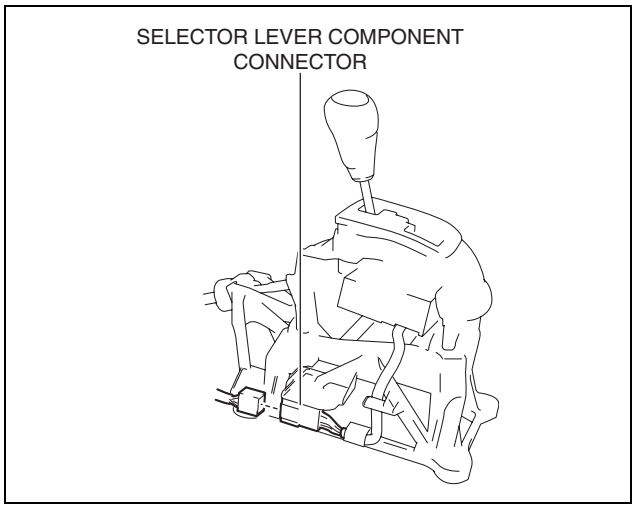

ac5wzw0000078

4. Verify that the continuity between selector lever component terminals C and J.
   - If not as verified, replace the selector lever component. (See 05-18-2 AUTOMATIC TRANSAXLE SHIFT MECHANISM REMOVAL/INSTALLATION.)

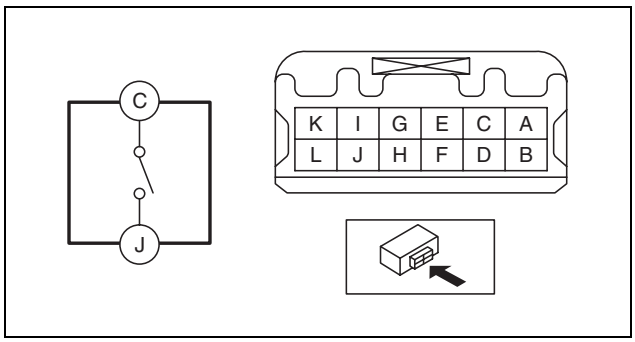

ac5wzw0000078

Up switch specification

Test condition	Continuity
Selector lever is in the M position (+) side position.	Continuity
Selector lever is not in the M position (+) side position.	No continuity

UP SWITCH REMOVAL/INSTALLATION [FW6A-EL, FW6AX-EL]

id0517h2112200

Note
- The up switch is built into the selector lever component.

1. If the up switch is replaced, replace the selector lever component. (See 05-18-2 AUTOMATIC TRANSAXLE SHIFT MECHANISM REMOVAL/INSTALLATION.)

AUTOMATIC TRANSAXLE [FW6A-EL, FW6AX-EL]

DOWN SWITCH INSPECTION [FW6A-EL, FW6AX-EL]

id0517h2600600

Continuity Inspection

Note
- The down switch is built into the selector lever component.

1. Disconnect the negative battery cable. (See 01-17A-11 NEGATIVE BATTERY CABLE DISCONNECTION/CONNECTION [SKYACTIV-G 2.0].) (See 01-17A-13 NEGATIVE BATTERY CABLE DISCONNECTION/CONNECTION [SKYACTIV-G 2.0 (WITHOUT i-stop)].)
2. Remove the front console. (See 09-17-50 FRONT CONSOLE REMOVAL/INSTALLATION.)
3. Disconnect the selector lever component connector.

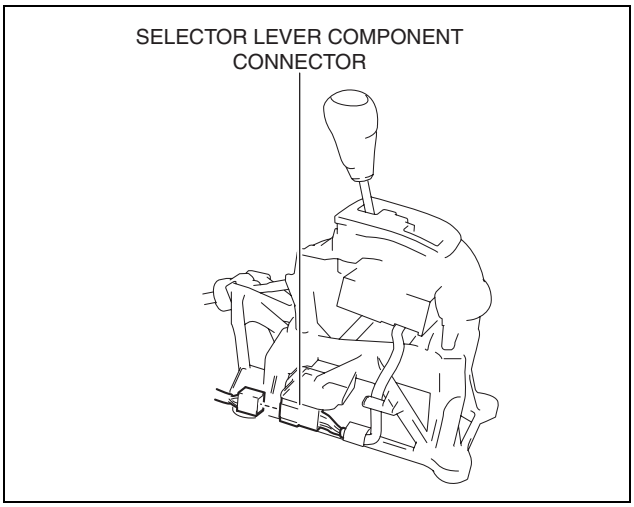

ac5wzw0000078

4. Verify that the continuity between selector lever component terminals D and J.
   - If not as verified, replace the selector lever component. (See 05-18-2 AUTOMATIC TRANSAXLE SHIFT MECHANISM REMOVAL/INSTALLATION.)

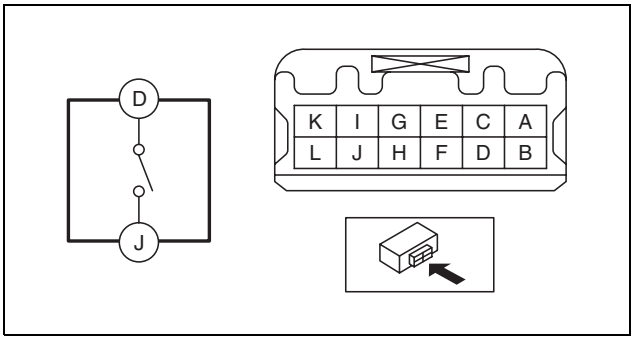

ac5wzw0000078

Down switch specification

Test condition	Continuity
Selector lever is in the M position (–) side position.	Continuity
Selector lever is not in the M position (–) side position.	No continuity

DOWN SWITCH REMOVAL/INSTALLATION [FW6A-EL, FW6AX-EL]

id0517h2112300

Note
- The down switch is built into the selector lever component.

1. If the down switch is replaced, replace the selector lever component. (See 05-18-2 AUTOMATIC TRANSAXLE SHIFT MECHANISM REMOVAL/INSTALLATION.)

AUTOMATIC TRANSAXLE [FW6A-EL, FW6AX-EL]

COUPLER COMPONENT REMOVAL/INSTALLATION [FW6A-EL, FW6AX-EL]

id0517h2112400

Warning

- **A hot transaxle and ATF can cause severe burns. Turn off the engine and wait until they are cool.**
- **Always wear protective eye wear when using the air compressor. If the air compressor is used, any particles of dirt or soiling could spatter and get into the eyes.**

Caution

- **Placing the control valve body connector side pointed downward could damage the control valve body connector part or sensor. If the servicing can only be performed by pointing the control valve body connector side downward, spread shock-absorbing material, which does not produce dust or foreign matter, and place the control valve body connector part and sensor on the table so that they do not directly contact the table.**

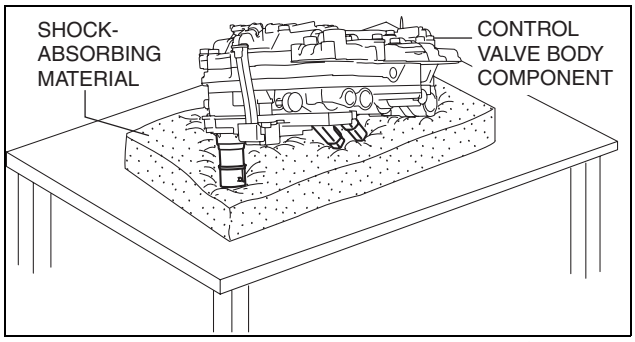

1. Select the selector lever to P position.
2. Disconnect the negative battery cable. (See 01-17A-13 NEGATIVE BATTERY CABLE DISCONNECTION/CONNECTION [SKYACTIV-G 2.0 (WITHOUT i-stop)].) (See 01-17A-11 NEGATIVE BATTERY CABLE DISCONNECTION/CONNECTION [SKYACTIV-G 2.0].)
3. Remove the front under cover No.2. (See 09-16-41 FRONT UNDER COVER No.2 REMOVAL/INSTALLATION.)
4. Clean the transaxle exterior throughout with a steam cleaner or cleaning solvents.
5. Remove the air cleaner component. (See 01-13A-6 INTAKE-AIR SYSTEM REMOVAL/INSTALLATION [SKYACTIV-G 2.0].)
6. Remove the control valve body. (See 05-17A-67 CONTROL VALVE BODY REMOVAL/INSTALLATION [FW6A-EL, FW6AX-EL].)
7. Remove the oil seal (control valve body). (See 05-17A-63 OIL SEAL (CONTROL VALVE BODY) REPLACEMENT [FW6A-EL, FW6AX-EL].)
8. Disconnect the coupler component connectors.

Caution

- **Do not scratch the shift solenoid, shift solenoid connector, oil pressure switch, and oil pressure switch connector with the precision flathead screwdriver.**
- **When disconnecting connectors, grasp the connectors, not the wiring harnesses. Otherwise, the wiring harnesses may be pulled out of the connector causing poor contact.**

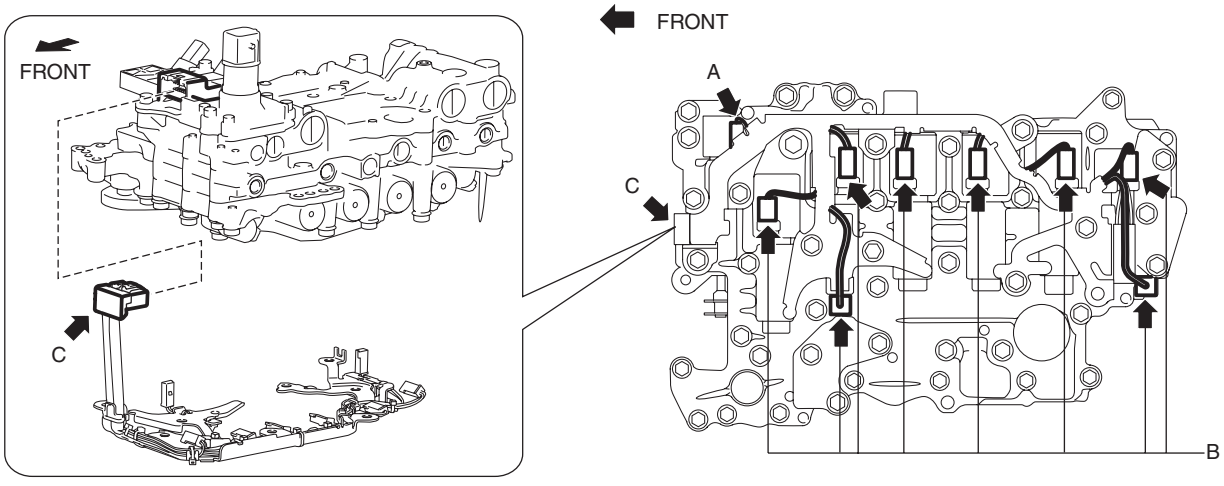

CONNECTOR A:ON/OFF SOLENOID
CONNECTOR B:SHIFT SOLENOID /OIL PRESSURE SWITCH
CONNECTOR C:TCM

AUTOMATIC TRANSAXLE [FW6A-EL, FW6AX-EL]

(1) Disconnect connector A and connector C by pressing the connector tab with your fingers.
(2) Insert a precision flathead screwdriver and move it in the direction of the arrow to disconnect connector B as shown in the figure.

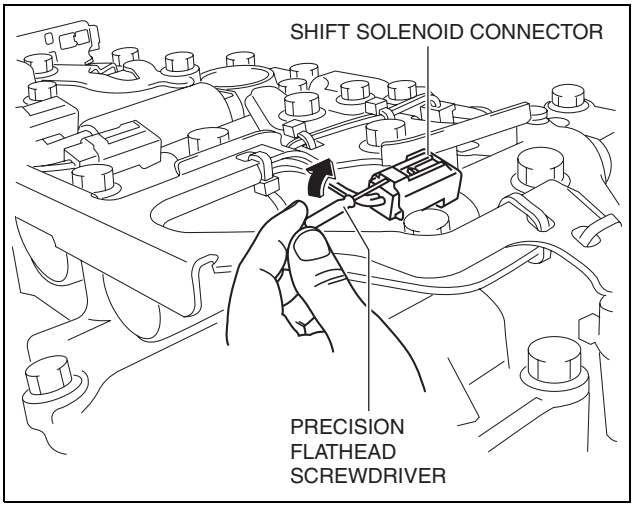

am3zzw0001264

9. Remove the coupler component.

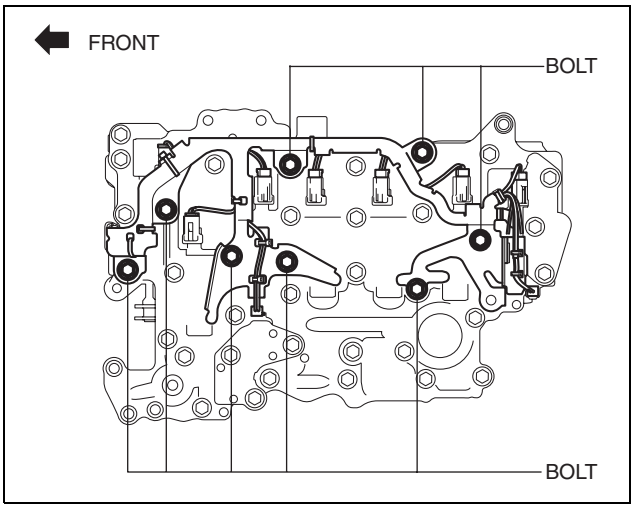

am3uuw0000916

AUTOMATIC TRANSAXLE [FW6A-EL, FW6AX-EL]

Caution
- **Because there are solenoid valve securing pins in the areas circled with a dotted line shown in the figure. Always verify that the solenoid valve securing pins are on the control valve body when installing the coupler component.**

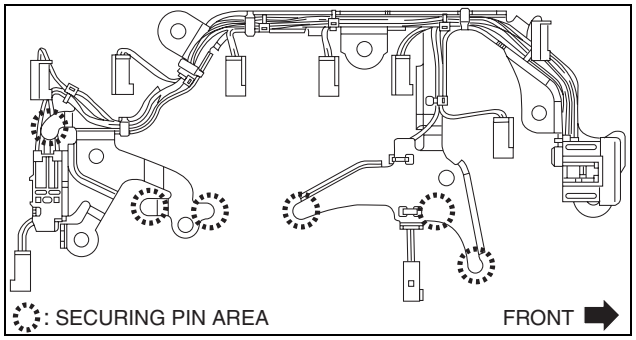

am3zzw0001265

10. Temporarily install the coupler component so that the oil strainer installation bolt hole does not deviate.
11. After verifying that the oil strainer installation bolt hole is not deviated, install the coupler component.

Caution
- **After assembling the coupler component, verify that shift solenoids No.1, 2, 3, 4, the pressure control solenoid, and the TCC control solenoid cannot be pulled out from the control valve body.**

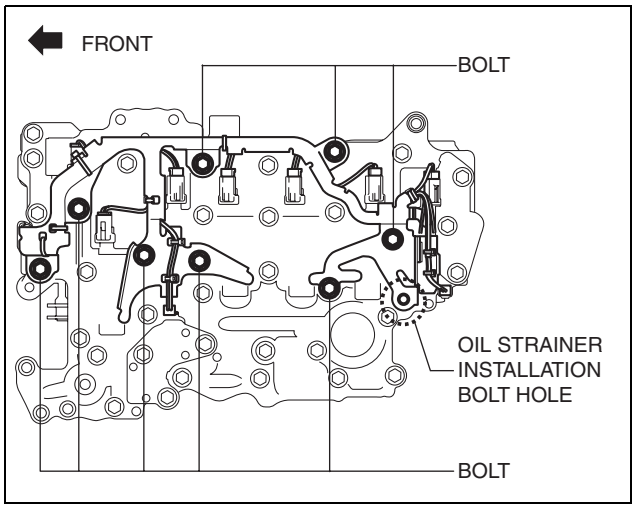

am3uuw0000916

Tightening torque
9—10 N·m {92—101 kgf·cm, 80—88 in·lbf}

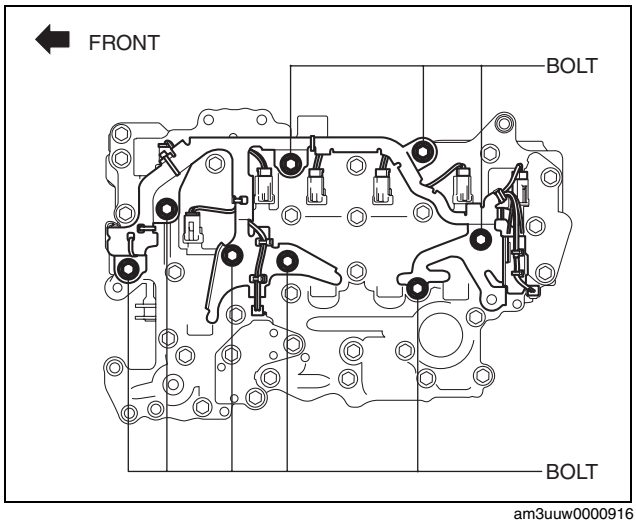

am3uuw0000916

AUTOMATIC TRANSAXLE [FW6A-EL, FW6AX-EL]

12. Connect the coupler component connectors.

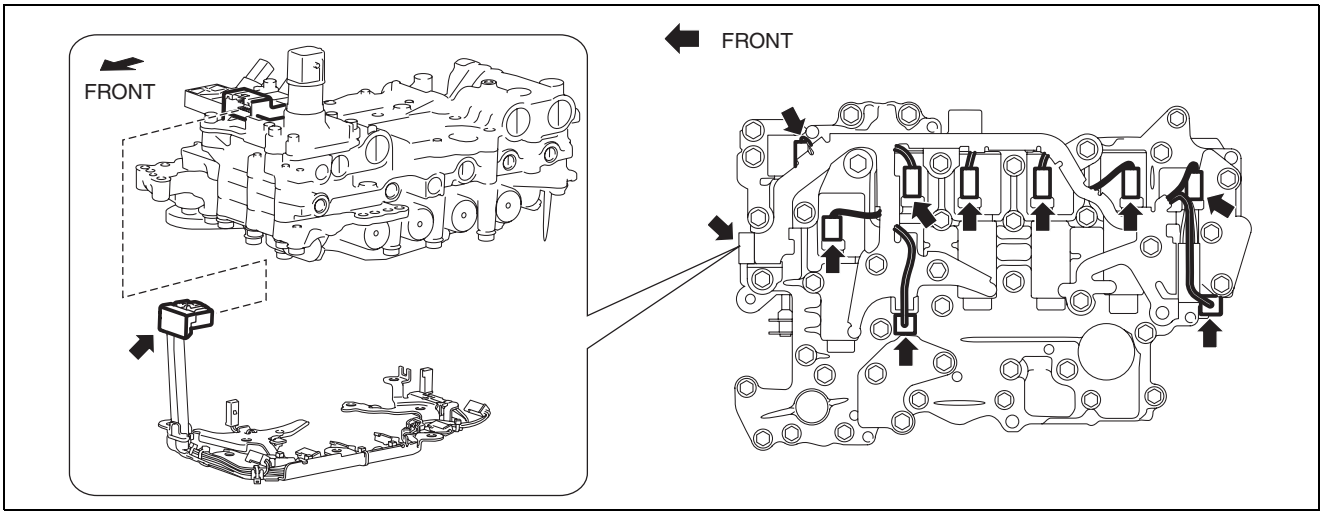

am3uuw0000916

13. Install the control valve body. (See 05-17A-67 CONTROL VALVE BODY REMOVAL/INSTALLATION [FW6A-EL, FW6AX-EL].)
14. Install the front under cover No.2. (See 09-16-41 FRONT UNDER COVER No.2 REMOVAL/INSTALLATION.)
15. Install the oil seal (control valve body). (See 05-17A-63 OIL SEAL (CONTROL VALVE BODY) REPLACEMENT [FW6A-EL, FW6AX-EL].)
16. Install the hose clamp. (See 05-17A-67 CONTROL VALVE BODY REMOVAL/INSTALLATION [FW6A-EL, FW6AX-EL].)
17. Connect the control valve body connector. (See 05-17A-67 CONTROL VALVE BODY REMOVAL/INSTALLATION [FW6A-EL, FW6AX-EL].)

Caution

- **Make sure that your hand does not touch the terminal as the connector terminal could be damaged.**
- **Verify that there is no fluid or foreign matter adhering to the connector before connecting the connector.**
- **Insert the connector straight as the connector terminal could be damaged.**
- **Rotate the connector lever until a click is heard.**

18. Add the ATF. (See 05-17A-12 AUTOMATIC TRANSAXLE FLUID (ATF) REPLACEMENT [FW6A-EL, FW6AX-EL].)
19. Install the air cleaner component. (See 01-13A-6 INTAKE-AIR SYSTEM REMOVAL/INSTALLATION [SKYACTIV-G 2.0].)
20. Connect the negative battery cable. (See 01-17A-13 NEGATIVE BATTERY CABLE DISCONNECTION/CONNECTION [SKYACTIV-G 2.0 (WITHOUT i-stop)].) (See 01-17A-11 NEGATIVE BATTERY CABLE DISCONNECTION/CONNECTION [SKYACTIV-G 2.0].)
21. Perform the “Mechanical System Test”. (See 05-17A-4 MECHANICAL SYSTEM TEST [FW6A-EL, FW6AX-EL].)

AUTOMATIC TRANSAXLE [FW6A-EL, FW6AX-EL]

OIL PRESSURE SWITCH REMOVAL/INSTALLATION [FW6A-EL, FW6AX-EL]

id0517h2112600

Warning

- **A hot transaxle and ATF can cause severe burns. Turn off the engine and wait until they are cool.**
- **Always wear protective eye wear when using the air compressor. If the air compressor is used, any particles of dirt or soiling could spatter and get into the eyes.**

Caution

- **If the oil pressure switch has been replaced, perform initial learning. (See 05-17A-74 INITIAL LEARNING [FW6A-EL, FW6AX-EL].)**
- **Placing the control valve body connector side pointed downward could damage the control valve body connector part or sensor. If the servicing can only be performed by pointing the control valve body connector side downward, spread shock-absorbing material, which does not produce dust or foreign matter, and place the control valve body connector part and sensor on the table so that they do not directly contact the table.**

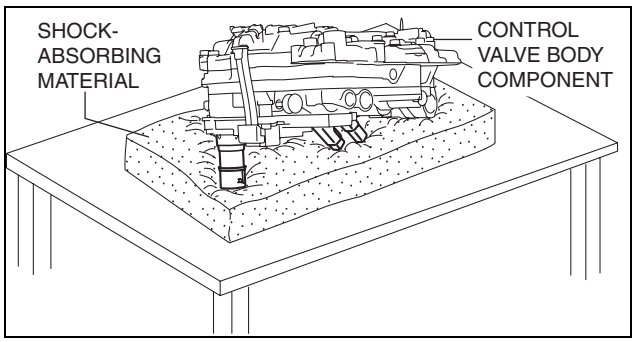

Oil Pressure Switch A

1. Select the selector lever to P position.
2. Disconnect the negative battery cable. (See 01-17A-13 NEGATIVE BATTERY CABLE DISCONNECTION/CONNECTION [SKYACTIV-G 2.0 (WITHOUT i-stop)].) (See 01-17A-11 NEGATIVE BATTERY CABLE DISCONNECTION/CONNECTION [SKYACTIV-G 2.0].)
3. Remove the front under cover No.2. (See 09-16-41 FRONT UNDER COVER No.2 REMOVAL/INSTALLATION.)
4. Clean the transaxle exterior throughout with a steam cleaner or cleaning solvents.
5. Remove the air cleaner component. (See 01-13A-6 INTAKE-AIR SYSTEM REMOVAL/INSTALLATION [SKYACTIV-G 2.0].)
6. Remove the control valve body. (See 05-17A-67 CONTROL VALVE BODY REMOVAL/INSTALLATION [FW6A-EL, FW6AX-EL].)
7. Remove the oil seal (control valve body). (See 05-17A-63 OIL SEAL (CONTROL VALVE BODY) REPLACEMENT [FW6A-EL, FW6AX-EL].)
8. Insert a precision flathead screwdriver and move it in the direction of the arrow to disconnect the oil pressure switch A connector as shown in the figure.

Caution

- **Do not scratch the oil pressure switch A and oil pressure switch connector A with the precision flathead screwdriver.**
- **When disconnecting connectors, grasp the connectors, not the wiring harnesses. Otherwise, the wiring harnesses may be pulled out of the connector causing poor contact.**

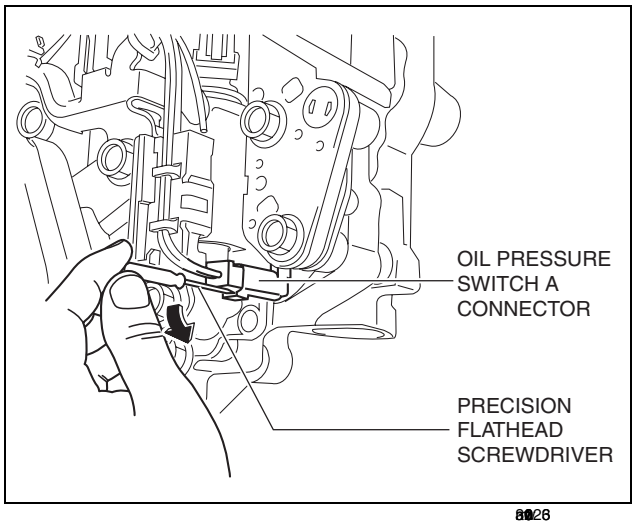

AUTOMATIC TRANSAXLE [FW6A-EL, FW6AX-EL]

9. Remove the oil pressure switch A fitting bolts.

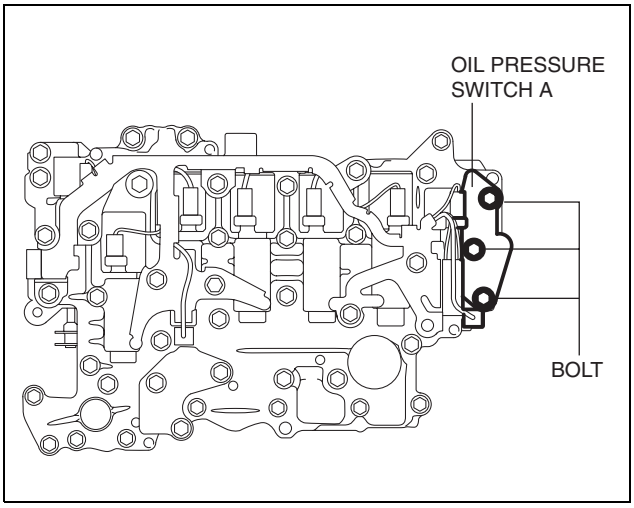

am3uuw0000872

10. Detach tab shown in the figure and remove the oil pressure switch A from the control valve body.

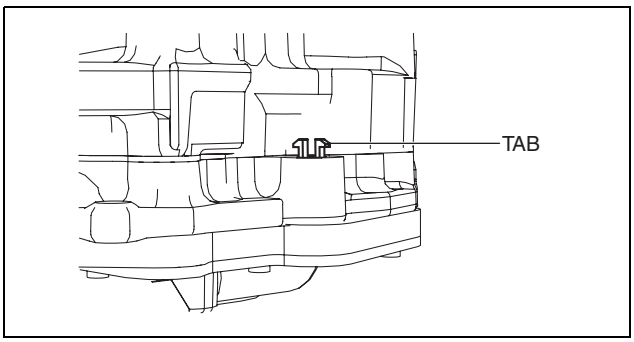

am3uuw0000901

11. Install the oil pressure switch A to the control valve body.
12. Verify that the tab is attached correctly.

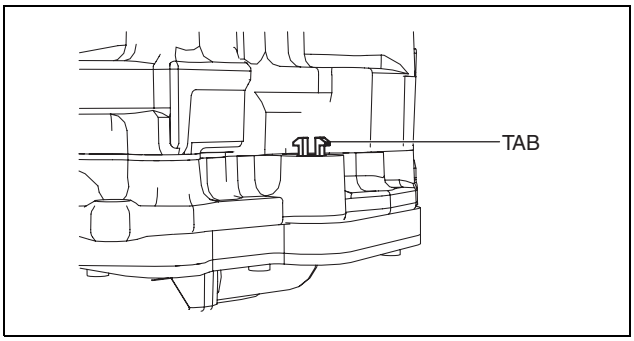

am3uuw0000901

13. Install the oil pressure switch A fitting bolts.

Tightening torque
9—10 N·m {92—101 kgf·cm, 80—88 in·lbf}

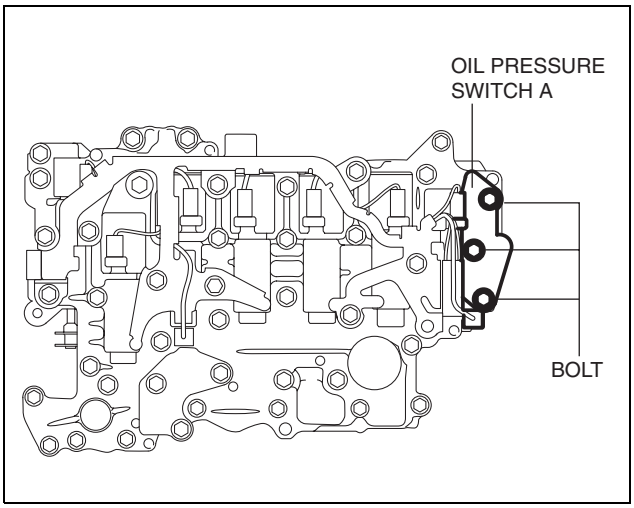

am3uuw0000872

AUTOMATIC TRANSAXLE [FW6A-EL, FW6AX-EL]

14. Connect the oil pressure switch A connector.
15. Install the control valve body. (See 05-17A-67 CONTROL VALVE BODY REMOVAL/ INSTALLATION [FW6A-EL, FW6AX-EL].)
16. Install the front under cover No.2. (See 09-16-41 FRONT UNDER COVER No.2 REMOVAL/ INSTALLATION.)
17. Install the oil seal (control valve body). (See 05-17A-63 OIL SEAL (CONTROL VALVE BODY) REPLACEMENT [FW6A-EL, FW6AX-EL].)
18. Install the hose clamp. (See 05-17A-67 CONTROL VALVE BODY REMOVAL/ INSTALLATION [FW6A-EL, FW6AX-EL].)
19. Connect the control valve body connector. (See 05-17A-67 CONTROL VALVE BODY REMOVAL/ INSTALLATION [FW6A-EL, FW6AX-EL].)

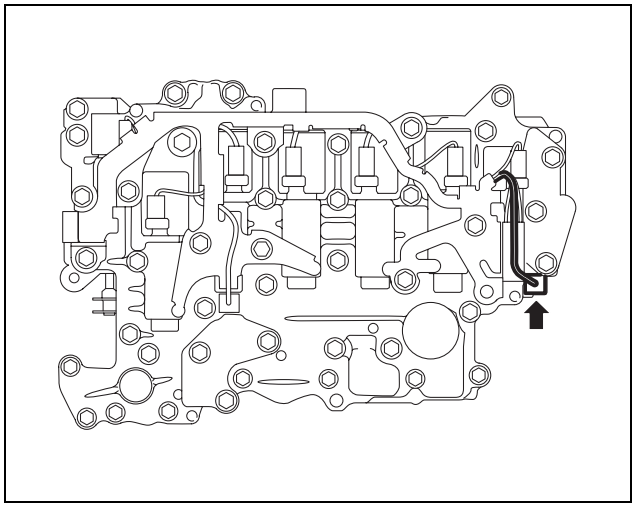
am3uuw0000871

Caution
- **Make sure that your hand does not touch the terminal as the connector terminal could be damaged.**
- **Verify that there is no fluid or foreign matter adhering to the connector before connecting the connector.**
- **Insert the connector straight as the connector terminal could be damaged.**
- **Rotate the connector lever until a click is heard.**

20. Add the ATF. (See 05-17A-12 AUTOMATIC TRANSAXLE FLUID (ATF) REPLACEMENT [FW6A-EL, FW6AX-EL].)
21. Install the air cleaner component. (See 01-13A-6 INTAKE-AIR SYSTEM REMOVAL/INSTALLATION [SKYACTIV-G 2.0].)
22. Connect the negative battery cable. (See 01-17A-13 NEGATIVE BATTERY CABLE DISCONNECTION/ CONNECTION [SKYACTIV-G 2.0 (WITHOUT i-stop)].) (See 01-17A-11 NEGATIVE BATTERY CABLE DISCONNECTION/CONNECTION [SKYACTIV-G 2.0].)
23. Perform the “Initial Learning” (oil pressure switch A Replacement). (See 05-17A-74 INITIAL LEARNING [FW6A-EL, FW6AX-EL].)
24. Perform the “Mechanical System Test”. (See 05-17A-4 MECHANICAL SYSTEM TEST [FW6A-EL, FW6AX-EL].)

Oil Pressure Switch B

1. Disconnect the negative battery cable. (See 01-17A-13 NEGATIVE BATTERY CABLE DISCONNECTION/ CONNECTION [SKYACTIV-G 2.0 (WITHOUT i-stop)].) (See 01-17A-11 NEGATIVE BATTERY CABLE DISCONNECTION/CONNECTION [SKYACTIV-G 2.0].)
2. Remove the front under cover No.2. (See 09-16-41 FRONT UNDER COVER No.2 REMOVAL/INSTALLATION.)
3. Clean the transaxle exterior throughout with a steam cleaner or cleaning solvents.
4. Drain the ATF. (See 05-17A-12 AUTOMATIC TRANSAXLE FLUID (ATF) REPLACEMENT [FW6A-EL, FW6AX-EL].)
5. Remove the oil pan.

Caution
- **To avoid damaging the control valve body, if there is a large amount of foreign material at the bottom of the oil pan when the oil pan is removed, replace the oil strainer with a new one.**
- **If there is not a large amount of foreign material at the bottom of the oil pan, the oil strainer does not have to be replaced.**

Note
- Always use new oil pan installation bolts when re-installing the oil pan because the oil pan installation bolts cannot be reused.

6. Remove the oil strainer. (See 05-17A-67 CONTROL VALVE BODY REMOVAL/INSTALLATION [FW6A-EL, FW6AX-EL].)
7. Remove the oil strainer O-ring. (See 05-17A-67 CONTROL VALVE BODY REMOVAL/INSTALLATION [FW6A-EL, FW6AX-EL].)

AUTOMATIC TRANSAXLE [FW6A-EL, FW6AX-EL]

8. Insert a precision flathead screwdriver and move it in the direction of the arrow to disconnect the oil pressure switch B connector as shown in the figure.

Caution

- **Do not scratch the oil pressure switch B and oil pressure switch connector B with the precision flathead screwdriver.**
- **When disconnecting connectors, grasp the connectors, not the wiring harnesses. Otherwise, the wiring harnesses may be pulled out of the connector causing poor contact.**

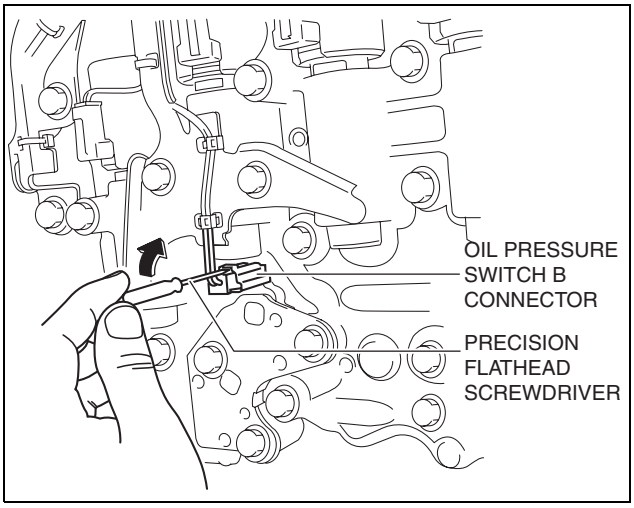

9. Remove the oil pressure switch B.

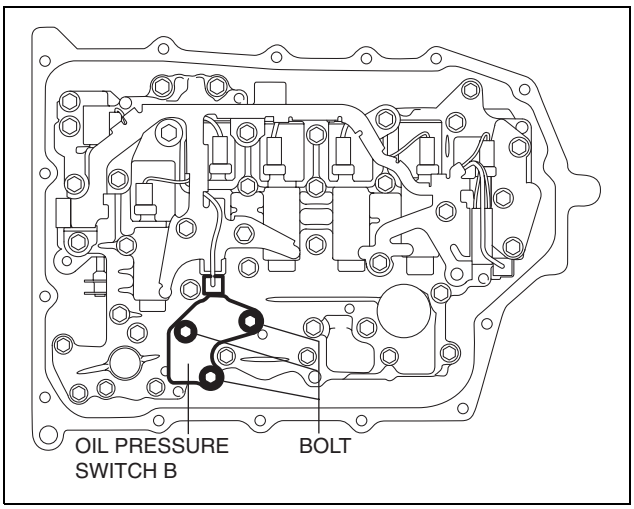

10. Install the oil pressure switch B.

Tightening torque
9—10 N·m {92—101 kgf·cm, 80—88 in·lbf}

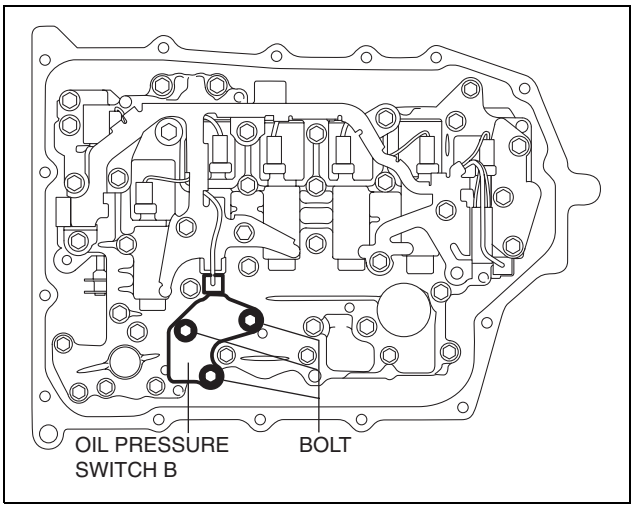

AUTOMATIC TRANSAXLE [FW6A-EL, FW6AX-EL]

11. Connect the oil pressure switch B connector.
12. Install the oil strainer O-ring. (See 05-17A-67 CONTROL VALVE BODY REMOVAL/INSTALLATION [FW6A-EL, FW6AX-EL].)

Note
- If there is a large amount of foreign material at the bottom of the oil pan, replace the oil strainer with a new one.

13. Install the oil strainer. (See 05-17A-67 CONTROL VALVE BODY REMOVAL/INSTALLATION [FW6A-EL, FW6AX-EL].)

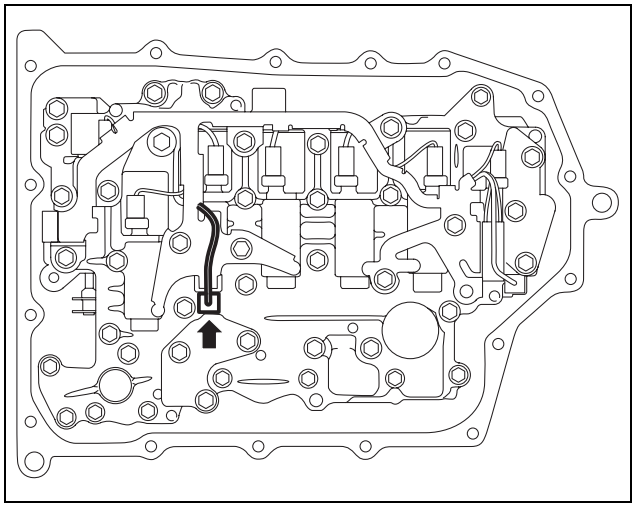
am3uuw0000872

14. Apply a light coat of silicon sealant (TB1217E) to the contact surfaces of the oil pan and transaxle case.

Caution
- **Clean any remaining silicone sealant on the contact surface of the transaxle case and oil pan, and degrease the sealant area. Otherwise, oil could leak.**

15. Install the oil pan with new bolts before the applied sealant starts to harden.

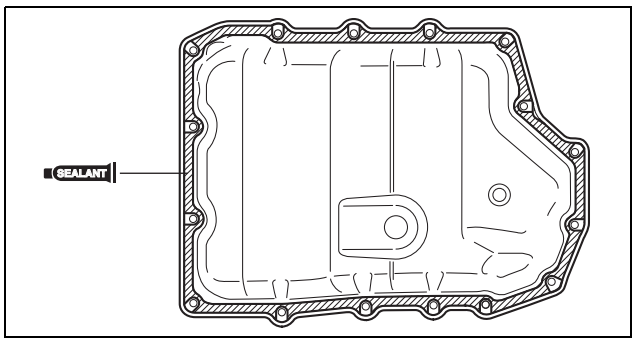

am3uuw0000828

Tightening torque
8—10 N·m {82—101 kgf·cm, 71—88 in·lbf}

16. Install the front under cover No.2. (See 09-16-41 FRONT UNDER COVER No.2 REMOVAL/INSTALLATION.)
17. Add the ATF. (See 05-17A-12 AUTOMATIC TRANSAXLE FLUID (ATF) REPLACEMENT [FW6A-EL, FW6AX-EL].)
18. Connect the negative battery cable. (See 01-17A-13 NEGATIVE BATTERY CABLE DISCONNECTION/CONNECTION [SKYACTIV-G 2.0 (WITHOUT i-stop)].) (See 01-17A-11 NEGATIVE BATTERY CABLE DISCONNECTION/CONNECTION [SKYACTIV-G 2.0].)
19. Perform the “Initial Learning” (oil pressure switch B Replacement). (See 05-17A-74 INITIAL LEARNING [FW6A-EL, FW6AX-EL].)
20. Perform the “Mechanical System Test”. (See 05-17A-4 MECHANICAL SYSTEM TEST [FW6A-EL, FW6AX-EL].)

AUTOMATIC TRANSAXLE [FW6A-EL, FW6AX-EL]

ON/OFF SOLENOID REMOVAL/INSTALLATION [FW6A-EL, FW6AX-EL]

id0517h2117100

Warning
- **A hot transaxle and ATF can cause severe burns. Turn off the engine and wait until they are cool.**
- **Always wear protective eye wear when using the air compressor. If the air compressor is used, any particles of dirt or soiling could spatter and get into the eyes.**

1. Disconnect the negative battery cable. (See 01-17A-13 NEGATIVE BATTERY CABLE DISCONNECTION/CONNECTION [SKYACTIV-G 2.0 (WITHOUT i-stop)].) (See 01-17A-11 NEGATIVE BATTERY CABLE DISCONNECTION/CONNECTION [SKYACTIV-G 2.0].)
2. Remove the front under cover No.2. (See 09-16-41 FRONT UNDER COVER No.2 REMOVAL/INSTALLATION.)
3. Clean the transaxle exterior throughout with a steam cleaner or cleaning solvents.
4. Drain the ATF. (See 05-17A-12 AUTOMATIC TRANSAXLE FLUID (ATF) REPLACEMENT [FW6A-EL, FW6AX-EL].)
5. Remove the oil pan.

Caution
- **To avoid damaging the control valve body, if there is a large amount of foreign material at the bottom of the oil pan when the oil pan is removed, replace the oil strainer with a new one.**
- **If there is not a large amount of foreign material at the bottom of the oil pan, the oil strainer does not have to be replaced.**

Note
- Always use new oil pan installation bolts when re-installing the oil pan because the oil pan installation bolts cannot be reused.

6. Disconnect the ON/OFF solenoid connector.

Note
- Disconnect the ON/OFF solenoid connector by pressing the connector tab with your fingers.

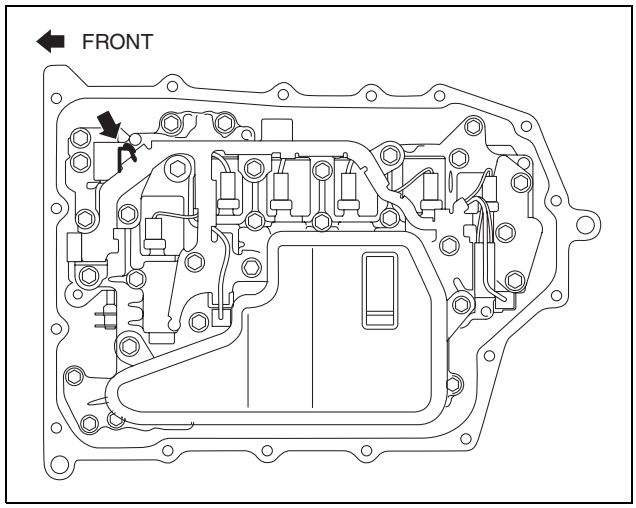

am3uuw0000838

AUTOMATIC TRANSAXLE [FW6A-EL, FW6AX-EL]

7. Remove the ON/OFF solenoid.

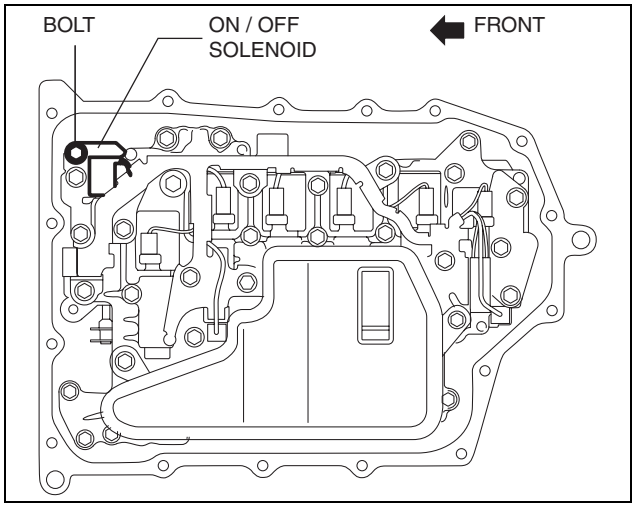

am3uuw0000838

8. Install the ON/OFF solenoid.

Tightening torque
9—10 N·m {92—101 kgf·cm, 80—88 in·lbf}

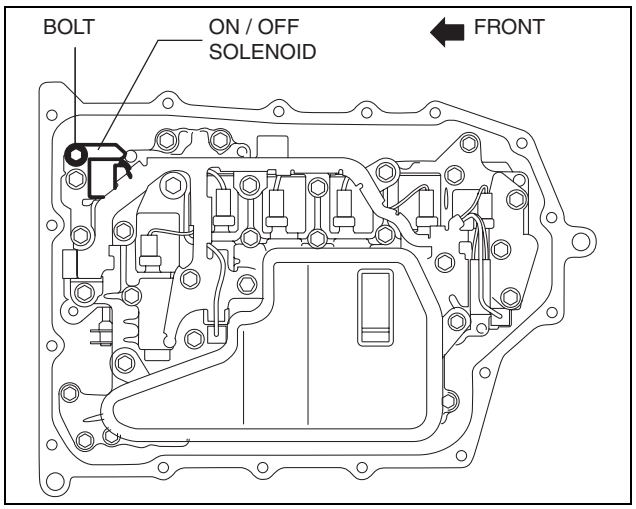

am3uuw0000838

9. Connect the ON/OFF solenoid connector.

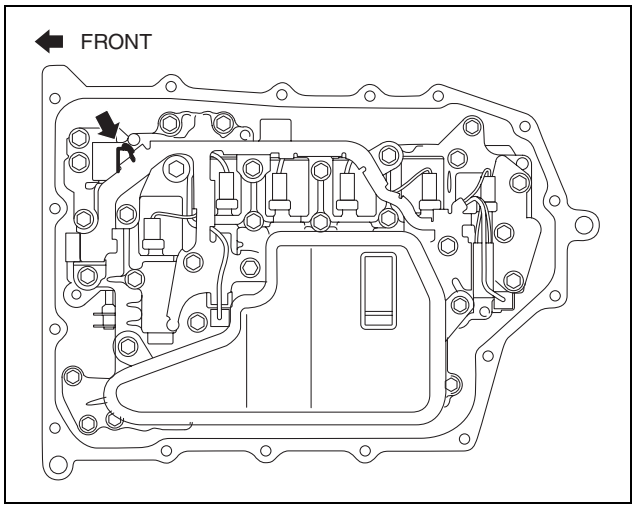

am3uuw0000838

AUTOMATIC TRANSAXLE [FW6A-EL, FW6AX-EL]

10. Apply a light coat of silicon sealant (TB1217E) to the contact surfaces of the oil pan and transaxle case.

Caution
- **Clean any remaining silicone sealant on the contact surface of the transaxle case and oil pan, and degrease the sealant area. Otherwise, oil could leak.**

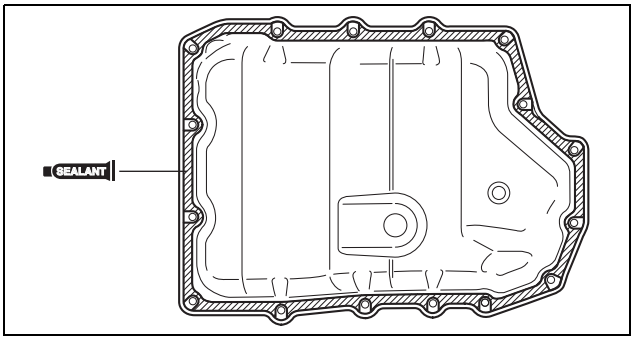

am3uuw0000828

11. Install the oil pan with new bolts before the applied sealant starts to harden.

Tightening torque
8—10 N·m {82—101 kgf·cm, 71—88 in·lbf}

12. Install the front under cover No.2. (See 09-16-41 FRONT UNDER COVER No.2 REMOVAL/INSTALLATION.)
13. Add the ATF. (See 05-17A-12 AUTOMATIC TRANSAXLE FLUID (ATF) REPLACEMENT [FW6A-EL, FW6AX-EL].)
14. Connect the negative battery cable. (See 01-17A-13 NEGATIVE BATTERY CABLE DISCONNECTION/CONNECTION [SKYACTIV-G 2.0 (WITHOUT i-stop)].) (See 01-17A-11 NEGATIVE BATTERY CABLE DISCONNECTION/CONNECTION [SKYACTIV-G 2.0].)
15. Perform the “Mechanical System Test”. (See 05-17A-4 MECHANICAL SYSTEM TEST [FW6A-EL, FW6AX-EL].)

05

ELECTRIC AT OIL PUMP REMOVAL/INSTALLATION [FW6A-EL, FW6AX-EL]

id0517h2117600

Caution
- **Do not drop or apply a shock to the electric AT oil pump. Replace the electric AT oil pump if it has been dropped or received an impact.**
- **Do not disassemble the electric AT oil pump. Replace the electric AT oil pump if it has been disassembled.**
- **Make sure that there is no silicone sealant or other foreign matter in the electric AT oil pump and transaxle. Otherwise, it could cause a malfunction.**

1. Turn the steering wheel left until it locks.
2. Disconnect the negative battery cable. (See 01-17A-13 NEGATIVE BATTERY CABLE DISCONNECTION/CONNECTION [SKYACTIV-G 2.0 (WITHOUT i-stop)].) (See 01-17A-11 NEGATIVE BATTERY CABLE DISCONNECTION/CONNECTION [SKYACTIV-G 2.0].)
3. Remove the splash shield (LH). (See 09-16-49 SPLASH SHIELD REMOVAL/INSTALLATION.)
4. Remove in the order indicated in the table.

1	Electric AT oil pump connector
2	Electric AT oil pump (See05-17A-28 Electric AT Oil Pump Installation Note.)
3	O-ring

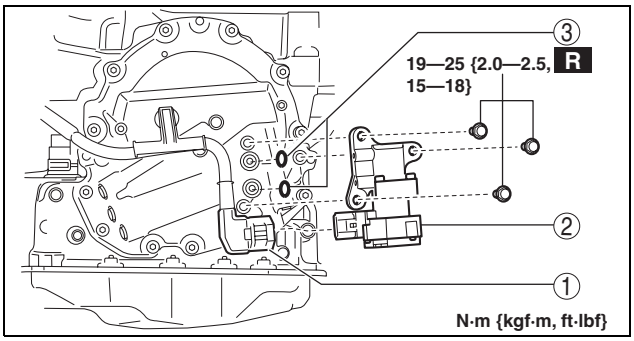

am3zzw0001264

5. Install in the reverse order of removal.
6. Adjust the ATF level. (See 05-17A-12 AUTOMATIC TRANSAXLE FLUID (ATF) ADJUSTMENT [FW6A-EL, FW6AX-EL].)

AUTOMATIC TRANSAXLE [FW6A-EL, FW6AX-EL]

Electric AT Oil Pump Installation Note

1. Apply a light coat of silicon sealant (TB1217E) to the contact surfaces of the electric AT oil pump and end cover.

   Caution
   - **If any old sealant gets into the side cover during installation of the electric AT oil pump, trouble may occur in the end cover and electric AT oil pump, and clean with cleaning fluids.**
   - **Do not damage the O-ring installation area and the sealing surface.**
   - **To apply silicone sealant securely, clean away the oil on the sealing surface before applying silicone sealant.**

2. Install the electric AT oil pump before the applied sealant starts to harden.

   Tightening torque
   19—25 N·m {2.0—2.5 kgf·m, 15—18 ft·lbf}

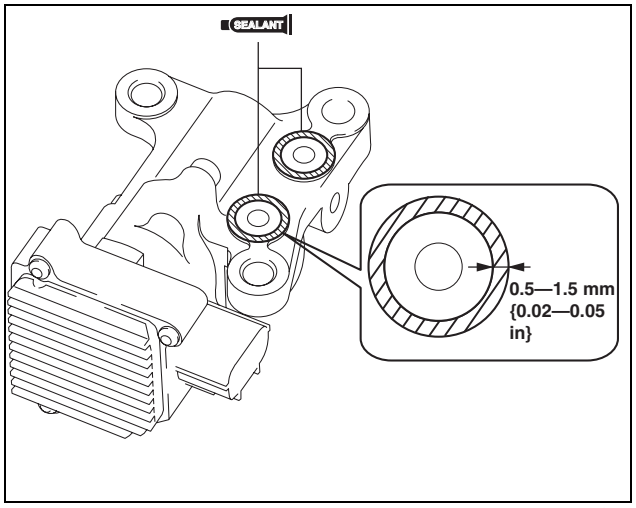

am3zzw0001265

AUTOMATIC TRANSAXLE REMOVAL/INSTALLATION [FW6A-EL]

id0517h21172h1

Caution
- **Performing the following procedures without first removing the front ABS wheel-speed sensor may possibly cause an open circuit in the harness if it is pulled by mistake. Before performing the following procedures, disconnect the front ABS wheel-speed sensor (axle side) and fix it to an appropriate place where the sensor will not be pulled by mistake while servicing the vehicle.**
- **Secure the steering wheel using tape or a cable to prevent the steering shaft from rotating after disconnecting the steering shaft. If the steering wheel rotates after the steering shaft and the steering gear and linkage are disconnected, the internal parts of the clock spring could be damaged.**

Removal

1. Disconnect the negative battery cable. (See 01-17A-13 NEGATIVE BATTERY CABLE DISCONNECTION/CONNECTION [SKYACTIV-G 2.0 (WITHOUT i-stop)].) (See 01-17A-11 NEGATIVE BATTERY CABLE DISCONNECTION/CONNECTION [SKYACTIV-G 2.0].)
2. Remove the air cleaner and air hose as a single unit. (See 01-13A-6 INTAKE-AIR SYSTEM REMOVAL/INSTALLATION [SKYACTIV-G 2.0].)
3. Remove the battery tray and PCM component. (See 01-17A-3 BATTERY REMOVAL/INSTALLATION [SKYACTIV-G 2.0].)
4. Disconnect the wiring harness clip from the transaxle.
5. Remove the splash shield. (See 09-16-49 SPLASH SHIELD REMOVAL/INSTALLATION.)

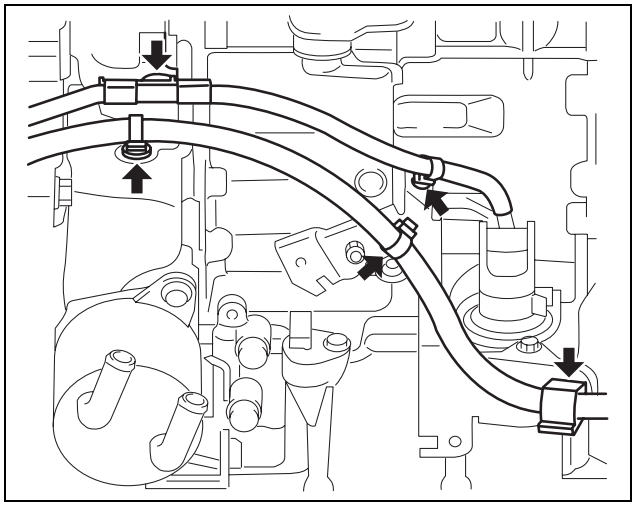
ac5uuw00000219

AUTOMATIC TRANSAXLE [FW6A-EL, FW6AX-EL]

6. Disconnect the electric AT oil pump connector and electric AT oil pump harness from the transaxle. (With electric AT oil pump)
7. Disconnect the control valve body connector.

Caution

- **Make sure that your hand does not touch the terminal as the connector terminal could be damaged.**
- **Water or foreign objects entering the connector can cause a poor connection or corrosion. Be sure not to drop water or foreign objects on the connector when disconnecting it.**

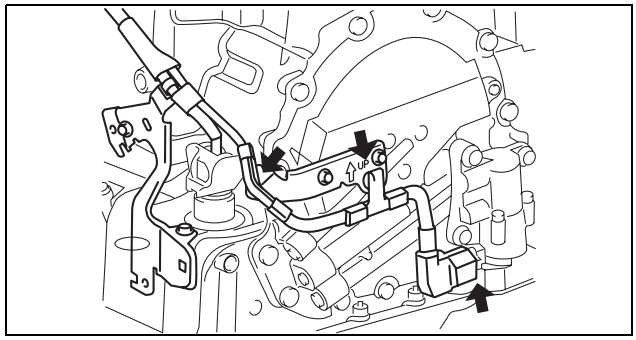

ac5wzw0000091

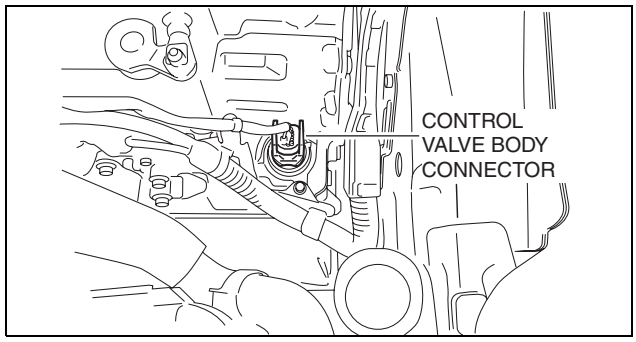

ac5uuw00000223

8. Remove the bracket from the transaxle.

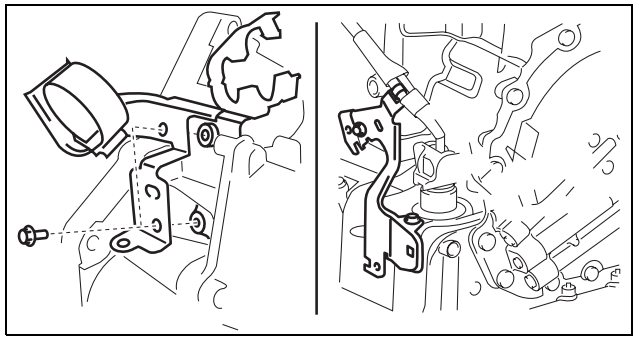

ac5uuw00000224

9. Disconnect the ground cable.

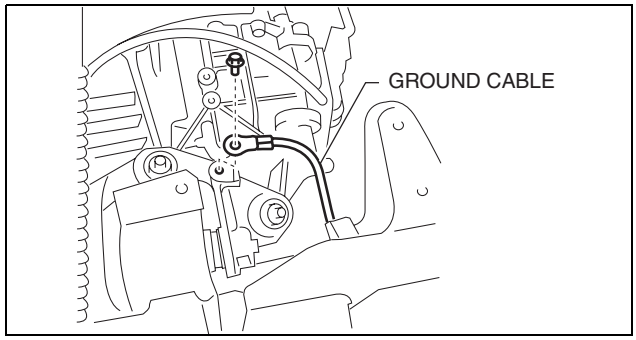

ac5uuw00000220

AUTOMATIC TRANSAXLE [FW6A-EL, FW6AX-EL]

10. Disconnect the selector cable from the transaxle.

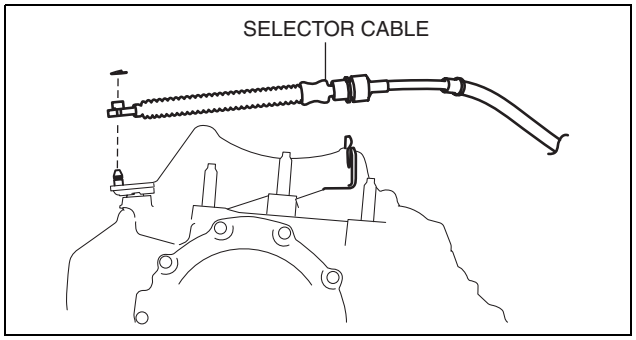

ac5uuw00000221

11. Remove the selector cable bracket.

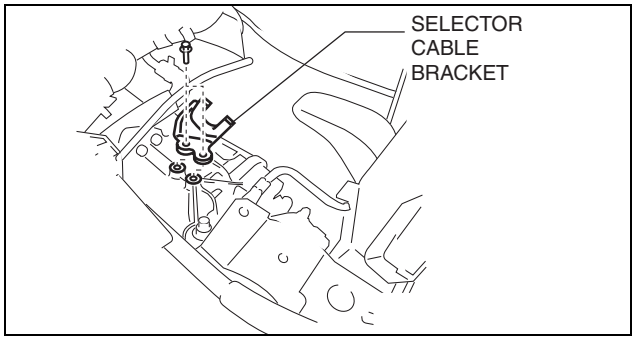

ac5uuw00000222

12. Remove the bracket.
13. Disconnect the breather hose from the transaxle.
14. Remove the joint cover. (See 06-13-4 STEERING WHEEL AND COLUMN REMOVAL/ INSTALLATION.)
15. Disconnect the intermediate shaft from the steering gear and linkage. (See 06-13-4 STEERING WHEEL AND COLUMN REMOVAL/ INSTALLATION.)
16. Remove the front tires. (See 02-10-1 GENERAL PROCEDURES (SUSPENSION).)
17. Remove the front under cover No.2. (See 09-16-41 FRONT UNDER COVER No.2 REMOVAL/ INSTALLATION.)
18. Remove the front under cover No.1. (See 09-16-40 FRONT UNDER COVER No.1 REMOVAL/ INSTALLATION.)
19. Drain the ATF. (See 05-17A-12 AUTOMATIC TRANSAXLE FLUID (ATF) REPLACEMENT [FW6A-EL, FW6AX-EL].)

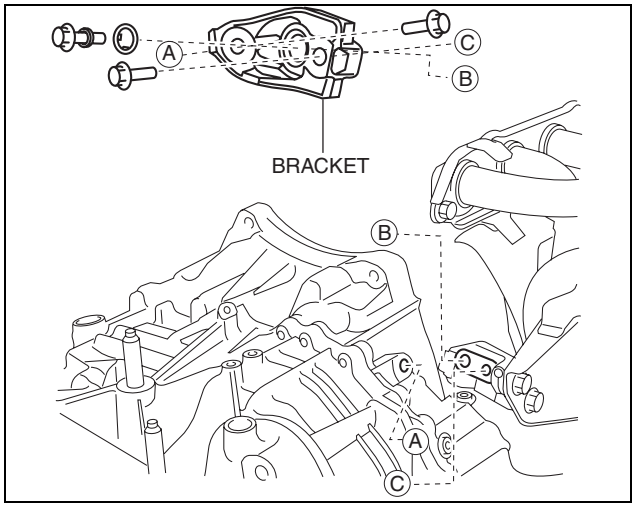

ac5wzw0000246

20. Disconnect the oil cooler from the transaxle with the hose connected. (Except Automatic Transaxle Replacement) (See 05-17A-66 OIL COOLER REMOVAL/INSTALLATION [FW6A-EL, FW6AX-EL].)
21. Disconnect the water hose from the oil cooler. (Automatic Transaxle Replacement) (See 05-17A-66 OIL COOLER REMOVAL/INSTALLATION [FW6A-EL, FW6AX-EL].)
22. Remove the starter. (See 01-19A-2 STARTER REMOVAL/INSTALLATION [SKYACTIV-G 2.0].)
23. Remove the blind cover.

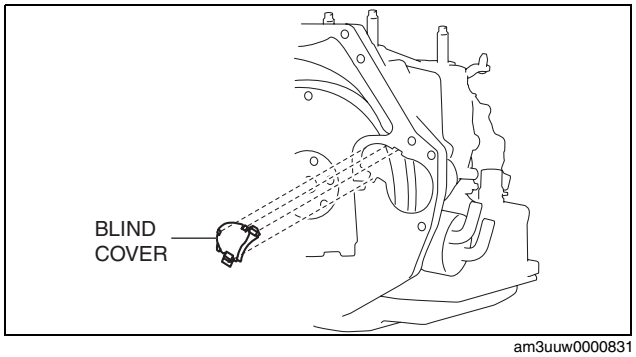

am3uuw0000831

AUTOMATIC TRANSAXLE [FW6A-EL, FW6AX-EL]

24. Hold the crankshaft pulley to prevent drive plate from rotating.

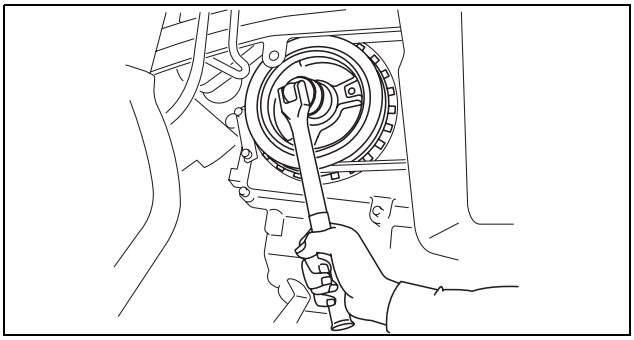
am3uuw0000258

25. Remove the torque converter nuts from the starter installation hole.
26. Disconnect the front ABS wheel-speed sensors from the steering knuckles. (See 04-15-9 FRONT ABS WHEEL-SPEED SENSOR REMOVAL/INSTALLATION.)
27. Disconnect the clips securing the brake hose from the front shock absorbers. (See 04-11-30 BRAKE HOSE (FRONT) REMOVAL/INSTALLATION.)
28. Disconnect the tie-rod end ball joints from the steering knuckles. (See 06-13-16 STEERING GEAR AND LINKAGE REMOVAL/INSTALLATION.)

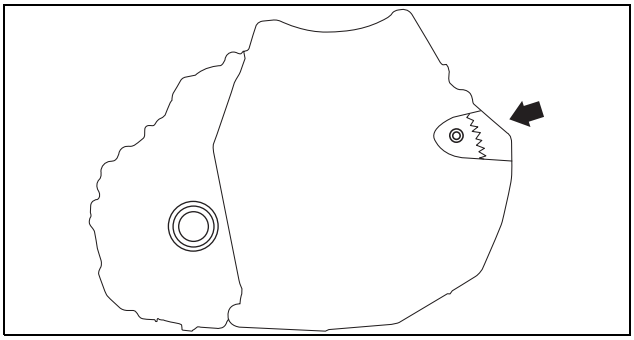
ac5uuw00000225

29. Disconnect the front lower arms from the steering knuckles. (See 02-13-7 FRONT LOWER ARM REMOVAL/INSTALLATION.)
30. Disconnect the front stabilizer control links from the front stabilizer. (See 02-13-10 FRONT STABILIZER REMOVAL/INSTALLATION.)
31. Disconnect the front drive shaft (LH) from the transaxle. (See 03-13-3 FRONT DRIVE SHAFT REMOVAL/INSTALLATION.)
32. Disconnect the front drive shaft (RH) from the transaxle. (See 03-13-3 FRONT DRIVE SHAFT REMOVAL/INSTALLATION.)
33. Remove the front crossmember component and No.1 engine mount rubber as a single unit. (See 02-13-15 FRONT CROSSMEMBER REMOVAL/INSTALLATION.)
34. Remove the bracket plate No.1 and No.1 engine mount bracket component from the transaxle.

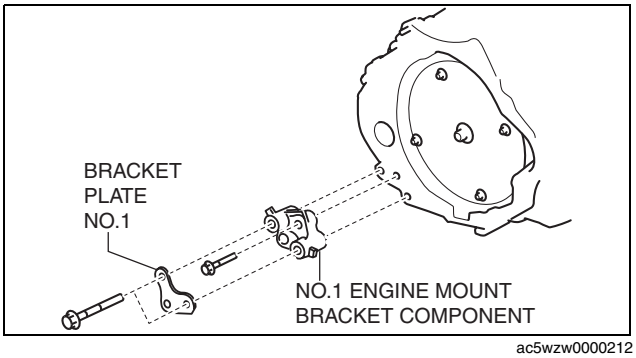

ac5wzw0000212

35. Install the **SST** using the following procedures.

Caution
- **Refer to the SST instruction manual for the basic handing procedure.**

(1) Install one front foot No.2 to each of the left and right front shafts of the **SST**.
(2) Remove the windshield wiper arm and blade. (See 09-19-3 WINDSHIELD WIPER ARM AND BLADE REMOVAL/INSTALLATION.)
(3) Remove the cowl grille. (See 09-16-3 COWL GRILLE REMOVAL/INSTALLATION.)
(4) Remove the cowl panel. (See 09-10-41 COWL PANEL REMOVAL/INSTALLATION.)

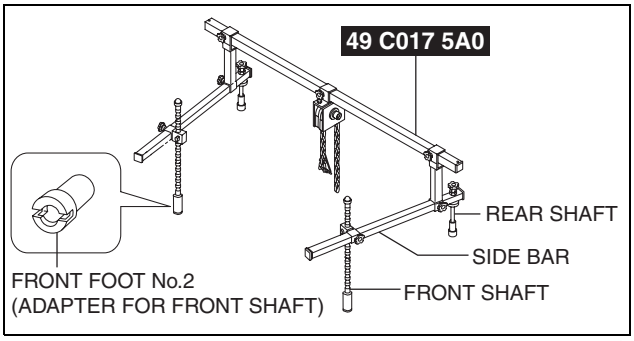

ac5wzw0000212

AUTOMATIC TRANSAXLE [FW6A-EL, FW6AX-EL]

(5) Protect the positions shown in the area using tape.

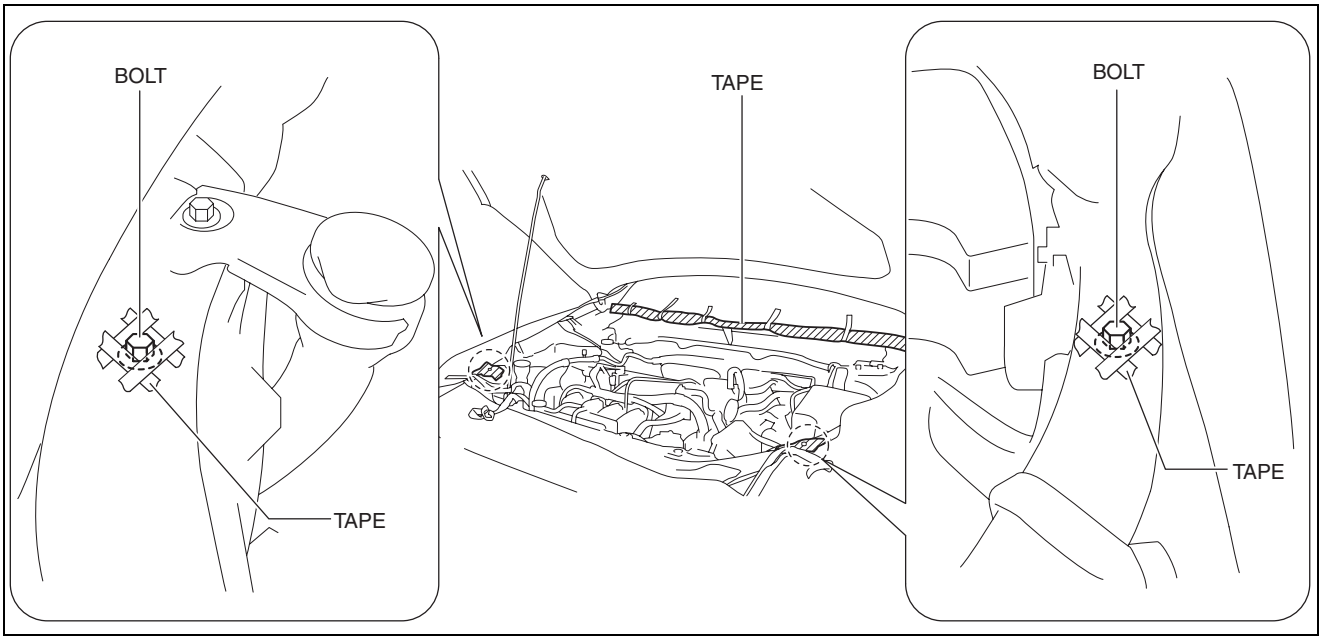

(6) To enable to install the **SST**, disconnect the clip shown in the figure and set the wiring harness aside.
(7) Install the **SST** using **part number 99794 1025** or an **M10—1.25**, length **25 mm {0.98 in}** bolt as shown in the figure.

Engine front side

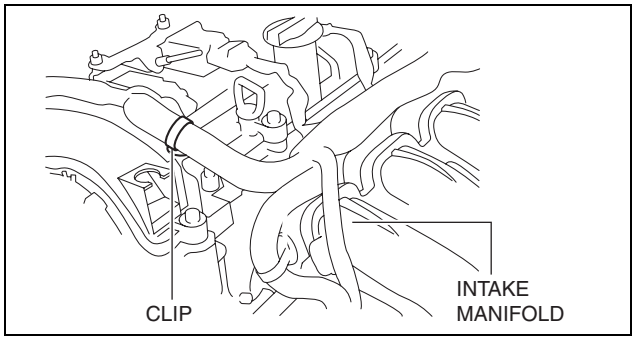

Tightening torque
38—51 N·m {3.9—5.2 kgf·m, 29—37 ft·lbf}

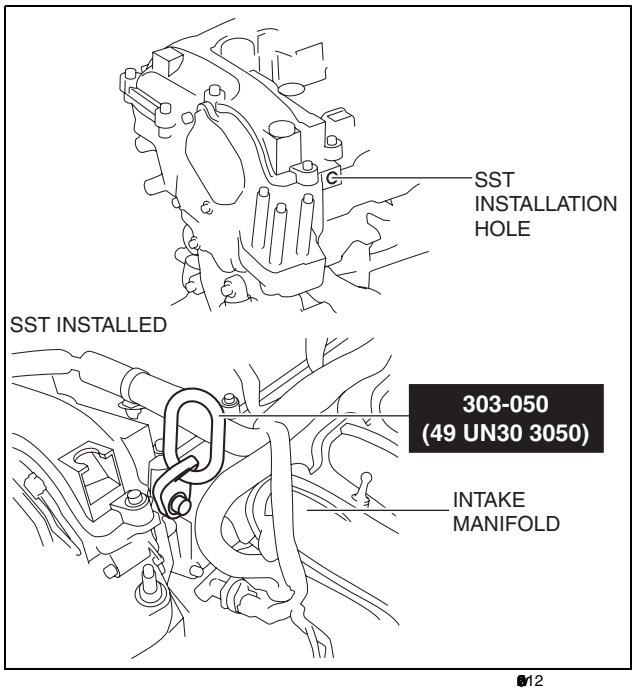

AUTOMATIC TRANSAXLE [FW6A-EL, FW6AX-EL]

Engine rear side

Tightening torque
38—51 N·m {3.9—5.2 kgf·m, 29—37 ft·lbf}

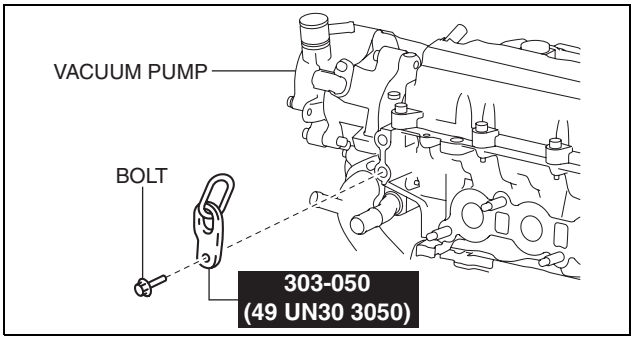

am3uuw0000830

(8) As shown in the figure, set the rear shafts of the **SST** to the left and right shock absorber nuts.

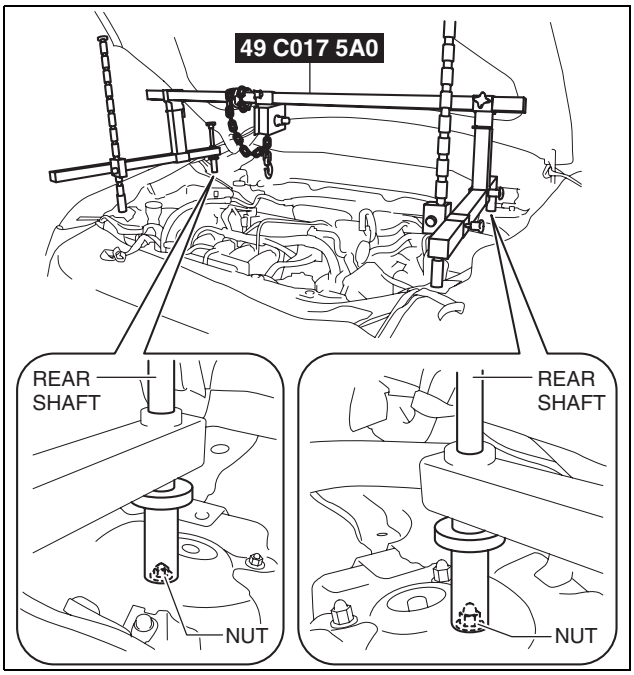

ac5uuw00000230

(9) As shown in the figure, set the front shafts of the **SST** to the left and right bolts.

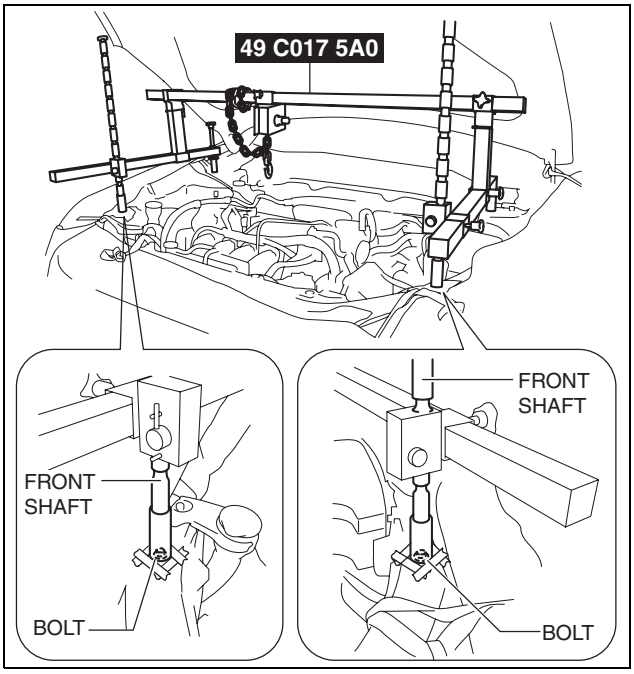

ac5uuw00000238

AUTOMATIC TRANSAXLE [FW6A-EL, FW6AX-EL]

(10)When assembling the **SST** (49 L017 5A0), disconnect the fuel hose from the clip shown in the figure to prevent interference between the fuel hose and **SST**.

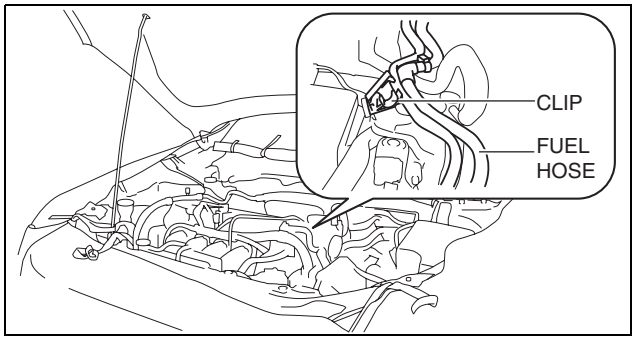

ac5uuw00000232

(11)Install the **SST** (49 L017 5A0) to the **SST** (49 C017 5A0) as shown in the figure.

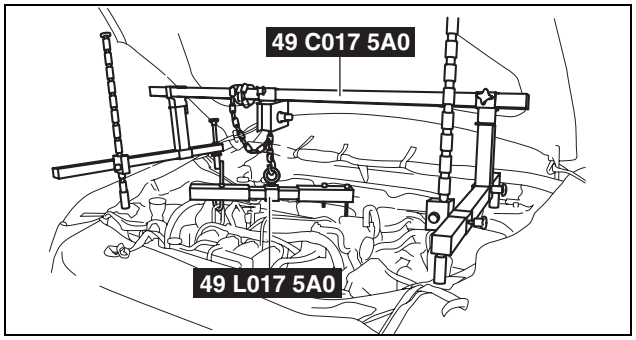

ac5uuw00000234

(12)Install the **SST** (49 L017 5A0) to the **SST** (49 UN30 3050) with the hook of the **SST** (49 L017 5A0) facing outward.
(13)Adjust the height of the left and right side bars so that they are leveled, then tighten each part of the **SST**.
(14)Apply tension to the chain to secure the engine.

36. Remove in the order shown in the figure.

Warning

- **Improperly jacking a transaxle is dangerous. It can slip off the jack and may cause serious injury.**

Caution

- **To prevent the torque converter and transaxle from separating, remove the transaxle without tilting it toward the torque converter.**

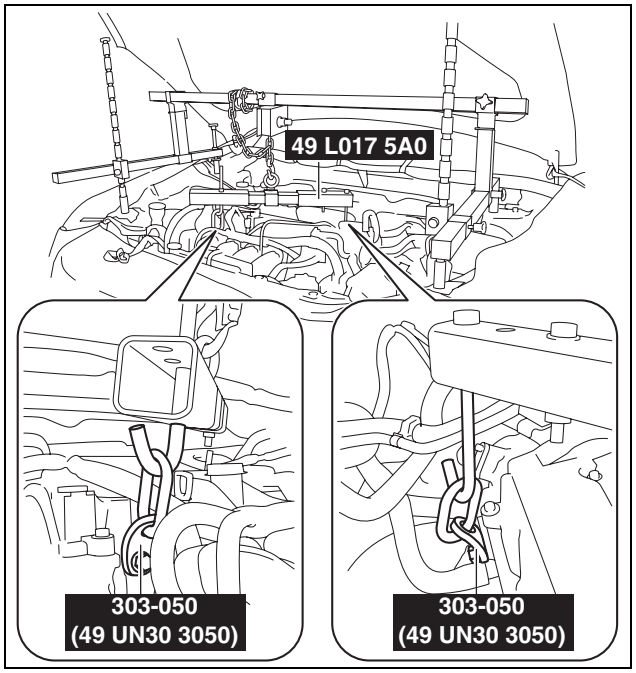

ac5uuw00000233

AUTOMATIC TRANSAXLE [FW6A-EL, FW6AX-EL]

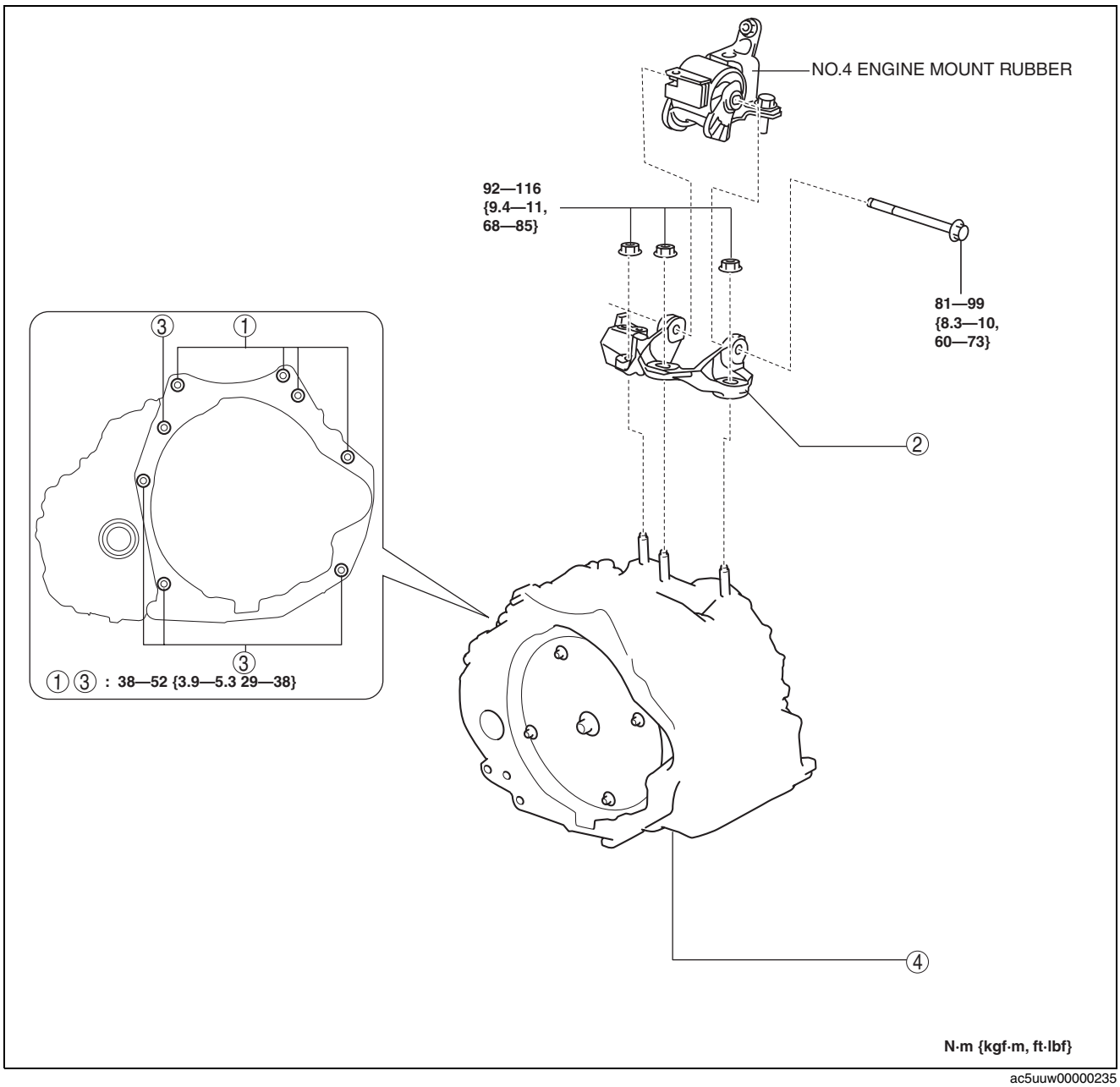

ac5uuw00000235

1	Transaxle mounting bolts (upper side)
2	No.4 engine mount bracket (See 05-17A-36 No.4 engine mount bracket removal note.)
3	Transaxle mounting bolts (lower side) (See 05-17A-36 Transaxle mounting bolt removal note.)

4	Transaxle (See 05-17A-36 No.4 engine mount bracket removal note.) (See 05-17A-36 Transaxle mounting bolt removal note.)

AUTOMATIC TRANSAXLE [FW6A-EL, FW6AX-EL]

No.4 engine mount bracket removal note

Caution
- **A slot has been adopted for the No.4 engine mount bracket installation hole. If the No.4 engine mount bracket is deviated from the original position when installing the No.4 engine mount, engine noise or vibration could increase. When removing the No.4 engine mount, place alignment marks on the No.4 engine mount bracket so that they can be assembled to the same positions as before removal.**

1. Place alignment marks on the locations shown in the figure so that they can be assembled to the same positions as before removal.

   Note
   - Paint so that the outline of the nut is framed on the bracket side.

2. Remove the No.4 engine mount bracket.

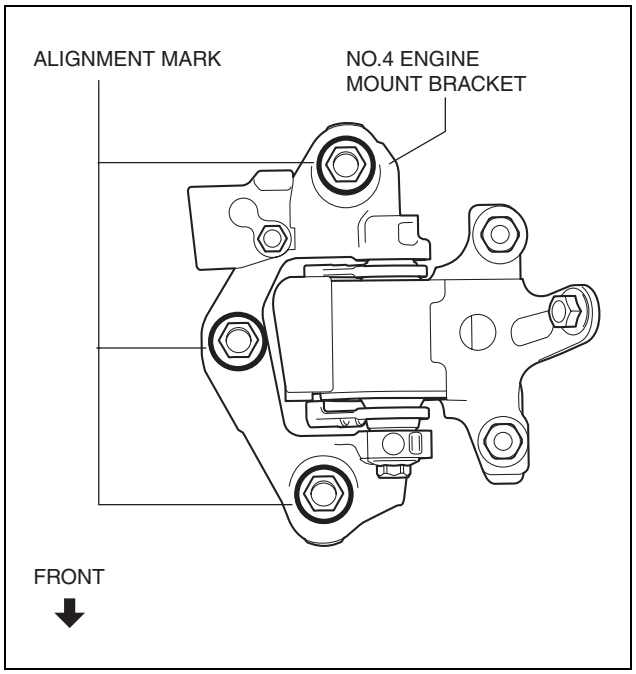

ac5wzw0000460

Transaxle mounting bolt removal note

Warning
- **Remove the transaxle carefully, holding it steady. If the transaxle falls it could be damaged or cause injury.**

1. Adjust the **SST** and lean the engine toward the transaxle.

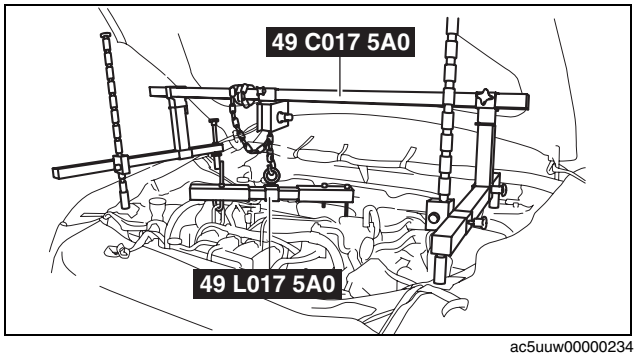

ac5uuw00000234

AUTOMATIC TRANSAXLE [FW6A-EL, FW6AX-EL]

2. Support the transaxle on a jack.
3. Remove the transaxle mounting bolts (lower side).
4. Remove the transaxle.

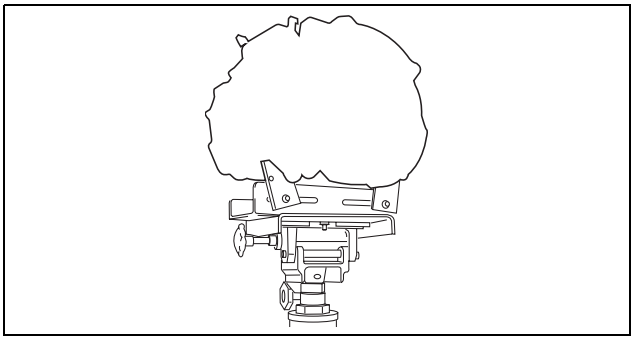
am3uuw0000258

Installation

Caution
- **Verify that the torque converter stud bolts are inserted into the drive plate bolt holes, and install the transaxle installation bolts. Otherwise, the drive plate could be damaged.**

1. Verify that the torque converter stud bolts are inserted into the drive plate bolt holes from the starter installation hole.

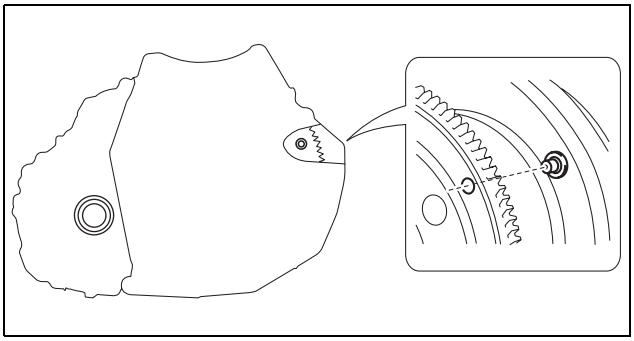
am3uuw0000831

2. Install the transaxle mounting bolts.

Tightening torque
38—52 N·m {3.9—5.3 kgf·m, 29—38 ft·lbf}

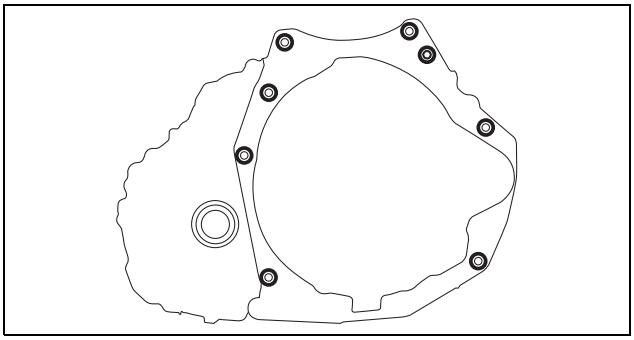
am3uuw0000918

3. Tighten the stud bolts for the transaxle.

Note
- If the No.4 engine mount bracket nut is loosened, tighten the stud bolts for the transaxle because they may be loosened.

Tightening torque
15—25 N·m {1.6—2.5 kgf·m, 12—18 ft·lbf}

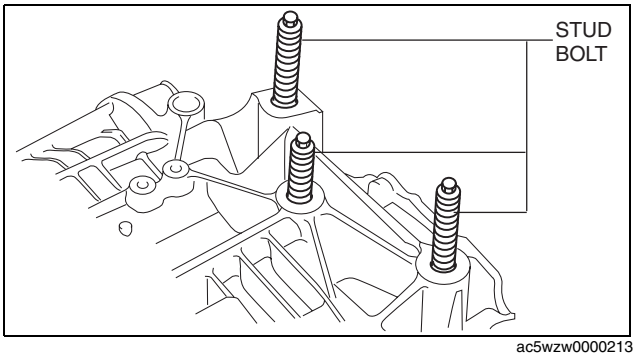

ac5wzw0000213

AUTOMATIC TRANSAXLE [FW6A-EL, FW6AX-EL]

4. Install the No.4 engine mount bracket to No.4 engine mount rubber, and temporarily tighten the installation bolt.

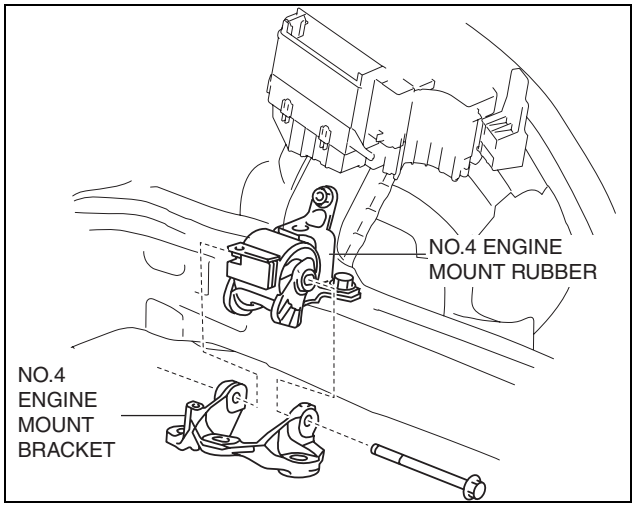

ac5uuw00000237

5. Pull up the transaxle using the **SSTs**, pass the transaxle stud bolts through the No.4 engine mount bracket, and temporarily tighten the No.4 engine mount installation nuts.

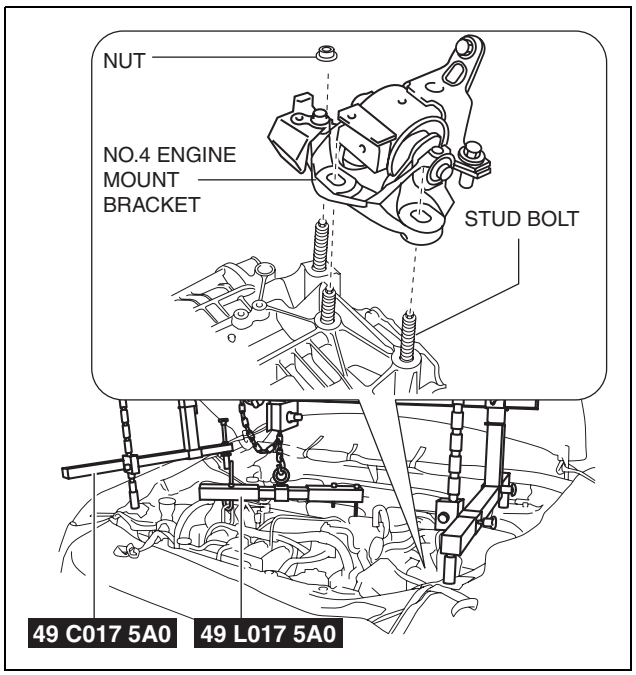

ac5uuw00000238

6. Install the No.1 engine mount bracket component and the bracket plate No.1 to the transaxle, and temporarily tighten the installation bolts.

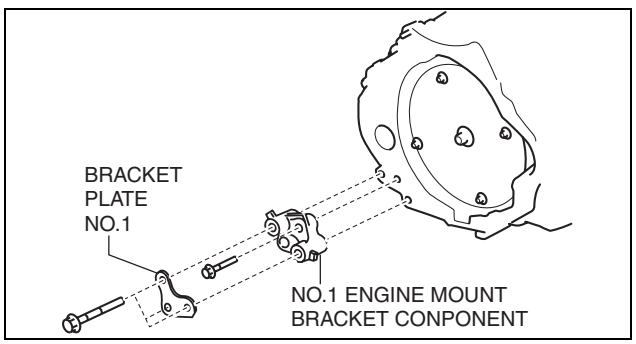

ac5uuw00000241

AUTOMATIC TRANSAXLE [FW6A-EL, FW6AX-EL]

7. Install the bracket to the transaxle and the exhaust manifold and tighten the bolts in the order shown in the figure.

   Tightening procedure
   1. **Tighten the bolt A.**
      19—25 N·m {2.0—2.5 kgf·m, 15—18 ft·lbf}
   2. **Tighten the bolt B.**
      5—10 N·m {51—101 kgf·cm, 45—88 in·lbf}
   3. **Loosen the bolt B 90°—180°**
   4. **Tighten the bolt C.**
      38—51 N·m {3.9—5.2 kgf·m, 29—37 ft·lbf}

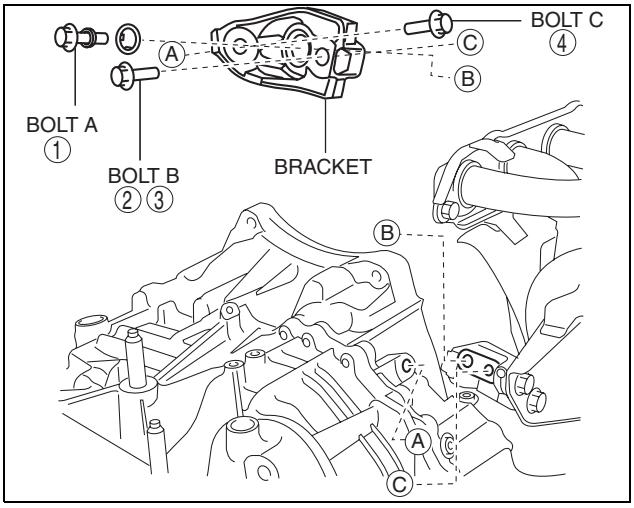

ac5wzw0000246

8. Install the front crossmember component and No.1 engine mount rubber as a single unit. (See 02-13-15 FRONT CROSSMEMBER REMOVAL/ INSTALLATION.)

9. Temporarily tighten the No.1 engine mount rubber installation bolts.

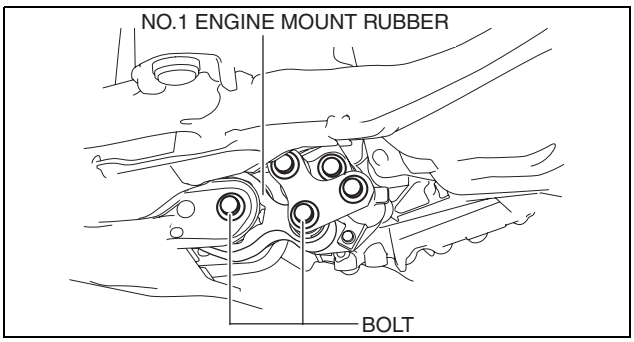

ac5wzw0000213

10. Align the alignment marks on the No.4 engine mount bracket and nuts, and temporarily tighten the nuts shown in the figure.

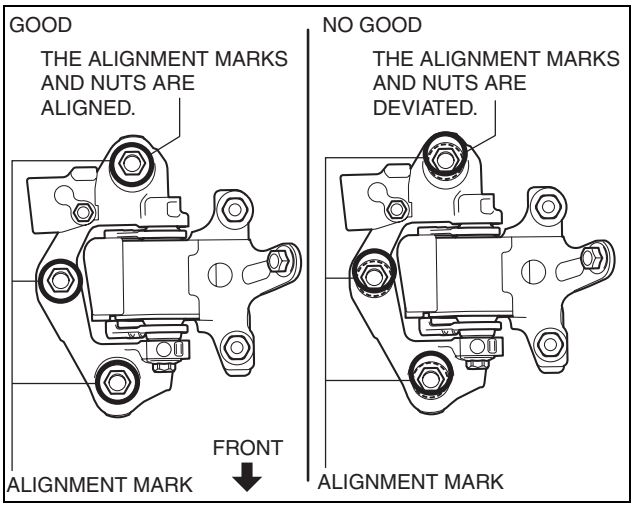

ac5wzw0000460

AUTOMATIC TRANSAXLE [FW6A-EL, FW6AX-EL]

11. Tighten the No.4 engine mount bracket installation nuts and bolt in the order shown in the figure.

No.	Tightening torque
1, 2, 3	92—116 N·m {9.4—11 kgf·m, 69—85 ft·lbf}
4	81—99 N·m {8.3—10 kgf·m, 60—73 ft·lbf}

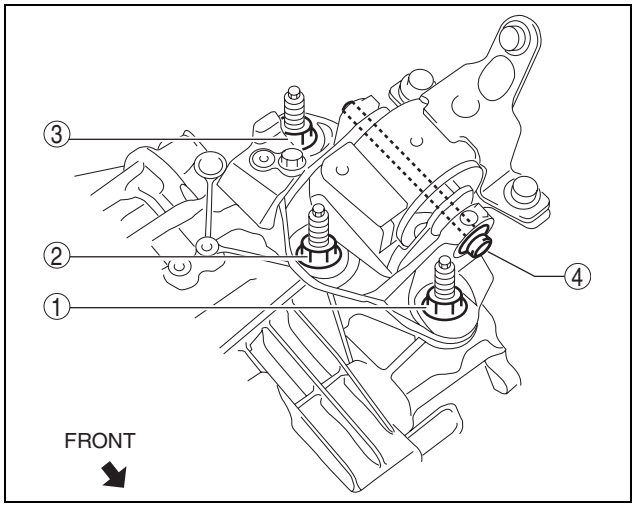

ac5uuw00000243

12. Tighten the No.1 engine mount bracket and bracket plate installation bolts in the order shown in the figure.

    Tightening torque
    84—98 N·m {8.6—9.9 kgf·m, 62—72 ft·lbf}

13. Remove the **SST (49 C017 5A0)** .

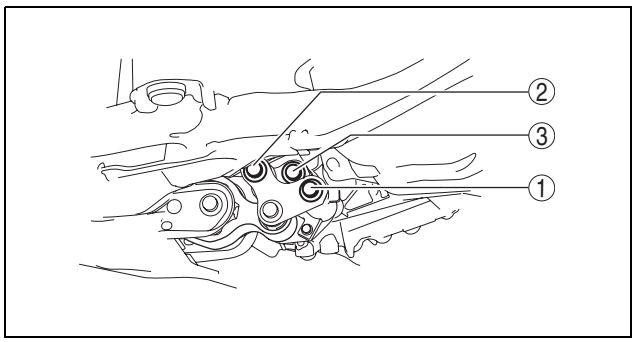

ac5wzw0000213

14. Tighten the No.1 engine mount rubber installation bolts in the order shown in the figure.

No.	Tightening torque
1	140—163 N·m {15—16 kgf·m, 104—120 ft·lbf}
2	130—164 N·m {14—16 kgf·m, 96—120 ft·lbf}

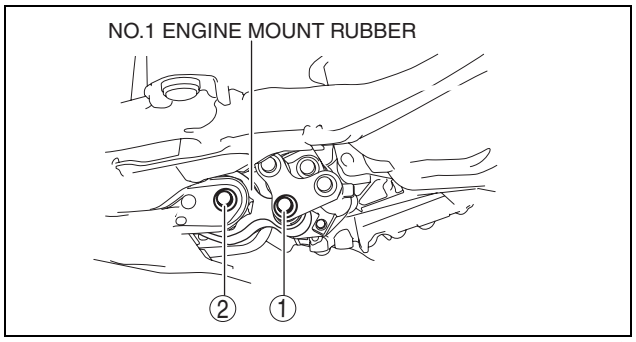

ac5wzw0000213

15. Fix the crankshaft pulley to lock the torque converter against rotation.

    Caution
    - **After temporarily tightening the torque converter installation nut uniformly, tighten it to the specified torque.**

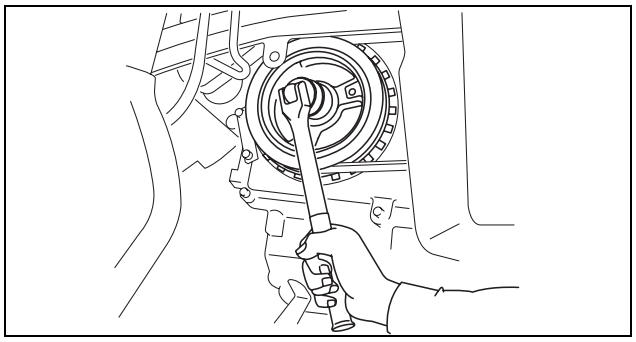
am3uuw0000258

AUTOMATIC TRANSAXLE [FW6A-EL, FW6AX-EL]

16. Tighten the torque converter installation nut.

    Tightening torque
    41—54 N·m {4.2—5.5 kgf·m, 31—39 ft·lbf}

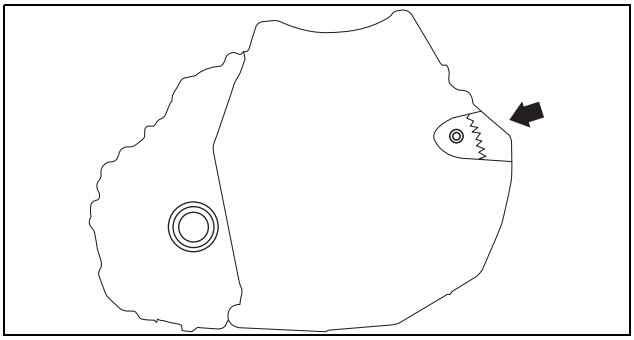
ac5uuw00000225

17. Install the blind cover.
18. Install the starter. (See 01-19A-2 STARTER REMOVAL/INSTALLATION [SKYACTIV-G 2.0].)
19. Install the front drive shaft (RH) to the transaxle. (See 03-13-3 FRONT DRIVE SHAFT REMOVAL/INSTALLATION.)
20. Install the front drive shaft (LH) to the transaxle. (See 03-13-3 FRONT DRIVE SHAFT REMOVAL/INSTALLATION.)
21. Install the front stabilizer control links to the front stabilizer. (See 02-13-10 FRONT STABILIZER REMOVAL/INSTALLATION.)
22. Install the front lower arms to the steering knuckles. (See 02-13-7 FRONT LOWER ARM REMOVAL/INSTALLATION.)

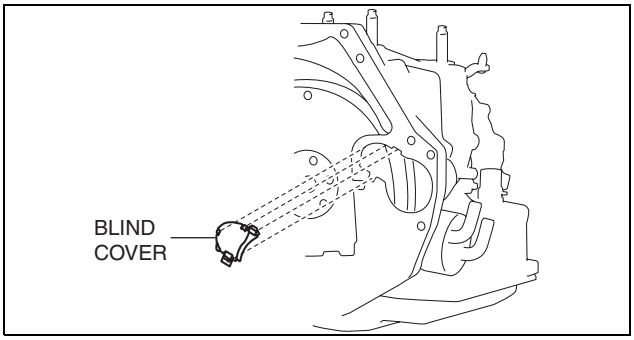

am3uuw0000831

23. Install the tie-rod end ball joints to the steering knuckles. (See 06-13-16 STEERING GEAR AND LINKAGE REMOVAL/INSTALLATION.)
24. Install the clips securing the brake hose to the front shock absorbers. (See 04-11-30 BRAKE HOSE (FRONT) REMOVAL/INSTALLATION.)
25. Install the front ABS wheel-speed sensors to the steering knuckles. (See 04-15-9 FRONT ABS WHEEL-SPEED SENSOR REMOVAL/INSTALLATION.)
26. Connect the water hose to the oil cooler. (Automatic Transaxle Replacement) (See 05-17A-66 OIL COOLER REMOVAL/INSTALLATION [FW6A-EL, FW6AX-EL].)
27. Install the oil cooler to the transaxle with the hose connected. (Except Automatic Transaxle Replacement) (See 05-17A-66 OIL COOLER REMOVAL/INSTALLATION [FW6A-EL, FW6AX-EL].)
28. Install the front under cover No.1. (See 09-16-40 FRONT UNDER COVER No.1 REMOVAL/INSTALLATION.)
29. Install the front under cover No.2. (See 09-16-41 FRONT UNDER COVER No.2 REMOVAL/INSTALLATION.)
30. Install the front tires. (See 02-10-1 GENERAL PROCEDURES (SUSPENSION).)
31. Install the intermediate shaft to the steering gear and linkage. (See 06-13-4 STEERING WHEEL AND COLUMN REMOVAL/INSTALLATION.)
32. Install the joint cover. (See 06-13-4 STEERING WHEEL AND COLUMN REMOVAL/INSTALLATION.)
33. Connect the breather hose to the transaxle.
34. Install the selector cable bracket.
35. Connect the selector cable to the transaxle.

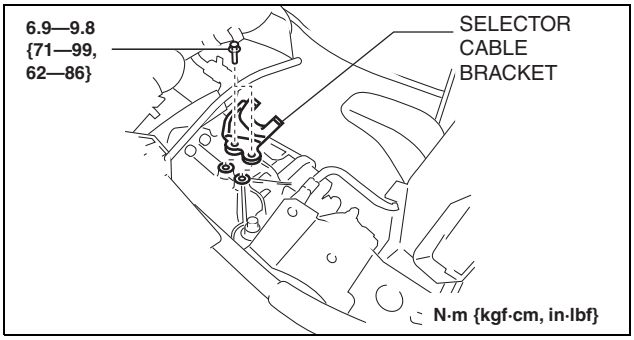

ac5wzw0000213

AUTOMATIC TRANSAXLE [FW6A-EL, FW6AX-EL]

36. Install the ground cable.

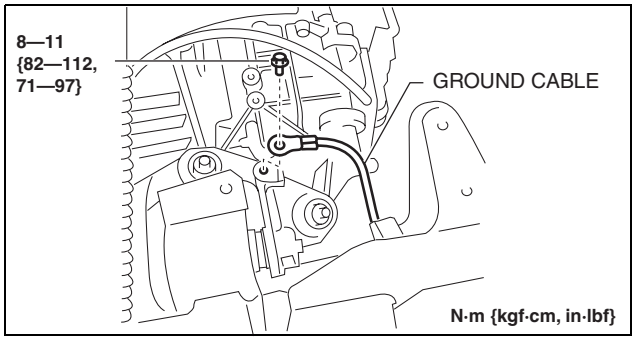

ac5uuw00000247

37. Install the bracket to the transaxle.
38. Connect the control valve body connector.

Caution
- **Make sure that your hand does not touch the terminal as the connector terminal could be damaged.**
- **Verify that there is no fluid or foreign matter adhering to the connector before connecting the connector.**
- **Insert the connector straight as the connector terminal could be damaged.**
- **Rotate the connector lever until a click is heard.**

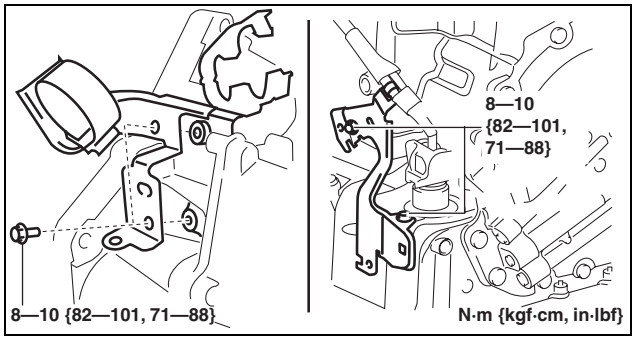

ac5wzw0000213

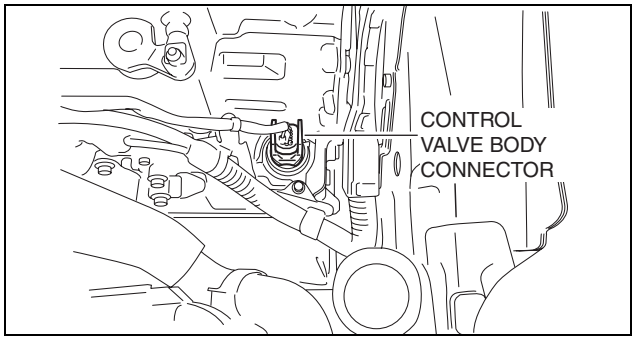

ac5uuw00000223

39. Connect the electric AT oil pump connector and electric AT oil pump harness from the transaxle. (With electric AT oil pump)
40. Install the splash shield. (See 09-16-49 SPLASH SHIELD REMOVAL/INSTALLATION.)

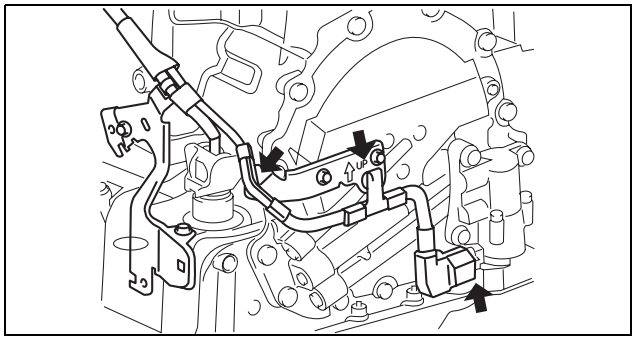

ac5wzw0000091

AUTOMATIC TRANSAXLE [FW6A-EL, FW6AX-EL]

41. Connect the wiring harness from the transaxle.
42. Install the battery tray and PCM component. (See 01-17A-3 BATTERY REMOVAL/INSTALLATION [SKYACTIV-G 2.0].)
43. Install the air cleaner and air hose as a single unit. (See 01-13A-6 INTAKE-AIR SYSTEM REMOVAL/INSTALLATION [SKYACTIV-G 2.0].)
44. Disconnect the negative battery cable. (See 01-17A-13 NEGATIVE BATTERY CABLE DISCONNECTION/CONNECTION [SKYACTIV-G 2.0 (WITHOUT i-stop)].) (See 01-17A-11 NEGATIVE BATTERY CABLE DISCONNECTION/CONNECTION [SKYACTIV-G 2.0].)
45. Add the ATF. (See 05-17A-12 AUTOMATIC TRANSAXLE FLUID (ATF) REPLACEMENT [FW6A-EL, FW6AX-EL].)
46. Perform the “Mechanical System Test”. (See 05-17A-4 MECHANICAL SYSTEM TEST [FW6A-EL, FW6AX-EL].)

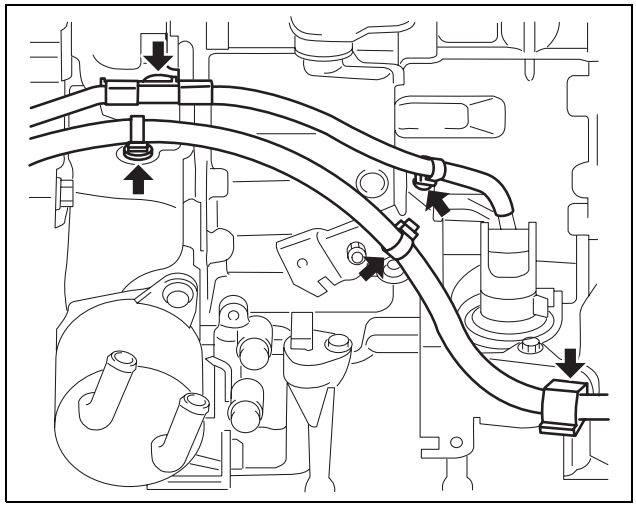
ac5uuw00000219

AUTOMATIC TRANSAXLE REMOVAL/INSTALLATION [FW6AX-EL]

id0517h21172h4

Caution

- **Performing the following procedures without first removing the front ABS wheel-speed sensor may possibly cause an open circuit in the harness if it is pulled by mistake. Before performing the following procedures, disconnect the front ABS wheel-speed sensor (axle side) and fix it to an appropriate place where the sensor will not be pulled by mistake while servicing the vehicle.**
- **Secure the steering wheel using tape or a cable to prevent the steering shaft from rotating after disconnecting the steering shaft. If the steering wheel rotates after the steering shaft and the steering gear and linkage are disconnected, the internal parts of the clock spring could be damaged.**

Removal

1. Disconnect the negative battery cable. (See 01-17A-13 NEGATIVE BATTERY CABLE DISCONNECTION/CONNECTION [SKYACTIV-G 2.0 (WITHOUT i-stop)].) (See 01-17A-11 NEGATIVE BATTERY CABLE DISCONNECTION/CONNECTION [SKYACTIV-G 2.0].)
2. Remove the air cleaner and air hose as a single unit. (See 01-13A-6 INTAKE-AIR SYSTEM REMOVAL/INSTALLATION [SKYACTIV-G 2.0].)
3. Remove the battery tray and PCM component. (See 01-17A-3 BATTERY REMOVAL/INSTALLATION [SKYACTIV-G 2.0].)
4. Disconnect the wiring harness clip from the transaxle.
5. Remove the splash shield. (See 09-16-49 SPLASH SHIELD REMOVAL/INSTALLATION.)

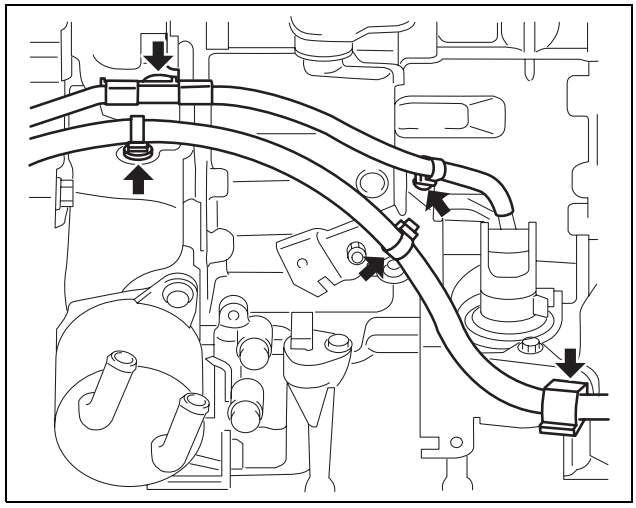
ac5uuw00000323

AUTOMATIC TRANSAXLE [FW6A-EL, FW6AX-EL]

6. Disconnect the electric AT oil pump connector and electric AT oil pump harness from the transaxle. (With electric AT oil pump)
7. Disconnect the control valve body connector.

Caution

- **Make sure that your hand does not touch the terminal as the connector terminal could be damaged.**
- **Water or foreign objects entering the connector can cause a poor connection or corrosion. Be sure not to drop water or foreign objects on the connector when disconnecting it.**

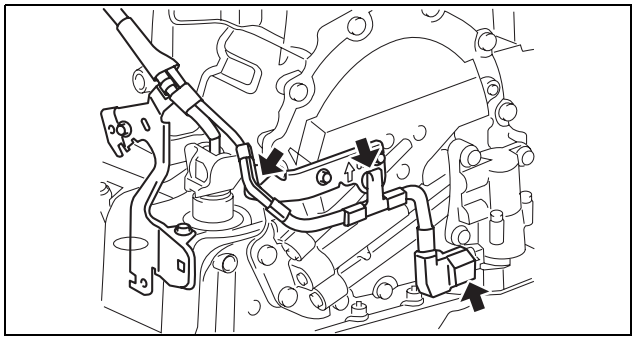

ac5wzw0000091

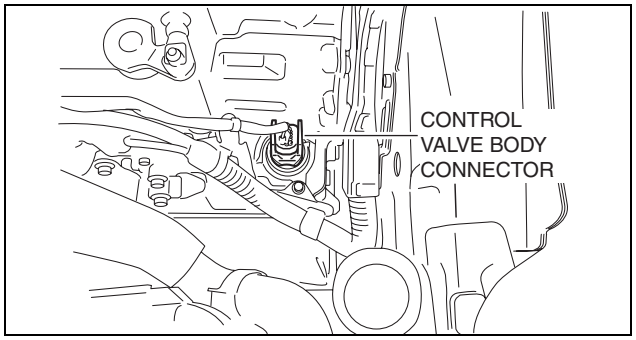

ac5uuw00000327

8. Remove the bracket from the transaxle.

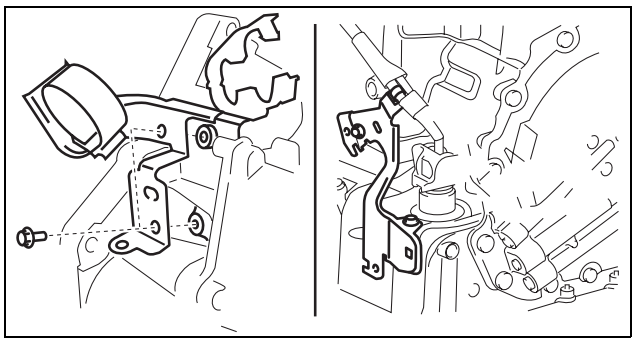

ac5uuw00000328

9. Disconnect the ground cable.

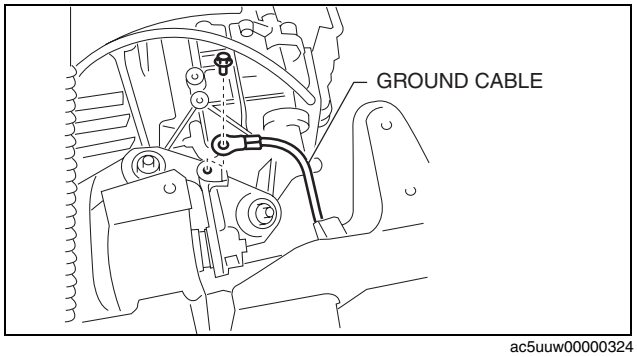

ac5uuw00000324

AUTOMATIC TRANSAXLE [FW6A-EL, FW6AX-EL]

10. Disconnect the selector cable from the transaxle.

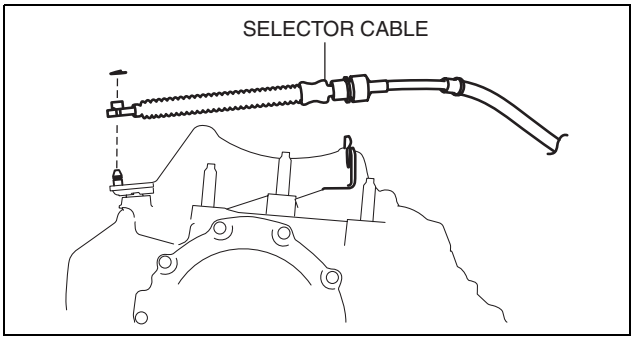

ac5uuw00000325

11. Remove the selector cable bracket.
12. Disconnect the breather hose from the transaxle.
13. Remove the joint cover. (See 06-13-4 STEERING WHEEL AND COLUMN REMOVAL/ INSTALLATION.)
14. Disconnect the intermediate shaft from the steering gear and linkage. (See 06-13-4 STEERING WHEEL AND COLUMN REMOVAL/ INSTALLATION.)
15. Remove the front tires. (See 02-10-1 GENERAL PROCEDURES (SUSPENSION).)
16. Remove the front under cover No.2. (See 09-16-41 FRONT UNDER COVER No.2 REMOVAL/ INSTALLATION.)

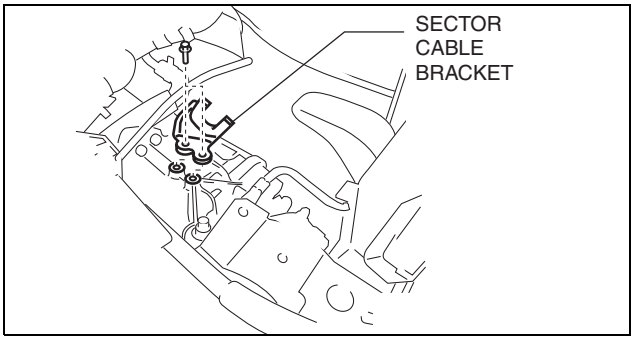

ac5uuw00000788

17. Remove the front under cover No.1. (See 09-16-40 FRONT UNDER COVER No.1 REMOVAL/INSTALLATION.)
18. Drain the ATF. (See 05-17A-12 AUTOMATIC TRANSAXLE FLUID (ATF) REPLACEMENT [FW6A-EL, FW6AX-EL].)
19. Disconnect the oil cooler from the transaxle with the hose connected. (Except Automatic Transaxle Replacement) (See 05-17A-66 OIL COOLER REMOVAL/INSTALLATION [FW6A-EL, FW6AX-EL].)
20. Disconnect the water hose from the oil cooler. (Automatic Transaxle Replacement) (See 05-17A-66 OIL COOLER REMOVAL/INSTALLATION [FW6A-EL, FW6AX-EL].)
21. Remove the starter. (See 01-19A-2 STARTER REMOVAL/INSTALLATION [SKYACTIV-G 2.0].)
22. Remove the blind cover.

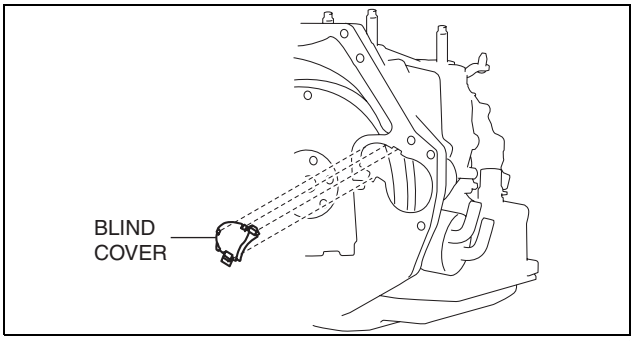

am3uuw0000831

23. Hold the crankshaft pulley to prevent drive plate from rotating.

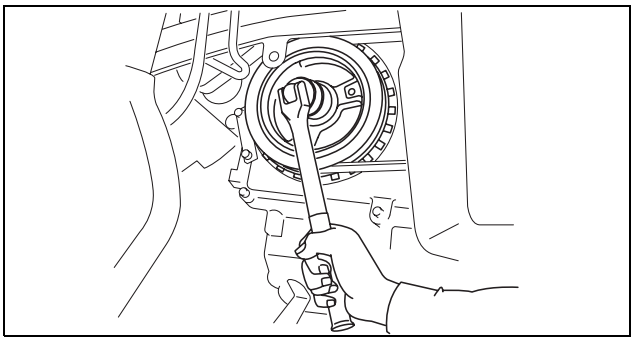
am3uuw0000258

AUTOMATIC TRANSAXLE [FW6A-EL, FW6AX-EL]

24. Remove the torque converter nuts from the starter installation hole.
25. Disconnect the front ABS wheel-speed sensors from the steering knuckles. (See 04-15-9 FRONT ABS WHEEL-SPEED SENSOR REMOVAL/INSTALLATION.)
26. Disconnect the clips securing the brake hose from the front shock absorbers. (See 04-11-27 FRONT BRAKE (DISC) REMOVAL/INSTALLATION.)
27. Disconnect the tie-rod end ball joints from the steering knuckles. (See 06-13-16 STEERING GEAR AND LINKAGE REMOVAL/INSTALLATION.)

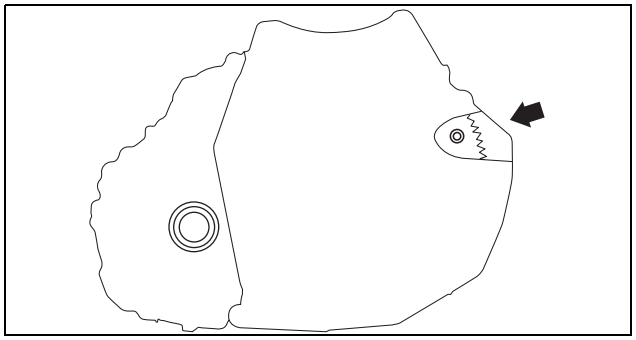
ac5uuw00000329

28. Disconnect the front lower arms from the steering knuckles. (See 02-13-7 FRONT LOWER ARM REMOVAL/INSTALLATION.)
29. Disconnect the front stabilizer control links from the front stabilizer. (See 02-13-10 FRONT STABILIZER REMOVAL/INSTALLATION.)
30. Disconnect the front drive shaft (LH) from the transaxle. (See 03-13-3 FRONT DRIVE SHAFT REMOVAL/INSTALLATION.)
31. Remove the front drive shaft (RH) from the transfer. (See 03-13-3 FRONT DRIVE SHAFT REMOVAL/INSTALLATION.)
32. Remove the propeller shaft. (See 03-15-2 PROPELLER SHAFT REMOVAL/INSTALLATION.)
33. Remove the bracket plate. (See 01-10A-91 ENGINE MOUNT DISASSEMBLY/ASSEMBLY [SKYACTIV-G 2.0].)
34. Remove the front crossmember component and No.1 engine mount rubber as a single unit. (See 02-13-15 FRONT CROSSMEMBER REMOVAL/INSTALLATION.)
35. Remove the exhaust manifold (WU-TWC). (See 01-15A-2 EXHAUST SYSTEM REMOVAL/INSTALLATION [SKYACTIV-G 2.0].)
36. Remove the transfer. (See 03-16B-4 TRANSFER REMOVAL/INSTALLATION [FW6AX-EL].)

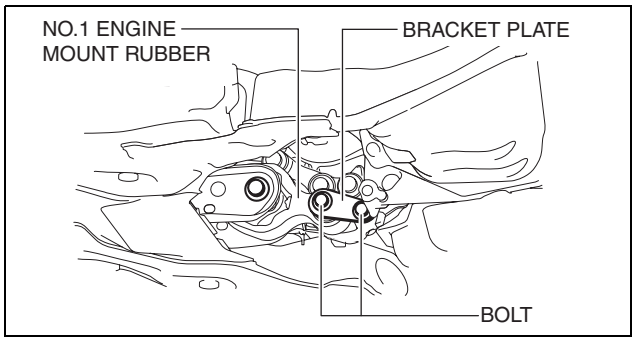

ac5uuw00000330

37. Remove the bracket.

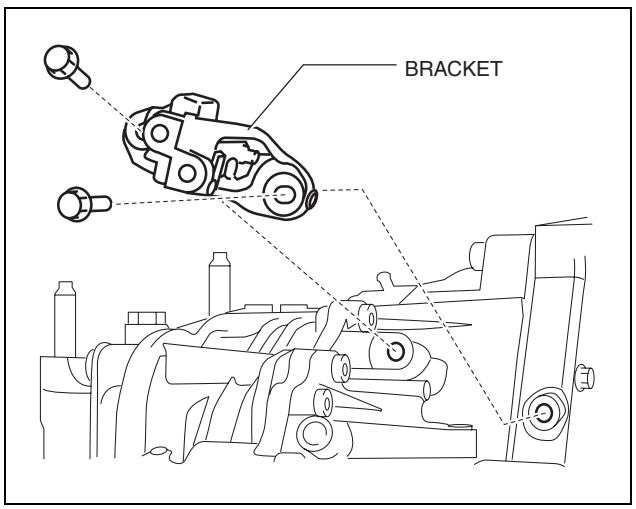

ac5uuw00000331

38. Remove the No.1 engine mounting bracket.

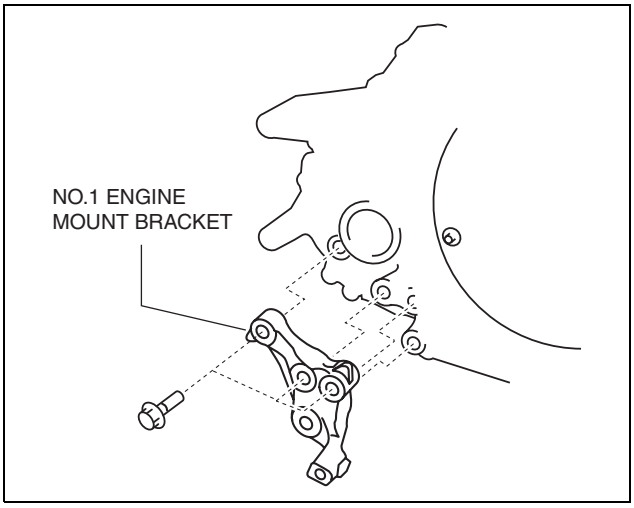

ac5uuw00000346

39. Install the **SST** using the following procedures.

Caution
- **Refer to the SST instruction manual for the basic handing procedure.**

(1) Install one front foot No.2 to each of the left and right front shafts of the **SST**.
(2) Remove the windshield wiper arm and blade. (See 09-19-3 WINDSHIELD WIPER ARM AND BLADE REMOVAL/INSTALLATION.)
(3) Remove the cowl grille. (See 09-16-3 COWL GRILLE REMOVAL/INSTALLATION.)
(4) Remove the cowl panel. (See 09-10-41 COWL PANEL REMOVAL/INSTALLATION.)
(5) Protect the positions shown in the area using tape.

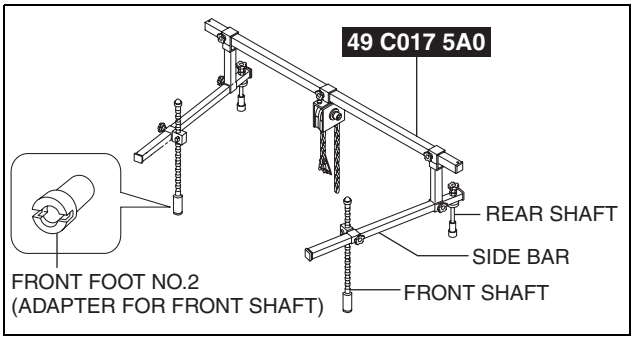

ac5wzw0000459

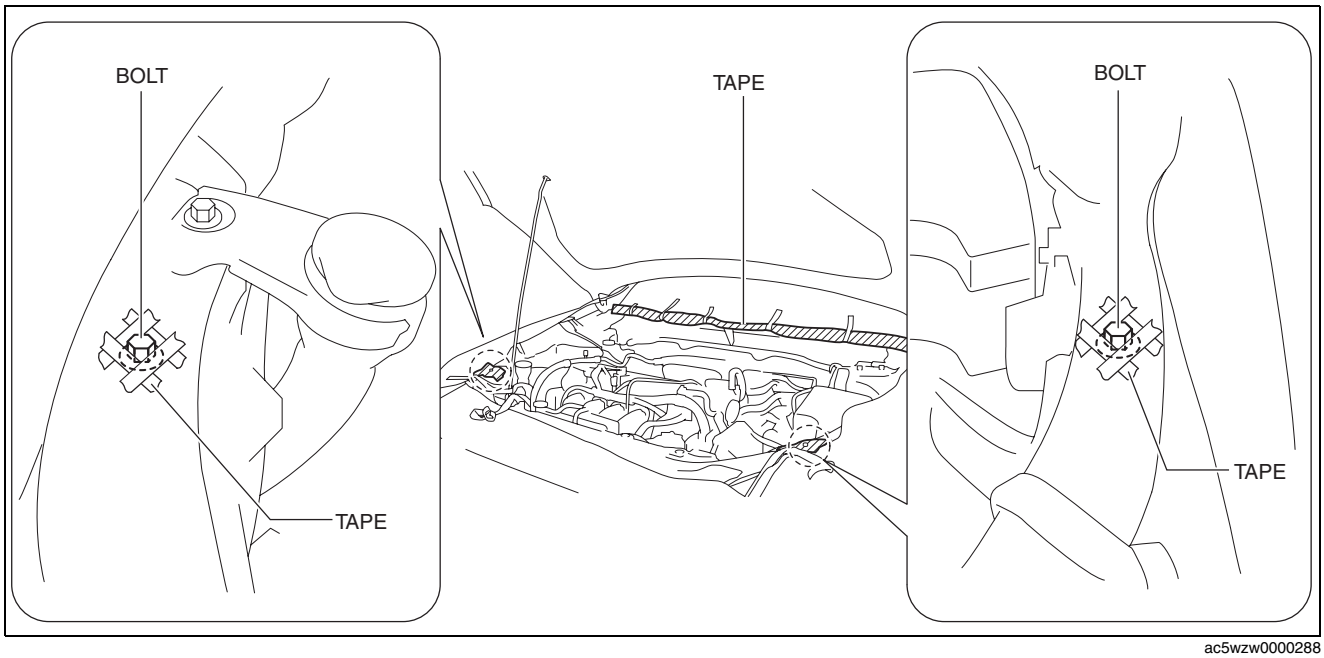

ac5wzw0000288

AUTOMATIC TRANSAXLE [FW6A-EL, FW6AX-EL]

(6) To enable to install the **SST**, disconnect the clip shown in the figure and set the wiring harness aside.

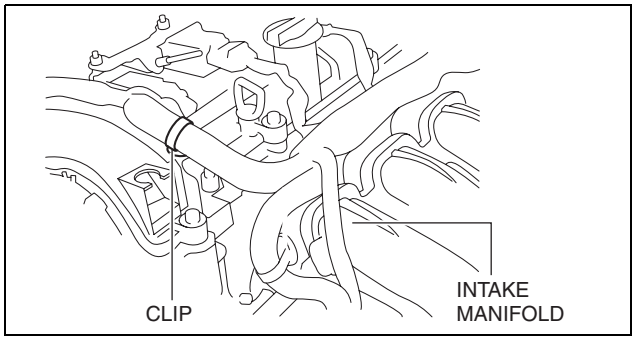

ac5uuw00000333

(7) Install the **SST** using **part number 99794 1025** or an **M10—1.25**, length **25 mm {0.98 in}** bolt as shown in the figure.

Tightening torque
38—51 N·m {3.9—5.2 kgf·m, 29—37 ft·lbf}

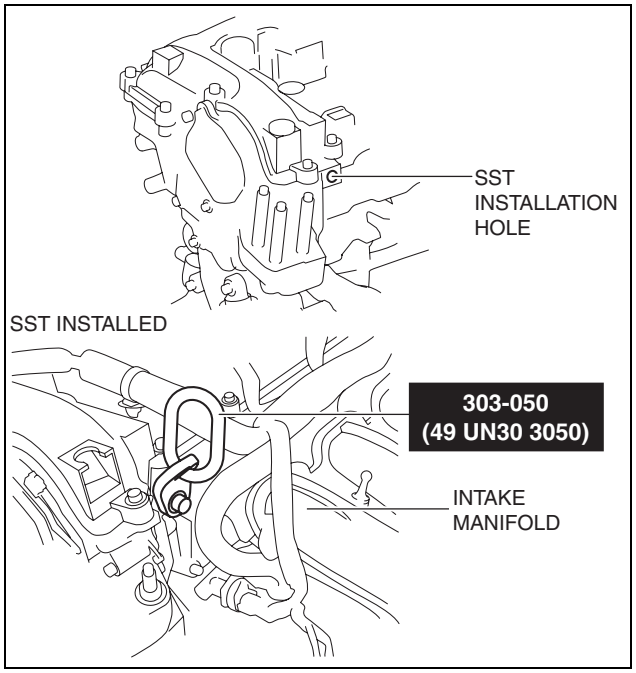

am3uuw0000813

Engine rear side

Tightening torque
38—51 N·m {3.9—5.2 kgf·m, 29—37 ft·lbf}

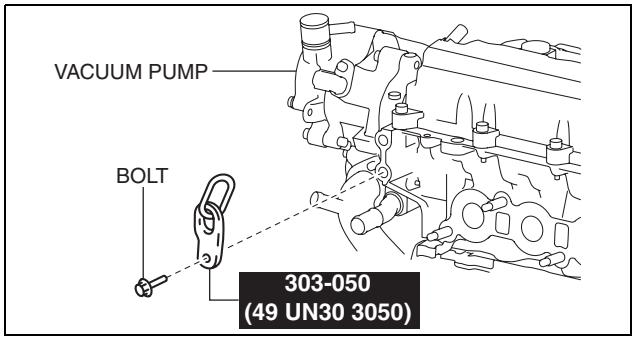

am3uuw0000830

AUTOMATIC TRANSAXLE [FW6A-EL, FW6AX-EL]

(8) As shown in the figure, set the rear shafts of the **SST** to the left and right shock absorber nuts

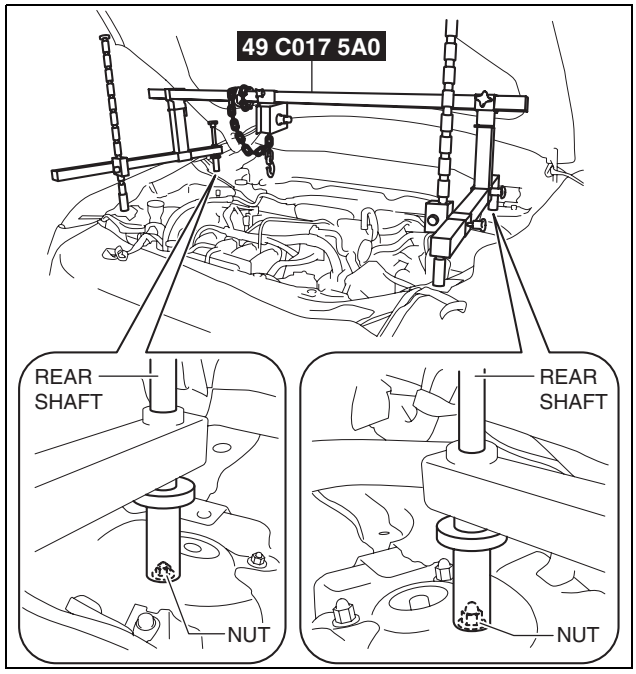

ac5uuw00000334

(9) As shown in the figure, set the front shafts of the **SST** to the left and right bolts.

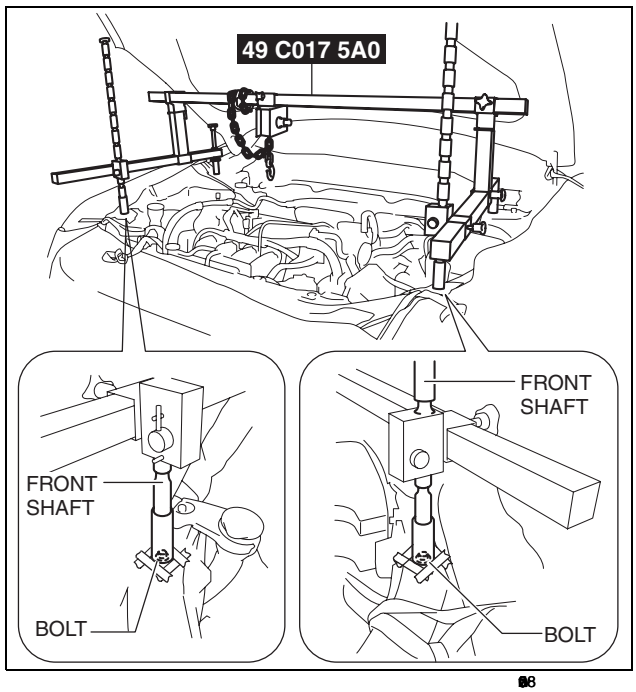

(10) When assembling the **SST** (49 L017 5A0), disconnect the fuel hose from the clip shown in the figure to prevent interference between the fuel hose and **SST**.

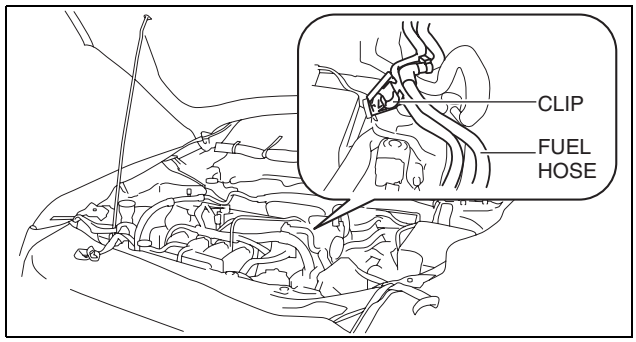

05

AUTOMATIC TRANSAXLE [FW6A-EL, FW6AX-EL]

(11)Install the **SST (49 L017 5A0)** to the **SST (49 C017 5A0)** as shown in the figure.

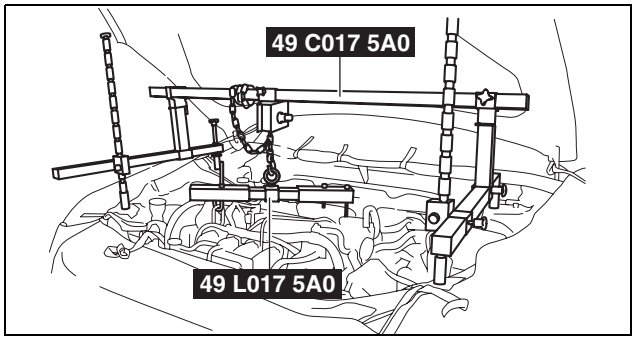

ac5uuw00000338

(12)Install the **SST** (49 L017 5A0) to the **SST** (49 UN30 3050) with the hook of the **SST** (49 L017 5A0) facing outward.
(13)Adjust the height of the left and right side bars so that they are leveled, then tighten each part of the **SST**.
(14)Apply tension to the chain to secure the engine.

40. Remove in the order shown in the figure.

Warning
- **Improperly jacking a transaxle is dangerous. It can slip off the jack and may cause serious injury.**

Caution
- **To prevent the torque converter and transaxle from separating, remove the transaxle without tilting it toward the torque converter.**

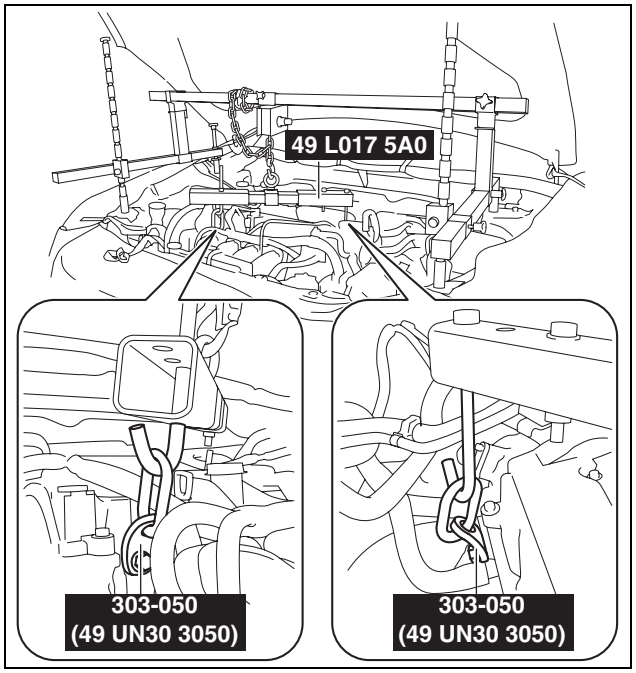

ac5uuw00000337

AUTOMATIC TRANSAXLE [FW6A-EL, FW6AX-EL]

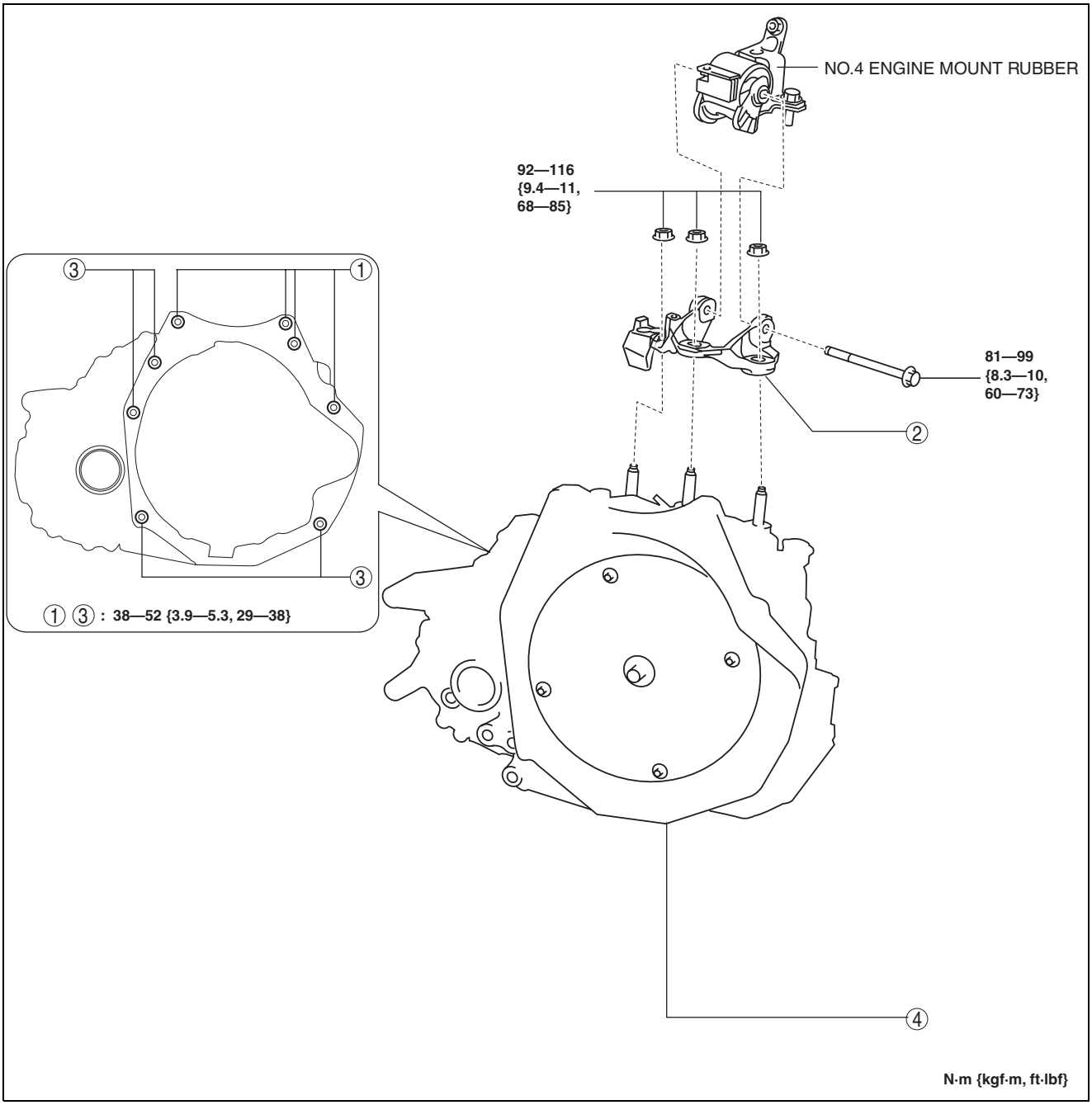

1	Transaxle mounting bolts (upper side)
2	No.4 engine mount bracket (See 05-17A-52 No.4 engine mount bracket removal note.)
3	Transaxle mounting bolts (lower side) (See 05-17A-52 No.4 engine mount bracket removal note.)

4	Transaxle (See 05-17A-52 No.4 engine mount bracket removal note.) (See 05-17A-52 Transaxle mounting bolt removal note.)

AUTOMATIC TRANSAXLE [FW6A-EL, FW6AX-EL]

No.4 engine mount bracket removal note

Caution
- **A slot has been adopted for the No.4 engine mount bracket installation hole. If the No.4 engine mount bracket is deviated from the original position when installing the No.4 engine mount, engine noise or vibration could increase. When removing the No.4 engine mount, place alignment marks on the No.4 engine mount bracket so that they can be assembled to the same positions as before removal.**

1. Place alignment marks on the locations shown in the figure so that they can be assembled to the same positions as before removal.

Note
- Paint so that the outline of the nut is framed on the bracket side.

2. Remove the No.4 engine mount bracket.

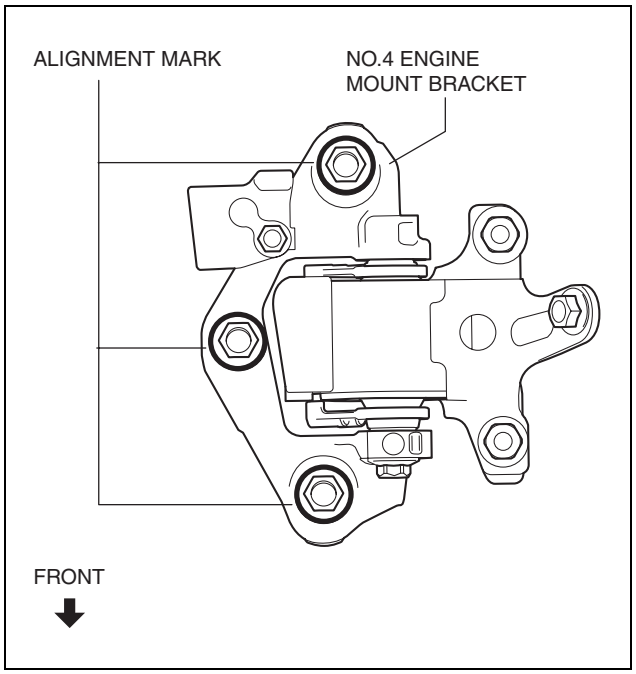

ac5wzw0000460

Transaxle mounting bolt removal note

Warning
- **Remove the transaxle carefully, holding it steady. If the transaxle falls it could be damaged or cause injury.**

1. Adjust the **SST** and lean the engine toward the transaxle.

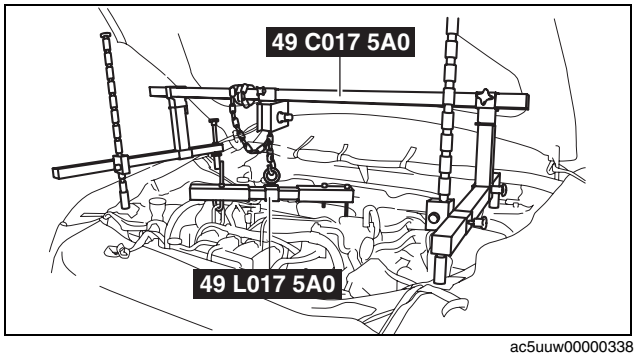

ac5uuw00000338

AUTOMATIC TRANSAXLE [FW6A-EL, FW6AX-EL]

2. Support the transaxle on a jack.
3. Remove the transaxle mounting bolts (lower side).
4. Remove the transaxle.

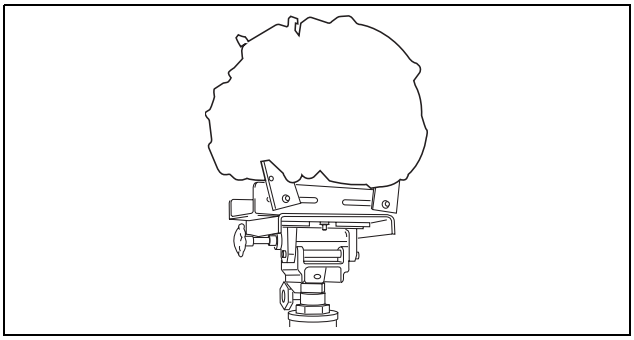
am3uuw0000258

Installation

Caution
- **Verify that the torque converter stud bolts are inserted into the drive plate bolt holes, and install the transaxle installation bolts. Otherwise, the drive plate could be damaged.**

1. Verify that the torque converter stud bolts are inserted into the drive plate bolt holes from the starter installation hole.

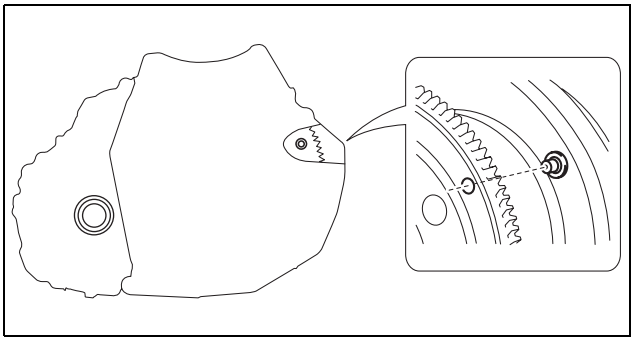
am3uuw0000831

2. Install the transaxle mounting bolts.

Tightening torque
38—52 N·m {3.9—5.3 kgf·m, 29—38 ft·lbf}

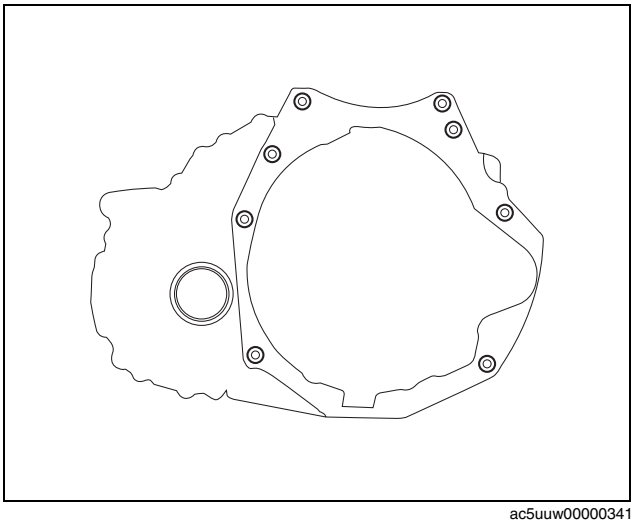
ac5uuw00000341

3. Tighten the stud bolts for the transaxle.

Tightening torque
15—25 N·m {1.6—2.5 kgf·m, 12—18 ft·lbf}

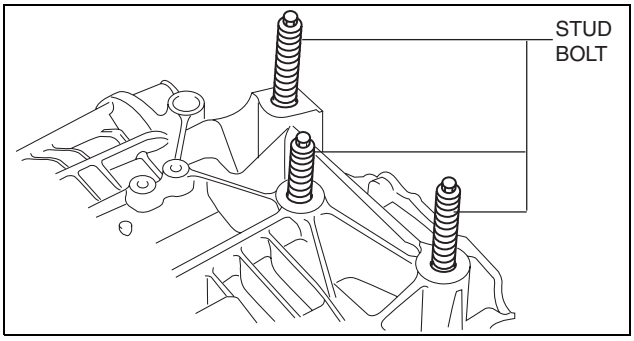

ac5wzw0000213

AUTOMATIC TRANSAXLE [FW6A-EL, FW6AX-EL]

4. Install the No.4 engine mount bracket to No.4 engine mount rubber, and temporarily tighten the installation bolt.

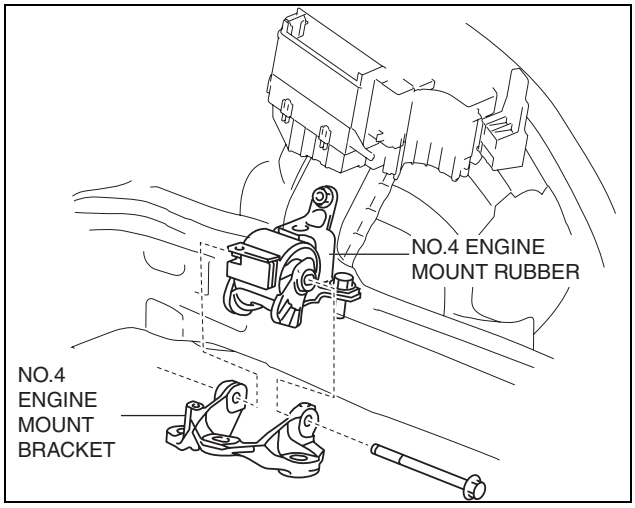

5. Pull up the transaxle using the **SSTs**, pass the transaxle stud bolts through the No.4 engine mount bracket, and temporarily tighten the No.4 engine mount installation nuts.

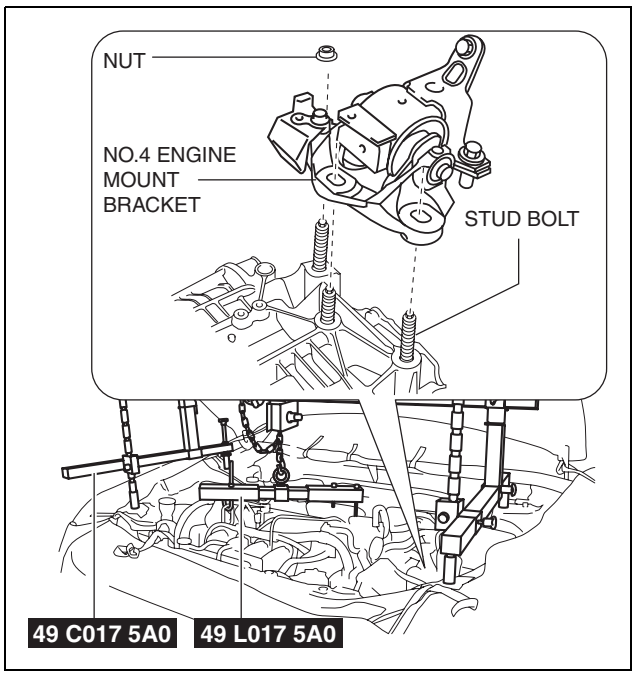

ac5uuw00000343

6. Install the No.1 engine mounting bracket.

Tightening torque
131—153 N·m {14—15 kgf·m, 97—112 ft·lbf}

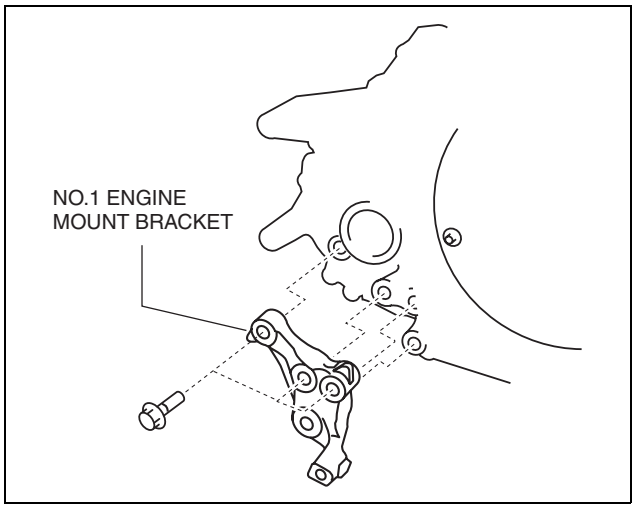

ac5uuw00000346

AUTOMATIC TRANSAXLE [FW6A-EL, FW6AX-EL]

7. Install the bracket.

   Tightening torque
   38—51 N·m {3.9—5.2 kgf·m, 29—37 ft·lbf}

8. Install the the transfer. (See 03-16B-4 TRANSFER REMOVAL/INSTALLATION [FW6AX-EL].)
9. Install the exhaust manifold (WU-TWC). (See 01-15A-2 EXHAUST SYSTEM REMOVAL/INSTALLATION [SKYACTIV-G 2.0].)
10. Install the front crossmember component and No.1 engine mount rubber as a single unit. (See 02-13-15 FRONT CROSSMEMBER REMOVAL/INSTALLATION.)

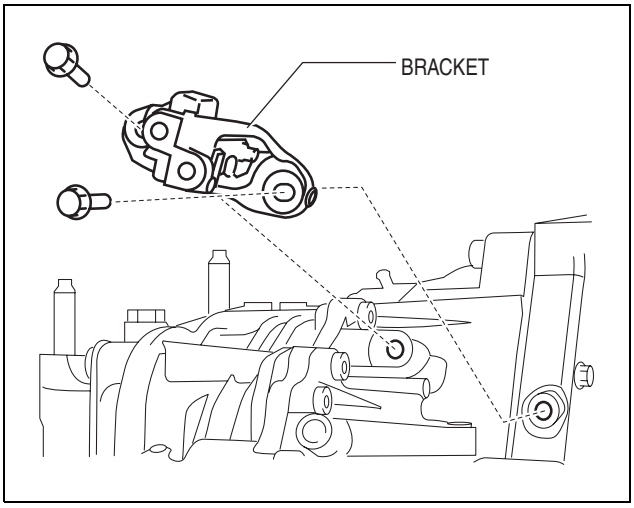

ac5uuw00000345

11. Temporarily install the No.1 engine mount rubber and bracket plate.

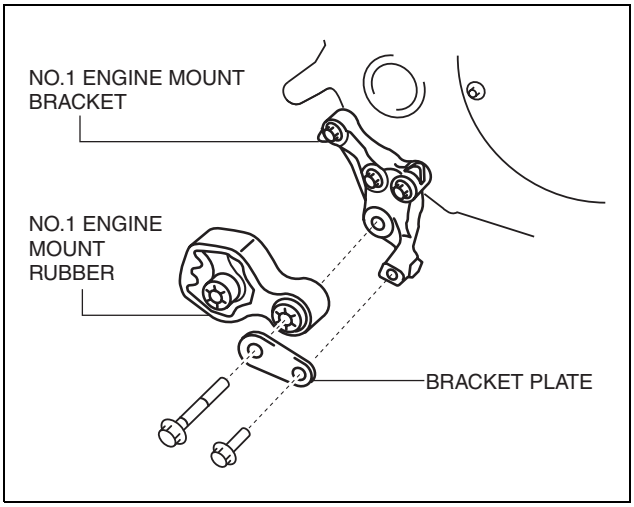

ac5uuw00000347

12. Align the alignment marks on the No.4 engine mount bracket and nuts, and temporarily tighten the nuts shown in the figure.

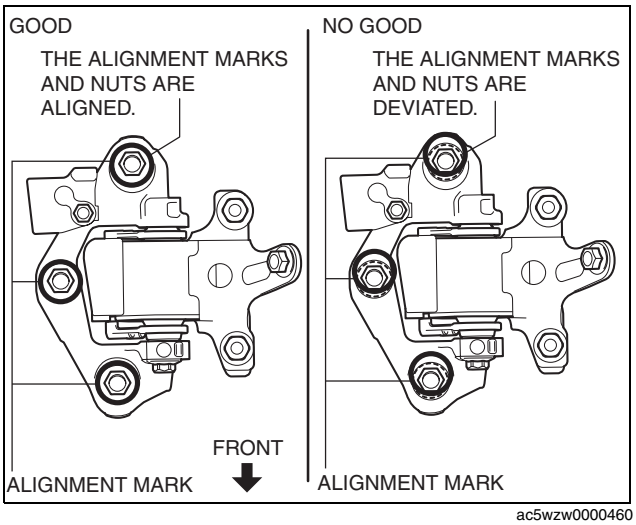

ac5wzw0000460

AUTOMATIC TRANSAXLE [FW6A-EL, FW6AX-EL]

13. Tighten the No.4 engine mount bracket installation nuts and bolt in the order shown in the figure.

No.	Tightening torque
1, 2, 3	92—116 N·m {9.4—11 kgf·m, 69—85 ft·lbf}
4	81—99 N·m {8.3—10 kgf·m, 60—73 ft·lbf}

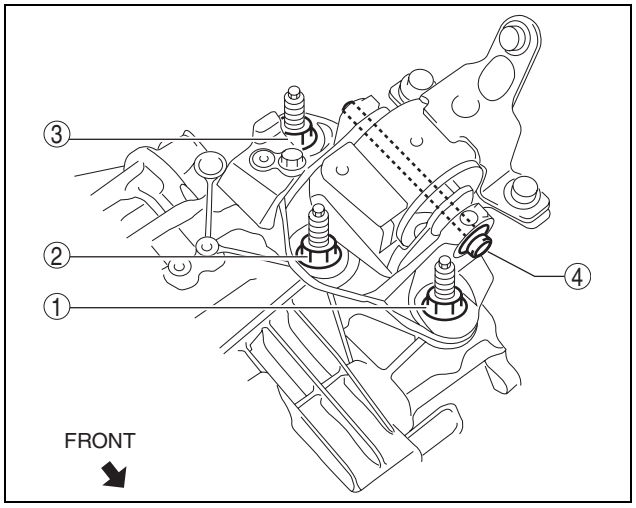

ac5uuw00000349

14. Install the propeller shaft. (See 03-15-2 PROPELLER SHAFT REMOVAL/ INSTALLATION.)
15. Remove the **SST (49 C017 5A0)**.

16. Tighten the No.1 engine mount rubber and bracket plate installation bolts.

No.	Tightening torque
1	140—163 N·m {15—16 kgf·m, 104—120 ft·lbf}
2	55—69 N·m {5.7—7.0 kgf·m, 41—50 ft·lbf}
3	130—164 N·m {14—16 kgf·m, 96—120 ft·lbf}

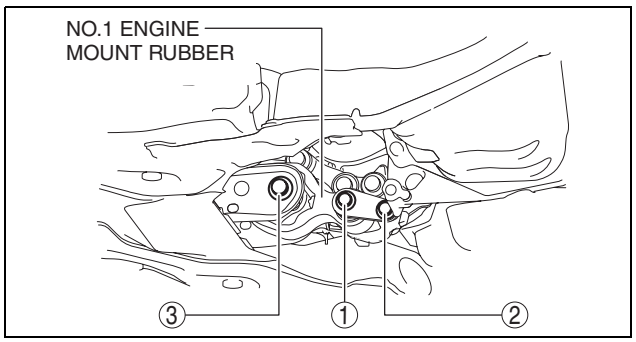

ac5uuw00000350

17. Fix the crankshaft pulley to lock the torque converter against rotation.

Caution
- **After temporarily tightening the torque converter installation nut uniformly, tighten it to the specified torque.**

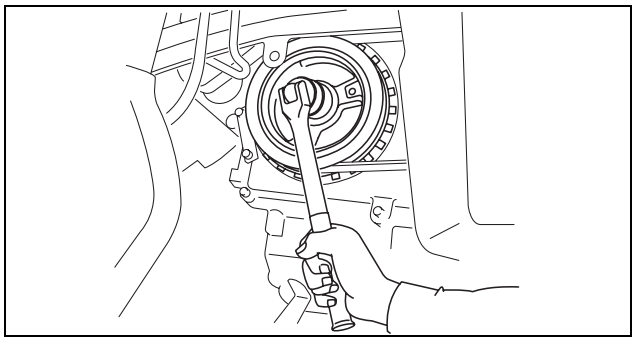
am3uuw0000258

18. Tighten the torque converter installation nut.

Tightening torque
41—54 N·m {4.2—5.5 kgf·m, 31—39 ft·lbf}

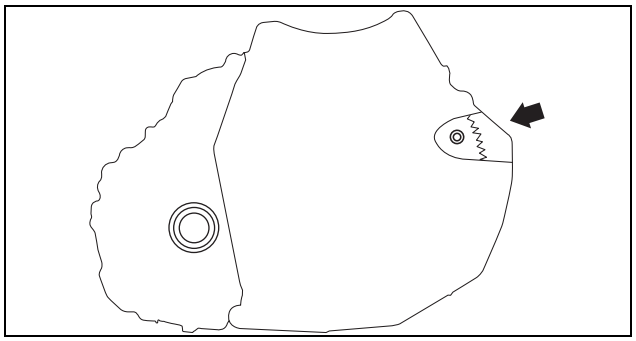
ac5uuw00000329

AUTOMATIC TRANSAXLE [FW6A-EL, FW6AX-EL]

19. Install the blind cover.
20. Install the starter. (See 01-19A-2 STARTER REMOVAL/INSTALLATION [SKYACTIV-G 2.0].)
21. Install the drive shaft (RH) to the transfer. (See 03-13-3 FRONT DRIVE SHAFT REMOVAL/INSTALLATION.)
22. Install the drive shaft (LH) to the transaxle. (See 03-13-3 FRONT DRIVE SHAFT REMOVAL/INSTALLATION.)
23. Install the front stabilizer control links to the front stabilizer. (See 02-13-10 FRONT STABILIZER REMOVAL/INSTALLATION.)
24. Install the front lower arms to the steering knuckles. (See 02-13-7 FRONT LOWER ARM REMOVAL/INSTALLATION.)

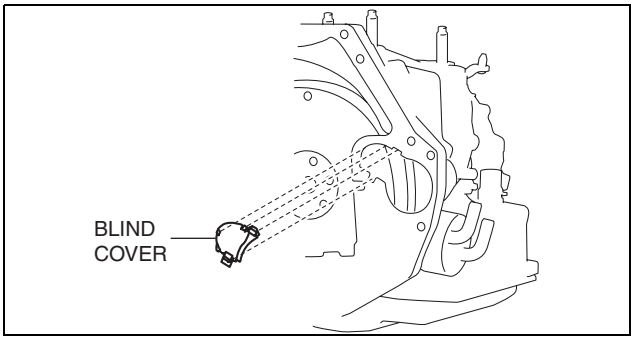

am3uuw0000831

25. Install the tie-rod end ball joints to the steering knuckles. (See 06-13-16 STEERING GEAR AND LINKAGE REMOVAL/INSTALLATION.)
26. Install the clips securing the brake hose to the front shock absorbers. (See 04-11-27 FRONT BRAKE (DISC) REMOVAL/INSTALLATION.)
27. Install the front ABS wheel-speed sensors to the steering knuckles. (See 04-15-9 FRONT ABS WHEEL-SPEED SENSOR REMOVAL/INSTALLATION.)
28. Connect the water hose to the oil cooler. (Automatic Transaxle Replacement) (See 05-17A-66 OIL COOLER REMOVAL/INSTALLATION [FW6A-EL, FW6AX-EL].)
29. Install the oil cooler to the transaxle with the hose connected. (Except Automatic Transaxle Replacement) (See 05-17A-66 OIL COOLER REMOVAL/INSTALLATION [FW6A-EL, FW6AX-EL].)
30. Install the front under cover No.1. (See 09-16-40 FRONT UNDER COVER No.1 REMOVAL/INSTALLATION.)
31. Install the front under cover No.2. (See 09-16-41 FRONT UNDER COVER No.2 REMOVAL/INSTALLATION.)
32. Install the front tires. (See 02-10-1 GENERAL PROCEDURES (SUSPENSION).)
33. Connect the intermediate shaft to the steering gear and linkage. (See 06-13-4 STEERING WHEEL AND COLUMN REMOVAL/INSTALLATION.)
34. Install the joint cover. (See 06-13-4 STEERING WHEEL AND COLUMN REMOVAL/INSTALLATION.)
35. Connect the breather hose to the transaxle.
36. Install the selector cable bracket.

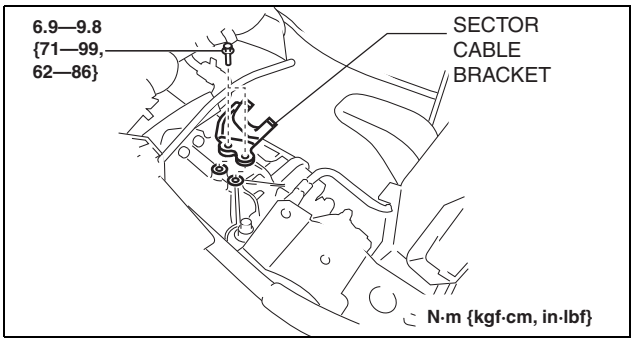

ac5wzw0000459

37. Connect the selector cable to the transaxle.

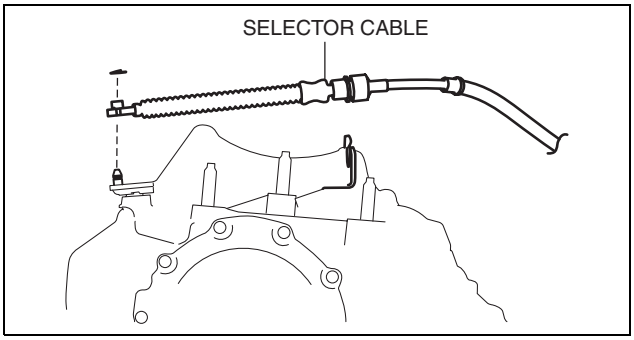

ac5uuw00000325

AUTOMATIC TRANSAXLE [FW6A-EL, FW6AX-EL]

38. Install the ground cable.

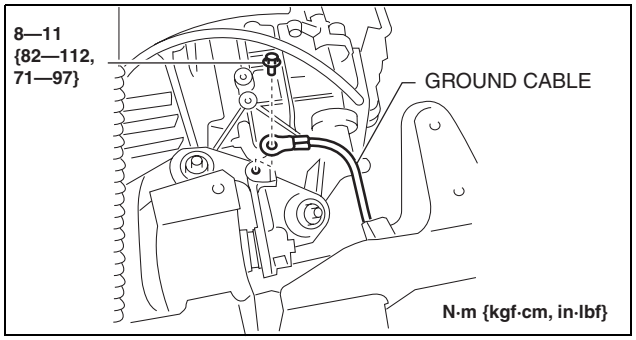

ac5uuw00000353

39. Install the bracket to the transaxle.
40. Connect the control valve body connector.

Caution
- **Make sure that your hand does not touch the terminal as the connector terminal could be damaged.**
- **Verify that there is no fluid or foreign matter adhering to the connector before connecting the connector.**
- **Insert the connector straight as the connector terminal could be damaged.**
- **Rotate the connector lever until a click is heard.**

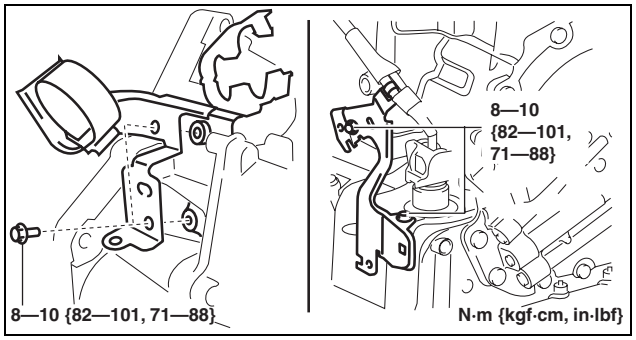

ac5uuw00000351

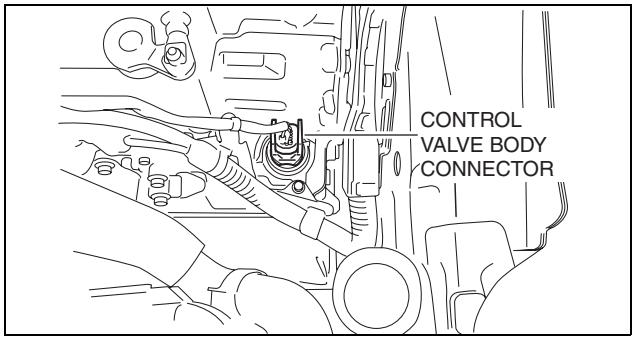

ac5uuw00000327

41. Connect the electric AT oil pump connector and electric AT oil pump harness from the transaxle. (With electric AT oil pump)
42. Install the splash shield. (See 09-16-49 SPLASH SHIELD REMOVAL/INSTALLATION.)

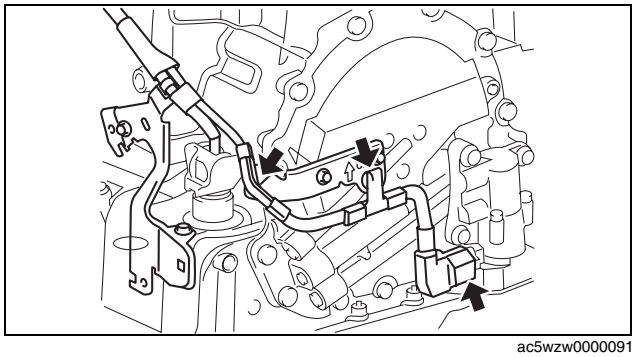

ac5wzw0000091

AUTOMATIC TRANSAXLE [FW6A-EL, FW6AX-EL]

43. Connect the wiring harness to the transaxle.
44. Install the battery tray and PCM component. (See 01-17A-3 BATTERY REMOVAL/INSTALLATION [SKYACTIV-G 2.0].)
45. Install the air cleaner and air hose as a single unit. (See 01-13A-6 INTAKE-AIR SYSTEM REMOVAL/INSTALLATION [SKYACTIV-G 2.0].)
46. Connect the negative battery cable. (See 01-17A-13 NEGATIVE BATTERY CABLE DISCONNECTION/CONNECTION [SKYACTIV-G 2.0 (WITHOUT i-stop)].) (See 01-17A-11 NEGATIVE BATTERY CABLE DISCONNECTION/CONNECTION [SKYACTIV-G 2.0].)
47. Add the ATF. (See 05-17A-12 AUTOMATIC TRANSAXLE FLUID (ATF) REPLACEMENT [FW6A-EL, FW6AX-EL].)
48. Perform the “Mechanical System Test”. (See 05-17A-4 MECHANICAL SYSTEM TEST [FW6A-EL, FW6AX-EL].)

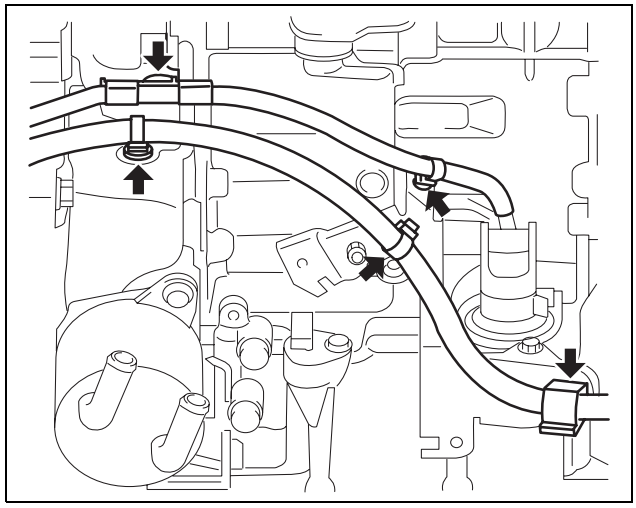
ac5uuw00000354

DRIVE PLATE REMOVAL/INSTALLATION [FW6A-EL, FW6AX-EL]

id0517h2117300

1. Remove the transaxle. (See 05-17A-28 AUTOMATIC TRANSAXLE REMOVAL/INSTALLATION [FW6A-EL].) (See 05-17A-43 AUTOMATIC TRANSAXLE REMOVAL/INSTALLATION [FW6AX-EL].)
2. Remove in the order indicated in the table.

1	Drive plate installation bolts (See 05-17A-59 Drive Plate Installation Bolts Removal Note.) (See 05-17A-60 Drive Plate Installation Bolts Installation Note.)
2	Backing plate
3	Drive plate

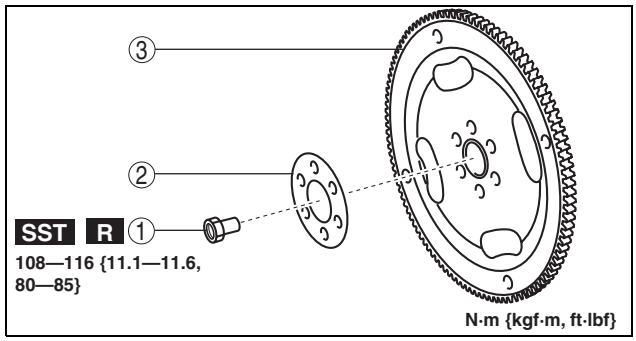

am3uuw0000918

3. Install in the reverse order of removal.

Drive Plate Installation Bolts Removal Note

1. Set the **SST** against the drive plate.
2. Loosen the drive plate installation bolts uniformly in two or three steps in the order shown in the figure, then remove the bolts and the drive plate.

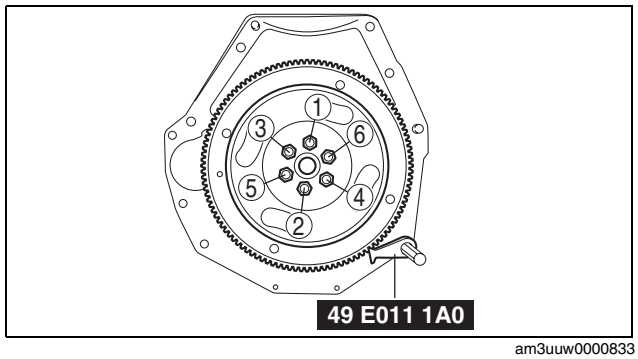

am3uuw0000833

AUTOMATIC TRANSAXLE [FW6A-EL, FW6AX-EL]

Drive Plate Installation Bolts Installation Note

1. Set the **SST** against the drive plate.
2. Tighten the new drive plate installation bolts uniformly in two or three steps in the order shown in the figure.

   Tightening torque
   108—116 N·m {11.1—11.8 kgf·m, 80—85 ft·lbf}

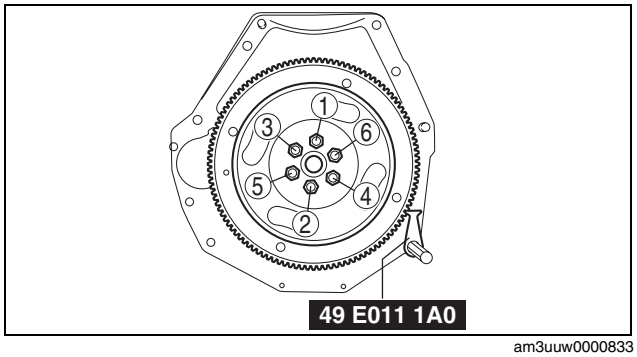

am3uuw0000833

OIL SEAL (DIFFERENTIAL) REPLACEMENT [FW6A-EL, FW6AX-EL]

id0517h2118800

Transaxle Case Side

1. Remove the front under cover No.2. (See 09-16-41 FRONT UNDER COVER No.2 REMOVAL/INSTALLATION.)
2. Drain the ATF. (See 05-17A-12 AUTOMATIC TRANSAXLE FLUID (ATF) REPLACEMENT [FW6A-EL, FW6AX-EL].)
3. Disconnect the front drive shaft (LH) from the transaxle. (See 03-13-3 FRONT DRIVE SHAFT REMOVAL/INSTALLATION.)

   Caution
   - **The oil seal is easily damaged by the sharp edges of the drive shaft splines. Do not let the splines contact the oil seal.**

4. Remove the oil seal using a flathead screwdriver.

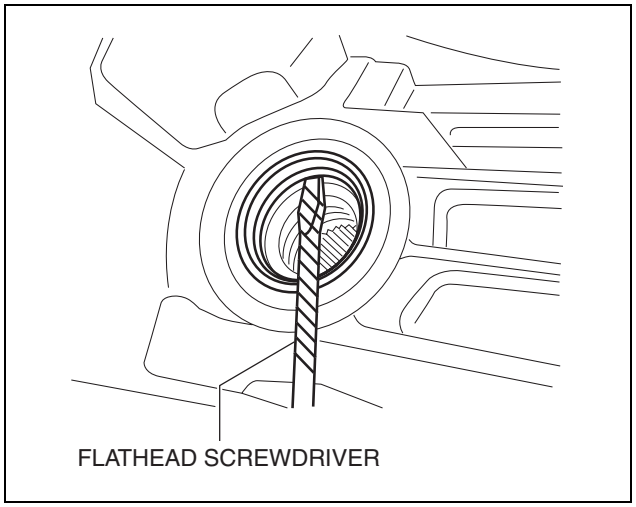

ac5uuw00000215

5. Using the **SSTs** and a hammer, tap a new oil seal in evenly until the **SST** (**49 U027 003**) contacts the transaxle case.
6. Coat the lip of the oil seal with ATF.
7. Install the front drive shaft (LH) to the transaxle. (See 03-13-3 FRONT DRIVE SHAFT REMOVAL/INSTALLATION.)
8. Add the ATF. (See 05-17A-12 AUTOMATIC TRANSAXLE FLUID (ATF) REPLACEMENT [FW6A-EL, FW6AX-EL].)
9. Install the front under cover No.2. (See 09-16-41 FRONT UNDER COVER No.2 REMOVAL/INSTALLATION.)
10. Perform the “Mechanical System Test”. (See 05-17A-4 MECHANICAL SYSTEM TEST [FW6A-EL, FW6AX-EL].)

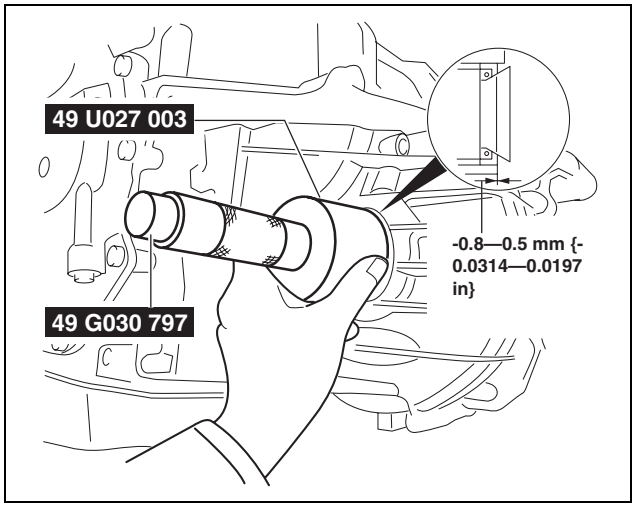

ac5uuw00000216

AUTOMATIC TRANSAXLE [FW6A-EL, FW6AX-EL]

Converter housing Side (FW6A-EL)

1. Remove the front under cover No.2. (See 09-16-41 FRONT UNDER COVER No.2 REMOVAL/INSTALLATION.)
2. Drain the ATF. (See 05-17A-12 AUTOMATIC TRANSAXLE FLUID (ATF) REPLACEMENT [FW6A-EL, FW6AX-EL].)
3. Disconnect the front drive shaft (RH). (See 03-13-3 FRONT DRIVE SHAFT REMOVAL/INSTALLATION.)

Caution

- **The oil seal is easily damaged by the sharp edges of the drive shaft splines. Do not let the splines contact the oil seal.**

4. Remove the oil seal using a flathead screwdriver.

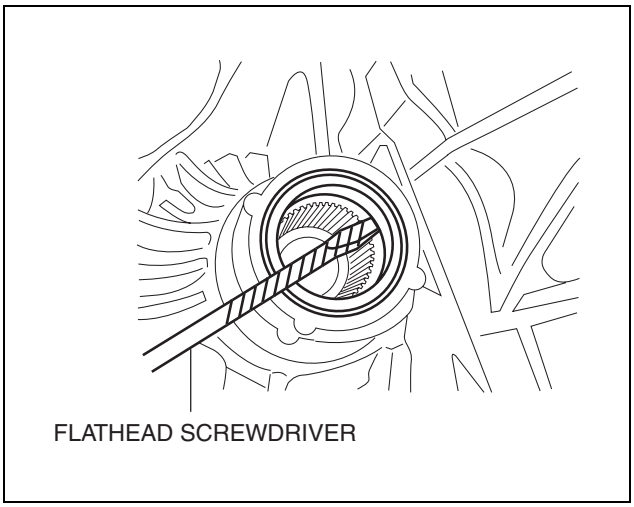

ac5uuw00000217

5. Using the **SSTs** and a hammer, tap a new oil seal in evenly until the **SST** (**49 U027 003**) contacts the transaxle case.
6. Coat the lip of the oil seal with ATF.
7. Install the front drive shaft (RH). (See 03-13-3 FRONT DRIVE SHAFT REMOVAL/INSTALLATION.)
8. Add the ATF. (See 05-17A-12 AUTOMATIC TRANSAXLE FLUID (ATF) REPLACEMENT [FW6A-EL, FW6AX-EL].)
9. Install the front under cover No.2. (See 09-16-41 FRONT UNDER COVER No.2 REMOVAL/INSTALLATION.)
10. Perform the “Mechanical System Test”. (See 05-17A-4 MECHANICAL SYSTEM TEST [FW6A-EL, FW6AX-EL].)

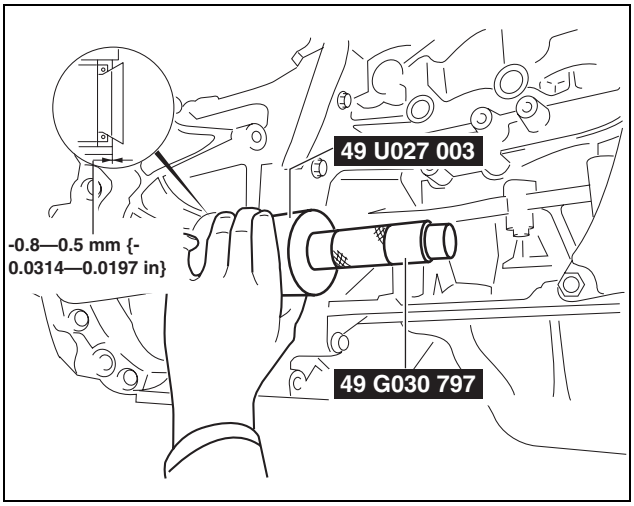

ac5uuw00000218

AUTOMATIC TRANSAXLE [FW6A-EL, FW6AX-EL]

Converter housing Side (FW6AX-EL)

1. Remove the front under cover No.2. (See 09-16-41 FRONT UNDER COVER No.2 REMOVAL/INSTALLATION.)
2. Drain the ATF. (See 05-17A-12 AUTOMATIC TRANSAXLE FLUID (ATF) REPLACEMENT [FW6A-EL, FW6AX-EL].)
3. Remove the transfer. (See 03-16B-4 TRANSFER REMOVAL/INSTALLATION [FW6AX-EL].)

Caution

- **The oil seal is easily damaged by the sharp edges of the drive shaft splines. Do not let the splines contact the oil seal.**

4. Remove the oil seal using a flathead screwdriver.

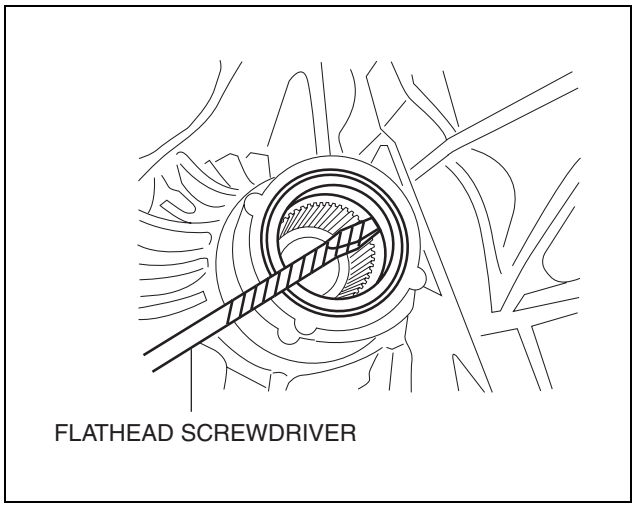

ac5uuw00000217

5. Using the **SSTs** and a hammer, tap a new oil seal in evenly until the **SST** (**49 U027 003**) contacts the transaxle case.
6. Coat the lip of the oil seal with ATF.
7. Install the transfer. (See 03-16B-4 TRANSFER REMOVAL/INSTALLATION [FW6AX-EL].)
8. Add the ATF. (See 05-17A-12 AUTOMATIC TRANSAXLE FLUID (ATF) REPLACEMENT [FW6A-EL, FW6AX-EL].)
9. Install the front under cover No.2. (See 09-16-41 FRONT UNDER COVER No.2 REMOVAL/INSTALLATION.)
10. Perform the “Mechanical System Test”. (See 05-17A-4 MECHANICAL SYSTEM TEST [FW6A-EL, FW6AX-EL].)

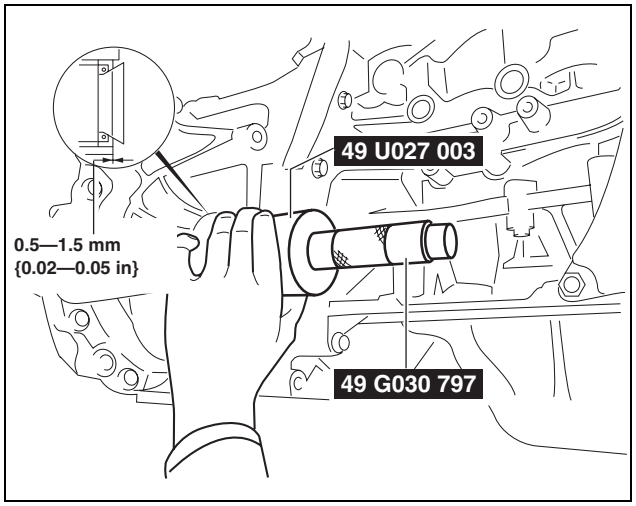

ac5wzw0000091

AUTOMATIC TRANSAXLE [FW6A-EL, FW6AX-EL]

OIL SEAL (CONTROL VALVE BODY) REPLACEMENT [FW6A-EL, FW6AX-EL]

id0517h2118700

1. Disconnect the negative battery cable. (See 01-17A-13 NEGATIVE BATTERY CABLE DISCONNECTION/CONNECTION [SKYACTIV-G 2.0 (WITHOUT i-stop)].) (See 01-17A-11 NEGATIVE BATTERY CABLE DISCONNECTION/CONNECTION [SKYACTIV-G 2.0].)
2. Remove the air cleaner component. (See 01-13A-6 INTAKE-AIR SYSTEM REMOVAL/INSTALLATION [SKYACTIV-G 2.0].)
3. Disconnect the control valve body connector.

Caution
- **Make sure that your hand does not touch the terminal as the connector terminal could be damaged.**
- **Water or foreign objects entering the connector can cause a poor connection or corrosion. Be sure not to drop water or foreign objects on the connector when disconnecting it.**

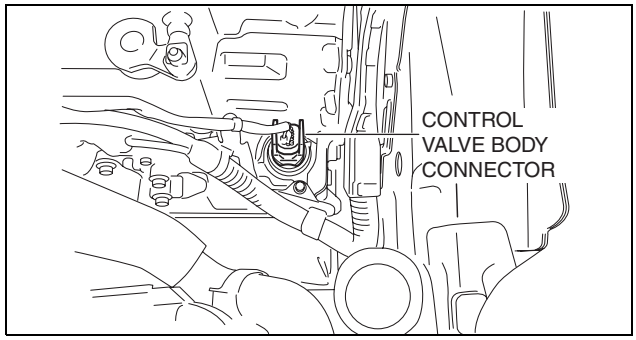

am3uuw0000832

4. Remove the hose clamp.

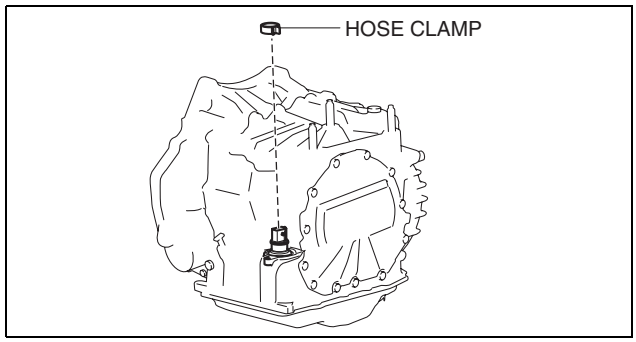

am3uuw0000832

5. Cut the oil seal using a utility knife as shown in the following illustration.

Caution
- **Do not damage the transaxle case.**
- **Do not damage the control valve body coupler connector.**
- **To prevent foreign matter penetration, clean the oil seal area thoroughly and cut the oil seal so as not to leave cutting fragments.**

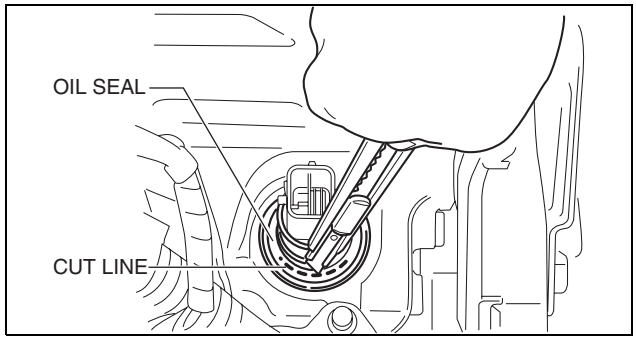

am3uuw0000832

6. Using a tape-wrapped flathead screwdriver, remove the oil seal from the transaxle case.

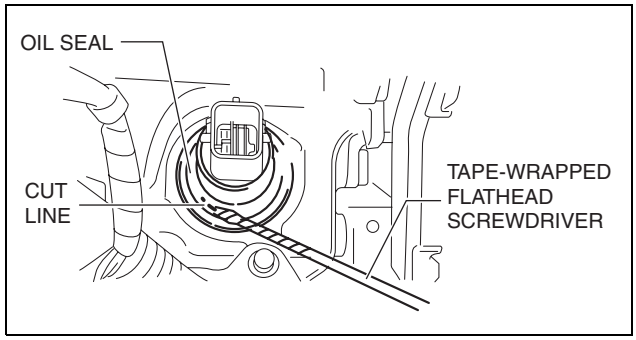

am3uuw0000919

AUTOMATIC TRANSAXLE [FW6A-EL, FW6AX-EL]

Note
- Remove the oil seal by tapping the tip of a tape-wrapped flathead screwdriver on the inner circumference surface A area of the oil seal.

7. Temporarily install the oil seal (control valve body) by hand.

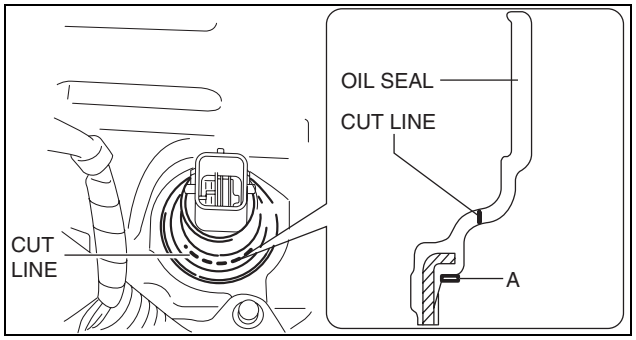

am3uuw0000919

8. Using the **SSTs** and a hammer, install the oil seal (control valve body) so that it is not tilted and there is no height difference between the transaxle case surface and the end surface of the oil seal.

Caution
- **When installing the oil seal (control valve body), do not mistakenly hit the control valve body connector with the hammer. Otherwise the control valve body connector could be damaged making it no longer waterproof.**

9. Install a new hose clamp to the position shown in the figure.

Caution
- **If the hose clamp is reused it could cause ATF leakage, therefore use a new hose clamp.**

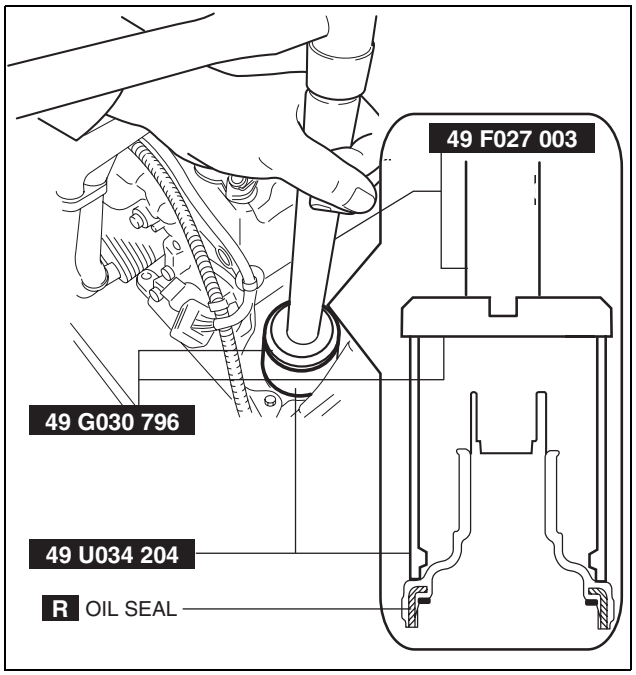

ac5wzw0000234

- **Install the hose clamp tab to within the range shown in the figure.**
  A: 210°

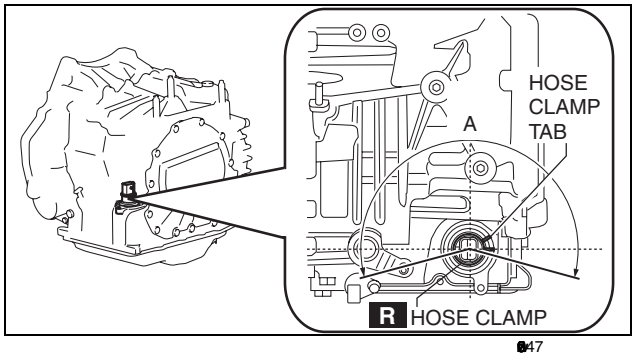

ac5wzw0000247

AUTOMATIC TRANSAXLE [FW6A-EL, FW6AX-EL]

- **Install the hose clamp so that it does not interfere with the top and bottom flanges of the oil seal to maintain the waterproofing integrity.**

10. Connect the control valve body connector.

Caution
- **Make sure that your hand does not touch the terminal as the connector terminal could be damaged.**
- **Verify that there is no fluid or foreign matter adhering to the connector before connecting the connector.**
- **Insert the connector straight as the connector terminal could be damaged.**
- **Rotate the connector lever until a click is heard.**

11. Install the air cleaner component. (See 01-13A-6 INTAKE-AIR SYSTEM REMOVAL/ INSTALLATION [SKYACTIV-G 2.0].)
12. Connect the negative battery cable. (See 01-17A-13 NEGATIVE BATTERY CABLE DISCONNECTION/CONNECTION [SKYACTIV-G 2.0 (WITHOUT i-stop)].) (See 01-17A-11 NEGATIVE BATTERY CABLE DISCONNECTION/CONNECTION [SKYACTIV-G 2.0].)

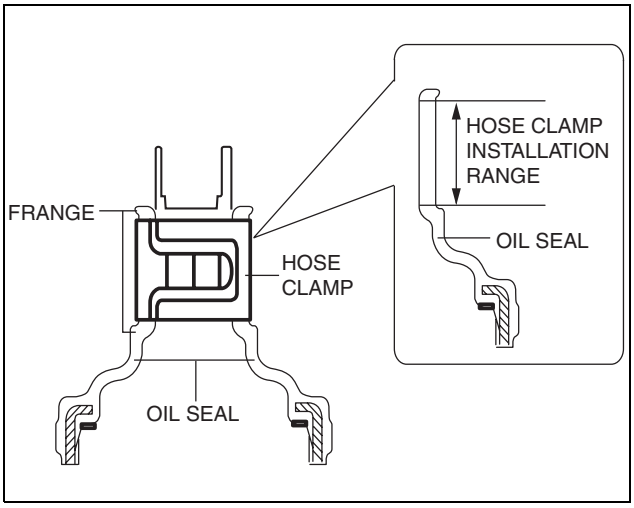

ac5wzw0000291

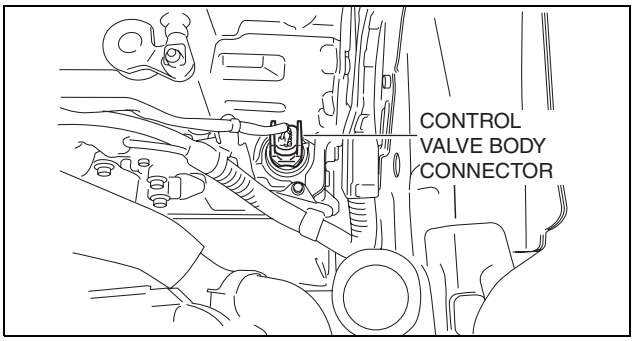

am3uuw0000832

05

AUTOMATIC TRANSAXLE [FW6A-EL, FW6AX-EL]

OIL COOLER REMOVAL/INSTALLATION [FW6A-EL, FW6AX-EL]

id0517h2117500

1. Disconnect the negative battery cable. (See 01-17A-13 NEGATIVE BATTERY CABLE DISCONNECTION/CONNECTION [SKYACTIV-G 2.0 (WITHOUT i-stop)].) (See 01-17A-11 NEGATIVE BATTERY CABLE DISCONNECTION/CONNECTION [SKYACTIV-G 2.0].)
2. Remove the front under cover NO.2. (See 09-16-40 FRONT UNDER COVER No.1 REMOVAL/INSTALLATION.)
3. Drain the ATF. (See 05-17A-12 AUTOMATIC TRANSAXLE FLUID (ATF) REPLACEMENT [FW6A-EL, FW6AX-EL].)
4. Drain the engine coolant. (See 01-12A-4 ENGINE COOLANT REPLACEMENT [SKYACTIV-G 2.0].)
5. Remove in the order indicated in the table.

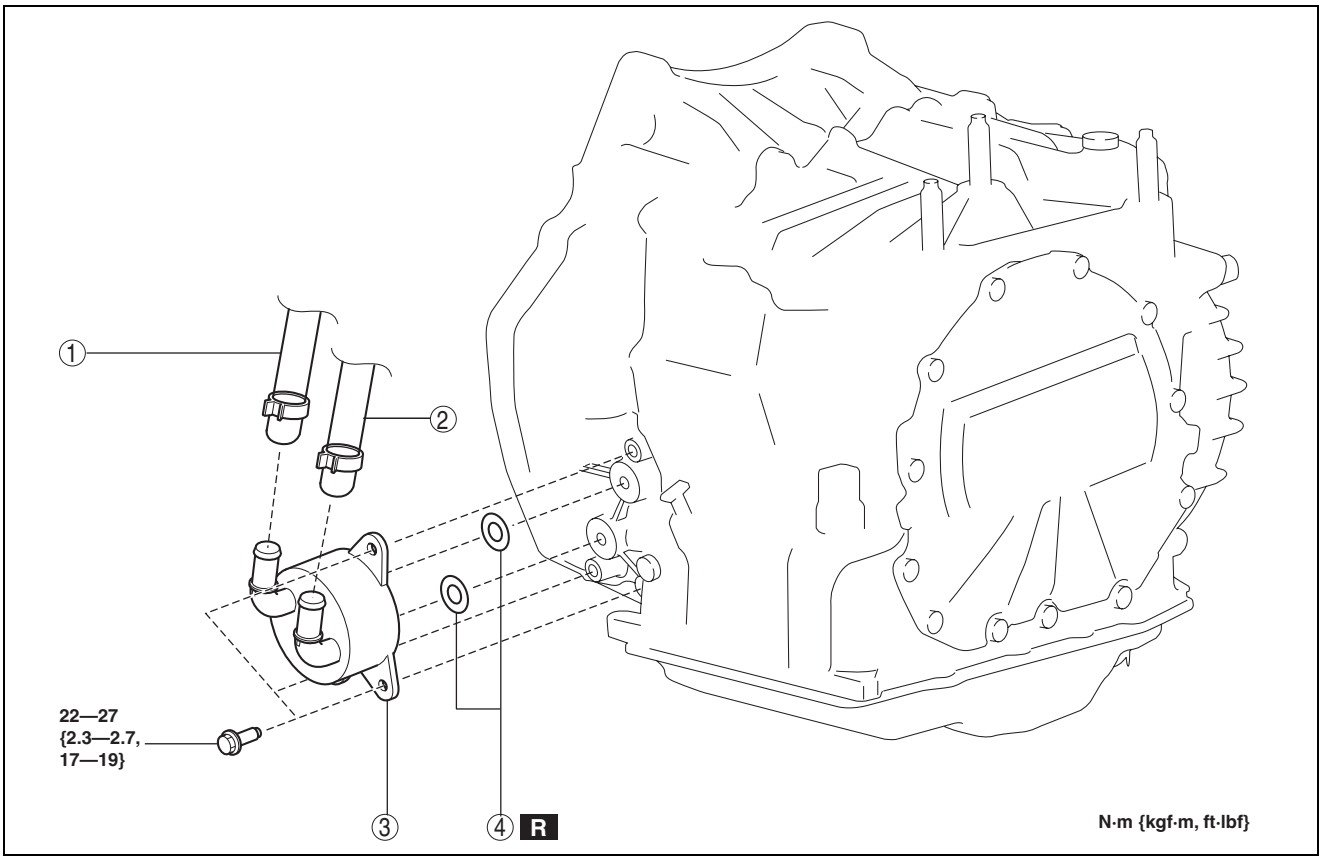

1	W[illegible]	3	W[illegible]
2	W[illegible]	4	O-[illegible]

6. Install in the reverse order of removal.
7. Add the engine coolant. (See 01-12A-4 ENGINE COOLANT REPLACEMENT [SKYACTIV-G 2.0].)
8. Add the ATF. (See 05-17A-12 AUTOMATIC TRANSAXLE FLUID (ATF) REPLACEMENT [FW6A-EL, FW6AX-EL].)
9. Perform the “Mechanical System Test”. (See 05-17A-4 MECHANICAL SYSTEM TEST [FW6A-EL, FW6AX-EL].)

AUTOMATIC TRANSAXLE [FW6A-EL, FW6AX-EL]

Water Hose Installation Note

1. Install the water hose to the oil cooler as shown in the figure with the hose clamp expanded.

Note

- A new water hose and hose clamp are attached.

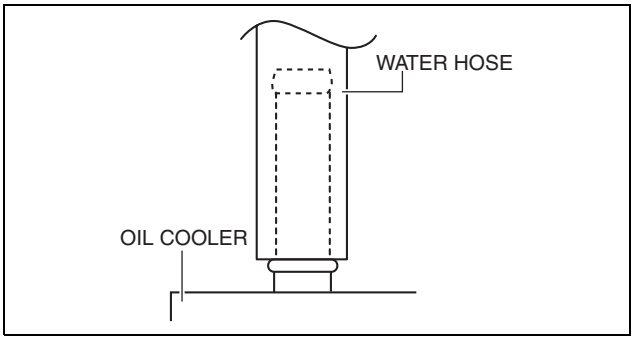

am3uuw0000832

2. Install the hose clamp so that center A of the hose clamp tab is within the range shown in the figure.
   - Verify that the installation angle of the hose clamp is within the range shown in the figure.
3. Verify that the hose clamp does not interfere with any other components.

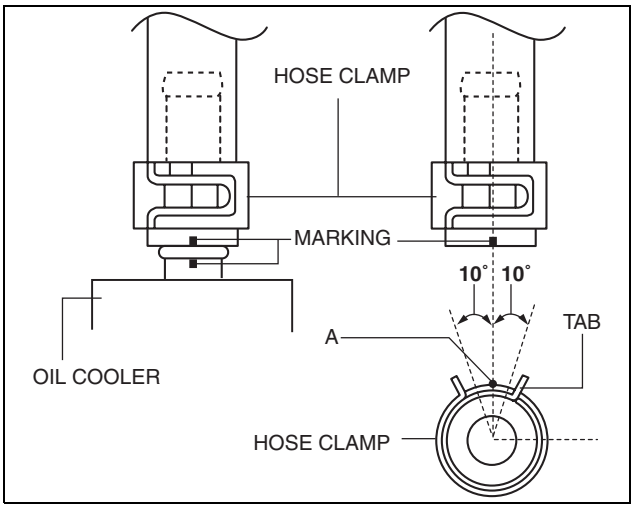

id0517h2118000

CONTROL VALVE BODY REMOVAL/INSTALLATION [FW6A-EL, FW6AX-EL]

On-Vehicle Removal

Warning

- **A hot transaxle and ATF can cause severe burns. Turn off the engine and wait until they are cool.**
- **Using compressed air can cause dirt and other particles to fly out, causing injury to the eyes. Wear protective eyeglasses whenever using compressed air.**

Caution

- **If the control valve body has been replaced, perform initial learning. (See 05-17A-74 INITIAL LEARNING [FW6A-EL, FW6AX-EL].)**
- **Placing the control valve body connector side pointed downward could damage the control valve body connector part or sensor. If the servicing can only be performed by pointing the control valve body connector side downward, spread shock-absorbing material, which does not produce dust or foreign matter, and place the control valve body connector part and sensor on the table so that they do not directly contact the table.**

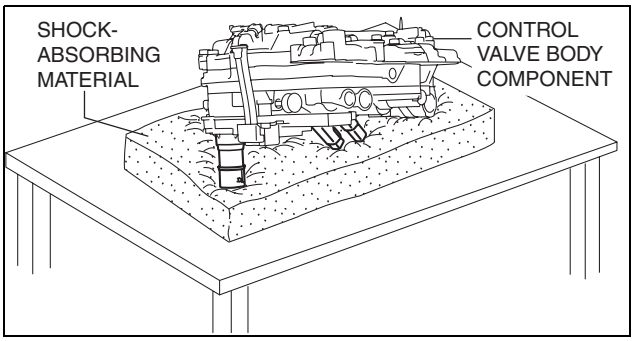

1. Select the selector lever to P position.

AUTOMATIC TRANSAXLE [FW6A-EL, FW6AX-EL]

2. Disconnect the negative battery cable. (See 01-17A-13 NEGATIVE BATTERY CABLE DISCONNECTION/CONNECTION [SKYACTIV-G 2.0 (WITHOUT i-stop)].) (See 01-17A-11 NEGATIVE BATTERY CABLE DISCONNECTION/CONNECTION [SKYACTIV-G 2.0].)
3. Remove the front under cover No.2. (See 09-16-41 FRONT UNDER COVER No.2 REMOVAL/INSTALLATION.)
4. Clean the transaxle exterior throughout with a steam cleaner or cleaning solvents.
5. Remove the air cleaner component. (See 01-13A-6 INTAKE-AIR SYSTEM REMOVAL/INSTALLATION [SKYACTIV-G 2.0].)
6. Disconnect the control valve body connector.

Caution
- **Make sure that your hand does not touch the terminal as the connector terminal could be damaged.**
- **Water or foreign objects entering the connector can cause a poor connection or corrosion. Be sure not to drop water or foreign objects on the connector when disconnecting it.**

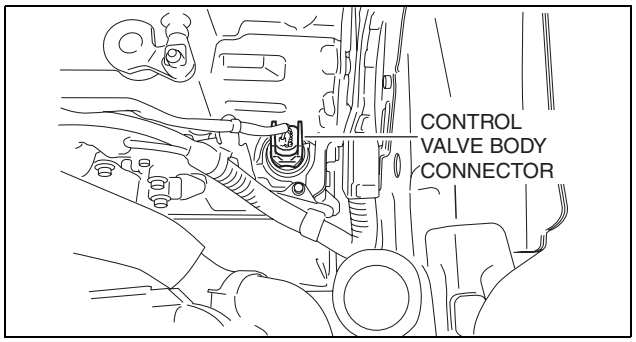

am3uuw0000828

7. Remove the hose clamp.
8. Drain the ATF. (See 05-17A-12 AUTOMATIC TRANSAXLE FLUID (ATF) REPLACEMENT [FW6A-EL, FW6AX-EL].)
9. Remove the oil pan.

Caution
- **To avoid damaging the control valve body, if there is a large amount of foreign material at the bottom of the oil pan when the oil pan is removed, replace the oil strainer with a new one.**
- **If there is not a large amount of foreign material at the bottom of the oil pan, the oil strainer does not have to be replaced.**

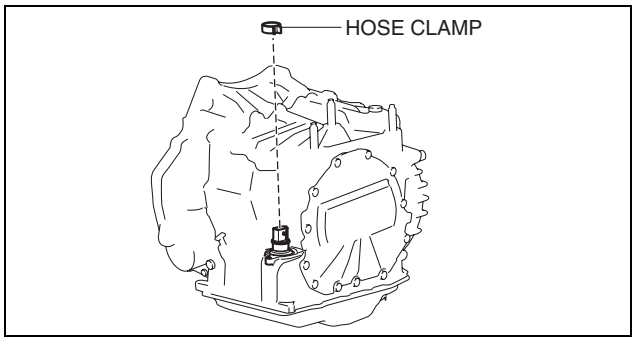

am3uuw0000828

Note
- Always use new oil pan installation bolts when re-installing the oil pan because the oil pan installation bolts cannot be reused.

10. Remove the oil strainer.

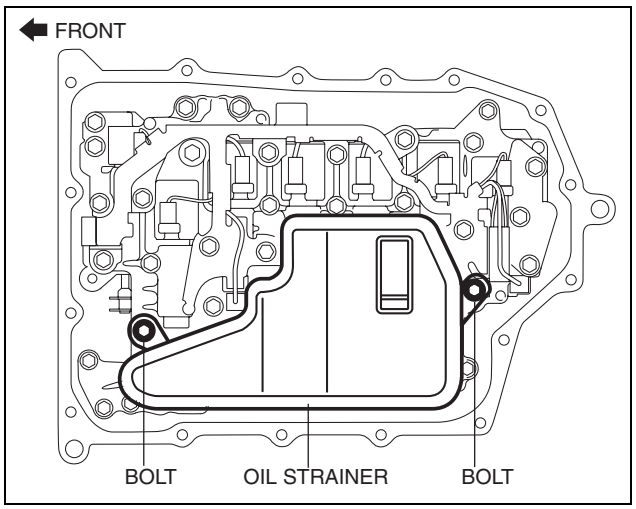

am3uuw0000828

AUTOMATIC TRANSAXLE [FW6A-EL, FW6AX-EL]

11. Remove the oil strainer O-ring.
12. Remove the control valve body.

Caution
- **Remove the control valve body directly from underneath so that force is not applied to the control valve body connector in the lateral direction.**

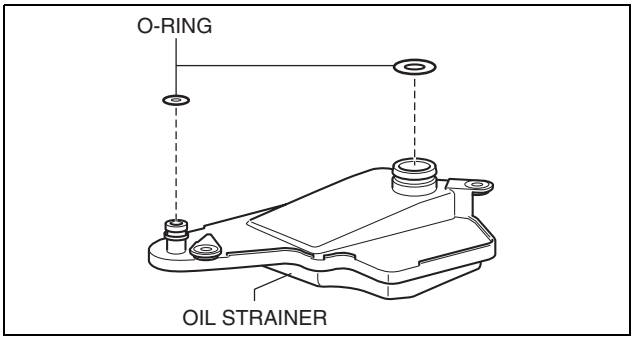

am3uuw0000828

13. Remove the oil seal (control valve body). (See 05-17A-63 OIL SEAL (CONTROL VALVE BODY) REPLACEMENT [FW6A-EL, FW6AX-EL].)

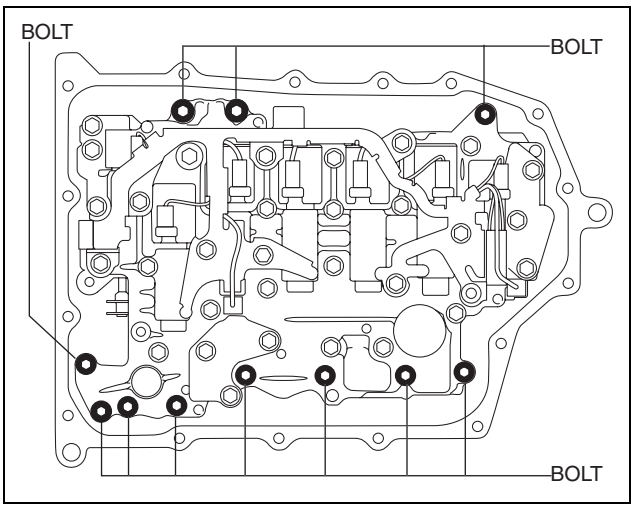

am3uuw0000828

14. Remove the gasket from the transaxle case.

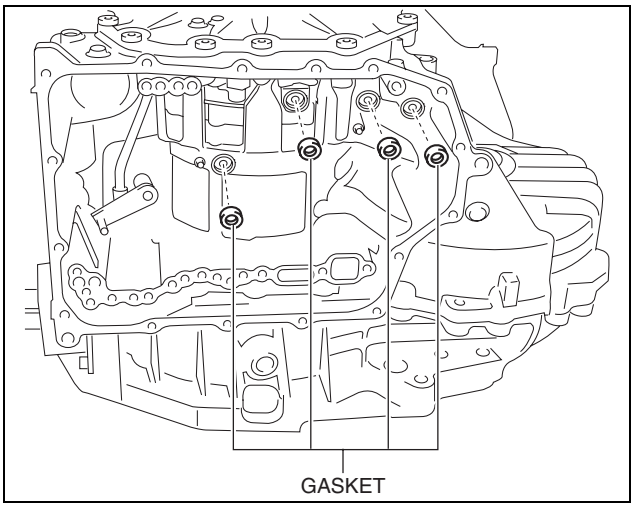

am3uuw0000921

AUTOMATIC TRANSAXLE [FW6A-EL, FW6AX-EL]

On-Vehicle Installation

1. Install the gasket to the transaxle case.
2. Install the dowel pin to the control valve body.

Note

- If the dowel pin remains in the transaxle case, remove the dowel pin from the transaxle case and install the dowel pin to the control valve body.

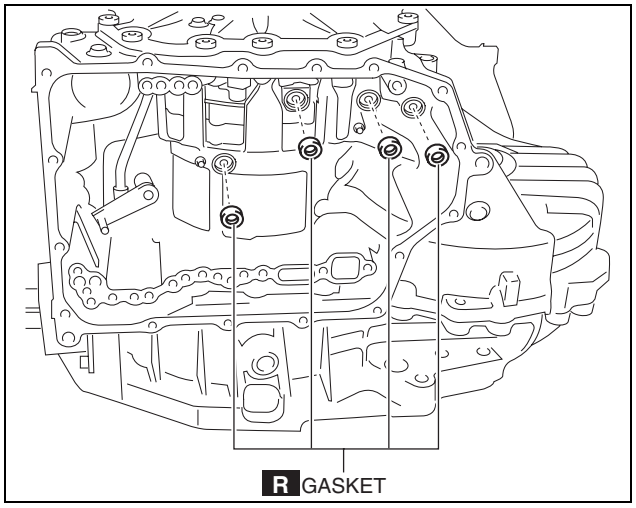

am3uuw0000918

3. Install the control valve body so that the parking assist lever component is engaged in the gap between the two surfaces of the spool part of the manual valve.

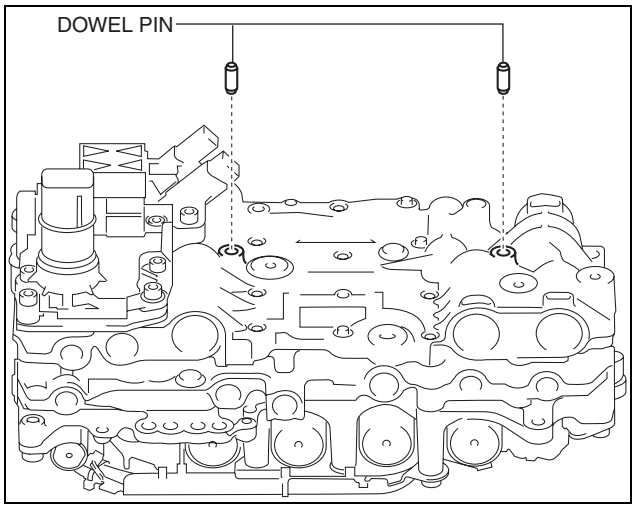

am3uuw0000918

Caution

- **Install the control valve body so that the turbine/input shaft speed sensor, output shaft speed sensor, and control valve body connector do not contact the transaxle case.**

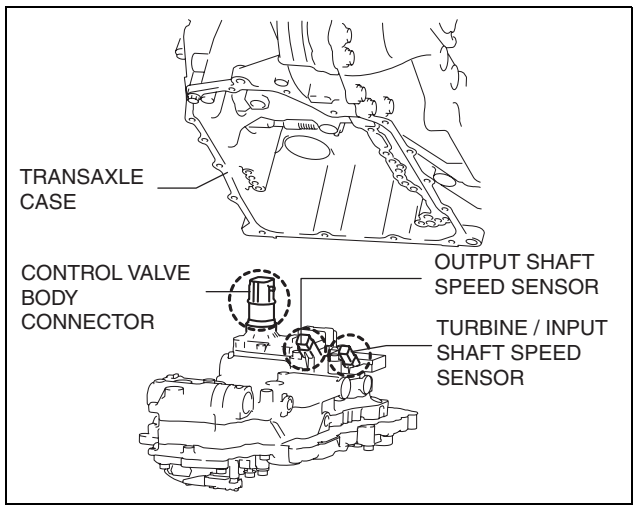

ac5wzw0000461

AUTOMATIC TRANSAXLE [FW6A-EL, FW6AX-EL]

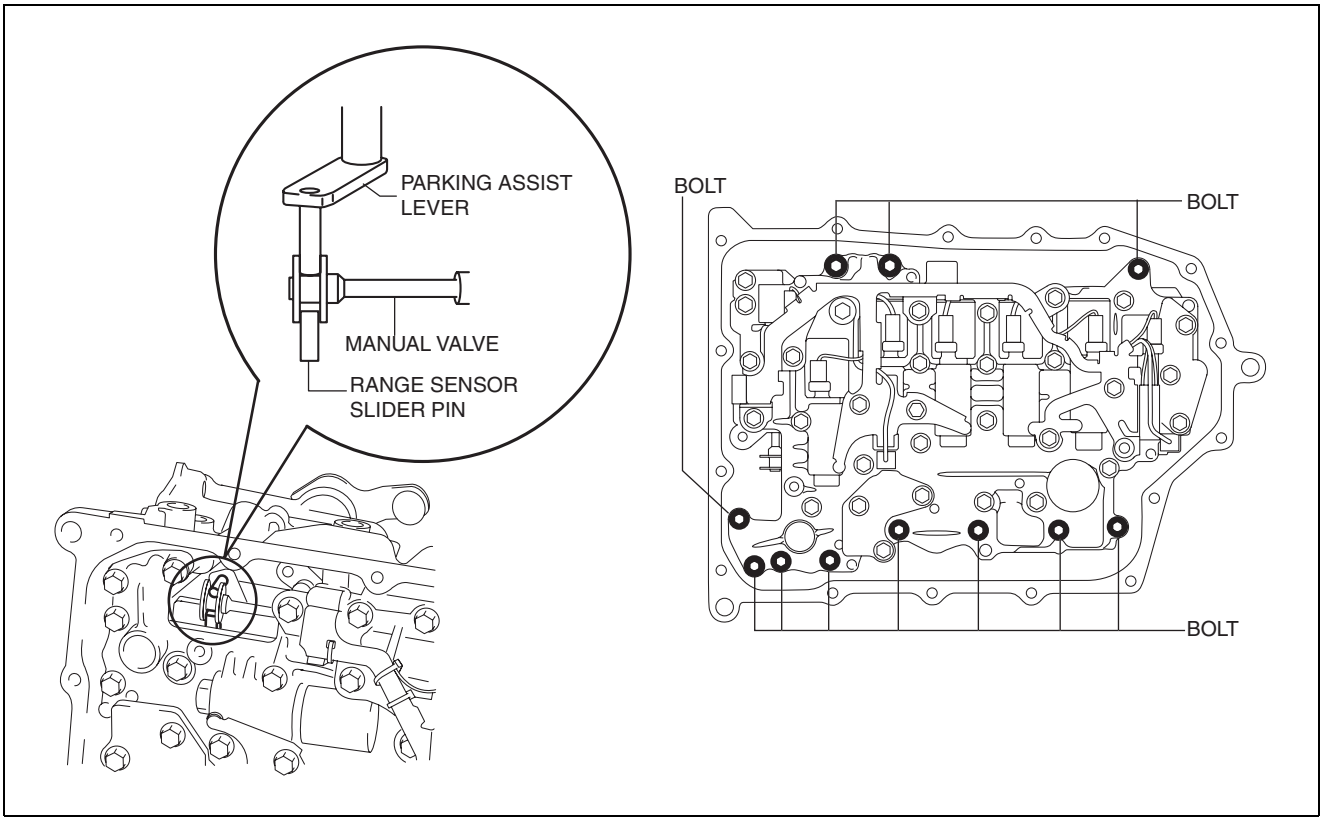

ac5wzw0000233

Tightening torque
9—10 N·m {92—101 kgf·cm, 80—88 in·lbf}

4. Move the manual valve in both directions of the arrow and verify that the manual valve is correctly connected to the parking assist lever component and the slider pin for the range sensor.

Note
- If the manual valve only moves in the gap between the parking assist lever component surface and the manual valve surface, the manual valve and the parking assist lever component are correctly engaged.

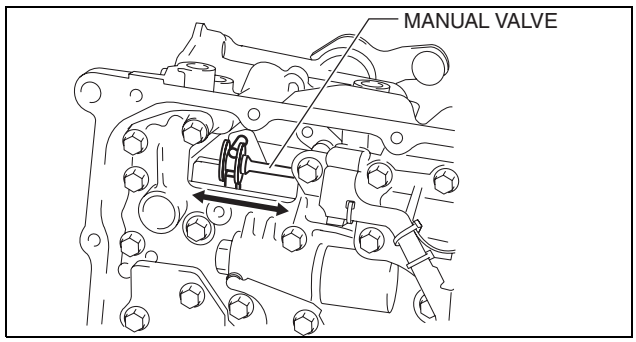

am3zzw0001265

5. Install the oil strainer O-ring.

Note
- If there is a large amount of foreign material at the bottom of the oil pan, replace the oil strainer with a new one.

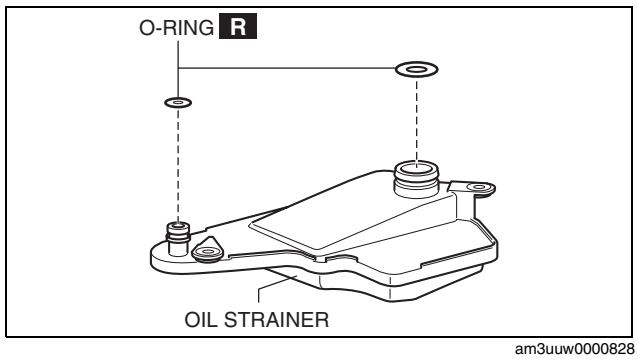

am3uuw0000828

AUTOMATIC TRANSAXLE [FW6A-EL, FW6AX-EL]

6. Install the oil strainer.

Tightening torque
9—10 N·m {92—101 kgf·cm, 80—88 in·lbf}

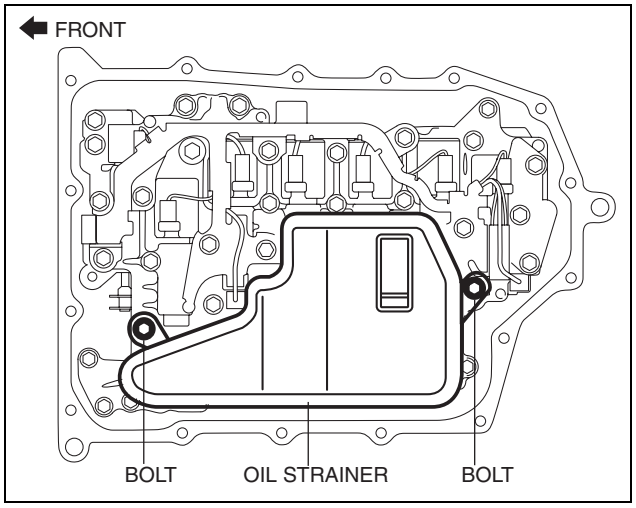

am3uuw0000828

7. Apply a light coat of silicon sealant (TB1217E) to the contact surfaces of the oil pan and transaxle case.

Caution
- **Clean any remaining silicone sealant on the contact surface of the transaxle case and oil pan, and degrease the sealant area. Otherwise, oil could leak.**

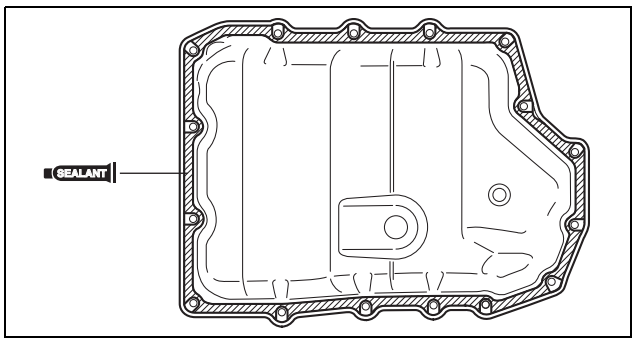

am3uuw0000828

8. Install the oil pan with new bolts before the applied sealant starts to harden.

Tightening torque
8—10 N·m {82—101 kgf·cm, 71—88 in·lbf}

9. Install the front under cover No.2. (See 09-16-41 FRONT UNDER COVER No.2 REMOVAL/INSTALLATION.)
10. Install the oil seal (control valve body). (See 05-17A-63 OIL SEAL (CONTROL VALVE BODY) REPLACEMENT [FW6A-EL, FW6AX-EL].)
11. Install a new hose clamp to the position shown in the figure.

Caution
- **If the hose clamp is reused it could cause ATF leakage, therefore use a new hose clamp.**
- **Install the hose clamp tab to within the range shown in the figure.**
  A: 210°

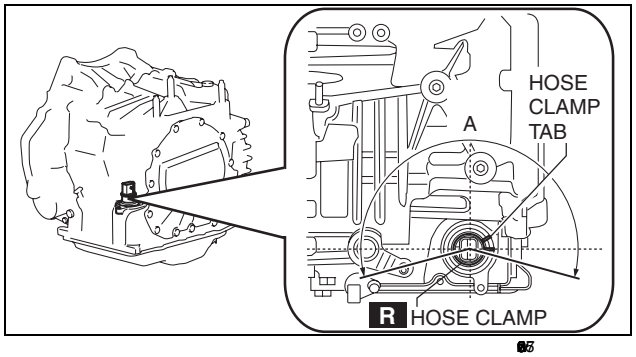

AUTOMATIC TRANSAXLE [FW6A-EL, FW6AX-EL]

- **Install the hose clamp so that it does not interfere with the top and bottom flanges of the oil seal to maintain the waterproofing integrity.**

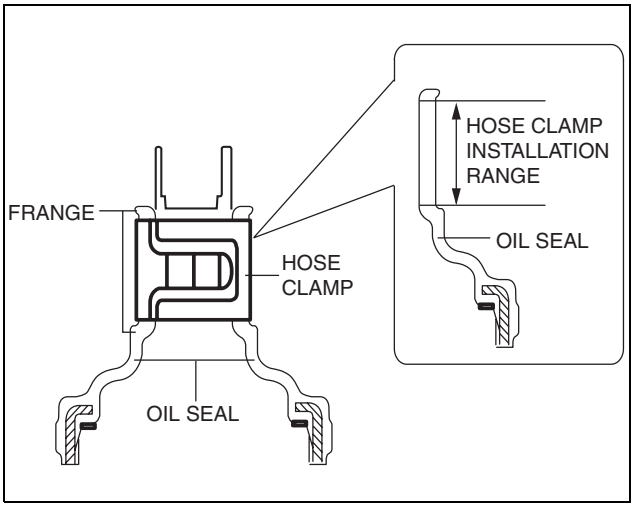

ac5wzw0000290

12. Connect the control valve body connector.

Caution
- **Make sure that your hand does not touch the terminal as the connector terminal could be damaged.**
- **Verify that there is no fluid or foreign matter adhering to the connector before connecting the connector.**
- **Insert the connector straight as the connector terminal could be damaged.**
- **Rotate the connector lever until a click is heard.**

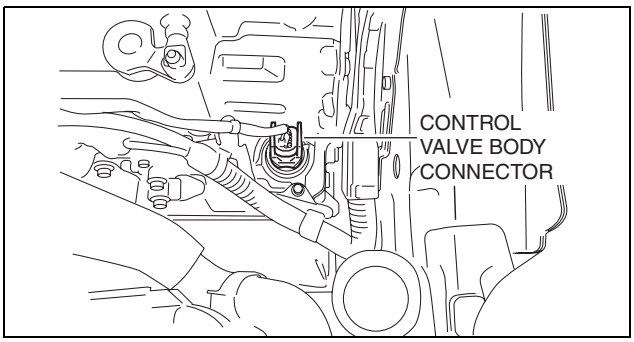

am3uuw0000828

13. Add the ATF. (See 05-17A-12 AUTOMATIC TRANSAXLE FLUID (ATF) REPLACEMENT [FW6A-EL, FW6AX-EL].)
14. Install the air cleaner component. (See 01-13A-6 INTAKE-AIR SYSTEM REMOVAL/INSTALLATION [SKYACTIV-G 2.0].)
15. Connect the negative battery cable. (See 01-17A-13 NEGATIVE BATTERY CABLE DISCONNECTION/CONNECTION [SKYACTIV-G 2.0 (WITHOUT i-stop)].) (See 01-17A-11 NEGATIVE BATTERY CABLE DISCONNECTION/CONNECTION [SKYACTIV-G 2.0].)
16. Perform the “TCM configuration” (Control valve body Replacement). (See 05-17A-79 TCM CONFIGURATION [FW6A-EL, FW6AX-EL].)
17. Perform the “Initial Learning” (Control valve body Replacement). (See 05-17A-74 INITIAL LEARNING [FW6A-EL, FW6AX-EL].)
18. Perform the “Mechanical System Test”. (See 05-17A-4 MECHANICAL SYSTEM TEST [FW6A-EL, FW6AX-EL].)
19. Perform the “Road Test”. (See 05-17A-9 ROAD TEST [FW6A-EL, FW6AX-EL].)

AUTOMATIC TRANSAXLE [FW6A-EL, FW6AX-EL]

INITIAL LEARNING [FW6A-EL, FW6AX-EL]

id0517h2119100

Introduction

- If the control valve body and oil pressure switch are replaced, always perform the initial learning. If the initial learning is not completed, engine rev-up may occur or shift shock may increase. DTC P06B8:00 is displayed while the initial learning has not been implemented.
- The procedure for the initial learning has a procedure which uses the M-MDS and one which does not. The initial learning can be activated easily using the M-MDS.

Warning

- **The initial learning forcibly changes gears within the driving shift range while the engine is running. Before implementing the initial learning, securely apply the parking brake and set the wheel blocks for both the front and rear wheels. Otherwise, the vehicle will move which could cause injury or property damage.**

Using M-MDS

Preparation before servicing

1. Verify initial learning implementation necessity for replacement parts.

Replacement part	Initial learning necessity
Control valve body replacement	Necessary
Oil pressure switch replacement	Necessary
Automatic transaxle replacement	Unnecessary
ON/OFF solenoid replacement	Unnecessary
Coupler component replacement	Unnecessary

2. Apply the parking brake firmly, and set the wheel blocks for both the front and rear wheels.
3. Inspect the ATF level. (See 05-17A-11 AUTOMATIC TRANSAXLE FLUID (ATF) INSPECTION [FW6A-EL, FW6AX-EL].)
4. Bring the M-MDS inside the vehicle and connect it to the DLC-2.
5. Perform vehicle identification using the M-MDS.
6. Start the engine.
7. After the vehicle is identified, select the following items from initialization of the M-MDS.
   (1) Select “Data logger”.
   (2) Select “Module”.
   (3) Select “TCM”.
8. While checking the PID TFT (ATF temperature), warm-up the engine and allow the ATF temperature to reach **40—110 °C {72—198 °F}**.

Starting procedure for initial learning

1. After the vehicle is identified, select the following items from initialization of the M-MDS.
   (1) Select “Self-test”
   (2) Select “Module”
   (3) Select “TCM”

Note

- DTC P06B8:00 is displayed while the initial learning has not been implemented.

2. Start the engine and wait for **30 s or more**.
3. Perform the following steps (1) to (4) with the brake pedal depressed.

Caution

- **When the brake fluid pressure sensor value is the specification or less, shut down the initial learning to assure safety. Accordingly, be careful of the following when performing the initial learning:**
  - **— Strongly depress the brake pedal while performing the initial learning.**
  - **— Do not depress the brake pedal again. Otherwise, the brake booster pressure will decrease and the brake force will weaken.**

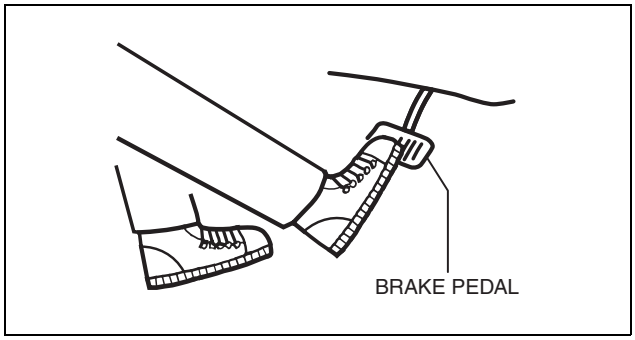

ac5wzw0000404

AUTOMATIC TRANSAXLE [FW6A-EL, FW6AX-EL]

(1) Shift the selector lever from P position to D position and click the DTC clear button for the M-MDS.

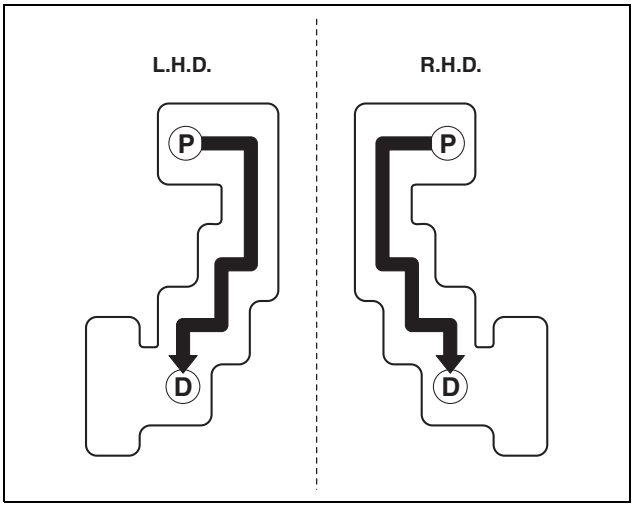

ac5wzw0000077

(2) When the M-MDS screen returns to the DTC display screen, shift the selector lever from D position to M position within **10 s** and verify that the engine speed increases from idling.

Note
- The initial learning implements after idle speed starts increasing. If idle speed does not start increasing, repeat the procedure from Step 2.
- If the initial learning is shut down for any reason while performing the learning, shift position indicator light does not flash. If shift position indicator light does not flash, repeat the procedure from Step 2.

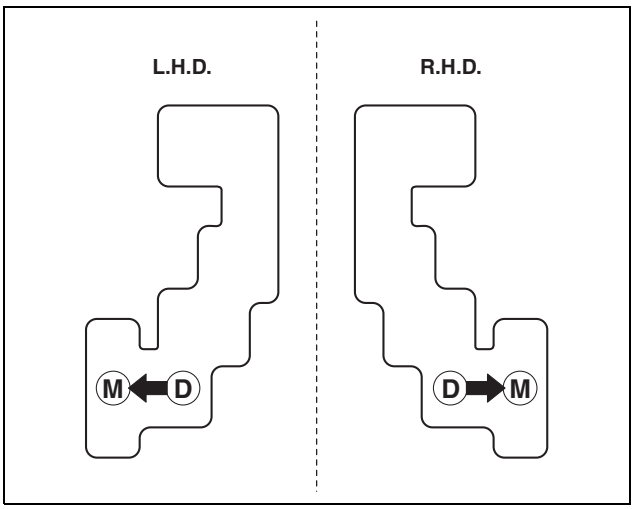

ac5wzw0000077

(3) Verify that the engine speed returns to idle and shift position indicator light flashes **two times**.

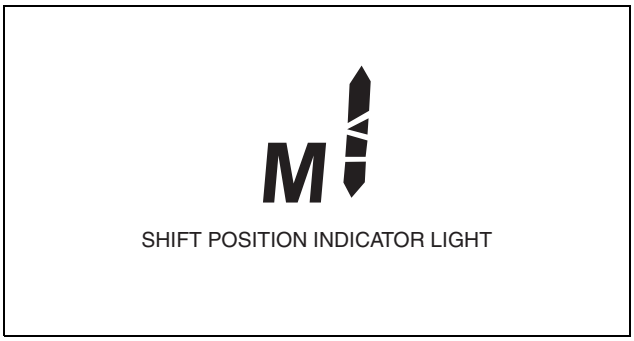

ac5wzw0000077

AUTOMATIC TRANSAXLE [FW6A-EL, FW6AX-EL]

(4) After shift position indicator light flashes twice, shift the selector lever from M position to P position and stop the engine.

Note
- Be careful not to miss looking at shift position indicator light because the light flashes only **one time**.

4. Release the brake pedal.
5. Switch the ignition to KOEO and verify the DTC.
   - If DTC P06B8:00 is displayed, repeat the procedure from Step 2. If any other DTCs are displayed, perform the applicable DTC troubleshooting. (See 05-02A-11 ON-BOARD DIAGNOSTIC SYSTEM DTC TABLE [FW6A-EL, FW6AX-EL].)

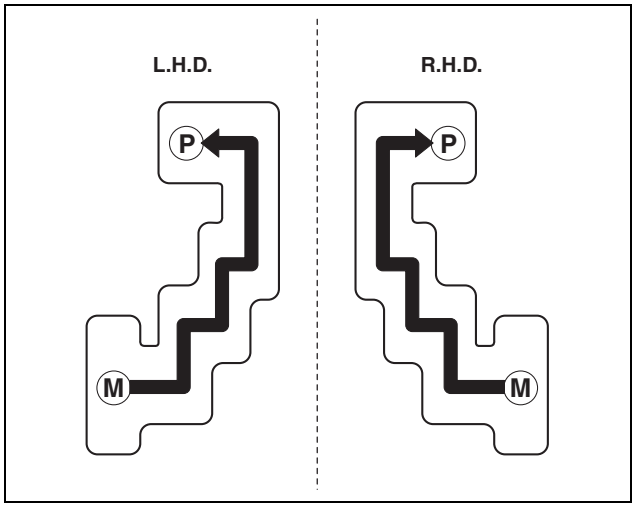

ac5wzw0000077

Not Using of M-MDS
Preparation before servicing
1. Verify initial learning implementation necessity for replacement parts.

Replacement part	Initial learning necessity
Control valve body replacement	Necessary
Oil pressure switch replacement	Necessary
Automatic transaxle replacement	Unnecessary
ON/OFF solenoid replacement	Unnecessary
Coupler component replacement	Unnecessary

2. Apply the parking brake firmly, and set the wheel blocks for both the front and rear wheels.
3. Inspect the ATF level. (See 05-17A-11 AUTOMATIC TRANSAXLE FLUID (ATF) INSPECTION [FW6A-EL, FW6AX-EL].)
4. Start the engine.
5. Warm-up the engine and allow the ATF temperature to reach **40—110 °C {72—198 °F}**.

Starting procedure for initial learning
1. Start the engine and wait for **30 s or more**.
2. Perform the following steps (1) to (7) with the brake pedal depressed.

Caution
- **When the brake fluid pressure sensor value is the specification or less, shut down the initial learning to assure safety. Accordingly, be careful of the following when performing the initial learning:**
  - **— Strongly depress the brake pedal while performing the initial learning.**
  - **— Do not depress the brake pedal again. Otherwise, the brake booster pressure will decrease and the brake force will weaken.**

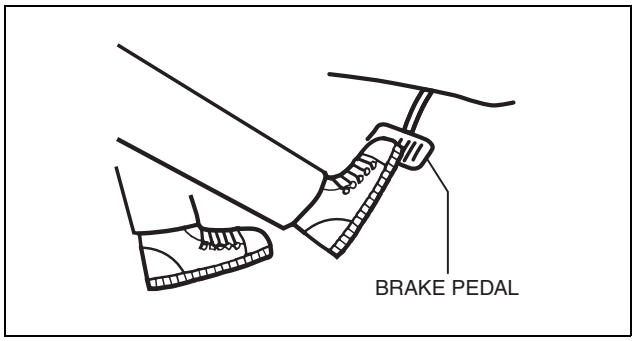

ac5wzw0000404

AUTOMATIC TRANSAXLE [FW6A-EL, FW6AX-EL]

(1) Shift the selector lever from P position to N position, press the push button start **one time**, and stop the engine.

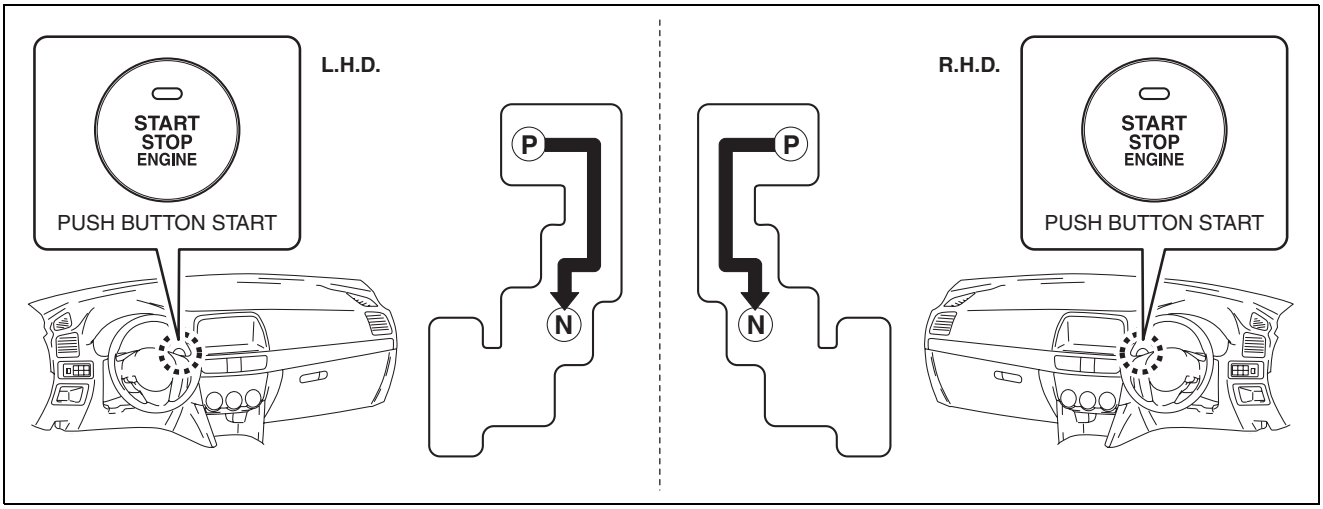

ac5wzw0000077

(2) Shift the selector lever from N position to M- position, press the push button start **one time** while holding the lever in the M- position, and wait for **5 s or more** (ignition switch ON (engine on)).

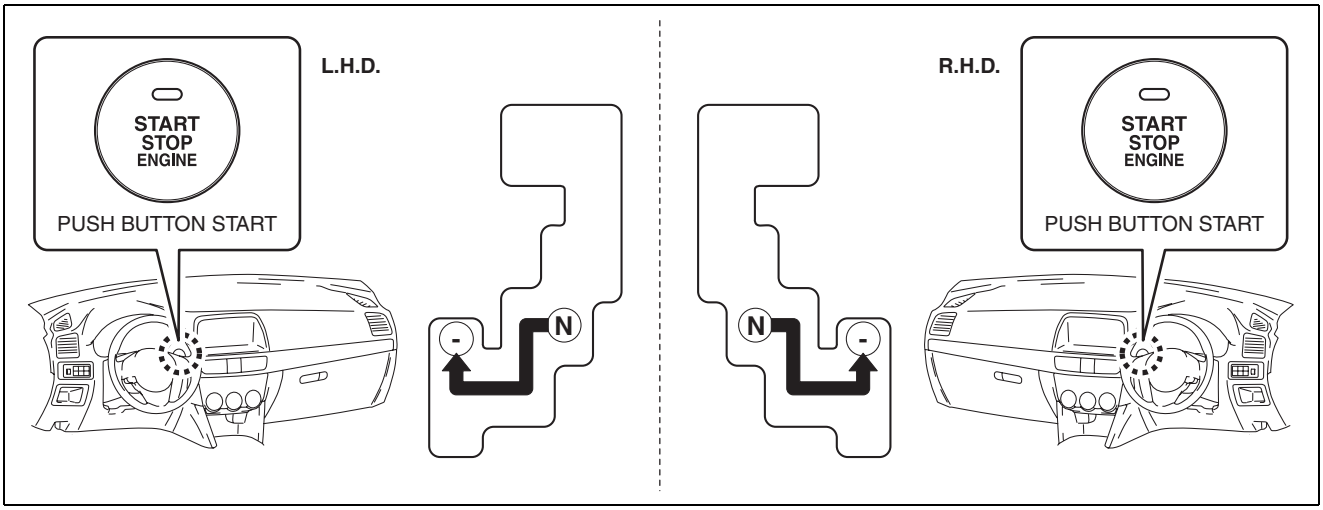

ac5wzw0000077

(3) Shift the selector lever from M- position to N position, press the push button start **one time**, and start the engine.

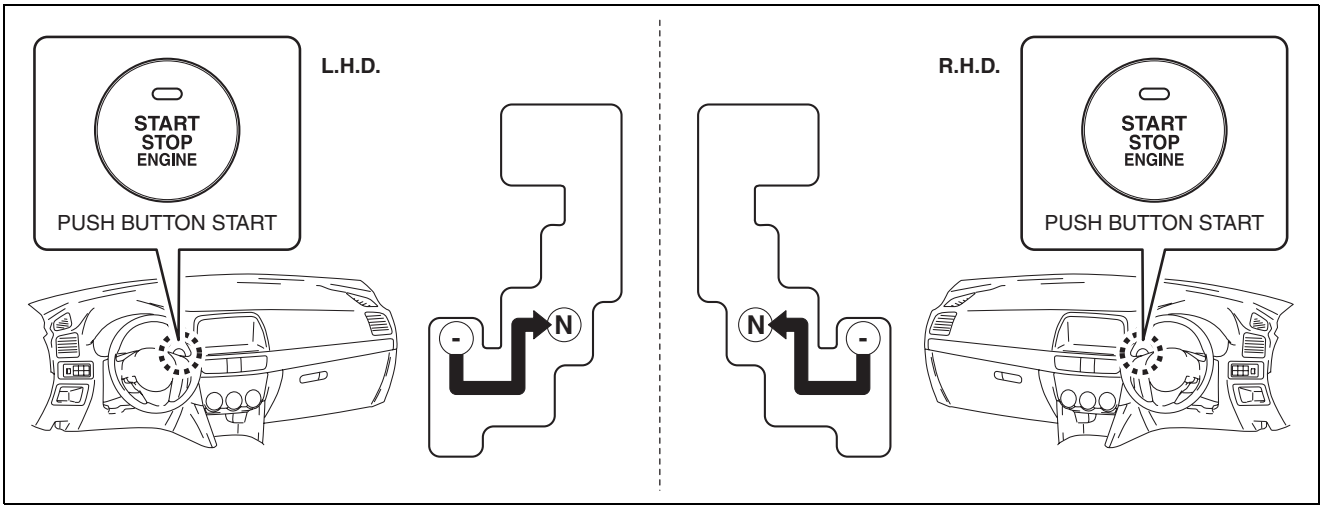

ac5wzw0000078

AUTOMATIC TRANSAXLE [FW6A-EL, FW6AX-EL]

(4) Shift the selector lever from N position to M+ position and wait for **5 s or more** while holding the lever in the M+ position.

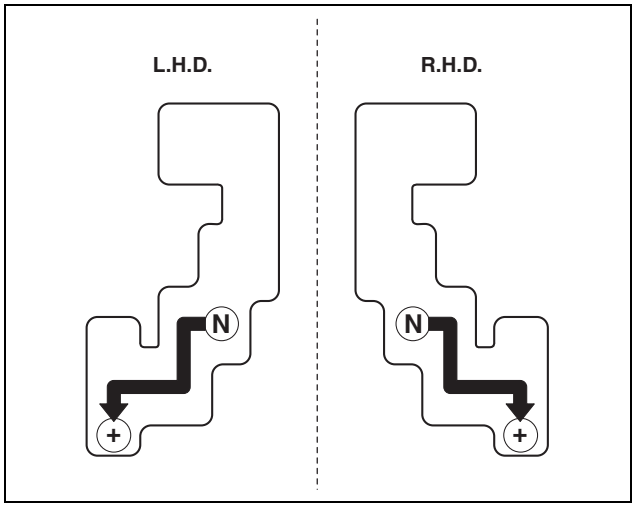

ac5wzw0000078

(5) Select the selector lever from M+ position to M- position and wait for **5 s or more** while holding the lever in the M- position.
(6) When starting idle up, shift the selector lever from the M- position to M position and verify that the shift position indicator light flashes **two times**.

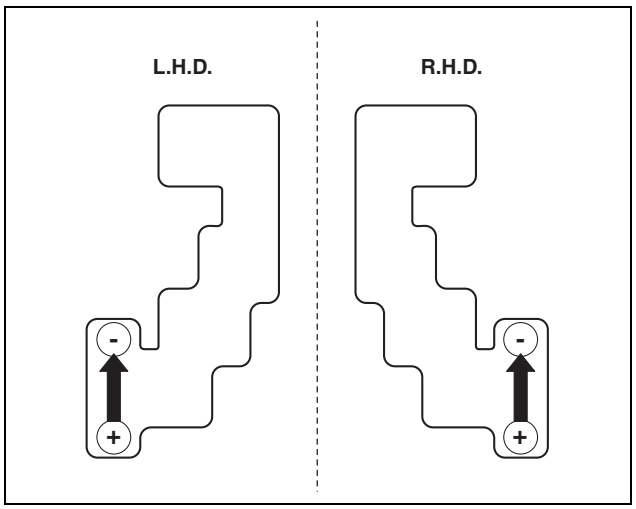

ac5wzw0000078

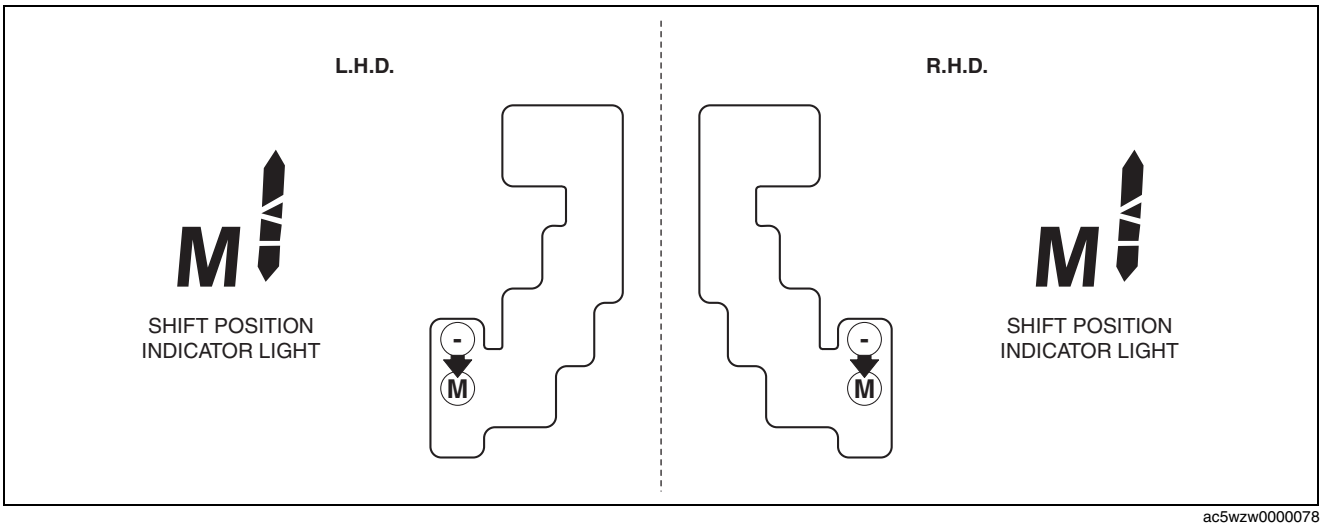

ac5wzw0000078

Note

- The initial learning implements after idle speed starts increasing. If idle speed does not start increasing, repeat the procedure from Step 1 "Start the engine and wait for **30 s or more**.".

AUTOMATIC TRANSAXLE [FW6A-EL, FW6AX-EL]

(7) After shift position indicator light flashes twice, shift the selector lever from M position to P position and stop the engine.

Note
- Be careful not to miss looking at shift position indicator light because the light flashes only **one time**.

3. Release the brake pedal.
4. Clear the DTC using the M-MDS and switch the ignition to off. (See 05-02A-7 ON-BOARD DIAGNOSTIC SYSTEM DTC INSPECTION [FW6A-EL, FW6AX-EL].)
5. Switch the ignition ON (engine off or on) and verify that DTC P06B8:00 is not recorded using the M-MDS. (See 05-02A-11 ON-BOARD DIAGNOSTIC SYSTEM DTC TABLE [FW6A-EL, FW6AX-EL].)
   - If the DTC P06B8:00 is displayed, repeat the procedure from Step 1.

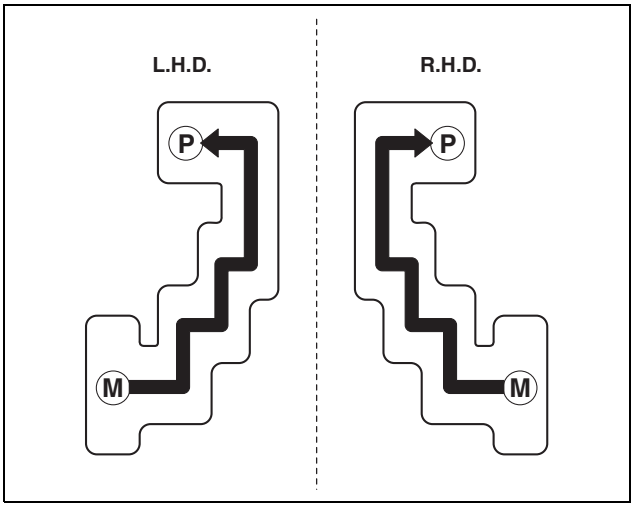

ac5wzw0000077

TCM CONFIGURATION [FW6A-EL, FW6AX-EL]

id0517h2119200

Note
- The TCM is built into the control valve body.

1. Verify TCM configuration implementation necessity for replacement parts.

Replacement part	Configuration necessity
Control valve body replacement	Necessary
Oil pressure switch replacement	Unnecessary
Automatic transaxle replacement	Unnecessary
ON/OFF solenoid replacement	Unnecessary
Coupler component replacement	Unnecessary

2. Connect the M-MDS to the DLC-2.
3. After vehicle identification, the following can be selected from the M-MDS initialization screen.
   1. Select “Module Programming”
4. Then, select the following from the screen menu.
   1. Select “Programmable Module Installation”
   2. Select “TCM”
5. Perform the configuration following the instructions on the screen.
6. Verify that no DTCs are stored. (See 05-02A-7 ON-BOARD DIAGNOSTIC SYSTEM DTC INSPECTION [FW6A-EL, FW6AX-EL].)

Note
- If any DTC (U code) is output, the system is normal.

7. Delete the U code and verify that no DTC is output. (See 05-02A-7 ON-BOARD DIAGNOSTIC SYSTEM DTC INSPECTION [FW6A-EL, FW6AX-EL].)
   - If any DTC other than U code is output, repair the malfunctioning location according to the applicable DTC troubleshooting. (See 05-02A-11 ON-BOARD DIAGNOSTIC SYSTEM DTC TABLE [FW6A-EL, FW6AX-EL].)

05-17B AUTOMATIC TRANSAXLE [GW6A-EL, GW6AX-EL]

AUTOMATIC TRANSAXLE LOCATION INDEX [GW6A-EL, GW6AX-EL] 05-17B–2
MECHANICAL SYSTEM TEST [GW6A-EL, GW6AX-EL] 05-17B–4
Mechanical system test preparation 05-17B–4
Line pressure test 05-17B–4
Stall test 05-17B–7
Time lag test 05-17B–8
ROAD TEST [GW6A-EL, GW6AX-EL] 05-17B–9
Road test preparation 05-17B–9
Shift diagram (D position, normal mode) 05-17B–9
D position test 05-17B–10
M position test 05-17B–11
P position test 05-17B–11
AUTOMATIC TRANSAXLE FLUID (ATF) INSPECTION [GW6A-EL, GW6AX-EL] 05-17B–11
ATF level inspection 05-17B–11
AUTOMATIC TRANSAXLE FLUID (ATF) REPLACEMENT [GW6A-EL, GW6AX-EL] 05-17B–12
AUTOMATIC TRANSAXLE FLUID (ATF) ADJUSTMENT [GW6A-EL, GW6AX-EL] 05-17B–13
M POSITION SWITCH INSPECTION [GW6A-EL, GW6AX-EL] 05-17B–14
Continuity Inspection 05-17B–14
M POSITION SWITCH REMOVAL/INSTALLATION [GW6A-EL, GW6AX-EL] 05-17B–14
UP SWITCH INSPECTION [GW6A-EL, GW6AX-EL] 05-17B–15
Continuity Inspection 05-17B–15
UP SWITCH REMOVAL/INSTALLATION [GW6A-EL, GW6AX-EL] 05-17B–15
DOWN SWITCH INSPECTION [GW6A-EL, GW6AX-EL] 05-17B–16
Continuity Inspection 05-17B–16
DOWN SWITCH REMOVAL/INSTALLATION [GW6A-EL, GW6AX-EL] 05-17B–16
COUPLER COMPONENT REMOVAL/INSTALLATION [GW6A-EL, GW6AX-EL] 05-17B–17
OIL PRESSURE SWITCH REMOVAL/INSTALLATION [GW6A-EL, GW6AX-EL] 05-17B–20
Oil Pressure Switch A 05-17B–21
Oil Pressure Switch B 05-17B–23
ON/OFF SOLENOID REMOVAL/INSTALLATION [GW6A-EL, GW6AX-EL] 05-17B–25
ELECTRIC AT OIL PUMP REMOVAL/INSTALLATION [GW6A-EL, GW6AX-EL] 05-17B–28
Electric AT Oil Pump Installation Note 05-17B–28
AUTOMATIC TRANSAXLE REMOVAL/INSTALLATION [GW6A-EL] 05-17B–29
Removal 05-17B–29
Installation 05-17B–39
AUTOMATIC TRANSAXLE REMOVAL/INSTALLATION [GW6AX-EL] 05-17B–47
Removal 05-17B–47
Installation 05-17B–57
DRIVE PLATE REMOVAL/INSTALLATION [GW6A-EL, GW6AX-EL] 05-17B–64
Drive Plate Installation Bolts Removal Note 05-17B–64
Drive Plate Installation Bolts Installation Note 05-17B–64
OIL SEAL (DIFFERENTIAL) REPLACEMENT [GW6A-EL, GW6AX-EL] 05-17B–65
Transaxle Case Side 05-17B–65
Converter housing Side (GW6A-EL) . . . 05-17B–66
Converter housing Side (GW6AX-EL) . . 05-17B–67
OIL SEAL (CONTROL VALVE BODY) REPLACEMENT [GW6A-EL, GW6AX-EL] 05-17B–68
OIL COOLER REMOVAL/INSTALLATION [GW6A-EL, GW6AX-EL] 05-17B–71
Without oil cooler No.2 . . . . . 05-17B–71
Water Hose Installation Note 05-17B–72
With oil cooler No.2 . . . . . 05-17B–73
Water Hose Installation Note 05-17B–74
Oil Hose No.4 (oil pipe No.2 side) Installation Note 05-17B–75
Oil Hose No.4 (transaxle side) Installation Note 05-17B–76
Oil Hose No.3 (oil pipe No.1 side) Installation Note 05-17B–77
Oil Hose No.3 (transaxle side) Installation Note 05-17B–77
Oil Hose No.2 (oil pipe No.1 side) Installation Note 05-17B–78
Oil Hose No.2 (radiator in side) Installation Note 05-17B–79
Oil Hose No.1 (oil pipe No.2 side) Installation Note 05-17B–79
Oil Hose No.1 (radiator out side) Installation Note 05-17B–80
CONTROL VALVE BODY REMOVAL/INSTALLATION [GW6A-EL, GW6AX-EL] 05-17B–81
On-Vehicle Removal 05-17B–81
On-Vehicle Installation (With oil cooler No.2) 05-17B–83
On-Vehicle Installation (Without oil cooler No.2) 05-17B–89
INITIAL LEARNING [GW6A-EL, GW6AX-EL] 05-17B–93
Introduction 05-17B–93
Using M-MDS 05-17B–93
Not Using of M-MDS 05-17B–95

AUTOMATIC TRANSAXLE [GW6A-EL, GW6AX-EL]

TCM CONFIGURATION
[GW6A-EL, GW6AX-EL] 05-17B–98

AUTOMATIC TRANSAXLE [GW6A-EL, GW6AX-EL]

AUTOMATIC TRANSAXLE LOCATION INDEX [GW6A-EL, GW6AX-EL]

id0517i2118200

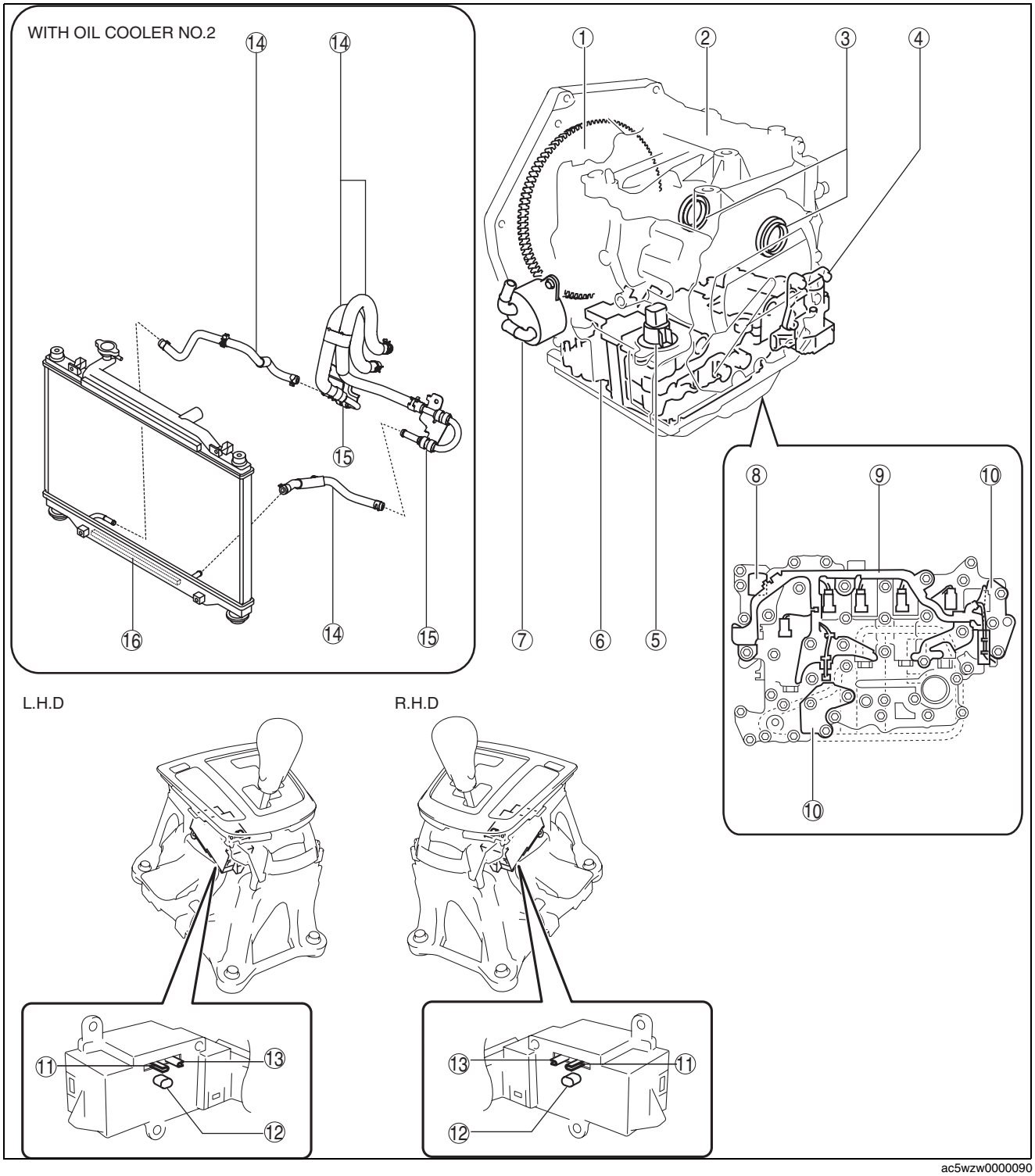

ac5wzw0000090

AUTOMATIC TRANSAXLE [GW6A-EL, GW6AX-EL]

1	Drive plate (See 05-17B-64 DRIVE PLATE REMOVAL/INSTALLATION [GW6A-EL, GW6AX-EL].)
2	Automatic transaxle (See 05-17B-4 MECHANICAL SYSTEM TEST [GW6A-EL, GW6AX-EL].) (See 05-17B-9 ROAD TEST [GW6A-EL, GW6AX-EL].) (See 05-17B-11 AUTOMATIC TRANSAXLE FLUID (ATF) INSPECTION [GW6A-EL, GW6AX-EL].) (See 05-17B-12 AUTOMATIC TRANSAXLE FLUID (ATF) REPLACEMENT [GW6A-EL, GW6AX-EL].) (See 05-17B-13 AUTOMATIC TRANSAXLE FLUID (ATF) ADJUSTMENT [GW6A-EL, GW6AX-EL].) (See 05-17B-93 INITIAL LEARNING [GW6A-EL, GW6AX-EL].) (See 05-17B-29 AUTOMATIC TRANSAXLE REMOVAL/INSTALLATION [GW6A-EL].) (See 05-17B-47 AUTOMATIC TRANSAXLE REMOVAL/INSTALLATION [GW6AX-EL].)
3	Oil seal (differential) (See 05-17B-65 OIL SEAL (DIFFERENTIAL) REPLACEMENT [GW6A-EL, GW6AX-EL].)
4	Electric AT oil pump (See 05-17B-28 ELECTRIC AT OIL PUMP REMOVAL/INSTALLATION [GW6A-EL, GW6AX-EL].)
5	Oil seal (control valve body) (See 05-17B-68 OIL SEAL (CONTROL VALVE BODY) REPLACEMENT [GW6A-EL, GW6AX-EL].)
6	Control valve body (See 05-17B-81 CONTROL VALVE BODY REMOVAL/INSTALLATION [GW6A-EL, GW6AX-EL].) (See 05-17B-98 TCM CONFIGURATION [GW6A-EL, GW6AX-EL].)
7	Oil cooler (See 05-17B-71 OIL COOLER REMOVAL/INSTALLATION [GW6A-EL, GW6AX-EL].)
8	ON/OFF solenoid (See 05-17B-25 ON/OFF SOLENOID REMOVAL/INSTALLATION [GW6A-EL, GW6AX-EL].)
9	Coupler component (See 05-17B-17 COUPLER COMPONENT REMOVAL/INSTALLATION [GW6A-EL, GW6AX-EL].)
10	Oil pressure switch (See 05-17B-20 OIL PRESSURE SWITCH REMOVAL/INSTALLATION [GW6A-EL, GW6AX-EL].)
11	Down switch (See 05-17B-16 DOWN SWITCH INSPECTION [GW6A-EL, GW6AX-EL].) (See 05-17B-16 DOWN SWITCH REMOVAL/INSTALLATION [GW6A-EL, GW6AX-EL].)
12	Up switch (See 05-17B-15 UP SWITCH INSPECTION [GW6A-EL, GW6AX-EL].) (See 05-17B-15 UP SWITCH REMOVAL/INSTALLATION [GW6A-EL, GW6AX-EL].)
13	M position switch (See 05-17B-14 M POSITION SWITCH INSPECTION [GW6A-EL, GW6AX-EL].) (See 05-17B-14 M POSITION SWITCH REMOVAL/INSTALLATION [GW6A-EL, GW6AX-EL].)
14	Oil hose (See 05-17B-71 OIL COOLER REMOVAL/INSTALLATION [GW6A-EL, GW6AX-EL].)
15	Oil pipe (See 05-17B-71 OIL COOLER REMOVAL/INSTALLATION [GW6A-EL, GW6AX-EL].)
16	Oil cooler No.2 (See 05-17B-71 OIL COOLER REMOVAL/INSTALLATION [GW6A-EL, GW6AX-EL].)

AUTOMATIC TRANSAXLE [GW6A-EL, GW6AX-EL]

MECHANICAL SYSTEM TEST [GW6A-EL, GW6AX-EL]

id0517i2118300

Mechanical system test preparation

1. Apply the parking brake firmly, and set the wheel blocks for both the front and rear wheels.
2. Inspect the engine coolant level. (See 01-12B-3 ENGINE COOLANT LEVEL INSPECTION [SKYACTIV-D 2.2].)
3. Inspect the engine oil level. (See 01-11B-3 ENGINE OIL LEVEL INSPECTION [SKYACTIV-D 2.2].)
4. Inspect the ATF level. (See 05-17B-11 AUTOMATIC TRANSAXLE FLUID (ATF) INSPECTION [GW6A-EL, GW6AX-EL].)
5. Inspect the ignition timing. (See 01-10B-3 ENGINE TUNE-UP [SKYACTIV-D 2.2].)
6. Inspect the idle speed. (See 01-10B-3 ENGINE TUNE-UP [SKYACTIV-D 2.2].)
7. Verify that no DTCs are stored.

Line pressure test

1. Perform the mechanical system test preparation. (See 05-17B-4 Mechanical system test preparation.)
2. Remove the air cleaner component. (See 01-13B-6 INTAKE-AIR SYSTEM REMOVAL/INSTALLATION [SKYACTIV-D 2.2].)
3. Disconnect the oil pipe No.1 from the harness bracket with the oil hose connected. (With Oil cooler No.2)

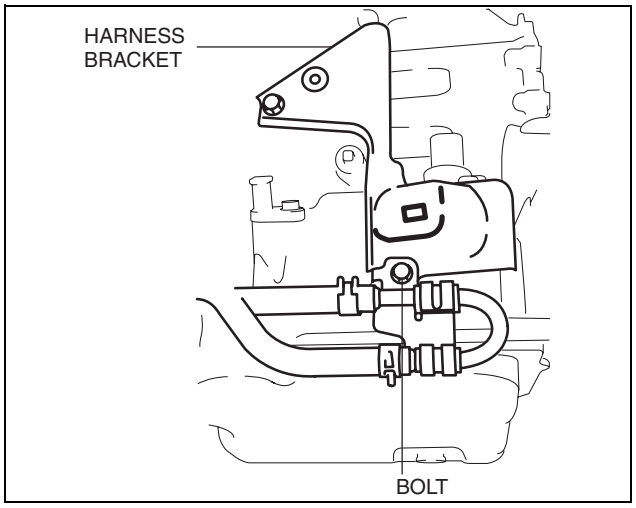

ac5wzw0000374

4. Remove the harness bracket.
5. Remove the pressure detection square head plug.

Warning

- **Do not remove the square head plug when the ATF temperature is high. Otherwise, ATF could overflow and cause severe burns or serious injury. Remove the square head plug when the transaxle and ATF temperatures are low.**

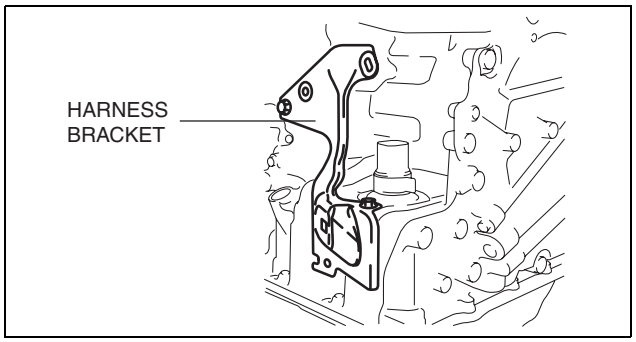

ac5wzw0000374

Note

- Use a suitable oil pressure gauge that corresponds to the line pressure because the maximum scale value differs depending on the oil pressure gauge.

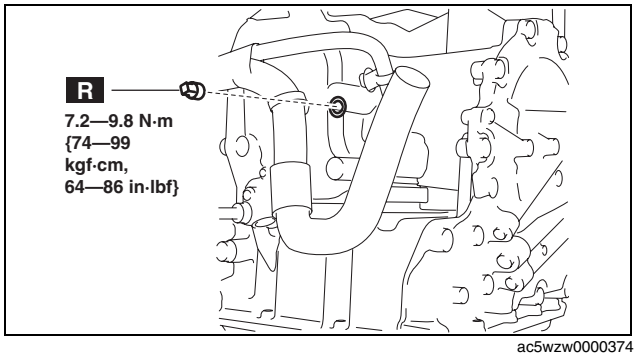

ac5wzw0000374

6. Install the air cleaner component. (See 01-13B-6 INTAKE-AIR SYSTEM REMOVAL/INSTALLATION [SKYACTIV-D 2.2].)

AUTOMATIC TRANSAXLE [GW6A-EL, GW6AX-EL]

7. Install **SSTs (49 D019 908, 49 D019 909, 49 D019 910,** 49 D019 911, 49 D019 913) to the line pressure detection port as shown in the figure.

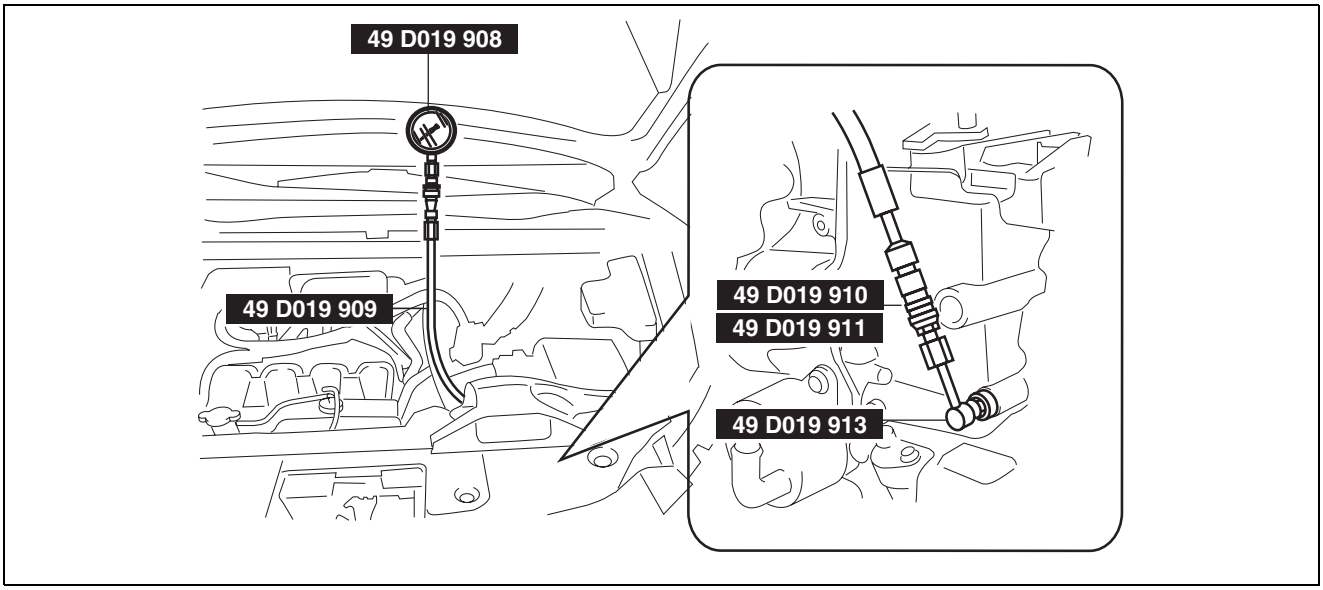

ac5uuw00000212

8. Start the engine.
9. Warm up the engine until the ATF temperature is **60—70 °C {140—158 °F}**.
10. Shift the selector lever to the D position.
11. Measure the line pressure while idling in D position.
12. Measure the line pressures while idling in the M (1st gear) and R positions using the same procedure.
13. Stop the engine.
14. Change the low-pressure gauge (49 D019 908) to the high-pressure gauge (49 D019 907).
15. Start the engine.
16. Measure the line pressure while stalling in D position.
    (1) Strongly depress the brake pedal with the left foot.
    (2) Shift the selector lever to the D position.

    Caution
    - **To prevent damage to the transaxle, measure the line pressure while stalling (Step (3)—(4)) within 5 s.**

    (3) Slowly depress the accelerator pedal fully with the right foot all the way down.
    (4) Read the line pressure quickly while stalling, and remove the right foot from the accelerator pedal.
    (5) Shift the selector lever to the N position and idle for **1 min or more**.
17. Measure the line pressure while stalling for positions other than D in the same procedure.
    - If there is any malfunction, one of the following causes may have occurred:

Condition		Possible cause
Lower than specification	Lower in R, D, and M (1GR) position	• Oil pump wear • ATF leakage from oil pump, control valve body, and transaxle case • Pressure regulator valve sticking • Pressure control solenoid malfunction • Solenoid reducing valve sticking
	Lower in D and M (1GR) position	• ATF leakage from low clutch hydraulic circuit
	Lower in R and M (1GR) position	• ATF leakage from low and reverse brake hydraulic circuit
	Lower in R position	• ATF leakage from R-3-5 brake hydraulic circuit
Higher than specification	Higher in R, D, and M (1GR) position	• Pressure regulator valve sticking • Pressure control solenoid malfunction

AUTOMATIC TRANSAXLE [GW6A-EL, GW6AX-EL]

Line pressure

Measurement conditions		Specification (kPa {kgf/cm^2, psi})
Idling	R position	500—700 {5.10—7.13, 72.6—101.0}
	D and M (1GR) position	330—470 {3.37—4.79, 47.9—68.1}
Stalling	R position	1,790—2,100 {18.26—21.41, 259.7—304.5}
	D and M (1GR) position	970—1,170 {9.90—11.93, 141.0—169.6}

18. Stop the engine.
19. Remove the air cleaner component. (See 01-13A-6 INTAKE-AIR SYSTEM REMOVAL/INSTALLATION [SKYACTIV-G 2.0].)
20. Remove the **SSTs**.

Warning
- **If the SST is removed when the ATF temperature is high, ATF could overflow and cause severe burns or serious injury. Remove the SST when the transaxle and ATF temperatures are low.**

21. Install a new square head plug.

Note
- Do not reuse the square head plug because a sealant coating has been applied.

Tightening torque
7.2—9.8 N·m {74—99 kgf·cm, 64—86 in·lbf}

22. Install the harness bracket.

Tightening torque
8—10 N·m {82—101 kgf·cm, 71—88 in·lbf}

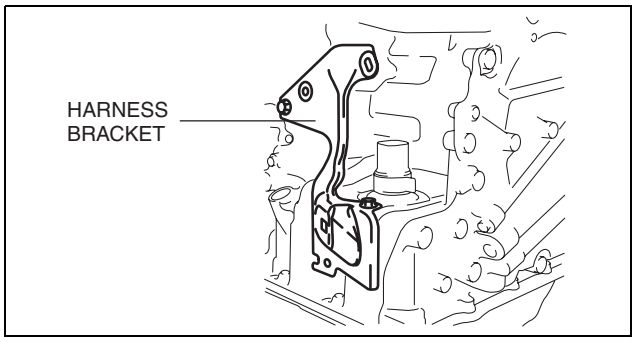

ac5wzw0000374

23. Install the oil pipe No.1 to the harness bracket. (With Oil cooler No.2)
24. Install the air cleaner component. (See 01-13B-6 INTAKE-AIR SYSTEM REMOVAL/ INSTALLATION [SKYACTIV-D 2.2].)

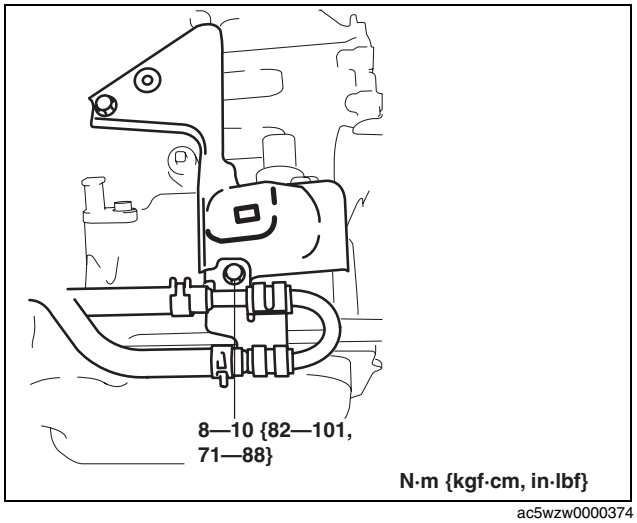

ac5wzw0000374

AUTOMATIC TRANSAXLE [GW6A-EL, GW6AX-EL]

Stall test

1. Perform the mechanical system test preparation. (See 05-17B-4 Mechanical system test preparation.)
2. Apply the parking brake firmly, and set the wheel blocks for both the front and rear wheels.
3. Start the engine.
4. Measure the stall speed in the D position.
   (1) Strongly depress the brake pedal with the left foot.
   (2) Shift the selector lever to the D position.

   Caution
   - **Stall speed: Maximum stall speed during stall test**
   - **If the stall condition is determined in the D or M position, the control for limiting the engine speed is operated to protect the transaxle. Engine speed increases momentarily and decreases gradually during the stall test, however, this does not indicate a malfunction.**
   - **To prevent damage to the transaxle, measure the stall speed (Step (3)—(4)) within 5 s.**

   (3) Slowly depress the accelerator pedal fully with the right foot all the way down.
   (4) Read the engine speed quickly when the speed is stabilized, and remove the right foot from the accelerator pedal.
   (5) Shift the selector lever to the N position and idle for **1 min or more**.
5. Measure the stall speed in the M (1st gear) and R positions using the same procedure.
   - If there is any malfunction, one of the following causes may have occurred:

Condition		Possible cause	
Higher than specification	Higher in R, D, and M (1GR) position	Line pressure is low	• Oil pump wear • ATF leakage from oil pump, control valve body, and transaxle case • Pressure regulator valve sticking • TR control valve sticking • Pressure control solenoid operation malfunction
		• Low and reverse brake slippage, and damage of one-way clutch	
	Higher in D and M (1GR) position	• Low clutch slippage • One-way clutch damage	
	Higher in R position	Perform road test to determine whether problem is in R-3-5 brake or low and reverse brake • Engine brake operates in M (1GR) position — R-3-5 brake slippage • Engine braking does not operate in M (1GR) position — Low and reverse brake slippage	
Lower than specification	Lower in R, D, and M (1GR) position	• Engine malfunction • One-way clutch slippage in torque converter	

Stall speed

Measurement conditions	Standard value (rpm)
R position	1,800—2,400
D position	2,100—3,100
M position	

AUTOMATIC TRANSAXLE [GW6A-EL, GW6AX-EL]

Time lag test

1. Perform the mechanical system test preparation. (See 05-17B-4 Mechanical system test preparation.)
2. Apply the parking brake firmly, and set the wheel blocks for both the front and rear wheels.
3. Start the engine.
4. Measure the time lag from the N position to the D position.
   (1) Shift the selector lever from the N position to the D position with the brake pedal depressed.
   (2) Measure the time until the shift shock is felt firmly after shifting.
5. Measure the time lag from the N position to the R position using the same procedure.
   - If there is any malfunction, one of the following causes may have occurred:

Condition		Possible cause
N to D selected	Longer than specification	• Line pressure is low • Low clutch slippage • ATF leakage from low clutch hydraulic circuit • ATF leakage from low and reverse brake hydraulic circuit • Shift solenoid No.1 operation malfunction • Shift solenoid No.4 operation malfunction
	Shorter than specification	• Line pressure is high • N-D accumulator operation malfunction • Shift solenoid No.1 operation malfunction • Shift solenoid No.4 operation malfunction
N to R selected	Longer than specification	• Line pressure is low • Low and Reverse brake slippage • R-3-5 brake slippage • ATF leakage from R-3-5 brake hydraulic circuit • ATF leakage from low and reverse brake hydraulic circuit • Shift solenoid No.3 operation malfunction • Shift solenoid No.4 operation malfunction
	Shorter than specification	• Line pressure is high • N-R accumulator operation malfunction • Shift solenoid No.3 operation malfunction • Shift solenoid No.4 operation malfunction

Time lag

Measurement conditions	Specification (s)
N to D selected	0.4—0.7
N to R selected	

AUTOMATIC TRANSAXLE [GW6A-EL, GW6AX-EL]

ROAD TEST [GW6A-EL, GW6AX-EL]

id0517i2118400

Warning

- **When performing a road test, always verify the safety of the surrounding area before performing the test.**

Note

- When performing a road test requiring speeds which exceed the legal speed limit, use a dynamometer.

Road test preparation

1. Inspect the engine coolant level. (See 01-12B-3 ENGINE COOLANT LEVEL INSPECTION [SKYACTIV-D 2.2].)
2. Inspect the engine oil level. (See 01-11B-3 ENGINE OIL LEVEL INSPECTION [SKYACTIV-D 2.2].)
3. Inspect the ATF level. (See 05-17B-11 AUTOMATIC TRANSAXLE FLUID (ATF) INSPECTION [GW6A-EL, GW6AX-EL].)
4. Inspect the ignition timing. (See 01-10B-3 ENGINE TUNE-UP [SKYACTIV-D 2.2].)
5. Inspect the idle speed. (See 01-10B-3 ENGINE TUNE-UP [SKYACTIV-D 2.2].)
6. Verify that no DTCs are stored.

Shift diagram (D position, normal mode)

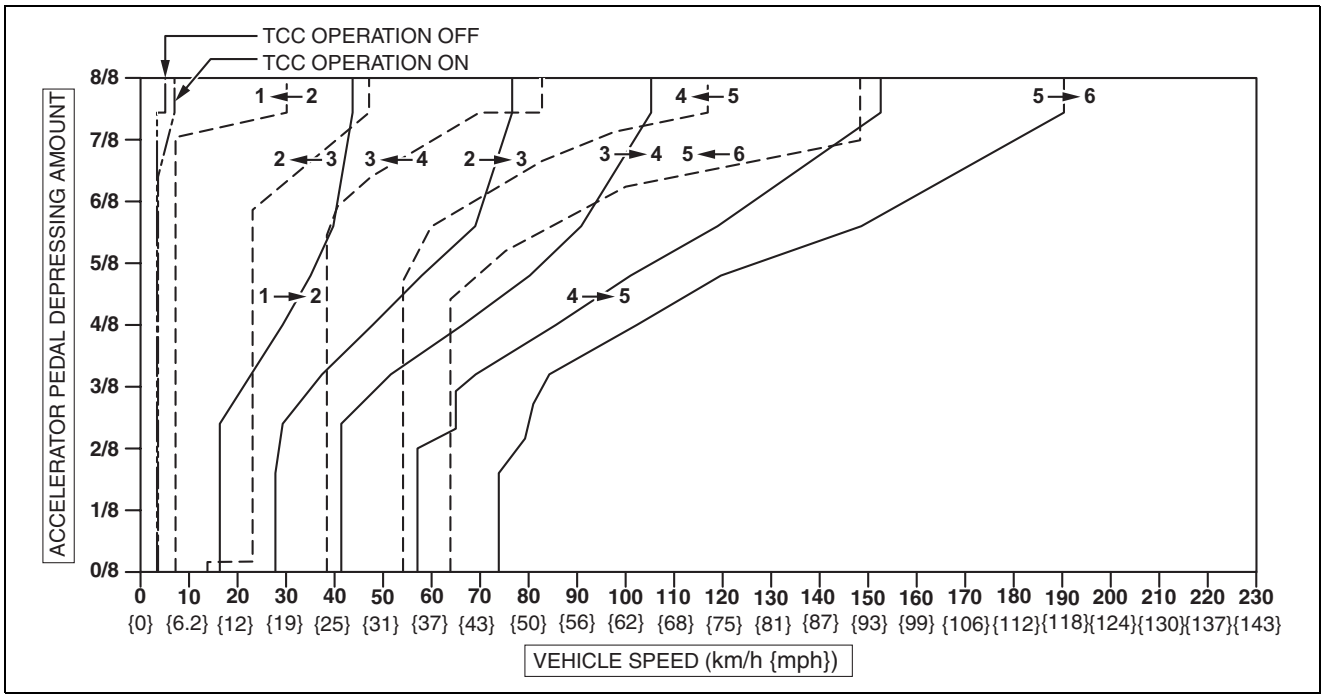

ac5wzw0000360

05

AUTOMATIC TRANSAXLE [GW6A-EL, GW6AX-EL]

D position test

1. Perform road test preparations. (See 05-17B-9 Road test preparation.)
2. Warm up the transaxle.
3. Select D position.
4. Inspect the shift point for the D position in normal mode.
   - If there is any malfunction, refer to symptom troubleshooting and verify the malfunction symptom.

   (1) Depress the accelerator pedal and start the vehicle, and verify that the gears shift from 1st to 2nd, 2nd to 3rd, 3rd to 4th, 4th to 5th, and 5th to 6th. In addition, verify that the vehicle speed corresponds to the shift point when shifting.

   (2) Release the accelerator pedal while driving in 6th gear, and verify that the gears shift from 6th to 5th, 5th to 4th, 4th to 3rd, 3rd to 2nd, and 2nd to 1st. In addition, verify that the vehicle speed corresponds to the shift point when shifting.

Note

- When the accelerator pedal is fully released quickly, shifting is not performed according to the shift pattern because the gear being used may be maintained.
- When decelerating by strongly depressing the brake pedal, shifting is not performed according to the shift pattern because the shift-down point may be at high vehicle speed.

   (3) Kick down while driving in 6th, 5th, 4th, 3rd, and 2nd gears, and verify that the gears shift from 6th to 5th, 5th to 4th, 4th to 3rd, 3rd to 2nd, and 2nd to 1st. In addition, verify that the vehicle speed limit for kicking down corresponds to the shift point.

   (4) Verify that the shift shock is minimal, shifting is smooth and timely, and there is no abnormal noise or slip.

Shift point

Position/mode		Accelerator pedal depression amount	Shift	Vehicle speed (km/h {mph})	Turbine rotation speed (rpm)
D	NORMAL	8/8	$D_1 \rightarrow D_2$	43—48 {27—29}	4,700—5,300
			$D_2 \rightarrow D_3$	75—82 {47—50}	4,700—5,150
			$D_3 \rightarrow D_4$	103—112 {64—69}	4,700—5,100
			$D_4 \rightarrow D_5$	150—159 {93—98}	4,750—5,000
		4/8	$D_1 \rightarrow D_2$	24—33 {15—20}	2,600—3,650
			$D_2 \rightarrow D_3$	39—57 {25—35}	2,450—3,550
			$D_3 \rightarrow D_4$	53—79 {33—48}	2,450—3,600
			$D_4 \rightarrow D_5$	72—99 {45—61}	2,300—3,100
		0/8	$D_6 \rightarrow D_5$	61—66 {38—40}	1,150—1,250
			$D_5 \rightarrow D_4$	51—57 {32—35}	1,150—1,250
			$D_4 \rightarrow D_3$	36—41 {23—25}	1,150—1,300
			$D_3 \rightarrow D_2$	11—16 {7—9}	500—750
			$D_2 \rightarrow D_1$	5—10 {4—6}	300—600
		Kickdown (8/8)	$D_5 \rightarrow D_4$	112—121 {70—75}	2,500—2,700
			$D_4 \rightarrow D_3$	78—87 {49—53}	2,450—2,750
			$D_3 \rightarrow D_2$	43—51 {27—31}	2,000—2,300
			$D_2 \rightarrow D_1$	27—33 {17—20}	1,700—2,050

AUTOMATIC TRANSAXLE [GW6A-EL, GW6AX-EL]

M position test

1. Perform road test preparations. (See 05-17B-9 Road test preparation.)
2. Warm up the transaxle.
3. Select the M position.
4. Inspect the shift point for the M position.
   - If there is any malfunction, refer to symptom troubleshooting and verify the malfunction symptom.
   (1) Perform the shift operation while driving and verify that the gears can be shifted.
   (2) Release the accelerator pedal while driving in 6th gear, and verify that the gears shift from 6th to 5th, 5th to 4th, 4th to 3rd, 3rd to 2nd, and 2nd to 1st. In addition, verify that the vehicle speed corresponds to the shift point when shifting.
   (3) Release the accelerator pedal while driving and verify that the engine braking operates in all gears.
   (4) Verify that the shift shock is minimal, shifting is smooth and timely, and there is no abnormal noise or slip.

Shift point

Position/mode	Accelerator pedal depression amount	Shift	Vehicle speed (km/h {mph})	Turbine rotation speed (rpm)
M	0/8	$M_6 \rightarrow M_5$	61—66 {38—40}	1,150—1,250
		$M_5 \rightarrow M_4$	51—57 {32—35}	1,150—1,250
		$M_4 \rightarrow M_3$	36—41 {23—25}	1,150—1,300
		$M_3 \rightarrow M_2$	11—16 {7—9}	500—750
		$M_2 \rightarrow M_1$	5—10 {4—6}	300—600

5. Inspect 2nd gear fixed mode.
   (1) While the vehicle is stopped or the vehicle speed is **10 km/h {6.2 mph} or less**, operate the selector lever toward + to shift to 2nd gear.
   (2) Verify that the gear is fixed in 2nd gear.
   (3) Release the accelerator pedal while driving and verify that the engine braking operates.
   (4) Perform the shift operation while driving and verify that the gears can be shifted.

P position test

1. Park the vehicle on a gentle slope and shift the selector lever to the P position.
2. Release the brake and verify that the vehicle does not move.
   - If there is any malfunction, inspect the parking mechanism in the transaxle.

AUTOMATIC TRANSAXLE FLUID (ATF) INSPECTION [GW6A-EL, GW6AX-EL]

id0517i2118500

Caution

- **If the ATF level is not within the specification or ATF is not adhering to the dipstick after warming up the engine, do not drive the vehicle. Otherwise, the transaxle could be damaged.**

ATF level inspection

1. Remove the dipstick securing bolt.
2. Connect the M-MDS to the DLC-2 and display the PID TFT.
3. Warm up the engine until the ATF temperature is 50 °C {122 °F}.
4. Remove the dipstick and wipe ATF off using a nylon cloth while leaving the engine idling.
5. Insert the dipstick and pull it out again.
6. Verify that the ATF is adhering between L and F on the dipstick.

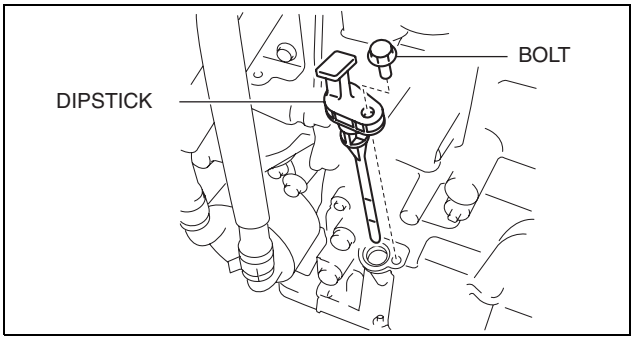

ac5wzw0000374

AUTOMATIC TRANSAXLE [GW6A-EL, GW6AX-EL]

- If ATF is not adhering between L and F on the dipstick, adjust the ATF level. (See 05-17B-13 AUTOMATIC TRANSAXLE FLUID (ATF) ADJUSTMENT [GW6A-EL, GW6AX-EL].)

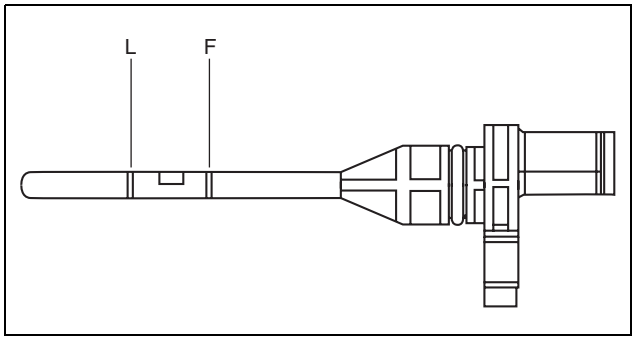

aaxjjw00010212

Note
- The ATF color is blue.
- Only use ATF FZ for the GW6A-EL, GW6AX-EL.

ATF type
ATF FZ

7. Insert the dipstick and install the securing bolt.

Tightening torque
8—11 N·m {82—112 kgf·cm, 71—97 in·lbf}

AUTOMATIC TRANSAXLE FLUID (ATF) REPLACEMENT [GW6A-EL, GW6AX-EL]

id0517i2118600

Warning
- **Do not perform the servicing while the ATF is hot. Otherwise, it could cause severe burns or serious injury.**

1. Remove the front under cover No.2. (See 09-16-41 FRONT UNDER COVER No.2 REMOVAL/INSTALLATION.)
2. Remove the dipstick securing bolt.
3. Remove the dipstick.
4. Remove the drain plug and washer, and drain the ATF.
5. Install a new washer and drain plug.

Tightening torque
30—41 N·m {3.1—4.1 kgf·m, 23—30 ft·lbf}

6. Add ATF from the dipstick installation hole.

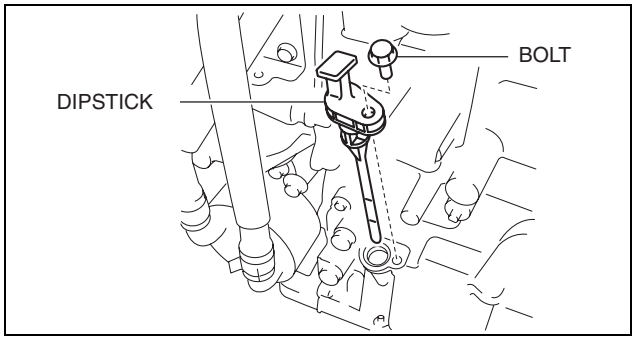

ac5wzw0000360

Note
- The ATF color is blue.
- Only use ATF FZ for the GW6A-EL, GW6AX-EL.

ATF type
ATF FZ
Resupply amount (Reference)
ATF is drained from drain plug: 3.5—4.9 L {3.7—5.1 US qt, 3.1—4.3 Imp qt}

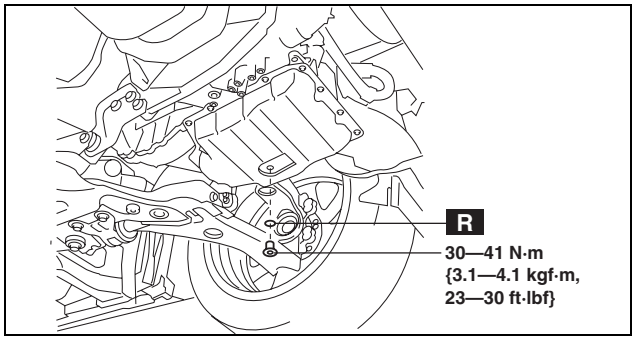

am3zzw0001264

7. Adjust the ATF level. (See 05-17B-13 AUTOMATIC TRANSAXLE FLUID (ATF) ADJUSTMENT [GW6A-EL, GW6AX-EL].)
8. Insert the dipstick and install the securing bolt.

Tightening torque
8—11 N·m {82—112 kgf·cm, 71—97 in·lbf}

9. Install the front under cover No.2. (See 09-16-41 FRONT UNDER COVER No.2 REMOVAL/INSTALLATION.)

AUTOMATIC TRANSAXLE [GW6A-EL, GW6AX-EL]

AUTOMATIC TRANSAXLE FLUID (ATF) ADJUSTMENT [GW6A-EL, GW6AX-EL]

id0517i2119300

Caution
- **Only adjust the ATF level when the ATF temperature is 45—55 °C {113—131 °F}. If the ATF level is incorrect, it could damage the transaxle.**
- **Do not add ATF over the specification. Otherwise, the transaxle performance could be reduced and ATF could leak.**

1. Remove the dipstick securing bolt.
2. Remove the dipstick.
3. Adjust the ATF level.
   (1) Connect the M-MDS to the DLC-2 and display the PID TFT.
   (2) Warm up the engine until the ATF temperature is **50 °C {122 °F}**.
   (3) Remove the dipstick and wipe the ATF off using a rag while leaving the engine idling.
   (4) Insert the dipstick and pull it out again.
   (5) Verify that ATF is adhering to the central marker area on the dipstick.
      - If ATF is not adhering to the central marker area on the dipstick, adjust the ATF level to the central marker area.

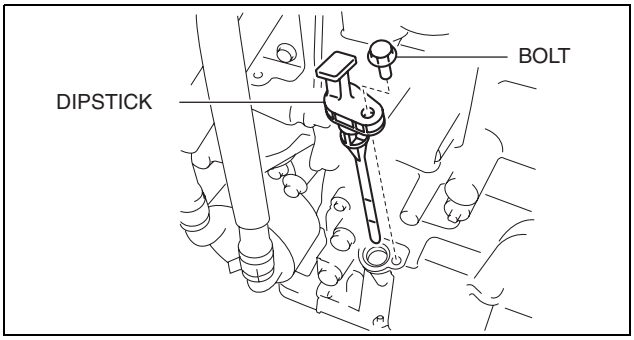

ac5wzw0000360

Note
- The ATF color is blue.
- Only use ATF FZ for the GW6A-EL, GW6AX-EL.

ATF type
ATF FZ

4. Insert the dipstick and install the securing bolt.

Tightening torque
8—11 N·m {82—112 kgf·cm, 71—97 in·lbf}

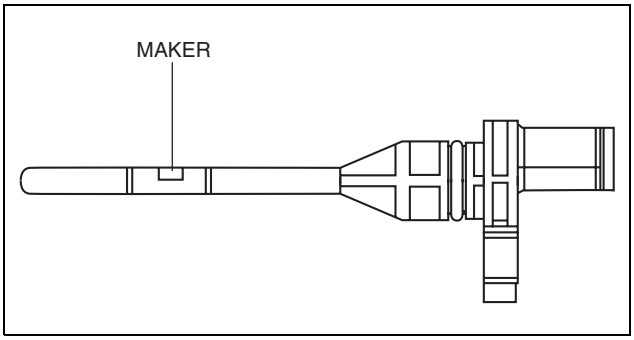

am3uuw0000839

05

AUTOMATIC TRANSAXLE [GW6A-EL, GW6AX-EL]

M POSITION SWITCH INSPECTION [GW6A-EL, GW6AX-EL]

id0517i2500000

Continuity Inspection

Note
- The M position switch is built into the selector lever component.

1. Disconnect the negative battery cable. (See 01-17B-9 NEGATIVE BATTERY CABLE DISCONNECTION/ CONNECTION [SKYACTIV-D 2.2].)
2. Remove the front console. (See 09-17-50 FRONT CONSOLE REMOVAL/INSTALLATION.)
3. Disconnect the selector lever component connector.

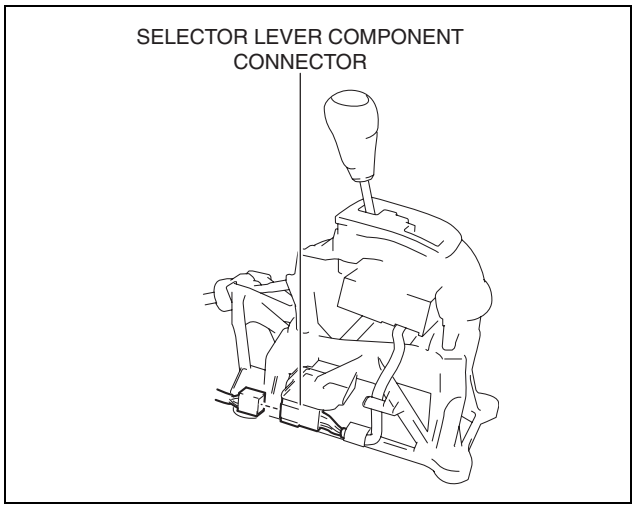

ac5wzw0000078

4. Verify that the continuity between selector lever component terminals E and J.
   - If not as verified, replace the selector lever component. (See 05-18-2 AUTOMATIC TRANSAXLE SHIFT MECHANISM REMOVAL/INSTALLATION.)

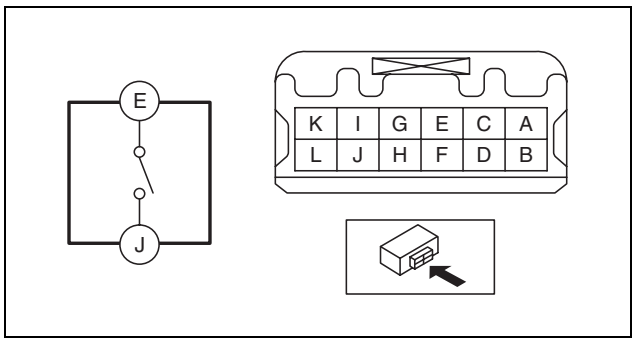

ac5wzw0000078

M position switch specification

Test condition	Continuity
Selector lever is in the M position.	Continuity
Selector lever is not in the M position.	No continuity

M POSITION SWITCH REMOVAL/INSTALLATION [GW6A-EL, GW6AX-EL]

id0517i2100000

Note
- The M position switch is built into the selector lever component.

1. If the M position switch is replaced, replace the selector lever component. (See 05-18-2 AUTOMATIC TRANSAXLE SHIFT MECHANISM REMOVAL/INSTALLATION.)

AUTOMATIC TRANSAXLE [GW6A-EL, GW6AX-EL]

UP SWITCH INSPECTION [GW6A-EL, GW6AX-EL]

id0517i2600500

Continuity Inspection

Note
- The up switch is built into the selector lever component.

1. Disconnect the negative battery cable. (See 01-17B-9 NEGATIVE BATTERY CABLE DISCONNECTION/ CONNECTION [SKYACTIV-D 2.2].)
2. Remove the front console. (See 09-17-50 FRONT CONSOLE REMOVAL/INSTALLATION.)
3. Disconnect the selector lever component connector.

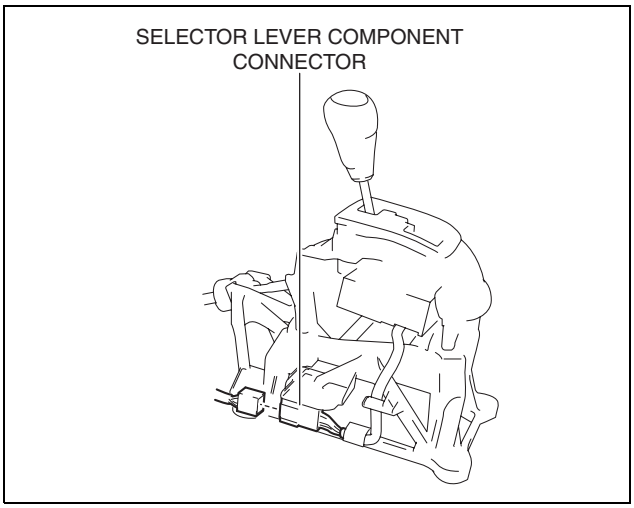

ac5wzw0000078

4. Verify that the continuity between selector lever component terminals C and J.
   - If not as verified, replace the selector lever component. (See 05-18-2 AUTOMATIC TRANSAXLE SHIFT MECHANISM REMOVAL/INSTALLATION.)

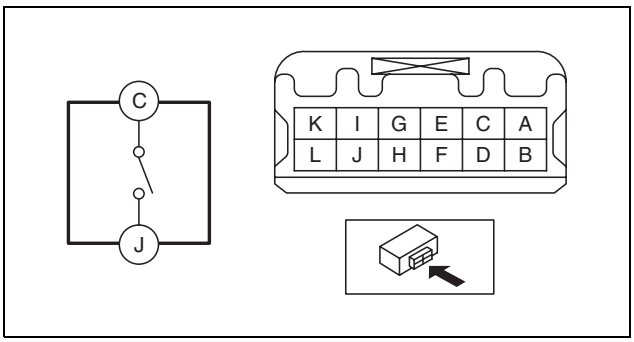

ac5wzw0000078

Up switch specification

Test condition	Continuity
Selector lever is in the M position (+) side position.	Continuity
Selector lever is not in the M position (+) side position.	No continuity

UP SWITCH REMOVAL/INSTALLATION [GW6A-EL, GW6AX-EL]

id0517i2112200

Note
- The up switch is built into the selector lever component.

1. If the up switch is replaced, replace the selector lever component. (See 05-18-2 AUTOMATIC TRANSAXLE SHIFT MECHANISM REMOVAL/INSTALLATION.)

AUTOMATIC TRANSAXLE [GW6A-EL, GW6AX-EL]

DOWN SWITCH INSPECTION [GW6A-EL, GW6AX-EL]

id0517i2600600

Continuity Inspection

Note
- The down switch is built into the selector lever component.

1. Disconnect the negative battery cable. (See 01-17B-9 NEGATIVE BATTERY CABLE DISCONNECTION/ CONNECTION [SKYACTIV-D 2.2].)
2. Remove the front console. (See 09-17-50 FRONT CONSOLE REMOVAL/INSTALLATION.)
3. Disconnect the selector lever component connector.

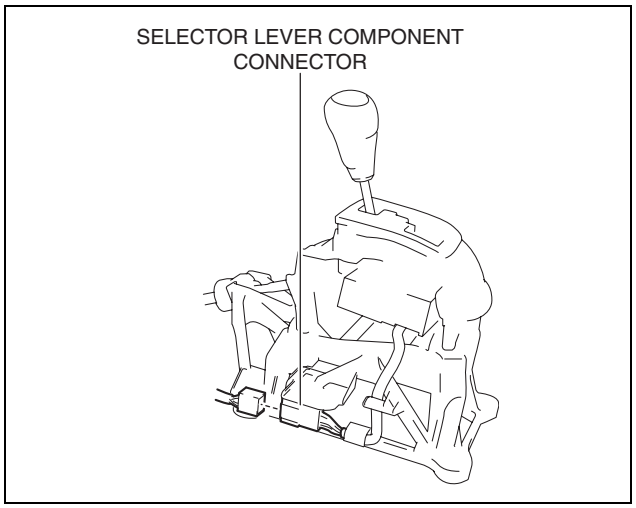

ac5wzw0000078

4. Verify that the continuity between selector lever component terminals D and J.
   - If not as verified, replace the selector lever component. (See 05-18-2 AUTOMATIC TRANSAXLE SHIFT MECHANISM REMOVAL/INSTALLATION.)

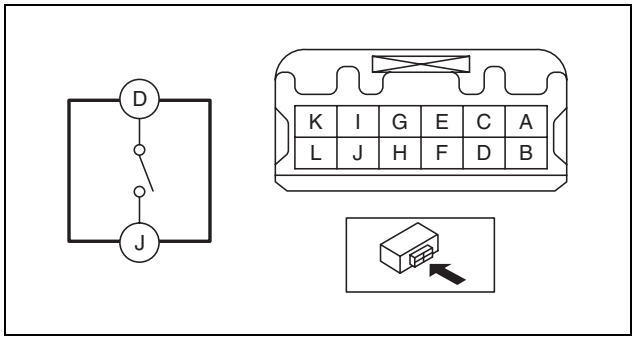

ac5wzw0000078

Down switch specification

Test condition	Continuity
Selector lever is in the M position (–) side position.	Continuity
Selector lever is not in the M position (–) side position.	No continuity

DOWN SWITCH REMOVAL/INSTALLATION [GW6A-EL, GW6AX-EL]

id0517i2112300

Note
- The down switch is built into the selector lever component.

1. If the down switch is replaced, replace the selector lever component. (See 05-18-2 AUTOMATIC TRANSAXLE SHIFT MECHANISM REMOVAL/INSTALLATION.)

AUTOMATIC TRANSAXLE [GW6A-EL, GW6AX-EL]

COUPLER COMPONENT REMOVAL/INSTALLATION [GW6A-EL, GW6AX-EL]

id0517i2112400

Warning

- **A hot transaxle and ATF can cause severe burns. Turn off the engine and wait until they are cool.**
- **Always wear protective eye wear when using the air compressor. If the air compressor is used, any particles of dirt or soiling could spatter and get into the eyes.**

Caution

- **Placing the control valve body connector side pointed downward could damage the control valve body connector part or sensor. If the servicing can only be performed by pointing the control valve body connector side downward, spread shock-absorbing material, which does not produce dust or foreign matter, and place the control valve body connector part and sensor on the table so that they do not directly contact the table.**

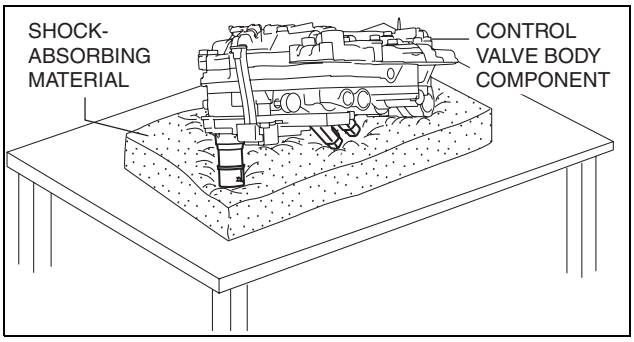

ac5wzw0000360

1. Select the selector lever to P position.
2. Disconnect the negative battery cable. (See 01-17B-9 NEGATIVE BATTERY CABLE DISCONNECTION/CONNECTION [SKYACTIV-D 2.2].)
3. Remove the front under cover No.2. (See 09-16-41 FRONT UNDER COVER No.2 REMOVAL/INSTALLATION.)
4. Clean the transaxle exterior throughout with a steam cleaner or cleaning solvents.
5. Remove the air cleaner component. (See 01-13B-6 INTAKE-AIR SYSTEM REMOVAL/INSTALLATION [SKYACTIV-D 2.2].)
6. Remove the control valve body. (See 05-17B-81 CONTROL VALVE BODY REMOVAL/INSTALLATION [GW6A-EL, GW6AX-EL].)
7. Remove the oil seal (control valve body). (See 05-17B-68 OIL SEAL (CONTROL VALVE BODY) REPLACEMENT [GW6A-EL, GW6AX-EL].)
8. Disconnect the coupler component connectors.

Caution

- **Do not scratch the shift solenoid, shift solenoid connector, oil pressure switch, and oil pressure switch connector with the precision flathead screwdriver.**
- **When disconnecting connectors, grasp the connectors, not the wiring harnesses. Otherwise, the wiring harnesses may be pulled out of the connector causing poor contact.**

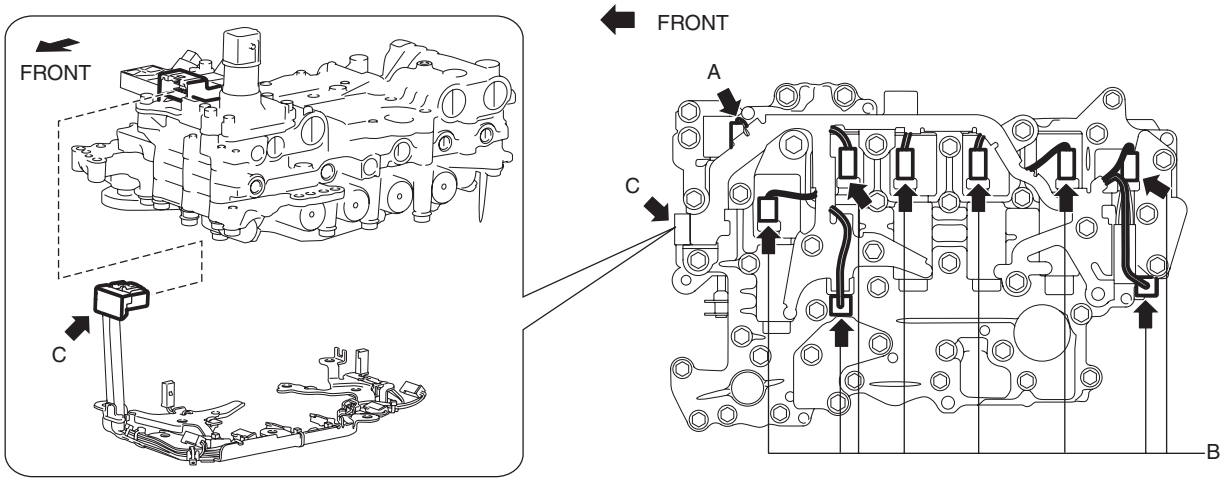

CONNECTOR A: ON/OFF SOLENOID
CONNECTOR B: SHIFT SOLENOID / OIL PRESSURE SWITCH
CONNECTOR C: TCM

ac5wzw0000396

(1) Disconnect connector A and connector C by pressing the connector tab with your fingers.

AUTOMATIC TRANSAXLE [GW6A-EL, GW6AX-EL]

(2) Insert a precision flathead screwdriver and move it in the direction of the arrow to disconnect connector B as shown in the figure.

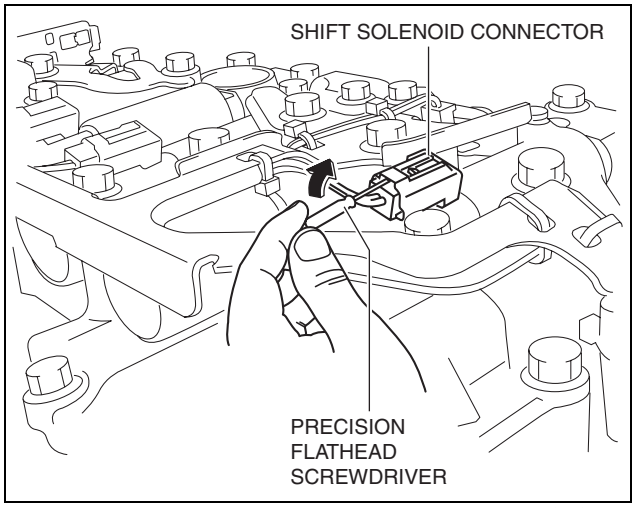

80001264

9. Remove the coupler component.

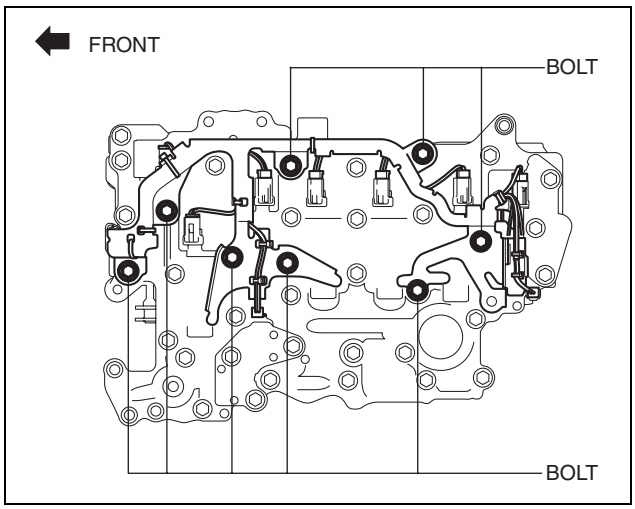

80000916

Caution

- **Because there are solenoid valve securing pins in the areas circled with a dotted line shown in the figure. Always verify that the solenoid valve securing pins are on the control valve body when installing the coupler component.**

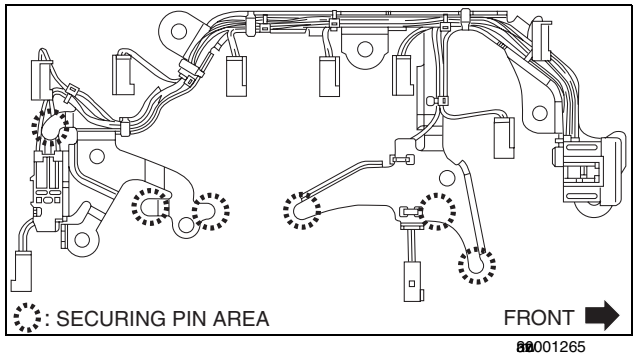

80001265

AUTOMATIC TRANSAXLE [GW6A-EL, GW6AX-EL]

10. Temporarily install the coupler component so that the oil strainer installation bolt hole does not deviate.
11. After verifying that the oil strainer installation bolt hole is not deviated, install the coupler component.

Caution
- **After assembling the coupler component, verify that shift solenoids No.1, 2, 3, 4, the pressure control solenoid, and the TCC control solenoid cannot be pulled out from the control valve body.**

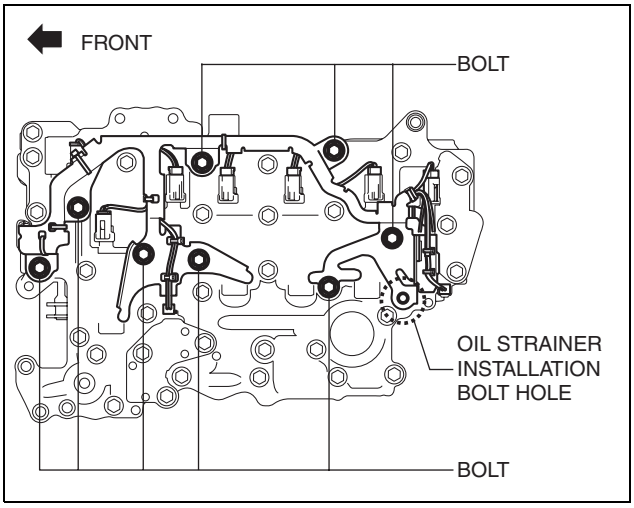

am3uuw0000916

Tightening torque
9—10 N·m {92—101 kgf·cm, 80—88 in·lbf}

12. Connect the coupler component connectors.

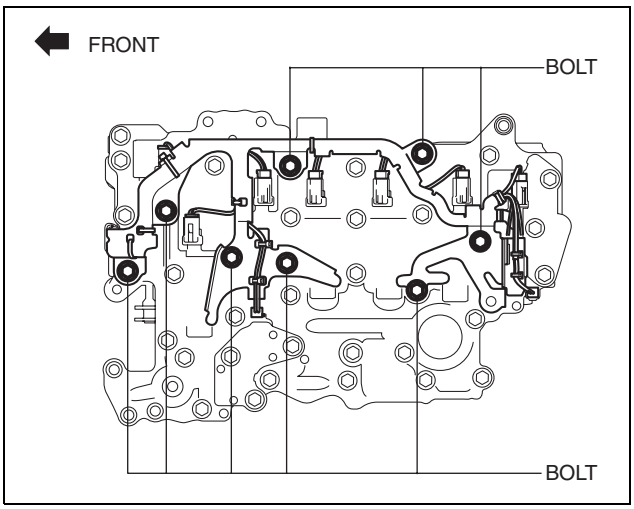

am3uuw0000916

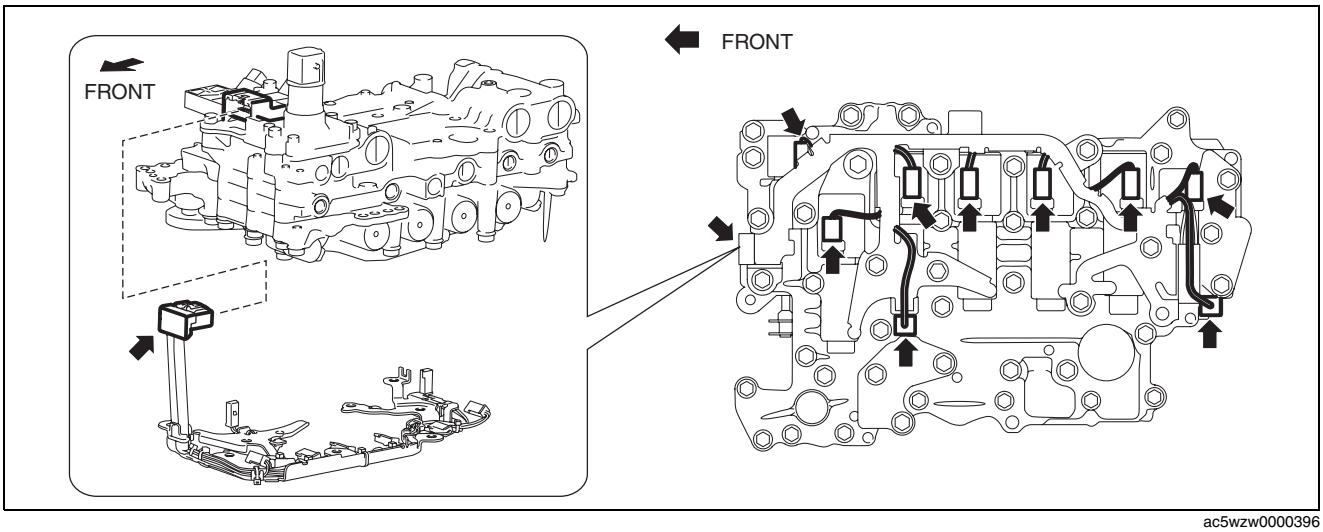

ac5wzw0000396

13. Install the control valve body. (See 05-17B-81 CONTROL VALVE BODY REMOVAL/INSTALLATION [GW6A-EL, GW6AX-EL].)
14. Install the front under cover No.2. (See 09-16-41 FRONT UNDER COVER No.2 REMOVAL/INSTALLATION.)
15. Install the oil seal (control valve body). (See 05-17B-68 OIL SEAL (CONTROL VALVE BODY) REPLACEMENT [GW6A-EL, GW6AX-EL].)
16. Install the hose clamp. (See 05-17B-81 CONTROL VALVE BODY REMOVAL/INSTALLATION [GW6A-EL, GW6AX-EL].)

AUTOMATIC TRANSAXLE [GW6A-EL, GW6AX-EL]

17. Connect the control valve body connector. (See 05-17B-81 CONTROL VALVE BODY REMOVAL/INSTALLATION [GW6A-EL, GW6AX-EL].)

Caution
- **Make sure that your hand does not touch the terminal as the connector terminal could be damaged.**
- **Verify that there is no fluid or foreign matter adhering to the connector before connecting the connector.**
- **Insert the connector straight as the connector terminal could be damaged.**
- **Rotate the connector lever until a click is heard.**

18. Add the ATF. (See 05-17B-12 AUTOMATIC TRANSAXLE FLUID (ATF) REPLACEMENT [GW6A-EL, GW6AX-EL].)
19. Install the air cleaner component. (See 01-13B-6 INTAKE-AIR SYSTEM REMOVAL/INSTALLATION [SKYACTIV-D 2.2].)
20. Connect the negative battery cable. (See 01-17B-9 NEGATIVE BATTERY CABLE DISCONNECTION/CONNECTION [SKYACTIV-D 2.2].)
21. Perform the “Mechanical System Test”. (See 05-17B-4 MECHANICAL SYSTEM TEST [GW6A-EL, GW6AX-EL].)

OIL PRESSURE SWITCH REMOVAL/INSTALLATION [GW6A-EL, GW6AX-EL]

id0517i2112600

Warning
- **A hot transaxle and ATF can cause severe burns. Turn off the engine and wait until they are cool.**
- **Always wear protective eye wear when using the air compressor. If the air compressor is used, any particles of dirt or soiling could spatter and get into the eyes.**

Caution
- **If the oil pressure switch has been replaced, perform initial learning. (See 05-17B-93 INITIAL LEARNING [GW6A-EL, GW6AX-EL].)**
- **Placing the control valve body connector side pointed downward could damage the control valve body connector part or sensor. If the servicing can only be performed by pointing the control valve body connector side downward, spread shock-absorbing material, which does not produce dust or foreign matter, and place the control valve body connector part and sensor on the table so that they do not directly contact the table.**

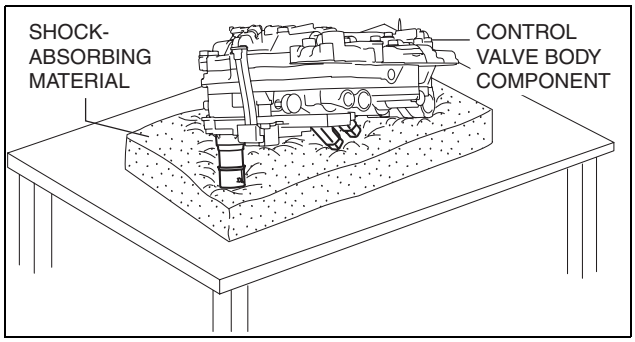

E5000360

AUTOMATIC TRANSAXLE [GW6A-EL, GW6AX-EL]

Oil Pressure Switch A

1. Select the selector lever to P position.
2. Disconnect the negative battery cable. (See 01-17B-9 NEGATIVE BATTERY CABLE DISCONNECTION/CONNECTION [SKYACTIV-D 2.2].)
3. Remove the front under cover No.2. (See 09-16-41 FRONT UNDER COVER No.2 REMOVAL/INSTALLATION.)
4. Clean the transaxle exterior throughout with a steam cleaner or cleaning solvents.
5. Remove the air cleaner component. (See 01-13B-6 INTAKE-AIR SYSTEM REMOVAL/INSTALLATION [SKYACTIV-D 2.2].)
6. Remove the control valve body. (See 05-17B-81 CONTROL VALVE BODY REMOVAL/INSTALLATION [GW6A-EL, GW6AX-EL].)
7. Remove the oil seal (control valve body). (See 05-17B-68 OIL SEAL (CONTROL VALVE BODY) REPLACEMENT [GW6A-EL, GW6AX-EL].)
8. Insert a precision flathead screwdriver and move it in the direction of the arrow to disconnect the oil pressure switch A connector as shown in the figure.

   Caution
   - **Do not scratch the oil pressure switch A and oil pressure switch connector A with the precision flathead screwdriver.**
   - **When disconnecting connectors, grasp the connectors, not the wiring harnesses. Otherwise, the wiring harnesses may be pulled out of the connector causing poor contact.**

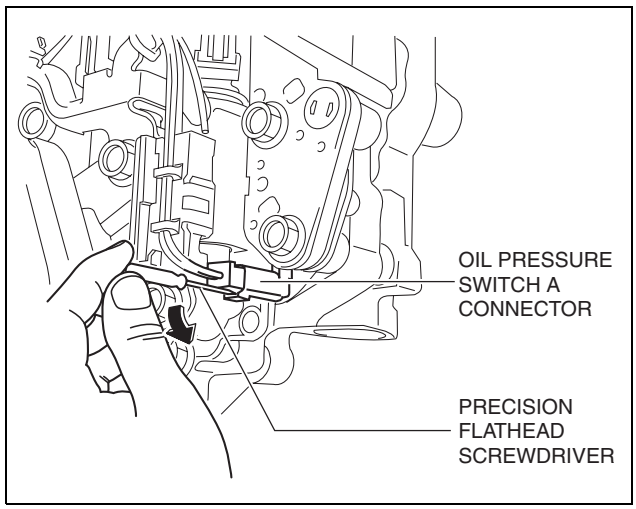

am3zzw0001263

9. Remove the oil pressure switch A fitting bolts.

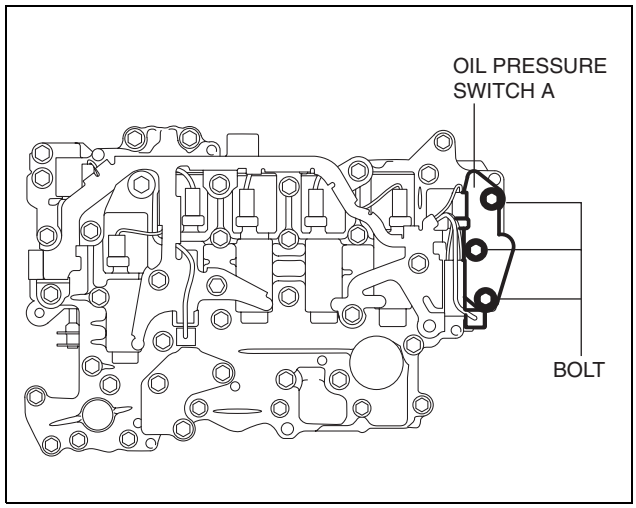

am3uuw0000872

10. Detach tab shown in the figure and remove the oil pressure switch A from the control valve body.

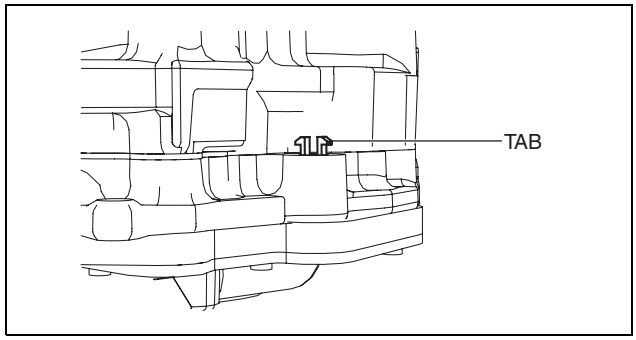

am3uuw0000901

AUTOMATIC TRANSAXLE [GW6A-EL, GW6AX-EL]

11. Install the oil pressure switch A to the control valve body.
12. Verify that the tab is attached correctly.

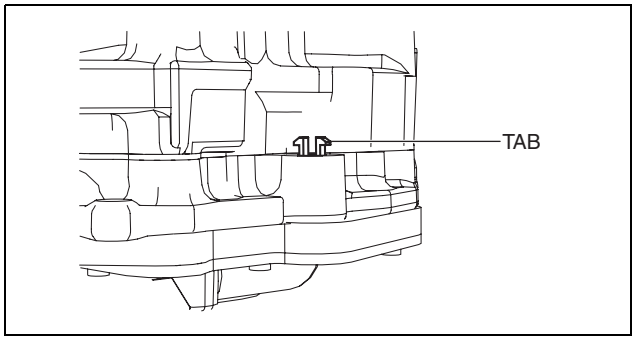

am3uuw0000901

13. Install the oil pressure switch A fitting bolts.

Tightening torque
9—10 N·m {92—101 kgf·cm, 80—88 in·lbf}

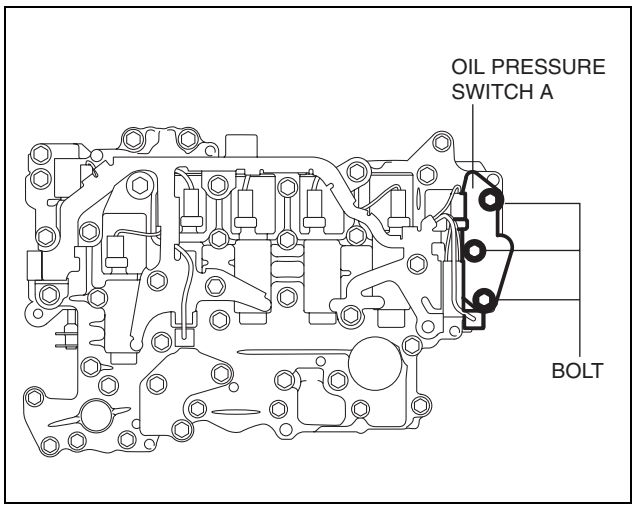

am3uuw0000872

14. Connect the oil pressure switch A connector.
15. Install the control valve body. (See 05-17B-81 CONTROL VALVE BODY REMOVAL/INSTALLATION [GW6A-EL, GW6AX-EL].)
16. Install the front under cover No.2. (See 09-16-41 FRONT UNDER COVER No.2 REMOVAL/INSTALLATION.)
17. Install the oil seal (control valve body). (See 05-17B-68 OIL SEAL (CONTROL VALVE BODY) REPLACEMENT [GW6A-EL, GW6AX-EL].)
18. Install the hose clamp. (See 05-17B-81 CONTROL VALVE BODY REMOVAL/INSTALLATION [GW6A-EL, GW6AX-EL].)
19. Connect the control valve body connector. (See 05-17B-81 CONTROL VALVE BODY REMOVAL/INSTALLATION [GW6A-EL, GW6AX-EL].)

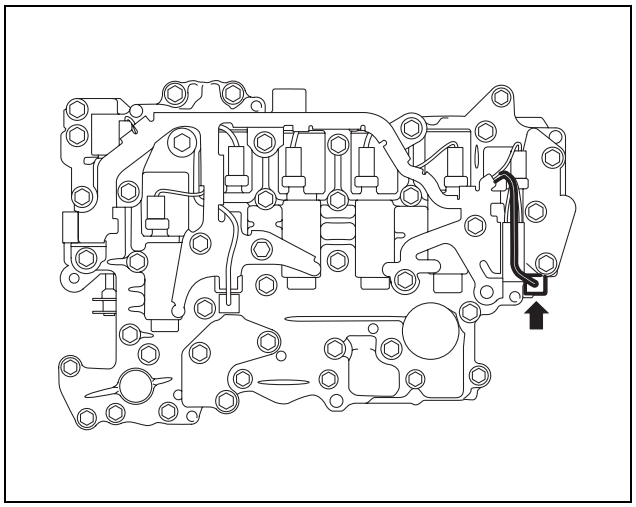
am3uuw0000871

Caution
- **Make sure that your hand does not touch the terminal as the connector terminal could be damaged.**
- **Verify that there is no fluid or foreign matter adhering to the connector before connecting the connector.**
- **Insert the connector straight as the connector terminal could be damaged.**
- **Rotate the connector lever until a click is heard.**

20. Add the ATF. (See 05-17B-12 AUTOMATIC TRANSAXLE FLUID (ATF) REPLACEMENT [GW6A-EL, GW6AX-EL].)
21. Install the air cleaner component. (See 01-13B-6 INTAKE-AIR SYSTEM REMOVAL/INSTALLATION [SKYACTIV-D 2.2].)
22. Connect the negative battery cable. (See 01-17B-9 NEGATIVE BATTERY CABLE DISCONNECTION/CONNECTION [SKYACTIV-D 2.2].)

AUTOMATIC TRANSAXLE [GW6A-EL, GW6AX-EL]

23. Perform the “Initial Learning” (oil pressure switch A Replacement). (See 05-17B-93 INITIAL LEARNING [GW6A-EL, GW6AX-EL].)
24. Perform the “Mechanical System Test”. (See 05-17B-4 MECHANICAL SYSTEM TEST [GW6A-EL, GW6AX-EL].)

Oil Pressure Switch B

1. Disconnect the negative battery cable. (See 01-17B-9 NEGATIVE BATTERY CABLE DISCONNECTION/CONNECTION [SKYACTIV-D 2.2].)
2. Remove the front under cover No.2. (See 09-16-41 FRONT UNDER COVER No.2 REMOVAL/INSTALLATION.)
3. Clean the transaxle exterior throughout with a steam cleaner or cleaning solvents.
4. Drain the ATF. (See 05-17B-12 AUTOMATIC TRANSAXLE FLUID (ATF) REPLACEMENT [GW6A-EL, GW6AX-EL].)
5. Remove the oil pan.

Caution

- **To avoid damaging the control valve body, if there is a large amount of foreign material at the bottom of the oil pan when the oil pan is removed, replace the oil strainer with a new one.**
- **If there is not a large amount of foreign material at the bottom of the oil pan, the oil strainer does not have to be replaced.**

Note

- Always use new oil pan installation bolts when re-installing the oil pan because the oil pan installation bolts cannot be reused.

6. Remove the oil strainer. (See 05-17B-81 CONTROL VALVE BODY REMOVAL/INSTALLATION [GW6A-EL, GW6AX-EL].)
7. Remove the oil strainer O-ring. (See 05-17B-81 CONTROL VALVE BODY REMOVAL/INSTALLATION [GW6A-EL, GW6AX-EL].)
8. Insert a precision flathead screwdriver and move it in the direction of the arrow to disconnect the oil pressure switch B connector as shown in the figure.

Caution

- **Do not scratch the oil pressure switch B and oil pressure switch connector B with the precision flathead screwdriver.**
- **When disconnecting connectors, grasp the connectors, not the wiring harnesses. Otherwise, the wiring harnesses may be pulled out of the connector causing poor contact.**

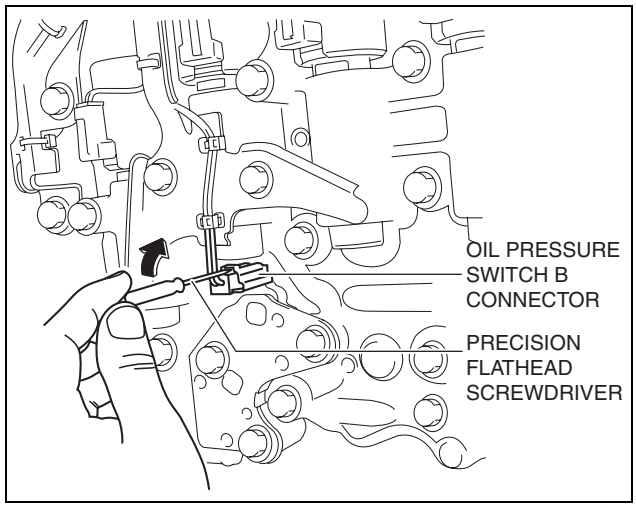

am3zzw0001263

9. Remove the oil pressure switch B.

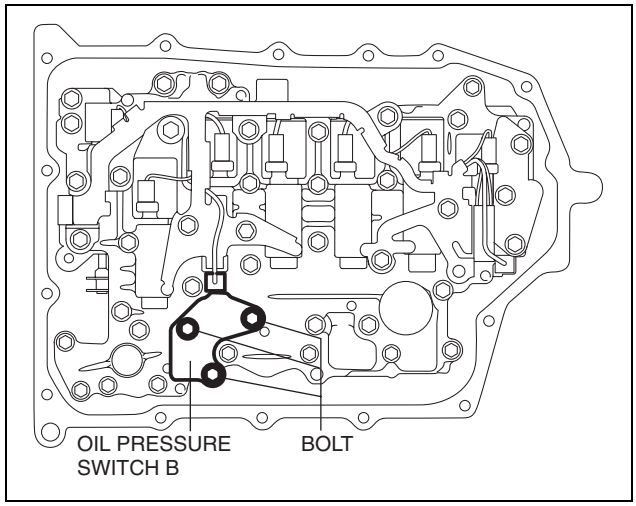

am3uuw0000872

AUTOMATIC TRANSAXLE [GW6A-EL, GW6AX-EL]

10. Install the oil pressure switch B.

    Tightening torque
    9—10 N·m {92—101 kgf·cm, 80—88 in·lbf}

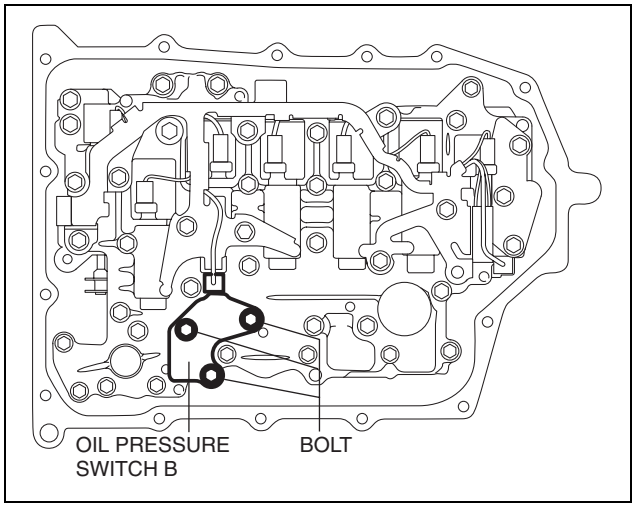

am3uuw0000872

11. Connect the oil pressure switch B connector.
12. Install the oil strainer O-ring. (See 05-17B-81 CONTROL VALVE BODY REMOVAL/INSTALLATION [GW6A-EL, GW6AX-EL].)

    Note
    - If there is a large amount of foreign material at the bottom of the oil pan, replace the oil strainer with a new one.

13. Install the oil strainer. (See 05-17B-81 CONTROL VALVE BODY REMOVAL/INSTALLATION [GW6A-EL, GW6AX-EL].)

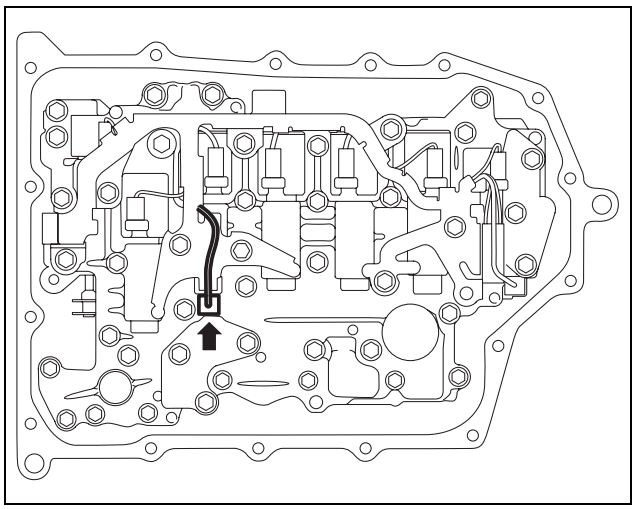
am3uuw0000872

14. Apply a light coat of silicon sealant (TB1217E) to the contact surfaces of the oil pan and transaxle case.

    Caution
    - **Clean any remaining silicone sealant on the contact surface of the transaxle case and oil pan, and degrease the sealant area. Otherwise, oil could leak.**

15. Install the oil pan with new bolts before the applied sealant starts to harden.

    Tightening torque
    8—10 N·m {82—101 kgf·cm, 71—88 in·lbf}

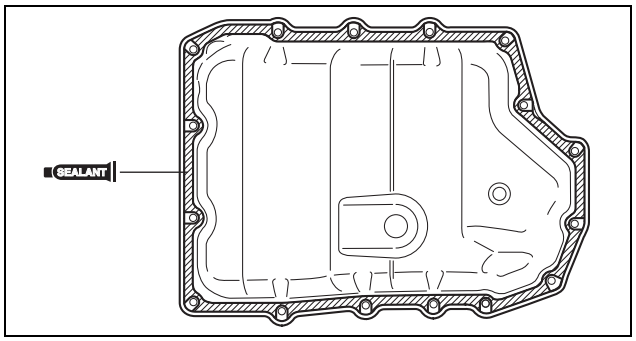

am3uuw0000828

16. Install the front under cover No.2. (See 09-16-41 FRONT UNDER COVER No.2 REMOVAL/INSTALLATION.)
17. Add the ATF. (See 05-17B-12 AUTOMATIC TRANSAXLE FLUID (ATF) REPLACEMENT [GW6A-EL, GW6AX-EL].)
18. Connect the negative battery cable. (See 01-17B-9 NEGATIVE BATTERY CABLE DISCONNECTION/CONNECTION [SKYACTIV-D 2.2].)
19. Perform the “Initial Learning” (oil pressure switch B Replacement). (See 05-17B-93 INITIAL LEARNING [GW6A-EL, GW6AX-EL].)
20. Perform the “Mechanical System Test”. (See 05-17B-4 MECHANICAL SYSTEM TEST [GW6A-EL, GW6AX-EL].)

AUTOMATIC TRANSAXLE [GW6A-EL, GW6AX-EL]

ON/OFF SOLENOID REMOVAL/INSTALLATION [GW6A-EL, GW6AX-EL]

id0517i2117100

Warning
- **A hot transaxle and ATF can cause severe burns. Turn off the engine and wait until they are cool.**
- **Always wear protective eye wear when using the air compressor. If the air compressor is used, any particles of dirt or soiling could spatter and get into the eyes.**

1. Disconnect the negative battery cable. (See 01-17B-9 NEGATIVE BATTERY CABLE DISCONNECTION/ CONNECTION [SKYACTIV-D 2.2].)
2. Remove the front under cover No.2. (See 09-16-41 FRONT UNDER COVER No.2 REMOVAL/INSTALLATION.)
3. Clean the transaxle exterior throughout with a steam cleaner or cleaning solvents.
4. Drain the ATF. (See 05-17B-12 AUTOMATIC TRANSAXLE FLUID (ATF) REPLACEMENT [GW6A-EL, GW6AX-EL].)
5. Remove the oil pan.

Caution
- **To avoid damaging the control valve body, if there is a large amount of foreign material at the bottom of the oil pan when the oil pan is removed, replace the oil strainer with a new one.**
- **If there is not a large amount of foreign material at the bottom of the oil pan, the oil strainer does not have to be replaced.**

Note
- Always use new oil pan installation bolts when re-installing the oil pan because the oil pan installation bolts cannot be reused.

6. Disconnect the ON/OFF solenoid connector.

Note
- Disconnect the ON/OFF solenoid connector by pressing the connector tab with your fingers.

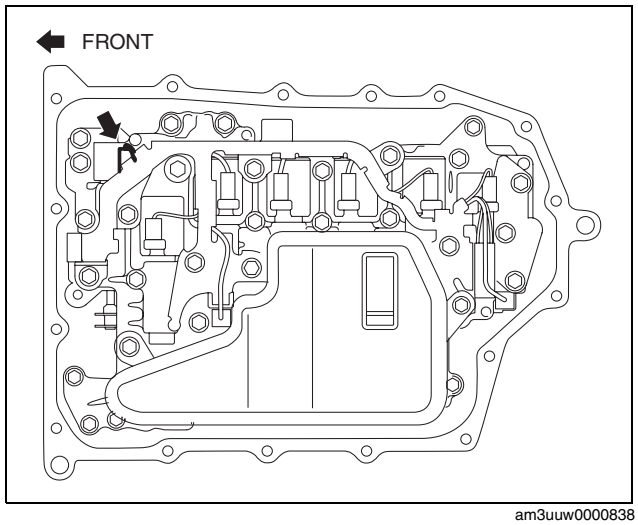

am3uuw0000838

AUTOMATIC TRANSAXLE [GW6A-EL, GW6AX-EL]

7. Remove the ON/OFF solenoid.

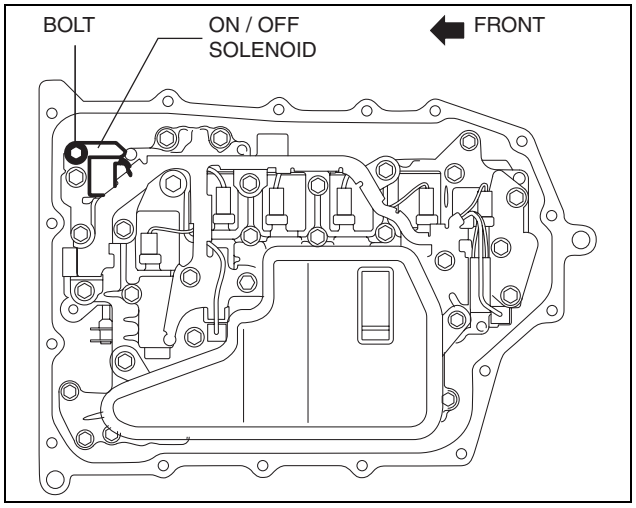

am3uuw0000838

8. Install the ON/OFF solenoid.

Tightening torque
9—10 N·m {92—101 kgf·cm, 80—88 in·lbf}

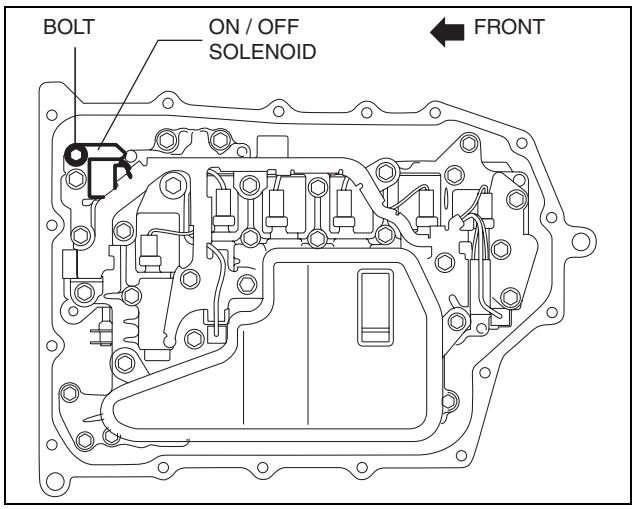

am3uuw0000838

9. Connect the ON/OFF solenoid connector.

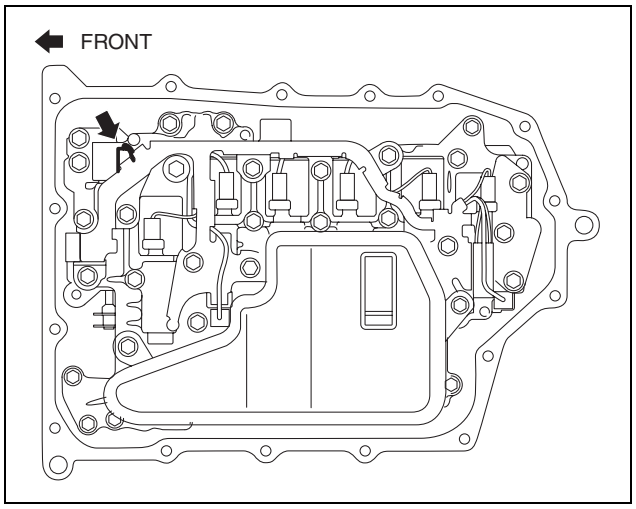

am3uuw0000838

AUTOMATIC TRANSAXLE [GW6A-EL, GW6AX-EL]

10. Apply a light coat of silicon sealant (TB1217E) to the contact surfaces of the oil pan and transaxle case.

    Caution
    - **Clean any remaining silicone sealant on the contact surface of the transaxle case and oil pan, and degrease the sealant area. Otherwise, oil could leak.**

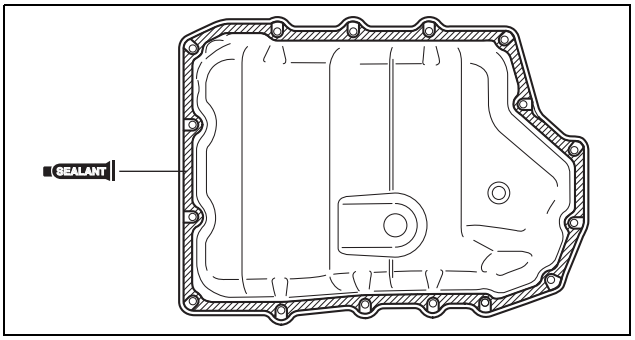

am3uuw0000828

11. Install the oil pan with new bolts before the applied sealant starts to harden.

    Tightening torque
    8—10 N·m {82—101 kgf·cm, 71—88 in·lbf}

12. Install the front under cover No.2. (See 09-16-41 FRONT UNDER COVER No.2 REMOVAL/INSTALLATION.)
13. Add the ATF. (See 05-17B-12 AUTOMATIC TRANSAXLE FLUID (ATF) REPLACEMENT [GW6A-EL, GW6AX-EL].)
14. Connect the negative battery cable. (See 01-17B-9 NEGATIVE BATTERY CABLE DISCONNECTION/CONNECTION [SKYACTIV-D 2.2].)
15. Perform the “Mechanical System Test”. (See 05-17B-4 MECHANICAL SYSTEM TEST [GW6A-EL, GW6AX-EL].)

AUTOMATIC TRANSAXLE [GW6A-EL, GW6AX-EL]

ELECTRIC AT OIL PUMP REMOVAL/INSTALLATION [GW6A-EL, GW6AX-EL]

id0517i2117600

Caution
- **Do not drop or apply a shock to the electric AT oil pump. Replace the electric AT oil pump if it has been dropped or received an impact.**
- **Do not disassemble the electric AT oil pump. Replace the electric AT oil pump if it has been disassembled.**
- **Make sure that there is no silicone sealant or other foreign matter in the electric AT oil pump and transaxle. Otherwise, it could cause a malfunction.**

1. Turn the steering wheel left until it locks.
2. Disconnect the negative battery cable. (See 01-17B-9 NEGATIVE BATTERY CABLE DISCONNECTION/ CONNECTION [SKYACTIV-D 2.2].)
3. Remove the splash shield (LH). (See 09-16-49 SPLASH SHIELD REMOVAL/INSTALLATION.)
4. Remove in the order indicated in the table.

1	Electric AT oil pump connector
2	Electric AT oil pump (See05-17B-28 Electric AT Oil Pump Installation Note.)
3	O-ring

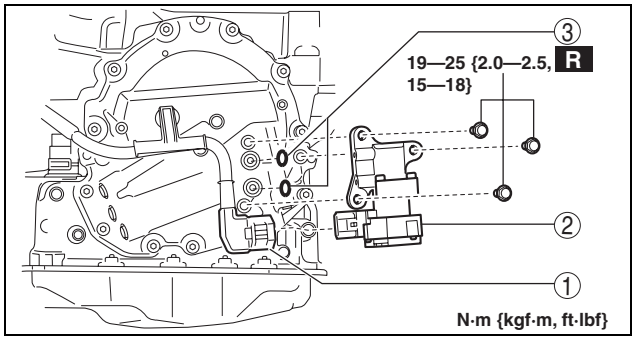

am3zzw0001264

5. Install in the reverse order of removal.
6. Adjust the ATF level. (See 05-17B-13 AUTOMATIC TRANSAXLE FLUID (ATF) ADJUSTMENT [GW6A-EL, GW6AX-EL].)

Electric AT Oil Pump Installation Note

1. Apply a light coat of silicon sealant (TB1217E) to the contact surfaces of the electric AT oil pump and end cover.

Caution
- **If any old sealant gets into the side cover during installation of the electric AT oil pump, trouble may occur in the end cover and electric AT oil pump, and clean with cleaning fluids.**
- **Do not damage the O-ring installation area and the sealing surface.**
- **To apply silicone sealant securely, clean away the oil on the sealing surface before applying silicone sealant.**

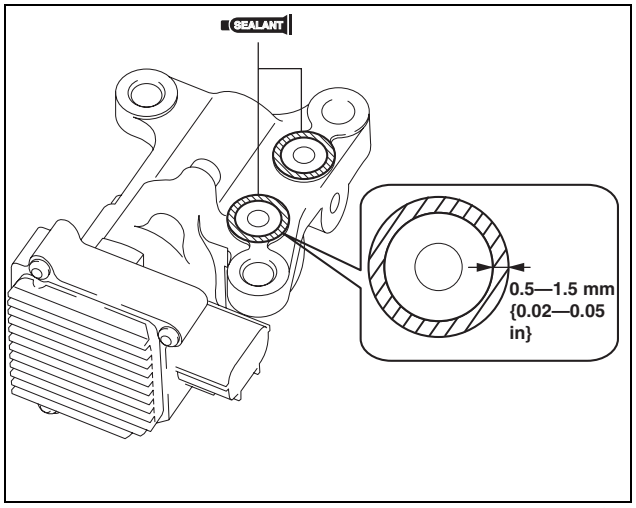

am3zzw0001265

2. Install the electric AT oil pump before the applied sealant starts to harden.

Tightening torque
19—25 N·m {2.0—2.5 kgf·m, 15—18 ft·lbf}

AUTOMATIC TRANSAXLE [GW6A-EL, GW6AX-EL]

AUTOMATIC TRANSAXLE REMOVAL/INSTALLATION [GW6A-EL]

id0517i21172i1

Caution

- **Performing the following procedures without first removing the front ABS wheel-speed sensor may possibly cause an open circuit in the harness if it is pulled by mistake. Before performing the following procedures, disconnect the front ABS wheel-speed sensor (axle side) and fix it to an appropriate place where the sensor will not be pulled by mistake while servicing the vehicle.**
- **Secure the steering wheel using tape or a cable to prevent the steering shaft from rotating after disconnecting the steering shaft. If the steering wheel rotates after the steering shaft and the steering gear and linkage are disconnected, the internal parts of the clock spring could be damaged.**

Removal

1. Disconnect the negative battery cable. (See 01-17B-9 NEGATIVE BATTERY CABLE DISCONNECTION/ CONNECTION [SKYACTIV-D 2.2].)
2. Remove the air cleaner and air hose as a single unit. (See 01-13B-6 INTAKE-AIR SYSTEM REMOVAL/ INSTALLATION [SKYACTIV-D 2.2].)
3. Remove the battery tray. (See 01-17B-3 BATTERY REMOVAL/INSTALLATION [SKYACTIV-D 2.2].)
4. Disconnect the wiring harness clip from the transaxle.
5. Remove the splash shield. (See 09-16-49 SPLASH SHIELD REMOVAL/INSTALLATION.)

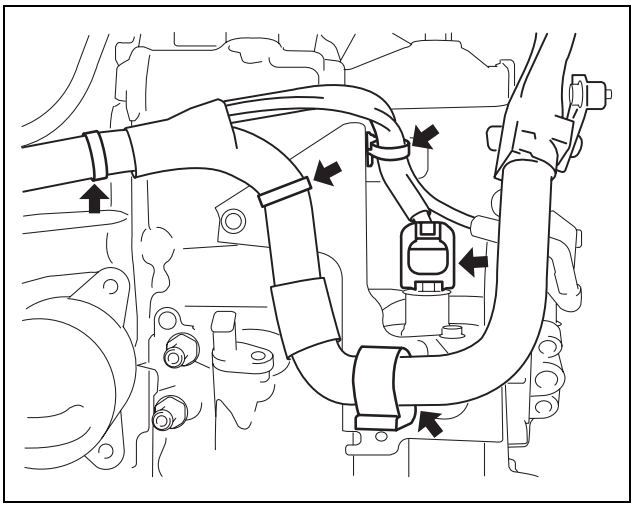

ac5wzw0000428

6. Disconnect the electric AT oil pump connector and electric AT oil pump harness from the transaxle.
7. Disconnect the control valve body connector.

Caution

- **Make sure that your hand does not touch the terminal as the connector terminal could be damaged.**
- **Water or foreign objects entering the connector can cause a poor connection or corrosion. Be sure not to drop water or foreign objects on the connector when disconnecting it.**

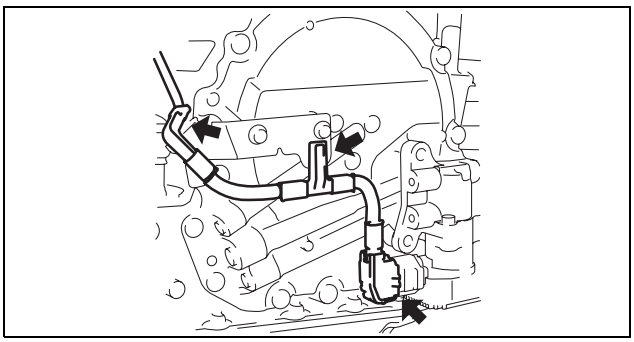

ac5wzw0000428

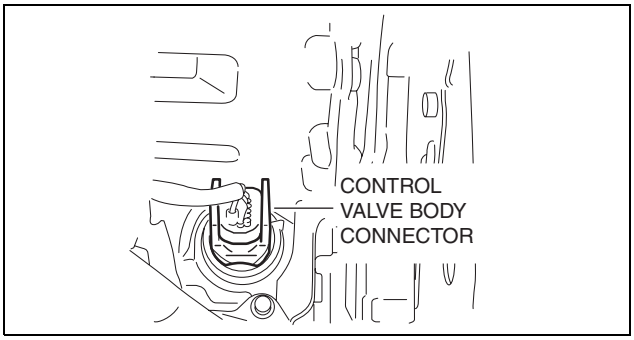

ac5wzw0000428

AUTOMATIC TRANSAXLE [GW6A-EL, GW6AX-EL]

8. Disconnect the ground cable.

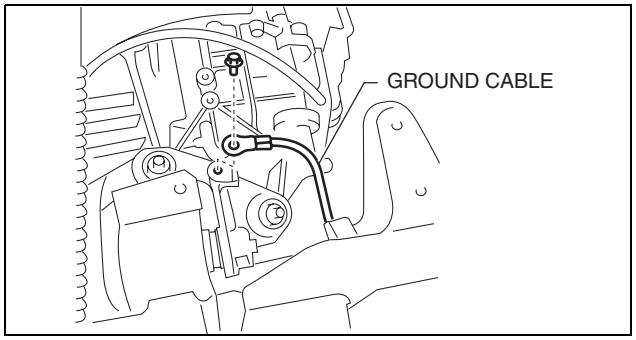

ac5wzw0000428

9. Disconnect the selector cable from the transaxle.

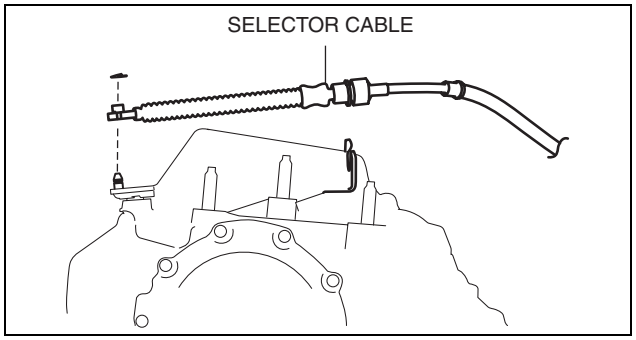

ac5wzw0000429

10. Remove the selector cable bracket.
11. Remove the EGR cooler. (See 01-16B-12 EGR COOLER REMOVAL/INSTALLATION [SKYACTIV-D 2.2].)

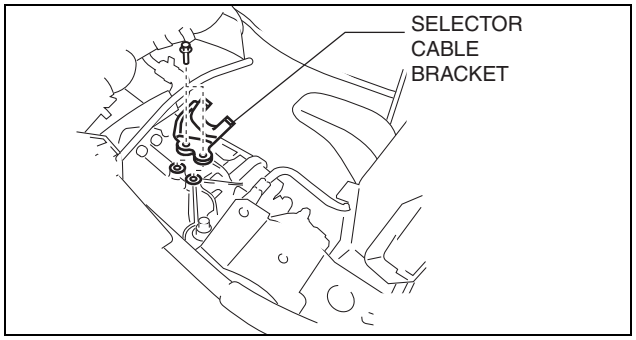

ac5wzw0000429

12. Disconnect the solenoid valve connectors and the wiring harness from the solenoid valve component. (See 01-13B-38 COMPRESSOR BYPASS SOLENOID VALVE REMOVAL/INSTALLATION [SKYACTIV-D 2.2]) (See 01-13B-50 REGULATING SOLENOID VALVE REMOVAL/INSTALLATION [SKYACTIV-D 2.2]) (See 01-13B-61 WASTEGATE SOLENOID VALVE REMOVAL/INSTALLATION [SKYACTIV-D 2.2])

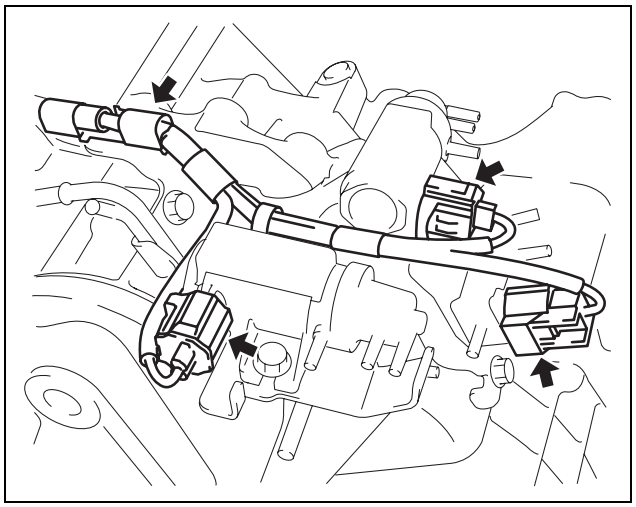
ac5wzw0000429

AUTOMATIC TRANSAXLE [GW6A-EL, GW6AX-EL]

13. Disconnect the solenoid valve component from the ATX with the hose still connected, and set it out of the way. (See 01-13B-38 COMPRESSOR BYPASS SOLENOID VALVE REMOVAL/INSTALLATION [SKYACTIV-D 2.2]) (See 01-13B-50 REGULATING SOLENOID VALVE REMOVAL/INSTALLATION [SKYACTIV-D 2.2]) (See 01-13B-61 WASTEGATE SOLENOID VALVE REMOVAL/INSTALLATION [SKYACTIV-D 2.2])
14. Disconnect the breather hose from the transaxle.
15. Remove the joint cover. (See 06-13-4 STEERING WHEEL AND COLUMN REMOVAL/INSTALLATION.)
16. Disconnect the intermediate shaft from the steering gear and linkage. (See 06-13-4 STEERING WHEEL AND COLUMN REMOVAL/INSTALLATION.)
17. Remove the front tires. (See 02-10-1 GENERAL PROCEDURES (SUSPENSION).)
18. Remove the front under cover No.2. (See 09-16-41 FRONT UNDER COVER No.2 REMOVAL/INSTALLATION.)
19. Remove the front under cover No.1. (See 09-16-40 FRONT UNDER COVER No.1 REMOVAL/INSTALLATION.)
20. Drain the ATF. (See 05-17B-12 AUTOMATIC TRANSAXLE FLUID (ATF) REPLACEMENT [GW6A-EL, GW6AX-EL].)
21. Disconnect the oil hose from the transaxle. (With oil cooler No.2) (See 05-17B-71 OIL COOLER REMOVAL/INSTALLATION [GW6A-EL, GW6AX-EL].)
22. Set the oil pipe component in a place which does not interfere with the servicing. (With oil cooler No.2) (See 05-17B-71 OIL COOLER REMOVAL/INSTALLATION [GW6A-EL, GW6AX-EL].)

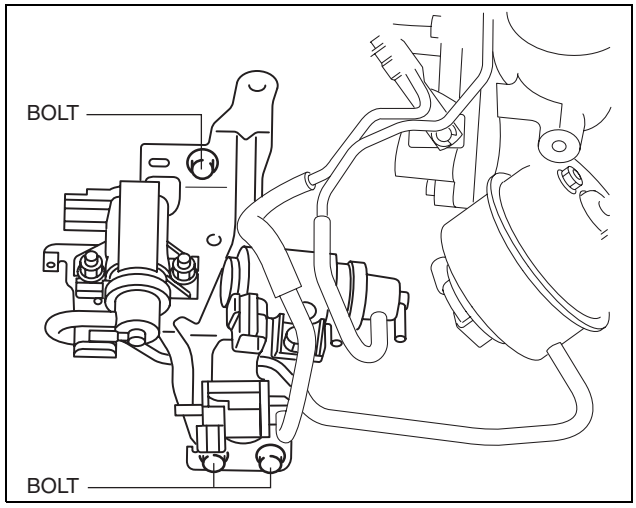

ac5wzw0000429

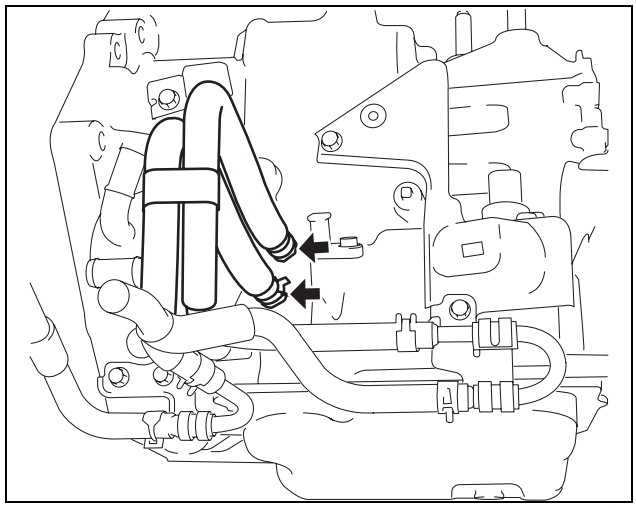
ac5wzw0000429

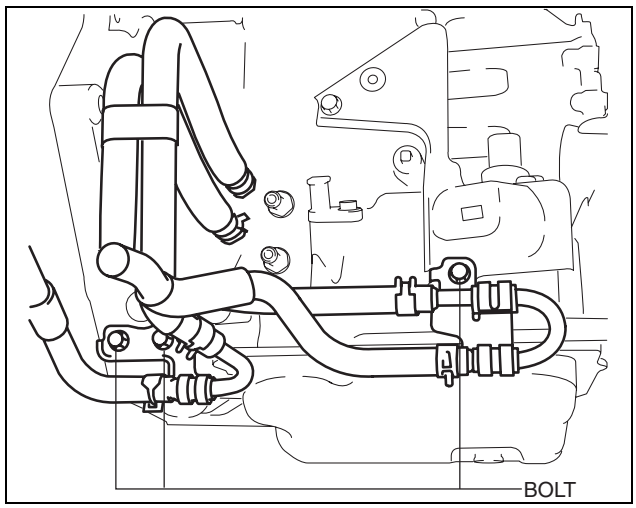

ac5wzw0000429

AUTOMATIC TRANSAXLE [GW6A-EL, GW6AX-EL]

23. Remove the bracket from the transaxle.
24. Disconnect the oil cooler from the transaxle with the hose connected. (Except Automatic Transaxle Replacement) (See 05-17B-71 OIL COOLER REMOVAL/INSTALLATION [GW6A-EL, GW6AX-EL].)
25. Disconnect the water hose from the oil cooler. (Automatic Transaxle Replacement) (See 05-17B-71 OIL COOLER REMOVAL/INSTALLATION [GW6A-EL, GW6AX-EL].)
26. Remove the starter. (See 01-19B-2 STARTER REMOVAL/INSTALLATION [SKYACTIV-D 2.2].)

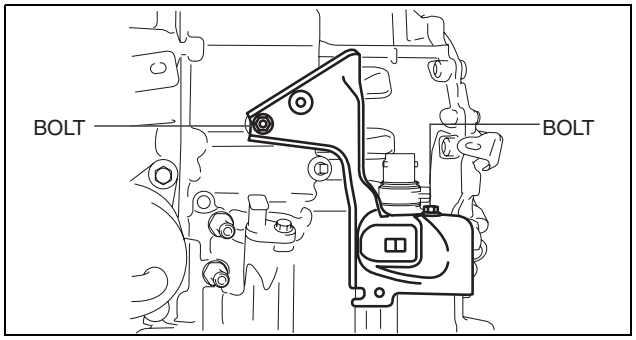

ac5wzw0000429

27. Remove the blind cover.

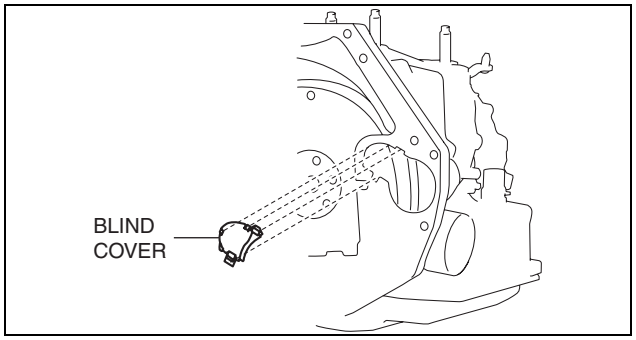

ac5wzw0000429

28. Hold the crankshaft pulley to prevent drive plate from rotating.
29. Remove the torque converter nuts from the starter installation hole.

Note
- There are six installation nuts.

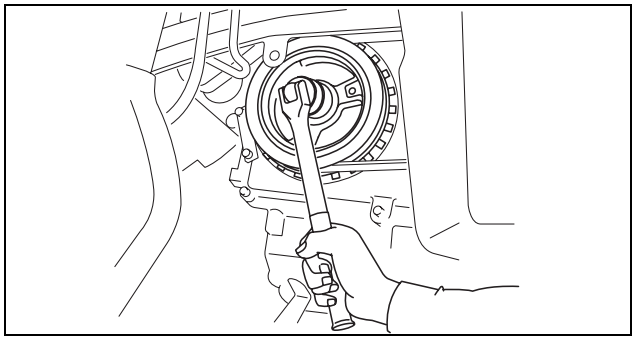
ac5wzw0000429

30. Disconnect the front ABS wheel-speed sensors from the steering knuckles. (See 04-15-9 FRONT ABS WHEEL-SPEED SENSOR REMOVAL/INSTALLATION.)
31. Disconnect the clips securing the brake hose from the front shock absorbers. (See 04-11-30 BRAKE HOSE (FRONT) REMOVAL/INSTALLATION.)
32. Disconnect the tie-rod end ball joints from the steering knuckles. (See 06-13-16 STEERING GEAR AND LINKAGE REMOVAL/INSTALLATION.)
33. Disconnect the front lower arms from the steering knuckles. (See 02-13-7 FRONT LOWER ARM REMOVAL/INSTALLATION.)

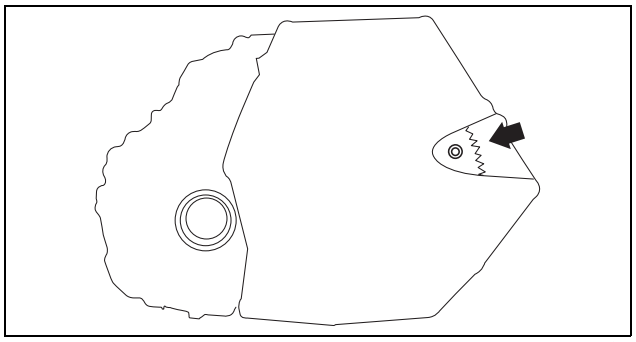
ac5wzw0000429

34. Disconnect the front stabilizer control links from the front stabilizer. (See 02-13-10 FRONT STABILIZER REMOVAL/INSTALLATION.)
35. Disconnect the front drive shaft (LH) from the transaxle. (See 03-13-3 FRONT DRIVE SHAFT REMOVAL/INSTALLATION.)
36. Disconnect the front drive shaft (RH) from the transaxle. (See 03-13-3 FRONT DRIVE SHAFT REMOVAL/INSTALLATION.)

AUTOMATIC TRANSAXLE [GW6A-EL, GW6AX-EL]

37. Remove the seal rubber.
38. Remove the front crossmember component and No.1 engine mount rubber as a single unit. (See 02-13-15 FRONT CROSSMEMBER REMOVAL/INSTALLATION.)

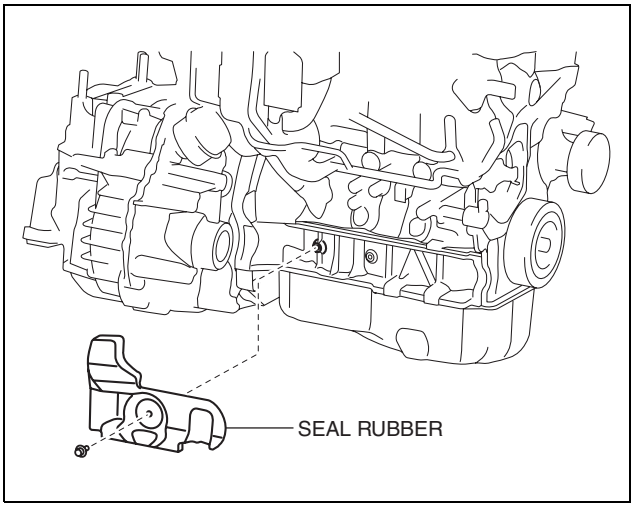

ac5wzw0000430

39. Remove the bracket plate No.1 and No.1 engine mount bracket component from the transaxle.

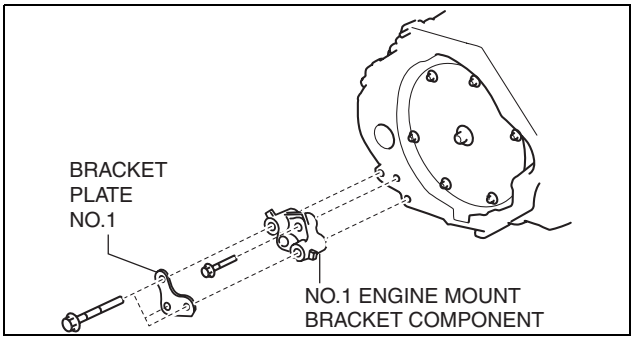

ac5wzw0000430

40. Install the **SST** using the following procedures.

Caution
- **Refer to the SST instruction manual for the basic handing procedure.**

(1) Install one front foot No.2 to each of the left and right front shafts of the **SST**.

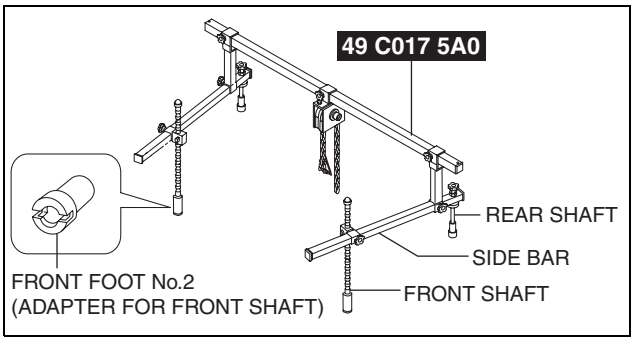

ac5wzw0000430

AUTOMATIC TRANSAXLE [GW6A-EL, GW6AX-EL]

(2) Protect the positions shown in the figure using tape.

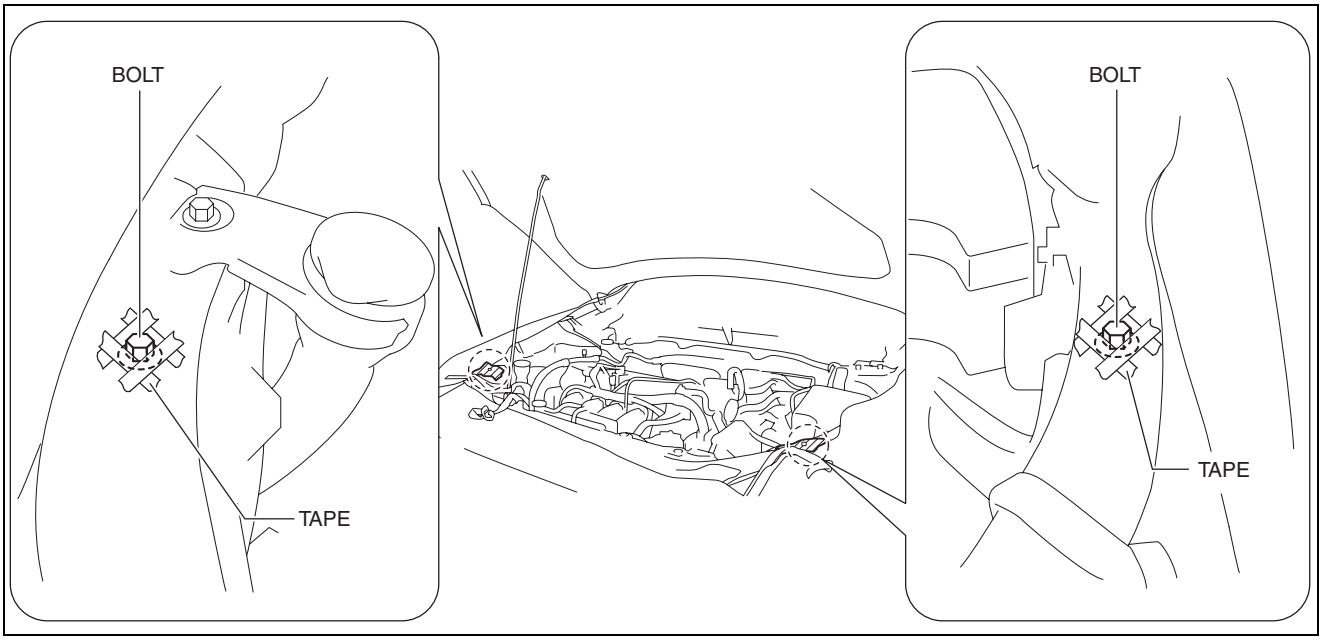

E5000430

(3) Remove the engine cover adapter.
(4) Install the SST to the position shown in the figure using the following bolt and washer.

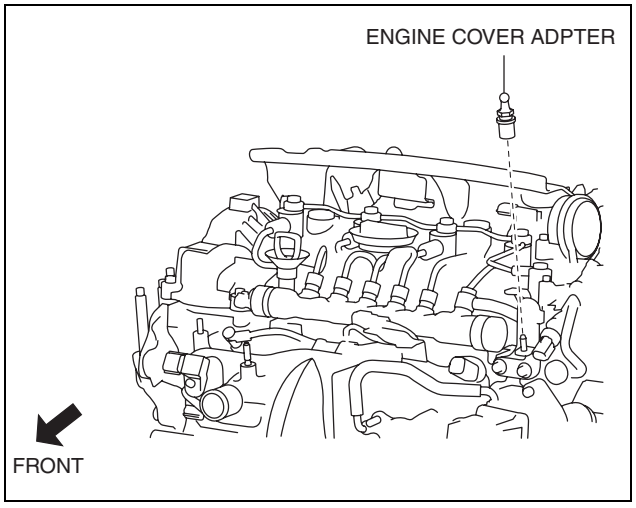

E5000430

Engine front side

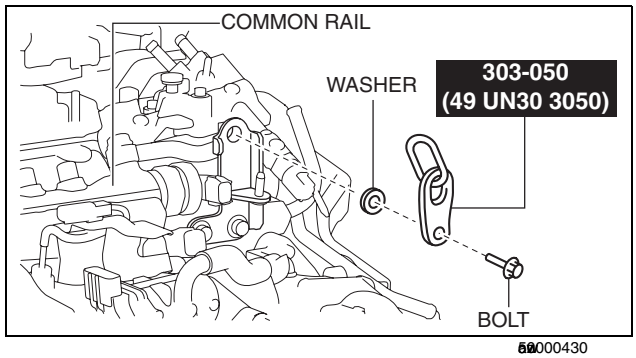

E5000430

Bolt: part number 99794 1025 or an M10—1.25, length 25 mm {0.98 in}
Washer: approx. 3 mm {0.1 in} thickness

Tightening torque
38—51 N·m {3.9—5.2 kgf·m, 29—37 ft·lbf}

AUTOMATIC TRANSAXLE [GW6A-EL, GW6AX-EL]

Engine rear side

Bolt: part number 99794 1025 or an M10—1.25, length 25 mm {0.98 in}

Tightening torque
38—51 N·m {3.9—5.2 kgf·m, 29—37 ft·lbf}

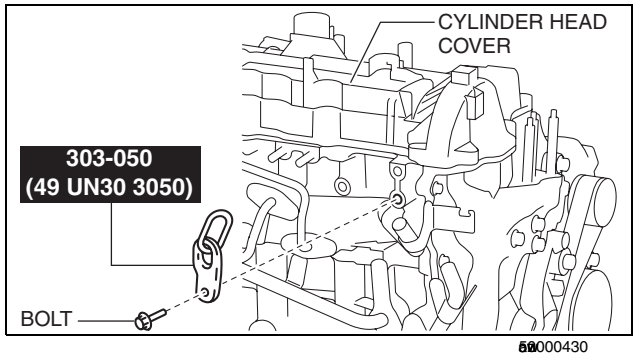

(5) As shown in the figure, set the rear shafts of the **SST** to the left and right shock absorber nuts.

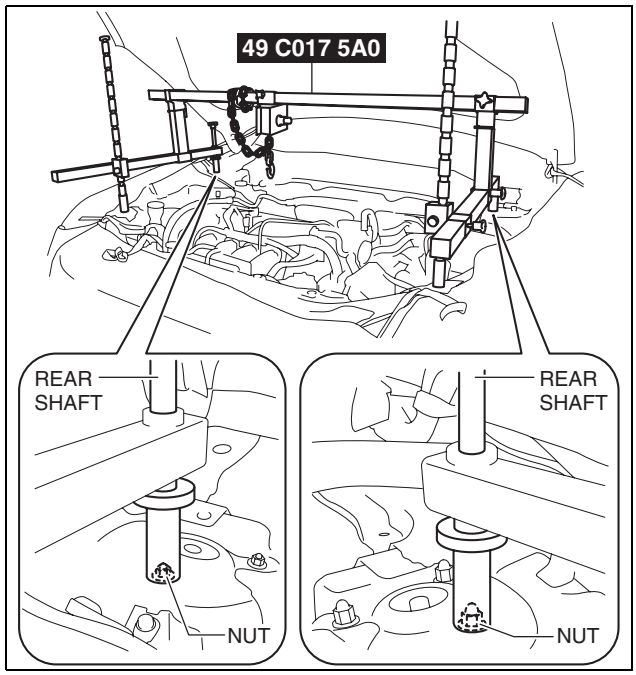

(6) As shown in the figure, set the front shafts of the **SST** to the left and right bolts.

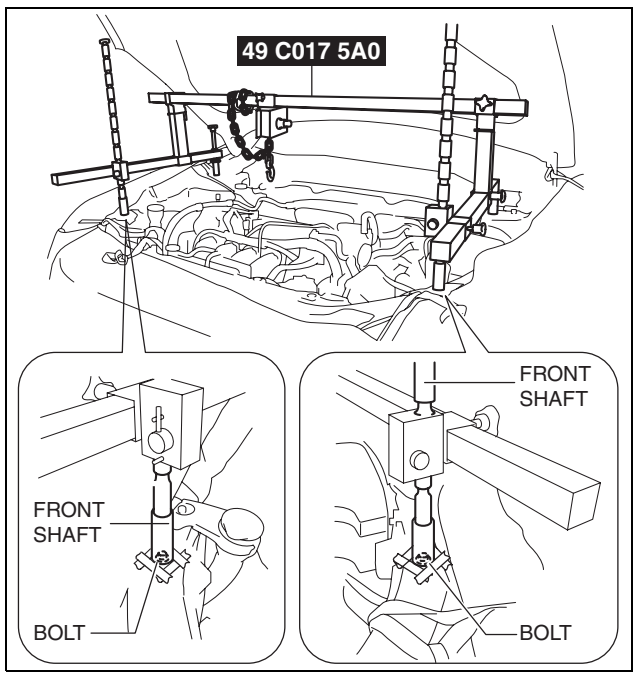

AUTOMATIC TRANSAXLE [GW6A-EL, GW6AX-EL]

(7) Install the **SST** (49 L017 5A0) to the **SST** (49 C017 5A0) as shown in the figure.

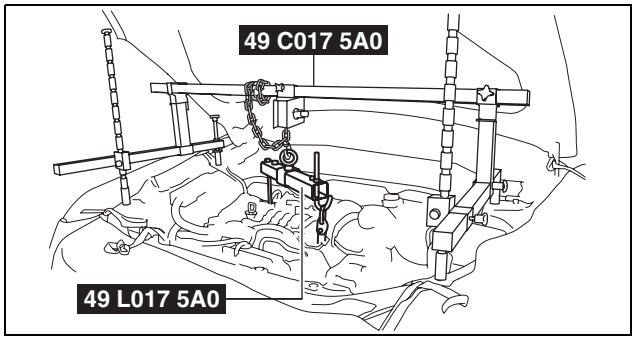

ac5wzw0000430

(8) Install the **SST** (49 L017 5A0) to the **SST** (49 UN30 3050) with the hook of the **SST** (49 L017 5A0) facing outward.
(9) Adjust the height of the left and right side bars so that they are leveled, then tighten each part of the **SST**.
(10) Apply tension to the chain to secure the engine.

41. Remove in the order shown in the figure.

Warning

- **Improperly jacking a transaxle is dangerous. It can slip off the jack and may cause serious injury.**

Caution

- **To prevent the torque converter and transaxle from separating, remove the transaxle without tilting it toward the torque converter.**

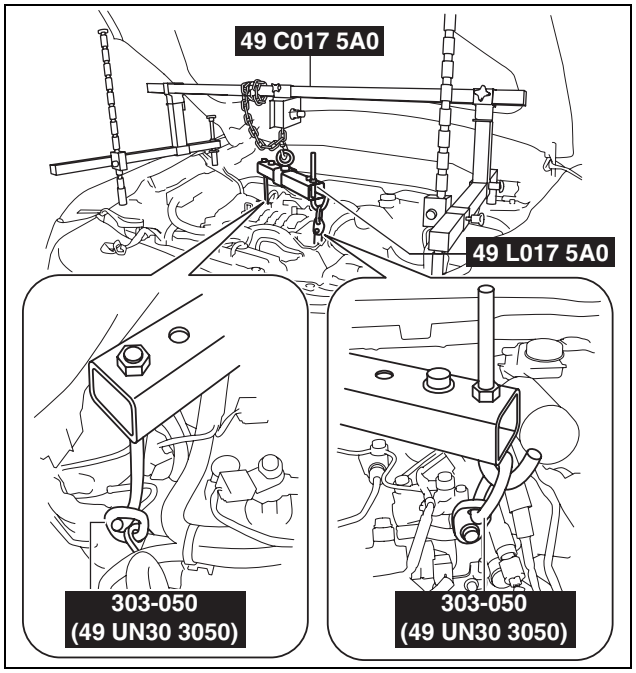

ac5wzw0000431

AUTOMATIC TRANSAXLE [GW6A-EL, GW6AX-EL]

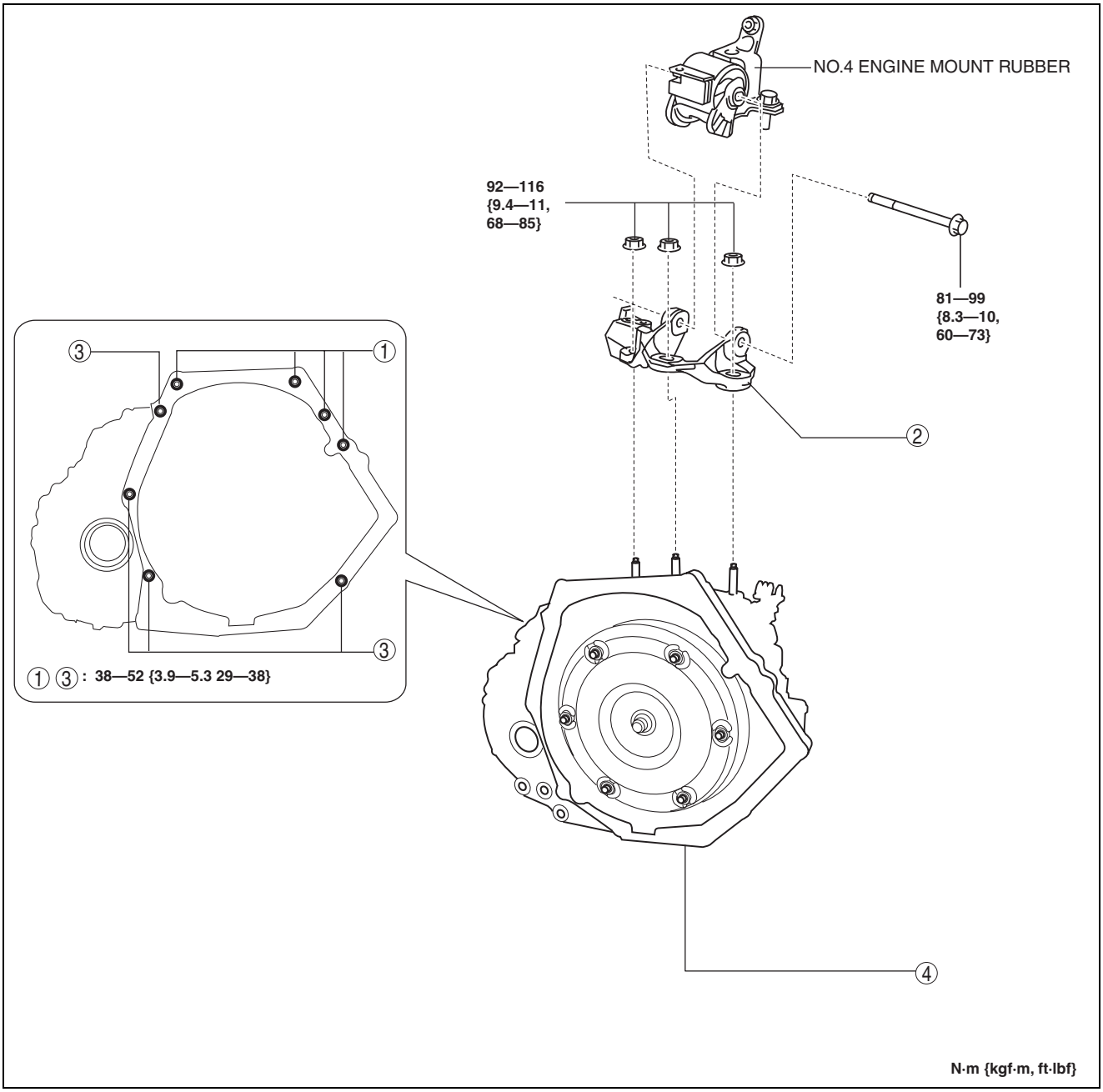

ac5wzw0000431

1	Transaxle mounting bolts (upper side)
2	No.4 engine mount bracket (See 05-17B-38 No.4 engine mount bracket removal note.)
3	Transaxle mounting bolts (lower side) (See 05-17B-38 Transaxle mounting bolt removal note.)

4	Transaxle (See 05-17B-38 No.4 engine mount bracket removal note.) (See 05-17B-38 Transaxle mounting bolt removal note.)

AUTOMATIC TRANSAXLE [GW6A-EL, GW6AX-EL]

No.4 engine mount bracket removal note

Caution
- **A slot has been adopted for the No.4 engine mount bracket installation hole. If the No.4 engine mount bracket is deviated from the original position when installing the No.4 engine mount, engine noise or vibration could increase. When removing the No.4 engine mount, place alignment marks on the No.4 engine mount bracket so that they can be assembled to the same positions as before removal.**

1. Place alignment marks on the locations shown in the figure so that they can be assembled to the same positions as before removal.

   Note
   - Paint so that the outline of the nut is framed on the bracket side.

2. Remove the No.4 engine mount bracket.

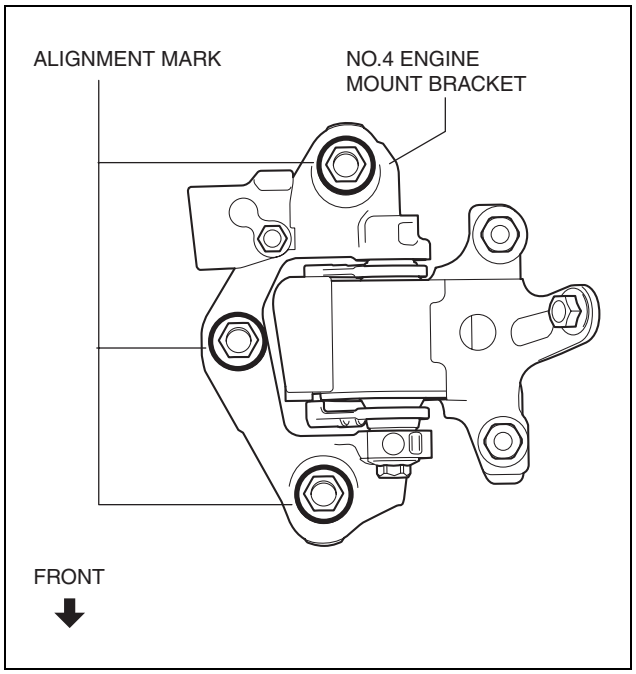

ac5wzw0000431

Transaxle mounting bolt removal note

Warning
- **Remove the transaxle carefully, holding it steady. If the transaxle falls it could be damaged or cause injury.**

1. Adjust the **SST** and lean the engine toward the transaxle.

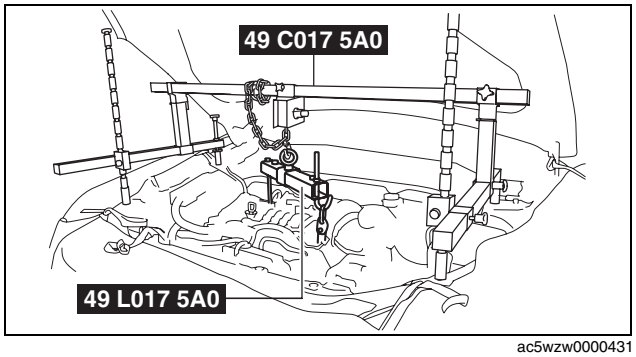

ac5wzw0000431

AUTOMATIC TRANSAXLE [GW6A-EL, GW6AX-EL]

2. Support the transaxle on a jack.
3. Remove the transaxle mounting bolts (lower side).
4. Remove the transaxle.

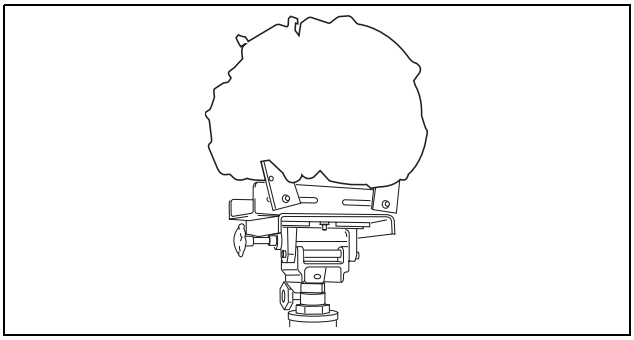
ac5wzw0000431

Installation

Caution
- **Verify that the torque converter stud bolts are inserted into the drive plate bolt holes, and install the transaxle installation bolts. Otherwise, the drive plate could be damaged.**

1. Verify that the torque converter stud bolts are inserted into the drive plate bolt holes from the starter installation hole.

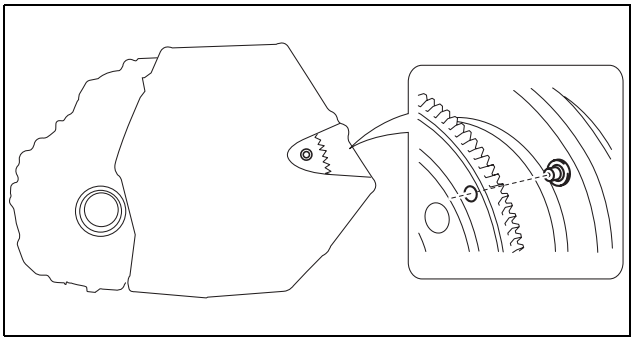
ac5wzw0000431

2. Install the transaxle mounting bolts.

Tightening torque
38—52 N·m {3.9—5.3 kgf·m, 29—38 ft·lbf}

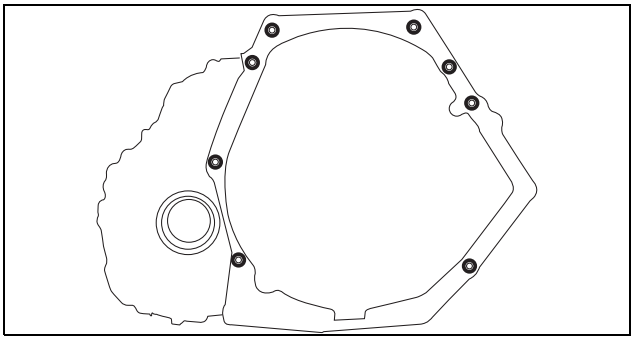
ac5wzw0000431

3. Tighten the stud bolts for the transaxle.

Note
- If the No.4 engine mount bracket nut is loosened, tighten the stud bolts for the transaxle because they may be loosened.

Tightening torque
15—25 N·m {1.6—2.5 kgf·m, 12—18 ft·lbf}

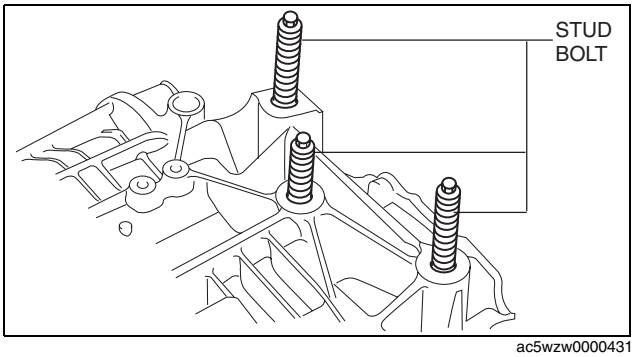

ac5wzw0000431

AUTOMATIC TRANSAXLE [GW6A-EL, GW6AX-EL]

4. Install the No.4 engine mount bracket to No.4 engine mount rubber, and temporarily tighten the installation bolt.

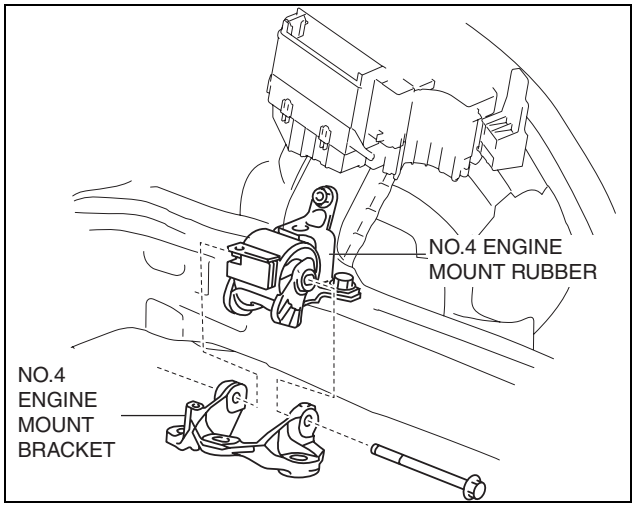

ac5wzw0000431

5. Pull up the transaxle using the **SSTs**, pass the transaxle stud bolts through the No.4 engine mount bracket, and temporarily tighten the No.4 engine mount installation nuts.

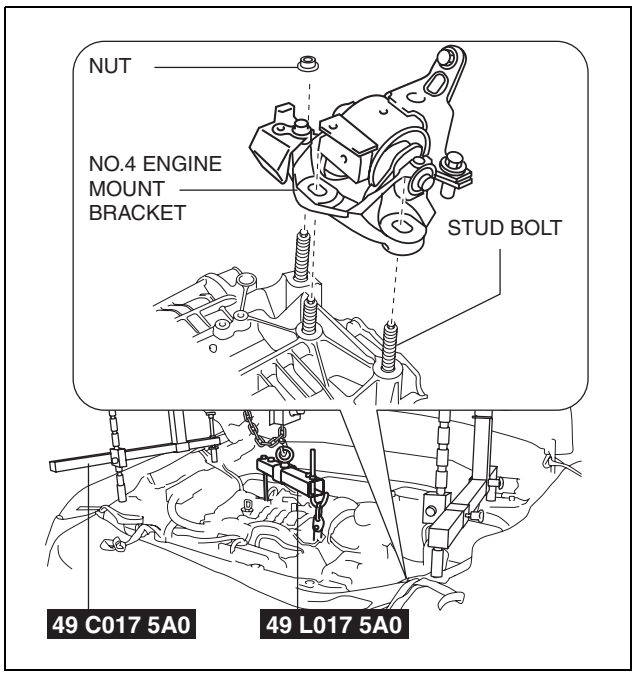

ac5wzw0000431

6. Install the No.1 engine mount bracket component and the bracket plate No.1 to the transaxle, and temporarily tighten the installation bolts.
7. Install the front crossmember component and No.1 engine mount rubber as a single unit. (See 02-13-15 FRONT CROSSMEMBER REMOVAL/ INSTALLATION.)

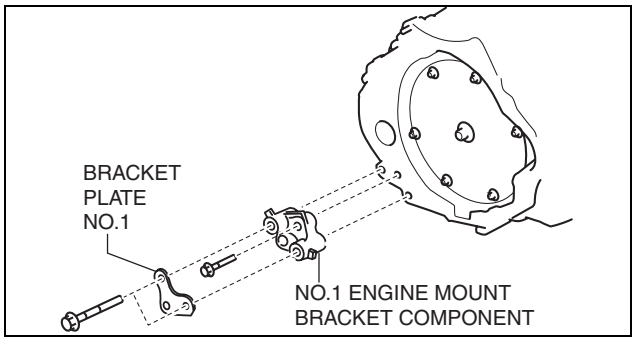

ac5wzw0000432

AUTOMATIC TRANSAXLE [GW6A-EL, GW6AX-EL]

8. Temporarily tighten the No.1 engine mount rubber installation bolts.

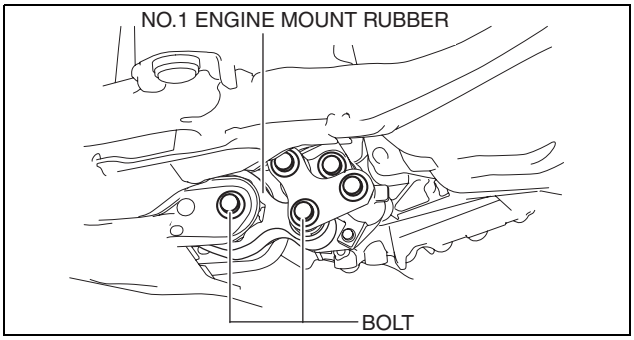

ac5wzw0000432

9. Align the alignment marks on the No.4 engine mount bracket and nuts, and temporarily tighten the nuts shown in the figure.

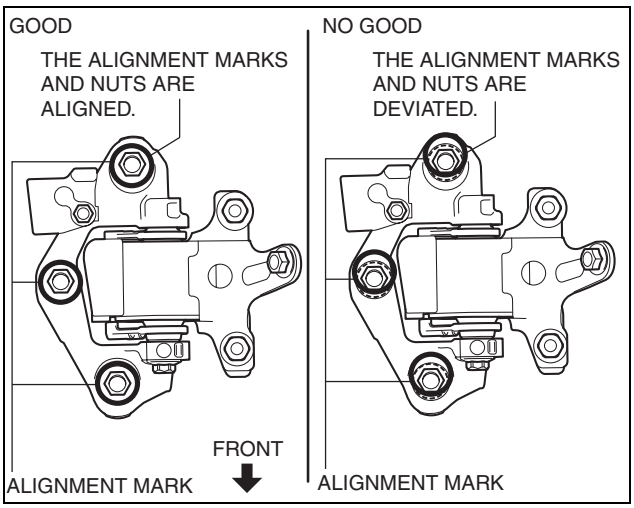

ac5wzw0000432

10. Tighten the No.4 engine mount bracket installation nuts and bolt in the order shown in the figure.

No.	Tightening torque
1, 2, 3	92—116 N·m {9.4—11 kgf·m, 69—85 ft·lbf}
4	81—99 N·m {8.3—10 kgf·m, 60—73 ft·lbf}

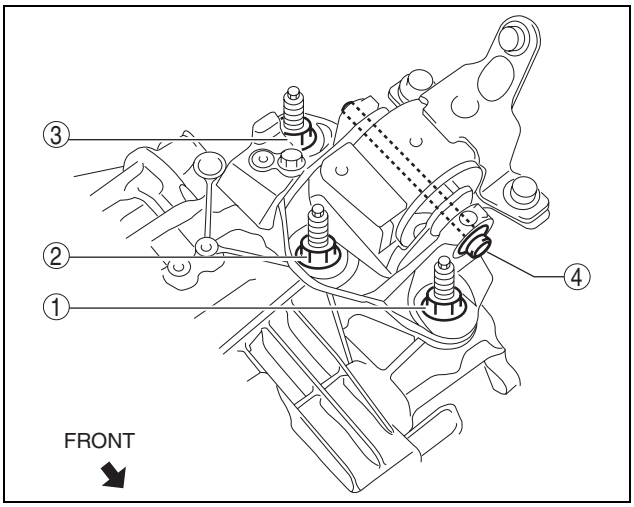

ac5wzw0000432

11. Tighten the No.1 engine mount bracket and bracket plate installation bolts in the order shown in the figure.

Tightening torque
84—98 N·m {8.6—9.9 kgf·m, 62—72 ft·lbf}

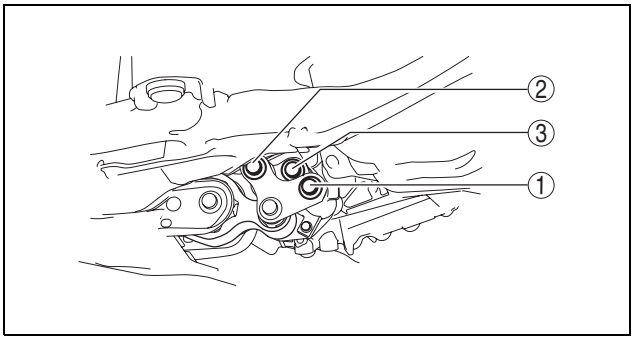

ac5wzw0000432

AUTOMATIC TRANSAXLE [GW6A-EL, GW6AX-EL]

12. Tighten the No.1 engine mount rubber installation bolts in the order shown in the figure.

No.	Tightening torque
1	130—151 N·m {14—15 kgf·m, 96—111 ft·lbf}
2	130—164 N·m {14—16 kgf·m, 96—120 ft·lbf}

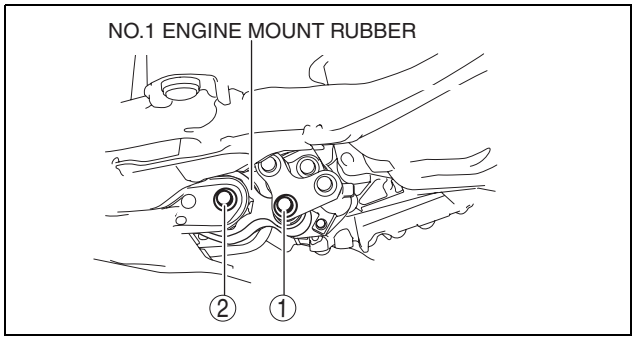

ac5wzw0000432

13. Remove the **SST (49 C017 5A0)**.

14. Fix the crankshaft pulley to lock the torque converter against rotation.

Caution
- **After temporarily tightening the torque converter installation nut uniformly, tighten it to the specified torque.**

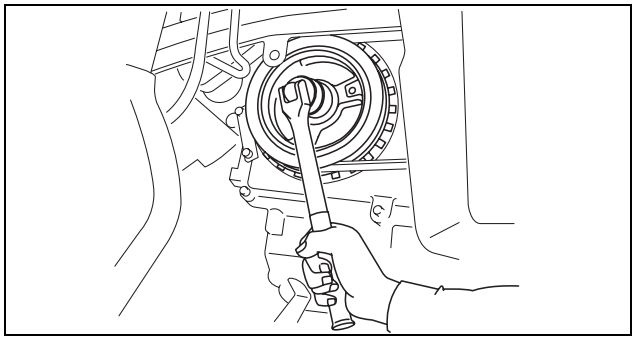
ac5wzw0000432

15. Tighten the torque converter installation nut.

Note
- There are six installation nuts.

Tightening torque
41—54 N·m {4.2—5.5 kgf·m, 31—39 ft·lbf}

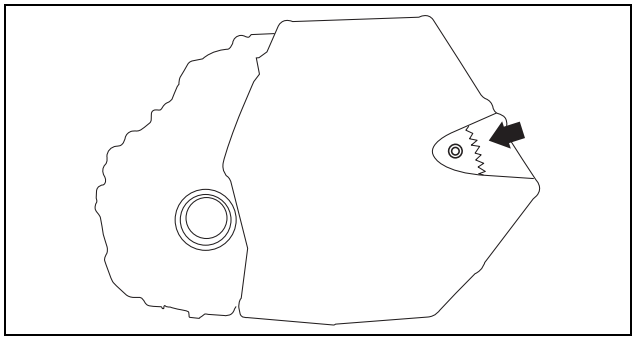
ac5wzw0000432

16. Install the blind cover.
17. Install the starter. (See 01-19B-2 STARTER REMOVAL/INSTALLATION [SKYACTIV-D 2.2].)

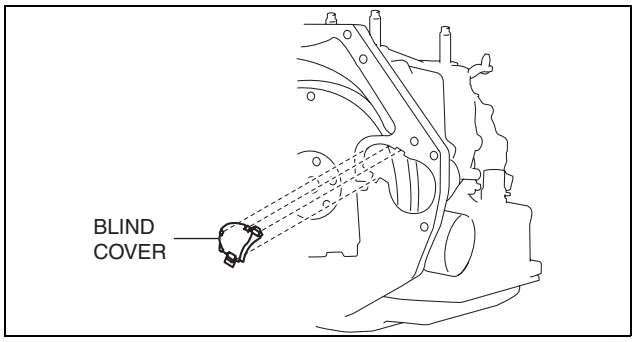

ac5wzw0000432

AUTOMATIC TRANSAXLE [GW6A-EL, GW6AX-EL]

18. Install the seal rubber.
19. Install the front drive shaft (RH) to the transaxle. (See 03-13-3 FRONT DRIVE SHAFT REMOVAL/INSTALLATION.)
20. Install the front drive shaft (LH) to the transaxle. (See 03-13-3 FRONT DRIVE SHAFT REMOVAL/INSTALLATION.)
21. Install the front stabilizer control links to the front stabilizer. (See 02-13-10 FRONT STABILIZER REMOVAL/INSTALLATION.)
22. Install the front lower arms to the steering knuckles. (See 02-13-7 FRONT LOWER ARM REMOVAL/INSTALLATION.)
23. Install the tie-rod end ball joints to the steering knuckles. (See 06-13-16 STEERING GEAR AND LINKAGE REMOVAL/INSTALLATION.)
24. Install the clips securing the brake hose to the front shock absorbers. (See 04-11-30 BRAKE HOSE (FRONT) REMOVAL/INSTALLATION.)
25. Install the front ABS wheel-speed sensors to the steering knuckles. (See 04-15-9 FRONT ABS WHEEL-SPEED SENSOR REMOVAL/INSTALLATION.)
26. Connect the water hose to the oil cooler. (Automatic Transaxle Replacement) (See 05-17B-71 OIL COOLER REMOVAL/INSTALLATION [GW6A-EL, GW6AX-EL].)
27. Install the oil cooler to the transaxle with the hose connected. (Except Automatic Transaxle Replacement) (See 05-17B-71 OIL COOLER REMOVAL/INSTALLATION [GW6A-EL, GW6AX-EL].)
28. Install the bracket to the transaxle.
29. Install the oil pipe conponent. (With oil cooler No.2) (See 05-17B-71 OIL COOLER REMOVAL/INSTALLATION [GW6A-EL, GW6AX-EL].)

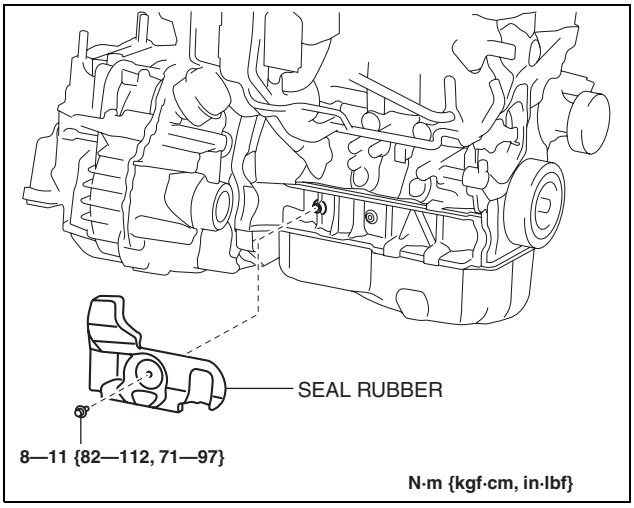

ac5wzw0000432

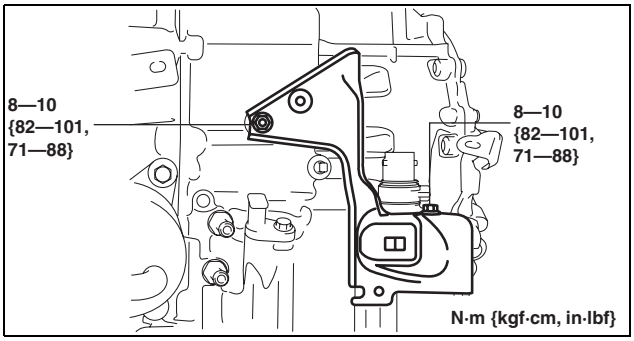

ac5wzw0000433

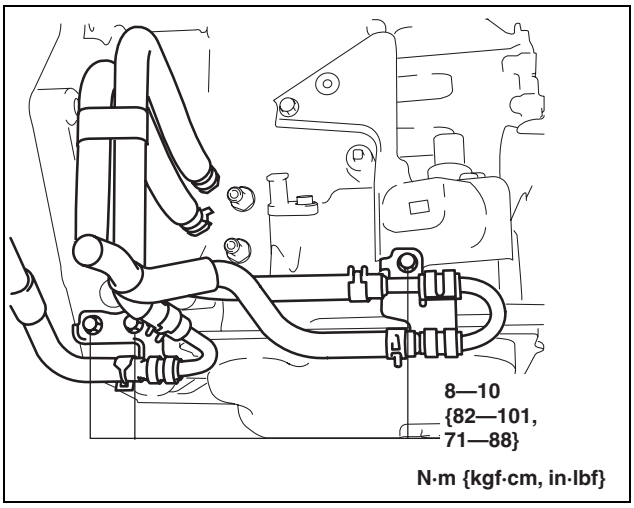

ac5wzw0000433

AUTOMATIC TRANSAXLE [GW6A-EL, GW6AX-EL]

30. Connect the oil hose to the transaxle. (With oil cooler No.2) (See 05-17B-71 OIL COOLER REMOVAL/INSTALLATION [GW6A-EL, GW6AX-EL].)
31. Install the front under cover No.1. (See 09-16-40 FRONT UNDER COVER No.1 REMOVAL/INSTALLATION.)
32. Install the front under cover No.2. (See 09-16-41 FRONT UNDER COVER No.2 REMOVAL/INSTALLATION.)
33. Install the front tires. (See 02-10-1 GENERAL PROCEDURES (SUSPENSION).)
34. Install the intermediate shaft to the steering gear and linkage. (See 06-13-4 STEERING WHEEL AND COLUMN REMOVAL/INSTALLATION.)
35. Install the joint cover. (See 06-13-4 STEERING WHEEL AND COLUMN REMOVAL/INSTALLATION.)
36. Connect the breather hose to the transaxle.
37. Install the solenoid valve component. (See 01-13B-38 COMPRESSOR BYPASS SOLENOID VALVE REMOVAL/INSTALLATION [SKYACTIV-D 2.2]) (See 01-13B-50 REGULATING SOLENOID VALVE REMOVAL/INSTALLATION [SKYACTIV-D 2.2]) (See 01-13B-61 WASTEGATE SOLENOID VALVE REMOVAL/INSTALLATION [SKYACTIV-D 2.2])

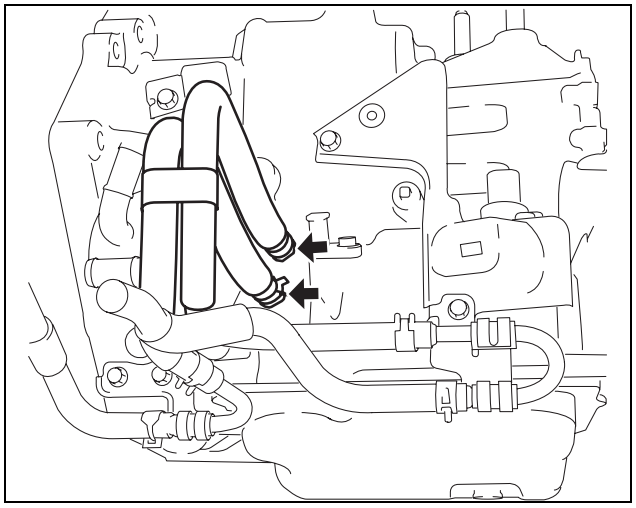
ac5wzw0000433

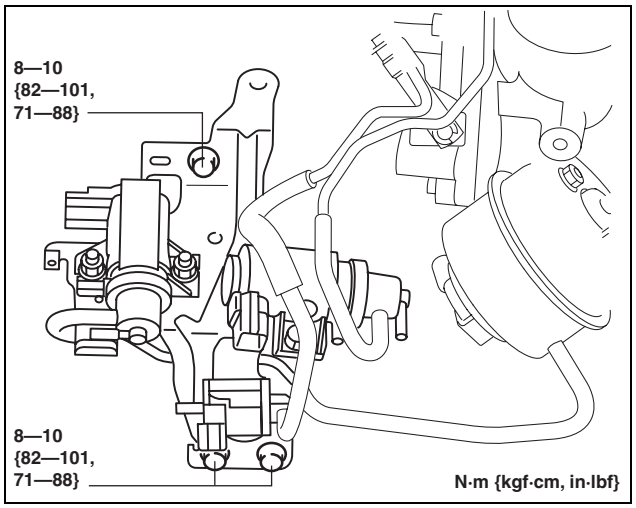

ac5wzw0000433

38. Connect the solenoid valve connectors and the wiring harness to the solenoid valve component. (See 01-13B-38 COMPRESSOR BYPASS SOLENOID VALVE REMOVAL/INSTALLATION [SKYACTIV-D 2.2]) (See 01-13B-50 REGULATING SOLENOID VALVE REMOVAL/INSTALLATION [SKYACTIV-D 2.2]) (See 01-13B-61 WASTEGATE SOLENOID VALVE REMOVAL/INSTALLATION [SKYACTIV-D 2.2])
39. Install the EGR cooler. (See 01-16B-12 EGR COOLER REMOVAL/INSTALLATION [SKYACTIV-D 2.2].)

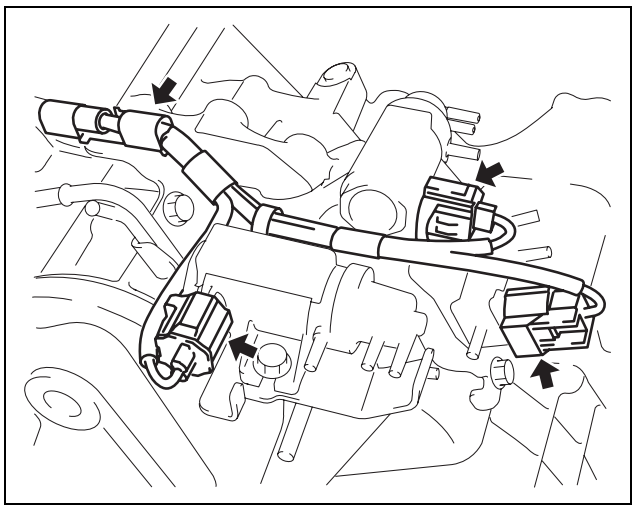
ac5wzw0000433

AUTOMATIC TRANSAXLE [GW6A-EL, GW6AX-EL]

40. Install the selector cable bracket.

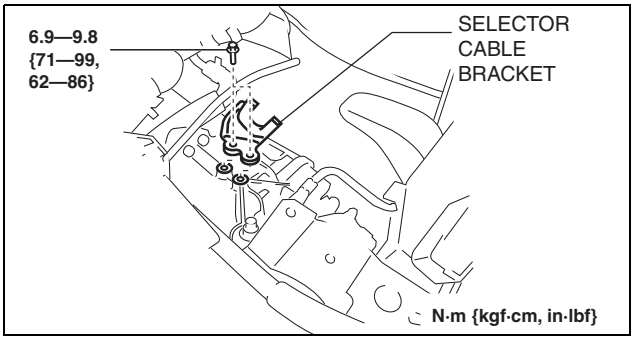

ac5wzw0000433

41. Connect the selector cable to the transaxle.

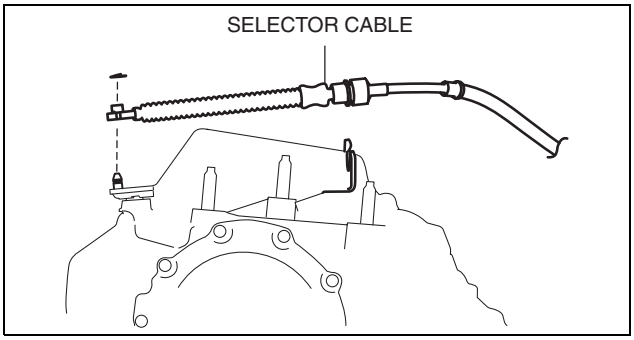

ac5wzw0000433

42. Install the ground cable.
43. Connect the control valve body connector.

Caution

- **Make sure that your hand does not touch the terminal as the connector terminal could be damaged.**
- **Verify that there is no fluid or foreign matter adhering to the connector before connecting the connector.**
- **Insert the connector straight as the connector terminal could be damaged.**
- **Rotate the connector lever until a click is heard.**

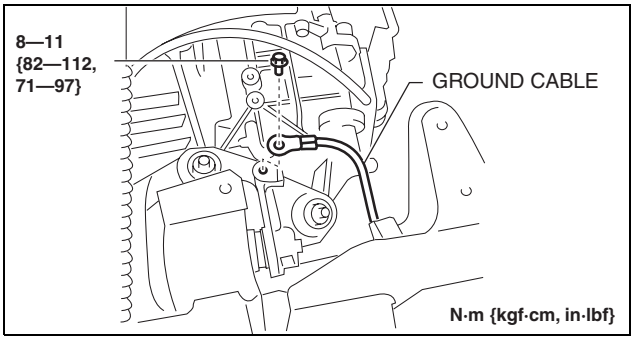

ac5wzw0000433

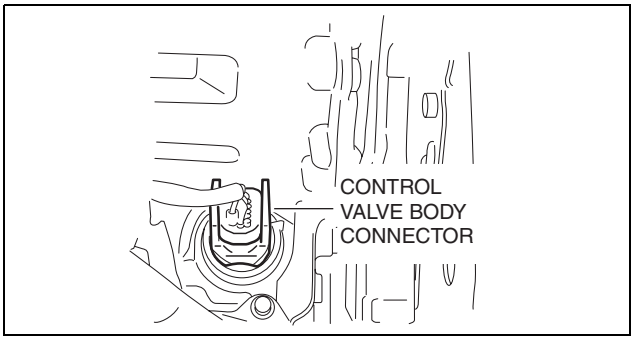

ac5wzw0000433

AUTOMATIC TRANSAXLE [GW6A-EL, GW6AX-EL]

44. Connect the electric AT oil pump connector and electric AT oil pump harness from the transaxle.
45. Install the splash shield. (See 09-16-49 SPLASH SHIELD REMOVAL/INSTALLATION.)

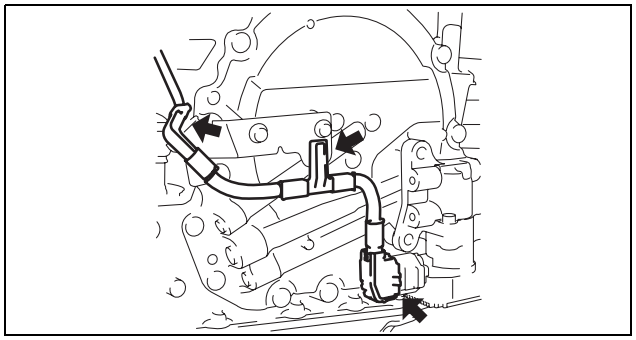
ac5wzw0000433

46. Connect the wiring harness from the transaxle.
47. Install the battery tray. (See 01-17B-3 BATTERY REMOVAL/INSTALLATION [SKYACTIV-D 2.2].)
48. Install the air cleaner and air hose as a single unit. (See 01-13B-6 INTAKE-AIR SYSTEM REMOVAL/INSTALLATION [SKYACTIV-D 2.2].)
49. Disconnect the negative battery cable. (See 01-17B-9 NEGATIVE BATTERY CABLE DISCONNECTION/CONNECTION [SKYACTIV-D 2.2].)
50. Add the ATF. (See 05-17B-12 AUTOMATIC TRANSAXLE FLUID (ATF) REPLACEMENT [GW6A-EL, GW6AX-EL].)
51. Perform the “Mechanical System Test”. (See 05-17B-4 MECHANICAL SYSTEM TEST [GW6A-EL, GW6AX-EL].)

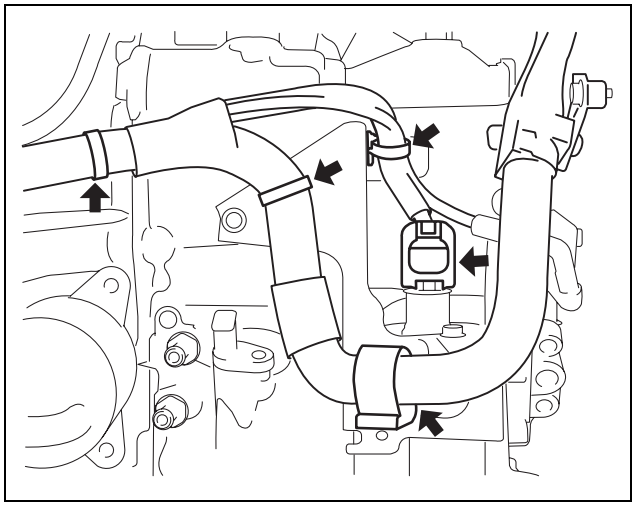
ac5wzw0000434

AUTOMATIC TRANSAXLE [GW6A-EL, GW6AX-EL]

AUTOMATIC TRANSAXLE REMOVAL/INSTALLATION [GW6AX-EL]

id0517i21172i4

Caution

- **Performing the following procedures without first removing the front ABS wheel-speed sensor may possibly cause an open circuit in the harness if it is pulled by mistake. Before performing the following procedures, disconnect the front ABS wheel-speed sensor (axle side) and fix it to an appropriate place where the sensor will not be pulled by mistake while servicing the vehicle.**
- **Secure the steering wheel using tape or a cable to prevent the steering shaft from rotating after disconnecting the steering shaft. If the steering wheel rotates after the steering shaft and the steering gear and linkage are disconnected, the internal parts of the clock spring could be damaged.**

Removal

1. Disconnect the negative battery cable. (See 01-17B-9 NEGATIVE BATTERY CABLE DISCONNECTION/CONNECTION [SKYACTIV-D 2.2].)
2. Remove the air cleaner and air hose as a single unit. (See 01-13B-6 INTAKE-AIR SYSTEM REMOVAL/INSTALLATION [SKYACTIV-D 2.2].)
3. Remove the battery tray. (See 01-17B-3 BATTERY REMOVAL/INSTALLATION [SKYACTIV-D 2.2].)
4. Disconnect the wiring harness clip from the transaxle.
5. Remove the splash shield. (See 09-16-49 SPLASH SHIELD REMOVAL/INSTALLATION.)

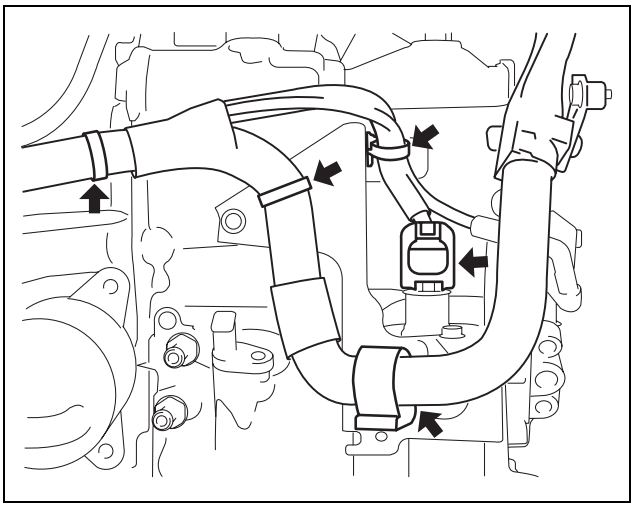

ac5wzw0000434

6. Disconnect the electric AT oil pump connector and electric AT oil pump harness from the transaxle.
7. Disconnect the control valve body connector.

Caution

- **Make sure that your hand does not touch the terminal as the connector terminal could be damaged.**
- **Water or foreign objects entering the connector can cause a poor connection or corrosion. Be sure not to drop water or foreign objects on the connector when disconnecting it.**

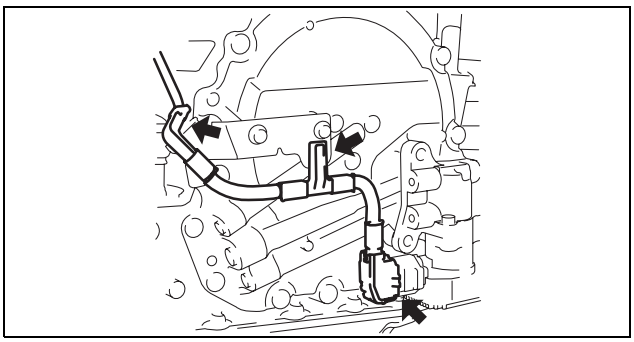

ac5wzw0000434

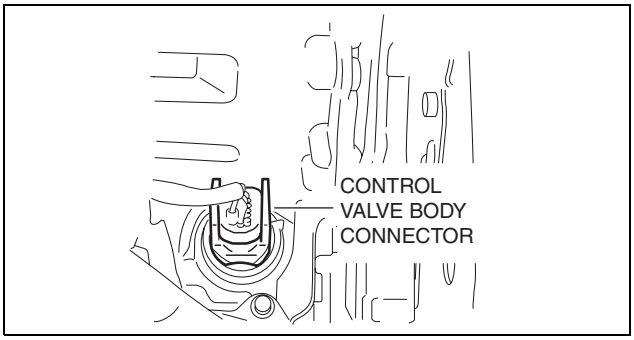

ac5wzw0000434

AUTOMATIC TRANSAXLE [GW6A-EL, GW6AX-EL]

8. Disconnect the ground cable.

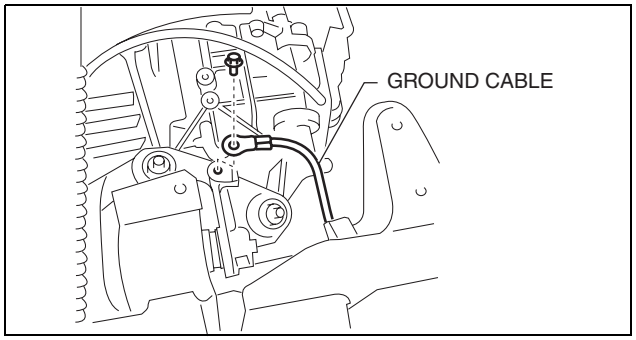

ac5wzw0000434

9. Disconnect the selector cable from the transaxle.

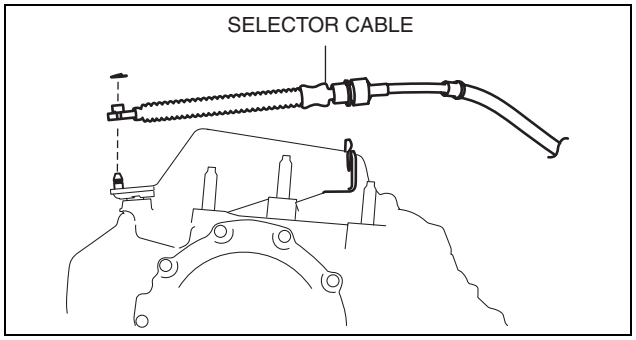

ac5wzw0000434

10. Remove the selector cable bracket.
11. Remove the EGR cooler. (See 01-16B-12 EGR COOLER REMOVAL/INSTALLATION [SKYACTIV-D 2.2].)

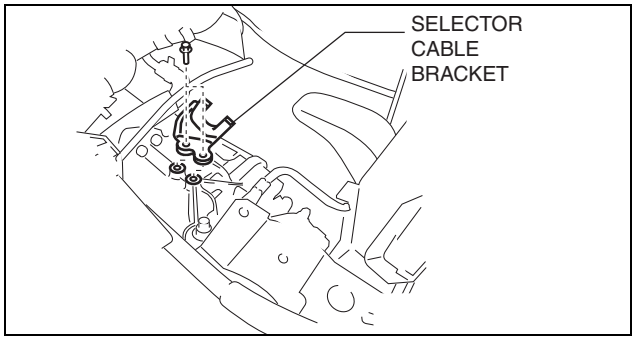

ac5wzw0000434

12. Disconnect the solenoid valve connectors and the wiring harness from the solenoid valve component. (See 01-13B-38 COMPRESSOR BYPASS SOLENOID VALVE REMOVAL/INSTALLATION [SKYACTIV-D 2.2]) (See 01-13B-50 REGULATING SOLENOID VALVE REMOVAL/INSTALLATION [SKYACTIV-D 2.2]) (See 01-13B-61 WASTEGATE SOLENOID VALVE REMOVAL/INSTALLATION [SKYACTIV-D 2.2])

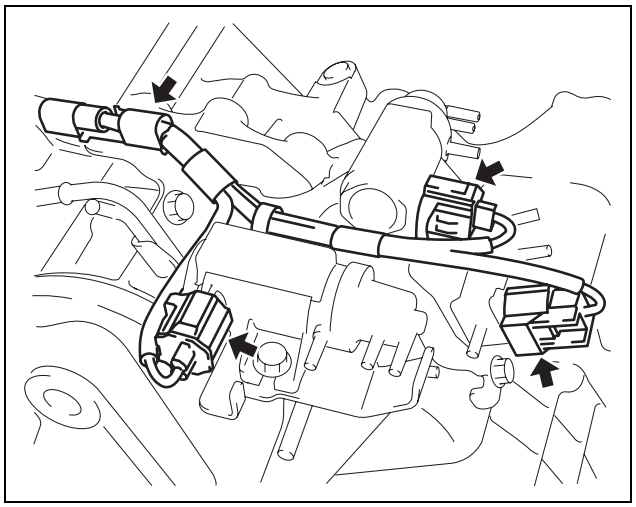
ac5wzw0000434

AUTOMATIC TRANSAXLE [GW6A-EL, GW6AX-EL]

13. Disconnect the solenoid valve component from the ATX with the hose still connected, and set it out of the way. (See 01-13B-38 COMPRESSOR BYPASS SOLENOID VALVE REMOVAL/INSTALLATION [SKYACTIV-D 2.2]) (See 01-13B-50 REGULATING SOLENOID VALVE REMOVAL/INSTALLATION [SKYACTIV-D 2.2]) (See 01-13B-61 WASTEGATE SOLENOID VALVE REMOVAL/INSTALLATION [SKYACTIV-D 2.2])
14. Disconnect the breather hose from the transaxle.
15. Remove the joint cover. (See 06-13-4 STEERING WHEEL AND COLUMN REMOVAL/INSTALLATION.)
16. Disconnect the intermediate shaft from the steering gear and linkage. (See 06-13-4 STEERING WHEEL AND COLUMN REMOVAL/INSTALLATION.)
17. Remove the front tires. (See 02-10-1 GENERAL PROCEDURES (SUSPENSION).)
18. Remove the front under cover No.2. (See 09-16-41 FRONT UNDER COVER No.2 REMOVAL/INSTALLATION.)
19. Remove the front under cover No.1. (See 09-16-40 FRONT UNDER COVER No.1 REMOVAL/INSTALLATION.)
20. Drain the ATF. (See 05-17B-12 AUTOMATIC TRANSAXLE FLUID (ATF) REPLACEMENT [GW6A-EL, GW6AX-EL].)
21. Disconnect the oil hose from the transaxle. (With oil cooler No.2) (See 05-17B-71 OIL COOLER REMOVAL/INSTALLATION [GW6A-EL, GW6AX-EL].)
22. Set the oil pipe component in a place which does not interfere with the servicing. (With oil cooler No.2) (See 05-17B-71 OIL COOLER REMOVAL/INSTALLATION [GW6A-EL, GW6AX-EL].)

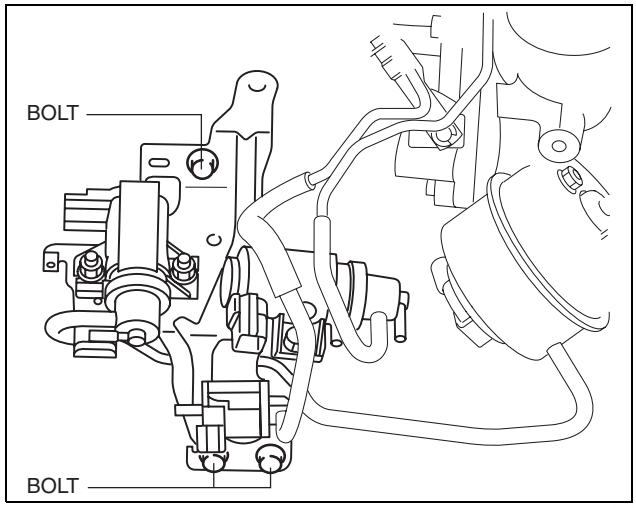

ac5wzw0000434

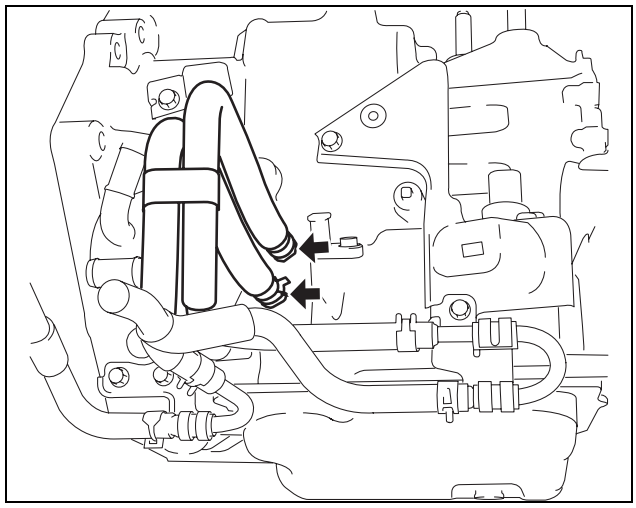
ac5wzw0000434

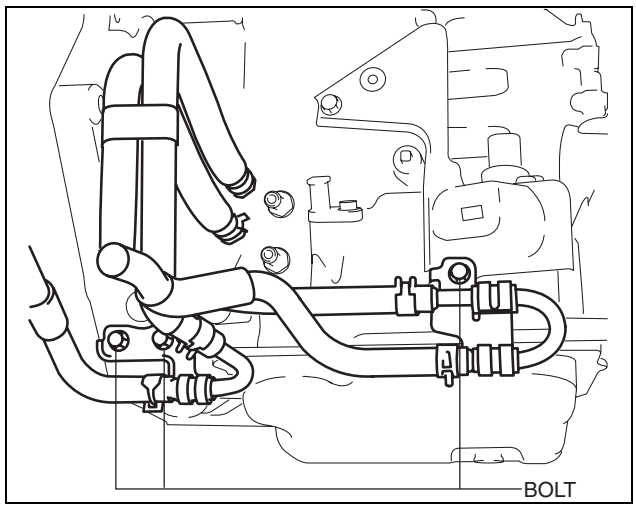

ac5wzw0000435

AUTOMATIC TRANSAXLE [GW6A-EL, GW6AX-EL]

23. Remove the bracket from the transaxle.
24. Disconnect the oil cooler from the transaxle with the hose connected. (Except Automatic Transaxle Replacement) (See 05-17B-71 OIL COOLER REMOVAL/INSTALLATION [GW6A-EL, GW6AX-EL].)
25. Disconnect the water hose from the oil cooler. (Automatic Transaxle Replacement) (See 05-17B-71 OIL COOLER REMOVAL/INSTALLATION [GW6A-EL, GW6AX-EL].)
26. Remove the starter. (See 01-19B-2 STARTER REMOVAL/INSTALLATION [SKYACTIV-D 2.2].)

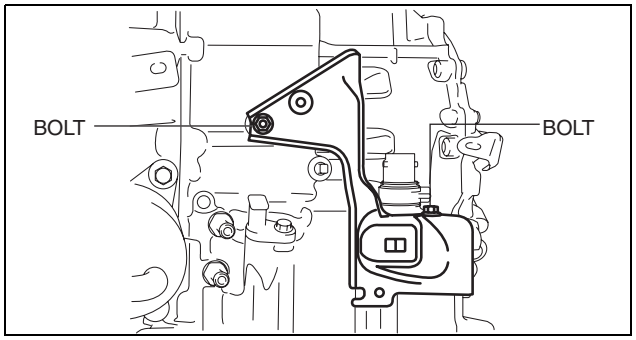

ac5wzw0000435

27. Remove the blind cover.

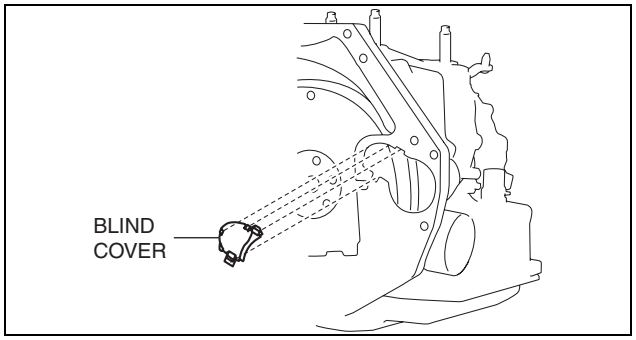

ac5wzw0000435

28. Hold the crankshaft pulley to prevent drive plate from rotating.
29. Remove the torque converter nuts from the starter installation hole.

Note
- There are six installation nuts.

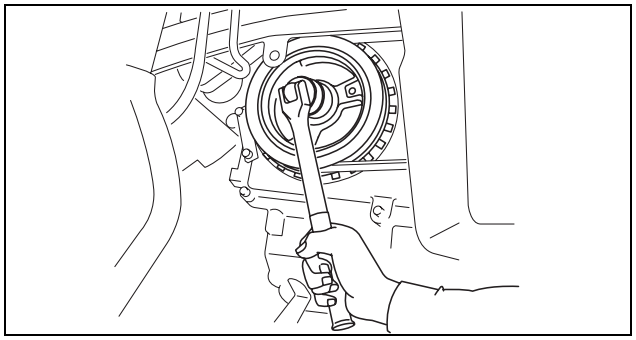
ac5wzw0000435

30. Disconnect the front ABS wheel-speed sensors from the steering knuckles. (See 04-15-9 FRONT ABS WHEEL-SPEED SENSOR REMOVAL/INSTALLATION.)
31. Disconnect the clips securing the brake hose from the front shock absorbers. (See 04-11-27 FRONT BRAKE (DISC) REMOVAL/INSTALLATION.)
32. Disconnect the tie-rod end ball joints from the steering knuckles. (See 06-13-16 STEERING GEAR AND LINKAGE REMOVAL/INSTALLATION.)
33. Disconnect the front lower arms from the steering knuckles. (See 02-13-7 FRONT LOWER ARM REMOVAL/INSTALLATION.)

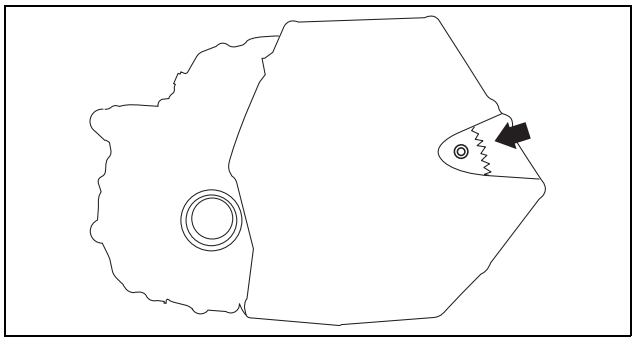
ac5wzw0000435

34. Disconnect the front stabilizer control links from the front stabilizer. (See 02-13-10 FRONT STABILIZER REMOVAL/INSTALLATION.)
35. Disconnect the front drive shaft (LH) from the transaxle. (See 03-13-3 FRONT DRIVE SHAFT REMOVAL/INSTALLATION.)
36. Remove the front drive shaft (RH) from the transfer. (See 03-13-3 FRONT DRIVE SHAFT REMOVAL/INSTALLATION.)
37. Remove the propeller shaft. (See 03-15-2 PROPELLER SHAFT REMOVAL/INSTALLATION.)

AUTOMATIC TRANSAXLE [GW6A-EL, GW6AX-EL]

38. Remove the bracket plate. (See 01-10B-110 ENGINE DISASSEMBLY/ASSEMBLY [SKYACTIV-D 2.2].)
39. Remove the front crossmember component and No.1 engine mount rubber as a single unit. (See 02-13-15 FRONT CROSSMEMBER REMOVAL/INSTALLATION.)
40. Remove the transfer. (See 03-16B-6 TRANSFER REMOVAL/INSTALLATION [GW6AX-EL].)

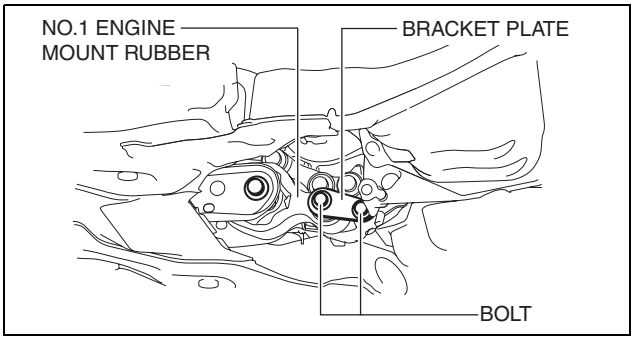

ac5wzw0000435

41. Remove the No.1 engine mounting bracket.

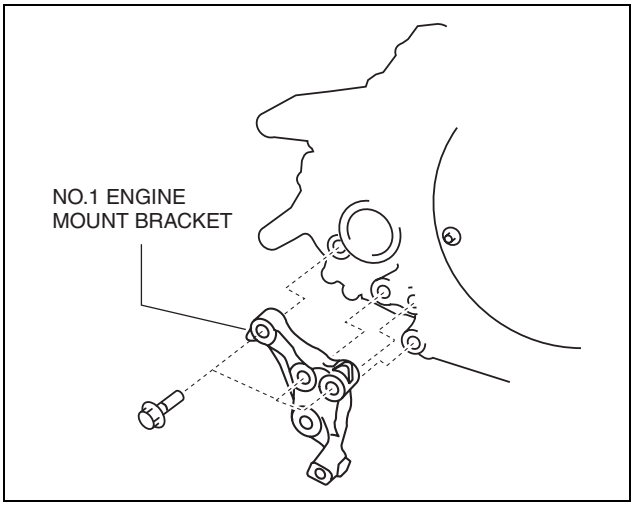

ac5wzw0000435

42. Install the **SST** using the following procedures.

Caution
- **Refer to the SST instruction manual for the basic handing procedure.**

(1) Install one front foot No.2 to each of the left and right front shafts of the **SST**.

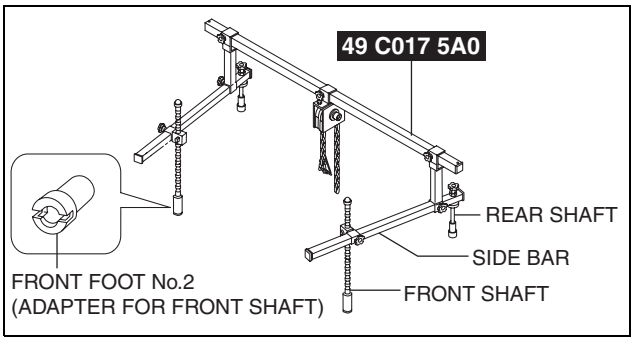

ac5wzw0000435

AUTOMATIC TRANSAXLE [GW6A-EL, GW6AX-EL]

(2) Protect the positions shown in the figure using tape.

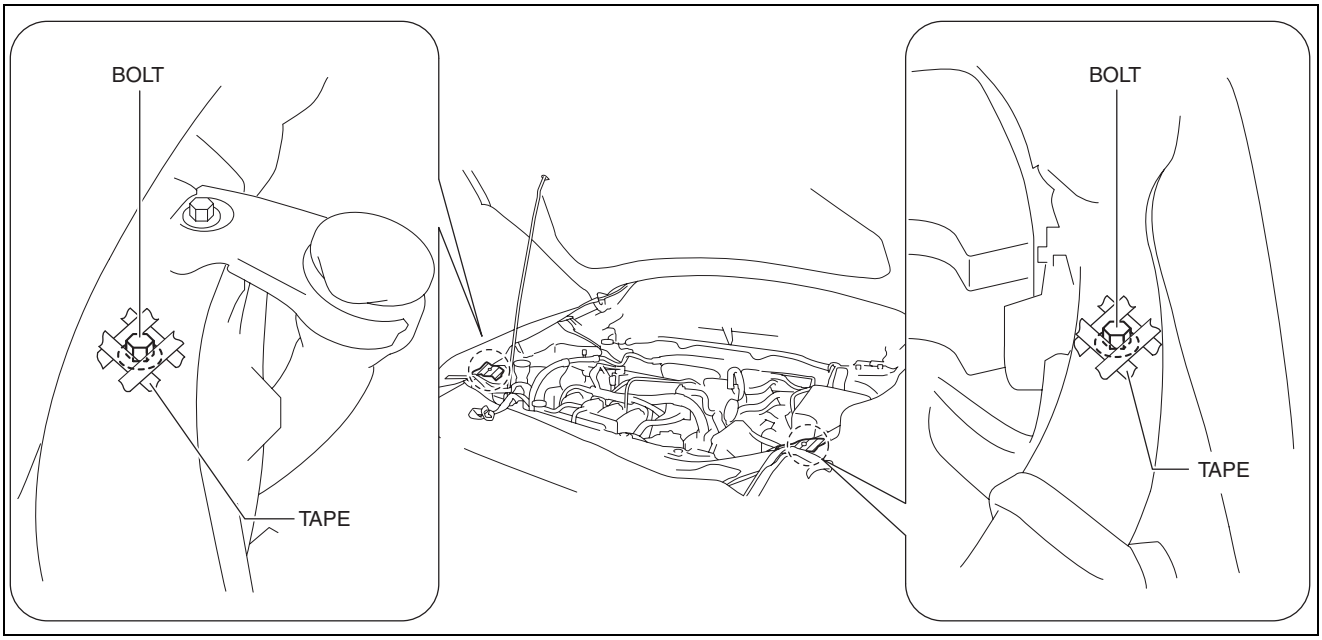

E5000435

(3) Remove the engine cover adapter.
(4) Install the SST to the position shown in the figure using the following bolt and washer.

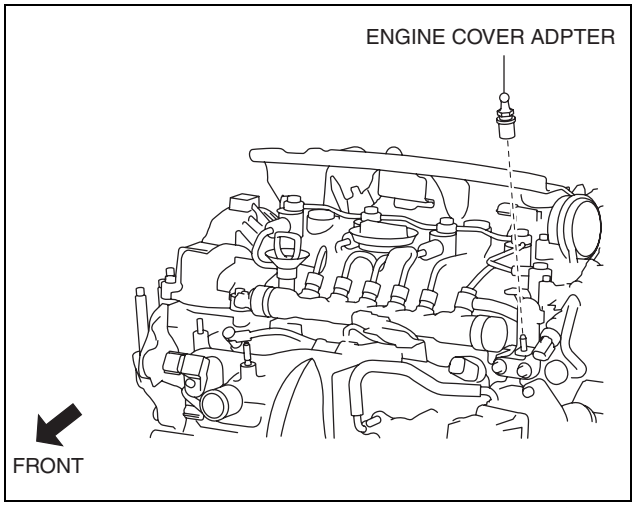

E5000435

Engine front side

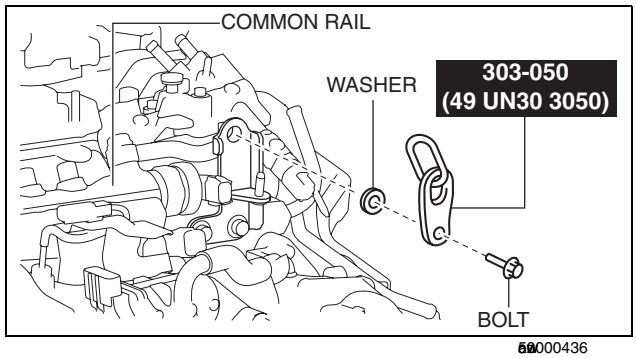

E5000436

Bolt: part number 99794 1025 or an M10—1.25, length 25 mm {0.98 in}
Washer: approx. 3 mm {0.1 in} thickness

Tightening torque
38—51 N·m {3.9—5.2 kgf·m, 29—37 ft·lbf}

AUTOMATIC TRANSAXLE [GW6A-EL, GW6AX-EL]

Engine rear side

Bolt: part number 99794 1025 or an M10—1.25, length 25 mm {0.98 in}

Tightening torque
38—51 N·m {3.9—5.2 kgf·m, 29—37 ft·lbf}

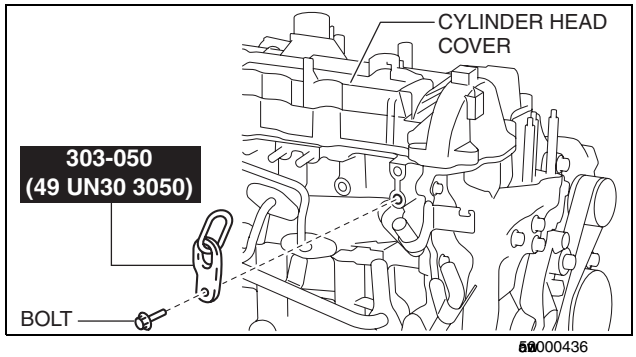

(5) As shown in the figure, set the rear shafts of the **SST** to the left and right shock absorber nuts

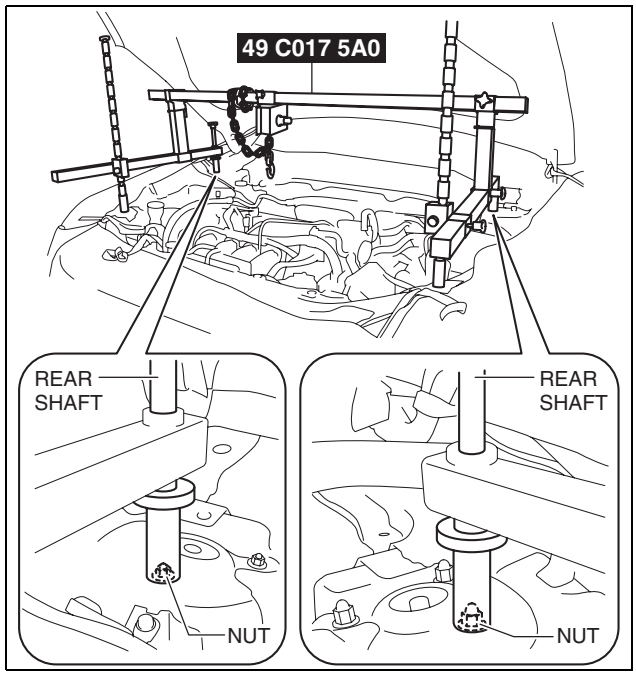

(6) As shown in the figure, set the front shafts of the **SST** to the left and right bolts.

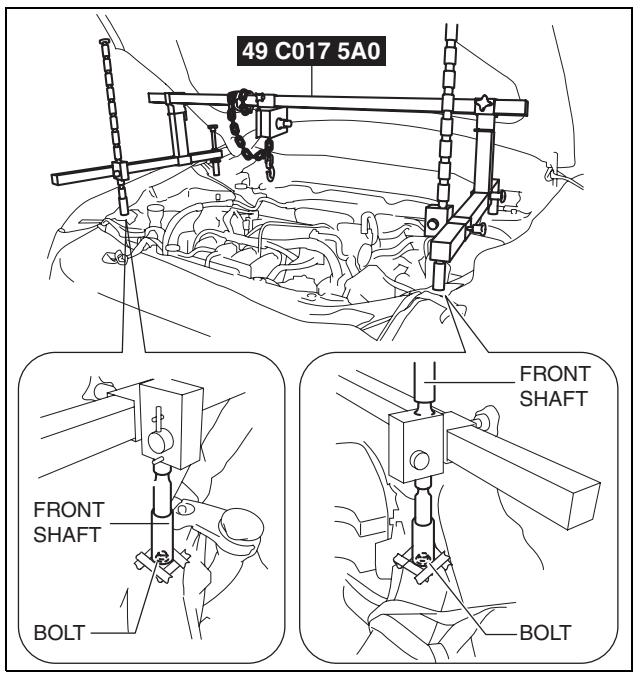

AUTOMATIC TRANSAXLE [GW6A-EL, GW6AX-EL]

(7) Install the **SST (49 L017 5A0)** to the **SST (49 C017 5A0)** as shown in the figure.

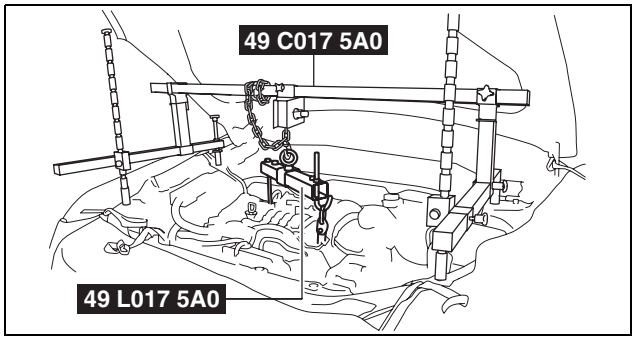

ac5wzw0000436

(8) Install the **SST** (49 L017 5A0) to the **SST** (49 UN30 3050) with the hook of the **SST** (49 L017 5A0) facing outward.
(9) Adjust the height of the left and right side bars so that they are leveled, then tighten each part of the **SST**.
(10) Apply tension to the chain to secure the engine.

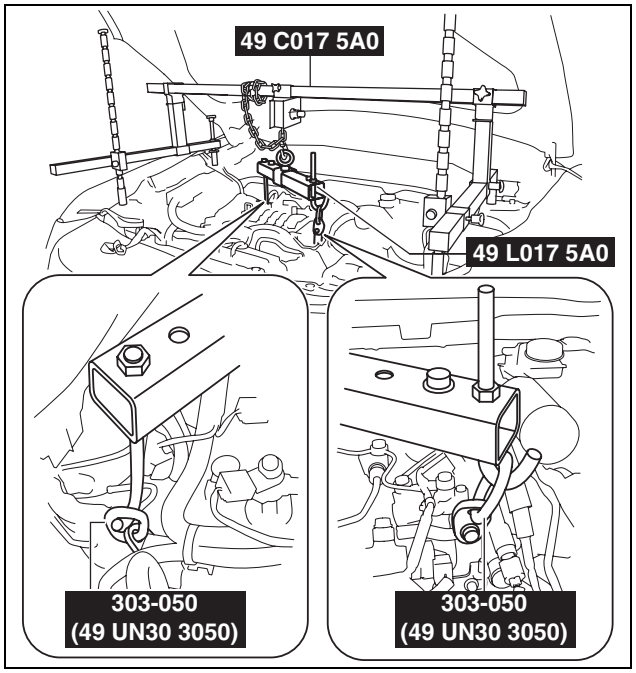

ac5wzw0000436

43. Remove in the order shown in the figure.

Warning
- **Improperly jacking a transaxle is dangerous. It can slip off the jack and may cause serious injury.**

Caution
- **To prevent the torque converter and transaxle from separating, remove the transaxle without tilting it toward the torque converter.**

AUTOMATIC TRANSAXLE [GW6A-EL, GW6AX-EL]

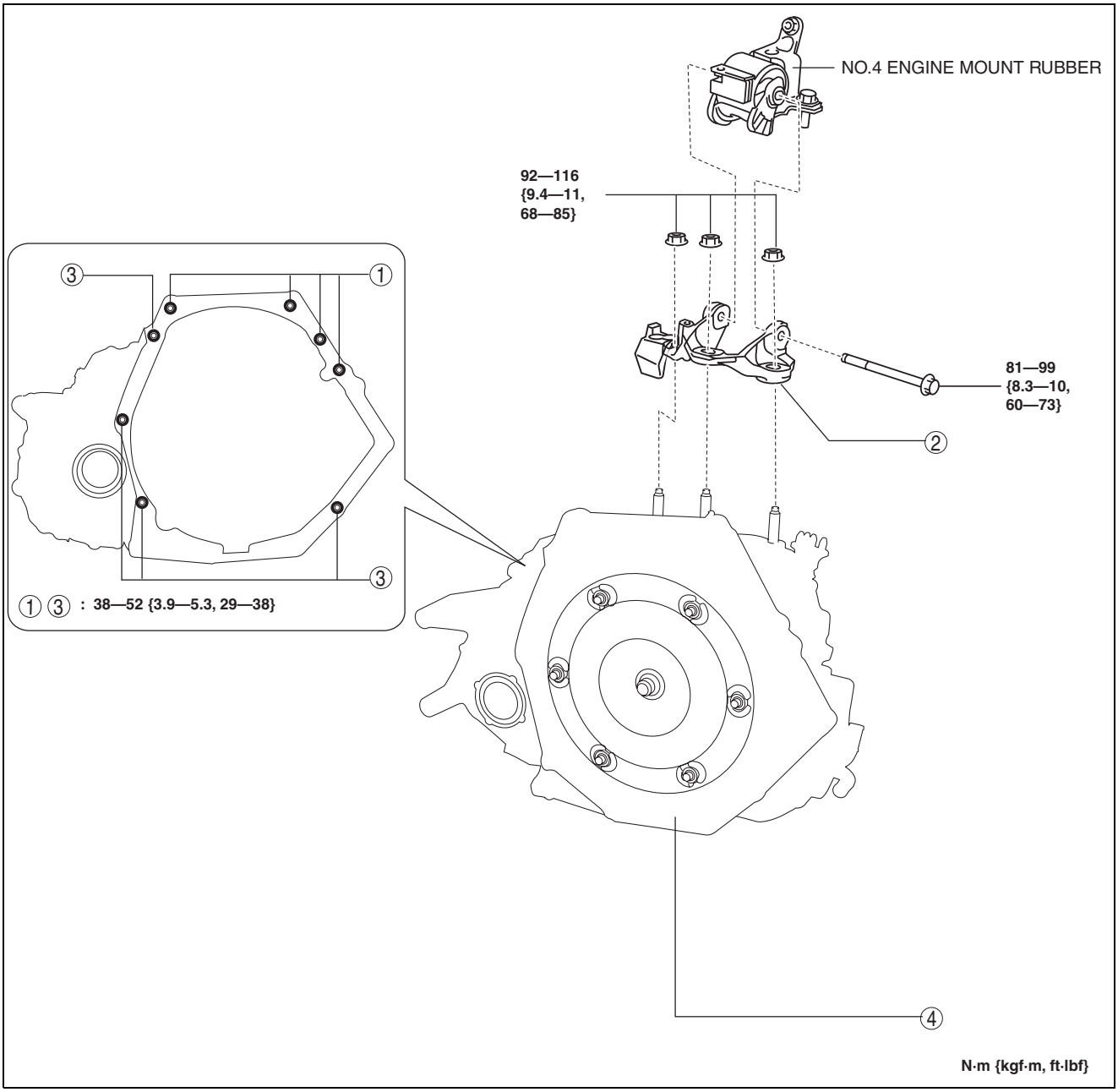

1	Tr[illegible]
2	No.4 [illegible] (Se[illegible] 05-17B-56 No.4 [illegible] [illegible])
3	Tr[illegible] (Se[illegible] 05-17B-56 No.4 [illegible] [illegible])

4	Tr[illegible] (Se[illegible] 05-17B-56 No.4 [illegible] [illegible]) (Se[illegible] 05-17B-56 Tr[illegible] [illegible])

05

AUTOMATIC TRANSAXLE [GW6A-EL, GW6AX-EL]

No.4 engine mount bracket removal note

Caution
- **A slot has been adopted for the No.4 engine mount bracket installation hole. If the No.4 engine mount bracket is deviated from the original position when installing the No.4 engine mount, engine noise or vibration could increase. When removing the No.4 engine mount, place alignment marks on the No.4 engine mount bracket so that they can be assembled to the same positions as before removal.**

1. Place alignment marks on the locations shown in the figure so that they can be assembled to the same positions as before removal.

   Note
   - Paint so that the outline of the nut is framed on the bracket side.

2. Remove the No.4 engine mount bracket.

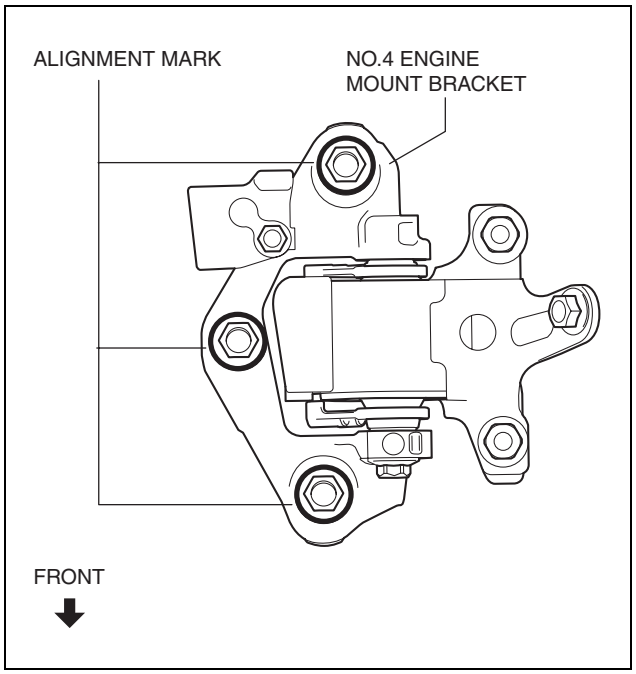

ac5wzw0000436

Transaxle mounting bolt removal note

Warning
- **Remove the transaxle carefully, holding it steady. If the transaxle falls it could be damaged or cause injury.**

1. Adjust the **SST** and lean the engine toward the transaxle.

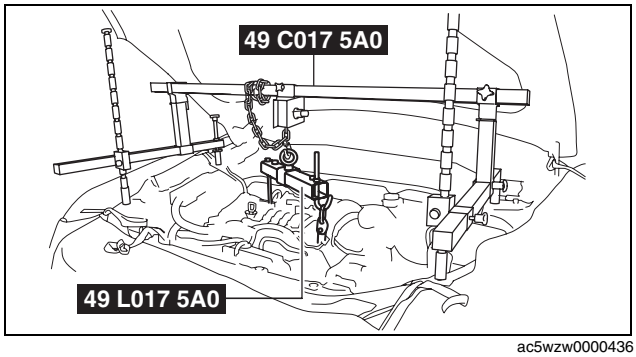

ac5wzw0000436

AUTOMATIC TRANSAXLE [GW6A-EL, GW6AX-EL]

2. Support the transaxle on a jack.
3. Remove the transaxle mounting bolts (lower side).
4. Remove the transaxle.

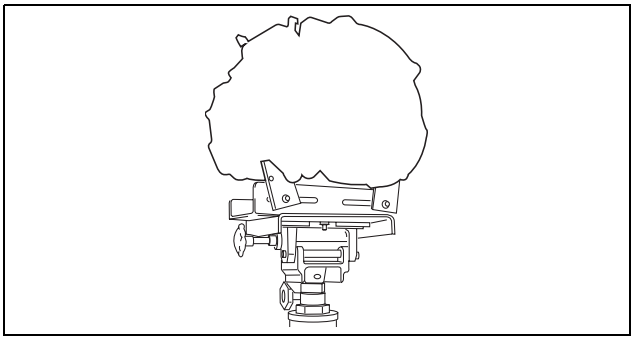
ac5wzw0000436

Installation

Caution
- **Verify that the torque converter stud bolts are inserted into the drive plate bolt holes, and install the transaxle installation bolts. Otherwise, the drive plate could be damaged.**

1. Verify that the torque converter stud bolts are inserted into the drive plate bolt holes from the starter installation hole.

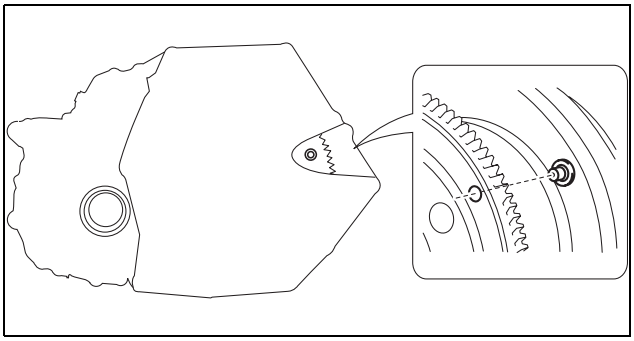
ac5wzw0000437

2. Install the transaxle mounting bolts.

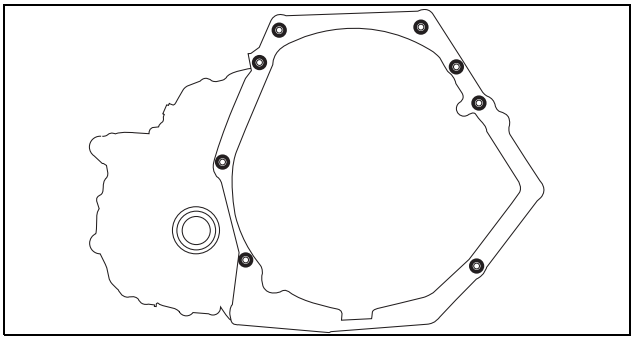
ac5wzw0000437

3. Tighten the stud bolts for the transaxle.

Tightening torque
15—25 N·m {1.6—2.5 kgf·m, 12—18 ft·lbf}

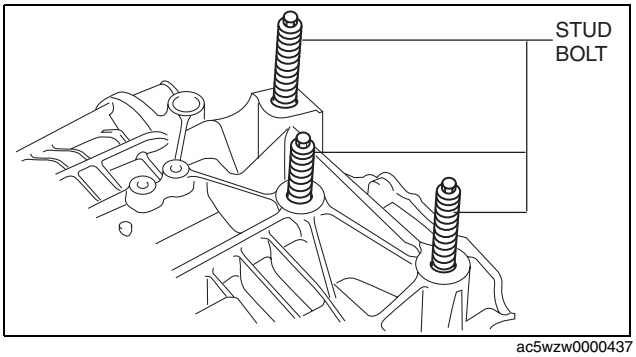

ac5wzw0000437

AUTOMATIC TRANSAXLE [GW6A-EL, GW6AX-EL]

4. Install the No.4 engine mount bracket to No.4 engine mount rubber, and temporarily tighten the installation bolt.

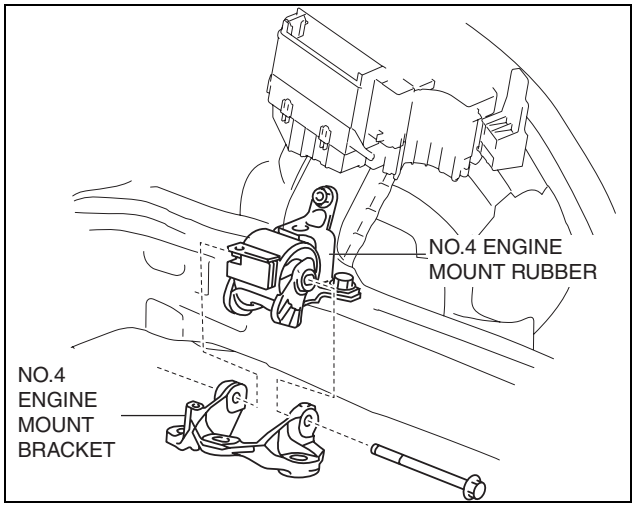

ac5wzw0000437

5. Pull up the transaxle using the **SSTs**, pass the transaxle stud bolts through the No.4 engine mount bracket, and temporarily tighten the No.4 engine mount installation nuts.

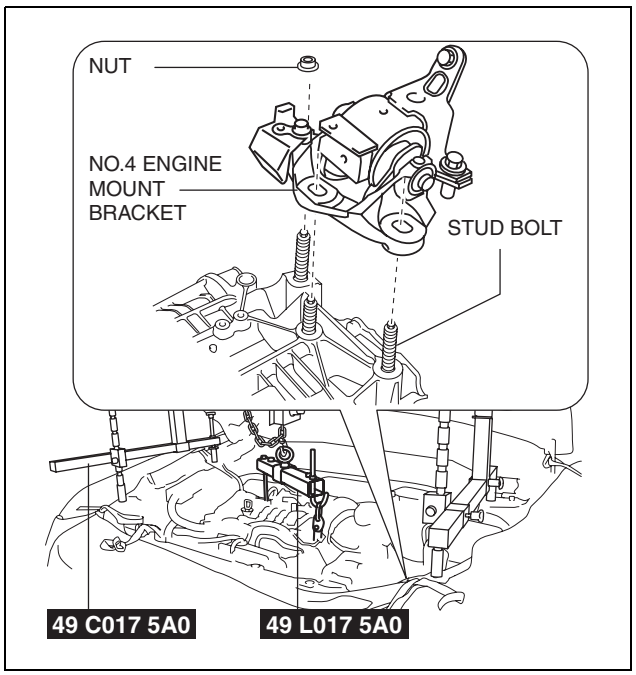

ac5wzw0000437

6. Install the No.1 engine mounting bracket.

   Tightening torque
   131—153 N·m {14—15 kgf·m, 97—112 ft·lbf}

7. Install the the transfer. (See 03-16B-6 TRANSFER REMOVAL/INSTALLATION [GW6AX-EL].)
8. Install the front crossmember component and No.1 engine mount rubber as a single unit. (See 02-13-15 FRONT CROSSMEMBER REMOVAL/INSTALLATION.)

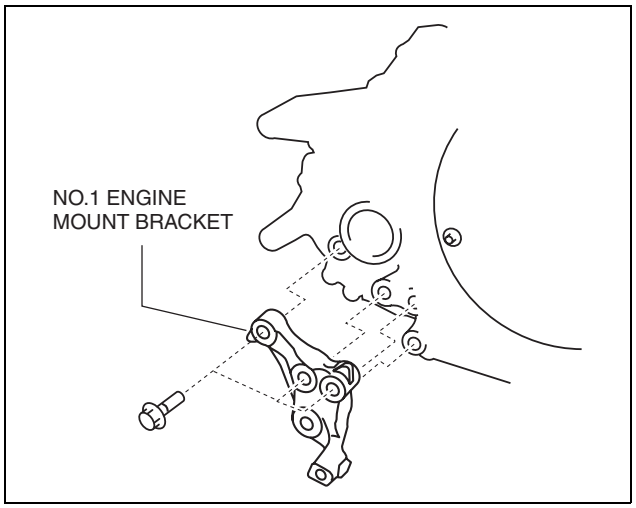

ac5wzw0000437

AUTOMATIC TRANSAXLE [GW6A-EL, GW6AX-EL]

9. Temporarily install the No.1 engine mount rubber and bracket plate.

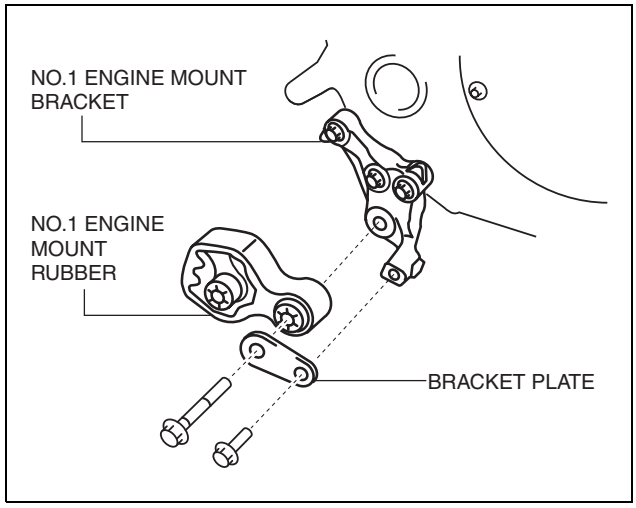

ac5wzw0000437

10. Align the alignment marks on the No.4 engine mount bracket and nuts, and temporarily tighten the nuts shown in the figure.

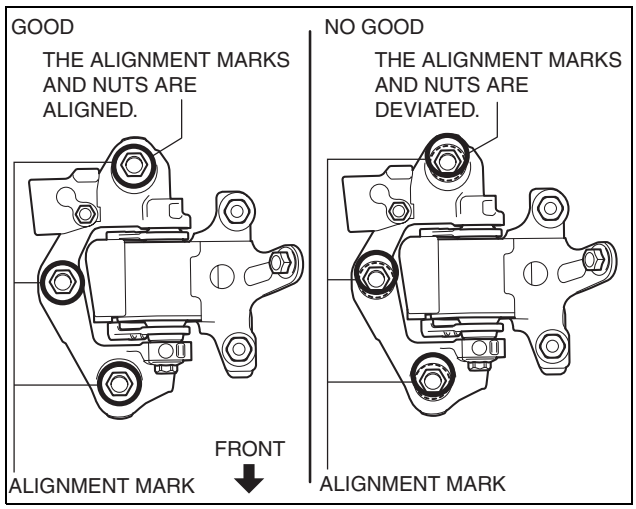

ac5wzw0000437

11. Tighten the No.4 engine mount bracket installation nuts and bolt in the order shown in the figure.

No.	Tightening torque
1, 2, 3	92—116 N·m {9.4—11 kgf·m, 69—85 ft·lbf}
4	81—99 N·m {8.3—10 kgf·m, 60—73 ft·lbf}

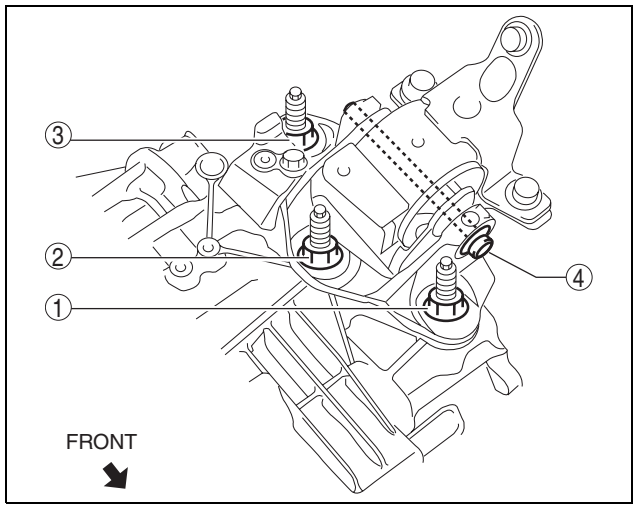

ac5wzw0000437

AUTOMATIC TRANSAXLE [GW6A-EL, GW6AX-EL]

12. Tighten the No.1 engine mount rubber and bracket plate installation bolts.

No.	Tightening torque
1	140—163 N·m {15—16 kgf·m, 104—120 ft·lbf}
2	55—69 N·m {5.7—7.0 kgf·m, 41—50 ft·lbf}
3	130—164 N·m {14—16 kgf·m, 96—120 ft·lbf}

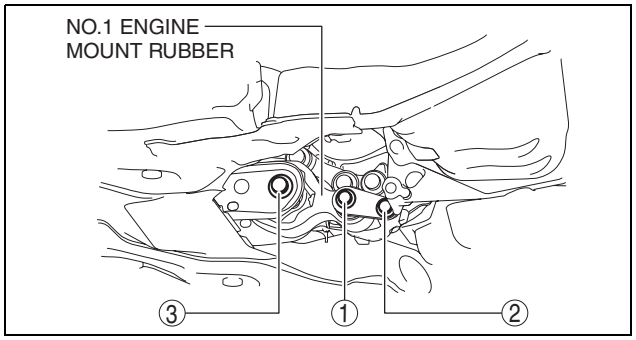

ac5wzw0000437

13. Install the propeller shaft. (See 03-15-2 PROPELLER SHAFT REMOVAL/INSTALLATION.)
14. Remove the **SST (49 C017 5A0)**.
15. Fix the crankshaft pulley to lock the torque converter against rotation.

Caution
- **After temporarily tightening the torque converter installation nut uniformly, tighten it to the specified torque.**

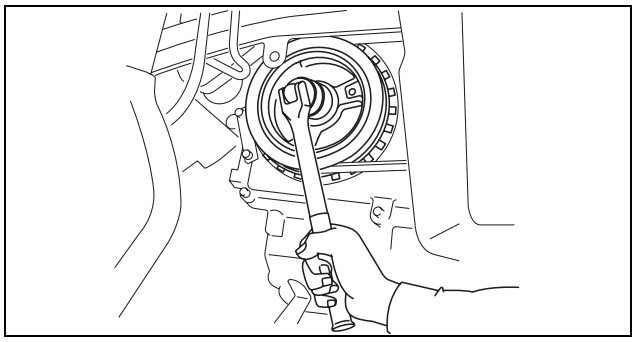
ac5wzw0000438

16. Tighten the torque converter installation nut.

Note
- There are six installation nuts.

Tightening torque
41—54 N·m {4.2—5.5 kgf·m, 31—39 ft·lbf}

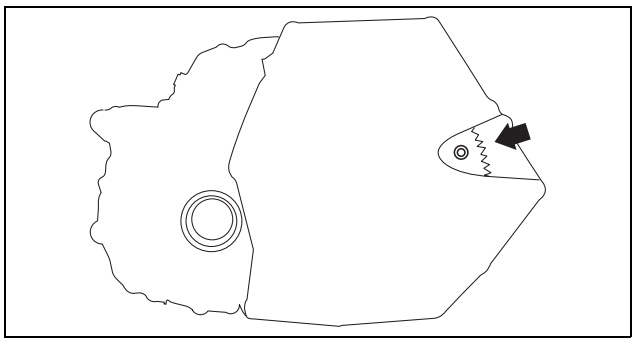
ac5wzw0000438

17. Install the blind cover.
18. Install the starter. (See 01-19B-2 STARTER REMOVAL/INSTALLATION [SKYACTIV-D 2.2].)
19. Install the front drive shaft (RH) to the transfer. (See 03-13-3 FRONT DRIVE SHAFT REMOVAL/INSTALLATION.)
20. Install the front drive shaft (LH) to the transaxle. (See 03-13-3 FRONT DRIVE SHAFT REMOVAL/INSTALLATION.)
21. Install the front stabilizer control links to the front stabilizer. (See 02-13-10 FRONT STABILIZER REMOVAL/INSTALLATION.)
22. Install the front lower arms to the steering knuckles. (See .02-13-7 FRONT LOWER ARM REMOVAL/INSTALLATION)

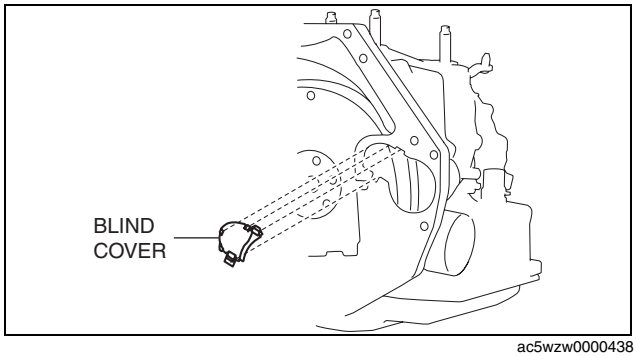

ac5wzw0000438

23. Install the tie-rod end ball joints to the steering knuckles. (See 06-13-16 STEERING GEAR AND LINKAGE REMOVAL/INSTALLATION.)
24. Install the clips securing the brake hose to the front shock absorbers. (See 04-11-27 FRONT BRAKE (DISC) REMOVAL/INSTALLATION.)
25. Install the front ABS wheel-speed sensors to the steering knuckles. (See 04-15-9 FRONT ABS WHEEL-SPEED SENSOR REMOVAL/INSTALLATION.)
26. Connect the water hose to the oil cooler. (Automatic Transaxle Replacement) (See 05-17B-71 OIL COOLER REMOVAL/INSTALLATION [GW6A-EL, GW6AX-EL].)
27. Install the oil cooler to the transaxle with the hose connected. (Except Automatic Transaxle Replacement) (See 05-17B-71 OIL COOLER REMOVAL/INSTALLATION [GW6A-EL, GW6AX-EL].)

AUTOMATIC TRANSAXLE [GW6A-EL, GW6AX-EL]

28. Install the bracket to the transaxle.

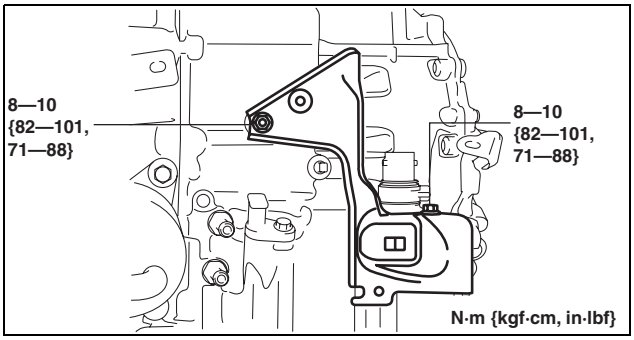

ac5wzw0000438

29. Install the oil pipe conponent. (With oil cooler No.2) (See 05-17B-71 OIL COOLER REMOVAL/INSTALLATION [GW6A-EL, GW6AX-EL].)

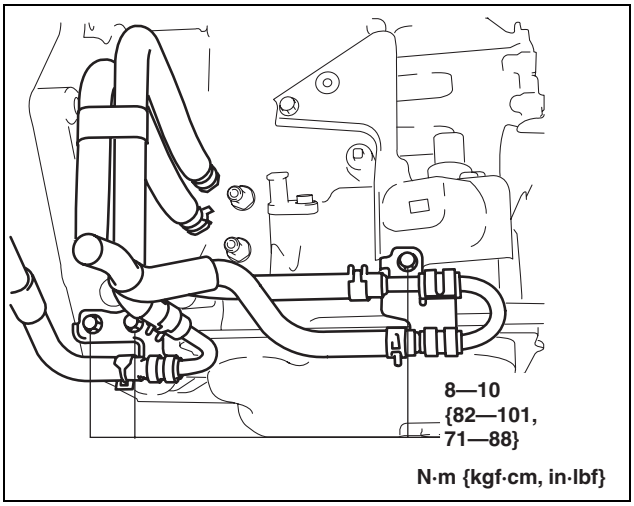

ac5wzw0000438

30. Connect the oil hose to the transaxle. (With oil cooler No.2) (See 05-17B-71 OIL COOLER REMOVAL/INSTALLATION [GW6A-EL, GW6AX-EL].)
31. Install the front under cover No.1. (See 09-16-40 FRONT UNDER COVER No.1 REMOVAL/INSTALLATION.)
32. Install the front under cover No.2. (See 09-16-41 FRONT UNDER COVER No.2 REMOVAL/INSTALLATION.)
33. Install the front tires. (See 02-10-1 GENERAL PROCEDURES (SUSPENSION).)
34. Connect the intermediate shaft to the steering gear and linkage. (See 06-13-4 STEERING WHEEL AND COLUMN REMOVAL/INSTALLATION.)
35. Install the joint cover. (See 06-13-4 STEERING WHEEL AND COLUMN REMOVAL/INSTALLATION.)
36. Connect the breather hose to the transaxle.

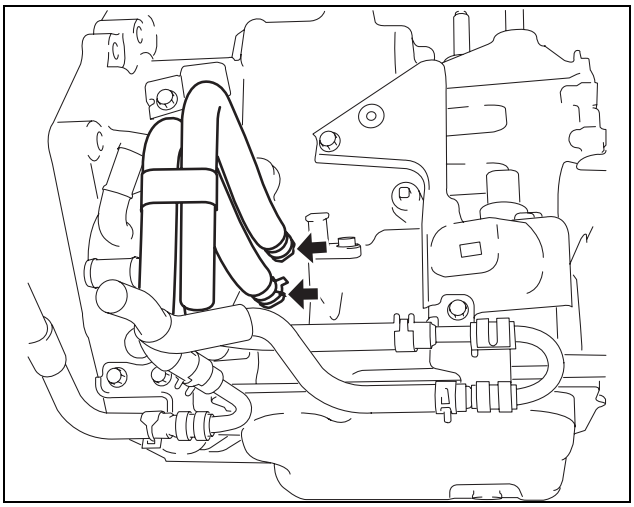
ac5wzw0000438

AUTOMATIC TRANSAXLE [GW6A-EL, GW6AX-EL]

37. Install the solenoid valve component. (See 01-13B-38 COMPRESSOR BYPASS SOLENOID VALVE REMOVAL/INSTALLATION [SKYACTIV-D 2.2]) (See 01-13B-50 REGULATING SOLENOID VALVE REMOVAL/INSTALLATION [SKYACTIV-D 2.2]) (See 01-13B-61 WASTEGATE SOLENOID VALVE REMOVAL/INSTALLATION [SKYACTIV-D 2.2])

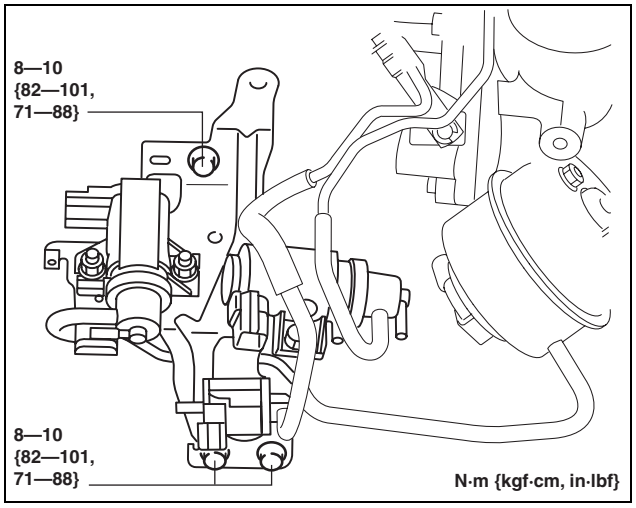

ac5wzw0000438

38. Connect the solenoid valve connectors and the wiring harness to the solenoid valve component. (See 01-13B-38 COMPRESSOR BYPASS SOLENOID VALVE REMOVAL/INSTALLATION [SKYACTIV-D 2.2]) (See 01-13B-50 REGULATING SOLENOID VALVE REMOVAL/INSTALLATION [SKYACTIV-D 2.2]) (See 01-13B-61 WASTEGATE SOLENOID VALVE REMOVAL/INSTALLATION [SKYACTIV-D 2.2])
39. Install the EGR cooler. (See 01-16B-12 EGR COOLER REMOVAL/INSTALLATION [SKYACTIV-D 2.2].)

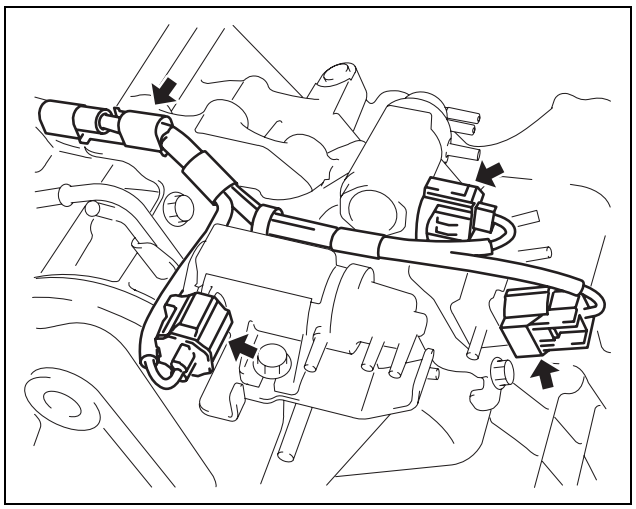
ac5wzw0000438

40. Install the selector cable bracket.

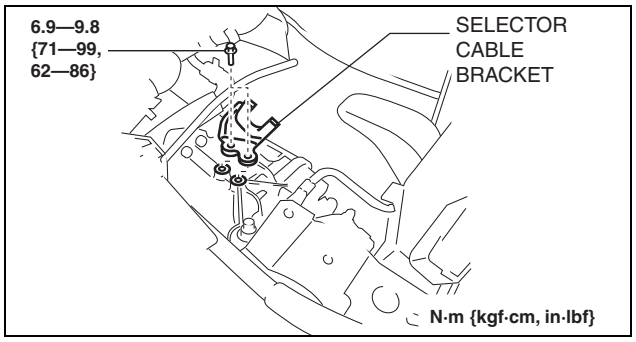

ac5wzw0000438

41. Connect the selector cable to the transaxle.

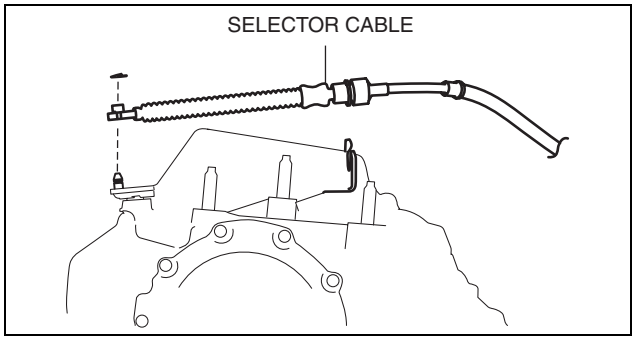

ac5wzw0000438

AUTOMATIC TRANSAXLE [GW6A-EL, GW6AX-EL]

42. Install the ground cable.
43. Connect the control valve body connector.

Caution

- **Make sure that your hand does not touch the terminal as the connector terminal could be damaged.**
- **Verify that there is no fluid or foreign matter adhering to the connector before connecting the connector.**
- **Insert the connector straight as the connector terminal could be damaged.**
- **Rotate the connector lever until a click is heard.**

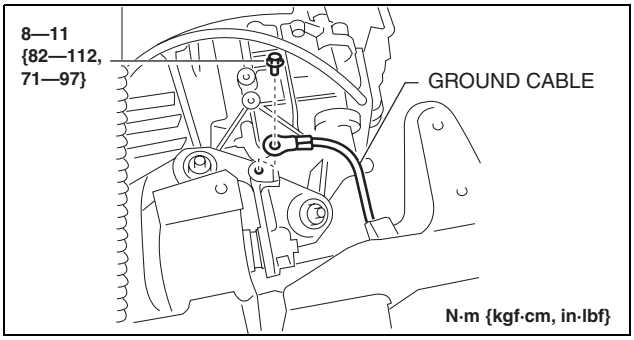

ac5wzw0000439

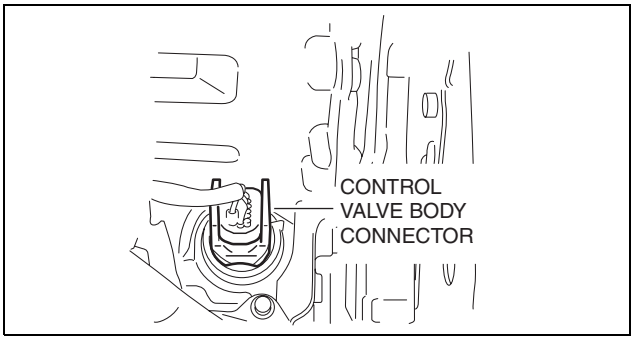

ac5wzw0000439

44. Connect the electric AT oil pump connector and electric AT oil pump harness from the transaxle.
45. Install the splash shield. (See 09-16-49 SPLASH SHIELD REMOVAL/INSTALLATION.)

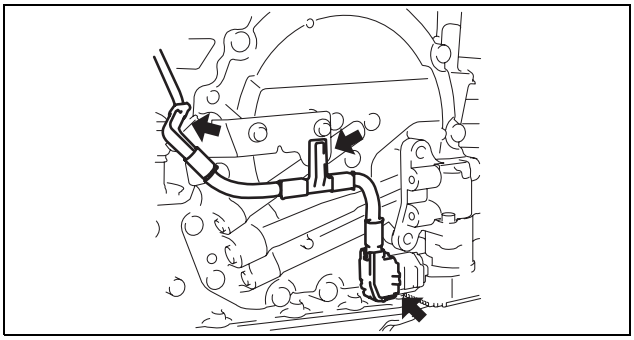
ac5wzw0000439

46. Connect the wiring harness to the transaxle.
47. Install the battery tray. (See 01-17B-3 BATTERY REMOVAL/INSTALLATION [SKYACTIV-D 2.2].)
48. Install the air cleaner and air hose as a single unit. (See 01-13B-6 INTAKE-AIR SYSTEM REMOVAL/INSTALLATION [SKYACTIV-D 2.2].)
49. Connect the negative battery cable. (See 01-17B-9 NEGATIVE BATTERY CABLE DISCONNECTION/CONNECTION [SKYACTIV-D 2.2].)
50. Add the ATF. (See 05-17B-12 AUTOMATIC TRANSAXLE FLUID (ATF) REPLACEMENT [GW6A-EL, GW6AX-EL].)
51. Perform the “Mechanical System Test”. (See 05-17B-4 MECHANICAL SYSTEM TEST [GW6A-EL, GW6AX-EL].)

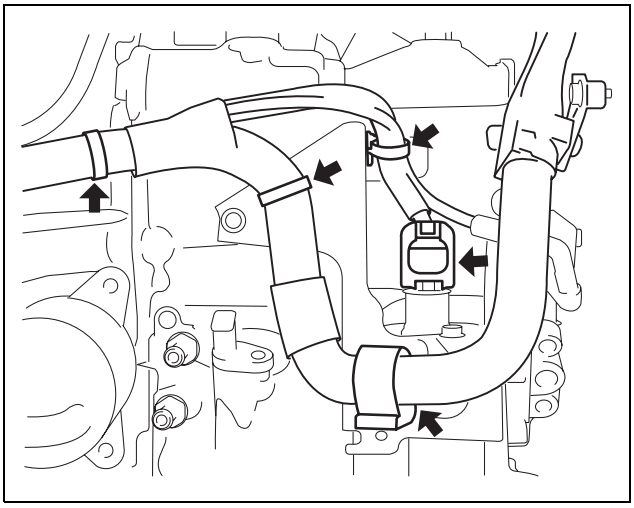
ac5wzw0000439

AUTOMATIC TRANSAXLE [GW6A-EL, GW6AX-EL]

DRIVE PLATE REMOVAL/INSTALLATION [GW6A-EL, GW6AX-EL]

id0517i2117300

1. Remove the transaxle. (See 05-17B-29 AUTOMATIC TRANSAXLE REMOVAL/INSTALLATION [GW6A-EL].) (See 05-17B-47 AUTOMATIC TRANSAXLE REMOVAL/INSTALLATION [GW6AX-EL].)
2. Remove in the order indicated in the table.

1	Drive plate installation bolts (See 05-17B-64 Drive Plate Installation Bolts Removal Note.) (See 05-17B-64 Drive Plate Installation Bolts Installation Note.)
2	Backing plate
3	Drive plate

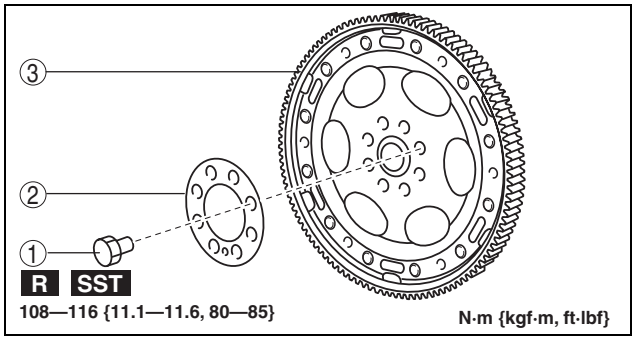

ac5wzw0000371

3. Install in the reverse order of removal.

Drive Plate Installation Bolts Removal Note

1. Set the **SST** against the drive plate.
2. Loosen the drive plate installation bolts uniformly in two or three steps in the order shown in the figure, then remove the bolts and the drive plate.

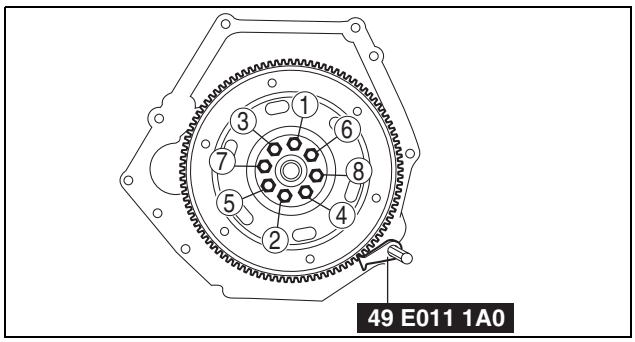

ac5wzw0000455

Drive Plate Installation Bolts Installation Note

1. Set the **SST** against the drive plate.
2. Tighten the new drive plate installation bolts uniformly in two or three steps in the order shown in the figure.

Tightening torque
108—116 N·m {11.1—11.8 kgf·m, 80—85 ft·lbf}

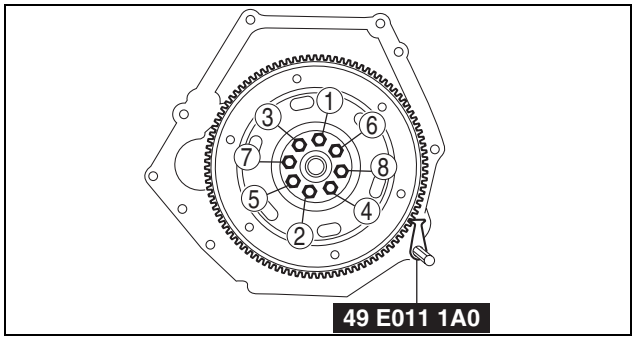

ac5wzw0000455

AUTOMATIC TRANSAXLE [GW6A-EL, GW6AX-EL]

OIL SEAL (DIFFERENTIAL) REPLACEMENT [GW6A-EL, GW6AX-EL]

id0517i2118800

Transaxle Case Side

1. Remove the front under cover No.2. (See 09-16-41 FRONT UNDER COVER No.2 REMOVAL/INSTALLATION.)
2. Drain the ATF. (See 05-17B-12 AUTOMATIC TRANSAXLE FLUID (ATF) REPLACEMENT [GW6A-EL, GW6AX-EL].)
3. Disconnect the drive shaft (LH) from the transaxle. (See 03-13-3 FRONT DRIVE SHAFT REMOVAL/INSTALLATION.)

Caution

- **The oil seal is easily damaged by the sharp edges of the drive shaft splines. Do not let the splines contact the oil seal.**

4. Remove the oil seal using a flathead screwdriver.

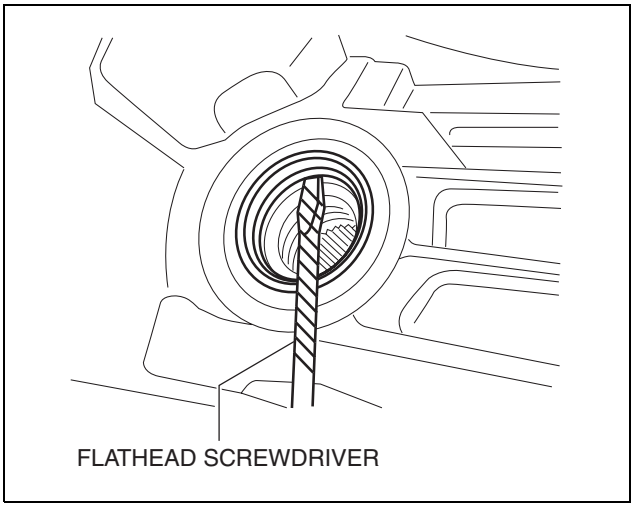

ac5uuw00000215

5. Using the **SSTs** and a hammer, tap a new oil seal in evenly until the **SST** (**49 U027 003**) contacts the transaxle case.
6. Coat the lip of the oil seal with ATF.
7. Install the drive shaft (LH) to the transaxle. (See 03-13-3 FRONT DRIVE SHAFT REMOVAL/INSTALLATION.)
8. Add the ATF. (See 05-17B-12 AUTOMATIC TRANSAXLE FLUID (ATF) REPLACEMENT [GW6A-EL, GW6AX-EL].)
9. Install the under cover No.2. (See 09-16-41 FRONT UNDER COVER No.2 REMOVAL/INSTALLATION.)
10. Perform the “Mechanical System Test”. (See 05-17B-4 MECHANICAL SYSTEM TEST [GW6A-EL, GW6AX-EL].)

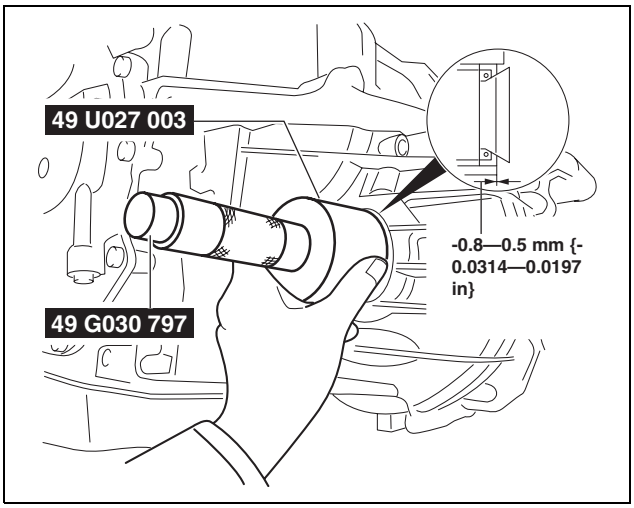

ac5uuw00000216

AUTOMATIC TRANSAXLE [GW6A-EL, GW6AX-EL]

Converter housing Side (GW6A-EL)

1. Remove the front under cover No.2. (See 09-16-41 FRONT UNDER COVER No.2 REMOVAL/INSTALLATION.)
2. Drain the ATF. (See 05-17B-12 AUTOMATIC TRANSAXLE FLUID (ATF) REPLACEMENT [GW6A-EL, GW6AX-EL].)
3. Disconnect the drive shaft (RH) from the transaxle. (See 03-13-3 FRONT DRIVE SHAFT REMOVAL/INSTALLATION.)

Caution

- **The oil seal is easily damaged by the sharp edges of the drive shaft splines. Do not let the splines contact the oil seal.**

4. Remove the oil seal using a flathead screwdriver.

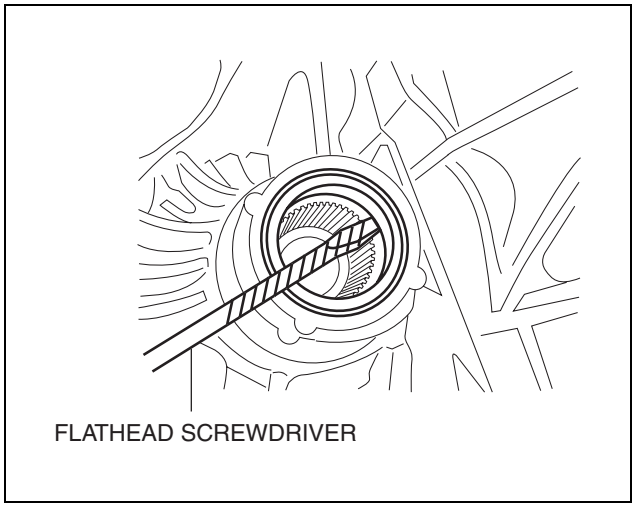

ac5uuw00000217

5. Using the **SSTs** and a hammer, tap a new oil seal in evenly until the **SST** (**49 U027 003**) contacts the transaxle case.
6. Coat the lip of the oil seal with ATF.
7. Install the drive shaft (RH) to the transaxle. (See 03-13-3 FRONT DRIVE SHAFT REMOVAL/INSTALLATION.)
8. Add the ATF. (See 05-17B-12 AUTOMATIC TRANSAXLE FLUID (ATF) REPLACEMENT [GW6A-EL, GW6AX-EL].)
9. Install the front under cover No.2. (See 09-16-41 FRONT UNDER COVER No.2 REMOVAL/INSTALLATION.)
10. Perform the “Mechanical System Test”. (See 05-17B-4 MECHANICAL SYSTEM TEST [GW6A-EL, GW6AX-EL].)

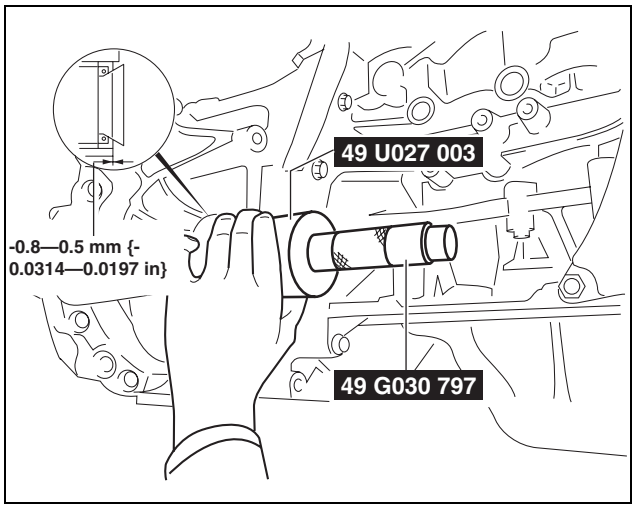

ac5uuw00000218

AUTOMATIC TRANSAXLE [GW6A-EL, GW6AX-EL]

Converter housing Side (GW6AX-EL)

1. Remove the front under cover No.2. (See 09-16-41 FRONT UNDER COVER No.2 REMOVAL/INSTALLATION.)
2. Drain the ATF. (See 05-17B-12 AUTOMATIC TRANSAXLE FLUID (ATF) REPLACEMENT [GW6A-EL, GW6AX-EL].)
3. Remove the transfer. (See 03-16B-6 TRANSFER REMOVAL/INSTALLATION [GW6AX-EL].)

Caution

- **The oil seal is easily damaged by the sharp edges of the drive shaft splines. Do not let the splines contact the oil seal.**

4. Remove the oil seal using a flathead screwdriver.

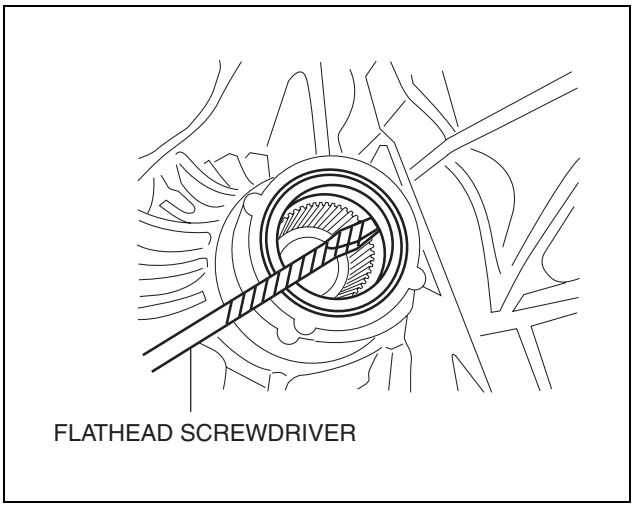

ac5uuw00000217

5. Using the **SSTs** and a hammer, tap a new oil seal in evenly until the **SST** (**49 U027 003**) contacts the transaxle case.
6. Coat the lip of the oil seal with ATF.
7. Install the transfer. (See 03-16B-6 TRANSFER REMOVAL/INSTALLATION [GW6AX-EL].)
8. Add the ATF. (See 05-17B-12 AUTOMATIC TRANSAXLE FLUID (ATF) REPLACEMENT [GW6A-EL, GW6AX-EL].)
9. Install the front under cover No.2. (See 09-16-41 FRONT UNDER COVER No.2 REMOVAL/INSTALLATION.)
10. Perform the “Mechanical System Test”. (See 05-17B-4 MECHANICAL SYSTEM TEST [GW6A-EL, GW6AX-EL].)

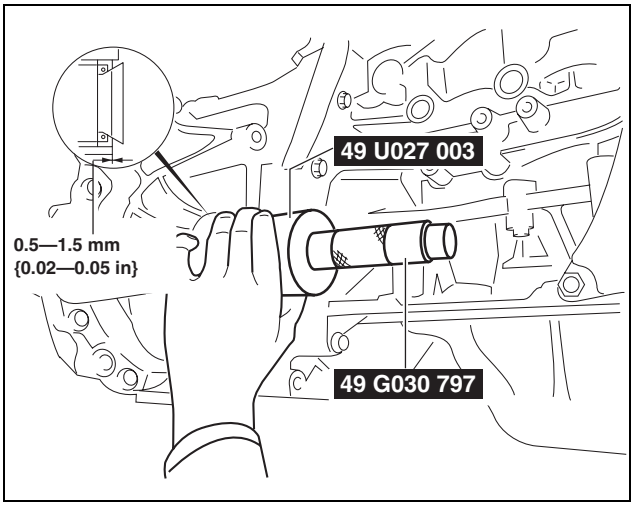

ac5wzw0000091

AUTOMATIC TRANSAXLE [GW6A-EL, GW6AX-EL]

OIL SEAL (CONTROL VALVE BODY) REPLACEMENT [GW6A-EL, GW6AX-EL]

id0517i2118700

1. Disconnect the negative battery cable. (See 01-17B-9 NEGATIVE BATTERY CABLE DISCONNECTION/ CONNECTION [SKYACTIV-D 2.2].)
2. Remove the air cleaner component. (See 01-13B-6 INTAKE-AIR SYSTEM REMOVAL/INSTALLATION [SKYACTIV-D 2.2].)
3. Disconnect the control valve body connector.

Caution
- **Make sure that your hand does not touch the terminal as the connector terminal could be damaged.**
- **Water or foreign objects entering the connector can cause a poor connection or corrosion. Be sure not to drop water or foreign objects on the connector when disconnecting it.**

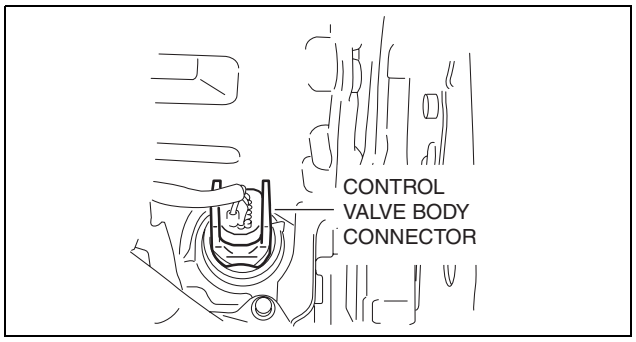

ac5wzw0000396

4. Remove the hose clamp.

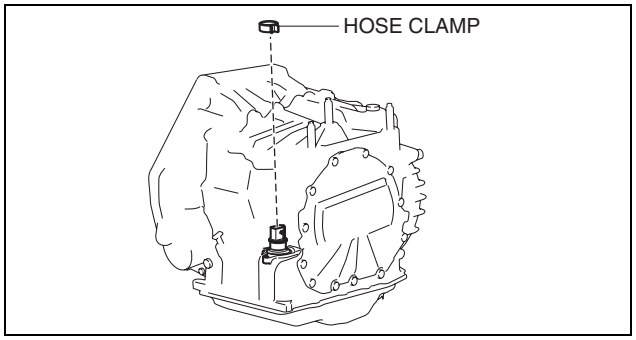

ac5wzw0000396

5. Cut the oil seal using a utility knife as shown in the following illustration.

Caution
- **Do not damage the transaxle case.**
- **Do not damage the control valve body coupler connector.**
- **To prevent foreign matter penetration, clean the oil seal area thoroughly and cut the oil seal so as not to leave cutting fragments.**

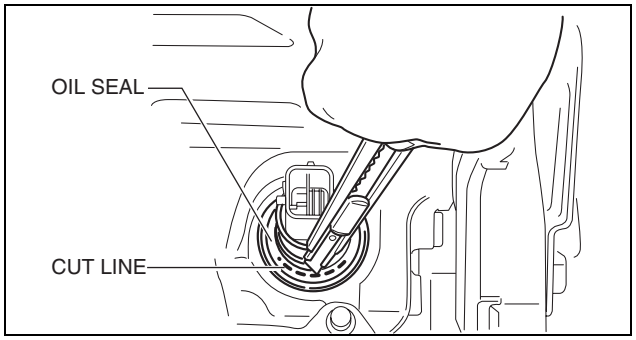

ac5wzw0000456

6. Using a tape-wrapped flathead screwdriver, remove the oil seal from the transaxle case.

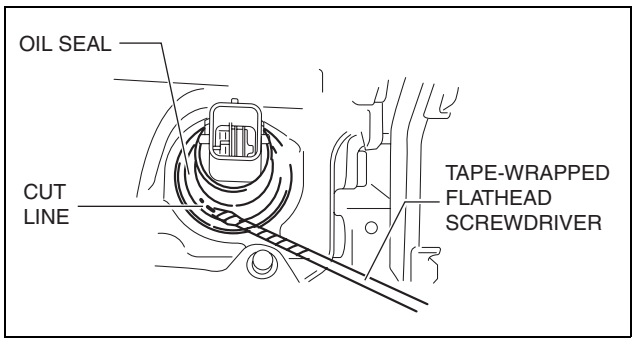

ac5wzw0000456

AUTOMATIC TRANSAXLE [GW6A-EL, GW6AX-EL]

Note
- Remove the oil seal by tapping the tip of a tape-wrapped flathead screwdriver on the inner circumference surface A area of the oil seal.

7. Temporarily install the oil seal (control valve body) by hand.

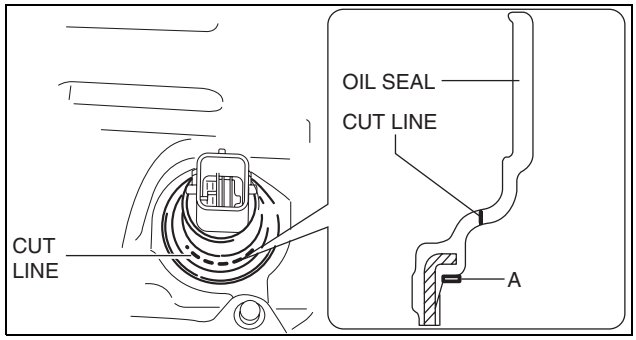

ac5wzw0000456

8. Using the **SSTs** and a hammer, install the oil seal (control valve body) so that it is not tilted and there is no height difference between the transaxle case surface and the end surface of the oil seal.

Caution
- **When installing the oil seal (control valve body), do not mistakenly hit the control valve body connector with the hammer. Otherwise the control valve body connector could be damaged making it no longer waterproof.**

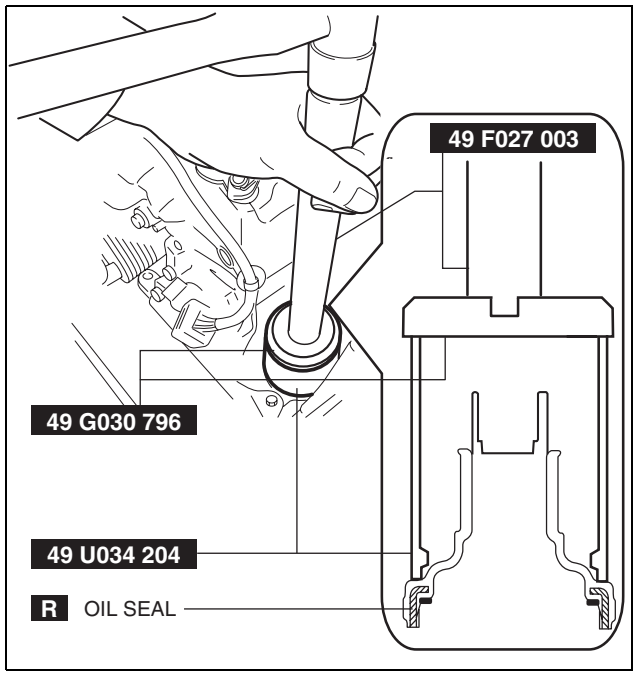

ac5wzw0000374

9. Install a new hose clamp to the position shown in the figure.

Caution
- **If the hose clamp is reused it could cause ATF leakage, therefore use a new hose clamp.**
- **Install the hose clamp tab to within the range shown in the figure.**
  A: 210°

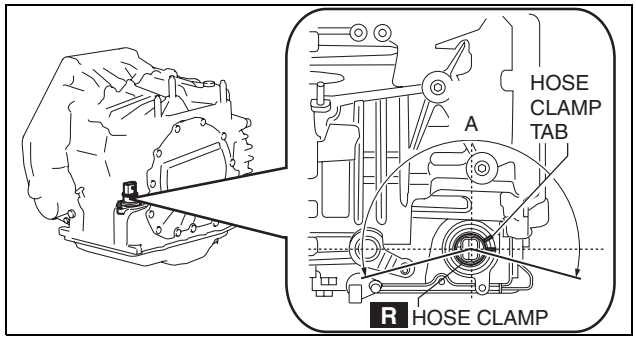

ac5wzw0000397

AUTOMATIC TRANSAXLE [GW6A-EL, GW6AX-EL]

- **Install the hose clamp so that it does not interfere with the top and bottom flanges of the oil seal to maintain the waterproofing integrity.**

10. Connect the control valve body connector.

Caution
- **Make sure that your hand does not touch the terminal as the connector terminal could be damaged.**
- **Verify that there is no fluid or foreign matter adhering to the connector before connecting the connector.**
- **Insert the connector straight as the connector terminal could be damaged.**
- **Rotate the connector lever until a click is heard.**

11. Install the air cleaner component. (See 01-13B-6 INTAKE-AIR SYSTEM REMOVAL/ INSTALLATION [SKYACTIV-D 2.2].)
12. Connect the negative battery cable. (See 01-17B-9 NEGATIVE BATTERY CABLE DISCONNECTION/CONNECTION [SKYACTIV-D 2.2].)

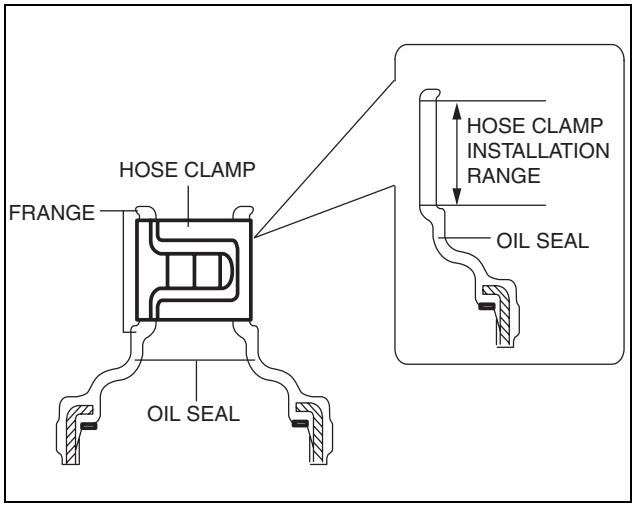

am3zzw0001267

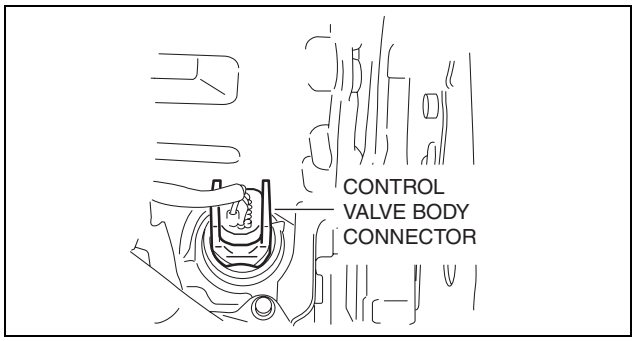

ac5wzw0000396

AUTOMATIC TRANSAXLE [GW6A-EL, GW6AX-EL]

OIL COOLER REMOVAL/INSTALLATION [GW6A-EL, GW6AX-EL]

id0517i2117500

Without oil cooler No.2

1. Disconnect the negative battery cable. (See 01-17B-9 NEGATIVE BATTERY CABLE DISCONNECTION/ CONNECTION [SKYACTIV-D 2.2].)
2. Remove the front under cover NO.2. (See 09-16-41 FRONT UNDER COVER No.2 REMOVAL/ INSTALLATION.)
3. Drain the ATF. (See 05-17B-12 AUTOMATIC TRANSAXLE FLUID (ATF) REPLACEMENT [GW6A-EL, GW6AX-EL].)
4. Drain the engine coolant. (See 01-12B-4 ENGINE COOLANT REPLACEMENT [SKYACTIV-D 2.2].)
5. Remove in the order indicated in the table.

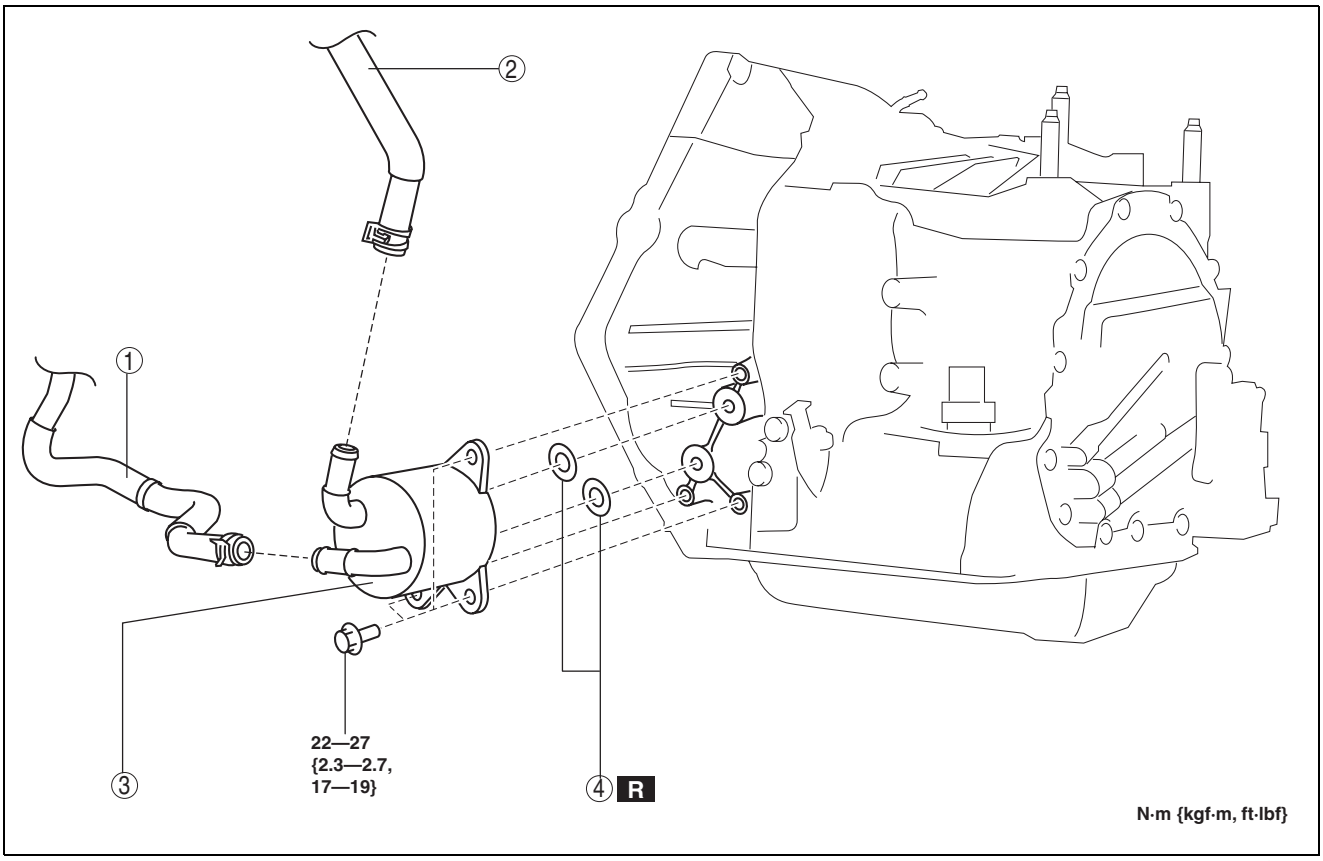

5a000371

1	Water (oil to oil cooler) (See 05-17B-72 Water Hose Installation Note)
2	Water (oil to oil cooler) (See 05-17B-72 Water Hose Installation Note)

3	Water oil cooler
4	O-ring

6. Install in the reverse order of removal.
7. Add the engine coolant. (See 01-12B-4 ENGINE COOLANT REPLACEMENT [SKYACTIV-D 2.2].)
8. Add the ATF. (See 05-17B-12 AUTOMATIC TRANSAXLE FLUID (ATF) REPLACEMENT [GW6A-EL, GW6AX-EL].)
9. Perform the “Mechanical System Test”. (See 05-17B-4 MECHANICAL SYSTEM TEST [GW6A-EL, GW6AX-EL].)

AUTOMATIC TRANSAXLE [GW6A-EL, GW6AX-EL]

Water Hose Installation Note

1. Install the water hose to the oil cooler as shown in the figure with the hose clamp expanded.

Note

- A new water hose and hose clamp are attached.

2. Install the hose clamp so that center A of the hose clamp tab is within the range shown in the figure.
   - Verify that the installation angle of the hose clamp is within the range shown in the figure.

Water hose (connected to the water pipe)

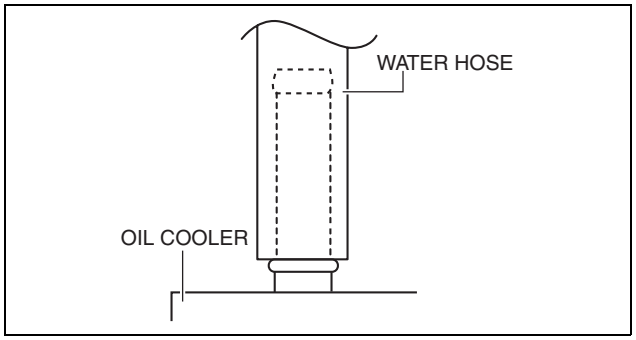

am3uuw0000832

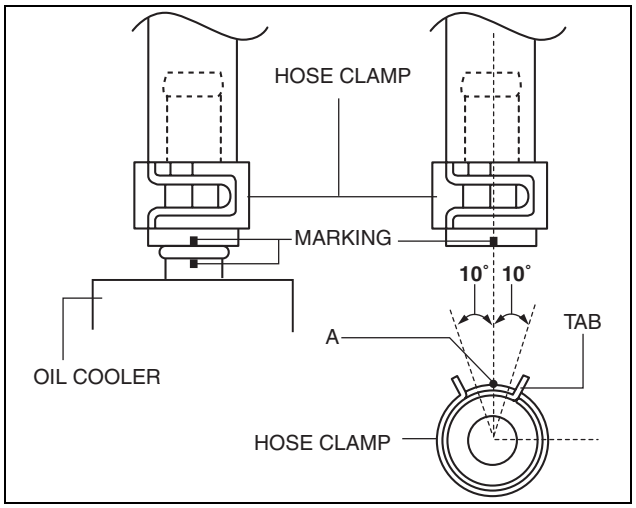

am3uuw0000371

Water hose (connected to the engine oil cooler)

3. Verify that the hose clamp does not interfere with any other components.

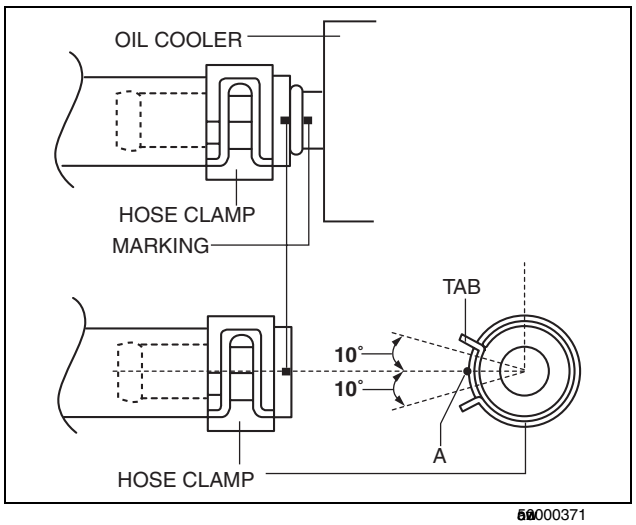

am3uuw0000371

AUTOMATIC TRANSAXLE [GW6A-EL, GW6AX-EL]

With oil cooler No.2

1. Disconnect the negative battery cable. (See 01-17B-9 NEGATIVE BATTERY CABLE DISCONNECTION/ CONNECTION [SKYACTIV-D 2.2].)
2. Remove the front under cover NO.2. (See 09-16-41 FRONT UNDER COVER No.2 REMOVAL/ INSTALLATION.)
3. Drain the ATF. (See 05-17B-12 AUTOMATIC TRANSAXLE FLUID (ATF) REPLACEMENT [GW6A-EL, GW6AX-EL].)
4. Drain the engine coolant. (See 01-12B-4 ENGINE COOLANT REPLACEMENT [SKYACTIV-D 2.2].)
5. Remove in the order indicated in the table.

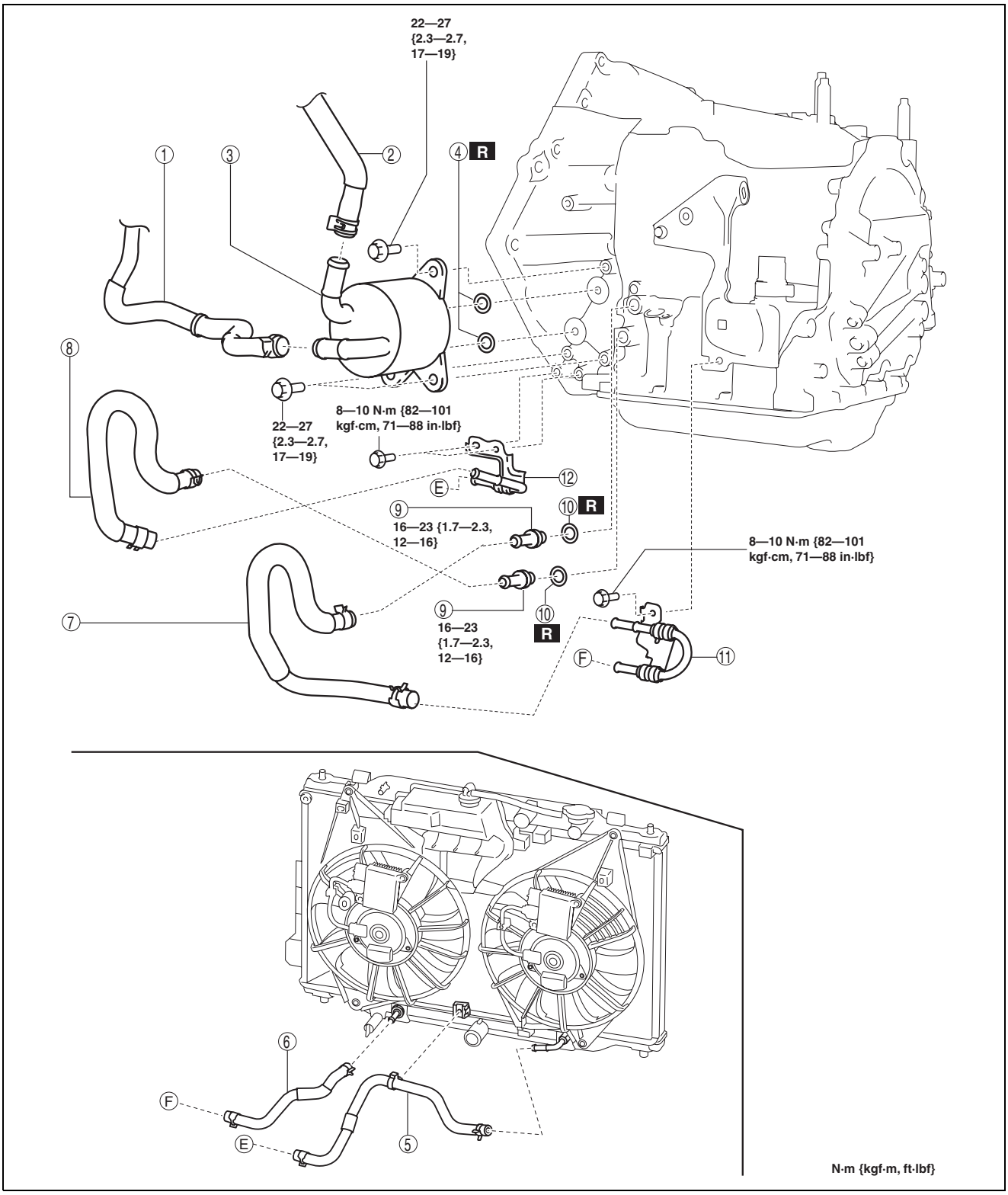

ac5wzw0000372

AUTOMATIC TRANSAXLE [GW6A-EL, GW6AX-EL]

1	Water hose (connected to the engine oil cooler) (See 05-17B-72 Water Hose Installation Note.)
2	Water hose (connected to the water pipe) (See 05-17B-72 Water Hose Installation Note.)
3	Water-cooled oil cooler
4	O-rings
5	Oil hose No.1 (See 05-17B-80 Oil Hose No.1 (radiator out side) Installation Note.) (See 05-17B-79 Oil Hose No.1 (oil pipe No.2 side) Installation Note.)
6	Oil hose No.2 (See 05-17B-79 Oil Hose No.2 (radiator in side) Installation Note.) (See 05-17B-78 Oil Hose No.2 (oil pipe No.1 side) Installation Note.)
7	Oil hose No.3 (See 05-17B-77 Oil Hose No.3 (transaxle side) Installation Note.) (See 05-17B-77 Oil Hose No.3 (oil pipe No.1 side) Installation Note.)
8	Oil hose No.4 (See 05-17B-76 Oil Hose No.4 (transaxle side) Installation Note.) (See 05-17B-75 Oil Hose No.4 (oil pipe No.2 side) Installation Note.)
9	Connector bolt
10	Gasket
11	Oil pipe No.1
12	Oil pipe No.2

6. Install in the reverse order of removal.
7. Add the engine coolant. (See 01-12B-4 ENGINE COOLANT REPLACEMENT [SKYACTIV-D 2.2].)
8. Add the ATF. (See 05-17B-12 AUTOMATIC TRANSAXLE FLUID (ATF) REPLACEMENT [GW6A-EL, GW6AX-EL].)
9. Perform the “Mechanical System Test”. (See 05-17B-4 MECHANICAL SYSTEM TEST [GW6A-EL, GW6AX-EL].)

Water Hose Installation Note

1. Install the water hose to the oil cooler as shown in the figure with the hose clamp expanded.

   Note
   - A new water hose and hose clamp are attached.

2. Install the hose clamp so that center A of the hose clamp tab is within the range shown in the figure.
   - Verify that the installation angle of the hose clamp is within the range shown in the figure.

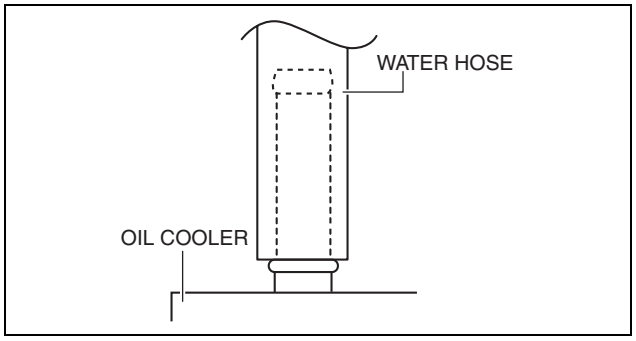

am3uuw0000832

AUTOMATIC TRANSAXLE [GW6A-EL, GW6AX-EL]

Water hose (connected to the water pipe)

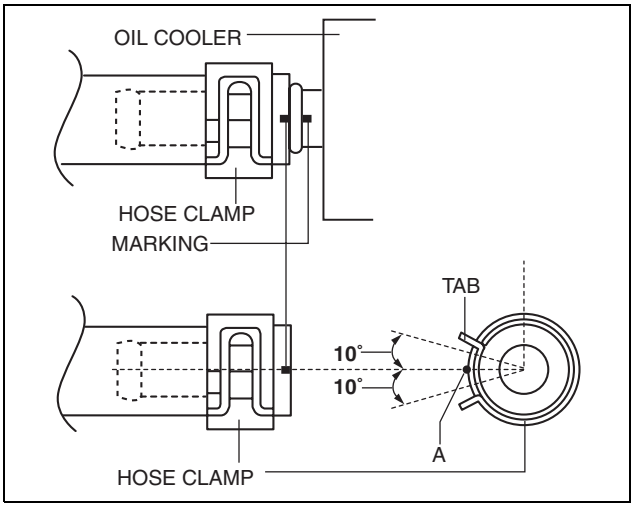

E5000371

Water hose (connected to the engine oil cooler)

3. Verify that the hose clamp does not interfere with any other components.

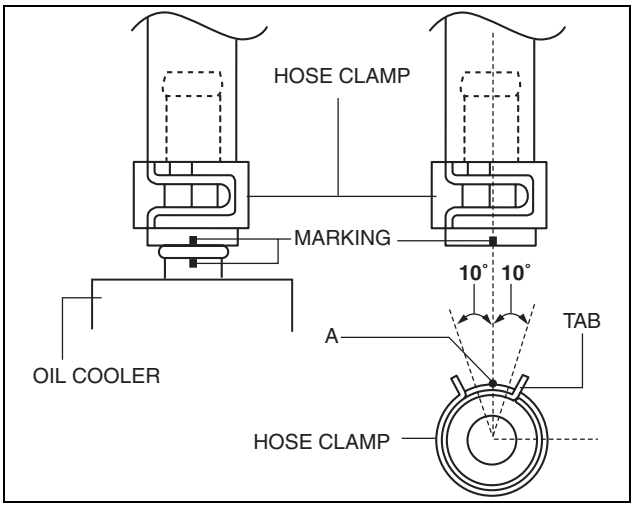

E5000371

Oil Hose No.4 (oil pipe No.2 side) Installation Note

1. Install the oil hose No.4 to the oil pipe No.2 as shown in the figure with the hose clamp expanded.

Note

- A new oil hose No.4 and hose clamp are attached.

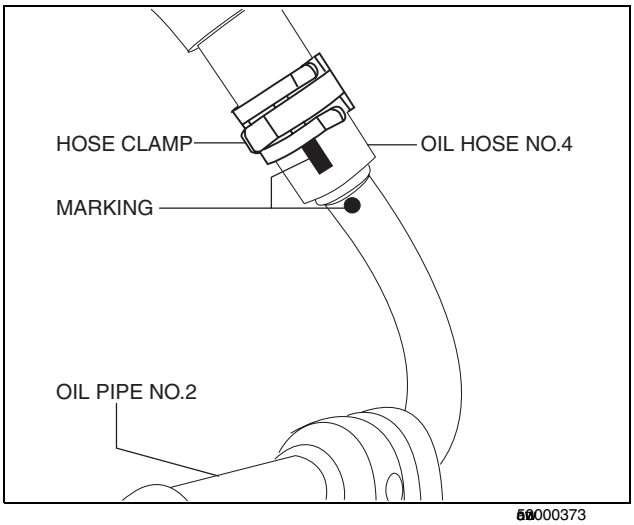

E5000373

AUTOMATIC TRANSAXLE [GW6A-EL, GW6AX-EL]

2. Install the hose clamp so that center A of the hose clamp tab is aligned with the marking as shown in the figure.
   - Verify that the installation angle of the hose clamp is within the range shown in the figure.
3. Verify that the hose clamp does not interfere with any other components.

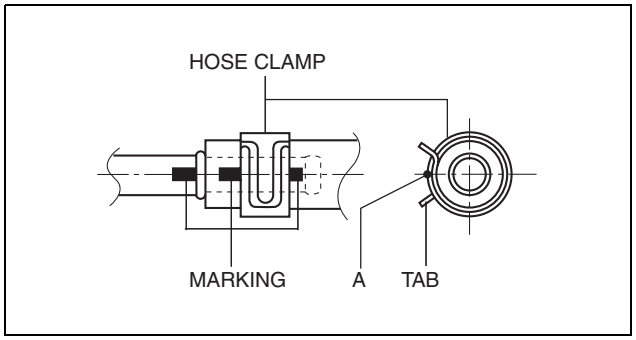

ac5wzw0000373

Oil Hose No.4 (transaxle side) Installation Note

1. Install the oil hose No.4 to the connector bolt as shown in the figure with the hose clamp expanded.

Note
- A new oil hose No.4 and hose clamp are attached.

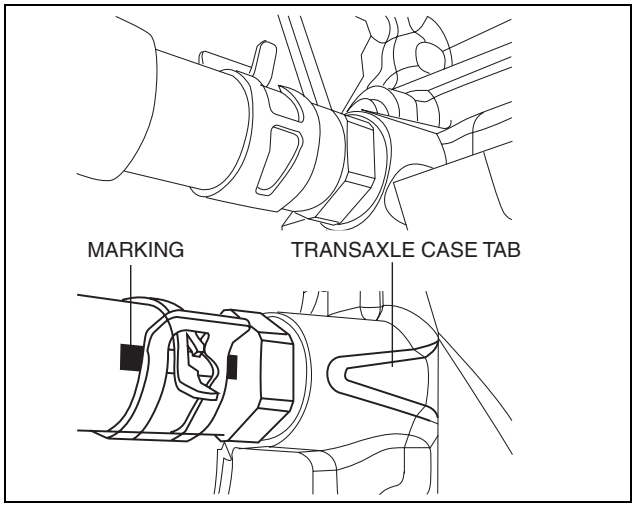

ac5wzw0000372

2. Install the hose clamp so that center A of the hose clamp tab is within the range shown in the figure.
   - Verify that the installation angle of the hose clamp is within the range shown in the figure.
3. Verify that the hose clamp does not interfere with any other components.

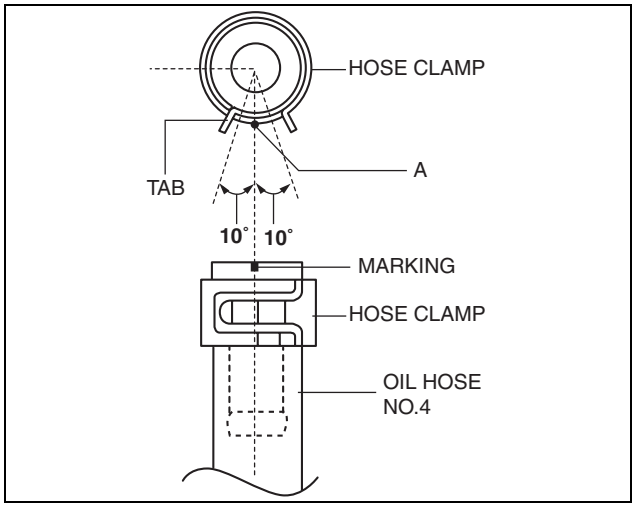

ac5wzw0000372

AUTOMATIC TRANSAXLE [GW6A-EL, GW6AX-EL]

Oil Hose No.3 (oil pipe No.1 side) Installation Note

1. Install the oil hose No.3 to the oil pipe No.1 as shown in the figure with the hose clamp expanded.

Note

- A new oil hose No.3 and hose clamp are attached.

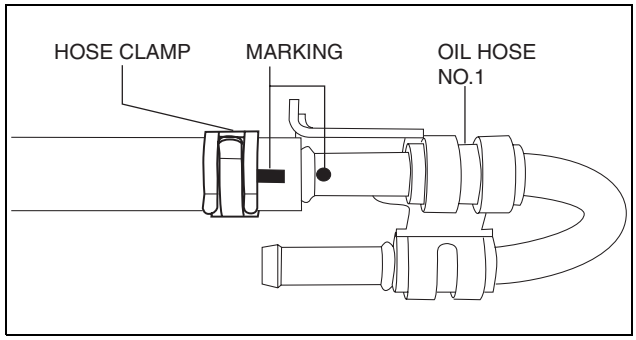

ac5wzw0000373

2. Install the hose clamp so that center A of the hose clamp tab is aligned with the marking as shown in the figure.
   - Verify that the installation angle of the hose clamp is within the range shown in the figure.
3. Verify that the hose clamp does not interfere with any other components.

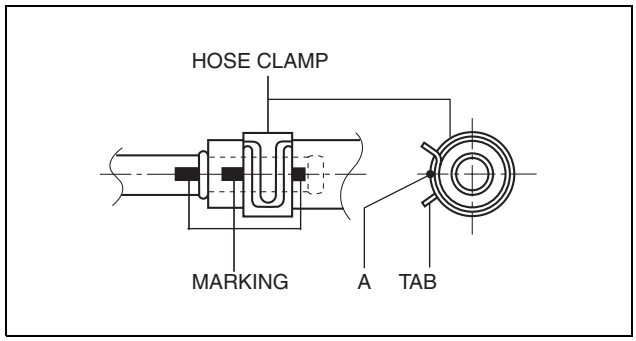

ac5wzw0000373

Oil Hose No.3 (transaxle side) Installation Note

1. Install the oil hose No.3 to the connector bolt as shown in the figure with the hose clamp expanded.

Note

- A new oil hose No.3 and hose clamp are attached.

2. Install the hose clamp so that center A of the hose clamp tab is within the range shown in the figure.

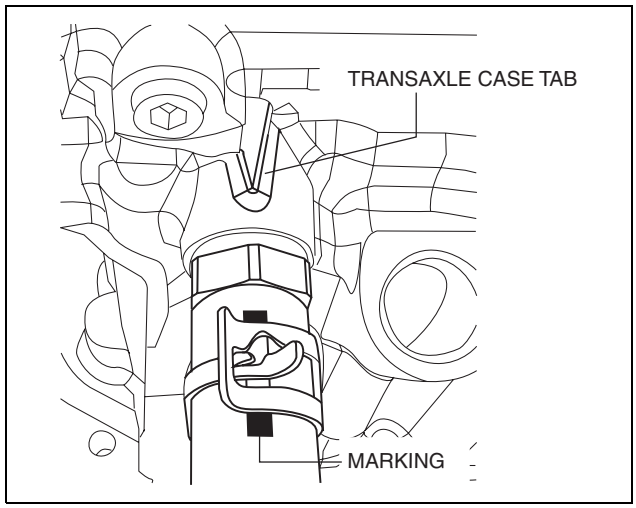

ac5wzw0000372

AUTOMATIC TRANSAXLE [GW6A-EL, GW6AX-EL]

- Verify that the installation angle of the hose clamp is within the range shown in the figure.

3. Verify that the hose clamp does not interfere with any other components.

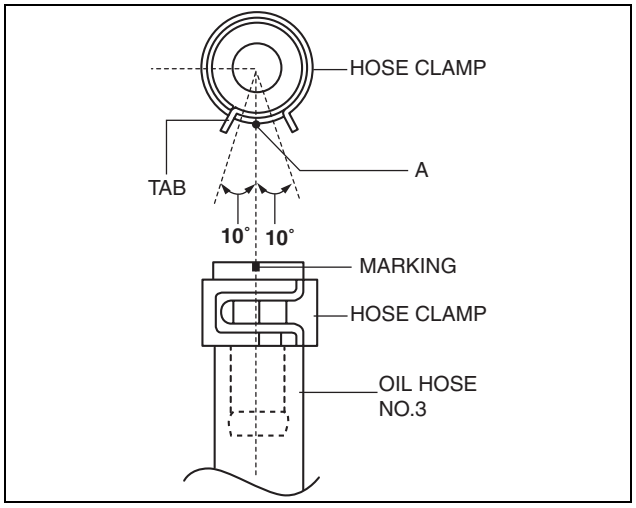

ac5wzw0000372

Oil Hose No.2 (oil pipe No.1 side) Installation Note

1. Install the oil hose No.2 to the oil pipe No.1 as shown in the figure with the hose clamp expanded.

Note

- A new oil hose No.2 and hose clamp are attached.

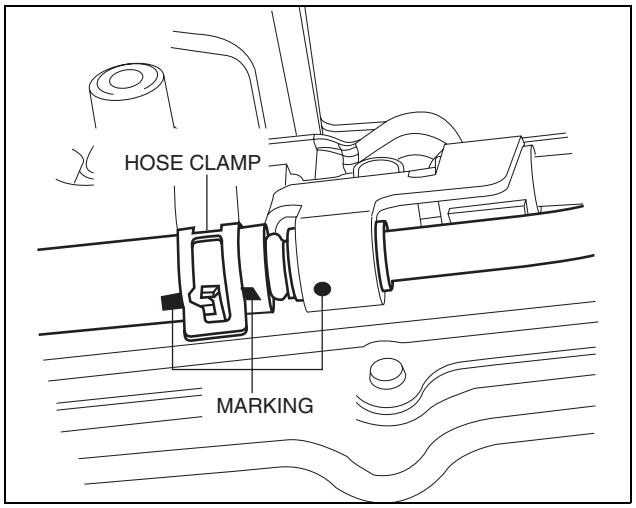

ac5wzw0000372

2. Install the hose clamp so that center A of the hose clamp tab is aligned with the marking as shown in the figure.
   - Verify that the installation angle of the hose clamp is within the range shown in the figure.
3. Verify that the hose clamp does not interfere with any other components.

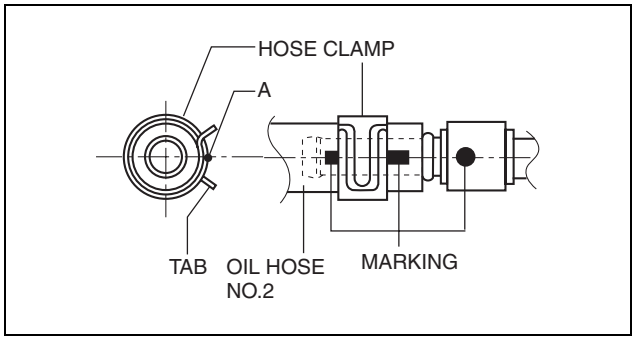

ac5wzw0000373

AUTOMATIC TRANSAXLE [GW6A-EL, GW6AX-EL]

Oil Hose No.2 (radiator in side) Installation Note

1. Install the oil hose No.2 to the radiator as shown in the figure with the hose clamp expanded.

Note

- A new oil hose No.2 and hose clamp are attached.

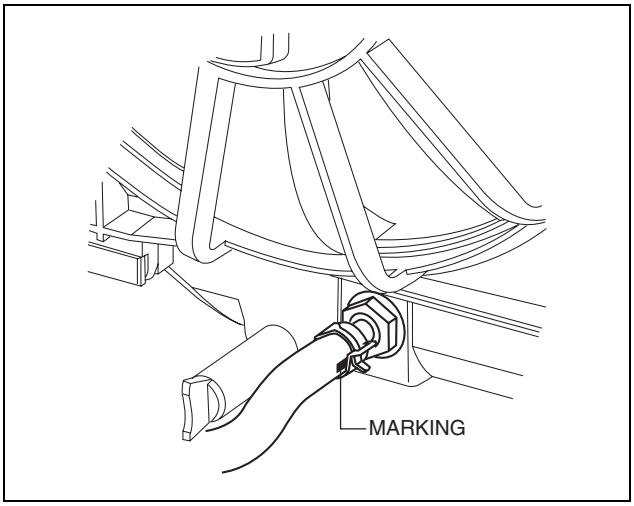

ac5wzw0000372

2. Install the hose clamp so that center A of the hose clamp tab is aligned with the marking as shown in the figure.
   - Verify that the installation angle of the hose clamp is within the range shown in the figure.
3. Verify that the hose clamp does not interfere with any other components.

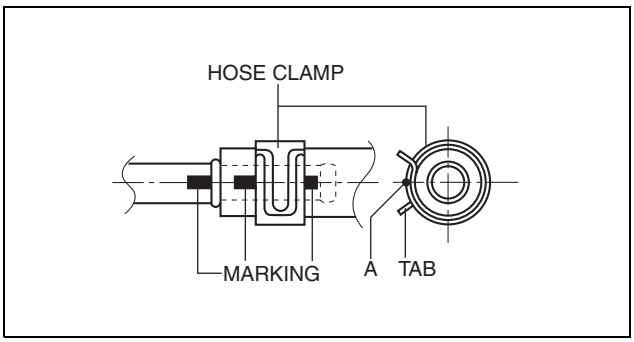

ac5wzw0000372

Oil Hose No.1 (oil pipe No.2 side) Installation Note

1. Install the oil hose No.1 to the oil pipe No.2 as shown in the figure with the hose clamp expanded.

Note

- A new oil hose No.1 and hose clamp are attached.

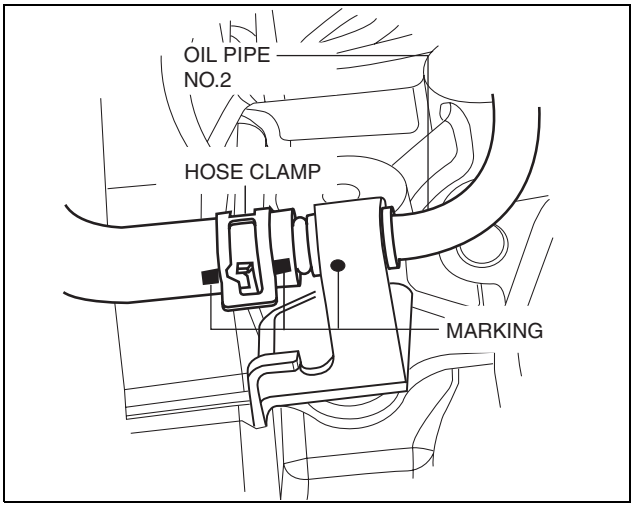

ac5wzw0000373

AUTOMATIC TRANSAXLE [GW6A-EL, GW6AX-EL]

2. Install the hose clamp so that center A of the hose clamp tab is aligned with the marking as shown in the figure.
   - Verify that the installation angle of the hose clamp is within the range shown in the figure.
3. Verify that the hose clamp does not interfere with any other components.

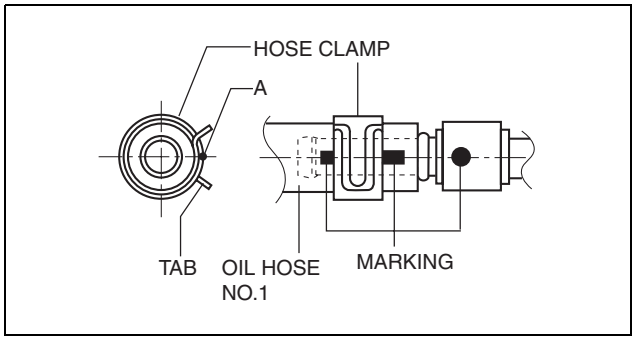

ac5wzw0000373

Oil Hose No.1 (radiator out side) Installation Note

1. Install the oil hose No.1 to the radiator as shown in the figure with the hose clamp expanded.

Note

- A new oil hose No.1 and hose clamp are attached.

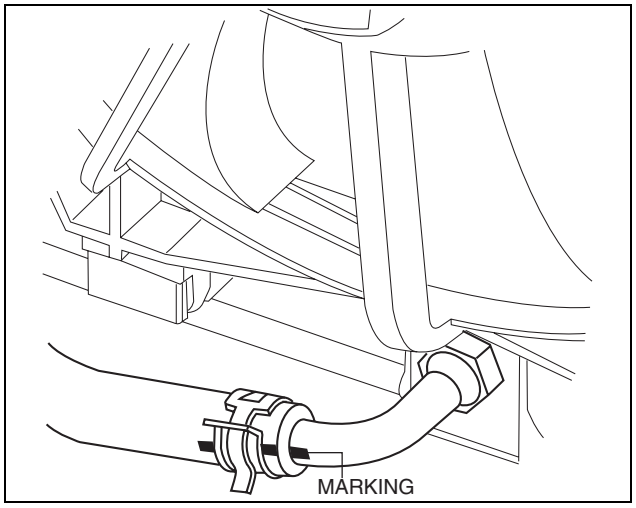

ac5wzw0000372

2. Install the hose clamp so that center A of the hose clamp tab is aligned with the marking as shown in the figure.
   - Verify that the installation angle of the hose clamp is within the range shown in the figure.
3. Verify that the hose clamp does not interfere with any other components.

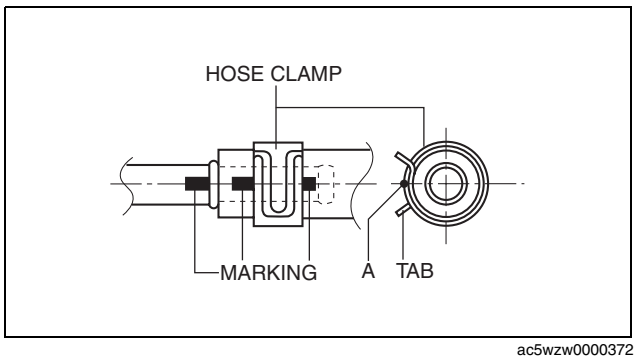

ac5wzw0000372

AUTOMATIC TRANSAXLE [GW6A-EL, GW6AX-EL]

CONTROL VALVE BODY REMOVAL/INSTALLATION [GW6A-EL, GW6AX-EL]

id0517i2118000

On-Vehicle Removal

Warning
- **A hot transaxle and ATF can cause severe burns. Turn off the engine and wait until they are cool.**
- **Using compressed air can cause dirt and other particles to fly out, causing injury to the eyes. Wear protective eyeglasses whenever using compressed air.**

Caution
- **If the control valve body has been replaced, perform initial learning. (See 05-17B-93 INITIAL LEARNING [GW6A-EL, GW6AX-EL].)**
- **Placing the control valve body connector side pointed downward could damage the control valve body connector part or sensor. If the servicing can only be performed by pointing the control valve body connector side downward, spread shock-absorbing material, which does not produce dust or foreign matter, and place the control valve body connector part and sensor on the table so that they do not directly contact the table.**

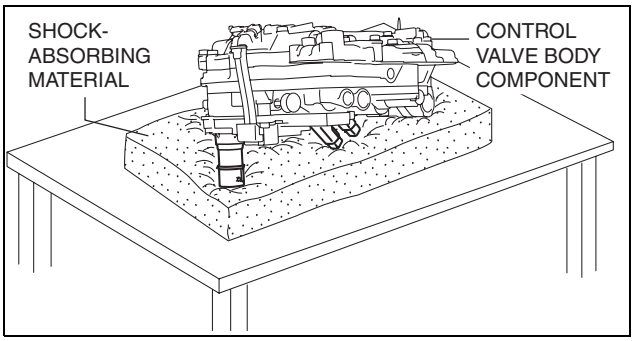

ac5wzw0000373

1. Select the selector lever to P position.
2. Disconnect the negative battery cable. (See 01-17B-9 NEGATIVE BATTERY CABLE DISCONNECTION/CONNECTION [SKYACTIV-D 2.2].)
3. Remove the front under cover No.2. (See 09-16-41 FRONT UNDER COVER No.2 REMOVAL/INSTALLATION.)
4. Clean the transaxle exterior throughout with a steam cleaner or cleaning solvents.
5. Remove the air cleaner component. (See 01-13B-6 INTAKE-AIR SYSTEM REMOVAL/INSTALLATION [SKYACTIV-D 2.2].)
6. Disconnect the control valve body connector.

Caution
- **Make sure that your hand does not touch the terminal as the connector terminal could be damaged.**
- **Water or foreign objects entering the connector can cause a poor connection or corrosion. Be sure not to drop water or foreign objects on the connector when disconnecting it.**

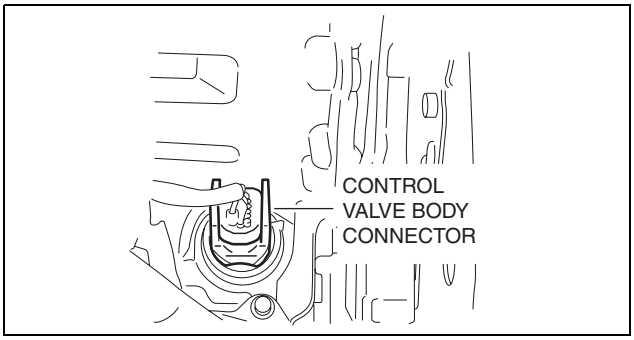

ac5wzw0000396

7. Remove the hose clamp.
8. Drain the ATF. (See 05-17B-12 AUTOMATIC TRANSAXLE FLUID (ATF) REPLACEMENT [GW6A-EL, GW6AX-EL].)
9. Remove the oil pan.

Caution
- **To avoid damaging the control valve body, if there is a large amount of foreign material at the bottom of the oil pan when the oil pan is removed, replace the oil strainer with a new one.**
- **If there is not a large amount of foreign material at the bottom of the oil pan, the oil strainer does not have to be replaced.**

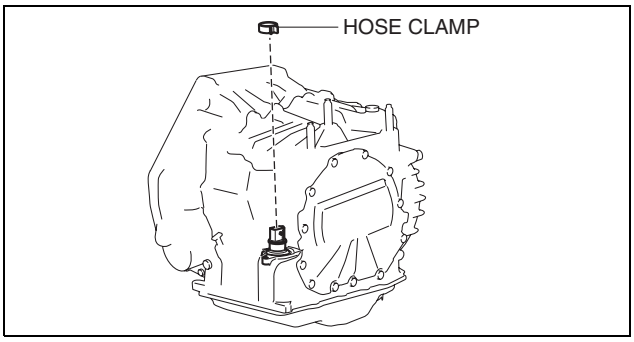

ac5wzw0000396

Note
- Always use new oil pan installation bolts when re-installing the oil pan because the oil pan installation bolts cannot be reused.

AUTOMATIC TRANSAXLE [GW6A-EL, GW6AX-EL]

10. Remove the oil strainer.

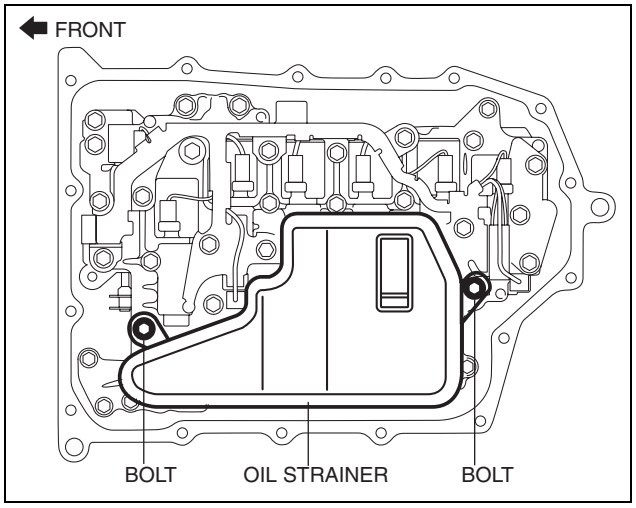

am3uuw0000828

11. Remove the oil strainer O-ring.
12. Remove the control valve body.

Caution
- **Remove the control valve body directly from underneath so that force is not applied to the control valve body connector in the lateral direction.**
- **When removing the control valve body component for vehicles with oil cooler No.2, be careful not to loose the spool valve and the spool valve spring because they may fall off.**

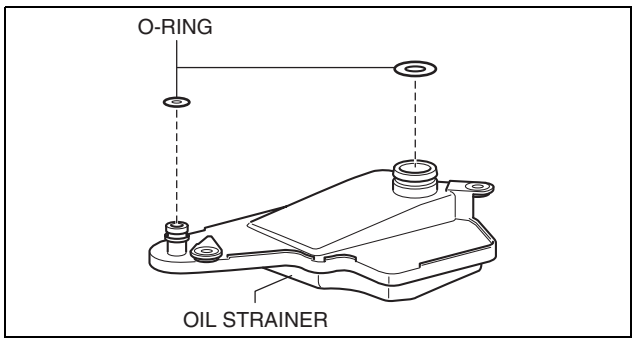

am3uuw0000828

13. Remove the oil seal (control valve body). (See 05-17B-68 OIL SEAL (CONTROL VALVE BODY) REPLACEMENT [GW6A-EL, GW6AX-EL].)

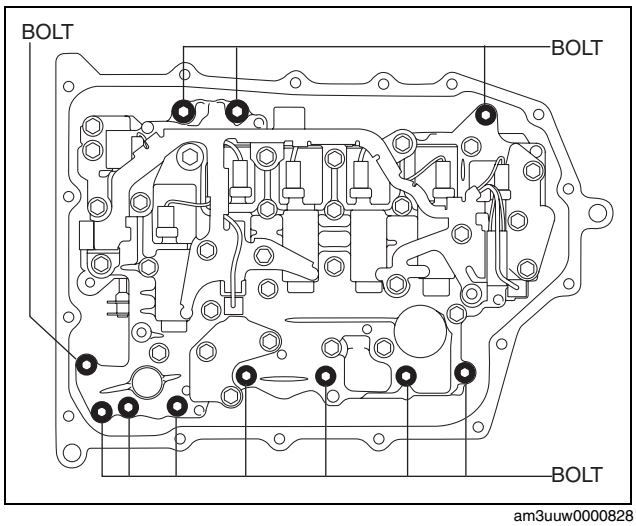

am3uuw0000828

AUTOMATIC TRANSAXLE [GW6A-EL, GW6AX-EL]

14. Remove the gasket from the transaxle case.

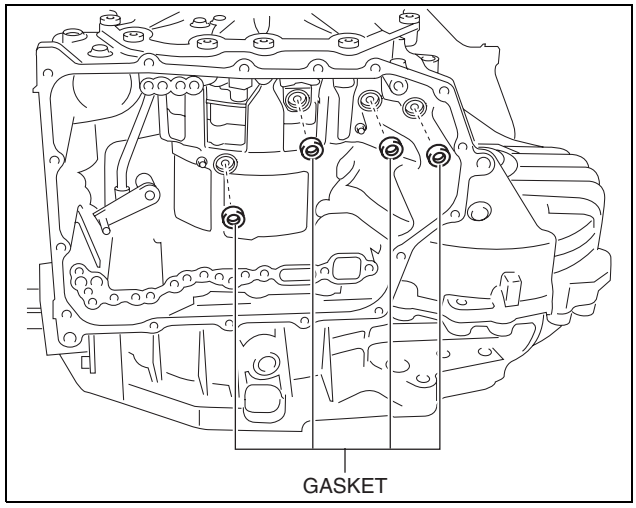

am3uuw0000921

On-Vehicle Installation (With oil cooler No.2)

1. Install the gasket to the transaxle case.
2. Install the dowel pin to the control valve body.

Note

- If the dowel pin remains in the transaxle case, remove the dowel pin from the transaxle case and install the dowel pin to the control valve body.

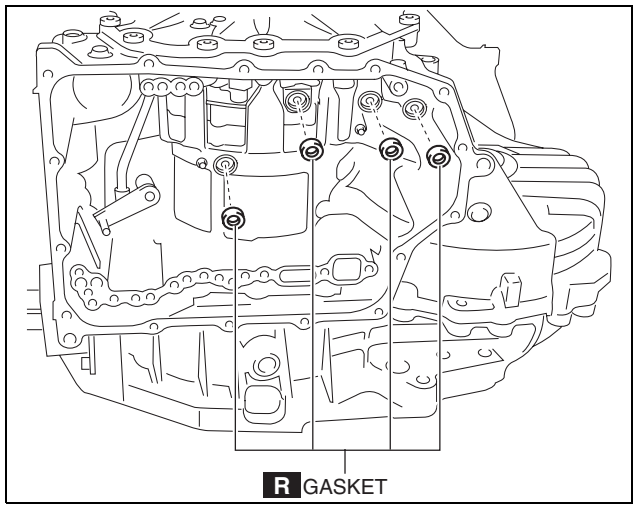

am3uuw0000918

3. Prepare a plastic plate of the size indicated in the figure.

Note

- Use a plastic plate made of material that is not too hard.

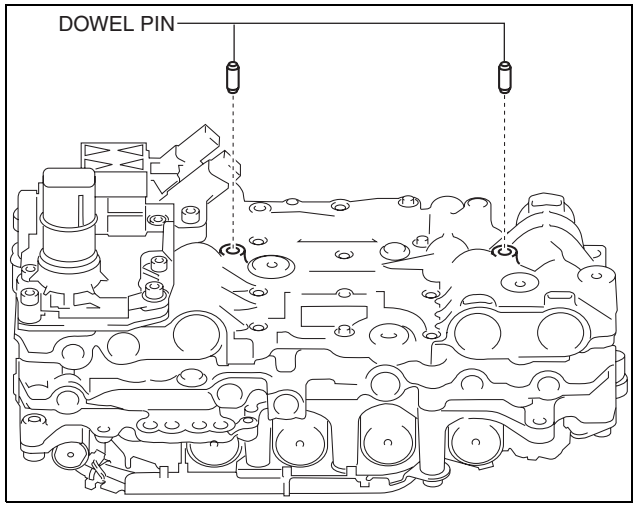

am3uuw0000918

AUTOMATIC TRANSAXLE [GW6A-EL, GW6AX-EL]

A: 20 mm {0.79 in}
B: ϕ8
C: 15 mm {0.59 in}
D: 65 mm {2.6 in}

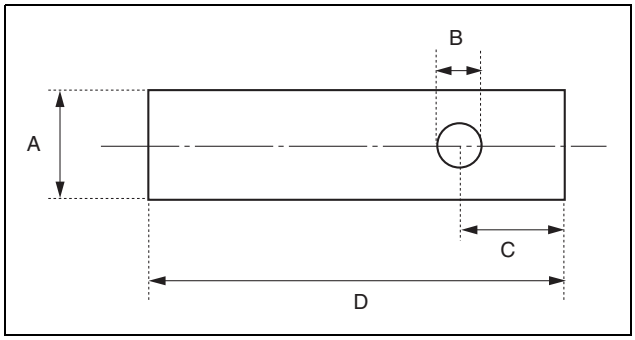

59000373

4. Insert the spool valve and the spool valve spring into the transaxle case, and hold the relief valve and the spring using the plastic plate prepared in Step 3 as shown in the figure so that they do not fall off.
5. Install the control valve body using the following procedure.

Caution

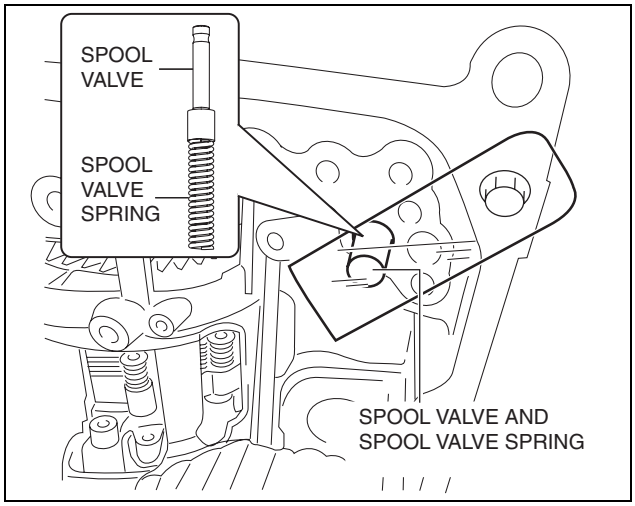

59000373

- **Install the control valve body so that the turbine/input shaft speed sensor, output shaft speed sensor, and control valve body connector do not contact the transaxle case.**

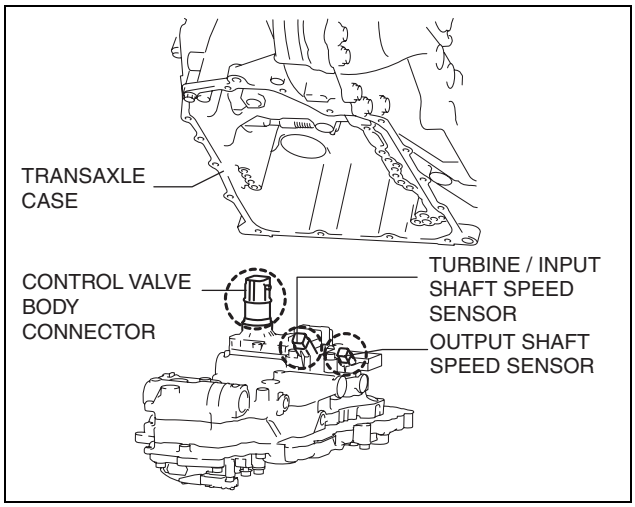

59000374

AUTOMATIC TRANSAXLE [GW6A-EL, GW6AX-EL]

(1) Engage the parking assist lever component on both surfaces of the manual valve.
(2) Temporarily install the control valve body installation bolts at three locations so that the plastic plate installed in Step 4 can be removed.

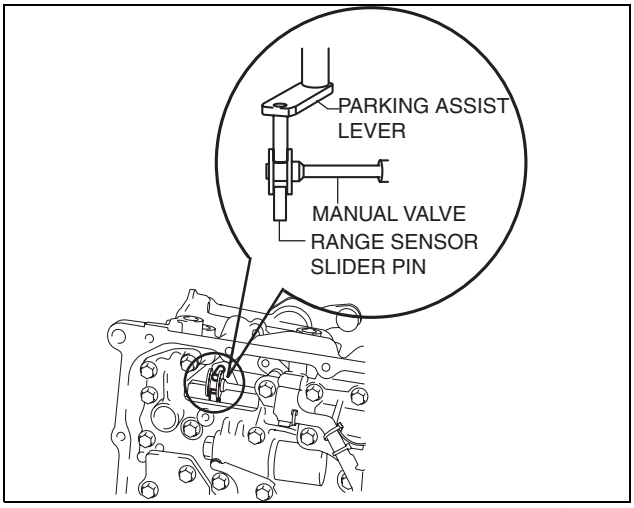

5000455

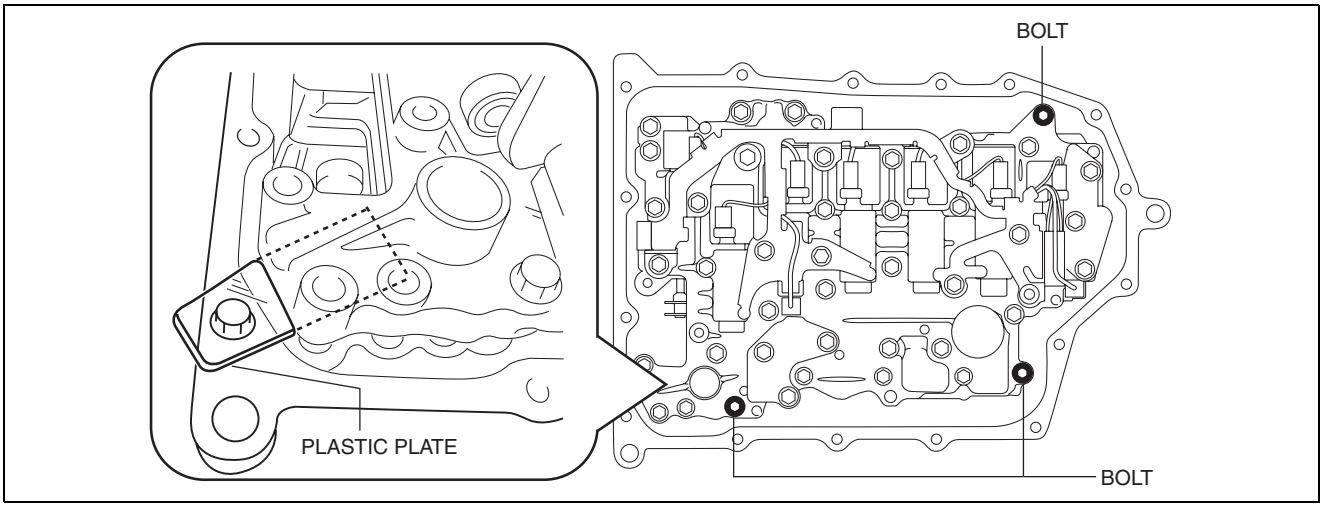

5000374

(3) Remove the plastic plate.

Caution

- **Because the control valve body may be damaged if foreign material penetrates it, carefully remove the plastic plate preventing foreign material from penetrating the control valve body.**

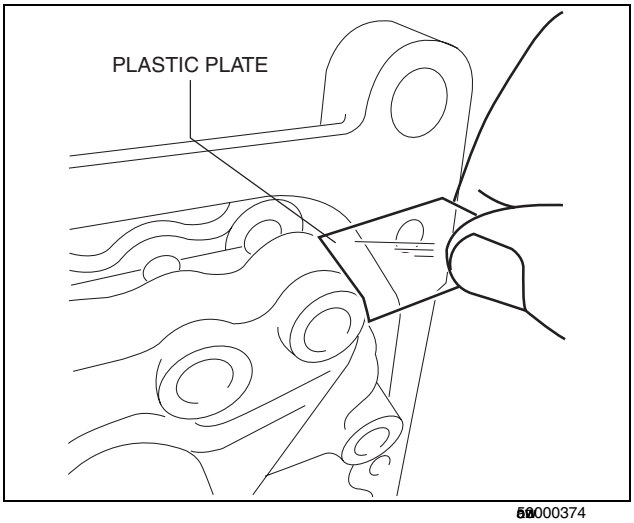

5000374

AUTOMATIC TRANSAXLE [GW6A-EL, GW6AX-EL]

(4) Install the control valve body.

Tightening torque
9—10 N·m {92—101 kgf·cm, 80—88 in·lbf}

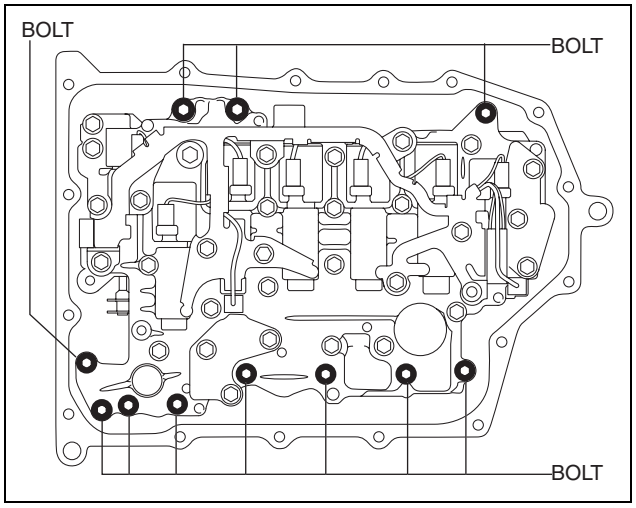

ac5wzw0000456

6. Move the manual valve in both directions of the arrow and verify that the manual valve is correctly connected to the parking assist lever component and the slider pin for the range sensor.

Note
- If the manual valve only moves in the gap between the parking assist lever component surface and the manual valve surface, the manual valve and the parking assist lever component are correctly engaged.

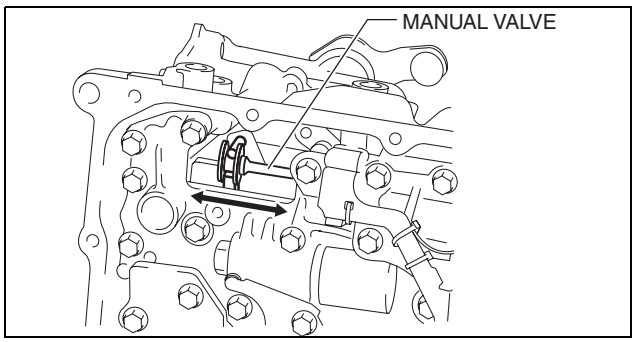

ac5wzw0000456

7. Install the oil strainer O-ring.

Note
- If there is a large amount of foreign material at the bottom of the oil pan, replace the oil strainer with a new one.

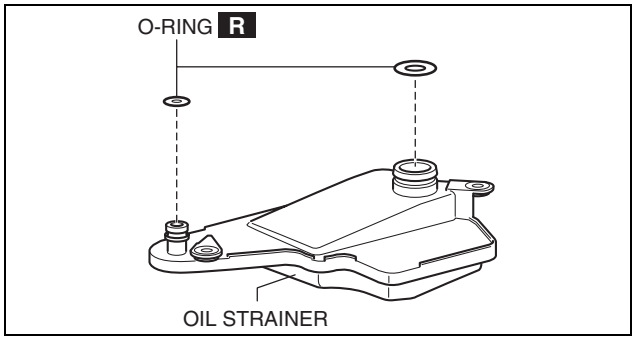

am3uuw0000828

AUTOMATIC TRANSAXLE [GW6A-EL, GW6AX-EL]

8. Install the oil strainer.

Tightening torque
9—10 N·m {92—101 kgf·cm, 80—88 in·lbf}

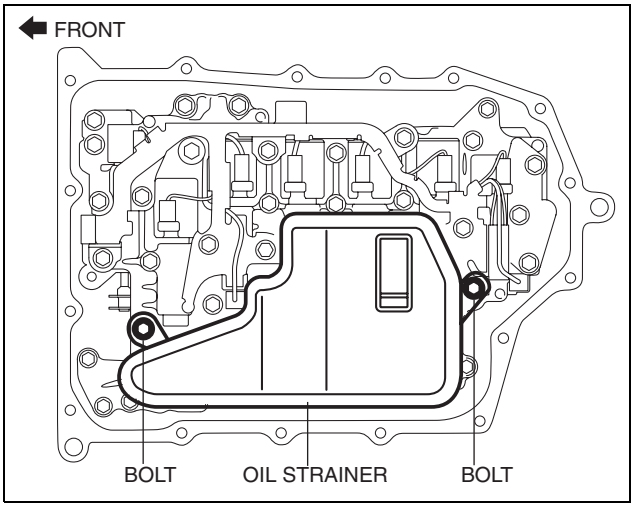

am3uuw0000828

9. Apply a light coat of silicon sealant (TB1217E) to the contact surfaces of the oil pan and transaxle case.

Caution
- **Clean any remaining silicone sealant on the contact surface of the transaxle case and oil pan, and degrease the sealant area. Otherwise, oil could leak.**

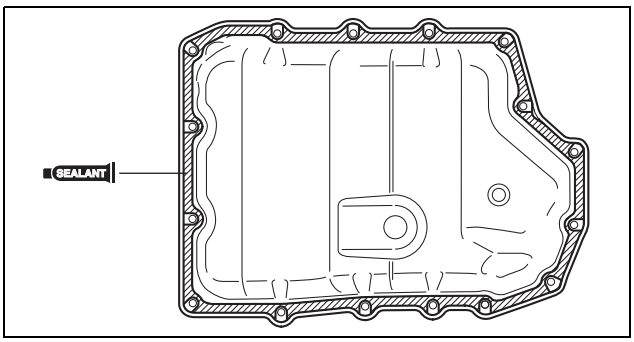

am3uuw0000828

10. Install the oil pan with new bolts before the applied sealant starts to harden.

Tightening torque
8—10 N·m {82—101 kgf·cm, 71—88 in·lbf}

11. Install the front under cover No.2. (See 09-16-41 FRONT UNDER COVER No.2 REMOVAL/INSTALLATION.)
12. Install the oil seal (control valve body). (See 05-17B-68 OIL SEAL (CONTROL VALVE BODY) REPLACEMENT [GW6A-EL, GW6AX-EL].)
13. Install a new hose clamp to the position shown in the figure.

Caution
- **If the hose clamp is reused it could cause ATF leakage, therefore use a new hose clamp.**
- **Install the hose clamp tab to within the range shown in the figure.**
  A: 210°

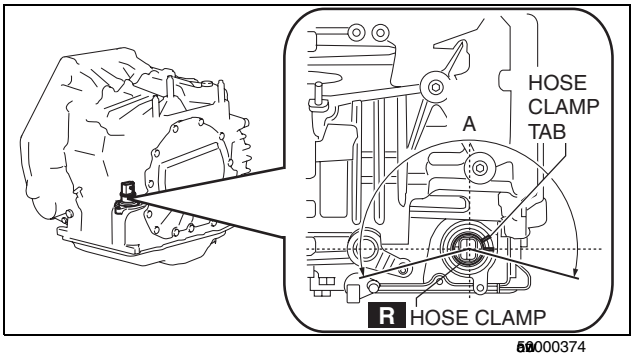

am3uuw0000374

AUTOMATIC TRANSAXLE [GW6A-EL, GW6AX-EL]

- **Install the hose clamp so that it does not interfere with the top and bottom flanges of the oil seal to maintain the waterproofing integrity.**

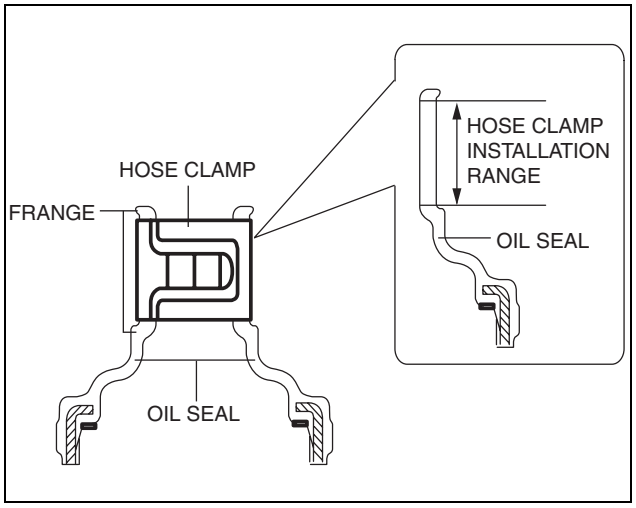

ac5wzw0000456

14. Connect the control valve body connector.

Caution
- **Make sure that your hand does not touch the terminal as the connector terminal could be damaged.**
- **Verify that there is no fluid or foreign matter adhering to the connector before connecting the connector.**
- **Insert the connector straight as the connector terminal could be damaged.**
- **Rotate the connector lever until a click is heard.**

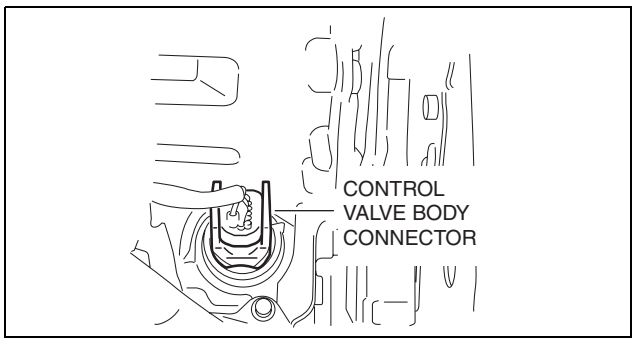

ac5wzw0000396

15. Add the ATF. (See 05-17B-12 AUTOMATIC TRANSAXLE FLUID (ATF) REPLACEMENT [GW6A-EL, GW6AX-EL].)
16. Install the air cleaner component. (See 01-13B-6 INTAKE-AIR SYSTEM REMOVAL/INSTALLATION [SKYACTIV-D 2.2].)
17. Connect the negative battery cable. (See 01-17B-9 NEGATIVE BATTERY CABLE DISCONNECTION/CONNECTION [SKYACTIV-D 2.2].)
18. Perform the “TCM configuration” (Control valve body Replacement). (See 05-17B-98 TCM CONFIGURATION [GW6A-EL, GW6AX-EL].)
19. Perform the “Initial Learning” (Control valve body Replacement). (See 05-17B-93 INITIAL LEARNING [GW6A-EL, GW6AX-EL].)
20. Perform the “Mechanical System Test”. (See 05-17B-4 MECHANICAL SYSTEM TEST [GW6A-EL, GW6AX-EL].)
21. Perform the “Road Test”. (See 05-17B-9 ROAD TEST [GW6A-EL, GW6AX-EL].)

AUTOMATIC TRANSAXLE [GW6A-EL, GW6AX-EL]

On-Vehicle Installation (Without oil cooler No.2)

1. Install the gasket to the transaxle case.
2. Install the dowel pin to the control valve body.

Note

- If the dowel pin remains in the transaxle case, remove the dowel pin from the transaxle case and install the dowel pin to the control valve body.

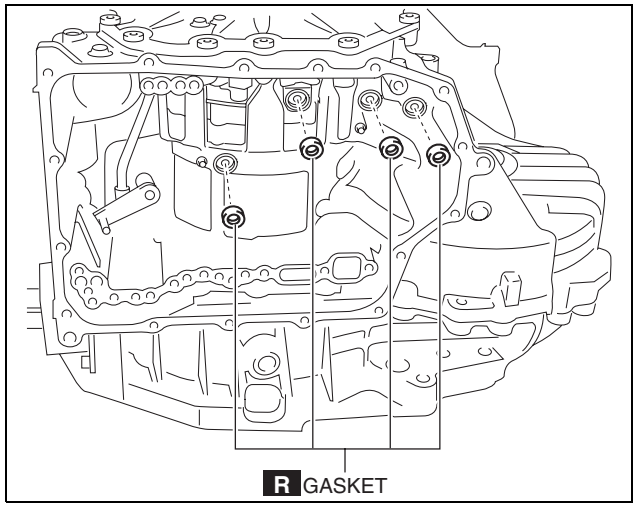

am3uuw0000918

3. Install the control valve body so that the parking assist lever component is engaged in the gap between the two surfaces of the spool part of the manual valve.

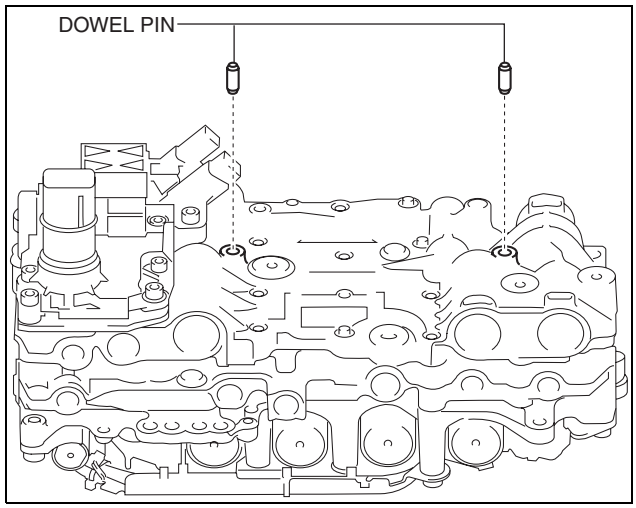

am3uuw0000918

Caution

- **Install the control valve body so that the turbine/input shaft speed sensor, output shaft speed sensor, and control valve body connector do not contact the transaxle case.**

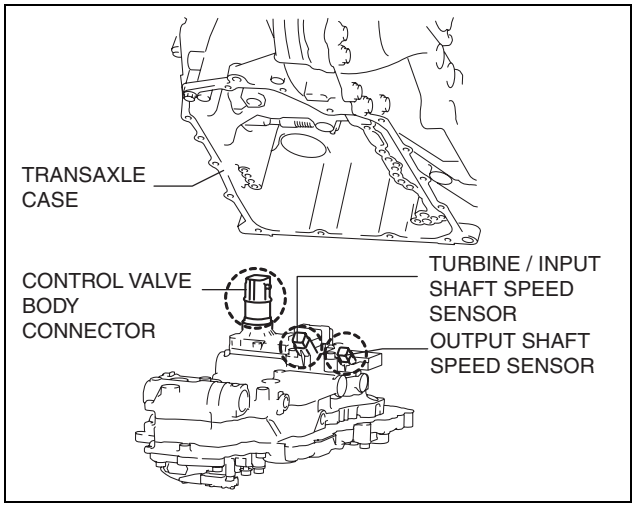

ac5wzw0000374

AUTOMATIC TRANSAXLE [GW6A-EL, GW6AX-EL]

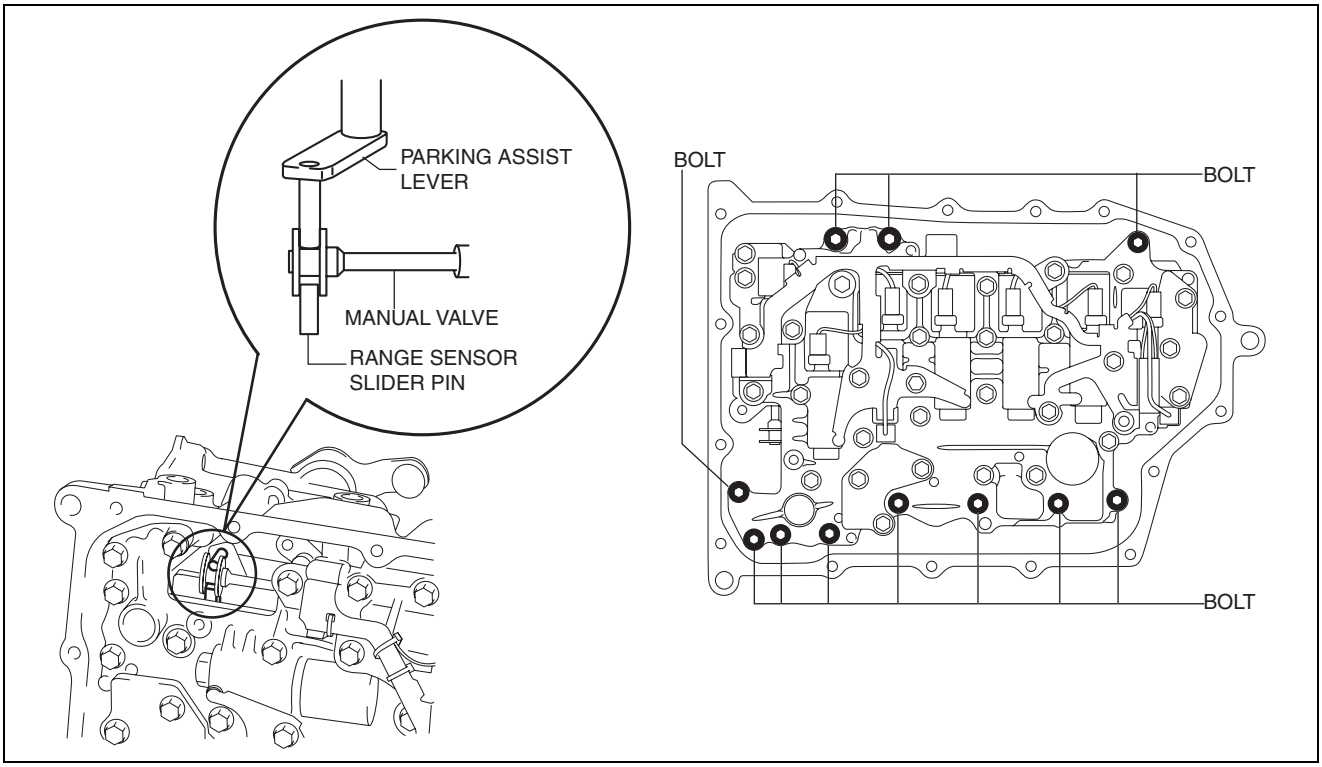

ac5wzw0000456

Tightening torque
9—10 N·m {92—101 kgf·cm, 80—88 in·lbf}

4. Move the manual valve in both directions of the arrow and verify that the manual valve is correctly connected to the parking assist lever component and the slider pin for the range sensor.

Note
- If the manual valve only moves in the gap between the parking assist lever component surface and the manual valve surface, the manual valve and the parking assist lever component are correctly engaged.

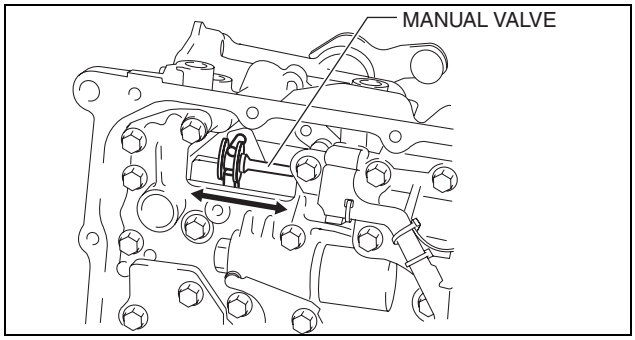

ac5wzw0000456

5. Install the oil strainer O-ring.

Note
- If there is a large amount of foreign material at the bottom of the oil pan, replace the oil strainer with a new one.

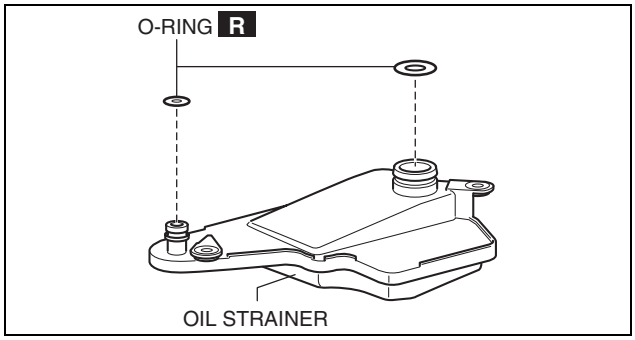

am3uuw0000828

AUTOMATIC TRANSAXLE [GW6A-EL, GW6AX-EL]

6. Install the oil strainer.

Tightening torque
9—10 N·m {92—101 kgf·cm, 80—88 in·lbf}

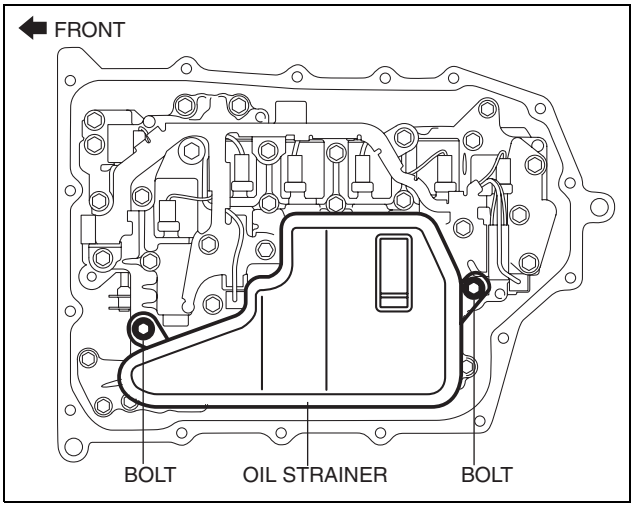

am3uuw0000828

7. Apply a light coat of silicon sealant (TB1217E) to the contact surfaces of the oil pan and transaxle case.

Caution
- **Clean any remaining silicone sealant on the contact surface of the transaxle case and oil pan, and degrease the sealant area. Otherwise, oil could leak.**

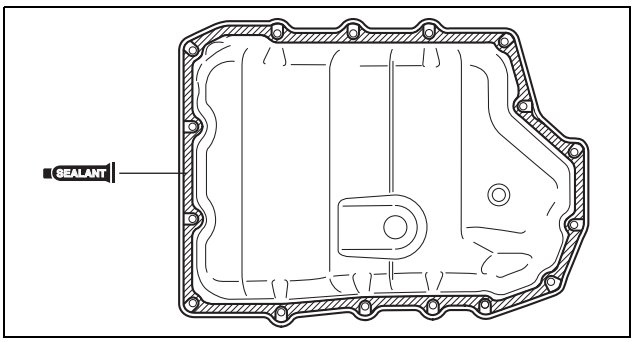

am3uuw0000828

8. Install the oil pan with new bolts before the applied sealant starts to harden.

Tightening torque
8—10 N·m {82—101 kgf·cm, 71—88 in·lbf}

9. Install the front under cover No.2. (See 09-16-41 FRONT UNDER COVER No.2 REMOVAL/INSTALLATION.)
10. Install the oil seal (control valve body). (See 05-17B-68 OIL SEAL (CONTROL VALVE BODY) REPLACEMENT [GW6A-EL, GW6AX-EL].)
11. Install a new hose clamp to the position shown in the figure.

Caution
- **If the hose clamp is reused it could cause ATF leakage, therefore use a new hose clamp.**
- **Install the hose clamp tab to within the range shown in the figure.**
  A: 210°

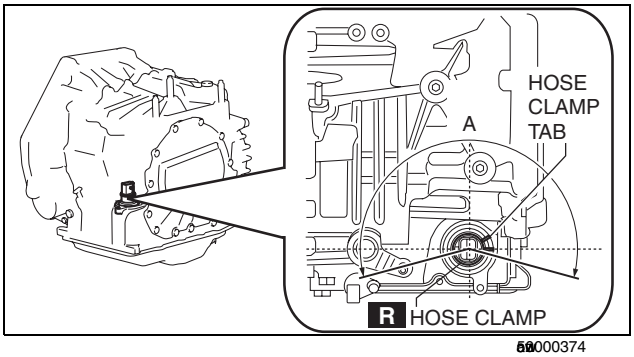

am3uuw0000374

AUTOMATIC TRANSAXLE [GW6A-EL, GW6AX-EL]

- **Install the hose clamp so that it does not interfere with the top and bottom flanges of the oil seal to maintain the waterproofing integrity.**

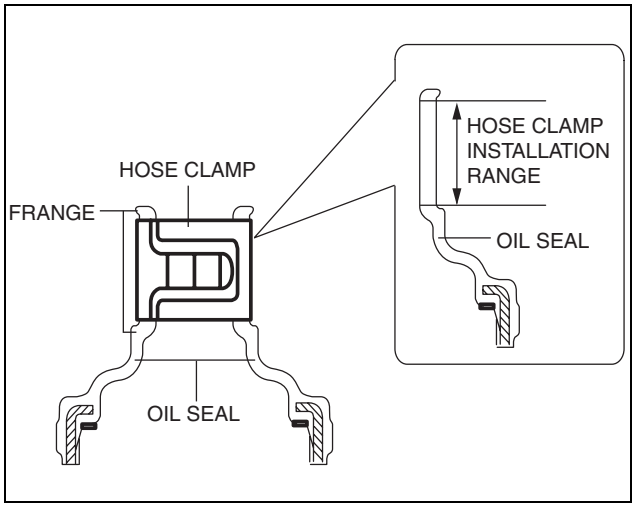

ac5wzw0000456

12. Connect the control valve body connector.

Caution
- **Make sure that your hand does not touch the terminal as the connector terminal could be damaged.**
- **Verify that there is no fluid or foreign matter adhering to the connector before connecting the connector.**
- **Insert the connector straight as the connector terminal could be damaged.**
- **Rotate the connector lever until a click is heard.**

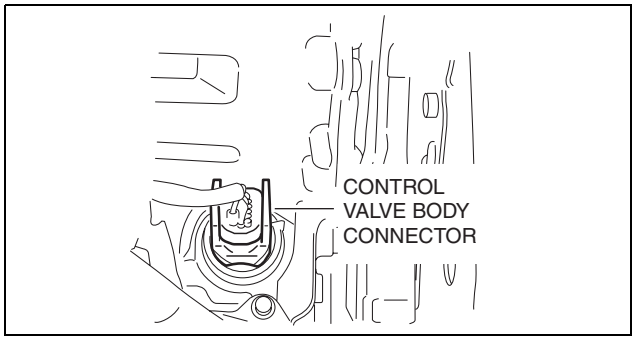

ac5wzw0000396

13. Add the ATF. (See 05-17B-12 AUTOMATIC TRANSAXLE FLUID (ATF) REPLACEMENT [GW6A-EL, GW6AX-EL].)
14. Install the air cleaner component. (See 01-13B-6 INTAKE-AIR SYSTEM REMOVAL/INSTALLATION [SKYACTIV-D 2.2].)
15. Connect the negative battery cable. (See 01-17B-9 NEGATIVE BATTERY CABLE DISCONNECTION/CONNECTION [SKYACTIV-D 2.2].)
16. Perform the “TCM configuration” (Control valve body Replacement). (See 05-17B-98 TCM CONFIGURATION [GW6A-EL, GW6AX-EL].)
17. Perform the “Initial Learning” (Control valve body Replacement). (See 05-17B-93 INITIAL LEARNING [GW6A-EL, GW6AX-EL].)
18. Perform the “Mechanical System Test”. (See 05-17B-4 MECHANICAL SYSTEM TEST [GW6A-EL, GW6AX-EL].)
19. Perform the “Road Test”. (See 05-17B-9 ROAD TEST [GW6A-EL, GW6AX-EL].)

AUTOMATIC TRANSAXLE [GW6A-EL, GW6AX-EL]

INITIAL LEARNING [GW6A-EL, GW6AX-EL]

id0517i2119100

Introduction

- If the control valve body and oil pressure switch are replaced, always perform the initial learning. If the initial learning is not completed, engine rev-up may occur or shift shock may increase. DTC P06B8:00 is displayed while the initial learning has not been implemented.
- The procedure for the initial learning has a procedure which uses the M-MDS and one which does not. The initial learning can be activated easily using the M-MDS.

Warning

- **The initial learning forcibly changes gears within the driving shift range while the engine is running. Before implementing the initial learning, securely apply the parking brake and set the wheel blocks for both the front and rear wheels. Otherwise, the vehicle will move which could cause injury or property damage.**

Using M-MDS

Preparation before servicing

1. Verify initial learning implementation necessity for replacement parts.

Replacement part	Initial learning necessity
Control valve body replacement	Necessary
Oil pressure switch replacement	Necessary
Automatic transaxle replacement	Unnecessary
ON/OFF solenoid replacement	Unnecessary
Coupler component replacement	Unnecessary

2. Apply the parking brake firmly, and set the wheel blocks for both the front and rear wheels.
3. Inspect the ATF level. (See 05-17B-11 AUTOMATIC TRANSAXLE FLUID (ATF) INSPECTION [GW6A-EL, GW6AX-EL].)
4. Bring the M-MDS inside the vehicle and connect it to the DLC-2.
5. Perform vehicle identification using the M-MDS.
6. Start the engine.
7. After the vehicle is identified, select the following items from initialization of the M-MDS.
   (1) Select “Data logger”.
   (2) Select “Module”.
   (3) Select “TCM”.
8. While checking the PID TFT (ATF temperature), warm-up the engine and allow the ATF temperature to reach **40—110 °C {72—198 °F}**.

Starting procedure for initial learning

1. After the vehicle is identified, select the following items from initialization of the M-MDS.
   (1) Select “Self-test”
   (2) Select “Module”
   (3) Select “TCM”

Note

- DTC P06B8:00 is displayed while the initial learning has not been implemented.

2. Start the engine and wait for **30 s or more**.
3. Perform the following steps (1) to (4) with the brake pedal depressed.

Caution

- **When the brake fluid pressure sensor value is the specification or less, shut down the initial learning to assure safety. Accordingly, be careful of the following when performing the initial learning:**
  - **— Strongly depress the brake pedal while performing the initial learning.**
  - **— Do not depress the brake pedal again. Otherwise, the brake booster pressure will decrease and the brake force will weaken.**

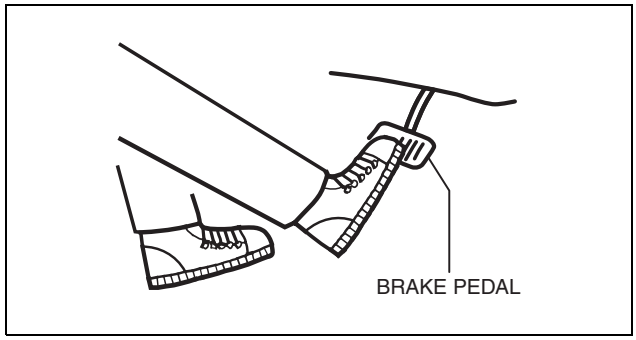

ac5wzw0000404

AUTOMATIC TRANSAXLE [GW6A-EL, GW6AX-EL]

(1) Shift the selector lever from P position to D position and click the DTC clear button for the M-MDS.

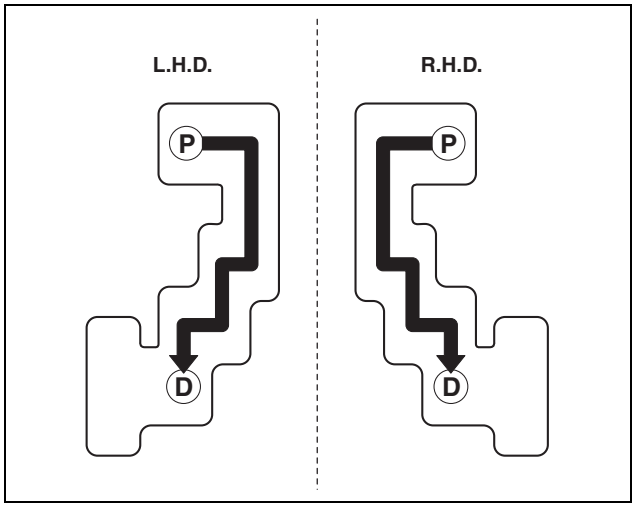

ac5wzw0000077

(2) When the M-MDS screen returns to the DTC display screen, shift the selector lever from D position to M position within **10 s** and verify that the engine speed increases from idling.

Note
- The initial learning implements after idle speed starts increasing. If idle speed does not start increasing, repeat the procedure from Step 2.
- If the initial learning is shut down for any reason while performing the learning, shift position indicator light does not flash. If shift position indicator light does not flash, repeat the procedure from Step 2.

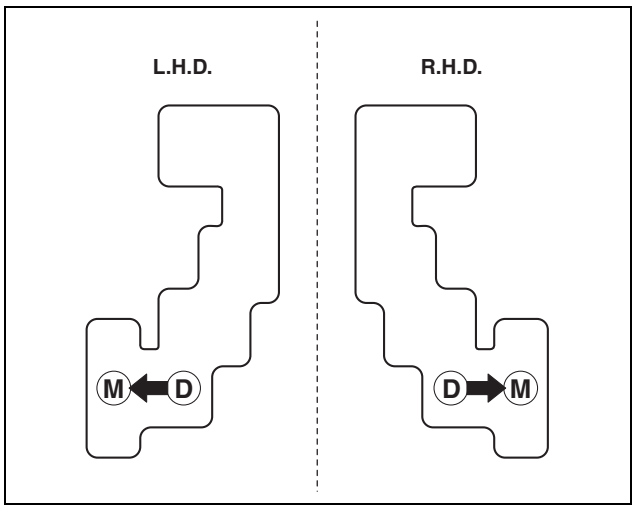

ac5wzw0000077

(3) Verify that the engine speed returns to idle and shift position indicator light flashes **two times**.

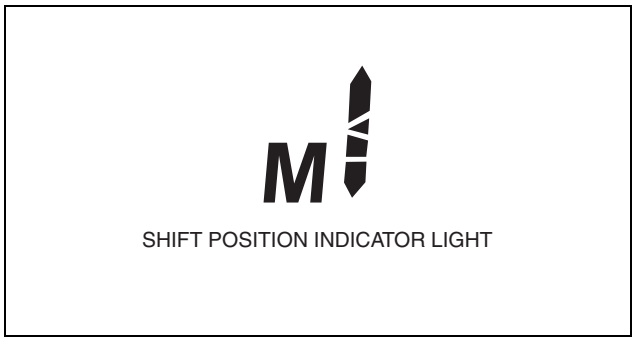

ac5wzw0000077

AUTOMATIC TRANSAXLE [GW6A-EL, GW6AX-EL]

(4) After shift position indicator light flashes twice, shift the selector lever from M position to P position and stop the engine.

Note
- Be careful not to miss looking at shift position indicator light because the light flashes only **one time**.

4. Release the brake pedal.
5. Switch the ignition to KOEO and verify the DTC.
   - If DTC P06B8:00 is displayed, repeat the procedure from Step 2. If any other DTCs are displayed, perform the applicable DTC troubleshooting. (See 05-02B-10 ON-BOARD DIAGNOSTIC SYSTEM DTC TABLE [GW6A-EL, GW6AX-EL].)

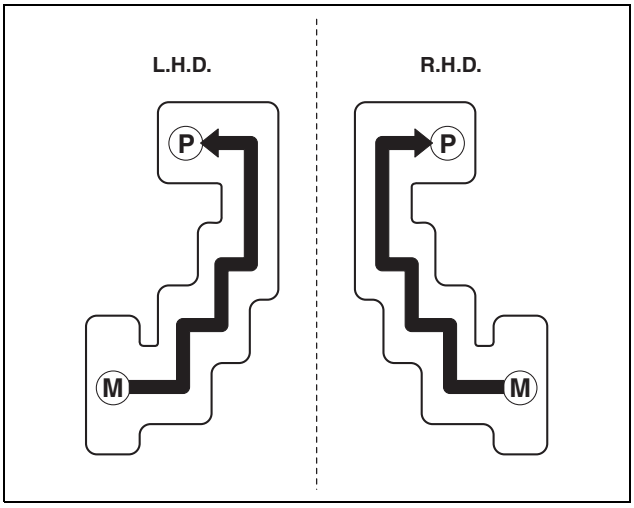

ac5wzw0000077

Not Using of M-MDS
Preparation before servicing
1. Verify initial learning implementation necessity for replacement parts.

Replacement part	Initial learning necessity
Control valve body replacement	Necessary
Oil pressure switch replacement	Necessary
Automatic transaxle replacement	Unnecessary
ON/OFF solenoid replacement	Unnecessary
Coupler component replacement	Unnecessary

2. Apply the parking brake firmly, and set the wheel blocks for both the front and rear wheels.
3. Inspect the ATF level. (See 05-17B-11 AUTOMATIC TRANSAXLE FLUID (ATF) INSPECTION [GW6A-EL, GW6AX-EL].)
4. Start the engine.
5. Warm-up the engine and allow the ATF temperature to reach **40—110 °C {72—198 °F}**.

Starting procedure for initial learning
1. Start the engine and wait for **30 s or more**.
2. Perform the following steps (1) to (7) with the brake pedal depressed.

Caution
- **When the brake fluid pressure sensor value is the specification or less, shut down the initial learning to assure safety. Accordingly, be careful of the following when performing the initial learning:**
  - **— Strongly depress the brake pedal while performing the initial learning.**
  - **— Do not depress the brake pedal again. Otherwise, the brake booster pressure will decrease and the brake force will weaken.**

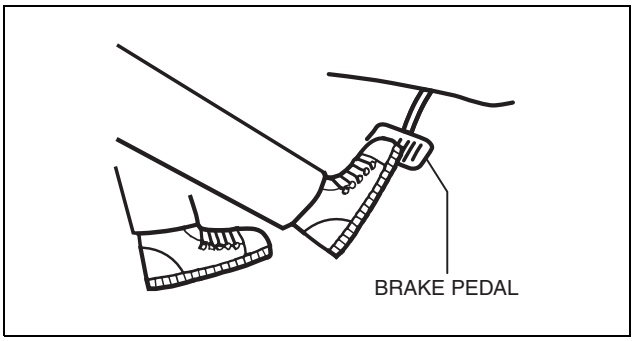

ac5wzw0000404

AUTOMATIC TRANSAXLE [GW6A-EL, GW6AX-EL]

(1) Shift the selector lever from P position to N position, press the push button start **one time**, and stop the engine.

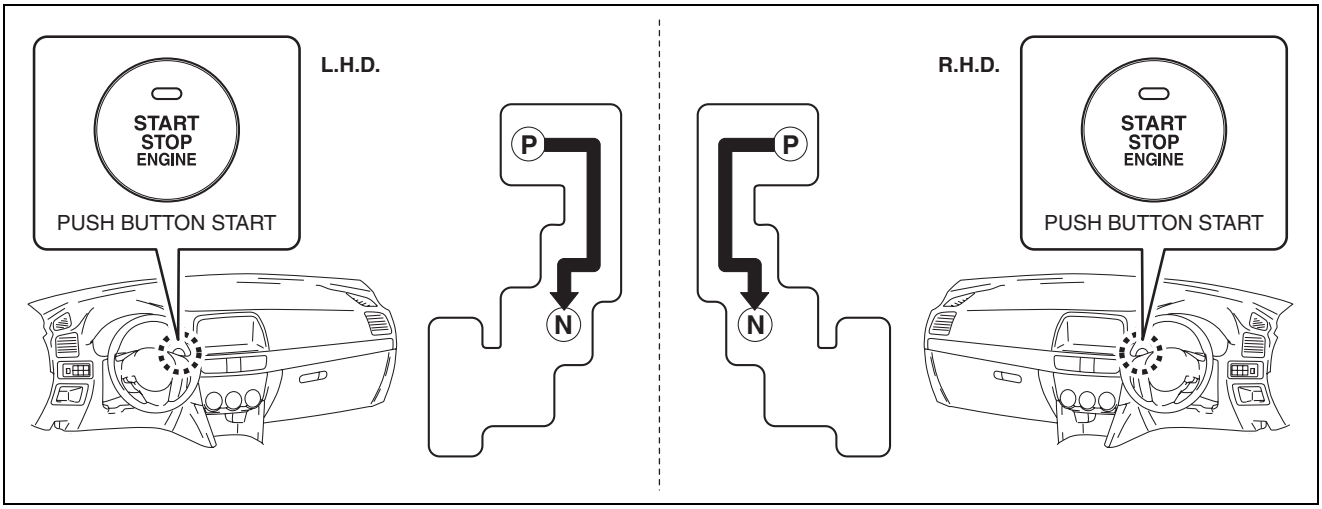

ac5wzw0000077

(2) Shift the selector lever from N position to M- position, press the push button start **one time** while holding the lever in the M- position, and wait for **5 s or more** (ignition switch ON (engine on)).

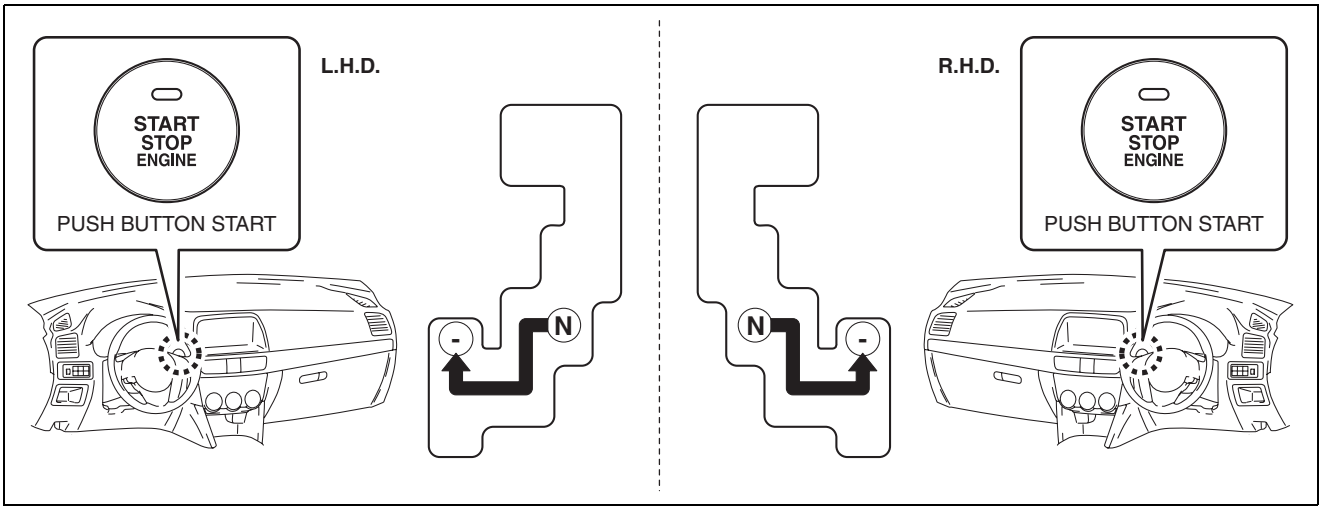

ac5wzw0000077

(3) Shift the selector lever from M- position to N position, press the push button start **one time**, and start the engine.

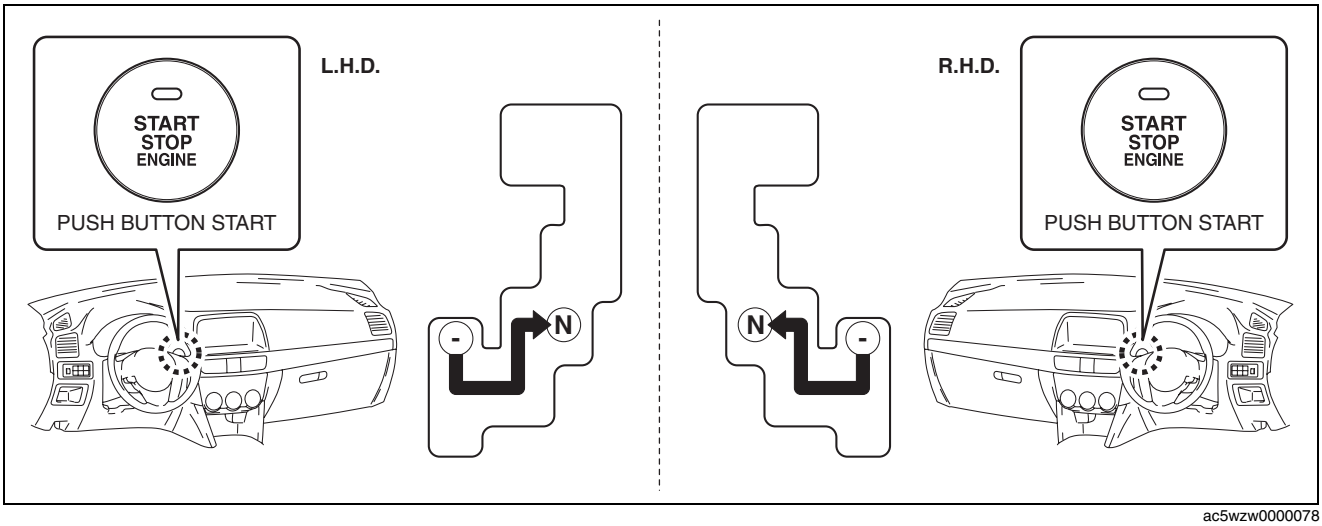

ac5wzw0000078

AUTOMATIC TRANSAXLE [GW6A-EL, GW6AX-EL]

(4) Shift the selector lever from N position to M+ position and wait for **5 s or more** while holding the lever in the M+ position.

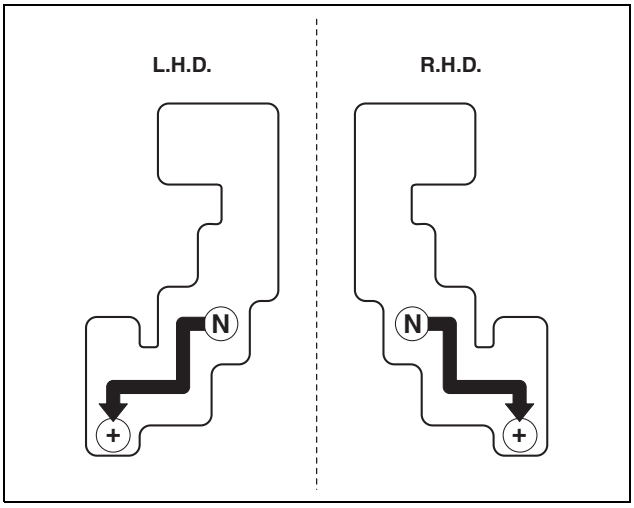

ac5wzw0000078

(5) Select the selector lever from M+ position to M- position and wait for **5 s or more** while holding the lever in the M- position.
(6) When starting idle up, shift the selector lever from the M- position to M position and verify that the shift position indicator light flashes **two times**.

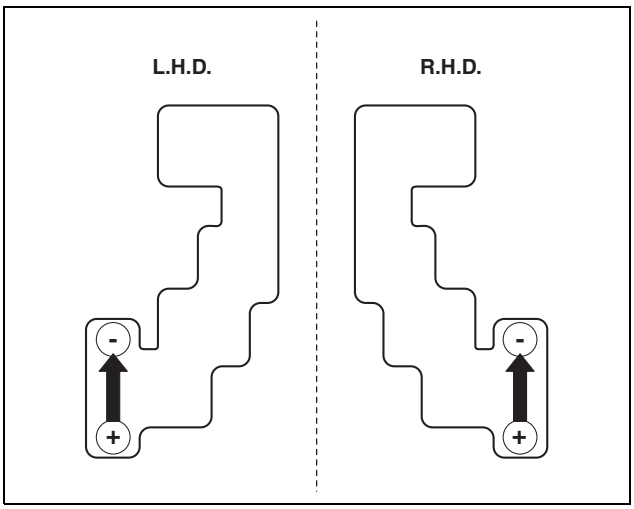

ac5wzw0000078

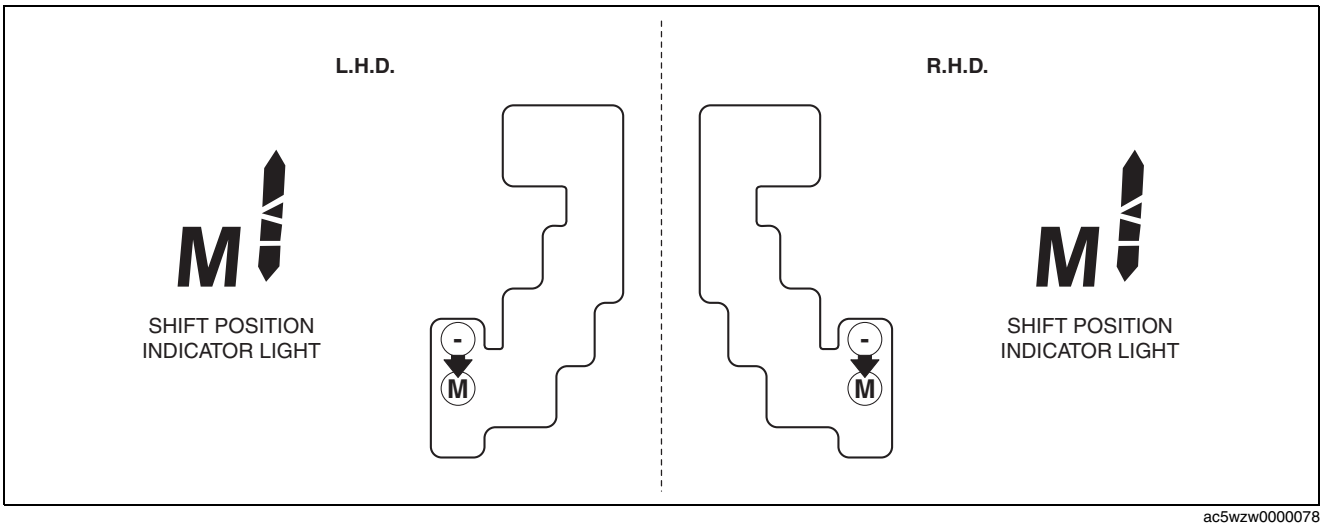

ac5wzw0000078

Note

- The initial learning implements after idle speed starts increasing. If idle speed does not start increasing, repeat the procedure from Step 1 "Start the engine and wait for **30 s or more**.".

AUTOMATIC TRANSAXLE [GW6A-EL, GW6AX-EL]

(7) After shift position indicator light flashes twice, shift the selector lever from M position to P position and stop the engine.

Note
- Be careful not to miss looking at shift position indicator light because the light flashes only **one time**.

3. Release the brake pedal.
4. Clear the DTC using the M-MDS and switch the ignition to off. (See 05-02B-6 ON-BOARD DIAGNOSTIC SYSTEM DTC INSPECTION [GW6A-EL, GW6AX-EL].)
5. Switch the ignition ON (engine off or on) and verify that DTC P06B8:00 is not recorded using the M-MDS. (See 05-02B-10 ON-BOARD DIAGNOSTIC SYSTEM DTC TABLE [GW6A-EL, GW6AX-EL].)
   - If the DTC P06B8:00 is displayed, repeat the procedure from Step 1.

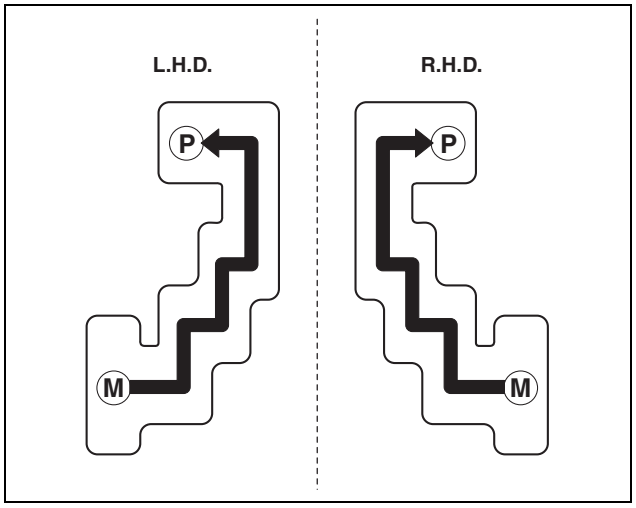

ac5wzw0000077

TCM CONFIGURATION [GW6A-EL, GW6AX-EL]

id0517i2119200

Note
- The TCM is built into the control valve body.

1. Verify TCM configuration implementation necessity for replacement parts.

Replacement part	Configuration necessity
Control valve body replacement	Necessary
Oil pressure switch replacement	Unnecessary
Automatic transaxle replacement	Unnecessary
ON/OFF solenoid replacement	Unnecessary
Coupler component replacement	Unnecessary

2. Connect the M-MDS to the DLC-2.
3. After vehicle identification, the following can be selected from the M-MDS initialization screen.
   1. Select “Module Programming”
4. Then, select the following from the screen menu.
   1. Select “Programmable Module Installation”
   2. Select “TCM”
5. Perform the configuration following the instructions on the screen.
6. Verify that no DTCs are stored. (See 05-02B-6 ON-BOARD DIAGNOSTIC SYSTEM DTC INSPECTION [GW6A-EL, GW6AX-EL].)

Note
- If any DTC (U code) is output, the system is normal.

7. Delete the U code and verify that no DTC is output. (See 05-02B-6 ON-BOARD DIAGNOSTIC SYSTEM DTC INSPECTION [GW6A-EL, GW6AX-EL].)
   - If any DTC other than U code is output, repair the malfunctioning location according to the applicable DTC troubleshooting. (See 05-02B-10 ON-BOARD DIAGNOSTIC SYSTEM DTC TABLE [GW6A-EL, GW6AX-EL].)

05-18 AUTOMATIC TRANSAXLE SHIFT MECHANISM

AUTOMATIC TRANSAXLE SHIFT MECHANISM LOCATION INDEX **05-18–1**
AUTOMATIC TRANSAXLE SHIFT MECHANISM REMOVAL/INSTALLATION **05-18–2**
Selector Lever Removal/Installation . . . **05-18–2**
Selector Cable Removal/Installation . . **05-18–3**
Selector Illumination Bulb Removal/Installation **05-18–7**
Selector Cable Adjustment **05-18–8**
Selector Cable (Selector Lever Side) Installation Note **05-18–10**
Cable Outer End (Transaxle Side) Installation Note **05-18–11**
SELECTOR LEVER INSPECTION **05-18–11**
SHIFT-LOCK SYSTEM INSPECTION . . . **05-18–12**
Shift-Lock System Inspection **05-18–12**
Shift-Lock Solenoid Inspection **05-18–13**
Shift-lock Override Button Inspection **05-18–14**
NOT P POSITION SWITCH INSPECTION **05-18–14**

AUTOMATIC TRANSAXLE SHIFT MECHANISM

AUTOMATIC TRANSAXLE SHIFT MECHANISM LOCATION INDEX

id051800296800

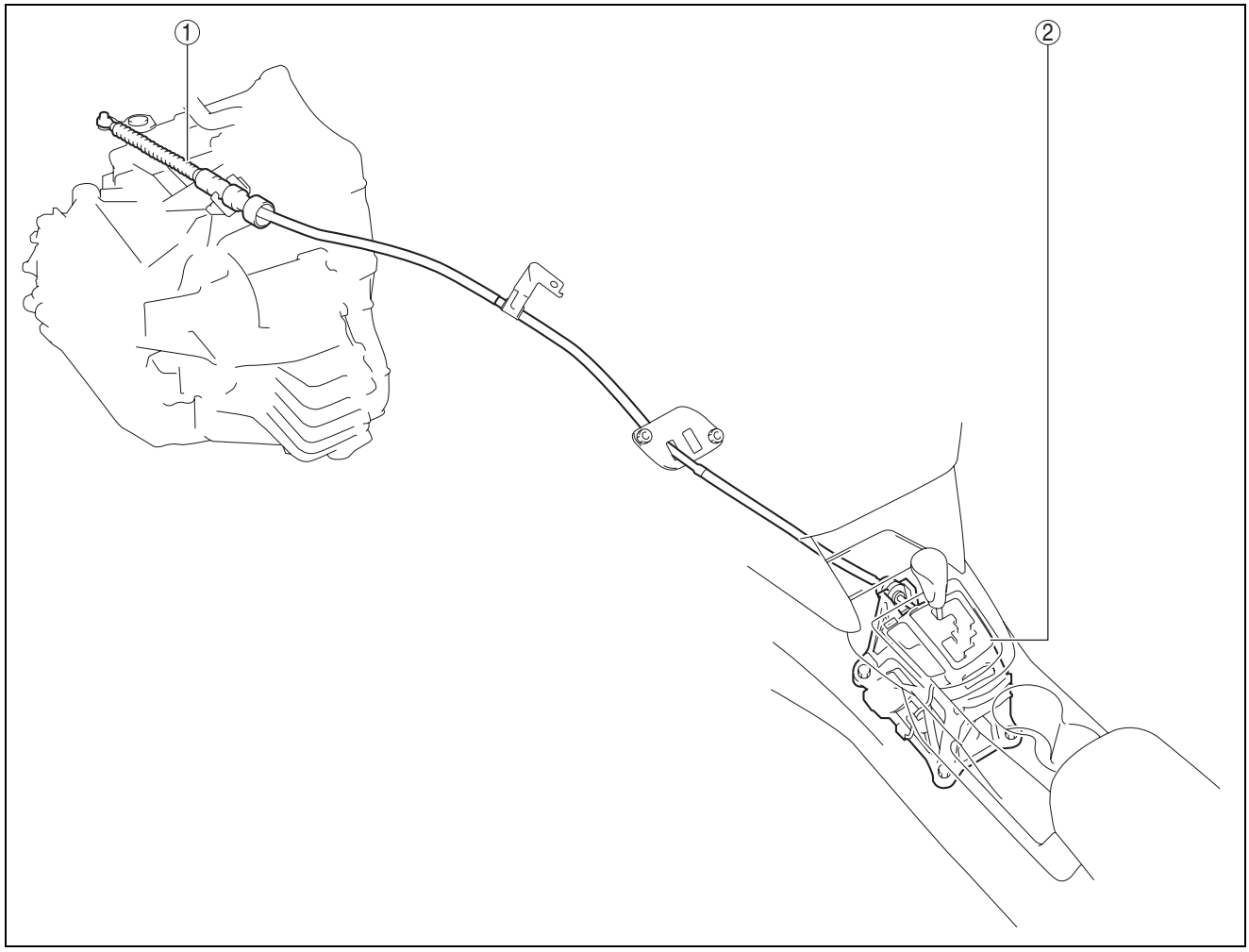

ac5wzw0000079

1	Selector cable (See 05-18-2 AUTOMATIC TRANSAXLE SHIFT MECHANISM REMOVAL/INSTALLATION.)

2	Selector lever component (See 05-18-2 AUTOMATIC TRANSAXLE SHIFT MECHANISM REMOVAL/INSTALLATION.) (See 05-18-11 SELECTOR LEVER INSPECTION.) (See 05-18-12 SHIFT-LOCK SYSTEM INSPECTION.) (See 05-18-14 NOT P POSITION SWITCH INSPECTION.)

AUTOMATIC TRANSAXLE SHIFT MECHANISM

AUTOMATIC TRANSAXLE SHIFT MECHANISM REMOVAL/INSTALLATION

id051800296900

Selector Lever Removal/Installation

1. Disconnect the negative battery cable. (See 01-17A-11 NEGATIVE BATTERY CABLE DISCONNECTION/CONNECTION [SKYACTIV-G 2.0].) (See 01-17A-13 NEGATIVE BATTERY CABLE DISCONNECTION/CONNECTION [SKYACTIV-G 2.0 (WITHOUT i-stop)].) (See 01-17B-9 NEGATIVE BATTERY CABLE DISCONNECTION/CONNECTION [SKYACTIV-D 2.2].)
2. Remove the front console. (See 09-17-50 FRONT CONSOLE REMOVAL/INSTALLATION.)
3. Disconnect the selector lever component connector.
4. Remove the selector cable (selector lever side). (See 05-18-3 Selector Cable Removal/Installation.)

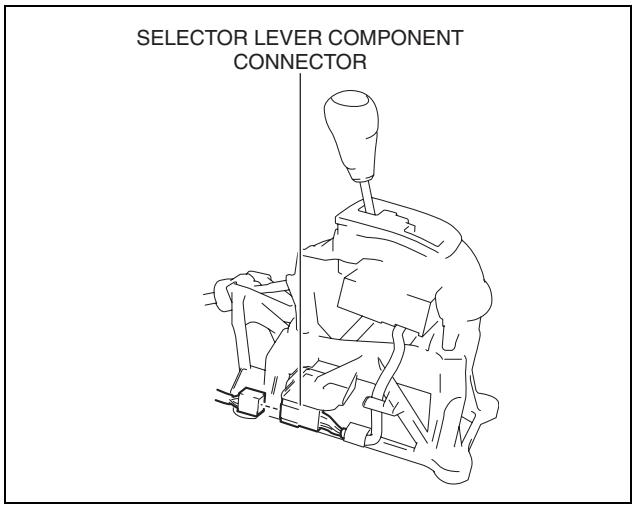

ac5wzw0000079

5. Remove the nuts from the selector lever.

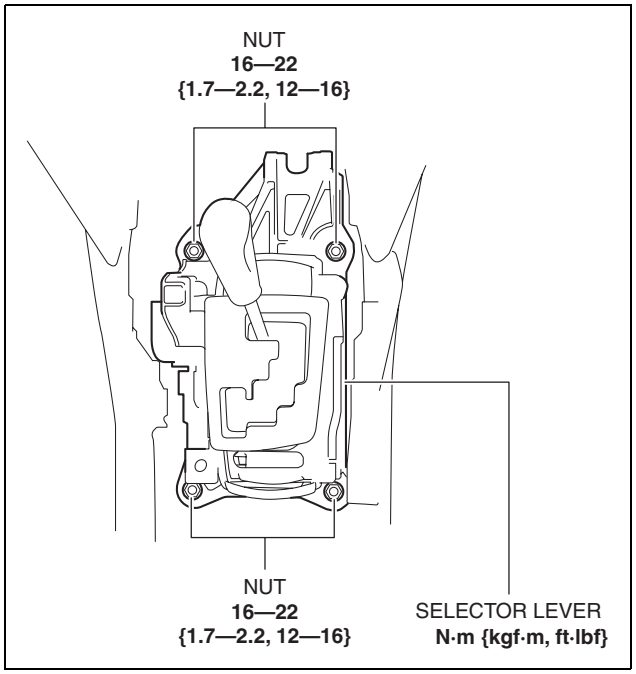

ac5wzw0000092

AUTOMATIC TRANSAXLE SHIFT MECHANISM

6. Remove the knob.
7. Remove the selector lever.
8. Install in the reverse order of removal.

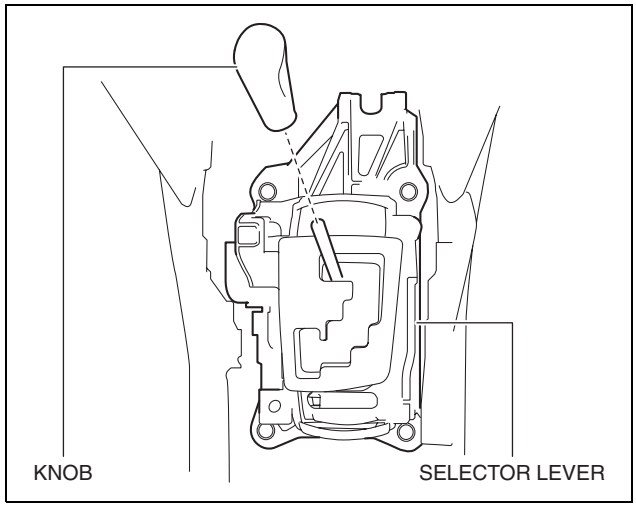

ac5wzw0000092

Selector Cable Removal/Installation

1. Disconnect the negative battery cable. (See 01-17A-11 NEGATIVE BATTERY CABLE DISCONNECTION/CONNECTION [SKYACTIV-G 2.0].) (See 01-17A-13 NEGATIVE BATTERY CABLE DISCONNECTION/CONNECTION [SKYACTIV-G 2.0 (WITHOUT i-stop)].) (See 01-17B-9 NEGATIVE BATTERY CABLE DISCONNECTION/CONNECTION [SKYACTIV-D 2.2].)
2. Perform the following procedure to remove the selector cable (selector lever side).
   (1) Remove the front console. (See 09-17-50 FRONT CONSOLE REMOVAL/INSTALLATION.)
   (2) Pull out the safety lock in the direction of the arrow (1) shown in the figure, pull out the lock piece in the direction of the arrow (2) shown in the figure, and release the lock. (See 05-18-10 Selector Cable (Selector Lever Side) Installation Note.)

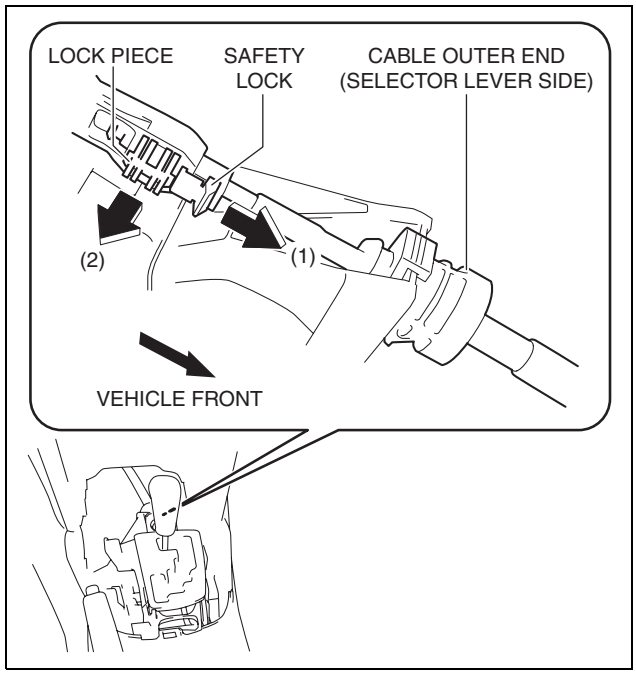

ac5wzw0000093

05

AUTOMATIC TRANSAXLE SHIFT MECHANISM

(3) While pressing the cable outer end tab (selector lever side) in the direction of the arrow (3) shown in the figure, lift up cable outer end (selector lever side) in the direction of the arrow (4) shown in the figure to detach the cable outer end tab (selector lever side) from the bracket.
(4) Remove the cable outer end (selector lever side) from the bracket.

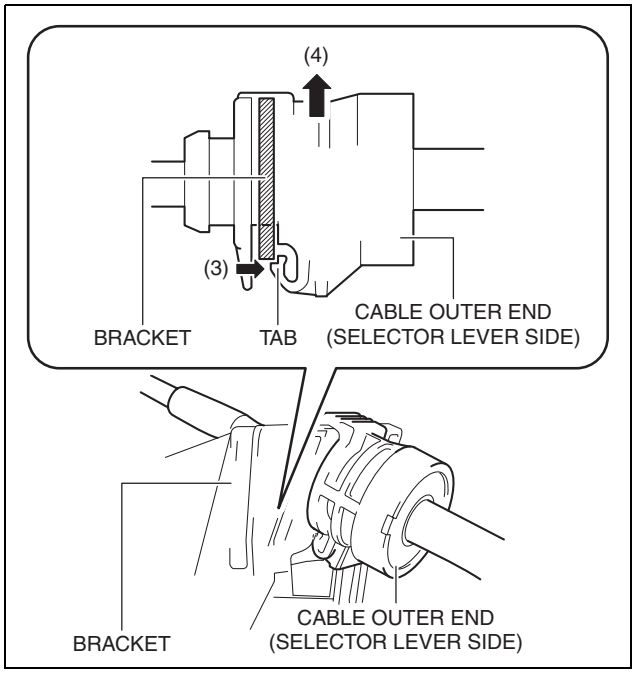

ac5wzw0000093

(5) Remove the selector cable end (selector lever side) from the selector lever.

3. Perform the following procedure to remove the selector cable (transaxle side).
(1) Remove the air cleaner case. (See 01-13A-6 INTAKE-AIR SYSTEM REMOVAL/INSTALLATION [SKYACTIV-G 2.0].) (See 01-13B-6 INTAKE-AIR SYSTEM REMOVAL/INSTALLATION [SKYACTIV-D 2.2].)
(2) Remove the battery tray. (See 01-17A-3 BATTERY REMOVAL/INSTALLATION [SKYACTIV-G 2.0].) (See 01-17B-3 BATTERY REMOVAL/INSTALLATION [SKYACTIV-D 2.2].)

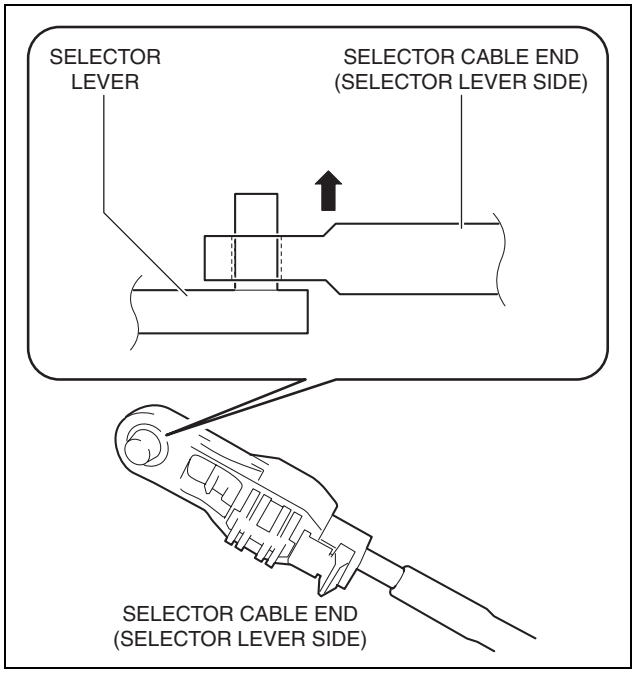

ac5wzw0000305

AUTOMATIC TRANSAXLE SHIFT MECHANISM

(3) While pressing the bracket tab in the direction of the arrow (5) shown in the figure, lift up the cable outer end (transaxle side) in the direction of the arrow (6) shown in the figure to detach the bracket tab from the cable outer end (transaxle side).
(4) Remove the cable outer end (transaxle side) from the bracket. (See 05-18-11 Cable Outer End (Transaxle Side) Installation Note.)

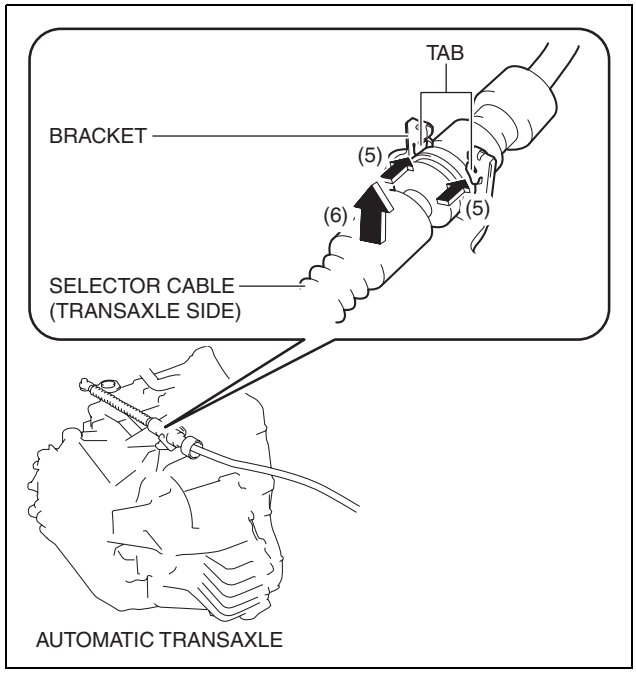

ac5wzw0000305

(5) Remove the clip from the selector cable end (transaxle side).

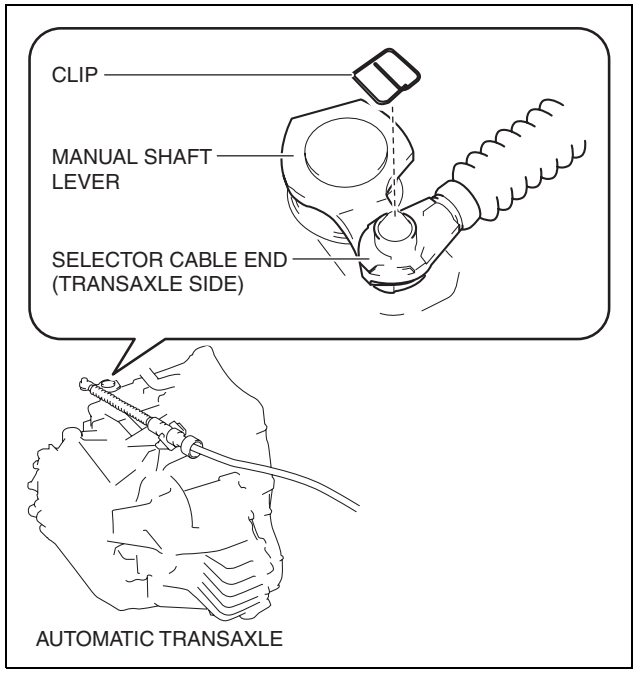

ac5wzw0000093

05

AUTOMATIC TRANSAXLE SHIFT MECHANISM

(6) Remove the selector cable end (transaxle side) from the manual shaft lever.

4. Remove the side wall. (See 09-17-49 SIDE WALL REMOVAL/INSTALLATION.)

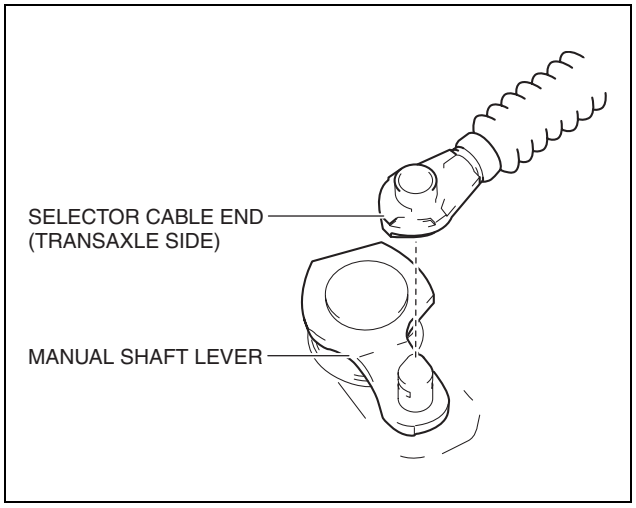

ac5wzw0000093

5. Remove the clip as shown in the figure and remove the nut.

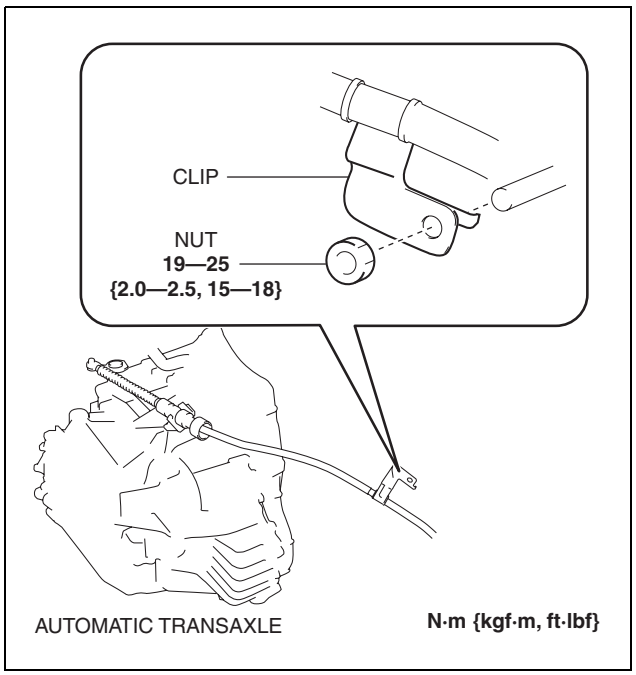

ac5wzw0000289

AUTOMATIC TRANSAXLE SHIFT MECHANISM

6. Remove the grommet as shown in the figure and remove the nuts.
7. Install in the reverse order of removal.

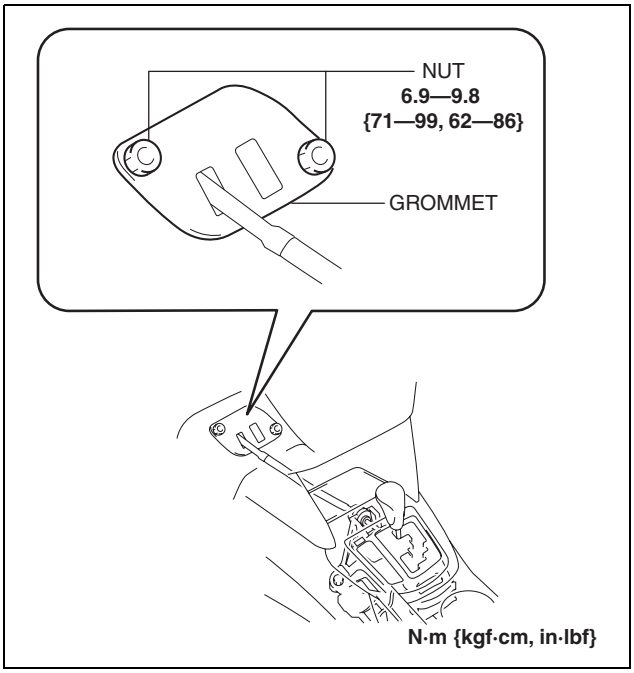

ac5wzw0000290

Selector Illumination Bulb Removal/Installation

1. Disconnect the negative battery cable. (See 01-17A-11 NEGATIVE BATTERY CABLE DISCONNECTION/CONNECTION [SKYACTIV-G 2.0].) (See 01-17A-13 NEGATIVE BATTERY CABLE DISCONNECTION/CONNECTION [SKYACTIV-G 2.0 (WITHOUT i-stop)].) (See 01-17B-9 NEGATIVE BATTERY CABLE DISCONNECTION/CONNECTION [SKYACTIV-D 2.2].)
2. Remove the shift panel. (See 09-17-42 SHIFT PANEL REMOVAL/INSTALLATION.)
3. Remove the socket from the shift panel.

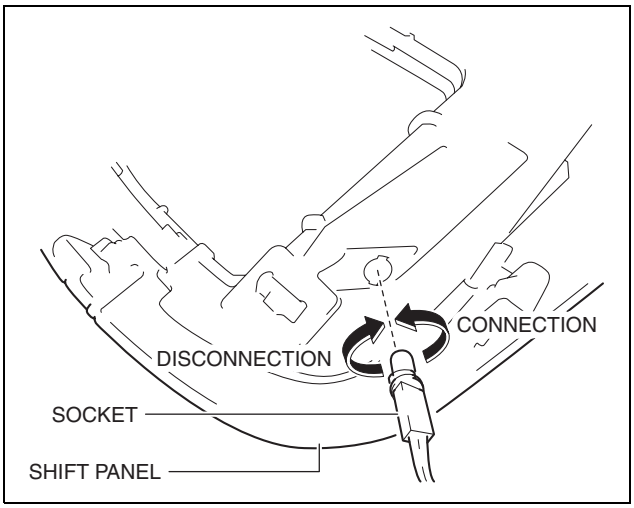

ac5wzw0000093

4. Remove the selector illumination bulb from the socket.
5. Install in the reverse order of removal.

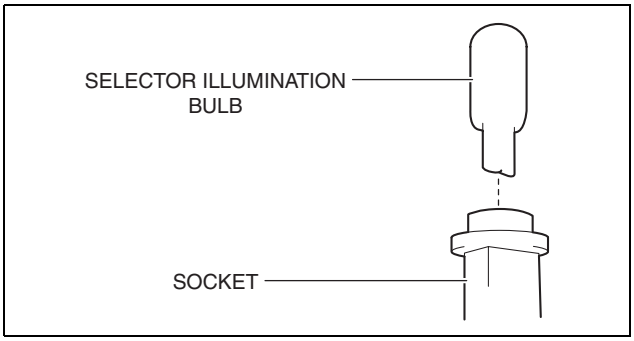

ac5wzw0000093

AUTOMATIC TRANSAXLE SHIFT MECHANISM

Selector Cable Adjustment

1. Disconnect the negative battery cable. (See 01-17A-11 NEGATIVE BATTERY CABLE DISCONNECTION/CONNECTION [SKYACTIV-G 2.0].) (See 01-17A-13 NEGATIVE BATTERY CABLE DISCONNECTION/CONNECTION [SKYACTIV-G 2.0 (WITHOUT i-stop)].) (See 01-17B-9 NEGATIVE BATTERY CABLE DISCONNECTION/CONNECTION [SKYACTIV-D 2.2].)
2. Remove the shift panel. (See 09-17-42 SHIFT PANEL REMOVAL/INSTALLATION.)
3. Remove the screws from the bracket.
4. Remove the bracket from the rear console.
5. Shift the selector lever to the P position.

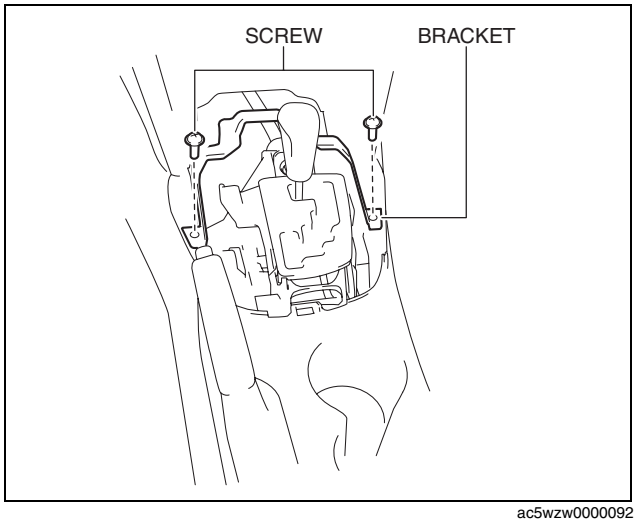

ac5wzw0000092

6. Pull out the safety lock in the direction of the arrow (1) shown in the figure, pull out the lock piece in the direction of the arrow (2) shown in the figure, and release the lock. (See 05-18-10 Selector Cable (Selector Lever Side) Installation Note.)

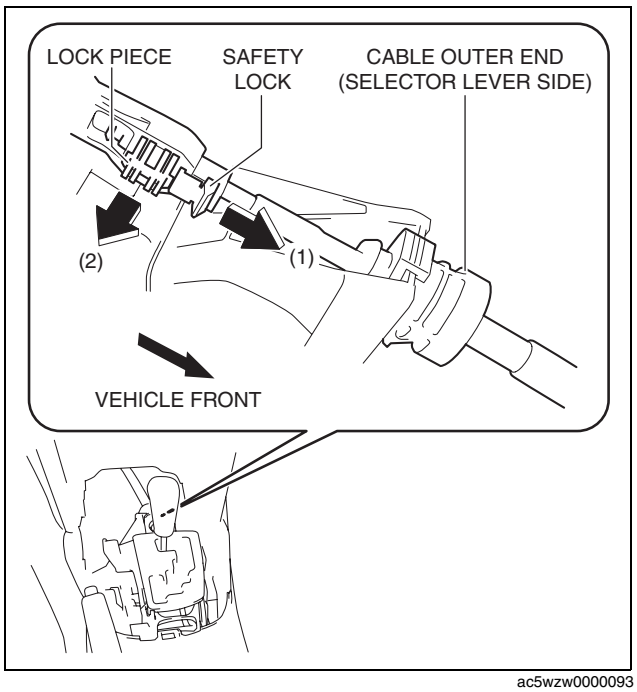

ac5wzw0000093

AUTOMATIC TRANSAXLE SHIFT MECHANISM

7. Set the manual shaft to the P position.

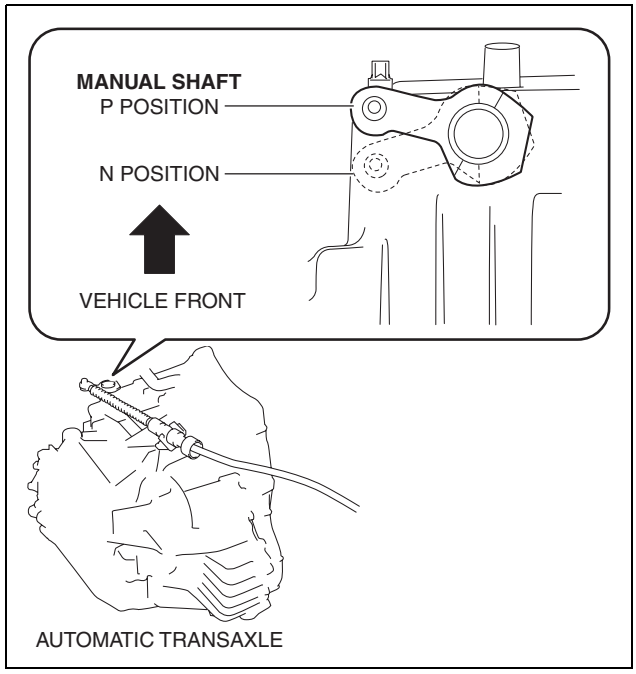

ac5wzw0000305

8. Press in the lock piece in the direction of the arrow (1) shown in the figure, press in the safety lock in the direction of the arrow (2) shown in the figure, and lock it.
9. Perform the procedure in the reverse order of Step 1 to 4 to install the removed part.
10. Perform the selector lever inspection. (See 05-18-11 SELECTOR LEVER INSPECTION.)

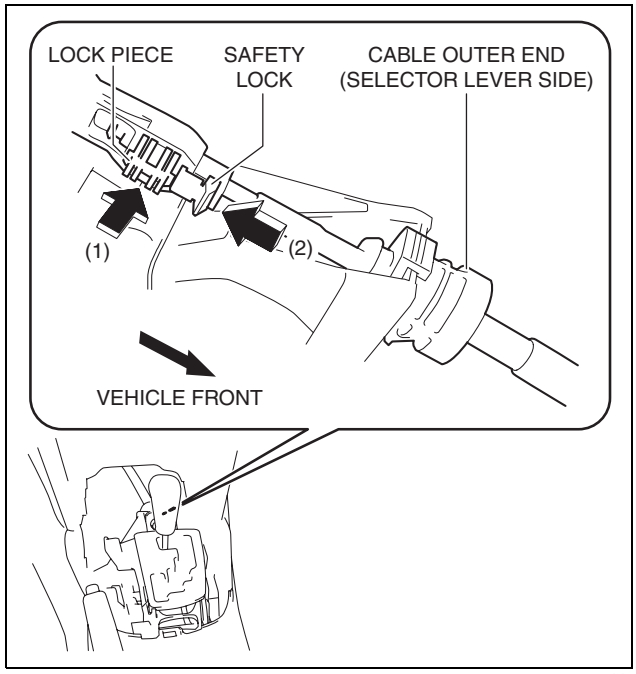

ac5wzw0000112

AUTOMATIC TRANSAXLE SHIFT MECHANISM

Selector Cable (Selector Lever Side) Installation Note

1. Verify that the selector lever is in the P position.
2. Verify that the manual shaft is in the P position.

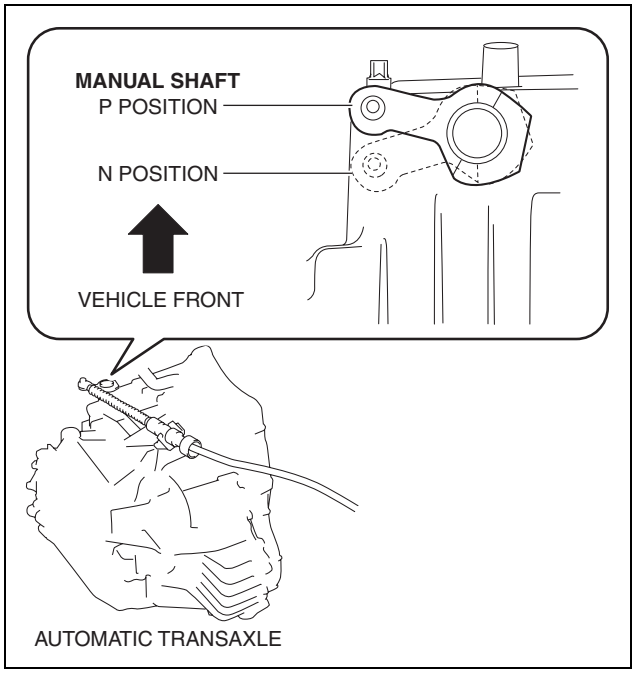

ac5wzw0000305

3. Press in the lock piece in the direction of the arrow (1) shown in the figure, press in the safety lock in the direction of the arrow (2) shown in the figure, and lock it.

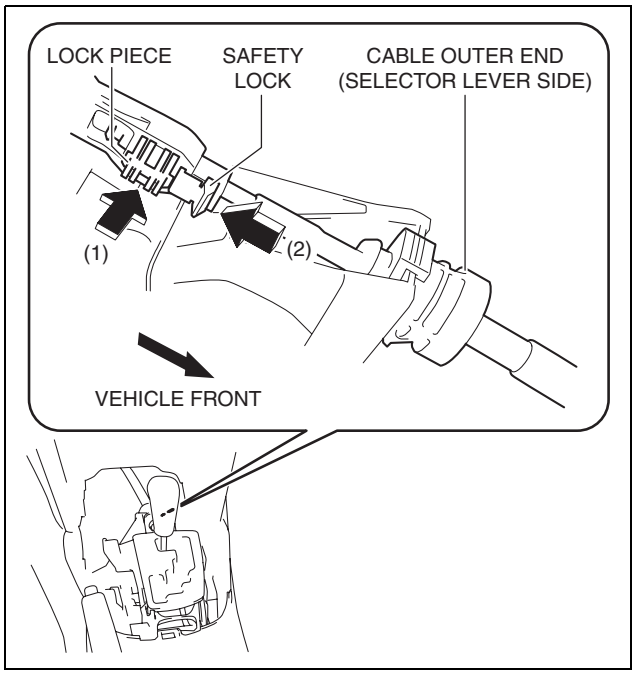

ac5wzw0000112

AUTOMATIC TRANSAXLE SHIFT MECHANISM

Cable Outer End (Transaxle Side) Installation Note

1. Assemble the cable outer end (transaxle side) to the bracket so that the marking is in the area of the arrow shown in the figure.

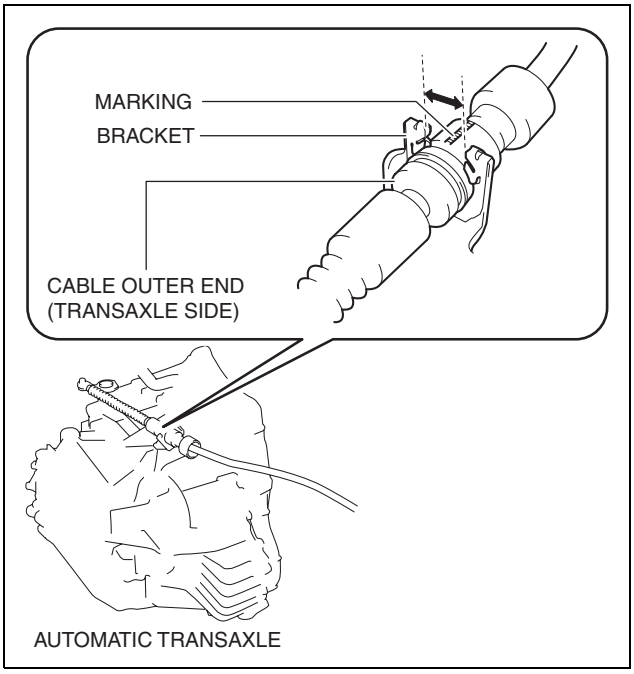

ac5wzw0000112

05

SELECTOR LEVER INSPECTION

id051800297000

1. Switch the ignition ON (engine off or on).
2. Perform the following procedures to inspect the selector lever.
   - If there is any malfunction, adjust the selector cable. (See 05-18-2 AUTOMATIC TRANSAXLE SHIFT MECHANISM REMOVAL/INSTALLATION.)

   (1) Verify that the selector lever can be operated as shown in the figure.

AUTOMATIC TRANSAXLE SHIFT MECHANISM

R.H.D.

(2) Verify that the selector lever can be operated smoothly and moderately.

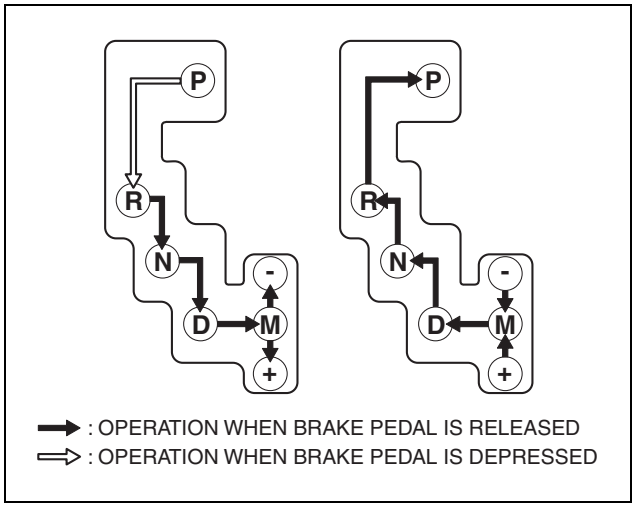

ac5wzw0000079

SHIFT-LOCK SYSTEM INSPECTION

id051800297100

Shift-Lock System Inspection

1. Switch the ignition ON (engine off).
2. Shift the selector lever to the P position.
3. Verify that the selector lever cannot be shifted from P to R position when the brake pedal is released.
   - If it can be verified, go to the next step.
   - If not as verified, inspect the following parts:
     - — Shift-lock solenoid (See 05-18-12 Shift-Lock System Inspection.)
     - — Not P position switch (See 05-18-14 NOT P POSITION SWITCH INSPECTION.)
     - — Brake switch (See 04-11-11 BRAKE SWITCH INSPECTION.)
     - — Start stop unit (See 09-14-56 START STOP UNIT INSPECTION.)
     - — PCM (See 01-40-17 PCM INSPECTION [SKYACTIV-G 2.0].)
4. Verify that the selector lever can be shifted from P to R position when the brake pedal is depressed.
   - If it can be verified, go to the next step.
   - If not as verified, inspect the following parts:
     - — Shift-lock solenoid (See 05-18-12 Shift-Lock System Inspection.)
     - — Not P position switch (See 05-18-14 NOT P POSITION SWITCH INSPECTION.)
     - — Brake switch (See 04-11-11 BRAKE SWITCH INSPECTION.)
     - — Start stop unit (See 09-14-56 START STOP UNIT INSPECTION.)
     - — PCM (See 01-40-17 PCM INSPECTION [SKYACTIV-G 2.0].)

AUTOMATIC TRANSAXLE SHIFT MECHANISM

Shift-Lock Solenoid Inspection

Note
- The shift-lock solenoid is built into the selector lever component.

1. Disconnect the negative battery cable. (See 01-17A-11 NEGATIVE BATTERY CABLE DISCONNECTION/CONNECTION [SKYACTIV-G 2.0].) (See 01-17A-13 NEGATIVE BATTERY CABLE DISCONNECTION/CONNECTION [SKYACTIV-G 2.0 (WITHOUT i-stop)].) (See 01-17B-9 NEGATIVE BATTERY CABLE DISCONNECTION/CONNECTION [SKYACTIV-D 2.2].)
2. Remove the front console. (See 09-17-50 FRONT CONSOLE REMOVAL/INSTALLATION.)
3. Reconnect the negative battery cable. (See 01-17A-11 NEGATIVE BATTERY CABLE DISCONNECTION/CONNECTION [SKYACTIV-G 2.0].) (See 01-17A-13 NEGATIVE BATTERY CABLE DISCONNECTION/CONNECTION [SKYACTIV-G 2.0 (WITHOUT i-stop)].) (See 01-17B-9 NEGATIVE BATTERY CABLE DISCONNECTION/CONNECTION [SKYACTIV-D 2.2].)
4. Verify that the voltages of each of the selector lever component terminals are as indicated in the table.

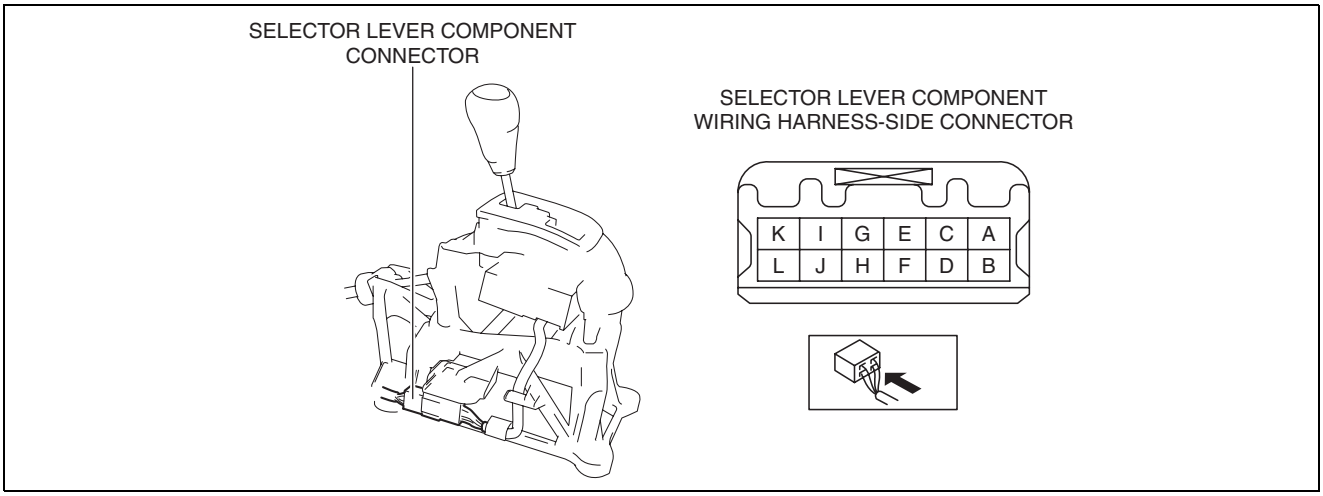

ac5wzw0000290

Shift-lock solenoid specification

Terminal	Connected to	Test condition	Voltage (V)
A	IG1 relay	Ignition switched ON (engine on)	B+
		Except above	Below 1.0
H	Start stop unit	Under any condition	Below 1.0

- If the voltage is not as indicated in the table, repair or replace the related wiring harness.
- If the voltage can be verified as indicated in the table, replace the selector lever component. (See 05-18-2 AUTOMATIC TRANSAXLE SHIFT MECHANISM REMOVAL/INSTALLATION.)

AUTOMATIC TRANSAXLE SHIFT MECHANISM

Shift-lock Override Button Inspection

1. Switch the ignition to off.
2. Verify that the selector lever is in the P position.
3. Without the brake pedal depressed, verify that the selector lever cannot be shifted from the P position.
4. Remove the emergency override hole cover using a tape-wrapped flathead screwdriver.
5. Insert the flathead screwdriver into the emergency override hole and push it down.
6. Verify that the selector lever can be shifted from the P position.
   - If not as verified, replace the selector lever. (See 05-18-2 AUTOMATIC TRANSAXLE SHIFT MECHANISM REMOVAL/INSTALLATION.)

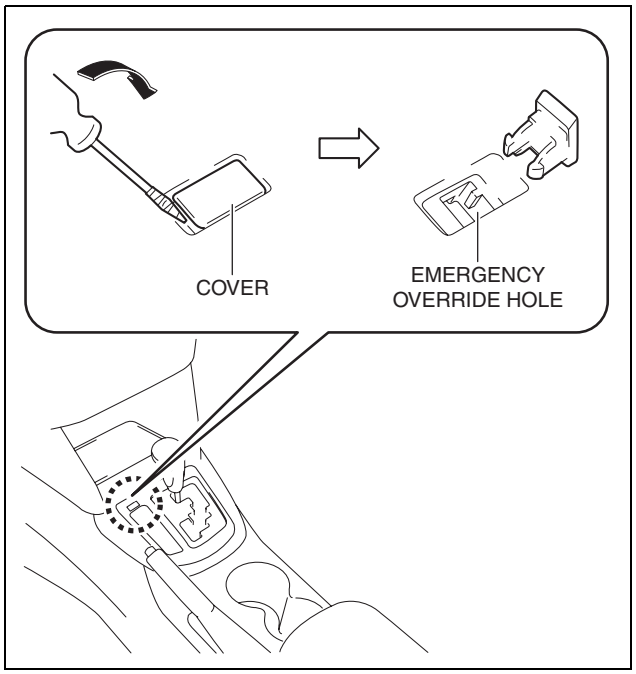

ac5wzw0000083

NOT P POSITION SWITCH INSPECTION

id051800300000

Note

- The not P position switch is built into the selector lever component.

1. Disconnect the negative battery cable. (See 01-17A-11 NEGATIVE BATTERY CABLE DISCONNECTION/CONNECTION [SKYACTIV-G 2.0].) (See 01-17A-13 NEGATIVE BATTERY CABLE DISCONNECTION/CONNECTION [SKYACTIV-G 2.0 (WITHOUT i-stop)].) (See 01-17B-9 NEGATIVE BATTERY CABLE DISCONNECTION/CONNECTION [SKYACTIV-D 2.2].)
2. Remove the front console. (See 09-17-50 FRONT CONSOLE REMOVAL/INSTALLATION.)
3. Disconnect the selector lever component connector.

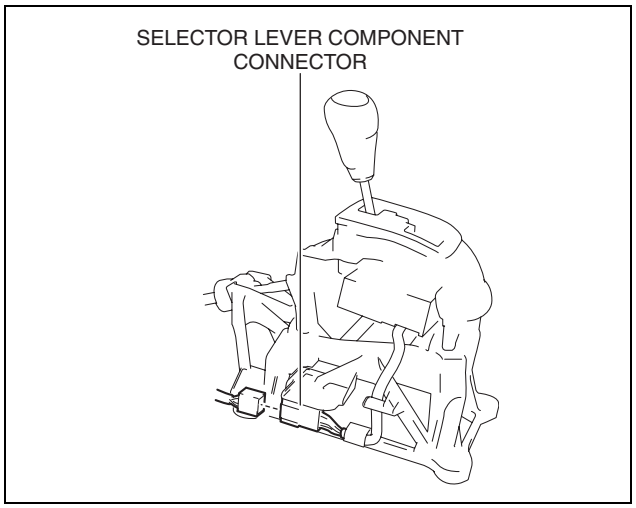

ac5wzw0000079

AUTOMATIC TRANSAXLE SHIFT MECHANISM

4. Verify that the continuity between selector lever component terminals B and I.
   - If not as verified, replace the selector lever component. (See 05-18-2 AUTOMATIC TRANSAXLE SHIFT MECHANISM REMOVAL/INSTALLATION.)

Not P position switch specification

Test condition	Continuity
Selector lever is in the P position.	No continuity
Selector lever is not in the P position.	Continuity

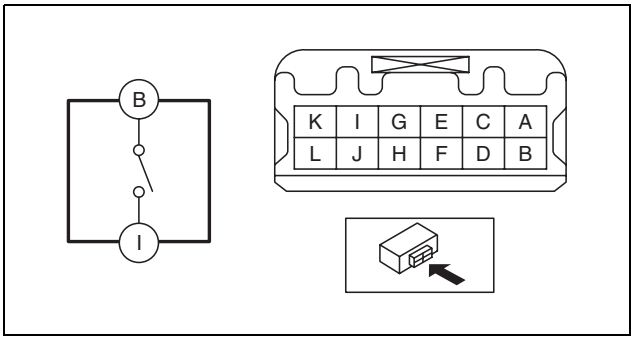

ac5wzw0000079

05-50 TECHNICAL DATA

TRANSMISSION/TRANSAXLE
TECHNICAL DATA 05-50–1
Clutch [C66M-R, C66MX-R]. **05-50–1**
Clutch [D66M-R, D66MX-R]. **05-50–1**
Manual Transaxle
[C66M-R, C66MX-R] **05-50–1**
Manual Transaxle
[D66M-R, D66MX-R]. **05-50–1**
Automatic Transaxle
[FW6A-EL, FW6AX-EL]. **05-50–2**
Automatic Transaxle
[GW6A-EL, GW6AX-EL] **05-50–2**

TECHNICAL DATA

TRANSMISSION/TRANSAXLE TECHNICAL DATA

id055000800100

Clutch [C66M-R, C66MX-R]

Item	Specification
Clutch fluid	European (L.H.D. U.K.) specs.: SAE J1703 or FMVSS116 DOT-3 or DOT-4 Australian and General (L.H.D. R.H.D.) specs.: SAE J1703 or FMVSS116 DOT-3
Clutch pedal height (Reference value)	150 mm {5.91 in}
Clutch pedal free play (Reference value)	10 mm {0.39 in} or less
Clutch pedal full stroke (Reference value)	146 mm {5.75 in}
Distance A, from clutch disengagement point to floor covering (Reference value)	82 mm {3.2 in} or more
Clutch cover diaphragm spring fingers maximum depth	0.6 mm {0.02 in}
Maximum clearance of flatness of the pressure plate	0.3 mm {0.01 in}
Clutch cover diaphragm spring fingers maximum height difference	1.0 mm {0.039 in}
Minimum clutch disc thickness	0.3 mm {0.01 in}
Maximum clutch disc runout	0.7 mm {0.03 in}
Flywheel maximum runout	0.1 mm {0.004 in}

Clutch [D66M-R, D66MX-R]

Item	Specification
Clutch fluid	SAE J1703 or FMVSS116 DOT-3 or DOT-4
Clutch pedal height (Reference value)	153.8 mm {6.055 in}
Clutch pedal free play (Reference value)	10 mm {0.39 in} or less
Clutch pedal full stroke (Reference value)	150.3 mm {5.917 in}
Distance A, from clutch disengagement point to floor covering (Reference value)	82 mm {3.2 in} or more

Manual Transaxle [C66M-R, C66MX-R]

Item		Specification
Manual transaxle oil	Grade	API service GL-4
	Viscosity	SAE 75W-80
	Capacity (approx. quantity)	1.65 L {1.74 US qt, 1.45 lmp qt}

Manual Transaxle [D66M-R, D66MX-R]

Item		Specification
Manual transaxle oil	Grade	API service GL-4
	Viscosity	SAE 75W-80
	Capacity (approx. quantity)	2.40 L {2.54 US qt, 2.11 lmp qt}

TECHNICAL DATA

Automatic Transaxle [FW6A-EL, FW6AX-EL]

Item		Specification
ATF	Type	ATF FZ
	Capacity (approx. quantity)	7.8 L {8.2 US qt, 6.9 Imp qt}
	Added amount if ATF is drained from drain plug (approx. quantity)	3.5—4.9 L {3.7—5.1 US qt, 3.1—4.3 Imp qt}

Line pressure

Measurement conditions		Specification (kPa {kgf/cm^2, psi})
Idling	R position	500—700 {5.10—7.13, 72.6—101.0}
	D and M (1GR) position	330—470 {3.37—4.79, 47.9—68.1}
Stalling	R position	1,790—2,100 {18.26—21.41, 259.7—304.5}
	D and M (1GR) position	970—1,170 {9.90—11.93, 141.0—169.6}

Stall speed

Measurement conditions	Specification (rpm)
R position	1,700—2,200
D position	1,900—2,600
M position	

Time lag

Measurement conditions	Specification (s)
N to D selected	0.4—0.7
N to R selected	

Automatic Transaxle [GW6A-EL, GW6AX-EL]

Item		Specification
ATF	Type	ATF FZ
	Capacity (approx. quantity)	8.0 L {8.5 US qt, 7.0 Imp qt}
	Added amount if ATF is drained from drain plug (approx. quantity)	3.5—4.9 L {3.7—5.1 US qt, 3.1—4.3 Imp qt}

Line pressure

Measurement conditions		Specification (kPa {kgf/cm^2, psi})
Idling	R position	500—700 {5.10—7.13, 72.6—101.0}
	D and M (1GR) position	330—470 {3.37—4.79, 47.9—68.1}
Stalling	R position	1,790—2,100 {18.26—21.41, 259.7—304.5}
	D and M (1GR) position	970—1,170 {9.90—11.93, 141.0—169.6}

Stall speed

Measurement conditions	Specification (rpm)
R position	1,800—2,400
D position	2,100—3,100
M position	

Time lag

Measurement conditions	Specification (s)
N to D selected	0.4—0.7
N to R selected	

05-60 SERVICE TOOLS

TRANSMISSION/TRANSAXLE SST. . . . 05-60–1
Example **05-60–1**
Clutch [C66M-R, C66MX-R]. **05-60–1**
Manual Transaxle
[C66M-R, C66MX-R] **05-60–1**
Manual Transaxle
[D66M-R, D66MX-R] **05-60–2**
Automatic Transaxle
[FW6A-EL, FW6AX-EL]. **05-60–2**
Automatic Transaxle
[GW6A-EL, GW6AX-EL] **05-60–3**

SERVICE TOOLS

TRANSMISSION/TRANSAXLE SST

id056000804200

1: Mazda SST number
2: Global SST number

Example

1:49 UN30 3009 2:303-009 Crankshaft damper remover	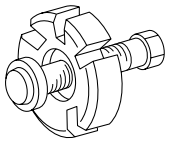

Clutch [C66M-R, C66MX-R]

1:49 E011 1A0 2: – Ring gear brake set 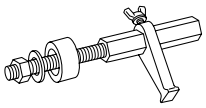	1:49 SE01 310A 2: – Clutch disc center tool 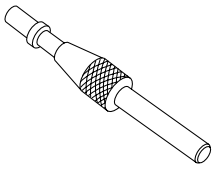	1:49 1285 071 2: – Bearing puller 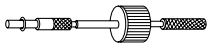

Manual Transaxle [C66M-R, C66MX-R]

1:49 UN30 3050 2: 303-050 Engine lifting brackets 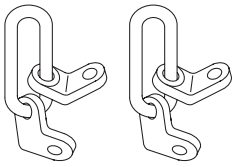	1:49 C017 5A0 2: – Engine support set 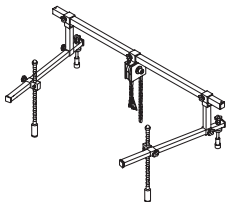	1:49 L017 5A0 2: – Support hanger 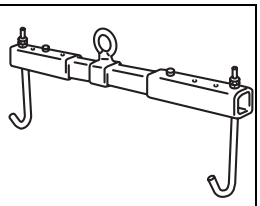
1:49 G030 797 2: – Handle (Part of 49 G030 795) 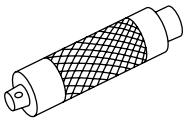	1:49 U027 003 2: – Oil Seal Installer 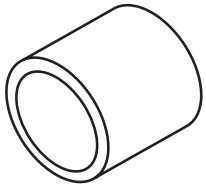	–

SERVICE TOOLS

Manual Transaxle [D66M-R, D66MX-R]

1:49 UN30 3050 2: 303-050 Engine lifting brackets 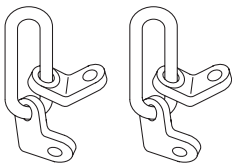	1:49 C017 5A0 2: – Engine support set 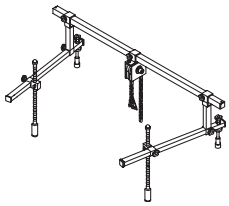	1:49 L017 5A0 2: – Support hanger 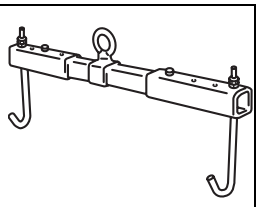
1:49 G030 797 2: – Handle (Part of 49 G030 795) 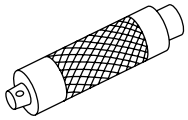	1:49 U027 003 2: – Oil Seal Installer 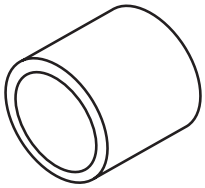	–

Automatic Transaxle [FW6A-EL, FW6AX-EL]

1:49 D019 910 2: – Adapter (Part of 49 D019 9A2) 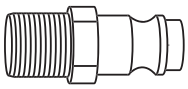	1:49 D019 911 2: – Adapter (Part of 49 D019 9A2) 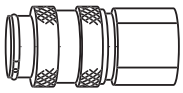	1:49 D019 913 2: – Adapter (Part of 49 D019 9A2) 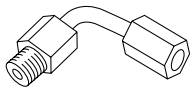
1:49 D019 909 2: – Hose (Part of 49 D019 9A2) 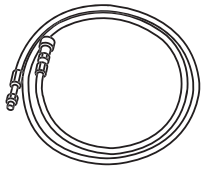	1:49 D019 908 2: – Gauge (Part of 49 D019 9A2) 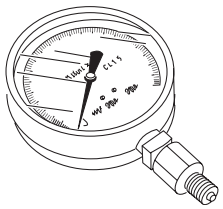	1:49 D019 907 2: – Oil pressure gauge (Part of 49 D019 9A2) 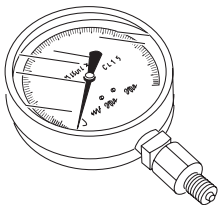
1:49 UN30 3050 2: 303-050 Engine lifting brackets 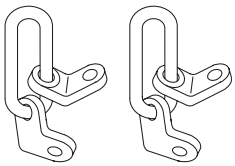	1:49 C017 5A0 2: – Engine support set 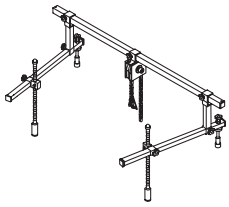	1:49 L017 5A0 2: – Support hanger 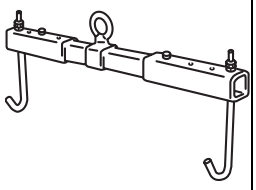
1:49 E011 1A0 2: – Ring gear brake set 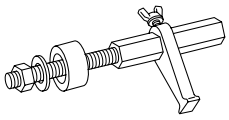	1:49 G030 797 2: – Handle (Part of 49 G030 795) 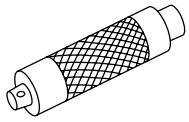	1:49 U027 003 2: – Oil Seal Installer 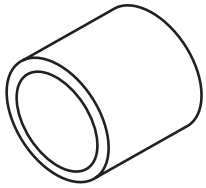
1:49 G030 796 2: – Body (Part of 49 G030 795)	1:49 F027 003 2: – Handle 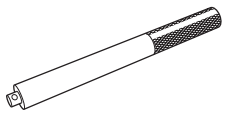	1:49 U034 204 2: – Dust boot installer 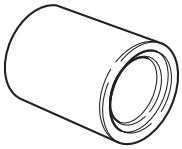

SERVICE TOOLS

Automatic Transaxle [GW6A-EL, GW6AX-EL]

1:49 D019 910 2: – Adapter (Part of 49 D019 9A2) 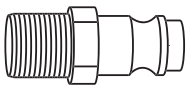	1:49 D019 911 2: – Adapter (Part of 49 D019 9A2) 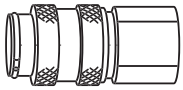	1:49 D019 913 2: – Adapter (Part of 49 D019 9A2) 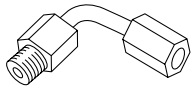
1:49 D019 909 2: – Hose (Part of 49 D019 9A2) 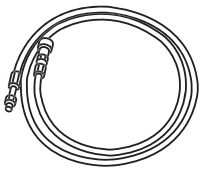	1:49 D019 908 2: – Gauge (Part of 49 D019 9A2) 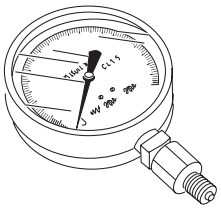	1:49 D019 907 2: – Oil pressure gauge (Part of 49 D019 9A2) 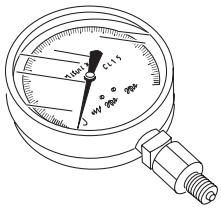
1:49 UN30 3050 2: 303-050 Engine lifting brackets 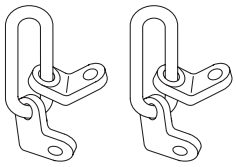	1:49 C017 5A0 2: – Engine support set 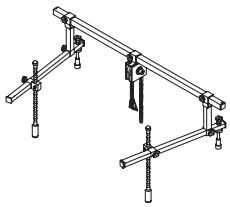	1:49 L017 5A0 2: – Support hanger 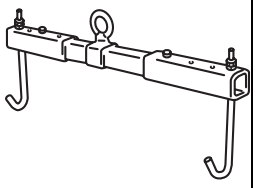
1:49 E011 1A0 2: – Ring gear brake set 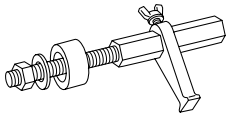	1:49 G030 797 2: – Handle (Part of 49 G030 795) 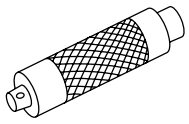	1:49 U027 003 2: – Oil Seal Installer 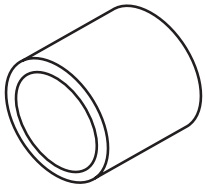
1:49 G030 796 2: – Body (Part of 49 G030 795) 	1:49 F027 003 2: – Handle 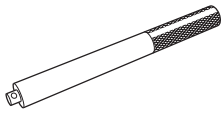	1:49 U034 204 2: – Dust boot installer 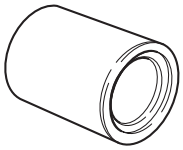

STEERING

06
SECTION

ON-BOARD DIAGNOSTIC. . . . 06-02
SYMPTOM
TROUBLESHOOTING. 06-03
GENERAL PROCEDURES . . . 06-10
ELECTRIC POWER
STEERING (EPS) 06-13
TECHNICAL DATA 06-50
SERVICE TOOLS 06-60

06-02 ON-BOARD DIAGNOSTIC

ELECTRIC POWER STEERING (EPS) SYSTEM WIRING DIAGRAM **06-02–2**
FOREWORD **06-02–3**
Troubleshooting Procedure **06-02–3**
Action for non-repeatable malfunction. **06-02–4**
ELECTRIC POWER STEERING (EPS) ON-BOARD DIAGNOSIS **06-02–5**
On-Board Diagnostic (OBD) Test Description **06-02–5**
Reading DTCs Procedure **06-02–5**
Snapshot Data Access Procedure **06-02–5**
Clearing DTCs Procedure **06-02–5**
PID/Data Monitor and Record Procedure **06-02–6**
DTC Table **06-02–6**
Fail-safe Function Table **06-02–8**
Snapshot Data Table **06-02–9**
PID/DATA Monitor Table **06-02–10**
DTC C200B:02/C200B:16/ C200B:62/C200B:85 . . . . . **06-02–12**
Diagnostic Procedure. **06-02–12**
DTC C200B:1C/C200C:1C **06-02–13**
Diagnostic Procedure. **06-02–13**
DTC C200D:1C/C200D:64/U2011:19/ U2011:1C/U2011:62/U2011:72/ U2011:92 . . . . . **06-02–14**
Diagnostic Procedure **06-02–14**
DTC U0001:88/U0100:00/ U0121:00/U0155:00 . . . . . **06-02–15**
DTC U0338:00/U0515:00 . . . . . **06-02–15**
Diagnostic Procedure **06-02–15**
DTC U0401:00 . . . . . **06-02–16**
Diagnostic Procedure **06-02–16**
DTC U0415:00 . . . . . **06-02–16**
Diagnostic Procedure **06-02–16**
DTC U2300:54/U2300:55/U2300:56. . . . . **06-02–17**
Diagnostic Procedure **06-02–17**
DTC U3000:16/U3000:1C/U3000:28/ U3000:41/U3000:46/U3000:47/ U3000:49/U3000:61/U3000:73/ U3000:96 . . . . . **06-02–18**
Diagnostic Procedure **06-02–18**
DTC U3000:4B **06-02–18**
Diagnostic Procedure **06-02–18**
DTC U3003:16 . . . . . **06-02–19**
Diagnostic Procedure **06-02–19**
DTC U3003:17 . . . . . **06-02–21**

ON-BOARD DIAGNOSTIC

ELECTRIC POWER STEERING (EPS) SYSTEM WIRING DIAGRAM

id060200812900

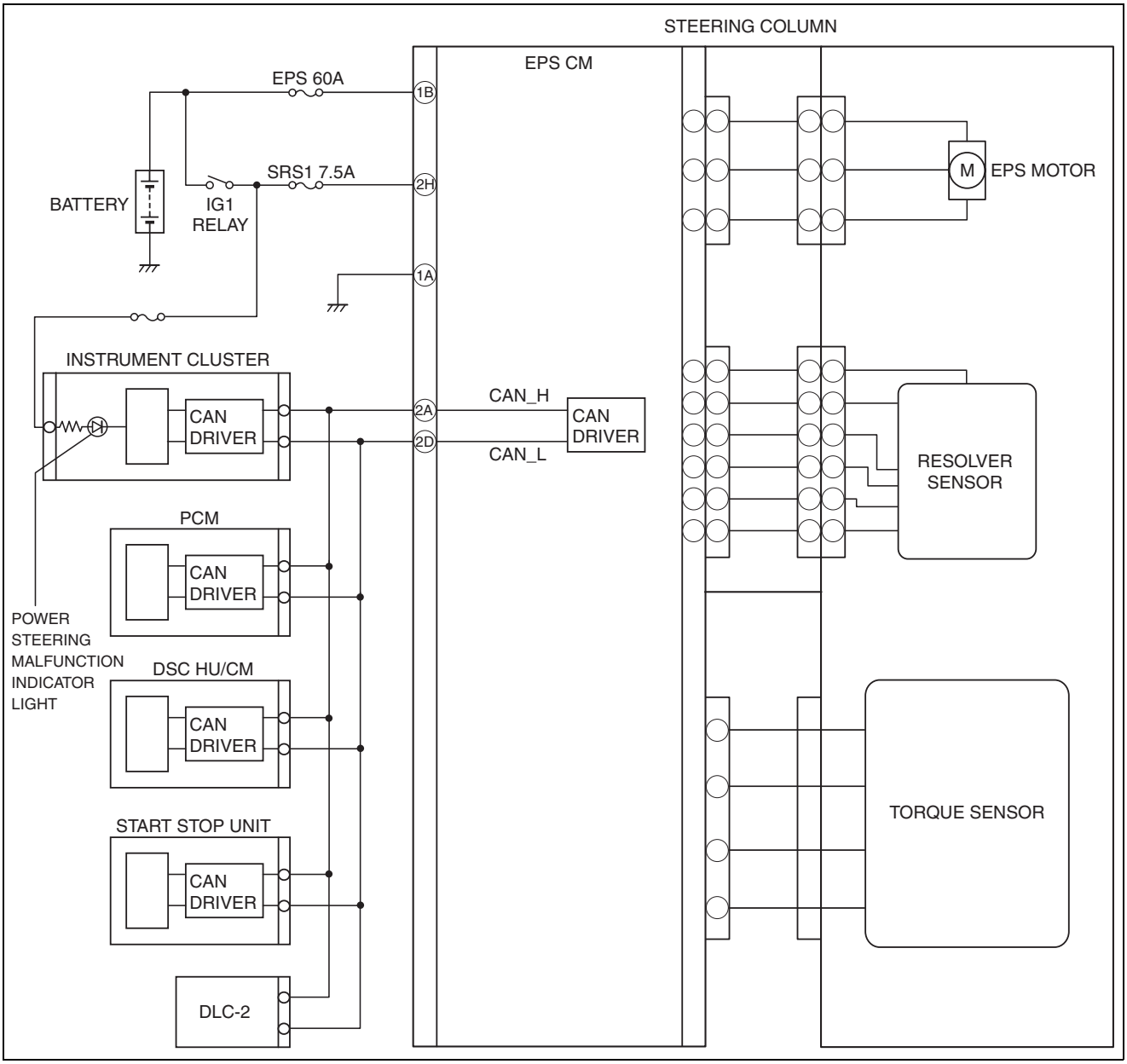

ac5wzw0000326

ON-BOARD DIAGNOSTIC

FOREWORD

id060200813800

- If there is any vehicle malfunction complaint lodged by a customer, perform malfunction diagnosis according to the troubleshooting procedure.

Troubleshooting Procedure

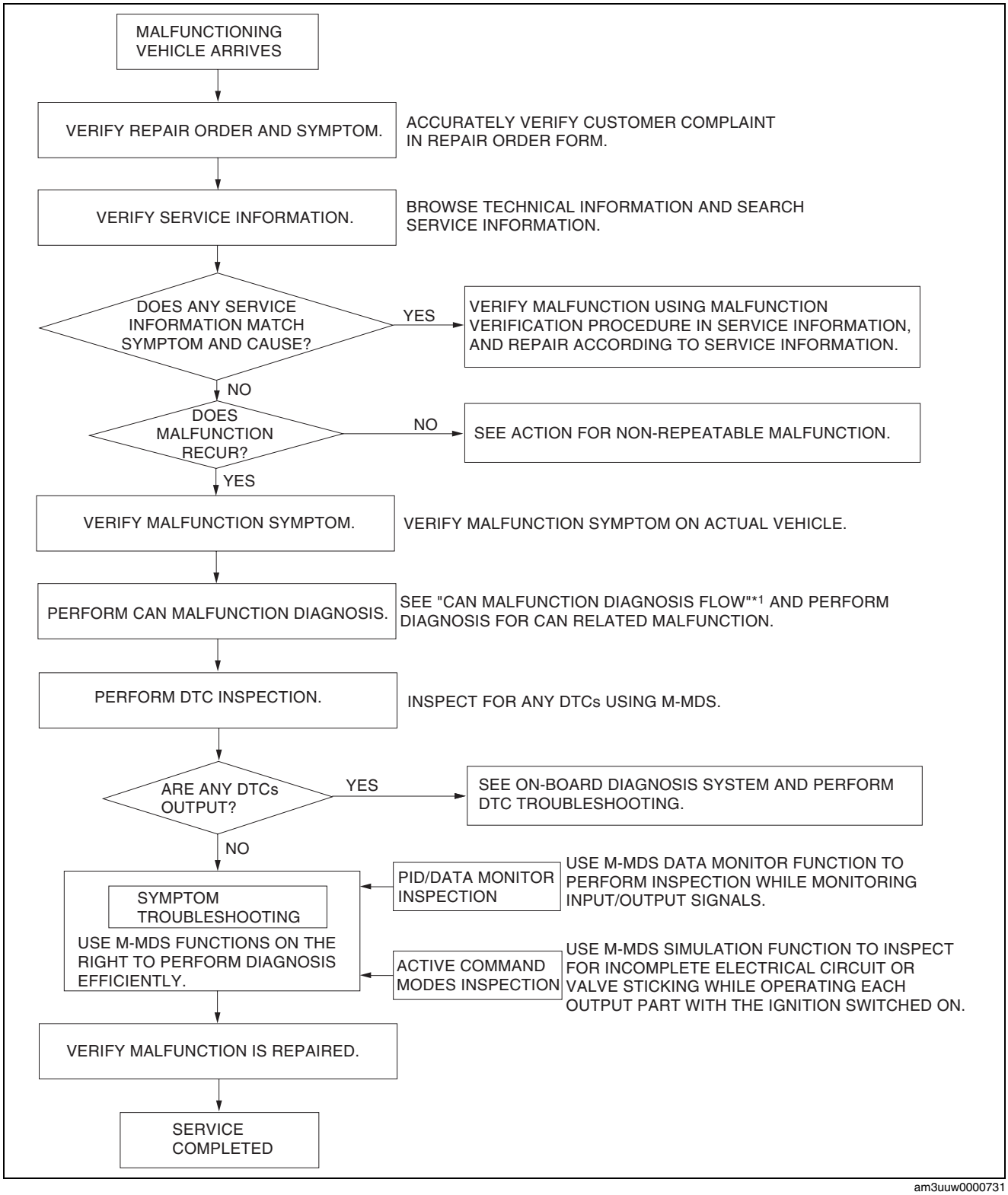

am3uuw0000731

ON-BOARD DIAGNOSTIC

*1 : 10-02A-3 CONTROLLER AREA NETWORK (CAN) MALFUNCTION DIAGNOSIS FLOW [SKYACTIV-G 2.0 (L.H.D.)], 10-02B-3 CONTROLLER AREA NETWORK (CAN) MALFUNCTION DIAGNOSIS FLOW [SKYACTIV-G 2.0 (R.H.D.)], 10-02C-3 CONTROLLER AREA NETWORK (CAN) MALFUNCTION DIAGNOSIS FLOW [SKYACTIV-D 2.2 (L.H.D.)], 10-02D-3 CONTROLLER AREA NETWORK (CAN) MALFUNCTION DIAGNOSIS FLOW [SKYACTIV-D 2.2 (R.H.D.)]

Action for non-repeatable malfunction

- If the malfunction does not recur, verify the malfunction cause by performing the following actions:

1. Verify that a DTC has been recorded in the memory using the M-MDS. (See 06-02-5 ELECTRIC POWER STEERING (EPS) ON-BOARD DIAGNOSIS.)
2. Perform a simulation test in the simulation mode based on the repair order form, record the data at that time, and detect the malfunction cause.
3. Shake the wiring harness or connector of the electrical component which is suspected to be the cause of the malfunction, and inspect for the occurrence of any malfunction or DTCs.

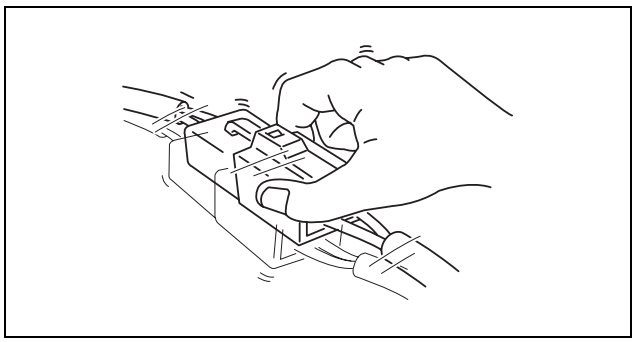

am3uuw0000812

4. Inspect the female terminals for poor connection.

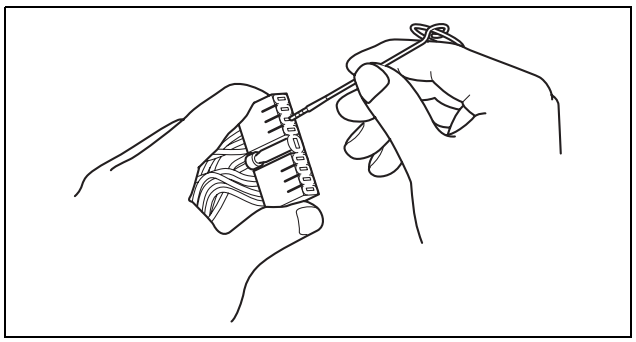

am3uuw0000812

ON-BOARD DIAGNOSTIC

ELECTRIC POWER STEERING (EPS) ON-BOARD DIAGNOSIS

id060200813500

On-Board Diagnostic (OBD) Test Description

- The OBD test inspects the integrity and function of the EPS and outputs the results when requested by the specific tests.
- On-board diagnostic test also:
  - — Provides a quick inspection of the EPS usually performed at the start of each diagnostic procedure.
  - — Provides verification after repairs to ensure that no other faults occurred during service.
- The OBD test is divided into 2 tests:
  - — Read/clear diagnostic results, PID monitor and record.

Read/clear diagnostic results

- This function allows reading or clearing of DTCs in the EPS CM memory.

PID/Data monitor and record

- This function allows access of certain data values, input signals, calculated values, and system status information.

Reading DTCs Procedure

CMDTC self test

1. Connect the M-MDS (IDS) to the DLC-2.
2. After the vehicle is identified, select the following items from the initialization screen of the IDS.
   (1) Select “Self Test”.
   (2) Select “All CMDTCs”.
3. Verify the DTC according to the directions on the screen.
   - If any DTCs are displayed, perform troubleshooting according to the corresponding DTC inspection after recording the snapshot data.
4. After completion of repairs, clear all DTCs stored in the EPS. (See 06-02-5 Clearing DTCs Procedure.)

ODDTC self test

1. Connect the M-MDS (IDS) to the DLC-2.
2. After the vehicle is identified, select the following items from the initialization screen of the IDS.
   (1) Select “Self Test”.
   (2) Select “Modules”.
   (3) Select “EPS”.
3. Verify the DTC according to the directions on the screen.
   - If any DTCs are displayed, perform troubleshooting according to the corresponding DTC inspection after recording the snapshot data.
4. After completion of repairs, clear all DTCs stored in the EPS. (See 06-02-5 Clearing DTCs Procedure.)

Snapshot Data Access Procedure

1. Connect the M-MDS (IDS) to the DLC-2.
2. After the vehicle is identified, select the following items from the initialization screen of the IDS.
   (1) Select “Self Test”.
   (2) Select “Modules”.
   (3) Select “EPS”.
3. Then, select the “Retrieve CMDTCs” and perform procedures according to directions on the IDS screen.
4. Retrieve the freeze frame PID data according to the directions on the IDS screen.

Note

- Snapshot data appears at the top of the help screen when the displayed DTC is selected.
- Snapshot data stores the currently detected DTC data.

Clearing DTCs Procedure

CMDTC clearing procedure

1. Connect the M-MDS (IDS) to the DLC-2.
2. After the vehicle is identified, select the following items from the initialization screen of the IDS.
   (1) Select “Self Test”.
   (2) Select “All CMDTCs”.
3. Verify the DTC according to the directions on the screen.
4. Press the clear button on the DTC screen to clear the DTC.
5. Switch the ignition OFF.
6. Switch the ignition ON (engine off) and wait for **5 s or more**.
7. Perform DTC inspection. (See 06-02-5 Reading DTCs Procedure.)
8. Verify that no DTCs are displayed.

ON-BOARD DIAGNOSTIC

ODDTC clearing procedure

1. Connect the M-MDS (IDS) to the DLC-2.
2. After the vehicle is identified, select the following items from the initialization screen of the IDS.
   (1) Select “Self Test”.
   (2) Select “Modules”.
   (3) Select “EPS”.
3. Verify the DTC according to the directions on the screen.
4. Press the clear button on the DTC screen to clear the DTC.
5. Switch the ignition OFF.
6. Switch the ignition ON (engine off) and wait for **5 s or more**.
7. Perform DTC inspection. (See 06-02-5 Reading DTCs Procedure.)
8. Verify that no DTCs are displayed.

PID/Data Monitor and Record Procedure

1. Connect the M-MDS (IDS) to the DLC-2.
2. After the vehicle is identified, select the following items from the initialization screen of the IDS.
   (1) Select “DataLogger”.
   (2) Select “Modules”.
   (3) Select “EPS”.
3. Select the applicable PID from the PID table.
4. Verify the PID data according to the directions on the screen.

Note

- The PID data screen function is used for monitoring the calculated value of input/output signals in the module.Therefore, if the monitored value of the output parts is not within the specification, it is necessary to inspect the monitored value of input parts corresponding to the applicable output part control. In addition, because the system does not display an output part malfunction as an abnormality in the monitored value, it is necessary to inspect the output parts individually.
- When detecting DTCs, PIDs related to a malfunctioning system may not display even if the module is normal. Therefore, if a PID is not displayed, it is necessary to verify the DTC, perform malfunction diagnosis of the DTC that was detected, and do repairs.

DTC Table

×: Applicable
—: Not applicable

DTC M-MDS	Power steering malfunction indicator light illumination status	Diagnosis system component	Fail-safe	Drive cycle	Self test type*1	Memory function	Page
C200B:02	Illuminated	Torque sensor	×	—	C, D	×	(See 06-02-12 DTC C200B:02/C200B:16/ C200B:62/C200B:85.)
C200B:16	Illuminated	Torque sensor	×	—	C, D	×	
C200B:1C	Illuminated	Torque sensor	×	—	C, D	×	(See 06-02-13 DTC C200B:1C/C200C:1C.)
C200B:62	Illuminated	Torque sensor	×	—	C, D	×	(See 06-02-12 DTC C200B:02/C200B:16/ C200B:62/C200B:85.)
C200B:85	Illuminated	Torque sensor	×	—	C, D	×	
C200C:1C	Illuminated	Torque sensor	×	—	C, D	×	(See 06-02-13 DTC C200B:1C/C200C:1C.)
C200D:1C	Illuminated	Resolver sensor	×	—	C, D	×	(See 06-02-14 DTC C200D:1C/C200D:64/ U2011:19/U2011:1C/ U2011:62/U2011:72/ U2011:92.)
C200D:64	Illuminated	Resolver sensor	×	—	C, D	×	
U0001:88	Illuminated	CAN system communication error	×	—	C, D	×	(See 06-02-15 DTC U0001:88/U0100:00/ U0121:00/U0155:00.)
U0100:00	Illuminated	Communication error to PCM	×	—	C, D	×	
U0121:00	—	Communication error to DSC CM	×	—	C, D	×	
U0155:00	—	Communication error to instrument cluster	×	—	C, D	×	
U0338:00	—	Signal error from start stop unit	×	—	C, D	×	(See 06-02-15 DTC U0338:00/U0515:00.)

ON-BOARD DIAGNOSTIC

DTC M-MDS	Power steering malfunction indicator light illumination status	Diagnosis system component	Fail-safe	Drive cycle	Self test type*1	Memory function	Page
U0401:00	Illuminated	Signal (vehicle speed) error from PCM	×	—	C, D	×	(See 06-02-16 DTC U0401:00.)
	—	Signal (engine speed) error from PCM	×	—	C, D	×	
	—	Signal (i-stop status) error from PCM	×	—	C, D	×	
U0415:00	—	Signal error from DSC CM	×	—	C, D	×	(See 06-02-16 DTC U0415:00.)
U0515:00	—	Signal error from start stop unit	×	—	C, D	×	(See 06-02-15 DTC U0338:00/U0515:00.)
U2011:19	Illuminated	EPS motor	×	—	C, D	×	(See 06-02-14 DTC C200D:1C/C200D:64/ U2011:19/U2011:1C/ U2011:62/U2011:72/ U2011:92.)
U2011:1C	Illuminated	EPS motor	×	—	C, D	×	
U2011:62	Illuminated	EPS motor	×	—	C, D	×	
U2011:72	Illuminated	EPS motor	×	—	C, D	×	
U2011:92	Illuminated	EPS motor	×	—	C, D	×	
U2300:54	—	EPS configuration	×	—	C, D	×	(See 06-02-17 DTC U2300:54/U2300:55/ U2300:56.)
U2300:55	Illuminated	EPS configuration	×	—	C, D	×	
U2300:56	—	EPS configuration	×	—	C, D	×	
U3000:16	Illuminated	EPS CM	×	—	C, D	×	(See 06-02-18 DTC U3000:16/U3000:1C/ U3000:28/U3000:41/ U3000:46/U3000:47/ U3000:49/U3000:61/ U3000:73/U3000:96.)
U3000:1C	Illuminated	EPS CM	×	—	C, D	×	
U3000:28	Illuminated	EPS CM	×	—	C, D	×	
U3000:41	Illuminated	EPS CM	×	—	C, D	×	
U3000:46	—	EPS CM	×	—	C, D	×	
U3000:47	Illuminated	EPS CM	×	—	C, D	×	
U3000:49	Illuminated	EPS CM	×	—	C, D	×	
U3000:4B	—	EPS CM	×	—	C, D	×	(See 06-02-18 DTC U3000:4B.)
U3000:61	Illuminated	EPS CM	×	—	C, D	×	(See 06-02-18 DTC U3000:16/U3000:1C/ U3000:28/U3000:41/ U3000:46/U3000:47/ U3000:49/U3000:61/ U3000:73/U3000:96.)
U3000:73	Illuminated	EPS CM	×	—	C, D	×	
U3000:96	Illuminated	EPS CM	×	—	C, D	×	
U3003:16	Illuminated	Battery power supply	×	—	C, D	×	(See 06-02-19 DTC U3003:16.)
U3003:17	Illuminated	Battery power supply	×	—	C, D	×	(See 06-02-21 DTC U3003:17.)

*1 : C: CMDTC self test, D: ODDTC self test

ON-BOARD DIAGNOSTIC

Fail-safe Function Table

DTC M-MDS	Fail-safe control status
C200B:02	Control disabled
C200B:16	Control disabled
C200B:1C	Control disabled
C200B:62	Control disabled
C200B:85	Control disabled
C200C:1C	Control disabled
C200D:1C	Control disabled
C200D:64	Control disabled
U0001:88	Control enabled
U0100:00	Control is maintained by gradually changing the controlled vehicle speed and setting it to **120 km/h {74.6 mph}**
U0121:00	Control enabled
U0155:00	Control enabled
U0338:00	Control enabled
U0401:00	• Vehicle speed signal malfunction — Control is maintained by gradually changing the controlled vehicle speed and setting it to **120 km/h {74.6 mph}** • Engine speed signal malfunction — Control enabled • i-stop status signal malfunction — EPS i-stop control is not operated, and normal control is maintained
U0415:00	Control enabled
U0515:00	Control enabled
U2011:19	Control disabled
U2011:1C	Control disabled
U2011:62	Control disabled
U2011:72	• Phase 1 open circuit malfunction is detected in the EPS motor — Control is maintained in the backup control • Other malfunction detected in EPS motor internal circuit — Control disabled
U2011:92	Control disabled
U2300:54	Control enabled
U2300:55	Control enabled
U2300:56	Control enabled
U3000:16	Control disabled
U3000:1C	Control disabled
U3000:28	Control disabled
U3000:41	Control disabled
U3000:46	Control is maintained in fail mode
U3000:47	Control disabled
U3000:49	Control disabled
U3000:4B	Control is maintained in fail mode
U3000:61	Control disabled
U3000:73	Control disabled
U3000:96	Control disabled
U3003:16	Control is maintained by gradually decreasing the motor control current However, control is inhibited if the power supply voltage is the specified value of less.
U3003:17	Control disabled

ON-BOARD DIAGNOSTIC

Snapshot Data Table

Note

- Refer to PID monitor table for confirm the EPS system operation status while the EPS does not store the DTC. (See 06-02-10 PID/DATA Monitor Table.)
- Snapshot data items are not displayed, according to detected DTC.

Snapshot data item	Unit	Definition	Corresponding data monitor items
AAT	°C, °F	Ambient air temperature	—
APP_STATUS	Accelerator Pedal Off/ Under 20%/ Over 20%/ FAIL	Accelerator pedal position	—
CEN_TRQ_S	Nm	Center value of torque sensor	CEN_TRQ_S
CFG_STATUS	Config Complete/ Not Configured/ Config Error	Configuration status	—
ECT_STATUS	Under 0 degrees C/ 0 - Under 80 degrees C/ Over 80 degrees C/ FAIL	Engine coolant temperature status	—
ECU_IN_TMP	°C, °F	ECU internal temperature	ECU_IN_TMP
ENG_RPM	RPM	Engine speed	ENG_RPM
IC_VPWR	V	Instrument cluster power supply	—
IG-ON_TIMER	hh:mm:ss	Times since ignition switch ON	—
MT_CURRENT	A	Motor current	MT_CURRENT
OH_CR_C	No/Yes	Current complete overheat protection	OH_CR_C
OH_CR_M	No/Yes	Current middle overheat protection	OH_CR_M
OH_HIST_C	No/Yes	History of complete overheat protection	OH_HIST_C
OH_HIST_M	No/Yes	History of middle overheat protection	OH_HIST_M
OH_IG_CNT_C	—	IG ON counter after complete overheat protection	OH_IG_CNT_C
OH_IG_CNT_M	—	IG ON counter after middle overheat protection	OH_IG_CNT_M
PWR_MODE_KEY	Key Out/ Key Recently Out/ Key Approved(Position 0)/ Post Accessory (Position 0)/ Accessory (Position 1)/ Post Ignition (Position 1)/ Ignition On (Position 2)/ Running (Position 2)/ Running - Starting In Progress (Position 2)/ Crank (Position 3)	Power mode key state	—
RPM_STATUS	Engine Stop/ Under 1500rpm/ Over 1500rpm/ FAIL	Engine RPM status	—
SHIFT_STATUS	P/N D/ R/ FAIL	Shift position status	—
STR_ANG	°	Steering wheel angle	STR_ANG
STR_ROT_SPD	°/s	Steering wheel rotation speed	STR_ROT_SPD

ON-BOARD DIAGNOSTIC

Snapshot data item	Unit	Definition	Corresponding data monitor items
STR_TRQ_S_M	Nm	Steering shaft torque (Main)	STR_TRQ_S_M
STR_TRQ_S_S	Nm	Steering shaft torque (Sub)	STR_TRQ_S_S
TOTAL_DIST	km, ft, mi	Total distance	—
TOTAL_TIME	hh:mm:ss	Total time	—
VPWR	V	Power supply	VPWR
VSPD	KPH, MPH	Vehicle speed	VSPD
VSPD_STATUS	Stop/ 0 - 10km/h/ Over 10km/h/ FAIL	Vehicle speed status	—

PID/DATA Monitor Table

Note

- If the PID/data monitor value “STR_ANG” is inspected, perform the following procedure before inspecting.
  1. Switch the ignition to OFF, and maintain this condition for **approx. 3 s**.
  2. Set the vehicle wheels in the straight-ahead position.
  3. Switch the ignition ON (engine off or on).

PID name (definition) M-MDS display	Unit/Operation	Operation Status (Reference)	Inspection item(s)	EPS control module terminal
CEN_TRQ_S	Nm	• Torque sensor neutral position: Near 0 Nm	• Steering column replacement (See 06-13-4 STEERING WHEEL AND COLUMN REMOVAL/INSTALLATION.)	—
ECU_IN_TMP	°C, °F	• Displays temperature of board in EPS control module: -40°C—+215°C {-40°F—419°F}	• EPS CM replacement (See 06-13-4 STEERING WHEEL AND COLUMN REMOVAL/INSTALLATION.)	—
ENG_RPM	RPM	• Engine stopped: 0 RPM • Engine rotating at **3,000 RPM**: 3,000 RPM	• PCM inspection (See 01-40-17 PCM INSPECTION [SKYACTIV-G 2.0].)	—
MT_CURRENT	A	• When not steered: Near 0 A • Steered: Changes to positive or negative	• EPS CM replacement (See 06-13-4 STEERING WHEEL AND COLUMN REMOVAL/INSTALLATION.)	—
OH_CR_C	Yes/No	• Is the overheating prevention control (Complete) operating?	—	—
OH_CR_M	Yes/No	• Is the overheating prevention control (Middle) operating?	—	—
OH_HIST_C	Yes/No	• Has the overheating prevention control (Complete) operated before?	—	—
OH_HIST_M	Yes/No	• Has the overheating prevention control (Middle) operated before?	—	—
OH_IG_CNT_C	—	• History of overheating prevention control (Complete) • Number of times vehicle is driven (ignition switched ON (engine off or on)) after overheating prevention control operates	—	—

ON-BOARD DIAGNOSTIC

PID name (definition) M-MDS display	Unit/Operation	Operation Status (Reference)	Inspection item(s)	EPS control module terminal
OH_IG_CNT_M	—	• History of overheating prevention control (Middle) • Number of times vehicle is driven (ignition switched ON (engine off or on)) after overheating prevention control operates	—	—
STR_ANG	°	• Steering in neutral position • Steered left: Changes to 0°—Positive • Steered right: Changes to 0°—Negative	• EPS CM replacement (See 06-13-4 STEERING WHEEL AND COLUMN REMOVAL/ INSTALLATION.)	—
STR_ROT_SPD	°/s	• Not steered: Near 0 °/s • Steered: Changes according to steering speed	• EPS CM replacement (See 06-13-4 STEERING WHEEL AND COLUMN REMOVAL/ INSTALLATION.)	—
STR_TRQ_S_M	Nm	• Not steered: Near 0 Nm • Steered left: Changes to 0 Nm—Positive • Steered right: Changes to 0 Nm—Negative	• EPS CM replacement (See 06-13-4 STEERING WHEEL AND COLUMN REMOVAL/ INSTALLATION.)	—
STR_TRQ_S_S	Nm	• Not steered: Near 0 Nm • Steered left: Changes to 0 Nm—Positive • Steered right: Changes to 0 Nm—Negative	• EPS CM replacement (See 06-13-4 STEERING WHEEL AND COLUMN REMOVAL/ INSTALLATION.)	—
VPWR	V	• Engine stopped: Approx. **12 V** • Idling: Approx. **14 V**	• Battery inspection (See 01-17A-7 BATTERY INSPECTION [SKYACTIV-G 2.0].) (See 01-17A-8 BATTERY INSPECTION [SKYACTIV-G 2.0 (WITHOUT i-stop)].) (See 01-17B-6 BATTERY INSPECTION [SKYACTIV-D 2.2].) • Power supply circuit inspection (ignition switch, fuses)	1B
VSPD	KPH, MPH	• Vehicle stopped: 0 KPH, 0 MPH • Vehicle speed **20 km/h {12 mph}**: 20 KPH, 12 MPH	• PCM inspection (See 01-40-17 PCM INSPECTION [SKYACTIV-G 2.0].)	—

ON-BOARD DIAGNOSTIC

DTC C200B:02/C200B:16/C200B:62/C200B:85

id060200814900

DTC C200B:02, C200B:16, C200B:62, C200B:85	Torque sensor
DETECTION CONDITION	• C200B:02 — Signal error detected in torque sensor signal • C200B:16 — Open or short circuit is detected in torque sensor circuit • C200B:62 — Difference occurs between signals 1 and 2 from torque sensor • C200B:85 — Signal error detected in torque sensor signal
FAIL-SAFE FUNCTION	• Control disabled • Power steering malfunction indicator light: Illuminated
POSSIBLE CAUSE	• Torque sensor malfunction • EPS CM malfunction
SYSTEM WIRING DIAGRAM	—

Diagnostic Procedure

Step	Inspection		Action
1	**INSPECT TORQUE SENSOR USING M-MDS** • Connect the M-MDS to the DLC-2. • Switch the ignition ON (engine off). • Access “STR_TRQ_S_M” and ”STR_TRQ_S_S” PIDs. (See 06-02-5 ELECTRIC POWER STEERING (EPS) ON-BOARD DIAGNOSIS.) • Verify that the data monitor value changes when the steering wheel is turned. — Left: 0—positive — Right: 0— negative • Do the torque sensor signal values change in the same way?	Yes	Go to the next step.
		No	Replace the steering column (torque sensor), then go to the next step. (See 06-13-4 STEERING WHEEL AND COLUMN REMOVAL/INSTALLATION.)
2	**VERIFY THAT SAME DTC IS NOT PRESENT** • Clear the DTC from the memory. (See 06-02-5 ELECTRIC POWER STEERING (EPS) ON-BOARD DIAGNOSIS.) • Is the same DTC present? (See 06-02-5 ELECTRIC POWER STEERING (EPS) ON-BOARD DIAGNOSIS.)	Yes	Repeat the inspection from Step 1. If the malfunction recurs, replace the EPS CM, then go to the next step. (See 06-13-4 STEERING WHEEL AND COLUMN REMOVAL/INSTALLATION.)
		No	Go to the next step.
3	**VERIFY THAT NO OTHER DTCs ARE PRESENT** • Are any other DTCs output? (See 06-02-5 ELECTRIC POWER STEERING (EPS) ON-BOARD DIAGNOSIS.)	Yes	Go to the applicable DTC inspection. (See 06-02-5 ELECTRIC POWER STEERING (EPS) ON-BOARD DIAGNOSIS.)
		No	DTC troubleshooting completed.

ON-BOARD DIAGNOSTIC

DTC C200B:1C/C200C:1C

id060200814800

DTC C200B:1C, C200C:1C	Torque sensor
DETECTION CONDITION	• Open or short circuit is detected in torque sensor circuit
FAIL-SAFE FUNCTION	• Control disabled • Power steering malfunction indicator light: Illuminated
POSSIBLE CAUSE	• Open or short circuit in wiring harness between the EPS CM terminals and torque sensor. • Poor connection at connectors • Torque sensor malfunction • EPS CM malfunction
SYSTEM WIRING DIAGRAM	—

Diagnostic Procedure

Step	Inspection		Action
1	**INSPECT TORQUE SENSOR USING M-MDS** • Connect the M-MDS to the DLC-2. • Switch the ignition ON (engine off). • Access “STR_TRQ_S_M” and ”STR_TRQ_S_S” PIDs. (See 06-02-5 ELECTRIC POWER STEERING (EPS) ON-BOARD DIAGNOSIS.) • Verify that the data monitor value changes when the steering wheel is turned. — Left: 0—positive — Right: 0— negative • Do the torque sensor signal values change in the same way?	Yes	Malfunction may be temporary. Go to step 3.
		No	Go to the next step.
2	**INSPECT TORQUE SENSOR CONNECTOR AND TORQUE SENSOR WIRING HARNESS** • Switch the ignition OFF. • Disconnect the torque sensor connector. • Are the connector connection, connector pins, and wiring harness normal?	Yes	Replace the steering column (torque sensor), then go to the next step. (See 06-13-4 STEERING WHEEL AND COLUMN REMOVAL/INSTALLATION.)
		No	Repair or replace the connector or wiring harness, then go to the next step.
3	**VERIFY THAT SAME DTC IS NOT PRESENT** • Clear the DTC from the memory. (See 06-02-5 ELECTRIC POWER STEERING (EPS) ON-BOARD DIAGNOSIS.) • Is the same DTC present? (See 06-02-5 ELECTRIC POWER STEERING (EPS) ON-BOARD DIAGNOSIS.)	Yes	Repeat the inspection from Step 1. If the malfunction recurs, replace the EPS CM, then go to the next step. (See 06-13-4 STEERING WHEEL AND COLUMN REMOVAL/INSTALLATION.)
		No	Go to the next step.
4	**VERIFY THAT NO OTHER DTCs ARE PRESENT** • Are any other DTCs output? (See 06-02-5 ELECTRIC POWER STEERING (EPS) ON-BOARD DIAGNOSIS.)	Yes	Go to the applicable DTC inspection. (See 06-02-5 ELECTRIC POWER STEERING (EPS) ON-BOARD DIAGNOSIS.)
		No	DTC troubleshooting completed.

ON-BOARD DIAGNOSTIC

DTC C200D:1C/C200D:64/U2011:19/U2011:1C/U2011:62/U2011:72/U2011:92

id060200814700

DTC C200D:1C, C200D:64, U2011:1C, U2011:19, U2011:62, U2011:72, U2011:92	EPS motor
DETECTION CONDITION	• C200D:1C — Malfunction detected in resolver sensor internal circuit • C200D:64 — Signal error detected in resolver sensor signal • U2011:1C, U2011:19, U2011:62, U2011:72 — Malfunction detected in EPS motor internal circuit • U2011:92 — Malfunction detected in EPS motor internal circuit in the backup control
FAIL-SAFE FUNCTION	• C200D:1C, C200D:64, U2011:1C, U2011:19, U2011:62 — Control disabled — Power steering malfunction indicator light: Illuminated • U2011:72 — Phase 1 open circuit malfunction is detected in the EPS motor • Control is maintained in the backup control — Other malfunction detected in EPS motor internal circuit • Control disabled — Power steering malfunction indicator light: Illuminated • U2011:92 — Control disabled — Power steering malfunction indicator light: Illuminated
POSSIBLE CAUSE	• Malfunction in internal steering column, EPS motor
SYSTEM WIRING DIAGRAM	—

Diagnostic Procedure

Step	Inspection		Action
1	**VERIFY DTC** • Clear the DTC from the memory. (See 06-02-5 ELECTRIC POWER STEERING (EPS) ON-BOARD DIAGNOSIS.) • Verify if any DTCs are displayed. (See 06-02-5 ELECTRIC POWER STEERING (EPS) ON-BOARD DIAGNOSIS.) • Is the same DTC present?	Yes	Replace the EPS CM (EPS motor). (See 06-13-4 STEERING WHEEL AND COLUMN REMOVAL/INSTALLATION.)
		No	Go to the next step.
2	**VERIFY THAT NO OTHER DTCs ARE PRESENT** • Are any other DTCs output? (See 06-02-5 ELECTRIC POWER STEERING (EPS) ON-BOARD DIAGNOSIS.)	Yes	Go to the applicable DTC inspection. (See 06-02-5 ELECTRIC POWER STEERING (EPS) ON-BOARD DIAGNOSIS.)
		No	DTC troubleshooting completed.

ON-BOARD DIAGNOSTIC

DTC U0001:88/U0100:00/U0121:00/U0155:00

id060200814600

DTC	U0001:88	CAN system Communication error
	U0100:00	Communication error to PCM
	U0121:00	Communication error to DSC HU/CM
	U0155:00	Communication error to instrument cluster
DETECTION CONDITION		• U0001:88 — Error detected in line between CAN connection module and CAN bus communication line • U0100:00 — Communication error to PCM is detected in CAN communication • U0121:00 — Communication error to DSC CM is detected in CAN communication • U0155:00 — Communication error to instrument cluster is detected in CAN communication
FAIL-SAFE FUNCTION		• U0001:88 — Control enabled — Power steering malfunction indicator light: Illuminated • U0100:00 — Control is maintained by gradually changing the controlled vehicle speed and setting it to **120 km/h {74.6 mph}** — Power steering malfunction indicator light: Illuminated • U0121:00, U0155:00 — Control enabled — Power steering malfunction indicator light: Not illuminated
POSSIBLE CAUSE		• CAN system wiring harness open or short circuit with PCM • CAN system wiring harness open or short circuit with DSC HU/CM • CAN system wiring harness open or short circuit with instrument cluster • Poor connection at connectors
SYSTEM WIRING DIAGRAM		—

Diagnostic procedure

- Perform inspection according to the diagnostic procedure in MULTIPLEX COMMUNICATION SYSTEM. (See 10-02A-1 FOREWORD [SKYACTIV-G 2.0 (L.H.D.)].) (See 10-02B-1 FOREWORD [SKYACTIV-G 2.0 (R.H.D.)].) (See 10-02C-1 FOREWORD [SKYACTIV-D 2.2 (L.H.D.)].) (See 10-02D-1 FOREWORD [SKYACTIV-D 2.2 (R.H.D.)].)

DTC U0338:00/U0515:00

id060200814500

DTC U0338:00, U0515:00	CAN system communication error
DETECTION CONDITION	• Error detected in signal from the start stop unit via CAN communication
FAIL-SAFE FUNCTION	• Control enabled • Power steering malfunction indicator light: Not illuminated
POSSIBLE CAUSE	• Start stop unit malfunction • Mis-assembly of the steering angle sensor
SYSTEM WIRING DIAGRAM	—

Diagnostic Procedure

Step	Inspection		Action
1	**INSPECT FOR THE START STOP UNIT MALFUNCTION** • Using the M-MDS, perform the DTC inspection for the start stop unit. (See 09-02C-6 DTC INSPECTION [START STOP UNIT].) • Are any DTCs detected?	Yes	Go to applicable DTC inspection. (See 09-02C-8 DTC TABLE [START STOP UNIT].) DTC troubleshooting completed, then go to the next step.
		No	Go to the next step.
2	**VERIFY DTC TROUBLESHOOTING COMPLETED** • Clear the DTC from the memory. (See 06-02-5 ELECTRIC POWER STEERING (EPS) ON-BOARD DIAGNOSIS.) • Is the same DTC present? (See 06-02-5 ELECTRIC POWER STEERING (EPS) ON-BOARD DIAGNOSIS.)	Yes	Replace the start stop unit. (See 09-14-54 START STOP UNIT REMOVAL/INSTALLATION.)
		No	DTC troubleshooting completed.

ON-BOARD DIAGNOSTIC

DTC U0401:00

id060200812200

DTC U0401:00	CAN system communication error
DETECTION CONDITION	• Error detected in signal from PCM via CAN communication
FAIL-SAFE FUNCTION	• Vehicle speed signal malfunction — Control is maintained by gradually changing the controlled vehicle speed and setting it to **120 km/h {74.6 mph}** — Power steering malfunction indicator light: Illuminated • Engine speed signal malfunction — Control enabled — Power steering malfunction indicator light: Not illuminated • i-stop status signal malfunction — EPS i-stop control is not operated, and normal control is maintained — Power steering malfunction indicator light: Not illuminated
POSSIBLE CAUSE	• PCM malfunction
SYSTEM WIRING DIAGRAM	—

Diagnostic Procedure

Step	Inspection		Action
1	**INSPECT FOR PCM MALFUNCTION** • Using the M-MDS, perform the DTC inspection for the PCM. (See 01-02-8 ON-BOARD DIAGNOSTIC TEST [SKYACTIV-G 2.0].) • Are any DTCs detected?	Yes	Go to applicable DTC inspection. (See 01-02-14 DTC TABLE [SKYACTIV-G 2.0].) DTC troubleshooting completed, then go to the next step.
		No	Go to the next step.
2	**VERIFY DTC TROUBLESHOOTING COMPLETED** • Clear the DTC from the memory. (See 06-02-5 ELECTRIC POWER STEERING (EPS) ON-BOARD DIAGNOSIS.) • Is the same DTC present? (See 06-02-5 ELECTRIC POWER STEERING (EPS) ON-BOARD DIAGNOSIS.)	Yes	Replace the PCM. (See 01-40-10 PCM REMOVAL/INSTALLATION [SKYACTIV-G 2.0].)
		No	DTC troubleshooting completed.

DTC U0415:00

id060200814400

DTC U0415:00	CAN system communication error
DETECTION CONDITION	• Error detected in signal from DSC HU/CM via CAN communication
FAIL-SAFE FUNCTION	• Control enabled • Power steering malfunction indicator light: Not illuminated
POSSIBLE CAUSE	• DSC HU/CM malfunction
SYSTEM WIRING DIAGRAM	—

Diagnostic Procedure

Step	Inspection		Action
1	**INSPECT FOR DSC HU/CM MALFUNCTION** • Using the M-MDS, perform the DTC inspection for the DSC HU/CM. (See 04-02A-7 ON-BOARD DIAGNOSIS [DYNAMIC STABILITY CONTROL (DSC)].) • Are any DTCs detected?	Yes	Go to applicable DTC inspection. (See 04-02A-7 ON-BOARD DIAGNOSIS [DYNAMIC STABILITY CONTROL (DSC)].) DTC troubleshooting completed, then go to the next step.
		No	Go to the next step.
2	**VERIFY DTC TROUBLESHOOTING COMPLETED** • Clear the DTC from the memory. (See 06-02-5 ELECTRIC POWER STEERING (EPS) ON-BOARD DIAGNOSIS.) • Is the same DTC present? (See 06-02-5 ELECTRIC POWER STEERING (EPS) ON-BOARD DIAGNOSIS.)	Yes	Replace the DSC HU/CM. (See 04-15-4 DSC HU/CM REMOVAL/INSTALLATION.)
		No	DTC troubleshooting completed.

ON-BOARD DIAGNOSTIC

DTC U2300:54/U2300:55/U2300:56

id060200813700

DTC U2300:54, U2300:55, U2300:56	EPS configuration
DETECTION CONDITION	• EPS CM detects configuration data not read or data error
FAIL-SAFE FUNCTION	• U2300:54 — Control enabled — Power steering malfunction indicator light: Not illuminated • U2300:55 — Control enabled — Power steering malfunction indicator light: Illuminated • U2300:56 — Control enabled — Power steering malfunction indicator light: Not illuminated
POSSIBLE CAUSE	• Module configuration procedure is not done properly • Correct data cannot be received from instrument cluster
SYSTEM WIRING DIAGRAM	—

Diagnostic Procedure

Step	Inspection		Action
1	**RECORD THE CAR CONFIGURATION DATA** • Switch the ignition OFF. • Switch the ignition ON (engine off or on), and maintain this condition for **approx. 1 min**. • Switch the ignition OFF, and maintain this condition for **approx. 3 s**. • Switch the ignition ON (engine off or on).		Go to the next step.
2	**VERIFY THAT THE SAME DTC IS NOT PRESENT** • Clear the DTC from the memory. (See 06-02-5 ELECTRIC POWER STEERING (EPS) ON-BOARD DIAGNOSIS.) • Is the same DTC present?	Yes	Repeat the inspection from Step 1. If the malfunction recurs, go to the next step.
		No	Go to Step 5.
3	**INSPECT FOR INSTRUMENT CLUSTER MALFUNCTION** • Switch the ignition OFF. • Using the M-MDS, perform the DTC inspection for the instrument cluster. (See 09-02G-7 DTC INSPECTION [INSTRUMENT CLUSTER].) • Are any DTCs detected?	Yes	Go to applicable DTC inspection. (See 09-02G-10 DTC TABLE [INSTRUMENT CLUSTER].) After repairing the instrument cluster, perform the “INSTRUMENT CLUSTER CONFIGURATION”, then go to the next step. (See 09-22-19 INSTRUMENT CLUSTER CONFIGURATION (USING READ/WRITE FUNCTION).) (See 09-22-19 INSTRUMENT CLUSTER CONFIGURATION (USING AS-BUILT DATA).)
		No	Go to the next step.
4	**VERIFY THAT THE SAME DTC IS NOT PRESENT** • Clear the DTC from the memory. (See 06-02-5 ELECTRIC POWER STEERING (EPS) ON-BOARD DIAGNOSIS.) • Is the same DTC present?	Yes	Repeat the inspection from Step 1. If the malfunction recurs, replace the EPS CM, then go to the next step. (See 06-13-4 STEERING WHEEL AND COLUMN REMOVAL/INSTALLATION.)
		No	Go to the next step.
5	**VERIFY THAT NO OTHER DTCs ARE PRESENT** • Are any other DTCs output? (See 06-02-5 ELECTRIC POWER STEERING (EPS) ON-BOARD DIAGNOSIS.)	Yes	Go to the applicable DTC inspection. (See 06-02-5 ELECTRIC POWER STEERING (EPS) ON-BOARD DIAGNOSIS.)
		No	DTC troubleshooting completed.

ON-BOARD DIAGNOSTIC

DTC U3000:16/U3000:1C/U3000:28/U3000:41/U3000:46/U3000:47/U3000:49/U3000:61/U3000:73/U3000:96

id060200813600

DTC U3000:16, U3000:1C, U3000:28, U3000:41, U3000:46, U3000:47, U3000:49, U3000:61, U3000:73, U3000:96	EPS CM
DETECTION CONDITION	• The on-board diagnostic function detects control module malfunction

FAIL-SAFE FUNCTION	• U3000:16, U3000:1C, U3000:28, C3000:41, U3000:47, U3000:49, U3000:61, U3000:73, U3000:96
	  • Control disabled
	  • Power steering malfunction indicator light: Illuminated
	• U3000:46
	  • Control is maintained in fail mode
	  • Power steering malfunction indicator light: Not illuminated

POSSIBLE CAUSE	• Internal malfunction of EPS CM
SYSTEM WIRING DIAGRAM	—

Diagnostic Procedure

Step	Inspection		Action
1	**VERIFY DTC** • Clear the DTC from the memory. (See 06-02-5 ELECTRIC POWER STEERING (EPS) ON-BOARD DIAGNOSIS.) • Verify if any DTCs are displayed. (See 06-02-5 ELECTRIC POWER STEERING (EPS) ON-BOARD DIAGNOSIS.) • Is the same DTC present?	Yes	Replace the EPS CM. (See 06-13-4 STEERING WHEEL AND COLUMN REMOVAL/INSTALLATION.)
		No	Go to the next step.
2	**VERIFY THAT NO OTHER DTCs ARE PRESENT** • Are any other DTCs output? (See 06-02-5 ELECTRIC POWER STEERING (EPS) ON-BOARD DIAGNOSIS.)	Yes	Go to the applicable DTC inspection. (See 06-02-5 ELECTRIC POWER STEERING (EPS) ON-BOARD DIAGNOSIS.)
		No	DTC troubleshooting completed.

DTC U3000:4B

id060200816400

Warning

- **The EPS CM temperature could become high and may cause a burn. Before performing the work, verify that the steering column is cold.**

DTC U3000:4B	EPS CM
DETECTION CONDITION	• Abnormal temperature in EPS CM is detected
FAIL-SAFE FUNCTION	• Control is maintained in fail mode • Power steering malfunction indicator light: Not illuminated
POSSIBLE CAUSE	• Due to the continuously static steering, being turned to the lock end, or other causes, the internal temperature of the EPS CM is more than the specified value. • EPS CM malfunction
SYSTEM WIRING DIAGRAM	—

Diagnostic Procedure

Step	Inspection		Action
1	**SWITCH THE IGNITION TO OFF AND ALLOW EPS CONTROL MODULE TO COOL DOWN.**		
2	**VERIFY THAT SAME DTC IS NOT PRESENT** • Clear the DTC from the memory. (See 06-02-5 ELECTRIC POWER STEERING (EPS) ON-BOARD DIAGNOSIS.) • Is the same DTC present? (See 06-02-5 ELECTRIC POWER STEERING (EPS) ON-BOARD DIAGNOSIS.)	Yes	Repeat the inspection from Step 1. If the malfunction recurs, replace the EPS CM. (See 06-13-4 STEERING WHEEL AND COLUMN REMOVAL/INSTALLATION.)
		No	Go to the next step.
3	**VERIFY THAT NO OTHER DTCs ARE PRESENT** • Are any other DTCs output? (See 06-02-5 ELECTRIC POWER STEERING (EPS) ON-BOARD DIAGNOSIS.)	Yes	Go to the applicable DTC inspection. (See 06-02-5 ELECTRIC POWER STEERING (EPS) ON-BOARD DIAGNOSIS.)
		No	DTC troubleshooting completed.

ON-BOARD DIAGNOSTIC

DTC U3003:16

id060200812800

DTC U3003:16	Battery power supply
DETECTION CONDITION	• Voltage of 8 V or less detected by EPS CM internal ignition voltage observation.
FAIL-SAFE FUNCTION	• Control is maintained by gradually decreasing the motor control current — However, control is inhibited if the power supply voltage is the specified value of less. • Power steering malfunction indicator light: Illuminated
POSSIBLE CAUSE	• Battery and/or generator malfunction • EPS 60A fuse malfunction • Malfunction in the wiring harness between EPS CM terminal 1B and battery • Open circuit in the wiring harness between EPS CM terminal 1A and body ground
SYSTEM WIRING DIAGRAM	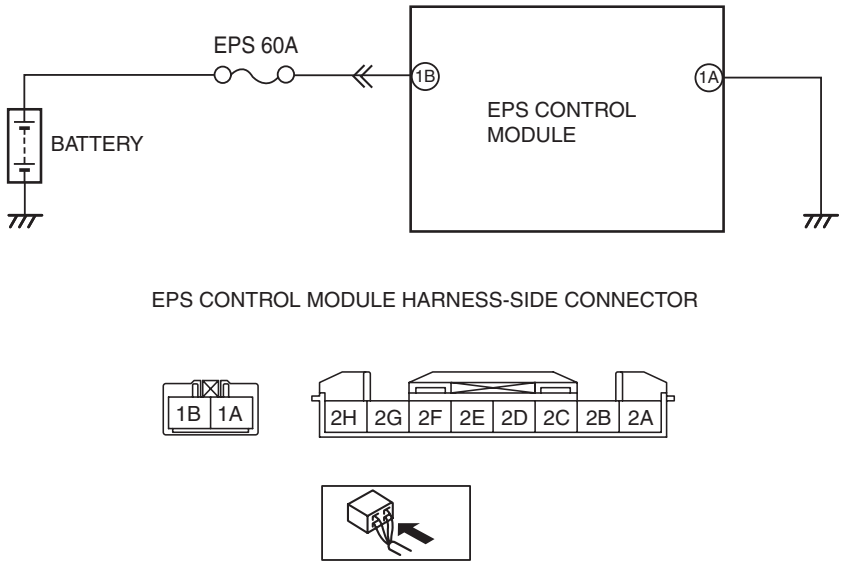

Diagnostic Procedure

Step	Inspection		Action
1	**INSPECT BATTERY VOLTAGE** • Is the battery terminal voltage normal?	Yes	Make sure that battery terminal connection is okay. Go to the next step.
		No	Charge or replace the battery, then go to Step 6. (See 01-17A-9 BATTERY RECHARGING [SKYACTIV-G 2.0].) (See 01-17A-10 BATTERY RECHARGING [SKYACTIV-G 2.0 (WITHOUT i-stop)].) (See 01-17B-8 BATTERY RECHARGING [SKYACTIV-D 2.2].) (See 01-17A-3 BATTERY REMOVAL/INSTALLATION [SKYACTIV-G 2.0].) (See 01-17B-3 BATTERY REMOVAL/INSTALLATION [SKYACTIV-D 2.2].)
2	**INSPECT BATTERY GRAVITY** • Is the battery specific gravity as specified?	Yes	Go to the next step.
		No	Replace the battery, then go to Step 6. (See 01-17A-3 BATTERY REMOVAL/INSTALLATION [SKYACTIV-G 2.0].) (See 01-17B-3 BATTERY REMOVAL/INSTALLATION [SKYACTIV-D 2.2].)
3	**INSPECT CHARGING SYSTEM** • Are the generator and drive belt tension normal?	Yes	Go to the next step.
		No	Replace the generator and/or drive belt if necessary. Go to step 6. (See 01-17A-17 GENERATOR REMOVAL/INSTALLATION [SKYACTIV-G 2.0].) (See 01-17B-14 GENERATOR REMOVAL/INSTALLATION [SKYACTIV-D 2.2].) (See 01-10A-10 DRIVE BELT REMOVAL/INSTALLATION [SKYACTIV-G 2.0].) (See 01-10B-8 DRIVE BELT REMOVAL/INSTALLATION [SKYACTIV-D 2.2].)

ON-BOARD DIAGNOSTIC

Step	Inspection		Action
4	**INSPECT FUSE CONDITION** • Is the fuse (EPS 60A) normal?	Yes	Go to the next step.
		No	Replace the fuse, then go to Step 7.
5	**INSPECT EPS CM POWER SUPPLY CIRCUIT FOR OPEN OR SHORT CIRCUIT** • Start the engine. • Measure the voltage between following EPS CM terminal (wiring harness-side) and ground. — EPS CM: 1B—ground • Is the voltage **8 V or more**?	Yes	Go to the next Step.
		No	Repair or replace the wiring harness (including fuse) between the EPS CM and ground, then go to Step 6.
6	**INSPECT EPS CM GROUND CIRCUIT FOR POOR GROUND OR OPEN CIRCUIT** • Switch the ignition OFF. • Inspect for continuity between EPS control module terminal 1A and body ground. • Is there continuity?	Yes	Go to the next step.
		No	Repair or replace the wiring harness between terminal 1A and body ground, then go to the next step.
7	**VERIFY THAT THE SAME DTC IS NOT PRESENT** • Make sure to reconnect all disconnected connectors. • Clear the DTC from the memory. (See 06-02-5 ELECTRIC POWER STEERING (EPS) ON-BOARD DIAGNOSIS.) • Is the same DTC present?	Yes	Replace the steering column, then go to the next step. (See 06-13-4 STEERING WHEEL AND COLUMN REMOVAL/INSTALLATION.)
		No	Go to the next step.
8	**VERIFY THAT NO OTHER DTCS ARE PRESENT** • Are any other DTCs output?	Yes	Go to the applicable DTC inspection. (See 06-02-5 ELECTRIC POWER STEERING (EPS) ON-BOARD DIAGNOSIS.)
		No	DTC troubleshooting completed.

ON-BOARD DIAGNOSTIC

DTC U3003:17

id060200810100

DTC U3003:17	Battery power supply
DETECTION CONDITION	• Voltage of 17.5 V or more detected by EPS CM internal battery voltage observation.
FAIL-SAFE FUNCTION	• Control disabled • Power steering malfunction indicator light: Illuminated
POSSIBLE CAUSE	• Generator malfunction • Poor connection at connectors
SYSTEM WIRING DIAGRAM	—

Diagnostic procedure

STEP	INSPECTION		ACTION
1	**INSPECT CHARGING SYSTEM** • Are the generator and drive belt tension normal?	Yes	Go to the next step.
		No	Replace the generator and/or drive belt if necessary. Go to step 3. (See 01-17A-17 GENERATOR REMOVAL/INSTALLATION [SKYACTIV-G 2.0].) (See 01-17B-14 GENERATOR REMOVAL/INSTALLATION [SKYACTIV-D 2.2].) (See 01-10A-10 DRIVE BELT REMOVAL/INSTALLATION [SKYACTIV-G 2.0].) (See 01-10B-8 DRIVE BELT REMOVAL/INSTALLATION [SKYACTIV-D 2.2].)
2	**INSPECT WHETHER MALFUNCTION IS CAUSED BY POOR CONNECTION OF EPS CM OR PIN DEFORMATION** • Switch the ignition OFF. • Inspect connection of the EPS CM and wiring harness. • Disconnect the EPS CM connector. • Inspect whether malfunction is caused by bent or poorly connected EPS CM connector pin. • Are the connector connection, connector pins, and wiring harness normal?	Yes	Go to the next step.
		No	Repair or replace the faulty connector wiring harness, then go to the next step.
3	**VERIFY THAT THE SAME DTC IS NOT PRESENT** • Make sure to reconnect all disconnected connectors. • Clear the DTC from the memory. (See 06-02-5 ELECTRIC POWER STEERING (EPS) ON-BOARD DIAGNOSIS.) • Is the same DTC present?	Yes	Replace the EPS CM, then go to the next step. (See 06-13-4 STEERING WHEEL AND COLUMN REMOVAL/INSTALLATION.)
		No	Go to the next step.
4	**VERIFY THAT NO OTHER DTCS ARE PRESENT** • Are any other DTCs output?	Yes	Go to the applicable DTC inspection. (See 06-02-5 ELECTRIC POWER STEERING (EPS) ON-BOARD DIAGNOSIS.)
		No	DTC troubleshooting completed.

06-03 SYMPTOM TROUBLESHOOTING

ELECTRIC POWER STEERING (EPS) SYSTEM WIRING DIAGRAM 06-03–1
FOREWORD 06-03–2
Troubleshooting Procedure 06-03–2
Action for non-repeatable malfunction. 06-03–3
PRECAUTION 06-03–4
Intermittent Concern Troubleshooting 06-03–4
SYMPTOM TROUBLESHOOTING 06-03–5
NO.1 ELECTRIC POWER STEERING (EPS) WARNING LIGHT DOES NOT ILLUMINATE WITH IGNITION SWITCHED ON 06-03–5
NO.2 ELECTRIC POWER STEERING (EPS) WARNING LIGHT/MASTER WARNING LIGHT DOES NOT GO OUT EVEN THOUGH ENGINE HAS STARTED 06-03–6
NO.3 POWER ASSIST DIFFERS BETWEEN RIGHT AND LEFT TURNS 06-03–7

SYMPTOM TROUBLESHOOTING

ELECTRIC POWER STEERING (EPS) SYSTEM WIRING DIAGRAM

id060300800700

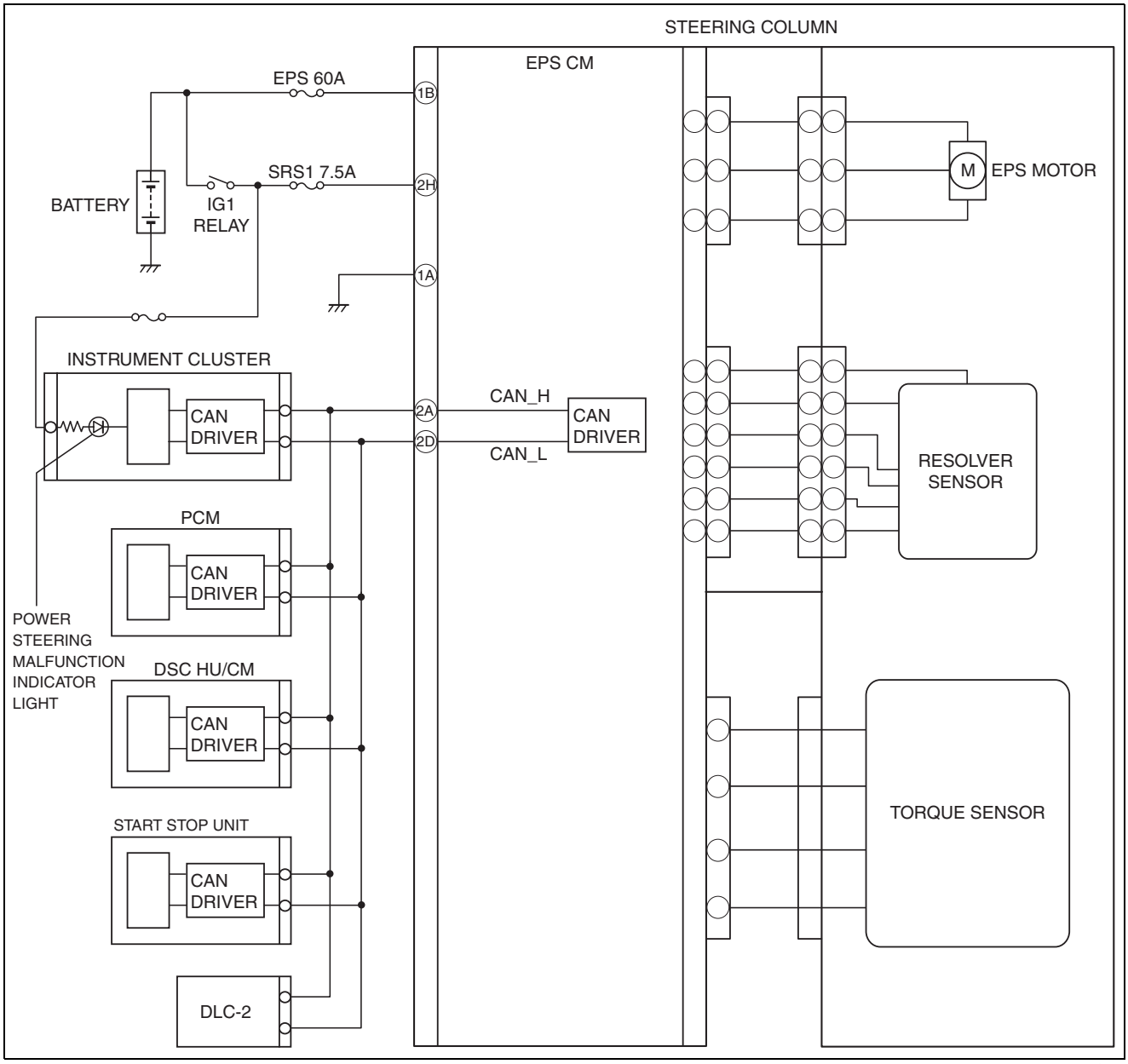

ac5uuw00001660

SYMPTOM TROUBLESHOOTING

FOREWORD

id060300800100

- If there is any vehicle malfunction complaint lodged by a customer, perform malfunction diagnosis according to the troubleshooting procedure.

Troubleshooting Procedure

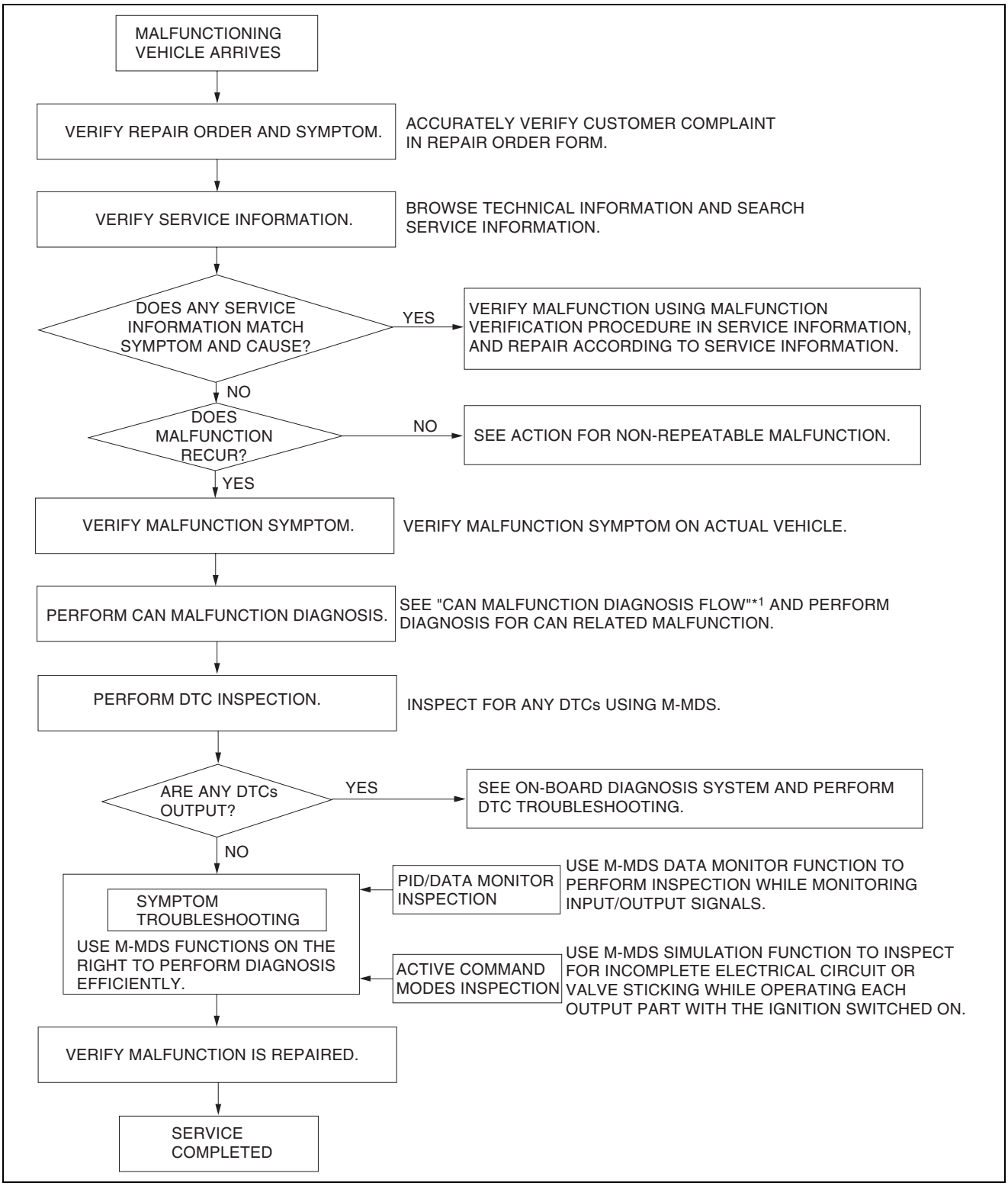

am3uuw0000731

SYMPTOM TROUBLESHOOTING

*1 : 10-02A-3 CONTROLLER AREA NETWORK (CAN) MALFUNCTION DIAGNOSIS FLOW [SKYACTIV-G 2.0 (L.H.D.)], 10-02B-3 CONTROLLER AREA NETWORK (CAN) MALFUNCTION DIAGNOSIS FLOW [SKYACTIV-G 2.0 (R.H.D.)], 10-02C-3 CONTROLLER AREA NETWORK (CAN) MALFUNCTION DIAGNOSIS FLOW [SKYACTIV-D 2.2 (L.H.D.)], 10-02D-3 CONTROLLER AREA NETWORK (CAN) MALFUNCTION DIAGNOSIS FLOW [SKYACTIV-D 2.2 (R.H.D.)]

Action for non-repeatable malfunction

- If the malfunction does not recur, verify the malfunction cause by performing the following actions:

1. Verify that a DTC has been recorded in the memory using the M-MDS. (See 06-02-5 ELECTRIC POWER STEERING (EPS) ON-BOARD DIAGNOSIS.)
2. Perform a simulation test in the simulation mode based on the repair order form, record the data at that time, and detect the malfunction cause.
3. Shake the wiring harness or connector of the electrical component which is suspected to be the cause of the malfunction, and inspect for the occurrence of any malfunction or DTCs.

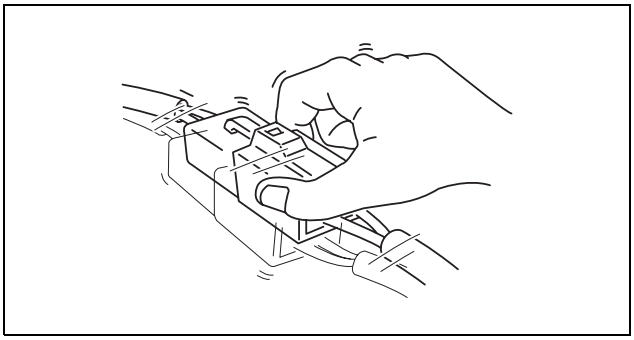

am3uuw0000812

4. Inspect the female terminals for poor connection.

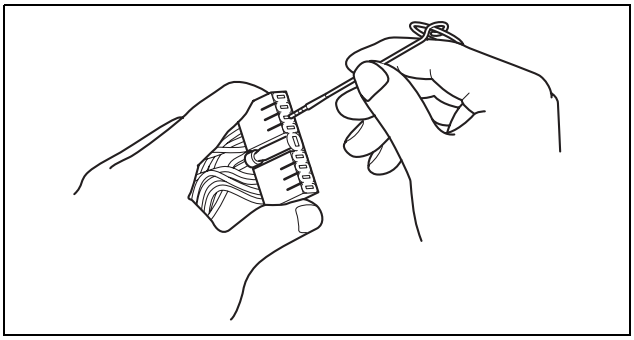

am3uuw0000812

SYMPTOM TROUBLESHOOTING

PRECAUTION

id060300800300

Intermittent Concern Troubleshooting

Vibration method

- If a malfunction occurs or becomes worse while driving on a rough road or when the engine is vibrating, perform the following steps.

Note

- There are several reasons why vehicle or engine vibration could cause an electrical malfunction. Inspect the following:
  - — Connectors not fully seated.
  - — Wiring harnesses not having full play.
  - — Wires laying across brackets or moving parts.
  - — Wires routed too close to hot parts.
- An improperly routed, improperly clamped, or loose wiring harness can cause wiring to become pinched between parts.
- The connector joints, points of vibration, and places where wiring harness pass through the firewall, body panels and other panels are the major areas to be inspected.

Inspection method for switch and/or sensor connectors or wires

1. Connect the M-MDS to the DLC-2.
2. Turn the ignition switch to the ON position (engine off).

Note

- If the engine starts and runs, perform the following steps at idle.

3. Access PIDs for the switch you are inspecting.
4. Turn the switch on manually.
5. Slightly shake each connector or wiring harness vertically and horizontally while monitoring the PID.
   - If the PID value is unstable, inspect for poor connection.

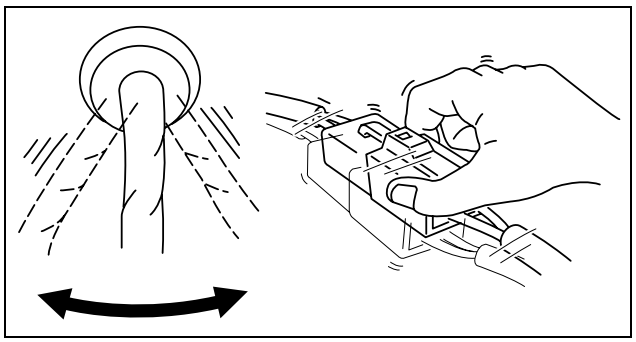

am2zzw0000021

Inspection method for sensors

1. Connect the M-MDS to the DLC-2.
2. Turn the ignition switch to the ON position (engine off).

Note

- If the engine starts and runs, perform the following steps at idle.

3. Access PIDs for the switch you are inspecting.
4. Vibrate the sensor slightly with your finger.
   - If the PID value is unstable or a malfunction occurs, inspect for poor connection and/or poorly mounted sensor.

SYMPTOM TROUBLESHOOTING

Connector terminal inspection method

1. Inspect the connection of each female terminal.
2. Insert the male terminal to the female terminal and inspect the female terminal for looseness.

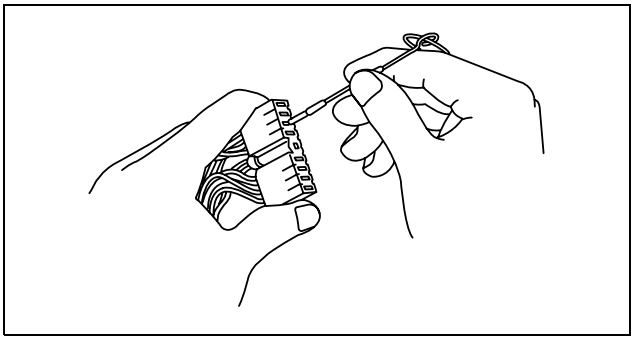

am2zzw0000021

SYMPTOM TROUBLESHOOTING

id060300800400

- Verify the symptom, and perform troubleshooting according to the appropriate number.

No.	Symptom
1	Electric power steering (EPS) warning light does not illuminate with ignition switched ON.
2	Electric power steering (EPS) warning light/Master warning light does not go out even though engine has started.
3	Power assist differs between right and left turns.

NO.1 ELECTRIC POWER STEERING (EPS) WARNING LIGHT DOES NOT ILLUMINATE WITH IGNITION SWITCHED ON

id060300950600

1	**Electric power steering (EPS) warning light does not illuminate with ignition switched ON.***

TROUBLESHOOTING HINTS

- EPS warning light circuit malfunction in the instrument cluster.
- An error originates from the EPS CM, and the off signal is generated.
  — EPS CM malfunction

* : Instrument cluster without TFT LCD display.

Diagnostic procedure

STEP	INSPECTION		ACTION
1	• Turn on the EPS warning light at instrument cluster using the “WL+IL” of the M-MDS active command modes function. • Does the EPS warning light turn on?	Yes	EPS CM malfunction. Replace the EPS CM. (See 06-13-16 STEERING GEAR AND LINKAGE REMOVAL/INSTALLATION.)
		No	Perform the instrument cluster configuration, then repeat the inspection from Step 1. (See 09-22-19 INSTRUMENT CLUSTER CONFIGURATION (USING AS-BUILT DATA).) If the malfunction recurs, replace the instrument cluster. (See 09-22-6 INSTRUMENT CLUSTER REMOVAL/INSTALLATION.)

SYMPTOM TROUBLESHOOTING

NO.2 ELECTRIC POWER STEERING (EPS) WARNING LIGHT/MASTER WARNING LIGHT DOES NOT GO OUT EVEN THOUGH ENGINE HAS STARTED

id060300950400

2	**Electric power steering (EPS) warning light*1/master warning light*2 does not go out even though engine has started.**

TROUBLESHOOTING HINTS

- EPS system malfunction.
  - — Wiring harness malfunction
  - — Connector condition malfunction
  - — Torque sensor malfunction
  - — EPS motor malfunction
  - — Fuse malfunction
  - — EPS CM malfunction
- EPS CM detects an EPS system malfunction even though the EPS system is normal.
- CAN communication line and/or CAN signal malfunction.
  - — Vehicle speed signal malfunction
  - — Engine speed signal malfunction
  - — CAN wiring harness malfunction
- EPS warning light*1/Master warning light*2 circuit malfunction in the instrument cluster.
- CAN wiring harness malfunction.
  - — Malfunction in wiring harness between EPS CM and instrument cluster
- Instrument cluster configuration procedure was not completed properly.

*1 : Without TFT LCD display.
*2 : With TFT LCD display.

Diagnostic procedure

STEP	INSPECTION		ACTION
1	• Switch the ignition to off and maintain this condition **approx. 1 minute**. • Switch the ignition ON (engine on). • Perform the DTC inspection. (See 06-02-5 ELECTRIC POWER STEERING (EPS) ON-BOARD DIAGNOSIS.) • Are any DTCs present?	Yes	Go to the applicable DTC inspection. (See 06-02-5 ELECTRIC POWER STEERING (EPS) ON-BOARD DIAGNOSIS.)
		No	Go to the next step.
2	• Turn off the EPS warning light at instrument cluster using the “WL+IL” of the M-MDS active command modes function. • Does the EPS warning light*1/master warning light*2 turn off?	Yes	EPS CM malfunction. Replace the EPS CM. (See 06-13-4 STEERING WHEEL AND COLUMN REMOVAL/INSTALLATION.)
		No	Perform the instrument cluster configuration, then repeat the inspection from Step 1. (See 09-22-19 INSTRUMENT CLUSTER CONFIGURATION (USING AS-BUILT DATA).) If the malfunction recurs, replace the instrument cluster. (See 09-22-6 INSTRUMENT CLUSTER REMOVAL/INSTALLATION.)

SYMPTOM TROUBLESHOOTING

NO.3 POWER ASSIST DIFFERS BETWEEN RIGHT AND LEFT TURNS

id060300801000

3	Power assist differs between right and left turns.

TROUBLESHOOTING HINTS

- Steering gear and linkage malfunction.
- EPS CM malfunction.
- Poor connection of EPS CM connector, terminal damage.
- The steering wheel angle neutral position automatic learning function has not been operated.

Note

- If the right and left wheels are rotated freely at the same speed with the vehicle jacked up, the EPS CM may learn the steering angle incorrectly.
- The steering angle learned by the EPS CM is cleared when **1 min. or more** has elapsed after the ignition was switched off.

Diagnostic procedure

STEP	INSPECTION		ACTION
1	• Have DTCs been recorded in the memory?	Yes	Perform inspection using the appropriate DTC.
		No	Go to the next step.
2	• Switch the ignition to off and maintain this condition **1 min. or more**. • Switch the ignition ON (engine on). • Drive **10 m {33 ft} or above** in a straight line at **more than 10 km/h {6.2 mph}**. • Is there recurrence of malfunction?	Yes	Go to the next step.
		No	Temporary error occurred while learning steering wheel angle neutral position. There is not malfunction in the EPS system.
3	• Inspect the connection of the EPS CM connector. • Disconnect the EPS CM connector. • Inspect both the EPS CM and wiring harness-side connector for poor connection (such as damage/pulled-out pins, corrosion). • Are all the pins normal?	Yes	Replace the steering gear and linkage. (See 06-13-16 STEERING GEAR AND LINKAGE REMOVAL/INSTALLATION.)
		No	**If poor connection of EPS CM connector:** • Securely connect the EPS CM connector. **If the EPS CM side connector is wrong:** • Replace the EPS CM. (See 06-13-4 STEERING WHEEL AND COLUMN REMOVAL/INSTALLATION.) **If the wiring harness-side connector is wrong:** • Repair or replace the pins and/or the connector. • Recheck malfunction symptoms, then replace the steering gear and linkage. (See 06-13-16 STEERING GEAR AND LINKAGE REMOVAL/INSTALLATION.)

06-10 GENERAL PROCEDURES

GENERAL PROCEDURES (STEERING) 06-10–1
Wheel And Tire Installation **06-10–2**
Connectors disconnection **06-10–2**
Suspension Links
Removal/Installation **06-10–2**
EPS Related Parts **06-10–2**

GENERAL PROCEDURES

GENERAL PROCEDURES (STEERING)

id061000279700

Warning

- **Always inspect the steering component carefully for any shock or impact which may have occurred during a collision or servicing operation. If a damaged part or a part suspected of being damaged is used, it could result in an unexpected accident due to the steering mechanism being inoperative. Always replace the damaged part or part suspected of being damaged.**
- **If the steering mechanism is turned from lock to lock continuously or the steering rack terminal limit is reached repeatedly, such high-load steering action increases the temperature of the steering column (to approx. 85 °C {185°F}), causing severe burns. Be careful when handling the steering column.**
- **If the steering column is dropped, the EPS CM could be damaged internally causing the steering mechanism to become inoperative, which could result in an unexpected accident. Always replace the steering column if it has been subjected to an impact.**

Caution

- **If the steering column is stored in a humid place, the EPS system may not operate properly when installed to the vehicle. Store the steering column in a suitable place.**
- **Be careful when handling the steering column because it weighs approximately 10 kg {22 lb} and it could fall off and be damaged while servicing.**
- **If the intermediate shaft is connected to the steering gear (pinion) before installing the steering column to the dashboard member, the weight of the steering column could cause damage to the intermediate shaft slider/bush/yoke. Always follow the procedure in the Workshop Manual.**
- **The universal joint could be damaged if subjected to an impact when the intermediate shaft (pinion) is disconnected. Perform the servicing carefully avoiding impact when disconnecting the intermediate shaft from the steering gear (pinion).**
- **Do not release the lock of the adjusting lever when handling the steering column unless it is securely installed to the dashboard member. If the adjusting lever is unlocked with the steering column not securely installed, the steering column and other parts could be damaged.**
- **A new steering column is shipped in a pre-set condition. Maintain this condition until the steering column is completely installed to the dashboard member so as to avoid damage during transportation and installation.**
- **When removing/installing the steering column, keep the wiring harness away from the steering column installation area so as to prevent the steering column from being caught in the wiring harness and damaged.**

Note

- When installing a replacement part, be careful not to rotate the steering shaft until the installation has been completed.
- In order to completely interrupt the EPS system power supply, do not disconnect the battery for **20 s** or more after the ignition switch is turned off.
- Do not replace the steering column (EPS system) with that of another vehicle even if they are the same model.

GENERAL PROCEDURES

Wheel And Tire Installation

1. When installing the wheels and tires, tighten the wheel nuts in a criss-cross pattern to the following tightening torque.

   Tightening Torque
   108—147 N·m {12—14 kgf·m, 80—108 ft·lbf}

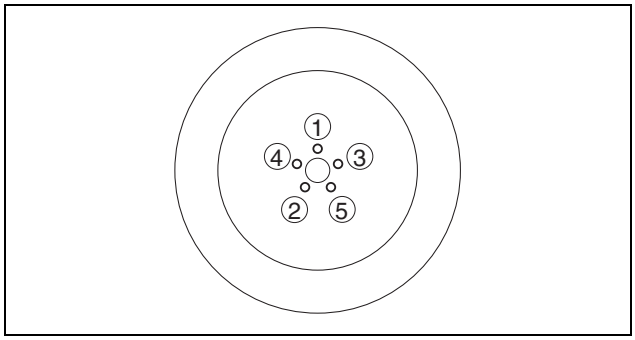

am5uuw0000341

Connectors disconnection

1. Disconnect the negative battery terminal before performing any work that requires handling of connectors. (See 01-17A-11 NEGATIVE BATTERY CABLE DISCONNECTION/CONNECTION [SKYACTIV-G 2.0].), (See 01-17A-13 NEGATIVE BATTERY CABLE DISCONNECTION/CONNECTION [SKYACTIV-G 2.0 (WITHOUT i-stop)].), (See 01-17B-9 NEGATIVE BATTERY CABLE DISCONNECTION/CONNECTION [SKYACTIV-D 2.2].)

Suspension Links Removal/Installation

Note
- To prevent the bushings from being twisted or pinched, perform the procedures with no passengers or luggage aboard the vehicle.

1. For the joint sections with rubber bushings, raise the vehicle using a lift and temporarily tighten the installation nuts and bolts. Afterwards, tighten to the specified torque with the wheels on the ground.

EPS Related Parts

Caution
- **If the EPS CM configuration is not completed, the EPS will not operate properly.If the steering column component or EPS CM is replaced, always carry out the automatic configuration so that the EPS operates properly.**

1. Make sure that there are no DTCs in the EPS memory after working on EPS related parts.If there are any DTCs in the memory, go to the applicable DTC diagnostic procedure. (See 06-02-5 ELECTRIC POWER STEERING (EPS) ON-BOARD DIAGNOSIS.)

06-13 ELECTRIC POWER STEERING (EPS)

STEERING LOCATION INDEX **06-13–1**
STEERING WHEEL AND COLUMN INSPECTION **06-13–3**
Play inspection **06-13–3**
Looseness, Excessive Play Inspection **06-13–3**
Steering Force Inspection **06-13–3**
STEERING WHEEL AND COLUMN REMOVAL/INSTALLATION **06-13–4**
Steering Wheel Removal Note **06-13–6**
Steering Column Component Removal Note **06-13–7**
EPS CM Removal Note **06-13–8**
Spacer, Rubber and EPS CM Installation Note **06-13–8**
Bracket Installation Note **06-13–8**
Steering Column Component Installation Note **06-13–9**
Steering Wheel Installation Note **06-13–10**
INTERMEDIATE SHAFT REMOVAL/INSTALLATION **06-13–10**
Intermediate Shaft Removal Note **06-13–11**
Intermediate Shaft Installation Note . . . **06-13–12**
STEERING SHAFT INSPECTION **06-13–14**
TIE-ROD END REPLACEMENT **06-13–15**
STEERING GEAR AND LINKAGE REMOVAL/INSTALLATION **06-13–16**
Steering Gear and Linkage Removal Note **06-13–18**
STEERING GEAR AND L INKAGE INSPECTION **06-13–19**
STEERING GEAR AND LINKAGE DISASSEMBLY **06-13–20**
Tie-rod End Disassembly Note **06-13–21**
Boot Band Disassembly Note **06-13–21**
Tie Rod Disassembly Note **06-13–21**
Mounting Rubber Disassembly Note . . . **06-13–22**
TIE-ROD END INSPECTION **06-13–22**
TIE ROD INSPECTION **06-13–22**
STEERING GEAR AND LINKAGE ASSEMBLY **06-13–23**
Mounting Rubber Assembly Note **06-13–24**
Tie Rod Assembly Note **06-13–25**
Boot Band Assembly Note **06-13–25**
Tie-rod End Assembly Note **06-13–26**
EPS CONTROL MODULE INSPECTION **06-13–26**
Terminal Voltage Table (Reference) . . . **06-13–27**

ELECTRIC POWER STEERING (EPS)

STEERING LOCATION INDEX

R.H.D.

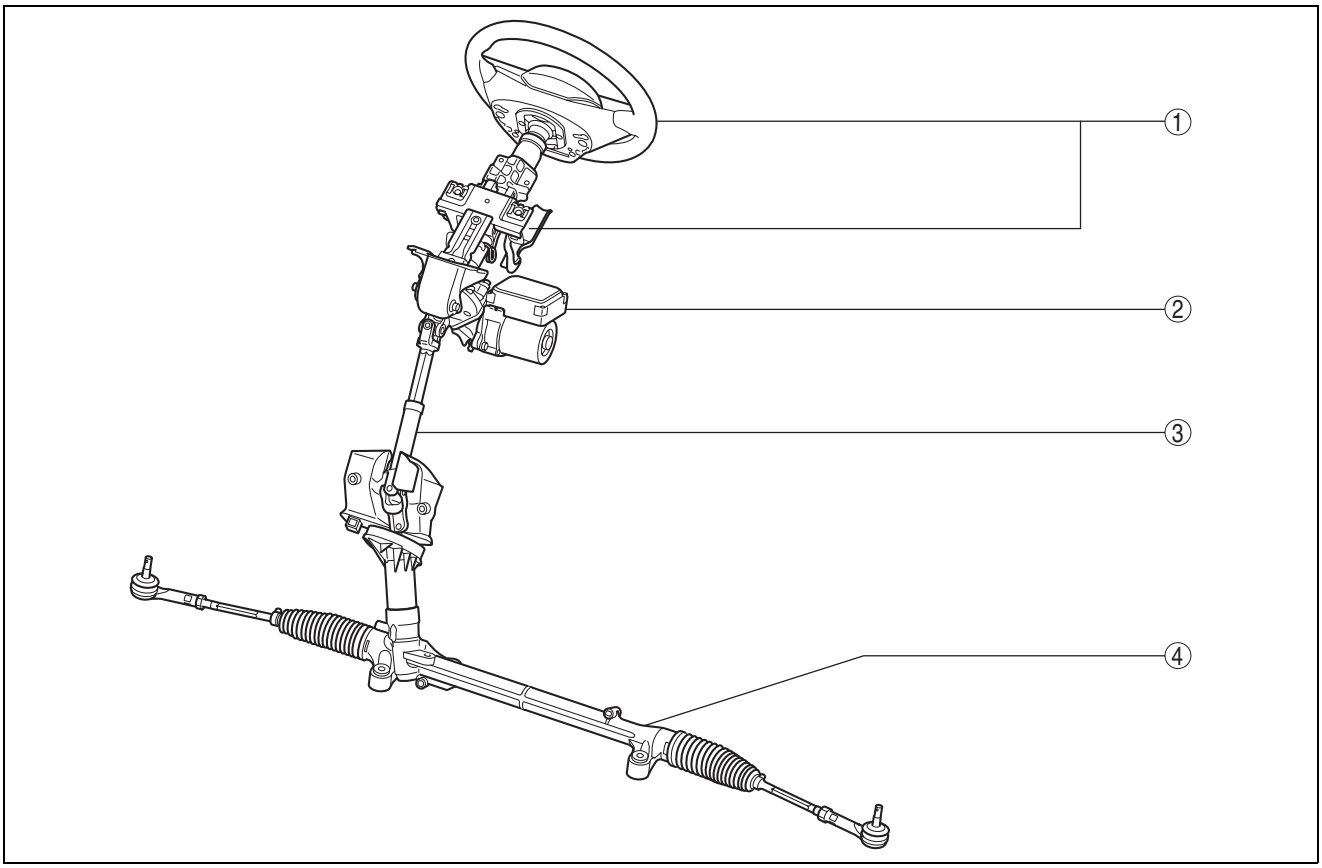

ac5wzw0000033

1	Steering wheel and column (See 06-13-3 STEERING WHEEL AND COLUMN INSPECTION.) (See 06-13-4 STEERING WHEEL AND COLUMN REMOVAL/INSTALLATION.) (See 06-13-14 STEERING SHAFT INSPECTION.)
2	EPS CM (See 06-13-26 EPS CONTROL MODULE INSPECTION.)
3	Intermediate shaft (See 06-13-10 INTERMEDIATE SHAFT REMOVAL/INSTALLATION.) (See 06-13-14 STEERING SHAFT INSPECTION.)
4	Steering gear and linkage (See 06-13-15 TIE-ROD END REPLACEMENT.) (See 06-13-16 STEERING GEAR AND LINKAGE REMOVAL/INSTALLATION.) (See 06-13-19 STEERING GEAR AND LINKAGE INSPECTION.) (See 06-13-20 STEERING GEAR AND LINKAGE DISASSEMBLY.) (See 06-13-22 TIE-ROD END INSPECTION.) (See 06-13-22 TIE ROD INSPECTION.) (See 06-13-23 STEERING GEAR AND LINKAGE ASSEMBLY.)

ELECTRIC POWER STEERING (EPS)

STEERING WHEEL AND COLUMN INSPECTION

id061300801300

Play inspection

1. With the wheels in the straight-ahead position, start the engine.
2. Turn the steering wheel to the left and right gently, then verify that the steering wheel play is within the specification.

Steering wheel play
0—30 mm {0—1.1 in}

Looseness, Excessive Play Inspection

1. Inspect the steering wheel for looseness or excessive play in the axial direction of the shaft and four locations around the steering wheel.
   - If there is any malfunction, inspect the following, and repair or replace the applicable part.
     — Column bearing wear
     — Looseness of the steering wheel installation part
     — Looseness of the column installation area
     — Excessive play in the intermediate shaft joint
     — Excessive play in the steering gear

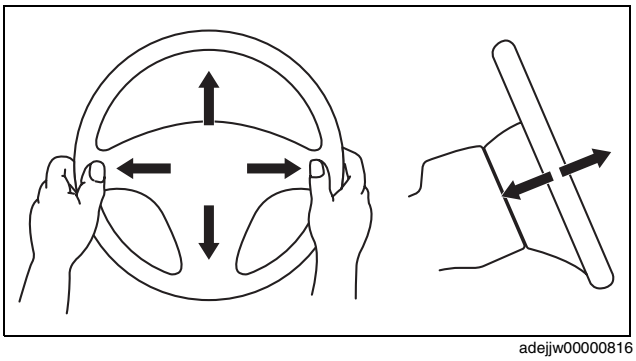

adejjw00000816

Steering Force Inspection

1. Verify that the equipped tire size and tire air pressure is as specified.
2. With the vehicle on a hard, level surface, put the wheels in the straight-ahead position.
3. Remove the driver-side air bag module. (See 08-10-6 DRIVER-SIDE AIR BAG MODULE REMOVAL/INSTALLATION.)

Warning
- **Handling the air bag module improperly can accidentally operate (deploy) the air bag module, which may seriously injure you.Read the service warnings and cautions before handling the air bag module. (See 08-10-3 AIR BAG SYSTEM SERVICE WARNINGS.) (See 08-10-5 AIR BAG SYSTEM SERVICE CAUTIONS.)**

4. Start the engine and idle it.
5. Verify that the power steering malfunction indicator light is not illuminated or flashing.
6. Inspect the steering torque using a torque wrench.
   - If it exceeds the reference value, inspect the steering gear and linkage. (See 06-13-19 STEERING GEAR AND LINKAGE INSPECTION.)

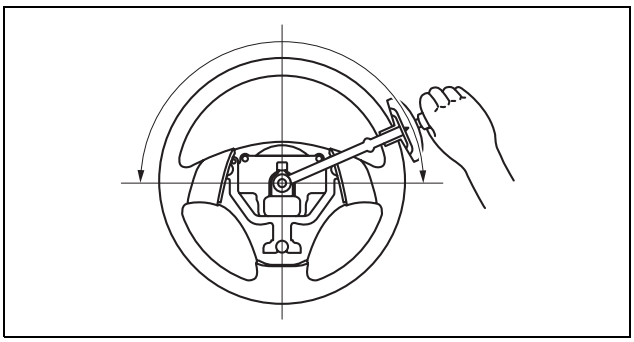

adejjw00000817

Steering wheel steering force (reference)
7.8 N·m {80 kgf·cm, 69 in·lbf} or less

Note
- Comparing another vehicle of the same model under the same conditions is an acceptable inspection method.
- The steering torque varies with the conditions indicated below.
  — Road conditions: Such as dry, wet, asphalt, or concrete
  — Tire condition: Such as brand, wear, and tire pressure

ELECTRIC POWER STEERING (EPS)

STEERING WHEEL AND COLUMN REMOVAL/INSTALLATION

id061300801400

Warning

- **Handling the air bag module improperly can accidentally operate (deploy) the air bag module, which may seriously injure you. Read the service warnings and cautions before handling the air bag module. (See 08-10-3 AIR BAG SYSTEM SERVICE WARNINGS.) (See 08-10-5 AIR BAG SYSTEM SERVICE CAUTIONS.)**
- **The steering column (EPS motor) temperature increases directly after continuous turning of the steering mechanism which could cause burns if it is touched. Before performing any servicing, verify that the steering column has cooled off.**

Caution

- **If the EPS CM configuration is not completed, the EPS will not operate properly. If the EPS CM is replaced, always use the automatic configuration function so that the EPS operation conditions are correct.**
- **If the EPS column is dropped it could result in internal damage to the EPS CM, therefore be careful not to drop it. Replace the EPS CM if it is subjected to an impact.**

Note

- When the ignition is switched to ON or the engine is started after the EPS CM have been replaced, the EPS CM reads data from the instrument cluster via CAN communication to perform automatic configuration.
- The EPS CM prior to replacement stores the vehicle specification information.
- A new EPS CM does not store any vehicle specification information.

1. Remove the driver-side front scuff plate. (See 09-17-61 FRONT SCUFF PLATE REMOVAL/INSTALLATION.)
2. Remove the driver-side front side trim. (See 09-17-62 FRONT SIDE TRIM REMOVAL/INSTALLATION.)
3. Remove the car-navigation unit (with car navigation system). (See 09-20-11 CAR-NAVIGATION UNIT REMOVAL/INSTALLATION.)
4. Remove the switch panel. (See 09-17-18 SWITCH PANEL REMOVAL/INSTALLATION.)
5. Remove the decoration panel. (See 09-17-33 DECORATION PANEL REMOVAL/INSTALLATION.)
6. Remove the shift lever knob (MTX vehicles). (See 05-16A-1 MANUAL TRANSAXLE SHIFT MECHANISM REMOVAL/INSTALLATION [C66M-R, C66MX-R].) (See 05-16B-1 MANUAL TRANSAXLE SHIFT MECHANISM REMOVAL/INSTALLATION [D66M-R, D66MX-R].)
7. Remove the selector lever knob (ATX vehicles). (See 05-18-2 AUTOMATIC TRANSAXLE SHIFT MECHANISM REMOVAL/INSTALLATION.)
8. Remove the front console box. (See 09-17-40 FRONT CONSOLE BOX REMOVAL/INSTALLATION.)
9. Remove the shift panel. (See 09-17-42 SHIFT PANEL REMOVAL/INSTALLATION.)
10. Remove the upper panel. (See 09-17-44 UPPER PANEL REMOVAL/INSTALLATION.)
11. Remove the rear console. (See 09-17-45 REAR CONSOLE REMOVAL/INSTALLATION.)
12. Remove the side wall. (See 09-17-49 SIDE WALL REMOVAL/INSTALLATION.)
13. Remove the front console. (See 09-17-50 FRONT CONSOLE REMOVAL/INSTALLATION.)
14. Disconnect the bonnet release lever from the lower panel. (See 09-14-17 BONNET LATCH AND RELEASE LEVER REMOVAL/INSTALLATION.)
15. Remove the lower panel. (See 09-17-35 LOWER PANEL REMOVAL/INSTALLATION.)
16. Remove the driver-side front heat duct. (See 07-11-22 FRONT HEAT DUCT REMOVAL/INSTALLATION.)
17. Detach the harness clips shown in the figure.
18. Remove in the order indicated in the table.
19. Install in the reverse order of removal.
20. If the EPS CM is replaced, perform the following procedure.
    (1) After installation, switch the ignition to ON or start the engine, and maintain this condition for **approx. 1 min.** to allow the EPS CM automatic configuration to be performed.
    (2) Switch the ignition to OFF, and maintain this condition for **approx. 3 s**
    (3) Switch the ignition to ON (engine on or off) to allow the EPS CM automatic configuration to be performed.
    (4) Clear the DTC from the memory. (See 06-02-5 ELECTRIC POWER STEERING (EPS) ON-BOARD DIAGNOSIS.)

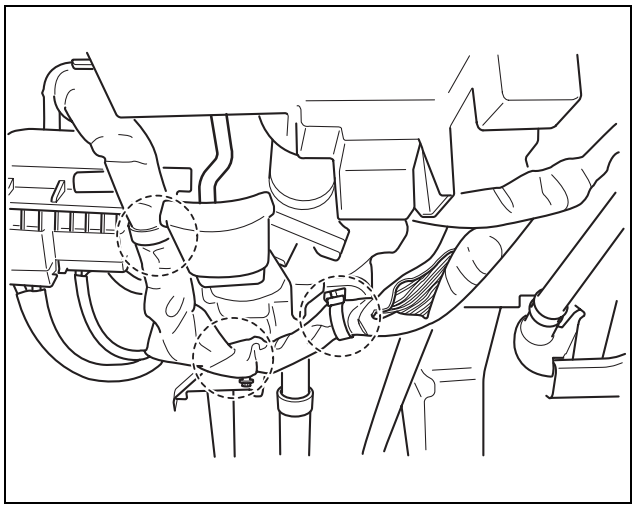

ac5wzw0000101

ELECTRIC POWER STEERING (EPS)

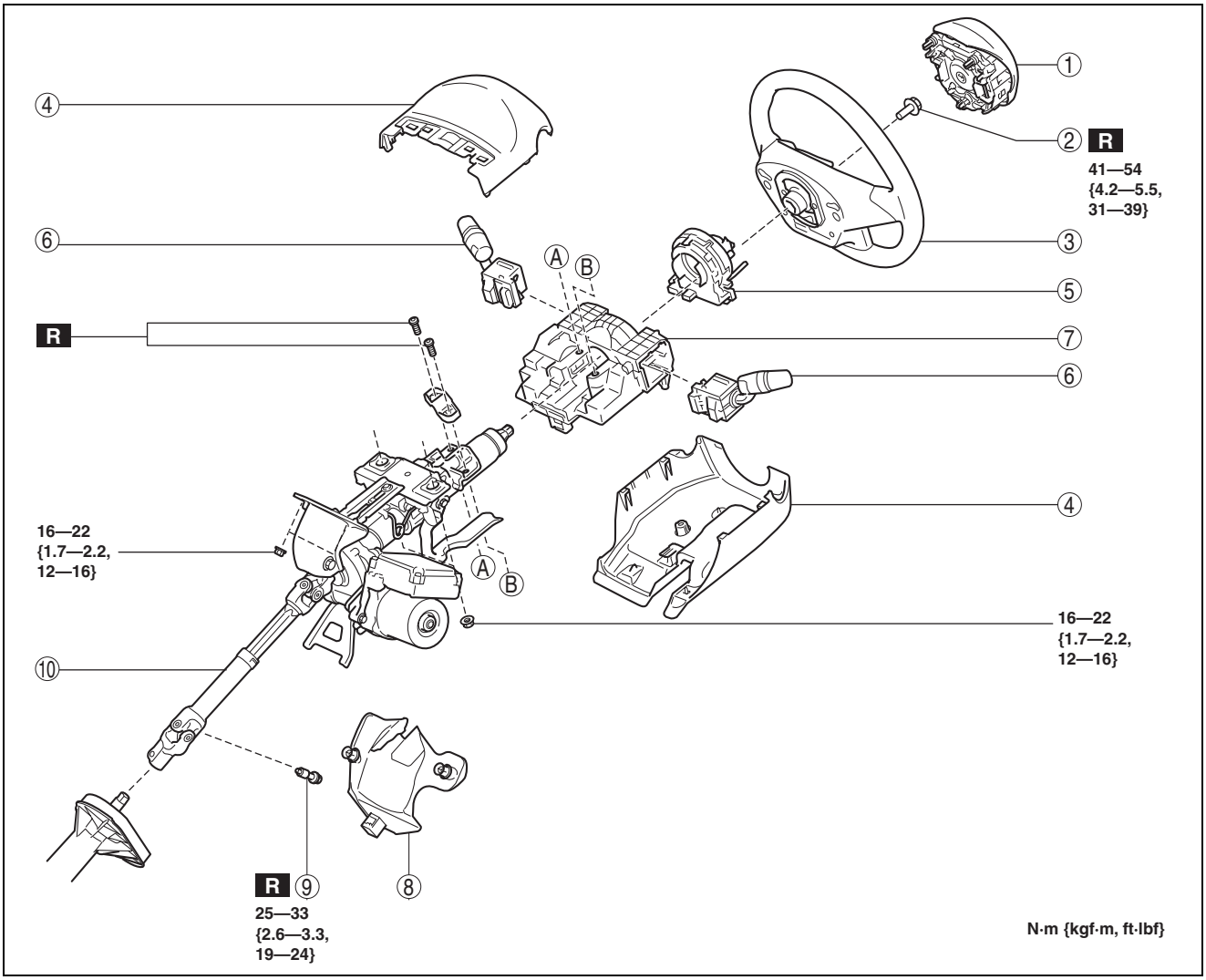

ac5wzw0000249

1	Driver-side air bag module (See 08-10-6 DRIVER-SIDE AIR BAG MODULE REMOVAL/INSTALLATION.)
2	Lockbolt
3	Steering wheel (See 06-13-6 Steering Wheel Removal Note.) (See 06-13-10 Steering Wheel Installation Note.)
4	Column cover (See 09-17-25 COLUMN COVER REMOVAL/INSTALLATION.)
5	Clock spring (See 08-10-24 CLOCK SPRING REMOVAL/INSTALLATION.)

6	Light switch, wiper and washer switch (See 09-18-84 LIGHT SWITCH REMOVAL/INSTALLATION.) (See 09-19-45 WIPER AND WASHER SWITCH REMOVAL/INSTALLATION.)
7	Start stop unit (See 09-14-54 START STOP UNIT REMOVAL/INSTALLATION.)
8	Joint cover
9	Joint bolt
10	Steering column component (See 06-13-7 Steering Column Component Removal Note.) (See 06-13-9 Steering Column Component Installation Note.)

ELECTRIC POWER STEERING (EPS)

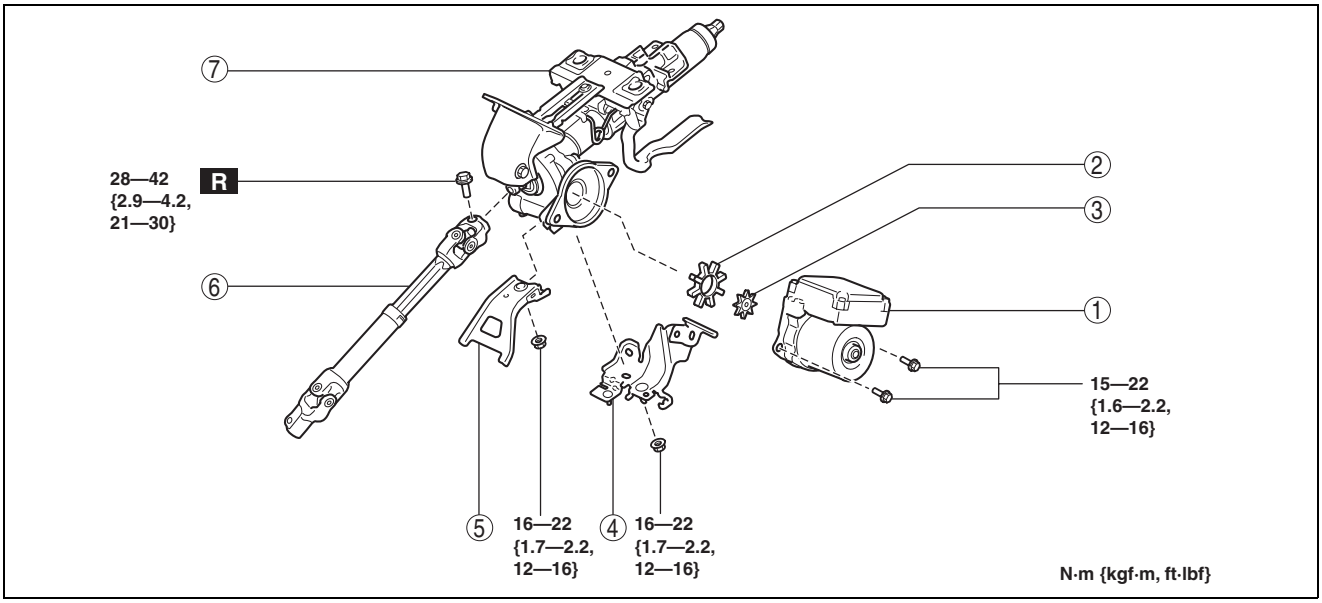

ac5wzw0000156

1	EPS CM (See 06-13-8 EPS CM Removal Note.) (See 06-13-8 Spacer, Rubber and EPS CM Installation Note.)
2	Rubber (See 06-13-8 Spacer, Rubber and EPS CM Installation Note.)
3	Spacer (See 06-13-8 Spacer, Rubber and EPS CM Installation Note.)

4	Harness bracket
5	Bracket (MTX vehicles) (See 06-13-8 Bracket Installation Note.)
6	Intermediate shaft (See 06-13-10 INTERMEDIATE SHAFT REMOVAL/INSTALLATION.)
7	Steering column

Steering Wheel Removal Note

Caution

- **Do not try to remove the steering wheel by hitting the shaft with a hammer. The steering column will be damaged.**

1. Set the vehicle wheels in the straight-ahead position.
2. Remove the steering wheel using any commercially available puller.

ELECTRIC POWER STEERING (EPS)

Steering Column Component Removal Note

Caution

- **Always lock the adjusting lever to prevent damage to the steering column.In addition, do not unlock the adjusting lever until after the steering column installation is completed.**
- **If the steering column is removed, remove it according to the procedure to prevent damage to intermediate shaft that could result if the steering column is removed in the incorrect order.**

1. Lock the adjusting lever.
2. Remove the bolt, disconnect the intermediate shaft from the steering gear (pinion shaft).
3. Remove nut A.

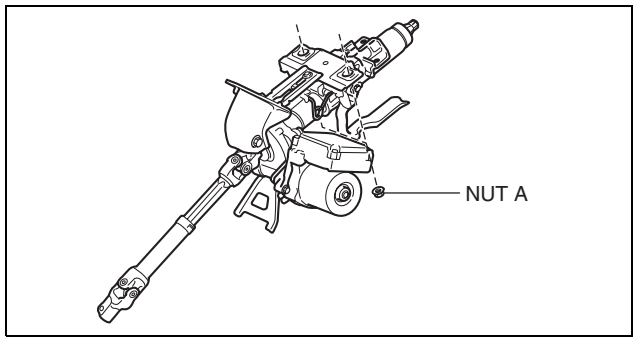

ac5wzw0000157

4. Loosen nut B.

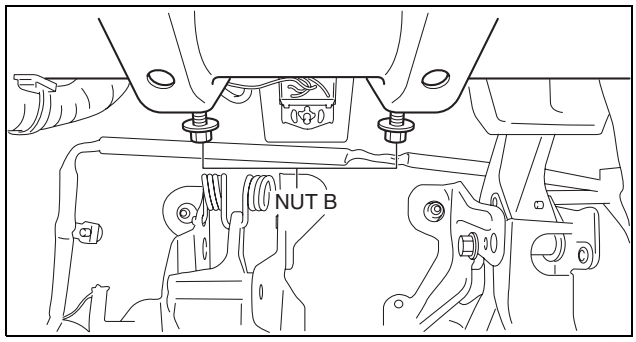

ac5wzw0000102

5. Remove the steering column component by tilting it towards the loosened nut B and sliding it outward.

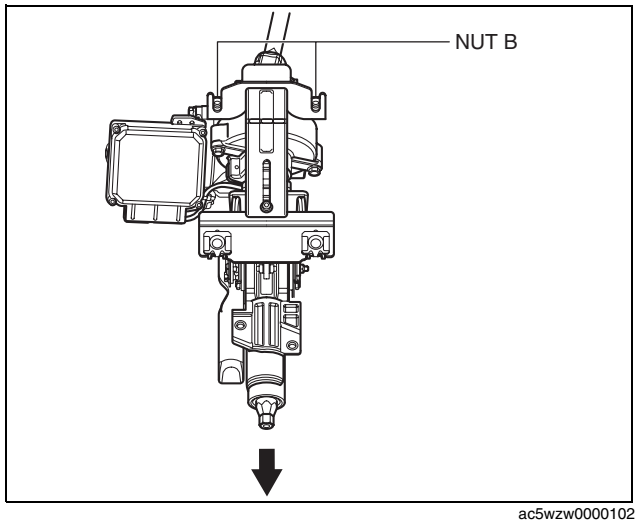

ac5wzw0000102

ELECTRIC POWER STEERING (EPS)

EPS CM Removal Note

1. Disconnect the torque sensor connector (EPS CM side).
2. Remove the EPS CM.

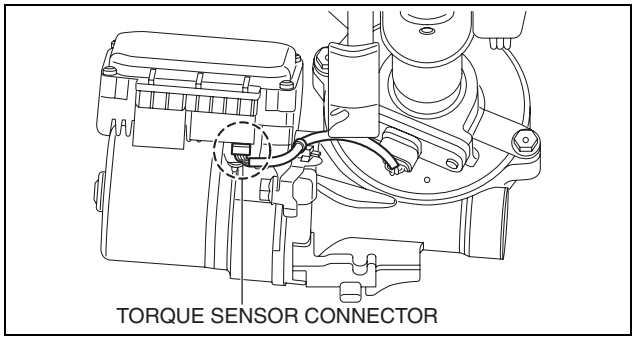

ac5wzw0000102

Spacer, Rubber and EPS CM Installation Note

1. Install the spacer and rubber to the steering column.
2. Install the EPS CM so that the projecting part of the EPS CM (rotor) is engaged with the notch in the rubber.

Note

- If the projecting part of the EPS CM (rotor) is not engaged with the notch in the rubber, adjust the position of the EPS CM projection (rotor).

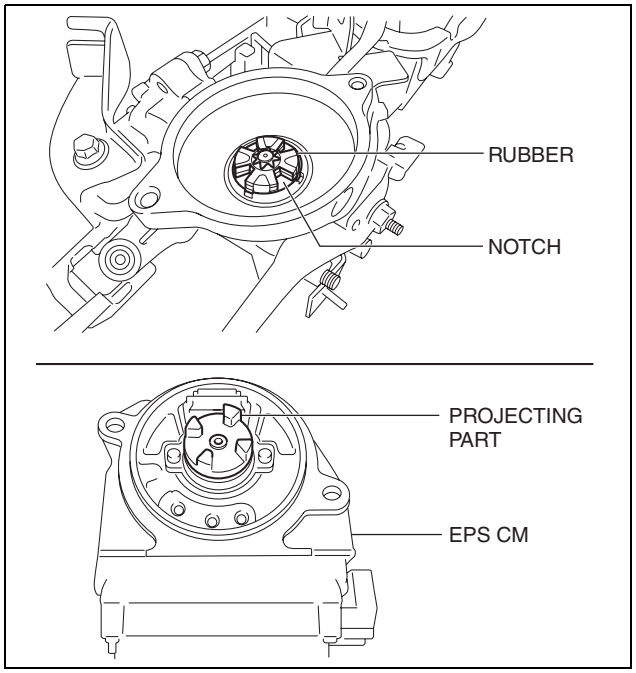

ac5wzw0000102

Bracket Installation Note

1. Insert the bracket bolt into the steering column and install the projecting part of the bracket to the installation area of the steering column.

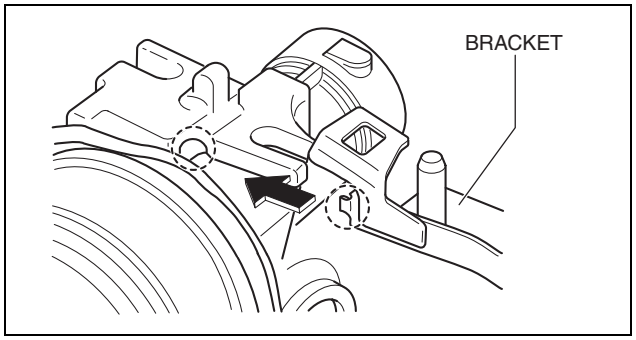

ac5wzw0000033

ELECTRIC POWER STEERING (EPS)

2. Verify that the projection on the steering column is inserted into the hole in the bracket as shown in the figure and tighten the nut to the specified torque.

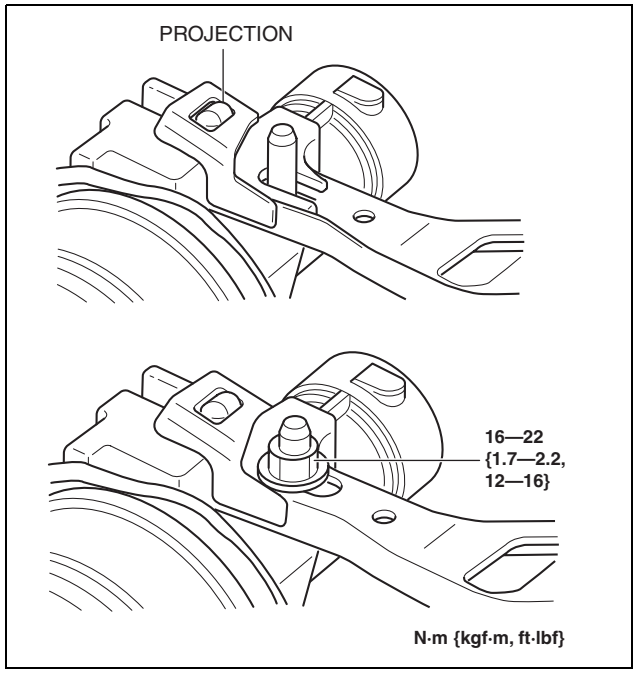

ac5wzw0000102

Steering Column Component Installation Note

Caution

- **If the steering column is installed, install it according to the procedure to prevent damage to intermediate shaft that could result if the steering column is installed in the incorrect order.**
- **Do not unlock the adjusting lever until after the steering column installation is completed to prevent damage to the steering column.**

1. Temporarily install nut B to the dashboard member.
2. Tilt the steering column component towards the temporarily installed nut B and temporarily install the steering column component to the instrument panel member using nut A

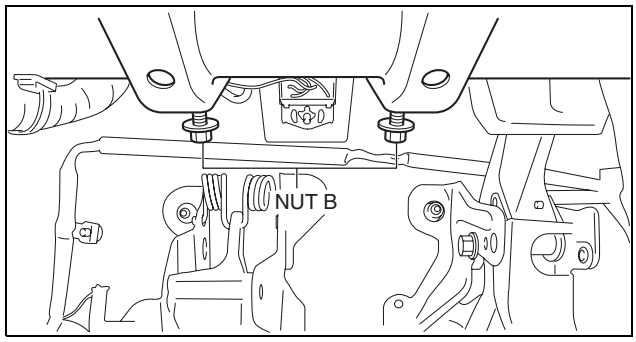

ac5wzw0000102

3. Tighten the nuts in the order of nut A and nut B.

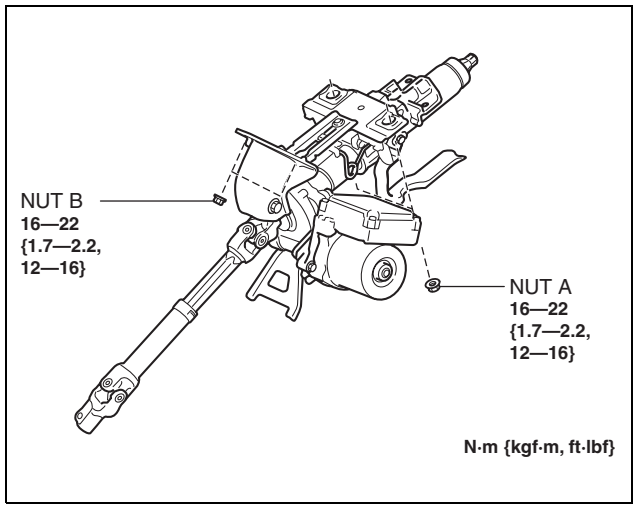

ac5wzw0000157

ELECTRIC POWER STEERING (EPS)

4. Insert the intermediate shaft into the steering gear (pinion shaft) to the position shown in the figure, and tighten it using a new bolt.

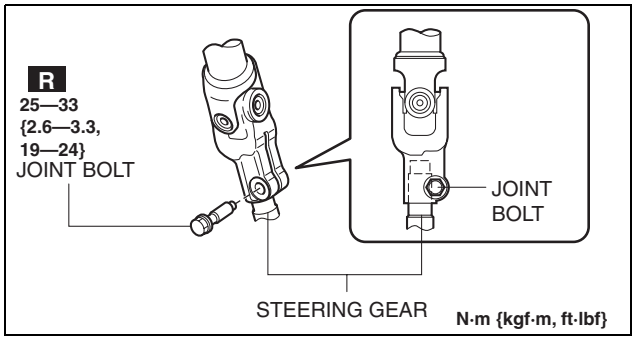

ac5wzw0000033

Steering Wheel Installation Note

1. Set the vehicle wheels in the straight-ahead position, and install the steering wheel using a new lockbolt.

INTERMEDIATE SHAFT REMOVAL/INSTALLATION

id061300803100

Warning

- **The steering column (EPS motor) temperature increases directly after continuous turning of the steering mechanism which could cause burns if it is touched. Before performing any servicing, verify that the steering column has cooled off.**

1. Rotate the steering wheel until the joint bolt is in a position in which it can be removed.

Caution

- **Secure the steering wheel using tape or a cable to prevent the steering shaft from rotating after disconnecting the intermediate shaft. If the steering wheel rotates after the steering shaft and the steering gear and linkage are disconnected, the internal parts of the clock spring could be damaged.**

2. Lock the adjusting lever.
3. Remove in the order indicated in the table.

ELECTRIC POWER STEERING (EPS)

4. Install in the reverse order of removal.

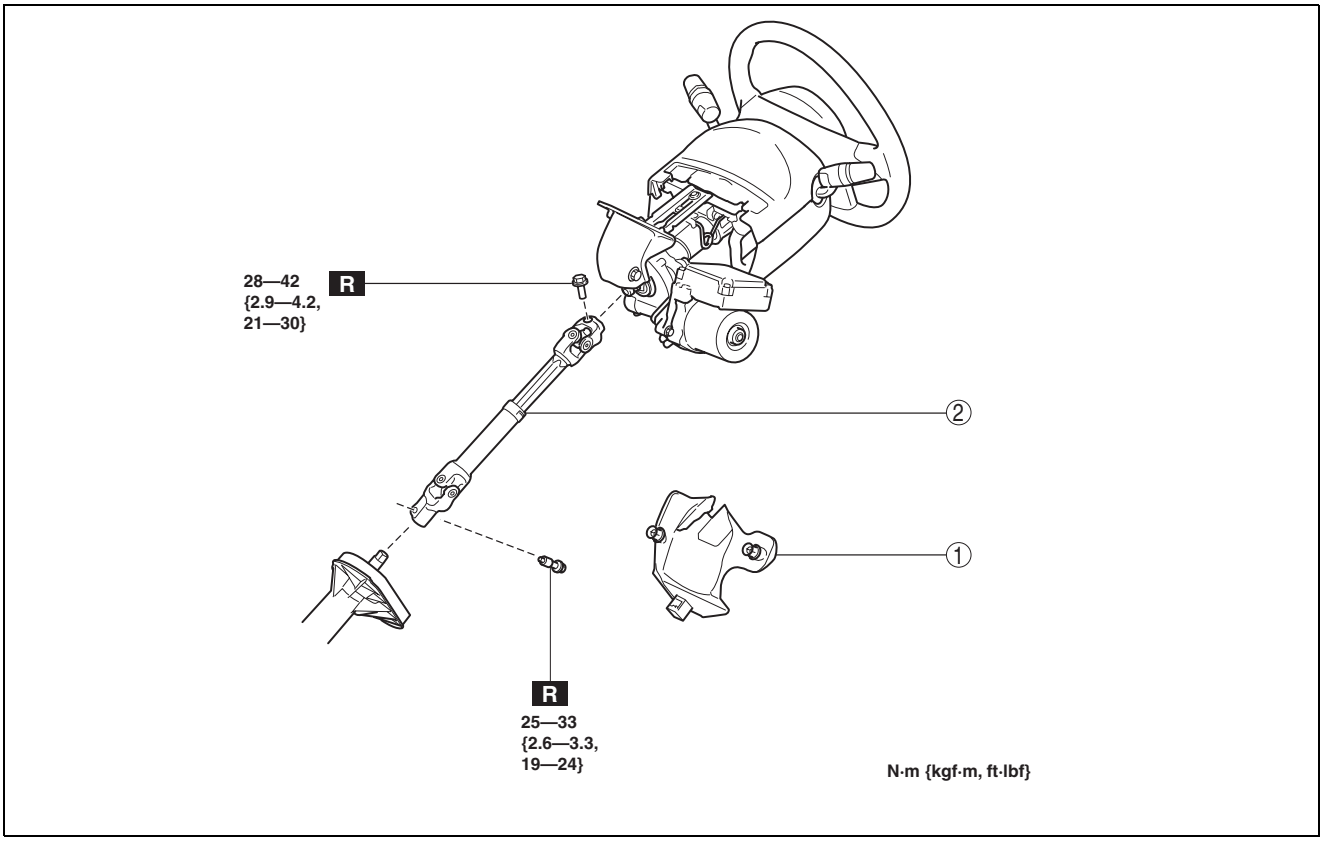

ac5wzw0000105

1	Joint cover

2	Intermediate shaft (See 06-13-11 Intermediate Shaft Removal Note.) (See 06-13-12 Intermediate Shaft Installation Note.)

Intermediate Shaft Removal Note

1. Place an alignment mark across the break between the steering column and the yoke for the intermediate shaft as shown in the figure.

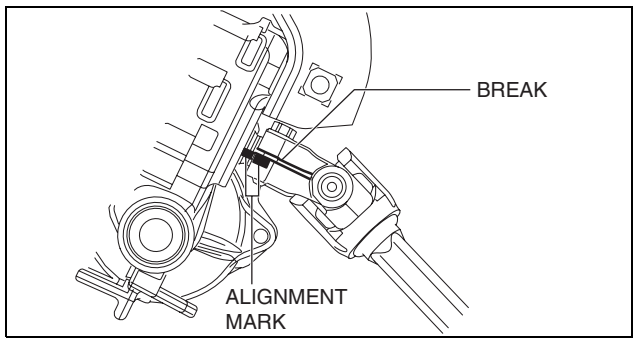

ac5wzw0000105

2. Place alignment marks on the steering gear (pinion) and the intermediate shaft as shown in the figure.

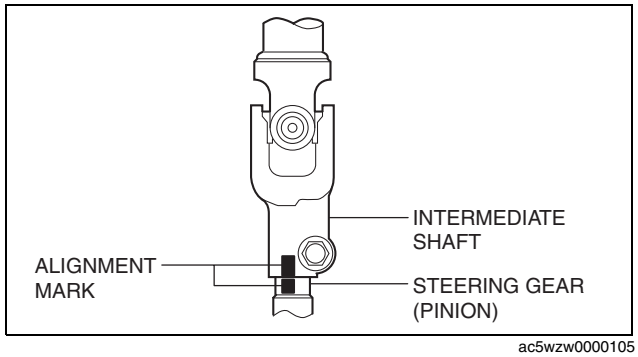

ac5wzw0000105

ELECTRIC POWER STEERING (EPS)

3. Remove joint bolt A, then joint bolt B.
4. Remove the intermediate shaft.

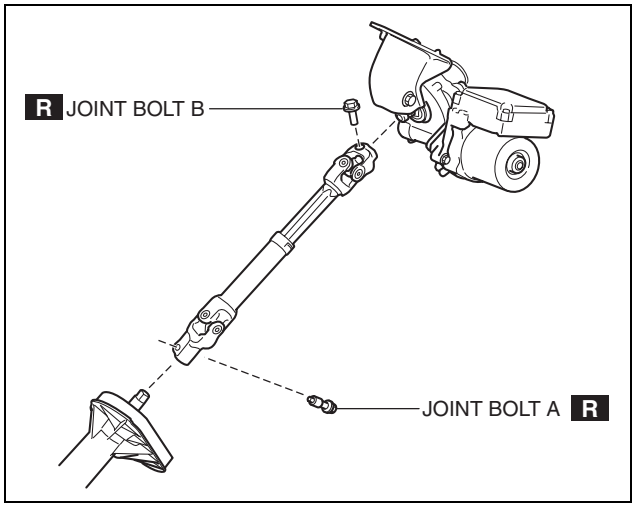

ac5wzw0000105

Intermediate Shaft Installation Note

1. Place alignment marks on the new intermediate shaft in the same positions as the removed intermediate shaft.

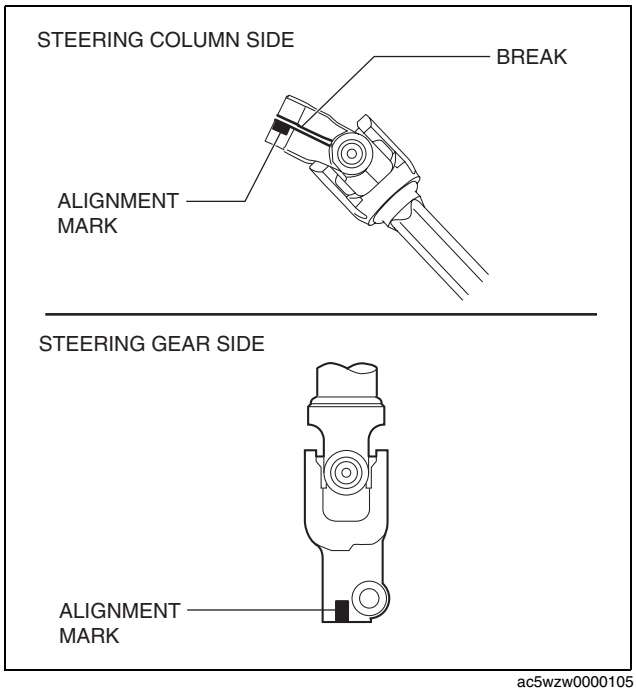

ac5wzw0000105

ELECTRIC POWER STEERING (EPS)

2. Align the alignment marks on the steering column and the steering gear (pinion), which were placed before removing the intermediate shaft, and install the intermediate shaft.

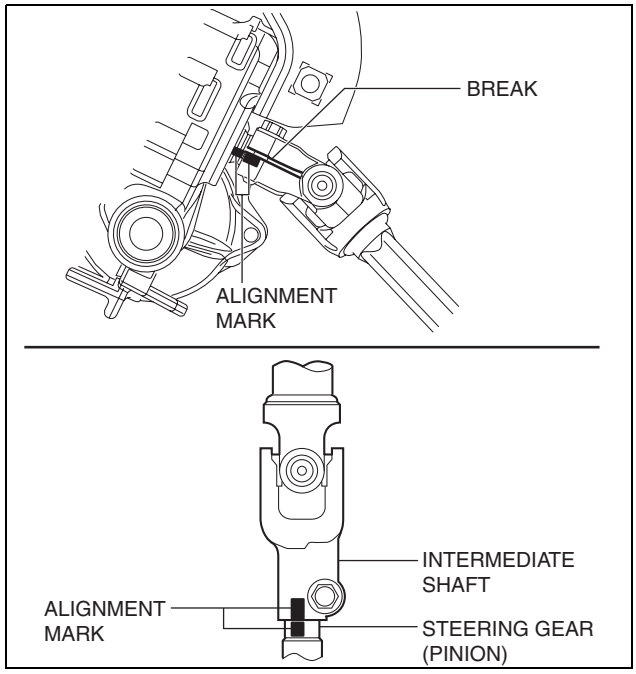

ac5wzw0000105

Note
- Install joint bolt B, then joint bolt A.

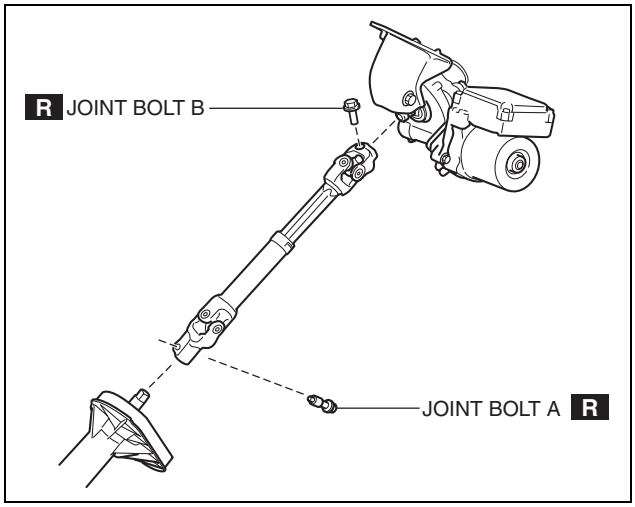

ac5wzw0000105

3. Verify that the joint bolt B flange is seated in the specified position.

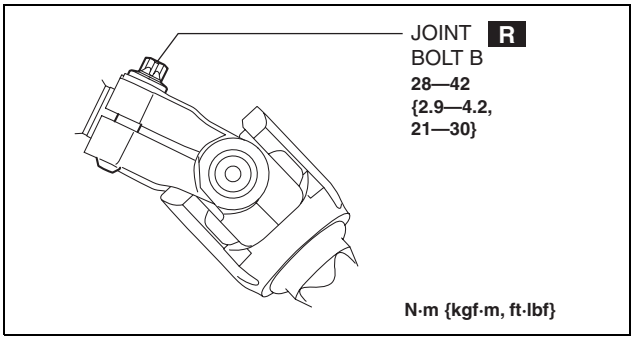

ac5wzw0000105

ELECTRIC POWER STEERING (EPS)

4. Verify that joint bolt A is installed to the groove of the steering gear (pinion).

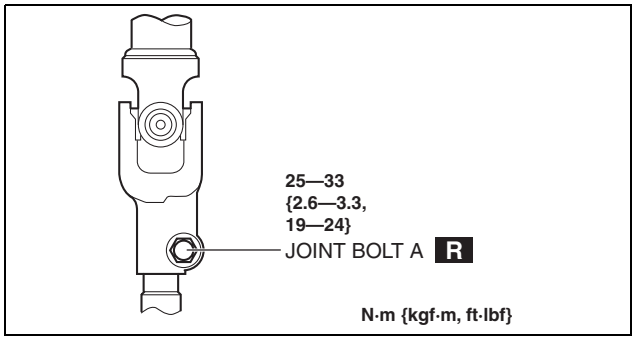

ac5wzw0000105

STEERING SHAFT INSPECTION

id061300801600

1. Inspect the steering column for excessive play and damage.
2. Verify that the clearance between the projection on the steering column shown in the figure and the bracket is **less than 2.0 mm {0.079 in}**.
   - If the clearance between the projection and bracket is **2.0 mm {0.079 in} or more**, replace the steering column component.

Note
- If the clearance between the projection and bracket is **2.0 mm {0.079 in} or more**, the impact absorbing mechanism of the steering column will operate, therefore it is necessary to replace the steering column component.

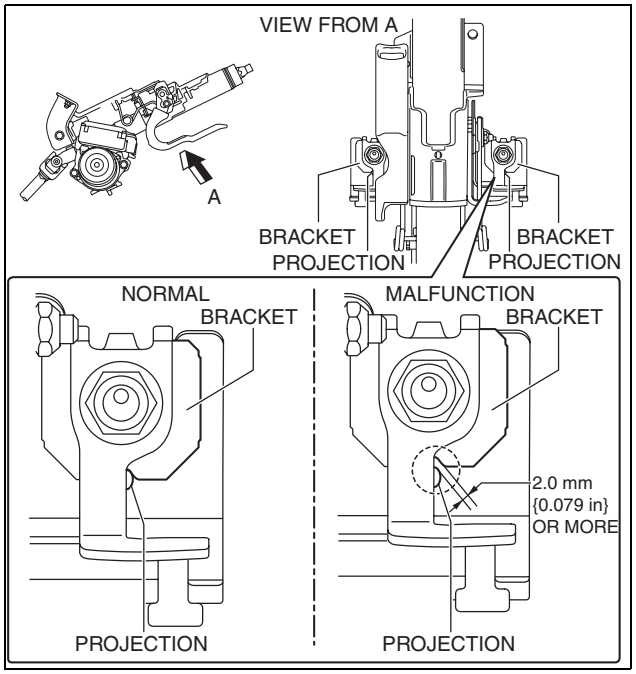

ac5uuw00002726

3. Inspect the tilt/telescope mechanism operation for the following:
   (1) The adjusting lever moves smoothly from the lock to the unlock position.
   (2) The steering shaft is fixed firmly when the adjusting lever is locked.
      - If there is any malfunction, replace the steering column.

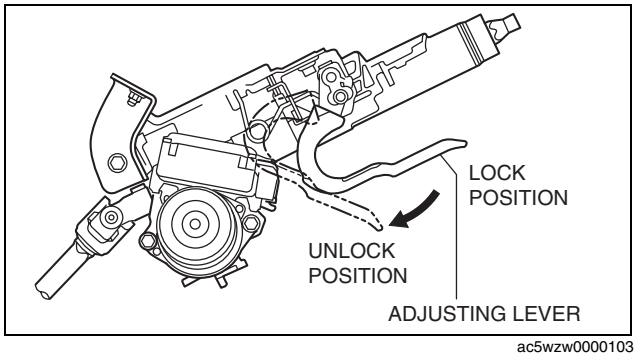

ac5wzw0000103

ELECTRIC POWER STEERING (EPS)

TIE-ROD END REPLACEMENT

id061300801200

1. Remove the snap pin.
2. Loosen the tie-rod end locknut.

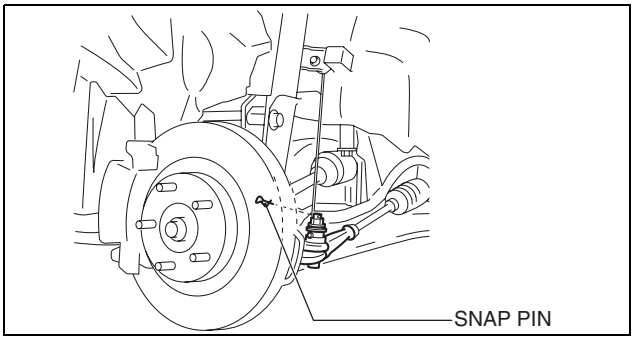

ac5wzw0000101

3. Detach the tie-rod end from the steering knuckle using the **SST**.
4. Remove the tie-rod end locknut.

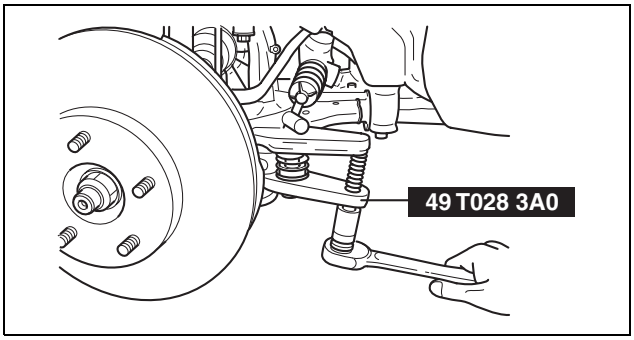

ac5wzw0000101

5. Place alignment marks as shown in the figure for proper installation.

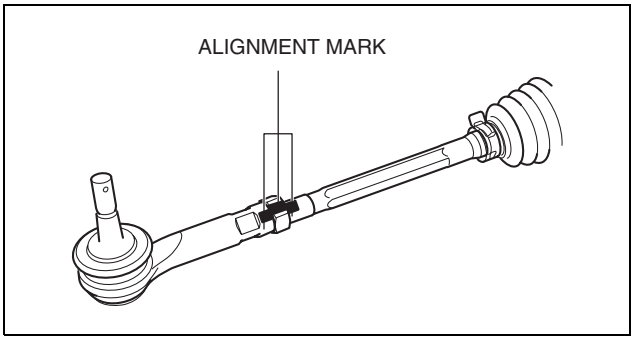

ac5wzw0000101

6. Remove the tie-rod end.

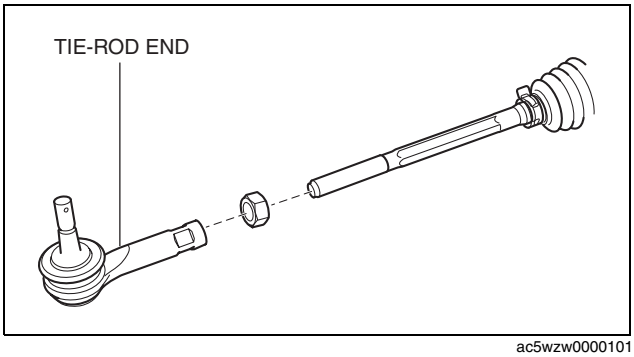

ac5wzw0000101

ELECTRIC POWER STEERING (EPS)

7. Align the alignment marks made before removing the tie-rod end, and then install a new tie-rod end to the tie rod.
   - If there are no alignment marks, go to the following procedure.

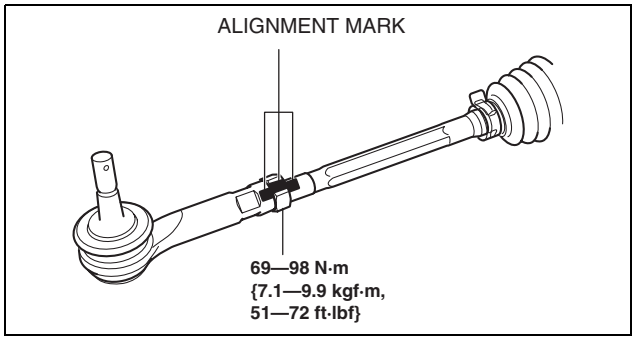

ac5wzw0000101

8. Adjust dimension A shown in the figure to the standard, and assemble.

   Standard Dimension A
   10.1—23.1 mm {0.398—0.909 in}

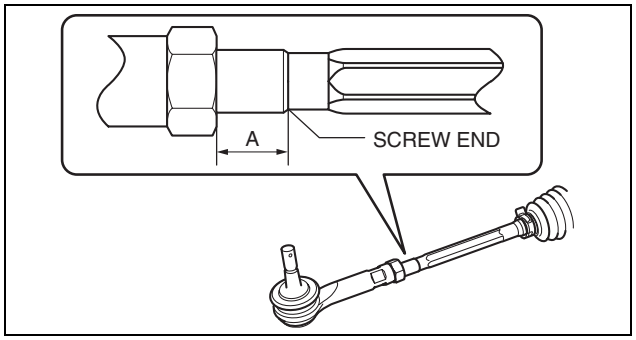

ac5wzw0000249

9. Install the tie-rod end to the steering knuckle.
10. Install a new snap pin.
11. After installation, inspect the front wheel alignment and adjust it if necessary. (See 02-11-1 FRONT WHEEL ALIGNMENT.)

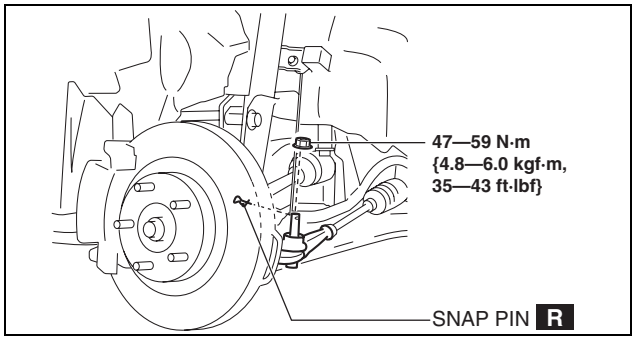

ac5wzw0000101

STEERING GEAR AND LINKAGE REMOVAL/INSTALLATION

id061300801700

Caution
- **Performing the following procedures without first removing the ABS wheel-speed sensor may possibly cause an open circuit in the wiring harness if it is pulled by mistake. Before performing the following procedures, disconnect the ABS wheel-speed sensor connector (axle side) and fix the wiring harness to an appropriate place where it will not be pulled by mistake while servicing the vehicle.**
- **Secure the steering wheel using tape or a cable to prevent the steering shaft from rotating after disconnecting the steering shaft. If the steering wheel rotates after the steering shaft and the steering gear and linkage are disconnected, the internal parts of the clock spring could be damaged.**

1. Remove the joint cover. (See 06-13-4 STEERING WHEEL AND COLUMN REMOVAL/INSTALLATION.)
2. Disconnect the intermediate shaft from the steering gear and linkage. (See 06-13-4 STEERING WHEEL AND COLUMN REMOVAL/INSTALLATION.)
3. Disconnect the front ABS wheel-speed sensor wiring harness installed to the steering knuckle and set it aside. (See 04-15-9 FRONT ABS WHEEL-SPEED SENSOR REMOVAL/INSTALLATION.)
4. Remove the front under cover No.2. (See 09-16-41 FRONT UNDER COVER No.2 REMOVAL/INSTALLATION.)
5. Remove the front under cover No.1. (See 09-16-40 FRONT UNDER COVER No.1 REMOVAL/INSTALLATION.)
6. Remove the splash shield. (See 09-16-49 SPLASH SHIELD REMOVAL/INSTALLATION.)
7. Remove the front crossmember component. (See 02-13-15 FRONT CROSSMEMBER REMOVAL/INSTALLATION.)
8. Remove in the order indicated in the table.
9. Install in the reverse order of removal.
10. After installation, inspect the front wheel alignment. (See 02-11-1 FRONT WHEEL ALIGNMENT.)

ELECTRIC POWER STEERING (EPS)

R.H.D.

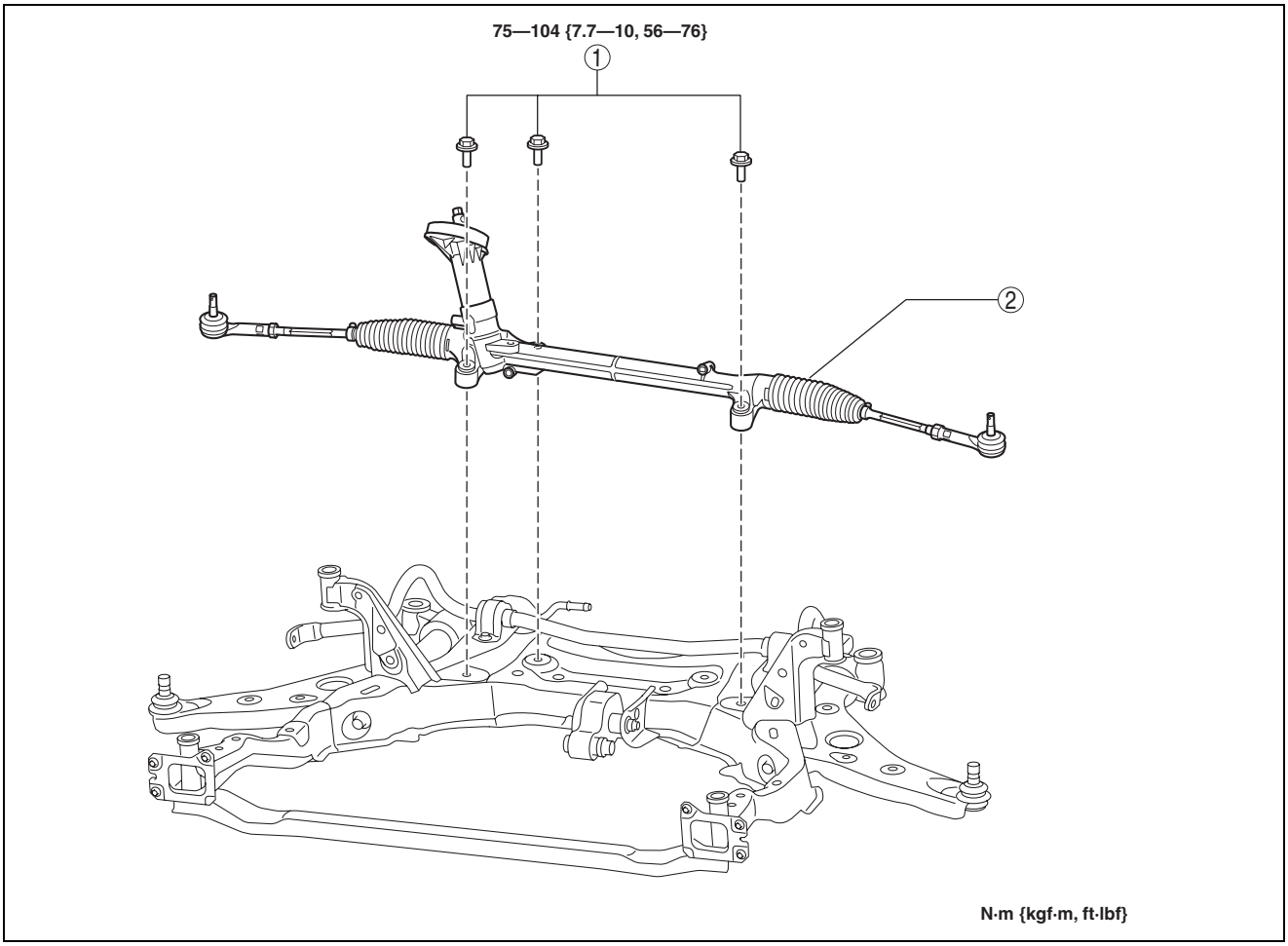

ac5wzw0000034

1	Steering gear and linkage installation bolt

2	Steering gear and linkage (See 06-13-18 Steering Gear and Linkage Removal Note.)

Steering Gear and Linkage Removal Note

1. Remove the steering gear and linkage installation bolts, move the steering gear and linkage in the direction and order of the arrows shown in the figure, and then remove it.

ELECTRIC POWER STEERING (EPS)

R.H.D.

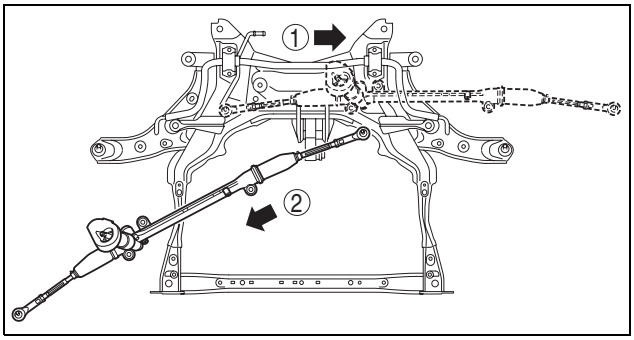

ac5wzw0000034

STEERING GEAR AND LINKAGE INSPECTION

id061300802000

1. Remove the steering gear and linkage. (See 06-13-16 STEERING GEAR AND LINKAGE REMOVAL/INSTALLATION.)
2. Remove the tie-rod end and boot. (See 06-13-20 STEERING GEAR AND LINKAGE DISASSEMBLY.)
3. Measure the rotation torque of the pinion shaft using a crescent wrench and pull scale. (speed measurement reference **5 °/s**)
   (1) Install the crescent wrench to the steering gear.

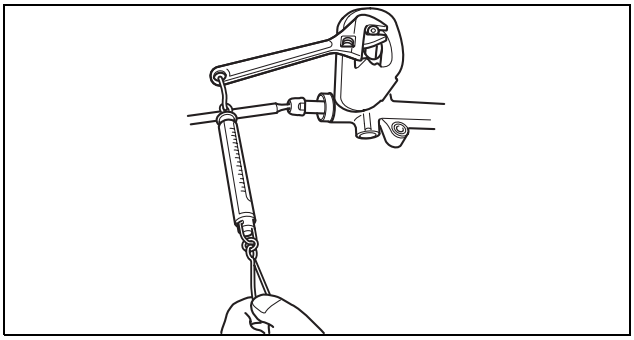

ac5wzw0000103

   (2) Measure the length from the pinion shaft center to the crescent wrench end (application point of pull scale) as shown in the figure. This is dimension A.
   (3) The rotation torque of the pinion shaft can be calculated using the following formula Measured value using pull scale (N {kgf, lbf}) = rotation torque of the pinion shaft (N·m {kgf·cm, in·lbf})/length A (m {cm, in})

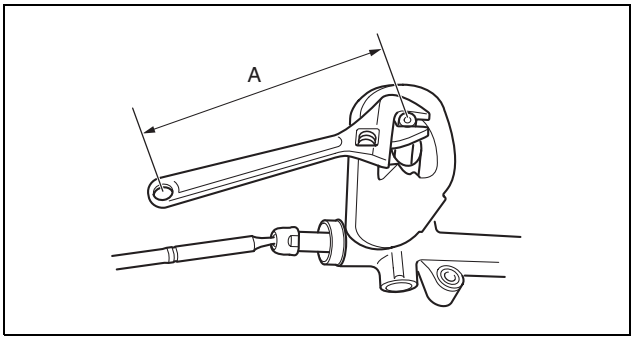

ac5wzw0000103

Pinion shaft rotation torque (center of rack ± 180°)
1.0—1.6 N·m {11—16 kgf·cm, 8.9—14 in·lbf} [Pull scale reading: 1.0—1.6 N·m {11—16 kgf·cm, 8.9—14 in·lbf}/A (m {cm, in})]

- If not within the specification, replace the steering gear. (See 06-13-16 STEERING GEAR AND LINKAGE REMOVAL/INSTALLATION.)

ELECTRIC POWER STEERING (EPS)

STEERING GEAR AND LINKAGE DISASSEMBLY

id061300801800

Caution
- **To prevent damage to the steering gear, secure it to the vise using a copper plate or clean cloth.**

1. Disassemble in the order indicated in the figure.

R.H.D.

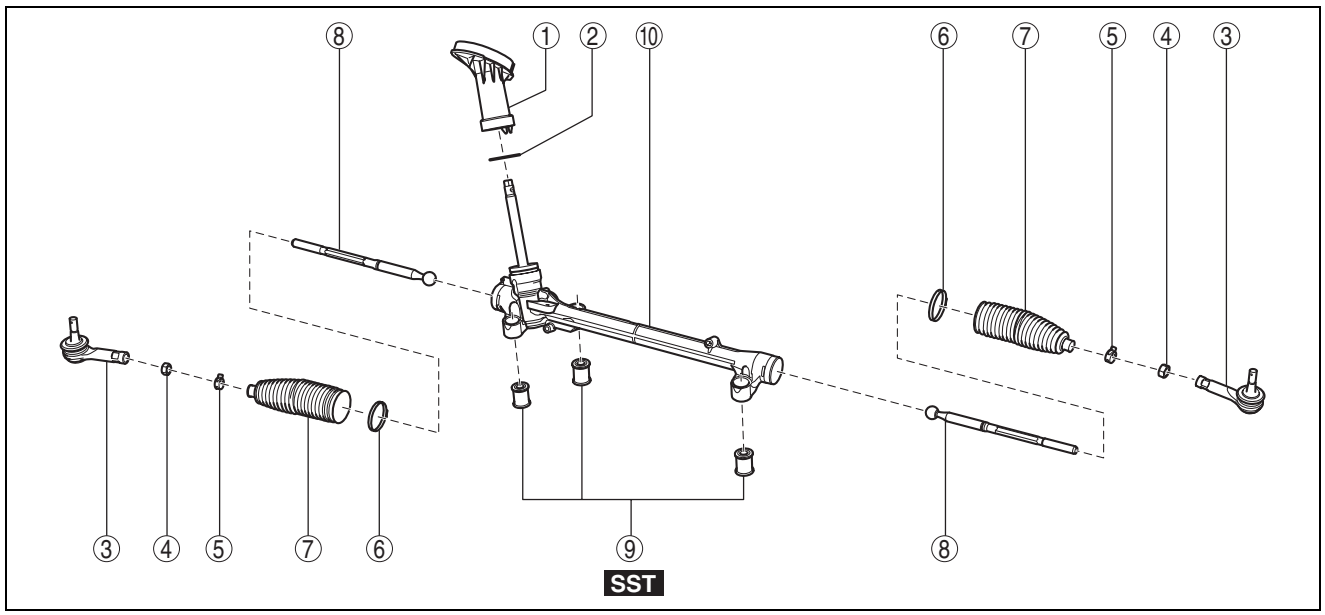

ac5wzw0000103

1	Dust cover
2	O-ring
3	Tie-rod end (See 06-13-21 Tie-rod End Disassembly Note.)
4	Locknut
5	Boot clamp
6	Boot band (See 06-13-21 Boot Band Disassembly Note.)

7	Boot
8	Tie rod (See 06-13-21 Tie Rod Disassembly Note.)
9	Mounting rubber (See 06-13-22 Mounting Rubber Disassembly Note.)
10	Steering gear

ELECTRIC POWER STEERING (EPS)

Tie-rod End Disassembly Note

1. Place alignment marks as shown in the figure for proper installation.
2. Remove the tie-rod end.

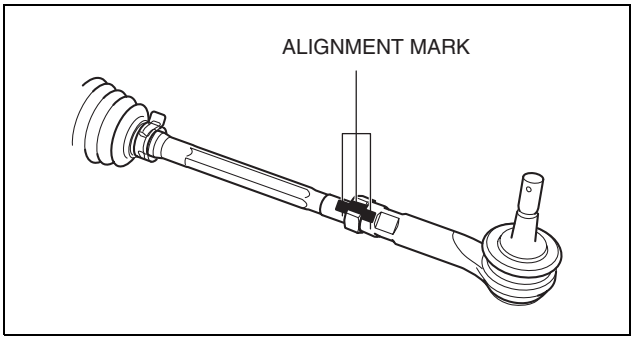

ac5wzw0000103

Boot Band Disassembly Note

1. Insert a flathead screwdriver into the boot band as shown in the figure, then press the caulked area outward to remove the boot band.

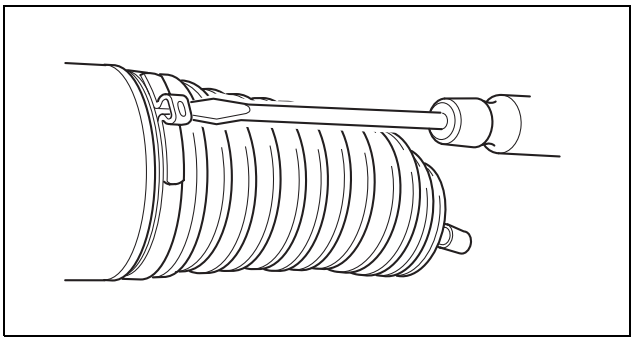
ac5wzw0000103

Tie Rod Disassembly Note

1. Lock the steering rack end (pinion gear side) against rotation with a wrench and remove the tie rod using the suitable wrench.

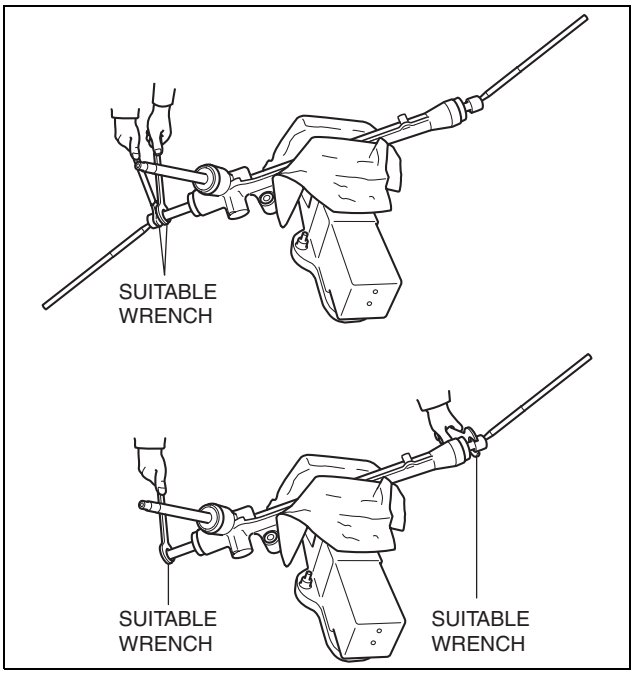

ac5wzw0000103

ELECTRIC POWER STEERING (EPS)

Mounting Rubber Disassembly Note

1. Remove the mounting rubber from the gear housing using the **SSTs** and a press.

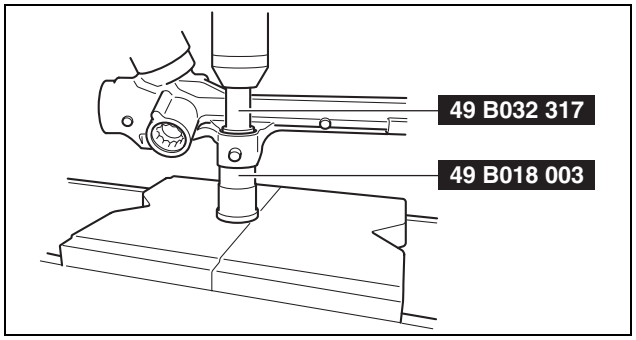

ac5wzw0000103

TIE-ROD END INSPECTION

id061300802700

1. Inspect the tie-rod end for damage and the boot for cracks.
   - If there is any malfunction, replace the tie-rod end.
2. Inspect for excessive play.
   - If there is any malfunction, replace the tie-rod end.
3. Rotate the tie-rod end five times.
4. Install two nuts to the ball joint and measure the tie-rod end rotational torque using a torque wrench.
   - If not within the specification, replace the tie-rod end.

   Tie-rod end rotational torque
   0.5—2.1 N·m {5.1—21 kgf·cm, 4.5—18 in·lbf}

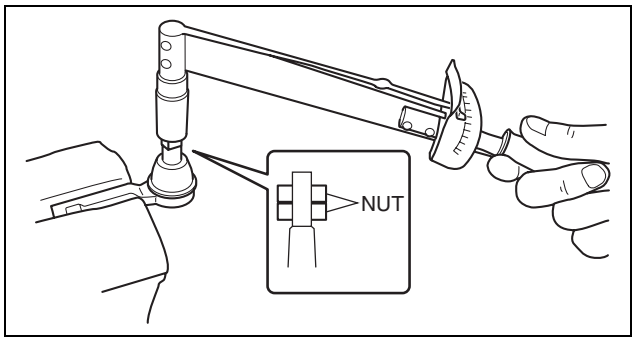

ac5wzw0000104

TIE ROD INSPECTION

id061300802900

1. Inspect for bending and damage.
   - If there is any malfunction, replace the tie rod.
2. Inspect for excessive play.
   - If there is any malfunction, replace the tie rod.
3. Swing the tie rod five times.
4. Measure the swing torque of the tie rod using a pull scale.
   - If not within the specification, replace the tie rod.

   Tie rod swing torque
   0.4—4.0 N·m {4.1—40 kgf·cm, 3.6—35 in·lbf}
   [Pull scale reading: 8—80 N {0.9—8.1 kgf, 2—17 lbf}]

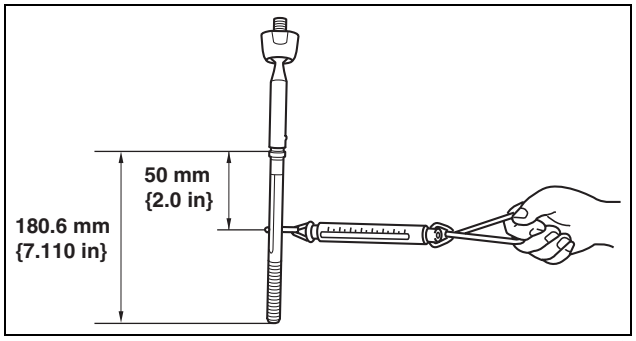

ac5wzw0000249

ELECTRIC POWER STEERING (EPS)

STEERING GEAR AND LINKAGE ASSEMBLY

id061300802100

Caution
- **To prevent damage to the steering gear, secure it to the vise using a copper plate or clean cloth.**

1. Assemble in the order shown in the figure.

R.H.D.

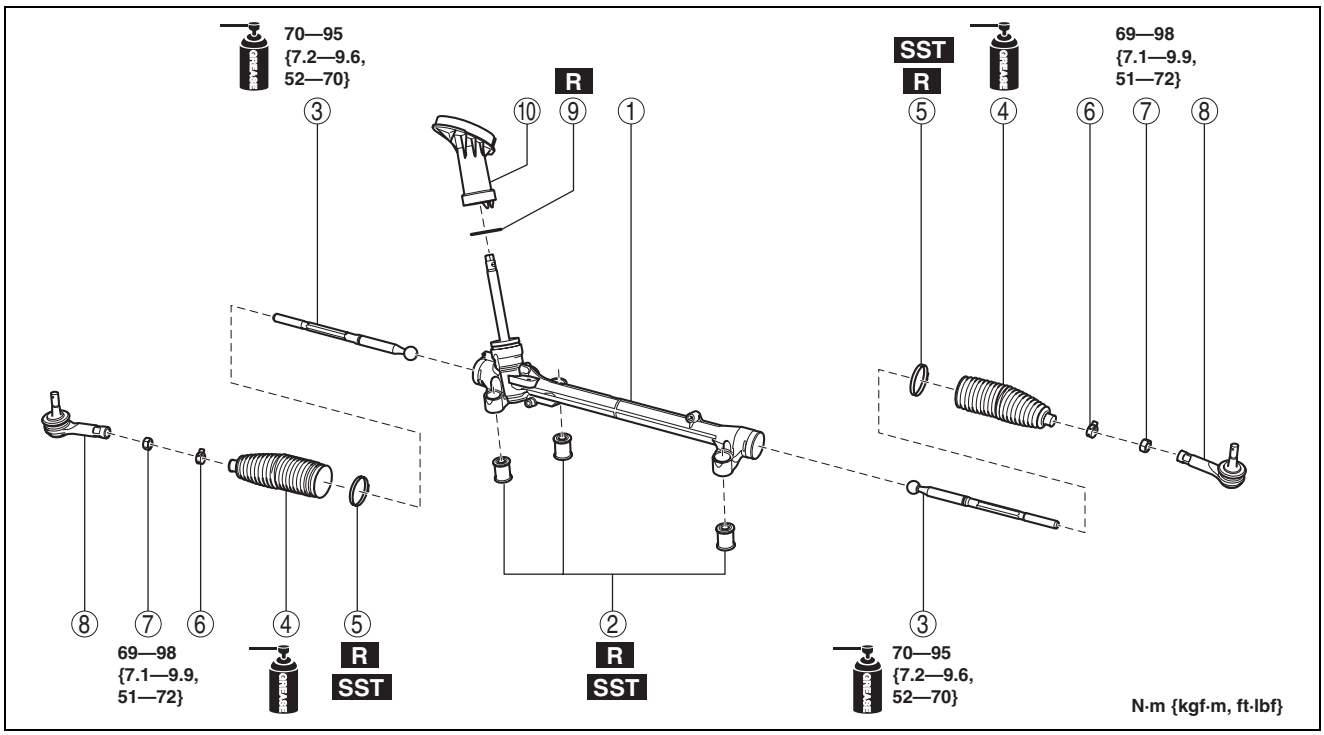

ac5wzw0000104

1	Steering gear
2	Mounting rubber (See 06-13-24 Mounting Rubber Assembly Note.)

3	Tie rod (See 06-13-25 Tie Rod Assembly Note.)
4	Boot

ELECTRIC POWER STEERING (EPS)

5	Boot band (See 06-13-25 Boot Band Assembly Note.)
6	Boot clamp
7	Locknut

8	Tie-rod end (See 06-13-26 Tie-rod End Assembly Note.)
9	O-ring
10	Dust cover

Mounting Rubber Assembly Note

1. Apply soapy water to the rubber part of the mounting rubber.
2. Press fit the ear portion of the mounting rubber (lower side) using the SSTs until it projects from the gear housing as shown in the figure.

Note

- Press fit the ear portion of the mounting rubber (upper side) until it partially enters the gear housing.

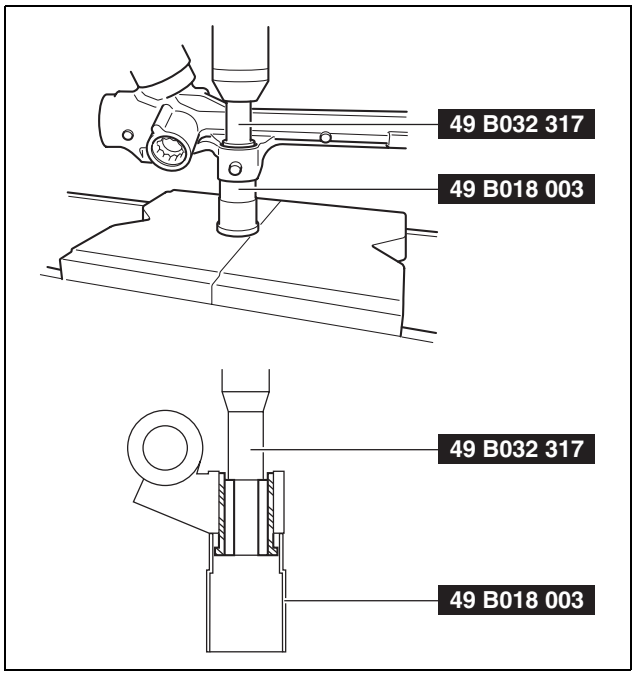

ac5wzw0000104

3. Reverse the gear housing, then press fit the mounting rubber using the SSTs and the press until the mounting rubber ear portion (upper side) contacts the gear housing.

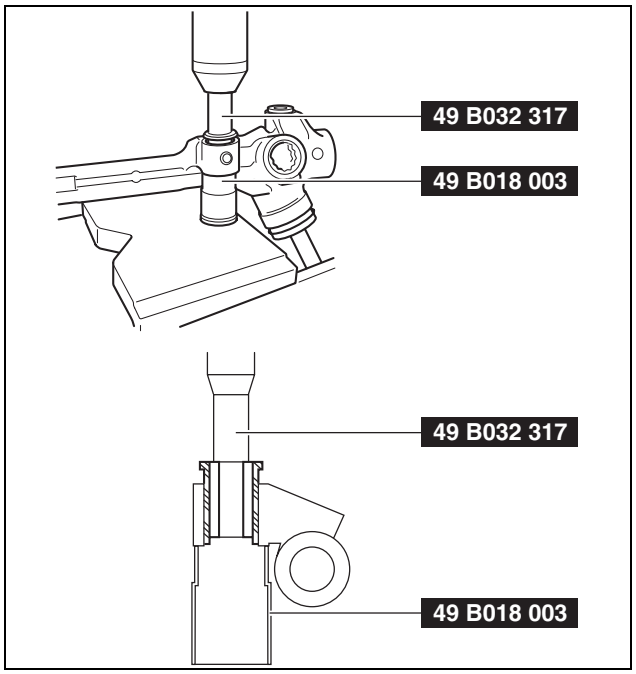

ac5wzw0000104

ELECTRIC POWER STEERING (EPS)

4. Verify that both mounting rubber ears are correctly assembled with no gaps between them and the gear housing as shown in the figure.
   - If there are gaps, readjust their positions using the **SSTs** and the press.

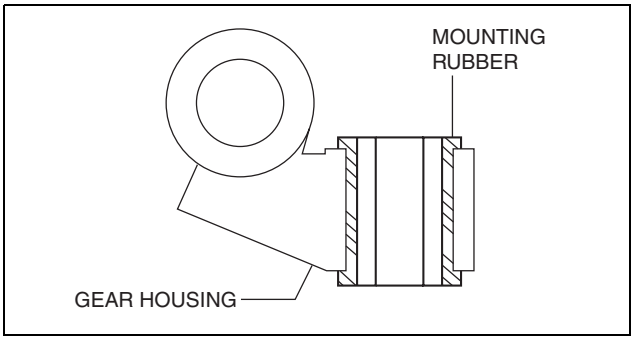

ac5wzw0000104

Tie Rod Assembly Note

1. Lock the steering rack end (pinion gear side) against rotation with a wrench and install the tie rod using the suitable wrench.

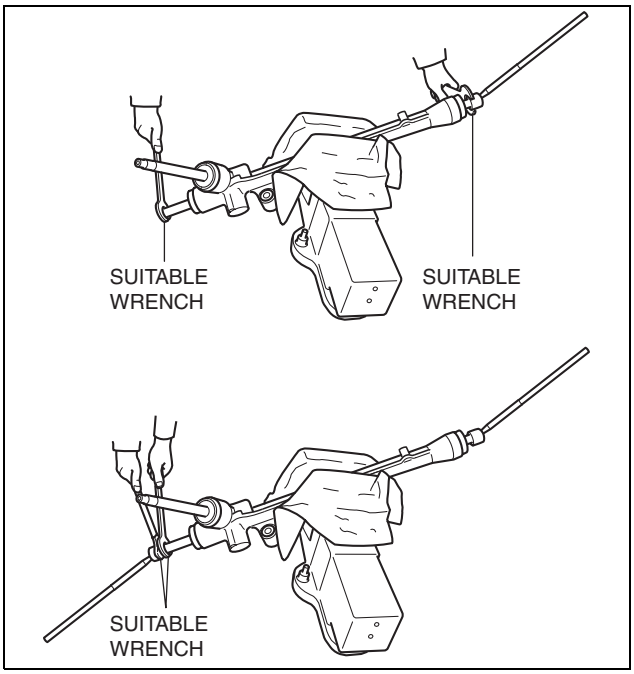

ac5wzw0000104

Boot Band Assembly Note

1. Assemble the boot band to the boot.
2. Crimp the boot band using the **SST**.
3. Verify that the crimping clearance A is within the specification.
   - If crimping clearance A exceeds the specification, reduce **SST** clearance, and crimp the boot band again.
   - If crimping clearance A is less than the specification, increase **SST** clearance, and crimp a new boot band.

   Standard clearance A
   2.5—3.0 mm {0.10—0.11 in}

4. Rotate the by hand and verify that it is securely installed to the boot band.

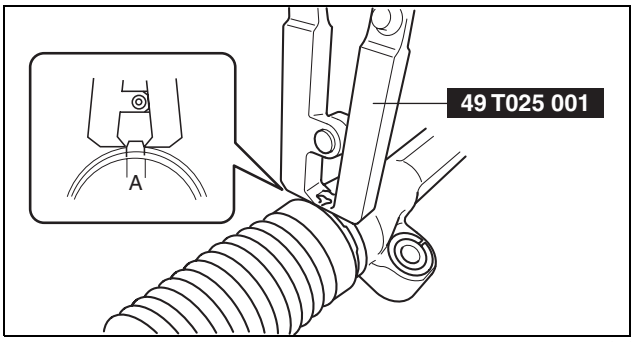

ac5wzw0000104

ELECTRIC POWER STEERING (EPS)

Tie-rod End Assembly Note

1. Align the alignment marks made before removal and assemble the tie-rod end to the tie rod.
   - If there are no alignment marks, go to the next step.

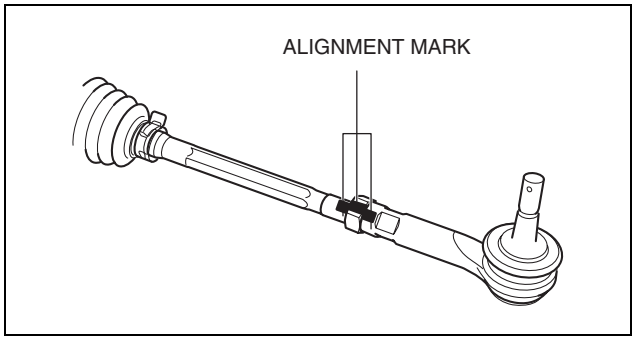

ac5wzw0000104

2. Adjust dimension A shown in the figure to the standard, then assemble the tie-rod end.

   Standard Dimension A
   - **10.1—23.1 mm {0.398—0.909 in}**

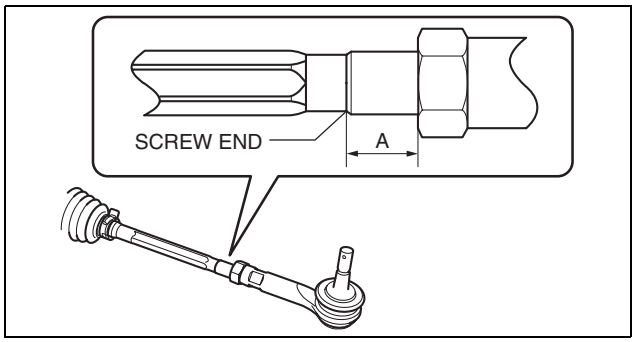

ac5wzw0000249

EPS CONTROL MODULE INSPECTION

id061300802400

1. Remove the driver-side front scuff plate. (See 09-17-61 FRONT SCUFF PLATE REMOVAL/INSTALLATION.)
2. Remove the driver-side front side trim. (See 09-17-62 FRONT SIDE TRIM REMOVAL/INSTALLATION.)
3. Remove the car-navigation unit (with car-navigation system). (See 09-20-11 CAR-NAVIGATION UNIT REMOVAL/INSTALLATION.)
4. Remove the switch panel. (See 09-17-18 SWITCH PANEL REMOVAL/INSTALLATION.)
5. Remove the decoration panel. (See 09-17-33 DECORATION PANEL REMOVAL/INSTALLATION.)
6. Remove the shift lever knob (MTX vehicles). (See 05-16A-1 MANUAL TRANSAXLE SHIFT MECHANISM REMOVAL/INSTALLATION [C66M-R, C66MX-R].) (See 05-16B-1 MANUAL TRANSAXLE SHIFT MECHANISM REMOVAL/INSTALLATION [D66M-R, D66MX-R]
7. Remove the selector lever knob (ATX vehicles). (See 05-18-2 AUTOMATIC TRANSAXLE SHIFT MECHANISM REMOVAL/INSTALLATION.)
8. Remove the front console box. (See 09-17-40 FRONT CONSOLE BOX REMOVAL/INSTALLATION.)
9. Remove the shift panel. (See 09-17-42 SHIFT PANEL REMOVAL/INSTALLATION.)
10. Remove the upper panel. (See 09-17-44 UPPER PANEL REMOVAL/INSTALLATION.)
11. Remove the rear console. (See 09-17-45 REAR CONSOLE REMOVAL/INSTALLATION.)
12. Remove the side wall. (See 09-17-49 SIDE WALL REMOVAL/INSTALLATION.)
13. Remove the front console. (See 09-17-50 FRONT CONSOLE REMOVAL/INSTALLATION.)
14. Disconnect the bonnet release lever from the lower panel. (See 09-14-17 BONNET LATCH AND RELEASE LEVER REMOVAL/INSTALLATION.)
15. Remove the lower panel. (See 09-17-35 LOWER PANEL REMOVAL/INSTALLATION.)
16. Remove the driver-side front heat duct. (See 07-11-22 FRONT HEAT DUCT REMOVAL/INSTALLATION.)
17. Attach the tester lead to the underside of the EPS CM connector and inspect the voltage according to the terminal voltage table (reference).

ELECTRIC POWER STEERING (EPS)

Terminal Voltage Table (Reference)

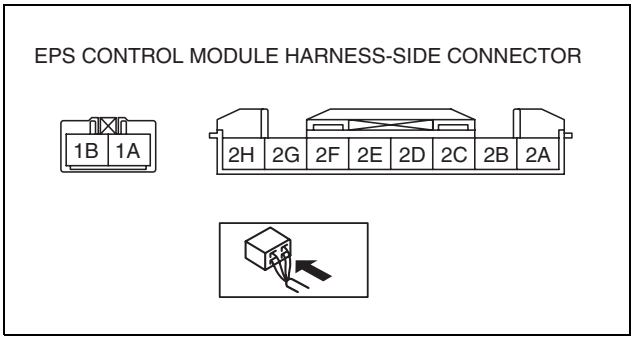

ac5wzw0000034

Terminal	Signal name	Connected to	Measured item	Measured terminal (measurement condition)	Voltage (V)	Inspection item(s)
1A	Ground	Ground point	Voltage	Under any condition	1 or less	• Wiring harness (1A—ground point)
1B	Battery power supply	Battery	Voltage	Under any condition	B+	• Wiring harness (1B—battery) • Fuse (EPS 60A)
2A	CAN_H	—	Perform DTC inspection			—
2B	—	—	—	—	—	—
2C	—	—	—	—	—	—
2D	CAN_L	—	Perform DTC inspection			—
2E	—	—	—	—	—	—
2F	—	—	—	—	—	—
2G	—	—	—	—	—	—
2H	Ignition power supply	IG1 relay	Voltage	Ignition ON (engine off or on)	B+	• Wiring harness (2H—IG1 relay—battery) • Fuse (SRS1 7.5A)
				Ignition OFF (LOCK)	1 or less	

06-50 TECHNICAL DATA

STEERING TECHNICAL DATA. 06-50–1

STEERING TECHNICAL DATA

id065000800200

Item	Specification
Steering wheel play	0—30 mm {0—1.1 in}
Steering wheel steering force (reference)	7.8 N·m {80 kgf·cm, 69 in·lbf} or less
Steering shaft length	463.7—467.7 mm {18.26—18.41 in}
Pinion shaft rotation torque (center of rack ± 180°)	1.0—1.6 N·m {11—16 kgf·cm, 8.9—14 in·lbf} [Pull scale reading: 1.0—1.6 N·m {11—16 kgf·cm, 8.9—14 in·lbf}/A (m {cm, in})] A: Length from the pinion shaft center to application point of pull scale
Tie-rod end rotational torque	0.5—2.1 N·m {5.1—21 kgf·cm, 4.5—18 in·lbf}
Tie rod swing torque	0.4—4.0 N·m {4.1—40 kgf·cm, 3.6—35 in·lbf} [Pull scale reading: 8—80 N {0.9—8.1 kgf, 2—17.0 lbf}]

06-60 SERVICE TOOLS

STEERING SST. 06-60–1

SERVICE TOOLS

STEERING SST

id066000800100

49 T028 3A0 Ball joint puller set 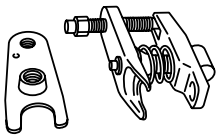	49 T025 001 Boot clamp crimpers 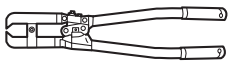	49 B032 317 Bearing & oil seal remover
49 B018 003 Body B	—	—

HEATER, VENTILATION & AIR CONDITIONING (HVAC)

07 SECTION

ON-BOARD DIAGNOSTIC [FULL-AUTO AIR CONDITIONER]. 07-02
SYMPTOM TROUBLESHOOTING [FULL-AUTO AIR CONDITIONER]. 07-03A
SYMPTOM TROUBLESHOOTING [MANUAL AIR CONDITIONER]. 07-03B
REFRIGERANT SYSTEM. 07-10
BASIC SYSTEM 07-11
CONTROL SYSTEM [FULL-AUTO AIR CONDITIONER] 07-40A
CONTROL SYSTEM [MANUAL AIR CONDITIONER] 07-40B
TECHNICAL DATA 07-50

07-02 ON-BOARD DIAGNOSTIC [FULL-AUTO AIR CONDITIONER]

HVAC SYSTEM WIRING DIAGRAM
[FULL-AUTO AIR CONDITIONER] 07-02–2
FOREWORD
[FULL-AUTO AIR CONDITIONER] 07-02–3
Troubleshooting Procedure **07-02–3**
Action for non-repeatable malfunction. **07-02–4**
FLOWCHART
[FULL-AUTO AIR CONDITIONER] 07-02–5
DTC DISPLAY
[FULL-AUTO AIR CONDITIONER] 07-02–6
CMDTC Self Test **07-02–6**
ODDTC Self Test **07-02–6**
CLEARING DTC
[FULL-AUTO AIR CONDITIONER] 07-02–7
CMDTC Clearing DTC Procedure **07-02–7**
ODDTC Clearing DTC Procedure **07-02–7**
DTC TABLE
[FULL-AUTO AIR CONDITIONER] 07-02–7
DTC B1081:71, B1082:71
[FULL-AUTO AIR CONDITIONER] 07-02–9
Diagnostic Procedure. **07-02–11**
DTC B1086:71
[FULL-AUTO AIR CONDITIONER] 07-02–12
Diagnostic Procedure. **07-02–13**
DTC B1A61:11, B1A61:13
[FULL-AUTO AIR CONDITIONER] 07-02–14
Diagnostic Procedure. **07-02–15**
DTC B1A63:12, B1A63:13, B1A64:12, B1A64:13
[FULL-AUTO AIR CONDITIONER] 07-02–17
Diagnostic Procedure. **07-02–18**
DTC B1B71:11, B1B71:13
[FULL-AUTO AIR CONDITIONER] 07-02–20
DTC B1C1A:12, B1C1A:13, B1C1B:12, B1C1B:13
[FULL-AUTO AIR CONDITIONER] 07-02–22
Diagnostic Procedure **07-02–24**
DTC B1C1C:12, B1C1C:13
[FULL-AUTO AIR CONDITIONER] 07-02–26
Diagnostic Procedure **07-02–27**
DTC B1D22:11, B1D22:13
[FULL-AUTO AIR CONDITIONER] 07-02–29
Diagnostic Procedure **07-02–29**
DTC U0423:68
[FULL-AUTO AIR CONDITIONER] 07-02–31
Diagnostic Procedure **07-02–31**
DTC U200D:11
[FULL-AUTO AIR CONDITIONER] 07-02–32
Diagnostic Procedure **07-02–33**
DTC U2300:54, U2300:55, U2300:56, U2300:64
[FULL-AUTO AIR CONDITIONER] 07-02–35
Diagnostic Procedure **07-02–35**
DTC U3003:16, U3003:17
[FULL-AUTO AIR CONDITIONER] 07-02–36
Diagnostic Procedure **07-02–36**
PID/DATA MONITOR DISPLAY
[FULL-AUTO AIR CONDITIONER] 07-02–38
PID/DATA MONITOR TABLE
[FULL-AUTO AIR CONDITIONER] 07-02–38
A/C OPERATION CHECK MODE
[FULL-AUTO AIR CONDITIONER] 07-02–39
Air Mix Actuator. **07-02–39**
A/C Compressor **07-02–40**
Air Intake Actuator. **07-02–40**
Blower Motor **07-02–41**
Airflow Mode Actuator **07-02–42**
Indicator Light **07-02–42**
Water Pump **07-02–43**
A/C Operation Check Stop **07-02–43**

ON-BOARD DIAGNOSTIC [FULL-AUTO AIR CONDITIONER]

HVAC SYSTEM WIRING DIAGRAM [FULL-AUTO AIR CONDITIONER]

id0702c1800100

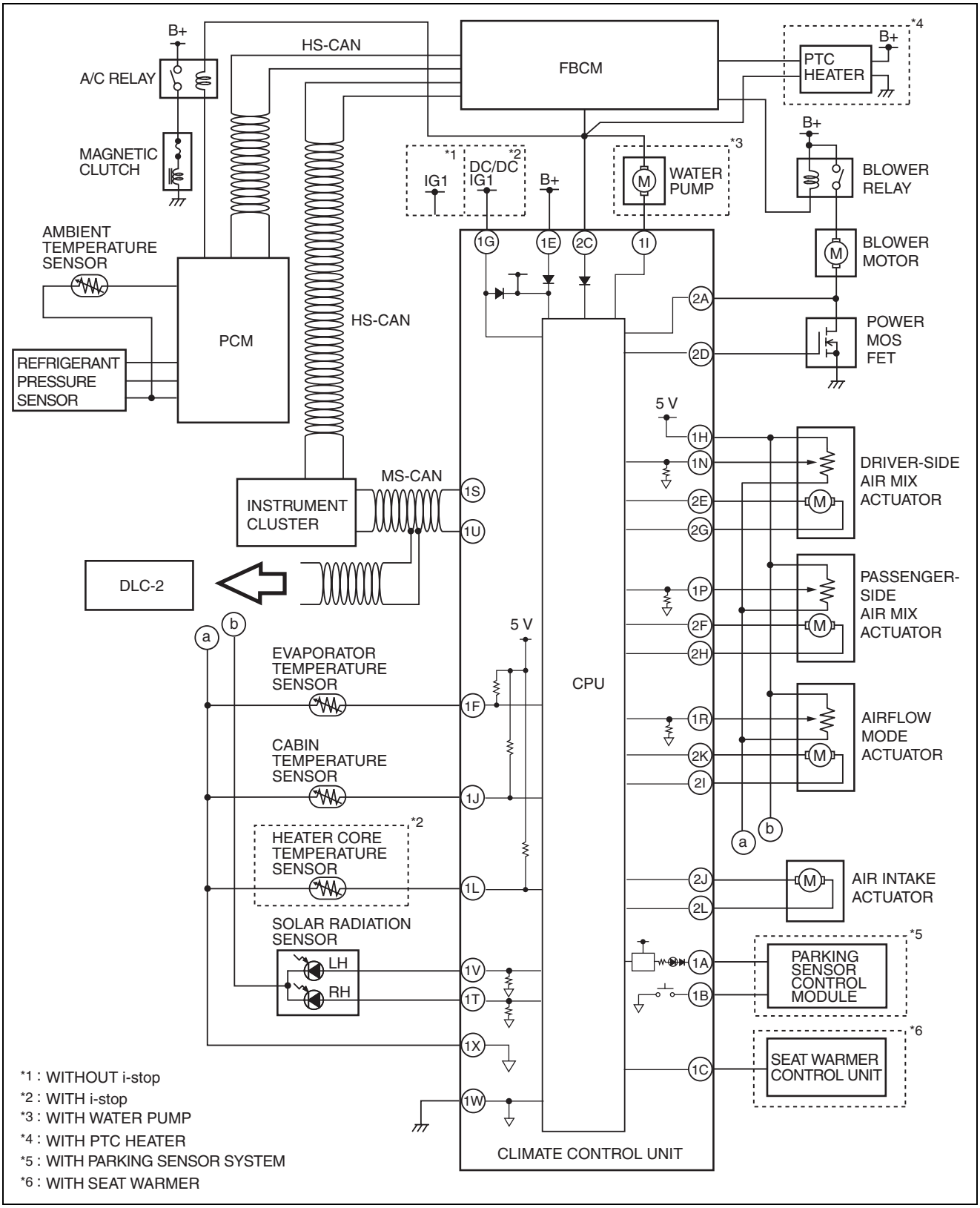

ac5wzw0000276

ON-BOARD DIAGNOSTIC [FULL-AUTO AIR CONDITIONER]

CLIMATE CONTROL UNIT WIRING HARNESS SIDE CONNECTOR

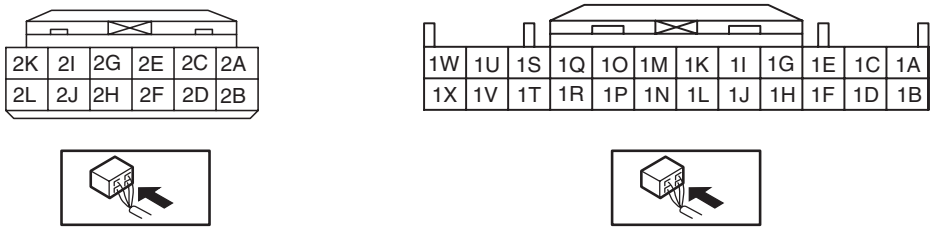

ac5wzw0000276

FOREWORD [FULL-AUTO AIR CONDITIONER]

id0702c1820100

- If there is any vehicle malfunction complaint lodged by a customer, perform malfunction diagnosis according to the troubleshooting procedure.

Troubleshooting Procedure

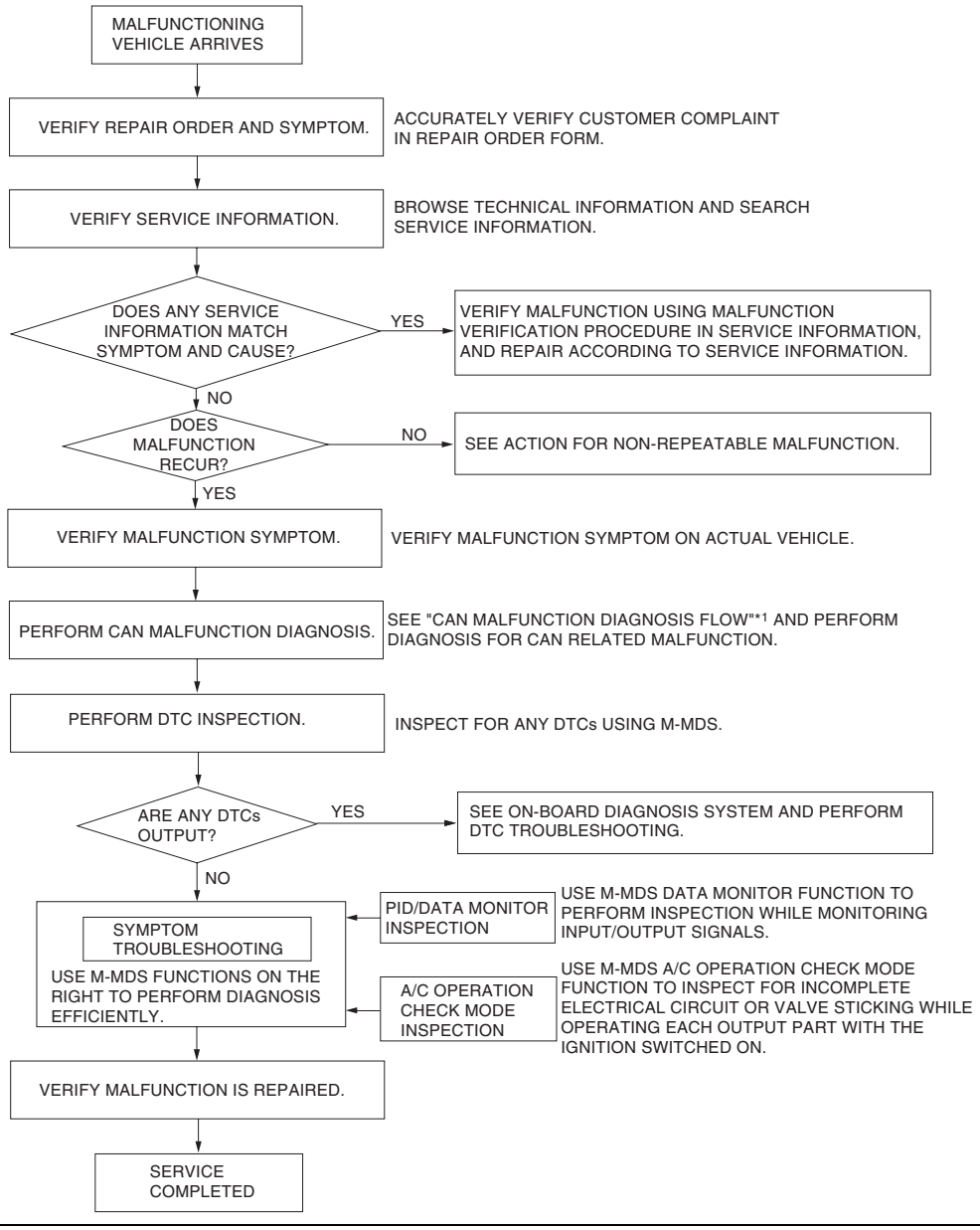

ac5wzw0000276

07

ON-BOARD DIAGNOSTIC [FULL-AUTO AIR CONDITIONER]

*1 : 10-02A-3 CONTROLLER AREA NETWORK (CAN) MALFUNCTION DIAGNOSIS FLOW [SKYACTIV-G 2.0 (L.H.D.)], 10-02B-3 CONTROLLER AREA NETWORK (CAN) MALFUNCTION DIAGNOSIS FLOW [SKYACTIV-G 2.0 (R.H.D.)], 10-02C-3 CONTROLLER AREA NETWORK (CAN) MALFUNCTION DIAGNOSIS FLOW [SKYACTIV-D 2.2 (L.H.D.)], 10-02D-3 CONTROLLER AREA NETWORK (CAN) MALFUNCTION DIAGNOSIS FLOW [SKYACTIV-D 2.2 (R.H.D.)]

Action for non-repeatable malfunction

- If the malfunction does not recur, verify the malfunction cause by performing the following actions:
  - — Based on the repair order form, attempt to drive the vehicle or perform tests to replicate the malfunction, record the data (such as CAN circuit voltage) at that time, and detect the malfunction cause.
  - — Refer to [Determining Open Circuit Location] based on the recorded DTC, shake the wiring harness or connector of the electrical component which is suspected to be the cause of the malfunction, and inspect for any changes in CAN system voltage or occurrence of any DTCs.

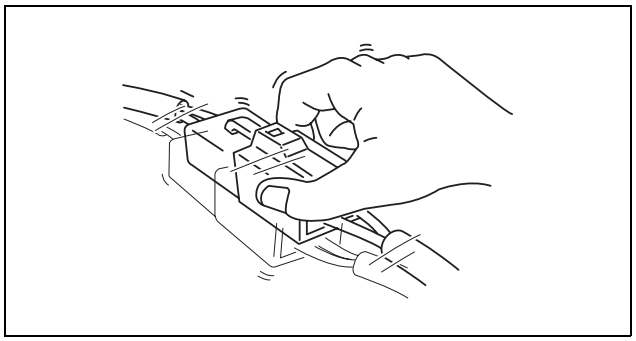

aaxjjw00007274

  - — Inspect the female terminals on the connector of the electric component which is suspected to be the cause of the malfunction for poor connection.

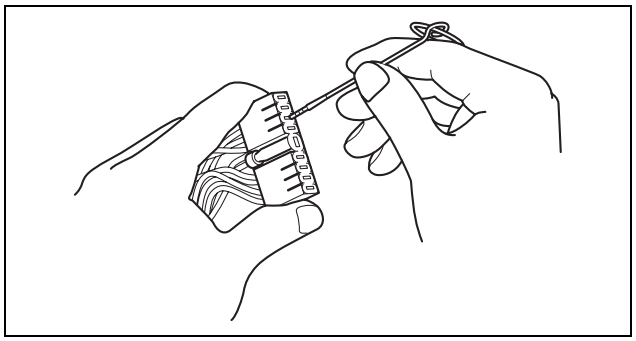

am3zzw0001143

ON-BOARD DIAGNOSTIC [FULL-AUTO AIR CONDITIONER]

FLOWCHART [FULL-AUTO AIR CONDITIONER]

id0702c1820200

- Use the following flowchart to verify the cause of the problem.

Note

- When inspecting past malfunction codes, inspect only the DTCs that were indicated before beginning the inspection. A mis-diagnosis could occur as a result of new DTCs being added while performing an inspection by disconnecting related parts or connectors.
- When DTCs of the present malfunction are no longer output after present or past malfunctions or both have been repaired, be sure to clear the past malfunction from memory to prevent repair of malfunctions that have already been repaired.

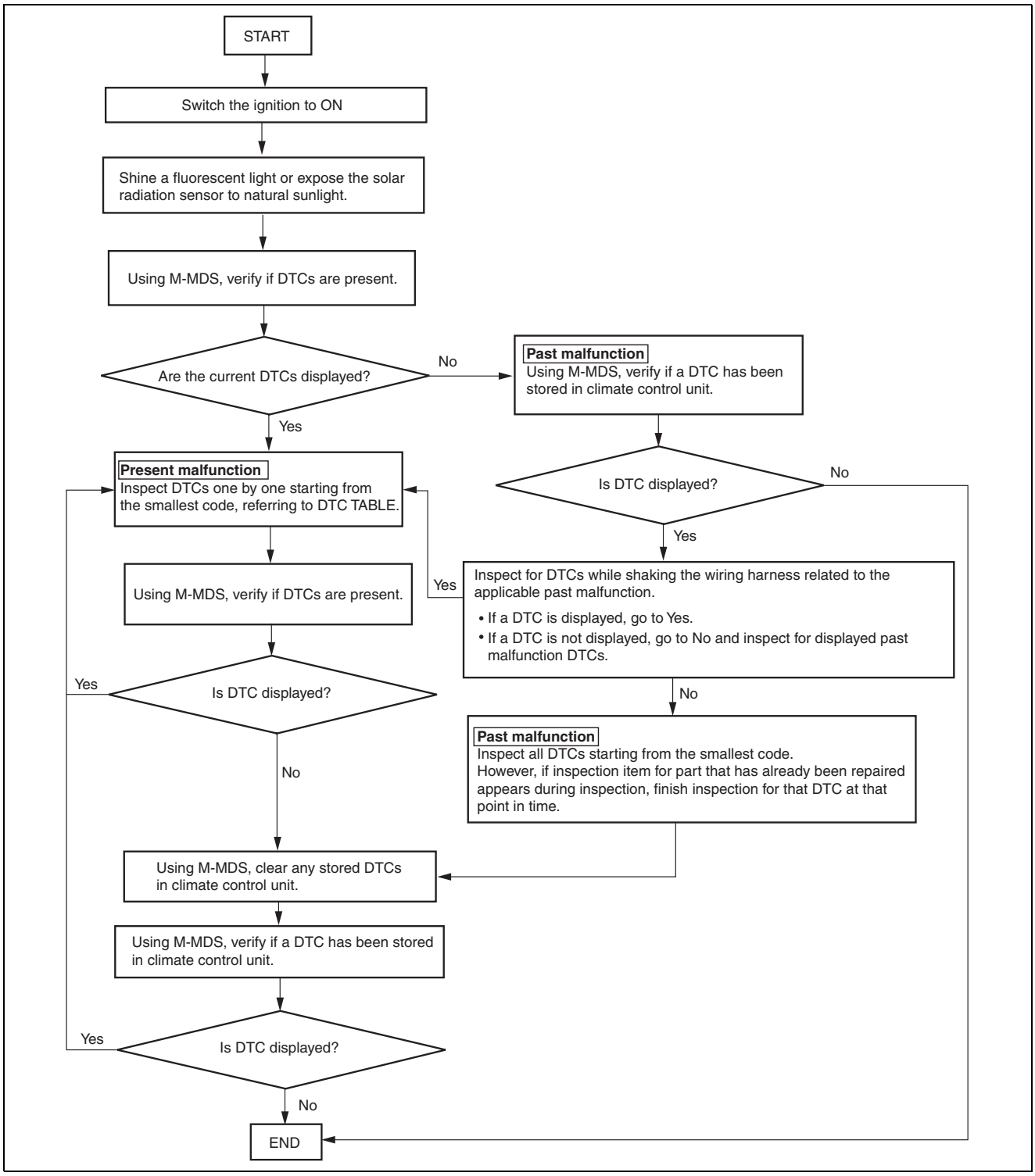

am3zzw0001093

ON-BOARD DIAGNOSTIC [FULL-AUTO AIR CONDITIONER]

DTC DISPLAY [FULL-AUTO AIR CONDITIONER]

id0702c1801500

Note
- If power from the battery is interrupted, the heater control unit will go into a non-configured state because the memory for the configuration information is erased. If the ignition is switched ON (engine off) at this time, DTC U2300:55 is detected.
- Normally, the configuration is re-performed within 6 s after the ignition is switched ON (engine off).
- After performing the configuration, DTC U2300:55 will be cleared if the ignition is switched ON (engine off) after the ignition is switched off.

CMDTC Self Test
1. Switch the ignition to off.
2. Switch the ignition to ON (engine off) and wait for **6 s or more**.
3. Switch the ignition to off.
4. Connect the M-MDS to the DLC-2.
5. Expose the solar radiation sensor to natural sunlight.

Note
- If natural sunlight is not shone on the solar radiation sensor, the climate control unit determines a malfunction and indicates DTC “B1A63:12, B1A63:13, B1A64:12, B1A64:13”.

6. After the vehicle is identified, select the following items from the initialization screen of the M-MDS.
   (1) Select “Self Test”.
   (2) Select “All CMDTCs”.
7. Verify the DTC according to the directions on the screen.
   - If any DTCs are displayed, perform troubleshooting according to the corresponding DTC inspection.
8. After completion of repairs, clear all DTCs stored in the climate control unit. (See 07-02-7 CLEARING DTC [FULL-AUTO AIR CONDITIONER].)

ODDTC Self Test
1. Switch the ignition to off.
2. Switch the ignition to ON (engine off) and wait for **6 s or more**.
3. Switch the ignition to off.
4. Connect the M-MDS to the DLC-2.
5. Expose the solar radiation sensor to natural sunlight.

Note
- If natural sunlight is not shone on the solar radiation sensor, the climate control unit determines a malfunction and indicates DTC “B1A63:12, B1A63:13, B1A64:12, B1A64:13”.

6. After the vehicle is identified, select the following items from the initialization screen of the M-MDS.
   (1) Select “Self Test”.
   (2) Select “Modules”.
   (3) Select “EATC”.
7. Verify the DTC according to the directions on the screen.
   - If any DTCs are displayed, perform troubleshooting according to the corresponding DTC inspection.
8. After completion of repairs, clear all DTCs stored in the climate control unit. (See 07-02-7 CLEARING DTC [FULL-AUTO AIR CONDITIONER].)

ON-BOARD DIAGNOSTIC [FULL-AUTO AIR CONDITIONER]

CLEARING DTC [FULL-AUTO AIR CONDITIONER]

id0702c1801600

CMDTC Clearing DTC Procedure

1. Connect the M-MDS to the DLC-2.
2. After the vehicle is identified, select the following items from the initialization screen of the M-MDS.
   (1) Select “Self Test”.
   (2) Select “All CMDTCs”.
3. Verify the DTC according to the directions on the screen.
4. Press the clear button on the DTC screen to clear the DTC.
5. Switch the ignition to off.
6. Switch the ignition ON (engine off or on) and wait for **5 s more.**
7. Perform DTC inspection. (See 07-02-6 DTC DISPLAY [FULL-AUTO AIR CONDITIONER].)
8. Verify that no DTCs are displayed.

ODDTC Clearing DTC Procedure

1. Connect the M-MDS to the DLC-2.
2. After the vehicle is identified, select the following items from the initialization screen of the M-MDS.
   (1) Select “Self Test”.
   (2) Select “Modules”.
   (3) Select “EATC”.
3. Verify the DTC according to the directions on the screen.
4. Press the clear button on the DTC screen to clear the DTC.
5. Switch the ignition to off.
6. Switch the ignition ON (engine off or on) and wait for **5 s more.**
7. Perform DTC inspection. (See 07-02-6 DTC DISPLAY [FULL-AUTO AIR CONDITIONER].)
8. Verify that no DTCs are displayed.

DTC TABLE [FULL-AUTO AIR CONDITIONER]

id0702c1801700

X: Applicable
–: Not applicable

DTC	Warning lamp	Malfunction location	Detected condition	Fail safe	Drive cycle	Self test type*1	Memory function	Page
B1081:71	—	• Driver-side air mix actuator (L.H.D.) • Passenger-side air mix actuator (R.H.D.)	Motor lock	X	—	C	X	(See 07-02-9 DTC B1081:71, B1082:71 [FULL-AUTO AIR CONDITIONER].)
B1082:71	—	• Passenger-side air mix actuator (L.H.D.) • Driver-side air mix actuator (R.H.D.)	Motor lock	X	—	C	X	(See 07-02-9 DTC B1081:71, B1082:71 [FULL-AUTO AIR CONDITIONER].)
B1086:71	—	Airflow mode actuator	Motor lock	X	—	C	X	(See 07-02-12 DTC B1086:71 [FULL-AUTO AIR CONDITIONER].)
B1A61:11	—	Cabin temperature sensor	Circuit short to ground	X	—	C, D	X	(See 07-02-14 DTC B1A61:11, B1A61:13 [FULL-AUTO AIR CONDITIONER].)
B1A61:13	—		Circuit open	X	—	C, D	X	
B1A63:12	—	Solar radiation sensor (RH)	Circuit shot to power supply	—	—	C, D	X	(See 07-02-17 DTC B1A63:12, B1A63:13, B1A64:12, B1A64:13 [FULL-AUTO AIR CONDITIONER].)
B1A63:13	—		Circuit open	—	—	D	X	
B1A64:12	—	Solar radiation sensor (LH)	Circuit shot to power supply	—	—	C, D	X	(See 07-02-17 DTC B1A63:12, B1A63:13, B1A64:12, B1A64:13 [FULL-AUTO AIR CONDITIONER].)
B1A64:13	—		Circuit open	—	—	D	X	
B1B71:11	—	Evaporator temperature sensor	Circuit short to ground	X	—	C, D	X	(See 07-02-20 DTC B1B71:11, B1B71:13 [FULL-AUTO AIR CONDITIONER].)
B1B71:13	—		Circuit open	X	—	C, D	X	

ON-BOARD DIAGNOSTIC [FULL-AUTO AIR CONDITIONER]

DTC	Warning lamp	Malfunction location	Detected condition	Fail safe	Drive cycle	Self test type*1	Memory function	Page
B1C1A:12	—	• Driver-side air mix actuator (potentiometer) (L.H.D.) • Passenger-side air mix actuator (potentiometer) (R.H.D.)	Circuit short to power supply	X	—	C, D	X	(See 07-02-22 DTC B1C1A:12, B1C1A:13, B1C1B:12, B1C1B:13 [FULL-AUTO AIR CONDITIONER].)
B1C1A:13	—		Circuit open	X	—	C, D	X	
B1C1B:12	—	• Passenger-side air mix actuator (potentiometer) (L.H.D.) • Driver-side air mix actuator (potentiometer) (R.H.D.)	Circuit short to power supply	X	—	C, D	X	(See 07-02-22 DTC B1C1A:12, B1C1A:13, B1C1B:12, B1C1B:13 [FULL-AUTO AIR CONDITIONER].)
B1C1B:13	—		Circuit open	X	—	C, D	X	
B1C1C:12	—	Airflow mode actuator (potentiometer)	Circuit short to power supply	X	—	C, D	X	(See 07-02-26 DTC B1C1C:12, B1C1C:13 [FULL-AUTO AIR CONDITIONER].)
B1C1C:13	—		Circuit open	X	—	C, D	X	
B1D22:11	—	Heater core temperature sensor	Circuit short to ground	X	—	C, D	X	(See 07-02-29 DTC B1D22:11, B1D22:13 [FULL-AUTO AIR CONDITIONER].)
B1D22:13	—		Circuit open	X	—	C, D	X	
U0010:88	—	CAN communication system	Bus off	X	—	C	X	(See 10-02A-1 FOREWORD [SKYACTIV-G 2.0 (L.H.D.)].) (See 10-02B-1 FOREWORD [SKYACTIV-G 2.0 (R.H.D.)].) (See 10-02C-1 FOREWORD [SKYACTIV-D 2.2 (L.H.D.)].) (See 10-02D-1 FOREWORD [SKYACTIV-D 2.2 (R.H.D.)].)
U0155:00	—	Lost communication with instrument cluster	No sub type information	X	—	C, D	X	
U0423:68	—	Invalid date received from Instrument cluster	Event information	X	—	C, D	X	(See 07-02-31 DTC U0423:68 [FULL-AUTO AIR CONDITIONER].)
U200D:11	—	Climate control unit circuit voltage (+5V)	Circuit short to ground	—	—	C, D	X	(See 07-02-32 DTC U200D:11 [FULL-AUTO AIR CONDITIONER].)
U2300:54	—	Configuration error	Data not received	—	—	C, D	X	(See 07-02-35 DTC U2300:54, U2300:55, U2300:56, U2300:64 [FULL-AUTO AIR CONDITIONER].)
U2300:55	—		Not configured	—	—	C, D	—	
U2300:56	—		Ineffective/ non-interchangeable data read	—	—	C, D	X	
U2300:64	—		Error value read	—	—	C, D	X	

ON-BOARD DIAGNOSTIC [FULL-AUTO AIR CONDITIONER]

DTC	Warning lamp	Malfunction location	Detected condition	Fail safe	Drive cycle	Self test type*1	Memory function	Page
U3003:16	—	Climate control unit power supply voltage (B+, IG1)	Power supply voltage decreases (**10 V or less**)	X	—	C, D	X	(See 07-02-36 DTC U3003:16, U3003:17 [FULL-AUTO AIR CONDITIONER].)
U3003:17	—	Climate control unit power supply voltage (B+, IG1)	Power supply voltage increases (**17.3 V or more** (B+, IG1))	X	—	C, D	X	

*1 : C: CMDTC self test, D: ODDTC self test

DTC B1081:71, B1082:71 [FULL-AUTO AIR CONDITIONER]

id0702c1816500

System malfunction location (L.H.D)	• **B1081:71: Driver-side air mix actuator motor lock** • **B1082:71: Passenger-side air mix actuator motor lock**
System malfunction location (R.H.D)	• **B1081:71: Passenger-side air mix actuator motor lock** • **B1082:71: Driver-side air mix actuator motor lock**
Detection condition	• Air mix actuator motor lock
Fail-safe	**Malfunction determined when IG SW at ON** • Air mix actuator drive signal is stopped right when the malfunction is determined. **Malfunction already exists when IG SW turned to ON** • Twenty seconds after ignition is switched ON, the air mix actuator drive signal is output normally again. Afterwards, motor output is stopped during malfunction determination.
Possible cause	• Connector or terminal malfunction • Air mix actuator malfunction • A/C unit (air mix link and air mix crank) malfunction • Open circuit in wiring harness between climate control unit and air mix actuator • Short to ground in wiring harness between climate control unit and air mix actuator • Climate control unit malfunction

ON-BOARD DIAGNOSTIC [FULL-AUTO AIR CONDITIONER]

System malfunction location (L.H.D)	• **B1081:71: Driver-side air mix actuator motor lock** • **B1082:71: Passenger-side air mix actuator motor lock**
System malfunction location (R.H.D)	• **B1081:71: Passenger-side air mix actuator motor lock** • **B1082:71: Driver-side air mix actuator motor lock**

• PASSENGER-SIDE AIR MIX ACTUATOR (L.H.D.)
• DRIVER-SIDE AIR MIX ACTUATOR (R.H.D.)

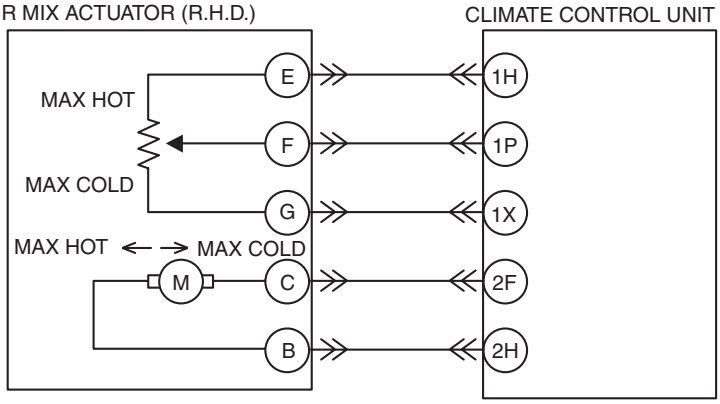

• DRIVER-SIDE AIR MIX ACTUATOR (L.H.D.)
• PASSENGER-SIDE AIR MIX ACTUATOR (R.H.D.)

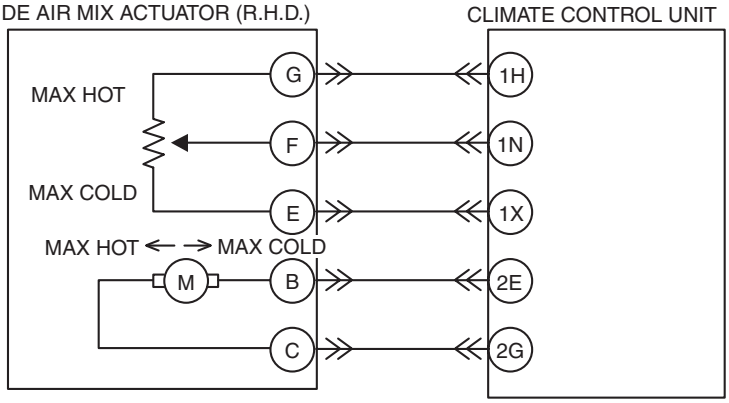

AIR MIX ACTUATOR WIRING HARNESS SIDE CONNECTOR

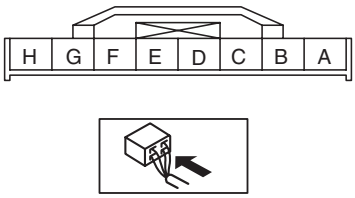

CLIMATE CONTROL UNIT WIRING HARNESS SIDE CONNECTOR

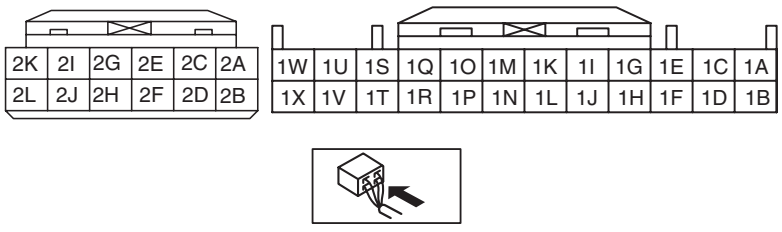

ON-BOARD DIAGNOSTIC [FULL-AUTO AIR CONDITIONER]

Diagnostic Procedure

STEP	INSPECTION		ACTION
1	**INSPECT AIR MIX ACTUATOR CONNECTOR** • Switch the ignition off. • Disconnect the negative battery cable. (See 01-17A-11 NEGATIVE BATTERY CABLE DISCONNECTION/CONNECTION [SKYACTIV-G 2.0].)(See 01-17A-13 NEGATIVE BATTERY CABLE DISCONNECTION/CONNECTION [SKYACTIV-G 2.0 (WITHOUT i-stop)].)(See 01-17B-9 NEGATIVE BATTERY CABLE DISCONNECTION/CONNECTION [SKYACTIV-D 2.2].) • Disconnect the air mix actuator connector. (See 07-40A-7 AIR MIX ACTUATOR REMOVAL/INSTALLATION [FULL-AUTO AIR CONDITIONER].) • Inspect the connector and terminals (corrosion, damage, pin disconnection). • Are the connector and terminals normal?	Yes	Go to the next step.
		No	Repair/replace the connector or terminal. After repair procedure, go to the next step.
2	**INSPECT AIR MIX ACTUATOR OPERATION** • Disconnect the air mix actuator connector. • Apply battery positive voltage and connect the ground to the air mix actuator terminals B and C, and then inspect the air mix actuator. • Does the air mix actuator operate?	Yes	Connect the connector, then go to Step 4.
		No	Go to the next step.
3	**INSPECT AIR MIX LINK OPERATION** • Remove the air mix actuator. • Operate the air mix link manually. • Does the air mix link operate smoothly?	Yes	Replace the air mix actuator. (See 07-40A-7 AIR MIX ACTUATOR REMOVAL/INSTALLATION [FULL-AUTO AIR CONDITIONER].) Go to the next step.
		No	Replace the air mix link and the air mix crank. Go to the next step.
4	**INSPECT AIR MIX ACTUATOR CIRCUIT FOR OPEN CIRCUIT OR SHORT TO GROUND** • Disconnect the climate control unit connector. (See 07-40A-32 CLIMATE CONTROL UNIT REMOVAL/INSTALLATION [FULL-AUTO AIR CONDITIONER].) • Apply battery positive voltage and connect the ground to the climate control unit terminal 2E and 2G, and then inspect the air mix actuator. (Driver-side) • Apply battery positive voltage and connect the ground to the climate control unit terminal 2F and 2H, and then inspect the air mix actuator. (Passenger-side) • Does the air mix actuator operate?	Yes	Go to the next step.
		No	Repair/replace the malfunctioning vehicle wiring harness. After repair procedure, go to the next step.
5	**VERIFY CLIMATE CONTROL UNIT CONNECTOR CONDITION** • Inspect the connector and terminals (corrosion, damage, pin disconnection). • Are the connector and terminals normal?	Yes	Go to the next step.
		No	Repair/replace the malfunctioning vehicle wiring harness, connector, or terminal. After repair procedure, go to the next step.
6	**VERIFY THAT SAME DTC IS NOT OUTPUT AGAIN** • Reconnect the disconnected connectors. • Connect the negative battery cable. (See 01-17A-11 NEGATIVE BATTERY CABLE DISCONNECTION/CONNECTION [SKYACTIV-G 2.0].)(See 01-17A-13 NEGATIVE BATTERY CABLE DISCONNECTION/CONNECTION [SKYACTIV-G 2.0 (WITHOUT i-stop)].)(See 01-17B-9 NEGATIVE BATTERY CABLE DISCONNECTION/CONNECTION [SKYACTIV-D 2.2].) • Clear the past malfunction from memory. • Verify DTCs. • Is DTC B1081:71 or B1082:71 output?	Yes	Repeat the inspection from Step 1. • If the malfunction does not recur, go to the next step. • If the malfunction recurs, replace the climate control unit. (See 07-40A-32 CLIMATE CONTROL UNIT REMOVAL/INSTALLATION [FULL-AUTO AIR CONDITIONER].) Go to the next step.
		No	Go to the next step.

ON-BOARD DIAGNOSTIC [FULL-AUTO AIR CONDITIONER]

STEP	INSPECTION		ACTION
7	**VERIFY THAT NO OTHER DTCs ARE PRESENT** • Verify other DTCs displayed. • Are any other DTCs output?	Yes	Perform the corresponding DTC inspection.
		No	DTC troubleshooting completed.

DTC B1086:71 [FULL-AUTO AIR CONDITIONER]

id0702c1816700

System malfunction location	• **Airflow mode actuator motor lock**
Detection condition	• Airflow mode actuator motor lock
Fail-safe	**Malfunction determined when IG SW at ON** • Airflow mode actuator drive signal is stopped right when the malfunction is determined. **Malfunction already exists when IG SW turned to ON** • Nine seconds after ignition is switched ON, the airflow mode actuator drive signal is output normally again. Afterwards, motor output is stopped during malfunction determination.
Possible cause	• Connector or terminal malfunction • Airflow mode actuator malfunction • A/C unit (airflow mode link and airflow mode crank) malfunction • Open circuit in wiring harness between climate control unit and airflow mode actuator • Short to ground in wiring harness between climate control unit and airflow mode actuator • Climate control unit malfunction

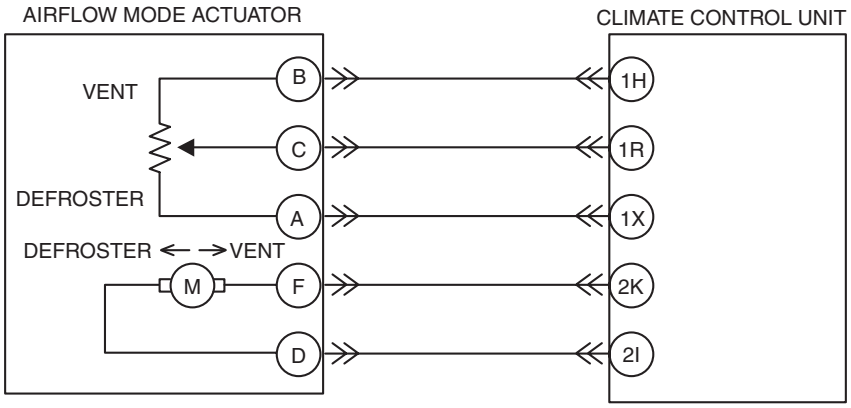

AIRFLOW MODE ACTUATOR WIRING HARNESS SIDE CONNECTOR

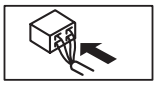

CLIMATE CONTROL UNIT WIRING HARNESS SIDE CONNECTOR

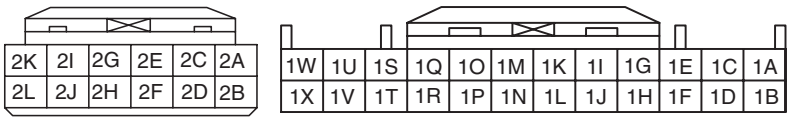

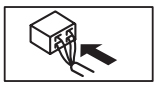

ON-BOARD DIAGNOSTIC [FULL-AUTO AIR CONDITIONER]

Diagnostic Procedure

STEP	INSPECTION		ACTION
1	**INSPECT AIRFLOW MODE ACTUATOR CONNECTOR** • Switch the ignition off. • Disconnect the negative battery cable. (See 01-17A-11 NEGATIVE BATTERY CABLE DISCONNECTION/CONNECTION [SKYACTIV-G 2.0].)(See 01-17A-13 NEGATIVE BATTERY CABLE DISCONNECTION/CONNECTION [SKYACTIV-G 2.0 (WITHOUT i-stop)].)(See 01-17B-9 NEGATIVE BATTERY CABLE DISCONNECTION/CONNECTION [SKYACTIV-D 2.2].) • Disconnect the airflow mode actuator connector. (See 07-40A-13 AIRFLOW MODE ACTUATOR REMOVAL/INSTALLATION [FULL-AUTO AIR CONDITIONER].) • Inspect the connector and terminals (corrosion, damage, pin disconnection). • Are the connector and terminals normal?	Yes	Go to the next step.
		No	Repair/replace the connector or terminal. After repair procedure, go to the next step.
2	**INSPECT AIRFLOW MODE ACTUATOR OPERATION** • Disconnect the airflow mode actuator connector. • Apply battery positive voltage and connect the ground to the airflow mode actuator terminals F and D, and then inspect the airflow mode actuator. • Does the airflow mode actuator operate?	Yes	Connect the connector, then go to Step 4.
		No	Go to the next step.
3	**INSPECT AIRFLOW MODE MAIN LINK OPERATION** • Remove the airflow mode actuator. • Operate the airflow mode main link manually. • Does the airflow mode main link operate smoothly?	Yes	Replace the airflow mode actuator. (See 07-40A-13 AIRFLOW MODE ACTUATOR REMOVAL/INSTALLATION [FULL-AUTO AIR CONDITIONER].) Go to the next step.
		No	Replace the airflow mode main link, airflow mode sub link, and the airflow mode crank. Go to the next step.
4	**INSPECT AIRFLOW MODE ACTUATOR CIRCUIT FOR OPEN CIRCUIT OR SHORT TO GROUND** • Disconnect the climate control unit connector. (See 07-40A-32 CLIMATE CONTROL UNIT REMOVAL/INSTALLATION [FULL-AUTO AIR CONDITIONER].) • Apply battery positive voltage and connect the ground to the climate control unit connector terminals 2K and 2I, and then inspect the airflow mode actuator. • Does the airflow mode actuator operate?	Yes	Go to the next step.
		No	Repair/replace the malfunctioning vehicle wiring harness. After repair procedure, go to the next step.
5	**VERIFY CLIMATE CONTROL UNIT CONNECTOR CONDITION** • Inspect the connector and terminals (corrosion, damage, pin disconnection). • Are the connector and terminals normal?	Yes	Go to the next step.
		No	Repair/replace the malfunctioning vehicle wiring harness, connector, or terminal. After repair procedure, go to the next step.
6	**VERIFY THAT SAME DTC IS NOT OUTPUT AGAIN** • Reconnect the disconnected connectors. • Connect the negative battery cable. (See 01-17A-11 NEGATIVE BATTERY CABLE DISCONNECTION/CONNECTION [SKYACTIV-G 2.0].)(See 01-17A-13 NEGATIVE BATTERY CABLE DISCONNECTION/CONNECTION [SKYACTIV-G 2.0 (WITHOUT i-stop)].)(See 01-17B-9 NEGATIVE BATTERY CABLE DISCONNECTION/CONNECTION [SKYACTIV-D 2.2].) • Clear the past malfunction from memory. • Verify DTCs. • Is DTC B1086:71 output?	Yes	Repeat the inspection from Step 1. • If the malfunction does not recur, go to the next step. • If the malfunction recurs, replace the climate control unit. (See 07-40A-32 CLIMATE CONTROL UNIT REMOVAL/INSTALLATION [FULL-AUTO AIR CONDITIONER].) Go to the next step.
		No	Go to the next step.

ON-BOARD DIAGNOSTIC [FULL-AUTO AIR CONDITIONER]

STEP	INSPECTION		ACTION
7	**VERIFY THAT NO OTHER DTCs ARE PRESENT** • Verify other DTCs displayed. • Are any other DTCs output?	Yes	Perform the corresponding DTC inspection.
		No	DTC troubleshooting completed.

DTC B1A61:11, B1A61:13 [FULL-AUTO AIR CONDITIONER]

id0702c1816800

System malfunction location	• **B1A61:11: Cabin temperature sensor circuit short to ground** • **B1A61:13: Cabin temperature sensor circuit open**
Detection condition	• Malfunction in wiring harness between cabin temperature sensor and climate control unit
Fail-safe	**Malfunction determined when IG SW at ON** • Cabin temperature sensor input value is fixed at the value right before the malfunction. **Malfunction already exists when IG SW turned to ON** • Cabin temperature sensor input value is fixed at **25 °C {77 °F}**.
Possible cause	• Connector or terminal malfunction • Cabin temperature sensor malfunction • Open circuit in wiring harness between climate control unit and cabin temperature sensor • Short to ground in wiring harness between climate control unit and cabin temperature sensor • Climate control unit malfunction

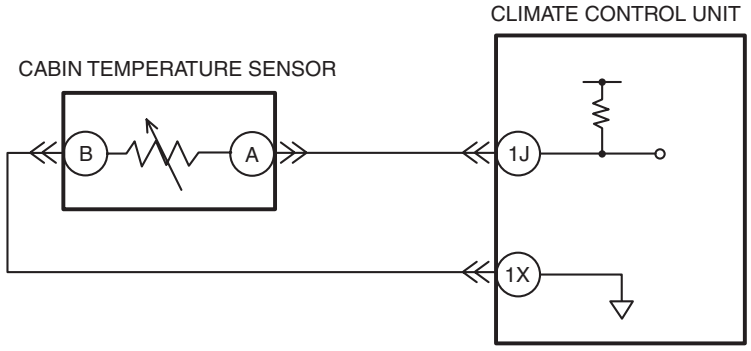

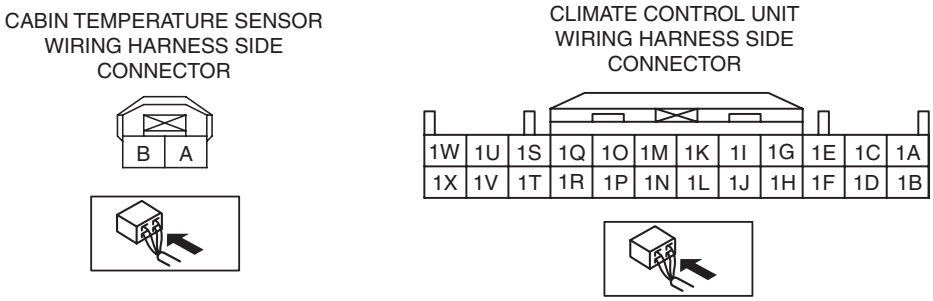

ON-BOARD DIAGNOSTIC [FULL-AUTO AIR CONDITIONER]

Diagnostic Procedure

STEP	INSPECTION		ACTION
1	**INSPECT CABIN TEMPERATURE SENSOR CONNECTOR** • Switch the ignition off. • Disconnect the negative battery cable. (See 01-17A-11 NEGATIVE BATTERY CABLE DISCONNECTION/CONNECTION [SKYACTIV-G 2.0].)(See 01-17A-13 NEGATIVE BATTERY CABLE DISCONNECTION/CONNECTION [SKYACTIV-G 2.0 (WITHOUT i-stop)].)(See 01-17B-9 NEGATIVE BATTERY CABLE DISCONNECTION/CONNECTION [SKYACTIV-D 2.2].) • Disconnect the cabin temperature sensor connector. • Inspect the connector and terminals (corrosion, damage, pin disconnection). • Are the connector and terminals normal?	Yes	Go to the next step.
		No	Repair/replace the connector or terminal. After repair procedure, go to the next step.
2	**INSPECT CABIN TEMPERATURE SENSOR** • Inspect the cabin temperature sensor. (See 07-40A-26 CABIN TEMPERATURE SENSOR INSPECTION [FULL-AUTO AIR CONDITIONER].) • Is it normal?	Yes	Go to the next step.
		No	Replace the cabin temperature sensor. (See 07-40A-23 CABIN TEMPERATURE SENSOR REMOVAL/INSTALLATION [FULL-AUTO AIR CONDITIONER].) Go to the next step.
3	**INSPECT CABIN TEMPERATURE SENSOR CIRCUIT FOR OPEN CIRCUIT** • Disconnect the climate control unit connector and the cabin temperature sensor connector. • Inspect for continuity between the following terminals (wiring harness-side): — Climate control unit terminal 1J—cabin temperature sensor terminal A — Climate control unit terminal 1X—cabin temperature sensor terminal B • Is there continuity?	Yes	Go to the next step.
		No	Repair the wiring harness. Go to the next step.
4	**INSPECT CABIN TEMPERATURE SENSOR CIRCUIT FOR SHORT TO GROUND** • Inspect for continuity between the following terminals (wiring harness-side) and body ground: — Climate control unit 1J • Is there continuity?	Yes	Repair the wiring harness. Go to the next step.
		No	Connect the climate control unit connector, then go to the next step.
5	**VERIFY CLIMATE CONTROL UNIT CONNECTOR CONDITION** • Inspect the connector and terminals (corrosion, damage, pin disconnection). • Are the connector and terminals normal?	Yes	Go to the next step.
		No	Repair/replace the malfunctioning vehicle wiring harness, connector, or terminal. After repair procedure, go to the next step.
6	**INSPECT CABIN TEMPERATURE SENSOR CIRCUIT** • Connect the climate control unit connector. • Connect the negative battery cable. (See 01-17A-11 NEGATIVE BATTERY CABLE DISCONNECTION/CONNECTION [SKYACTIV-G 2.0].)(See 01-17A-13 NEGATIVE BATTERY CABLE DISCONNECTION/CONNECTION [SKYACTIV-G 2.0 (WITHOUT i-stop)].)(See 01-17B-9 NEGATIVE BATTERY CABLE DISCONNECTION/CONNECTION [SKYACTIV-D 2.2].) • Switch the ignition ON (engine off or on). • Inspect the voltage at the following climate control unit terminal (wiring harness-side). — Terminal 1J (cabin temperature sensor input signal) • Is the voltage normal? (**Approx. 5 V**)	Yes	The system is normal at present. Go to the next step.
		No	Go to the next step.

ON-BOARD DIAGNOSTIC [FULL-AUTO AIR CONDITIONER]

STEP	INSPECTION		ACTION
7	**VERIFY THAT SAME DTC IS NOT OUTPUT AGAIN** • Switch the ignition off. • Disconnect the negative battery cable. • Reconnect the disconnected connectors. • Connect the negative battery cable. (See 01-17A-11 NEGATIVE BATTERY CABLE DISCONNECTION/CONNECTION [SKYACTIV-G 2.0].)(See 01-17A-13 NEGATIVE BATTERY CABLE DISCONNECTION/CONNECTION [SKYACTIV-G 2.0 (WITHOUT i-stop)].)(See 01-17B-9 NEGATIVE BATTERY CABLE DISCONNECTION/CONNECTION [SKYACTIV-D 2.2].) • Clear the past malfunction from memory. • Verify DTCs. • Is DTC B1A61:11 or B1A61:13 output?	Yes	Repeat the inspection from Step 1. • If the malfunction does not recur, go to the next step. • If the malfunction recurs, replace the climate control unit. (See 07-40A-32 CLIMATE CONTROL UNIT REMOVAL/INSTALLATION [FULL-AUTO AIR CONDITIONER].) Go to the next step.
		No	Go to the next step.
8	**VERIFY THAT NO OTHER DTCs ARE PRESENT** • Verify other DTCs displayed. • Are any other DTCs output?	Yes	Perform the corresponding DTC inspection.
		No	DTC troubleshooting completed.

ON-BOARD DIAGNOSTIC [FULL-AUTO AIR CONDITIONER]

DTC B1A63:12, B1A63:13, B1A64:12, B1A64:13 [FULL-AUTO AIR CONDITIONER]

id0702c1730000

System malfunction location	• **B1A63:12: Solar radiation sensor (RH) circuit short to power supply** • **B1A63:13: Solar radiation sensor (RH) circuit open** • **B1A64:12: Solar radiation sensor (LH) circuit short to power supply** • **B1A64:13: Solar radiation sensor (LH) circuit open**
Detection condition	• Malfunction in wiring harness between solar radiation sensor and climate control unit
Fail-safe	**Malfunction determined when IG SW at ON** • The solar radiation sensor input value is fixed at the value directly before the malfunction only when the valve is **1,450 W/m^2 or more**. **Malfunction already exists when IG SW turned to ON** • Solar radiation sensor value is fixed at **0 W/m^2**.
Possible cause	• Connector or terminal malfunction • Light amount shone on the solar radiation sensor is insufficient (Circuit is normal) • Solar radiation sensor malfunction • Open circuit in wiring harness between climate control unit and solar radiation sensor • Short to power supply in wiring harness between climate control unit and solar radiation sensor • Climate control unit malfunction

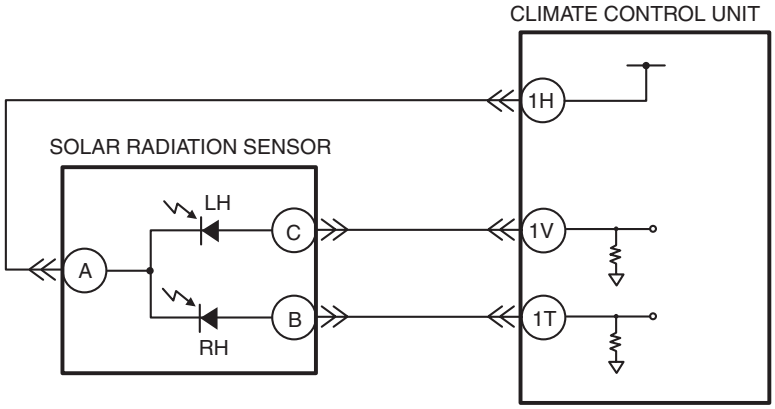

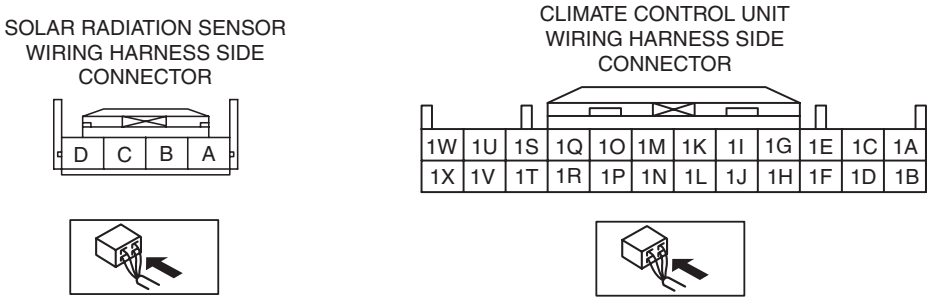

ON-BOARD DIAGNOSTIC [FULL-AUTO AIR CONDITIONER]

Diagnostic Procedure

STEP	INSPECTION		ACTION
1	**INSPECT SOLAR RADIATION SENSOR CONNECTOR** • Switch the ignition off. • Disconnect the negative battery cable. (See 01-17A-11 NEGATIVE BATTERY CABLE DISCONNECTION/CONNECTION [SKYACTIV-G 2.0].)(See 01-17A-13 NEGATIVE BATTERY CABLE DISCONNECTION/CONNECTION [SKYACTIV-G 2.0 (WITHOUT i-stop)].)(See 01-17B-9 NEGATIVE BATTERY CABLE DISCONNECTION/CONNECTION [SKYACTIV-D 2.2].) • Disconnect the solar radiation sensor connector. • Inspect the connector and terminals (corrosion, damage, pin disconnection). • Are the connector and terminals normal?	Yes	Go to the next step.
		No	Repair/replace the connector or terminal. After repair procedure, go to the next step.
2	**INSPECT SOLAR RADIATION SENSOR** • Inspect the solar radiation sensor. (See 07-40A-22 SOLAR RADIATION SENSOR INSPECTION [FULL-AUTO AIR CONDITIONER].) • Is it normal?	Yes	Go to the next step.
		No	Replace the solar radiation sensor. (See 07-40A-21 SOLAR RADIATION SENSOR REMOVAL/INSTALLATION [FULL-AUTO AIR CONDITIONER].) Go to the next step.
3	**INSPECT SOLAR RADIATION SENSOR CIRCUIT FOR OPEN CIRCUIT** • Disconnect the climate control unit connector and the solar radiation sensor connector. • Inspect for continuity between the following terminals (wiring harness-side): — Climate control unit terminal 1H—solar radiation sensor terminal A — Climate control unit terminal 1V—solar radiation sensor terminal C — Climate control unit terminal 1T—solar radiation sensor terminal B • Is there continuity?	Yes	Go to the next step.
		No	Repair the wiring harness. Go to the next step.
4	**INSPECT SOLAR RADIATION SENSOR CIRCUIT FOR SHORT TO POWER SUPPLY** • Connect the negative battery cable. (See 01-17A-11 NEGATIVE BATTERY CABLE DISCONNECTION/CONNECTION [SKYACTIV-G 2.0].)(See 01-17A-13 NEGATIVE BATTERY CABLE DISCONNECTION/CONNECTION [SKYACTIV-G 2.0 (WITHOUT i-stop)].)(See 01-17B-9 NEGATIVE BATTERY CABLE DISCONNECTION/CONNECTION [SKYACTIV-D 2.2].) • Switch the ignition ON (engine off or on). • Measure the voltage at the following terminals (wiring harness-side): — Climate control unit terminal 1H — Climate control unit terminal 1V — Climate control unit terminal 1T • Is the voltage **0V**?	Yes	Go to the next step.
		No	Repair the wiring harness. Go to the next step.

ON-BOARD DIAGNOSTIC [FULL-AUTO AIR CONDITIONER]

STEP	INSPECTION		ACTION
5	**VERIFY CLIMATE CONTROL UNIT CONNECTOR CONDITION** • Switch the ignition off. • Disconnect the negative battery cable. (See 01-17A-11 NEGATIVE BATTERY CABLE DISCONNECTION/CONNECTION [SKYACTIV-G 2.0].)(See 01-17A-13 NEGATIVE BATTERY CABLE DISCONNECTION/CONNECTION [SKYACTIV-G 2.0 (WITHOUT i-stop)].)(See 01-17B-9 NEGATIVE BATTERY CABLE DISCONNECTION/CONNECTION [SKYACTIV-D 2.2].) • Inspect the connector and terminals (corrosion, damage, pin disconnection). • Are the connector and terminals normal?	Yes	Go to the next step.
		No	Repair/replace the malfunctioning vehicle wiring harness, connector, or terminal. After repair procedure, go to the next step.
6	**VERIFY THAT SAME DTC IS NOT OUTPUT AGAIN** • Reconnect the disconnected connectors. • Connect the negative battery cable. (See 01-17A-11 NEGATIVE BATTERY CABLE DISCONNECTION/CONNECTION [SKYACTIV-G 2.0].)(See 01-17A-13 NEGATIVE BATTERY CABLE DISCONNECTION/CONNECTION [SKYACTIV-G 2.0 (WITHOUT i-stop)].)(See 01-17B-9 NEGATIVE BATTERY CABLE DISCONNECTION/CONNECTION [SKYACTIV-D 2.2].) • Clear the past malfunction from memory. • Verify DTCs. • Is DTC B1A63:12, B1A63:13, B1A64:12 or B1A64:13 output?	Yes	Repeat the inspection from Step 1. • If the malfunction does not recur, go to the next step. • If the malfunction recurs, replace the climate control unit. (See 07-40A-32 CLIMATE CONTROL UNIT REMOVAL/INSTALLATION [FULL-AUTO AIR CONDITIONER].) Go to the next step.
		No	Go to the next step.
7	**VERIFY THAT NO OTHER DTCs ARE PRESENT** • Verify other DTCs displayed. • Are any other DTCs output?	Yes	Perform the corresponding DTC inspection.
		No	DTC troubleshooting completed.

ON-BOARD DIAGNOSTIC [FULL-AUTO AIR CONDITIONER]

DTC B1B71:11, B1B71:13 [FULL-AUTO AIR CONDITIONER]

id0702c1817100

System malfunction location	• **B1B71:11: Evaporator temperature sensor circuit short to ground** • **B1B71:13: Evaporator temperature sensor circuit open**
Detection condition	• Malfunction in wiring harness between evaporator temperature sensor and climate control unit
Fail-safe	• A/C output OFF is controlled when the evaporator temperature sensor input value is at **0 °C {32 °F}**.
Possible cause	• Connector or terminal malfunction • Evaporator temperature sensor malfunction • Open circuit in wiring harness between climate control unit and evaporator temperature sensor • Short to ground in wiring harness between climate control unit and evaporator temperature sensor • Climate control unit malfunction

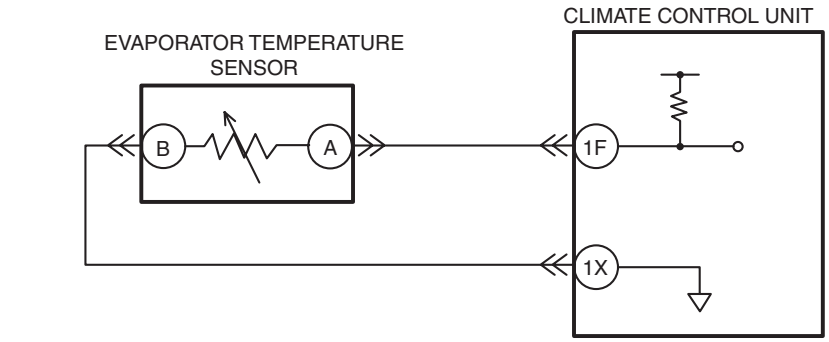

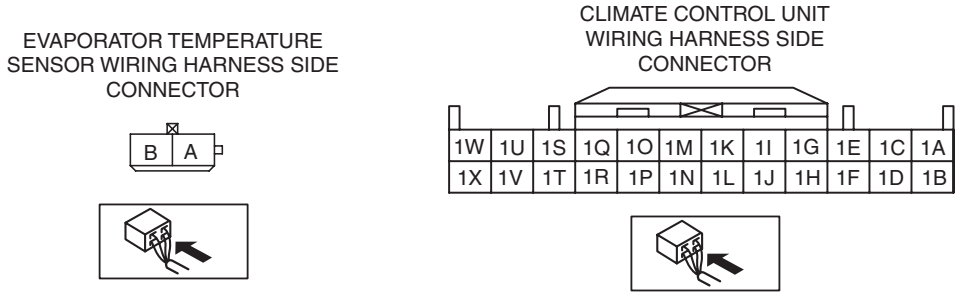

Diagnostic procedure

STEP	INSPECTION		ACTION
1	**INSPECT EVAPORATOR TEMPERATURE SENSOR CONNECTOR** • Switch the ignition off. • Disconnect the negative battery cable. (See 01-17A-11 NEGATIVE BATTERY CABLE DISCONNECTION/CONNECTION [SKYACTIV-G 2.0].)(See 01-17A-13 NEGATIVE BATTERY CABLE DISCONNECTION/CONNECTION [SKYACTIV-G 2.0 (WITHOUT i-stop)].)(See 01-17B-9 NEGATIVE BATTERY CABLE DISCONNECTION/CONNECTION [SKYACTIV-D 2.2].) • Disconnect the evaporator temperature sensor connector. (See 07-11-14 A/C UNIT DISASSEMBLY/ASSEMBLY.) • Inspect the connector and terminals (corrosion, damage, pin disconnection). • Are the connector and terminals normal?	Yes	Go to the next step.
		No	Repair/replace the connector or terminal. After repair procedure, go to the next step.
2	**INSPECT EVAPORATOR TEMPERATURE SENSOR** • Inspect the evaporator temperature sensor. (See 07-40A-27 EVAPORATOR TEMPERATURE SENSOR INSPECTION [FULL-AUTO AIR CONDITIONER].) • Is it normal?	Yes	Go to the next step.
		No	Replace the evaporator temperature sensor. (See 07-11-14 A/C UNIT DISASSEMBLY/ASSEMBLY.) Go to the next step.

ON-BOARD DIAGNOSTIC [FULL-AUTO AIR CONDITIONER]

STEP	INSPECTION		ACTION
3	**INSPECT EVAPORATOR TEMPERATURE SENSOR CIRCUIT FOR OPEN CIRCUIT** • Disconnect the climate control unit connector and the evaporator temperature sensor connector. • Inspect for continuity between the following terminals (wiring harness-side): — Climate control unit terminal1F—evaporator temperature sensor terminal A — Climate control unit terminal 1X—evaporator temperature sensor terminal B • Is there continuity?	Yes	Go to the next step.
		No	Repair the wiring harness. Go to the next step.
4	**INSPECT EVAPORATOR TEMPERATURE SENSOR CIRCUIT FOR SHORT TO GROUND** • Inspect for continuity between the following terminals (wiring harness-side) and body ground: — Climate control unit 1F • Is there continuity?	Yes	Repair the wiring harness. Go to the next step.
		No	Connect the climate control unit connector, then go to the next step.
5	**VERIFY CLIMATE CONTROL UNIT CONNECTOR CONDITION** • Inspect the connector and terminals (corrosion, damage, pin disconnection). • Are the connector and terminals normal?	Yes	Go to the next step.
		No	Repair/replace the malfunctioning vehicle wiring harness, connector, or terminal. After repair procedure, go to the next step.
6	**INSPECT EVAPORATOR TEMPERATURE SENSOR CIRCUIT** • Connect the climate control unit connector. • Connect the negative battery cable. (See 01-17A-11 NEGATIVE BATTERY CABLE DISCONNECTION/CONNECTION [SKYACTIV-G 2.0].)(See 01-17A-13 NEGATIVE BATTERY CABLE DISCONNECTION/CONNECTION [SKYACTIV-G 2.0 (WITHOUT i-stop)].)(See 01-17B-9 NEGATIVE BATTERY CABLE DISCONNECTION/CONNECTION [SKYACTIV-D 2.2].) • Switch the ignition ON (engine off or on). • Inspect the voltage at the following climate control unit terminal (wiring harness-side). — Terminal 1F (evaporator temperature sensor input signal) • Is the voltage normal? (**Approx. 5 V**)	Yes	The system is normal at present. Go to the next step.
		No	Go to the next step.
7	**VERIFY THAT SAME DTC IS NOT OUTPUT AGAIN** • Switch the ignition off. • Disconnect the negative battery cable. • Reconnect the disconnected connectors. • Connect the negative battery cable. (See 01-17A-11 NEGATIVE BATTERY CABLE DISCONNECTION/CONNECTION [SKYACTIV-G 2.0].)(See 01-17A-13 NEGATIVE BATTERY CABLE DISCONNECTION/CONNECTION [SKYACTIV-G 2.0 (WITHOUT i-stop)].)(See 01-17B-9 NEGATIVE BATTERY CABLE DISCONNECTION/CONNECTION [SKYACTIV-D 2.2].) • Clear the past malfunction from memory. • Verify DTCs. • Is DTC B1B71:11 or B1B71:13 output?	Yes	Repeat the inspection from Step 1. • If the malfunction does not recur, go to the next step. • If the malfunction recurs, replace the climate control unit. (See 07-40A-32 CLIMATE CONTROL UNIT REMOVAL/INSTALLATION [FULL-AUTO AIR CONDITIONER].) Go to the next step.
		No	Go to the next step.
8	**VERIFY THAT NO OTHER DTCs ARE PRESENT** • Verify other DTCs displayed. • Are any other DTCs output?	Yes	Perform the corresponding DTC inspection.
		No	DTC troubleshooting completed.

ON-BOARD DIAGNOSTIC [FULL-AUTO AIR CONDITIONER]

DTC B1C1A:12, B1C1A:13, B1C1B:12, B1C1B:13 [FULL-AUTO AIR CONDITIONER]

id0702c1818100

System malfunction location (L.H.D)	• **B1C1A:12: Driver-side air mix actuator (potentiometer) circuit short to power supply** • **B1C1A:13: Driver-side air mix actuator (potentiometer) circuit open** • **B1C1B:12: Passenger-side air mix actuator (potentiometer) circuit short to power supply** • **B1C1B:13: Passenger-side air mix actuator (potentiometer) circuit open**
System malfunction location (R.H.D)	• **B1C1A:12: Passenger-side air mix actuator (potentiometer) circuit short to power supply** • **B1C1A:13: Passenger-side air mix actuator (potentiometer) circuit open** • **B1C1B:12: Driver-side air mix actuator (potentiometer) circuit short to power supply** • **B1C1B:13: Driver-side air mix actuator (potentiometer) circuit open**
Detection condition	• Malfunction in wiring harness between air mix actuator and climate control unit
Fail-safe	**Malfunction determined when IG SW at ON** • Air mix actuator drive signal is stopped right when the malfunction is determined. **Malfunction already exists when IG SW turned to ON** • Control based on ambient temperature.
Possible cause	• Connector or terminal malfunction • Air mix actuator malfunction • Open circuit in wiring harness between climate control unit and air mix actuator • Short to power supply in wiring harness between climate control unit and air mix actuator • Climate control unit malfunction

ON-BOARD DIAGNOSTIC [FULL-AUTO AIR CONDITIONER]

System malfunction location (L.H.D)	• **B1C1A:12: Driver-side air mix actuator (potentiometer) circuit short to power supply** • **B1C1A:13: Driver-side air mix actuator (potentiometer) circuit open** • **B1C1B:12: Passenger-side air mix actuator (potentiometer) circuit short to power supply** • **B1C1B:13: Passenger-side air mix actuator (potentiometer) circuit open**
System malfunction location (R.H.D)	• **B1C1A:12: Passenger-side air mix actuator (potentiometer) circuit short to power supply** • **B1C1A:13: Passenger-side air mix actuator (potentiometer) circuit open** • **B1C1B:12: Driver-side air mix actuator (potentiometer) circuit short to power supply** • **B1C1B:13: Driver-side air mix actuator (potentiometer) circuit open**

• PASSENGER-SIDE AIR MIX ACTUATOR (L.H.D.)
• DRIVER-SIDE AIR MIX ACTUATOR (R.H.D.)

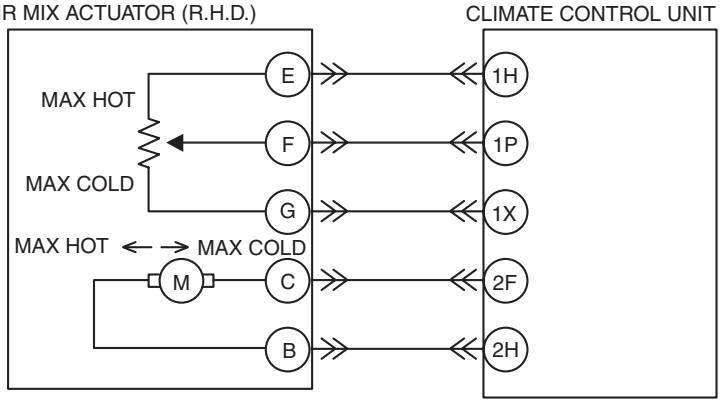

• DRIVER-SIDE AIR MIX ACTUATOR (L.H.D.)
• PASSENGER-SIDE AIR MIX ACTUATOR (R.H.D.)

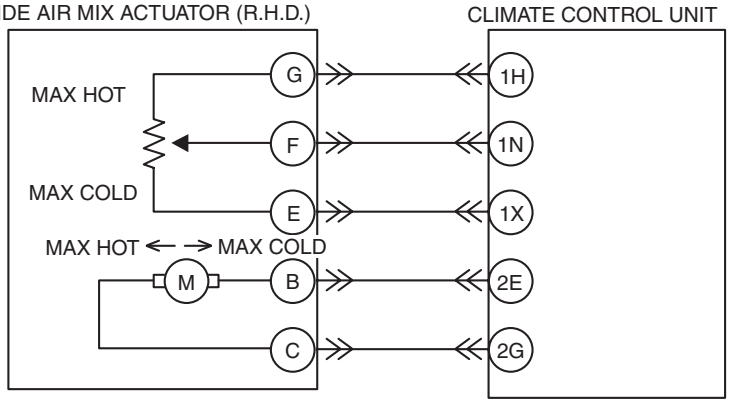

AIR MIX ACTUATOR WIRING HARNESS SIDE CONNECTOR

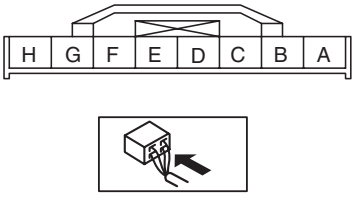

CLIMATE CONTROL UNIT WIRING HARNESS SIDE CONNECTOR

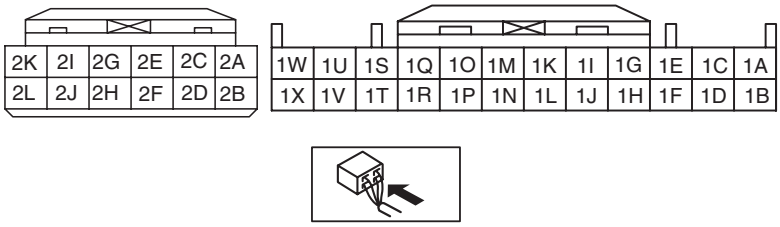

07

ON-BOARD DIAGNOSTIC [FULL-AUTO AIR CONDITIONER]

Diagnostic Procedure

STEP	INSPECTION		ACTION
1	**INSPECT AIR MIX ACTUATOR CONNECTOR** • Switch the ignition off. • Disconnect the negative battery cable. (See 01-17A-11 NEGATIVE BATTERY CABLE DISCONNECTION/CONNECTION [SKYACTIV-G 2.0].)(See 01-17A-13 NEGATIVE BATTERY CABLE DISCONNECTION/CONNECTION [SKYACTIV-G 2.0 (WITHOUT i-stop)].)(See 01-17B-9 NEGATIVE BATTERY CABLE DISCONNECTION/CONNECTION [SKYACTIV-D 2.2].) • Disconnect the air mix actuator connector. (See 07-40A-7 AIR MIX ACTUATOR REMOVAL/INSTALLATION [FULL-AUTO AIR CONDITIONER].) • Inspect the connector and terminals (corrosion, damage, pin disconnection). • Are the connector and terminals normal?	Yes	Go to the next step.
		No	Repair/replace the connector or terminal. After repair procedure, go to the next step.
2	**INSPECT AIR MIX ACTUATOR** • Inspect the air mix actuator. (See 07-40A-9 AIR MIX ACTUATOR INSPECTION [FULL-AUTO AIR CONDITIONER].) • Is it normal?	Yes	Go to the next step.
		No	Replace the air mix actuator. (See 07-40A-7 AIR MIX ACTUATOR REMOVAL/INSTALLATION [FULL-AUTO AIR CONDITIONER].) Go to the next step.
3	**INSPECT AIR MIX ACTUATOR (POTENTIOMETER) CIRCUIT FOR OPEN** • Disconnect the climate control unit connector and the air mix actuator connector. • Inspect for continuity between the following terminals (wiring harness-side): **Driver-side (L.H.D.), Passenger-side (R.H.D.)** — Climate control unit terminal 1H—air mix actuator terminal G — Climate control unit terminal 1N—air mix actuator terminal F — Climate control unit terminal 1X—air mix actuator terminal E **Passenger-side (L.H.D.), Driver-side (R.H.D.)** — Climate control unit terminal 1H—air mix actuator terminal E — Climate control unit terminal 1P—air mix actuator terminal F — Climate control unit terminal 1X—air mix actuator terminal G • Is there continuity?	Yes	Go to the next step.
		No	Repair the wiring harness. Go to the next step.

ON-BOARD DIAGNOSTIC [FULL-AUTO AIR CONDITIONER]

STEP	INSPECTION		ACTION
4	**INSPECT AIR MIX ACTUATOR (POTENTIOMETER) SHORT TO POWER SUPPLY** • Connect the negative battery cable. (See 01-17A-11 NEGATIVE BATTERY CABLE DISCONNECTION/CONNECTION [SKYACTIV-G 2.0].)(See 01-17A-13 NEGATIVE BATTERY CABLE DISCONNECTION/CONNECTION [SKYACTIV-G 2.0 (WITHOUT i-stop)].)(See 01-17B-9 NEGATIVE BATTERY CABLE DISCONNECTION/CONNECTION [SKYACTIV-D 2.2].) • Switch the ignition ON (engine off or on). • Measure the voltage at the following terminals (wiring harness-side): **Driver-side (L.H.D.), Passenger-side (R.H.D.)** — Climate control unit 1N **Passenger-side (L.H.D.), Driver-side (R.H.D.)** — Climate control unit 1P • Is the voltage **0V**?	Yes	The system is normal at present. Go to the next step.
		No	Repair/replace the malfunctioning vehicle wiring harness. After repair procedure, go to the next step.
5	**VERIFY CLIMATE CONTROL UNIT CONNECTOR CONDITION** • Switch the ignition off. • Disconnect the negative battery cable. (See 01-17A-11 NEGATIVE BATTERY CABLE DISCONNECTION/CONNECTION [SKYACTIV-G 2.0].)(See 01-17A-13 NEGATIVE BATTERY CABLE DISCONNECTION/CONNECTION [SKYACTIV-G 2.0 (WITHOUT i-stop)].)(See 01-17B-9 NEGATIVE BATTERY CABLE DISCONNECTION/CONNECTION [SKYACTIV-D 2.2].) • Inspect the connector and terminals (corrosion, damage, pin disconnection). • Are the connector and terminals normal?	Yes	Go to the next step.
		No	Repair/replace the malfunctioning vehicle wiring harness, connector, or terminal. After repair procedure, go to the next step.
6	**VERIFY THAT SAME DTC IS NOT OUTPUT AGAIN** • Reconnect the disconnected connectors. • Connect the negative battery cable. (See 01-17A-11 NEGATIVE BATTERY CABLE DISCONNECTION/CONNECTION [SKYACTIV-G 2.0].)(See 01-17A-13 NEGATIVE BATTERY CABLE DISCONNECTION/CONNECTION [SKYACTIV-G 2.0 (WITHOUT i-stop)].)(See 01-17B-9 NEGATIVE BATTERY CABLE DISCONNECTION/CONNECTION [SKYACTIV-D 2.2].) • Clear the past malfunction from memory. • Verify DTCs. • Is DTC B1C1A:12, B1C1A:13, B1C1B:12, B1C1B:13 output?	Yes	Repeat the inspection from Step 1. • If the malfunction does not recur, go to the next step. • If the malfunction recurs, replace the climate control unit. (See 07-40A-32 CLIMATE CONTROL UNIT REMOVAL/INSTALLATION [FULL-AUTO AIR CONDITIONER].) Go to the next step.
		No	Go to the next step.
7	**VERIFY THAT NO OTHER DTCs ARE PRESENT** • Verify other DTCs displayed. • Are any other DTCs output?	Yes	Perform the corresponding DTC inspection.
		No	DTC troubleshooting completed.

ON-BOARD DIAGNOSTIC [FULL-AUTO AIR CONDITIONER]

DTC B1C1C:12, B1C1C:13 [FULL-AUTO AIR CONDITIONER]

id0702c1200100

System malfunction location	• **B1C1C:12: Airflow mode actuator (potentiometer) circuit short to power supply** • **B1C1C:13: Airflow mode actuator (potentiometer) circuit open**
Detection condition	• Malfunction in wiring harness between airflow mode actuator and climate control unit
Fail-safe	**Malfunction determined when IG SW at ON** • Airflow mode actuator drive signal is stopped right when the malfunction is determined. **Malfunction already exists when IG SW turned to ON** • Control based on ambient temperature.
Possible cause	• Connector or terminal malfunction • Airflow mode actuator malfunction • Open circuit in wiring harness between climate control unit and airflow mode actuator • Short to power supply in wiring harness between climate control unit and airflow mode actuator • Climate control unit malfunction

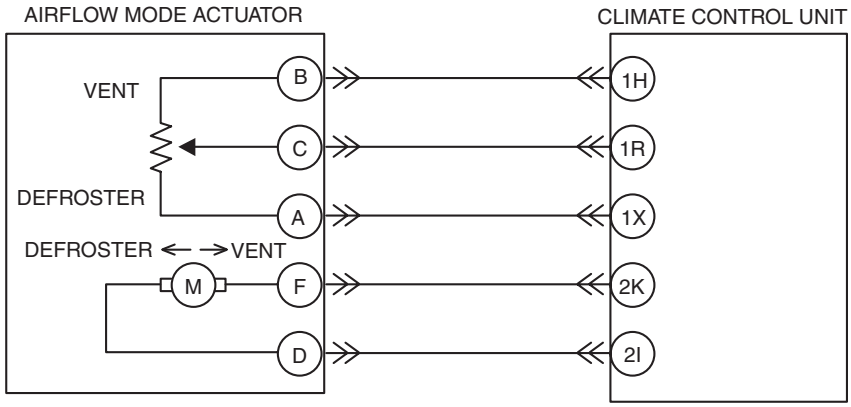

AIRFLOW MODE ACTUATOR WIRING HARNESS SIDE CONNECTOR

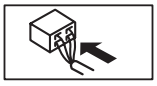

CLIMATE CONTROL UNIT WIRING HARNESS SIDE CONNECTOR

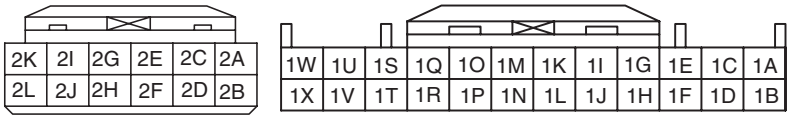

ON-BOARD DIAGNOSTIC [FULL-AUTO AIR CONDITIONER]

Diagnostic Procedure

STEP	INSPECTION		ACTION
1	**INSPECT AIRFLOW MODE ACTUATOR CONNECTOR** • Switch the ignition off. • Disconnect the negative battery cable. (See 01-17A-11 NEGATIVE BATTERY CABLE DISCONNECTION/CONNECTION [SKYACTIV-G 2.0].)(See 01-17A-13 NEGATIVE BATTERY CABLE DISCONNECTION/CONNECTION [SKYACTIV-G 2.0 (WITHOUT i-stop)].)(See 01-17B-9 NEGATIVE BATTERY CABLE DISCONNECTION/CONNECTION [SKYACTIV-D 2.2].) • Disconnect the airflow mode actuator connector. (See 07-40A-13 AIRFLOW MODE ACTUATOR REMOVAL/INSTALLATION [FULL-AUTO AIR CONDITIONER].) • Inspect the connector and terminals (corrosion, damage, pin disconnection). • Are the connector and terminals normal?	Yes	Go to the next step.
		No	Repair/replace the connector or terminal. After repair procedure, go to the next step.
2	**INSPECT AIRFLOW MODE ACTUATOR** • Inspect the airflow mode actuator. (See 07-40A-15 AIRFLOW MODE ACTUATOR INSPECTION [FULL-AUTO AIR CONDITIONER].) • Is it normal?	Yes	Go to the next step.
		No	Replace the airflow mode actuator. (See 07-40A-13 AIRFLOW MODE ACTUATOR REMOVAL/INSTALLATION [FULL-AUTO AIR CONDITIONER].) Go to the next step.
3	**INSPECT AIRFLOW MODE ACTUATOR (POTENTIOMETER) CIRCUIT FOR OPEN CIRCUIT** • Disconnect the climate control unit connector and the airflow mode actuator connector. • Inspect for continuity between the following terminals (wiring harness-side): — Climate control unit terminal 1H—airflow mode actuator terminal B — Climate control unit terminal 1R—airflow mode actuator terminal C — Climate control unit terminal 1X—airflow mode actuator terminal A • Is there continuity?	Yes	Go to the next step.
		No	Repair the wiring harness. Go to the next step.
4	**INSPECT AIRFLOW MODE ACTUATOR (POTENTIOMETER) SHORT TO POWER SUPPLY** • Connect the negative battery cable. (See 01-17A-11 NEGATIVE BATTERY CABLE DISCONNECTION/CONNECTION [SKYACTIV-G 2.0].)(See 01-17A-13 NEGATIVE BATTERY CABLE DISCONNECTION/CONNECTION [SKYACTIV-G 2.0 (WITHOUT i-stop)].)(See 01-17B-9 NEGATIVE BATTERY CABLE DISCONNECTION/CONNECTION [SKYACTIV-D 2.2].) • Switch the ignition ON (engine off or on). • Measure the voltage at the following terminals (wiring harness-side): — Climate control unit terminal 1R • Is the voltage **0V**?	Yes	The system is normal at present. Go to the next step.
		No	Repair/replace the malfunctioning vehicle wiring harness. After repair procedure, go to the next step.

ON-BOARD DIAGNOSTIC [FULL-AUTO AIR CONDITIONER]

STEP	INSPECTION		ACTION
5	**VERIFY CLIMATE CONTROL UNIT CONNECTOR CONDITION** • Switch the ignition off. • Disconnect the negative battery cable. (See 01-17A-11 NEGATIVE BATTERY CABLE DISCONNECTION/CONNECTION [SKYACTIV-G 2.0].)(See 01-17A-13 NEGATIVE BATTERY CABLE DISCONNECTION/CONNECTION [SKYACTIV-G 2.0 (WITHOUT i-stop)].)(See 01-17B-9 NEGATIVE BATTERY CABLE DISCONNECTION/CONNECTION [SKYACTIV-D 2.2].) • Inspect the connector and terminals (corrosion, damage, pin disconnection). • Are the connector and terminals normal?	Yes	Go to the next step.
		No	Repair/replace the malfunctioning vehicle wiring harness, connector, or terminal. After repair procedure, go to the next step.
6	**VERIFY THAT SAME DTC IS NOT OUTPUT AGAIN** • Reconnect the disconnected connectors. • Connect the negative battery cable. (See 01-17A-11 NEGATIVE BATTERY CABLE DISCONNECTION/CONNECTION [SKYACTIV-G 2.0].)(See 01-17A-13 NEGATIVE BATTERY CABLE DISCONNECTION/CONNECTION [SKYACTIV-G 2.0 (WITHOUT i-stop)].)(See 01-17B-9 NEGATIVE BATTERY CABLE DISCONNECTION/CONNECTION [SKYACTIV-D 2.2].) • Clear the past malfunction from memory. • Verify DTCs. • Is DTC B1C1C:12, B1C1C:13 output?	Yes	Repeat the inspection from Step 1. • If the malfunction does not recur, go to the next step. • If the malfunction recurs, replace the climate control unit. (See 07-40A-32 CLIMATE CONTROL UNIT REMOVAL/INSTALLATION [FULL-AUTO AIR CONDITIONER].) Go to the next step.
		No	Go to the next step.
7	**VERIFY THAT NO OTHER DTCs ARE PRESENT** • Verify other DTCs displayed. • Are any other DTCs output?	Yes	Perform the corresponding DTC inspection.
		No	DTC troubleshooting completed.

ON-BOARD DIAGNOSTIC [FULL-AUTO AIR CONDITIONER]

DTC B1D22:11, B1D22:13 [FULL-AUTO AIR CONDITIONER]

id0702c1731600

System malfunction location	• **B1D22:11: Heater core temperature sensor circuit short to ground** • **B1D22:13: Heater core temperature sensor circuit open**
Detection condition	• Malfunction in wiring harness between heater core temperature sensor and climate control unit
Fail-safe	• Heater core temperature sensor input value is fixed at **50 °C {122 °F}**.
Possible cause	• Connector or terminal malfunction • Heater core temperature sensor malfunction • Open circuit in wiring harness between climate control unit and heater core temperature sensor • Short to ground in wiring harness between climate control unit and heater core temperature sensor • Climate control unit malfunction

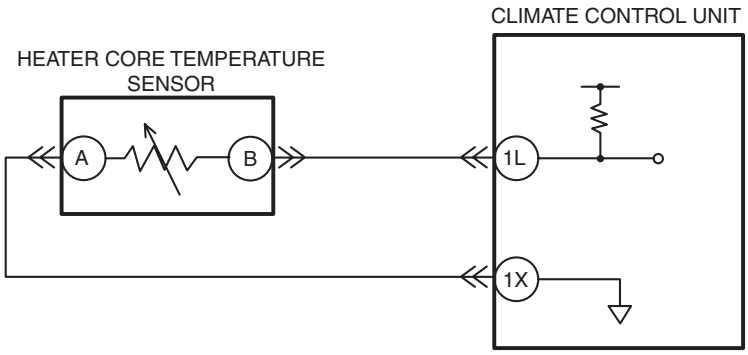

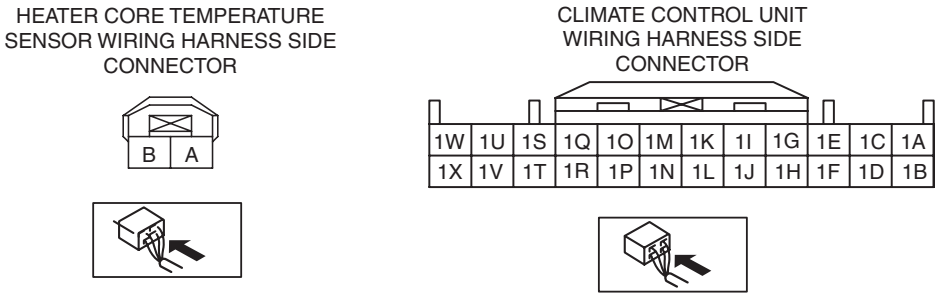

Diagnostic Procedure

STEP	INSPECTION		ACTION
1	**INSPECT HEATER CORE TEMPERATURE SENSOR CONNECTOR** • Switch the ignition off. • Disconnect the negative battery cable. (See 01-17A-11 NEGATIVE BATTERY CABLE DISCONNECTION/CONNECTION [SKYACTIV-G 2.0].)(See 01-17A-13 NEGATIVE BATTERY CABLE DISCONNECTION/CONNECTION [SKYACTIV-G 2.0 (WITHOUT i-stop)].)(See 01-17B-9 NEGATIVE BATTERY CABLE DISCONNECTION/CONNECTION [SKYACTIV-D 2.2].) • Disconnect the heater core temperature sensor connector. • Inspect the connector and terminals (corrosion, damage, pin disconnection). • Are the connector and terminals normal?	Yes	Go to the next step.
		No	Repair/replace the connector or terminal. After repair procedure, go to the next step.
2	**INSPECT HEATER CORE TEMPERATURE SENSOR** • Inspect the heater core temperature sensor. (See 07-40A-29 HEATER CORE TEMPERATURE SENSOR INSPECTION [FULL-AUTO AIR CONDITIONER].) • Is it normal?	Yes	Go to the next step.
		No	Replace the heater core temperature sensor. (See 07-40A-27 HEATER CORE TEMPERATURE SENSOR REMOVAL/INSTALLATION [FULL-AUTO AIR CONDITIONER].) Go to the next step.

ON-BOARD DIAGNOSTIC [FULL-AUTO AIR CONDITIONER]

STEP	INSPECTION		ACTION
3	**INSPECT HEATER CORE TEMPERATURE SENSOR CIRCUIT FOR OPEN CIRCUIT** • Disconnect the climate control unit connector and the heater core temperature sensor connector. • Inspect for continuity between the following terminals (wiring harness-side): — Climate control unit terminal 1L—heater core temperature sensor terminal B — Climate control unit terminal 1X—heater core temperature sensor terminal A • Is there continuity?	Yes	Go to the next step.
		No	Repair the wiring harness. Go to the next step.
4	**INSPECT HEATER CORE TEMPERATURE SENSOR CIRCUIT FOR SHORT TO GROUND** • Inspect for continuity between the following terminals (wiring harness-side) and body ground: — Climate control unit 1L • Is there continuity?	Yes	Repair the wiring harness. Go to the next step.
		No	Connect the climate control unit connector, then go to the next step.
5	**VERIFY CLIMATE CONTROL UNIT CONNECTOR CONDITION** • Inspect the connector and terminals (corrosion, damage, pin disconnection). • Are the connector and terminals normal?	Yes	Go to the next step.
		No	Repair/replace the malfunctioning vehicle wiring harness, connector, or terminal. After repair procedure, go to the next step.
6	**INSPECT HEATER CORE TEMPERATURE SENSOR CIRCUIT** • Connect the climate control unit connector. • Connect the negative battery cable. (See 01-17A-11 NEGATIVE BATTERY CABLE DISCONNECTION/CONNECTION [SKYACTIV-G 2.0].)(See 01-17A-13 NEGATIVE BATTERY CABLE DISCONNECTION/CONNECTION [SKYACTIV-G 2.0 (WITHOUT i-stop)].)(See 01-17B-9 NEGATIVE BATTERY CABLE DISCONNECTION/CONNECTION [SKYACTIV-D 2.2].) • Switch the ignition ON (engine off or on). • Inspect the voltage at the following climate control unit terminal (wiring harness-side). — Terminal 1L (heater core temperature sensor input signal) • Is the voltage normal? (**Approx. 5 V**)	Yes	The system is normal at present. Go to the next step.
		No	Go to the next step.
7	**VERIFY THAT SAME DTC IS NOT OUTPUT AGAIN** • Switch the ignition off. • Disconnect the negative battery cable. • Reconnect the disconnected connectors. • Connect the negative battery cable. (See 01-17A-11 NEGATIVE BATTERY CABLE DISCONNECTION/CONNECTION [SKYACTIV-G 2.0].)(See 01-17A-13 NEGATIVE BATTERY CABLE DISCONNECTION/CONNECTION [SKYACTIV-G 2.0 (WITHOUT i-stop)].)(See 01-17B-9 NEGATIVE BATTERY CABLE DISCONNECTION/CONNECTION [SKYACTIV-D 2.2].) • Clear the past malfunction from memory. • Verify DTCs. • Is DTC B1D22:11 or B1D22:13 output?	Yes	Repeat the inspection from Step 1. • If the malfunction does not recur, go to the next step. • If the malfunction recurs, replace the climate control unit. (See 07-40A-32 CLIMATE CONTROL UNIT REMOVAL/INSTALLATION [FULL-AUTO AIR CONDITIONER].) Go to the next step.
		No	Go to the next step.
8	**VERIFY THAT NO OTHER DTCs ARE PRESENT** • Verify other DTCs displayed. • Are any other DTCs output?	Yes	Perform the corresponding DTC inspection.
		No	DTC troubleshooting completed.

ON-BOARD DIAGNOSTIC [FULL-AUTO AIR CONDITIONER]

DTC U0423:68 [FULL-AUTO AIR CONDITIONER]

id0702c1730600

System malfunction location	• **Invalid data received from instrument cluster**
Detection condition	• Communication error between Instrument cluster and climate control unit
Fail-safe	—
Possible cause	• Instrument cluster malfunction • Climate control unit malfunction
System wiring diagram	—

Diagnostic Procedure

Step	Inspection		Action
1	**PERFORM INSTRUMENT CLUSTER DTC INSPECTION** • Perform the instrument cluster DTC inspection using the M-MDS. (See 09-02G-7 DTC INSPECTION [INSTRUMENT CLUSTER].) • Are any DTCs present?	Yes	Go to the applicable DTC inspection. (See 09-02G-10 DTC TABLE [INSTRUMENT CLUSTER].)
		No	Go to the next step.
2	**PERFORM CLIMATE CONTROL UNIT DTC INSPECTION** • Clear the DTC from the climate control unit memory using the M-MDS. (See 07-02-7 CLEARING DTC [FULL-AUTO AIR CONDITIONER].) • Perform the climate control unit DTC inspection using the M-MDS. (See 07-02-6 DTC DISPLAY [FULL-AUTO AIR CONDITIONER].) • Is the same DTC present?	Yes	Replace the instrument cluster, then go to the next step. (See 09-22-6 INSTRUMENT CLUSTER REMOVAL/INSTALLATION.)
		No	Go to the next step.
3	**VERIFY TROUBLESHOOTING COMPLETED** • Clear the DTC from the climate control unit memory using the M-MDS. (See 07-02-7 CLEARING DTC [FULL-AUTO AIR CONDITIONER].) • Perform the climate control unit DTC inspection using the M-MDS. (See 07-02-6 DTC DISPLAY [FULL-AUTO AIR CONDITIONER].) • Is the same DTC present?	Yes	Repeat the inspection from Step 1. • If the malfunction does not recur, go to the next step. • If the malfunction recurs, replace the climate control unit. (See 07-40A-32 CLIMATE CONTROL UNIT REMOVAL/INSTALLATION [FULL-AUTO AIR CONDITIONER].) Go to the next step.
		No	Go to the next step.
4	**VERIFY THAT NO OTHER DTCs ARE PRESENT** • Verify other DTCs displayed. • Are any other DTCs output?	Yes	Perform the corresponding DTC inspection.
		No	DTC troubleshooting completed.

ON-BOARD DIAGNOSTIC [FULL-AUTO AIR CONDITIONER]

DTC U200D:11 [FULL-AUTO AIR CONDITIONER]

id0702c1736600

System malfunction location	• **Climate control unit circuit voltage (+5V) circuit short to ground**
Detection condition	• Malfunction in wiring harness between climate control unit circuit voltage (+5V) and each sensor/ actuator
Fail-safe	—
Possible cause	• Connector or terminal malfunction • Each sensor/actuator malfunction • Short to ground in wiring harness between climate control unit and air mix actuator • Short to ground in wiring harness between climate control unit and airflow mode actuator • Short to ground in wiring harness between climate control unit and solar radiation sensor • Short to ground in wiring harness between climate control unit and evaporator temperature sensor • Short to ground in wiring harness between climate control unit and cabin temperature sensor • Short to ground in wiring harness between climate control unit and heater core temperature sensor • Climate control unit malfunction

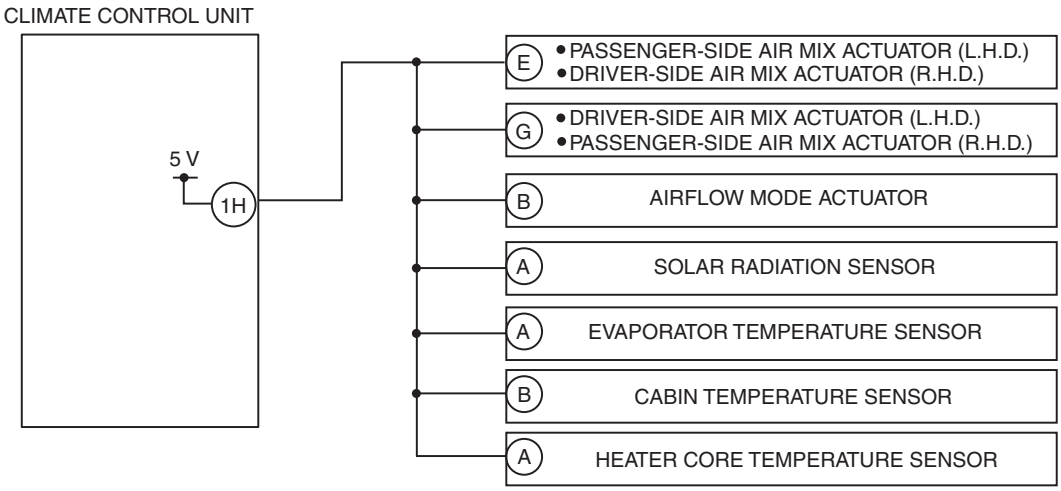

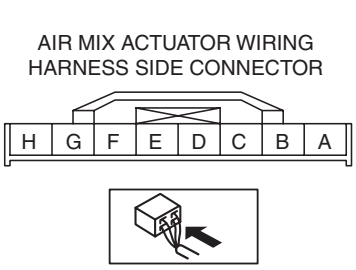

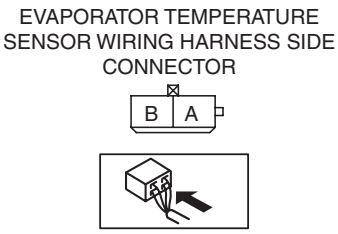

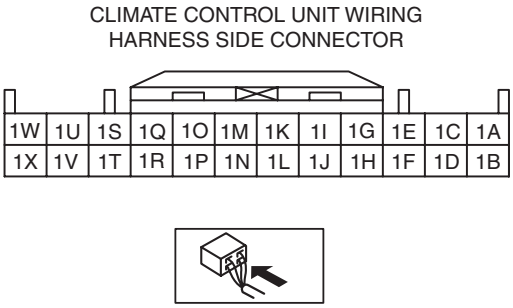

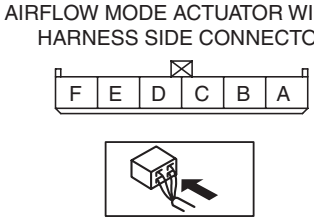

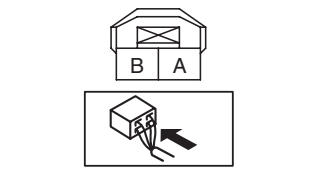

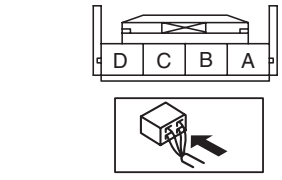

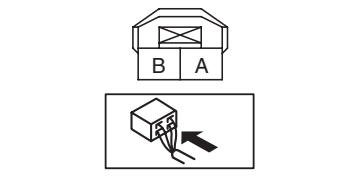

ON-BOARD DIAGNOSTIC [FULL-AUTO AIR CONDITIONER]

Diagnostic Procedure

STEP	INSPECTION		ACTION
1	**VERIFY CLIMATE CONTROL UNIT CONNECTOR CONDITION** • Switch the ignition off. • Disconnect the negative battery cable. (See 01-17A-11 NEGATIVE BATTERY CABLE DISCONNECTION/CONNECTION [SKYACTIV-G 2.0].)(See 01-17A-13 NEGATIVE BATTERY CABLE DISCONNECTION/CONNECTION [SKYACTIV-G 2.0 (WITHOUT i-stop)].)(See 01-17B-9 NEGATIVE BATTERY CABLE DISCONNECTION/CONNECTION [SKYACTIV-D 2.2].) • Disconnect the climate control unit connectors. • Inspect the connector and terminals (corrosion, damage, pin disconnection). • Are the connector and terminals normal?	Yes	Go to the next step.
		No	Repair/replace the malfunctioning vehicle wiring harness, connector, or terminal. After repair procedure, go to the next step.
2	**VERIFY CONNECTOR CONDITION** • Disconnect the following each sensor/actuator connectors. — Air mix actuator (See 07-40A-7 AIR MIX ACTUATOR REMOVAL/INSTALLATION [FULL-AUTO AIR CONDITIONER].) — Airflow mode actuator (See 07-40A-13 AIRFLOW MODE ACTUATOR REMOVAL/INSTALLATION [FULL-AUTO AIR CONDITIONER].) — Solar radiation sensor (See 07-40A-21 SOLAR RADIATION SENSOR REMOVAL/INSTALLATION [FULL-AUTO AIR CONDITIONER].) — Evaporator temperature sensor (See 07-40A-26 EVAPORATOR TEMPERATURE SENSOR REMOVAL/INSTALLATION [FULL-AUTO AIR CONDITIONER].) — Cabin temperature sensor (See 07-40A-23 CABIN TEMPERATURE SENSOR REMOVAL/INSTALLATION [FULL-AUTO AIR CONDITIONER].) — Heater core temperature sensor (See 07-40A-27 HEATER CORE TEMPERATURE SENSOR REMOVAL/INSTALLATION [FULL-AUTO AIR CONDITIONER].) • Inspect the connector and terminals (corrosion, damage, pin disconnection). • Are the connector and terminals normal?	Yes	Go to the next step.
		No	Replace the malfunctioning part. After replace procedure, go to the next step.

ON-BOARD DIAGNOSTIC [FULL-AUTO AIR CONDITIONER]

STEP	INSPECTION		ACTION
3	**INSPECT EACH SENSOR/ACTUATOR** • Inspect the following each sensor/actuator connectors. — Air mix actuator (See 07-40A-9 AIR MIX ACTUATOR INSPECTION [FULL-AUTO AIR CONDITIONER].) — Airflow mode actuator (See 07-40A-15 AIRFLOW MODE ACTUATOR INSPECTION [FULL-AUTO AIR CONDITIONER].) — Solar radiation sensor (See 07-40A-22 SOLAR RADIATION SENSOR INSPECTION [FULL-AUTO AIR CONDITIONER].) — Evaporator temperature sensor (See 07-40A-27 EVAPORATOR TEMPERATURE SENSOR INSPECTION [FULL-AUTO AIR CONDITIONER].) — Cabin temperature sensor (See 07-40A-26 CABIN TEMPERATURE SENSOR INSPECTION [FULL-AUTO AIR CONDITIONER].) — Heater core temperature sensor (See 07-40A-29 HEATER CORE TEMPERATURE SENSOR INSPECTION [FULL-AUTO AIR CONDITIONER].) • Is it normal?	Yes	Go to the next step.
		No	Replace the malfunctioning sensor/actuator. After repair procedure, go to the next step.
4	**INSPECT EACH SENSOR/ACTUATOR CIRCUIT FOR SHORT TO GROUND** • Inspect for continuity between the following terminals (wiring harness-side) and body ground: — Climate control unit 1H • Is there continuity?	Yes	Repair the wiring harness. Go to the next step.
		No	Go to the next step.
5	**VERIFY THAT SAME DTC IS NOT OUTPUT AGAIN** • Reconnect the disconnected connectors. • Connect the negative battery cable. (See 01-17A-11 NEGATIVE BATTERY CABLE DISCONNECTION/CONNECTION [SKYACTIV-G 2.0].)(See 01-17A-13 NEGATIVE BATTERY CABLE DISCONNECTION/CONNECTION [SKYACTIV-G 2.0 (WITHOUT i-stop)].)(See 01-17B-9 NEGATIVE BATTERY CABLE DISCONNECTION/CONNECTION [SKYACTIV-D 2.2].) • Clear the past malfunction from memory. • Verify DTCs. • Is DTC U200D:11 output?	Yes	Repeat the inspection from Step 1. • If the malfunction does not recur, go to the next step. • If the malfunction recurs, replace the climate control unit. (See 07-40A-32 CLIMATE CONTROL UNIT REMOVAL/INSTALLATION [FULL-AUTO AIR CONDITIONER].) Go to the next step.
		No	Go to the next step.
6	**VERIFY THAT NO OTHER DTCs ARE PRESENT** • Verify other DTCs displayed. • Are any other DTCs output?	Yes	Perform the corresponding DTC inspection.
		No	DTC troubleshooting completed.

ON-BOARD DIAGNOSTIC [FULL-AUTO AIR CONDITIONER]

DTC U2300:54, U2300:55, U2300:56, U2300:64 [FULL-AUTO AIR CONDITIONER]

id0702c1745500

System malfunction location	• **U2300:54: Configuration error (data not received)** • **U2300:55: Configuration error (not configured)** • **U2300:56: Configuration error (ineffective/non-interchangeable data read)** • **U2300:64: Configuration error (error value read)**
Detection condition	• Climate control unit detects configuration data not record or data error
Fail-safe	—
Possible cause	**Note** • If power from the battery is interrupted, the heater control unit will go into a non-configured state because the memory for the configuration information is erased. If the ignition is switched ON (engine off) at this time, DTC U2300:55 is detected. • Normally, the configuration is re-performed within 6 s after the ignition is switched ON (engine off). • After performing the configuration, DTC U2300:55 will be cleared if the ignition is switched ON (engine off) after the ignition is switched off. • Module configuration procedure was not completed properly • Correct data cannot be received from instrument cluster • Climate control unit malfunction
System wiring diagram	—

Diagnostic Procedure

Step	Inspection		Action
1	**RECORD THE CAR CONFIGURATION DATA** • Switch the ignition ON (engine off) and wait for 6 s or more. • Switch the ignition off. • Switch the ignition ON (engine off).		Go to the next step.
2	**VERIFY THAT THE SAME DTC IS NOT PRESENT** • Clear the DTCs from the memory. (See 07-02-7 CLEARING DTC [FULL-AUTO AIR CONDITIONER].) • Perform the climate control unit DTC inspection using the M-MDS. (See 07-02-6 DTC DISPLAY [FULL-AUTO AIR CONDITIONER].) • Are the same DTCs present?	Yes	Repeat the inspection from Step 1. If the malfunction recurs, go to the next step.
		No	Go to Step 5.
3	**INSPECT FOR INSTRUMENT CLUSTER MALFUNCTION** • Switch the ignition off. • Perform the instrument cluster DTC inspection using the M-MDS. (See 09-02G-7 DTC INSPECTION [INSTRUMENT CLUSTER].) • Are any DTCs present?	Yes	Go to applicable DTC inspection. (See 09-02G-10 DTC TABLE [INSTRUMENT CLUSTER].) After repairing the instrument cluster, perform the instrument cluster configuration. (See 09-22-19 INSTRUMENT CLUSTER CONFIGURATION (USING AS-BUILT DATA).) Then go to the next step.
		No	Go to the next step.
4	**VERIFY THAT THE SAME DTC IS NOT PRESENT** • Clear the DTCs from the memory. (See 07-02-7 CLEARING DTC [FULL-AUTO AIR CONDITIONER].) • Perform the climate control unit DTC inspection using the M-MDS. (See 07-02-6 DTC DISPLAY [FULL-AUTO AIR CONDITIONER].) • Are the same DTCs present?	Yes	Repeat the inspection from Step 1. • If the malfunction does not recur, go to the next step. • If the malfunction recurs, replace the climate control unit. (See 07-40A-32 CLIMATE CONTROL UNIT REMOVAL/INSTALLATION [FULL-AUTO AIR CONDITIONER].) Go to the next step.
		No	Go to the next step.
5	**VERIFY THAT NO OTHER DTCs ARE PRESENT** • Verify other DTCs displayed. • Are any other DTCs output?	Yes	Perform the corresponding DTC inspection.
		No	DTC troubleshooting completed.

ON-BOARD DIAGNOSTIC [FULL-AUTO AIR CONDITIONER]

DTC U3003:16, U3003:17 [FULL-AUTO AIR CONDITIONER]

id0702c1731000

System malfunction location	• **U3003:16: Climate control unit power supply circuit voltage below threshold (B+, IG1) (10 V or less)** • **U3003:17: Climate control unit power supply circuit voltage above threshold (B+, IG1) (17.3 V or more)**
Detection condition	• Climate control unit power supply voltage is other than **10.1—17.2 V**
Fail-safe	—
Possible cause	• Generator system malfunction • ROOM 15 A fuse malfunction • Battery malfunction • Climate control unit connector malfunction • Open or short circuit to ground in wiring harness between battery positive terminal and climate control unit • Climate control unit malfunction

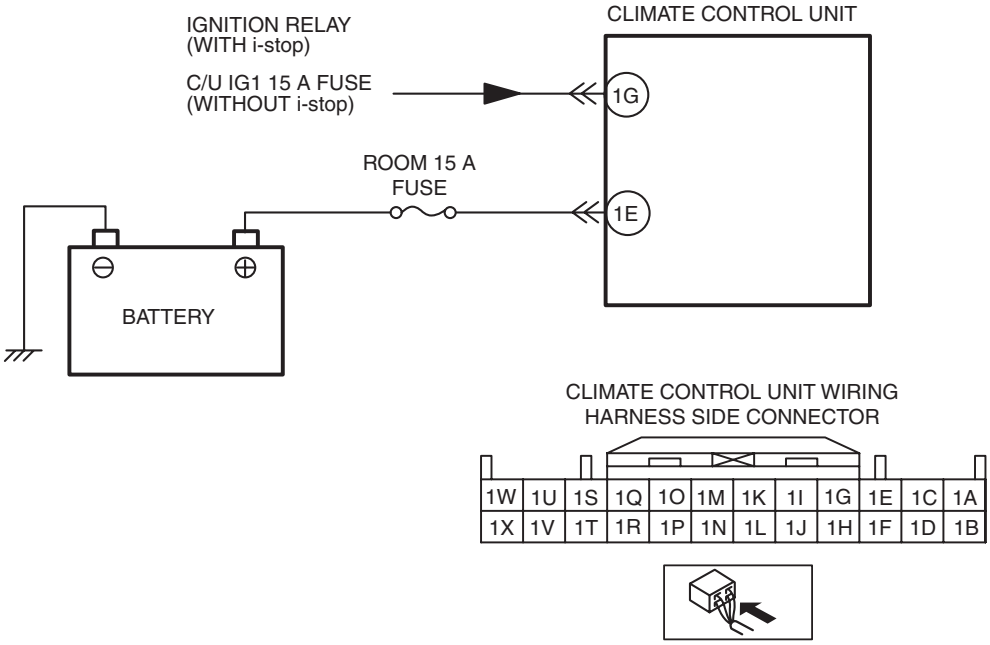

Diagnostic Procedure

STEP	INSPECTION		ACTION
1	**INSPECT PCM DTC (INSPECT GENERATOR CIRCUIT)** • Switch the ignition off. • Connect the M-MDS to the DLC-2. • Perform the PCM DTC inspection using the M-MDS. (See 01-02-8 ON-BOARD DIAGNOSTIC TEST [SKYACTIV-G 2.0].) • Are any DTCs present?	Yes	Go to the applicable DTC inspection. (See 01-02-14 DTC TABLE [SKYACTIV-G 2.0].)
		No	Go to the next step.
2	**INSPECT FUSE** • Switch the ignition off. • Disconnect the negative battery cable. (See 01-17A-11 NEGATIVE BATTERY CABLE DISCONNECTION/CONNECTION [SKYACTIV-G 2.0].)(See 01-17A-13 NEGATIVE BATTERY CABLE DISCONNECTION/CONNECTION [SKYACTIV-G 2.0 (WITHOUT i-stop)].)(See 01-17B-9 NEGATIVE BATTERY CABLE DISCONNECTION/CONNECTION [SKYACTIV-D 2.2].) • Remove the ROOM 15 A fuse. • Is the fuse normal?	Yes	Install the ROOM 15 A fuse, then go to the next step.
		No	Replace the ROOM 15 A fuse, then go to Step 8.

ON-BOARD DIAGNOSTIC [FULL-AUTO AIR CONDITIONER]

STEP	INSPECTION		ACTION
3	**INSPECT BATTERY** • Inspect the battery. (See 01-17A-7 BATTERY INSPECTION [SKYACTIV-G 2.0].) (See 01-17A-8 BATTERY INSPECTION [SKYACTIV-G 2.0 (WITHOUT i-stop)].) (See 01-17B-6 BATTERY INSPECTION [SKYACTIV-D 2.2].) • Is the battery normal?	Yes	Go to the next step.
		No	Replace/charge the battery, then go to Step 8.
4	**INSPECT CLIMATE CONTROL UNIT** • Connect the negative battery cable. (See 01-17A-11 NEGATIVE BATTERY CABLE DISCONNECTION/CONNECTION [SKYACTIV-G 2.0].)(See 01-17A-13 NEGATIVE BATTERY CABLE DISCONNECTION/CONNECTION [SKYACTIV-G 2.0 (WITHOUT i-stop)].)(See 01-17B-9 NEGATIVE BATTERY CABLE DISCONNECTION/CONNECTION [SKYACTIV-D 2.2].) • Switch the ignition ON (engine off or on). • Inspect the climate control unit terminal 1E. • Is voltage normal?	Yes	The system is normal at present. Go to the step 8.
		No	Go to the next step.
5	**VERIFY CLIMATE CONTROL UNIT CONNECTOR CONDITION** • Switch the ignition off. • Disconnect the negative battery cable. (See 01-17A-11 NEGATIVE BATTERY CABLE DISCONNECTION/CONNECTION [SKYACTIV-G 2.0].)(See 01-17A-13 NEGATIVE BATTERY CABLE DISCONNECTION/CONNECTION [SKYACTIV-G 2.0 (WITHOUT i-stop)].)(See 01-17B-9 NEGATIVE BATTERY CABLE DISCONNECTION/CONNECTION [SKYACTIV-D 2.2].) • Disconnect the climate control unit connector. • Inspect the connector and terminals (corrosion, damage, pin disconnection). • Are the connector and terminals normal?	Yes	Go to the next step.
		No	Repair/replace the connector or terminal. After repair procedure, go to the next step.
6	**INSPECT CLIMATE CONTROL UNIT POWER SUPPLY CIRCUIT FOR SHORT CIRCUIT TO GROUND** • Disconnect the climate control unit connector. • Inspect for continuity between climate control unit terminal 1E and body ground. • Is there continuity?	Yes	Repair the wiring harness, then go to Step 8.
		No	Go to the next step.
7	**INSPECT CLIMATE CONTROL UNIT POWER SUPPLY CIRCUIT FOR OPEN CIRCUIT** • Inspect for continuity between climate control unit terminal 1E and battery positive terminal. • Is there continuity?	Yes	Go to the next step.
		No	Repair the wiring harness, then go to the next step.
8	**INSPECT CLIMATE CONTROL UNIT** • Reconnect the disconnected connectors. • Connect the negative battery cable. (See 01-17A-11 NEGATIVE BATTERY CABLE DISCONNECTION/CONNECTION [SKYACTIV-G 2.0].)(See 01-17A-13 NEGATIVE BATTERY CABLE DISCONNECTION/CONNECTION [SKYACTIV-G 2.0 (WITHOUT i-stop)].)(See 01-17B-9 NEGATIVE BATTERY CABLE DISCONNECTION/CONNECTION [SKYACTIV-D 2.2].) • Clear DTCs using the M-MDS. • Perform the climate control unit DTC inspection using the M-MDS. (See 07-02-6 DTC DISPLAY [FULL-AUTO AIR CONDITIONER].) • Are DTCs U3003:16 or U3003:17 displayed?	Yes	Repeat the inspection from Step 1. • If the malfunction does not recur, go to the next step. • If the malfunction recurs, replace the climate control unit. (See 07-40A-32 CLIMATE CONTROL UNIT REMOVAL/INSTALLATION [FULL-AUTO AIR CONDITIONER].) Go to the next step.
		No	Go to the next step.

ON-BOARD DIAGNOSTIC [FULL-AUTO AIR CONDITIONER]

STEP	INSPECTION		ACTION
9	**VERIFY THAT NO OTHER DTCs ARE PRESENT** • Verify other DTCs displayed. • Are any other DTCs output?	Yes	Perform the corresponding DTC inspection.
		No	DTC troubleshooting completed.

PID/DATA MONITOR DISPLAY [FULL-AUTO AIR CONDITIONER]

id0702c1801800

1. Connect the M-MDS to the DLC-2.
2. After the vehicle is identified, select the following items from the initialization screen of the M-MDS.
   (1) Select “DataLogger”.
   (2) Select “Modules”.
   (3) Select “EATC”.
3. Select the applicable PID from the PID table.
4. Verify the PID data according to the directions on the screen.

Note

- The PID data screen function is used for monitoring the calculated value of input/output signals in the module. Therefore, if the monitored value of the output parts is not within the specification, it is necessary to inspect the monitored value of input parts corresponding to the applicable output part control. In addition, because the system does not display an output part malfunction as an abnormality in the monitored value, it is necessary to inspect the output parts individually.

PID/DATA MONITOR TABLE [FULL-AUTO AIR CONDITIONER]

id0702c1801900

PID name (definition)	Unit/Condition	Operation Status (Reference)	Input part
A/C_SW	Off/On	• A/C switch OFF: Off • A/C switch ON: On	Climate control unit
AUTO_SW	Off/On	• AUTO switch OFF: Off • AUTO switch ON: On	Climate control unit
B_MT_RLY_CS	Off/On	• Blower relay off: Off • Blower relay on: On	Climate control unit
DEF_SW	Off/On	• DEFROSTER switch OFF: Off • DEFROSTER switch ON: On	Climate control unit
DUAL_SW	Off/On	• DUAL switch OFF: Off • DUAL switch ON: On	Climate control unit
ELE_W/P	Off/On	• Water pump off: Off • Water pump on: On	Water pump
ENG_C_TMP	°C, °F	Engine coolant temperature is displayed	Engine coolant temperature sensor
EVA_TMP_SEN	°C, °F	Evaporator temperature is displayed	Evaporator temperature sensor
F_REC_CS	Off/On	• Forced recirculate control off: Off • Forced recirculate control on: On	Climate control unit
FRE_SW	Off/On	• FRESH switch OFF: Off • FRESH switch ON: On	Climate control unit
HC_TMP_SEN	°C, °F	Heater core temperature is displayed	Heater core temperature sensor
INC_TMP_SEN	°C, °F	Cabin temperature is displayed	Cabin temperature sensor
M_DOWN_SW	Off/On	• MODE switch (DOWN) OFF: Off • MODE switch (DOWN) ON: On	Climate control unit
M_UP_SW	Off/On	• MODE switch (UP) OFF: Off • MODE switch (UP) ON: On	Climate control unit
OFF_SW	Off/On	• OFF switch OFF: Off • OFF switch ON: On	Climate control unit
OUT_CAR_TMP	°C, °F	Ambient temperature is displayed	Ambient temperature sensor
R/DEF_CS	Off/On	• Rear defroster off: Off • Rear defroster on: On	Climate control unit
R/DEF_SW	Off/On	• Rear window defroster switch OFF: Off • Rear window defroster switch ON: On	Climate control unit
REC_SW	Off/On	• RECIRCULATE switch OFF: Off • RECIRCULATE switch ON: On	Climate control unit

ON-BOARD DIAGNOSTIC [FULL-AUTO AIR CONDITIONER]

PID name (definition)	Unit/Condition	Operation Status (Reference)	Input part
S_HT_CUT_CS	No_Request/Cut	• Seat warmer signal cut control off: No_Request • Seat warmer signal cut control on: Cut	Climate control unit
SLR_R_SEN_L SLR_R_SEN_R	W	Solar radiation amount is displayed	Solar radiation sensor
STOP_ST	Available/ Not Available/ Error	• i-stop permit condition: Available • i-stop inhibit condition: Not Available • i-stop signal failure: Error	• Climate control unit • PCM
UNIT_TMP	deg_C/deg_F	• Centigrade: deg_C • Fahrenheit: deg_F	Climate control unit

A/C OPERATION CHECK MODE [FULL-AUTO AIR CONDITIONER]

id0702c1881500

- The A/C operation check mode forcibly operates the output devices as shown in the operation check table regardless of the signals input to the climate control unit.
- During an A/C operation check mode operation, indication in the display panel and the illumination of the indicator light on the switches are automatically controlled.
- Determine the malfunctioning part by visual inspection, listening to the operation sound, placing a hand on the air vents, or checking that each transition is as indicated in the operation check table.

M-MDS display	Target part	Reference
Air Mix Actuator	• Air mix actuator • Air mix door	(See 07-02-39 Air Mix Actuator)
Air conditioning compressor	• A/C compressor	(See 07-02-40 A/C Compressor)
Air Intake Actuator	• Air intake actuator • Air intake door	(See 07-02-40 Air Intake Actuator)
Blower Motor Speed	• Blower motor	(See 07-02-41 Blower Motor)
Air Flow Mode Actuator	• Airflow mode actuator • Airflow mode door	(See 07-02-42 Airflow Mode Actuator)
Illumination of All Indicator Lights	• Climate control unit	(See 07-02-42 Indicator Light)
Electrical Water Pump	• Water pump*	(See 07-02-43 Water Pump)

* : With water pump

Air Mix Actuator

1. Connect the M-MDS to the DLC-2.
2. Switch the ignition to ON.
3. Start the engine.
4. After the vehicle is identified, select the following items from the initial screen of the M-MDS.
   (1) Select the “Body”.
   (2) Select the “EATC Operation Check”.
5. Select the “Air Mix Actuator” from the screen menu.
6. Verify the A/C operation check mode according to the directions on the screen.
7. Select "Stop" to stop the A/C operation check. (See 07-02-43 A/C Operation Check Stop.)

Operation

Step	Air mix actuator	Airflow mode actuator	Blower speed	Magnet clutch	Air intake actuator
1	0 %	VENT	5th	ON	FRESH
2	100 %				

Display

Step	Temperature (°C {°F})	Airflow mode	Blower volume	A/C	Recirculate switch indicator light	Fresh switch indicator light
1	20.0 {68}			Displayed	Not illuminated	Illuminated
2	21.0 {70}					

ON-BOARD DIAGNOSTIC [FULL-AUTO AIR CONDITIONER]

Note
- After approx. 22 s have elapsed the operation step moves to the next step.
- When the last step is finished, the operation is repeated from Step 1.
- To prevent super-cooling, the magnetic clutch turns off despite the A/C forced override.

A/C Compressor
1. Connect the M-MDS to the DLC-2.
2. Switch the ignition to ON.
3. Start the engine.
4. After the vehicle is identified, select the following items from the initial screen of the M-MDS.
   (1) Select the “Body”.
   (2) Select the “EATC Operation Check”.
5. Select the “Air conditioning compressor” from the screen menu.
6. Verify the A/C operation check mode according to the directions on the screen.
7. Select "Stop" to stop the A/C operation check. (See 07-02-43 A/C Operation Check Stop.)

Operation

Step	Air mix actuator	Airflow mode actuator	Blower speed	Magnet clutch	Air intake actuator
1	0 %	VENT	5th	ON	FRESH
2				OFF	

Display

Step	Temperature (°C {°F})	Airflow mode	Blower volume	A/C	Recirculate switch indicator light	Fresh switch indicator light
1	4 {39}			Displayed	Not illuminated	Illuminated
2				Not displayed		

Note
- After the following times have elapsed, the operation step moves to the next step.
  — Step 1: Approx. 5 s
  — Step 2: Approx. 25 s
- When the last step is finished, the operation is repeated from Step 1.

Air Intake Actuator
1. Connect the M-MDS to the DLC-2.
2. Switch the ignition to ON.
3. Start the engine.
4. After the vehicle is identified, select the following items from the initial screen of the M-MDS.
   (1) Select the “Body”.
   (2) Select the “EATC Operation Check”.
5. Select the “Air Intake Actuator” from the screen menu.
6. Verify the A/C operation check mode according to the directions on the screen.
7. Select "Stop" to stop the A/C operation check. (See 07-02-43 A/C Operation Check Stop.)

Operation

Step	Air mix actuator	Airflow mode actuator	Blower speed	Magnet clutch	Air intake actuator
1	0 %	VENT	5th	ON	FRESH
2					RECIRCULATE
3				OFF	FRESH
4					RECIRCULATE

ON-BOARD DIAGNOSTIC [FULL-AUTO AIR CONDITIONER]

Display

Step	Temperature (°C {°F})	Airflow mode	Blower volume	A/C	Recirculate switch indicator light	Fresh switch indicator light
1	4 {39}			Displayed	Not illuminated	Illuminated
2					Illuminated	Not illuminated
3				Not displayed	Not illuminated	Illuminated
4					Illuminated	Not illuminated

Note

- After approx. 11 s have elapsed the operation step moves to the next step.
- When the last step is finished, the operation is repeated from Step 1.
- To prevent super-cooling, the magnetic clutch turns off despite the A/C forced override.

Blower Motor

1. Connect the M-MDS to the DLC-2.
2. Switch the ignition to ON.
3. Start the engine.
4. After the vehicle is identified, select the following items from the initial screen of the M-MDS.
   (1) Select the “Body”.
   (2) Select the “EATC Operation Check”.
5. Select the “Blower Motor Speed” from the screen menu.
6. Verify the A/C operation check mode according to the directions on the screen.
7. Select "Stop" to stop the A/C operation check. (See 07-02-43 A/C Operation Check Stop.)

Operation

Step	Air mix actuator	Airflow mode actuator	Blower speed	Magnet clutch	Air intake actuator
1	50 %	VENT	OFF	OFF	FRESH
2			1st	ON	
3			3rd		
4			5th		
5			7th		

Display

Step	Temperature (°C {°F})	Airflow mode	Blower volume	A/C	Recirculate switch indicator light	Fresh switch indicator light
1	1 {34}		Not displayed	Not displayed	Not illuminated	Illuminated
2				Displayed		
3						
4						
5						

Note

- After approx. 4 s have elapsed the operation step moves to the next step.
- When the last step is finished, the operation is repeated from Step 1.
- To prevent super-cooling, the magnetic clutch turns off despite the A/C forced override.

ON-BOARD DIAGNOSTIC [FULL-AUTO AIR CONDITIONER]

Airflow Mode Actuator

1. Connect the M-MDS to the DLC-2.
2. Switch the ignition to ON.
3. Start the engine.
4. After the vehicle is identified, select the following items from the initial screen of the M-MDS.
   (1) Select the “Body”.
   (2) Select the “EATC Operation Check”.
5. Select the “Airflow Mode Actuator” from the screen menu.
6. Verify the A/C operation check mode according to the directions on the screen.
7. Select "Stop" to stop the A/C operation check. (See 07-02-43 A/C Operation Check Stop.)

Operation

Step	Air mix actuator	Airflow mode actuator	Blower speed	Magnet clutch	Air intake actuator
1	50 %	VENT	5th	ON	FRESH
2		BI-LEVEL			
3		HEAT			
4		DEF/HEAT			
5		DEFROSTER			

Display

Step	Temperature (°C {°F})	Airflow mode	Blower volume	A/C	Recirculate switch indicator light	Fresh switch indicator light
1	3 {37}			Displayed	Not illuminated	Illuminated
2						
3						
4						
5						

Note

- After approx. 11 s have elapsed the operation step moves to the next step.
- When the last step is finished, the operation is repeated from Step 1.
- To prevent super-cooling, the magnetic clutch turns off despite the A/C forced override.

Indicator Light

1. Connect the M-MDS to the DLC-2.
2. Switch the ignition ON (engine off).
3. After the vehicle is identified, select the following items from the initial screen of the M-MDS.
   (1) Select the “Body”.
   (2) Select the “EATC Operation Check”.
4. Select the “Illumination Of All Indicator Lights” from the screen menu.
5. Verify the A/C operation check mode according to the directions on the screen.
6. Select "Stop" to stop the A/C operation check. (See 07-02-43 A/C Operation Check Stop.)

Operation

Step	Air mix actuator	Airflow mode actuator	Blower speed	Magnet clutch	Air intake actuator
—	50 %	VENT	OFF	OFF	FRESH

Display

Step	Temperature (°C {°F})	Airflow mode	Blower volume	A/C	Recirculate switch indicator light	Fresh switch indicator light
—	All indicator displayed				Illuminated	Illuminated

ON-BOARD DIAGNOSTIC [FULL-AUTO AIR CONDITIONER]

Water Pump

1. Connect the M-MDS to the DLC-2.
2. Switch the ignition ON (engine off).
3. After the vehicle is identified, select the following items from the initial screen of the M-MDS.
   (1) Select the “Body”.
   (2) Select the “EATC Operation Check”.
4. Select the “Electrical Water Pump” from the screen menu.
5. Verify the A/C operation check mode according to the directions on the screen.
6. Select "Stop" to stop the A/C operation check. (See 07-02-43 A/C Operation Check Stop.)

Operation

Step	Water pump	Air mix actuator	Airflow mode actuator	Blower speed	Magnet clutch	Air intake actuator
—	ON	50 %	VENT	OFF	OFF	FRESH

Display

Step	Temperature (°C {°F})	Airflow mode	Blower volume	A/C	Recirculate switch indicator light	Fresh switch indicator light
—	10 {50}		Not displayed	Not displayed	Not illuminated	Illuminated

A/C Operation Check Stop

1. If "Stop" is selected while the A/C operation check is operating, the A/C stops at the conditions shown in the table.

Operation

Step	Water pump (with water pump)	Air mix actuator	Airflow mode actuator	Blower speed	Magnet clutch	Air intake actuator
—	OFF	50 %	VENT	OFF	OFF	FRESH

Display

Step	Temperature (°C {°F})	Airflow mode	Blower volume	A/C	Recirculate switch indicator light	Fresh switch indicator light
—	0 {32}		Not displayed	Not displayed	Not illuminated	Illuminated

07-03A SYMPTOM TROUBLESHOOTING [FULL-AUTO AIR CONDITIONER]

HVAC SYSTEM WIRING DIAGRAM [FULL-AUTO AIR CONDITIONER] 07-03A–2
FOREWORD [FULL-AUTO AIR CONDITIONER] 07-03A–3
Troubleshooting Procedure 07-03A–3
Action for non-repeatable malfunction. 07-03A–4
TROUBLESHOOTING INDEX [FULL-AUTO AIR CONDITIONER] 07-03A–4
NO.1 INSUFFICIENT AIR (OR NO AIR) BLOWN FROM VENTS [FULL-AUTO AIR CONDITIONER] 07-03A–5
NO.2 AMOUNT OF AIR BLOWN FROM VENTS DOES NOT CHANGE [FULL-AUTO AIR CONDITIONER] 07-03A–8
NO.3 AIR INTAKE MODE FROM VENT DOES NOT CHANGE [FULL-AUTO AIR CONDITIONER] 07-03A–11
NO.4 NO TEMPERATURE CONTROL WITH CLIMATE CONTROL UNIT [FULL-AUTO AIR CONDITIONER] 07-03A–13
NO.5 WINDSHIELD FOGGED [FULL-AUTO AIR CONDITIONER] 07-03A–17
NO.6 AIR FROM VENTS NOT COLD ENOUGH [FULL-AUTO AIR CONDITIONER] 07-03A–19
NO.7 NO COOL AIR [FULL-AUTO AIR CONDITIONER] 07-03A–22
NO.8 NOISE WHILE OPERATING A/C SYSTEM [FULL-AUTO AIR CONDITIONER] 07-03A–25
NO.9 DUAL A/C CONTROL DOES NOT OPERATE [FULL-AUTO AIR CONDITIONER] 07-03A–27

SYMPTOM TROUBLESHOOTING [FULL-AUTO AIR CONDITIONER]

HVAC SYSTEM WIRING DIAGRAM [FULL-AUTO AIR CONDITIONER]

id0703c1800100

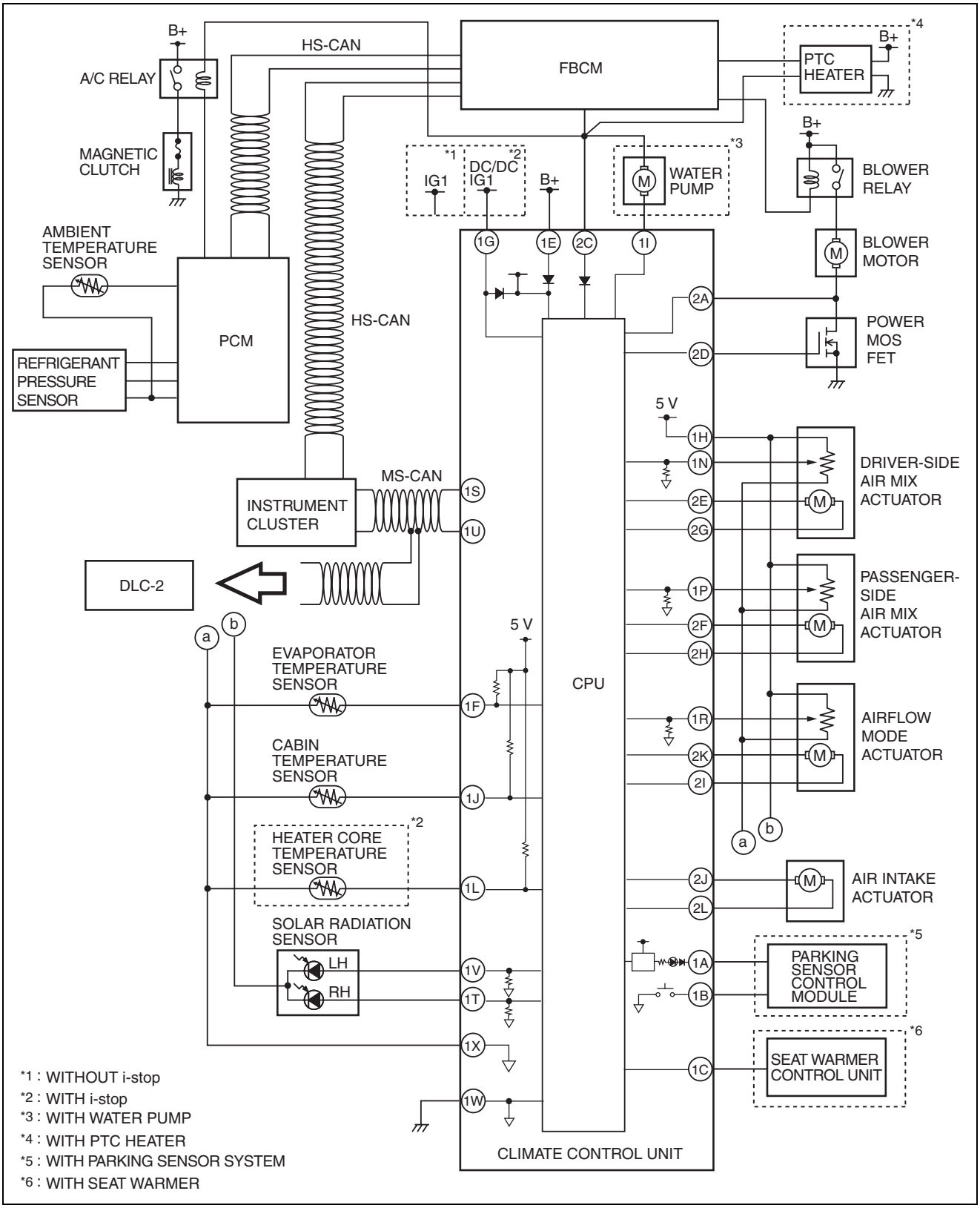

ac5wzw0000276

SYMPTOM TROUBLESHOOTING [FULL-AUTO AIR CONDITIONER]

CLIMATE CONTROL UNIT WIRING HARNESS SIDE CONNECTOR

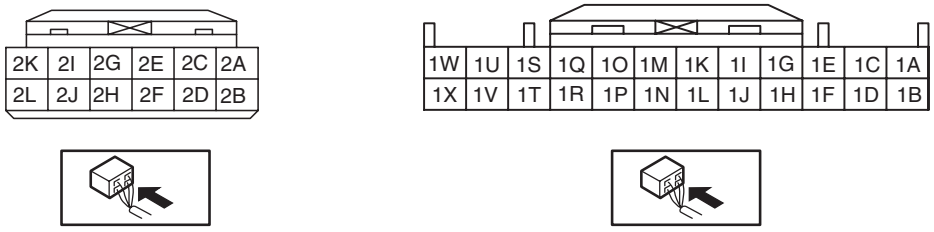

ac5wzw0000276

FOREWORD [FULL-AUTO AIR CONDITIONER]

id0703c1800200

- If there is any vehicle malfunction complaint lodged by a customer, perform malfunction diagnosis according to the troubleshooting procedure.

Troubleshooting Procedure

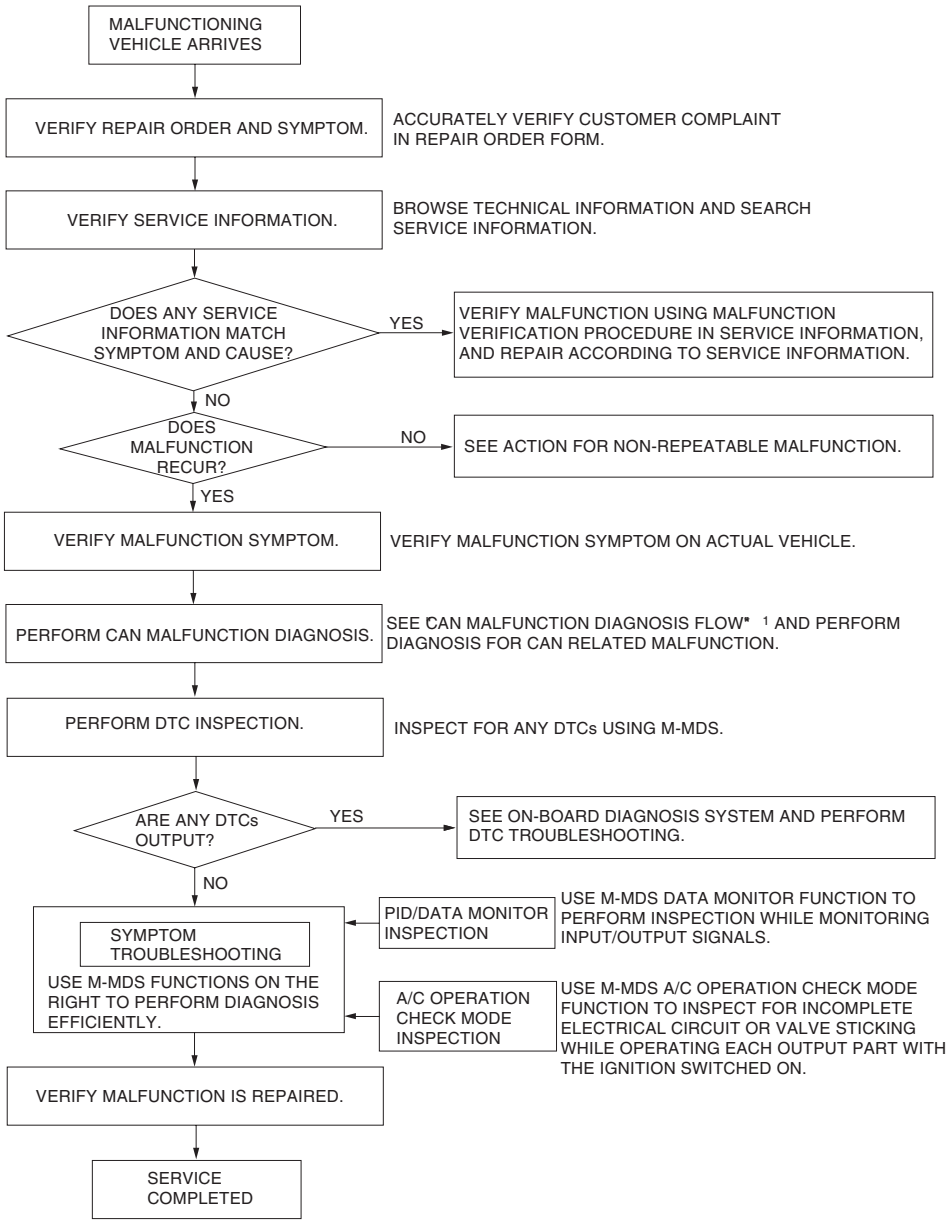

ac5wzw0000290

SYMPTOM TROUBLESHOOTING [FULL-AUTO AIR CONDITIONER]

*1 : 10-02A-3 CONTROLLER AREA NETWORK (CAN) MALFUNCTION DIAGNOSIS FLOW [SKYACTIV-G 2.0 (L.H.D.)], 10-02B-3 CONTROLLER AREA NETWORK (CAN) MALFUNCTION DIAGNOSIS FLOW [SKYACTIV-G 2.0 (R.H.D.)], 10-02C-3 CONTROLLER AREA NETWORK (CAN) MALFUNCTION DIAGNOSIS FLOW [SKYACTIV-D 2.2 (L.H.D.)], 10-02D-3 CONTROLLER AREA NETWORK (CAN) MALFUNCTION DIAGNOSIS FLOW [SKYACTIV-D 2.2 (R.H.D.)]

Action for non-repeatable malfunction

- If the malfunction does not recur, verify the malfunction cause by performing the following actions:
  - — Based on the repair order form, attempt to drive the vehicle or perform tests to replicate the malfunction, record the data (such as CAN circuit voltage) at that time, and detect the malfunction cause.
  - — Refer to [Determining Open Circuit Location] based on the recorded DTC, shake the wiring harness or connector of the electrical component which is suspected to be the cause of the malfunction, and inspect for any changes in CAN system voltage or occurrence of any DTCs.

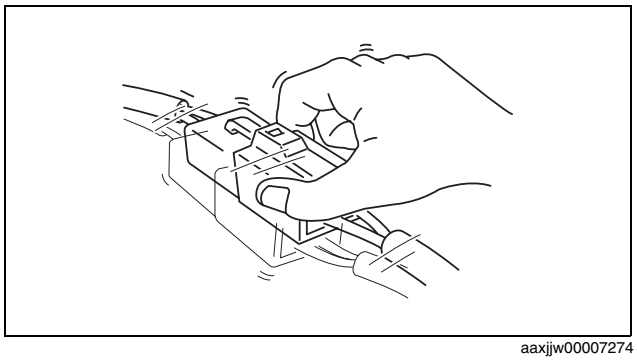

aaxjjw00007274

  - — Inspect the female terminals on the connector of the electric component which is suspected to be the cause of the malfunction for poor connection.

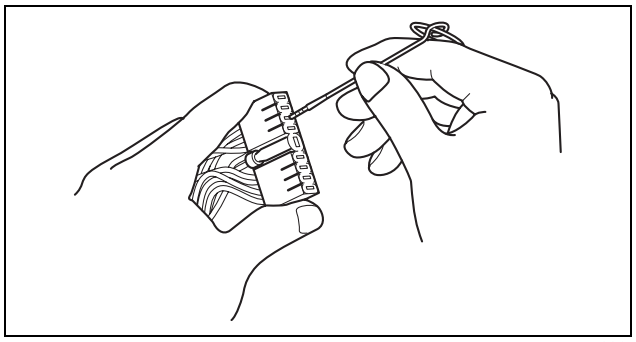

am3zzw0001143

TROUBLESHOOTING INDEX [FULL-AUTO AIR CONDITIONER]

id0703c1800300

No.	TROUBLESHOOTING ITEM	DESCRIPTION
1	Insufficient air (or no air) blown from vents	• Problem with each vent and/or duct • Airflow mode does not change
2	Amount of air blown from vents does not change	• Malfunction in blower system
3	Air intake mode from front vent does not change	• Air intake mode does not change when switching REC/FRESH mode
4	No temperature control with climate control unit	• Temperature does not change when operating temperature dial • Malfunction in A/C unit and/or climate control unit air mix system • Malfunction in driver and/or passenger side air mix actuator or related wiring harness
5	Windshield fogged	• A/C compressor does not operate while airflow mode is in DEFROSTER or DEF/HEAT modes • Air intake mode does not change to FRESH while airflow mode is in DEFROSTER or DEF/HEAT modes
6	Air from vents not cold enough	• Magnetic clutch operates but A/C system malfunctions
7	No cool air	• Magnetic clutch does not operate
8	Noise while operating A/C system	• Noise from magnetic clutch, A/C compressor, hose or refrigerant line
9	Dual A/C control function does not operate	• Driver or passenger side temperature control dial does not operate individually • Temperature control operates normally expect for dual A/C control function

SYMPTOM TROUBLESHOOTING [FULL-AUTO AIR CONDITIONER]

NO.1 INSUFFICIENT AIR (OR NO AIR) BLOWN FROM VENTS [FULL-AUTO AIR CONDITIONER]

id0703c1800400

1	Insufficient air (or no air) blown from vents
DESCRIPTION	• Problem with each vent and/or duct • Airflow mode does not change
POSSIBLE CAUSE	• Malfunction in airflow mode actuator • Malfunction in VENT mode system • Malfunction in HEAT mode system • Malfunction in DEFROSTER mode system

- When performing an asterisked (*) troubleshooting inspection, shake the wiring harness and connectors while performing the inspection to discover whether poor contact points are the cause of any intermittent malfunctions.
  If there is a problem, check to make sure connectors, terminals and wiring harnesses are connected correctly and undamaged.

Diagnostic procedure

STEP	INSPECTION		ACTION
1*	**INSPECT CLIMATE CONTROL UNIT POWER SUPPLY FUSE FOR B+ SIGNAL** • Is the climate control unit power supply fuse for B+ signal normal?	Yes	Go to the next step.
		No	Inspect for short to GND in blown fuse circuit Repair or replace as necessary. Install appropriate amperage fuse.
2*	**INSPECT TO SEE WHETHER MALFUNCTION (OPEN CIRCUIT) IS IN B+ SIGNAL WIRING HARNESS (BETWEEN FUSE BLOCK AND CLIMATE CONTROL UNIT) OR ELSEWHERE** • Disconnect the climate control unit connector (24-pin). • Switch the ignition ON (engine off or on). • Measure the voltage at climate control unit harness-side connector (24-pin) terminal 1E (B+ signal). • Is the voltage **approx. 12V**?	Yes	Go to the next step.
		No	Repair wiring harness between fuse block and climate control unit, then go to Step 20.
3*	**INSPECT TO SEE WHETHER MALFUNCTION (LACK OF CONTINUITY) IS IN WIRING HARNESS (BETWEEN CLIMATE CONTROL UNIT AND GND) OR ELSEWHERE** • Climate control unit connector (24-pin) disconnected. • Verify that continuity between climate control unit harness-side connector (24-pin) terminal 1W and GND. • Is there continuity?	Yes	Go to the next step.
		No	Repair wiring harness between climate control unit and GND. Inspect GND point condition. Then go to Step 20.
4*	**INSPECT TO SEE WHETHER MALFUNCTION IS IN A/C UNIT OR AIRFLOW MODE ACTUATOR** • Switch the ignition ON (engine off or on). • Measure voltage at climate control unit terminal 1R (24-pin) when airflow mode at VENT and DEFROSTER. (See 07-40A-33 CLIMATE CONTROL UNIT INSPECTION [FULL-AUTO AIR CONDITIONER].) • Is voltage normal?	Yes	Go to Step 16.
		No	Go to the next step.
5*	**INSPECT TO SEE WHETHER MALFUNCTION IS IN POSITION SENSOR OR ELSEWHERE** • Switch the ignition ON (engine off or on). • Measure voltage at climate control unit terminal 1P and 1N (24-pin) when temperature setting to MAX HOT and MAX COLD. (See 07-40A-33 CLIMATE CONTROL UNIT INSPECTION [FULL-AUTO AIR CONDITIONER].) • Are voltages normal?	Yes	Go to Step 8.
		No	Go to the next step.

SYMPTOM TROUBLESHOOTING [FULL-AUTO AIR CONDITIONER]

STEP	INSPECTION		ACTION
6*	**INSPECT TO SEE WHETHER MALFUNCTION (LACK OF CONTINUITY OR SHORT TO BATTERY POWER OR GND) IS IN POSITION SENSOR POWER SUPPLY (CLIMATE CONTROL UNIT TERMINAL 1H) OR ELSEWHERE** • Switch the ignition ON (engine off or on). • Measure voltage at climate control unit terminal 1H (24-pin). • Is voltage **approx. 5V**?	Yes	Go to the next step.
		No	Repair wiring harness between climate control unit terminal 1H and follows: • Airflow mode actuator terminal B • Driver side air mix actuator terminal G (L.H.D.) / E (R.H.D.) • Passenger side air mix actuator terminal E (L.H.D.) / G (R.H.D.) Then go to Step 20.
7*	**INSPECT TO SE WHETHER MALFUNCTION (LACK OF CONTINUITY OR OPEN) IS IN POSITION SENSOR GND (CLIMATE CONTROL UNIT TERMINAL 1X) OR ELSEWHERE** • Measure voltage at climate control unit terminal 1X (24-pin). • Is voltage **below 1.0V**?	Yes	Go to Step 11.
		No	Repair wiring harness for lack of continuity or open between climate control unit terminal 1X and follows: • Airflow mode actuator terminal A • Driver side air mix actuator terminal E (L.H.D.) / G (R.H.D.) • Passenger side air mix actuator terminal G (L.H.D.) / E (R.H.D.) Then go to Step 20.
8*	**INSPECT TO SEE WHETHER MALFUNCTION (SHORT TO POWER) IS IN WIRING HARNESS (AIRFLOW MODE POSITION SIGNAL) OR ELSEWHERE** • Is climate control unit terminal 1R voltage **approx. 12V**, at Step 4?	Yes	Repair wiring harness between climate control unit terminal 1R and airflow mode actuator terminal C. Then go to Step 20.
		No	Go to the next step.
9*	**INSPECT TO SEE WHETHER MALFUNCTION (LACK OF CONTINUITY) IS IN WIRING HARNESS (AIRFLOW MODE POSITION SIGNAL) OR ELSEWHERE** • Switch the ignition off. • Disconnect climate control unit and airflow mode actuator connectors • Verify continuity between climate control unit terminal 1R (24-pin) and airflow mode actuator terminal C at harness-side connector. • Is there continuity?	Yes	Go to next step.
		No	Repair wiring harness between climate control unit terminal 1R and airflow mode actuator terminal C. Then go to Step 20.
10*	**INSPECT TO SEE WHETHER MALFUNCTION (SHORT TO GND) IS IN WIRING HARNESS (AIRFLOW MODE POSITION SIGNAL) OR POSITION SENSOR COMMON (POWER SUPPLY OR GND) HARNESS** • Verify continuity between climate control unit harness-side connector terminal 1R (24-pin) and GND. • Is there continuity?	Yes	Repair wiring harness between climate control unit terminal 1R and airflow mode actuator terminal C. Then go to Step 20.
		No	Inspection and repair for open circuit following: • Between airflow mode actuator terminal B and junction point to each air mix actuator (position sensor power supply). • Between airflow mode actuator terminal A and junction point to each air mix actuator (position sensor GND). Then go to Step 20.
11*	**INSPECT TO SEE WHETHER MALFUNCTION (LACK OF CONTINUITY) IS IN AIRFLOW MODE ACTUATOR WIRING HARNESS (BETWEEN CLIMATE CONTROL UNIT AND AIR FLOW MODE ACTUATOR) OR ELSEWHERE** • Switch the ignition ON (engine off or on). • Measure voltage at the following terminals of climate control unit. (See 07-40A-33 CLIMATE CONTROL UNIT INSPECTION [FULL-AUTO AIR CONDITIONER].) — Terminal 2K (12-pin, DEFROSTER mode motor drive signal) — Terminal 2I (12-pin, VENT mode motor drive signal) • Are voltages okay?	Yes	Go to the next step.
		No	Go to Step 13.

SYMPTOM TROUBLESHOOTING [FULL-AUTO AIR CONDITIONER]

STEP	INSPECTION		ACTION
12*	**INSPECT TO SEE WHETHER MALFUNCTION (LACK OF CONTINUITY) IS IN AIR FLOW MODE ACTUATOR OR WIRING HARNESS (BETWEEN CLIMATE CONTROL UNIT AND AIR FLOW MODE ACTUATOR)** • Verify continuity at following terminals between airflow mode actuator and climate control unit. — Climate control unit terminal 2K — airflow mode actuator terminal F (12-pin, DEFROSTER mode motor drive signal) — Climate control unit terminal 2I — airflow mode actuator terminal D (12-pin, VENT mode motor drive signal) • Is there continuity?	Yes	Go to Step 17.
		No	Repair wiring harness between climate control unit and airflow mode actuator. Then go to Step 20.
13*	**INSPECT TO SEE WHETHER MALFUNCTION IS IN AIR FLOW MODE ACTUATOR OR ELSEWHERE** • Airflow mode actuator and climate control unit connectors disconnected. • Measure voltage at the following terminals of climate control unit. (See 07-40A-33 CLIMATE CONTROL UNIT INSPECTION [FULL-AUTO AIR CONDITIONER].) — Terminal 2K (12-pin, DEFROSTER mode motor drive signal) — Terminal 2I (12-pin, VENT mode motor drive signal) • Are voltage okay?	Yes	Go to Step 16.
		No	Go to the next step.
14*	**INSPECT TO SEE WHETHER MALFUNCTION IS IN WIRING HARNESS (SHORT TO B+ BETWEEN CLIMATE CONTROL UNIT AND FLOW MODE ACTUATOR) OR ELSEWHERE** • Measure voltage at the following terminal of the climate control unit harness-side connector. — Terminal 2K (12-pin, DEFROSTER mode motor drive signal) — Terminal 2I (12-pin, VENT mode motor drive signal) • Are voltages **approx. 0V**?	Yes	Go to the next step.
		No	Repair wiring between climate control unit and airflow mode actuator. Then go to the Step 20.
15*	**INSPECT TO SEE WHETHER MALFUNCTION IS IN WIRING HARNESS (SHORT TO GND BETWEEN CLIMATE CONTROL UNIT AND AIRFLOW MODE ACTUATOR) OR ELSEWHERE** • Switch the ignition off. • Verify that continuity at the following harness-side connector terminals between climate control unit and GND. — Terminal 2K (12-pin, DEFROSTER mode motor drive signal) — Terminal 2I (12-pin, VENT mode motor drive signal) • Is there continuity?	Yes	Repair wiring harness between climate control unit and airflow mode actuator. Then go to the Step 20.
		No	Go to the next step.
16	**INSPECT AIRFLOW MODE ACTUATOR** • Inspect airflow mode actuator. (See 07-40A-15 AIRFLOW MODE ACTUATOR INSPECTION [FULL-AUTO AIR CONDITIONER].) • Is airflow mode actuator normal?	Yes	Go to the next step.
		No	Replace the airflow mode actuator. (See 07-40A-13 AIRFLOW MODE ACTUATOR REMOVAL/INSTALLATION [FULL-AUTO AIR CONDITIONER].) Then go to the Step 20.
17	**INSPECT AIRFLOW MODE LINK** • Inspect airflow mode links. — Is grease on link? — Are links securely and properly installed? — Are links free of obstructions and hindrances? • Are above items okay?	Yes	Go to the next step.
		No	Apply grease to links. If any links are damaged, replace malfunctioning part. Then go to the Step 20.

SYMPTOM TROUBLESHOOTING [FULL-AUTO AIR CONDITIONER]

STEP	INSPECTION		ACTION
18	**INSPECT TO SEE WHETHER MALFUNCTION IS IN CLIMATE CONTROL UNIT OR AIRFLOW MODE DOOR** • Inspect A/C unit airflow mode door. — Is door free of obstructions, cracks and damage? — Are door securely and properly installed? • Are above items okay?	Yes	Go to the next step.
		No	Remove the obstruction, or install door in proper position. If any doors are cracked or damaged, replace them. Then go to the Step 20.
19	**VERIFY THAT DUCTS INSTALLATION CONDITION** • Are following ducts installed properly? — Dashboard ducts — Defroster ducts	Yes	Inspect ducts for clogging, deformity, and air leakage, then go to the next step.
		No	Install the suspected ducts properly, then go to the next step.
20	**CONFIRM THAT MALFUNCTION SYMPTOM DOES NOT RECUR AFTER REPAIR** • Does air blow out?	Yes	Troubleshooting completed. Explain repairs to customer.
		No	Recheck malfunction symptoms, then repeat from Step 1 if the malfunction recurs.

NO.2 AMOUNT OF AIR BLOWN FROM VENTS DOES NOT CHANGE [FULL-AUTO AIR CONDITIONER]

id0703c1800500

2	**Amount of air blown from vents does not change.**
DESCRIPTION	• Malfunction in blower system
POSSIBLE CAUSE	• Blower unit malfunction • Blower motor malfunction • Malfunction in power MOS FET system • Climate control unit malfunction

- When performing an asterisked (*) troubleshooting inspection, shake the wiring harness and connectors while performing the inspection to discover whether poor contact points are the cause of any intermittent malfunctions. If there is a problem, inspect make sure connectors, terminals and wiring harnesses are connected correctly and undamaged.

Diagnostic procedure

STEP	INSPECTION		ACTION
1	**INSPECT HEATER 40 A FUSE** • Inspect the HEATER 40 A fuse. • Is it normal?	Yes	Go to the next step.
		No	**If the fuse is melted:** Repair or replace wiring harness for short to GND and replace the fuse. **If the fuse is deterioration:** Replace the fuse. Then go to Step 15.
2	**INSPECT TO SEE WHETHER MALFUNCTION IS IN BLOWER UNIT OR ELSEWHERE** • Switch the ignition ON (engine off or on). • Turn the fan dial clockwise. • Recirculate air inside the vehicle. • Does the blower motor rotate smoothly?	Yes	Go to the next step.
		No	Go to Step 4.
3	**INSPECT BLOWER UNIT INTAKE VENT** • Is blower unit intake vent clogged?	Yes	Remove obstruction, then go to Step 15.
		No	Inspect if there are any obstruction in the A/C unit passage, then go to Step 15.
4*	**INSPECT TO SEE WHETHER MALFUNCTION IS IN BLOWER RELAY SYSTEM OR POWER MOS FET SYSTEM** • Switch the ignition ON (engine off or on). • Turn the fan dial clockwise. • Measure the voltage at the following blower motor terminal. — Terminal A (blower motor operation signal) • Is voltage **approx. 12 V**?	Yes	Go to Step 8.
		No	Go to the next step.

SYMPTOM TROUBLESHOOTING [FULL-AUTO AIR CONDITIONER]

STEP	INSPECTION		ACTION
5*	**INSPECT TO SEE WHETHER MALFUNCTION IS IN WIRING HARNESS (LACK OF CONTINUITY BETWEEN FUSE BLOCK AND BLOWER RELAY) OR ELSEWHERE** • Measure the voltage at the following blower relay terminals. — Terminal A (B+ signal) — Terminal B (B+ signal) • Is the voltage **approx. 12 V**?	Yes	Go to the next step.
		No	Repair the wiring harness for lack of continuity between the blower relay and HEATER 40 A fuse, then go to Step 15.
6*	**INSPECT TO SEE WHETHER MALFUNCTION IS IN WIRING HARNESS (LACK OF CONTINUITY BETWEEN BLOWER RELAY AND GROUND) OR ELSEWHERE** • Measure the voltage at the following blower relay terminal. — Terminal D (GND signal) • Is the voltage **approx. 0 V**?	Yes	Go to the next step.
		No	Repair the wiring harness for lack of continuity between the blower relay and front body control module (FBCM), then go to Step 15.
7*	**INSPECT TO SEE WHETHER MALFUNCTION IS IN WIRING HARNESS (LACK OF CONTINUITY BETWEEN BLOWER RELAY AND BLOWER MOTOR) OR BLOWER RELAY** • Measure the voltage at the following blower relay terminal. — Terminal C (blower motor operation signal) • Is the voltage **approx. 12 V**?	Yes	Repair the wiring harness for lack of continuity between the blower relay and blower motor, then go to Step 15.
		No	Replace the blower relay, then go to Step 15.
8*	**INSPECT TO SEE WHETHER MALFUNCTION IS IN BLOWER MOTOR OR ELSEWHERE** • Measure the voltage at the following blower motor terminal. — Terminal B (blower motor operation signal) • Is the voltage **approx. 12 V**?	Yes	Go to the next step.
		No	Inspect the blower motor, then go to Step 15. (See 07-40A-16 BLOWER MOTOR INSPECTION [FULL-AUTO AIR CONDITIONER].)
9*	**INSPECT TO SEE WHETHER MALFUNCTION IS IN WIRING HARNESS (LACK OF CONTINUITY BETWEEN BLOWER MOTOR AND POWER MOS FET) OR ELSEWHERE** • Measure the voltage at the following terminal of power MOS FET. — Terminal B (blower motor operation signal) • Is voltage **approx. 12 V**?	Yes	Go to the next step.
		No	Repair the wiring harness for lack of continuity between the blower motor and power MOS FET, then go to Step 15.
10*	**INSPECT TO SEE WHETHER MALFUNCTION IS IN WIRING HARNESS (LACK OF CONTINUITY BETWEEN POWER MOS FET AND GROUND) OR ELSEWHERE** • Measure the voltage at the following power MOS FET terminal. — Terminal A (GND) • Is the voltage **approx. 0 V**?	Yes	Go to the next step.
		No	Repair the wiring harness for lack of continuity between the power MOS FET and ground, then go to Step 15.
11	**INSPECT BLOWER UNIT** • Inspect the fan in blower unit. — Is the fan free of interference with the blower unit case? — Is the fan free of foreign material and obstruction? • Is the fan normal?	Yes	Go to the next step.
		No	Remove obstruction, repair or replace the fan and A/C unit case, then go to Step 15.
12*	**INSPECT TO SEE WHETHER MALFUNCTION IS IN POWER MOS FET OR ELSEWHERE** • Disconnect power MOS FET connector. • Turn the fun switch to 1st position from off. • Measure the voltage at the following power MOS FET terminal. — Terminal E (blower motor speed control signal) • Is voltage **approx. 10 V**?	Yes	Replace the power MOS FET, then go to Step 15. (See 07-40A-19 POWER METAL OXIDE SEMICONDUCTOR FIELD EFFECT TRANSISTOR (POWER MOS FET) REMOVAL/INSTALLATION [FULL-AUTO AIR CONDITIONER].)
		No	Go to the next step.

SYMPTOM TROUBLESHOOTING [FULL-AUTO AIR CONDITIONER]

STEP	INSPECTION		ACTION
13*	**INSPECT TO SEE WHETHER MALFUNCTION IS IN WIRING HARNESS (LACK OF CONTINUITY BETWEEN POWER MOS FET AND CLIMATE CONTROL UNIT) OR ELSEWHERE** • Switch the ignition off. • Disconnect climate control unit connector. • Inspect for continuity at the following terminals between the power MOS FET and climate control unit. — Terminal E—2D blower motor speed control signal) — Terminal B—2A (blower motor speed feedback signal) • Is there continuity?	Yes	Go to the next step.
		No	Repair the wiring harness for lack of continuity between the power MOS FET and climate control unit, then go to Step 15.
14*	**INSPECT TO SEE WHETHER MALFUNCTION IS IN CLIMATE CONTROL UNIT OR WIRING HARNESS (SHORT TO GROUND IN WIRING HARNESS BETWEEN POWER MOS FET AND CLIMATE CONTROL UNIT)** • Inspect for continuity at the following terminal between the power MOS FET and ground. — Terminal E (blower motor control signal)—ground — Terminal B (blower motor feedback signal)—ground • Is there continuity?	Yes	Repair the wiring harness for short to GND between the power MOS FET and ground, then go to the next step.
		No	Replace the climate control unit, then go to the next step. (See 07-40A-32 CLIMATE CONTROL UNIT REMOVAL/ INSTALLATION [FULL-AUTO AIR CONDITIONER].)
15	**CONFIRM THAT MALFUNCTION SYMPTOM DOES NOT RECUR AFTER REPAIR** • Is air discharged from vent?	Yes	Troubleshooting completed. Explain repairs to customer.
		No	Recheck malfunction symptoms, then repeat from Step 1 if the malfunction recurs.

SYMPTOM TROUBLESHOOTING [FULL-AUTO AIR CONDITIONER]

NO.3 AIR INTAKE MODE FROM VENT DOES NOT CHANGE [FULL-AUTO AIR CONDITIONER]

id0703c1803000

3	**Air intake mode from vent does not change.**
DESCRIPTION	• Air intake mode does not change when switching REC/FRESH mode.
POSSIBLE CAUSE	• Air intake actuator malfunction • Air intake door malfunction • Clogged in blower unit

- When performing an asterisked (*) troubleshooting inspection, shake the wiring harness and connectors while performing the inspection to discover whether poor contact points are the cause of any intermittent malfunctions. If there is a problem, inspect to make sure connectors, terminals and wiring harnesses are connected correctly and undamaged.

Diagnostic procedure

STEP	INSPECTION		ACTION
1	**INSPECT AIR INTAKE ACTUATOR** • Inspect the following item using the M-MDS A/C operation check mode function. (See 07-02-39 A/C OPERATION CHECK MODE [FULL-AUTO AIR CONDITIONER].) — Air Intake Actuator • Does the air intake actuator operate?	Yes	Go to Step 7.
		No	Go to the next step.
2	**INSPECT TO SEE WHETHER MALFUNCTION IS IN AIR INTAKE ACTUATOR OR ELSEWHERE** • Disconnect the air intake actuator connector. • Switch the ignition ON (engine off or on). • Measure the voltages at the following climate control unit terminals. — Terminal 2J (FRESH motor drive signal) — Terminal 2L (RECIRCULATE motor drive signal) (See 07-40A-33 CLIMATE CONTROL UNIT INSPECTION [FULL-AUTO AIR CONDITIONER].) • Are voltages normal?	Yes	Go to the next step.
		No	Go to Step 4.
3	**INSPECT AIR INTAKE ACTUATOR** • Inspect the air intake actuator. (See 07-40A-6 AIR INTAKE ACTUATOR INSPECTION [FULL-AUTO AIR CONDITIONER].) • Is the air intake actuator normal?	Yes	Go to Step 7.
		No	Replace the air intake actuator. (See 07-40A-5 AIR INTAKE ACTUATOR REMOVAL/ INSTALLATION [FULL-AUTO AIR CONDITIONER].) Then go to Step 9.
4	**INSPECT TO SEE WHETHER MALFUNCTION IS IN WIRING HARNESS (SHORT TO B+ BETWEEN CLIMATE CONTROL UNIT AND AIR INTAKE ACTUATOR) OR ELSEWHERE** • Air intake actuator connector disconnected. • Disconnect the climate control unit connector. • Measure the voltages at the following air intake actuator terminals. — Terminal C (L.H.D.) / B (R.H.D.) (FRESH motor drive signal) — Terminal B (L.H.D.) / C (R.H.D.) (RECIRCULATE motor drive signal) • Are voltages **approx. 0 V**?	Yes	Go to the next step.
		No	Repair the wiring harness for short to B+ between the climate control unit and air intake actuator, then go to Step 9.

SYMPTOM TROUBLESHOOTING [FULL-AUTO AIR CONDITIONER]

STEP	INSPECTION		ACTION
5	**INSPECT TO SEE WHETHER MALFUNCTION IS IN WIRING HARNESS (SHORT TO GROUND BETWEEN CLIMATE CONTROL UNIT AND AIR INTAKE ACTUATOR) OR ELSEWHERE** • Climate control unit and air intake actuator connectors disconnected. • Switch the ignition off. • Inspect for continuity at the following terminals between the air intake actuator and ground. — Terminal C (L.H.D.) / B (R.H.D.) (FRESH motor drive signal) — Terminal B (L.H.D.) / C (R.H.D.) (RECIRCULATE motor drive signal) • Is there continuity?	Yes	Repair the wiring harness between the climate control unit and air intake actuator, then go to Step 9.
		No	Go to the next step.
6	**INSPECT TO SEE WHETHER MALFUNCTION IS IN WIRING HARNESS (LACK OF CONTINUITY OR OPEN BETWEEN CLIMATE CONTROL UNIT AND AIR INTAKE ACTUATOR) OR ELSEWHERE** • Climate control unit and air intake actuator connectors disconnected. • Inspect for continuity at the following terminals between the air intake actuator and climate control unit. **L.H.D.** — Terminal C—2J (FRESH motor drive signal) — Terminal B—2L (RECIRCULATE motor drive signal) **R.H.D.** — Terminal B—2J (FRESH motor drive signal) — Terminal C—2L (RECIRCULATE motor drive signal) • Is there continuity?	Yes	Replace the climate control unit, then go to Step 9. (See 07-40A-32 CLIMATE CONTROL UNIT REMOVAL/ INSTALLATION [FULL-AUTO AIR CONDITIONER].)
		No	Repair the wiring harness for lack of continuity or open between climate control unit and air intake actuator, then go to Step 9.
7	**INSPECT AIR INTAKE LINK** • Inspect the air intake links. — Is there grease on link? — Are the links securely and properly installed? — Are the links free of obstructions and hindrances? • Are the above items normal?	Yes	Go to the next step.
		No	Apply grease to the links. If any the links are damaged, replace the air intake actuator, then go to Step 9.
8	**INSPECT TO SEE WHETHER MALFUNCTION IS IN CLIMATE CONTROL UNIT OR AIR INTAKE DOOR** • Inspect the blower unit air intake door. — Is the door free of obstructions, cracks, and damage? — Are the doors securely and properly installed? • Are the above items normal?	Yes	Replace the climate control unit, then go to the next step. (See 07-40A-32 CLIMATE CONTROL UNIT REMOVAL/ INSTALLATION [FULL-AUTO AIR CONDITIONER].)
		No	Remove obstruction, or install the doors in the proper position. If any doors are cracked or damaged, replace them, then go to the next step.
9	**CONFIRM THAT MALFUNCTION SYMPTOMS DO NOT RECUR AFTER REPAIR** • Does the air intake mode change smoothly?	Yes	Troubleshooting completed. Explain repairs to customer.
		No	Recheck malfunction symptoms, then repeat from Step 1 if the malfunction recurs.

SYMPTOM TROUBLESHOOTING [FULL-AUTO AIR CONDITIONER]

NO.4 NO TEMPERATURE CONTROL WITH CLIMATE CONTROL UNIT [FULL-AUTO AIR CONDITIONER]

id0702c1812400

4	No temperature control with climate control unit
DESCRIPTION	• Temperature does not change when operating temperature dial • Malfunction in A/C unit and/or climate control unit air mix system • Malfunction in driver and/or passenger side air mix actuator or related wiring harness
POSSIBLE CAUSE	• A/C unit air mix link, air mix crank, air mix rod, malfunction • Climate control unit rack-and-pinion, malfunction • A/C unit air mix door malfunction • Heater piping malfunction

Diagnostic procedure

STEP	INSPECTION		ACTION
1	**INSPECT COOLANT TEMPERATURE** • Is the coolant sufficiently warmed up?	Yes	Go to the next step.
		No	Warm up the engine, then go to Step 20.
2*	**INSPECT CLIMATE CONTROL UNIT POWER SUPPLY FUSE FOR B+ SIGNAL** • Is the climate control unit power supply fuse for B+ signal normal?.	Yes	Go to the next step.
		No	Inspect for short to GND in blown fuse circuit. Repair or replace as necessary. Install appropriate amperage fuse, then go to Step 20.
3*	**INSPECT TO SEE WHETHER MALFUNCTION (OPEN CIRCUIT) IS IN B+ SIGNAL WIRING HARNESS (BETWEEN FUSE BLOCK AND CLIMATE CONTROL UNIT) OR ELSEWHERE.** • Disconnect the climate control unit connector (24-pin). • Switch the ignition ON (engine off or on). • Measure voltage at climate control unit harness-side connector (24-pin) terminal 1E (B+ signal). • Is the voltage **approx. 12V?**	Yes	Go to the next step.
		No	Repair wiring harness for open between fuse block and climate control unit, then go to Step 20.
4*	**INSPECT TO SEE WHETHER MALFUNCTION (LACK OF CONTINUITY) WIRING HARNESS (BETWEEN CLIMATE CONTROL UNIT AND GND) OR ELSEWHERE** • Climate control unit connector (24-pin) disconnected. • Verify that continuity between climate control unit harness-side connector (24-pin) terminal 1W and GND. • Is the continuity?	Yes	Go to the next step.
		No	Repair wiring harness for lack of continuity between climate control unit and GND. Inspect GND point condition. Then go to Step 20.
5*	**INSPECT TO SEE WHETHER MALFUNCTION IS IN BLOWER UNIT OR AIR MIX ACTUATOR** • Reconnect the disconnected climate control unit connector. • Switch the ignition ON (engine off or on). • Measure the voltage at climate control unit terminal 1N and 1P (24-pin) when temperature control dial at MAX HOT and MAX COLD. (See 07-40A-33 CLIMATE CONTROL UNIT INSPECTION [FULL-AUTO AIR CONDITIONER].) • Is voltage normal?	Yes	Go to Step 16.
		No	Go to the next step.
6*	**INSPECT TO SEE WHETHER MALFUNCTION IS IN POSITION SENSOR OR ELSEWHERE** • Switch the ignition ON (engine off or on). • Measure voltage at climate control unit terminal 1R (24-pin) when airflow mode change to DEF and VENT (See 07-40A-33 CLIMATE CONTROL UNIT INSPECTION [FULL-AUTO AIR CONDITIONER].) • Is voltage normal?	Yes	Go to Step 9.
		No	Go to the next step.

SYMPTOM TROUBLESHOOTING [FULL-AUTO AIR CONDITIONER]

STEP	INSPECTION		ACTION
7*	**INSPECT TO SEE WHETHER MALFUNCTION (LACK OF CONTINUITY OR SHORT TO BATTERY POWER OR GND) IS IN POSITION SENSOR POWER SUPPLY (CLIMATE CONTROL UNIT TERMINAL 1H) OR ELSEWHERE** • Switch the ignition ON (engine off or on). • Measure voltage at climate control unit terminal 1H (24-pin). • Is voltage **approx. 5V?**	Yes	Go to the next step.
		No	Repair wiring harness for lack of continuity or short circuit between climate control unit terminal 1H and follows: • Driver side air mix actuator terminal G (L.H.D.) / E (R.H.D.) • Passenger side air mix actuator terminal E (L.H.D.) / G (R.H.D.) • Airflow mode actuator terminal B Then go to Step 20.
8*	**INSPECT TO SEE WHETHER MALFUNCTION (LACK OF CONTINUITY OR OPEN) IS IN POSITION SENSOR GND (CLIMATE CONTROL UNIT TERMINAL 1X) OR ELSEWHERE** • Measure voltage at climate control unit terminal 1X (24-pin). • Is the voltage **below. 1.0V?**	Yes	Go to Step 12.
		No	Repair wiring harness for lack of continuity or open between climate control unit terminal 1X and follows: • Driver side air mix actuator terminal E (L.H.D.) / G (R.H.D.) • Passenger side air mix actuator terminal G (L.H.D.) / E (R.H.D.) • Airflow mode actuator terminal A Then go to Step 20.
9	**INSPECT TO SEE WHETHER MALFUNCTION (SHORT TO POWER) IS IN WIRING HARNESS (AIR MIX POSITION SIGNAL) OR ELSEWHERE** • Is climate control unit terminal 1N and 1P voltage **approx. 12V,** at Step 5?	Yes	Repair wiring harness for short to power supply between climate control unit terminal 1N and 1P and each side air mix actuator terminal F. Then go to Step 20.
		No	Go to the next step.
10*	**INSPECT TO SEE WHETHER MALFUNCTION (LACK OF CONTINUITY) IS IN WIRING HARNESS (AIR MIX POSITION SIGNAL) OR ELSEWHERE** • Switch the ignition off. • Disconnect the climate control unit and air mix actuator connectors. • Verify continuity between climate control unit terminal 1N and 1P (24-pin) and each side air mix actuator terminal F at harness-side connector. • Is there continuity?	Yes	Go to the next step.
		No	Repair wiring harness for lack of continuity between climate control unit terminal 1N and 1P and each side air mix actuator terminal F. Then go to Step 20.
11*	**INSPECT TO SEE WHETHER MALFUNCTION (SHORT TO GND) IS IN WIRING HARNESS (AIR MIX POSITION SIGNAL) OR POSITION SENSOR COMMON (POWER SUPPLY OR GND) HARNESS** • Climate control unit and air mix actuators connectors disconnected. • Verify continuity between climate control unit harness-side connector terminal 1N and 1P (24-pin) and GND. • Is there continuity?	Yes	Repair wiring harness for short to GND between climate control unit terminal 1N and 1P and each side air mix actuator terminal F. Then go to Step 20.
		No	Inspect and repair for open circuit following: • Between driver side air mix actuator terminal G (L.H.D.) / E (R.H.D.) and junction point to airflow mode actuator (position sensor power supply). • Between passenger side air mix actuator terminal E (L.H.D.) / G (R.H.D.) and junction point to airflow mode actuator (position sensor power supply). • Between driver side air mix actuator terminal E (L.H.D.) / G (R.H.D.) and junction point to airflow mode actuator (position sensor GND). • Between passenger side air mix actuator terminal G (L.H.D.) / E (R.H.D.) and junction point to airflow mode actuator (position sensor GND). Then go to Step 20.

SYMPTOM TROUBLESHOOTING [FULL-AUTO AIR CONDITIONER]

STEP	INSPECTION		ACTION
12*	**INSPECT TO SEE WHETHER MALFUNCTION (LACK OF CONTINUITY) IS IN AIR MIX ACTUATOR OR WIRING HARNESS (BETWEEN CLIMATE CONTROL UNIT AND AIR MIX ACTUATOR)** • Disconnect the air mix actuators connectors. • Measure voltage at the following terminals of air mix actuator. **L.H.D.** — Terminal C (driver-side)/B (passenger-side) (COLD motor drive signal) — Terminal B (driver-side)/C (passenger-side) (HOT motor drive signal) **R.H.D.** — Terminal B (driver-side)/C (passenger-side) (COLD motor drive signal) — Terminal C (driver-side)/B (passenger-side) (HOT motor drive signal) • Are voltage s as shown below? — COLD motor drive signal: **approx. 10V** during COLD and **approx. 0.5V** during HOT — HOT motor drive signal: **approx. 0.5V** during COLD and **approx. 10V** during HOT	Yes	Go to Step 16.
		No	Go to the next step.
13*	**INSPECT TO SEE WHETHER MALFUNCTION IS IN WIRING HARNESS (SHORT TO B+ BETWEEN CLIMATE CONTROL UNIT AND AIR MIX ACTUATOR) OR ELSEWHERE** • Air mix actuators connectors disconnected. • Disconnect the climate control unit connector. • Measure voltage at the following terminals of the climate control unit harness-side connector. **Driver-side: (L.H.D.)** — Terminal 2G (12-pin, COLD motor drive signal) — Terminal 2E (12-pin, HOT motor drive signal) **Passenger-side: (L.H.D.)** — Terminal 2H (12-pin, COLD motor drive signal) — Terminal 2F (12-pin, HOT motor drive signal) **Driver-side: (R.H.D.)** — Terminal 2H (12-pin, COLD motor drive signal) — Terminal 2F (12-pin, HOT motor drive signal) **Passenger-side: (R.H.D.)** — Terminal 2G (12-pin, COLD motor drive signal) — Terminal 2E (12-pin, HOT motor drive signal) • Are voltages **approx. 0V?**	Yes	Go to the next step.
		No	Repair wiring harness for short to B+ between climate control unit and air mix actuator. Then go to Step 20.

SYMPTOM TROUBLESHOOTING [FULL-AUTO AIR CONDITIONER]

STEP	INSPECTION		ACTION
14*	**INSPECT TO SEE WHETHER MALFUNCTION IS IN WIRING HARNESS (SHORT TO GND BETWEEN CLIMATE CONTROL UNIT AND AIR MIX ACTUATOR) OR ELSEWHERE** • Air mix actuators connectors disconnected. • Switch the ignition off. • Verify that continuity at the following harness-side connector terminals between climate control unit and GND. **Driver-side: (L.H.D.)** — Terminal 2G (12-pin, COLD motor drive signal) — Terminal 2E (12-pin, HOT motor drive signal) **Passenger-side: (L.H.D.)** — Terminal 2H (12-pin, COLD motor drive signal) — Terminal 2F (12-pin, HOT motor drive signal) **Driver-side: (R.H.D.)** — Terminal 2H (12-pin, COLD motor drive signal) — Terminal 2F (12-pin, HOT motor drive signal) **Passenger-side: (R.H.D.)** — Terminal 2G (12-pin, COLD motor drive signal) — Terminal 2E (12-pin, HOT motor drive signal) • Is there continuity?	Yes	Repair wiring harness for short to GND between climate control unit and air mix actuator. Then go to Step 20.
		No	Go to the next step.
15	**INSPECT TO SEE WHETHER MALFUNCTION IS IN WIRING HARNESS (LACK OF CONTINUITY OR OPEN BETWEEN CLIMATE CONTROL UNIT AND AIR MIX ACTUATOR) OR ELSEWHERE** • Air mix actuators connectors disconnected. • Switch the ignition off. • Verify that continuity at the following harness-side connector terminals between climate control unit and each air mix actuator. **L.H.D.** Driver-side air mix actuator: — Terminal C—climate control unit terminal 2G (12-pin, COLD motor drive signal) — Terminal B—climate control unit terminal 2E (12-pin, HOT motor drive signal) Passenger-side air mix actuator: — Terminal B—climate control unit terminal 2H (12-pin, COLD motor drive signal) — Terminal C—climate control unit terminal 2F (12-pin, HOT motor drive signal) **R.H.D.** Driver-side air mix actuator: — Terminal B—climate control unit terminal 2H (12-pin, COLD motor drive signal) — Terminal C—climate control unit terminal 2F (12-pin, HOT motor drive signal) Passenger-side air mix actuator: — Terminal C—climate control unit terminal 2G (12-pin, COLD motor drive signal) — Terminal B—climate control unit terminal 2E (12-pin, HOT motor drive signal) • Is there continuity?	Yes	Repair wiring harness for lack of continuity or open between climate control unit and air mix actuator. Then go to Step 20.
		No	Go to the next step.

SYMPTOM TROUBLESHOOTING [FULL-AUTO AIR CONDITIONER]

STEP	INSPECTION		ACTION
16	**INSPECT AIR MIX ACTUATOR** • Inspect the air mix actuator. (See 07-40A-9 AIR MIX ACTUATOR INSPECTION [FULL-AUTO AIR CONDITIONER].) • Is air mix actuator normal?	Yes	Go to the next step.
		No	Replace the suspected side air mix actuator. Then go to 20. (See 07-40A-7 AIR MIX ACTUATOR REMOVAL/ INSTALLATION [FULL-AUTO AIR CONDITIONER].)
17	**INSPECT AIR MIX LINK** • Inspect air mix links for each-side. — Is grease on link? — Are links securely and properly installed? — Are links free of obstructions and hindrances? • Are above items okay?	Yes	Go to the next step.
		No	Apply grease to links. If any links are damaged. Replace malfunctioning part. Then go to Step 20.
18	**INSPECT TO SEE WHETHER MALFUNCTION IS IN CLIMATE CONTROL UNIT OR AIR MIX DOOR ELSEWHERE** • Inspect A/C unit and each-side air mix door. — Is door free of unit and obstruction, and damage? — Are doors securely and properly installed? • Are above items okay?	Yes	Go to the next step.
		No	Remove the obstruction, or install door in proper position. If any door are cracked, replace them. Then go to the next step.
19	**INSPECT HEATER LINES** • Inspect heater lines for followings: — Is heater piping free if damage and cracks? — Are heater piping connections free of engine coolant leakage? — Are heater piping installation points on A/C unit free of engine coolant leakage? • Are above items okay?	Yes	Replace the climate control unit. Then go to the next step. (See 07-40A-32 CLIMATE CONTROL UNIT REMOVAL/ INSTALLATION [FULL-AUTO AIR CONDITIONER].)
		No	If heater piping connections is loosed, tighten connections with specified torque. Repair or replace heater piping. Then go to the next step.
20	**VERIFY THAT MALFUNCTION SYMPTOM OCCURS AFTER REPAIR** • Does the unit operate in every temperature setting?	Yes	Trouble shooting completed. Explain repairs customer.
		No	Recheck malfunction symptoms, then repeat from Step1 if the malfunction recurs.

07

NO.5 WINDSHIELD FOGGED [FULL-AUTO AIR CONDITIONER]

id0703c1801900

5	Windshield fogged
DESCRIPTION	• A/C compressor does not operate while airflow mode is in DEFROSTER or DEF/HEAT modes • Air intake mode does not change to FRESH while airflow mode is in DEFROSTER or DEF/HEAT modes
POSSIBLE CAUSE	• Climate control unit (B+ signal) system malfunction • Air intake actuator malfunction • Climate control unit (RECIRCULATE, FRESH signal) system malfunction • Blower unit air intake door malfunction

- When performing an asterisked (*) troubleshooting inspection, shake the wiring harness and connectors while doing the inspection to discover whether poor contact points are the cause of any intermittent malfunctions. If there is a problem, inspect to make sure connectors, terminals and wiring harness are connected correctly and undamaged.

Diagnostic procedure

STEP	INSPECTION		ACTION
1	**COOL AIR BLOW OUT INSPECTION** • When both the A/C switch and airflow volume control dial in the climate control unit are on, does cool air blow out from the front vent?	Yes	Go to the next step.
		No	Go to Step 1 of troubleshooting index No.7.
2	**INSPECT CLIMATE CONTROL UNIT POWER SUPPLY FUSE FOR B+ SIGNAL** • Is the climate control unit power supply fuse for B+ signal normal?	Yes	Go to the next step.
		No	**If the fuse is melted:** Repair or replace wiring harness for short to GND and replace the fuse. **If the fuse is deterioration:** Replace the fuse. Then go to Step 14.

SYMPTOM TROUBLESHOOTING [FULL-AUTO AIR CONDITIONER]

STEP	INSPECTION		ACTION
3	**INSPECT AIR INTAKE ACTUATOR** • Inspect the air intake actuator. — Is there grease on the link? — Is the link securely and properly positioned? — Is the link free of obstructions? • Are the above items normal?	Yes	Go to the next step.
		No	Apply grease or install the link properly and securely, remove obstruction, then go to Step 14.
4*	**INSPECT WIRING HARNESS BETWEEN FUSE BLOCK AND CLIMATE CONTROL UNIT FOR CONTINUITY** • Disconnect the climate control unit connector (24-pin). • Switch the ignition ON (engine off or on). • Measure the voltage at climate control unit terminal 1E (B+ signal). • Is the voltage **approx. 12 V**?	Yes	Go to the next step.
		No	Repair the wiring harness between the fuse block and climate control unit, then go to Step 14.
5*	**INSPECT WIRING HARNESS BETWEEN CLIMATE CONTROL UNIT AND GROUND FOR VOLTAGE** • Measure the voltage at climate control unit terminal 1W (Ground). • Is the voltage **approx. 0V**?	Yes	Go to the next step.
		No	Repair the wiring harness between the climate control unit and ground, then go to Step 14.
6	**VERIFY WHETHER MALFUNCTION IS IN A/C UNIT AIR INTAKE DOOR OR ELSEWHERE** • Switch the ignition off. • Connect the climate control unit connector (24-pin and 12-pin). • Remove the air intake actuator. • Switch the ignition ON (engine off or on). • Set the airflow volume control dial to MAX position. • Does the air intake mode (RECIRCULATE, FRESH) change smoothly when the air intake link is operated by hand?	Yes	Go to the next step.
		No	Go to Step 12.
7	**INSPECT AIR INTAKE ACTUATOR** • Inspect the air intake actuator. (See 07-40A-6 AIR INTAKE ACTUATOR INSPECTION [FULL-AUTO AIR CONDITIONER].) • Is it normal?	Yes	Go to the next step.
		No	Replace the air intake actuator, go to Step 14.
8	**INSPECT AIR INTAKE SELECTOR SWITCH AND DEFROSTER SWITCH IN CLIMATE CONTROL UNIT** • Measure the voltage at climate control unit connector (12-pin) terminals 2J and 2L. • Is it normal?	Yes	Go to the next step.
		No	Replace the climate control unit, then go to Step 14. (See 07-40A-32 CLIMATE CONTROL UNIT REMOVAL/ INSTALLATION [FULL-AUTO AIR CONDITIONER].)
9*	**INSPECT WIRING HARNESS BETWEEN CLIMATE CONTROL UNIT AND AIR INTAKE ACTUATOR FOR CONTINUITY** • Switch the ignition off. • Is there continuity between the following climate control unit terminals and air intake actuator terminals? **L.H.D.** — Terminal 2J —Terminal C (FRESH signal) — Terminal 2L —Terminal B (RECIRCULATE signal) **R.H.D.** — Terminal 2J —Terminal B (FRESH signal) — Terminal 2L —Terminal C (RECIRCULATE signal)	Yes	Go to the next step.
		No	Repair the wiring harness between the climate control unit and air intake actuator, then go to Step 14.

SYMPTOM TROUBLESHOOTING [FULL-AUTO AIR CONDITIONER]

STEP	INSPECTION		ACTION
10*	**INSPECT WIRING HARNESS BETWEEN CLIMATE CONTROL UNIT AND AIR INTAKE ACTUATOR FOR SHORT TO GROUND** • Is there continuity between the following climate control unit terminals and ground? — Terminal 2J (FRESH signal) — Terminal 2L (RECIRCULATE signal)	Yes	Repair the wiring harness between the climate control unit and air intake actuator, then go to Step 14.
		No	Go to the next step.
11*	**INSPECT WIRING HARNESS BETWEEN CLIMATE CONTROL UNIT AND AIR INTAKE ACTUATOR FOR SHORT TO B+** • Switch the ignition ON (engine off or on). • Measure the voltage at the following climate control unit terminals. — Terminal 2J (FRESH signal) — Terminal 2L (RECIRCULATE signal) • Is the voltage **approx. 12 V**?	Yes	Repair the wiring harness between the climate control unit and air intake actuator, then go to Step 14.
		No	Replace the climate control unit, then go to Step 14. (See 07-40A-32 CLIMATE CONTROL UNIT REMOVAL/ INSTALLATION [FULL-AUTO AIR CONDITIONER].)
12	**INSPECT BLOWER UNIT AIR INTAKE DOOR** • Is there any foreign material or obstruction in the blower unit air intake door?	Yes	Remove obstruction, then go to Step 14.
		No	Go to the next step.
13	**VERIFY THAT BLOWER UNIT AIR INTAKE DOOR IS POSITIONED SECURELY AND PROPERLY** • Is the blower unit air intake door securely and properly positioned?	Yes	Inspect the air intake door for cracks or damage, then go to the next step.
		No	Install the air intake door securely in the proper position, then go to the next step.
14	**VERIFY THAT MALFUNCTION SYMPTOM OCCURS AFTER REPAIR** • Does the malfunction disappear?	Yes	Troubleshooting completed. Explain repairs to customer.
		No	Recheck malfunction symptoms, then repeat from Step 1 if the malfunction recurs.

NO.6 AIR FROM VENTS NOT COLD ENOUGH [FULL-AUTO AIR CONDITIONER]

id0702c1812500

07

6	**Air from vents not cold enough**
DESCRIPTION	• Magnetic clutch operates but A/C system malfunctions
POSSIBLE CAUSE	**Note** • If the engine coolant temperature increases due to a cooling system malfunction, the fail-safe function disables the A/C operation. • Drive belt malfunction • Refrigerant pressure sensor malfunction • Malfunction in blower unit or condenser • Cooling fan system malfunction • Condenser or related part malfunction • A/C unit or condenser malfunction • Receiver/drier or expansion valve malfunction (valve closes too much) • Malfunction in refrigerant lines • A/C compressor system malfunction, insufficient compressor oil • Over filling of compressor oil, malfunction in expansion valve or A/C unit air mix link system • Evaporative temperature sensor malfunction

Diagnostic procedure

STEP	INSPECTION		ACTION
1	**CHECK MALFUNCTION SYMPTOMS** **Note** • Without i-stop, go to the next step. • Is malfunctions occur in only when operating the i-stop?	Yes	Perform the i-stop troubleshooting. (See 01-02-4 FOREWORD [SKYACTIV-G 2.0].)
		No	Go to the next step.
2	**INSPECT REFRIGERANT SYSTEM PERFORMANCE** • Perform refrigerant system performance test. (See 07-10-9 REFRIGERANT SYSTEM PERFORMANCE TEST.) • Is the operation normal?	Yes	Operation is normal. (Recheck malfunction symptoms.)
		No	Go to the next step.

SYMPTOM TROUBLESHOOTING [FULL-AUTO AIR CONDITIONER]

STEP	INSPECTION		ACTION
3	**INSPECT DRIVE BELT** • Inspect the drive belt. (See 01-10A-9 DRIVE BELT INSPECTION [SKYACTIV-G 2.0].) (See 01-10B-7 DRIVE BELT INSPECTION [SKYACTIV-D 2.2].) • Is it normal?	Yes	Go to the next step.
		No	Adjust or replace the drive belt, then the next step. (See 01-10A-10 DRIVE BELT REMOVAL/INSTALLATION [SKYACTIV-G 2.0].) (See 01-10B-8 DRIVE BELT REMOVAL/INSTALLATION [SKYACTIV-D 2.2].)
4	**INSPECT REFRIGERANT PRESSURE SENSOR** • Inspect the refrigerant pressure sensor. (See 07-40A-30 REFRIGERANT PRESSURE SENSOR INSPECTION [FULL-AUTO AIR CONDITIONER].) • Is it normal?	Yes	Replace the refrigerant pressure sensor. (See 07-40A-32 CLIMATE CONTROL UNIT REMOVAL/INSTALLATION [FULL-AUTO AIR CONDITIONER].) Then go to the next step.
		No	Go to the next step.
5	**DETERMINE IF MALFUNCTION CAUSE IS A/C PRESSURE SENSOR SIGNAL OR ELSEWHERE** • Access PCM PID AC_PRES. • Monitor the AC_PRES PID while turning on and off the air conditioner by switching the control panel. (See 01-40-17 PCM INSPECTION [SKYACTIV-G 2.0].) • Is the PID normal?	Yes	Go to appropriate inspection procedure.
		No	Go to the next step.
6	**INSPECT REFRIGERANT PRESSURE** • Perform refrigerant pressure check. (See 07-10-7 REFRIGERANT PRESSURE CHECK.) • Are the refrigerant high-pressure and low-pressure values both high?	Yes	Go to the next step.
		No	After recording the inspection results, go to Step 11.
7	**INSPECT COOLING FAN OPERATION** • Verify the cooling fan operation. (See 01-03-118 ENGINE CONTROL SYSTEM OPERATION INSPECTION [SKYACTIV-G 2.0].) • Is the cooling fan operation normal?	Yes	Go to the next step.
		No	Repair or replace the malfunctioning location according to the inspection results. Then go to Step 23.
8	**VISUALLY INSPECT CONDENSER** • Is the condenser fin clogged or obstructed by foreign material?	Yes	Remove the foreign material. Repair the condenser fin. Then go to Step 23.
		No	Go to the next step.
9	**CHECK TO SEE WHETHER MALFUNCTION IS IN EXPANSION VALVE OR ELSEWHERE** • Verify the condition of the low pressure hose while the A/C is operating. • Is there frost or condensation adhering?	Yes	Replace the expansion valve. After performing the following servicing, go to Step 23. • Adjust the compressor oil to the specified level. • After discharging, charge with new refrigerant to the specified level.
		No	Go to the next step.
10	**INSPECT AIR MIX DOOR RELATED PART INSTALLATION** • Remove the A/C unit. (See 07-11-11 A/C UNIT REMOVAL/INSTALLATION.) • Are the air mix link, and air mix crank of the A/C unit correctly and securely installed to their positions?	Yes	Adjust the compressor oil to the specified amount. (See 07-11-25 A/C COMPRESSOR REMOVAL/INSTALLATION.) Then go to Step 23.
		No	Repair or install the links, and cranks securely in the proper position, then go to Step 23.
11	**CHECK TO SEE WHETHER MALFUNCTION IS IN BLOWER UNIT AND REFRIGERANT PRESSURE LINE OR ELSEWHERE** • Are the refrigerant high-pressure and low-pressure values low?	Yes	Go to the next step.
		No	Go to Step 17.
12	**INSPECT BLOWER UNIT FOR BLOCKAGE** • Is the blower unit intake and air filter clogged?	Yes	Remove the cause of the clogging. Replace the air filter if it is clogged. (See 07-11-11 AIR FILTER REMOVAL/INSTALLATION.) Then go to Step 23.
		No	Go to the next step.

SYMPTOM TROUBLESHOOTING [FULL-AUTO AIR CONDITIONER]

STEP	INSPECTION		ACTION
13	**CHECK TO SEE WHETHER MALFUNCTION IS REFRIGERANT LINE LEAKAGE OR ELSEWHERE** • Verify if there is gas leakage from the system hoses using the gas leak tester. • Is there gas leakage?	Yes	• If there is leakage from a system hose connection area, go to Step 15. • If there is leakage other than from a system hose connection area, go to the next step.
		No	Go to the next step.
14	**VISUALLY INSPECT REFRIGERANT LINE** • Is a system hose crushed?	Yes	Replace the crushed system hose. (See 07-11-36 REFRIGERANT LINE REMOVAL/INSTALLATION.) After performing the following servicing, go to the next step. • Adjust the compressor oil to the specified level. • After discharging, charge with new refrigerant to the specified level.
		No	Go to the next step.
15	**CHECK TO SEE WHETHER MALFUNCTION IS IN REFRIGERANT LINE JOINT LOOSE OR O-RING** • Tighten the system hose connection area to the specified torque. (See 07-11-36 REFRIGERANT LINE REMOVAL/INSTALLATION.) • Has the leakage stopped?	Yes	Go to Step 23.
		No	Go to the next step.
16	**VISUALLY INSPECT REFRIGERANT LINE** • Is a system hose crushed?	Yes	Replace the O-ring of the leaking area. Replace the crushed system hose. (See 07-11-36 REFRIGERANT LINE REMOVAL/INSTALLATION.) After performing the following servicing, go to Step 23. • Adjust the compressor oil to the specified level. • After discharging, charge with new refrigerant to the specified level.
		No	Replace the O-ring of the leaking area. After performing the following servicing, go to Step 23. • Adjust the compressor oil to the specified level. • After discharging, charge with new refrigerant to the specified level.
17	**CHECK TO SEE WHETHER MALFUNCTION IS IN CONDENSER AND EXPANSION VALVE OR ELSEWHERE** • Do the results of the refrigerant pressure inspection in Step 6 indicate vacuum on the low pressure side and extremely low pressure on the high pressure side?	Yes	Go to the next step.
		No	Go to Step 21.
18	**CHECK TO SEE WHETHER MALFUNCTION IS IN EXPANSION VALVE AND RECEIVER/DRIER OR ELSEWHERE** • Is there no refrigerant pressure on the low pressure side, or is it normal?	Yes	Replace the condenser. (See 07-11-28 CONDENSER REMOVAL/INSTALLATION.) After performing the following servicing, go to Step 23. • Adjust the compressor oil to the specified level. • After discharging, charge with new refrigerant to the specified level.
		No	Go to the next step.
19	**CHECK TO SEE WHETHER MALFUNCTION IS IN CONDENSER OR EXPANSION VALVE** • Verify the condition of the outlet hose on the condenser high pressure side. • Is there condensation in the hose?	Yes	Replace the condenser. (See 07-11-28 CONDENSER REMOVAL/INSTALLATION.) After performing the following servicing, go to Step 23. • Adjust the compressor oil to the specified level. • After discharging, charge with new refrigerant to the specified level.
		No	Go to the next step.
20	**INSPECT EXPANSION VALVE** • Remove the expansion valve and verify its condition. • Is there refrigerant leakage or valve clogging?	Yes	If there is foreign matter clogging the valve • Remove the foreign matter. If there is refrigerant leakage or clogging • Replace the expansion valve. Perform discharge, charge with new refrigerant, and then go to Step 23.
		No	Install the expansion valve, then go to Step 23.

SYMPTOM TROUBLESHOOTING [FULL-AUTO AIR CONDITIONER]

STEP	INSPECTION		ACTION
21	**CHECK TO SEE WHETHER MALFUNCTION IS IN A/C COMPRESSOR OR ELSEWHERE** • Do the results of the refrigerant pressure inspection in Step 6 indicate low pressure on the high pressure side and high pressure on the low pressure side?	Yes	Replace the A/C compressor. (See 07-11-25 A/C COMPRESSOR REMOVAL/INSTALLATION.) Then go to Step 23.
		No	Go to the next step.
22	**INSPECT EVAPORATIVE TEMPERATURE SENSOR** • Inspect the evaporator temperature sensor. (See 07-40A-27 EVAPORATOR TEMPERATURE SENSOR INSPECTION [FULL-AUTO AIR CONDITIONER].) • Is it normal?	Yes	Verify the evaporator temperature sensor position. (See 07-11-14 A/C UNIT DISASSEMBLY/ASSEMBLY.) Then go to the next step.
		No	Replace the evaporator temperature sensor. (See 07-11-14 A/C UNIT DISASSEMBLY/ASSEMBLY.) Then go to the next step.
23	**VERIFY THAT MALFUNCTION SYMPTOM OCCURS AFTER REPAIR** • If the refrigerant discharged during inspection has not been recharged, discharge and charge with new refrigerant to the specified level. • Does cool air blow out? (Are results of refrigerant system performance test normal?)	Yes	Troubleshooting completed. Explain repairs to customer.
		No	Recheck malfunction symptoms, then repeat from Step 1 if malfunction recurs.

NO.7 NO COOL AIR [FULL-AUTO AIR CONDITIONER]

id0702c1812600

7	**No cool air**
DESCRIPTION	• Magnetic clutch does not operate.
POSSIBLE CAUSE	• Malfunction in PCM A/C cut control system • Malfunction in climate control unit • Malfunction in refrigerant pressure sensor • Malfunction in PCM (A/C signal) • Malfunction in PCM (IG1 signal) • Malfunction in A/C compressor • Malfunction in A/C relay • Malfunction in evaporator temperature sensor • Malfunction in front body control module (FBCM) • Malfunction in instrument cluster • Malfunction in CAN communication • Improper refrigerant charging amount

- When performing an asterisked (*) troubleshooting inspection, shake the wiring harness and connectors while performing the inspection to discover whether poor contact points are the cause of any intermittent malfunctions. If there is a problem, check to make sure connectors, terminals and wiring harnesses are connected correctly and undamaged.

Diagnostic procedure

STEP	INSPECTION		ACTION
1	**CHECK MALFUNCTION SYMPTOMS** **Note** • Without i-stop, go to the next step. • Is malfunctions occur in only when operating the i-stop?	Yes	Perform the i-stop troubleshooting. (See 01-02-4 FOREWORD [SKYACTIV-G 2.0].)
		No	Go to the next step.
2	**INSPECT AIR BLOW OUT** • Does air blow out?	Yes	Go to the next step.
		No	Go to Step 1 of troubleshooting indexes No.1 and 2.
3	**INSPECT A/C COMPRESSOR OPERATION** • Start engine. • Turn A/C switch and fan switch on. • Does A/C compressor operate?	Yes	Go to Step 1 of troubleshooting index No.6.
		No	Go to the next step.

SYMPTOM TROUBLESHOOTING [FULL-AUTO AIR CONDITIONER]

STEP	INSPECTION		ACTION
4	**INSPECT FOR DTC IN PCM, CLIMATE CONTROL UNIT, AND INSTRUMENT CLUSTER** • Inspect for DTCs related to the PCM, climate control unit, and instrument cluster on-board diagnostic system. • Are any DTCs displayed?	Yes	Go to appropriate inspection procedure.
		No	Go to the next step.
5	**DETERMINE IF MALFUNCTION CAUSE IS A/C REQUEST SIGNAL OR A/C RELAY OPERATIONAL MALFUNCTION** • Access PCM PID ACCS using the M-MDS. • Start the engine and idle it. • Turn the PID ACCS to ON from OFF using the M-MDS simulation function. • Is the A/C magnetic clutch engaged?	Yes	Go to the next step.
		No	Go to Step 11.
6	**DETERMINE IF MALFUNCTION CAUSE IS A/C PRESSURE SENSOR SIGNAL OR ELSEWHERE** • Access climate control unit PID AC_PRES. • Monitor the AC_PRES PID while turning on and off the air conditioner by switching the control panel. • Is the PID normal? (See 07-02-38 PID/DATA MONITOR DISPLAY [FULL-AUTO AIR CONDITIONER].)	Yes	Go to Step 8.
		No	Go to the next step.
7	**INSPECT TO SEE MALFUNCTION IS IN REFRIGERANT PRESSURE SENSOR OR A/C SYSTEM** • Inspect the refrigerant pressure sensor. (See 07-40A-30 REFRIGERANT PRESSURE SENSOR INSPECTION [FULL-AUTO AIR CONDITIONER].) • Is the refrigerant pressure sensor normal?	Yes	Inspect for following and repair or replace if necessary. • Refrigerant charging amount • A/C compressor for seizure Then go to Step 17.
		No	Repair or replace malfunctioning part according to inspection result, then go to Step 17.
8	**DETERMINE IF MALFUNCTION CAUSE IS EVAPORATOR TEMPERATURE SENSOR OPERATIONAL SIGNAL OR ELSEWHERE** • Access climate control unit PID EVA_TMP_SEN. • Monitor the EVA_TMP_SEN PID while turning on and off the air conditioner by switching the control panel. • Is the PID normal? (See 07-02-38 PID/DATA MONITOR DISPLAY [FULL-AUTO AIR CONDITIONER].)	Yes	Go to Step 10.
		No	Go to the next step.
9	**INSPECT EVAPORATOR TEMPERATURE SENSOR** • Inspect the evaporator temperature sensor. (See 07-40A-27 EVAPORATOR TEMPERATURE SENSOR INSPECTION [FULL-AUTO AIR CONDITIONER].) • Is the evaporator temperature sensor normal?	Yes	Inspect and repair for open or short circuit between evaporator temperature sensor and climate control unit. Then go to Step 17.
		No	Replace the evaporator temperature sensor, then go to Step 17. (See 07-11-14 A/C UNIT DISASSEMBLY/ASSEMBLY.)
10	**DETERMINE IF MALFUNCTION CAUSE IS INSTRUMENT CLUSTER OR CAN COMMUNICATION SIGNAL** • Verify the information panel indication of A/C system while turning on and off the air conditioner by switching the control panel. • Does the information panel indicate properly?	Yes	Replace the instrument cluster.(Instrument cluster does not receive A/C request signal from climate control unit or transmit it to PCM.) (See 09-22-6 INSTRUMENT CLUSTER REMOVAL/INSTALLATION.) Then go to Step 17.
		No	Repair or replace malfunctioning part according to inspection result, then go to Step 17.

SYMPTOM TROUBLESHOOTING [FULL-AUTO AIR CONDITIONER]

STEP	INSPECTION		ACTION
11	**INSPECT TO SEE WHETHER MALFUNCTION (LACK OF CONTINUITY) IS IN A/C CONTROL SIGNAL CIRCUIT (BETWEEN A/C RELAY AND PCM) OR ELSEWHERE** • Does cool air blow out when terminal E of A/C relay connector (A/C control signal) is grounded?	Yes	Release short, then go to the next step.
		No	Go to Step 13.
12*	**INSPECT TO SEE WHETHER MALFUNCTION (LACK OF CONTINUITY) IS IN PCM OR WIRING HARNESS (BETWEEN A/C RELAY AND PCM)** • Test voltage at the A/C relay control signal terminal of PCM. • Is voltage **approx. 12 V**?	Yes	Inspect the PCM, then go to Step 17.
		No	Repair wiring harness between A/C relay and PCM, then go to Step 17.
13*	**INSPECT TO SEE WHETHER MALFUNCTION IS IN MAGNETIC CLUTCH OR ELSEWHERE** • Test voltage at the following terminal of magnetic clutch thermal protector. — Terminal A (magnetic clutch operation signal) • Is voltage **approx. 12 V**?	Yes	Inspect magnetic clutch, then go to Step 17.
		No	Go to the next step.
14	**INSPECT FUSE** • Are A/C relay power supply fuses okay?	Yes	Go to the next step.
		No	Replace fuse, then go to Step 17. If fuse burns out immediately, go to the next step.
15	**INSPECT WIRING HARNESS BETWEEN FUSE BLOCK AND A/C RELAY FOR LACK OF CONTINUITY** • Test voltages at following terminals of A/C relay. — Terminal A (A/C relay control signal) — Terminal C (A/C control signal) • Are voltages **approx. 12 V**?	Yes	Go to the next step.
		No	Repair the wiring harness between fuse block and A/C relay, then go to Step 17.
16	**INSPECT TO SEE WHETHER MALFUNCTION IS IN A/C RELAY OR WIRING HARNESS (BETWEEN A/C RELAY AND MAGNETIC CLUTCH)** • Test voltage at the following terminal of A/C relay. — Terminal D (magnetic clutch operation signal) • Is voltage **approx. 12 V**?	Yes	Inspect wiring harness between A/C relay and magnetic clutch. • If above wiring harness is OK, go to the next step. • If above wiring harness malfunctions, repair wiring harness, then go to the next step.
		No	Replace the A/C relay, then go to the next step.
17	**CONFIRM THAT MALFUNCTION SYMPTOMS DO NOT RECUR AFTER REPAIR** • Does cool air blow out? (Are the results of refrigerant system performance test okay?)	Yes	Troubleshooting completed. Explain repairs to customer.
		No	Recheck malfunction symptoms, then repeat from Step 1 if malfunction recurs.

SYMPTOM TROUBLESHOOTING [FULL-AUTO AIR CONDITIONER]

NO.8 NOISE WHILE OPERATING A/C SYSTEM [FULL-AUTO AIR CONDITIONER]

id0702c1812700

8	Noise while operating A/C system.
DESCRIPTION	• Noise from magnetic clutch, A/C compressor, hose or refrigerant line.
POSSIBLE CAUSE	• Magnetic clutch operation noise • A/C compressor vane noise • A/C compressor slippage noise • Hose or refrigerant line interference noise

* : If there is gas leakage, air enters into the A/C system. The desiccant within the receiver/drier absorbs the moisture from the air and becomes saturated. If the A/C system is used in this condition, the inside of the A/C compressor will begin to rust due to this moisture, which may cause lock up or noise to occur. Therefore, replacement of the receiver/drier is necessary.

Diagnostic procedure

STEP	INSPECTION		ACTION
1	**CHECK A/C COMPRESSOR VANE NOISE** • Is there a jingling, popping, beeping, or buzzing sound (A/C compressor vane noise)?	Yes	Go to Step 5.
		No	Go to the next step.
2	**INSPECT A/C COMPRESSOR SLIPPAGE NOISE** • Is there a squeaking or whirling sound (A/C compressor slippage noise)?	Yes	Go to Step 14.
		No	Go to the next step.
3	**INSPECT A/C COMPRESSOR INTERFERENCE NOISE** • Is there a rattling or vibrating sound (interference noise)?	Yes	Go to Step 18.
		No	Go to the next step.
4	**INSPECT MAGNETIC CLUTCH OPERATION NOISE** • Is there a clicking sound (magnetic clutch operation noise)?	Yes	Adjust clearance between pressure plate of magnetic clutch and A/C compressor pulley, then go to Step 19. (See 07-40A-18 MAGNETIC CLUTCH ADJUSTMENT [FULL-AUTO AIR CONDITIONER].)
		No	Condition is normal. (Recheck malfunction symptoms.)
5	**INSPECT A/C COMPRESSOR NOISE TIME** • Is noise heard continuously for **more than 3 s** after A/C compressor comes on?	Yes	Go to the next step.
		No	Condition is normal. (Noise occurs for **2—3 s** immediately after A/C compressor turns on.)
6	**INSPECT IDLE SPEED** • Inspect idle speed. (See 01-10A-4 ENGINE TUNE-UP [SKYACTIV-G 2.0].) (See 01-10B-3 ENGINE TUNE-UP [SKYACTIV-D 2.2].) • Is it okay?	Yes	Go to the next step.
		No	Follow the repair instruction described in “ENGINE” section, then go to Step 19.
7	**INSPECT REFRIGERANT AMOUNT** • Inspect refrigerant amount. • Is it okay?	Yes	Go to Step 10.
		No	Go to the next step.
8	**INSPECT REFRIGERANT LINES** • Inspect refrigerant lines. — Is piping free of damage and cracks? — Are piping connections free of oil grime? (Visual inspection) — Are piping connections free of gas leakage? — Are piping installation points on condenser free of gas leakage? — Are piping installation points on receiver/drier free of gas leakage? — Are piping installation points on A/C compressor free of gas leakage? — Are piping installation points on A/C unit free of gas leakage? — Perform gas leak inspection using gas leak tester. • Are above items okay?	Yes	Go to the next step.
		No	If piping or A/C component(s) is damaged or cracked, replace then go to Step 19. If there is gas leakage, repair or replace connection and replace condenser*, then go to Step 19.

SYMPTOM TROUBLESHOOTING [FULL-AUTO AIR CONDITIONER]

STEP	INSPECTION		ACTION
9	**INSPECT EVAPORATOR PIPING CONNECTIONS IN A/C UNIT FOR GAS LEAKAGE** • Are piping connections for evaporator in A/C unit free of gas leakage?	Yes	Adjust refrigerant amount to specified level, then go to Step 19.
		No	If piping is damaged or cracked, replace then go to Step 19. If there is gas leakage, repair or replace connection and replace condenser*, then go to Step 19.
10	**CHECK TO SEE WHETHER MALFUNCTION IS IN COMPRESSOR OIL OR ELSEWHERE** • Add **20 ml {20 cc, 0.68 fl oz}** of compressor oil. • Is noise heard when racing engine?	Yes	Go to the next step.
		No	Troubleshooting completed. Explain repair to customer.
11	**CHECK TO SEE WHETHER MALFUNCTION IS IN A/C COMPRESSOR OR ELSEWHERE** • Drain compressor oil. • Is it contaminated with metal particles?	Yes	Go to the next step.
		No	Replace A/C compressor, then go to Step 19.
12	**CHECK TO SEE WHETHER MALFUNCTION IS SOMEWHERE IN A/C SYSTEM OR ELSEWHERE** • Is compressor oil whitish and mixed with water?	Yes	Replace entire A/C system (excluding heater), then go to Step 19.
		No	Go to the next step.
13	**INSPECT A/C COMPRESSOR OIL** • Is compressor oil darker than normal and contaminated with aluminum chips?	Yes	Replace A/C compressor and condenser, then go to Step 19. (Since A/C compressor may be worn and receiver/drier may be clogged, replacement of receiver/drier is necessary.)
		No	Condition is normal. Recheck malfunction symptoms.
14	**CHECK TO SEE WHETHER MALFUNCTION IS IN A/C COMPRESSOR OR ELSEWHERE** • Is noise heard immediately after A/C compressor is stopped?	Yes	Replace A/C compressor, then go to Step 19. (A/C compressor discharge valve left open)
		No	Go to the next step.
15	**INSPECT DRIVE BELT** • Inspect the drive belt. (See 01-10A-9 DRIVE BELT INSPECTION [SKYACTIV-G 2.0].) (See 01-10B-7 DRIVE BELT INSPECTION [SKYACTIV-D 2.2].) • Is it okay?	Yes	Go to the next step.
		No	Replace the drive belt, then go to Step 19. (See 01-10A-10 DRIVE BELT REMOVAL/INSTALLATION [SKYACTIV-G 2.0].) (See 01-10B-8 DRIVE BELT REMOVAL/INSTALLATION [SKYACTIV-D 2.2].)
16	**INSPECT DRIVE BELT CONDITION** • Is drive belt worn? • Does it have foreign material imbedded in it, or have oil on it?	Yes	Remove obstruction, remove oil, or replace drive belt, then go to Step 19.
		No	Go to the next step.
17	**INSPECT MAGNETIC CLUTCH** • Inspect the magnetic clutch. (See 07-40A-19 MAGNETIC CLUTCH INSPECTION [FULL-AUTO AIR CONDITIONER].) • Is it okay?	Yes	Replace A/C compressor (excluding pressure plate, A/C compressor pulley, and stator), then go to Step 19.
		No	Replace magnetic clutch, then go to Step 19.
18	**CHECK TO SEE WHETHER MALFUNCTION IS IN A/C COMPRESSOR OR REFRIGERANT LINES** • Is noise emitted from A/C compressor?	Yes	Visually inspect A/C compressor, replace appropriate parts if necessary, then go to the next step.
		No	If noise is due to refrigerant lines, repair detached or missing clips, tighten loose bolts, then go to the next step.
19	**VERIFY THAT MALFUNCTION SYMPTOM OCCURS AFTER REPAIR** • Has A/C compressor noise stopped?	Yes	Troubleshooting completed. Explain repairs to customer.
		No	Recheck malfunction symptoms, then repeat from Step 1 if malfunction recurs.

SYMPTOM TROUBLESHOOTING [FULL-AUTO AIR CONDITIONER]

NO.9 DUAL A/C CONTROL DOES NOT OPERATE [FULL-AUTO AIR CONDITIONER]

id0703c1812300

9	Dual A/C control function does not operate
DESCRIPTION	• Driver or passenger side temperature control dial does not operate individually • Temperature control operates normally except for dual A/C control function
POSSIBLE CAUSE	• Driver-side air mix door malfunction (stuck) • Passenger-side air mix door malfunction (stuck) • Driver-side air mix actuator malfunction • Passenger-side air mix actuator malfunction • Driver-side air mix actuator position sensor malfunction • Passenger-side air mix actuator position sensor malfunction • Open, short circuit in wiring or poor connection between climate control unit and driver-side air mix actuator • Open, short circuit in wiring or poor connection between climate control unit and passenger-side air mix actuator • Open, short circuit in wiring or poor connection between climate control unit and driver-side air mix actuator position sensor • Open, short circuit in wiring or poor connection between climate control unit and passenger-side air mix actuator position sensor • Climate control unit malfunction

- When performing an asterisked (*) troubleshooting inspection, shake the wiring harness and connectors while doing the inspection to discover whether poor contact points are the cause of any intermittent malfunctions. If there is a problem, inspect to make sure connectors, terminals and wiring harness are connected correctly and undamaged.

Diagnostic procedure

STEP	INSPECTION		ACTION
1	**CHECK SYMPTOM** • Turn on the A/C. • Perform the dual A/C control function for driver and passenger side individually. • Is it either of cannot the temperature control on driver side or passenger side?	Yes	Go to the next step.
		No	Go to Step 12.
2	**INSPECT TO SEE WHETHER MALFUNCTION IS IN AIR MIX DOOR OR ELSEWHERE** • Turn on the A/C. • Change temperature control for suspect side seat at the dual mode. • Does the suspect side air mix door move smoothly?	Yes	Go to Step 8.
		No	Go to the next step.
3	**INSPECT AIR MIX ACTUATOR** • Inspect the suspect side air mix actuator. • Is the air mix actuator normal?	Yes	Go to the next step.
		No	Replace the suspect air mix actuator, then go to Step 15.

SYMPTOM TROUBLESHOOTING [FULL-AUTO AIR CONDITIONER]

STEP	INSPECTION		ACTION
4*	**INSPECT AIR MIX ACTUATOR (MOTOR) CIRCUIT FOR SHORT TO GROUND** • Disconnect the negative battery cable. (See 01-17A-11 NEGATIVE BATTERY CABLE DISCONNECTION/CONNECTION [SKYACTIV-G 2.0].)(See 01-17A-13 NEGATIVE BATTERY CABLE DISCONNECTION/CONNECTION [SKYACTIV-G 2.0 (WITHOUT i-stop)].)(See 01-17B-9 NEGATIVE BATTERY CABLE DISCONNECTION/CONNECTION [SKYACTIV-D 2.2].) • Disconnect the climate control unit connector. • Inspect for continuity between the following terminals (wiring harness-side) and body ground: **L.H.D.** — Climate control unit terminal 2E (driver-side motor) — Climate control unit terminal 2G (driver-side motor) — Climate control unit terminal 2F (passenger-side motor) — Climate control unit terminal 2H (passenger-side motor) **R.H.D.** — Climate control unit terminal 2F (driver-side motor) — Climate control unit terminal 2H (driver-side motor) — Climate control unit terminal 2E (passenger-side motor) — Climate control unit terminal 2G (passenger-side motor) • Is there continuity?	Yes	Repair or replace the wiring harness for a possible short to ground, then go to the Step 15.
		No	Go to the next step.
5*	**INSPECT AIR MIX ACTUATOR (MOTOR) CIRCUIT FOR OPEN CIRCUIT** • Air mix actuator and climate control unit connectors are disconnected. • Inspect for continuity between the following terminals (wiring harness-side): **L.H.D.** — Climate control unit terminal 2E— driver-side air mix actuator terminal B — Climate control unit terminal 2G — driver-side air mix actuator terminal C — Climate control unit terminal 2F— passenger-side air mix actuator terminal C — Climate control unit terminal 2H — passenger-side air mix actuator terminal B **R.H.D.** — Climate control unit terminal 2F — driver-side air mix actuator terminal C — Climate control unit terminal 2H — driver-side air mix actuator terminal B — Climate control unit terminal 2E — passenger-side air mix actuator terminal B — Climate control unit terminal 2G— passenger-side air mix actuator terminal C • Is there continuity?	Yes	Go to the next step.
		No	Repair or replace the wiring harness for a possible open circuit, then go to Step 15.

SYMPTOM TROUBLESHOOTING [FULL-AUTO AIR CONDITIONER]

STEP	INSPECTION		ACTION
6*	**INSPECT AIR MIX ACTUATOR (MOTOR) CIRCUIT FOR SHORT TO POWER SUPPLY** • Air mix actuator and climate control unit connectors are disconnected. • Connect the negative battery cable. (See 01-17A-11 NEGATIVE BATTERY CABLE DISCONNECTION/CONNECTION [SKYACTIV-G 2.0].)(See 01-17A-13 NEGATIVE BATTERY CABLE DISCONNECTION/CONNECTION [SKYACTIV-G 2.0 (WITHOUT i-stop)].)(See 01-17B-9 NEGATIVE BATTERY CABLE DISCONNECTION/CONNECTION [SKYACTIV-D 2.2].) • Switch the ignition ON (engine off or on). • Measure the voltage at the following terminals (wiring harness-side): **L.H.D.** — Climate control unit terminal 2E (driver-side motor) — Climate control unit terminal 2G (driver-side motor) — Climate control unit terminal 2F (passenger-side motor) — Climate control unit terminal 2H (passenger-side motor) **R.H.D.** — Climate control unit terminal 2F (driver-side motor) — Climate control unit terminal 2H (driver-side motor) — Climate control unit terminal 2E (passenger-side motor) — Climate control unit terminal 2G (passenger-side motor) • Is the voltage 0 V?	Yes	Go to the next step.
		No	Repair or replace the wiring harness for a possible short to power supply, then go to Step 15.
7	**INSPECT AIR MIX DOOR** • Inspect the suspect side air mix door. — Is the fan free of interfere with the suspect side A/C unit case? — Is the fan free of foreign material and obstruction? • Is the air mix door normal?	Yes	Replace the climate control unit, then go to Step 15. (See 07-40A-32 CLIMATE CONTROL UNIT REMOVAL/INSTALLATION [FULL-AUTO AIR CONDITIONER].)
		No	Remove the obstruction or replace the suspect side A/C unit case, then go to Step 15.
8*	**INSPECT AIR MIX ACTUATOR POSITION SENSOR** • Inspect the suspect side air mix actuator position sensor. • Is the air mix actuator position sensor normal?	Yes	Go to the next step.
		No	Replace the suspect air mix actuator, then go to Step 15.

SYMPTOM TROUBLESHOOTING [FULL-AUTO AIR CONDITIONER]

STEP	INSPECTION		ACTION
9*	**INSPECT AIR MIX ACTUATOR (POSITION SENSOR) CIRCUIT FOR SHORT TO GROUND** • Disconnect the negative battery cable. (See 01-17A-11 NEGATIVE BATTERY CABLE DISCONNECTION/CONNECTION [SKYACTIV-G 2.0].)(See 01-17A-13 NEGATIVE BATTERY CABLE DISCONNECTION/CONNECTION [SKYACTIV-G 2.0 (WITHOUT i-stop)].)(See 01-17B-9 NEGATIVE BATTERY CABLE DISCONNECTION/CONNECTION [SKYACTIV-D 2.2].) • Disconnect the climate control unit connector. • Inspect for continuity between the following terminals (wiring harness-side) and body ground: **L.H.D.** — Climate control unit terminal 1N (driver-side position sensor) — Climate control unit terminal 1P (passenger-side position sensor) — Climate control unit terminal 1H (position sensor power supply) — Climate control unit terminal 1X (position sensor ground) **R.H.D.** — Climate control unit terminal 1P (driver-side position sensor) — Climate control unit terminal 1N (passenger-side position sensor) — Climate control unit terminal 1H (position sensor power supply) — Climate control unit terminal 1X (position sensor ground) • Is there continuity?	Yes	Repair or replace the wiring harness for a possible short to ground, then go to the Step 15.
		No	Go to the next step.

SYMPTOM TROUBLESHOOTING [FULL-AUTO AIR CONDITIONER]

STEP	INSPECTION		ACTION
10*	**INSPECT AIR MIX ACTUATOR (POSITION SENSOR) CIRCUIT FOR OPEN CIRCUIT** • Air mix actuator and climate control unit connectors are disconnected. • Inspect for continuity between the following terminals (wiring harness-side): **L.H.D.** — Climate control unit terminal 1N — driver-side air mix actuator terminal F — Climate control unit terminal 1P — passenger-side air mix actuator terminal F — Climate control unit terminal 1H — driver-side air mix actuator terminal G — Climate control unit terminal 1H — passenger-side air mix actuator terminal E — Climate control unit terminal 1X — driver-side air mix actuator terminal E — Climate control unit terminal 1X — passenger-side air mix actuator terminal G **R.H.D.** — Climate control unit terminal 1P — driver-side air mix actuator terminal F — Climate control unit terminal 1N — passenger-side air mix actuator terminal F — Climate control unit terminal 1H — driver-side air mix actuator terminal E — Climate control unit terminal 1H — passenger-side air mix actuator terminal G — Climate control unit terminal 1X — driver-side air mix actuator terminal G — Climate control unit terminal 1X — passenger-side air mix actuator terminal E • Is there continuity?	Yes	Go to the next step.
		No	Repair or replace the wiring harness for a possible open circuit, then go to Step 15.

07

SYMPTOM TROUBLESHOOTING [FULL-AUTO AIR CONDITIONER]

STEP	INSPECTION		ACTION
11*	**INSPECT AIR MIX ACTUATOR (POSITION SENSOR) CIRCUIT FOR SHORT TO POWER SUPPLY** • Air mix actuator and climate control unit connectors are disconnected. • Connect the negative battery cable. (See 01-17A-11 NEGATIVE BATTERY CABLE DISCONNECTION/CONNECTION [SKYACTIV-G 2.0].)(See 01-17A-13 NEGATIVE BATTERY CABLE DISCONNECTION/CONNECTION [SKYACTIV-G 2.0 (WITHOUT i-stop)].)(See 01-17B-9 NEGATIVE BATTERY CABLE DISCONNECTION/CONNECTION [SKYACTIV-D 2.2].) • Switch the ignition ON (engine off or on). • Measure the voltage at the following terminals (wiring harness-side): **L.H.D.** — Climate control unit terminal 1N (driver-side position sensor) — Climate control unit terminal 1P (passenger-side position sensor) — Climate control unit terminal 1H (position sensor power supply) — Climate control unit terminal 1X (position sensor ground) **R.H.D.** — Climate control unit terminal 1P (driver-side position sensor) — Climate control unit terminal 1N (passenger-side position sensor) — Climate control unit terminal 1H (position sensor power supply) — Climate control unit terminal 1X (position sensor ground) • Is the voltage 0 V?	Yes	Go to the next step.
		No	Repair or replace the wiring harness for a possible short to power supply, then go to Step 15.
12*	**INSPECT AIR MIX ACTUATOR (POSITION SENSOR) CIRCUIT FOR SHORT TO GROUND** • Disconnect the negative battery cable. (See 01-17A-11 NEGATIVE BATTERY CABLE DISCONNECTION/CONNECTION [SKYACTIV-G 2.0].)(See 01-17A-13 NEGATIVE BATTERY CABLE DISCONNECTION/CONNECTION [SKYACTIV-G 2.0 (WITHOUT i-stop)].)(See 01-17B-9 NEGATIVE BATTERY CABLE DISCONNECTION/CONNECTION [SKYACTIV-D 2.2].) • Disconnect the climate control unit connector. • Inspect for continuity between the following terminals (wiring harness-side) and body ground: — Climate control unit terminal 1H (position sensor power supply) — Climate control unit terminal 1X (position sensor ground) • Is there continuity?	Yes	Repair or replace the wiring harness for a possible short to ground, then go to the Step 15.
		No	Go to the next step.

SYMPTOM TROUBLESHOOTING [FULL-AUTO AIR CONDITIONER]

STEP	INSPECTION		ACTION
13*	**INSPECT AIR MIX ACTUATOR (POSITION SENSOR) CIRCUIT FOR OPEN CIRCUIT** • Air mix actuator and climate control unit connectors are disconnected. • Inspect for continuity between the following terminals (wiring harness-side): **L.H.D.** — Climate control unit terminal 1H — driver-side air mix actuator terminal G — Climate control unit terminal 1H — passenger-side air mix actuator terminal E — Climate control unit terminal 1X — driver-side air mix actuator terminal E — Climate control unit terminal 1X — passenger-side air mix actuator terminal G **R.H.D.** — Climate control unit terminal 1H — driver-side air mix actuator terminal E — Climate control unit terminal 1H — passenger-side air mix actuator terminal G — Climate control unit terminal 1X — driver-side air mix actuator terminal G — Climate control unit terminal 1X — passenger-side air mix actuator terminal E • Is there continuity?	Yes	Go to the next step.
		No	Repair or replace the wiring harness for a possible open circuit, then go to Step 15.
14*	**INSPECT AIR MIX ACTUATOR (POSITION SENSOR) CIRCUIT FOR SHORT TO POWER SUPPLY** • Air mix actuator and climate control unit connectors are disconnected. • Connect the negative battery cable. (See 01-17A-11 NEGATIVE BATTERY CABLE DISCONNECTION/CONNECTION [SKYACTIV-G 2.0].)(See 01-17A-13 NEGATIVE BATTERY CABLE DISCONNECTION/CONNECTION [SKYACTIV-G 2.0 (WITHOUT i-stop)].)(See 01-17B-9 NEGATIVE BATTERY CABLE DISCONNECTION/CONNECTION [SKYACTIV-D 2.2].) • Switch the ignition ON (engine off or on). • Measure the voltage at the following terminals (wiring harness-side): — Climate control unit terminal 1H (position sensor power supply) — Climate control unit terminal 1X (position sensor ground) • Is the voltage 0 V?	Yes	Go to the next step.
		No	Repair or replace the wiring harness for a possible short to power supply, then go to the next step.
15	**CONFIRM THAT MALFUNCTION SYMPTOMS DOES NOT RECUR AFTER REPAIR** • Does the temperature adjust individually for driver seat and passenger seat?	Yes	Troubleshooting completed. Explain repairs to customer.
		No	Recheck malfunction symptoms, then repeat from Step 1 if malfunction recurs.

07-03B SYMPTOM TROUBLESHOOTING [MANUAL AIR CONDITIONER]

HVAC SYSTEM WIRING DIAGRAM [MANUAL AIR CONDITIONER] 07-03B–2
FOREWORD [MANUAL AIR CONDITIONER] 07-03B–3
Troubleshooting Procedure 07-03B–3
Action for non-repeatable malfunction. 07-03B–3
TROUBLESHOOTING INDEX [MANUAL AIR CONDITIONER] 07-03B–4
NO.1 INSUFFICIENT AIR (OR NO AIR) BLOWN FROM VENTS [MANUAL AIR CONDITIONER] 07-03B–4
NO.2 AMOUNT OF AIR BLOWN FROM VENTS DOES NOT CHANGE [MANUAL AIR CONDITIONER] 07-03B–5
NO.3 AIR INTAKE MODE DOES NOT CHANGE [MANUAL AIR CONDITIONER] 07-03B–6
NO.4 NO TEMPERATURE CONTROL WITH CLIMATE CONTROL UNIT [MANUAL AIR CONDITIONER] 07-03B–8
NO.5 WINDSHIELD FOGGED [MANUAL AIR CONDITIONER] 07-03B–9
NO.6 AIR FROM VENTS NOT COLD ENOUGH [MANUAL AIR CONDITIONER] 07-03B–11
NO.7 NO COOL AIR [MANUAL AIR CONDITIONER] 07-03B–14
NO.8 NOISE WHILE OPERATING A/C SYSTEM [MANUAL AIR CONDITIONER] 07-03B–16

SYMPTOM TROUBLESHOOTING [MANUAL AIR CONDITIONER]

HVAC SYSTEM WIRING DIAGRAM [MANUAL AIR CONDITIONER]

id0703c2800100

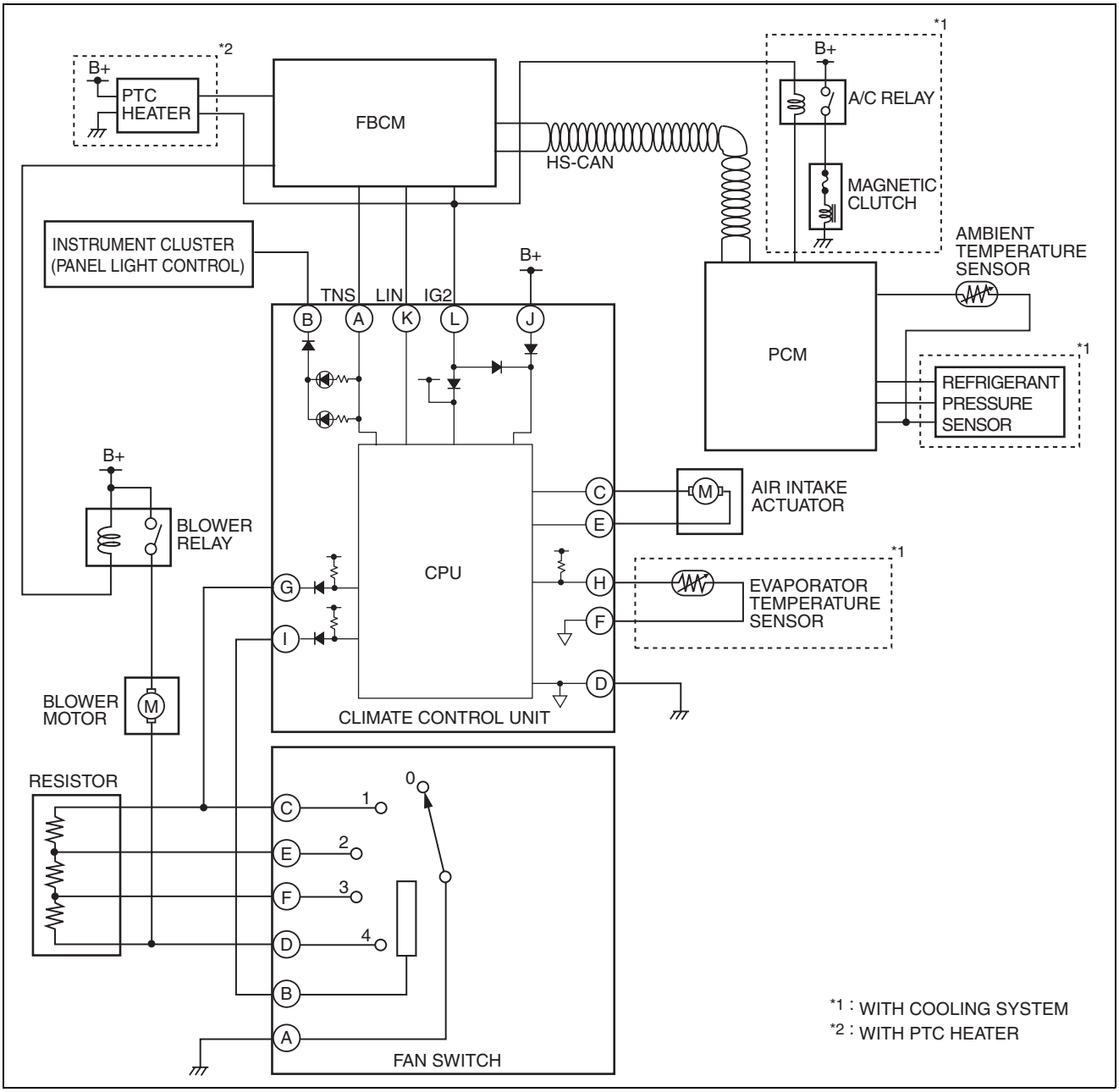

ac5wzw0000156

CLIMATE CONTROL UNIT WIRING HARNESS SIDE CONNECTOR

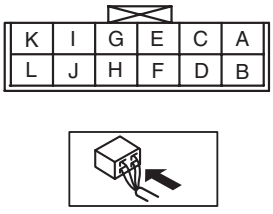

ac5wzw0000156

SYMPTOM TROUBLESHOOTING [MANUAL AIR CONDITIONER]

FOREWORD [MANUAL AIR CONDITIONER]

id0703c2800200

- If there is any vehicle malfunction complaint lodged by a customer, perform malfunction diagnosis according to the troubleshooting procedure.

Troubleshooting Procedure

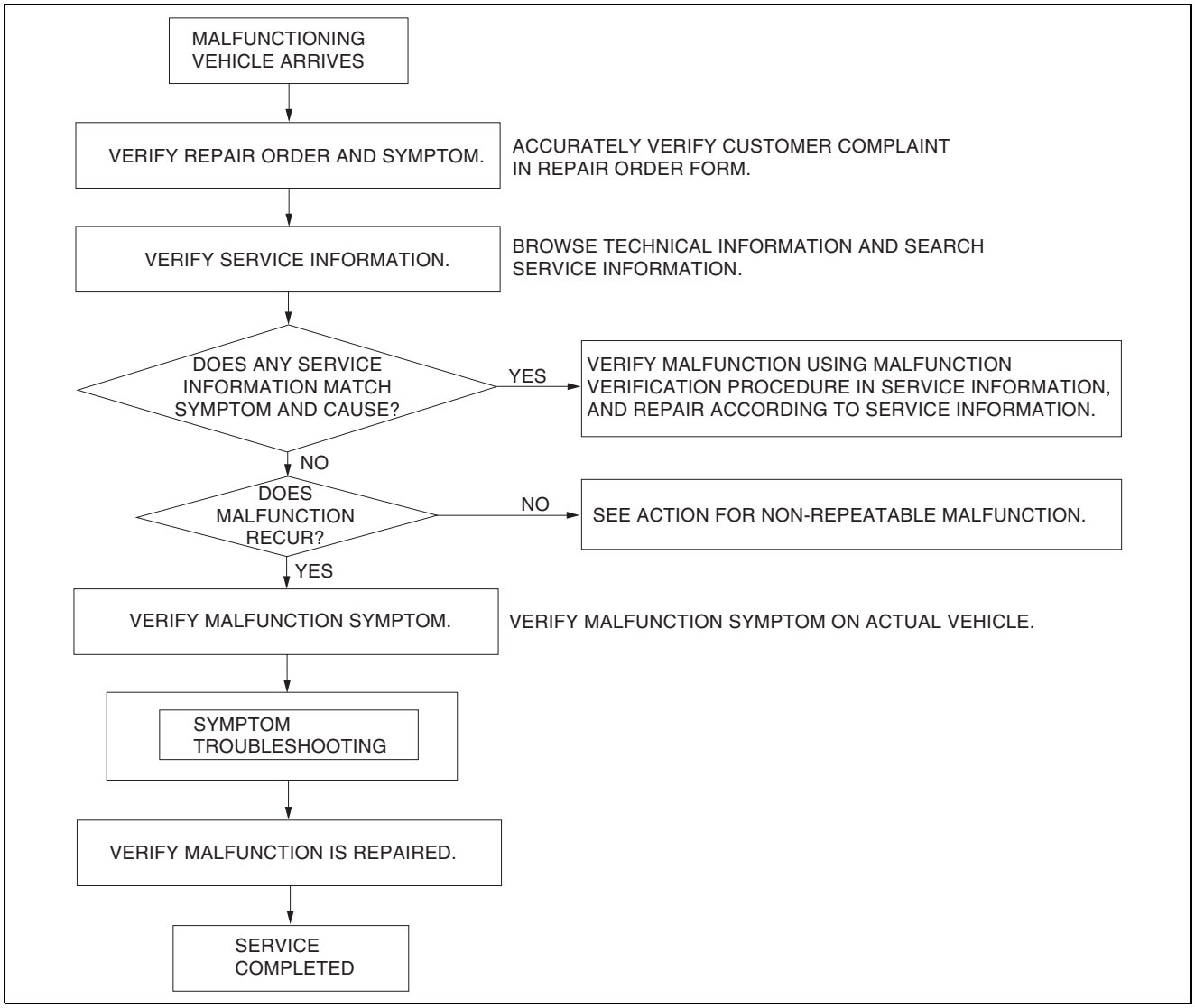

am3zzw0001143

Action for non-repeatable malfunction

- If the malfunction does not recur, verify the malfunction cause by performing the following actions:
  - — Based on the repair order form, attempt to drive the vehicle or perform tests to replicate the malfunction, record the data at that time, and detect the malfunction cause.
  - — Refer to [Determining Open Circuit Location] based on the recorded DTC, shake the wiring harness or connector of the electrical component which is suspected to be the cause of the malfunction.

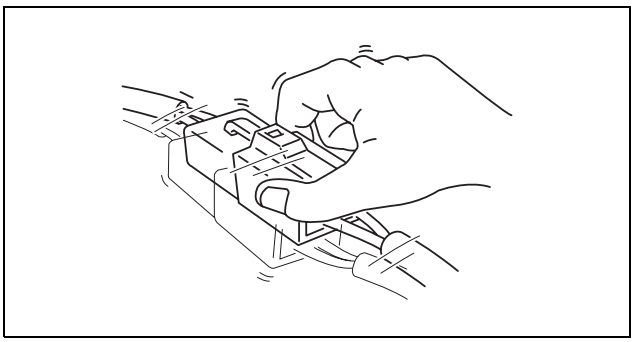

aaxjjw00007274

07

SYMPTOM TROUBLESHOOTING [MANUAL AIR CONDITIONER]

— Inspect the female terminals on the connector of the electric component which is suspected to be the cause of the malfunction for poor connection.

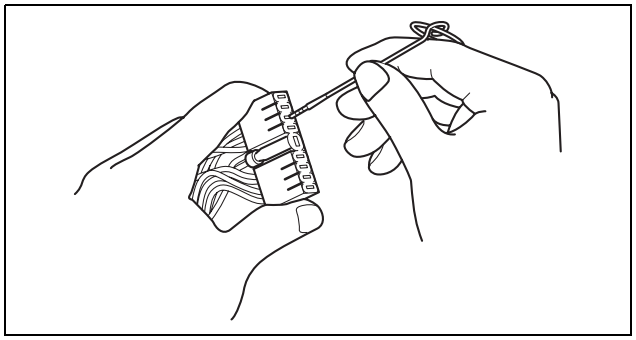

am3zzw0001144

TROUBLESHOOTING INDEX [MANUAL AIR CONDITIONER]

id0703c2800300

No.	TROUBLESHOOTING ITEM	DESCRIPTION
1	Insufficient air (or no air) blown from vents	• Problem with each vent and/or duct • Airflow mode does not change
2	Amount of air blown from vents does not change	• Malfunction in blower system
3	Air intake mode does not change	• Air intake mode does not change when switching REC/FRESH mode
4	No temperature control with climate control unit	• Temperature does not change when operating temperature dial • Malfunction in A/C unit and/or climate control unit air mix system
5	Windshield fogged	• A/C compressor does not operate while airflow mode is in DEFROSTER or DEF/HEAT mode • Air intake mode does not change to FRESH while airflow mode is in DEFROSTER or DEF/HEAT mode
6	Air from vents not cold enough	• Magnetic clutch operates but A/C system malfunctions
7	No cool air	• Magnetic clutch does not operate
8	Noise while operating A/C system	• Noise from magnetic clutch, A/C compressor, hose or refrigerant line

NO.1 INSUFFICIENT AIR (OR NO AIR) BLOWN FROM VENTS [MANUAL AIR CONDITIONER]

id0703c2800400

1	Insufficient air (or no air) blown from vents
DESCRIPTION	• Problem with each vent and/or duct. • Airflow mode does not change.
POSSIBLE CAUSE	• Malfunction in airflow mode wire • Malfunction in VENT mode system • Malfunction in HEAT mode system • Malfunction in DEFROSTER mode system • Malfunction in next vent or duct (clogging, deformation, air leakage, improper operation)

Diagnostic procedure

STEP	INSPECTION		ACTION
1	**INSPECT A/C UNIT AIRFLOW MODE SYSTEM** • Inspect the A/C unit and/or climate control unit airflow mode links, air airflow mode cranks, air airflow mode rods, and wire clamp. — Is there grease on links and cranks? — Are links, cranks, and rods securely installed in their proper positions? — Is wire clamp free of deformation? • Are the above items normal?	Yes	Go to the next step.
		No	Apply grease or airflow mode the links, cranks, and rods securely in their proper positions, repair or replace the airflow mode wire clamp, then go to Step 9.
2	**INSPECT TO SEE WHETHER MALFUNCTION IS IN VENT MODE OR OTHER MODES** • Does air blow out when in the VENT mode?	Yes	Go to Step 5.
		No	Go to the next step.
3	**INSPECT VENT** • Is the vent clogged?	Yes	Remove obstruction, then go to Step 9.
		No	Go to the next step.

SYMPTOM TROUBLESHOOTING [MANUAL AIR CONDITIONER]

STEP	INSPECTION		ACTION
4	**VERIFY THAT DUCT IN DASHBOARD IS INSTALLED** • Is the duct in the dashboard properly installed?	Yes	Inspect the duct for clogging, deformation and air leakage, then go to Step 9.
		No	Install the duct securely in the proper position, then go to Step 9.
5	**INSPECT TO SEE WHETHER MALFUNCTION IS IN HEAT MODE OR DEFROSTER MODE** • Does air blow out when in the HEAT mode?	Yes	Go to the next step.
		No	Inspect the vent for clogging, then go to Step 9.
6	**INSPECT DEFROSTER MODE** • Does air blow out when in the DEFROSTER mode?	Yes	Operation is normal. Recheck malfunction symptoms.
		No	Go to the next step.
7	**INSPECT VENT** • Is the vent clogged?	Yes	Remove obstruction, then go to Step 9.
		No	Go to the next step.
8	**VERIFY THAT DEFROSTER DUCT IS INSTALLED** • Is the defroster duct properly installed?	Yes	Inspect the duct for clogging, deformation, and air leakage, then go to the next step.
		No	Install the duct securely in proper position, then go to the next step.
9	**CONFIRM THAT MALFUNCTION SYMPTOM DOES NOT RECUR AFTER REPAIR** • Does air blow out?	Yes	Troubleshooting completed. Explain repairs to customer.
		No	Recheck malfunction symptoms, then repeat from Step 1 if the malfunction recurs.

NO.2 AMOUNT OF AIR BLOWN FROM VENTS DOES NOT CHANGE [MANUAL AIR CONDITIONER]

id0703c2800500

2	**Amount of air blown from vents does not change.**
DESCRIPTION	• Malfunction in blower system
POSSIBLE CAUSE	• Blower unit malfunction • Blower motor malfunction • Clogged in A/C unit passage

Diagnostic procedure

STEP	INSPECTION		ACTION
1	**INSPECT BLOWER SYSTEM** • Inspect the following systems and electrical parts. — Blower relay — Blower motor — Resistor — Fan switch — Related wiring harnesses • Are they normal?	Yes	Go to the next step.
		No	Repair or replace the malfunctioning part, then go to Step 5.
2	**INSPECT TO SEE WHETHER MALFUNCTION IS IN A/C UNIT OR ELSEWHERE** • Switch the ignition ON (engine off or on). • Turn the fan switch to ON position. • Recirculate air inside the vehicle. • Does the blower motor rotate smoothly?	Yes	Go to Step 4.
		No	Go to the next step.
3	**INSPECT BLOWER UNIT INTAKE VENT** • Inspect blower motor. — Is the fan free of interference from the A/C unit case? — Is the fan free of foreign material and obstructions? • Is the fan normal?	Yes	Go to the next step.
		No	Remove obstruction, repair or replace the fan and A/C unit case, then go to Step 5.
4	**INSPECT BLOWER UNIT INTAKE VENT** • Is the blower unit intake vent clogged?	Yes	Remove obstruction, then go to the next step.
		No	Inspect it there are not any obstructions in the blower unit passage, then go to the next step.
5	**VERIFY THAT MALFUNCTION SYMPTOM OCCURS AFTER REPAIR** • Does air blow out?	Yes	Troubleshooting completed. Explain repairs to customer.
		No	Recheck malfunction symptoms, then repeat from Step 1 if the malfunction recurs.

SYMPTOM TROUBLESHOOTING [MANUAL AIR CONDITIONER]

NO.3 AIR INTAKE MODE DOES NOT CHANGE [MANUAL AIR CONDITIONER]

id0703c2802900

3	**Air intake mode does not change.**
DESCRIPTION	• Air intake mode does not change when switching REC/FRESH mode.
POSSIBLE CAUSE	• Air intake actuator malfunction • Air intake door malfunction

- When performing an asterisked (*) troubleshooting inspection, shake the wiring harness and connectors while performing the inspection to discover whether poor contact points are the cause of any intermittent malfunctions. If there is a problem, inspect to make sure connectors, terminals and wiring harnesses are connected correctly and undamaged.

Note

- The climate control unit controls the air intake mode when the airflow mode is in DEFROSTER so that it is fixed at FRESH mode. At this time, the airflow mode cannot be changed from FRESH to RECIRCULATE even if the REC switch is pressed, but this does not indicate a malfunction.

Diagnostic procedure

STEP	INSPECTION		ACTION
1	**INSPECT TO SEE WHETHER MALFUNCTION IS IN AIR INTAKE ACTUATOR OR ELSEWHERE** • Disconnect the air intake actuator connector. • Measure the voltages at the following air intake actuator terminals. **L.H.D.** — Terminal C (FRESH motor drive signal) — Terminal B (RECIRCULATE motor drive signal) **R.H.D.** — Terminal B (FRESH motor drive signal) — Terminal C (RECIRCULATE motor drive signal) • Are voltages normal?	Yes	Go to the next step.
		No	Go to Step 3.
2	**INSPECT AIR INTAKE ACTUATOR** • Inspect air intake actuator. (See 07-40B-5 AIR INTAKE ACTUATOR INSPECTION [MANUAL AIR CONDITIONER].) • Is it normal?	Yes	Go to the Step 6.
		No	Replace the air intake actuator, then go to Step 8. (See 07-40B-4 AIR INTAKE ACTUATOR REMOVAL/ INSTALLATION [MANUAL AIR CONDITIONER].)
3	**INSPECT TO SEE WHETHER MALFUNCTION IS IN WIRING HARNESS (SHORT TO B+ BETWEEN CLIMATE CONTROL UNIT AND AIR INTAKE ACTUATOR) OR ELSEWHERE** • Air intake actuator and climate control unit disconnected. • Switch the ignition ON (engine off or on). • Measure the voltages at the following air intake actuator terminals. **L.H.D.** — Terminal C (FRESH motor drive signal) — Terminal B (RECIRCULATE motor drive signal) **R.H.D.** — Terminal B (FRESH motor drive signal) — Terminal C (RECIRCULATE motor drive signal) • Are voltages **approx. 0 V**?	Yes	Go to the next step.
		No	Repair the wiring harness for short to B+ between the climate control unit and air intake actuator, then go to Step 8.

SYMPTOM TROUBLESHOOTING [MANUAL AIR CONDITIONER]

STEP	INSPECTION		ACTION
4	**INSPECT TO SEE WHETHER MALFUNCTION IS IN WIRING HARNESS (SHORT TO GROUND BETWEEN CLIMATE CONTROL UNIT AND AIR INTAKE ACTUATOR) OR ELSEWHERE** • Air intake actuator and climate control unit connectors disconnected. • Switch the ignition off. • Inspect for continuity at the following terminals between the air intake actuator and ground. **L.H.D.** — Terminal C (FRESH motor drive signal) — Terminal B (RECIRCULATE motor drive signal) **R.H.D.** — Terminal B (FRESH motor drive signal) — Terminal C (RECIRCULATE motor drive signal) • Is there continuity?	Yes	Repair the wiring harness for short to ground between the climate control unit and air intake actuator, then go to Step 8.
		No	Go to the next step.
5	**INSPECT TO SEE WHETHER MALFUNCTION IS IN WIRING HARNESS (OPEN CIRCUIT BETWEEN CLIMATE CONTROL UNIT AND AIR INTAKE ACTUATOR) OR ELSEWHERE** • Air intake actuator and climate control unit connectors disconnected. • Switch the ignition off. • Inspect for continuity at the following terminals between the climate control unit and air intake actuator. — Air intake actuator terminal C (L.H.D.) /B (R.H.D.) and climate control unit terminal E (FRESH motor drive signal) — Air intake actuator terminal B (L.H.D.) / C (R.H.D.) and climate control unit terminal C (RECIRCULATE motor drive signal) • Is there continuity?	Yes	Go to the next step.
		No	Repair the wiring harness for open circuit between the climate control unit and air intake actuator, then go to Step 8.
6	**INSPECT AIR INTAKE LINK** • Inspect the air intake links. — Is there grease on link? — Are the links securely and properly installed? — Are the links free of obstructions and hindrances? • Are the above items normal?	Yes	Go to the next step.
		No	Apply grease to the links. if any the links are damaged, replace the air intake actuator, then go to Step 8.
7	**INSPECT TO SEE WHETHER MALFUNCTION IS IN CLIMATE CONTROL UNIT OR AIR INTAKE DOOR** • Inspect the blower unit air intake door. — Is the door free of obstructions, cracks, and damage? — Are the doors securely and properly installed? • Are the above items normal?	Yes	Replace the climate control unit, then go to the next step.
		No	Remove obstruction, or install the doors in the proper position. If any doors are cracked or damaged, replace them, then go to the next step.
8	**CONFIRM THAT MALFUNCTION SYMPTOMS DO NOT RECUR AFTER REPAIR** • Does the air intake mode change smoothly?	Yes	Troubleshooting completed. Explain repairs to customer.
		No	Recheck malfunction symptoms, then repeat from Step 1 if the malfunction recurs.

SYMPTOM TROUBLESHOOTING [MANUAL AIR CONDITIONER]

NO.4 NO TEMPERATURE CONTROL WITH CLIMATE CONTROL UNIT [MANUAL AIR CONDITIONER]

id0702c2812400

4	No temperature control with climate control unit
DESCRIPTION	• Temperature does not change when operating temperature dial • Malfunction in A/C unit and/or climate control unit air mix system
POSSIBLE CAUSE	• A/C unit air mix link, air mix crank, air mix rod, air mix wire, or wire clamp malfunction • Climate control unit rack-and-pinion, or air mix wire malfunction • A/C unit air mix door malfunction • Heater piping malfunction

Diagnostic procedure

STEP	INSPECTION		ACTION
1	**INSPECT COOLANT TEMPERATURE** • Is the coolant sufficiently warmed up?	Yes	Go to the next step.
		No	Warm up the engine, then go to Step 8.
2	**INSPECT A/C UNIT AIR MIX SYSTEM** • Inspect the A/C unit air mix links, air mix cranks, air mix rods, and wire clamp. — Is there grease on links and cranks? — Are links, cranks, and rods securely installed in their proper positions? — Is wire clamp free of deformation? • Are the above items normal?	Yes	Go to the next step.
		No	Apply grease or install the links, cranks, and rods securely in their proper positions, repair or replace the wire clamp, then go to Step 8.
3	**VERIFY THAT AIR MIX WIRE FROM A/C UNIT IS POSITIONED SECURELY AND CORRECTLY** • Is the air mix wire securely installed in the correct position in relation to the A/C unit air mix links?	Yes	Go to the next step.
		No	Adjust the air mix wire or install securely in the correct position, then go to Step 8.
4	**INSPECT CLIMATE CONTROL UNIT** • Inspect the climate control unit. • Is the climate control unit normal?	Yes	Go to the next step.
		No	Repair or replace the climate control unit, then go to Step 8.
5	**INSPECT A/C UNIT** • Is there any foreign material or obstruction in the A/C unit air mix doors?	Yes	Remove obstruction, then go to Step 8.
		No	Go to the next step.
6	**INSPECT A/C UNIT AIR MIX DOOR** • Is the A/C unit air mix door securely and properly installed?	Yes	Inspect the air mix door for cracks or damage, then go to the next step.
		No	Install the air mix door securely in the proper position, then go to the next step.
7	**INSPECT HEATER LINE** • Inspect the heater lines. — Is the heater piping free of damage and cracks? — Are the heater piping connections free of engine coolant leakage? — Are the heater piping connections securely tightened? — Are the heater piping installation points on A/C unit free of engine coolant leakage? • Are the above items normal?	Yes	Operation is normal. Recheck malfunction symptoms.
		No	If heater piping connections are loose, tighten the connections to the specified torque. Repair or replace the heater piping, then go to the next step.
8	**VERIFY THAT MALFUNCTION SYMPTOM OCCURS AFTER REPAIR** • Does the unit operate in every temperature setting?	Yes	Troubleshooting completed. Explain repairs to customer.
		No	Recheck malfunction symptoms, then repeat from Step 1 if the malfunction recurs.

SYMPTOM TROUBLESHOOTING [MANUAL AIR CONDITIONER]

NO.5 WINDSHIELD FOGGED [MANUAL AIR CONDITIONER]

id0703c2801900

5	Windshield fogged
DESCRIPTION	• A/C compressor does not operate while airflow mode is in DEFROSTER or DEF/HEAT modes • Air intake mode does not change to FRESH while airflow mode is in DEFROSTER or DEF/HEAT modes
POSSIBLE CAUSE	• Climate control unit (B+ signal) system malfunction • Air intake actuator malfunction • Climate control unit (RECIRCULATE, FRESH signal) system malfunction • Blower unit air intake door malfunction

- When performing an asterisked (*) troubleshooting inspection, shake the wiring harness and connectors while doing the inspection to discover whether poor contact points are the cause of any intermittent malfunctions. If there is a problem, inspect to make sure connectors, terminals and wiring harness are connected correctly and undamaged.

Diagnostic procedure

STEP	INSPECTION		ACTION
1	**COOL AIR BLOW OUT INSPECTION** • When both the A/C and fan switch in the climate control unit are on, does cool air blow out from the front vent?	Yes	Go to the next step.
		No	Go to Step 1 of troubleshooting index No.8.
2	**INSPECT CLIMATE CONTROL UNIT POWER SUPPLY FUSE FOR B+ SIGNAL** • Is the climate control unit power supply fuse for B+ signal normal?	Yes	Go to the next step.
		No	Inspect for a short to ground on blown fuse circuit. • Repair or replace if necessary. Install appropriate amperage fuse.
3	**INSPECT AIR INTAKE ACTUATOR** • Inspect the air intake actuator. — Is there grease on the link? — Is the link securely and properly positioned? — Is the link free of obstructions? • Are the above items normal?	Yes	Go to the next step.
		No	Apply grease or install the link properly and securely, remove obstruction, then go to Step 14.
*4	**INSPECT WIRING HARNESS BETWEEN FUSE BLOCK AND CLIMATE CONTROL UNIT FOR CONTINUITY** • Disconnect the climate control unit connector. • Switch the ignition ON (engine off or on). • Measure the voltage at climate control unit terminal J (B+ signal). • Is the voltage **approx. 12 V**?	Yes	Go to the next step.
		No	Repair the wiring harness between the fuse block and climate control unit, then go to Step 14.
*5	**INSPECT WIRING HARNESS BETWEEN CLIMATE CONTROL UNIT AND GROUND FOR VOLTAGE** • Measure the voltage at climate control unit terminal D (Ground). • Is the voltage **approx. 0V**?	Yes	Go to the next step.
		No	Repair the wiring harness between the climate control unit and ground, then go to Step 14.
6	**VERIFY WHETHER MALFUNCTION IS IN BLOWER UNIT AIR INTAKE DOOR OR ELSEWHERE** • Switch the ignition off. • Connect the climate control unit connector. • Remove the air intake actuator. • Switch the ignition ON (engine off or on). • Set the fan switch to 4th position. • Does the air intake mode (RECIRCULATE, FRESH) change smoothly when the air intake link is operated by hand?	Yes	Go to the next step.
		No	Go to Step 12.
7	**INSPECT AIR INTAKE ACTUATOR** • Inspect the air intake actuator. (See 07-40B-5 AIR INTAKE ACTUATOR INSPECTION [MANUAL AIR CONDITIONER].) • Is it normal?	Yes	Go to the next step.
		No	Replace the air intake actuator, go to Step 14.

07

SYMPTOM TROUBLESHOOTING [MANUAL AIR CONDITIONER]

STEP	INSPECTION		ACTION
8	**INSPECT AIR INTAKE SELECTOR SWITCH AND DEFROSTER SWITCH IN CLIMATE CONTROL UNIT** • Measure the voltage at climate control unit connector (12-pin) terminals E and C. • Is it normal?	Yes	Go to the next step.
		No	Replace the climate control unit, then go to Step 14.
*9	**INSPECT WIRING HARNESS BETWEEN CLIMATE CONTROL UNIT AND AIR INTAKE ACTUATOR FOR CONTINUITY** • Switch the ignition off. • Is there continuity between the following climate control unit terminals and air intake actuator terminals? **L.H.D.** — Terminal C —Terminal E (FRESH signal) — Terminal B —Terminal C (RECIRCULATE signal) **R.H.D.** — Terminal B —Terminal E (FRESH signal) — Terminal C —Terminal C (RECIRCULATE signal)	Yes	Go to the next step.
		No	Repair the wiring harness between the climate control unit and air intake actuator, then go to Step 14.
*10	**INSPECT WIRING HARNESS BETWEEN CLIMATE CONTROL UNIT AND AIR INTAKE ACTUATOR FOR SHORT TO GROUND** • Is there continuity between the following climate control unit terminals and ground? — Terminal E (FRESH signal) — Terminal C (RECIRCULATE signal)	Yes	Repair the wiring harness between the climate control unit and air intake actuator, then go to Step 14.
		No	Go to the next step.
*11	**INSPECT WIRING HARNESS BETWEEN CLIMATE CONTROL UNIT AND AIR INTAKE ACTUATOR FOR SHORT TO B+** • Switch the ignition ON (engine off or on). • Measure the voltage at the following climate control unit terminals. — Terminal E (FRESH signal) — Terminal C (RECIRCULATE signal) • Is the voltage **approx. 12 V**?	Yes	Repair the wiring harness between the climate control unit and air intake actuator, then go to Step 14.
		No	Replace the climate control unit, then go to Step 14.
12	**INSPECT BLOWER UNIT AIR INTAKE DOOR** • Is there any foreign material or obstruction in the blower unit air intake door?	Yes	Remove obstruction, then go to Step 14.
		No	Go to the next step.
13	**VERIFY THAT BLOWER UNIT AIR INTAKE DOOR IS POSITIONED SECURELY AND PROPERLY** • Is the blower unit air intake door securely and properly positioned?	Yes	Inspect the air intake door for cracks or damage, then go to the next step.
		No	Install the air intake door securely in the proper position, then go to the next step.
14	**VERIFY THAT MALFUNCTION SYMPTOM OCCURS AFTER REPAIR** • Does the malfunction disappear?	Yes	Troubleshooting completed. Explain repairs to customer.
		No	Recheck malfunction symptoms, then repeat from Step 1 if the malfunction recurs.

SYMPTOM TROUBLESHOOTING [MANUAL AIR CONDITIONER]

NO.6 AIR FROM VENTS NOT COLD ENOUGH [MANUAL AIR CONDITIONER]

id0702c2812500

6	Air from vents not cold enough
DESCRIPTION	• Magnetic clutch operates but A/C system malfunctions
POSSIBLE CAUSE	**Note** • If the engine coolant temperature increases due to a cooling system malfunction, the fail-safe function disables the A/C operation. • Drive belt malfunction • Refrigerant pressure sensor malfunction • Malfunction in blower unit or condenser • Cooling fan system malfunction • Condenser or related part malfunction • A/C unit or condenser malfunction • Receiver/drier or expansion valve malfunction (valve closes too much) • A/C compressor system malfunction, insufficient compressor oil • Over filling of compressor oil, malfunction in expansion valve or A/C unit air mix link system • Evaporative temperature sensor malfunction

Diagnostic procedure

STEP	INSPECTION		ACTION
1	**CHECK MALFUNCTION SYMPTOMS** **Note** • Without i-stop, go to the next step. • Is malfunctions occur in only when operating the i-stop?	Yes	Perform the i-stop troubleshooting. (See 01-02-4 FOREWORD [SKYACTIV-G 2.0].)
		No	Go to the next step.
2	**INSPECT REFRIGERANT PRESSURE TO LOCATE MALFUNCTION** • Perform refrigerant pressure check. (See 07-10-7 REFRIGERANT PRESSURE CHECK.) • Is the refrigerant pressure normal?	Yes	Go to the next step.
		No	Record the inspection result. • If the refrigerant high-pressure and low-pressure values are both high, go to Step 6. • If the refrigerant high-pressure and low-pressure values are approximately the same, go to Step 9. • If the refrigerant high-pressure and low-pressure values are both low, go to Step 11. • If there is a vacuum on the low pressure side and extremely low pressure on the high pressure side, go to Step 17. • If there is low pressure on the high pressure side and high pressure on the low pressure side, replace the A/C compressor, then go to Step 21. (See 07-11-25 A/C COMPRESSOR REMOVAL/INSTALLATION.) • If the refrigerant pressure is other than above condition, go to Step 19.
3	**INSPECT REFRIGERANT SYSTEM PERFORMANCE** • Perform refrigerant system performance test. (See 07-10-9 REFRIGERANT SYSTEM PERFORMANCE TEST.) • Is the operation normal?	Yes	Operation is normal. (Recheck malfunction symptoms.)
		No	Go to the next step.
4	**INSPECT DRIVE BELT** • Inspect the drive belt. (See 01-10A-9 DRIVE BELT INSPECTION [SKYACTIV-G 2.0].) (See 01-10B-7 DRIVE BELT INSPECTION [SKYACTIV-D 2.2].) • Is it normal?	Yes	Go to the next step.
		No	Adjust or replace the drive belt, then the next step. (See 01-10A-10 DRIVE BELT REMOVAL/INSTALLATION [SKYACTIV-G 2.0].) (See 01-10B-8 DRIVE BELT REMOVAL/INSTALLATION [SKYACTIV-D 2.2].)
5	**INSPECT REFRIGERANT PRESSURE SENSOR** • Inspect the refrigerant pressure sensor. (See 07-40B-14 REFRIGERANT PRESSURE SENSOR INSPECTION [MANUAL AIR CONDITIONER].) • Is it normal?	Yes	Go to the next step.
		No	Repair or replace malfunctioning part according to inspection result, then go to Step 21.

SYMPTOM TROUBLESHOOTING [MANUAL AIR CONDITIONER]

STEP	INSPECTION		ACTION
6	**INSPECT COOLING FAN OPERATION** • Verify the cooling fan operation. (See 01-12A-21 COOLING FAN MOTOR INSPECTION [SKYACTIV-G 2.0].) (See 01-12B-19 COOLING FAN MOTOR INSPECTION [SKYACTIV-D 2.2].) • Is the cooling fan operation normal?	Yes	Go to the next step.
		No	Repair or replace the malfunctioning location according to the inspection results. Then go to Step 21.
7	**VISUALLY INSPECT CONDENSER** • Is the condenser fin clogged or obstructed by foreign material?	Yes	Remove the foreign material. Repair the condenser fin. Then go to Step 21.
		No	Go to the next step.
8	**CHECK REFRIGERATION SYSTEM FOR OVERCHARGE OR AIR CONTAMINATION** • Is the low side line hot to the touch?	Yes	Recover refrigerant. Evacuate system for one hour. Refill with correct amount of refrigerant, and go to step 21.
		No	Recover refrigerant, evacuate for 15 minutes, refill with correct amount and go to step 21.
9	**CHECK TO SEE WHETHER MALFUNCTION IS IN EXPANSION VALVE OR ELSEWHERE** • Compare the refrigerant pressure of the low pressure side with the high pressure side at Step 3. • Is there little difference between the high pressure side and low pressure side readings (refer to graph in REFRIGERANT PRESSURE CHECK procedure)? (See 07-10-7 REFRIGERANT PRESSURE CHECK.)	Yes	Replace the expansion valve. After performing the following servicing, go to Step 21. • Adjust the compressor oil to the specified level. • After discharging, charge with new refrigerant to the specified level.
		No	Go to the next step.
10	**INSPECT AIR MIX DOOR RELATED PART INSTALLATION** • Remove the A/C unit. (See 07-11-11 A/C UNIT REMOVAL/INSTALLATION.) • Are the air mix link, air mix crank, air mix wire and air mix rod of the A/C unit correctly and securely installed to their positions?	Yes	Adjust the compressor oil to the specified amount, then go to Step 21. (See 07-11-25 A/C COMPRESSOR REMOVAL/INSTALLATION.)
		No	Inspect the air mix link, air mix crank, and air mix rod of the A/C unit correctly and securely installed to their positions. (See 07-11-11 A/C UNIT REMOVAL/INSTALLATION.) • Repair or install correctly for suspect part according to inspection result, then go to Step 21.
11	**INSPECT BLOWER UNIT FOR BLOCKAGE** • Is the blower unit intake and air filter clogged?	Yes	Remove the cause of the clogging.Replace the air filter if it is clogged. (See 07-11-11 AIR FILTER REMOVAL/INSTALLATION.) Then go to Step 21.
		No	Go to the next step.
12	**CHECK TO SEE WHETHER MALFUNCTION IS REFRIGERANT LINE LEAKAGE OR ELSEWHERE** • Verify if there is gas leakage from the system hoses using the gas leak tester. • Is there gas leakage?	Yes	If there is leakage from a system hose connection area, go to Step 14. If there is leakage other than from a system hose connection area, go to Step 16.
		No	Go to the next step.
13	**VISUALLY INSPECT REFRIGERANT LINE** • Is a system hose crushed?	Yes	Replace the crushed system hose. (See 07-11-36 REFRIGERANT LINE REMOVAL/INSTALLATION.) After performing the following servicing, go to Step 21. • Adjust the compressor oil to the specified level. • After discharging, charge with new refrigerant to the specified level.
		No	Go to Step 21.
14	**CHECK TO SEE WHETHER MALFUNCTION IS IN REFRIGERANT LINE JOINT LOOSE OR O-RING** • Tighten the system hose connection area to the specified torque. (See 07-11-36 REFRIGERANT LINE REMOVAL/INSTALLATION.) • Has the leakage stopped?	Yes	Go to the next step.
		No	Go to Step 16.

SYMPTOM TROUBLESHOOTING [MANUAL AIR CONDITIONER]

STEP	INSPECTION		ACTION
15	**VISUALLY INSPECT REFRIGERANT LINE** • Is a system hose crushed?	Yes	Replace the crushed system hose. (See 07-11-36 REFRIGERANT LINE REMOVAL/INSTALLATION.) After performing the following servicing, go to Step 21. • Adjust the compressor oil to the specified level. • After discharging, charge with new refrigerant to the specified level.
		No	Adjust the compressor oil to the specified amount, then go to Step 21. (See 07-11-25 A/C COMPRESSOR REMOVAL/INSTALLATION.)
16	**VISUALLY INSPECT REFRIGERANT LINE** • Is a system hose crushed?	Yes	Replace the O-ring of the leaking area. Replace the crushed system hose. (See 07-11-36 REFRIGERANT LINE REMOVAL/INSTALLATION.) After performing the following servicing, go to Step 21. • Adjust the compressor oil to the specified level. • After discharging, charge with new refrigerant to the specified level.
		No	Replace the O-ring of the leaking area. After performing the following servicing, go to Step 21. • Adjust the compressor oil to the specified level. • After discharging, charge with new refrigerant to the specified level.
17	**CHECK TO SEE WHETHER MALFUNCTION IS WATER IN REFRIGERANT SYSTEM OR ELSEWHERE** • Does the refrigerant pressure on the low pressure side vary between the vacuum and normal range?	Yes	Replace the condenser. (Water in refrigerant system) (See 07-11-28 CONDENSER REMOVAL/INSTALLATION.) Then go to Step 21.
		No	Go to the next step.
18	**CHECK TO SEE WHETHER MALFUNCTION IS IN RECEIVER DRYER FILTER OR EXPANSION VALVE** • Remove the expansion valve and verify its condition. • Is there refrigerant leakage or valve clogging?	Yes	If there is foreign matter clogging the valve, remove the foreign matter. If there is refrigerant leakage or clogging, replace the expansion valve. Perform discharge, charge with new refrigerant, and then go to Step 21.
		No	Install the expansion valve. Replace the condenser. (Receiver/Dryer filter is clogged.) (See 07-11-28 CONDENSER REMOVAL/INSTALLATION.) Then go to Step 21.
19	**INSPECT EVAPORATIVE TEMPERATURE SENSOR** • Inspect the evaporator temperature sensor. (See 07-40A-27 EVAPORATOR TEMPERATURE SENSOR INSPECTION [FULL-AUTO AIR CONDITIONER].) • Is it normal?	Yes	Verify the evaporator temperature sensor position. (See 07-11-14 A/C UNIT DISASSEMBLY/ASSEMBLY.) Then go to Step 21.
		No	Replace the evaporator temperature sensor, then go to Step 21. (See 07-11-14 A/C UNIT DISASSEMBLY/ASSEMBLY.)
20	**INSPECT AIR MIX DOOR RELATED PART INSTALLATION** • Remove the A/C unit. (See 07-11-11 A/C UNIT REMOVAL/INSTALLATION.) • Are the air mix link, air mix crank, and air mix wire of the A/C unit correctly and securely installed to their positions?	Yes	Go to the next step.
		No	• Inspect the air mix link, and air mix crank of the A/C unit correctly and securely installed to their positions. (See 07-11-14 A/C UNIT DISASSEMBLY/ASSEMBLY.) • Repair or install correctly for suspect part according to inspection result. Then go to next step.
21	**VERIFY THAT MALFUNCTION SYMPTOM DOES OCCURS AFTER REPAIR** • If the refrigerant discharged during inspection has not been recharged, discharge and charge with new refrigerant to the specified level. • Does cool air blow out? (Are results of refrigerant system performance test normal?)	Yes	Troubleshooting completed. Explain repairs to customer.
		No	Recheck malfunction symptoms, then repeat from Step 1 if malfunction recurs.

SYMPTOM TROUBLESHOOTING [MANUAL AIR CONDITIONER]

NO.7 NO COOL AIR [MANUAL AIR CONDITIONER]

id0702c2812600

7	No cool air
DESCRIPTION	• Magnetic clutch does not operate
POSSIBLE CAUSE	• Malfunction in PCM A/C cut control system • Open or short circuit in wiring harness between evaporator temperature sensor and climate control unit • Malfunction in evaporator temperature sensor (internal circuit malfunction) • Malfunction in climate control unit • Malfunction in refrigerant pressure sensor • Malfunction in PCM (A/C signal) • Malfunction in PCM (IG1 signal) • Malfunction in A/C compressor • Malfunction in A/C relay • Malfunction in evaporator temperature sensor • Malfunction in front body control module (FBCM) • Improper refrigerant charging amount • Open circuit in wiring harness between front body control module (FBCM) and climate control unit • Malfunction in CAN communication

- When performing an asterisked (*) troubleshooting inspection, shake the wiring harness and connectors while performing the inspection to discover whether poor contact points are the cause of any intermittent malfunctions. If there is a problem, check to make sure connectors, terminals and wiring harnesses are connected correctly and undamaged.

Diagnostic procedure

STEP	INSPECTION		ACTION
1	**CHECK MALFUNCTION SYMPTOMS** **Note** • Without i-stop, go to the next step. • Is malfunctions occur in only when operating the i-stop?	Yes	Perform the i-stop troubleshooting. (See 01-02-4 FOREWORD [SKYACTIV-G 2.0].)
		No	Go to the next step.
2	**INSPECT FUSE** • Are A/C relay power supply fuses okay?	Yes	Go to the next step.
		No	Replace fuse, then go to Step 16. If fuse burns out immediately, go to the next step.
3	**INSPECT AIR BLOW OUT** • Does air blow out?	Yes	Go to the next step.
		No	Go to Step 1 of troubleshooting indexes No.1 and 2.
4	**INSPECT A/C COMPRESSOR OPERATION** • Start engine. • Turn A/C switch and fan switch on. • Does A/C compressor operate?	Yes	Go to Step 1 of troubleshooting index No.6.
		No	Go to the next step.
5	**INSPECT FOR DTC IN PCM AND FRONT BODY CONTROL MODULE (FBCM)** • Inspect for DTCs related to the PCM and front body control module (FBCM) on-board diagnostic system. • Are any DTCs displayed?	Yes	Go to appropriate inspection procedure.
		No	Go to the next step.
6	**DETERMINE IF MALFUNCTION CAUSE IS A/C REQUEST SIGNAL OR A/C RELAY OPERATIONAL MALFUNCTION** • Access PCM PID ACCS using the M-MDS. • Start the engine and idle it. • Turn the PID ACCS to ON from OFF using the M-MDS simulation function. • Is the A/C magnetic clutch engaged?	Yes	Go to the next step.
		No	Go to Step 11.
7*	**SIGNAL INSPECTION FROM EVAPORATOR TEMPERATURE SENSOR TO CLIMATE CONTROL UNIT** • Remove the climate control unit. • Reconnect the climate control unit connector. • Measure the climate control unit terminal H voltage. (See 07-40B-25 CLIMATE CONTROL UNIT INSPECTION [MANUAL AIR CONDITIONER].) • Is the voltage within the specified?	Yes	Go to Step 9.
		No	Go to the next step.

SYMPTOM TROUBLESHOOTING [MANUAL AIR CONDITIONER]

STEP	INSPECTION		ACTION
8	**INSPECT EVAPORATOR TEMPERATURE SENSOR** • Inspect the evaporator temperature sensor. (See 07-40B-12 EVAPORATOR TEMPERATURE SENSOR INSPECTION [MANUAL AIR CONDITIONER].) • Is the evaporator temperature sensor normal?	Yes	Inspect and repair for open or short circuit between evaporator temperature sensor and climate control unit.
		No	Replace the evaporator temperature sensor. (See 07-11-14 A/C UNIT DISASSEMBLY/ASSEMBLY.)
9	**INSPECT REFRIGERANT PRESSURE SENSOR** • Inspect refrigerant pressure sensor. (See 07-40B-14 REFRIGERANT PRESSURE SENSOR INSPECTION [MANUAL AIR CONDITIONER].) • Is the refrigerant pressure sensor normal?	Yes	Go to the next step.
		No	Repair or replace malfunctioning part according to inspection result, then go to Step 17.
10	**CONTINUITY INSPECTION BETWEEN CLIMATE CONTROL UNIT AND INSTRUMENT CLUSTER** • Inspect for open or short circuit between climate control unit terminal K and front body control module (FBCM) terminal 2J. Is there any open or short circuit detected?	Yes	Repair for open or short circuit.
		No	Replace the climate control unit.(A/C switch malfunction or climate control unit does not determine A/C request or transmit the A/C request signal.) (See 07-40B-16 CLIMATE CONTROL UNIT REMOVAL/INSTALLATION [MANUAL AIR CONDITIONER].)
11	**INSPECT TO SEE WHETHER MALFUNCTION (LACK OF CONTINUITY) IS IN A/C CONTROL SIGNAL CIRCUIT (BETWEEN A/C RELAY AND PCM) OR ELSEWHERE** • Does cool air blow out when terminal E of A/C relay connector (A/C control signal) is grounded?	Yes	Release short, then go to the next step.
		No	Go to Step 13.
12*	**INSPECT TO SEE WHETHER MALFUNCTION (LACK OF CONTINUITY) IS IN PCM OR WIRING HARNESS (BETWEEN A/C RELAY AND PCM)** • Test voltage at the A/C relay control signal terminal of PCM. • Is voltage **approx. 12 V**?	Yes	Inspect PCM, then go to Step 17.
		No	Repair wiring harness between A/C relay and PCM, then go to Step 17.
13*	**INSPECT TO SEE WHETHER MALFUNCTION IS IN MAGNETIC CLUTCH OR ELSEWHERE** • Test voltage at the following terminal of magnetic clutch. — Terminal A (magnetic clutch operation signal) • Is voltage **approx. 12 V**?	Yes	Go to the next step.
		No	Go to Step 15.
14	**INSPECT MAGNETIC CLUTCH CLEARANCE** • Inspect the magnetic clutch clearance. (See 07-40B-9 MAGNETIC CLUTCH ADJUSTMENT [MANUAL AIR CONDITIONER].) • Is the magnetic clutch clearance normal?	Yes	Inspect and repair the magnetic clutch, then go to Step 17. (See 07-40B-9 MAGNETIC CLUTCH INSPECTION [MANUAL AIR CONDITIONER].)
		No	Adjust the magnetic clutch clearance, then go to Step 17. (See 07-40B-9 MAGNETIC CLUTCH ADJUSTMENT [MANUAL AIR CONDITIONER].)
15	**INSPECT WIRING HARNESS BETWEEN FUSE BLOCK AND A/C RELAY FOR LACK OF CONTINUITY** • Test voltages at following terminals of A/C relay. — Terminal A (A/C relay control signal) — Terminal C (A/C control signal) • Are voltages **approx. 12 V**?	Yes	Go to the next step.
		No	Repair wiring harness between fuse block and A/C relay, then go to Step 17.

SYMPTOM TROUBLESHOOTING [MANUAL AIR CONDITIONER]

STEP	INSPECTION		ACTION
16	**INSPECT TO SEE WHETHER MALFUNCTION IS IN A/C RELAY OR WIRING HARNESS (BETWEEN A/C RELAY AND MAGNETIC CLUTCH)** • Test voltage at the following terminal of A/C relay. — Terminal D (magnetic clutch operation signal) • Is voltage **approx. 12 V**?	Yes	Inspect wiring harness between A/C relay and magnetic clutch. • If above wiring harness is OK, go to the next step. • If above wiring harness malfunctions, repair wiring harness, then go to the next step.
		No	Replace A/C relay, then go to the next step.
17	**CONFIRM THAT MALFUNCTION SYMPTOMS DO NOT RECUR AFTER REPAIR** • Does cool air blow out? (Are the results of refrigerant system performance test okay?)	Yes	Troubleshooting completed. Explain repairs to customer.
		No	Recheck malfunction symptoms, then repeat from Step 1 if malfunction recurs.

NO.8 NOISE WHILE OPERATING A/C SYSTEM [MANUAL AIR CONDITIONER]

id0702c2812700

8	**Noise while operating A/C system**
DESCRIPTION	• Noise from magnetic clutch, A/C compressor, hose or refrigerant line
POSSIBLE CAUSE	• Magnetic clutch operation noise • A/C compressor vane noise • A/C compressor slippage noise • Hose or refrigerant line interference noise

* : If there is gas leakage, air enters into the A/C system. The desiccant within the receiver/drier absorbs the moisture from the air and becomes saturated. If the A/C system is used in this condition, the inside of the A/C compressor will begin to rust due to this moisture, which may cause lock up or noise to occur. Therefore, replacement of the receiver/drier is necessary.

Diagnostic procedure

STEP	INSPECTION		ACTION
1	**CHECK A/C COMPRESSOR VANE NOISE** • Is there a jingling, popping, beeping, or buzzing sound (A/C compressor vane noise)?	Yes	Go to Step 5.
		No	Go to the next step.
2	**INSPECT A/C COMPRESSOR SLIPPAGE NOISE** • Is there a squeaking or whirling sound (A/C compressor slippage noise)?	Yes	Go to Step 14.
		No	Go to the next step.
3	**INSPECT A/C COMPRESSOR INTERFERENCE NOISE** • Is there a rattling or vibrating sound (interference noise)?	Yes	Go to Step 18.
		No	Go to the next step.
4	**INSPECT MAGNETIC CLUTCH OPERATION NOISE** • Is there a clicking sound (magnetic clutch operation noise)?	Yes	Adjust clearance between pressure plate of magnetic clutch and A/C compressor pulley, then go to Step 19. (See 07-40B-9 MAGNETIC CLUTCH ADJUSTMENT [MANUAL AIR CONDITIONER].)
		No	Condition is normal. (Recheck malfunction symptoms.)
5	**INSPECT A/C COMPRESSOR NOISE TIME** • Is noise heard continuously for **more than 3 s** after A/C compressor comes on?	Yes	Go to the next step.
		No	Condition is normal. (Noise occurs for **2—3 s** immediately after A/C compressor turns on.)
6	**INSPECT IDLE SPEED** • Inspect idle speed. (See 01-10A-4 ENGINE TUNE-UP [SKYACTIV-G 2.0].) (See 01-10B-3 ENGINE TUNE-UP [SKYACTIV-D 2.2].) • Is it okay?	Yes	Go to the next step.
		No	Follow the repair instruction described in section 01, then go to Step 19.
7	**INSPECT REFRIGERANT AMOUNT** • Inspect refrigerant amount. • Is it okay?	Yes	Go to Step 10.
		No	Go to the next step.

SYMPTOM TROUBLESHOOTING [MANUAL AIR CONDITIONER]

STEP	INSPECTION		ACTION
8	**INSPECT REFRIGERANT LINES** • Inspect refrigerant lines. — Is piping free of damage and cracks? — Are piping connections free of oil grime? (Visual inspection) — Are piping connections free of gas leakage? — Are piping installation points on condenser free of gas leakage? — Are piping installation points on receiver/drier free of gas leakage? — Are piping installation points on A/C compressor free of gas leakage? — Are piping installation points on A/C unit free of gas leakage? — Perform gas leak inspection using gas leak tester. • Are above items okay?	Yes	Go to the next step.
		No	If piping or A/C component(s) is damaged or cracked, replace then go to Step 19. If there is gas leakage, repair or replace connection and replace condenser*, then go to Step 19.
9	**INSPECT EVAPORATOR PIPING CONNECTIONS IN A/C UNIT FOR GAS LEAKAGE** • Are piping connections for evaporator in A/C unit free of gas leakage?	Yes	Adjust refrigerant amount to specified level, then go to Step 19.
		No	If piping is damaged or cracked, replace then go to Step 19. If there is gas leakage, repair or replace connection and replace condenser*, then go to Step 19.
10	**CHECK TO SEE WHETHER MALFUNCTION IS IN COMPRESSOR OIL OR ELSEWHERE** • Add **20 ml {20 cc, 0.8 fl oz}** of compressor oil. • Is noise heard when racing engine?	Yes	Go to the next step.
		No	Troubleshooting completed. Explain repair to customer.
11	**CHECK TO SEE WHETHER MALFUNCTION IS IN A/C COMPRESSOR OR ELSEWHERE** • Drain compressor oil. • Is it contaminated with metal particles?	Yes	Go to the next step.
		No	Replace A/C compressor, then go to Step 19.
12	**CHECK TO SEE WHETHER MALFUNCTION IS SOMEWHERE IN A/C SYSTEM OR ELSEWHERE** • Is compressor oil whitish and mixed with water?	Yes	Replace entire A/C system (excluding heater), then go to Step 19.
		No	Go to the next step.
13	**INSPECT A/C COMPRESSOR OIL** • Is compressor oil darker than normal and contaminated with aluminum chips?	Yes	Replace A/C compressor and condenser, then go to Step 19. (Since A/C compressor may be worn and receiver/drier may be clogged, replacement of receiver/drier is necessary.)
		No	Condition is normal. Recheck malfunction symptoms.
14	**CHECK TO SEE WHETHER MALFUNCTION IS IN A/C COMPRESSOR OR ELSEWHERE** • Is noise heard immediately after A/C compressor is stopped?	Yes	Replace A/C compressor, then go to Step 19. (A/C compressor discharge valve left open)
		No	Go to the next step.
15	**INSPECT DRIVE BELT** • Inspect drive belt. (See 01-10A-9 DRIVE BELT INSPECTION [SKYACTIV-G 2.0].) (See 01-10B-7 DRIVE BELT INSPECTION [SKYACTIV-D 2.2].) • Is it okay?	Yes	Go to the next step.
		No	Replace drive belt, then go to Step 19. (See 01-10A-10 DRIVE BELT REMOVAL/INSTALLATION [SKYACTIV-G 2.0].) (See 01-10B-8 DRIVE BELT REMOVAL/INSTALLATION [SKYACTIV-D 2.2].)
16	**INSPECT DRIVE BELT CONDITION** • Is drive belt worn? • Does it have foreign material imbedded in it, or have oil on it?	Yes	Remove obstruction, remove oil, or replace drive belt, then go to Step 19.
		No	Go to the next step.
17	**INSPECT MAGNETIC CLUTCH** • Inspect magnetic clutch. (See 07-40B-9 MAGNETIC CLUTCH INSPECTION [MANUAL AIR CONDITIONER].) • Is it okay?	Yes	Replace A/C compressor (excluding pressure plate, A/C compressor pulley, and stator), then go to Step 19.
		No	Replace magnetic clutch, then go to Step 19.
18	**CHECK TO SEE WHETHER MALFUNCTION IS IN A/C COMPRESSOR OR REFRIGERANT LINES** • Is noise emitted from A/C compressor?	Yes	Visually inspect A/C compressor, replace appropriate parts if necessary, then go to the next step.
		No	If noise is due to refrigerant lines, repair detached or missing clips, tighten loose bolts, then go to the next step.

SYMPTOM TROUBLESHOOTING [MANUAL AIR CONDITIONER]

STEP	INSPECTION		ACTION
19	**VERIFY THAT MALFUNCTION SYMPTOM OCCURS AFTER REPAIR** • Has A/C compressor noise stopped?	Yes	Troubleshooting completed. Explain repairs to customer.
		No	Recheck malfunction symptoms, then repeat from Step 1 if malfunction recurs.

07-10 REFRIGERANT SYSTEM

REFRIGERANT SYSTEM
SERVICE WARNINGS **07-10–1**
Handling Refrigerant **07-10–1**
Storing Refrigerant **07-10–1**
REFRIGERANT SYSTEM
SERVICE CAUTIONS **07-10–2**
Handling Insufficient
Refrigerant Level **07-10–2**
Handling Compressor Oil **07-10–2**
REFRIGERANT SYSTEM
GENERAL PROCEDURES **07-10–2**
REFRIGERANT CHARGING **07-10–3**
Charging Recycled
R-134a Refrigerant **07-10–3**
Charging Recycled
R-1234yf Refrigerant **07-10–3**
Charging Preparation **07-10–4**
Evacuation **07-10–4**
Airtightness Check **07-10–5**
Charging New Refrigerant **07-10–5**
Leak Test **07-10–6**
REFRIGERANT RECOVERY **07-10–7**
REFRIGERANT PRESSURE CHECK . . . **07-10–7**
REFRIGERANT SYSTEM
PERFORMANCE TEST **07-10–9**

REFRIGERANT SYSTEM

REFRIGERANT SYSTEM SERVICE WARNINGS

id071000800100

Handling Refrigerant

- **Avoid breathing air conditioning refrigerant or lubricant vapor. Exposure may irritate eyes, nose and throat. Also, due to environmental concerns, we urge use of recovery/recycling/recharging equipment when draining refrigerant from the air conditioning system. If accidental system discharge occurs, ventilate work area before resuming service.**
- **Do not perform pressure test or leak test for refrigerant service equipment and/or vehicle air conditioning system using compressed air. Some mixtures of air and refrigerant have been shown to be combustible at elevated pressures. These mixtures, if ignited, may cause injury or property damage. Additional health and safety information may be obtained from refrigerant manufacturers.**
- **Do not allow the refrigerant to leak near fire or any kind of heat. A poisonous gas may be generated if the refrigerant gas contacts fire or heat such as from cigarettes and heaters. When carrying out any operation that can cause refrigerant leakage, extinguish or remove the above-mentioned heat sources and maintain adequate ventilation.**
- **Handling liquid refrigerant is dangerous. A drop of it on the skin can result in localized frostbite. When handling the refrigerant, wear gloves and safety goggles. If refrigerant splashes into the eyes, immediately wash them with clean water and consult a doctor.**

Storing Refrigerant

- **The refrigerant container is highly pressurized. If it is subjected to high heat, it could explode, scattering metal fragments and liquid refrigerant that can seriously injure you. Store the refrigerant at temperatures below 40 °C {104 °F}.**

REFRIGERANT SYSTEM

REFRIGERANT SYSTEM SERVICE CAUTIONS

id071000800200

Handling Insufficient Refrigerant Level

- **If an insufficient refrigerant level is detected at troubleshooting, do not charge (add) the refrigerant. Because an accurate amount of refrigerant cannot be determined from the pressure indicated on the manifold gauge, never charge the refrigerant. If there is too much or too little refrigerant from the refilling, there may be secondary problems such as damage to the refrigerant cycle parts, or a decrease of cooling performance. Therefore, if it is determined that the refrigerant level is insufficient, completely remove refrigerant from the refrigerant cycle and refill with refrigerant to the specified amount.**

Handling Compressor Oil

- **Use only the following specified compressor oil for this vehicle. Using compressor oil (PAG oil) other than specified compressor oil can damage the A/C compressor.**
  - **FD46XG**
- **Do not spill compressor oil on the vehicle. A drop of compressor oil on the vehicle surface can eat away at the paint. If oil gets on the vehicle, wipe it off immediately.**
- **Compressor oil (PAG oil) has a higher moisture absorption efficiency than the previously used mineral oil. If moisture mixes with the compressor oil, the refrigerant system could be damaged. Therefore, install caps immediately after using the compressor oil or removing refrigerant system parts to prevent moisture absorption.**
- **If the refrigerant gas is completely discharged from the system for reasons such as a malfunction during A/C operation, repair or replace the malfunctioning part, charge the refrigerant to the specified amount and always add 60 ml {60 cc, 2.0 fl oz} of compressor. If the compressor oil is not adequately replenished, the A/C compressor may quickly deteriorate, abnormal noise may develop, cooling performance may be affected or, in the worst case, the A/C compressor may seize.**

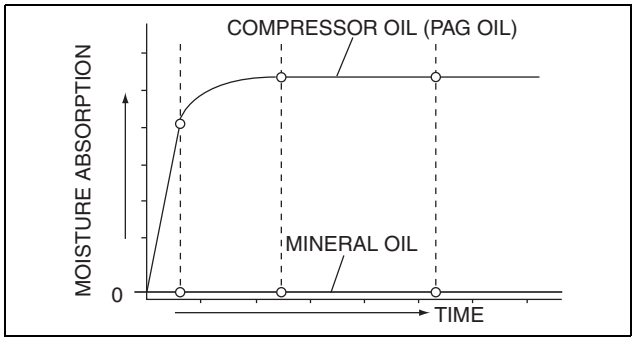

am3zzw0001093

REFRIGERANT SYSTEM GENERAL PROCEDURES

id071000800300

1. Fully close the valves of the manifold gauge.
2. Connect the charging hoses to the high- and low-pressure side joints of the manifold gauge.

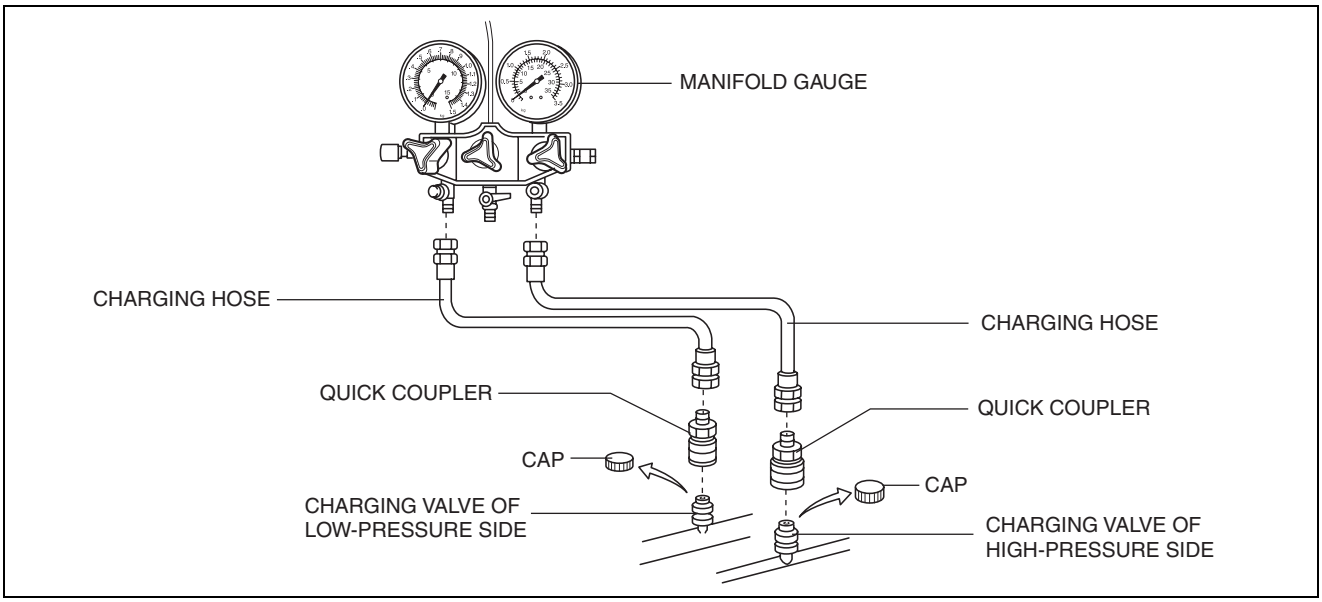

ac5wzw0000175

3. Connect the quick couplers to the ends of the charging hoses.
4. Connect the quick couplers to the charging valves.

REFRIGERANT SYSTEM

REFRIGERANT CHARGING

id071000800400

Caution
- **Do not use a different type of refrigerant or charge beyond the specified level. Otherwise, cooling ability will be lowered and the A/C compressor could be damaged.**

Note
- The refrigerant used for the refrigerant system differs depending on the country. When draining or adding the refrigerant, verify the appropriate refrigerant type and specified amount of refrigerant from the caution label.

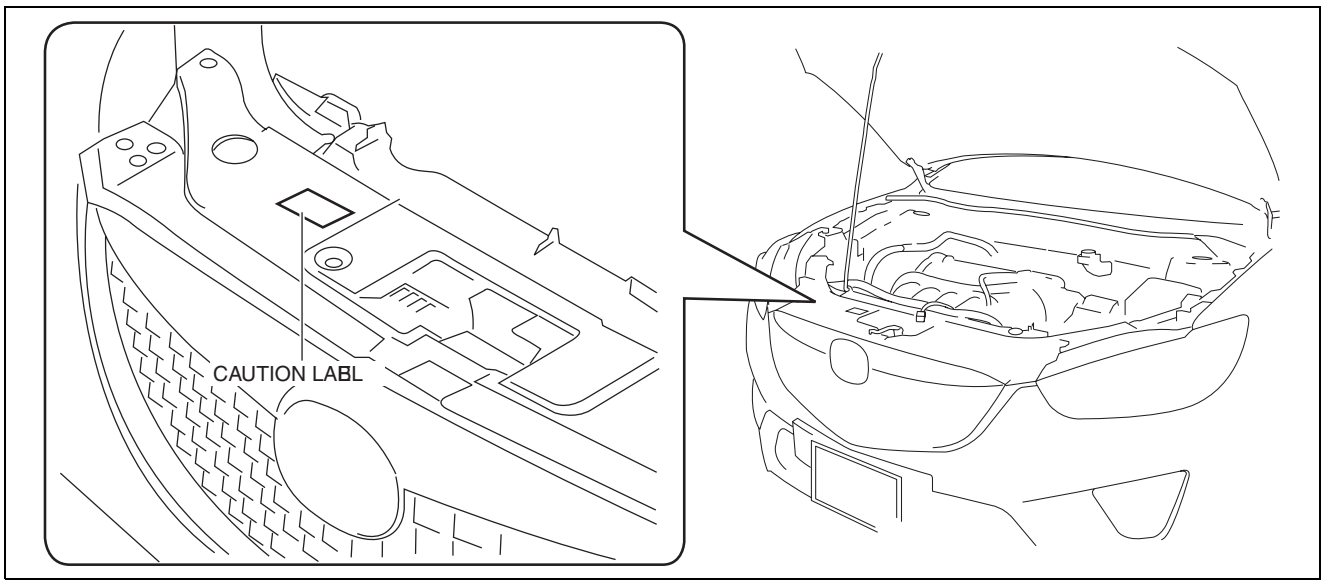

ac5wzw0000276

Refrigerant type
- HFO-1234yf
- HFC-134a

Regular amount of refrigerant (approx. quantity)
- **475—525** g {**16.8—18.5** oz} (SKYACTIV-G 2.0 (HFO-1234yf))
- **445—495** g {**15.7—17.4** oz} (SKYACTIV-D 2.2 (HFO-1234yf))
- **465—515** g {**16.5—18.1** oz} (HFC-134a)

Charging Recycled R-134a Refrigerant
1. Connect an R-134a recovery/recycling/recharging device to the vehicle and follow the device manufacturer's instructions.

Charging Recycled R-1234yf Refrigerant
1. Connect an R-1234yf recovery/recycling/recharging device to the vehicle and follow the device manufacturer's instructions.

REFRIGERANT SYSTEM

Charging Preparation

1. Install the manifold gauge set.
2. Connect the tap pin side of the charging hose to the air purge valve of the manifold gauge.

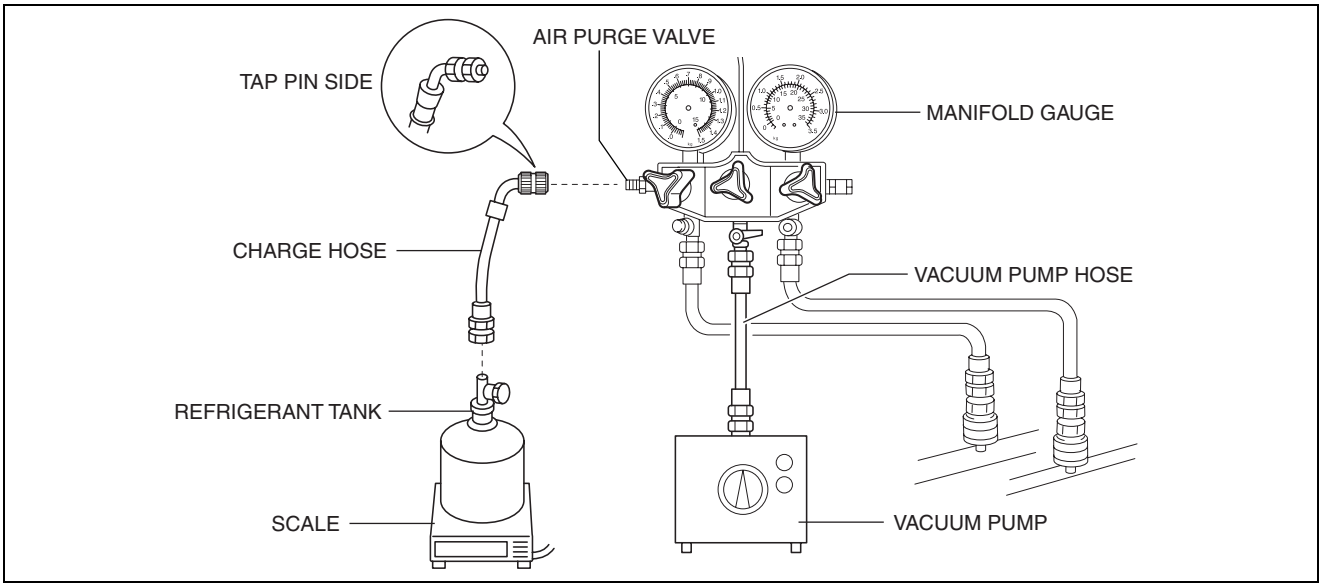

ac5wzw0000175

3. Connect the vacuum pump hose to the center joint of the manifold gauge.
4. Connect the vacuum pump hose to the vacuum pump.
5. Connect the charging hose to the refrigerant tank.
6. Place the refrigerant tank on the scale.

Evacuation

1. Open all the valves of the manifold gauge.

Caution

- **Close the manifold gauge valve immediately after stopping the vacuum pump. If the valve is left open, the vacuum pump oil will flow back into the refrigeration cycle and cause a decrease in the efficiency of the air conditioner.**

2. Start the vacuum pump and let it operate for **15 min**.

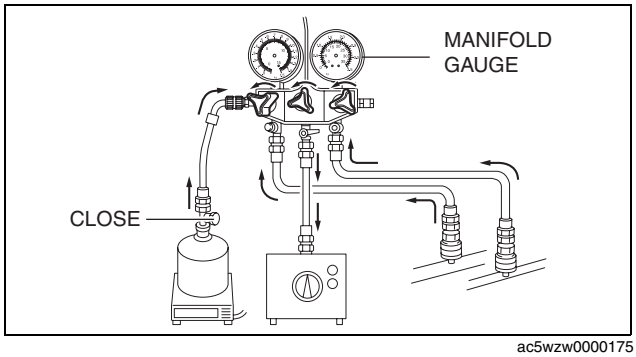

ac5wzw0000175

3. Verify that high- and low-pressure side readings of the manifold gauge are at **–101 kPa {–1.03 kgf/cm^2, –14.6 psi}**. Close each valve of the manifold gauge.

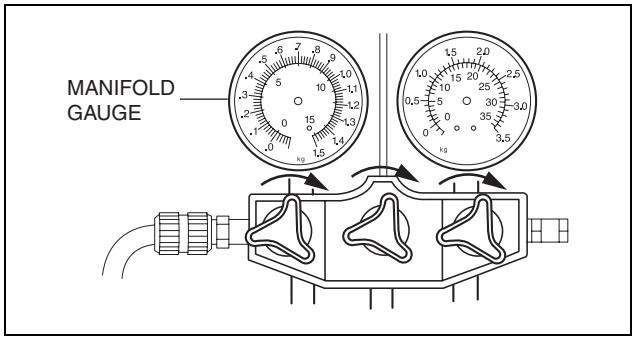

ac5wzw0000176

REFRIGERANT SYSTEM

Airtightness Check

1. Stop the vacuum pump and wait for **5 min**.
2. Check the high- and low-pressure side readings of the manifold gauge.
   - If the reading has changed, inspect for leakage and go to Evacuation. (See 07-10-4 Evacuation.)
   - If the reading has not changed, go to Charging New Refrigerant. (See 07-10-5 Charging New Refrigerant.)

Charging New Refrigerant

1. Open the valve of the refrigerant tank.
2. Weigh the refrigerant tank to charge the suitable amount of refrigerant.

Warning

- **If the refrigerant system is charged with a large amount of refrigerant when inspecting for gas leakage, and if any leakage should occur, the refrigerant will be released into the atmosphere. In order to prevent the accidental release of refrigerant which can destroy the ozone layer in the stratosphere, follow the proper procedures and charge with only a small amount of refrigerant when inspecting for gas leakage.**
- **If charging the system with refrigerant using service cans, running the engine with the high-pressure side valve open is dangerous. Pressure within the service cans will increase and the cans could explode, scattering metal fragments and liquid refrigerant that can seriously injure you. Therefore, do not open the high-pressure side valve while the engine is running.**

3. Open the low-pressure side valve of the manifold gauge.

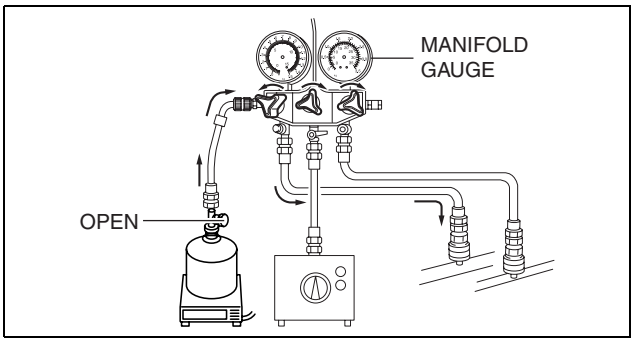

ac5wzw0000176

4. When the low-pressure side reading increases to **0.098 MPa {1.0 kgf/cm^2, 14 psi}**, close the low-pressure side valve of the manifold gauge.
5. Inspect for leakage from the cooler pipe/hose connections using the manifold gauge.
   - If there is no leakage, go to Step 7.
   - If leakage is found at a loose joint, tighten the joint, then go to the next step.
6. Inspect for leakage again.
   - If there is no leakage after tightening the joint, go to the next step.
   - If there is still a leakage at the same joint, discharge the refrigerant and then repair the joint. Repeat the charging procedure from evacuation.

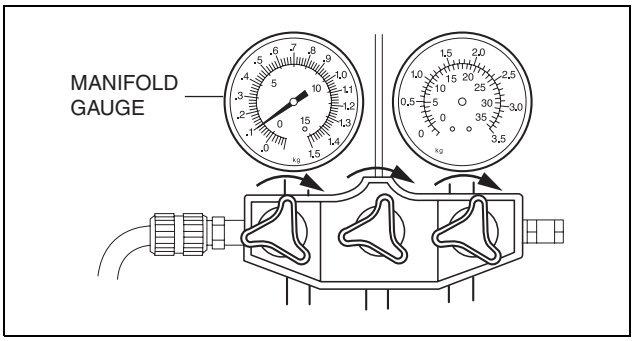

ac5wzw0000176

Warning

- **If charging the system with refrigerant using service cans, running the engine with the high-pressure side valve open is dangerous. Pressure within the service cans will increase and the cans could explode, scattering metal fragments and liquid refrigerant that can seriously injure you. Therefore, do not open the high-pressure side valve while the engine is running.**

REFRIGERANT SYSTEM

7. Open the low-pressure side valve of the manifold gauge and charge with refrigerant until the weight of refrigerant tank has decreased **250 g {8.82 oz}** from the amount in Step 2.

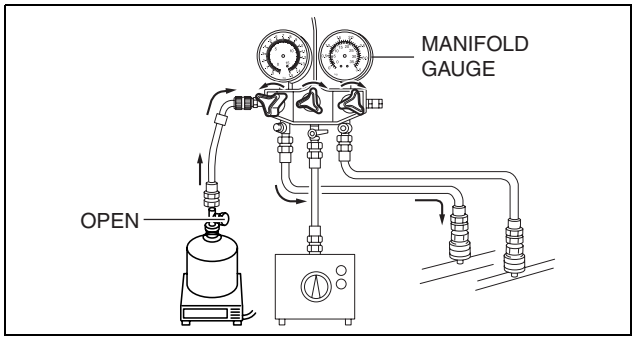

ac5wzw0000176

8. Close the low-pressure side valve of the manifold gauge.

Warning
- **If charging the system with refrigerant using service cans, running the engine with the high-pressure side valve open is dangerous. Pressure within the service cans will increase and the cans could explode, scattering metal fragments and liquid refrigerant that can seriously injure you. Therefore, do not open the high-pressure side valve while the engine is running.**

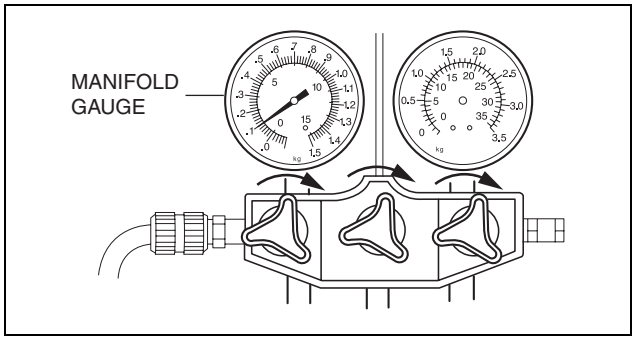

ac5wzw0000176

9. Start the engine and actuate the A/C compressor.
10. Open the low-pressure side valve of the manifold gauge and charge with refrigerant until the weight of the refrigerant tank has decreased regular amount from the amount in Step 2.
11. Close the low-pressure side valve of the manifold gauge and the valve of the refrigerant tank.
12. Stop the engine and A/C compressor.

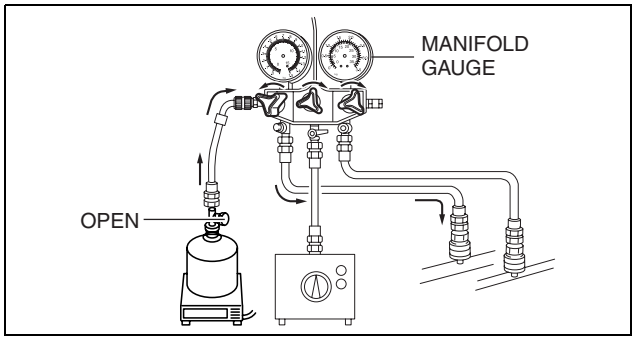

ac5wzw0000176

Leak Test

1. Inspect for leakage using the gas leak tester.
   - If there is no leakage, go to Step 3.
   - If leakage is found at a loose joint, tighten the joint, then go to the next step.
2. Inspect for leakage again.
   - If there is no leakage after tightening the joint, go to the next step.
   - If there is still leakage at the same joint, discharge the refrigerant and then repair the joint. Repeat the charging procedure from evacuation.
3. Disconnect the quick couplers from the charging valves.
4. Install the caps to the charging valves.

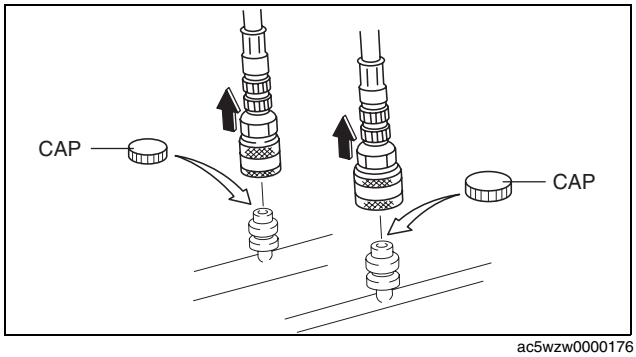

ac5wzw0000176

REFRIGERANT SYSTEM

REFRIGERANT RECOVERY

id071000800500

HFC-134a

- Connect a HFC-134a recovery/recycling/recharging device to the vehicle and follow the device manufacturer's instructions.

HFO-1234yf

- Connect a HFO-1234yf recovery/recycling/recharging device to the vehicle and follow the device manufacturer's instructions.

REFRIGERANT PRESSURE CHECK

id071000800600

Note

- Measure the refrigerant pressure after approx. **10 min** have elapsed from engine start.

1. Install the manifold gauge. (See 07-10-2 REFRIGERANT SYSTEM GENERAL PROCEDURES.)
2. Start the engine and warm it up.
3. Set the fan speed MAX HI.
4. Turn the A/C switch on.
5. Set to RECIRCULATE mode.
6. Set the temperature control to MAX COLD.
7. Set to VENT mode.
8. Close all the doors and all the windows.
9. Maintain the engine speed at **1,500 rpm**.
10. Measure the ambient temperature and high- and low- pressure side reading of the manifold gauge.
11. Verify that the intersection of the pressure reading of the manifold gauge and ambient temperature is in the shaded zone.

SKYACTIV-G 2.0 (HFC-134a)

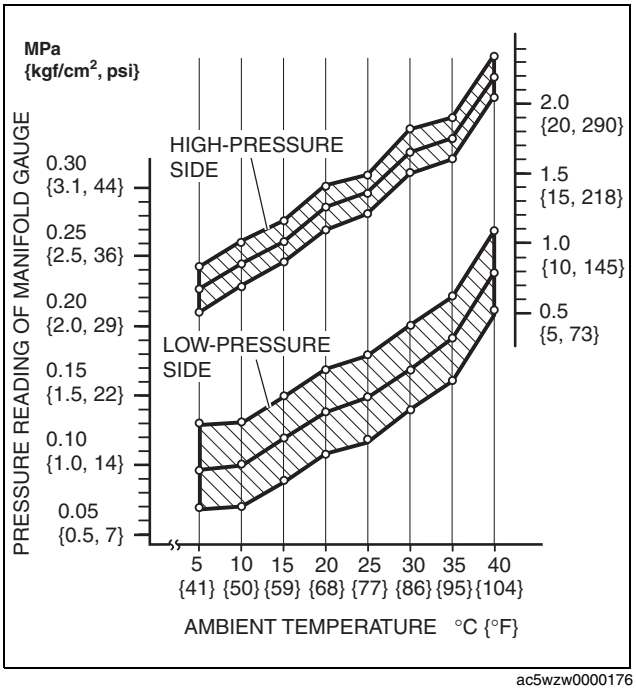

ac5wzw0000176

REFRIGERANT SYSTEM

SKYACTIV-D 2.2 (HFC-134a)

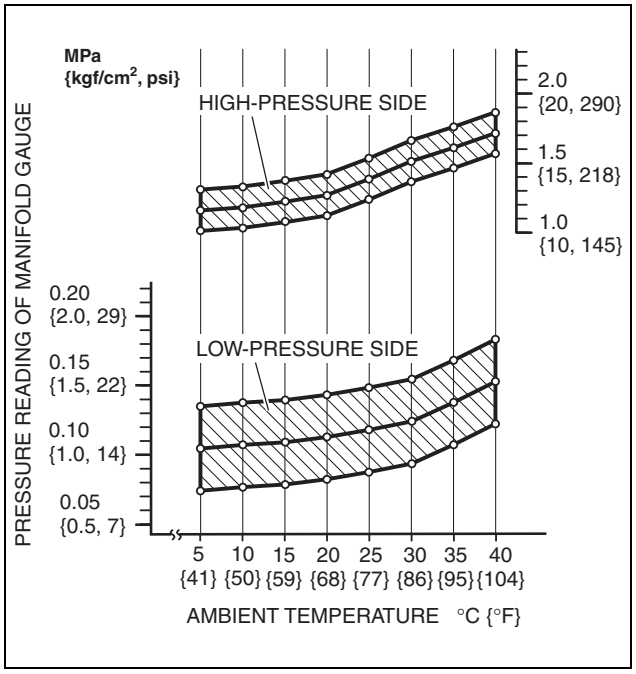

ac5wzw0000176

SKYACTIV-G 2.0 (HFO-1234yf)

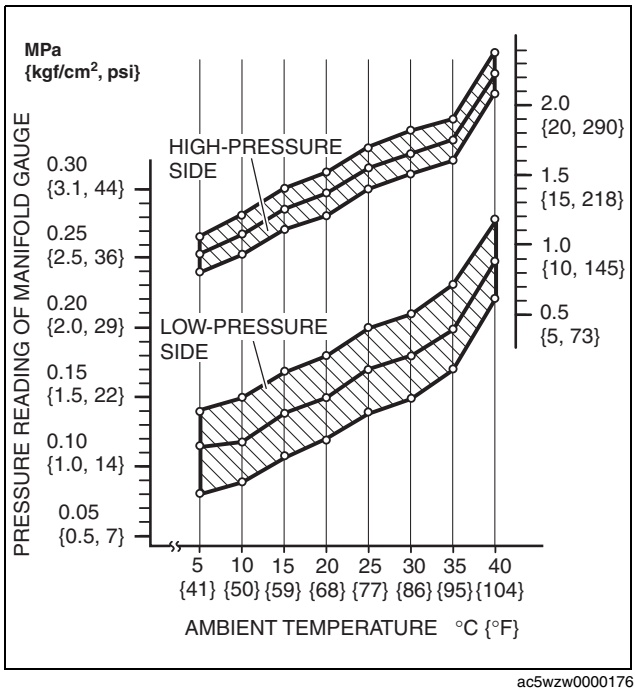

ac5wzw0000176

REFRIGERANT SYSTEM

SKYACTIV-D 2.2 (HFO-1234yf)

- If there is any malfunction, inspect the refrigerant system according to the troubleshooting chart.

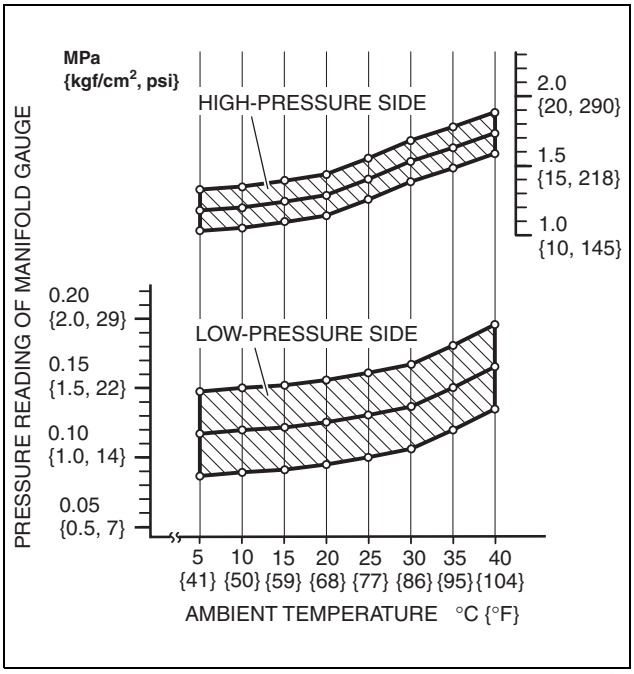

ac5wzw0000176

REFRIGERANT SYSTEM PERFORMANCE TEST

id071000800700

Note

- Measure the air conditioner output temperature after approx. **10 min** have elapsed from engine start.

1. Inspect the refrigerant pressure. (See 07-10-7 REFRIGERANT PRESSURE CHECK.)
2. Place a dry-bulb thermometer in the driver-side center ventilator outlet.
3. Start the engine and warm it up.
4. Set the fan speed to MAX HI.
5. Turn the A/C switch on.
6. Set to RECIRCULATE mode.
7. Set the temperature control to MAX COLD.
8. Set to VENT mode.
9. Close all the doors and windows.
10. Maintain the engine speed at **1,500 rpm**.
11. Wait until the air conditioner output temperature stabilizes.

    Stabilized condition

    - The A/C compressor repeatedly turns on and off at regular intervals.
12. After the blower air is stabilized, read the dry-bulb thermometer.
13. Verify the ambient temperature.
14. Verify that the temperature reading is in the shaded zone.

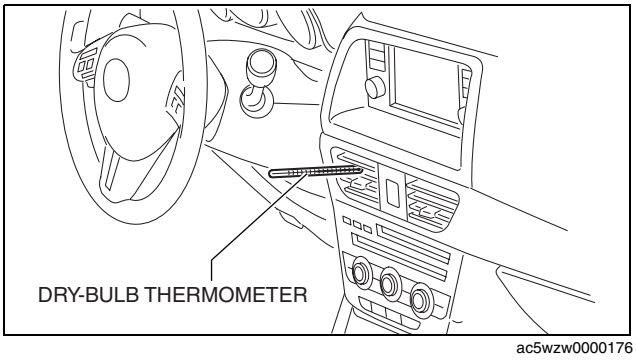

ac5wzw0000176

SKYACTIV-G 2.0 (HFC-134a)

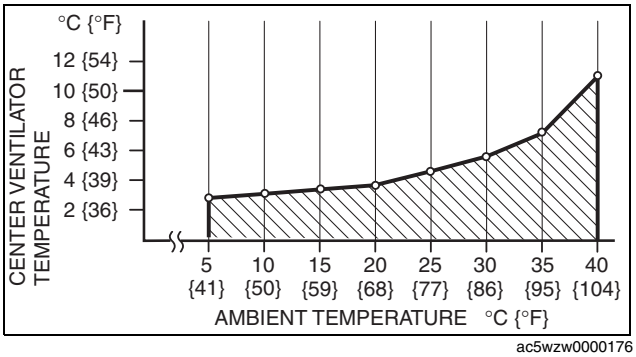

ac5wzw0000176

REFRIGERANT SYSTEM

SKYACTIV-D 2.2 (HFC-134a)

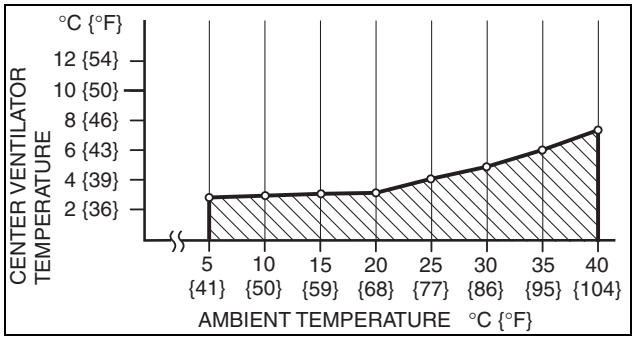

ac5wzw0000177

SKYACTIV-G 2.0 (HFO-1234yf)

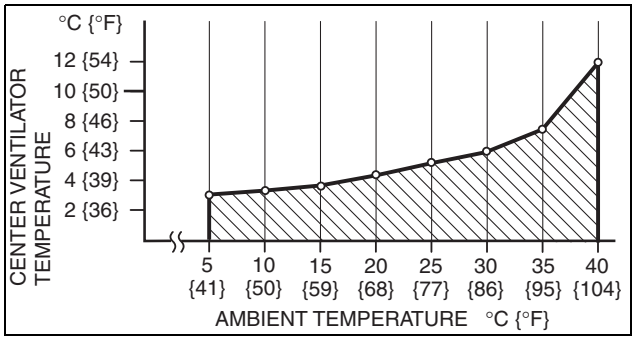

ac5wzw0000177

SKYACTIV-D 2.2 (HFO-1234yf)

- If the there is any malfunction, inspect the refrigerant system according to the troubleshooting chart.

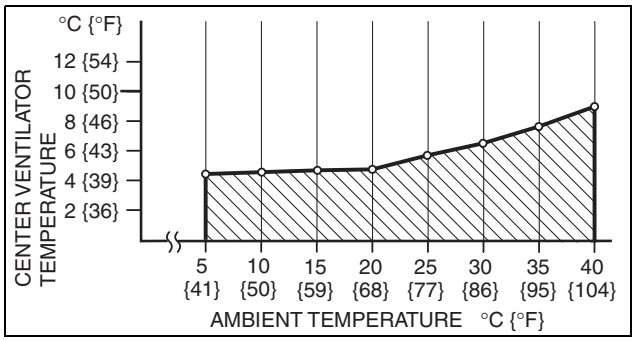

ac5wzw0000177

07-11 BASIC SYSTEM

HVAC BASIC SYSTEM
LOCATION INDEX **07-11–2**
BLOWER UNIT
REMOVAL/INSTALLATION **07-11–5**
L.H.D. 07-11–5
R.H.D. **07-11–7**
BLOWER UNIT
DISASSEMBLY/ASSEMBLY **07-11–9**
AIR FILTER
REMOVAL/INSTALLATION **07-11–11**
AIR FILTER INSPECTION **07-11–11**
A/C UNIT
REMOVAL/INSTALLATION **07-11–11**
A/C Unit Installation Note **07-11–13**
Drain Hose Installation Note **07-11–13**
A/C UNIT
DISASSEMBLY/ASSEMBLY **07-11–14**
Evaporator Temperature
Sensor Assembly Note **07-11–16**
EXPANSION VALVE
REMOVAL/INSTALLATION **07-11–18**
L.H.D. 07-11–18
R.H.D. **07-11–19**
EVAPORATOR INSPECTION **07-11–20**
HEATER CORE INSPECTION **07-11–20**
AIRFLOW MODE MAIN LINK
REMOVAL/INSTALLATION **07-11–20**
Full-auto Air Conditioner **07-11–20**
Manual Air Conditioner **07-11–20**
Airflow Mode Main
Link Installation Note **07-11–21**
FRONT HEAT DUCT
REMOVAL/INSTALLATION **07-11–22**
REAR HEAT DUCT
REMOVAL/INSTALLATION **07-11–23**
A/C COMPRESSOR
REMOVAL/INSTALLATION **07-11–25**
SKYACTIV-G 2.0 . . . . . **07-11–25**
SKYACTIV-D 2.2 . . . . . **07-11–26**
A/C Compressor Installation Note **07-11–27**
CONDENSER
REMOVAL/INSTALLATION **07-11–28**
Condenser Installation Note **07-11–29**
CONDENSER INSPECTION **07-11–29**
RECEIVER/DRIER
REMOVAL/INSTALLATION **07-11–29**
Receiver/drier
Installation Note **07-11–30**
HEATER HOSE
REMOVAL/INSTALLATION **07-11–31**
L.H.D. 07-11–31
R.H.D. **07-11–33**
REFRIGERANT LINE
REMOVAL/INSTALLATION **07-11–36**
L.H.D. 07-11–36
R.H.D. **07-11–40**
Refrigerant Line Installation Note (1) . . **07-11–47**
Refrigerant Line Installation Note (2) . . **07-11–47**

BASIC SYSTEM

HVAC BASIC SYSTEM LOCATION INDEX

id071100801700

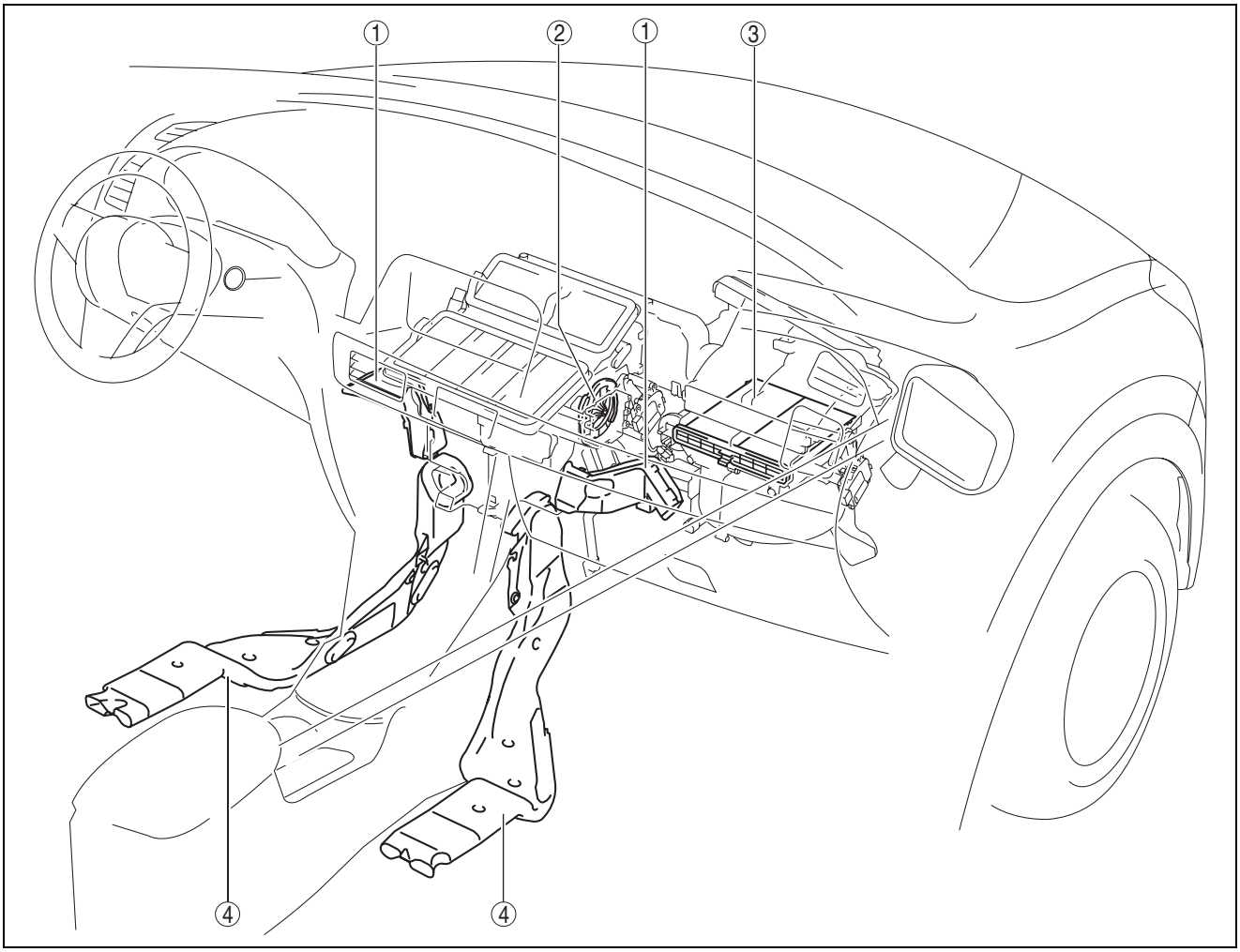

ac5wzw0000181

BASIC SYSTEM

SKYACTIV-G 2.0

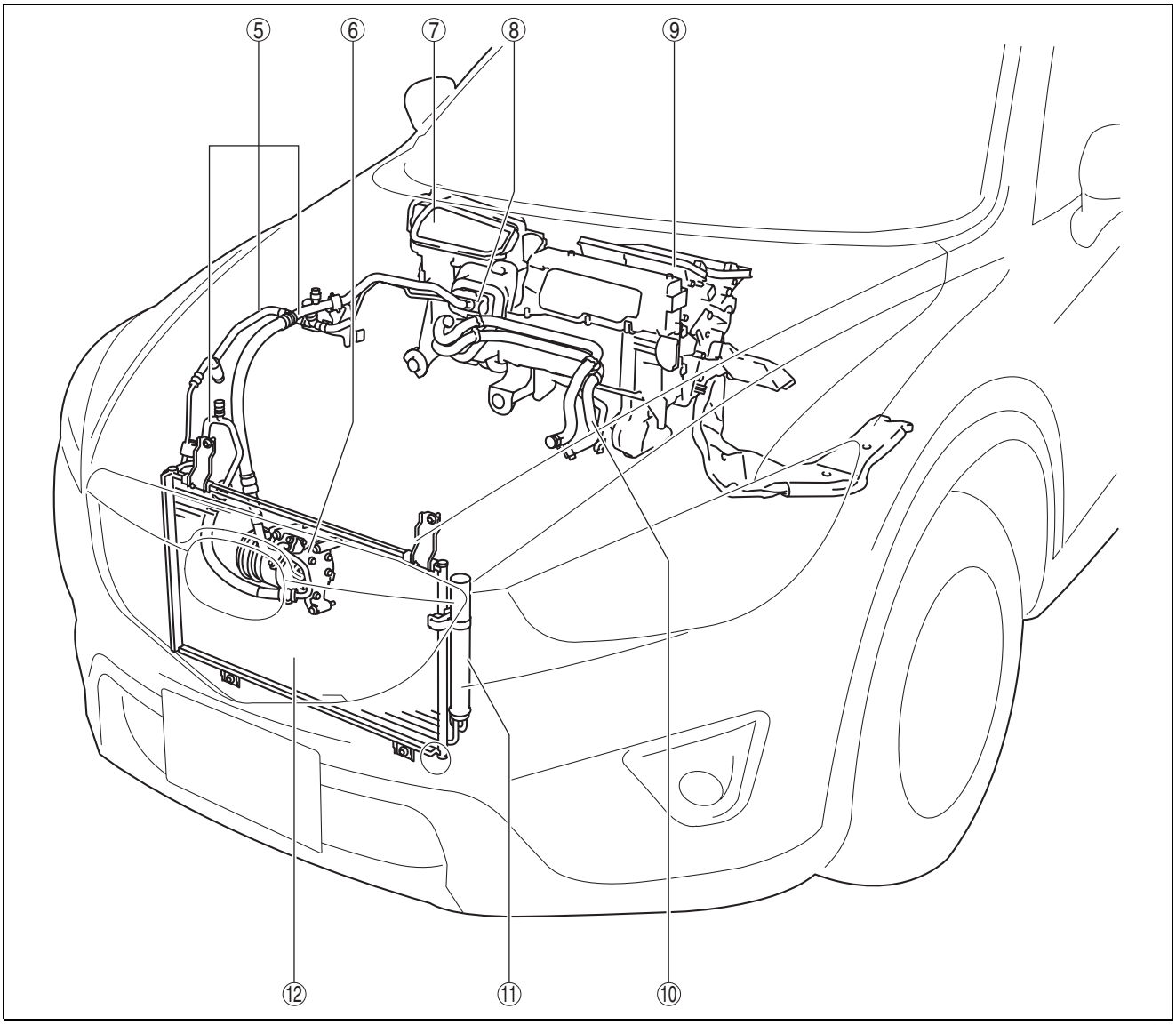

ac5wzw0000181

BASIC SYSTEM

SKYACTIV-D 2.2

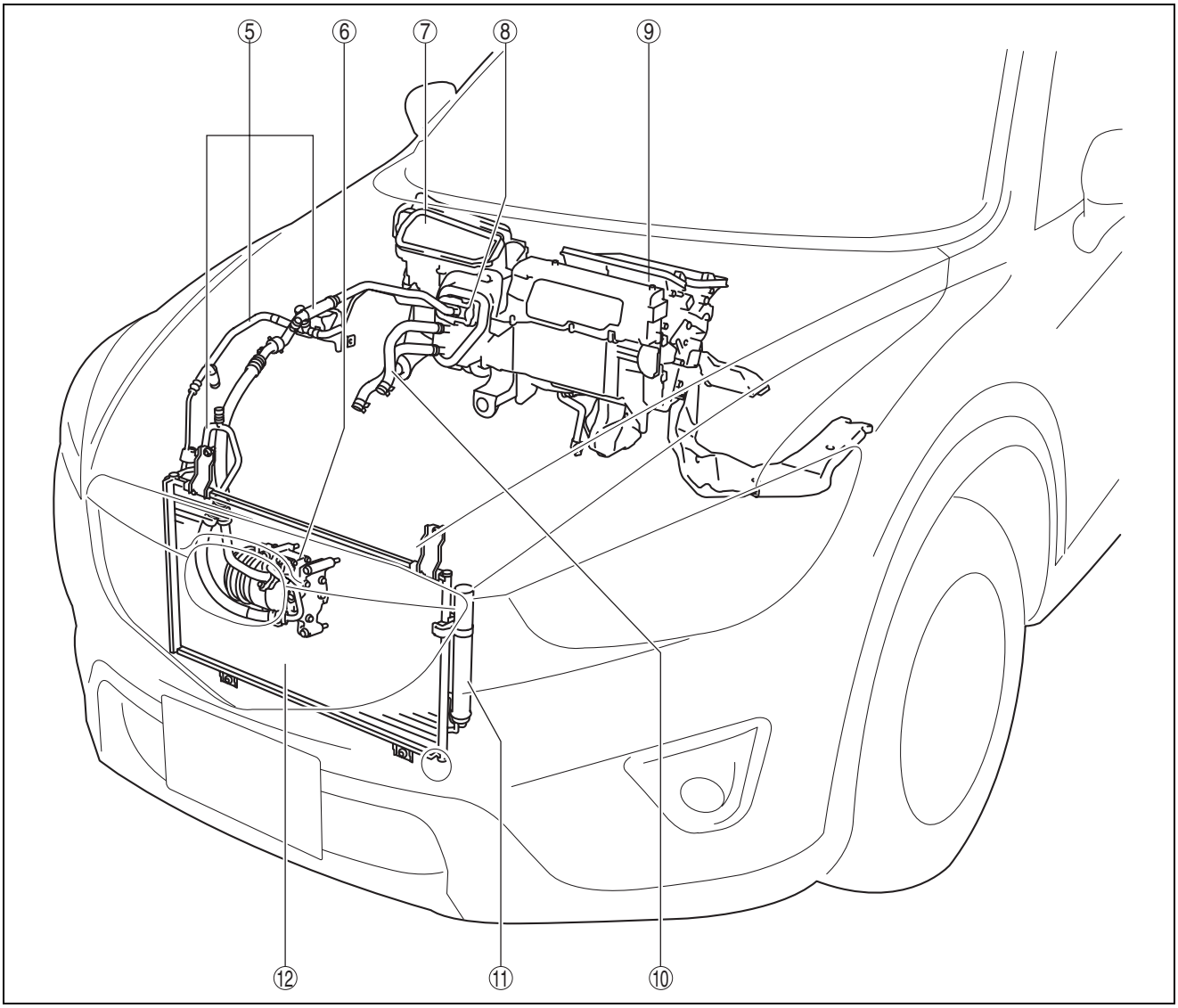

ac5wzw0000181

1	Front heat duct (See 07-11-22 FRONT HEAT DUCT REMOVAL/INSTALLATION.)
2	Airflow mode main link (See 07-11-20 AIRFLOW MODE MAIN LINK REMOVAL/INSTALLATION.)
3	Air filter (See 07-11-11 AIR FILTER REMOVAL/INSTALLATION.) (See 07-11-11 AIR FILTER INSPECTION.)
4	Rear heat duct (See 07-11-23 REAR HEAT DUCT REMOVAL/INSTALLATION.)
5	Refrigerant line (See 07-11-36 REFRIGERANT LINE REMOVAL/INSTALLATION.)
6	A/C compressor (See 07-11-25 A/C COMPRESSOR REMOVAL/INSTALLATION.)

7	A/C unit (See 07-11-11 A/C UNIT REMOVAL/INSTALLATION.) (See 07-11-14 A/C UNIT DISASSEMBLY/ASSEMBLY.) (See 07-11-18 EXPANSION VALVE REMOVAL/INSTALLATION.) (See 07-11-20 EVAPORATOR INSPECTION.) (See 07-11-20 HEATER CORE INSPECTION.)
8	Expansion valve (See 07-11-18 EXPANSION VALVE REMOVAL/INSTALLATION.)
9	Blower unit (See 07-11-5 BLOWER UNIT REMOVAL/INSTALLATION.) (See 07-11-9 BLOWER UNIT DISASSEMBLY/ASSEMBLY.)
10	Heater hose (See 07-11-31 HEATER HOSE REMOVAL/INSTALLATION.)
11	Receiver/drier (See 07-11-29 RECEIVER/DRIER REMOVAL/INSTALLATION.)

BASIC SYSTEM

12	Condenser (See 07-11-28 CONDENSER REMOVAL/INSTALLATION.) (See 07-11-29 CONDENSER INSPECTION.)

BLOWER UNIT REMOVAL/INSTALLATION

id071100800500

R.H.D.

1. Disconnect the negative battery cable. (See 01-17A-11 NEGATIVE BATTERY CABLE DISCONNECTION/CONNECTION [SKYACTIV-G 2.0].)(See 01-17A-13 NEGATIVE BATTERY CABLE DISCONNECTION/CONNECTION [SKYACTIV-G 2.0 (WITHOUT i-stop)].)(See 01-17B-9 NEGATIVE BATTERY CABLE DISCONNECTION/CONNECTION [SKYACTIV-D 2.2].)
2. Remove the following parts:
   (1) Front scuff plate (passenger-side) (See 09-17-61 FRONT SCUFF PLATE REMOVAL/INSTALLATION.)
   (2) Front side trim (passenger-side) (See 09-17-62 FRONT SIDE TRIM REMOVAL/INSTALLATION.)
   (3) Dashboard under cover (See 09-17-35 DASHBOARD UNDER COVER REMOVAL/INSTALLATION.)
   (4) Front heat duct (passenger-side) (See 07-11-22 FRONT HEAT DUCT REMOVAL/INSTALLATION.)
   (5) Glove compartment (See 09-17-30 GLOVE COMPARTMENT REMOVAL/INSTALLATION.)
   (6) Decoration panel (See 09-17-33 DECORATION PANEL REMOVAL/INSTALLATION.)
   (7) Lower panel (passenger-side) (See 09-17-35 LOWER PANEL REMOVAL/INSTALLATION.)
3. Disconnect the air intake actuator connector.
4. Disconnect the instrument panel harness connector.
5. Remove the bolt, then remove the instrument panel harness bracket.

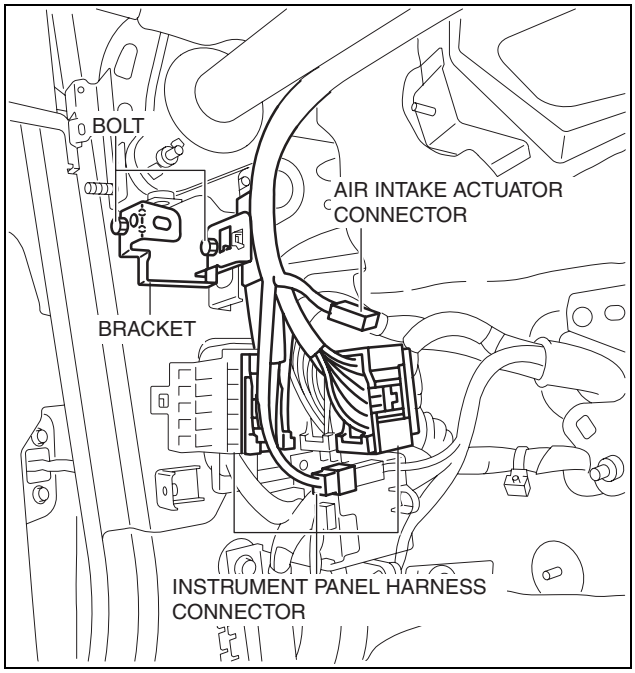

ac5wzw0000179

BASIC SYSTEM

6. Set the instrument panel harness connector and bracket out of the way as shown in the figure.
7. Disconnect the blower motor connector.

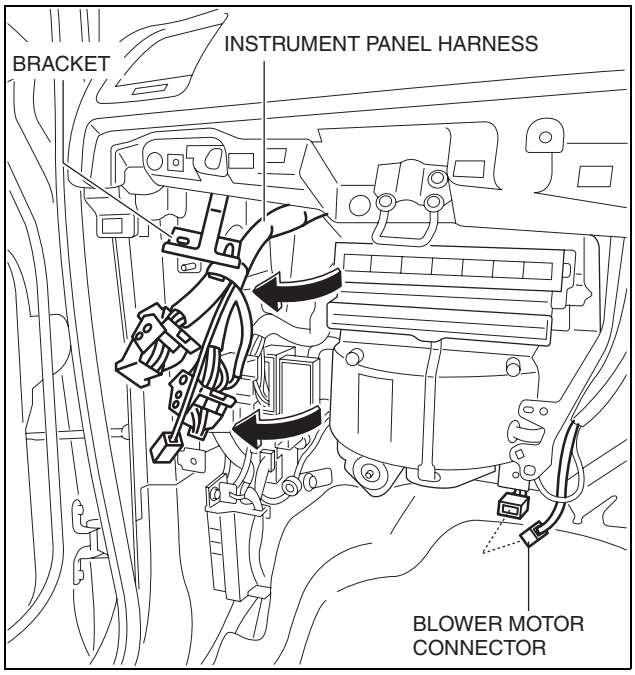

ac5wzw0000179

8. Remove the blower unit installation nuts.

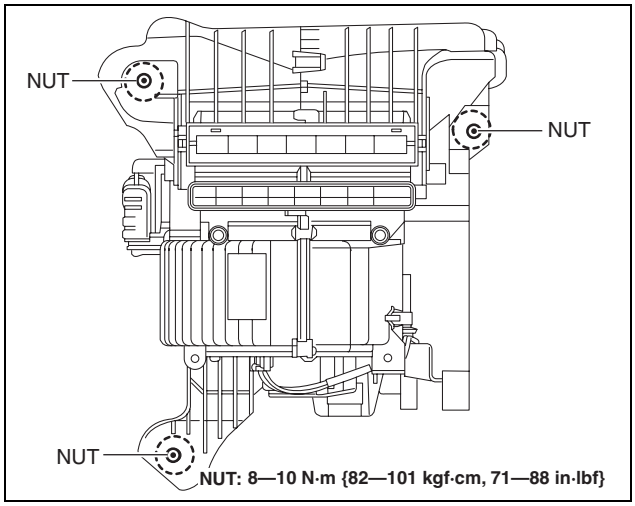

ac5wzw0000179

9. Remove the blower unit.
10. Install in the reverse order of removal.

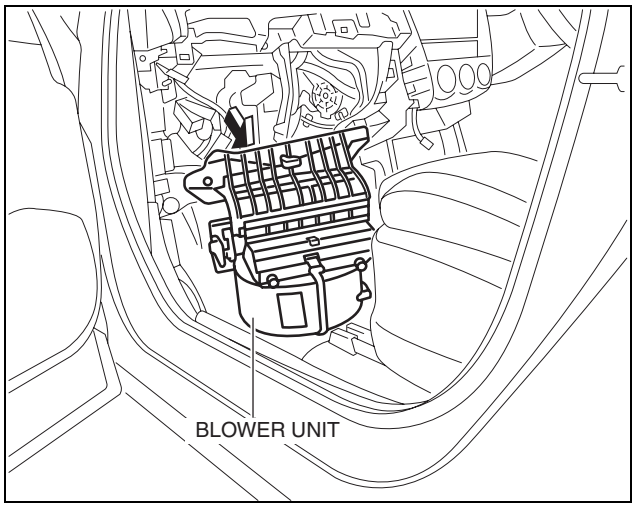

ac5wzw0000179

BASIC SYSTEM

BLOWER UNIT DISASSEMBLY/ASSEMBLY

id071100800600

Caution
- **Apply only the specified grease to the link. Otherwise abnormal noise or improper operation may result.**

1. Disassemble in the order indicated in the table.

R.H.D.

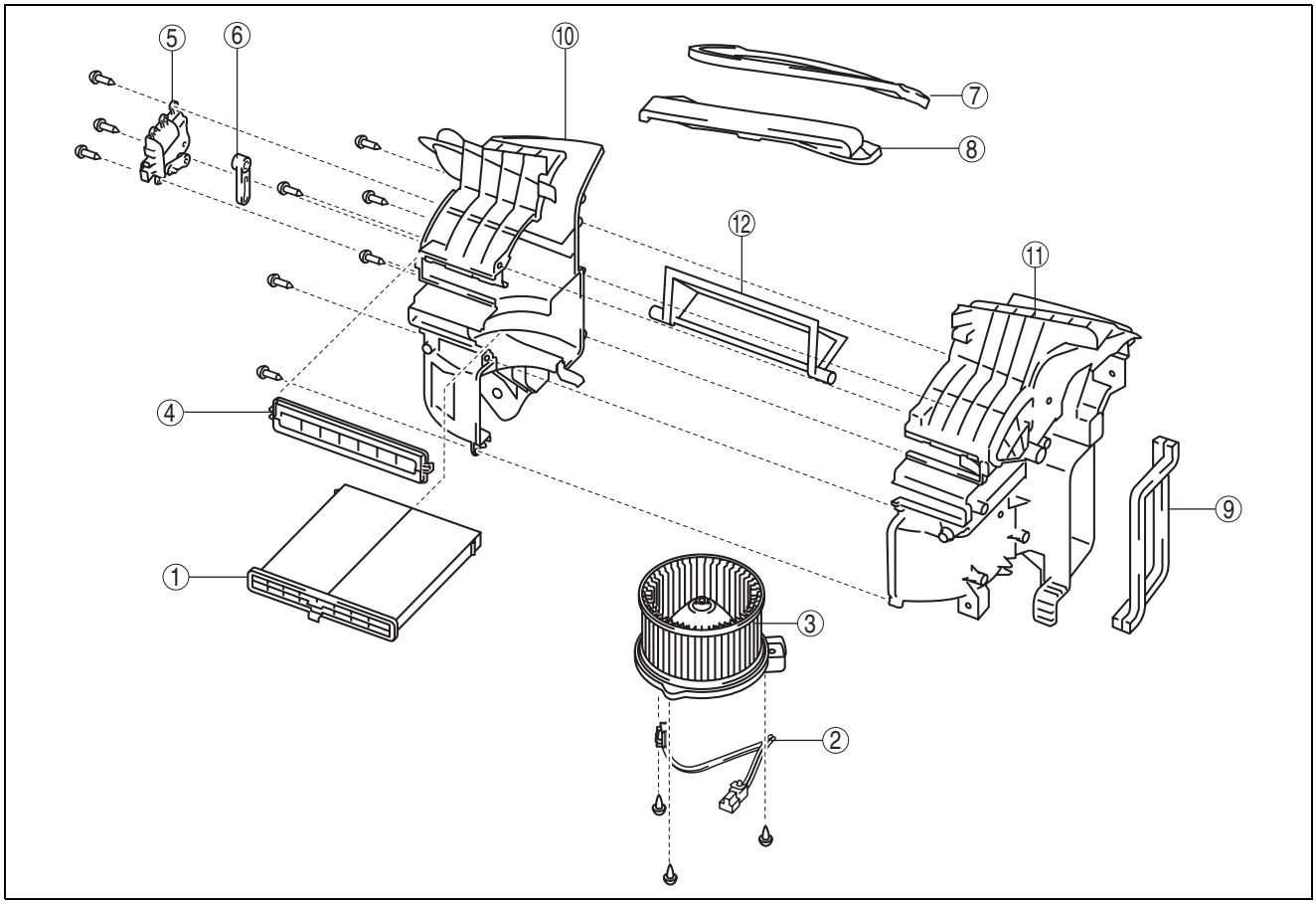

ac5wzw0000179

1	Air filter
2	Harness
3	Blower motor
4	Cover
5	Air intake actuator
6	Air intake link

7	Polyurethane (1)
8	Polyurethane (2)
9	Polyurethane (3)
10	Blower case (1)
11	Blower case (2)
12	Air intake door

2. Assemble in the reverse order of disassembly.

BASIC SYSTEM

AIR FILTER REMOVAL/INSTALLATION

id071100360100

1. Remove the glove compartment (See 09-17-30 GLOVE COMPARTMENT REMOVAL/INSTALLATION.)
2. Remove the air filter.
3. Install in the reverse order of removal.

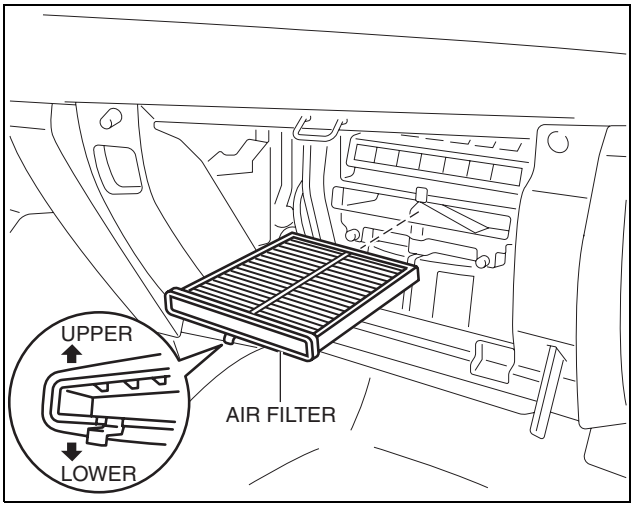

ac5wzw0000353

AIR FILTER INSPECTION

id071100360200

1. Verify that there is no damage, excessive dirt, or abnormal odor on the air filter.
   - If there is any malfunction, replace the air filter.

Note
- The air filter cannot be reused by cleaning it with water or compressed air.

A/C UNIT REMOVAL/INSTALLATION

id071100800200

1. Disconnect the negative battery cable. (See 01-17A-11 NEGATIVE BATTERY CABLE DISCONNECTION/CONNECTION [SKYACTIV-G 2.0].)(See 01-17A-13 NEGATIVE BATTERY CABLE DISCONNECTION/CONNECTION [SKYACTIV-G 2.0 (WITHOUT i-stop)].)(See 01-17B-9 NEGATIVE BATTERY CABLE DISCONNECTION/CONNECTION [SKYACTIV-D 2.2].)
2. Discharge the refrigerant. (See 07-10-3 REFRIGERANT CHARGING.)
3. Drain the engine coolant. (See 01-12A-4 ENGINE COOLANT REPLACEMENT [SKYACTIV-G 2.0].) (See 01-12B-4 ENGINE COOLANT REPLACEMENT [SKYACTIV-D 2.2].)

Caution
- **If moisture or foreign material enters the refrigeration cycle, cooling ability will be lowered and abnormal noise or other malfunction could occur. Always plug open fittings immediately after removing any refrigeration cycle parts.**

4. Remove the bolt, then disconnect the cooler hose (LO) and cooler pipe.

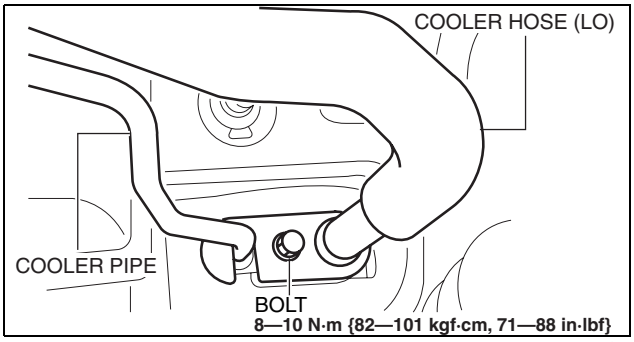

ac5wzw0000177

07

BASIC SYSTEM

5. Disconnect the heater hose.
6. Remove the following parts:
   (1) Windshield wiper arm and blade (See 09-19-3 WINDSHIELD WIPER ARM AND BLADE REMOVAL/INSTALLATION.)
   (2) Cowl grille (See 09-16-3 COWL GRILLE REMOVAL/INSTALLATION.)
   (3) Windshield wiper motor (See 09-19-9 WINDSHIELD WIPER MOTOR AND LINK REMOVAL/INSTALLATION.)
   (4) Front scuff plate (See 09-17-61 FRONT SCUFF PLATE REMOVAL/INSTALLATION.)
   (5) Front side trim (See 09-17-62 FRONT SIDE TRIM REMOVAL/INSTALLATION.)

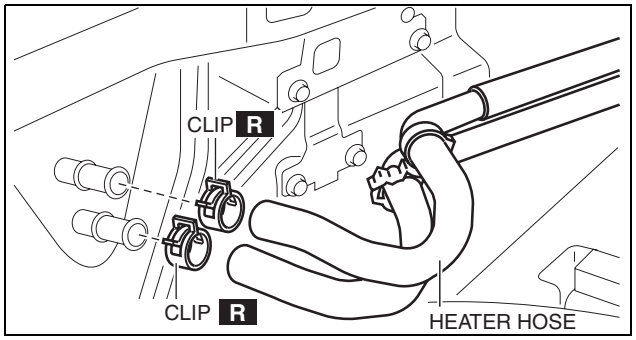

ac5wzw0000177

   (6) Glove compartment (See 09-17-30 GLOVE COMPARTMENT REMOVAL/INSTALLATION.)
   (7) Dashboard under cover (See 09-17-35 DASHBOARD UNDER COVER REMOVAL/INSTALLATION.)
   (8) Decoration panel (See 09-17-33 DECORATION PANEL REMOVAL/INSTALLATION.)
   (9) Center panel (See 09-17-28 CENTER PANEL REMOVAL/INSTALLATION.)
   (10) Audio unit (with audio unit) (See 09-20-4 AUDIO UNIT REMOVAL/INSTALLATION.)
   (11) Front console box (See 09-17-40 FRONT CONSOLE BOX REMOVAL/INSTALLATION.)
   (12) Shift lever knob (MTX) (See 05-16A-1 MANUAL TRANSAXLE SHIFT MECHANISM REMOVAL/INSTALLATION [C66M-R, C66MX-R].) (See 05-16B-1 MANUAL TRANSAXLE SHIFT MECHANISM REMOVAL/INSTALLATION [D66M-R, D66MX-R].)
   (13) Shift panel (See 09-17-42 SHIFT PANEL REMOVAL/INSTALLATION.)
   (14) Upper panel (See 09-17-44 UPPER PANEL REMOVAL/INSTALLATION.)
   (15) Rear console (See 09-17-45 REAR CONSOLE REMOVAL/INSTALLATION.)
   (16) Side wall (See 09-17-49 SIDE WALL REMOVAL/INSTALLATION.)
   (17) Front console (See 09-17-50 FRONT CONSOLE REMOVAL/INSTALLATION.)
   (18) Shift lever component (MTX) (See 05-16A-1 MANUAL TRANSAXLE SHIFT MECHANISM REMOVAL/INSTALLATION [C66M-R, C66MX-R].) (See 05-16B-1 MANUAL TRANSAXLE SHIFT MECHANISM REMOVAL/INSTALLATION [D66M-R, D66MX-R].)
   (19) Selector lever component (ATX) (See 05-18-2 AUTOMATIC TRANSAXLE SHIFT MECHANISM REMOVAL/INSTALLATION.)
   (20) Bonnet release lever (See 09-14-17 BONNET LATCH AND RELEASE LEVER REMOVAL/INSTALLATION.)
   (21) Lower panel (See 09-17-35 LOWER PANEL REMOVAL/INSTALLATION.)
   (22) Climate control unit (See 07-40A-32 CLIMATE CONTROL UNIT REMOVAL/INSTALLATION [FULL-AUTO AIR CONDITIONER].) (See 07-40B-16 CLIMATE CONTROL UNIT REMOVAL/INSTALLATION [MANUAL AIR CONDITIONER].)
   (23) Column cover (See 09-17-25 COLUMN COVER REMOVAL/INSTALLATION.)
   (24) Driver-side air bag module (See 08-10-6 DRIVER-SIDE AIR BAG MODULE REMOVAL/INSTALLATION.)
   (25) Steering wheel (See 06-13-4 STEERING WHEEL AND COLUMN REMOVAL/INSTALLATION.)
   (26) Steering shaft (See 06-13-4 STEERING WHEEL AND COLUMN REMOVAL/INSTALLATION.)
   (27) Switch panel (See 09-17-18 SWITCH PANEL REMOVAL/INSTALLATION.)
   (28) Meter hood (See 09-17-20 METER HOOD REMOVAL/INSTALLATION.)
   (29) Instrument cluster (See 09-22-6 INSTRUMENT CLUSTER REMOVAL/INSTALLATION.)
   (30) A-pillar trim (See 09-17-53 A-PILLAR TRIM REMOVAL/INSTALLATION.)
7. Remove the dashboard. (See 09-17-4 DASHBOARD REMOVAL/INSTALLATION.)
8. Remove the blower unit. (See 07-11-5 BLOWER UNIT REMOVAL/INSTALLATION.)
9. Disconnect the drain hose.

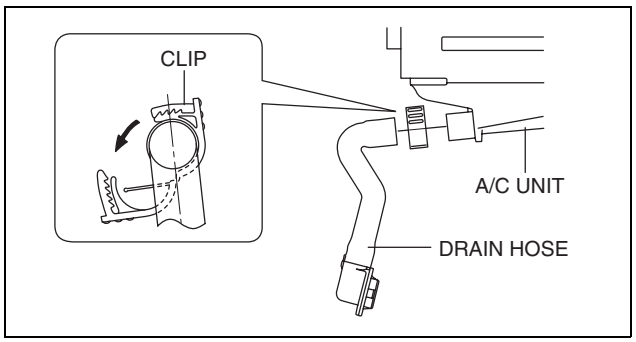

ac5wzw0000177

BASIC SYSTEM

10. Remove the nut, then remove the A/C unit. Do not allow compressor oil to spill.
11. Install in the reverse order of removal. (See 07-11-13 A/C Unit Installation Note.)
12. Inspect for engine coolant leakage. (See 01-12A-7 ENGINE COOLANT LEAKAGE INSPECTION [SKYACTIV-G 2.0].) (See 01-12B-7 ENGINE COOLANT LEAKAGE INSPECTION [SKYACTIV-D 2.2].)
13. Perform the refrigerant system performance test. (See 07-10-9 REFRIGERANT SYSTEM PERFORMANCE TEST.)

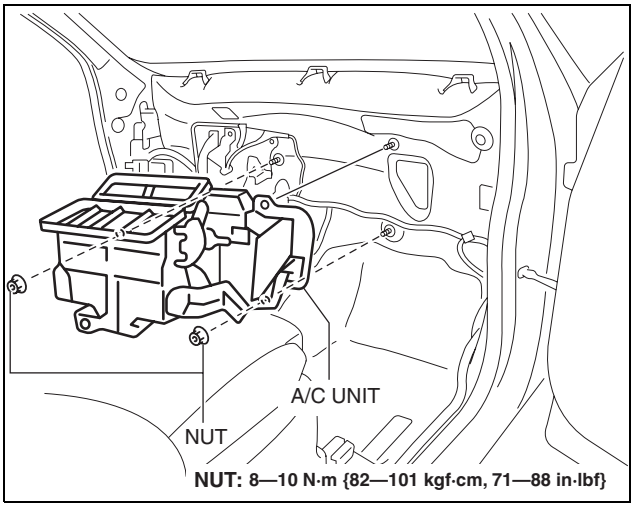

ac5wzw0000177

A/C Unit Installation Note

1. When replacing the A/C unit or evaporator, add compressor oil to the refrigerant cycle.

Supplemental oil amount (approx. quantity)
40 ml {40 cc, 1.4 fl oz}

Drain Hose Installation Note

1. Install the clip as shown in the figure.

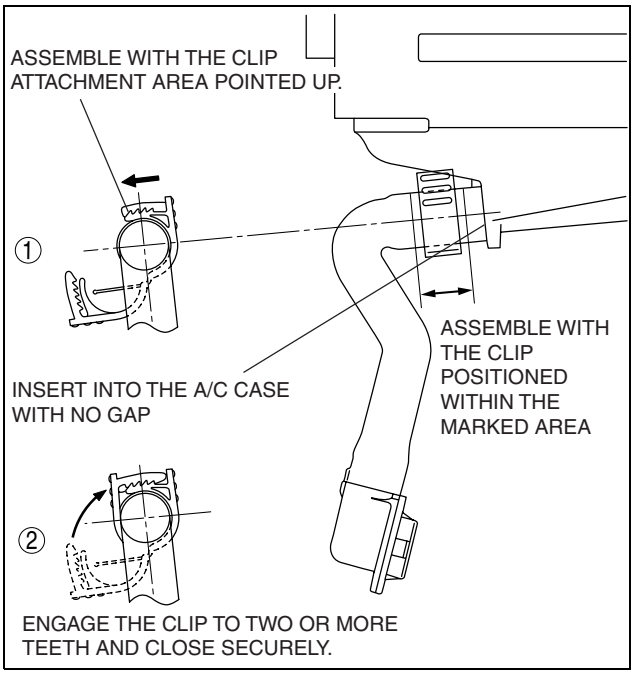

am3zzw0000071

07

BASIC SYSTEM

A/C UNIT DISASSEMBLY/ASSEMBLY

id071100800300

1. Disassemble in the order indicated in the table.

Caution
- **If a non-specified grease is used, it may result in abnormal noise or improper operation of the links. Apply only the specified grease to each link.**

2. Assemble in the reverse order of disassembly.

R.H.D.

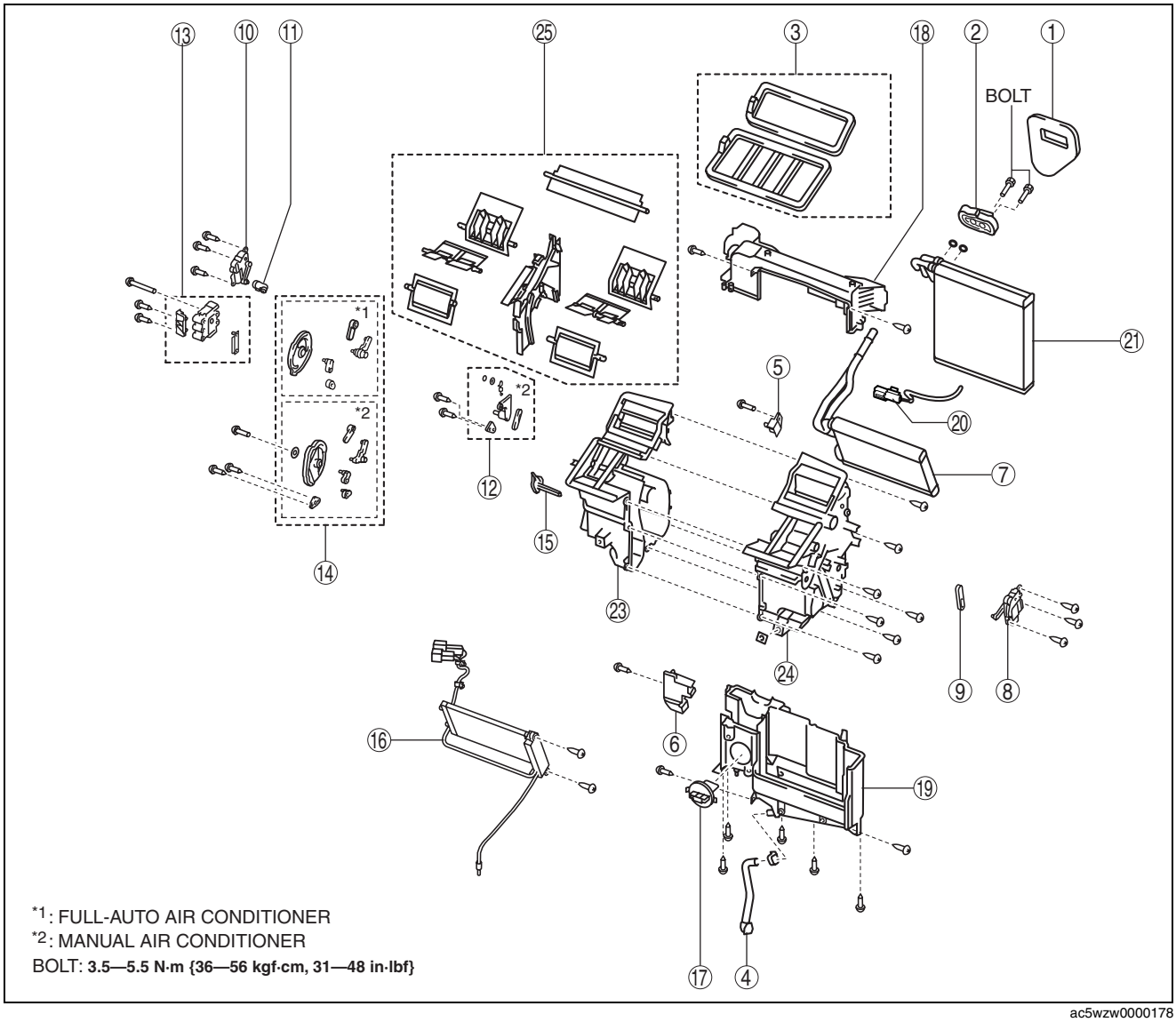

*1: FULL-AUTO AIR CONDITIONER
*2: MANUAL AIR CONDITIONER
BOLT: **3.5—5.5 N·m {36—56 kgf·cm, 31—48 in·lbf}**

ac5wzw0000178

07

BASIC SYSTEM

Step	Part name	Disassembly/assembly of main parts		
		Heater core	Evaporator temperature sensor	Evaporator
1	Polyurethane foam	–	–	–
2	Expansion valve	–	–	–
3	Adhesive polyurethane	–	–	–
4	Drain hose	–	–	–
5	Plate (1)	X	–	–
6	Plate (2)	X	–	–
7	Heater core	X	–	–
8	Driver-side air mix actuator (Full-auto air conditioner)	–	–	–
9	[illegible]	–	–	–
10	Passenger-side air mix actuator (Full-auto air conditioner)	–	–	–
11	Passenger-side air mix link (Full-auto air conditioner)	–	–	–
12	Air mix link (Manual air conditioner)	–	–	–
13	Airflow mode actuator (Full-auto air conditioner)	–	–	–
14	Airflow mode link set	–	–	–
15	Heater core temperature sensor (vehicles with i-stop)	–	–	–
16	PTC heater (vehicles with PTC heater)	–	–	–
17	Power MOS FET (Full-auto air conditioner)	–	–	–
	Resistor (Manual air conditioner)	–	–	–
18	A/C case (1)	–	X	X
19	A/C case (2)	–	X	X
20	Evaporator temperature sensor (See 07-11-16 Evaporator Temperature Sensor Assembly Note.)	–	X	X
21	Evaporator	–	–	X
22	Case (vehicles without cooling system)	–	–	–
23	A/C case (3)	–	–	–
24	A/C case (4)	–	–	–
25	Door damper	–	–	–

X: Applicable
–: Not applicable

Evaporator Temperature Sensor Assembly Note

1. Assemble the evaporator temperature sensor as shown in the figure.

BASIC SYSTEM

R.H.D.

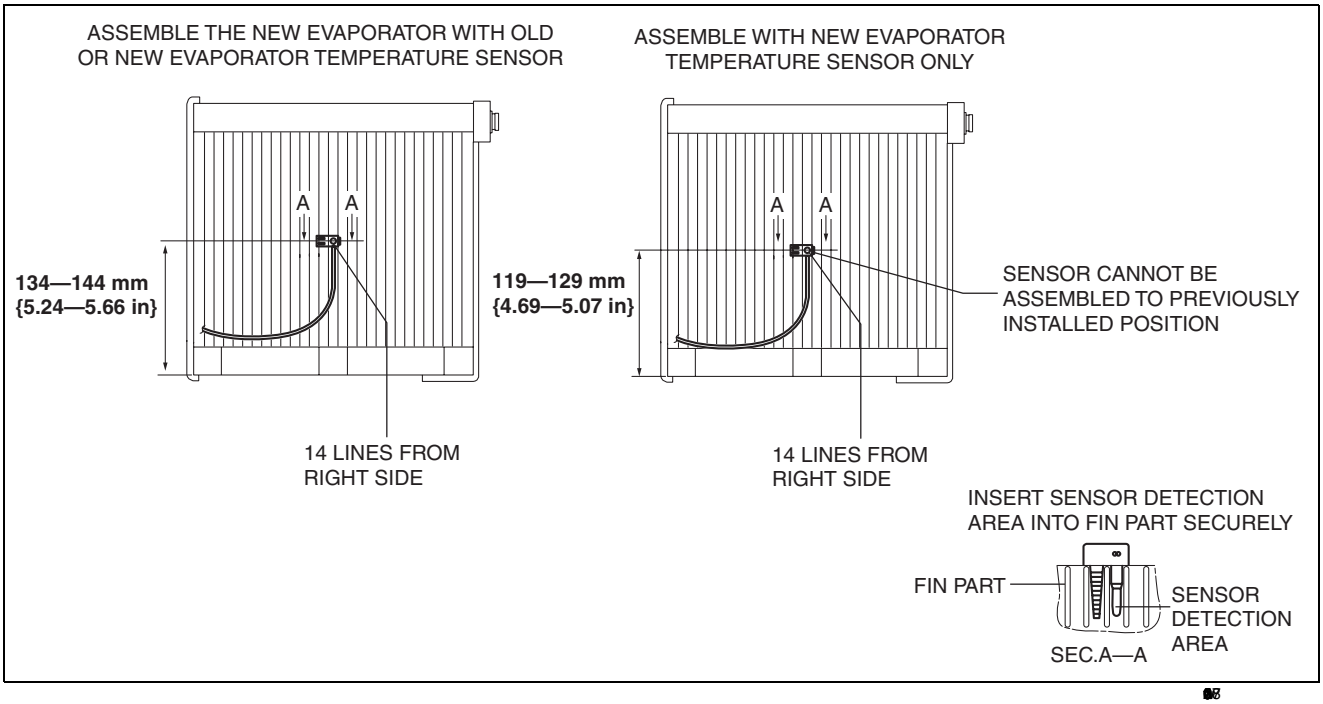

Caution

- **When installing the evaporator temperature sensor without replacing the evaporator, assemble the evaporator temperature sensor with the installation position slid to the left of the previous position by 1 line. If the evaporator temperature sensor is assembled to the previously installed position, it may not function due to poor contact of the fin surface with the sensor detection area caused by fin deformation.**

Note

- If an evaporator temperature sensor cannot be correctly positioned on the evaporator, replace the evaporator.

07

BASIC SYSTEM

EXPANSION VALVE REMOVAL/INSTALLATION

id071100800400

R.H.D.

1. Disconnect the negative battery cable. (See 01-17A-11 NEGATIVE BATTERY CABLE DISCONNECTION/CONNECTION [SKYACTIV-G 2.0].)(See 01-17A-13 NEGATIVE BATTERY CABLE DISCONNECTION/CONNECTION [SKYACTIV-G 2.0 (WITHOUT i-stop)].)(See 01-17B-9 NEGATIVE BATTERY CABLE DISCONNECTION/CONNECTION [SKYACTIV-D 2.2].)
2. Discharge the refrigerant from the system. (See 07-10-3 REFRIGERANT CHARGING.)

Caution

- **If moisture or foreign material enters the refrigeration cycle, cooling ability will be lowered and abnormal noise will occur. Always immediately plug all open fittings after removing any refrigeration cycle parts to keep moisture or foreign material out of the cycle.**

3. Remove the bolt.
4. Disconnect the cooler hose (LO) and cooler pipe. Do not allow compressor oil to spill. (See 07-11-36 REFRIGERANT LINE REMOVAL/INSTALLATION.)

Caution

- **When setting the cooler hose (LO) and cooler pipe aside, only bend the flexible hose part. If force is applied to areas other than the flexible hose, the pipe will bend and could be damaged.**

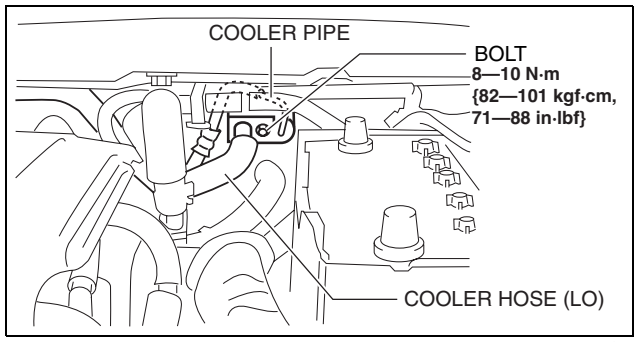

ac5wzw0000178

BASIC SYSTEM

5. Remove the bolt.
6. Remove the expansion valve. Do not allow compressor oil to spill.
7. Install in the reverse order of removal.
8. Perform the refrigerant system performance test. (See 07-10-9 REFRIGERANT SYSTEM PERFORMANCE TEST.)

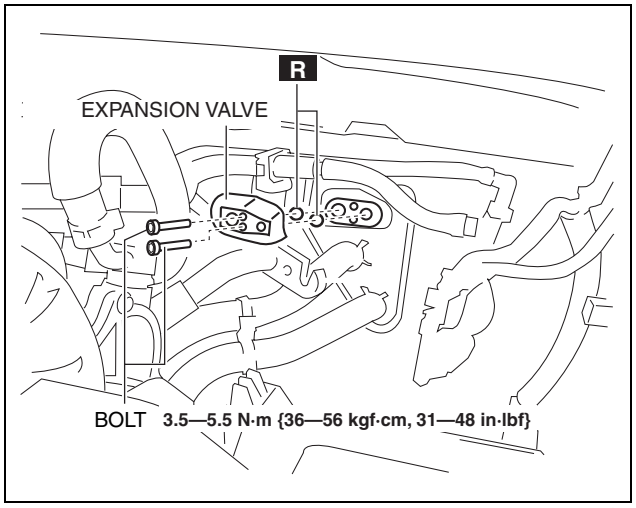

ac5wzw0000178

EVAPORATOR INSPECTION

id071100801500

1. Inspect the evaporator for damage, cracks, and oil leakage.
   - If there is any malfunction, replace the evaporator.
2. Visually inspect the fins for bending.
   - If there is any bending, use the end of a flathead screwdriver to straighten the fins.

HEATER CORE INSPECTION

id071100801600

1. Inspect the heater core for damage, cracks, and water leakage.
   - If there is any malfunction, replace the heater core.
2. Visually inspect the fins for bending.
   - If there is any bending, use the end of a flathead screwdriver to straighten the fins.
3. Visually inspect the heater hose for deformation.
   - Repair with pliers if there is deformation. If there is any malfunction, replace the heater core.

AIRFLOW MODE MAIN LINK REMOVAL/INSTALLATION

id071100801800

Full-auto Air Conditioner

1. The airflow mode main link is installed to the airflow mode actuator. When removing the airflow mode main link, refer to the airflow mode actuator removal/installation. (See 07-40A-13 AIRFLOW MODE ACTUATOR REMOVAL/INSTALLATION [FULL-AUTO AIR CONDITIONER].)

Manual Air Conditioner

1. Disconnect the negative battery cable. (See 01-17A-11 NEGATIVE BATTERY CABLE DISCONNECTION/CONNECTION [SKYACTIV-G 2.0].)(See 01-17A-13 NEGATIVE BATTERY CABLE DISCONNECTION/CONNECTION [SKYACTIV-G 2.0 (WITHOUT i-stop)].)(See 01-17B-9 NEGATIVE BATTERY CABLE DISCONNECTION/CONNECTION [SKYACTIV-D 2.2].)
2. Remove the glove compartment. (See 09-17-30 GLOVE COMPARTMENT REMOVAL/INSTALLATION.)
3. Detach the hook (1), then remove the airflow mode rod (2). (L.H.D.)

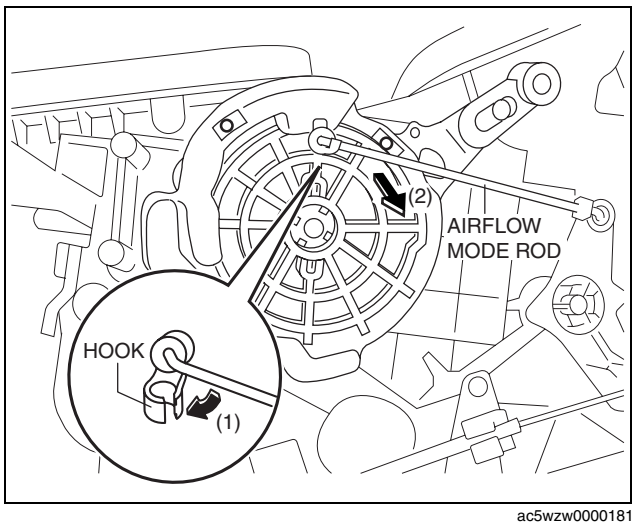

ac5wzw0000181

4. Remove the airflow mode wire. (R.H.D.)

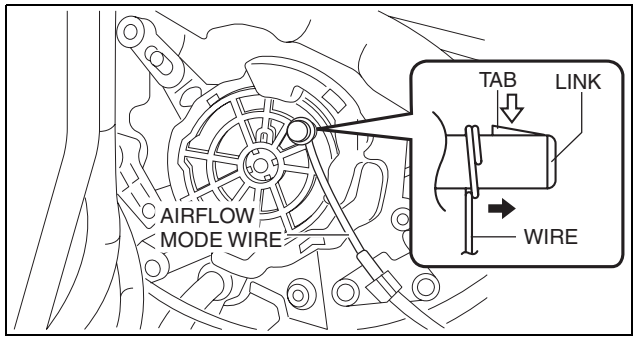

ac5wzw0000181

5. Remove the screw, then airflow mode main link.
6. Install in the reverse order of removal. (See 07-11-21 Airflow Mode Main Link Installation Note.)

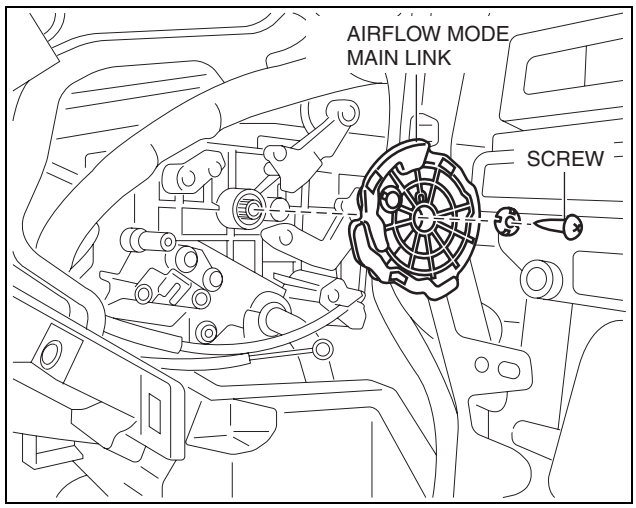

ac5wzw0000181

Airflow Mode Main Link Installation Note

Caution

- **Apply only the specified grease to links. Otherwise abnormal noise or improper operation may result.**

1. Align the airflow mode main link hole with the airflow mode sub link projection as shown in the figure.

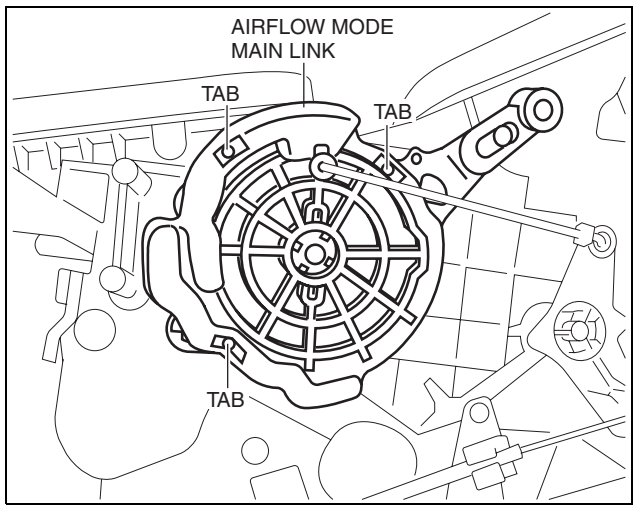

ac5wzw0000181

BASIC SYSTEM

2. Press the airflow mode main link lightly to the A/C unit, then set the projections of each airflow mode sub link into the grooves of the airflow mode main link.
3. Rotate airflow mode main link and verify that each mode is accessed properly.

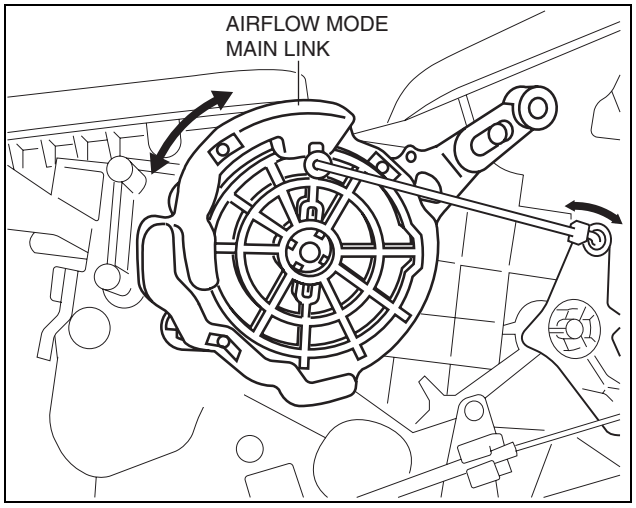

ac5wzw0000181

FRONT HEAT DUCT REMOVAL/INSTALLATION

id071100307100

1. Disconnect the negative battery cable. (See 01-17A-11 NEGATIVE BATTERY CABLE DISCONNECTION/CONNECTION [SKYACTIV-G 2.0].)(See 01-17A-13 NEGATIVE BATTERY CABLE DISCONNECTION/CONNECTION [SKYACTIV-G 2.0 (WITHOUT i-stop)].)(See 01-17B-9 NEGATIVE BATTERY CABLE DISCONNECTION/CONNECTION [SKYACTIV-D 2.2].)
2. Remove the dashboard under cover. (See 09-17-35 DASHBOARD UNDER COVER REMOVAL/INSTALLATION.)
3. Detach the tab and remove the front heat duct.

LH

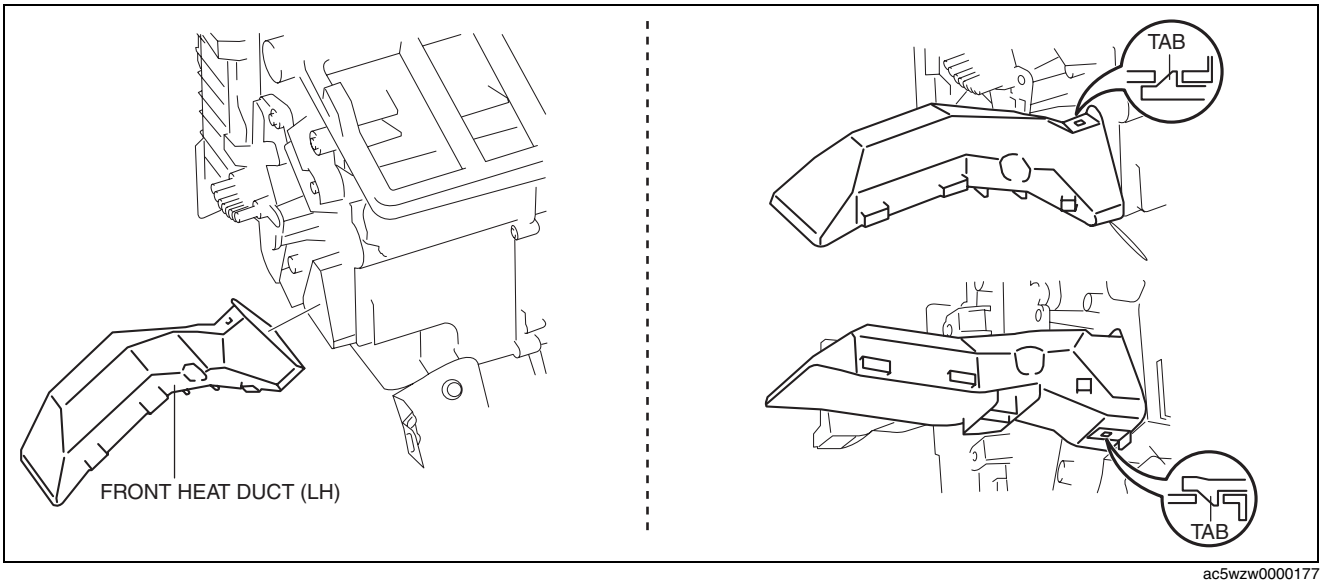

ac5wzw0000177

BASIC SYSTEM

RH

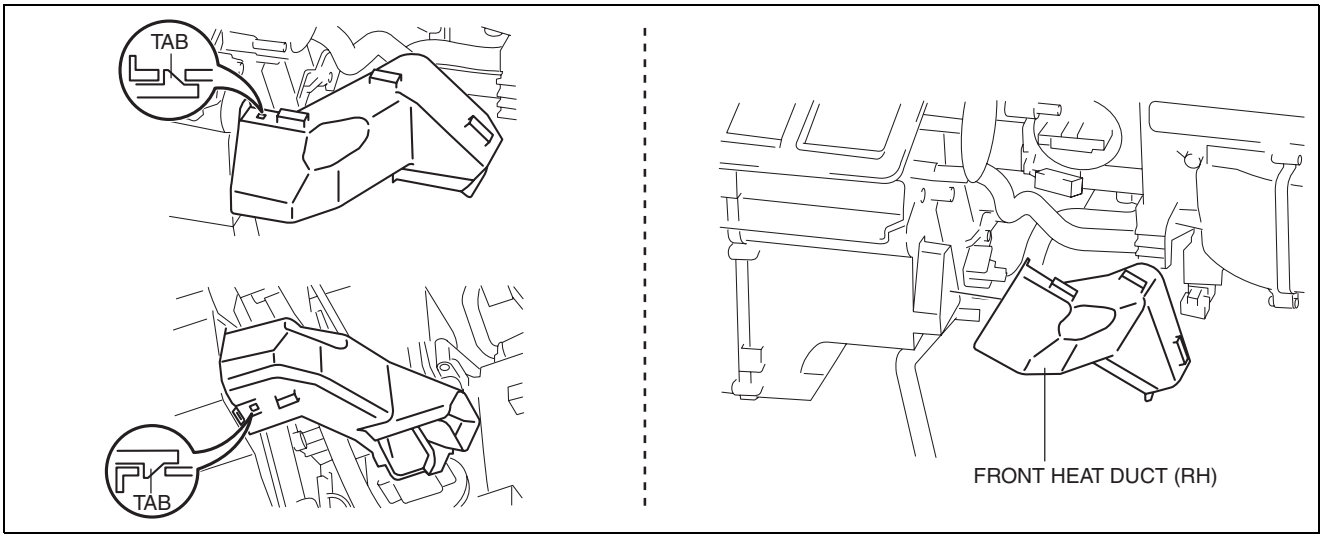

ac5wzw0000177

4. Install in the reverse order of removal.

REAR HEAT DUCT REMOVAL/INSTALLATION

id071100800900

1. Disconnect the negative battery cable. (See 01-17A-11 NEGATIVE BATTERY CABLE DISCONNECTION/CONNECTION [SKYACTIV-G 2.0].)(See 01-17A-13 NEGATIVE BATTERY CABLE DISCONNECTION/CONNECTION [SKYACTIV-G 2.0 (WITHOUT i-stop)].)(See 01-17B-9 NEGATIVE BATTERY CABLE DISCONNECTION/CONNECTION [SKYACTIV-D 2.2].)
2. Remove the following parts:
   (1) Shift lever knob (MTX) (See 05-16A-1 MANUAL TRANSAXLE SHIFT MECHANISM REMOVAL/INSTALLATION [C66M-R, C66MX-R].) (See 05-16B-1 MANUAL TRANSAXLE SHIFT MECHANISM REMOVAL/INSTALLATION [D66M-R, D66MX-R].)
   (2) Front console box (See 09-17-40 FRONT CONSOLE BOX REMOVAL/INSTALLATION.)
   (3) Shift panel (See 09-17-42 SHIFT PANEL REMOVAL/INSTALLATION.)
   (4) Upper panel (See 09-17-44 UPPER PANEL REMOVAL/INSTALLATION.)
   (5) Rear console (See 09-17-45 REAR CONSOLE REMOVAL/INSTALLATION.)
   (6) Side wall (See 09-17-49 SIDE WALL REMOVAL/INSTALLATION.)
   (7) Decoration panel (See 09-17-33 DECORATION PANEL REMOVAL/INSTALLATION.)
   (8) Front console (See 09-17-50 FRONT CONSOLE REMOVAL/INSTALLATION.)
   (9) Front scuff plate (See 09-17-61 FRONT SCUFF PLATE REMOVAL/INSTALLATION.)
   (10) Front side trim (See 09-17-62 FRONT SIDE TRIM REMOVAL/INSTALLATION.)
   (11) Joint cover (See 06-13-4 STEERING WHEEL AND COLUMN REMOVAL/INSTALLATION.)
3. Turn the floor covering over.

BASIC SYSTEM

4. Remove in the order indicated in the table.

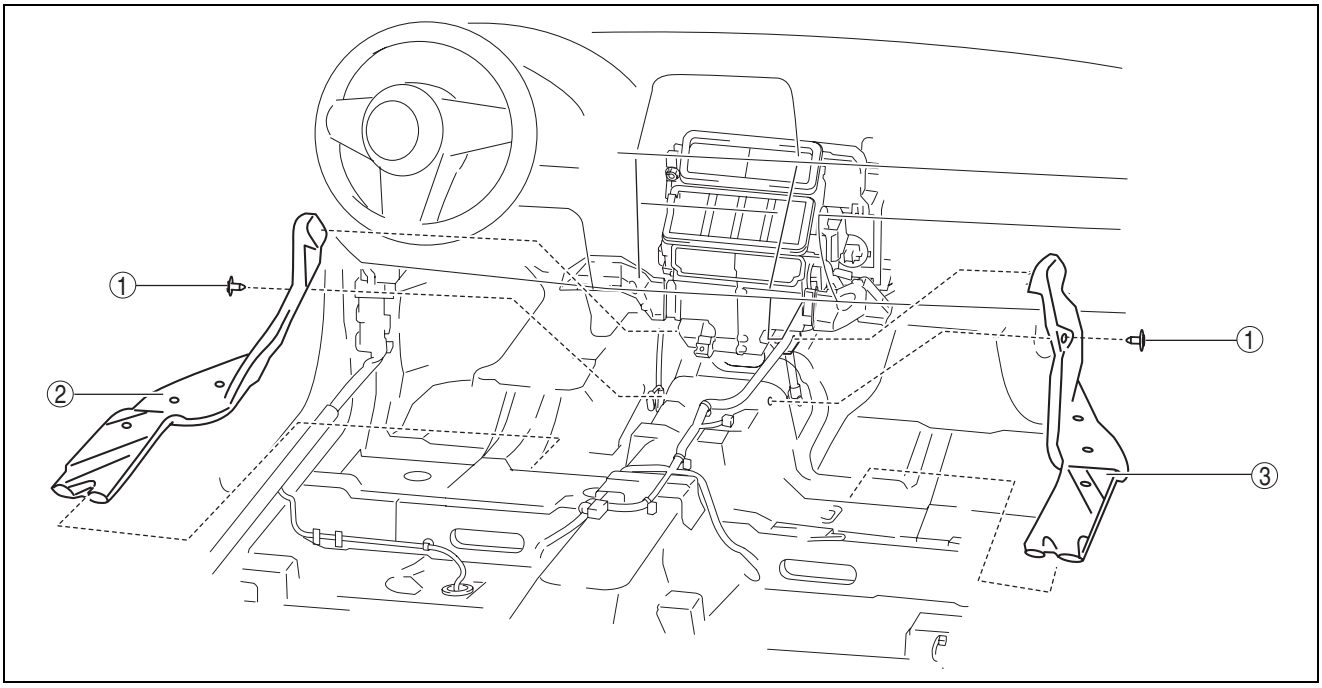

ac5wzw0000180

1	Fastener
2	Rear heat duct (1)
3	Rear heat duct (2)

5. Install in the reverse order of removal.

BASIC SYSTEM

A/C COMPRESSOR REMOVAL/INSTALLATION

id071100801000

SKYACTIV-G 2.0

1. Disconnect the negative battery cable. (See 01-17A-11 NEGATIVE BATTERY CABLE DISCONNECTION/ CONNECTION [SKYACTIV-G 2.0].)(See 01-17A-13 NEGATIVE BATTERY CABLE DISCONNECTION/ CONNECTION [SKYACTIV-G 2.0 (WITHOUT i-stop)].)
2. Discharge the refrigerant. (See 07-10-3 REFRIGERANT CHARGING.)
3. Remove the front under cover No.2. (See 09-16-41 FRONT UNDER COVER No.2 REMOVAL/INSTALLATION.)
4. Remove the drive belt. (See 01-10A-10 DRIVE BELT REMOVAL/INSTALLATION [SKYACTIV-G 2.0].)
5. Disconnect the connector.

Caution

- **If moisture or foreign material enters the refrigeration cycle, cooling ability will be lowered and abnormal noise or other malfunction could occur. Always plug open fittings immediately after removing any refrigeration cycle parts.**

6. Remove bolts A.
7. Disconnect the cooler hose (LO). (See 07-11-36 REFRIGERANT LINE REMOVAL/ INSTALLATION.)
8. Disconnect the cooler hose (HI). (See 07-11-36 REFRIGERANT LINE REMOVAL/ INSTALLATION.)
9. Remove bolts B.
10. Remove the A/C compressor. Do not allow compressor oil to spill. (See 07-11-27 A/C Compressor Installation Note.)
11. Install in the reverse order of removal.
12. Perform the refrigerant system performance test. (See 07-10-9 REFRIGERANT SYSTEM PERFORMANCE TEST.)

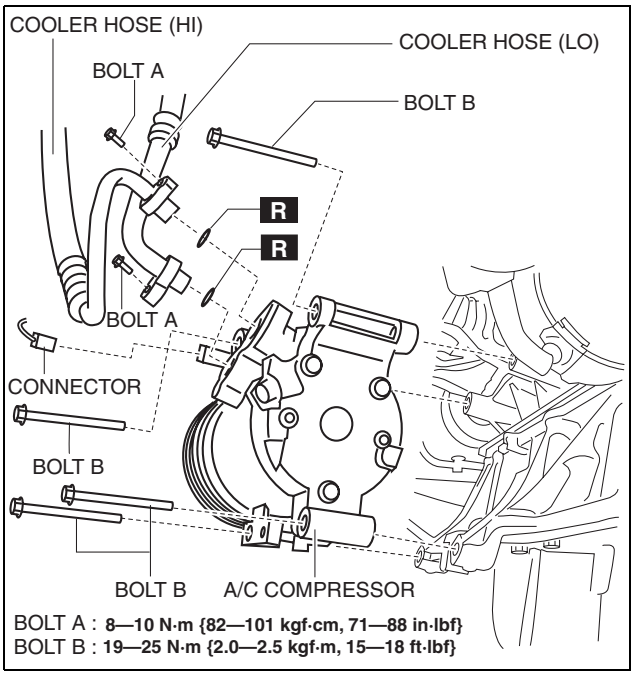

BOLT A : **8—10 N·m {82—101 kgf·cm, 71—88 in·lbf}**
BOLT B : **19—25 N·m {2.0—2.5 kgf·m, 15—18 ft·lbf}**

ac5wzw0000180

BASIC SYSTEM

SKYACTIV-D 2.2

Procedure from top side of vehicle

1. Disconnect the negative battery cable. (See 01-17B-9 NEGATIVE BATTERY CABLE DISCONNECTION/ CONNECTION [SKYACTIV-D 2.2].)
2. Discharge the refrigerant. (See 07-10-3 REFRIGERANT CHARGING.)
3. Remove bolts A.

Caution

- **If moisture or foreign material enters the refrigeration cycle, cooling ability will be lowered and abnormal noise or other malfunction could occur. Always plug open fittings immediately after removing any refrigeration cycle parts.**

4. Disconnect the cooler hose (LO). (See 07-11-36 REFRIGERANT LINE REMOVAL/ INSTALLATION.)
5. Disconnect the cooler hose (HI). (See 07-11-36 REFRIGERANT LINE REMOVAL/ INSTALLATION.)
6. Disconnect the connector.
7. Remove bolts B.

Procedure from underside of vehicle

8. Remove the front under cover No.2. (See 09-16-41 FRONT UNDER COVER No.2 REMOVAL/ INSTALLATION.)
9. Remove the splash shield (RH). (See 09-16-49 SPLASH SHIELD REMOVAL/INSTALLATION.)
10. Remove the drive belt. (See 01-10B-8 DRIVE BELT REMOVAL/INSTALLATION [SKYACTIV-D 2.2].)

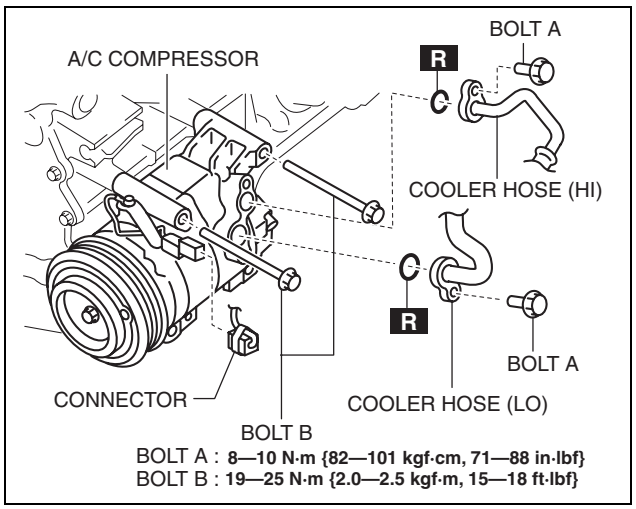

ac5wzw0000180

11. Detach the clip.

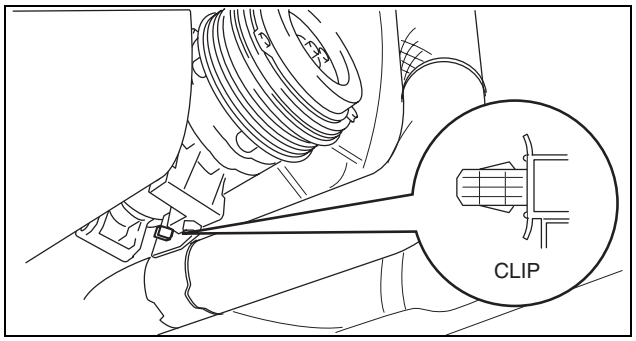

ac5wzw0000180

12. Disconnect the charge air cooler hose.

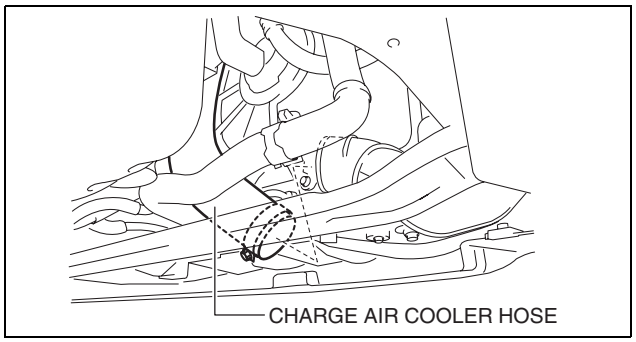

ac5wzw0000180

BASIC SYSTEM

13. Set the radiator hose out of the way.

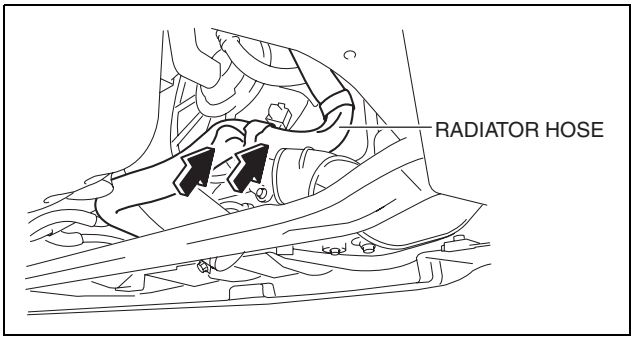

ac5wzw0000180

14. Remove bolts B.

Caution
- **If moisture or foreign material enters the refrigeration cycle, cooling ability will be lowered and abnormal noise or other malfunction could occur. Always plug open fittings immediately after removing any refrigeration cycle parts.**

15. Remove the A/C compressor. Do not allow compressor oil to spill. (See 07-11-27 A/C Compressor Installation Note.)
16. Install in the reverse order of removal.
17. Perform the refrigerant system performance test. (See 07-10-9 REFRIGERANT SYSTEM PERFORMANCE TEST.)

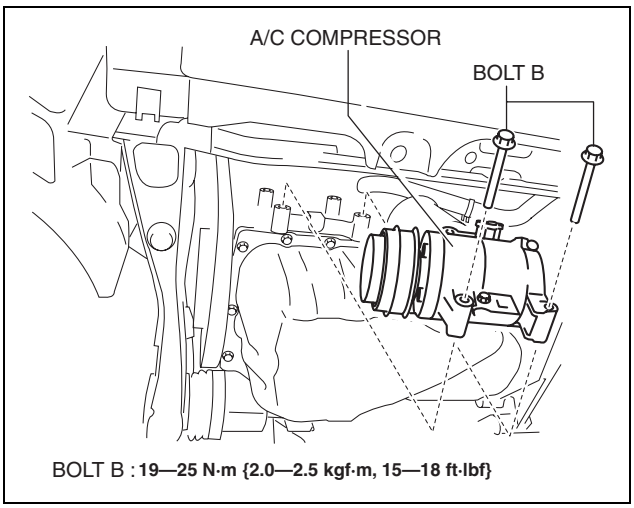

ac5wzw0000180

A/C Compressor Installation Note

Caution
- **Due to the high moisture-absorption characteristics of the compressor oil, it may absorb moisture if left over a long period of time thereby negatively affecting A/C operation. Drain the compressor oil and refill within 10 min. of each other.**

1. Rotate the new A/C compressor shaft six to eight revolutions while pouring refrigerant oil in a clean measuring container. Use this refrigerant oil to refill new compressor. Do not allow refrigerant oil to become contaminated.
2. Rotate old A/C compressor shaft six to eight revolutions while pouring refrigerant oil in a separate, clean measuring container.
3. Compare those oil amounts. The amount of the oil drained from the new A/C compressor should be greater than the old one.
4. Pour the same amount oil of drained from the old A/C compressor back into the new A/C compressor.

A/C compressor oil type
FD46XG

A/C compressor oil sealed volume (approx. quantity)
100 ml {100 cc, 3.38 fl oz}

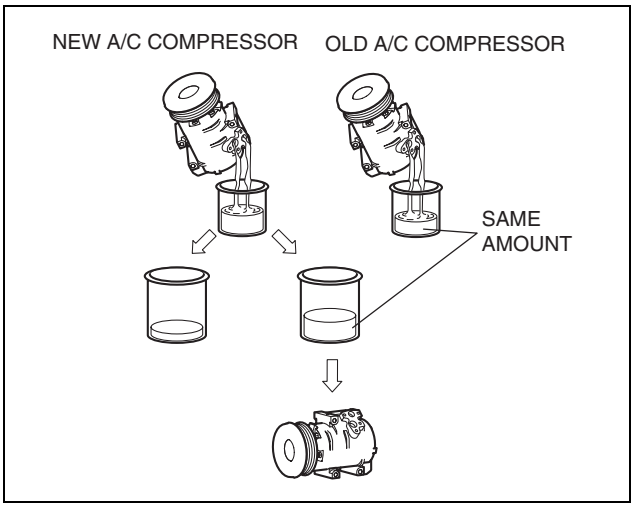

ac5wzw0000180

BASIC SYSTEM

CONDENSER REMOVAL/INSTALLATION

id071100801200

1. Disconnect the negative battery cable. (See 01-17A-11 NEGATIVE BATTERY CABLE DISCONNECTION/CONNECTION [SKYACTIV-G 2.0].)(See 01-17A-13 NEGATIVE BATTERY CABLE DISCONNECTION/CONNECTION [SKYACTIV-G 2.0 (WITHOUT i-stop)].)(See 01-17B-9 NEGATIVE BATTERY CABLE DISCONNECTION/CONNECTION [SKYACTIV-D 2.2].)
2. Discharge the refrigerant. (See 07-10-3 REFRIGERANT CHARGING.)
3. Remove the front under cover No.1. (See 09-16-40 FRONT UNDER COVER No.1 REMOVAL/INSTALLATION.)
4. Drain the engine coolant. (See 01-12A-4 ENGINE COOLANT REPLACEMENT [SKYACTIV-G 2.0].) (See 01-12B-4 ENGINE COOLANT REPLACEMENT [SKYACTIV-D 2.2].)
5. Remove the following parts: (SKYACTIV-G 2.0)
   (1) Plug hole plate (See 01-10A-6 PLUG HOLE PLATE REMOVAL/INSTALLATION [SKYACTIV-G 2.0].)
   (2) Air cleaner, air hose and fresh air duct component (See 01-13A-6 INTAKE-AIR SYSTEM REMOVAL/INSTALLATION [SKYACTIV-G 2.0].)
   (3) Coolant reserve tank (See 01-12A-8 COOLANT RESERVE TANK REMOVAL/INSTALLATION [SKYACTIV-G 2.0].)
   (4) Cooling fan component (See 01-12A-19 COOLING FAN MOTOR REMOVAL/INSTALLATION [SKYACTIV-G 2.0].)
6. Remove the following parts: (SKYACTIV-D 2.2)
   (1) Engine cover (See 01-10B-4 ENGINE COVER REMOVAL/INSTALLATION [SKYACTIV-D 2.2].)
   (2) Air cleaner and fresh air duct component (See 01-13B-6 INTAKE-AIR SYSTEM REMOVAL/INSTALLATION [SKYACTIV-D 2.2].)
   (3) Coolant reserve tank (See 01-12B-8 COOLANT RESERVE TANK REMOVAL/INSTALLATION [SKYACTIV-D 2.2].)
   (4) Cooling fan component (See 01-12B-18 COOLING FAN MOTOR REMOVAL/INSTALLATION [SKYACTIV-D 2.2].)
   (5) Charge air cooler inlet hose and charge air cooler outlet hose (See 01-13B-6 INTAKE-AIR SYSTEM REMOVAL/INSTALLATION [SKYACTIV-D 2.2].)
7. Disconnect the ATF oil cooler hose from the radiator. (if equipped) (SKYACTIV-D 2.2) (See 05-17B-71 OIL COOLER REMOVAL/INSTALLATION [GW6A-EL, GW6AX-EL].)
8. Remove the radiator. (See 01-12A-9 RADIATOR REMOVAL/INSTALLATION [SKYACTIV-G 2.0].) (See 01-12B-9 RADIATOR REMOVAL/INSTALLATION [SKYACTIV-D 2.2].)
9. Remove the bolts.
10. Disconnect the cooler hose (HI) and cooler pipe. Do not allow remaining compressor oil in the refrigerant line to spill. (See 07-11-36 REFRIGERANT LINE REMOVAL/INSTALLATION.)

Caution

- **If moisture or foreign material enters the refrigeration cycle, cooling ability will be lowered and abnormal noise or other malfunction could occur. Always plug open fittings immediately after removing any refrigeration cycle parts.**

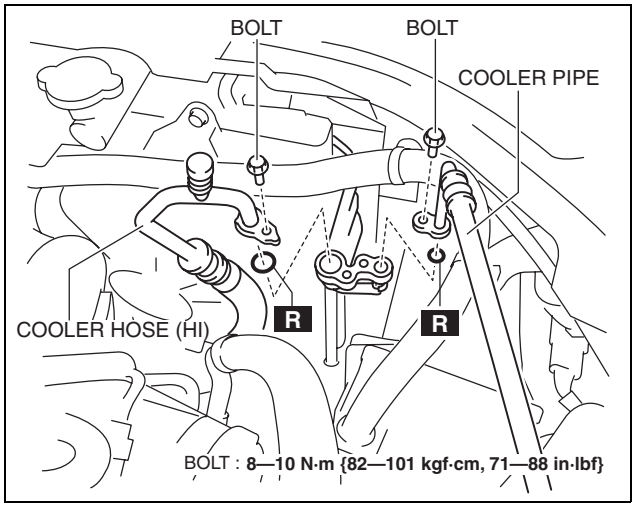

ac5wzw0000180

BASIC SYSTEM

11. Remove the condenser, being careful not to allow remaining compressor oil in the condenser to spill. (See 07-11-29 Condenser Installation Note.)

    Caution
    - **If moisture or foreign material enters the refrigeration cycle, cooling ability will be lowered and abnormal noise or other malfunction could occur. Always plug open fittings immediately after removing any refrigeration cycle parts.**

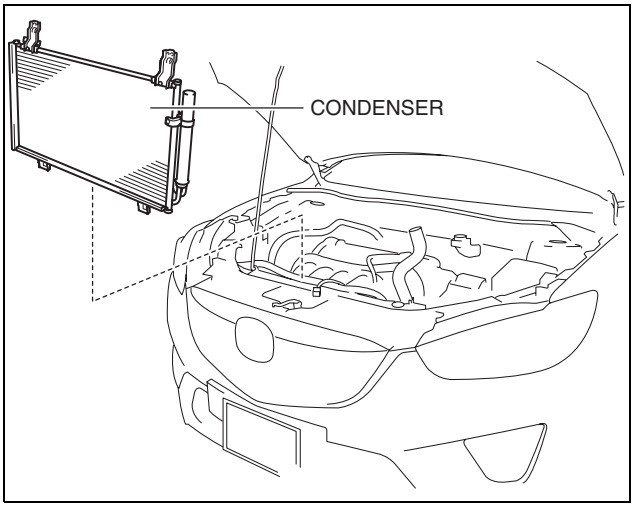

ac5wzw0000180

12. Install in the reverse order of removal.
13. Inspect for engine coolant leakage. (See 01-12A-7 ENGINE COOLANT LEAKAGE INSPECTION [SKYACTIV-G 2.0].) (See 01-12B-7 ENGINE COOLANT LEAKAGE INSPECTION [SKYACTIV-D 2.2].)
14. Inspect the ATF level. (if equipped) (See 05-17B-11 AUTOMATIC TRANSAXLE FLUID (ATF) INSPECTION [GW6A-EL, GW6AX-EL].)
15. Perform the refrigerant system performance test. (See 07-10-9 REFRIGERANT SYSTEM PERFORMANCE TEST.)

Condenser Installation Note

1. After replacing the condenser, add compressor oil to the refrigeration cycle.

   Supplemental oil amount (approx. quantity)
   13 ml {13 cc, 0.44 fl oz}

CONDENSER INSPECTION

id071100801300

1. Inspect the condenser for cracks, damage, and oil leakage.
   - If there is any malfunction, replace the condenser.
2. Visually inspect for bent fins for clogging of foreign material.
   - If any fins are clogged, remove the foreign material.
3. Visually inspect for bent fins.
   - If any fins are bent, use the end of a flathead screwdriver to straighten fins.

RECEIVER/DRIER REMOVAL/INSTALLATION

id071100801400

1. Disconnect the negative battery cable.(See 01-17A-11 NEGATIVE BATTERY CABLE DISCONNECTION/CONNECTION [SKYACTIV-G 2.0].)(See 01-17A-13 NEGATIVE BATTERY CABLE DISCONNECTION/CONNECTION [SKYACTIV-G 2.0 (WITHOUT i-stop)].)(See 01-17B-9 NEGATIVE BATTERY CABLE DISCONNECTION/CONNECTION [SKYACTIV-D 2.2].)
2. Discharge the refrigerant. (See 07-10-3 REFRIGERANT CHARGING.)
3. Remove the front under cover No.1. (See 09-16-40 FRONT UNDER COVER No.1 REMOVAL/INSTALLATION.)
4. Drain the engine coolant. (See 01-12A-4 ENGINE COOLANT REPLACEMENT [SKYACTIV-G 2.0].) (See 01-12B-4 ENGINE COOLANT REPLACEMENT [SKYACTIV-D 2.2].)
5. Remove the following parts: (SKYACTIV-G 2.0)
   (1) Plug hole plate (See 01-10A-6 PLUG HOLE PLATE REMOVAL/INSTALLATION [SKYACTIV-G 2.0].)
   (2) Air cleaner, air hose and fresh air duct component (See 01-13A-6 INTAKE-AIR SYSTEM REMOVAL/INSTALLATION [SKYACTIV-G 2.0].)
   (3) Coolant reserve tank (See 01-12A-8 COOLANT RESERVE TANK REMOVAL/INSTALLATION [SKYACTIV-G 2.0].)
   (4) Cooling fan component (See 01-12A-19 COOLING FAN MOTOR REMOVAL/INSTALLATION [SKYACTIV-G 2.0].)

6. Remove the following parts: (SKYACTIV-D 2.2)
   (1) Engine cover (See 01-10B-4 ENGINE COVER REMOVAL/INSTALLATION [SKYACTIV-D 2.2].)
   (2) Air cleaner and fresh air duct component (See 01-13B-6 INTAKE-AIR SYSTEM REMOVAL/INSTALLATION [SKYACTIV-D 2.2].)
   (3) Coolant reserve tank (See 01-12B-8 COOLANT RESERVE TANK REMOVAL/INSTALLATION [SKYACTIV-D 2.2].)
   (4) Cooling fan component (See 01-12B-18 COOLING FAN MOTOR REMOVAL/INSTALLATION [SKYACTIV-D 2.2].)
   (5) Charge air cooler inlet hose and charge air cooler outlet hose (See 01-13B-6 INTAKE-AIR SYSTEM REMOVAL/INSTALLATION [SKYACTIV-D 2.2].)
7. Disconnect the ATF oil cooler hose from the radiator. (if equipped) (SKYACTIV-D 2.2) (See 05-17B-71 OIL COOLER REMOVAL/INSTALLATION [GW6A-EL, GW6AX-EL].)
8. Remove the radiator. (See 01-12A-9 RADIATOR REMOVAL/INSTALLATION [SKYACTIV-G 2.0].) (See 01-12B-9 RADIATOR REMOVAL/INSTALLATION [SKYACTIV-D 2.2].)
9. Remove the condenser. (See 07-11-28 CONDENSER REMOVAL/INSTALLATION.)
10. Disconnect the block joint type pipes by grasping female side of the block with hand holding firmly then loosen the connection bolt A.

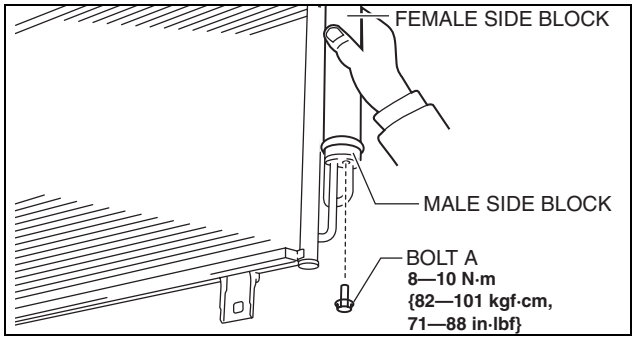

ac5wzw0000181

11. Remove bolt B.
12. Remove the bracket.
13. Remove the receiver/drier. Do not allow compressor oil to spill.

Caution
- **If moisture or foreign material enters the refrigeration cycle, cooling ability will be lowered and abnormal noise will occur. Always immediately plug all open fittings after removing any refrigeration cycle parts to keep moisture or foreign material out of the cycle.**

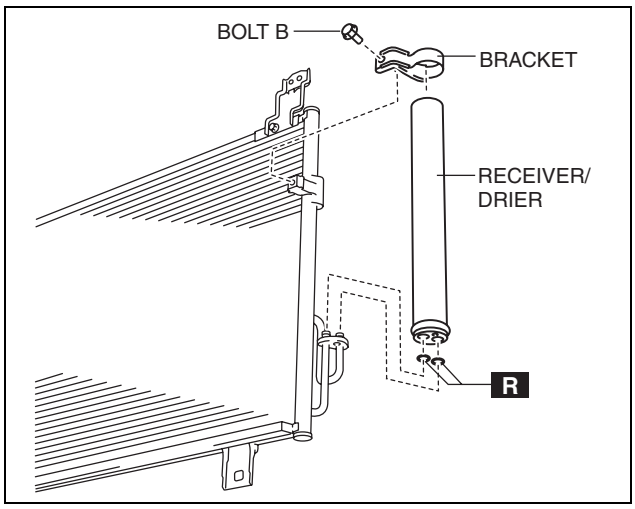

ac5wzw0000181

14. Install in the reverse order of removal.
15. Inspect for engine coolant leakage. (See 01-12A-7 ENGINE COOLANT LEAKAGE INSPECTION [SKYACTIV-G 2.0].) (See 01-12B-7 ENGINE COOLANT LEAKAGE INSPECTION [SKYACTIV-D 2.2].)
16. Inspect the ATF level. (if equipped) (See 05-17B-11 AUTOMATIC TRANSAXLE FLUID (ATF) INSPECTION [GW6A-EL, GW6AX-EL].)
17. Perform the refrigerant system performance test. (See 07-10-9 REFRIGERANT SYSTEM PERFORMANCE TEST.)

Receiver/drier Installation Note
1. After replacing the receiver/drier, add compressor oil to the refrigeration cycle.

Supplemental oil amount (approx. quantity)
2 ml {2 cc, 0.1 fl oz}

BASIC SYSTEM

HEATER HOSE REMOVAL/INSTALLATION

id071100805100

R.H.D.
SKYACTIV-G 2.0

1. Remove the battery. (See 01-17A-11 NEGATIVE BATTERY CABLE DISCONNECTION/CONNECTION [SKYACTIV-G 2.0].)(See 01-17A-13 NEGATIVE BATTERY CABLE DISCONNECTION/CONNECTION [SKYACTIV-G 2.0 (WITHOUT i-stop)].)
2. Drain the engine coolant. (See 01-12A-4 ENGINE COOLANT REPLACEMENT [SKYACTIV-G 2.0].)
3. Remove the plug hole plate. (See 01-10A-6 PLUG HOLE PLATE REMOVAL/INSTALLATION [SKYACTIV-G 2.0].)
4. Remove the clips.
5. Remove the heater hose.

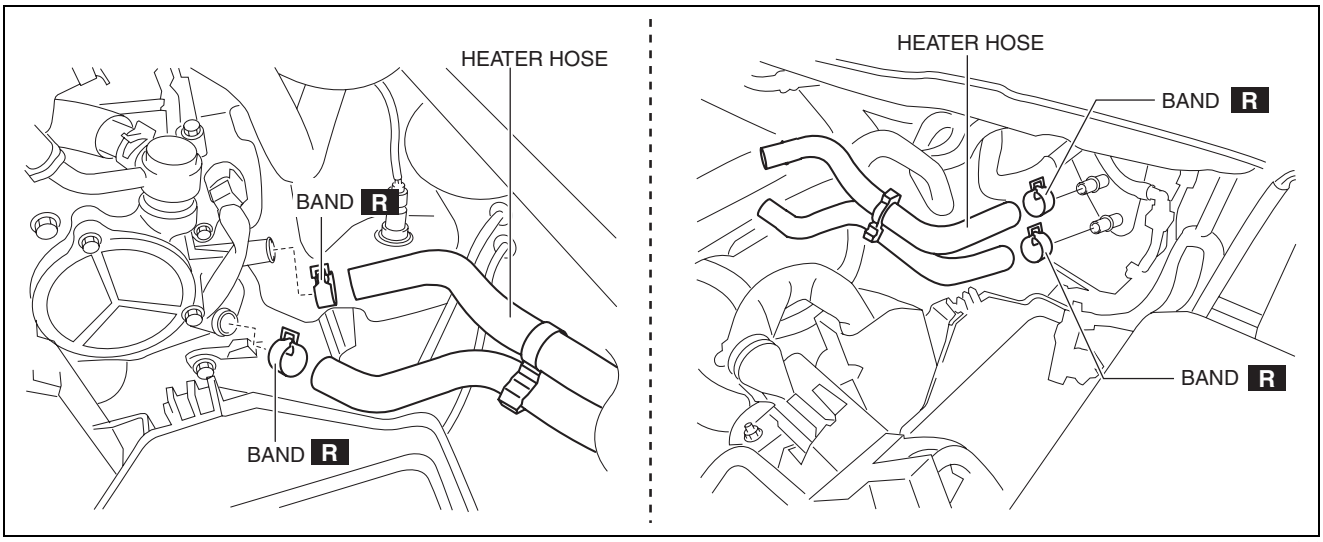

ac5wzw0000194

6. Install in the reverse order of the removal.
7. Inspect for engine coolant leakage. (See 01-12A-7 ENGINE COOLANT LEAKAGE INSPECTION [SKYACTIV-G 2.0].)

BASIC SYSTEM

SKYACTIV-D 2.2

1. Disconnect the negative battery cable. (See 01-17B-9 NEGATIVE BATTERY CABLE DISCONNECTION/ CONNECTION [SKYACTIV-D 2.2].)
2. Drain the engine coolant. (See 01-12B-4 ENGINE COOLANT REPLACEMENT [SKYACTIV-D 2.2].)
3. Remove the engine cover. (See 01-10B-4 ENGINE COVER REMOVAL/INSTALLATION [SKYACTIV-D 2.2].)
4. Remove the nut from underside of vehicle.

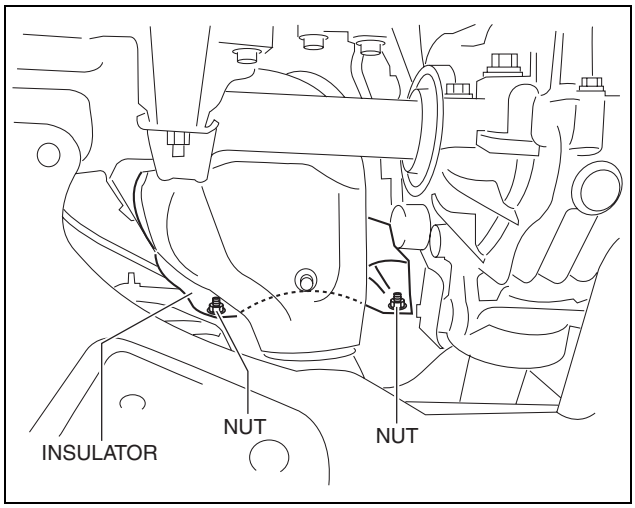

ac5wzw0000194

5. Remove the nut from top side of vehicle.
6. Remove the insulator as shown in the figure.

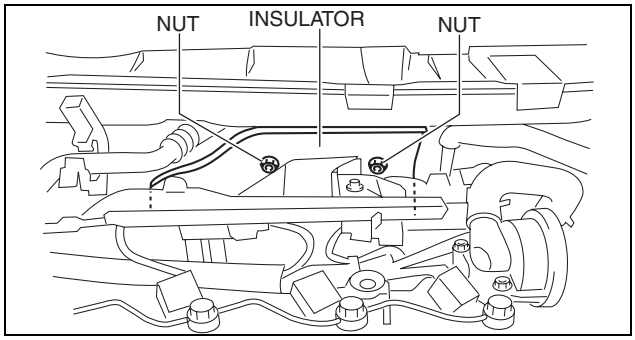

ac5wzw0000194

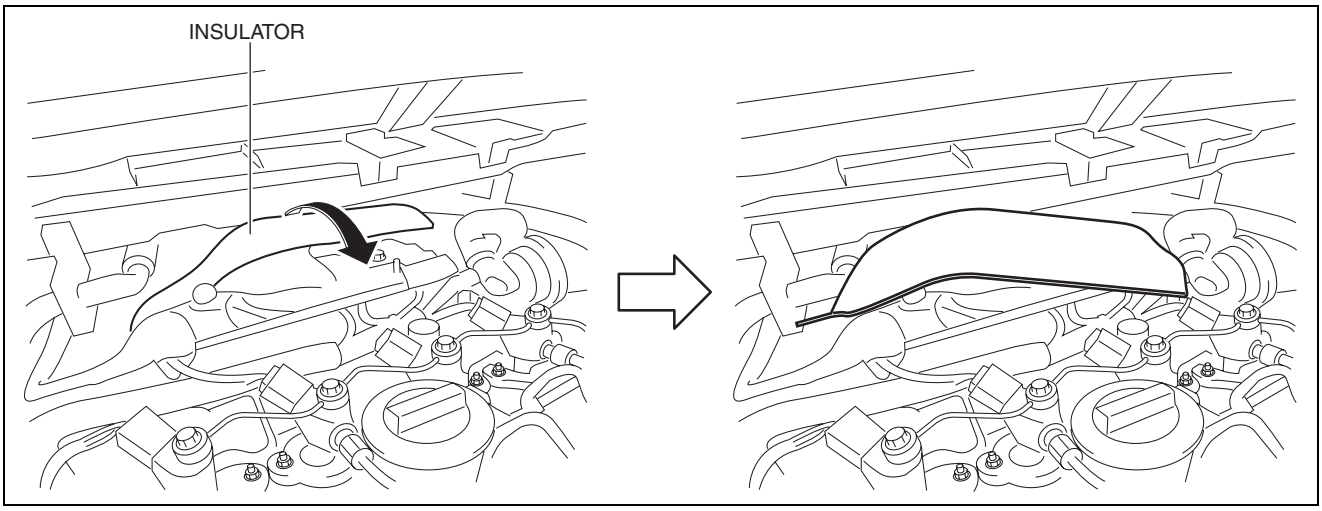

ac5wzw0000194

BASIC SYSTEM

7. Detach the fastener.
8. Remove the bolt and disconnect the engine mount earth.

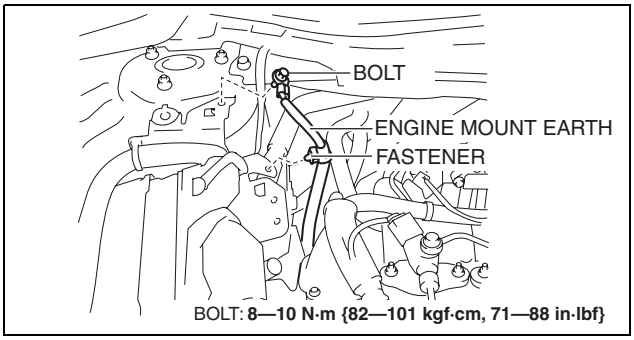

ac5wzw0000195

9. Detach the clip.
10. Remove the nut.

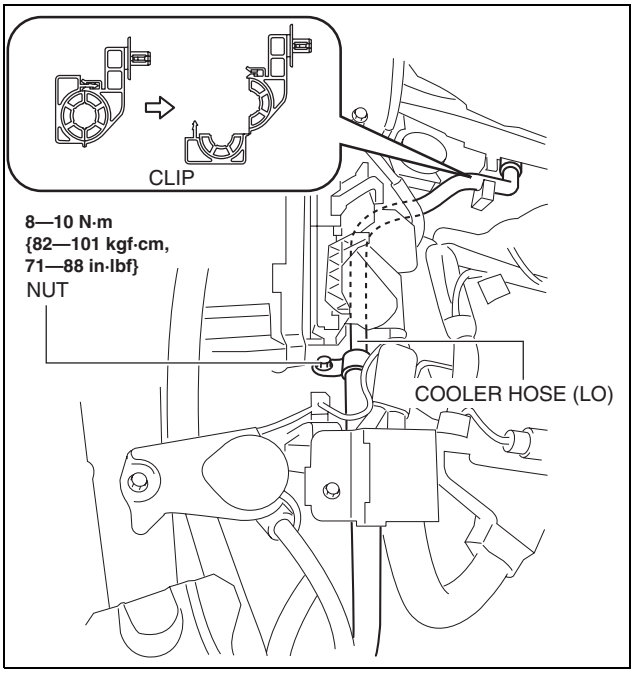

ac5wzw0000195

11. Set the cooler hose (LO) out of the way.

Caution

- **When setting the cooler hose (LO), only bend the flexible hose part. If force is applied to areas other than the flexible hose, the pipe will bend and could be damaged.**

12. Remove the clips.

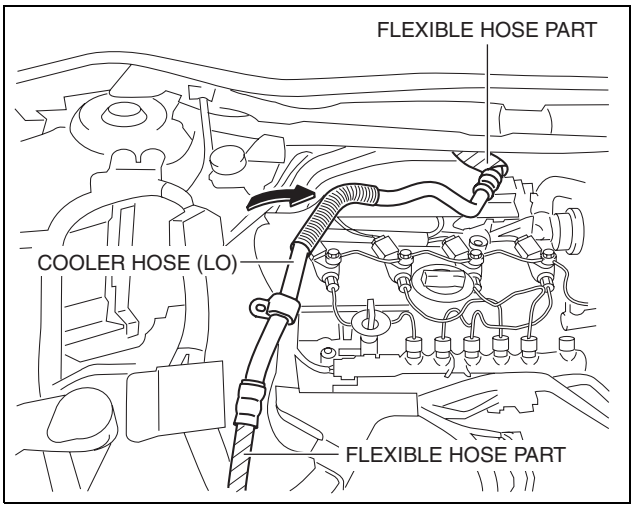

ac5wzw0000195

07

BASIC SYSTEM

13. Remove the heater hose.

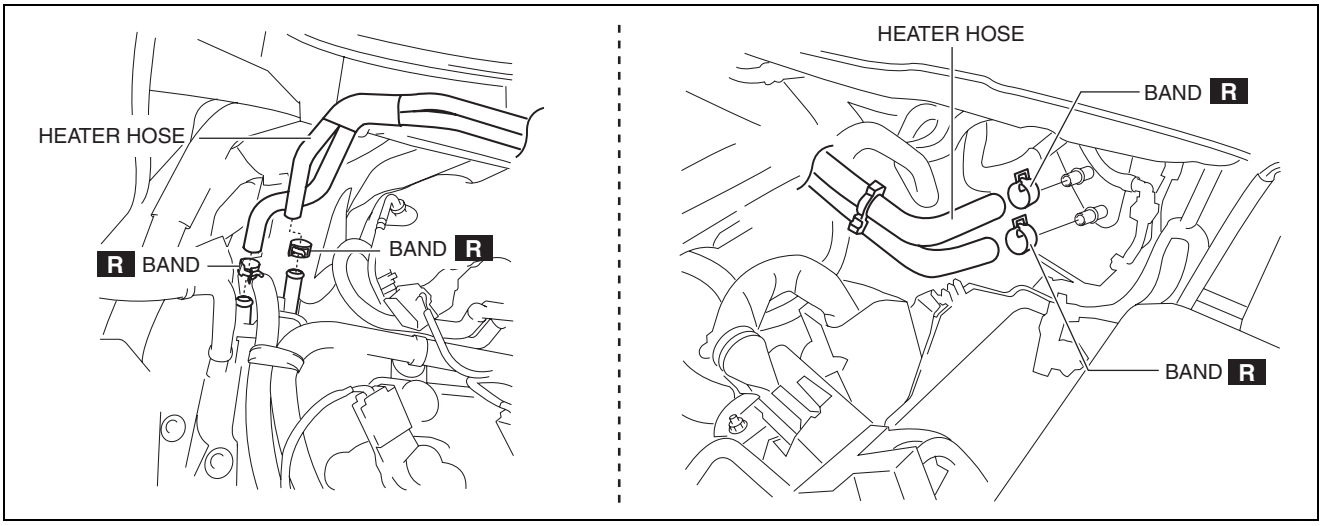

ac5wzw0000195

14. Install in the reverse order of the removal.
15. Inspect for engine coolant leakage. (See 01-12B-7 ENGINE COOLANT LEAKAGE INSPECTION [SKYACTIV-D 2.2].)

REFRIGERANT LINE REMOVAL/INSTALLATION

id071100803000

R.H.D.
SKYACTIV-G 2.0

1. Disconnect the negative battery cable. (See 01-17A-11 NEGATIVE BATTERY CABLE DISCONNECTION/CONNECTION [SKYACTIV-G 2.0].)(See 01-17A-13 NEGATIVE BATTERY CABLE DISCONNECTION/CONNECTION [SKYACTIV-G 2.0 (WITHOUT i-stop)].)
2. Discharge the refrigerant. (See 07-10-3 REFRIGERANT CHARGING.)
3. Remove the plug hole plate. (See 01-10A-6 PLUG HOLE PLATE REMOVAL/INSTALLATION [SKYACTIV-G 2.0].)
4. Remove the nut.
5. Remove the insulator.

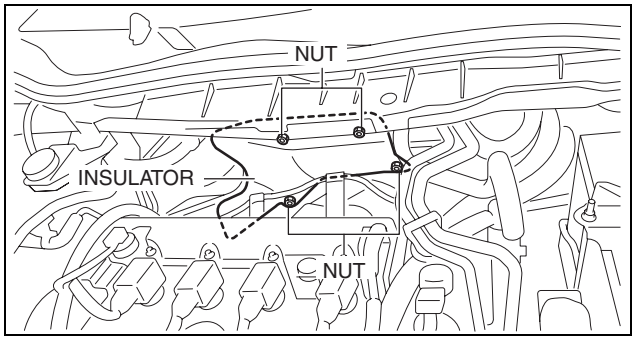

ac5wzw0000182

6. Detach the clip.

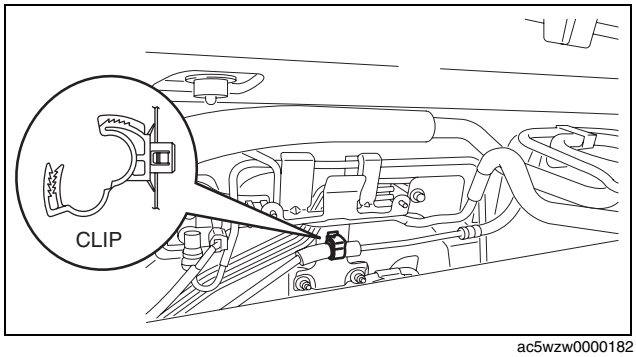

ac5wzw0000182

BASIC SYSTEM

7. Remove the bolt and disconnect the engine ground.
8. Disconnect the refrigerant pressure sensor connector.
9. Remove in the order indicated in the table. Do not allow compressor oil to spill.

Caution

- **If moisture or foreign material enters the refrigeration cycle, cooling ability will be lowered and abnormal noise will occur. Always immediately plug all open fittings after removing any refrigeration cycle parts to keep moisture or foreign material out of the cycle.**

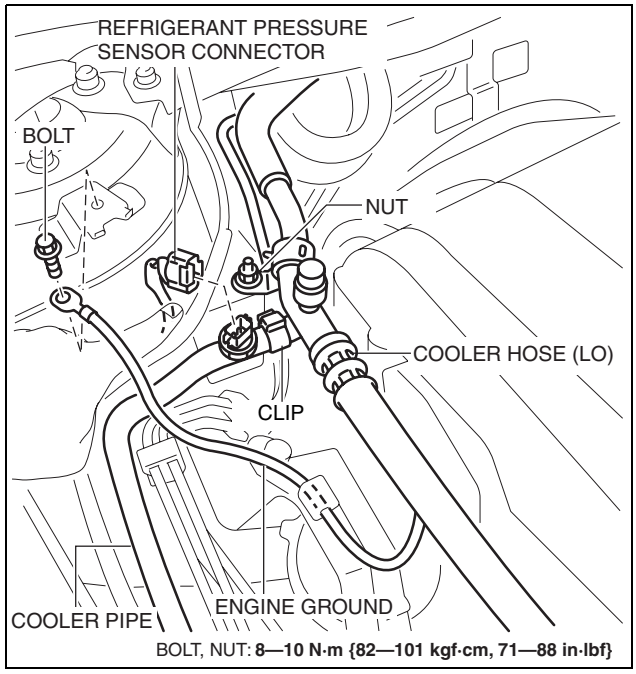

ac5wzw0000182

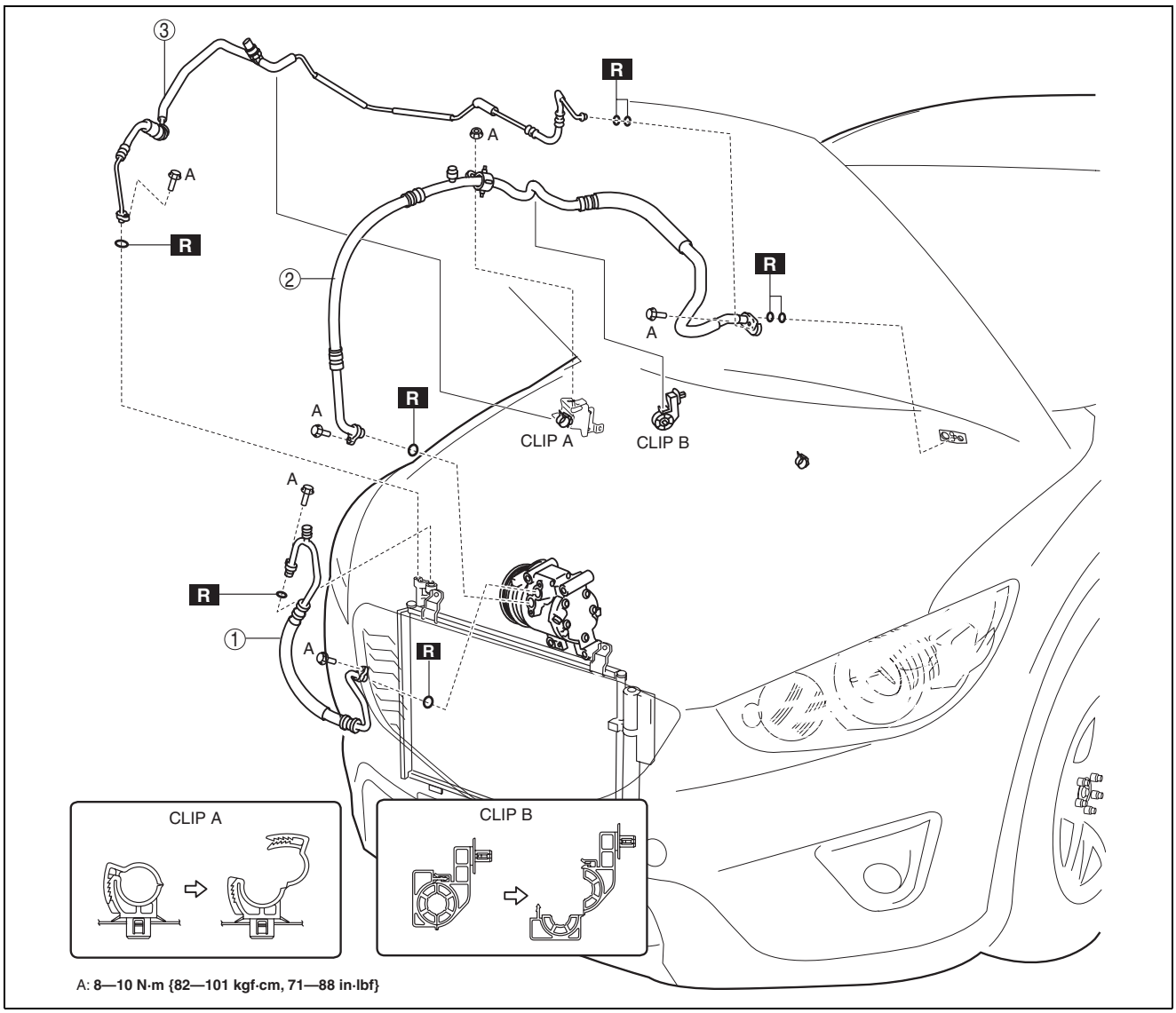

07

BASIC SYSTEM

1	Cooler hose (HI) (See 07-11-47 Refrigerant Line Installation Note (1).) (See 07-11-47 Refrigerant Line Installation Note (2).)
2	Cooler hose (LO) (See 07-11-47 Refrigerant Line Installation Note (1).) (See 07-11-47 Refrigerant Line Installation Note (2).)
3	Cooler pipe (See 07-11-47 Refrigerant Line Installation Note (1).) (See 07-11-47 Refrigerant Line Installation Note (2).)

10. Install in the reverse order of removal.
11. Perform the refrigerant system performance test. (See 07-10-9 REFRIGERANT SYSTEM PERFORMANCE TEST.)

SKYACTIV-D 2.2

1. Disconnect the negative battery cable. (See 01-17B-9 NEGATIVE BATTERY CABLE DISCONNECTION/CONNECTION [SKYACTIV-D 2.2].)
2. Discharge the refrigerant. (See 07-10-3 REFRIGERANT CHARGING.)
3. Remove the engine cover. (See 01-10B-4 ENGINE COVER REMOVAL/INSTALLATION [SKYACTIV-D 2.2].)
4. Remove the nut from underside of vehicle.

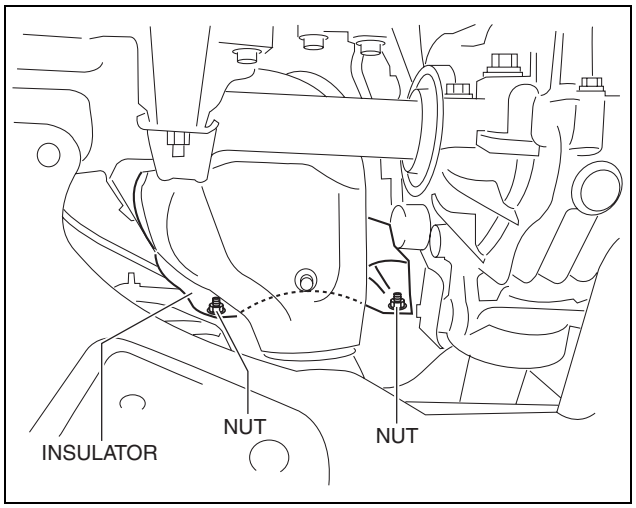

ac5wzw0000183

5. Remove the nut from top side of vehicle.

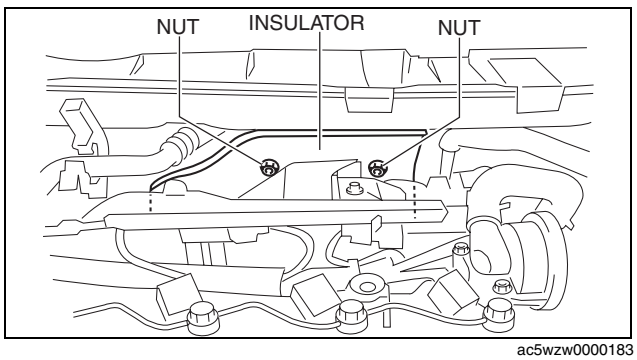

ac5wzw0000183

BASIC SYSTEM

6. Remove the insulator as shown in the figure.

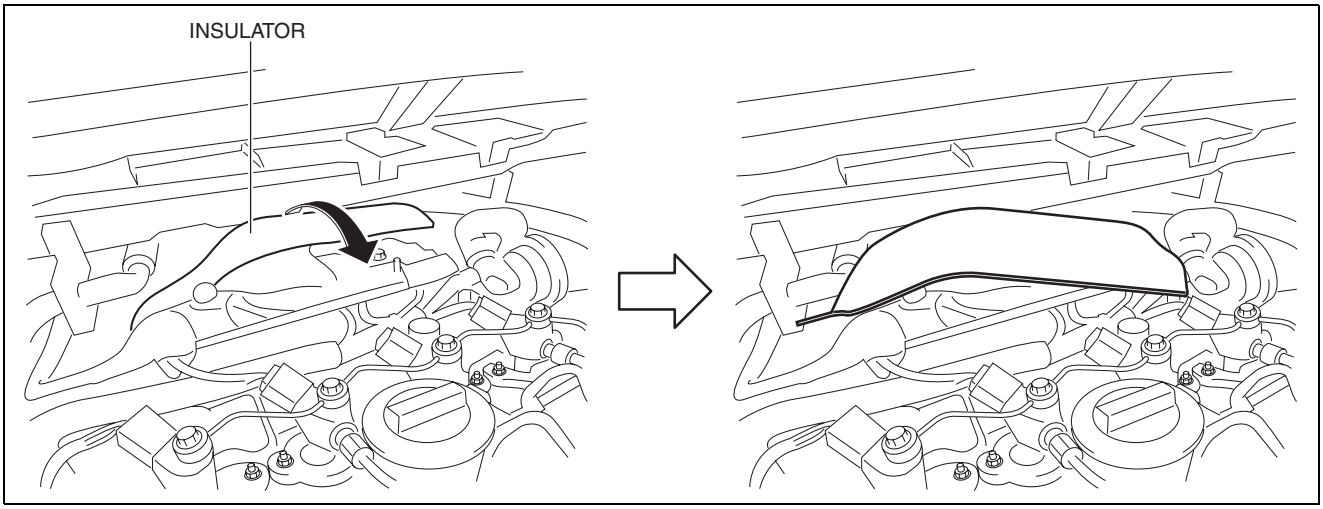

ac5wzw0000183

7. Detach the clip.

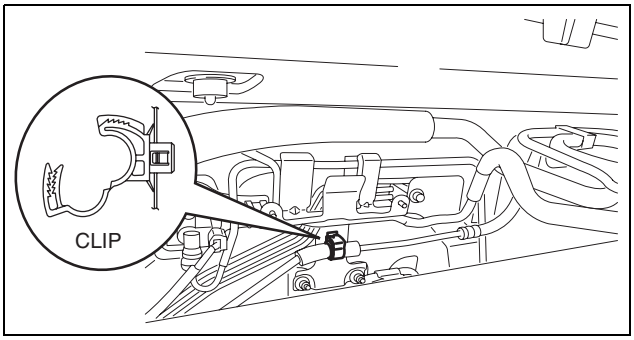

ac5wzw0000182

8. Disconnect the vacuum hose.

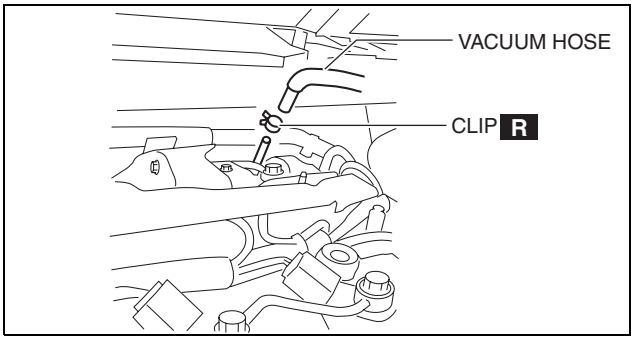

ac5wzw0000183

BASIC SYSTEM

9. Set the heater hose out of the way as shown in the figure.

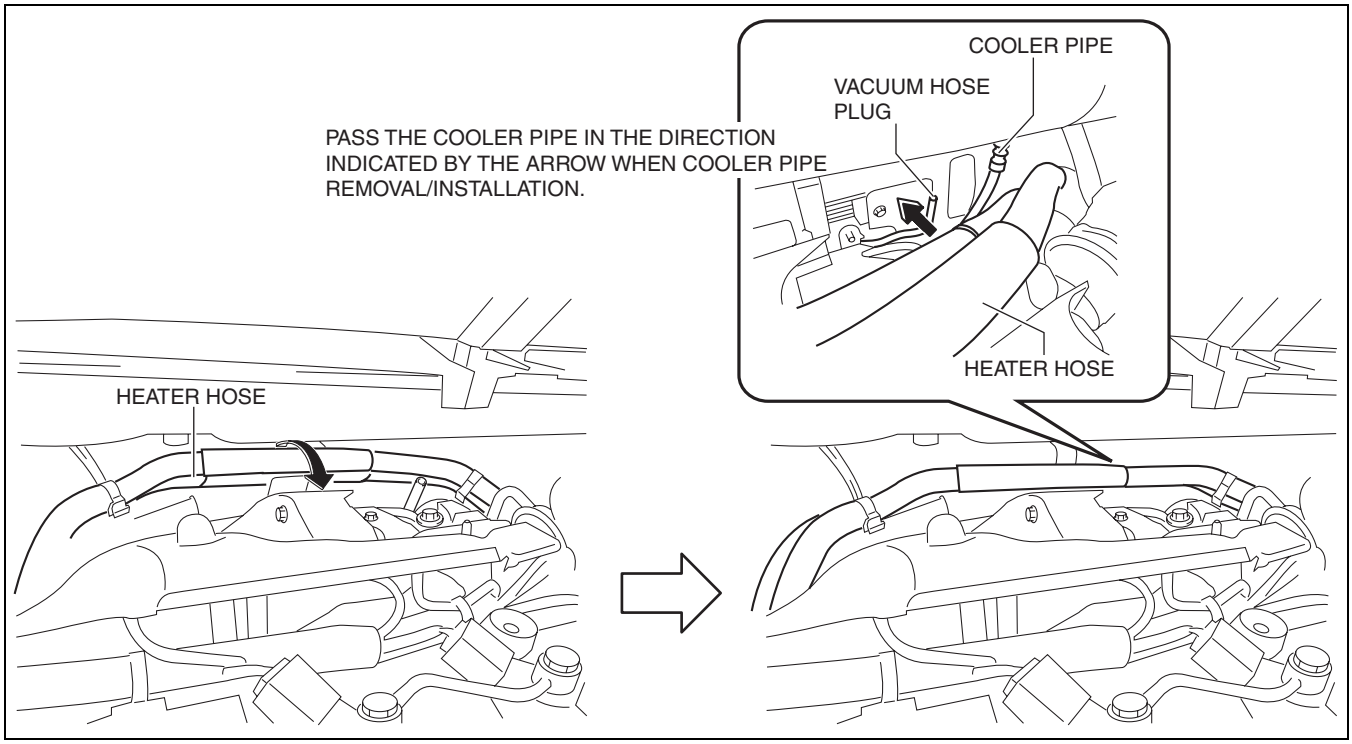

ac5wzw0000183

10. Detach the fastener.
11. Remove the bolt and disconnect the engine ground.

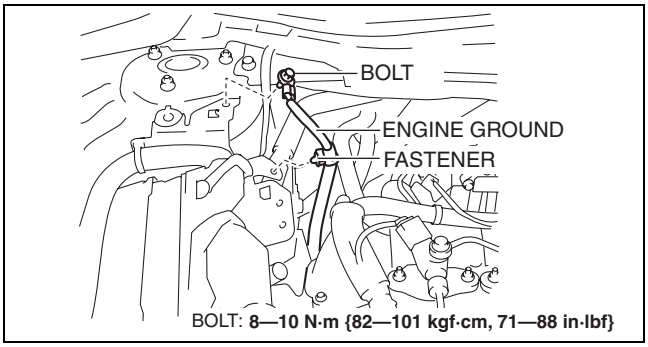

ac5wzw0000182

12. Remove the bolts for the PCM.
13. Remove the fastener for the vehicle wiring harness connector.

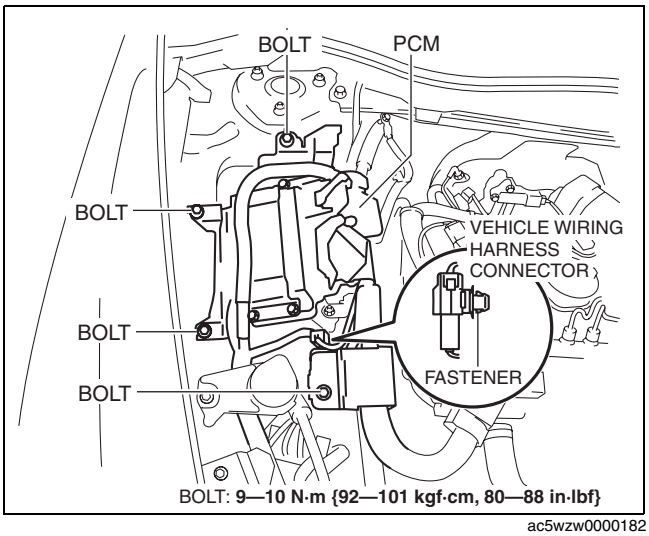

ac5wzw0000182

BASIC SYSTEM

14. Set the PCM out of the way.

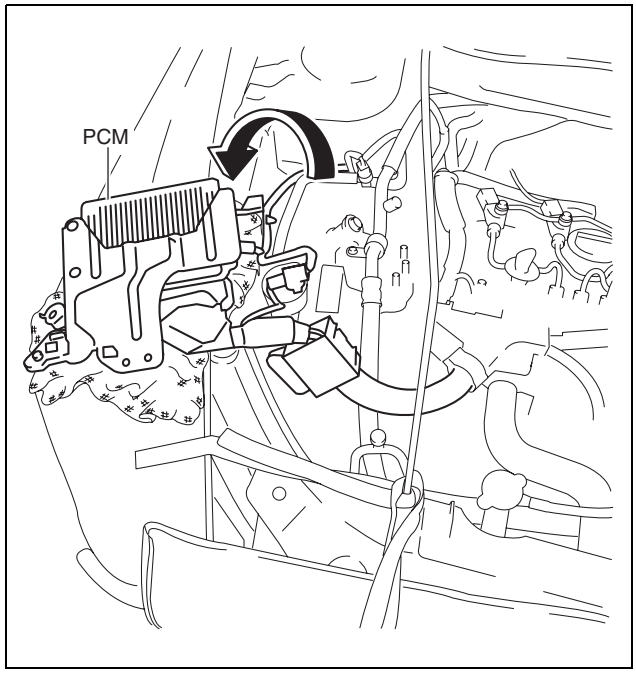

ac5wzw0000182

15. Disconnect the refrigerant pressure sensor connector.
16. Remove in the order indicated in the table. Do not allow compressor oil to spill.

Caution

- **If moisture or foreign material enters the refrigeration cycle, cooling ability will be lowered and abnormal noise will occur. Always immediately plug all open fittings after removing any refrigeration cycle parts to keep moisture or foreign material out of the cycle.**

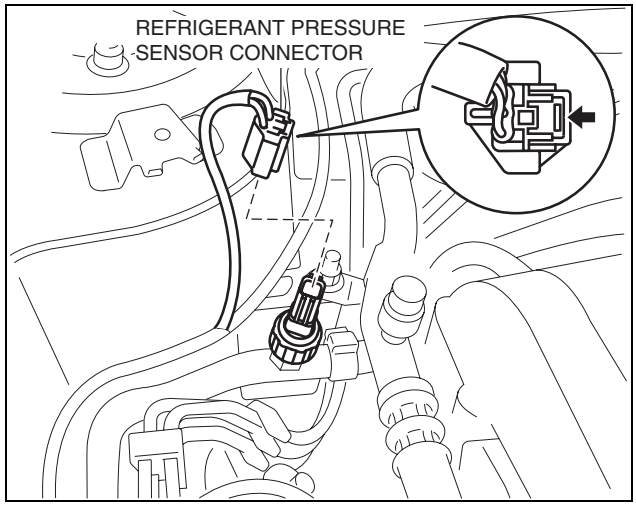

ac5wzw0000182

BASIC SYSTEM

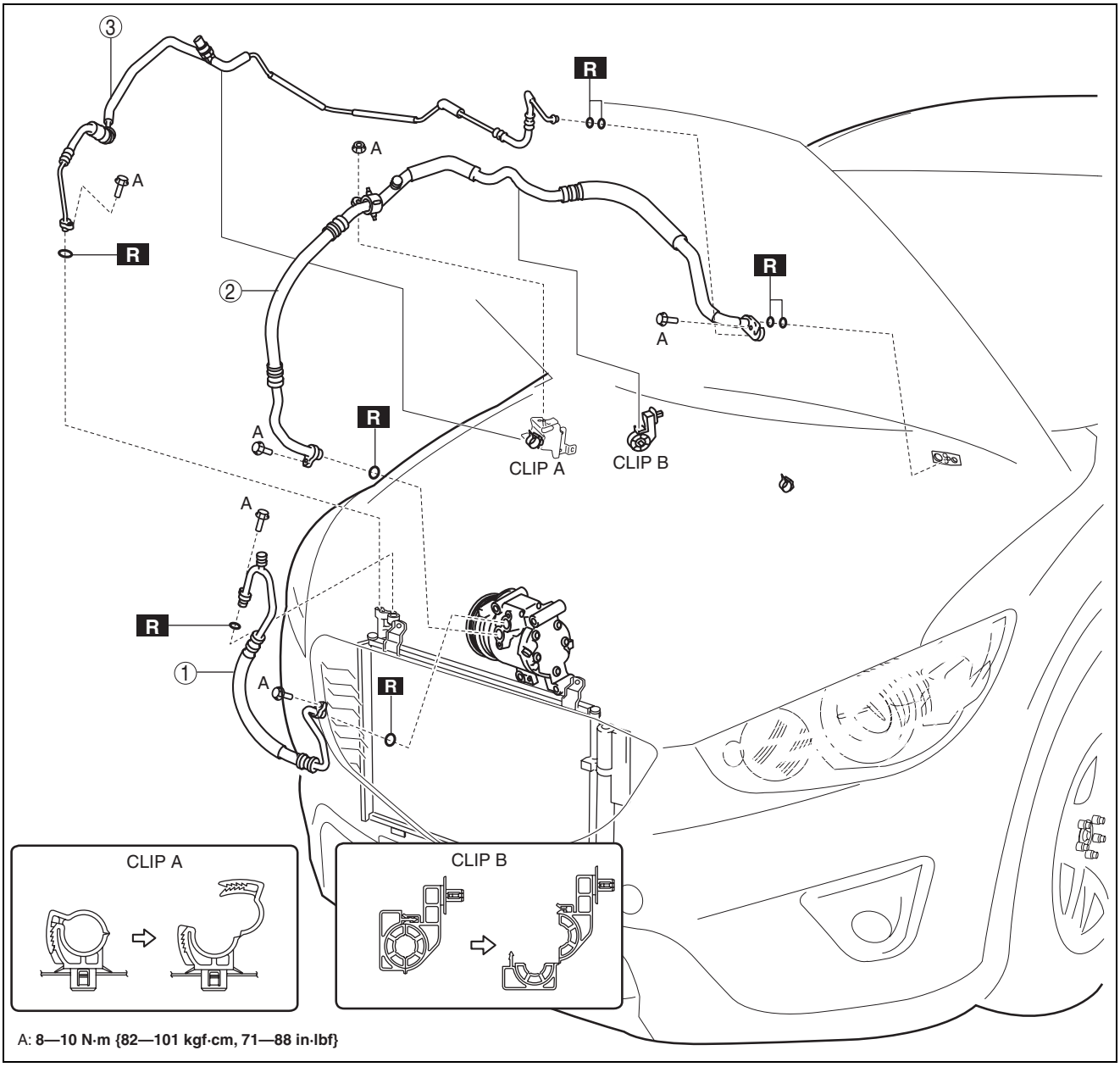

ac5wzw0000183

1	Cooler hose (HI) (See 07-11-47 Refrigerant Line Installation Note (1).) (See 07-11-47 Refrigerant Line Installation Note (2).)
2	Cooler hose (LO) (See 07-11-47 Refrigerant Line Installation Note (1).) (See 07-11-47 Refrigerant Line Installation Note (2).)

3	Cooler pipe (See 07-11-47 Refrigerant Line Installation Note (1).) (See 07-11-47 Refrigerant Line Installation Note (2).)

17. Install in the reverse order of removal.
18. Perform the refrigerant system performance test. (See 07-10-9 REFRIGERANT SYSTEM PERFORMANCE TEST.)

BASIC SYSTEM

Refrigerant Line Installation Note (1)

1. Apply compressor oil to the O-rings and connect the joints.
2. Tighten the joints.

Block joint type

1. Tighten the joint bolt by hand.
2. Connect the block joint type pipes by grasping the female side of the block with pliers or similar tool and holding firmly, then tighten the connection bolt or nut with a torque wrench.

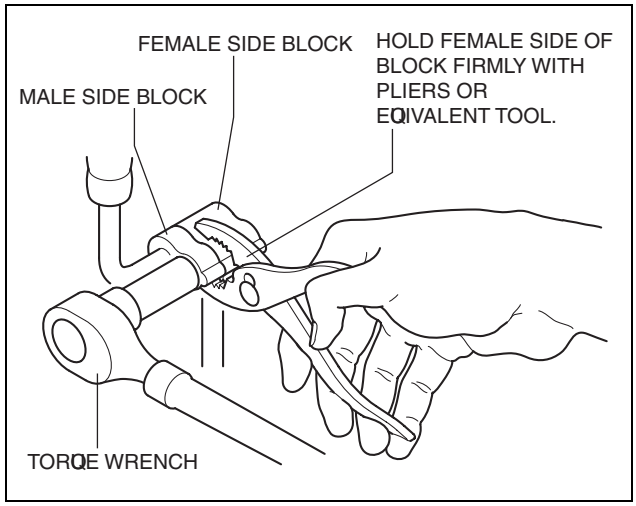

ac5wzw0000281

Refrigerant Line Installation Note (2)

1. After replacing the refrigerant line, add compressor oil to the refrigeration cycle.
   - After replacing the cooler hose (HI)
     Supplemental oil amount (approx. quantity)
     — 1 ml {1 cc, 0.03 fl oz}
   - After replacing the cooler hose (LO)
     Supplemental oil amount (approx. quantity)
     — 3 ml {3 cc, 0.1 fl oz}
   - After replacing the cooler pipe
     Supplemental oil amount (approx. quantity)
     — 1 ml {1 cc, 0.03 fl oz}

07-40A CONTROL SYSTEM [FULL-AUTO AIR CONDITIONER]

HVAC CONTROL SYSTEM LOCATION INDEX [FULL-AUTO AIR CONDITIONER] ---------- **07-40A-2**

AIR INTAKE ACTUATOR REMOVAL/INSTALLATION [FULL-AUTO AIR CONDITIONER] ---------- **07-40A-5**

L.H.D ---------- 07-40A-5

R.H.D ---------- 07-40A-6

AIR INTAKE ACTUATOR INSPECTION [FULL-AUTO AIR CONDITIONER] ---------- **07-40A-6**

AIR MIX ACTUATOR REMOVAL/INSTALLATION [FULL-AUTO AIR CONDITIONER] ---------- **07-40A-7**

AIR MIX ACTUATOR INSPECTION [FULL-AUTO AIR CONDITIONER] ---------- **07-40A-9**

AIRFLOW MODE ACTUATOR REMOVAL/INSTALLATION [FULL-AUTO AIR CONDITIONER] ---------- **07-40A-13**

AIRFLOW MODE ACTUATOR INSPECTION [FULL-AUTO AIR CONDITIONER ---------- **07-40A-15**

BLOWER MOTOR REMOVAL/INSTALLATION [FULL-AUTO AIR CONDITIONER] ---------- **07-40A-16**

BLOWER MOTOR INSPECTION [FULL-AUTO AIR CONDITIONER] ---------- **07-40A-16**

MAGNETIC CLUTCH DISASSEMBLY/ASSEMBLY [FULL-AUTO AIR CONDITIONER] ---------- **07-40A-17**

Bolt Removal/Installation ---------- 07-**40A-17**

Snap Ring Removal/Installation Note ---------- **07-40A-18**

Shim Installation Note ---------- **07-40A-18**

MAGNETIC CLUTCH ADJUSTMENT [FULL-AUTO AIR CONDITIONER] ---------- **07-40A-18**

MAGNETIC CLUTCH INSPECTION [FULL-AUTO AIR CONDITIONER] ---------- **07-40A-19**

POWER METAL OXIDE SEMICONDUCTOR FIELD EFFECT TRANSISTOR (POWER MOS FET) REMOVAL/INSTALLATION [FULL-AUTO AIR CONDITIONER] ---------- **07-40A-19**

POWER METAL OXIDE SEMICONDUCTOR FIELD EFFECT TRANSISTOR (POWER MOS FET) INSPECTION [FULL-AUTO AIR CONDITIONER] ---------- **07-40A-20**

SOLAR REDIATION SENSOR REMOVAL/INSTALLATION [FULL-AUTO AIR CONDITIONER] ---------- **07-40A-21**

Solar Radiation Sensor Installation Note ---------- 07-**40A-22**

SOLAR REDIATION SENSOR REMOVAL/INSTALLATION [FULL-AUTO AIR CONDITIONER] ---------- **07-40A-22**

AMBIENT TEMPERATURE SENSOR REMOVAL/INSTALLATION [FULL-AUTO AIR CONDITIONER] ---------- **07-40A-22**

AMBIENT TEMPERATURE SENSOR INSPECTION [FULL-AUTO AIR CONDITIONER] ---------- **07-40A-23**

CABIN TEMPERATURE SENSOR REMOVAL/INSTALLATION [FULL-AUTO AIR CONDITIONER] ---------- **07-40A-23**

Aspirator Removal Note ---------- **07-40A-25**

CABIN TEMPERATURE SENSOR INSPECTION [FULL-AUTO AIR CONDITIONER] ---------- **07-40A-26**

EVAPORATOR TEMPERATURE SENSOR REMOVAL/INSTALLATION [FULL-AUTO AIR CONDITIONER] ---------- **07-40A-26**

EVAPORATOR TEMPERATURE SENSOR INSPECTION [FULL-AUTO AIR CONDITIONER] ---------- **07-40A-27**

HEATER CORE TEMPERATURE SENSOR REMOVAL/INSTALLATION [FULL-AUTO AIR CONDITIONER] ---------- **07-40A-27**

HEATER CORE TEMPERATURE SENSOR INSPECTION [FULL-AUTO AIR CONDITIONER] ---------- **07-40A-29**

REFRIGERANT PRESSURE SENSOR REMOVAL/INSTALLATION [FULL-AUTO AIR CONDITIONER] ---------- **07-40A-29**

Refrigerant Pressure Sensor Installation Note ---------- **07-40A-30**

REFRIGERANT PRESSURE SENSOR INSPECTION [FULL-AUTO AIR CONDITIONER] ---------- **07-40A-30**

SKYACTIV-G 2.0 ---------- **07-40A-30**

SKYACTIV-D 2.2 ---------- **07-40A-31**

CLIMATE CONTROL UNIT REMOVAL/INSTALLATION [FULL-AUTO AIR CONDITIONER] ---------- **07-40A-32**

CLIMATE CONTROL UNIT INSPECTION [FULL-AUTO AIR CONDITIONER] ---------- **07-40A-33**

Terminal Voltage Table (Reference) ---------- **07-40A-33**

PTC (POSITIVE TEMPERATURE COEFFICIENT) HEATER

CONTROL SYSTEM [FULL-AUTO AIR CONDITIONER]

REMOVAL/INSTALLATION
[FULL-AUTO AIR CONDITIONER] ---------- 07-40A-37

PTC (POSITIVE TEMPERATURE
COEFFICIENT) HEATER INSPECTION
[FULL-AUTO AIR CONDITIONER] ---------- 07-40A-39

WATER PUMP
REMOVAL/INSTALLATION
[FULL-AUTO AIR CONDITIONER] ---------- 07-40A-39

Water Pump Unit
Removal Note (SKYACTIV-D 2.2) ---------- 07-40A-41

Water Pump Unit
Disassemble Note ---------- 07-40A-41

WATER PUMP INSPECTION
[FULL-AUTO AIR CONDITIONER] ---------- 07-40A-42

CONTROL SYSTEM [FULL-AUTO AIR CONDITIONER]

HVAC CONTROL SYSTEM LOCATION INDEX [FULL-AUTO AIR CONDITIONER]

R.H.D.

id0740a1803600

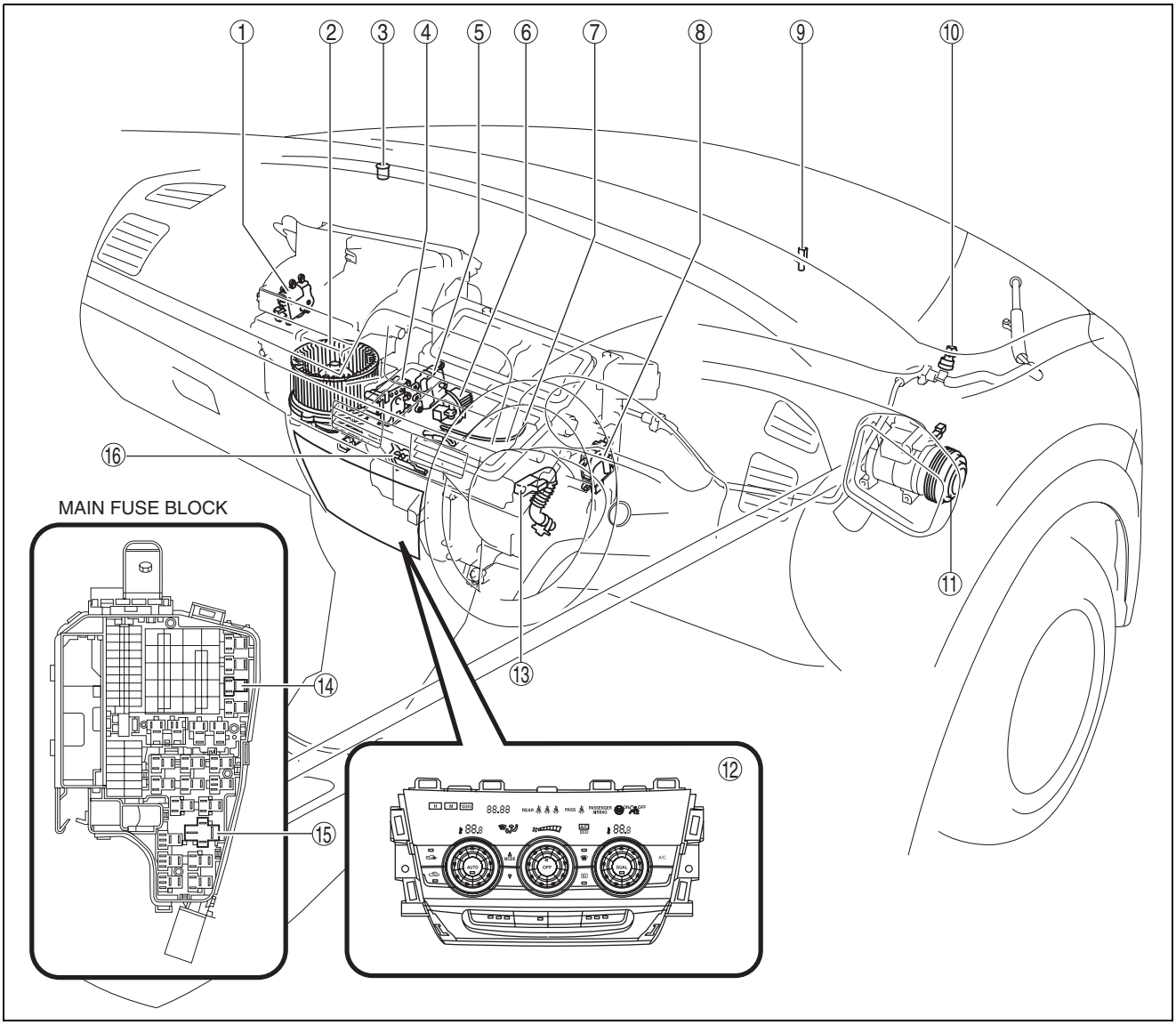

ac5wzw0000187

1	Air intake actuator (See 07-40A-5 AIR INTAKE ACTUATOR REMOVAL/INSTALLATION [FULL-AUTO AIR CONDITIONER].) (See 07-40A-6 AIR INTAKE ACTUATOR INSPECTION [FULL-AUTO AIR CONDITIONER].)
2	Blower motor (See 07-40A-16 BLOWER MOTOR REMOVAL/INSTALLATION [FULL-AUTO AIR CONDITIONER].) (See 07-40A-16 BLOWER MOTOR INSPECTION [FULL-AUTO AIR CONDITIONER].)
3	Solar radiation sensor (See 07-40A-21 SOLAR RADIATION SENSOR REMOVAL/INSTALLATION [FULL-AUTO AIR CONDITIONER].) (See 07-40A-22 SOLAR RADIATION SENSOR INSPECTION [FULL-AUTO AIR CONDITIONER].)
4	Airflow mode actuator (See 07-40A-13 AIRFLOW MODE ACTUATOR REMOVAL/INSTALLATION [FULL-AUTO AIR CONDITIONER].) (See 07-40A-15 AIRFLOW MODE ACTUATOR INSPECTION [FULL-AUTO AIR CONDITIONER].)
5	Passenger-side air mix actuator (See 07-40A-7 AIR MIX ACTUATOR REMOVAL/INSTALLATION [FULL-AUTO AIR CONDITIONER].) (See 07-40A-9 AIR MIX ACTUATOR INSPECTION [FULL-AUTO AIR CONDITIONER].)
6	Power MOS FET (See 07-40A-19 POWER METAL OXIDE SEMICONDUCTOR FIELD EFFECT TRANSISTOR (POWER MOS FET) REMOVAL/INSTALLATION [FULL-AUTO AIR CONDITIONER].) (See 07-40A-20 POWER METAL OXIDE SEMICONDUCTOR FIELD EFFECT TRANSISTOR (POWER MOS FET) INSPECTION [FULL-AUTO AIR CONDITIONER].)
7	Evaporator temperature sensor (See 07-40A-26 EVAPORATOR TEMPERATURE SENSOR REMOVAL/INSTALLATION [FULL-AUTO AIR CONDITIONER].) (See 07-40A-27 EVAPORATOR TEMPERATURE SENSOR INSPECTION [FULL-AUTO AIR CONDITIONER].)

CONTROL SYSTEM [FULL-AUTO AIR CONDITIONER]

8	Driver-side air mix actuator (See 07-40A-7 AIR MIX ACTUATOR REMOVAL/INSTALLATION [FULL-AUTO AIR CONDITIONER].) (See 07-40A-9 AIR MIX ACTUATOR INSPECTION [FULL-AUTO AIR CONDITIONER].)
9	Ambient temperature sensor (See 07-40A-22 AMBIENT TEMPERATURE SENSOR REMOVAL/INSTALLATION [FULL-AUTO AIR CONDITIONER].) (See 07-40A-23 AMBIENT TEMPERATURE SENSOR INSPECTION [FULL-AUTO AIR CONDITIONER].)
10	Refrigerant pressure sensor (See 07-40A-29 REFRIGERANT PRESSURE SENSOR REMOVAL/INSTALLATION [FULL-AUTO AIR CONDITIONER].) (See 07-40A-30 REFRIGERANT PRESSURE SENSOR INSPECTION [FULL-AUTO AIR CONDITIONER].)
11	Magnetic clutch (See 07-40A-17 MAGNETIC CLUTCH DISASSEMBLY/ASSEMBLY [FULL-AUTO AIR CONDITIONER].) (See 07-40A-18 MAGNETIC CLUTCH ADJUSTMENT [FULL-AUTO AIR CONDITIONER].) (See 07-40A-19 MAGNETIC CLUTCH INSPECTION [FULL-AUTO AIR CONDITIONER].)
12	Climate control unit (See 07-40A-32 CLIMATE CONTROL UNIT REMOVAL/INSTALLATION [FULL-AUTO AIR CONDITIONER].) (See 07-40A-33 CLIMATE CONTROL UNIT INSPECTION [FULL-AUTO AIR CONDITIONER].)
13	Cabin temperature sensor (See 07-40A-23 CABIN TEMPERATURE SENSOR REMOVAL/INSTALLATION [FULL-AUTO AIR CONDITIONER].) (See 07-40A-26 CABIN TEMPERATURE SENSOR INSPECTION [FULL-AUTO AIR CONDITIONER].)
14	A/C relay (See 09-21-28 RELAY LOCATION.) (See 09-21-29 RELAY INSPECTION.)
15	Blower relay (See 09-21-28 RELAY LOCATION.) (See 09-21-29 RELAY INSPECTION.)
16	Heater core temperature sensor (with heater core temperature sensor) (See 07-40A-27 HEATER CORE TEMPERATURE SENSOR REMOVAL/INSTALLATION [FULL-AUTO AIR CONDITIONER].) (See 07-40A-29 HEATER CORE TEMPERATURE SENSOR INSPECTION [FULL-AUTO AIR CONDITIONER].)

AIR INTAKE ACTUATOR REMOVAL/INSTALLATION [FULL-AUTO AIR CONDITIONER]

id0740a1801400

R.H.D.

1. Disconnect the negative battery cable. (See 01-17A-11 NEGATIVE BATTERY CABLE DISCONNECTION/CONNECTION [SKYACTIV-G 2.0].)(See 01-17A-13 NEGATIVE BATTERY CABLE DISCONNECTION/CONNECTION [SKYACTIV-G 2.0 (WITHOUT i-stop)].)(See 01-17B-9 NEGATIVE BATTERY CABLE DISCONNECTION/CONNECTION [SKYACTIV-D 2.2].)
2. Remove the following parts:
   (1) Shift lever knob (MTX) (See 05-16A-1 MANUAL TRANSAXLE SHIFT MECHANISM REMOVAL/INSTALLATION [C66M-R, C66MX-R].) (See 05-16B-1 MANUAL TRANSAXLE SHIFT MECHANISM REMOVAL/INSTALLATION [D66M-R, D66MX-R].)
   (2) Glove compartment (See 09-17-30 GLOVE COMPARTMENT REMOVAL/INSTALLATION.)
   (3) Front console box (See 09-17-40 FRONT CONSOLE BOX REMOVAL/INSTALLATION.)
   (4) Shift panel (See 09-17-42 SHIFT PANEL REMOVAL/INSTALLATION.)
   (5) Upper panel (See 09-17-44 UPPER PANEL REMOVAL/INSTALLATION.)
   (6) Rear console (See 09-17-45 REAR CONSOLE REMOVAL/INSTALLATION.)
   (7) Side wall (See 09-17-49 SIDE WALL REMOVAL/INSTALLATION.)
   (8) Decoration panel (See 09-17-33 DECORATION PANEL REMOVAL/INSTALLATION.)
   (9) Front console (See 09-17-50 FRONT CONSOLE REMOVAL/INSTALLATION.)
   (10)Front scuff plate (passenger-side) (See 09-17-61 FRONT SCUFF PLATE REMOVAL/INSTALLATION.)
   (11)Front side trim (passenger-side) (See 09-17-62 FRONT SIDE TRIM REMOVAL/INSTALLATION.)
   (12)Dashboard under cover (See 09-17-35 DASHBOARD UNDER COVER REMOVAL/INSTALLATION.)
   (13)Front heat duct (passenger-side) (See 07-11-22 FRONT HEAT DUCT REMOVAL/INSTALLATION.)
   (14)Lower panel (passenger-side) (See 09-17-35 LOWER PANEL REMOVAL/INSTALLATION.)
3. Remove the blower unit. (See 07-11-5 BLOWER UNIT REMOVAL/INSTALLATION.)

CONTROL SYSTEM [FULL-AUTO AIR CONDITIONER]

4. Remove the screw, then remove the air intake actuator.
5. Install in the reverse order of removal.

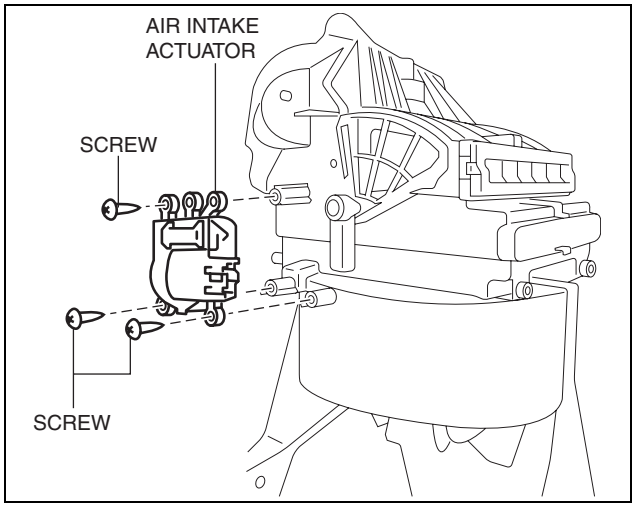

ac5wzw0000184

AIR INTAKE ACTUATOR INSPECTION [FULL-AUTO AIR CONDITIONER]

id0740a1801500

1. Connect battery positive voltage to air intake actuator terminal B (or C), connect terminal C (or B) to ground, and then verify that the air intake actuator operates as shown in the table.
   - If the operation condition is not normal, replace the air intake actuator.

R.H.D.

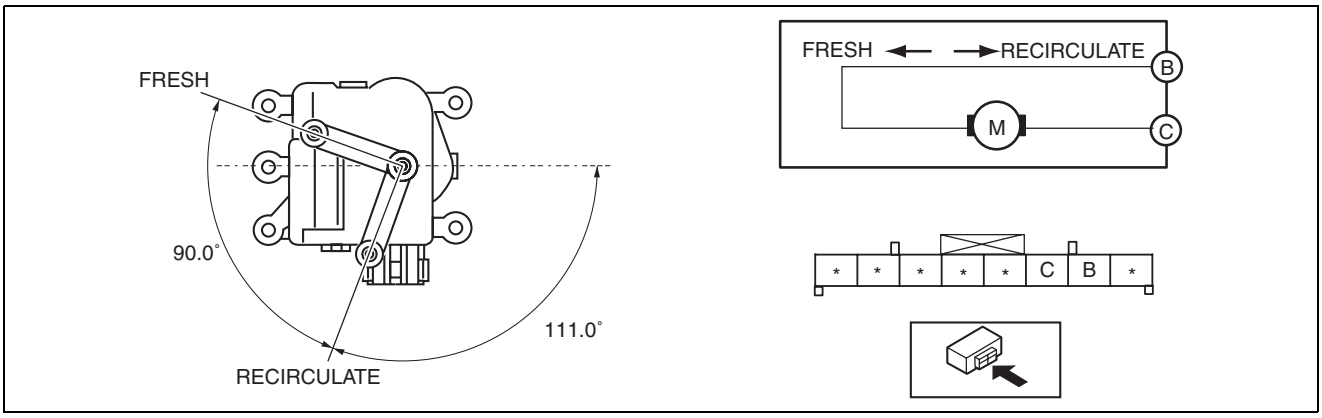

ac5wzw0000184

Terminal		Air intake actuator operation
B	C	
B+	Ground	RECIRCULATE → FRESH
Ground	B+	FRESH → RECIRCULATE

AIR MIX ACTUATOR REMOVAL/INSTALLATION [FULL-AUTO AIR CONDITIONER]

id0740a1802400

R.H.D.
Driver-side

1. Disconnect the negative battery cable. (See 01-17A-11 NEGATIVE BATTERY CABLE DISCONNECTION/CONNECTION [SKYACTIV-G 2.0].)(See 01-17A-13 NEGATIVE BATTERY CABLE DISCONNECTION/CONNECTION [SKYACTIV-G 2.0 (WITHOUT i-stop)].)(See 01-17B-9 NEGATIVE BATTERY CABLE DISCONNECTION/CONNECTION [SKYACTIV-D 2.2].)
2. Remove the following parts:
   (1) Side wall (driver-side) (See 09-17-49 SIDE WALL REMOVAL/INSTALLATION.)
   (2) Front heat duct (driver-side) (See 07-11-22 FRONT HEAT DUCT REMOVAL/INSTALLATION.)

CONTROL SYSTEM [FULL-AUTO AIR CONDITIONER]

3. Disconnect the air mix actuator connector.
4. Remove the screw.
5. Remove the driver-side air mix actuator.
6. Install in the reverse order of removal.

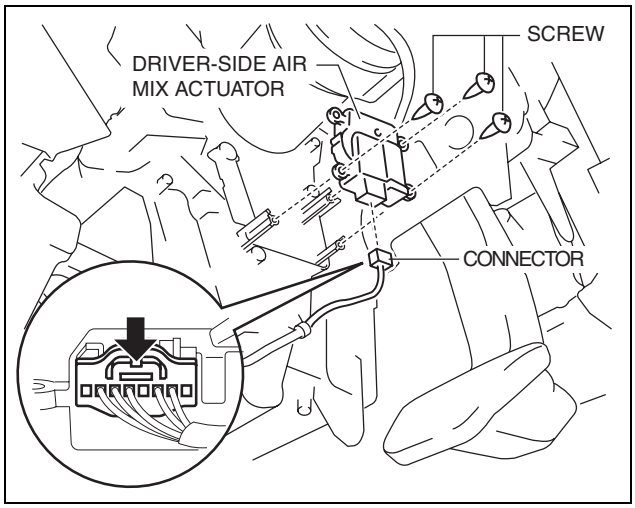

ac5wzw0000185

Passenger-side

1. Disconnect the negative battery cable. (See 01-17A-11 NEGATIVE BATTERY CABLE DISCONNECTION/CONNECTION [SKYACTIV-G 2.0].)(See 01-17A-13 NEGATIVE BATTERY CABLE DISCONNECTION/CONNECTION [SKYACTIV-G 2.0 (WITHOUT i-stop)].)(See 01-17B-9 NEGATIVE BATTERY CABLE DISCONNECTION/CONNECTION [SKYACTIV-D 2.2].)
2. Remove the following parts:
   (1) Dashboard under cover (See 09-17-35 DASHBOARD UNDER COVER REMOVAL/INSTALLATION.)
   (2) Glove compartment (See 09-17-30 GLOVE COMPARTMENT REMOVAL/INSTALLATION.)
3. Disconnect the air mix actuator connector.
4. Remove the screw.
5. Remove the passenger-side air mix actuator.
6. Install in the reverse order of removal.

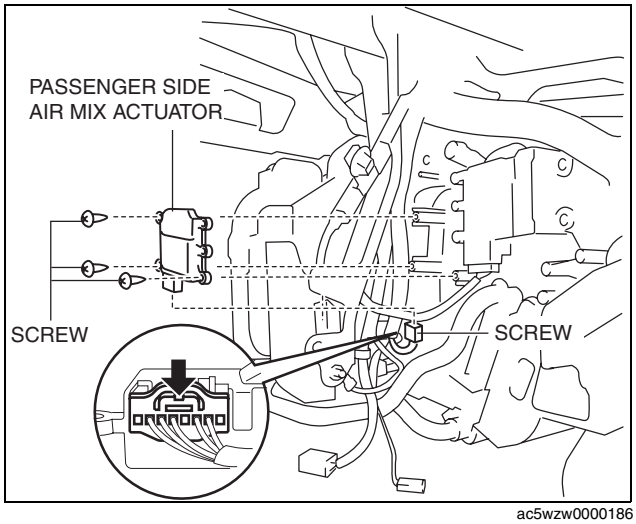

ac5wzw0000186

CONTROL SYSTEM [FULL-AUTO AIR CONDITIONER]

AIR MIX ACTUATOR INSPECTION [FULL-AUTO AIR CONDITIONER]

id0740a1802500

Caution

- **If the lever position exceeds the operation range shown in the figure, the circuit in the actuator could be damaged. Always perform an actuator operation inspection with the lever movement within the range shown in the figure.**

R.H.D.
Driver-side

1. Connect battery positive voltage to air mix actuator terminal C (or B), connect terminal B (or C) to ground, and then verify that the air mix actuator operates as shown in the table.
   - If the operation condition is not normal, replace the air mix actuator.

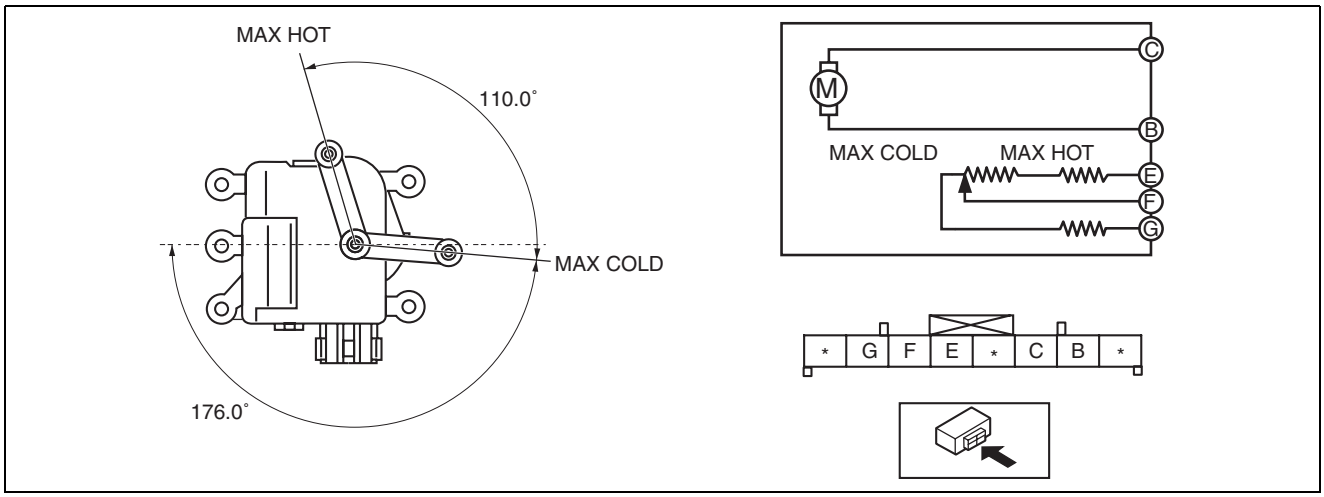

ac5wzw0000186

Terminal		Air mix actuator operation
B	C	
B+	Ground	HOT → COLD
Ground	B+	COLD → HOT

2. Verify that the resistance between terminals F and G, E and F matches the air mix actuator operation as shown in the graph.
   - If the operation condition and resistance are not normal, replace the air mix actuator.

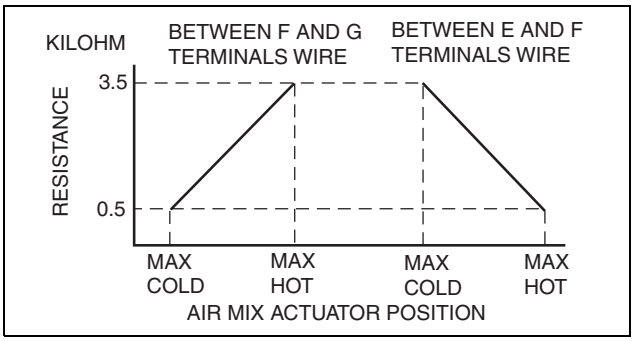

am3uuw0000404

07

CONTROL SYSTEM [FULL-AUTO AIR CONDITIONER]

Passenger-side

1. Connect battery positive voltage to air mix actuator terminal C (or B), connect terminal B (or C) to ground, and then verify that the air mix actuator operates as shown in the table.
   - If the operation condition is not normal, replace the air mix actuator.

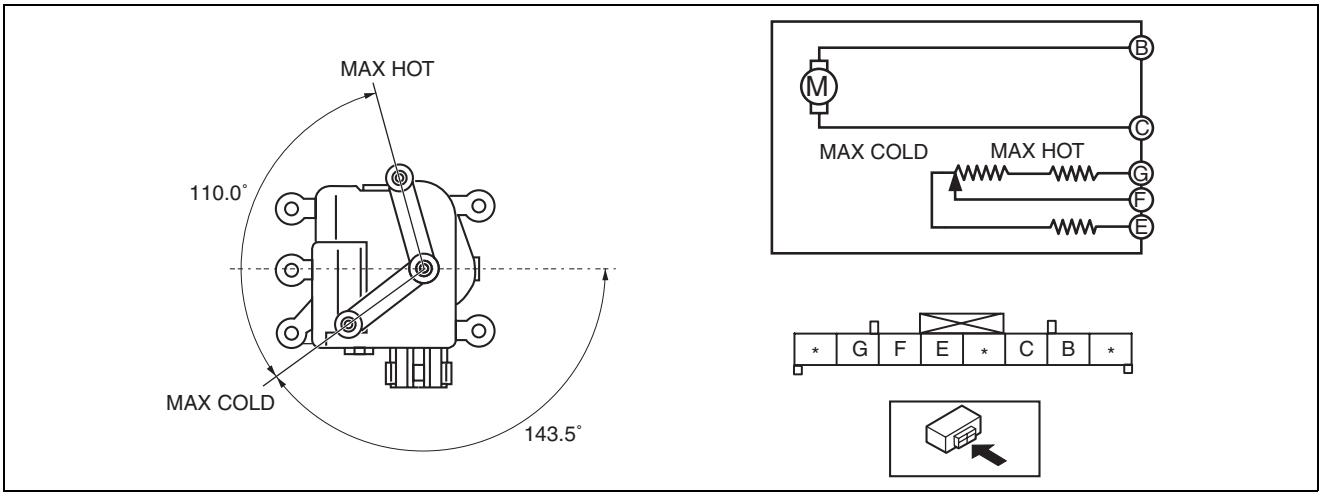

ac5wzw0000186

Terminal		Air mix actuator operation
B	C	
B+	Ground	COLD → HOT
Ground	B+	HOT → COLD

2. Verify that the resistance between terminals F and G, E and F matches the air mix actuator operation as shown in the graph.
   - If the operation condition and resistance are not normal, replace the air mix actuator.

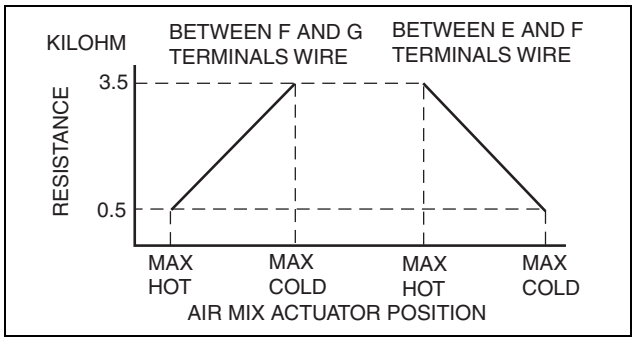

am3uuw0000404

CONTROL SYSTEM [FULL-AUTO AIR CONDITIONER]

AIRFLOW MODE ACTUATOR REMOVAL/INSTALLATION [FULL-AUTO AIR CONDITIONER]

id0740a1801600

1. Disconnect the negative battery cable. (See 01-17A-11 NEGATIVE BATTERY CABLE DISCONNECTION/CONNECTION [SKYACTIV-G 2.0].)(See 01-17A-13 NEGATIVE BATTERY CABLE DISCONNECTION/CONNECTION [SKYACTIV-G 2.0 (WITHOUT i-stop)].)(See 01-17B-9 NEGATIVE BATTERY CABLE DISCONNECTION/CONNECTION [SKYACTIV-D 2.2].)
2. Remove the following parts:
   (1) Dashboard under cover (See 09-17-35 DASHBOARD UNDER COVER REMOVAL/INSTALLATION.)
   (2) Glove compartment (See 09-17-30 GLOVE COMPARTMENT REMOVAL/INSTALLATION.)
3. Disconnect the airflow mode actuator connector.
4. Remove the screw.
5. Remove the airflow mode actuator.

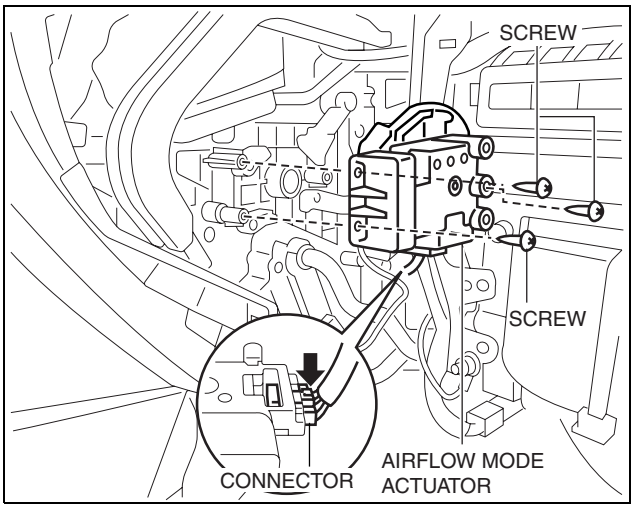

ac5wzw0000184

6. Remove the airflow mode main link.

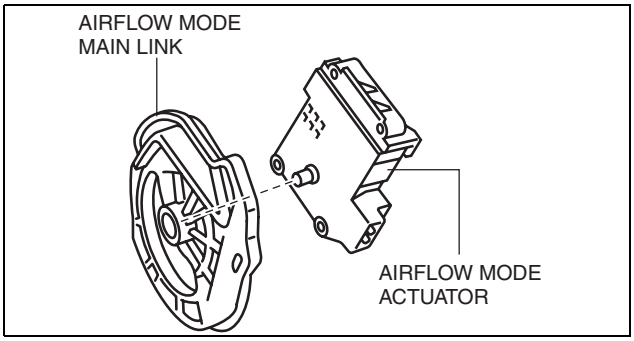

ac5wzw0000184

7. Remove the bracket.
8. Install in the reverse order of removal. (See 07-40A-14 Airflow Mode Actuator Installation Note.)

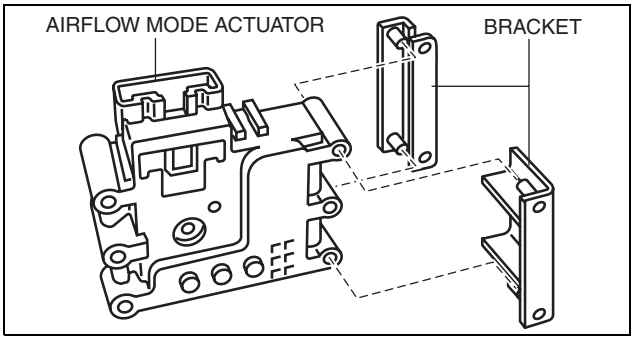

ac5wzw0000185

CONTROL SYSTEM [FULL-AUTO AIR CONDITIONER]

Airflow Mode Actuator Installation Note

1. Align the airflow mode main link and the airflow mode sub link projection as shown in the figure.
2. When lightly pressing the airflow main link to rotate it in the direction of the arrow, verify that the airflow mode door switches to the position for each mode.

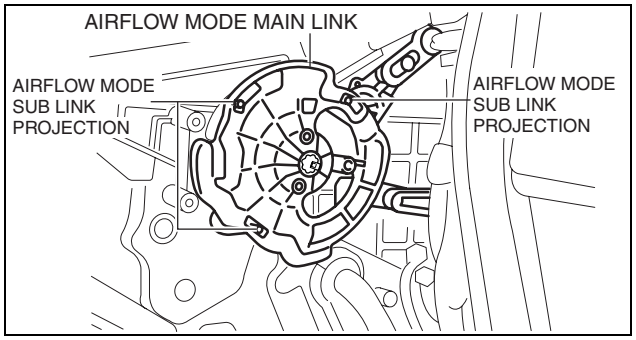

ac5wzw0000185

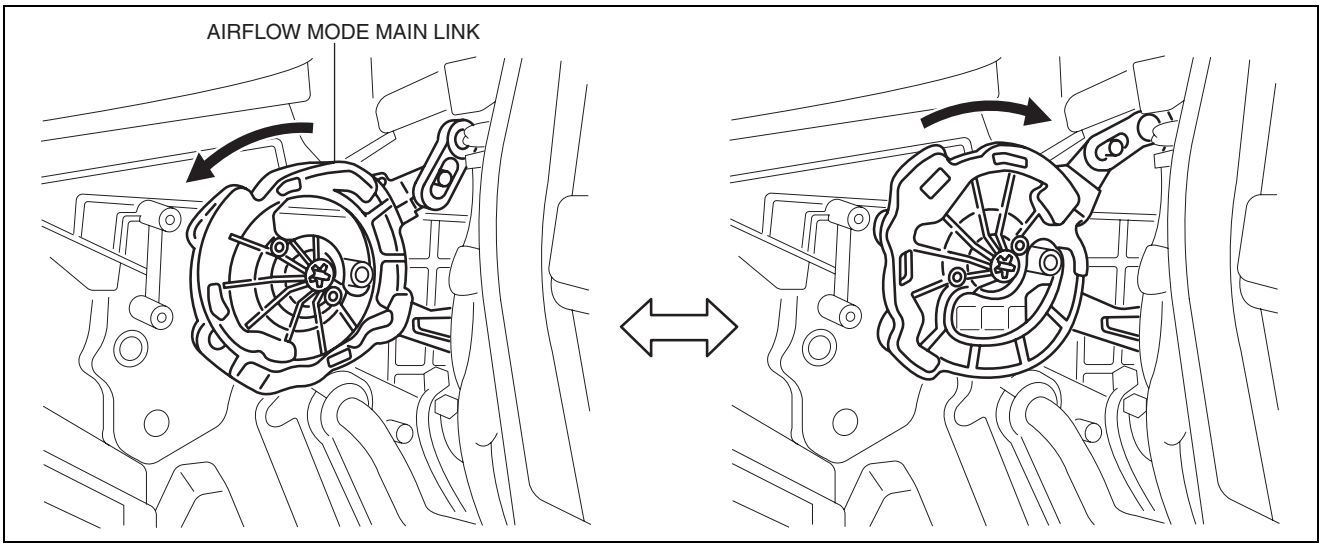

ac5wzw0000185

3. Align the airflow mode main link installation hole with the shape of the airflow mode actuator shaft, and install while holding the airflow mode main link.

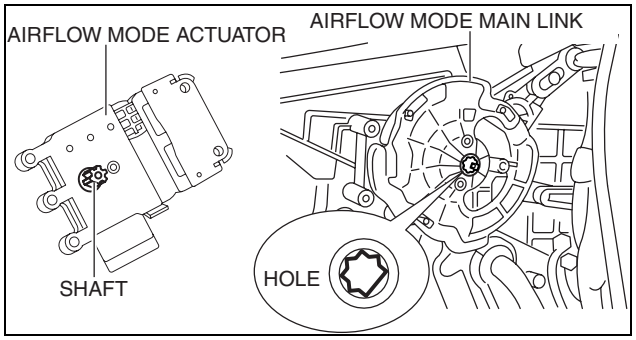

ac5wzw0000185

CONTROL SYSTEM [FULL-AUTO AIR CONDITIONER]

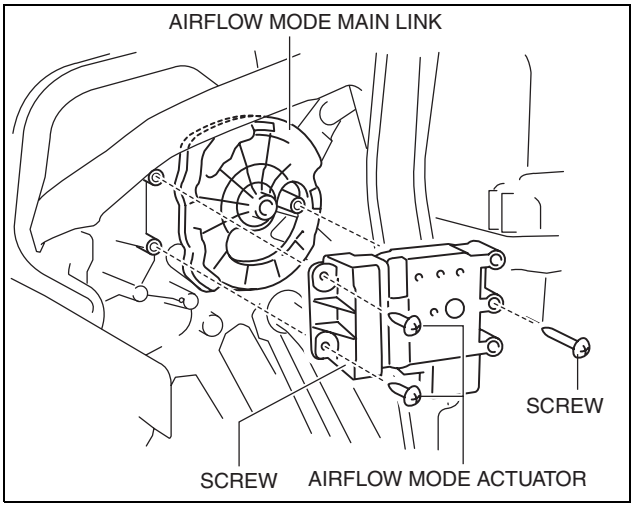

ac5wzw0000185

AIRFLOW MODE ACTUATOR INSPECTION [FULL-AUTO AIR CONDITIONER]

id0740a1801700

Caution

- **If the lever position exceeds the operation range shown in the figure, the circuit in the actuator could be damaged. Always perform an actuator operation inspection with the lever movement within the range shown in the figure.**

1. Connect battery positive voltage to airflow mode actuator terminal D (or F), connect terminal F (or D) to ground, and then verify that the airflow mode actuator operates as shown in the table.
   - If the operation condition is not normal, replace the airflow mode actuator.

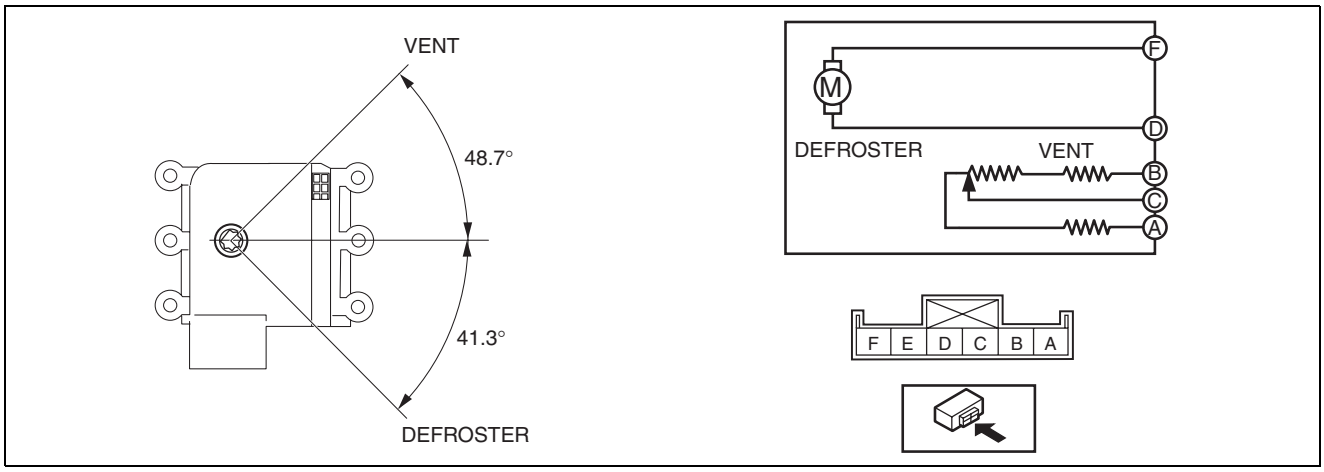

ac5wzw0000185

Terminal		Airflow mode actuator operation
D	F	
B+	Ground	DEFROSTER → VENT
Ground	B+	VENT → DEFROSTER

2. Verify that the resistance between terminals B and C, C and A matches the airflow mode actuator operation as shown in the graph.
   - If the operation condition and resistance are not normal, replace the airflow mode actuator.

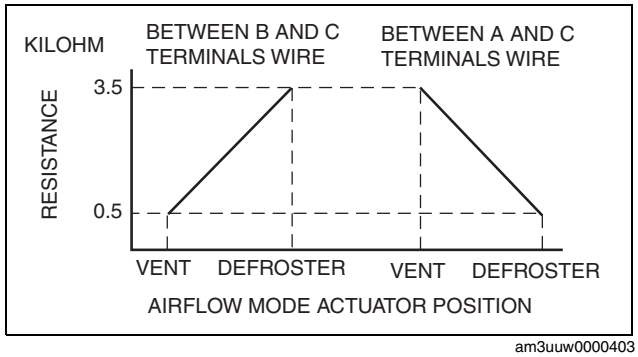

am3uuw0000403

CONTROL SYSTEM [FULL-AUTO AIR CONDITIONER]

BLOWER MOTOR REMOVAL/INSTALLATION [FULL-AUTO AIR CONDITIONER]

id0740a1800900

1. Disconnect the negative battery cable. (See 01-17A-11 NEGATIVE BATTERY CABLE DISCONNECTION/CONNECTION [SKYACTIV-G 2.0].)(See 01-17A-13 NEGATIVE BATTERY CABLE DISCONNECTION/CONNECTION [SKYACTIV-G 2.0 (WITHOUT i-stop)].)(See 01-17B-9 NEGATIVE BATTERY CABLE DISCONNECTION/CONNECTION [SKYACTIV-D 2.2].)
2. Remove the dashboard under cover. (See 09-17-35 DASHBOARD UNDER COVER REMOVAL/INSTALLATION.)
3. Disconnect the connector.
4. Remove the screws.

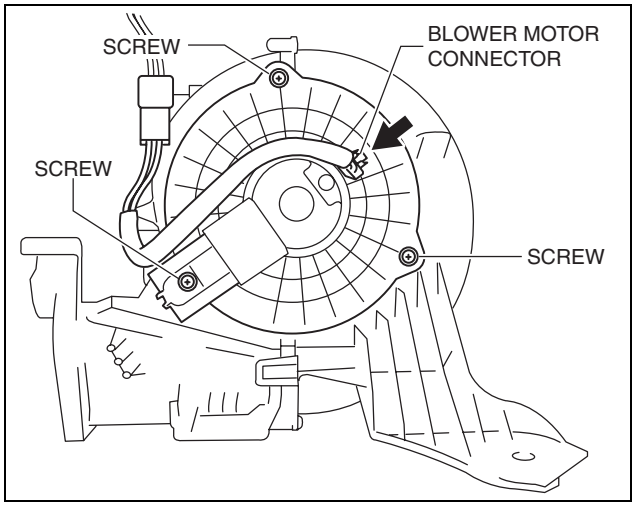

ac5wzw0000184

5. Remove the blower motor.
6. Install in the reverse order of removal.

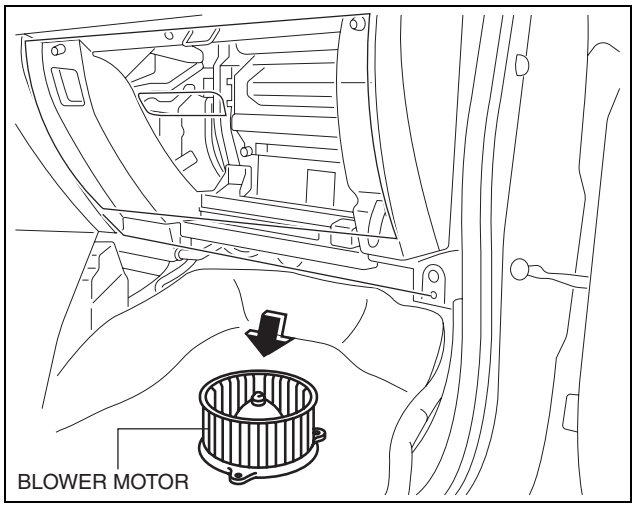

ac5wzw0000184

BLOWER MOTOR INSPECTION [FULL-AUTO AIR CONDITIONER]

id0740a1801000

1. Connect battery positive voltage to blower motor terminal B, connect terminal A to ground, and then verify its operation.
   - If there is any malfunction, replace the blower motor.

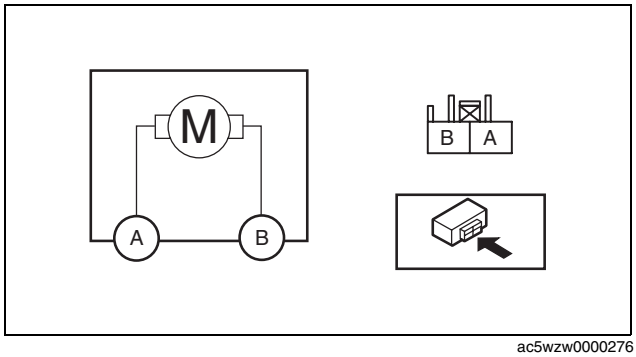

ac5wzw0000276

CONTROL SYSTEM [FULL-AUTO AIR CONDITIONER]

MAGNETIC CLUTCH DISASSEMBLY/ASSEMBLY [FULL-AUTO AIR CONDITIONER]

id0740a1800400

1. Disassemble in the order indicated in the table.

1	Bolt (See 07-40A-17 Bolt Removal/Installation Note.)
2	Pressure plate
3	Shim (See 07-40A-18 Shim Installation Note.)
4	Snap ring (See 07-40A-18 Snap Ring Removal/Installation Note.)
5	A/C compressor pulley
6	Snap ring (See 07-40A-18 Snap Ring Removal/Installation Note.)
7	Stator
8	A/C compressor body

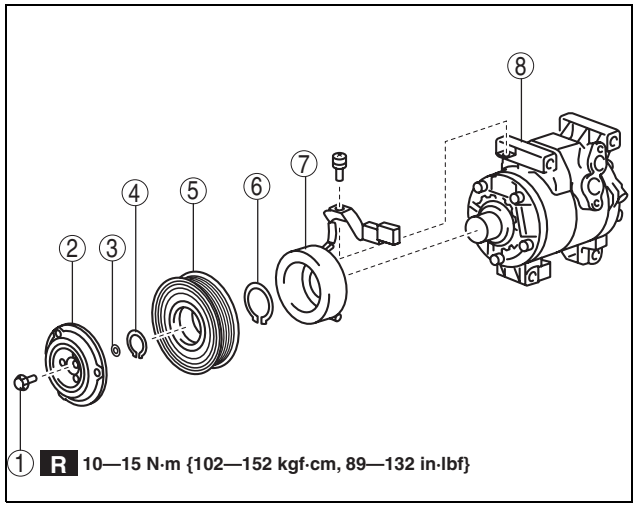

ac5wzw0000276

2. Assemble in the reverse order of disassembly.
3. Adjust the magnetic clutch clearance. (See 07-40A-18 MAGNETIC CLUTCH ADJUSTMENT [FULL-AUTO AIR CONDITIONER].)

Bolt Removal/Installation Note

1. When removing or installing the bolt, lock the A/C compressor pulley against rotation using the following procedure.

Caution

- **When connecting the positive battery cable to the magnetic clutch connector, use a cable with a female terminal of the correct size. Otherwise, load will be applied to the terminal, resulting in deformation or damage, and poor contact. In addition, the positive battery cable could disconnect from the connector resulting in a short circuit.**

(1) Apply battery positive voltage to the magnetic clutch terminal and connect the A/C compressor body to the ground.

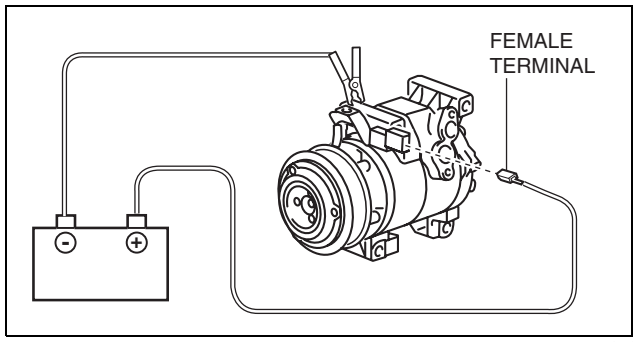

ac5wzw0000184

(2) Wrap the drive belt, which is no longer of use, tightly around the A/C compressor pulley.
(3) Hold the drive belt in place with pliers.
(4) Remove/installation the bolt.

Tightening torque
10—15 N·m {102 —152 kgf·cm, 89 — 132 in·lbf}

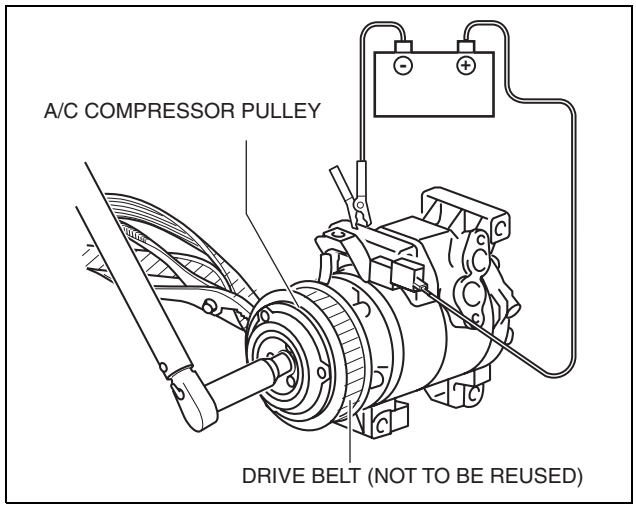

ac5wzw0000184

2. When installing a new A/C compressor body, replace the recommended bolt.

CONTROL SYSTEM [FULL-AUTO AIR CONDITIONER]

Snap Ring Removal/Installation Note

1. Remove/install the snap ring using a snap ring pliers.

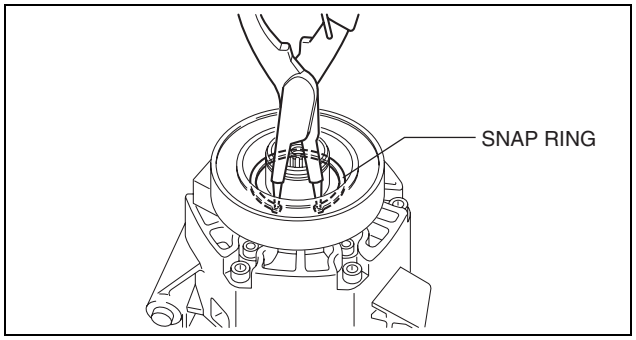

am3zzw0001099

Shim Installation Note

1. First, insert the **1mm (0.039 in)** thick shim into the shaft.

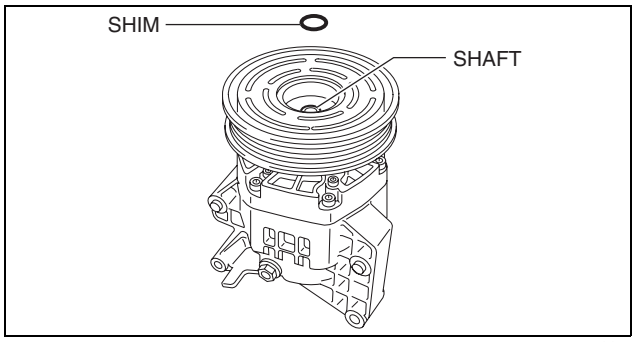

am3zzw0001100

MAGNETIC CLUTCH ADJUSTMENT [FULL-AUTO AIR CONDITIONER]

id0740a1800500

1. Measure the clearance around the entire circumference between the pressure plate and A/C compressor pulley using a thickness gauge.
2. Verify the clearance.
   - If not within the specification, remove the pressure plate and adjust the clearance by changing the shim (**0.2 mm {0.008 in}, 0.5 mm {0.02 in}**) or the number of shims.

   Magnetic clutch clearance
   0.35—0.65 mm {0.014—0.025 in}

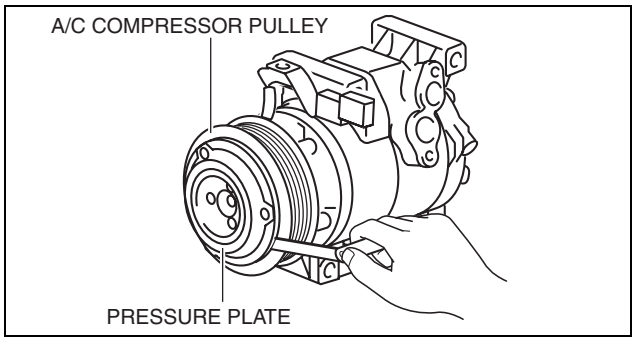

am3zzw0001100

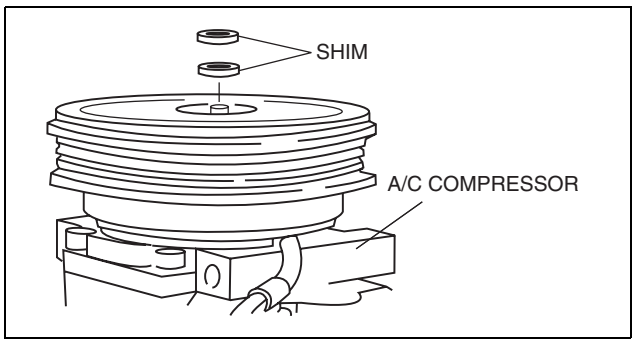

am3zzw0001194

CONTROL SYSTEM [FULL-AUTO AIR CONDITIONER]

MAGNETIC CLUTCH INSPECTION [FULL-AUTO AIR CONDITIONER]

id0740a1800600

1. Connect battery to terminal A of magnetic clutch and ground to A/C compressor body.

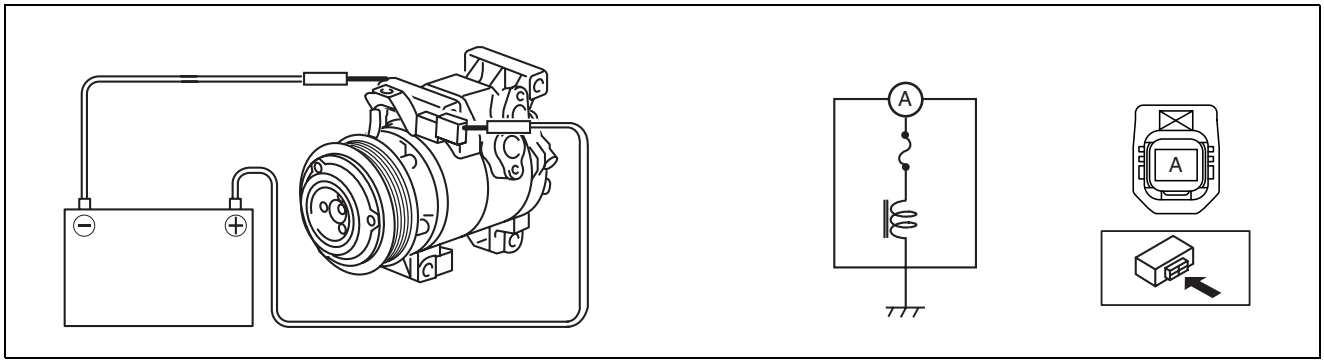

am3zzw0001100

2. Verify that the magnetic clutch operates.
   - If there is any malfunction, replace the magnetic clutch.

POWER METAL OXIDE SEMICONDUCTOR FIELD EFFECT TRANSISTOR (POWER MOS FET) REMOVAL/INSTALLATION [FULL-AUTO AIR CONDITIONER]

id0740a1800200

Note
- When removing the power MOS FET, perform the procedure in the posture shown in the figure.

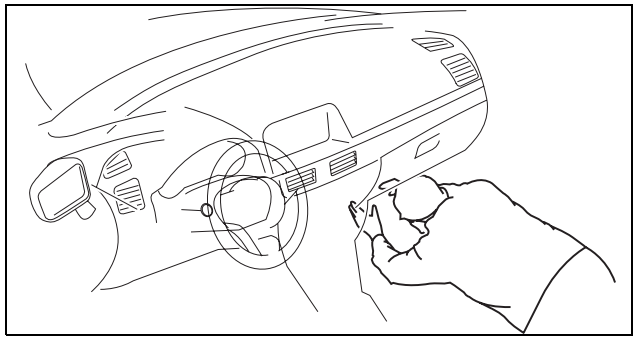

ac5wzw0000183

1. Disconnect the negative battery cable. (See 01-17A-11 NEGATIVE BATTERY CABLE DISCONNECTION/CONNECTION [SKYACTIV-G 2.0].)(See 01-17A-13 NEGATIVE BATTERY CABLE DISCONNECTION/CONNECTION [SKYACTIV-G 2.0 (WITHOUT i-stop)].)(See 01-17B-9 NEGATIVE BATTERY CABLE DISCONNECTION/CONNECTION [SKYACTIV-D 2.2].)
2. Remove the dashboard under cover. (See 09-17-35 DASHBOARD UNDER COVER REMOVAL/INSTALLATION.)
3. Disconnect the connector.

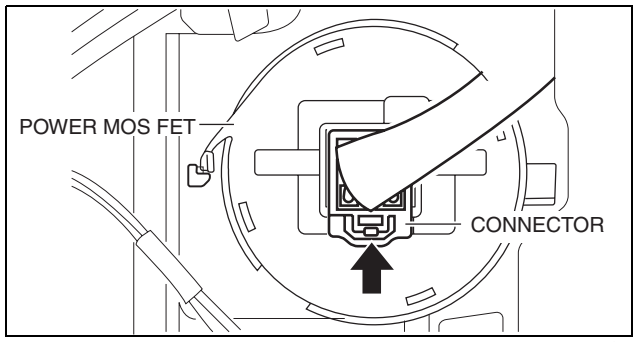

ac5wzw0000183

CONTROL SYSTEM [FULL-AUTO AIR CONDITIONER]

4. Rotate the power MOS FET (2) while pressing the tab (1).

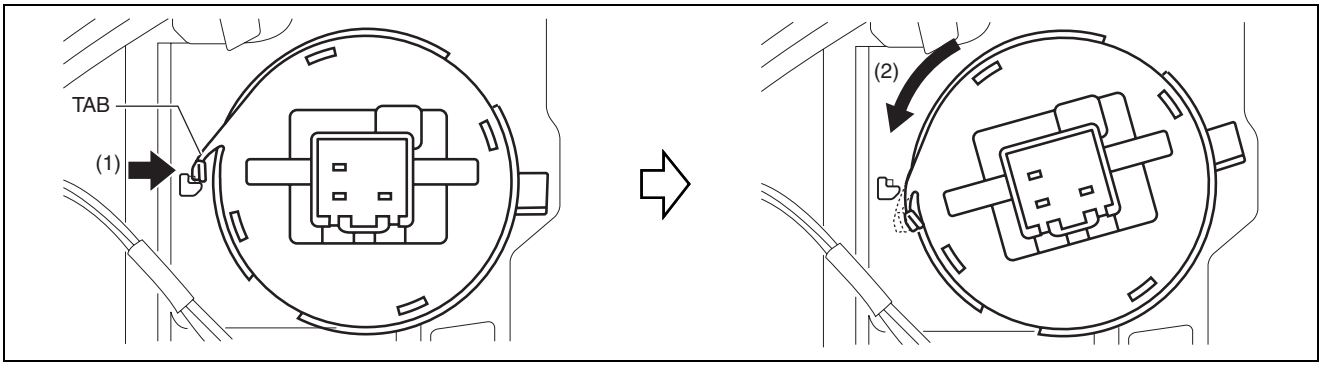

ac5wzw0000183

5. Remove the power MOS FET.
6. Install in the reverse order of removal.

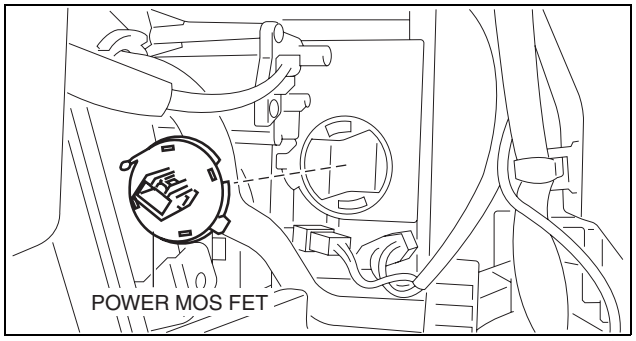

ac5wzw0000183

POWER METAL OXIDE SEMICONDUCTOR FIELD EFFECT TRANSISTOR (POWER MOS FET) INSPECTION [FULL-AUTO AIR CONDITIONER]

id0740a1800300

1. Verify that the continuity between the power MOS FET terminals is as indicated in the table.
   - If there is any malfunction, replace the power MOS FET.
   - If the blower motor operation is not normal even though no malfunction can be verified, inspect the climate control unit. (See 07-40A-33 CLIMATE CONTROL UNIT INSPECTION [FULL-AUTO AIR CONDITIONER].)

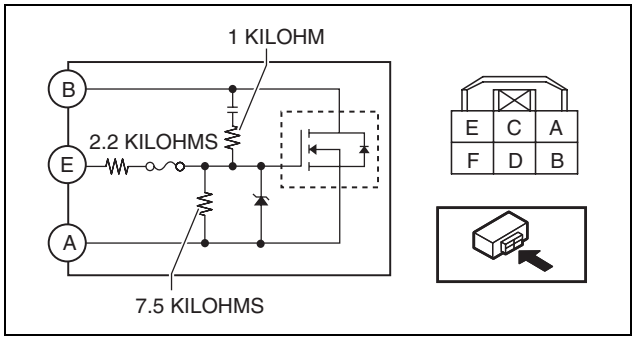

ac5wzw0000276

Tester lead		Resistance (kilohm)
+	-	
A	B	∞
A	E	9.7
B	A	∞
B	E	∞
E	A	9.7
E	B	∞

CONTROL SYSTEM [FULL-AUTO AIR CONDITIONER]

SOLAR RADIATION SENSOR REMOVAL/INSTALLATION [FULL-AUTO AIR CONDITIONER]

id0740a1802800

Note
- When removing the solar radiation sensor, perform the procedure in the posture shown in the figure.

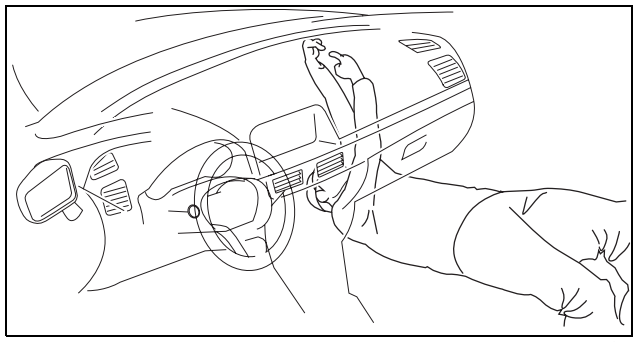
ac5wzw0000186

1. Disconnect the negative battery cable. (See 01-17A-11 NEGATIVE BATTERY CABLE DISCONNECTION/CONNECTION [SKYACTIV-G 2.0].)(See 01-17A-13 NEGATIVE BATTERY CABLE DISCONNECTION/CONNECTION [SKYACTIV-G 2.0 (WITHOUT i-stop)].)(See 01-17B-9 NEGATIVE BATTERY CABLE DISCONNECTION/CONNECTION [SKYACTIV-D 2.2].)
2. Remove the following parts:
   (1) Front scuff plate (passenger-side) (See 09-17-61 FRONT SCUFF PLATE REMOVAL/INSTALLATION.)
   (2) Front side trim (passenger-side) (See 09-17-62 FRONT SIDE TRIM REMOVAL/INSTALLATION.)
   (3) Dashboard under cover (See 09-17-35 DASHBOARD UNDER COVER REMOVAL/INSTALLATION.)
   (4) Front heat duct (passenger-side) (See 07-11-22 FRONT HEAT DUCT REMOVAL/INSTALLATION.)
   (5) Glove compartment (See 09-17-30 GLOVE COMPARTMENT REMOVAL/INSTALLATION.)
   (6) Decoration panel (See 09-17-33 DECORATION PANEL REMOVAL/INSTALLATION.)
   (7) Lower panel (passenger-side) (See 09-17-35 LOWER PANEL REMOVAL/INSTALLATION.)
   (8) Blower unit (See 07-11-5 BLOWER UNIT REMOVAL/INSTALLATION.)
3. Press the tab from the inside of the dashboard and press out the solar radiation sensor as shown in the figure.

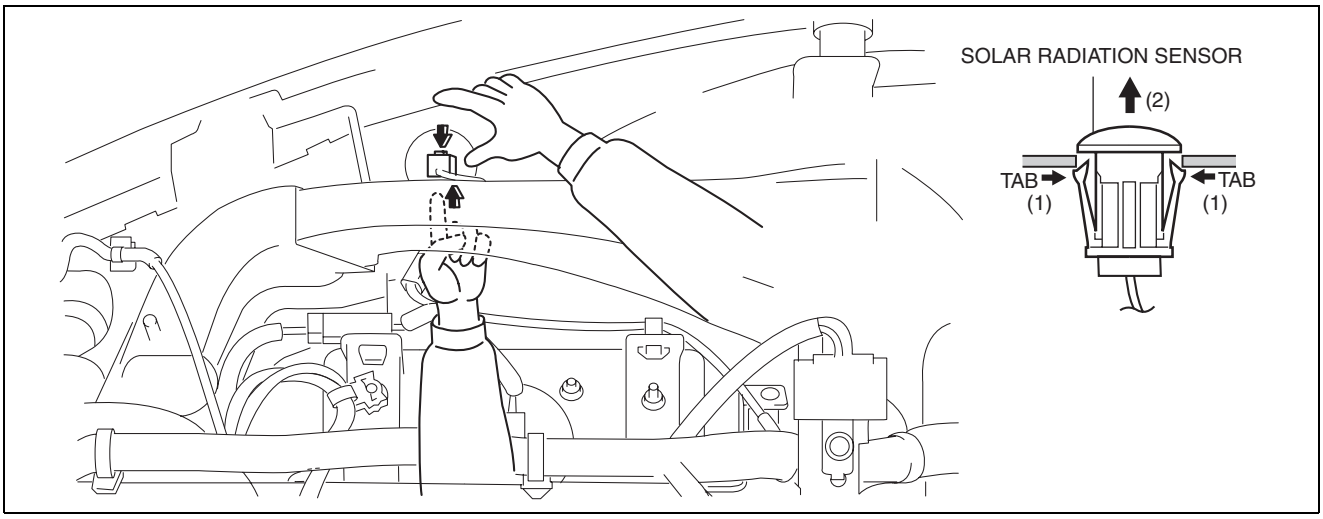

ac5wzw0000186

4. Disconnect the solar radiation sensor connector.
5. Remove the solar radiation sensor.
6. Install in the reverse order of removal.

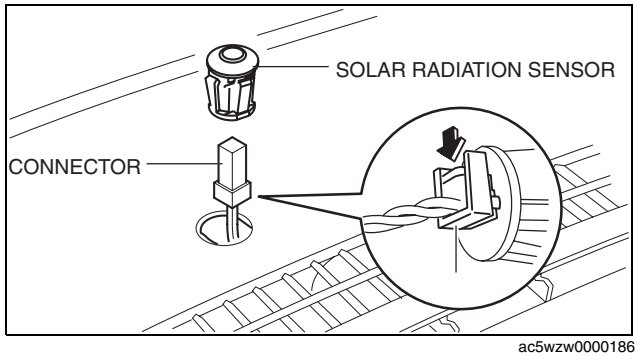

ac5wzw0000186

07

CONTROL SYSTEM [FULL-AUTO AIR CONDITIONER]

Solar Radiation Sensor Installation Note

1. Align the shape of the solar radiation sensor with the shape of the installation hole on the dashboard side, and install as shown in the figure.

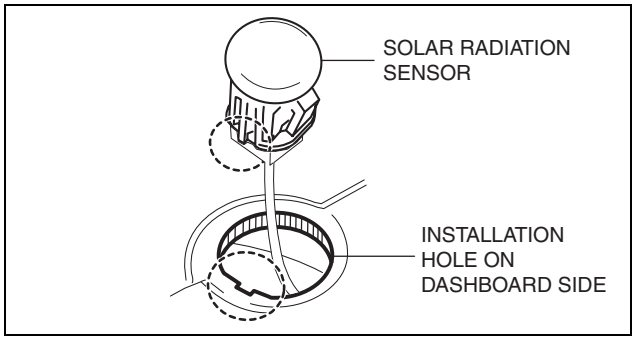

ac5wzw0000186

SOLAR RADIATION SENSOR INSPECTION [FULL-AUTO AIR CONDITIONER]

id0740a1802900

1. Shine a fluorescent light or expose the solar radiation sensor to natural sunlight.
2. Connect the positive (+) lead to terminal B, C and negative (-) lead to terminal A of the solar radiation sensor, and verify that the voltage value is output.
   - If the voltage is **0 V**, replace the solar radiation sensor.

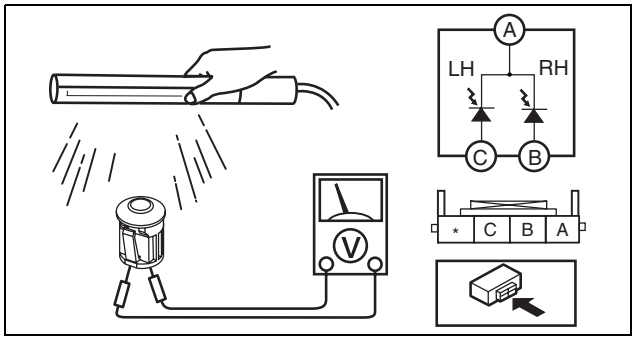

am3zzw0001102

AMBIENT TEMPERATURE SENSOR REMOVAL/INSTALLATION [FULL-AUTO AIR CONDITIONER]

id0740a1803200

1. Disconnect the negative battery cable. (See 01-17A-11 NEGATIVE BATTERY CABLE DISCONNECTION/CONNECTION [SKYACTIV-G 2.0].)(See 01-17A-13 NEGATIVE BATTERY CABLE DISCONNECTION/CONNECTION [SKYACTIV-G 2.0 (WITHOUT i-stop)].)(See 01-17B-9 NEGATIVE BATTERY CABLE DISCONNECTION/CONNECTION [SKYACTIV-D 2.2].)
2. Remove the front bumper. (See 09-10-10 FRONT BUMPER REMOVAL/INSTALLATION.)
3. Disconnect the connector.
4. Remove the ambient temperature sensor.
5. Install in the reverse order of removal.

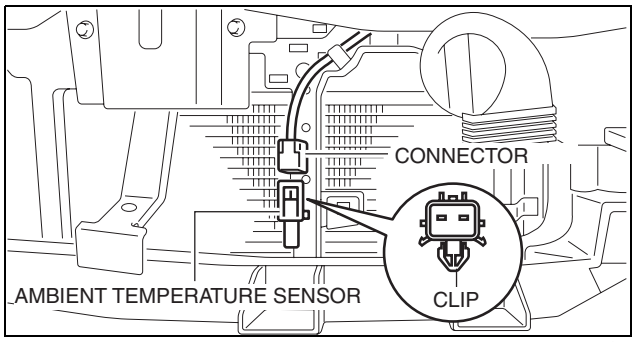

ac5wzw0000186

CONTROL SYSTEM [FULL-AUTO AIR CONDITIONER]

AMBIENT TEMPERATURE SENSOR INSPECTION [FULL-AUTO AIR CONDITIONER]

id0740a1803300

1. Measure the temperature around the ambient temperature sensor and measure the resistance between the ambient temperature sensor terminal.
   - If the characteristics of the ambient temperature sensor are not as shown in the graph, replace the ambient temperature sensor.

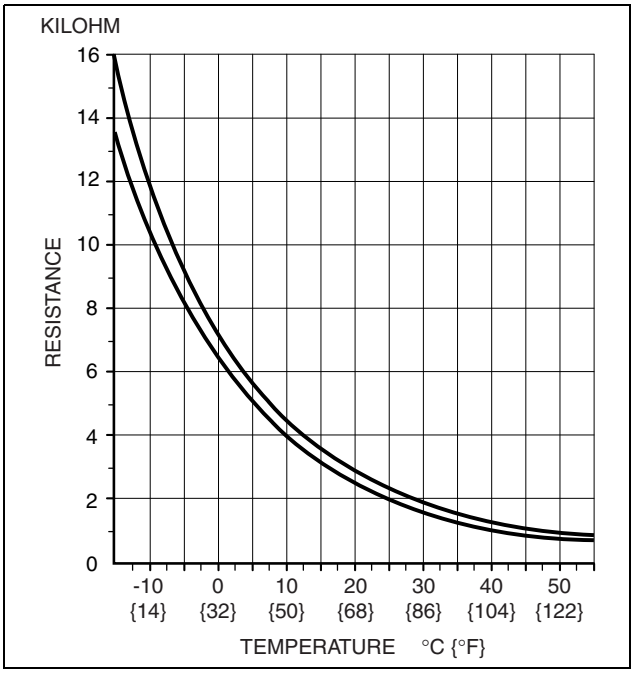

am3zzw0000076

CABIN TEMPERATURE SENSOR REMOVAL/INSTALLATION [FULL-AUTO AIR CONDITIONER]

id0740a1807800

R.H.D.

1. Disconnect the negative battery cable. (See 01-17A-11 NEGATIVE BATTERY CABLE DISCONNECTION/CONNECTION [SKYACTIV-G 2.0].)(See 01-17A-13 NEGATIVE BATTERY CABLE DISCONNECTION/CONNECTION [SKYACTIV-G 2.0 (WITHOUT i-stop)].)(See 01-17B-9 NEGATIVE BATTERY CABLE DISCONNECTION/CONNECTION [SKYACTIV-D 2.2].)
2. Remove the following parts:
   (1) Front scuff plate (driver-side) (See 09-17-61 FRONT SCUFF PLATE REMOVAL/INSTALLATION.)
   (2) Front side trim (driver-side) (See 09-17-62 FRONT SIDE TRIM REMOVAL/INSTALLATION.)
   (3) Switch panel (See 09-17-18 SWITCH PANEL REMOVAL/INSTALLATION.)
   (4) Decoration panel (See 09-17-33 DECORATION PANEL REMOVAL/INSTALLATION.)
   (5) Shift lever knob (MTX) (See 05-16A-1 MANUAL TRANSAXLE SHIFT MECHANISM REMOVAL/INSTALLATION [C66M-R, C66MX-R].) (See 05-16B-1 MANUAL TRANSAXLE SHIFT MECHANISM REMOVAL/INSTALLATION [D66M-R, D66MX-R].)
   (6) Front console box (See 09-17-40 FRONT CONSOLE BOX REMOVAL/INSTALLATION.)
   (7) Shift panel (See 09-17-42 SHIFT PANEL REMOVAL/INSTALLATION.)
   (8) Upper panel (See 09-17-44 UPPER PANEL REMOVAL/INSTALLATION.)
   (9) Rear console (See 09-17-45 REAR CONSOLE REMOVAL/INSTALLATION.)
   (10) Side wall (See 09-17-49 SIDE WALL REMOVAL/INSTALLATION.)
   (11) Front console (See 09-17-50 FRONT CONSOLE REMOVAL/INSTALLATION.)
   (12) Bonnet release lever (See 09-14-17 BONNET LATCH AND RELEASE LEVER REMOVAL/INSTALLATION.)
   (13) Lower panel (driver-side) (See 09-17-35 LOWER PANEL REMOVAL/INSTALLATION.)

CONTROL SYSTEM [FULL-AUTO AIR CONDITIONER]

3. Remove the aspirator. (See 07-40A-25 Aspirator Removal Note.)
4. Disconnect the connector.
5. Detach the tab.
6. Remove the cabin temperature sensor.

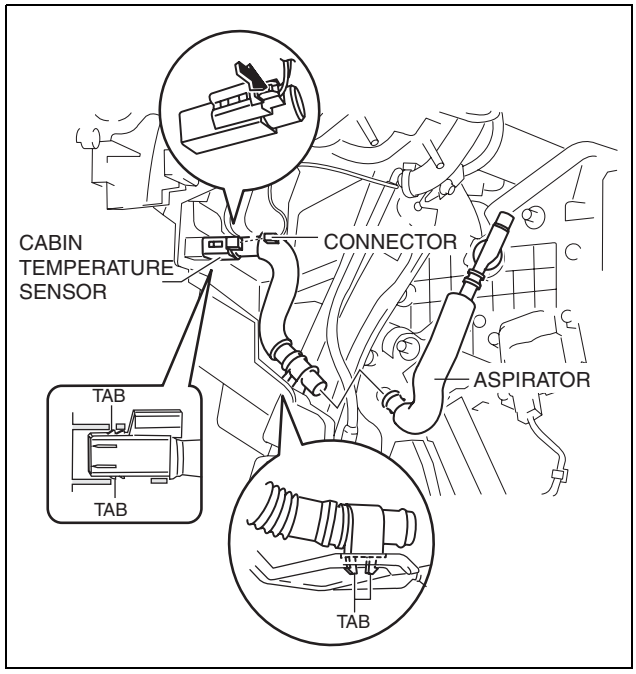

ac5wzw0000188

7. Remove the hose and duct.
8. Install in the reverse order of removal.

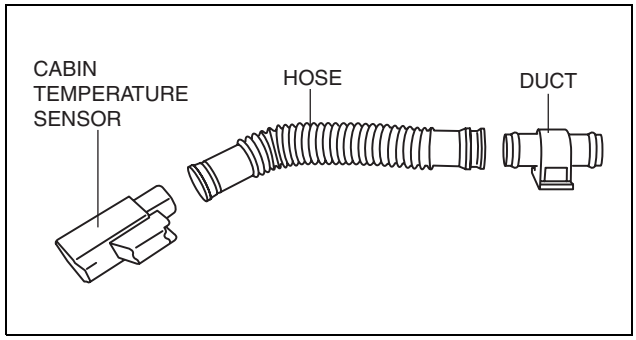

ac5wzw0000188

Aspirator Removal Note

1. Remove the aspirator as shown in the figure.

L.H.D.

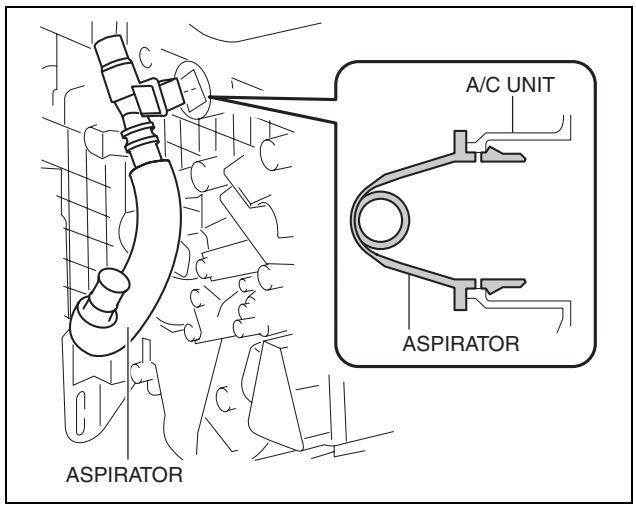

ac5wzw0000188

CONTROL SYSTEM [FULL-AUTO AIR CONDITIONER]

R.H.D.

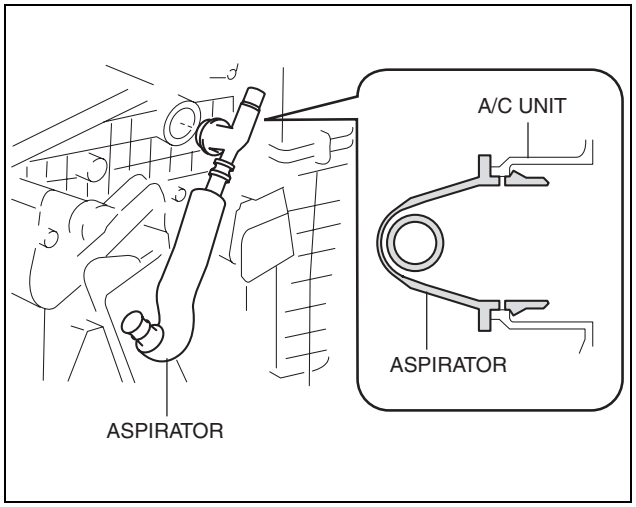

ac5wzw0000188

CABIN TEMPERATURE SENSOR INSPECTION [FULL-AUTO AIR CONDITIONER]

id0740a1807700

1. Measure the temperature around the cabin temperature sensor and measure the resistance between cabin temperature sensor terminals A and B.
   - If the characteristics of the cabin temperature sensor are not as shown in the graph, replace the cabin temperature sensor.

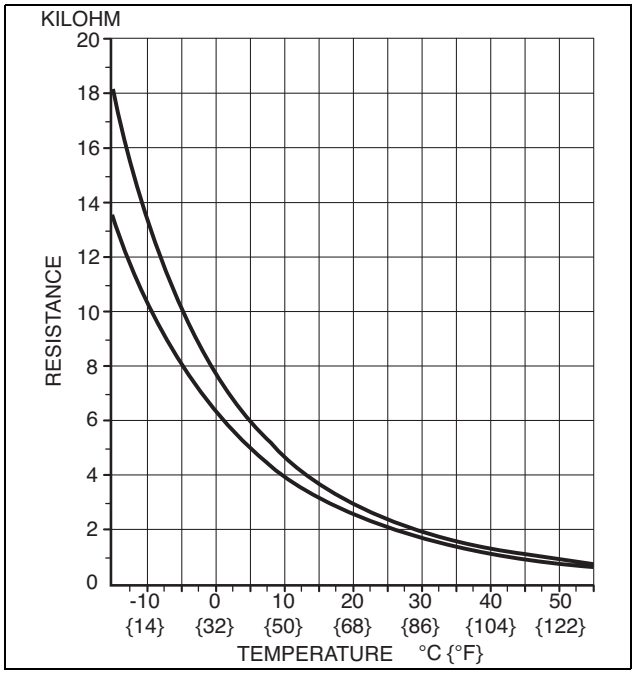

am3uuw0000405

EVAPORATOR TEMPERATURE SENSOR REMOVAL/INSTALLATION [FULL-AUTO AIR CONDITIONER]

id0740a1801100

1. Remove the evaporator temperature sensor from the A/C unit. (See 07-11-14 A/C UNIT DISASSEMBLY/ ASSEMBLY.)

CONTROL SYSTEM [FULL-AUTO AIR CONDITIONER]

EVAPORATOR TEMPERATURE SENSOR INSPECTION [FULL-AUTO AIR CONDITIONER]

id0740a1801200

Note
- Inspect the evaporator temperature sensor when it is installed to the A/C unit.

1. Set the fan speed at MAX HI.
2. Set the temperature control at MAX COLD.
3. Set the RECIRCULATE mode.
4. Turn the A/C switch off.
5. Close all doors and windows.
6. Wait for **5 min**.
7. Disconnect the evaporator temperature sensor connector.
8. Measure the temperature at the blower inlet.
9. Measure the resistance between the evaporator temperature sensor terminals.
   - If the resistance is not as shown in the graph, replace the evaporator temperature sensor.

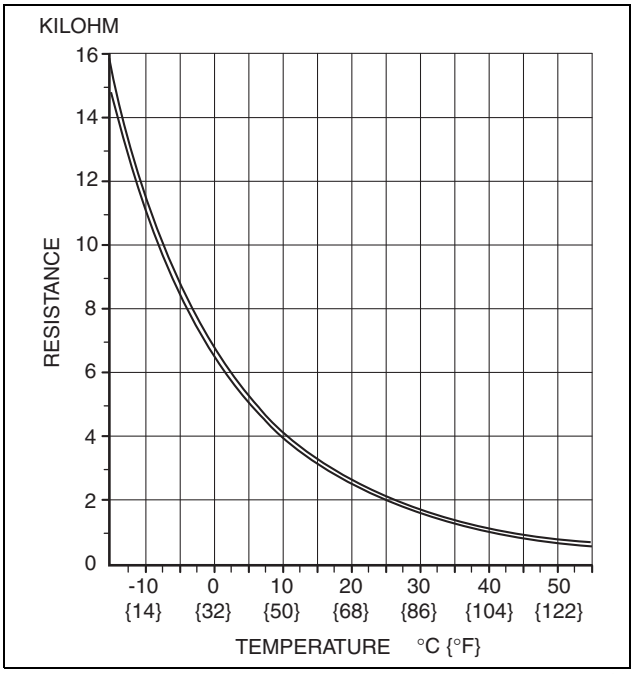

am3uuw0000403

HEATER CORE TEMPERATURE SENSOR REMOVAL/INSTALLATION [FULL-AUTO AIR CONDITIONER]

id0740a1808100

Note
- The heater core temperature sensor is installed to the A/C unit by engaging the tab.

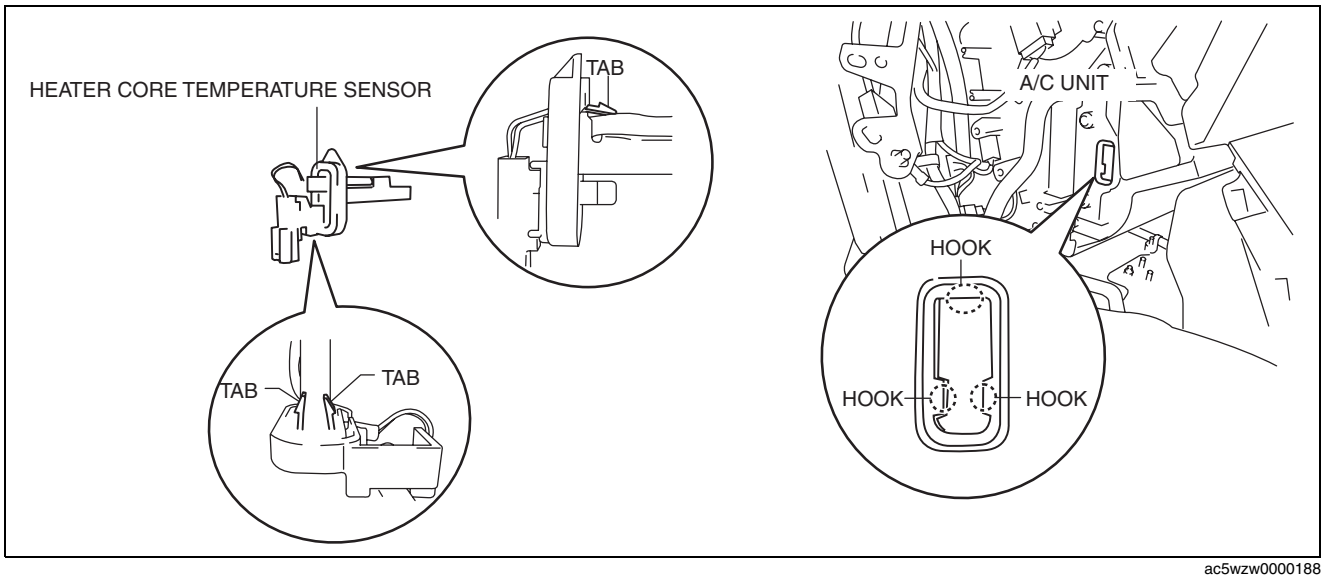

ac5wzw0000188

CONTROL SYSTEM [FULL-AUTO AIR CONDITIONER]

R.H.D.

1. Disconnect the negative battery cable. (See 01-17A-11 NEGATIVE BATTERY CABLE DISCONNECTION/ CONNECTION [SKYACTIV-G 2.0].) (See 01-17B-9 NEGATIVE BATTERY CABLE DISCONNECTION/ CONNECTION [SKYACTIV-D 2.2].)
2. Remove the following parts:
   (1) Side wall (See 09-17-49 SIDE WALL REMOVAL/INSTALLATION.)
   (2) Dashboard under cover (See 09-17-35 DASHBOARD UNDER COVER REMOVAL/INSTALLATION.)
   (3) Front heat duct (passenger-side) (See 07-11-22 FRONT HEAT DUCT REMOVAL/INSTALLATION.)
3. Disconnect the connector.
4. Remove the heater core temperature sensor.
5. Install in the reverse order of the removal.

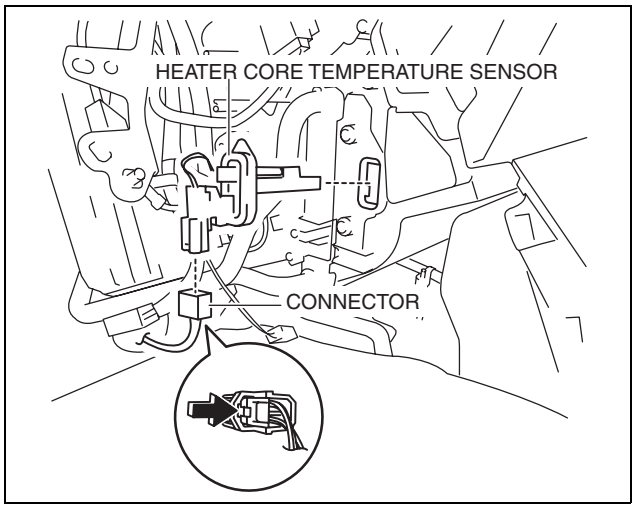

ac5wzw0000188

CONTROL SYSTEM [FULL-AUTO AIR CONDITIONER]

HEATER CORE TEMPERATURE SENSOR INSPECTION [FULL-AUTO AIR CONDITIONER]

id0740a1808200

Note
- Inspect the heater core temperature sensor when it is installed to the heater case.

1. Set the fan speed MAX HI.
2. Set the temperature control at MAX HOT.
3. Set the RECIRCULATE mode.
4. Turn the A/C switch off.
5. Close all doors and windows.
6. Wait for **5 min**.
7. Disconnect the heater core temperature sensor connector.
8. Measure the temperature at the blower inlet.
9. Measure the resistance between the heater core temperature sensor terminals.
   - If the resistance is not as shown in the graph, replace the heater core temperature sensor.

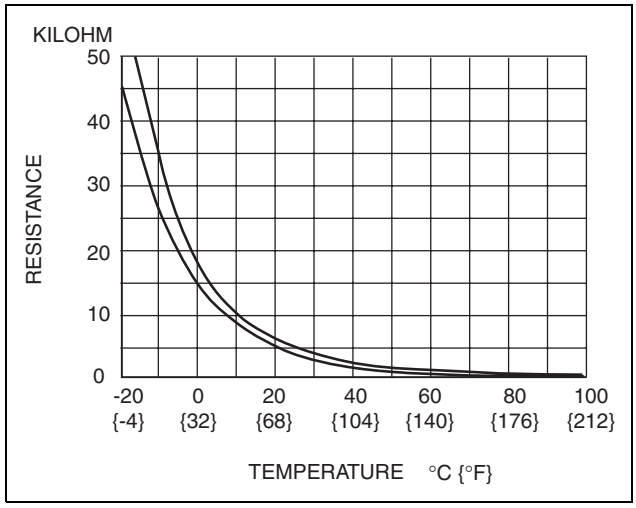

ac5wzw0000277

REFRIGERANT PRESSURE SENSOR REMOVAL/INSTALLATION [FULL-AUTO AIR CONDITIONER]

id0740a1817300

07

1. Disconnect the negative battery cable. (See 01-17A-11 NEGATIVE BATTERY CABLE DISCONNECTION/CONNECTION [SKYACTIV-G 2.0].)(See 01-17A-13 NEGATIVE BATTERY CABLE DISCONNECTION/CONNECTION [SKYACTIV-G 2.0 (WITHOUT i-stop)].)(See 01-17B-9 NEGATIVE BATTERY CABLE DISCONNECTION/CONNECTION [SKYACTIV-D 2.2].)
2. Discharge the refrigerant. (See 07-10-3 REFRIGERANT CHARGING.)
3. Disconnect the refrigerant pressure sensor connector.

Caution
- **If moisture or foreign material enters the refrigeration cycle, cooling ability will be lowered and abnormal noise will occur. Always immediately plug all open fittings after removing any refrigeration cycle parts to keep moisture or foreign material out of the cycle.**

4. Loosen the refrigerant pressure sensor using two spanners.
5. Remove the refrigerant pressure sensor.

Tightening torque
10—11 N·m {102—112 kgf·cm, 89—97 in·lbf}

6. Install in the reverse order of removal. (See 07-40A-30 Refrigerant Pressure Sensor Installation Note.)
7. Perform the refrigerant system performance test. (See 07-10-9 REFRIGERANT SYSTEM PERFORMANCE TEST.)

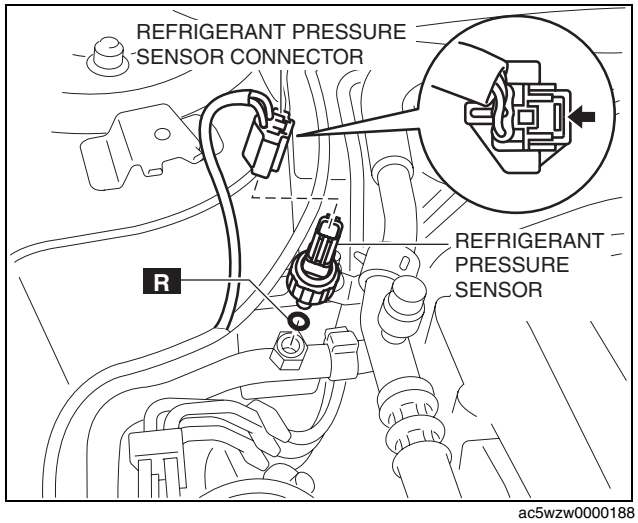

ac5wzw0000188

CONTROL SYSTEM [FULL-AUTO AIR CONDITIONER]

Refrigerant Pressure Sensor Installation Note

1. Apply compressor oil to the O-rings and connect the joints.

REFRIGERANT PRESSURE SENSOR INSPECTION [FULL-AUTO AIR CONDITIONER]

id0740a1817400

SKYACTIV-G 2.0

1. Install the manifold gauge.
2. Verify the high-pressure side reading of the manifold gauge.
3. Measure the terminal voltage at PCM terminal 2BB, 2AX and 2AJ.
4. Using the graph below, measure and verify the terminal voltage at 2AX.
5. Follow the PCM inspection when measuring the other terminal voltages. (See 01-40-17 PCM INSPECTION [SKYACTIV-G 2.0].)
   - Terminal 2BB: Approx. 5 V (Ignition switch on)
   - Terminal 2AJ: 1.0 V or less
     - — If the each voltage is not normal, inspect the related wiring harness.
       - If there is any malfunction, replace the related wiring harness.
       - If wiring harness is normal, replace the refrigerant pressure sensor.

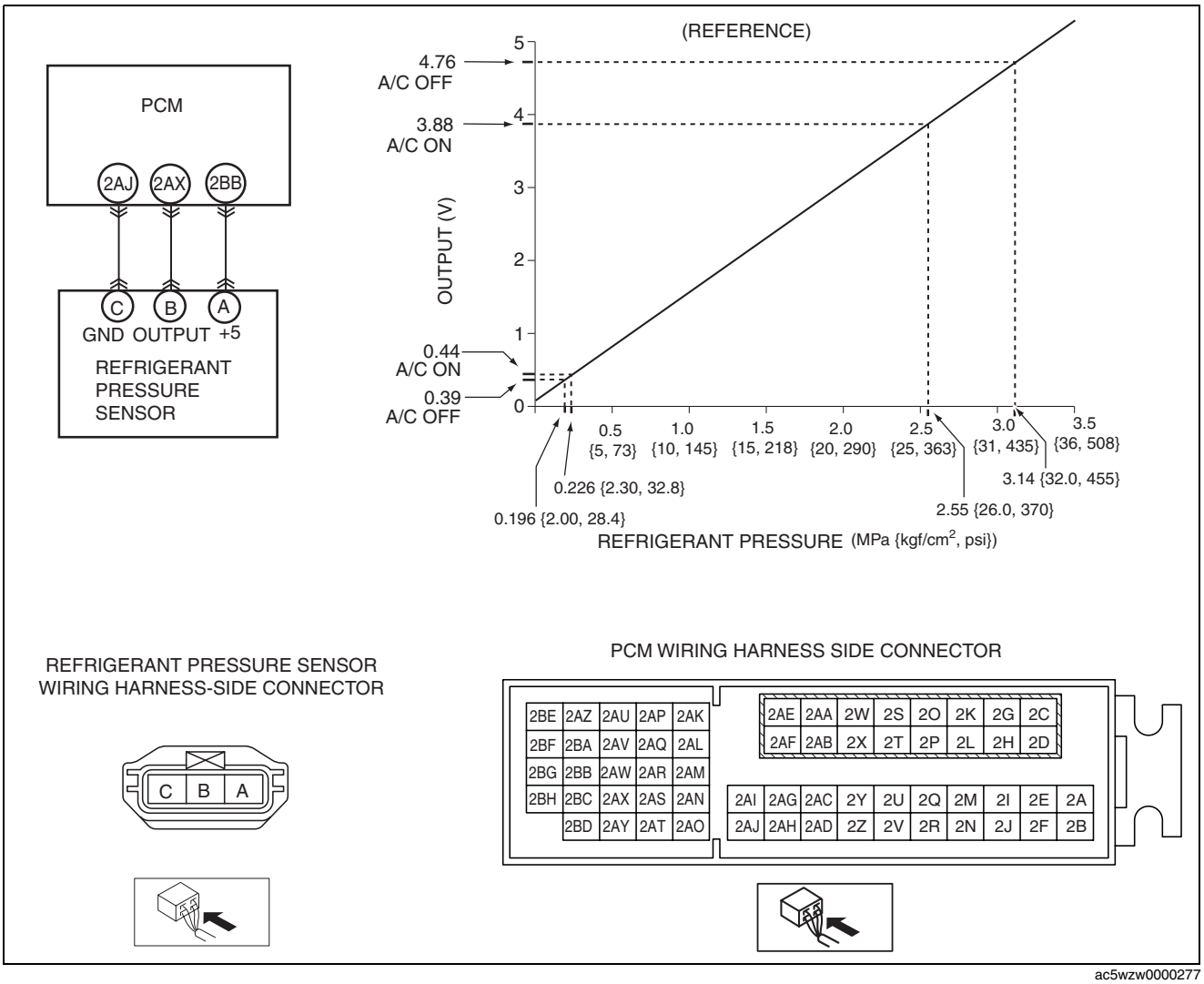

ac5wzw0000277

CONTROL SYSTEM [FULL-AUTO AIR CONDITIONER]

SKYACTIV-D 2.2

1. Install the manifold gauge.
2. Verify the high-pressure side reading of the manifold gauge.
3. Measure the terminal voltage at PCM terminal 2BB, 2BH and 2BD.
4. Using the graph below, measure and verify the terminal voltage at 2BH.
5. Follow the PCM inspection when measuring the other terminal voltages.
   - Terminal 2BB: Approx. 5 V (Ignition switch on)
   - Terminal 2BD: 1.0 V or less
     - — If the each voltage is not normal, inspect the related wiring harness.
       - If there is any malfunction, replace the related wiring harness.
       - If wiring harness is normal, replace the refrigerant pressure sensor.

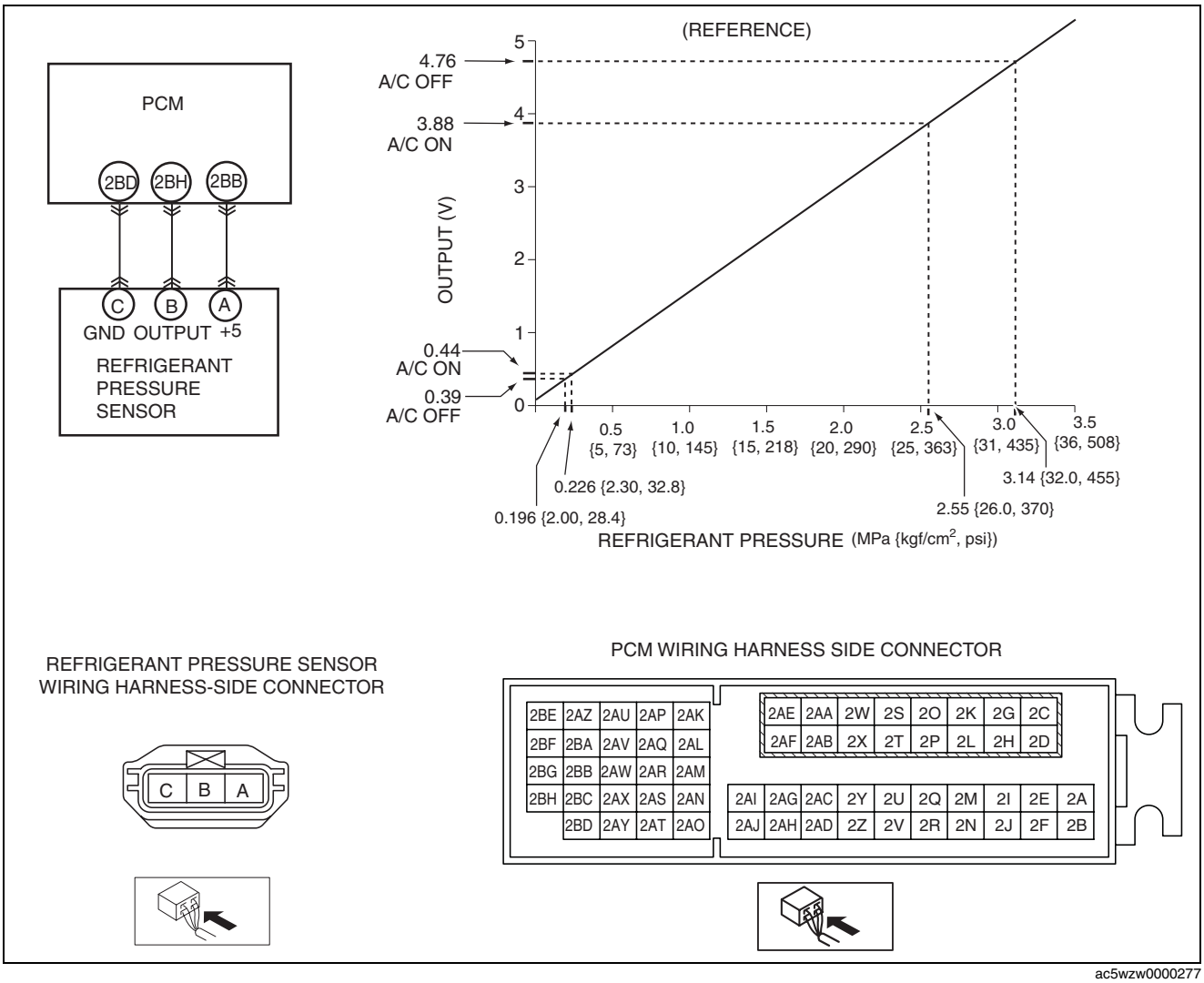

ac5wzw0000277

07

CONTROL SYSTEM [FULL-AUTO AIR CONDITIONER]

CLIMATE CONTROL UNIT REMOVAL/INSTALLATION [FULL-AUTO AIR CONDITIONER]

id0740a1807400

Note

- The climate control unit prior to replacement stores the vehicle specification information.
- The new climate control unit does not store any vehicle specification information.
- When the ignition is switched ON after the climate control unit is replaced, the climate control unit reads the vehicle specification information sent via CAN transmission from the instrument cluster, and stores the vehicle specification information.

1. Disconnect the negative battery cable. (See 01-17A-11 NEGATIVE BATTERY CABLE DISCONNECTION/CONNECTION [SKYACTIV-G 2.0].)(See 01-17A-13 NEGATIVE BATTERY CABLE DISCONNECTION/CONNECTION [SKYACTIV-G 2.0 (WITHOUT i-stop)].)(See 01-17B-9 NEGATIVE BATTERY CABLE DISCONNECTION/CONNECTION [SKYACTIV-D 2.2].)
2. Remove the following parts:
   (1) Shift lever knob (MTX) (See 05-16A-1 MANUAL TRANSAXLE SHIFT MECHANISM REMOVAL/INSTALLATION [C66M-R, C66MX-R].) (See 05-16B-1 MANUAL TRANSAXLE SHIFT MECHANISM REMOVAL/INSTALLATION [D66M-R, D66MX-R].)
   (2) Front console box (See 09-17-40 FRONT CONSOLE BOX REMOVAL/INSTALLATION.)
   (3) Shift panel (See 09-17-42 SHIFT PANEL REMOVAL/INSTALLATION.)
   (4) Upper panel (See 09-17-44 UPPER PANEL REMOVAL/INSTALLATION.)
   (5) Rear console (See 09-17-45 REAR CONSOLE REMOVAL/INSTALLATION.)
   (6) Side wall (See 09-17-49 SIDE WALL REMOVAL/INSTALLATION.)
   (7) Decoration panel (See 09-17-33 DECORATION PANEL REMOVAL/INSTALLATION.)
   (8) Front console (See 09-17-50 FRONT CONSOLE REMOVAL/INSTALLATION.)
3. Remove in the order indicated in the table.

1	Screw
2	Connector
3	Climate control unit

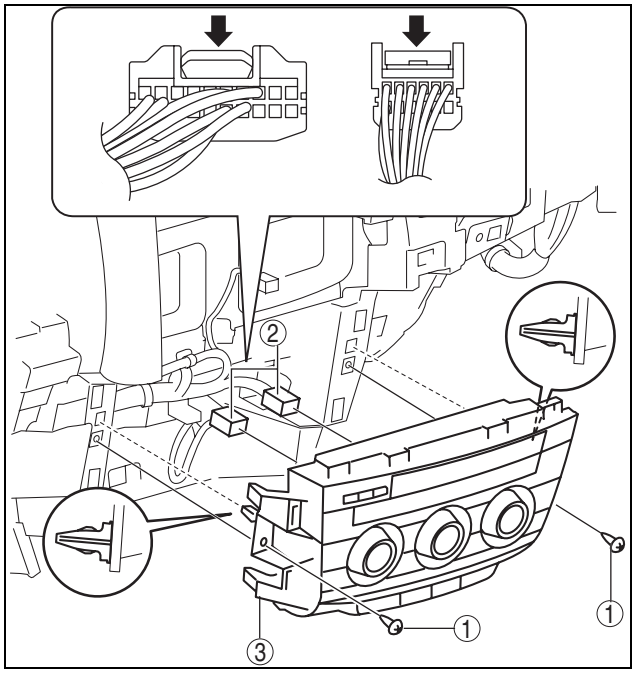

ac5wzw0000187

4. Install in the reverse order of removal.
5. Switch the ignition ON and perform the climate control unit automatic configuration.
6. Clear the DTCs. (See 07-02-7 CLEARING DTC [FULL-AUTO AIR CONDITIONER].)

CONTROL SYSTEM [FULL-AUTO AIR CONDITIONER]

CLIMATE CONTROL UNIT INSPECTION [FULL-AUTO AIR CONDITIONER]

id0740a1802200

1. Remove the climate control unit with the connector connected. (See 07-40A-32 CLIMATE CONTROL UNIT REMOVAL/INSTALLATION [FULL-AUTO AIR CONDITIONER].)
2. Switch the ignition ON (engine off or on).
3. Connect the negative (-) lead of the tester to body ground.
4. By inserting the positive (+) lead of the tester into each climate control unit terminal, measure the voltage according to the terminal voltage table.
   - If there is any malfunction, inspect the parts under “Inspection item (s)”.
     - — If the parts under “Inspection item (s)” are found to be normal (except for terminal 2D), replace the climate control unit.
     - — For terminal 2D, first try replacing the power MOS FET. If there is still any malfunction, replace the climate control unit.

Terminal Voltage Table (Reference)

CLIMATE CONTROL UNIT WIRING HARNESS SIDE CONNECTOR

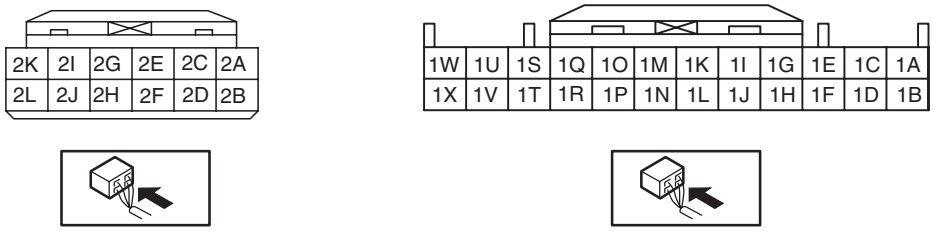

ac5wzw0000185

Terminal	Signal name	Connected to	Measurement condition	Voltage (V)	Inspection item (s)
1A*1	Parking sensor OFF indicator	Parking sensor control module	Parking sensor OFF indicator on	0.6 or less	• Related wiring harness • Parking sensor control unit
			Parking sensor OFF indicator off	B+	
1B*1	Parking sensor OFF switch	Parking sensor control module	Keep parking sensor OFF switch push	2.0 or less	• Related wiring harness • Parking sensor control unit
			Release parking sensor OFF switch	5	
1C*2	Seat warmer switch signal	Seat warmer control unit	Because this terminal is for communication, good/no good judgment by terminal voltage is not possible.		• Related wiring harness
1D	—	—	—	—	—
1E	B+	ROOM 15 A fuse	Under any condition	B+	• Related wiring harness • ROOM 15 A fuse
1F	Evaporator temperature sensor input	Evaporator temperature sensor	Compared with temperature detected by evaporator temperature sensor	Refer to graph 1	• Related wiring harness • Evaporator temperature sensor • Climate control unit: terminal voltage (1X)
1G	DC/DC IG1*3	Ignition relay	Switch the ignition ON (engine off or on)	B+	• Related wiring harness • Ignition relay
			Switch the ignition off	1.0 or less	
	IG1*4	C/U IG1 15 A fuse	Switch the ignition ON (engine off or on)	B+	• Related wiring harness • C/U IG1 15 A fuse
			Switch the ignition off	1.0 or less	
1H	+5V	• Driver-side air mix actuator • Passenger-side air mix actuator • Airflow mode actuator • Solar radiation sensor	Under any condition	5	• Related wiring harness • Driver-side air mix actuator • Passenger-side air mix actuator • Airflow mode actuator • Solar radiation sensor • Climate control unit: terminal voltage (1X)

CONTROL SYSTEM [FULL-AUTO AIR CONDITIONER]

Terminal	Signal name	Connected to	Measurement condition	Voltage (V)	Inspection item (s)
1I*5	Water pump	Water pump	Water pump on	0.2 or less	• Related wiring harness • Water pump
			Water pump off	B+	
1J	Cabin temperature sensor input	Cabin temperature sensor	Compared with temperature detected by cabin temperature sensor	Refer to graph 2	• Related wiring harness • Cabin temperature sensor • Climate control unit: terminal voltage (1X)
1K	—	—	—	—	—
1L*3	Heater core temperature sensor input	Heater core temperature sensor	Compared with temperature detected by heater core temperature sensor	Refer to graph 3	• Related wiring harness • Heater core temperature sensor • Climate control unit: terminal voltage (1X)
1M	—	—	—	—	—
1N	Potentiometer input	• Driver-side air mix actuator (L.H.D.) • Passenger-side air mix actuator (R.H.D.)	Set temperature at MAX HOT	4.3 or more	• Related wiring harness • Driver-side air mix actuator (L.H.D.) • Passenger-side air mix actuator (R.H.D.) • Climate control unit: terminal voltage (1X)
			Set temperature at MAX COLD	1.0 or less	
1O	—	—	—	—	—
1P	Potentiometer input	• Passenger-side air mix actuator (L.H.D.) • Driver-side air mix actuator (R.H.D.)	Set temperature at MAX HOT	4.3 or more	• Related wiring harness • Passenger-side air mix actuator (L.H.D.) • Driver-side air mix actuator (R.H.D.) • Climate control unit: terminal voltage (1X)
			Set temperature at MAX COLD	1.0 or less	
1Q	—	—	—	—	—
1R	Potentiometer input	Airflow mode actuator	VENT	4.3 or more	• Related wiring harness • Airflow mode actuator • Climate control unit: terminal voltage (1X)
			BI-LEVEL	3.4	
			HEAT	2.5	
			HEAT/DEF	1.6	
			DEFROSTER	0.7 or less	
1S	MS_CAN_H	CAN related module	Because this terminal is for communication, good/no good judgment by terminal voltage is not possible.		• Related wiring harness
1T	Solar radiation sensor (RH) input	Solar radiation sensor	Sunlight shined directly on the solar radiation sensor	4	• Related wiring harness • Climate control unit: terminal voltage (1H) • Solar radiation sensor
			Blocking light to solar radiation sensor	1.0 or less	
1U	MS_CAN_L	CAN related module	Because this terminal is for communication, good/no good judgment by terminal voltage is not possible.		• Related wiring harness
1V	Solar radiation sensor (LH) input	Solar radiation sensor	Sunlight shined directly on the solar radiation sensor	4	• Related wiring harness • Climate control unit: terminal voltage (1H) • Solar radiation sensor
			Blocking light to solar radiation sensor	1.0 or less	
1W	GND	Body ground	Under any condition	1.0 or less	• Related wiring harness
1X	Sensor GND	• Driver-side air mix actuator • Passenger-side air mix actuator • Airflow mode actuator • Evaporator temperature sensor • Heater core temperature sensor*3	Under any condition	1.0 or less	• Related wiring harness • Climate control unit: terminal voltage (1H)

CONTROL SYSTEM [FULL-AUTO AIR CONDITIONER]

Terminal	Signal name	Connected to	Measurement condition	Voltage (V)	Inspection item (s)
2A	Blower motor feedback	• Blower motor • Power MOS FET	Fan stopped	B+	• Power MOS FET • Blower motor • Blower relay • HEATER 40 A fuse • Power MOS FET replacement • Related wiring harness
			Fan: manual 1st	10.33	
			Fan: manual 7th	0.4 or less	
2B	—	—	—	—	—
2C	IG2	Front body control module (FBCM)	Switch the ignition ON (engine off or on)	B+	• Related wiring harness • Front body control module (FBCM)
			Switch the ignition off	1.0 or less	
2D	Blower fan speed control	Power MOS FET	Fan stopped	1.0 or less	• Related wiring harness • Power MOS FET
			Fan: manual 1st	2.2	
			Fan: manual 7th	9.7	
2E	Motor operation (HOT)	• Driver-side air mix actuator (L.H.D.) • Passenger-side air mix actuator (R.H.D.)	Moving towards HOT	B+	• Related wiring harness • Driver-side air mix actuator (L.H.D.) • Passenger-side air mix actuator (R.H.D.)
			Moving towards COLD	1.0 or less	
2F	Motor operation (HOT)	• Passenger-side air mix actuator (L.H.D.) • Driver-side air mix actuator (R.H.D.)	Moving towards HOT	B+	• Related wiring harness • Passenger-side air mix actuator (L.H.D.) • Driver-side air mix actuator (R.H.D.)
			Moving towards COLD	1.0 or less	
2G	Motor operation (COLD)	• Driver-side air mix actuator (L.H.D.) • Passenger-side air mix actuator (R.H.D.)	Moving towards HOT	1.0 or less	• Related wiring harness • Driver-side air mix actuator (L.H.D.) • Passenger-side air mix actuator (R.H.D.)
			Moving towards COLD	B+	
2H	Motor operation (COLD)	• Passenger-side air mix actuator (L.H.D.) • Driver-side air mix actuator (R.H.D.)	Moving towards HOT	1.0 or less	• Related wiring harness • Passenger-side air mix actuator (L.H.D.) • Driver-side air mix actuator (R.H.D.)
			Moving towards COLD	B+	
2I	Motor operation (VENT)	Airflow mode actuator	Moving towards VENT	B+	• Related wiring harness • Airflow mode actuator
			Moving towards DEFROSTER	1.0 or less	
2J	Motor operation (FRESH)	Air intake actuator	Moving towards RECIRCULATE	1.0 or less	• Related wiring harness • Air intake actuator
			Moving towards FRESH	B+	
2K	Motor operation (DEFROSTER)	Airflow mode actuator	Moving towards DEFROSTER	B+	• Related wiring harness • Airflow mode actuator
			Moving towards VENT	1.0 or less	
2L	Motor operation (RECIRCULATE)	Air intake actuator	Moving towards RECIRCULATE	B+	• Related wiring harness • Air intake actuator
			Moving towards FRESH	1.0 or less	

*1 : With parking sensor OFF switch.
*2 : With seat warmer.
*3 : With i-stop.
*4 : Without i-stop.
*5 : With water pump.

CONTROL SYSTEM [FULL-AUTO AIR CONDITIONER]

GRAPH 1 (EVAPORATOR TEMPERATURE SENSOR)

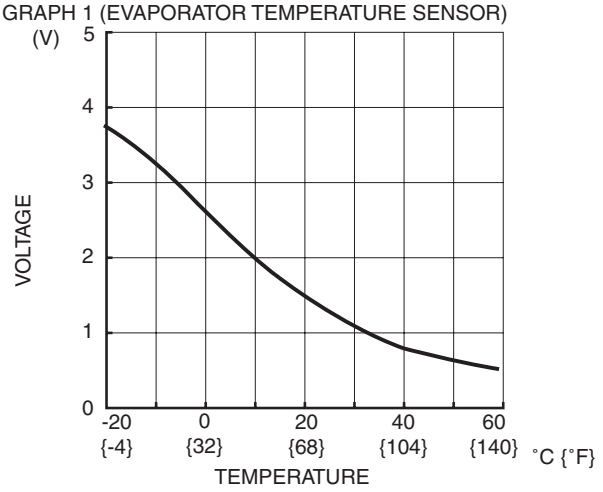

GRAPH 2 (CABIN TEMPERATURE SENSOR)

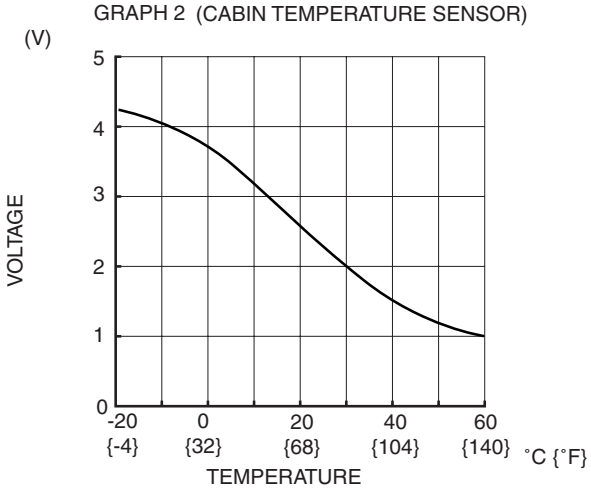

GRAPH 3 (HEATER CORE TEMPERATURE SENSOR)

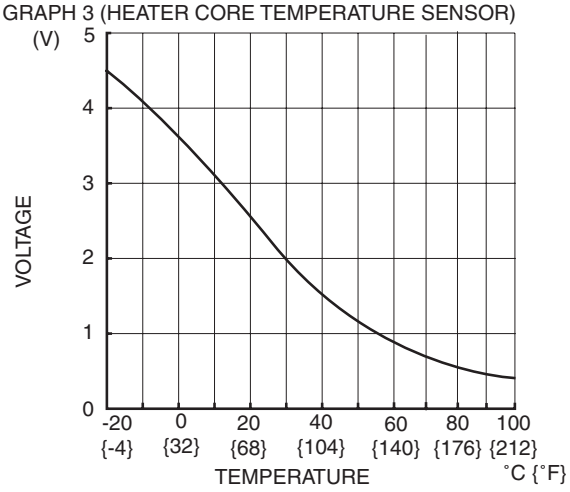

—

CONTROL SYSTEM [FULL-AUTO AIR CONDITIONER]

PTC (POSITIVE TEMPERATURE COEFFICIENT) HEATER REMOVAL/INSTALLATION [FULL-AUTO AIR CONDITIONER]

id0740a1806900

1. Disconnect the negative battery cable. (See 01-17B-9 NEGATIVE BATTERY CABLE DISCONNECTION/ CONNECTION [SKYACTIV-D 2.2].)
2. Remove the following parts:
   (1) Shift lever knob (MTX) (See 05-16A-1 MANUAL TRANSAXLE SHIFT MECHANISM REMOVAL/ INSTALLATION [C66M-R, C66MX-R].) (See 05-16B-1 MANUAL TRANSAXLE SHIFT MECHANISM REMOVAL/INSTALLATION [D66M-R, D66MX-R].)
   (2) Glove compartment (See 09-17-30 GLOVE COMPARTMENT REMOVAL/INSTALLATION.)
   (3) Front console box (See 09-17-40 FRONT CONSOLE BOX REMOVAL/INSTALLATION.)
   (4) Shift panel (See 09-17-42 SHIFT PANEL REMOVAL/INSTALLATION.)
   (5) Upper panel (See 09-17-44 UPPER PANEL REMOVAL/INSTALLATION.)
   (6) Rear console (See 09-17-45 REAR CONSOLE REMOVAL/INSTALLATION.)
   (7) Side wall (See 09-17-49 SIDE WALL REMOVAL/INSTALLATION.)
   (8) Decoration panel (See 09-17-33 DECORATION PANEL REMOVAL/INSTALLATION.)
   (9) Front console (See 09-17-40 FRONT CONSOLE BOX REMOVAL/INSTALLATION.)
   (10)Front scuff plate (passenger-side) (See 09-17-61 FRONT SCUFF PLATE REMOVAL/INSTALLATION.)
   (11)Front side trim (passenger-side) (See 09-17-62 FRONT SIDE TRIM REMOVAL/INSTALLATION.)
   (12)Dashboard under cover (See 09-17-35 DASHBOARD UNDER COVER REMOVAL/INSTALLATION.)
   (13)Front heat duct (passenger-side) (See 07-11-22 FRONT HEAT DUCT REMOVAL/INSTALLATION.)
   (14)Lower panel (passenger-side) (See 09-17-35 LOWER PANEL REMOVAL/INSTALLATION.)
3. Detach the clips.
4. Remove the adhesive polyurethane.

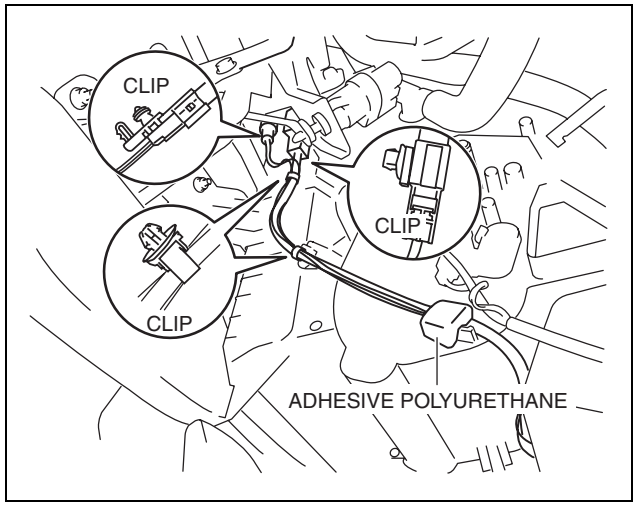

ac5wzw0000187

5. Disconnect the PTC heater connectors.

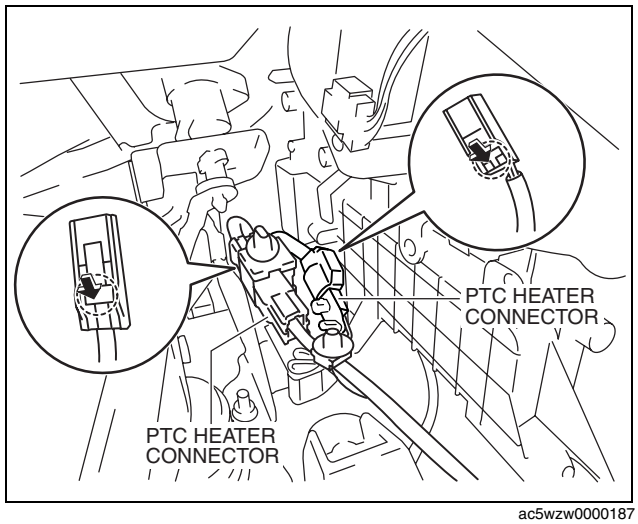

ac5wzw0000187

07

CONTROL SYSTEM [FULL-AUTO AIR CONDITIONER]

6. Remove the PTC heater wiring harness from the hook as shown in the figure.

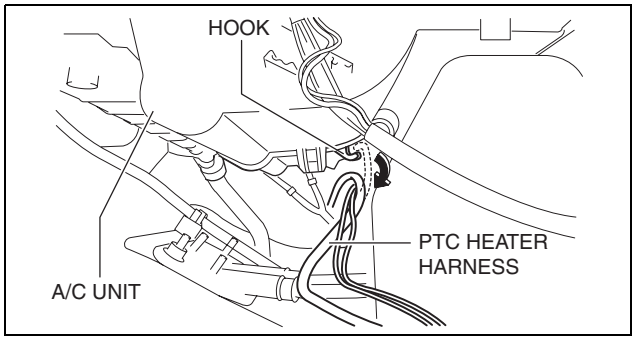

ac5wzw0000187

7. Remove the bolt and disconnect the earth.

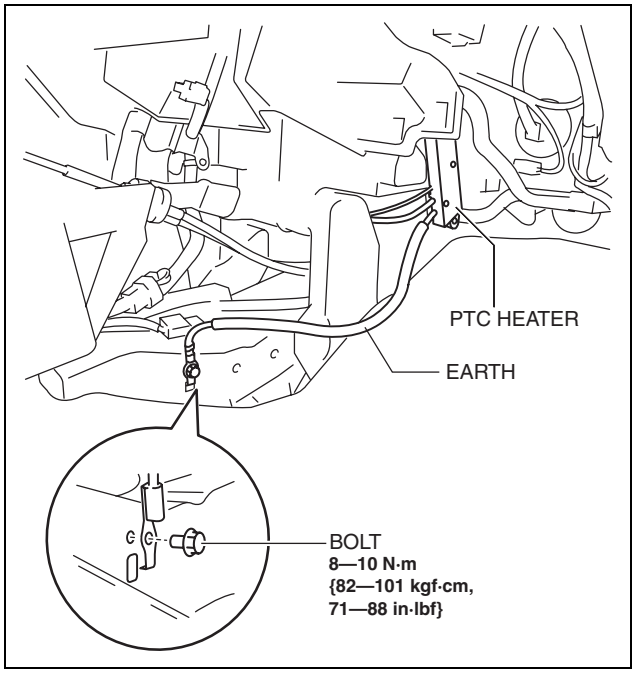

ac5wzw0000187

8. Remove the screws and remove the PTC heater.
9. Install in the reverse order of the removal.

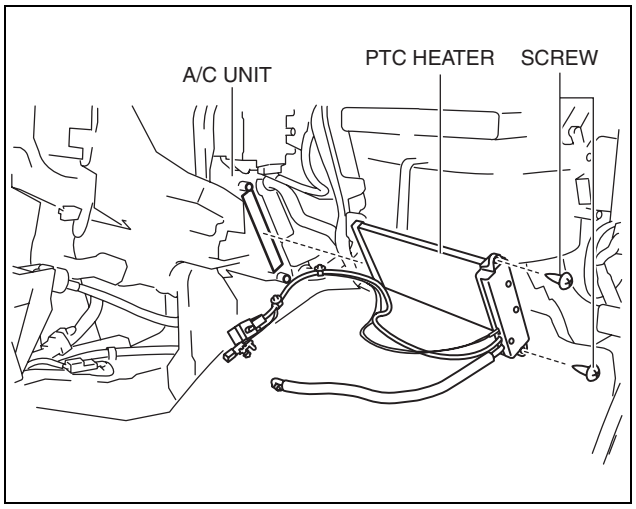

ac5wzw0000187

CONTROL SYSTEM [FULL-AUTO AIR CONDITIONER]

PTC (POSITIVE TEMPERATURE COEFFICIENT) HEATER INSPECTION [FULL-AUTO AIR CONDITIONER]

id0740a1806800

1. Allow the engine to cool down completely.
2. Remove the ambient temperature sensor and apply a resistance of **approx.12 kilohms (equivalent to -10 °C {14.0 °F})**.
3. Connect the PTC heater power supply wiring harness (red) or ground wiring harness (black) to a tester.
4. Set the fan switch at MAX HI and the temperature setting dial at MAX HOT, start the engine, and then measure the current.
   - If not within specification, remove the PTC heater.
     Current value (approx. quantity)
     67.5—82.5 A

WATER PUMP REMOVAL/INSTALLATION [FULL-AUTO AIR CONDITIONER]

id0740a1911000

1. Disconnect the negative battery cable. (See 01-17A-11 NEGATIVE BATTERY CABLE DISCONNECTION/CONNECTION [SKYACTIV-G 2.0].) (See 01-17B-9 NEGATIVE BATTERY CABLE DISCONNECTION/CONNECTION [SKYACTIV-D 2.2].)
2. Drain the engine coolant. (See 01-12A-4 ENGINE COOLANT REPLACEMENT [SKYACTIV-G 2.0].) (See 01-12B-4 ENGINE COOLANT REPLACEMENT [SKYACTIV-D 2.2].)
3. Disconnect the heater hose. (SKYACTIV-G 2.0)

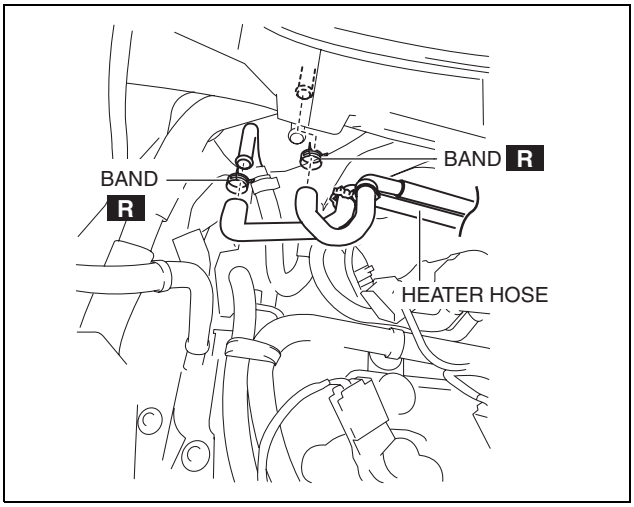

ac5wzw0000189

4. Remove the heater hose. (SKYACTIV-D 2.2)

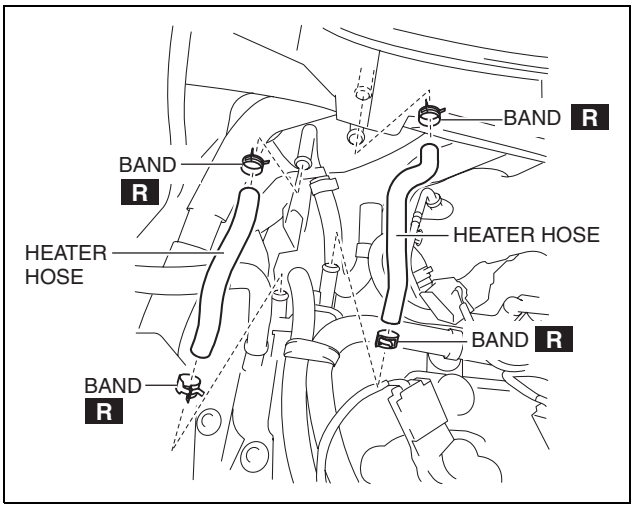

ac5wzw0000189

07

CONTROL SYSTEM [FULL-AUTO AIR CONDITIONER]

5. Disconnect the heater hose.
6. Disconnect the connector.
7. Remove the nut.

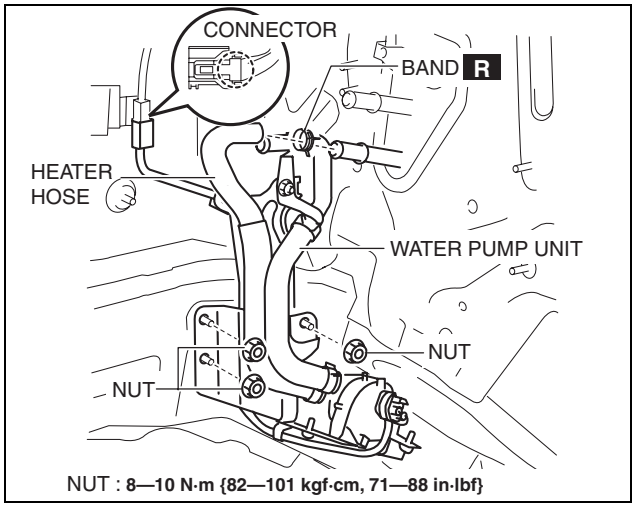

ac5wzw0000189

8. Remove the water pump unit.(See 07-40A-41 Water Pump Unit Removal Note (SKYACTIV-D 2.2).)

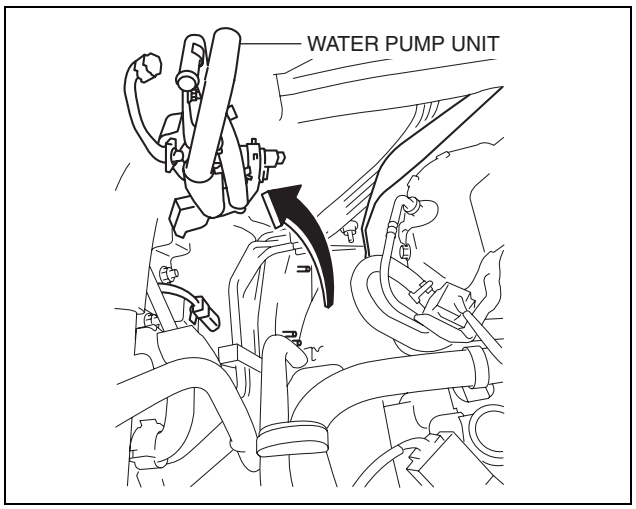

ac5wzw0000189

9. Disconnect the connector.
10. Remove the bolt, then remove the water pump. (See 07-40A-41 Water Pump Unit Disassemble Note.)
11. Install in the reverse order of the removal.

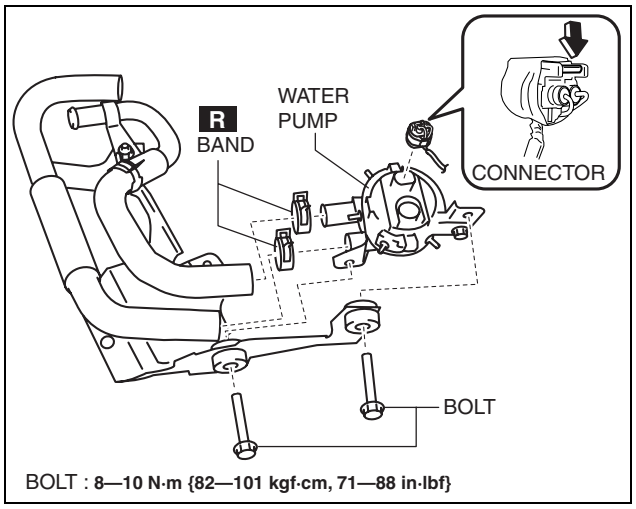

ac5wzw0000189

CONTROL SYSTEM [FULL-AUTO AIR CONDITIONER]

Water Pump Unit Removal Note (SKYACTIV-D 2.2)

1. Pull out the water pump unit in the upward direction so that the heater hose plug on the engine side passes between the heater hoses installed to the water pump as indicated by the circled areas in the figure.

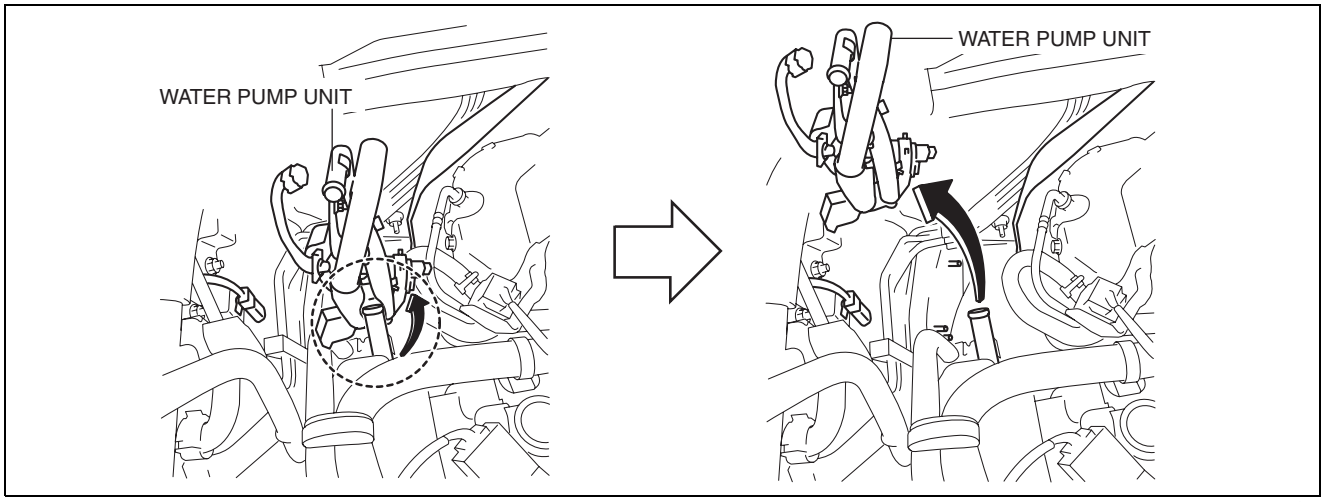

ac5wzw0000189

Water Pump Unit Disassemble Note

1. Disassemble the water pump unit as shown in the figure.

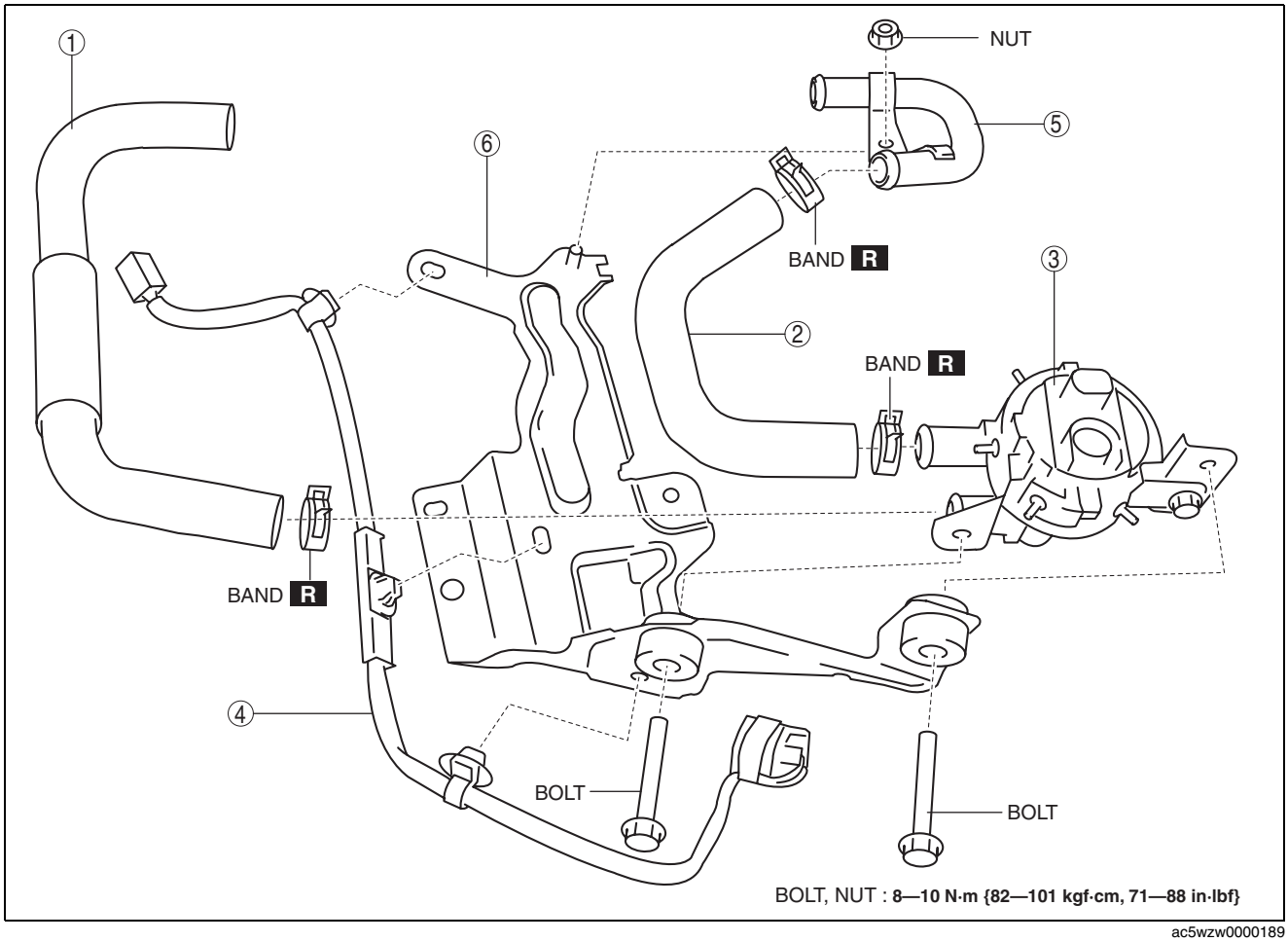

ac5wzw0000189

1	Heater hose No.2
2	Heater hose No.3
3	Water pump

4	Harness
5	Pipe
6	Bracket

CONTROL SYSTEM [FULL-AUTO AIR CONDITIONER]

WATER PUMP INSPECTION [FULL-AUTO AIR CONDITIONER]

id0740a1910200

Caution

- **The water pump operates by the passage of engine coolant in the water pump. If the water pump is left operating empty for a long period of time, load will be applied to the engine which could cause a malfunction.**

1. Disconnect the negative battery cable. (See 01-17A-11 NEGATIVE BATTERY CABLE DISCONNECTION/CONNECTION [SKYACTIV-G 2.0].) (See 01-17B-9 NEGATIVE BATTERY CABLE DISCONNECTION/CONNECTION [SKYACTIV-D 2.2].)
2. Disconnect the water pump connector. (See 07-40A-39 WATER PUMP REMOVAL/INSTALLATION [FULL-AUTO AIR CONDITIONER].)
3. Connect battery positive voltage to water pump terminal B, connect terminal A to ground, and then verify its operation.
   - If there is any malfunction, replace the water pump.

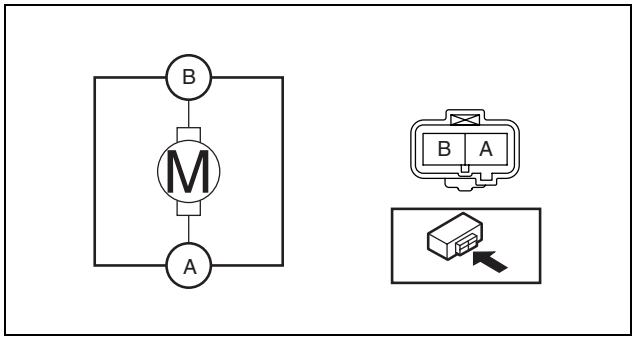

ac5wzw0000188

07-40B CONTROL SYSTEM [MANUAL AIR CONDITIONER]

HVAC CONTROL SYSTEM
LOCATION INDEX
[MANUAL AIR CONDITIONER] 07-40B–2
AIR INTAKE ACTUATOR
REMOVAL/INSTALLATION
[MANUAL AIR CONDITIONER] 07-40B–4
L.H.D. 07-40B–4
R.H.D. 07-40B–4
AIR INTAKE ACTUATOR INSPECTION
[MANUAL AIR CONDITIONER] 07-40B–5
BLOWER MOTOR
REMOVAL/INSTALLATION
[MANUAL AIR CONDITIONER] 07-40B–6
BLOWER MOTOR INSPECTION
[MANUAL AIR CONDITIONER] 07-40B–7
MAGNETIC CLUTCH
DISASSEMBLY/ASSEMBLY
[MANUAL AIR CONDITIONER] 07-40B–7
Bolt Removal/Installation Note 07-40B–8
Snap Ring
Removal/Installation Note 07-40B–8
Shim Installation Note 07-40B–9
MAGNETIC CLUTCH ADJUSTMENT
[MANUAL AIR CONDITIONER] 07-40B–9
MAGNETIC CLUTCH INSPECTION
[MANUAL AIR CONDITIONER] 07-40B–9
RESISTOR REMOVAL/INSTALLATION
[MANUAL AIR CONDITIONER] 07-40B–10
RESISTOR INSPECTION
[MANUAL AIR CONDITIONER] 07-40B–11
AMBIENT TEMPERATURE SENSOR
REMOVAL/INSTALLATION
[MANUAL AIR CONDITIONER] 07-40B–11
AMBIENT TEMPERATURE
SENSOR INSPECTION
[MANUAL AIR CONDITIONER] 07-40B–11
EVAPORATOR TEMPERATURE
SENSOR REMOVAL/INSTALLATION
[MANUAL AIR CONDITIONER] 07-40B–11
EVAPORATOR TEMPERATURE
SENSOR INSPECTION
[MANUAL AIR CONDITIONER] 07-40B–12
REFRIGERANT PRESSURE SENSOR
REMOVAL/INSTALLATION
[MANUAL AIR CONDITIONER] 07-40B–13
Refrigerant Pressure Sensor
Installation Note 07-40B–13
REFRIGERANT PRESSURE
SENSOR INSPECTION
[MANUAL AIR CONDITIONER] 07-40B–14
SKYACTIV-G 2.0 . . . . . 07-40B–14
SKYACTIV-D 2.2 . . . . . 07-40B–15
CLIMATE CONTROL UNIT
REMOVAL/INSTALLATION
[MANUAL AIR CONDITIONER] 07-40B–16
L.H.D. 07-40B–16
R.H.D. 07-40B–19
CLIMATE CONTROL UNIT
DISASSEMBLY/ASSEMBLY
[MANUAL AIR CONDITIONER] 07-40B–22
Wire Removal Note 07-40B–23
Wire Installation Note 07-40B–23
Fan Switch Removal Note 07-40B–24
Clock Removal Note 07-40B–25
CLIMATE CONTROL UNIT
INSPECTION
[MANUAL AIR CONDITIONER] 07-40B–25
Terminal Voltage Table (Reference) . . . 07-40B–26
FAN SWITCH INSPECTION
[MANUAL AIR CONDITIONER] 07-40B–27
PTC (POSITIVE TEMPERATURE
COEFFICIENT) HEATER
REMOVAL/INSTALLATION
[MANUAL AIR CONDITIONER] 07-40B–28
PTC (POSITIVE TEMPERATURE
COEFFICIENT) HEATER INSPECTION
[MANUAL AIR CONDITIONER] 07-40B–30

CONTROL SYSTEM [MANUAL AIR CONDITIONER]

HVAC CONTROL SYSTEM LOCATION INDEX [MANUAL AIR CONDITIONER]

id0740a2803600

R.H.D.

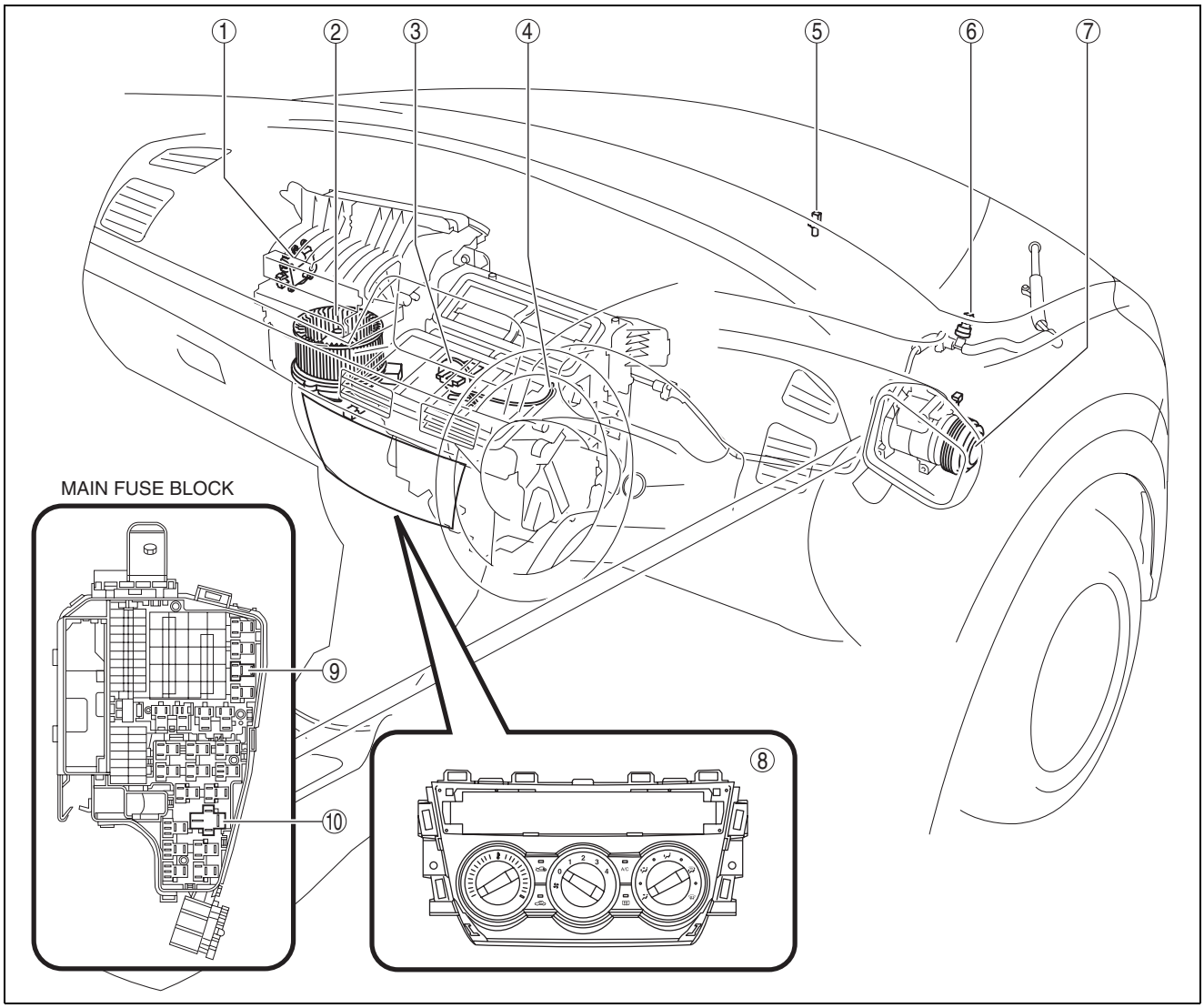

ac5wzw0000192

CONTROL SYSTEM [MANUAL AIR CONDITIONER]

1	Air intake actuator (See 07-40B-4 AIR INTAKE ACTUATOR REMOVAL/INSTALLATION [MANUAL AIR CONDITIONER].) (See 07-40B-5 AIR INTAKE ACTUATOR INSPECTION [MANUAL AIR CONDITIONER].)
2	Blower motor (See 07-40B-6 BLOWER MOTOR REMOVAL/INSTALLATION [MANUAL AIR CONDITIONER].) (See 07-40B-7 BLOWER MOTOR INSPECTION [MANUAL AIR CONDITIONER].)
3	Resistor (See 07-40B-10 RESISTOR REMOVAL/INSTALLATION [MANUAL AIR CONDITIONER].) (See 07-40B-11 RESISTOR INSPECTION [MANUAL AIR CONDITIONER].)
4	Evaporator temperature sensor (See 07-40B-11 EVAPORATOR TEMPERATURE SENSOR REMOVAL/INSTALLATION [MANUAL AIR CONDITIONER].) (See 07-40B-12 EVAPORATOR TEMPERATURE SENSOR INSPECTION [MANUAL AIR CONDITIONER].)
5	Ambient temperature sensor (See 07-40B-11 AMBIENT TEMPERATURE SENSOR REMOVAL/INSTALLATION [MANUAL AIR CONDITIONER].) (See 07-40B-11 AMBIENT TEMPERATURE SENSOR INSPECTION [MANUAL AIR CONDITIONER].)
6	Refrigerant pressure sensor (See 07-40B-13 REFRIGERANT PRESSURE SENSOR REMOVAL/INSTALLATION [MANUAL AIR CONDITIONER].) (See 07-40B-14 REFRIGERANT PRESSURE SENSOR INSPECTION [MANUAL AIR CONDITIONER].)
7	Magnetic clutch (See 07-40B-7 MAGNETIC CLUTCH DISASSEMBLY/ASSEMBLY [MANUAL AIR CONDITIONER].) (See 07-40B-9 MAGNETIC CLUTCH ADJUSTMENT [MANUAL AIR CONDITIONER].) (See 07-40B-9 MAGNETIC CLUTCH INSPECTION [MANUAL AIR CONDITIONER].)
8	Climate control unit (See 07-40B-16 CLIMATE CONTROL UNIT REMOVAL/INSTALLATION [MANUAL AIR CONDITIONER].) (See 07-40B-22 CLIMATE CONTROL UNIT DISASSEMBLY/ASSEMBLY [MANUAL AIR CONDITIONER].) (See 07-40B-25 CLIMATE CONTROL UNIT INSPECTION [MANUAL AIR CONDITIONER].) (See 07-40B-27 FAN SWITCH INSPECTION [MANUAL AIR CONDITIONER].)
9	A/C relay (See 09-21-28 RELAY LOCATION.) (See 09-21-29 RELAY INSPECTION.)
10	Blower relay (See 09-21-28 RELAY LOCATION.) (See 09-21-29 RELAY INSPECTION.)

AIR INTAKE ACTUATOR REMOVAL/INSTALLATION [MANUAL AIR CONDITIONER]

id0740a2801400

R.H.D.

1. Disconnect the negative battery cable. (See 01-17A-11 NEGATIVE BATTERY CABLE DISCONNECTION/

CONTROL SYSTEM [MANUAL AIR CONDITIONER]

CONNECTION [SKYACTIV-G 2.0].)(See 01-17A-13 NEGATIVE BATTERY CABLE DISCONNECTION/CONNECTION [SKYACTIV-G 2.0 (WITHOUT i-stop)].)(See 01-17B-9 NEGATIVE BATTERY CABLE DISCONNECTION/CONNECTION [SKYACTIV-D 2.2].)

2. Remove the following parts:
   (1) Shift lever knob (MTX) (See 05-16A-1 MANUAL TRANSAXLE SHIFT MECHANISM REMOVAL/INSTALLATION [C66M-R, C66MX-R].) (See 05-16B-1 MANUAL TRANSAXLE SHIFT MECHANISM REMOVAL/INSTALLATION [D66M-R, D66MX-R].)
   (2) Glove compartment (See 09-17-30 GLOVE COMPARTMENT REMOVAL/INSTALLATION.)
   (3) Front console box (See 09-17-40 FRONT CONSOLE BOX REMOVAL/INSTALLATION.)
   (4) Shift panel (See 09-17-42 SHIFT PANEL REMOVAL/INSTALLATION.)
   (5) Upper panel (See 09-17-44 UPPER PANEL REMOVAL/INSTALLATION.)
   (6) Rear console (See 09-17-45 REAR CONSOLE REMOVAL/INSTALLATION.)
   (7) Side wall (See 09-17-49 SIDE WALL REMOVAL/INSTALLATION.)
   (8) Decoration panel (See 09-17-33 DECORATION PANEL REMOVAL/INSTALLATION.)
   (9) Front console (See 09-17-50 FRONT CONSOLE REMOVAL/INSTALLATION.)
   (10)Front scuff plate (passenger-side) (See 09-17-61 FRONT SCUFF PLATE REMOVAL/INSTALLATION.)
   (11)Front side trim (passenger-side) (See 09-17-62 FRONT SIDE TRIM REMOVAL/INSTALLATION.)
   (12)Dashboard under cover (See 09-17-35 DASHBOARD UNDER COVER REMOVAL/INSTALLATION.)
   (13)Front heat duct (passenger-side) (See 07-11-22 FRONT HEAT DUCT REMOVAL/INSTALLATION.)
   (14)Lower panel (passenger-side) (See 09-17-35 LOWER PANEL REMOVAL/INSTALLATION.)
3. Remove the blower unit. (See 07-40B-6 BLOWER MOTOR REMOVAL/INSTALLATION [MANUAL AIR CONDITIONER].)
4. Remove the screw, then remove the air intake actuator.
5. Install in the reverse order of removal.

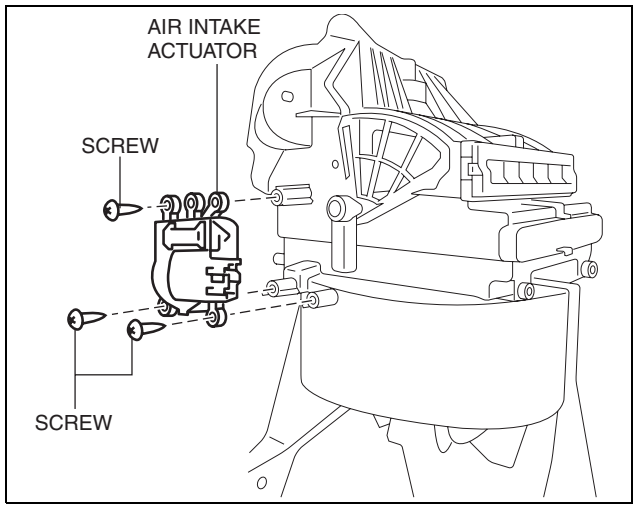

ac5wzw0000190

AIR INTAKE ACTUATOR INSPECTION [MANUAL AIR CONDITIONER]

id0740a2801500

1. Connect battery positive voltage to air intake actuator terminal B (or C), connect terminal C (or B) to ground, and then verify that the air intake actuator operates as shown in the table.
   - If the operation condition is not normal, replace the air intake actuator.

L.H.D.

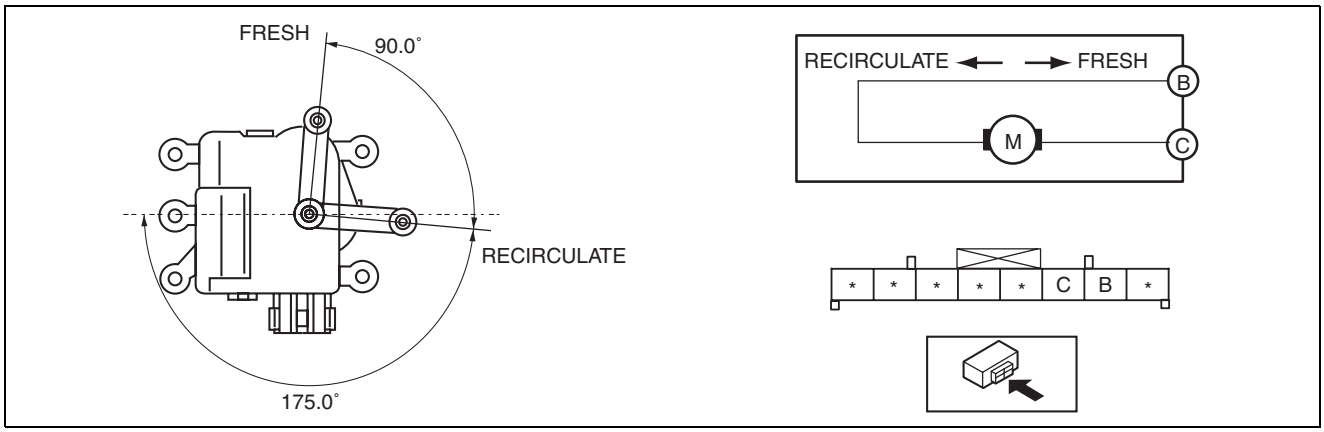

ac5wzw0000190

CONTROL SYSTEM [MANUAL AIR CONDITIONER]

Terminal		Air intake actuator operation
B	C	
B+	Ground	FRESH → RECIRCULATE
Ground	B+	RECIRCULATE → FRESH

R.H.D.

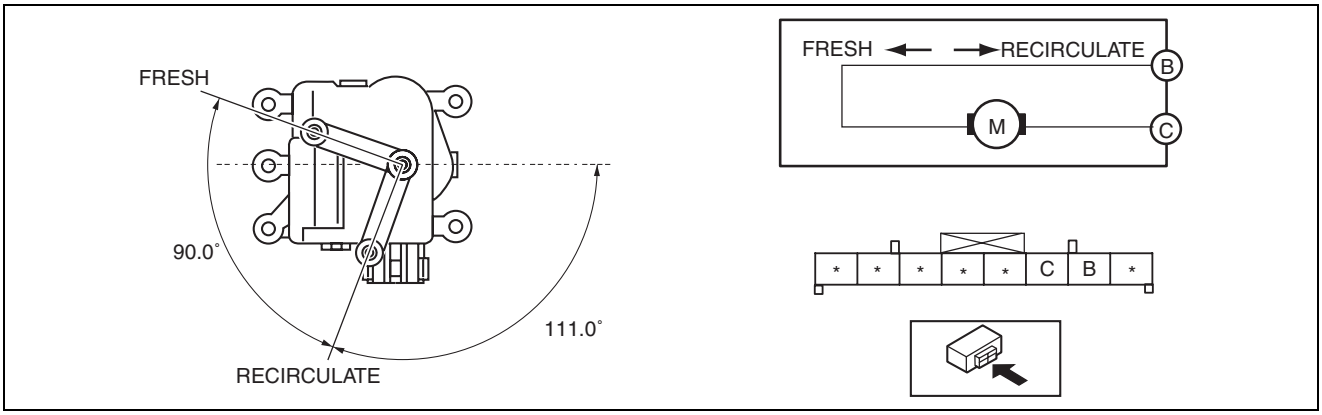

ac5wzw0000190

Terminal		Air intake actuator operation
B	C	
B+	Ground	RECIRCULATE → FRESH
Ground	B+	FRESH → RECIRCULATE

BLOWER MOTOR REMOVAL/INSTALLATION [MANUAL AIR CONDITIONER]

id0740a2800900

1. Disconnect the negative battery cable. (See 01-17A-11 NEGATIVE BATTERY CABLE DISCONNECTION/CONNECTION [SKYACTIV-G 2.0].)(See 01-17A-13 NEGATIVE BATTERY CABLE DISCONNECTION/CONNECTION [SKYACTIV-G 2.0 (WITHOUT i-stop)].)(See 01-17B-9 NEGATIVE BATTERY CABLE DISCONNECTION/CONNECTION [SKYACTIV-D 2.2].)
2. Remove the dashboard under cover. (See 09-17-35 DASHBOARD UNDER COVER REMOVAL/INSTALLATION.)
3. Disconnect the connector.
4. Remove the screws.

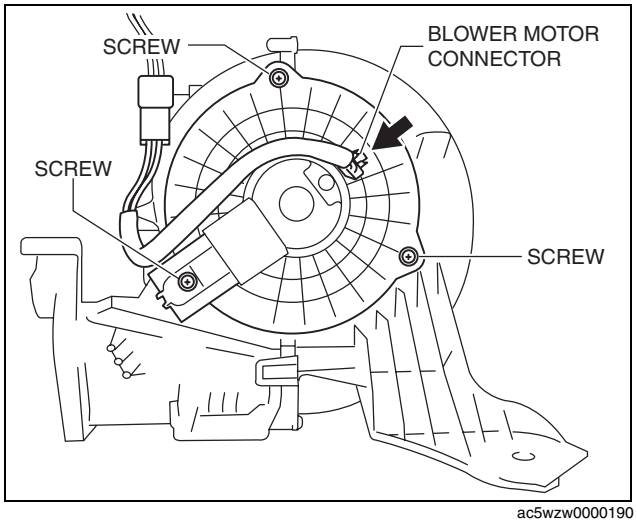

ac5wzw0000190

CONTROL SYSTEM [MANUAL AIR CONDITIONER]

5. Remove the blower motor.
6. Install in the reverse order of removal.

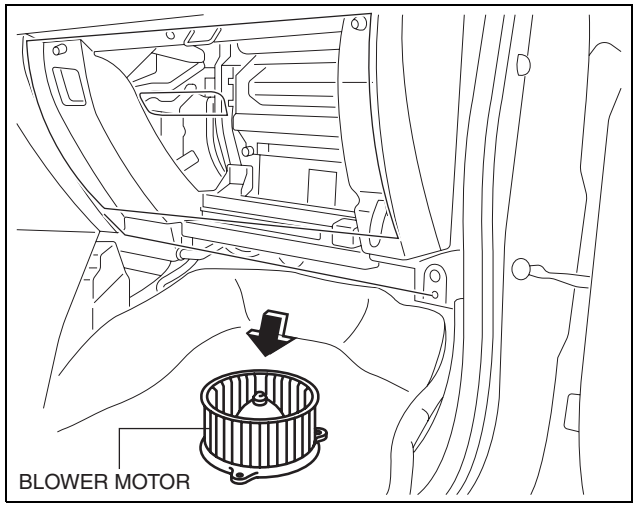

ac5wzw0000190

BLOWER MOTOR INSPECTION [MANUAL AIR CONDITIONER]

id0740a2801000

1. Connect battery positive voltage to blower motor terminal B, connect terminal A to ground, and then verify its operation.
   - If there is any malfunction, replace the blower motor.

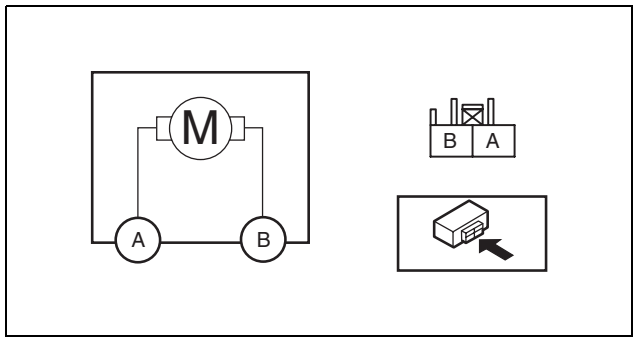

ac5wzw0000277

MAGNETIC CLUTCH DISASSEMBLY/ASSEMBLY [MANUAL AIR CONDITIONER]

id0740a2800400

1. Disassemble in the order indicated in the table.

1	Bolt (See 07-40B-8 Bolt Removal/Installation Note.)
2	Pressure plate
3	Shim (See 07-40B-9 Shim Installation Note.)
4	Snap ring (See 07-40B-8 Snap Ring Removal/Installation Note.)
5	A/C compressor pulley
6	Snap ring (See 07-40B-8 Snap Ring Removal/Installation Note.)
7	Stator
8	A/C compressor body

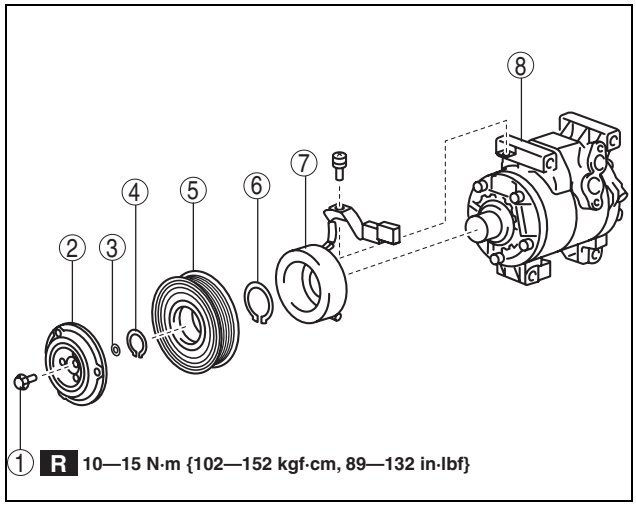

ac5wzw0000277

2. Assemble in the reverse order of disassembly.
3. Adjust the magnetic clutch clearance. (See 07-40B-9 MAGNETIC CLUTCH ADJUSTMENT [MANUAL AIR CONDITIONER].)

07

CONTROL SYSTEM [MANUAL AIR CONDITIONER]

Bolt Removal/Installation Note

1. When removing or installing the bolt, lock the A/C compressor pulley against rotation using the following procedure.

Caution

- **When connecting the positive battery cable to the magnetic clutch connector, use a cable with a female terminal of the correct size. Otherwise, load will be applied to the terminal, resulting in deformation or damage, and poor contact. In addition, the positive battery cable could disconnect from the connector resulting in a short circuit.**

(1) Apply battery positive voltage to the magnetic clutch terminal and connect the A/C compressor body to the ground.

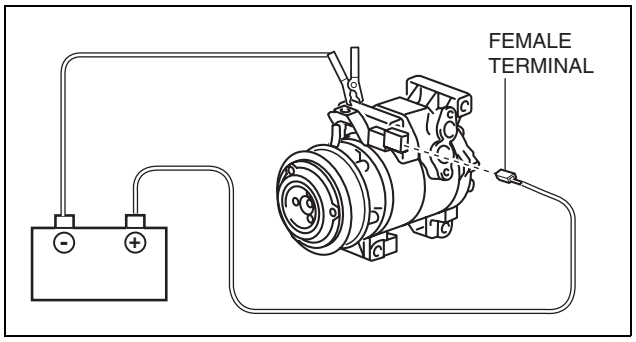

ac5wzw0000189

(2) Wrap the drive belt, which is no longer of use, tightly around the A/C compressor pulley.
(3) Hold the drive belt in place with pliers.
(4) Remove/installation the bolt.

Tightening torque
10—15 N·m {102 —152 kgf·cm, 89 — 132 in·lbf}

2. When installing a new A/C compressor body, replace the recommended bolt.

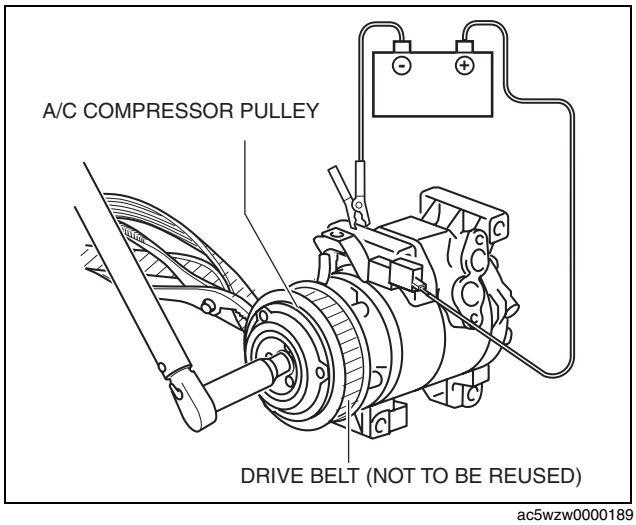

ac5wzw0000189

Snap Ring Removal/Installation Note

1. Remove/install the snap ring using a snap ring pliers.

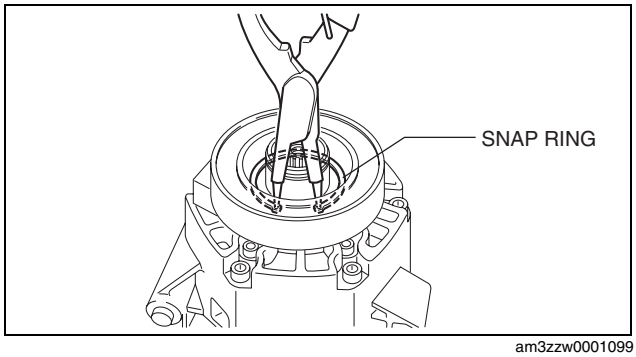

am3zzw0001099

CONTROL SYSTEM [MANUAL AIR CONDITIONER]

Shim Installation Note

1. First, insert the **1mm (0.039 in)** thick shim into the shaft.

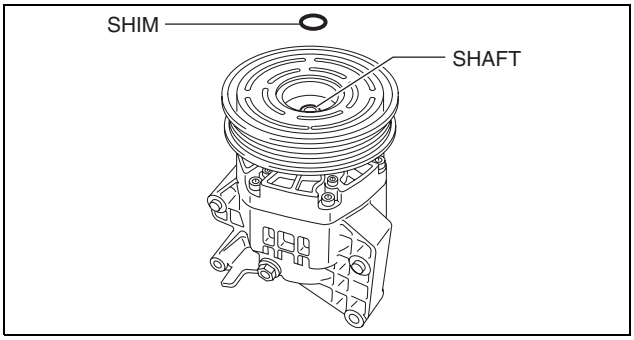

am3zzw0001100

MAGNETIC CLUTCH ADJUSTMENT [MANUAL AIR CONDITIONER]

id0740a2800500

1. Measure the clearance around the entire circumference between the pressure plate and A/C compressor pulley using a thickness gauge.
2. Verify the clearance.
   - If not within the specification, remove the pressure plate and adjust the clearance by changing the shim (**0.2 mm {0.008 in}, 0.5 mm {0.02 in}**) or the number of shims.

   Magnetic clutch clearance
   0.35—0.65 mm {0.014—0.025 in}

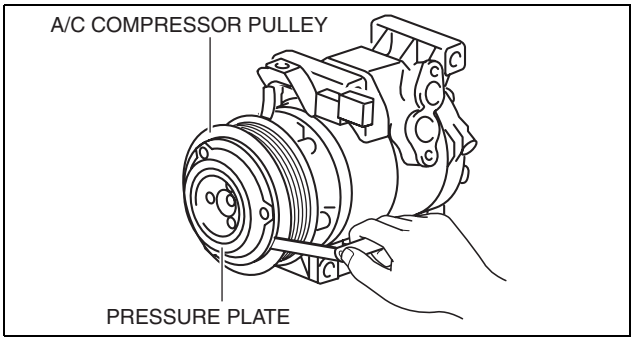

am3zzw0001100

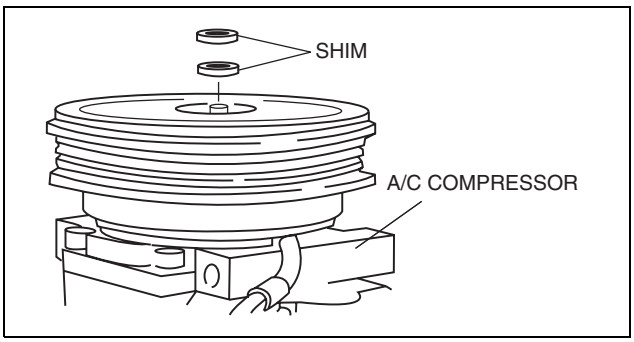

am3zzw0001194

MAGNETIC CLUTCH INSPECTION [MANUAL AIR CONDITIONER]

id0740a2800600

1. Connect battery to terminal A of magnetic clutch and ground to A/C compressor body.

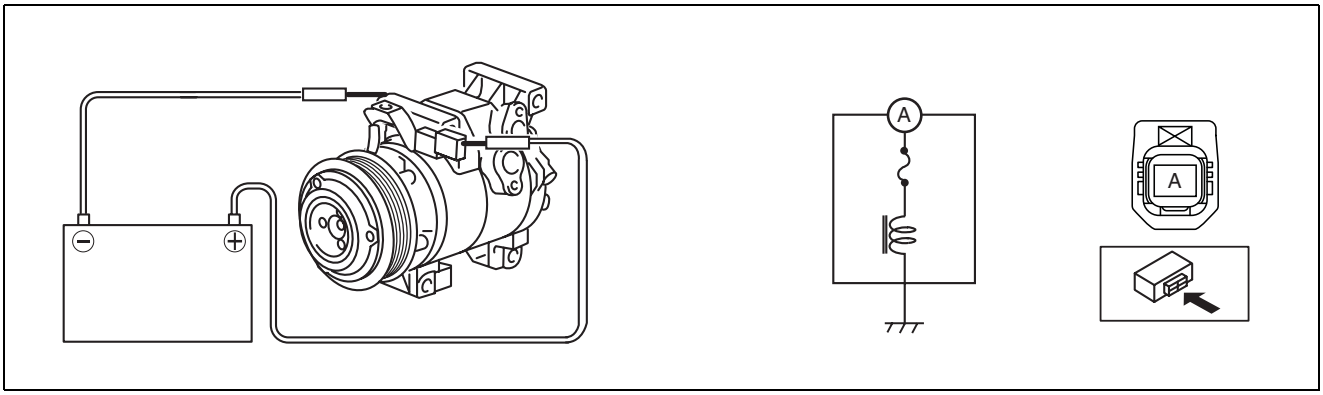

am3zzw0001100

2. Verify that the magnetic clutch operates.
   - If there is any malfunction, replace the magnetic clutch.

CONTROL SYSTEM [MANUAL AIR CONDITIONER]

RESISTOR REMOVAL/INSTALLATION [MANUAL AIR CONDITIONER]

id0740a2800700

Note
- When removing the resistor, perform the procedure in the posture shown in the figure.

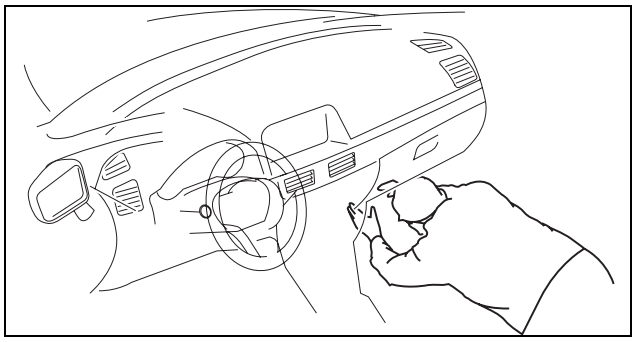
ac5wzw0000189

1. Disconnect the negative battery cable. (See 01-17A-11 NEGATIVE BATTERY CABLE DISCONNECTION/CONNECTION [SKYACTIV-G 2.0].)(See 01-17A-13 NEGATIVE BATTERY CABLE DISCONNECTION/CONNECTION [SKYACTIV-G 2.0 (WITHOUT i-stop)].)(See 01-17B-9 NEGATIVE BATTERY CABLE DISCONNECTION/CONNECTION [SKYACTIV-D 2.2].)
2. Remove the dashboard under cover. (See 09-17-35 DASHBOARD UNDER COVER REMOVAL/INSTALLATION.)
3. Disconnect the connector.
4. Rotate the resistor (2) while pressing the tab (1).

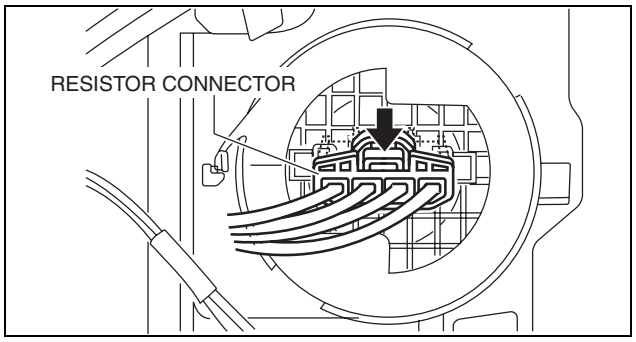

ac5wzw0000190

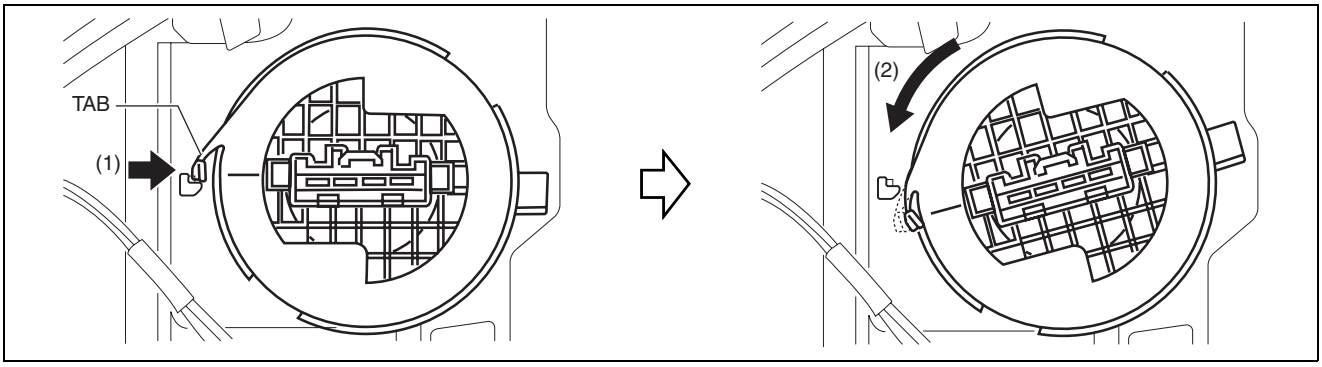

ac5wzw0000190

5. Remove the resistor.
6. Install in the reverse order of removal.

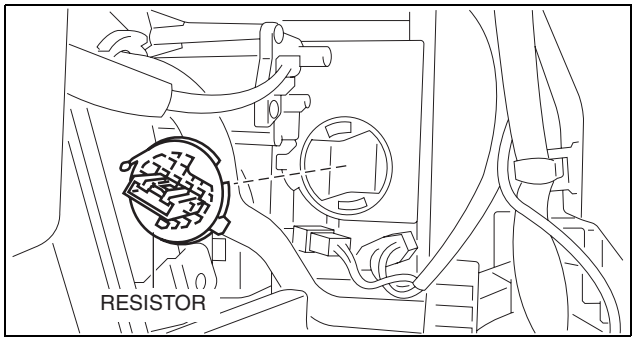

ac5wzw0000190

CONTROL SYSTEM [MANUAL AIR CONDITIONER]

RESISTOR INSPECTION [MANUAL AIR CONDITIONER]

id0740a2800800

1. Verify that the resistance between the resistor terminals is as shown in the table.
   - If there is any malfunction, replace the resistor.

Terminal	Resistance (ohm)
A—D	0.35—0.41
A—B	0.95—1.09
A—C	2.68—3.08

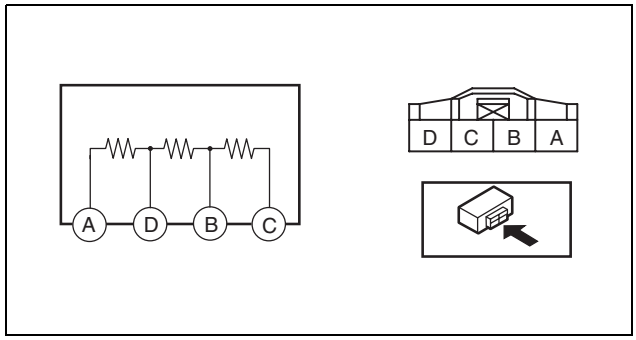

am3zzw0001104

AMBIENT TEMPERATURE SENSOR REMOVAL/INSTALLATION [MANUAL AIR CONDITIONER]

id0740a2803200

1. Disconnect the negative battery cable. (See 01-17A-11 NEGATIVE BATTERY CABLE DISCONNECTION/CONNECTION [SKYACTIV-G 2.0].)(See 01-17A-13 NEGATIVE BATTERY CABLE DISCONNECTION/CONNECTION [SKYACTIV-G 2.0 (WITHOUT i-stop)].)(See 01-17B-9 NEGATIVE BATTERY CABLE DISCONNECTION/CONNECTION [SKYACTIV-D 2.2].)
2. Remove the front bumper. (See 09-10-10 FRONT BUMPER REMOVAL/INSTALLATION.)
3. Disconnect the connector.
4. Remove the ambient temperature sensor.
5. Install in the reverse order of removal.

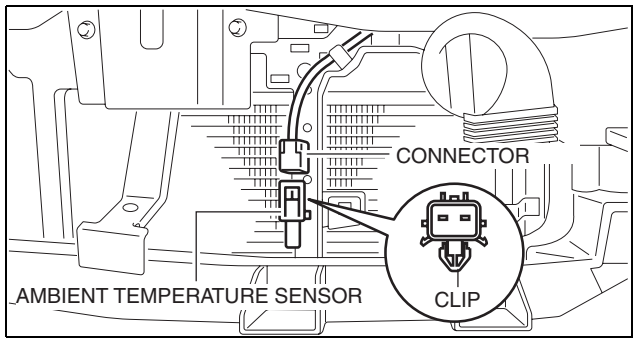

ac5wzw0000192

AMBIENT TEMPERATURE SENSOR INSPECTION [MANUAL AIR CONDITIONER]

id0740a2803300

1. Measure the temperature around the ambient temperature sensor and measure the resistance between the ambient temperature sensor terminal.
   - If the characteristics of the ambient temperature sensor are not as shown in the graph, replace the ambient temperature sensor.

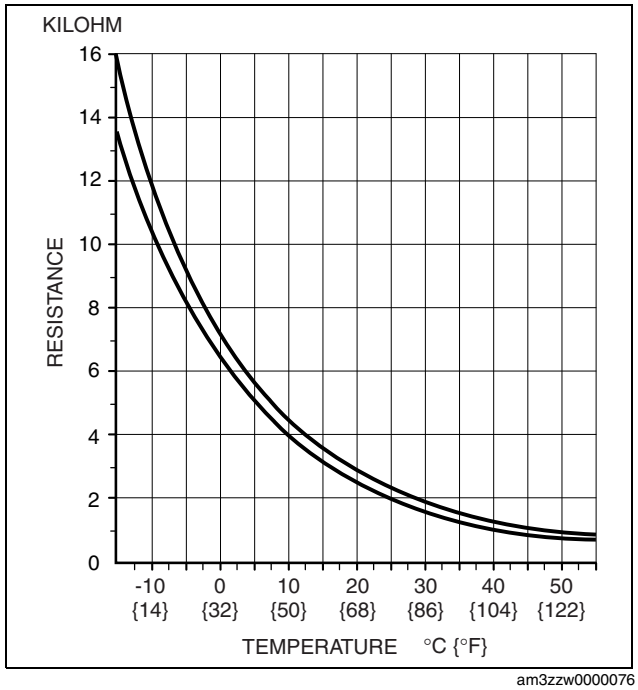

am3zzw0000076

EVAPORATOR TEMPERATURE SENSOR REMOVAL/INSTALLATION [MANUAL AIR CONDITIONER]

id0740a2801100

1. Remove the evaporator temperature sensor from the A/C unit. (See 07-11-14 A/C UNIT DISASSEMBLY/ASSEMBLY.)

CONTROL SYSTEM [MANUAL AIR CONDITIONER]

EVAPORATOR TEMPERATURE SENSOR INSPECTION [MANUAL AIR CONDITIONER]

id0740a2801200

Note
- Inspect the evaporator temperature sensor when it is installed to the A/C unit.

1. Set the fan speed at MAX HI.
2. Set the temperature control at MAX COLD.
3. Set the RECIRCULATE mode.
4. Turn the A/C switch off.
5. Close all doors and windows.
6. Wait for **5 min**.
7. Disconnect the evaporator temperature sensor connector.
8. Measure the temperature at the blower inlet.
9. Measure the resistance between the evaporator temperature sensor terminals.
   - If the resistance is not as shown in the graph, replace the evaporator temperature sensor.

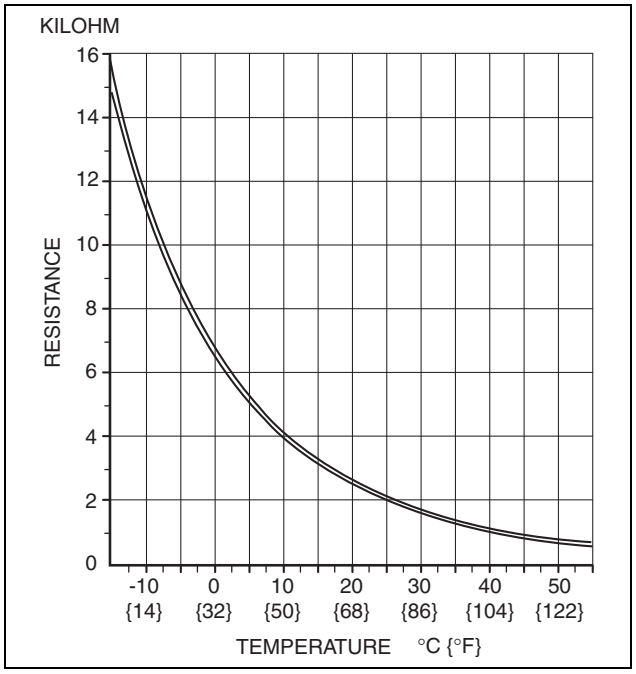

am3uuw0000408

CONTROL SYSTEM [MANUAL AIR CONDITIONER]

REFRIGERANT PRESSURE SENSOR REMOVAL/INSTALLATION [MANUAL AIR CONDITIONER]

id0740a2817300

1. Disconnect the negative battery cable. (See 01-17A-11 NEGATIVE BATTERY CABLE DISCONNECTION/CONNECTION [SKYACTIV-G 2.0].)(See 01-17A-13 NEGATIVE BATTERY CABLE DISCONNECTION/CONNECTION [SKYACTIV-G 2.0 (WITHOUT i-stop)].)(See 01-17B-9 NEGATIVE BATTERY CABLE DISCONNECTION/CONNECTION [SKYACTIV-D 2.2].)
2. Discharge the refrigerant. (See 07-10-3 REFRIGERANT CHARGING.)
3. Disconnect the refrigerant pressure sensor connector.

Caution
- **If moisture or foreign material enters the refrigeration cycle, cooling ability will be lowered and abnormal noise will occur. Always immediately plug all open fittings after removing any refrigeration cycle parts to keep moisture or foreign material out of the cycle.**

4. Loosen the refrigerant pressure sensor using two spanners.
5. Remove the refrigerant pressure sensor. (See 07-40B-13 Refrigerant Pressure Sensor Installation Note.)

Tightening torque
10—11 N·m {102—112 kgf·cm, 89—97 in·lbf}

6. Install in the reverse order of removal.
7. Perform the refrigerant system performance test. (See 07-10-9 REFRIGERANT SYSTEM PERFORMANCE TEST.)

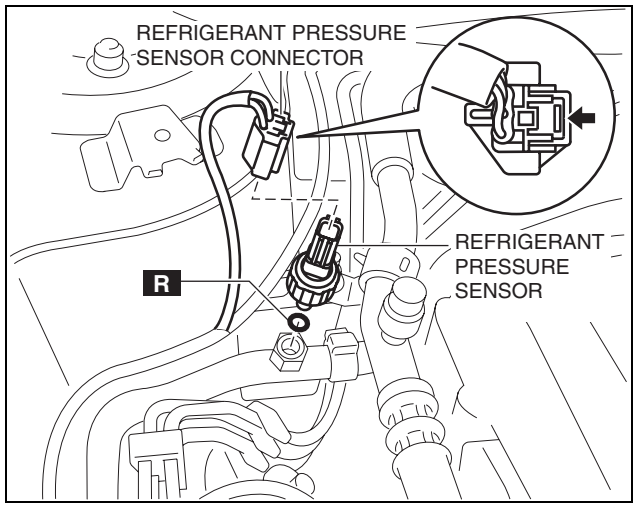

ac5wzw0000193

Refrigerant Pressure Sensor Installation Note

1. Apply compressor oil to the O-rings and connect the joints.

CONTROL SYSTEM [MANUAL AIR CONDITIONER]

REFRIGERANT PRESSURE SENSOR INSPECTION [MANUAL AIR CONDITIONER]

id0740a2817400

SKYACTIV-G 2.0

1. Install the manifold gauge.
2. Verify the high-pressure side reading of the manifold gauge.
3. Measure the terminal voltage at PCM terminal 2BB, 2AX and 2AJ.
4. Using the graph below, measure and verify the terminal voltage at 2AX.
5. Follow the PCM inspection when measuring the other terminal voltages. (See 01-40-17 PCM INSPECTION [SKYACTIV-G 2.0].)
   - Terminal 2BB: Approx. 5 V (Ignition switch on)
   - Terminal 2AJ: 1.0 V or less
     - — If the each voltage is not normal, inspect the related wiring harness.
       - If there is any malfunction, replace the related wiring harness.
       - If wiring harness is normal, replace the refrigerant pressure sensor.

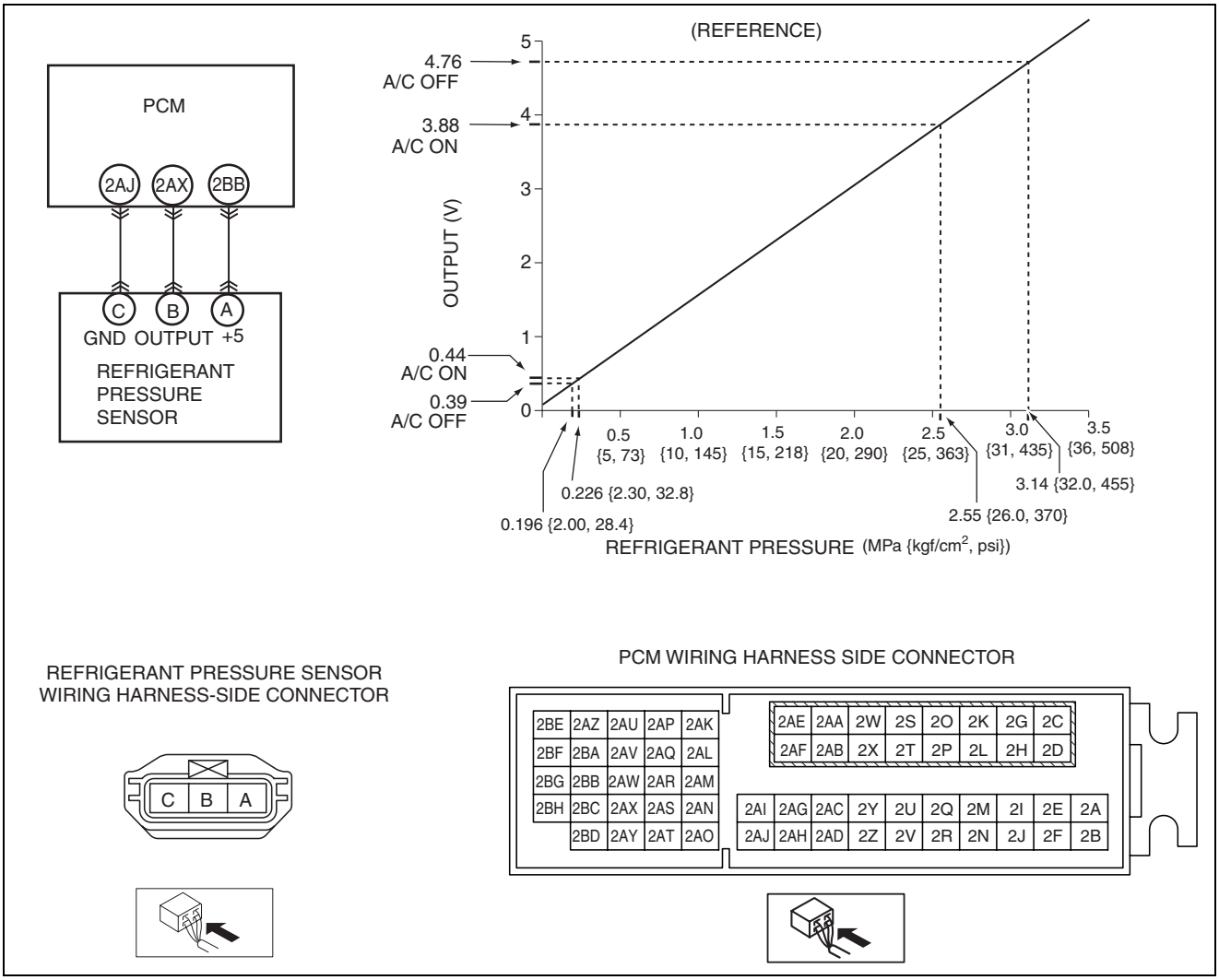

ac5wzw0000277

CONTROL SYSTEM [MANUAL AIR CONDITIONER]

SKYACTIV-D 2.2

1. Install the manifold gauge.
2. Verify the high-pressure side reading of the manifold gauge.
3. Measure the terminal voltage at PCM terminal 2BB, 2BH and 2BD.
4. Using the graph below, measure and verify the terminal voltage at 2BH.
5. Follow the PCM inspection when measuring the other terminal voltages.
   - Terminal 2BB: Approx. 5 V (Ignition switch on)
   - Terminal 2BD: 1.0 V or less
     - — If the each voltage is not normal, inspect the related wiring harness.
       - If there is any malfunction, replace the related wiring harness.
       - If wiring harness is normal, replace the refrigerant pressure sensor.

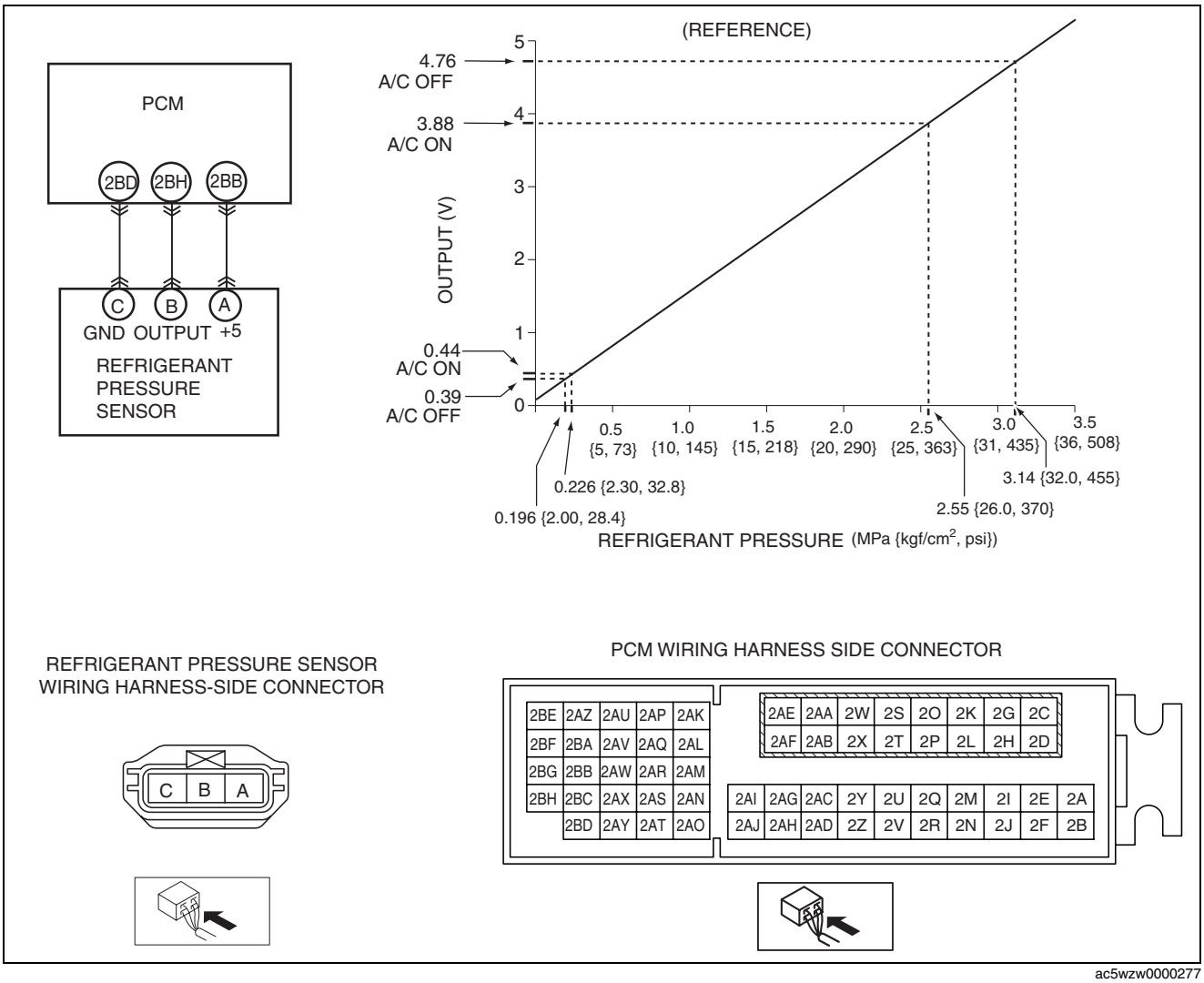

ac5wzw0000277

07

CONTROL SYSTEM [MANUAL AIR CONDITIONER]

CLIMATE CONTROL UNIT REMOVAL/INSTALLATION [MANUAL AIR CONDITIONER]

R.H.D.
Removal

1. Disconnect the negative battery cable. (See 01-17A-11 NEGATIVE BATTERY CABLE DISCONNECTION/CONNECTION [SKYACTIV-G 2.0].)(See 01-17A-13 NEGATIVE BATTERY CABLE DISCONNECTION/CONNECTION [SKYACTIV-G 2.0 (WITHOUT i-stop)].)(See 01-17B-9 NEGATIVE BATTERY CABLE DISCONNECTION/CONNECTION [SKYACTIV-D 2.2].)
2. Remove the following parts:
   (1) Shift lever knob (MTX) (See 05-16A-1 MANUAL TRANSAXLE SHIFT MECHANISM REMOVAL/INSTALLATION [C66M-R, C66MX-R].) (See 05-16B-1 MANUAL TRANSAXLE SHIFT MECHANISM REMOVAL/INSTALLATION [D66M-R, D66MX-R].)
   (2) Glove compartment (See 09-17-30 GLOVE COMPARTMENT REMOVAL/INSTALLATION.)
   (3) Front console box (See 09-17-40 FRONT CONSOLE BOX REMOVAL/INSTALLATION.)
   (4) Shift panel (See 09-17-42 SHIFT PANEL REMOVAL/INSTALLATION.)
   (5) Upper panel (See 09-17-44 UPPER PANEL REMOVAL/INSTALLATION.)
   (6) Rear console (See 09-17-45 REAR CONSOLE REMOVAL/INSTALLATION.)
   (7) Side wall (See 09-17-49 SIDE WALL REMOVAL/INSTALLATION.)
   (8) Decoration panel (See 09-17-33 DECORATION PANEL REMOVAL/INSTALLATION.)
   (9) Front console (See 09-17-50 FRONT CONSOLE REMOVAL/INSTALLATION.)
3. Press the tab down, then slide the wire off the link.
4. Remove the wire from the wire clamp.

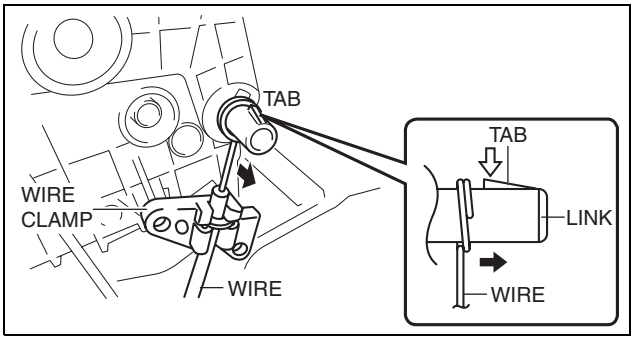

ac5wzw0000192

5. Remove in the order indicated in the table.

1	Screw
2	Connector
3	Climate control unit

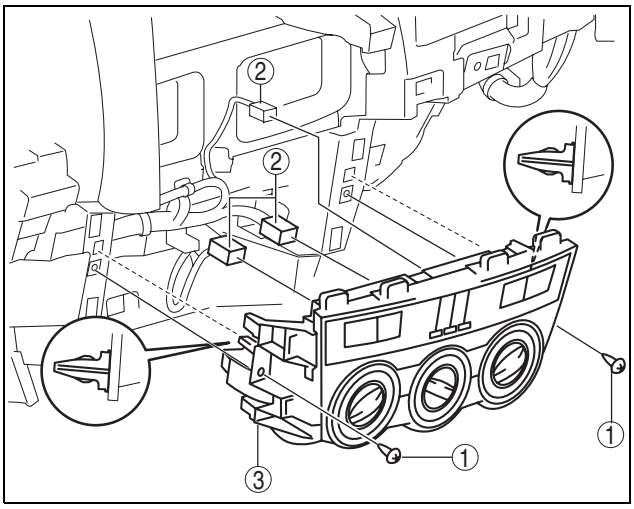

ac5wzw0000192

07

CONTROL SYSTEM [MANUAL AIR CONDITIONER]

6. Pull out the air mix wire and airflow mode wire from the dashboard.

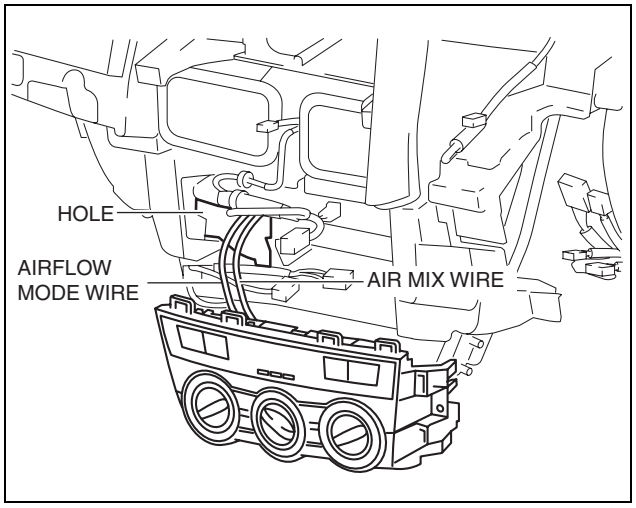

ac5wzw0000193

Install

1. Pass each wire through the hole on the dashboard as shown in the figure.

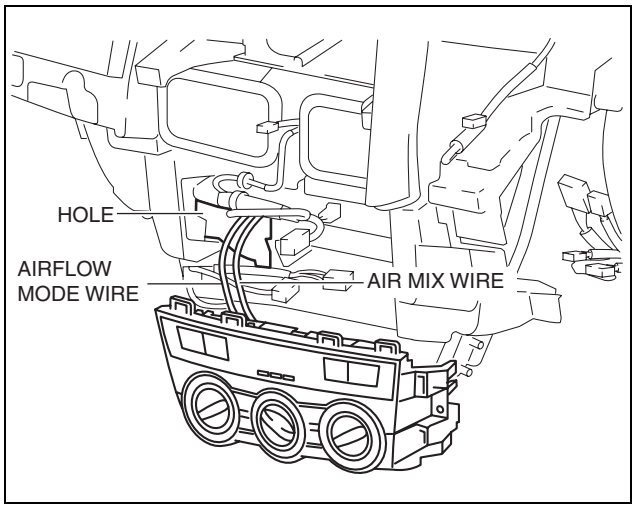

ac5wzw0000193

2. Route each wire as shown in the figure.

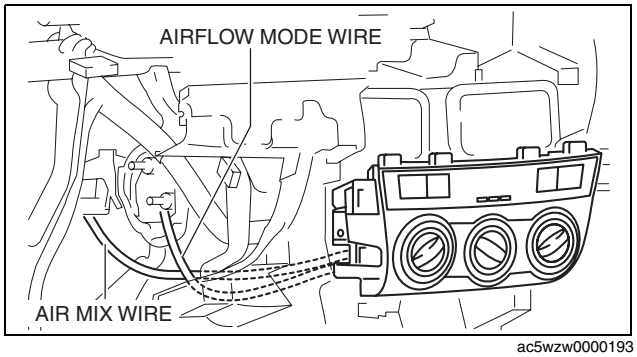

ac5wzw0000193

CONTROL SYSTEM [MANUAL AIR CONDITIONER]

3. Install in the order indicated in the table.

1	Connector
2	Climate control unit
3	Screw

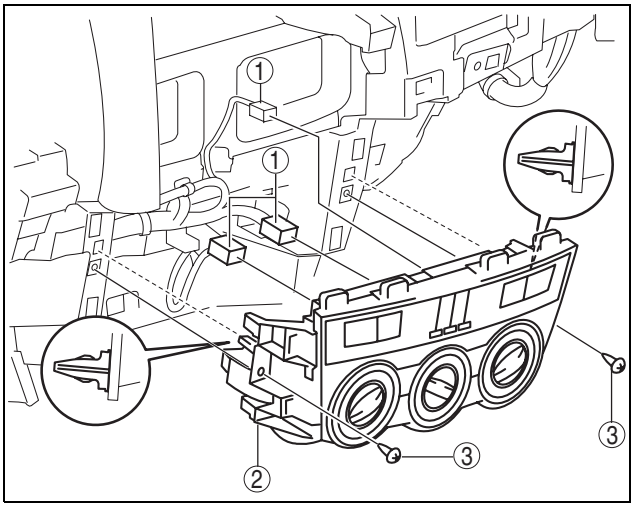

ac5wzw0000193

4. Connect each wire to links and install it to the wire clamps.
5. Verify that the dial operation is correct by fully turning each of the dials from one end to the other.
6. Install the following parts:
   (1) Front console (See 09-17-50 FRONT CONSOLE REMOVAL/INSTALLATION.)
   (2) Decoration panel (See 09-17-33 DECORATION PANEL REMOVAL/INSTALLATION.)
   (3) Side wall (See 09-17-49 SIDE WALL REMOVAL/INSTALLATION.)
   (4) Rear console (See 09-17-45 REAR CONSOLE REMOVAL/INSTALLATION.)
   (5) Upper panel (See 09-17-44 UPPER PANEL REMOVAL/INSTALLATION.)
   (6) Shift panel (See 09-17-42 SHIFT PANEL REMOVAL/INSTALLATION.)
   (7) Front console box (See 09-17-40 FRONT CONSOLE BOX REMOVAL/INSTALLATION.)
   (8) Glove compartment (See 09-17-30 GLOVE COMPARTMENT REMOVAL/INSTALLATION.)
   (9) Shift lever knob (MTX) (See 05-16A-1 MANUAL TRANSAXLE SHIFT MECHANISM REMOVAL/INSTALLATION [C66M-R, C66MX-R].) (See 05-16B-1 MANUAL TRANSAXLE SHIFT MECHANISM REMOVAL/INSTALLATION [D66M-R, D66MX-R].)
7. Connect the negative battery cable. (See 01-17A-11 NEGATIVE BATTERY CABLE DISCONNECTION/CONNECTION [SKYACTIV-G 2.0].)(See 01-17A-13 NEGATIVE BATTERY CABLE DISCONNECTION/CONNECTION [SKYACTIV-G 2.0 (WITHOUT i-stop)].)(See 01-17B-9 NEGATIVE BATTERY CABLE DISCONNECTION/CONNECTION [SKYACTIV-D 2.2].)

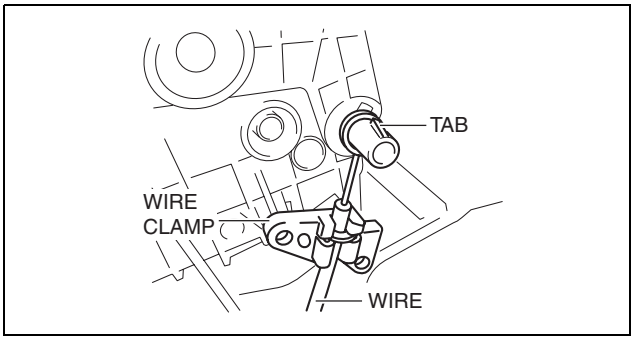

ac5wzw0000193

07

CONTROL SYSTEM [MANUAL AIR CONDITIONER]

CLIMATE CONTROL UNIT DISASSEMBLY/ASSEMBLY [MANUAL AIR CONDITIONER]

id0740a2802000

1. Disassemble in the order indicated in the figure.

L.H.D.

1	Dials
2	Airflow mode wire (See 07-40B-23 Wire Removal Note.) (See 07-40B-23 Wire Installation Note.)
3	Air mix wire (See 07-40B-23 Wire Removal Note.) (See 07-40B-23 Wire Installation Note.)
4	Fan switch (See 07-40B-24 Fan Switch Removal Note.)
5	Climate control unit (See 07-40B-25 Clock Removal Note.)

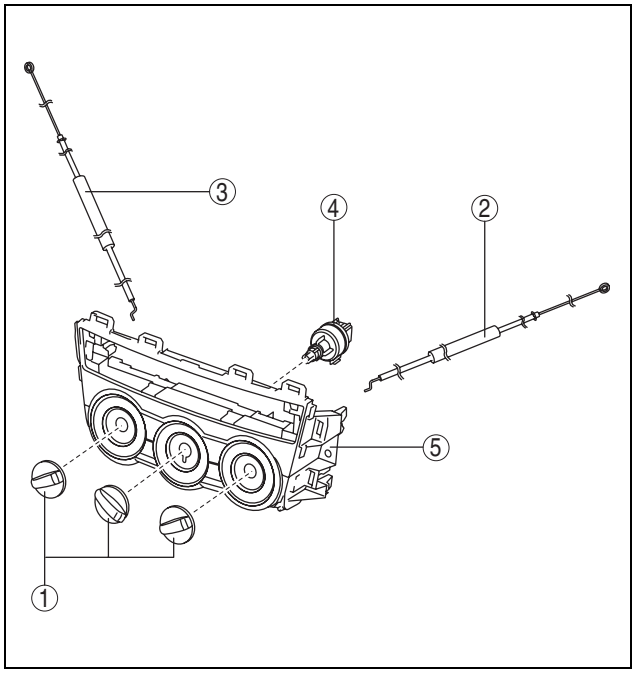

ac5wzw0000191

R.H.D.

1	Dials
2	Airflow mode wire (See 07-40B-23 Wire Removal Note.) (See 07-40B-23 Wire Installation Note.)
3	Air mix wire (See 07-40B-23 Wire Removal Note.) (See 07-40B-23 Wire Installation Note.)
4	Fan switch (See 07-40B-24 Fan Switch Removal Note.)
5	Climate control unit (See 07-40B-25 Clock Removal Note.)

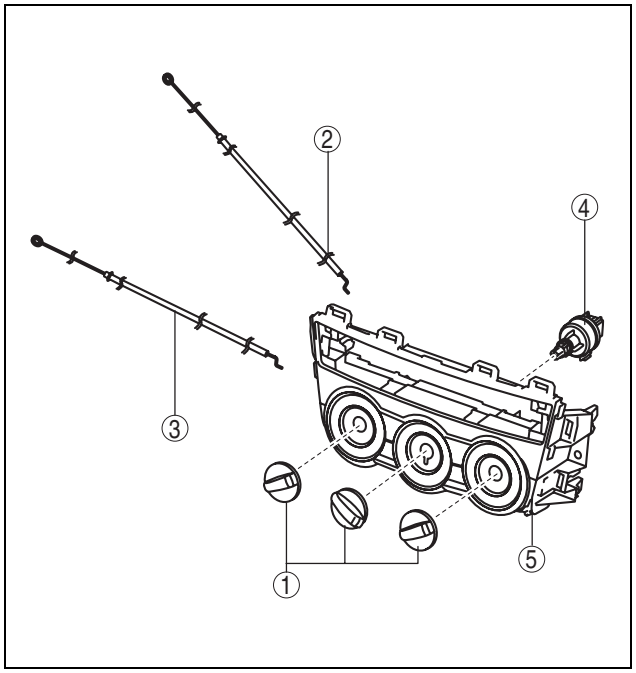

ac5wzw0000191

2. Assemble in the reverse order of disassembly.

CONTROL SYSTEM [MANUAL AIR CONDITIONER]

Wire Removal Note

1. Remove in the order indicated in the figure.

L.H.D.

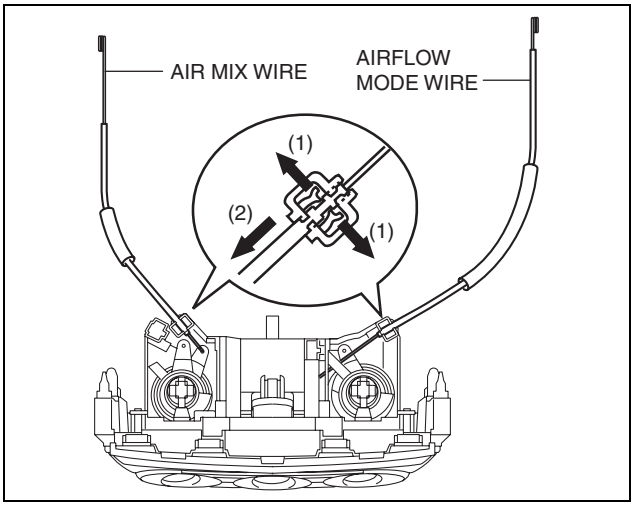

ac5wzw0000191

R.H.D.

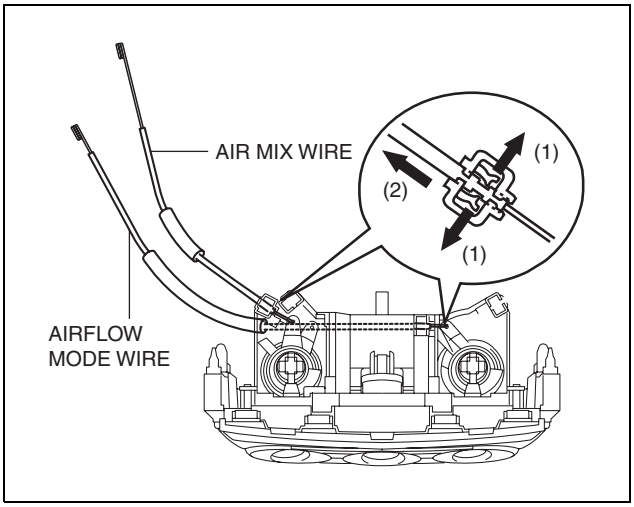

ac5wzw0000191

Wire Installation Note

1. Install as shown in the figure.

L.H.D.

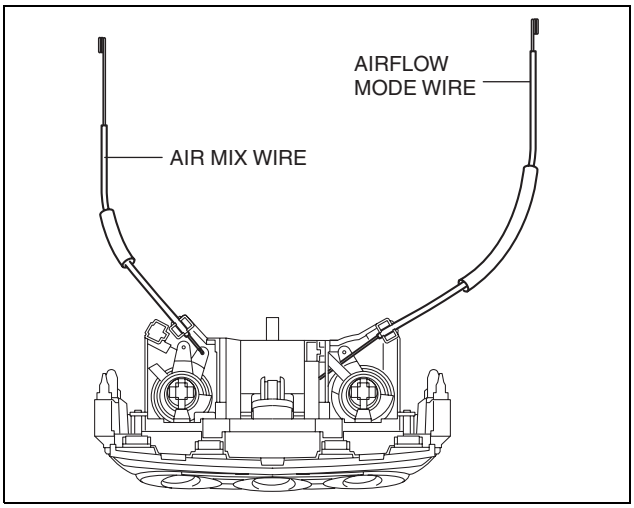

ac5wzw0000191

CONTROL SYSTEM [MANUAL AIR CONDITIONER]

R.H.D.

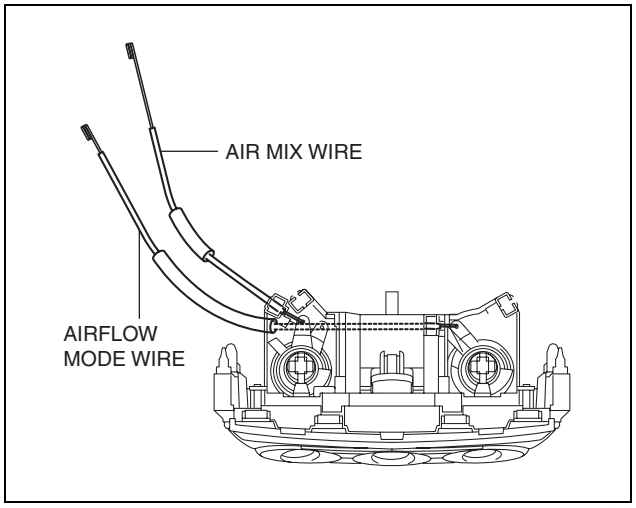

ac5wzw0000191

Fan Switch Removal Note

1. Remove the fan switch dial.
2. Press the tab as shown in the figure.

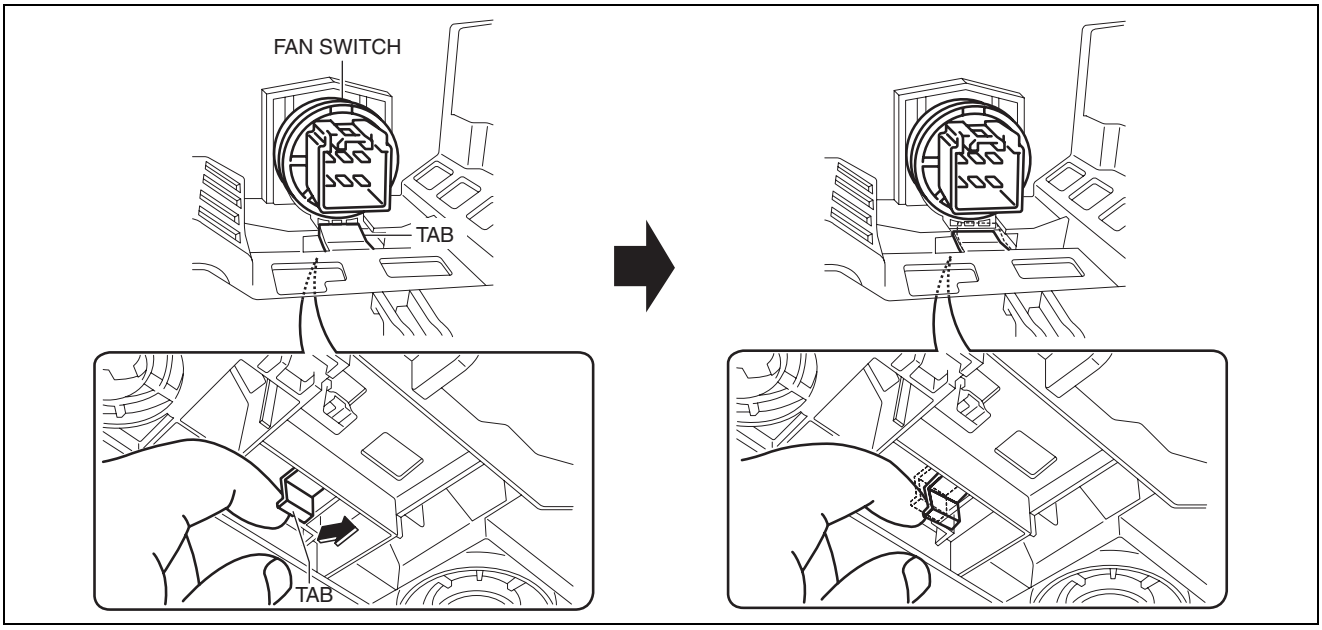

ac5wzw0000191

3. Pull the fan switch outward and remove it with the tab pressed.

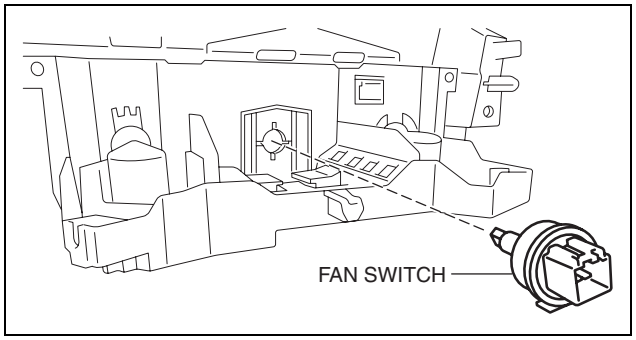

ac5wzw0000191

CONTROL SYSTEM [MANUAL AIR CONDITIONER]

Clock Removal Note

1. The clock can be removed from the climate control unit as shown in the figure. Refer to the clock removal/installation for the detailed procedure. (See 09-22-92 CLOCK REMOVAL/INSTALLATION.)

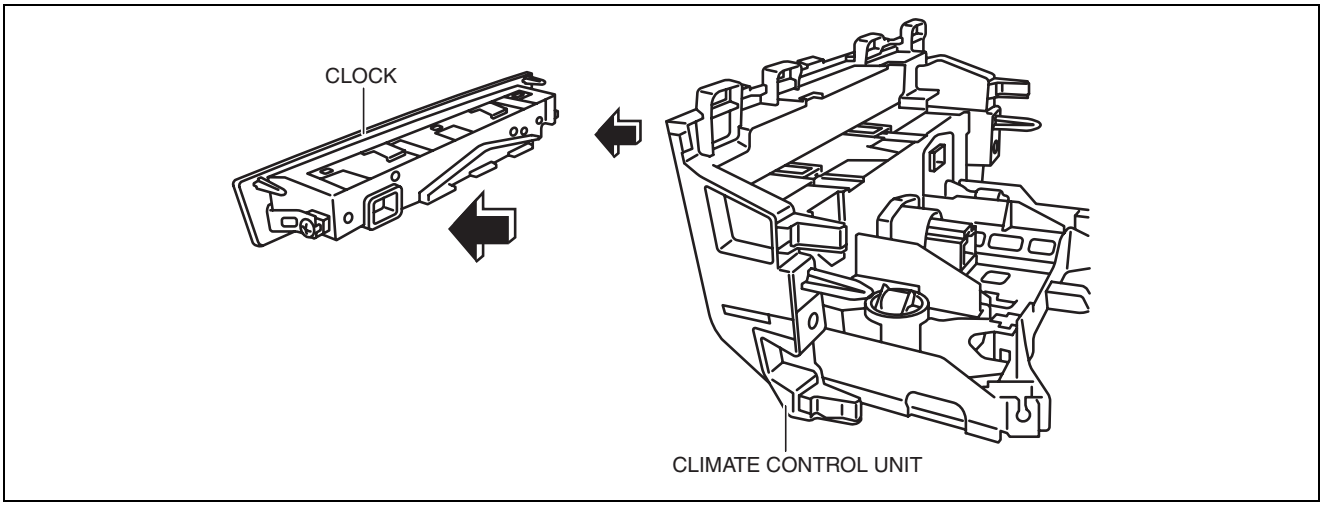

ac5wzw0000191

CLIMATE CONTROL UNIT INSPECTION [MANUAL AIR CONDITIONER]

id0740a2802200

1. Remove the climate control unit with the connector connected. (See 07-40B-16 CLIMATE CONTROL UNIT REMOVAL/INSTALLATION [MANUAL AIR CONDITIONER].)
2. Switch the ignition ON (engine off or on).
3. Connect the negative (-) lead of the tester to the body ground.
4. By inserting the positive (+) lead of the tester into the climate control unit connector, measure the voltage according to the terminal voltage table.
   - If there is any malfunction, inspect the parts under “Inspection item(s)”.
     — If the parts under “Inspection item(s)” are normal, replace the climate control unit.

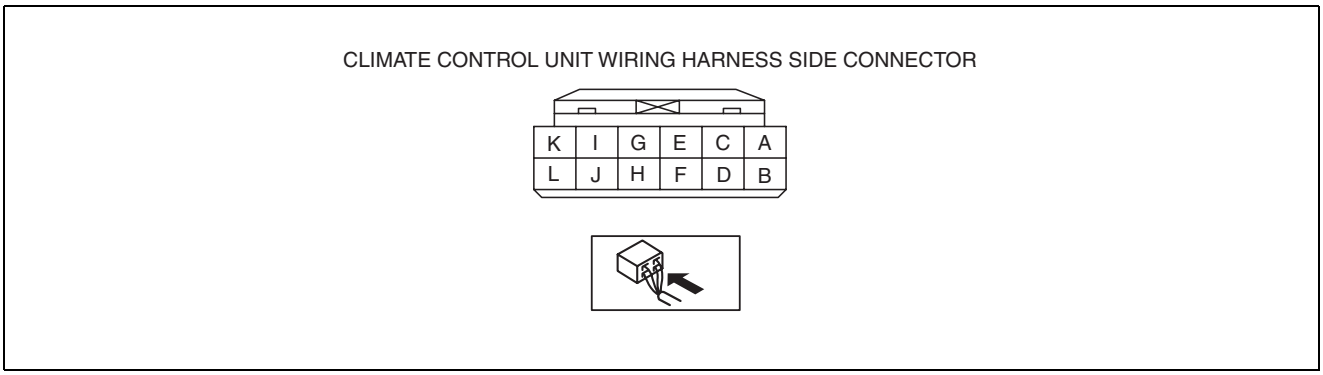

ac5wzw0000191

07

CONTROL SYSTEM [MANUAL AIR CONDITIONER]

Terminal Voltage Table (Reference)

Terminal	Signal name	Connected to	Measurement condition	Voltage (V)	Inspection item(s)
A	TNS signal	Front body control module (FBCM)	TNS OFF	1.0 or less	• Related wiring harness • Front body control module (FBCM)
			TNS ON	B+	
B	Illumination (-)	Instrument cluster	Headlight ON and panel light control MAX	2.0	• Instrument cluster • Related wiring harness
			Headlight ON and panel light control MIN	9.65	
C	Motor operation	Air intake actuator	Switched to RECIRCULATE	B+	• Related wiring harness • Air intake actuator
			Switched to FRESH	1.0 or less	
D	Ground	Body ground	Under any condition	1.0 or less	• Related wiring harness
E	Motor operation	Air intake actuator	Switched to RECIRCULATE	1.0 or less	• Related wiring harness • Air intake actuator
			Switched to FRESH	B+	
F	Sensor GND	Evaporator temperature sensor	Under any condition	1.0 or less	• Related wiring harness • Evaporator temperature sensor
G	Blower fan ON/OFF signal	Fan switch	Fan stopped	B+	• Related wiring harness • Resistor • Fan switch terminal voltage (D)
			Fan on	1.0 or less	
H*1	Evaporator temperature sensor input	Evaporator temperature sensor	Compared with temperature detected by evaporator temperature sensor	Refer to graph 1	• Related wiring harness • Evaporator temperature sensor • Climate control unit: terminal voltage (F)
I	Blower fan position signal	Fan switch	3rd, 4th	1.0 or less	• Related wiring harness • Resistor • Fan switch terminal voltage (D)
			off, 1st, 2nd	B+	
J	B+	ROOM 15 A fuse	Under any condition	B+	• Related wiring harness • ROOM 15 A fuse
K	LIN	Front body control module (FBCM)	Because this terminal is for communication, good/no good judgment by terminal voltage is not possible.		• Related wiring harness
L	IG2	Front body control module (FBCM)	Switch the ignition ON (engine off or on)	B+	• Related wiring harness • Front body control module (FBCM)
			Switch the ignition off	1.0 or less	

*1 : With cooling system

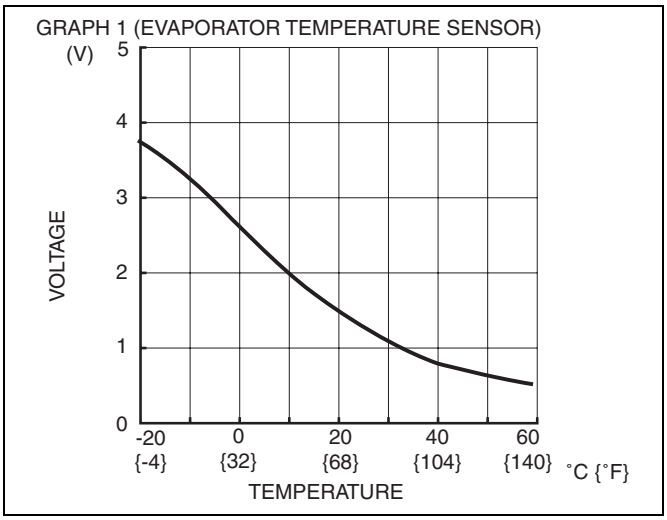

CONTROL SYSTEM [MANUAL AIR CONDITIONER]

FAN SWITCH INSPECTION [MANUAL AIR CONDITIONER]

id0740a2801300

1. Disconnect the negative battery cable. (See 01-17A-11 NEGATIVE BATTERY CABLE DISCONNECTION/CONNECTION [SKYACTIV-G 2.0].)(See 01-17A-13 NEGATIVE BATTERY CABLE DISCONNECTION/CONNECTION [SKYACTIV-G 2.0 (WITHOUT i-stop)].)(See 01-17B-9 NEGATIVE BATTERY CABLE DISCONNECTION/CONNECTION [SKYACTIV-D 2.2].)
2. Remove the following parts:
   (1) Shift lever knob (MTX) (See 05-16A-1 MANUAL TRANSAXLE SHIFT MECHANISM REMOVAL/INSTALLATION [C66M-R, C66MX-R].) (See 05-16B-1 MANUAL TRANSAXLE SHIFT MECHANISM REMOVAL/INSTALLATION [D66M-R, D66MX-R].)
   (2) Glove compartment (See 09-17-30 GLOVE COMPARTMENT REMOVAL/INSTALLATION.)
   (3) Front console box (See 09-17-40 FRONT CONSOLE BOX REMOVAL/INSTALLATION.)
   (4) Shift panel (See 09-17-42 SHIFT PANEL REMOVAL/INSTALLATION.)
   (5) Upper panel (See 09-17-44 UPPER PANEL REMOVAL/INSTALLATION.)
   (6) Rear console (See 09-17-45 REAR CONSOLE REMOVAL/INSTALLATION.)
   (7) Side wall (See 09-17-49 SIDE WALL REMOVAL/INSTALLATION.)
   (8) Decoration panel (See 09-17-33 DECORATION PANEL REMOVAL/INSTALLATION.)
   (9) Front console (See 09-17-50 FRONT CONSOLE REMOVAL/INSTALLATION.)
3. Remove the climate control unit. (See 07-40B-16 CLIMATE CONTROL UNIT REMOVAL/INSTALLATION [MANUAL AIR CONDITIONER].)
4. Verify that the continuity between the fan switch terminals as indicated in the table.
   - If there is any malfunction, replace the fan switch.

○—○: Continuity

Switch position	Terminal					
	A	B	C	D	E	F
0						
1	○		○			
2	○				○	
3	○	○				○
4	○	○		○		

ac5wzw0000190

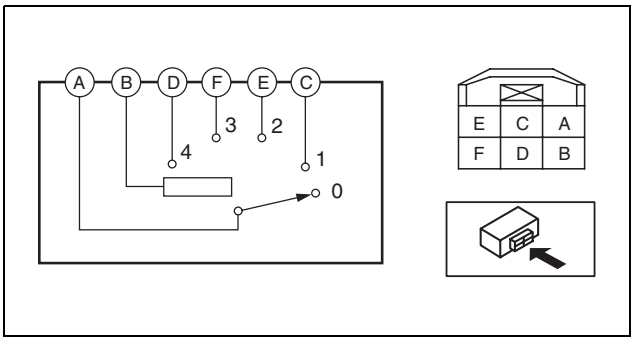

ac5wzw0000294

07

CONTROL SYSTEM [MANUAL AIR CONDITIONER]

PTC (POSITIVE TEMPERATURE COEFFICIENT) HEATER REMOVAL/INSTALLATION [MANUAL AIR CONDITIONER]

id0740a2806900

1. Disconnect the negative battery cable. (See 01-17B-9 NEGATIVE BATTERY CABLE DISCONNECTION/ CONNECTION [SKYACTIV-D 2.2].)
2. Remove the following parts:
   (1) Shift lever knob (MTX) (See 05-16A-1 MANUAL TRANSAXLE SHIFT MECHANISM REMOVAL/ INSTALLATION [C66M-R, C66MX-R].) (See 05-16B-1 MANUAL TRANSAXLE SHIFT MECHANISM REMOVAL/INSTALLATION [D66M-R, D66MX-R].)
   (2) Glove compartment (See 09-17-30 GLOVE COMPARTMENT REMOVAL/INSTALLATION.)
   (3) Front console box (See 09-17-40 FRONT CONSOLE BOX REMOVAL/INSTALLATION.)
   (4) Shift panel (See 09-17-42 SHIFT PANEL REMOVAL/INSTALLATION.)
   (5) Upper panel (See 09-17-44 UPPER PANEL REMOVAL/INSTALLATION.)
   (6) Rear console (See 09-17-45 REAR CONSOLE REMOVAL/INSTALLATION.)
   (7) Side wall (See 09-17-49 SIDE WALL REMOVAL/INSTALLATION.)
   (8) Decoration panel (See 09-17-33 DECORATION PANEL REMOVAL/INSTALLATION.)
   (9) Front console (See 09-17-50 FRONT CONSOLE REMOVAL/INSTALLATION.)
   (10)Front scuff plate (passenger-side) (See 09-17-61 FRONT SCUFF PLATE REMOVAL/INSTALLATION.)
   (11)Front side trim (passenger-side) (See 09-17-62 FRONT SIDE TRIM REMOVAL/INSTALLATION.)
   (12)Dashboard under cover (See 09-17-35 DASHBOARD UNDER COVER REMOVAL/INSTALLATION.)
   (13)Front heat duct (passenger-side) (See 07-11-22 FRONT HEAT DUCT REMOVAL/INSTALLATION.)
   (14)Lower panel (passenger-side) (See 09-17-35 LOWER PANEL REMOVAL/INSTALLATION.)
3. Detach the clips.
4. Remove the adhesive polyurethane.

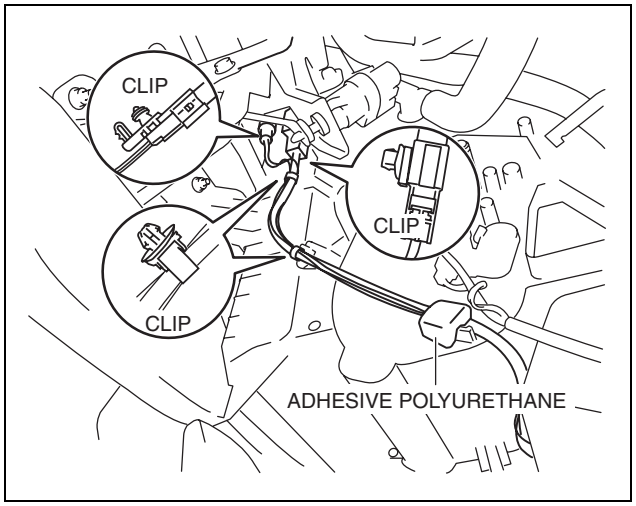

ac5wzw0000192

5. Disconnect the PTC heater connectors.

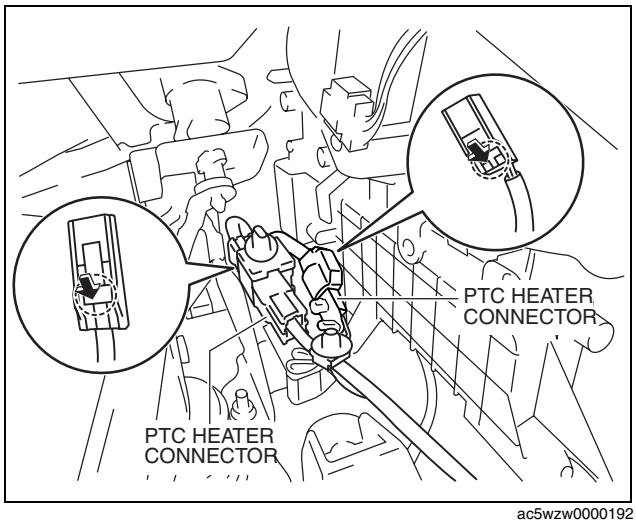

ac5wzw0000192

CONTROL SYSTEM [MANUAL AIR CONDITIONER]

6. Remove the PTC heater wiring harness from the hook as shown in the figure.

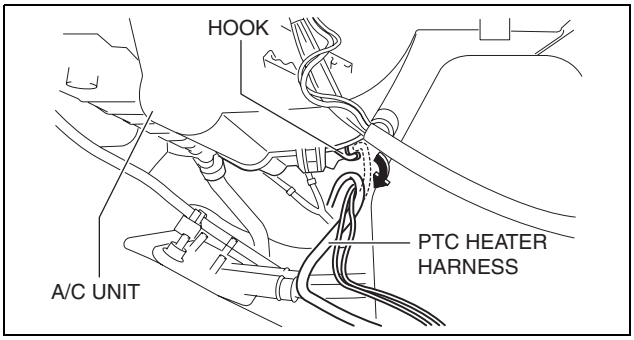

ac5wzw0000192

7. Remove the bolt and disconnect the earth.

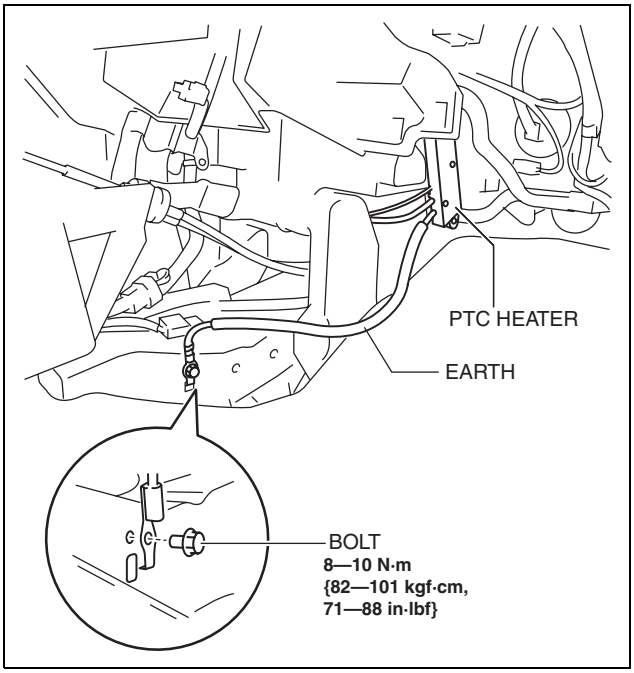

ac5wzw0000192

8. Remove the screws and remove the PTC heater.
9. Install in the reverse order of the removal.

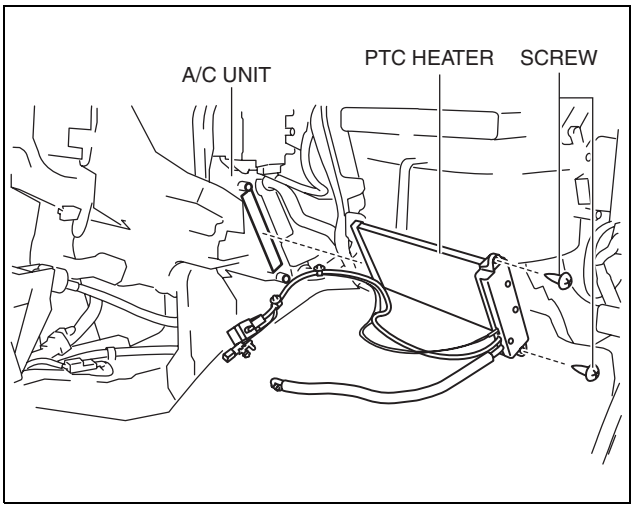

ac5wzw0000192

CONTROL SYSTEM [MANUAL AIR CONDITIONER]

PTC (POSITIVE TEMPERATURE COEFFICIENT) HEATER INSPECTION [MANUAL AIR CONDITIONER]

id0740a2806800

1. Allow the engine to cool down completely.
2. Remove the ambient temperature sensor and apply a resistance of **approx.12 kilohms (equivalent to -10 °C {14.0 °F})**.
3. Connect the PTC heater power supply wiring harness (red) or ground wiring harness (black) to a tester.
4. Set the fan switch at MAX HI and the temperature setting dial at MAX HOT, start the engine, and then measure the current.
   - If not within specification, remove the PTC heater.
     Current value (approx. quantity)
     67.5—82.5 A

07-50 TECHNICAL DATA

HVAC TECHNICAL DATA 07-50–1

TECHNICAL DATA

HVAC TECHNICAL DATA

id075000800100

Note

- The refrigerant used for the refrigerant system differs depending on the country. When draining or adding the refrigerant, verify the appropriate refrigerant type and specified amount of refrigerant from the caution label.

Item			Specification
REFRIGERANT SYSTEM			
Refrigerant	Type		HFO-1234yf HFC-134a
	Regular amount (approx. quantity) (g {oz})		465—515 {16.5—18.1} (HFC-134a) 475—525 {16.8—18.5} (SKYACTIV-G 2.0 (HFO-1234yf)) 445—495 {15.7—17.4} (SKYACTIV-D 2.2 (HFO-1234yf))
BASIC SYSTEM			
A/C compressor	Lubrication oil	Type	FD46XG
		Sealed volume (approx. quantity) (ml {cc, fl oz})	100 {100, 3.38}
CONTROL SYSTEM			
A/C compressor	Magnetic clutch clearance (mm {in})		0.35—0.65 {0.014—0.025}

RESTRAINTS

08
SECTION

ON-BOARD DIAGNOSTIC. . . . 08-02
SYMPTOM
TROUBLESHOOTING. 08-03
AIR BAG SYSTEM 08-10
SEAT BELT 08-11
SERVICE TOOLS 08-60

08-02 ON-BOARD DIAGNOSTIC

ON-BOARD DIAGNOSTIC
WIRING DIAGRAM **08-02–2**
FOREWORD **08-02–4**
Troubleshooting Procedure **08-02–4**
Action for non-repeatable malfunction. **08-02–5**
Outline **08-02–5**
FLOWCHART **08-02–5**
DTC INSPECTION. **08-02–7**
CMDTC Self Test **08-02–7**
ODDTC Self Test **08-02–7**
Snapshot Data Table **08-02–7**
CLEARING DTC **08-02–10**
CMDTC Self Test **08-02–10**
ODDTC Self Test **08-02–10**
DTC TABLE **08-02–11**
Inspection for DTCs not shown in DTC table **08-02–21**
DTC B0001:11/B0001:12/ B0001:13/B0001:19/B0001:1A **08-02–25**
Diagnostic Procedure. **08-02–26**
DTC B0001:55/B0010:55 . . . . . **08-02–30**
Diagnostic Procedure. **08-02–30**
DTC B0003:53. . . . . **08-02–31**
Diagnostic Procedure. **08-02–31**
DTC B0010:11/B0010:12/ B0010:13/B0010:19/B0010:1A **08-02–32**
Diagnostic Procedure. **08-02–33**
DTC B0094:11/B0094:13/ B0094:87/B0094:96 . . . . . **08-02–38**
Diagnostic Procedure. **08-02–39**
DTC B0094:55/B1417:55 . . . . . **08-02–42**
Diagnostic Procedure. **08-02–42**
DTC B00D2:01 . . . . . **08-02–43**
Diagnostic Procedure. **08-02–43**
DTC B00D2:29 . . . . . **08-02–44**
Diagnostic Procedure. **08-02–44**
DTC B00D5:01/B00D5:29/B1202:01 . . . **08-02–45**
Diagnostic Procedure. **08-02–45**
DTC B1011:95. . . . . **08-02–49**
Diagnostic Procedure. **08-02–50**
DTC B10FD:11/B10FD:13/ B10FD:87/B10FD:96. . . . . **08-02–52**
Diagnostic Procedure. **08-02–53**
DTC B10FD:55/B10FE:55. . . . . **08-02–57**
Diagnostic Procedure. **08-02–57**
DTC B10FE:11/B10FE:13/ B10FE:87/B10FE:96 . . . . . **08-02–58**
Diagnostic Procedure. **08-02–59**
DTC B1126:11/B1126:12/ B1126:13/B1126:19/B1126:1A **08-02–63**
Diagnostic Procedure. **08-02–64**
DTC B1126:55/B1127:55 . . . . . **08-02–69**
Diagnostic Procedure **08-02–69**
DTC B1127:11/B1127:12/ B1127:13/B1127:19/B1127:1A **08-02–70**
Diagnostic Procedure **08-02–71**
DTC B1128:11/B1128:12/ B1128:13/B1128:19/B1128:1A **08-02–76**
Diagnostic Procedure **08-02–77**
DTC B1128:55/B1129:55 . . . . . **08-02–82**
Diagnostic Procedure **08-02–82**
DTC B1129:11/B1129:12/ B1129:13/B1129:19/B1129:1A **08-02–83**
Diagnostic Procedure **08-02–84**
DTC B1193:00 . . . . . **08-02–89**
Diagnostic Procedure **08-02–89**
DTC B1196:11/B1196:13/ B1196:87/B1196:96 . . . . . **08-02–90**
Diagnostic Procedure **08-02–91**
DTC B1196:55/B1197:55 . . . . . **08-02–95**
Diagnostic Procedure **08-02–95**
DTC B1197:11/B1197:13/ B1197:87/B1197:96 . . . . . **08-02–96**
Diagnostic Procedure **08-02–97**
DTC B1D75:55 . . . . . **08-02–101**
Diagnostic Procedure **08-02–101**
DTC B1D75:62 . . . . . **08-02–102**
Diagnostic Procedure **08-02–103**
DTC B1206:00/U2107:00 . . . . . **08-02–106**
Diagnostic Procedure **08-02–106**
DTC B1211:11/B1211:12/ B1211:13/B1211:19/B1211:1A **08-02–107**
Diagnostic Procedure **08-02–108**
DTC B1211:55, B1214:55 . . . . . **08-02–113**
Diagnostic Procedure **08-02–113**
DTC B1214:11/B1214:12/ B1214:13/B1214:19/B1214:1A **08-02–114**
Diagnostic Procedure **08-02–115**
DTC B1417:11/B1417:13/ B1417:87/B1417:96 . . . . . **08-02–120**
Diagnostic Procedure **08-02–121**
DTC C0061:29/C0062:29/ C0063:29/P0666:29 . . . . . **08-02–125**
Diagnostic Procedure **08-02–125**
DTC U0028:88 . . . . . **08-02–126**
Diagnostic Procedure **08-02–126**
DTC U0300:00/U2100:00 . . . . . **08-02–130**
Diagnostic Procedure **08-02–130**
DTC U2005:68 . . . . . **08-02–131**
Diagnostic Procedure **08-02–131**
DTC U3000:49 . . . . . **08-02–132**
Diagnostic Procedure **08-02–132**
DTC U3003:16/U3003:17 . . . . . **08-02–132**

ON-BOARD DIAGNOSTIC

PAGE 2 OF 2
Diagnostic Procedure. 08-02–133

PID/DATA
MONITOR INSPECTION. 08-02–136
PID/DATA MONITOR TABLE 08-02–136

ON-BOARD DIAGNOSTIC

ON-BOARD DIAGNOSTIC WIRING DIAGRAM

id080200080200

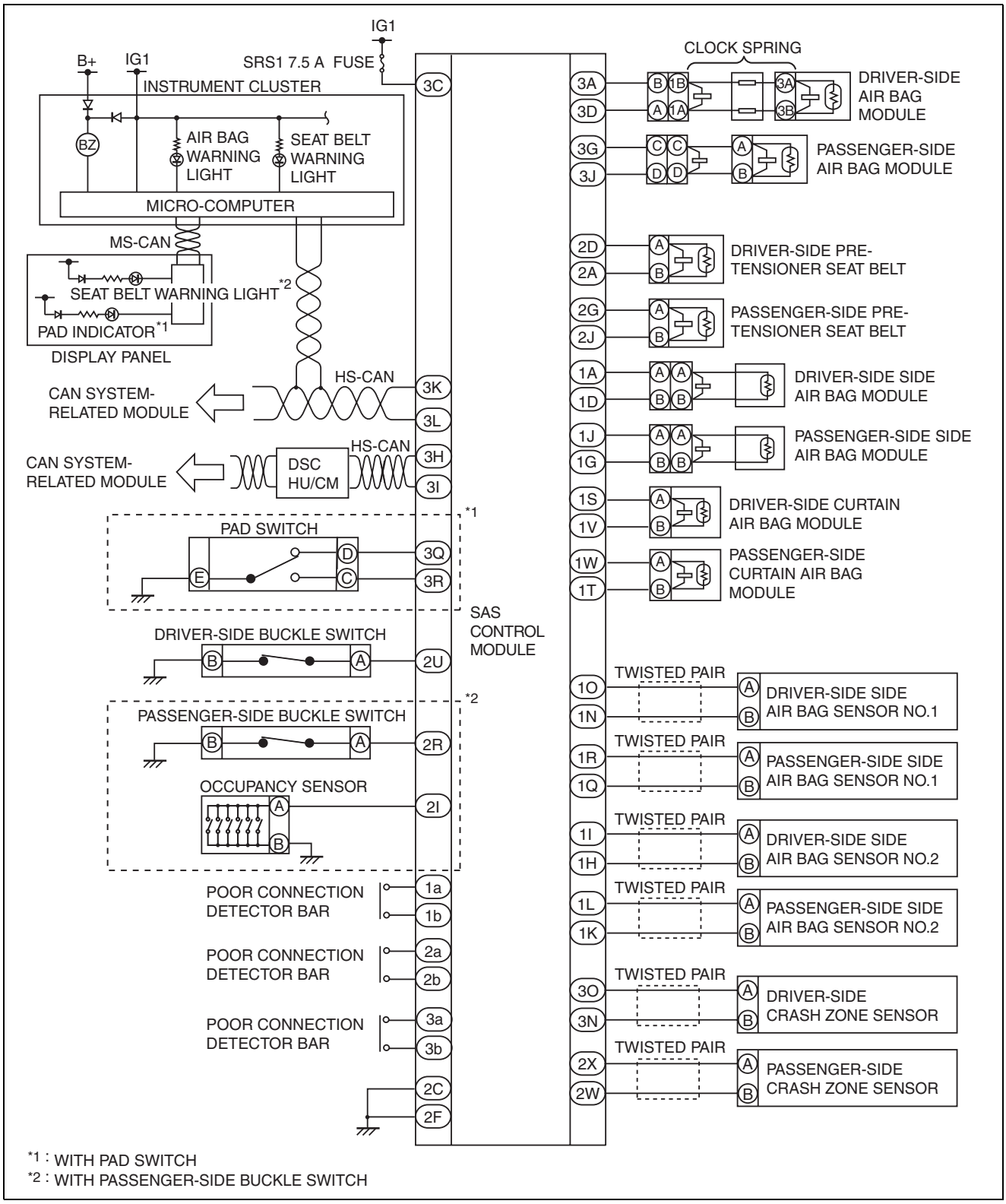

ac5wzw0000277

ON-BOARD DIAGNOSTIC

SAS CONTROL MODULE
HARNESS-SIDE CONNECTOR

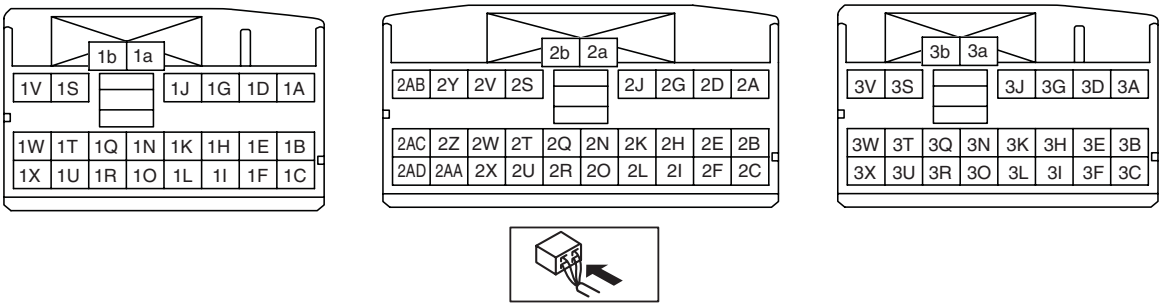

am3zzw0001106

08

ON-BOARD DIAGNOSTIC

FOREWORD

id080200080300

- If there is any vehicle malfunction complaint lodged by a customer, perform malfunction diagnosis according to the troubleshooting procedure.

Troubleshooting Procedure

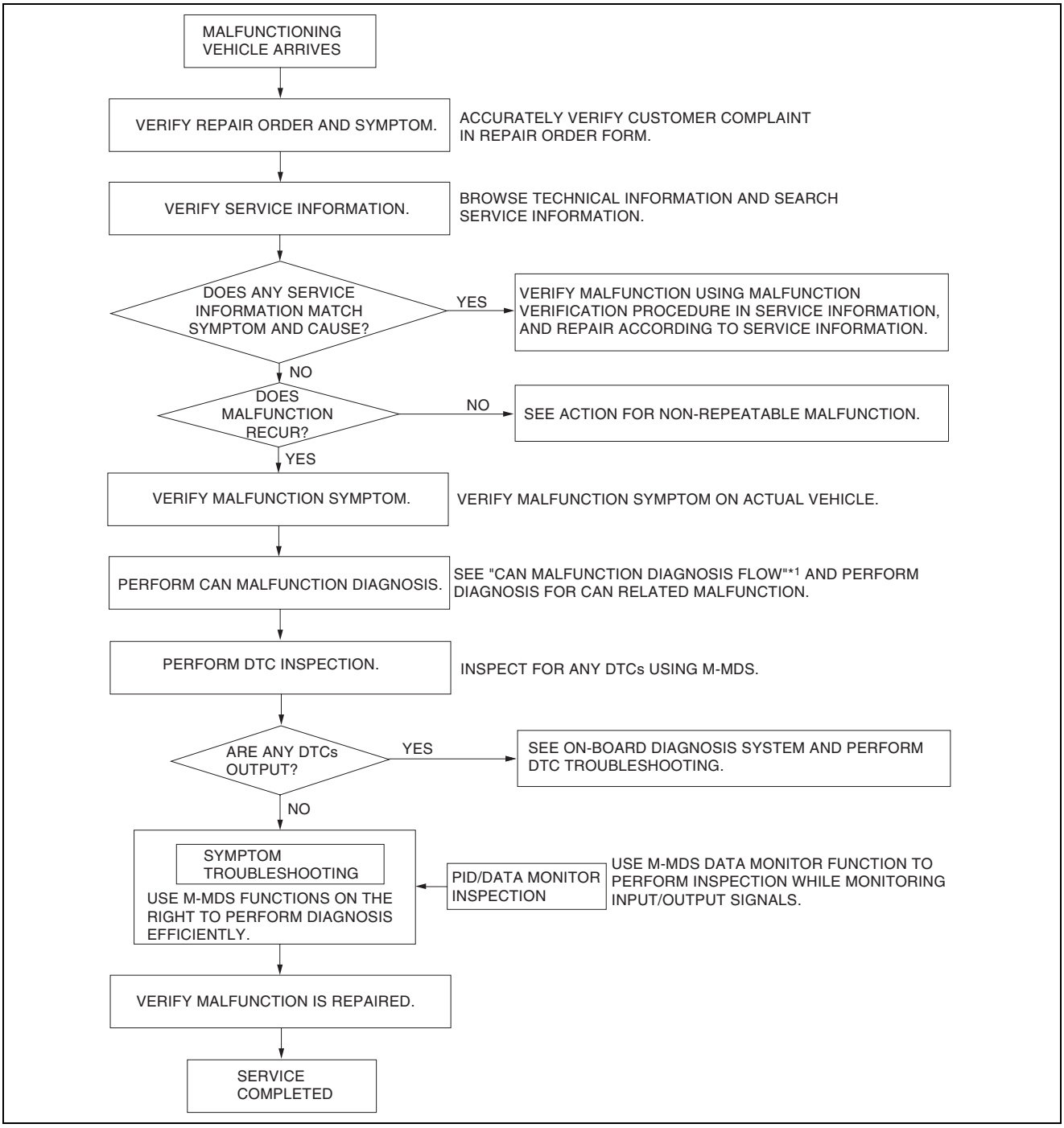

am3zzw0001144

*1 : 10-02A-3 CONTROLLER AREA NETWORK (CAN) MALFUNCTION DIAGNOSIS FLOW [SKYACTIV-G 2.0 (L.H.D.)], 10-02B-3 CONTROLLER AREA NETWORK (CAN) MALFUNCTION DIAGNOSIS FLOW [SKYACTIV-G 2.0 (R.H.D.)], 10-02C-3 CONTROLLER AREA NETWORK (CAN) MALFUNCTION DIAGNOSIS FLOW [SKYACTIV-D 2.2 (L.H.D.)], 10-02D-3 CONTROLLER AREA NETWORK (CAN) MALFUNCTION DIAGNOSIS FLOW [SKYACTIV-D 2.2 (R.H.D.)]

ON-BOARD DIAGNOSTIC

Action for non-repeatable malfunction

- If the malfunction does not recur, verify the malfunction cause by performing the following actions:
  - — Verify that a DTC has been recorded in the memory.
  - — Based on the repair order form, attempt to drive the vehicle or perform tests to replicate the malfunction, record the data (such as CAN circuit voltage) at that time, and detect the malfunction cause.
  - — Refer to [Determining Open Circuit Location] based on the recorded DTC, shake the wiring harness or connector of the electrical component which is suspected to be the cause of the malfunction, and inspect for any changes in CAN system voltage or occurrence of any DTCs.

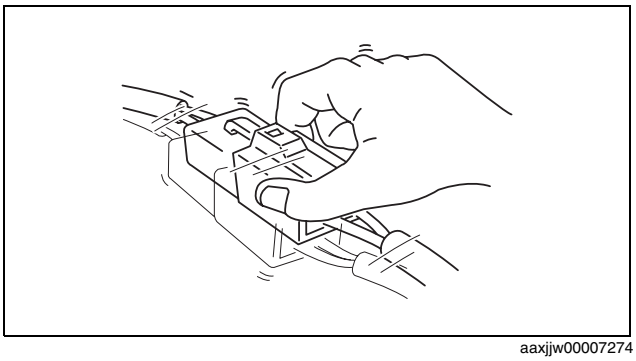

aaxjjw00007274

  - — Inspect the female terminals on the connector of the electric component which is suspected to be the cause of the malfunction for poor connection.

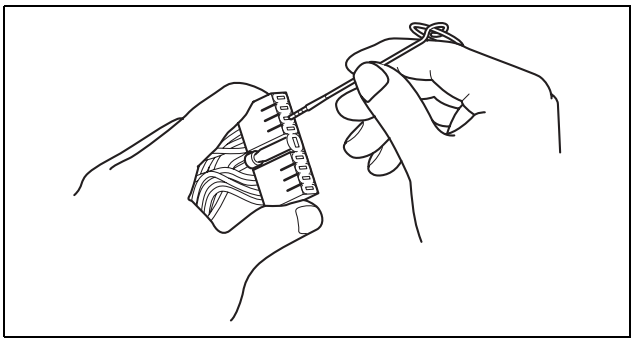

am3zzw0001144

Outline

- The OBD (on-board diagnostic) system has the following functions:
  - — Malfunction detection function: Detects malfunctions in the air bag system and outputs DTCs (Diagnostic Trouble Codes).
  - — PID/data monitor function: Reads out specific input/output signals and the system status.
- DTCs can be read/cleared using the M-MDS.

Note

- Use the M-MDS to verify DTCs because the DTCs displayed by the air bag system warning light are reference information only.

FLOWCHART

id080200080400

- Use the following flowchart to verify the cause of the trouble.

Note

- When inspecting past malfunction codes, inspect only the DTCs that were indicated before beginning the inspection. A mis-diagnosis could occur as a result of new DTCs being added while performing an inspection by disconnecting related parts or connectors.
- When DTCs of the present malfunction are no longer output after present or past malfunctions or both have been repaired, be sure to clear the past malfunction from memory to prevent repair of malfunctions that have already been repaired.

ON-BOARD DIAGNOSTIC

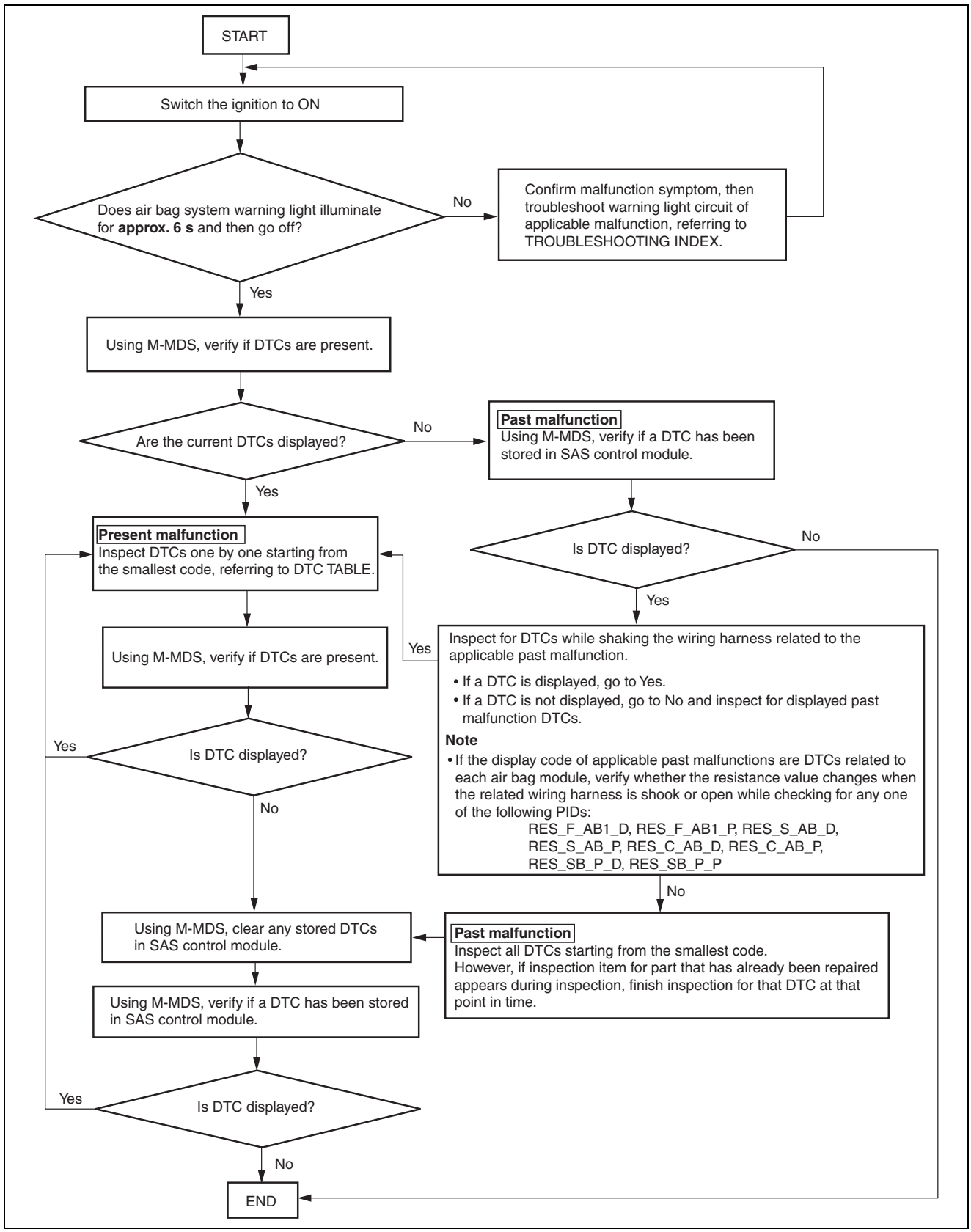

ac5wzw0000195

ON-BOARD DIAGNOSTIC

DTC INSPECTION

id080200080500

CMDTC Self Test

1. Connect the M-MDS to the DLC-2.
2. After the vehicle is identified, select the following items from the initialization screen of the M-MDS.
   (1) Select "Self Test".
   (2) Select "All CMDTCs".
3. Verify the DTC according to the directions on the screen.
   - If any DTCs are displayed, perform troubleshooting according to the corresponding DTC inspection after recording the snapshot data.
4. After completion of repairs, clear all DTCs stored in the SAS control module. (See 08-02-10 CLEARING DTC.)

ODDTC Self Test

1. Connect the M-MDS to the DLC-2.
2. After the vehicle is identified, select the following items from the initialization screen of the M-MDS.
   (1) Select "Self Test".
   (2) Select "Modules".
   (3) Select "RCM".
3. Verify the DTC according to the directions on the screen.
   - If any DTCs are displayed, perform troubleshooting according to the corresponding DTC inspection after recording the snapshot data.
4. After completion of repairs, clear all DTCs stored in the SAS control module. (See 08-02-10 CLEARING DTC.)

Snapshot Data Table

Note

- Snapshot data items are not displayed, according to detected DTC.

Snapshot data item	Unit		Definition	Corresponding PID data monitor item
AAT	°C	°F	Ambient temperature	—
APP_STATUS	Accelerator Pedal Off/ Under20%/ Over20%/FAIL		Accelerator pedal position status	—
CFG_STATUS	Config Complete/ Not Configured/ Config Error		Configuration status	—
ECT_STATUS	Under 0 degrees C/ 0-Under 80 degrees C/ Over 80 degrees C/ FAIL		Engine coolant temperature status	—
FAULT_CNT	—		Number of malfunction detections	—
FIRST_DET_IG	hh:mm:ss		Time when initial malfunction occurs (IG-ON counter) • Elapsed time from when ignition is switched ON (engine off or on) until SAS control module detects first malfunction (See 08-02-9 Snapshot counter pattern.)	—
IC_VPWR	V		Instrument cluster power supply voltage	—
IG-ON_TIMER	hh:mm:ss		Elapsed time since ignition switched ON (engine off or on)	—
LAST_CLR	hh:mm:ss		Repair time for last malfunction (B+ counter) • Elapsed time from when battery is connected until SAS control module detects that last malfunction is repaired (See 08-02-9 Snapshot counter pattern.)	—

ON-BOARD DIAGNOSTIC

Snapshot data item	Unit		Definition	Corresponding PID data monitor item
LAST_CLR_IG	hh:mm:ss		Repair time for last malfunction (IG-ON counter) • Elapsed time from when ignition is switched ON (engine off or on) until SAS control module detects that last malfunction is repaired (See 08-02-9 Snapshot counter pattern.)	—
LAST_DET	hh:mm:ss		Time when last malfunction occurs (B+ counter) • Elapsed time from when battery is connected until SAS control module detects last malfunction (See 08-02-9 Snapshot counter pattern.)	—
LAST_DET_IG	hh:mm:ss		Time when last malfunction occurs (IG-ON counter) • Elapsed time from when ignition is switched ON (engine off or on) until SAS control module detects last malfunction (See 08-02-9 Snapshot counter pattern.)	—
PWR_MODE_KEY	Key Out/ Key Recently Out/ Key Approved (Position 0)/ Post Accessory (Position 0)/ Accessory (Position 1)/ Post Ignition (Position 1)/ Ignition On (Position 2)/ Running (Position 2)/ Running - Starting In Progress (Position 2)/ Crank (Position 3)		Push button start power position switching status	—
RPM_STATUS	Engine Stop/ Under1500rpm/ Over1500rpm/ FAIL		Engine speed status	—
SHIFT_STATUS	P/N/ D/ R/ FAIL		Selector lever position status	—
TOTAL_TIME	hh:mm:ss		Time when first malfunction occurs (B+ counter) • Elapsed time from when battery is connected until SAS control module detects first malfunction (See 08-02-9 Snapshot counter pattern.)	—
TOTAL_DIST	km	miles	Accumulated total traveled distance since vehicle completion	—
VPWR	V		SAS control module power supply malfunction	VPWR_IGA
VSPD_STATUS	Stop/ 0-10km/h/ Over10km/h/ FAIL		Vehicle speed status	—

ON-BOARD DIAGNOSTIC

Snapshot counter pattern

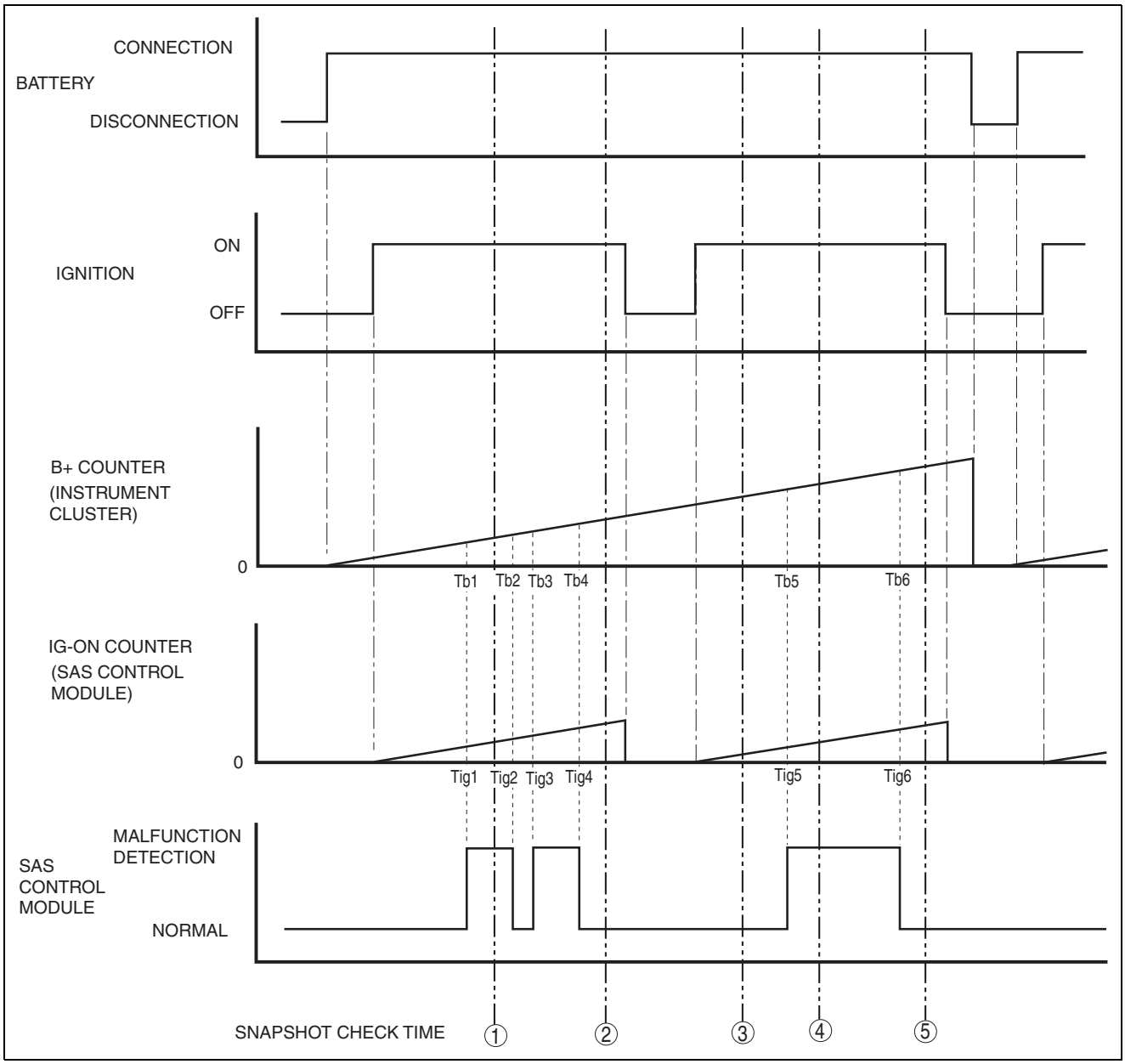

ac5wzw0000304

Snap-shot check time	FAULT_CNT	FIRST_DET_IG	LAST_CLR	LAST_CLR_IG	LAST_DET	LAST_DET_IG	TOTAL_TIME
	Number of malfunction detections	Time when initial malfunction occurs (IG-ON counter)	Repair time for last malfunction (B+ counter)	Repair time for last malfunction (IG-ON counter)	Time when last malfunction occurs (B+ counter)	Time when last malfunction occurs (IG-ON counter)	Time when first malfunction occurs (B+ counter)
1	1	Tb1	-	-	Tb1	Tig1	Tig1
2	2	Tb1	Tb4	Tig4	Tb3	Tig3	Tig1
3	2	Tb1	Tb4	Tig4	Tb3	Tig3	Tig1
4	3	Tb1	Tb4	Tig4	Tb5	Tig5	Tig1
5	3	Tb1	Tb6	Tig6	Tb5	Tig5	Tig1

ON-BOARD DIAGNOSTIC

CLEARING DTC

id080200080600

CMDTC Self Test

1. Connect the M-MDS to the DLC-2.
2. After the vehicle is identified, select the following items from the initialization screen of the M-MDS.
   (1) Select “Module programming”.
   (2) Select “All CMDTCs”.
3. Verify the DTC according to the directions on the screen.
4. Press the clear button on the DTC screen to clear the DTC.
5. Switch the ignition to off.
6. Switch the ignition ON (engine off or on) and wait for **5 s or more**.
7. Perform DTC inspection. (See 08-02-7 DTC INSPECTION.)
8. Verify that no DTCs are displayed.

ODDTC Self Test

1. Connect the M-MDS to the DLC-2.
2. After the vehicle is identified, select the following items from the initialization screen of the M-MDS.
   (1) Select “Module programming”.
   (2) Select “Programmable Module Installation”.
   (3) Select “RCM”.
3. Verify the DTC according to the directions on the screen.
4. Press the clear button on the DTC screen to clear the DTC.
5. Switch the ignition to off.
6. Switch the ignition ON (engine off or on) and wait for **5 s or more**.
7. Perform DTC inspection. (See 08-02-7 DTC INSPECTION.)
8. Verify that no DTCs are displayed.

ON-BOARD DIAGNOSTIC

DTC TABLE

id080200080700

Caution
- **When DTCs not shown in the DTC table are displayed, perform the inspection for DTCs not shown in the DTC table. (See 08-02-21 Inspection for DTCs not shown in DTC table.)**

X: Applicable
–: Not applicable

DTC				System malfunction location	Fail safe	Drive cycle	Self test type* 1	Memory function	Page
M-MDS display	Air bag system warning light								
	Flashing pattern		Priority ranking						
B0001:11	19		15	Driver-side air bag module circuit short to body ground	—	—	C, D	×	(See 08-02-25 DTC B0001:11/ B0001:12/ B0001:13/ B0001:19/ B0001:1A.)
B0001:12				Driver-side air bag module circuit short to power supply	—	—	C, D	×	
B0001:13				Driver-side air bag module circuit open circuit or resistance high	—	—	C, D	×	
B0001:19				Short circuit to driver-side air bag module and other air bag module circuits	—	—	C, D	×	
B0001:1A				Driver-side air bag module circuit resistance low	—	—	C, D	×	
B0001:55				Configuration setting error (driver-side air bag module structural malfunction)	—	—	C, D	×	(See 08-02-30 DTC B0001:55/ B0010:55.)
B0003:53	—	Flashing	4	Operation (deployment) inhibited due to configuration setting	—	—	C, D	×	(See 08-02-31 DTC B0003:53.)

08

ON-BOARD DIAGNOSTIC

DTC				System malfunction location	Fail safe	Drive cycle	Self test type* 1	Memory function	Page
M-MDS display	Air bag system warning light								
	Flashing pattern		Priority ranking						
B0010:11	21		14	Passenger-side air bag module circuit short to body ground	—	—	C, D	×	(See 08-02-32 DTC B0010:11/ B0010:12/ B0010:13/ B0010:19/ B0010:1A.)
B0010:12				Passenger-side air bag module circuit short to power supply	—	—	C, D	×	
B0010:13				Passenger-side air bag module circuit open circuit or resistance high	—	—	C, D	×	
B0010:19				Short circuit to passenger-side air bag module and other air bag module circuits	—	—	C, D	×	
B0010:1A				Passenger-side air bag module circuit resistance low	—	—	C, D	×	
B0010:55				Configuration setting error (passenger-side air bag module structural malfunction)	—	—	C, D	×	(See 08-02-30 DTC B0001:55/ B0010:55.)
B0094:11	42		9	Driver-side crash zone sensor circuit short to body ground	—	—	C, D	×	(See 08-02-38 DTC B0094:11/ B0094:13/ B0094:87/ B0094:96.)
B0094:13				Driver-side crash zone sensor circuit open circuit or short to power supply	—	—	C, D	×	
B0094:87				Signal reception error from driver-side crash zone sensor	—	—	C, D	×	
B0094:96				Driver-side crash zone sensor internal malfunction	—	—	C, D	×	
B0094:55				Configuration setting error (driver-side crash zone sensor structural malfunction)	—	—	C, D	×	(See 08-02-42 DTC B0094:55/ B1417:55.)
B00D2:01	14		5	Air bag system warning light malfunction	—	—	C, D	×	(See 08-02-43 DTC B00D2:01.)
B00D2:29				Invalid signal to air bag system warning light	—	—	C, D	×	(See 08-02-44 DTC B00D2:29.)

ON-BOARD DIAGNOSTIC

DTC				System malfunction location	Fail safe	Drive cycle	Self test type* 1	Memory function	Page
M-MDS display	Air bag system warning light								
	Flashing pattern		Priority ranking						
B00D5:01	18		22	PAD OFF indicator circuit open circuit or short to power supply	—	—	C, D	×	(See 08-02-45 DTC B00D5:01/ B00D5:29/ B1202:01.)
B00D5:29				PAD OFF indicator communication error	—	—	C, D	×	
B1011:95	58		7	SAS control module connectors are poorly connected	—	—	C, D	×	(See 08-02-49 DTC B1011:95.)
B10FD:11	43		11	Driver-side side air bag sensor No.1 circuit short to body ground or power supply	—	—	C, D	×	(See 08-02-52 DTC B10FD:11/ B10FD:13/ B10FD:87/ B10FD:96.)
B10FD:13				Driver-side side air bag sensor No.1 circuit open circuit or resistance high	—	—	C, D	×	
B10FD:87				Signal reception error from driver-side side air bag sensor No.1	—	—	C, D	×	
B10FD:96				Driver-side side air bag sensor No.1 internal malfunction	—	—	C, D	×	
B10FD:55				Configuration setting error (driver-side side air bag sensor No.1 structural malfunction)	—	—	C, D	×	(See 08-02-57 DTC B10FD:55/ B10FE:55.)

ON-BOARD DIAGNOSTIC

DTC				System malfunction location	Fail safe	Drive cycle	Self test type* 1	Memory function	Page
M-MDS display	Air bag system warning light								
	Flashing pattern		Priority ranking						
B10FE:11	44		10	Passenger-side side air bag sensor No.1 circuit short to body ground or power supply	—	—	C, D	×	(See 08-02-58 DTC B10FE:11/ B10FE:13/ B10FE:87/ B10FE:96.)
B10FE:13				Passenger-side side air bag sensor No.1 circuit open circuit or resistance high	—	—	C, D	×	
B10FE:87				Signal reception error from passenger-side side air bag sensor No.1	—	—	C, D	×	
B10FE:96				Passenger-side side air bag sensor No.1 internal malfunction	—	—	C, D	×	
B10FE:55				Configuration setting error (passenger-side side air bag sensor No.1 structural malfunction)	—	—	C, D	×	(See 08-02-57 DTC B10FD:55/ B10FE:55.)
B1126:11	22		19	Driver-side side air bag module circuit short to body ground	—	—	C, D	×	(See 08-02-63 DTC B1126:11/ B1126:12/ B1126:13/ B1126:19/ B1126:1A.)
B1126:12				Driver-side side air bag module circuit short to power supply	—	—	C, D	×	
B1126:13				Driver-side side air bag module circuit open circuit or resistance high	—	—	C, D	×	
B1126:19				Short circuit to driver-side side air bag module and other air bag module circuits	—	—	C, D	×	
B1126:1A				Driver-side side air bag module circuit resistance low	—	—	C, D	×	
B1126:55				Configuration setting error (driver-side side air bag module structural malfunction)	—	—	C, D	×	(See 08-02-69 DTC B1126:55/ B1127:55.)

ON-BOARD DIAGNOSTIC

DTC				System malfunction location	Fail safe	Drive cycle	Self test type* 1	Memory function	Page
M-MDS display	Air bag system warning light								
	Flashing pattern		Priority ranking						
B1127:11	23		18	Passenger-side side air bag module circuit short to body ground	—	—	C, D	×	(See 08-02-70 DTC B1127:11/ B1127:12/ B1127:13/ B1127:19/ B1127:1A.)
B1127:12				Passenger-side side air bag module circuit short to power supply	—	—	C, D	×	
B1127:13				Passenger-side side air bag module circuit open circuit or resistance high	—	—	C, D	×	
B1127:19				Short circuit to passenger-side side air bag module and other air bag module circuits	—	—	C, D	×	
B1127:1A				Passenger-side side air bag module circuit resistance low	—	—	C, D	×	
B1127:55				Configuration setting error (passenger-side side air bag module structural malfunction)	—	—	C, D	×	(See 08-02-69 DTC B1126:55/ B1127:55.)
B1128:11	24		21	Driver-side curtain air bag module circuit short to body ground	—	—	C, D	×	(See 08-02-76 DTC B1128:11/ B1128:12/ B1128:13/ B1128:19/ B1128:1A.)
B1128:12				Driver-side curtain air bag module circuit short to power supply	—	—	C, D	×	
B1128:13				Driver-side curtain air bag module circuit open circuit or resistance high	—	—	C, D	×	
B1128:19				Short circuit to driver-side curtain air bag module and other air bag module circuits	—	—	C, D	×	
B1128:1A				Driver-side curtain air bag module circuit resistance low	—	—	C, D	×	
B1128:55				Configuration setting error (driver-side curtain air bag module structural malfunction)	—	—	C, D	×	(See 08-02-82 DTC B1128:55/ B1129:55.)

ON-BOARD DIAGNOSTIC

DTC				System malfunction location	Fail safe	Drive cycle	Self test type* 1	Memory function	Page
M-MDS display	Air bag system warning light								
	Flashing pattern		Priority ranking						
B1129:11	25		20	Passenger-side curtain air bag module circuit short to body ground	—	—	C, D	×	(See 08-02-83 DTC B1129:11/ B1129:12/ B1129:13/ B1129:19/ B1129:1A.)
B1129:12				Passenger-side curtain air bag module circuit short to power supply	—	—	C, D	×	
B1129:13				Passenger-side curtain air bag module circuit open circuit or resistance high	—	—	C, D	×	
B1129:19				Short circuit to passenger-side curtain air bag module and other air bag module circuits	—	—	C, D	×	
B1129:1A				Passenger-side curtain air bag module circuit resistance low	—	—	C, D	×	
B1129:55				Configuration setting error (passenger-side curtain air bag module structural malfunction)	—	—	C, D	×	(See 08-02-82 DTC B1128:55/ B1129:55.)
B1193:00	13		3	SAS control module operation (deployment)	—	—	C, D	×	(See 08-02-89 DTC B1193:00.)
B1196:11	45		13	Driver-side side air bag sensor No.2 circuit short to body ground	—	—	C, D	×	(See 08-02-90 DTC B1196:11/ B1196:13/ B1196:87/ B1196:96.)
B1196:13				Driver-side side air bag sensor No.2 circuit open circuit or short to power supply	—	—	C, D	×	
B1196:87				Signal reception error from driver-side side air bag sensor No.2	—	—	C, D	×	
B1196:96				Driver-side side air bag sensor No.2 internal malfunction	—	—	C, D	×	
B1196:55				Configuration setting error (driver-side side air bag sensor No.2 structural malfunction)	—	—	C, D	×	(See 08-02-95 DTC B1196:55/ B1197:55.)

ON-BOARD DIAGNOSTIC

DTC				System malfunction location	Fail safe	Drive cycle	Self test type* 1	Memory function	Page
M-MDS display	Air bag system warning light								
	Flashing pattern		Priority ranking						
B1197:11	46		12	Passenger-side side air bag sensor No.2 circuit short to body ground	—	—	C, D	×	(See 08-02-96 DTC B1197:11/ B1197:13/ B1197:87/ B1197:96.)
B1197:13				Passenger-side side air bag sensor No.2 circuit open circuit or short to power supply	—	—	C, D	×	
B1197:87				Signal reception error from passenger-side side air bag sensor No.2	—	—	C, D	×	
B1197:96				Passenger-side side air bag sensor No.2 internal malfunction	—	—	C, D	×	
B1197:55				Configuration setting error (passenger-side side air bag sensor No.2 structural malfunction)	—	—	C, D	×	(See 08-02-95 DTC B1196:55/ B1197:55.)
B1202:01	18		22	PAD ON indicator circuit open circuit or short to power supply	—	—	C, D	×	(See 08-02-45 DTC B00D5:01/ B00D5:29/ B1202:01.)
B1206:00	—	—	—	SAS control module operation (deployment) (fuel cut signal output)	—	—	C, D	×	(See 08-02-106 DTC B1206:00/ U2107:00.)

ON-BOARD DIAGNOSTIC

DTC				System malfunction location	Fail safe	Drive cycle	Self test type * 1	Memory function	Page
M-MDS display	Air bag system warning light								
	Flashing pattern		Priority ranking						
B1211:11	38		17	Driver-side pre-tensioner seat belt circuit short to body ground	—	—	C, D	×	(See 08-02-107 DTC B1211:11/ B1211:12/ B1211:13/ B1211:19/ B1211:1A.)
B1211:12				Driver-side pre-tensioner seat belt circuit short to power supply	—	—	C, D	×	
B1211:13				Driver-side pre-tensioner seat belt circuit open circuit or resistance high	—	—	C, D	×	
B1211:19				Short circuit to driver-side pre-tensioner seat belt and other air bag module circuits	—	—	C, D	×	
B1211:1A				Driver-side pre-tensioner seat belt circuit resistance low	—	—	C, D	×	
B1211:55				Configuration setting error (driver-side pre-tensioner seat belt structural malfunction)	—	—	C, D	×	(See 08-02-113 DTC B1211:55, B1214:55.)
B1214:11	39		16	Passenger-side pre-tensioner seat belt circuit short to body ground	—	—	C, D	×	(See 08-02-114 DTC B1214:11/ B1214:12/ B1214:13/ B1214:19/ B1214:1A.)
B1214:12				Passenger-side pre-tensioner seat belt circuit short to power supply	—	—	C, D	×	
B1214:13				Passenger-side pre-tensioner seat belt circuit open circuit or resistance high	—	—	C, D	×	
B1214:19				Short circuit to passenger-side pre-tensioner seat belt and other air bag module circuits	—	—	C, D	×	
B1214:1A				Passenger-side pre-tensioner seat belt circuit resistance low	—	—	C, D	×	
B1214:55				Configuration setting error (passenger-side pre-tensioner seat belt structural malfunction)	—	—	C, D	×	(See 08-02-113 DTC B1211:55, B1214:55.)

ON-BOARD DIAGNOSTIC

DTC				System malfunction location	Fail safe	Drive cycle	Self test type* 1	Memory function	Page
M-MDS display	Air bag system warning light		Priority ranking						
	Flashing pattern								
B1417:11	41		8	Passenger-side crash zone sensor circuit short to body ground	—	—	C, D	×	(See 08-02-120 DTC B1417:11/ B1417:13/ B1417:87/ B1417:96.)
B1417:13				Passenger-side crash zone sensor circuit open circuit or short to power supply	—	—	C, D	×	
B1417:87				Signal reception error from passenger-side crash zone sensor	—	—	C, D	×	
B1417:96				Passenger-side crash zone sensor internal malfunction	—	—	C, D	×	
B1417:55				Configuration setting error (passenger-side crash zone sensor structural malfunction)	—	—	C, D	×	(See 08-02-42 DTC B0094:55/ B1417:55.)
B1D75:55	56		23	Configuration setting error (PAD switch structural malfunction)	—	—	C, D	×	(See 08-02-101 DTC B1D75:55.)
B1D75:62				PAD switch circuit open circuit or short to body ground	—	—	C, D	×	(See 08-02-102 DTC B1D75:62.)
C0061:29	—	—	—	Low-G sensor (lateral-G) in SAS control module (internal circuit disabled)	—	—	C, D	×	(See 08-02-125 DTC C0061:29/ C0062:29/ C0063:29/ P0666:29.)
C0062:29				Low-G sensor (forward-G) in SAS control module (internal circuit disabled)	—	—	C, D	×	
C0063:29				Yaw rate sensor in SAS control module (internal circuit disabled)	—	—	C, D	×	
P0666:29				Temperature sensor in SAS control module (internal circuit disabled)	—	—	C, D	×	

ON-BOARD DIAGNOSTIC

DTC				System malfunction location	Fail safe	Drive cycle	Self test type * 1	Memory function	Page
M-MDS display	Air bag system warning light								
	Flashing pattern		Priority ranking						
U0001:88	14		5	CAN communication error	—	—	C, D	×	(See 10-02A-1 FOREWORD [SKYACTIV-G 2.0 (L.H.D.)].) (See 10-02B-1 FOREWORD [SKYACTIV-G 2.0 (R.H.D.)].) (See 10-02C-1 FOREWORD [SKYACTIV-D 2.2 (L.H.D.)].) (See 10-02D-1 FOREWORD [SKYACTIV-D 2.2 (R.H.D.)].)
U0028:88	—	—	—	DSC HU/CM communication fault	—	—	C, D	×	(See 08-02-126 DTC U0028:88.)
U0155:00	14		5	Instrument cluster communication error	—	—	C, D	×	(See 10-02A-1 FOREWORD [SKYACTIV-G 2.0 (L.H.D.)].) (See 10-02B-1 FOREWORD [SKYACTIV-G 2.0 (R.H.D.)].) (See 10-02C-1 FOREWORD [SKYACTIV-D 2.2 (L.H.D.)].) (See 10-02D-1 FOREWORD [SKYACTIV-D 2.2 (R.H.D.)].)
U2005:68				PCM communication error (vehicle speed signal)	—	—	C, D	×	(See 08-02-131 DTC U2005:68.)

ON-BOARD DIAGNOSTIC

DTC				System malfunction location	Fail safe	Drive cycle	Self test type* 1	Memory function	Page
M-MDS display	Air bag system warning light								
	Flashing pattern		Priority ranking						
U0300:00	54		6	Configuration setting invalid	—	—	C, D	×	(See 08-02-130 DTC U0300:00/ U2100:00.)
U2100:00				Configuration not set	—	—	C, D	×	
U2107:00	—	—	—	SAS control module operation (deployment) signal output	—	—	C, D	×	(See 08-02-106 DTC B1206:00/ U2107:00.)
U3000:49	12		2	SAS control module internal malfunction	—	—	C, D	×	(See 08-02-132 DTC U3000:49.)
U3003:16	—	Continuously illuminated	1	SAS control module power supply voltage decreases (**less than 8 V**).	—	—	C, D	×	(See 08-02-132 DTC U3003:16/ U3003:17.)
U3003:17				SAS control module power supply voltage increases (**18 V or more**)	—	—	C, D	×	

*1 : C: CMDTC self test, D: ODDTC self test

Inspection for DTCs not shown in DTC table
System wiring diagram

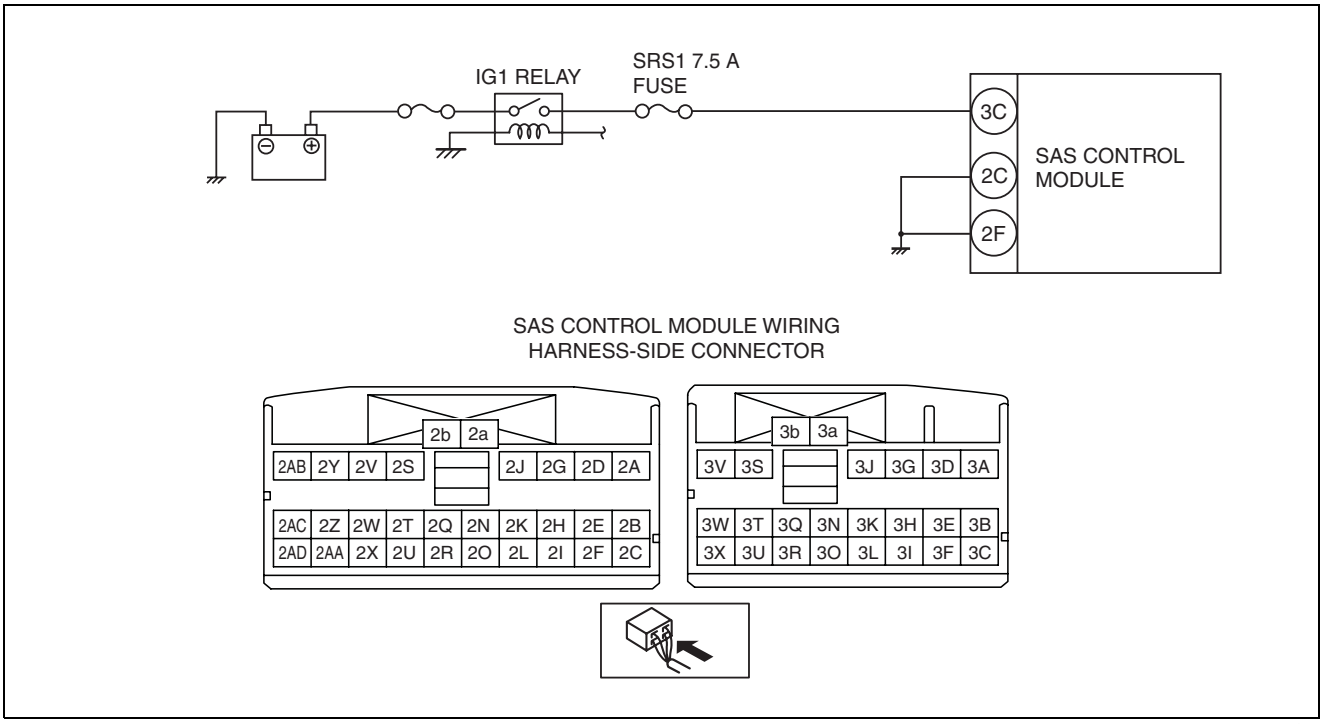

ac5wzw0000197

08

ON-BOARD DIAGNOSTIC

Diagnostic procedure

Step	Inspection		Action
1	**BATTERY INSPECTION** • Refer to the battery inspection and inspect the battery. (See 01-17A-7 BATTERY INSPECTION [SKYACTIV-G 2.0].) (See 01-17A-8 BATTERY INSPECTION [SKYACTIV-G 2.0 (WITHOUT i-stop)].) (See 01-17B-6 BATTERY INSPECTION [SKYACTIV-D 2.2].) • Is the battery normal?	Yes	Go to the next step.
		No	Replace or charge the battery. (See 01-17A-3 BATTERY REMOVAL/INSTALLATION [SKYACTIV-G 2.0].) (See 01-17A-9 BATTERY RECHARGING [SKYACTIV-G 2.0].) (See 01-17A-10 BATTERY RECHARGING [SKYACTIV-G 2.0 (WITHOUT i-stop)].) (See 01-17B-3 BATTERY REMOVAL/INSTALLATION [SKYACTIV-D 2.2].) (See 01-17B-8 BATTERY RECHARGING [SKYACTIV-D 2.2].) Then go to Step 5.
2	**FUSE INSPECTION** • Switch the ignition to off. • Disconnect the negative battery cable and wait **1 min or more**. (See 01-17A-11 NEGATIVE BATTERY CABLE DISCONNECTION/CONNECTION [SKYACTIV-G 2.0].)(See 01-17A-13 NEGATIVE BATTERY CABLE DISCONNECTION/CONNECTION [SKYACTIV-G 2.0 (WITHOUT i-stop)].)(See 01-17B-9 NEGATIVE BATTERY CABLE DISCONNECTION/CONNECTION [SKYACTIV-D 2.2].) • Remove the SRS1 7.5 A fuse. • Is the fuse normal?	Yes	Go to the next step.
		No	Replace the SRS1 7.5 A fuse. Then go to Step 5.

Step	Inspection		Action
3	**INSPECT WIRING HARNESS BETWEEN SAS CONTROL MODULE AND IG1 RELAY** **Warning** • **Handling the component parts improperly can accidentally operate (deploy) the air bag module, which may seriously injure you. Read the service warnings/cautions and the workshop manual before handling the air bag system components. (See 08-10-3 AIR BAG SYSTEM SERVICE WARNINGS.) (See 08-10-5 AIR BAG SYSTEM SERVICE CAUTIONS.)** • Remove the column cover. (See 09-17-25 COLUMN COVER REMOVAL/INSTALLATION.) • Disconnect the clock spring connector. (See 08-10-24 CLOCK SPRING REMOVAL/INSTALLATION.) • Remove the glove compartment. (See 09-17-30 GLOVE COMPARTMENT REMOVAL/INSTALLATION.) • Disconnect the passenger-side air bag module connector. (See 08-10-10 PASSENGER-SIDE AIR BAG MODULE REMOVAL/INSTALLATION.) • Disconnect the driver and passenger-side front seat connector. (See 09-13-4 FRONT SEAT REMOVAL/INSTALLATION.) • Remove the headliner. (See 09-17-94 HEADLINER REMOVAL/INSTALLATION.) • Disconnect the driver and passenger-side curtain air bag module connector. (See 08-10-15 CURTAIN AIR BAG MODULE REMOVAL/INSTALLATION.) • Remove the B-pillar lower trim. (See 09-17-57 B-PILLAR LOWER TRIM REMOVAL/INSTALLATION.) • Disconnect the driver and passenger-side pre-tensioner seat belt connector. (See 08-11-2 FRONT SEAT BELT REMOVAL/INSTALLATION.) • Remove the rear console. (See 09-17-45 REAR CONSOLE REMOVAL/INSTALLATION.) • Disconnect all SAS control module connectors. (See 08-10-20 SAS CONTROL MODULE REMOVAL/INSTALLATION.) • Connect the negative battery cable. (See 01-17A-11 NEGATIVE BATTERY CABLE DISCONNECTION/CONNECTION [SKYACTIV-G 2.0].)(See 01-17A-13 NEGATIVE BATTERY CABLE DISCONNECTION/CONNECTION [SKYACTIV-G 2.0 (WITHOUT i-stop)].)(See 01-17B-9 NEGATIVE BATTERY CABLE DISCONNECTION/CONNECTION [SKYACTIV-D 2.2].) • Switch the ignition ON (engine off or on). • Measure the voltage of SAS control module connector terminal 3C (wiring harness-side). **Note** • Measure the voltage while shaking the wiring harness between the SAS control module and IG1 relay.	Yes	Go to the next step.
		No	Replace the wiring harness between the SAS control module and IG1 relay. Then go to Step 5.

ON-BOARD DIAGNOSTIC

Step	Inspection		Action
3	• Is the voltage **8–17.9 V**?	Yes	Go to the next step.
		No	Replace the wiring harness between the SAS control module and IG1 relay. Then go to Step 5.
4	**INSPECT SAS CONTROL MODULE CIRCUIT FOR OPEN CIRCUIT** • SAS control module connectors are disconnected. • Switch the ignition to off. • Disconnect the negative battery cable and wait **1 min or more**. (See 01-17A-11 NEGATIVE BATTERY CABLE DISCONNECTION/CONNECTION [SKYACTIV-G 2.0].)(See 01-17A-13 NEGATIVE BATTERY CABLE DISCONNECTION/CONNECTION [SKYACTIV-G 2.0 (WITHOUT i-stop)].)(See 01-17B-9 NEGATIVE BATTERY CABLE DISCONNECTION/CONNECTION [SKYACTIV-D 2.2].) • Inspect the wiring harness between SAS control module connector terminal 2C, 2F (wiring harness-side) and body ground. **Note** • Inspect for continuity while shaking the wiring harness between the SAS control module and body ground. • Is there continuity?	Yes	Go to the next step.
		No	Replace the wiring harness for a possible open circuit, then go the next step.
5	**PERFORM SAS CONTROL MODULE DTC INSPECTION** • Connect the SAS control module connectors. • Reconnect all disconnected connectors. • Connect the negative battery cable. (See 01-17A-11 NEGATIVE BATTERY CABLE DISCONNECTION/CONNECTION [SKYACTIV-G 2.0].)(See 01-17A-13 NEGATIVE BATTERY CABLE DISCONNECTION/CONNECTION [SKYACTIV-G 2.0 (WITHOUT i-stop)].)(See 01-17B-9 NEGATIVE BATTERY CABLE DISCONNECTION/CONNECTION [SKYACTIV-D 2.2].) • Switch the ignition ON (engine off or on). • Clear the DTC for the SAS control module using the M-MDS. (See 08-02-10 CLEARING DTC.) • Perform the DTC inspection for the SAS control module using the M-MDS. (See 08-02-7 DTC INSPECTION.) • Are the same DTCs present?	Yes	Replace the SAS control module. (See 08-10-20 SAS CONTROL MODULE REMOVAL/INSTALLATION.)
		No	DTC troubleshooting completed.

ON-BOARD DIAGNOSTIC

DTC B0001:11/B0001:12/B0001:13/B0001:19/B0001:1A

id080200820100

System malfunction location	• **B0001:11: Driver-side air bag module circuit short to body ground** • **B0001:12: Driver-side air bag module circuit short to power supply** • **B0001:13: Driver-side air bag module circuit open circuit or resistance high** • **B0001:19: Short circuit to driver-side air bag module and other air bag module circuits** • **B0001:1A: Driver-side air bag module circuit resistance low**
Detection condition	**Warning** • **Detection conditions are for understanding the DTC outline before performing an inspection. Performing an inspection according to only the detection conditions may cause injury due to an operating error, or damage the system. When performing an inspection, always follow the inspection procedure.** • Resistance **other than 0.99–6.42 ohms** detected in driver-side air bag module circuit • Wiring harness between driver-side air bag module and SAS control module has malfunction
Fail-safe	—
Possible cause	• Clock spring connector malfunction • Clock spring malfunction • Short circuit to power supply or body ground in the wiring harness between the clock spring and SAS control module • Open circuit in the wiring harness between the clock spring and SAS control module • Driver-side air bag module malfunction • SAS control module malfunction

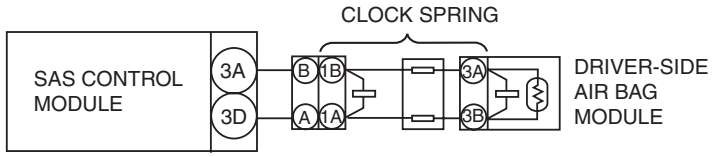

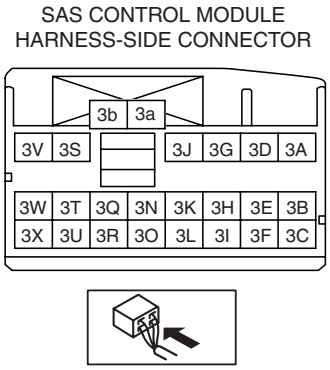

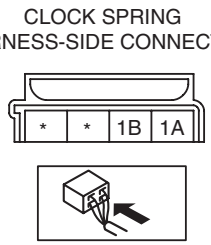

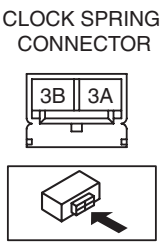

08

ON-BOARD DIAGNOSTIC

Diagnostic Procedure

Step	Inspection		Action
1	**INSPECT DRIVER-SIDE AIR BAG MODULE CONNECTOR** **Warning** • **Handling the component parts improperly can accidentally operate (deploy) the air bag module, which may seriously injure you. Read the service warnings/cautions and the workshop manual before handling the air bag system components. (See 08-10-3 AIR BAG SYSTEM SERVICE WARNINGS.) (See 08-10-5 AIR BAG SYSTEM SERVICE CAUTIONS.)** • Switch the ignition to off. • Disconnect the negative battery cable and wait for **1 min or more**. (See 01-17A-11 NEGATIVE BATTERY CABLE DISCONNECTION/CONNECTION [SKYACTIV-G 2.0].)(See 01-17A-13 NEGATIVE BATTERY CABLE DISCONNECTION/CONNECTION [SKYACTIV-G 2.0 (WITHOUT i-stop)].)(See 01-17B-9 NEGATIVE BATTERY CABLE DISCONNECTION/CONNECTION [SKYACTIV-D 2.2].) • Remove the driver-side air bag module connector. (See 08-10-6 DRIVER-SIDE AIR BAG MODULE REMOVAL/INSTALLATION.) • Inspect the clock spring connector. (Corrosion, damage, and disconnected pins) • Is there any malfunction of the clock spring connector?	Yes	Replace clock spring. (See 08-10-24 CLOCK SPRING REMOVAL/INSTALLATION.) Then go to Step 7.
		No	Go to the next step.
2	**INSPECT CLOCK SPRING** • Remove the steering wheel. (See 06-13-4 STEERING WHEEL AND COLUMN REMOVAL/INSTALLATION.) • Remove the column cover. (See 09-17-25 COLUMN COVER REMOVAL/INSTALLATION.) • Remove the clock spring. (See 08-10-24 CLOCK SPRING REMOVAL/INSTALLATION.) • Inspect for continuity between clock spring connector terminals 1B—3A and 1A—3B. **Note** • Inspect the clock spring wiring harness for continuity while shaking it. • Is there continuity?	Yes	Go to the next step.
		No	Replace clock spring. (See 08-10-24 CLOCK SPRING REMOVAL/INSTALLATION.) Then go to Step 7.

ON-BOARD DIAGNOSTIC

Step	Inspection		Action
3	**INSPECT DRIVER-SIDE AIR BAG MODULE CIRCUIT FOR SHORT TO GROUND** • Remove the glove compartment. (See 09-17-30 GLOVE COMPARTMENT REMOVAL/INSTALLATION.) • Disconnect the passenger-side air bag module connector. (See 08-10-10 PASSENGER-SIDE AIR BAG MODULE REMOVAL/INSTALLATION.) • Disconnect the driver and passenger-side front seat connector. (See 09-13-4 FRONT SEAT REMOVAL/INSTALLATION.) • Remove the headliner. (See 09-17-94 HEADLINER REMOVAL/INSTALLATION.) • Disconnect the driver and passenger-side curtain air bag module connectors. (See 08-10-15 CURTAIN AIR BAG MODULE REMOVAL/INSTALLATION.) • Remove the B-pillar lower trim. (See 09-17-57 B-PILLAR LOWER TRIM REMOVAL/INSTALLATION.) • Disconnect the driver and passenger-side pre-tensioner seat belt connectors. (See 08-11-2 FRONT SEAT BELT REMOVAL/INSTALLATION.) • Remove the rear console. (See 09-17-45 REAR CONSOLE REMOVAL/INSTALLATION.) • Disconnect the all SAS control module connectors. (See 08-10-20 SAS CONTROL MODULE REMOVAL/INSTALLATION.) • Inspect for continuity between the following terminals (wiring harness-side) and body ground: — SAS control module terminal 3A — SAS control module terminal 3D **Note** • Inspect for continuity while shaking the wiring harness between the SAS control module and clock spring. • Is there continuity?	Yes	Replace the wiring harness for a possible short to ground, then go to Step 7.
		No	Go to the next step.
4	**INSPECT DRIVER-SIDE AIR BAG MODULE CIRCUIT FOR OPEN CIRCUIT** • SAS control module and clock spring connectors are disconnected. • Inspect for continuity between the following terminals (wiring harness-side): — Clock spring terminal B—SAS control module terminal 3A — Clock spring terminal A—SAS control module terminal 3D **Note** • Inspect for continuity while shaking the wiring harness between the SAS control module and clock spring. • Is there continuity?	Yes	Go to the next step.
		No	Replace the wiring harness for a possible open circuit, then go to Step 7.

ON-BOARD DIAGNOSTIC

Step	Inspection		Action
5	**INSPECT DRIVER-SIDE AIR BAG MODULE CIRCUIT FOR SHORT TO POWER SUPPLY** • SAS control module and clock spring connectors are disconnected. • Connect the negative battery cable. (See 01-17A-11 NEGATIVE BATTERY CABLE DISCONNECTION/CONNECTION [SKYACTIV-G 2.0].)(See 01-17A-13 NEGATIVE BATTERY CABLE DISCONNECTION/CONNECTION [SKYACTIV-G 2.0 (WITHOUT i-stop)].)(See 01-17B-9 NEGATIVE BATTERY CABLE DISCONNECTION/CONNECTION [SKYACTIV-D 2.2].) • Switch the ignition ON (engine off or on). • Measure the voltage at the following terminals (wiring harness-side): — SAS control module terminal 3A — SAS control module terminal 3D **Note** • Measure the voltage while shaking the wiring harness between the SAS control module and clock spring. • Is the voltage **0V**?	Yes	Go to the next step.
		No	Replace the wiring harness for a possible short to power supply, then go to Step 7.
6	**INSPECT DRIVER-SIDE AIR BAG MODULE** • Switch the ignition to off. • Disconnect the negative battery cable and wait for **1 min or more**. (See 01-17A-11 NEGATIVE BATTERY CABLE DISCONNECTION/CONNECTION [SKYACTIV-G 2.0].)(See 01-17A-13 NEGATIVE BATTERY CABLE DISCONNECTION/CONNECTION [SKYACTIV-G 2.0 (WITHOUT i-stop)].)(See 01-17B-9 NEGATIVE BATTERY CABLE DISCONNECTION/CONNECTION [SKYACTIV-D 2.2].) • Connect the SAS control module connectors. • Except for the driver-side air bag module connector, reconnect all disconnected connectors. • Connect the **SST (Fuel and thermometer checker)** or apply **2 ohms** resistance to the clock spring connector terminals 3A and 3B. • Set the **SST (Fuel and thermometer checker)** to **2 ohms**. • Connect the negative battery cable. (See 01-17A-11 NEGATIVE BATTERY CABLE DISCONNECTION/CONNECTION [SKYACTIV-G 2.0].)(See 01-17A-13 NEGATIVE BATTERY CABLE DISCONNECTION/CONNECTION [SKYACTIV-G 2.0 (WITHOUT i-stop)].)(See 01-17B-9 NEGATIVE BATTERY CABLE DISCONNECTION/CONNECTION [SKYACTIV-D 2.2].) • Switch the ignition ON (engine off or on). • Clear the DTC for the SAS control module using the M-MDS. (See 08-02-10 CLEARING DTC.) • Perform the DTC inspection for the SAS control module using the M-MDS. (See 08-02-7 DTC INSPECTION.) • Are the same DTCs present?	Yes	Go to the next step.
		No	Replace the driver-side air bag module. (See 08-10-6 DRIVER-SIDE AIR BAG MODULE REMOVAL/INSTALLATION.) Then go to the next step.

ON-BOARD DIAGNOSTIC

Step	Inspection		Action
7	**PERFORM SAS CONTROL MODULE DTC INSPECTION** • Switch the ignition to off. • Disconnect the negative battery cable and wait for **1 min or more**. (See 01-17A-11 NEGATIVE BATTERY CABLE DISCONNECTION/CONNECTION [SKYACTIV-G 2.0].)(See 01-17A-13 NEGATIVE BATTERY CABLE DISCONNECTION/CONNECTION [SKYACTIV-G 2.0 (WITHOUT i-stop)].)(See 01-17B-9 NEGATIVE BATTERY CABLE DISCONNECTION/CONNECTION [SKYACTIV-D 2.2].) • Disconnect the **SST (Fuel and thermometer checker)** or the **2 ohms** resistance. • Connect the driver-side air bag module connector. • Connect the negative battery cable. (See 01-17A-11 NEGATIVE BATTERY CABLE DISCONNECTION/CONNECTION [SKYACTIV-G 2.0].)(See 01-17A-13 NEGATIVE BATTERY CABLE DISCONNECTION/CONNECTION [SKYACTIV-G 2.0 (WITHOUT i-stop)].)(See 01-17B-9 NEGATIVE BATTERY CABLE DISCONNECTION/CONNECTION [SKYACTIV-D 2.2].) • Switch the ignition ON (engine off or on). • Clear the DTC for the SAS control module using the M-MDS. (See 08-02-10 CLEARING DTC.) • Perform the DTC inspection for the SAS control module using the M-MDS. (See 08-02-7 DTC INSPECTION.) • Are the same DTCs present?	Yes	Replace the SAS control module. (See 08-10-20 SAS CONTROL MODULE REMOVAL/INSTALLATION.)
		No	DTC troubleshooting completed.

ON-BOARD DIAGNOSTIC

DTC B0001:55/B0010:55

id080200822500

System malfunction location	• **B0001:55: Configuration setting error (driver-side air bag module structural malfunction)** • **B0010:55: Configuration setting error (passenger-side air bag module structural malfunction)**
Detection condition	**Warning** • **Detection conditions are for understanding the DTC outline before performing an inspection. Performing an inspection according to only the detection conditions may cause injury due to an operating error, or damage the system. When performing an inspection, always follow the inspection procedure.** • SAS control module configuration setting has not been done correctly • Parts which have not been set to SAS control module are assembled
Fail-safe	—
Possible cause	• SAS control module configuration setting not implemented • SAS control module configuration setting invalid • Driver or passenger-side air bag module assembly incorrect • SAS control module malfunction
System wiring diagram	—

Diagnostic Procedure

Step	Inspection		Action
1	**PERFORM SAS CONTROL MODULE CONFIGURATION (AS-BUILT DATA USE)** • Perform the SAS control module configuration using the M-MDS. (See 08-10-22 SAS CONTROL MODULE CONFIGURATION (USING AS-BUILT DATA).) • Clear the DTC for the SAS control module using the M-MDS. (See 08-02-10 CLEARING DTC.) • Perform the DTC inspection for the SAS control module using the M-MDS. (See 08-02-7 DTC INSPECTION.) • Are the same DTCs present?	Yes	Go to the next step.
		No	DTC troubleshooting completed.
2	**INSPECT AIR BAG MODULE** • Verify that the driver or passenger-side air bag module is correctly installed. • Is the driver or passenger-side air bag module correctly installed?	Yes	Go to the next step.
		No	Correctly Install the driver or passenger-side air bag module.
3	**PERFORM SAS CONTROL MODULE DTC INSPECTION** • Clear the DTC for the SAS control module using the M-MDS. (See 08-02-10 CLEARING DTC.) • Perform the DTC inspection for the SAS control module using the M-MDS. (See 08-02-7 DTC INSPECTION.) • Are the same DTCs present?	Yes	Replace the SAS control module. (See 08-10-20 SAS CONTROL MODULE REMOVAL/INSTALLATION.)
		No	DTC troubleshooting completed.

ON-BOARD DIAGNOSTIC

DTC B0003:53

id080200821000

System malfunction location	• **Operation (deployment) inhibited due to configuration setting**
Detection condition	**Warning** • **Detection conditions are for understanding the DTC outline before performing an inspection. Performing an inspection according to only the detection conditions may cause injury due to an operating error, or damage the system. When performing an inspection, always follow the inspection procedure.** • The SAS control module configuration has not been set
Fail-safe	—
Possible cause	• SAS control module configuration error • SAS control module malfunction
System wiring diagram	—

Diagnostic Procedure

Step	Inspection		Action
1	**PERFORM SAS CONTROL MODULE CONFIGURATION (AS-BUILT DATA USE)** • Perform the SAS control module configuration using the M-MDS. (See 08-10-22 SAS CONTROL MODULE CONFIGURATION (USING AS-BUILT DATA).) • Clear the DTC for the SAS control module using the M-MDS. (See 08-02-10 CLEARING DTC.) • Perform the DTC inspection for the SAS control module using the M-MDS. (See 08-02-7 DTC INSPECTION.) • Are the same DTCs present?	Yes	Go to the next step.
		No	DTC troubleshooting completed.
2	**PERFORM SAS CONTROL MODULE DTC INSPECTION** • Clear the DTC for the SAS control module using the M-MDS. (See 08-02-10 CLEARING DTC.) • Perform the DTC inspection for the SAS control module using the M-MDS. (See 08-02-7 DTC INSPECTION.) • Are the same DTCs present?	Yes	Replace the SAS control module. (See 08-10-20 SAS CONTROL MODULE REMOVAL/INSTALLATION.) Go to the next step.
		No	DTC troubleshooting completed.
3	**VERIFY THAT NO OTHER DTCS ARE PRESENT** • Clear the DTC for the SAS control module using the M-MDS. (See 08-02-10 CLEARING DTC.) • Perform the DTC inspection for the SAS control module using the M-MDS. (See 08-02-7 DTC INSPECTION.) • Are any other DTCs output?	Yes	Go to the applicable DTC inspection.
		No	DTC troubleshooting completed.

ON-BOARD DIAGNOSTIC

DTC B0010:11/B0010:12/B0010:13/B0010:19/B0010:1A

id080200821200

System malfunction location	• **B0010:11: Passenger-side air bag module circuit short to body ground** • **B0010:12: Passenger-side air bag module circuit short to power supply** • **B0010:13: Passenger-side air bag module circuit open circuit or resistance high** • **B0010:19: Short circuit to passenger-side air bag module and other air bag module circuits** • **B0010:1A: Passenger-side air bag module circuit resistance low**
Detection condition	**Warning** • **Detection conditions are for understanding the DTC outline before performing an inspection. Performing an inspection according to only the detection conditions may cause injury due to an operating error, or damage the system. When performing an inspection, always follow the inspection procedure.** • Resistance **other than 0.81–6.42 ohms** detected in passenger-side air bag module circuit • Wiring harness between passenger-side air bag module and SAS control module has malfunction
Fail-safe	—
Possible cause	• Passenger-side air bag module connector malfunction • Short circuit to power supply or body ground in the wiring harness between the passenger-side air bag module and the SAS control module • Open circuit in the wiring harness between the passenger-side air bag module and the SAS control module • Passenger-side air bag module malfunction • SAS control module malfunction

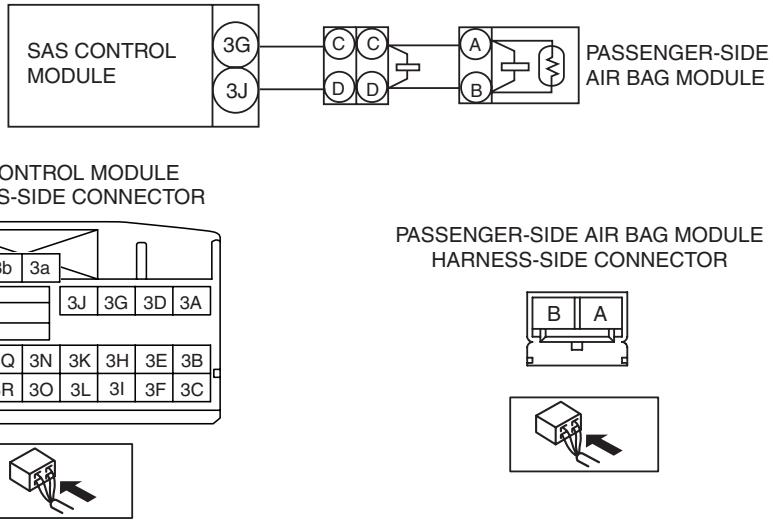

ON-BOARD DIAGNOSTIC

Diagnostic Procedure

Step	Inspection		Action
1	**INSPECT PASSENGER-SIDE AIR BAG MODULE CONNECTOR** **Warning** • **Handling the component parts improperly can accidentally operate (deploy) the air bag module, which may seriously injure you. Read the service warnings/cautions and the workshop manual before handling the air bag system components. (See 08-10-3 AIR BAG SYSTEM SERVICE WARNINGS.) (See 08-10-5 AIR BAG SYSTEM SERVICE CAUTIONS.)** • Switch the ignition to off. • Disconnect the negative battery cable and wait for **1 min or more**. (See 01-17A-11 NEGATIVE BATTERY CABLE DISCONNECTION/CONNECTION [SKYACTIV-G 2.0].)(See 01-17A-13 NEGATIVE BATTERY CABLE DISCONNECTION/CONNECTION [SKYACTIV-G 2.0 (WITHOUT i-stop)].)(See 01-17B-9 NEGATIVE BATTERY CABLE DISCONNECTION/CONNECTION [SKYACTIV-D 2.2].) • Remove the glove compartment. (See 09-17-30 GLOVE COMPARTMENT REMOVAL/INSTALLATION.) • Disconnect the passenger-side air bag module connector. (See 08-10-10 PASSENGER-SIDE AIR BAG MODULE REMOVAL/INSTALLATION.) • Inspect the passenger-side air bag module connector. (Corrosion, damage, and disconnected pins) • Is there any malfunction of the passenger-side air bag module connector?	Yes	Replace the malfunctioning part, then go to Step 6.
		No	Go to the next step.

ON-BOARD DIAGNOSTIC

Step	Inspection		Action
2	**INSPECT PASSENGER-SIDE AIR BAG MODULE CIRCUIT FOR SHORT TO GROUND** • Remove the column cover. (See 09-17-25 COLUMN COVER REMOVAL/ INSTALLATION.) • Disconnect the clock spring connector. (See 08-10-24 CLOCK SPRING REMOVAL/ INSTALLATION.) • Disconnect the driver and passenger-side front seat connector. (See 09-13-4 FRONT SEAT REMOVAL/INSTALLATION.) • Remove the headliner. (See 09-17-94 HEADLINER REMOVAL/INSTALLATION.) • Disconnect the driver and passenger-side curtain air bag module connectors. (See 08-10-15 CURTAIN AIR BAG MODULE REMOVAL/INSTALLATION.) • Remove the B-pillar lower trim. (See 09-17-57 B-PILLAR LOWER TRIM REMOVAL/ INSTALLATION.) • Disconnect the driver and passenger-side pre-tensioner seat belt connectors. (See 08-11-2 FRONT SEAT BELT REMOVAL/ INSTALLATION.) • Remove the rear console. (See 09-17-45 REAR CONSOLE REMOVAL/ INSTALLATION.) • Disconnect the all SAS control module connectors. (See 08-10-20 SAS CONTROL MODULE REMOVAL/INSTALLATION.) • Inspect for continuity between the following terminals (wiring harness-side) and body ground: — SAS control module terminal 3G — SAS control module terminal 3J **Note** • Inspect for continuity while shaking the wiring harness between the SAS control module and passenger-side air bag module. • Is there continuity?	Yes	Replace the wiring harness for a possible short to ground, then go to Step 6.
		No	Go to the next step.
3	**INSPECT PASSENGER-SIDE AIR BAG MODULE CIRCUIT FOR OPEN CIRCUIT** • Passenger-side air bag module and SAS control module connectors are disconnected. • Inspect for continuity between the following terminals (wiring harness-side): — Passenger-side air bag module terminal A—SAS control module terminal 3G — Passenger-side air bag module terminal B—SAS control module terminal 3J **Note** • Inspect for continuity while shaking the wiring harness between the SAS control module and passenger-side air bag module. • Is there continuity?	Yes	Go to the next step.
		No	Replace the wiring harness for a possible open circuit, then go to Step 6.

ON-BOARD DIAGNOSTIC

Step	Inspection		Action
4	**INSPECT PASSENGER-SIDE AIR BAG MODULE CIRCUIT FOR SHORT TO POWER SUPPLY** • Passenger-side air bag module and SAS control module connectors are disconnected. • Connect the negative battery cable. (See 01-17A-11 NEGATIVE BATTERY CABLE DISCONNECTION/CONNECTION [SKYACTIV-G 2.0].)(See 01-17A-13 NEGATIVE BATTERY CABLE DISCONNECTION/CONNECTION [SKYACTIV-G 2.0 (WITHOUT i-stop)].)(See 01-17B-9 NEGATIVE BATTERY CABLE DISCONNECTION/CONNECTION [SKYACTIV-D 2.2].) • Switch the ignition ON (engine off or on). • Measure the voltage at the following terminals (wiring harness-side): — SAS control module terminal 3G — SAS control module terminal 3J **Note** • Measure the voltage while shaking the wiring harness between the SAS control module and passenger-side air bag module. • Is the voltage **0V**?	Yes	Go to the next step.
		No	Replace the wiring harness for a possible short to power supply, then go to Step 6.

ON-BOARD DIAGNOSTIC

Step	Inspection		Action
5	**INSPECT PASSENGER-SIDE AIR BAG MODULE** • Switch the ignition to off. • Disconnect the negative battery cable and wait for **1 min or more**. (See 01-17A-11 NEGATIVE BATTERY CABLE DISCONNECTION/CONNECTION [SKYACTIV-G 2.0].)(See 01-17A-13 NEGATIVE BATTERY CABLE DISCONNECTION/CONNECTION [SKYACTIV-G 2.0 (WITHOUT i-stop)].)(See 01-17B-9 NEGATIVE BATTERY CABLE DISCONNECTION/CONNECTION [SKYACTIV-D 2.2].) • Connect the SAS control module connectors. • Except for the passenger-side air bag module connector, reconnect all disconnected connectors. • Connect the **SST (Fuel and thermometer checker)** or apply **2 ohms** resistance to the passenger-side air bag module connector terminals A and B. • Set the **SST (Fuel and thermometer checker)** to **2 ohms**. • Connect the negative battery cable. (See 01-17A-11 NEGATIVE BATTERY CABLE DISCONNECTION/CONNECTION [SKYACTIV-G 2.0].)(See 01-17A-13 NEGATIVE BATTERY CABLE DISCONNECTION/CONNECTION [SKYACTIV-G 2.0 (WITHOUT i-stop)].)(See 01-17B-9 NEGATIVE BATTERY CABLE DISCONNECTION/CONNECTION [SKYACTIV-D 2.2].) • Switch the ignition ON (engine off or on). • Clear the DTC for the SAS control module using the M-MDS. (See 08-02-10 CLEARING DTC.) • Perform the DTC inspection for the SAS control module using the M-MDS. (See 08-02-7 DTC INSPECTION.) • Are the same DTCs present?	Yes	Go to the next step.
		No	Replace the passenger-side air bag module. (See 08-10-10 PASSENGER-SIDE AIR BAG MODULE REMOVAL/INSTALLATION.) Then go to the next step.

ON-BOARD DIAGNOSTIC

Step	Inspection		Action
6	**PERFORM SAS CONTROL MODULE DTC INSPECTION** • Switch the ignition to off. • Disconnect the negative battery cable and wait for **1 min or more**. (See 01-17A-11 NEGATIVE BATTERY CABLE DISCONNECTION/CONNECTION [SKYACTIV-G 2.0].)(See 01-17A-13 NEGATIVE BATTERY CABLE DISCONNECTION/CONNECTION [SKYACTIV-G 2.0 (WITHOUT i-stop)].)(See 01-17B-9 NEGATIVE BATTERY CABLE DISCONNECTION/CONNECTION [SKYACTIV-D 2.2].) • Disconnect the **SST (Fuel and thermometer checker)** or the **2 ohms** resistance. • Connect the passenger-side air bag module connector. • Connect the negative battery cable. (See 01-17A-11 NEGATIVE BATTERY CABLE DISCONNECTION/CONNECTION [SKYACTIV-G 2.0].)(See 01-17A-13 NEGATIVE BATTERY CABLE DISCONNECTION/CONNECTION [SKYACTIV-G 2.0 (WITHOUT i-stop)].)(See 01-17B-9 NEGATIVE BATTERY CABLE DISCONNECTION/CONNECTION [SKYACTIV-D 2.2].) • Switch the ignition ON (engine off or on). • Clear the DTC for the SAS control module using the M-MDS. (See 08-02-10 CLEARING DTC.) • Perform the DTC inspection for the SAS control module using the M-MDS. (See 08-02-7 DTC INSPECTION.) • Are the same DTCs present?	Yes	Replace the SAS control module. (See 08-10-20 SAS CONTROL MODULE REMOVAL/INSTALLATION.)
		No	DTC troubleshooting completed.

ON-BOARD DIAGNOSTIC

DTC B0094:11/B0094:13/B0094:87/B0094:96

id080200000400

System malfunction location	• **B0094:11: Driver-side crash zone sensor circuit short to body ground** • **B0094:13: Driver-side crash zone sensor circuit open circuit or short to power supply** • **B0094:87: Signal reception error from driver-side crash zone sensor** • **B0094:96: Driver-side crash zone sensor internal malfunction**
Detection condition	**Warning** • **Detection conditions are for understanding the DTC outline before performing an inspection. Performing an inspection according to only the detection conditions may cause injury due to an operating error, or damage the system. When performing an inspection, always follow the inspection procedure.** • Wiring harness between the driver-side crash zone sensor and SAS control module has a malfunction • Driver-side crash zone sensor has a malfunction
Fail-safe	—
Possible cause	• Driver-side crash zone sensor connector malfunction • Open or short circuit or short to ground or short to power supply in the wiring harness between the driver-side crash zone sensor and SAS control module • Driver-side crash zone sensor malfunction • SAS control module malfunction

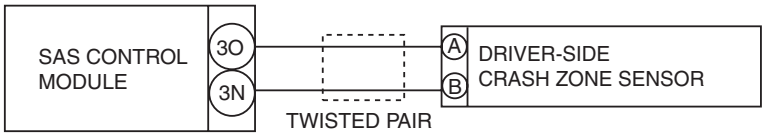

SAS CONTROL MODULE WIRING HARNESS-SIDE CONNECTOR

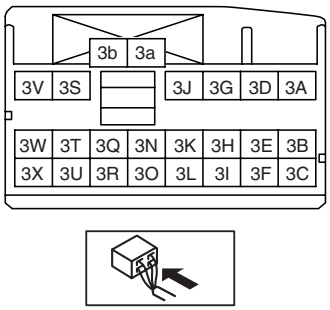

DRIVER-SIDE CRASH ZONE SENSOR WIRING HARNESS-SIDE CONNECTOR

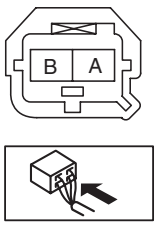

ON-BOARD DIAGNOSTIC

Diagnostic Procedure

Step	Inspection		Action
1	**INSPECT DRIVER-SIDE CRASH ZONE SENSOR CONNECTOR** **Warning** • **Handling the component parts improperly can accidentally operate (deploy) the air bag module, which may seriously injure you. Read the service warnings/cautions and the workshop manual before handling the air bag system components. (See 08-10-3 AIR BAG SYSTEM SERVICE WARNINGS.) (See 08-10-5 AIR BAG SYSTEM SERVICE CAUTIONS.)** • Switch the ignition to off. • Disconnect the negative battery cable and wait for **1 min or more**. (See 01-17A-11 NEGATIVE BATTERY CABLE DISCONNECTION/CONNECTION [SKYACTIV-G 2.0].)(See 01-17A-13 NEGATIVE BATTERY CABLE DISCONNECTION/CONNECTION [SKYACTIV-G 2.0 (WITHOUT i-stop)].)(See 01-17B-9 NEGATIVE BATTERY CABLE DISCONNECTION/CONNECTION [SKYACTIV-D 2.2].) • Remove the front bumper. (See 09-10-10 FRONT BUMPER REMOVAL/INSTALLATION.) • Disconnect the driver-side crash zone sensor connector. (See 08-10-19 CRASH ZONE SENSOR REMOVAL/INSTALLATION.) • Inspect the driver-side crash zone sensor connector. (Corrosion, damage, and disconnected pins) • Is there any malfunction of the driver-side crash zone sensor connector?	Yes	Replace the malfunctioning part, then go to Step 5.
		No	Go to the next step.

ON-BOARD DIAGNOSTIC

Step	Inspection		Action
2	**INSPECT DRIVER-SIDE CRASH ZONE SENSOR CIRCUIT FOR SHORT TO GROUND** • Remove the column cover. (See 09-17-25 COLUMN COVER REMOVAL/ INSTALLATION.) • Disconnect the clock spring connector. (See 08-10-24 CLOCK SPRING REMOVAL/ INSTALLATION.) • Remove the glove compartment. (See 09-17-30 GLOVE COMPARTMENT REMOVAL/ INSTALLATION.) • Disconnect the passenger-side air bag module connector. (See 08-10-10 PASSENGER-SIDE AIR BAG MODULE REMOVAL/INSTALLATION.) • Disconnect the driver and passenger-side front seat connector. (See 09-13-4 FRONT SEAT REMOVAL/INSTALLATION.) • Remove the headliner. (See 09-17-94 HEADLINER REMOVAL/INSTALLATION.) • Disconnect the driver and passenger-side curtain air bag module connector. (See 08-10-15 CURTAIN AIR BAG MODULE REMOVAL/INSTALLATION.) • Remove the B-pillar lower trim. (See 09-17-57 B-PILLAR LOWER TRIM REMOVAL/ INSTALLATION.) • Disconnect the driver and passenger-side pre-tensioner seat belt connector. (See 08-11-2 FRONT SEAT BELT REMOVAL/ INSTALLATION.) • Remove the rear console. (See 09-17-45 REAR CONSOLE REMOVAL/ INSTALLATION.) • Disconnect the all SAS control module connectors. (See 08-10-20 SAS CONTROL MODULE REMOVAL/INSTALLATION.) • Inspect for continuity between the following terminals (wiring harness-side) and body ground: — SAS control module terminal 3O — SAS control module terminal 3N **Note** • Inspect for continuity while shaking the wiring harness between the SAS control module and driver-side crash zone sensor. • Is there continuity?	Yes	Replace the wiring harness for a possible short to ground, then go to Step 5.
		No	Go to the next step.
3	**INSPECT DRIVER-SIDE CRASH ZONE SENSOR CIRCUIT FOR OPEN CIRCUIT** • Driver-side crash zone sensor and SAS control module connectors are disconnected. • Inspect for continuity between the following terminals (wiring harness-side): — Driver-side crash zone sensor terminal A—SAS control module terminal 3O — Driver-side crash zone sensor terminal B—SAS control module terminal 3N **Note** • Inspect for continuity while shaking the wiring harness between the SAS control module and driver-side crash zone sensor. • Is there continuity?	Yes	Go to the next step.
		No	Replace the wiring harness for a possible open circuit, then go to Step 5.

ON-BOARD DIAGNOSTIC

Step	Inspection		Action
4	**INSPECT DRIVER-SIDE CRASH ZONE SENSOR CIRCUIT FOR SHORT TO POWER SUPPLY** • Driver-side crash zone sensor and SAS control module connectors are disconnected. • Connect the negative battery cable. (See 01-17A-11 NEGATIVE BATTERY CABLE DISCONNECTION/CONNECTION [SKYACTIV-G 2.0].)(See 01-17A-13 NEGATIVE BATTERY CABLE DISCONNECTION/CONNECTION [SKYACTIV-G 2.0 (WITHOUT i-stop)].)(See 01-17B-9 NEGATIVE BATTERY CABLE DISCONNECTION/CONNECTION [SKYACTIV-D 2.2].) • Switch the ignition ON (engine off or on). • Measure the voltage at the following terminals (wiring harness-side): — SAS control module terminal 3O — SAS control module terminal 3N **Note** • Measure the voltage while shaking the wiring harness between the SAS control module and driver-side crash zone sensor. • Is the voltage **0V**?	Yes	Replace the driver-side crash zone sensor, then go to the next step. (See 08-10-19 CRASH ZONE SENSOR REMOVAL/INSTALLATION.)
		No	Replace the wiring harness for a possible short to power supply, then go to the next step.
5	**PERFORM SAS CONTROL MODULE DTC INSPECTION** • Switch the ignition to off. • Disconnect the negative battery cable and wait for **1min or more**. (See 01-17A-11 NEGATIVE BATTERY CABLE DISCONNECTION/CONNECTION [SKYACTIV-G 2.0].)(See 01-17A-13 NEGATIVE BATTERY CABLE DISCONNECTION/CONNECTION [SKYACTIV-G 2.0 (WITHOUT i-stop)].)(See 01-17B-9 NEGATIVE BATTERY CABLE DISCONNECTION/CONNECTION [SKYACTIV-D 2.2].) • Connect the SAS control module connectors. • Reconnect all disconnected connectors. • Connect the negative battery cable. (See 01-17A-11 NEGATIVE BATTERY CABLE DISCONNECTION/CONNECTION [SKYACTIV-G 2.0].)(See 01-17A-13 NEGATIVE BATTERY CABLE DISCONNECTION/CONNECTION [SKYACTIV-G 2.0 (WITHOUT i-stop)].)(See 01-17B-9 NEGATIVE BATTERY CABLE DISCONNECTION/CONNECTION [SKYACTIV-D 2.2].) • Switch the ignition ON (engine off or on). • Clear the DTC for the SAS control module using the M-MDS. (See 08-02-10 CLEARING DTC.) • Perform the DTC inspection for the SAS control module using the M-MDS. (See 08-02-7 DTC INSPECTION.) • Are the same DTCs present?	Yes	Replace the SAS control module. (See 08-10-20 SAS CONTROL MODULE REMOVAL/INSTALLATION.)
		No	DTC troubleshooting completed.

ON-BOARD DIAGNOSTIC

DTC B0094:55/B1417:55

id080200880100

System malfunction location	• **B0094:55: Configuration setting error (driver-side crash zone sensor structural malfunction)** • **B1417:55: Configuration setting error (passenger-side crash zone sensor structural malfunction)**
Detection condition	**Warning** • **Detection conditions are for understanding the DTC outline before performing an inspection. Performing an inspection according to only the detection conditions may cause injury due to an operating error, or damage the system. When performing an inspection, always follow the inspection procedure.** • SAS control module configuration setting has not been done correctly • Parts which have not been set to SAS control module are assembled
Fail-safe	—
Possible cause	• SAS control module configuration setting not implemented • SAS control module configuration setting invalid • Driver or passenger-side crash zone sensor assembly incorrect • SAS control module malfunction
System wiring diagram	—

Diagnostic Procedure

Step	Inspection		Action
1	**PERFORM SAS CONTROL MODULE CONFIGURATION (AS-BUILT DATA USE)** • Perform the SAS control module configuration using the M-MDS. (See 08-10-22 SAS CONTROL MODULE CONFIGURATION (USING AS-BUILT DATA).) • Clear the DTC for the SAS control module using the M-MDS. (See 08-02-10 CLEARING DTC.) • Perform the DTC inspection for the SAS control module using the M-MDS. (See 08-02-7 DTC INSPECTION.) • Are the same DTCs present?	Yes	Go to the next step.
		No	DTC troubleshooting completed.
2	**INSPECT CRASH ZONE SENSOR** • Verify that the driver or passenger-side crash zone sensor is correctly installed. • Is the driver or passenger-side crash zone sensor correctly installed?	Yes	Go to the next step.
		No	Correctly Install the driver or passenger-side crash zone sensor. Then go to the next step.
3	**PERFORM SAS CONTROL MODULE DTC INSPECTION** • Clear the DTC for the SAS control module using the M-MDS. (See 08-02-10 CLEARING DTC.) • Perform the DTC inspection for the SAS control module using the M-MDS. (See 08-02-7 DTC INSPECTION.) • Are the same DTCs present?	Yes	Replace the SAS control module. (See 08-10-20 SAS CONTROL MODULE REMOVAL/INSTALLATION.)
		No	DTC troubleshooting completed.

ON-BOARD DIAGNOSTIC

DTC B00D2:01

id080200824000

System malfunction location	• **Air bag system warning light malfunction**
Detection condition	**Warning** • **Detection conditions are for understanding the DTC outline before performing an inspection. Performing an inspection according to only the detection conditions may cause injury due to an operating error, or damage the system. When performing an inspection, always follow the inspection procedure.** • Air bag system warning light malfunction detected
Fail-safe	—
Possible cause	• Air bag system warning light malfunction
System wiring diagram	—

Diagnostic Procedure

Action
Replace the instrument cluster. (See 09-22-6 INSTRUMENT CLUSTER REMOVAL/INSTALLATION.)

ON-BOARD DIAGNOSTIC

DTC B00D2:29

id080200826700

System malfunction location	• **Invalid signal to air bag system warning light**
Detection condition	**Warning** • **Detection conditions are for understanding the DTC outline before performing an inspection. Performing an inspection according to only the detection conditions may cause injury due to an operating error, or damage the system. When performing an inspection, always follow the inspection procedure.** • Air bag system warning light illumination request sent from SAS control module does not correspond to air bag system warning light illumination status in instrument cluster
Fail-safe	—
Possible cause	• Instrument cluster assembly incorrect • Instrument cluster malfunction • SAS control module malfunction
System wiring diagram	—

Diagnostic Procedure

Step	Inspection		Action
1	**INSPECT DTCs IN SAS CONTROL MODULE** • Clear the DTC for the SAS control module using the M-MDS. (See 08-02-10 CLEARING DTC.) • Inspect the DTC from the SAS control module memory using the M-MDS. (See 08-02-7 DTC INSPECTION.) • Is DTC U0001:88 or U0155:00 displayed?	Yes	Perform the applicable DTC inspection.
		No	Go to the next step.
2	**INSPECT INSTRUMENT CLUSTER** • Verify that the instrument cluster is correctly installed. • Is the instrument cluster correctly installed?	Yes	Go to the next step.
		No	Correctly install the instrument cluster. (See 09-22-6 INSTRUMENT CLUSTER REMOVAL/INSTALLATION.) Then go to the next step.
3	**INSPECT INSTRUMENT CLUSTER** • Perform the active command mode inspection for the instrument cluster using the M-MDS. (See 09-02G-38 ACTIVE COMMAND MODES INSPECTION [INSTRUMENT CLUSTER].) — WL+IL (See 09-02G-38 ACTIVE COMMAND MODES TABLE [INSTRUMENT CLUSTER].) • Does the air bag system warning light illuminate?	Yes	Go to the next step.
		No	Replace the instrument cluster. (See 09-22-6 INSTRUMENT CLUSTER REMOVAL/INSTALLATION.) Then go to the next step.
4	**PERFORM SAS CONTROL MODULE DTC INSPECTION** • Clear the DTC for the SAS control module using the M-MDS. (See 08-02-10 CLEARING DTC.) • Perform the DTC inspection for the SAS control module using the M-MDS. (See 08-02-7 DTC INSPECTION.) • Is DTC B00D2:29 displayed?	Yes	Replace the SAS control module. (See 08-10-20 SAS CONTROL MODULE REMOVAL/INSTALLATION.)
		No	DTC troubleshooting completed.

ON-BOARD DIAGNOSTIC

DTC B00D5:01/B00D5:29/B1202:01

id080200890500

System malfunction location	• **B00D5:01: PAD OFF indicator circuit open circuit or short to power supply** • **B00D5:29: PAD OFF indicator communication error** • **B1202:01: PAD ON indicator circuit open circuit or short to power supply**
Detection condition	**Warning** • **Detection conditions are for understanding the DTC outline before performing an inspection. Performing an inspection according to only the detection conditions may cause injury due to an operating error, or damage the system. When performing an inspection, always follow the inspection procedure.** • Malfunction in PAD indicator circuit
Fail-safe	—
Possible cause	• Instrument cluster malfunction • SAS control module connector malfunction • Instrument cluster connector malfunction • Short circuit to power supply or body ground in wiring harness between Instrument cluster and SAS control module • Open circuit in wiring harness between Instrument cluster and SAS control module • SAS control module malfunction

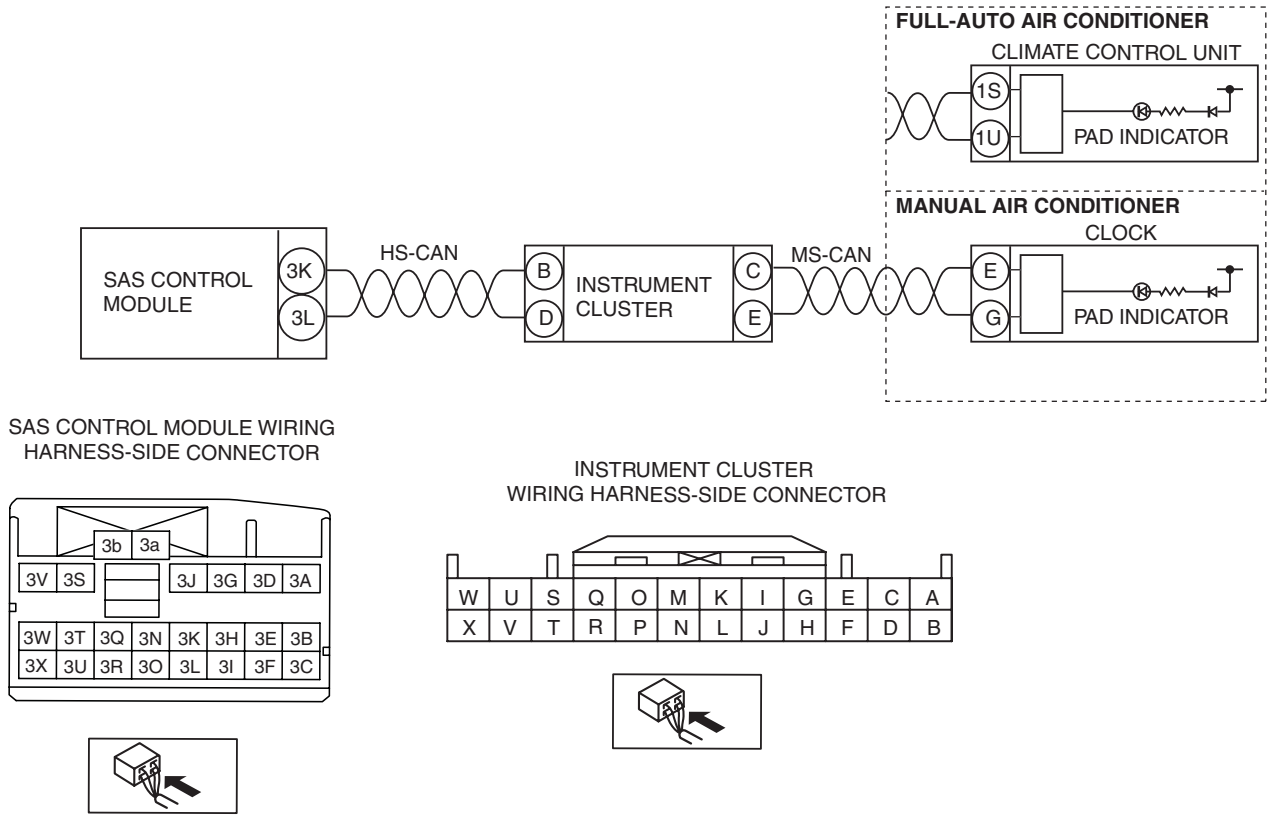

Diagnostic Procedure

STEP	INSPECTION		ACTION
1	**PERFORM INSTRUMENT CLUSTER DTC INSPECTION** • Perform the instrument cluster DTC inspection using the M-MDS. (See 09-02G-7 DTC INSPECTION [INSTRUMENT CLUSTER].) • Are any DTCs present?	Yes	Perform the applicable DTC inspection. (See 09-02G-10 DTC TABLE [INSTRUMENT CLUSTER].)
		No	Go to the next step.

ON-BOARD DIAGNOSTIC

STEP	INSPECTION		ACTION
2	**INSPECT SAS CONTROL MODULE CONNECTOR** **Warning** • **Handling the component parts improperly can accidentally operate (deploy) the air bag module, which may seriously injure you. Read the service warnings/cautions and the workshop manual before handling the air bag system components. (See 08-10-3 AIR BAG SYSTEM SERVICE WARNINGS.) (See 08-10-5 AIR BAG SYSTEM SERVICE CAUTIONS.)** • Switch the ignition to off. • Disconnect the negative battery cable and wait for **1min or more**. (See 01-17A-11 NEGATIVE BATTERY CABLE DISCONNECTION/CONNECTION [SKYACTIV-G 2.0].)(See 01-17A-13 NEGATIVE BATTERY CABLE DISCONNECTION/CONNECTION [SKYACTIV-G 2.0 (WITHOUT i-stop)].)(See 01-17B-9 NEGATIVE BATTERY CABLE DISCONNECTION/CONNECTION [SKYACTIV-D 2.2].) • Remove the column cover. (See 09-17-25 COLUMN COVER REMOVAL/INSTALLATION.) • Disconnect the clock spring connector. (See 08-10-24 CLOCK SPRING REMOVAL/INSTALLATION.) • Remove the glove compartment. (See 09-17-30 GLOVE COMPARTMENT REMOVAL/INSTALLATION.) • Disconnect the passenger-side air bag module connector. (See 08-10-10 PASSENGER-SIDE AIR BAG MODULE REMOVAL/INSTALLATION.) • Disconnect the driver and passenger-side front seat connector. (See 09-13-4 FRONT SEAT REMOVAL/INSTALLATION.) • Remove the headliner. (See 09-17-94 HEADLINER REMOVAL/INSTALLATION.) • Disconnect the driver and passenger-side curtain air bag module connectors. (See 08-10-15 CURTAIN AIR BAG MODULE REMOVAL/INSTALLATION.) • Remove the B-pillar lower trim. (See 09-17-57 B-PILLAR LOWER TRIM REMOVAL/INSTALLATION.) • Disconnect the driver and passenger-side pre-tensioner seat belt connectors. (See 08-11-2 FRONT SEAT BELT REMOVAL/INSTALLATION.) • Remove the rear console. (See 09-17-45 REAR CONSOLE REMOVAL/INSTALLATION.) • Disconnect the all SAS control module connectors. (See 08-10-20 SAS CONTROL MODULE REMOVAL/INSTALLATION.) • Inspect the SAS control module connector terminal for poor connection (such as damaged/pulled-out pins, and corrosion). • Is there any malfunction?	Yes	Replace the malfunctioning part, then go to the next step.
		No	Go to the next step.

ON-BOARD DIAGNOSTIC

STEP	INSPECTION		ACTION
3	**INSPECT INSTRUMENT CLUSTER CONNECTOR** • Disconnect the instrument cluster connectors. (See 09-22-6 INSTRUMENT CLUSTER REMOVAL/INSTALLATION.) • Inspect the instrument cluster terminal for poor connection (such as damaged/pulled-out pins, and corrosion). • Is there any malfunction?	Yes	Replace the malfunctioning part, then go to Step 6.
		No	Go to the next step.
4	**INSPECT SAS CONTROL MODULE CIRCUIT FOR SHORT TO GROUND** • Instrument cluster and SAS control module connectors are disconnected. • Inspect for continuity between the following terminals (wiring harness-side) and body ground: — SAS control module terminal 3K — SAS control module terminal 3L **Note** • Inspect for continuity while shaking the wiring harness between the SAS control module and instrument cluster. • Is there continuity?	Yes	Replace the wiring harness for a possible short to ground, then go to Step 7.
		No	Go to the next step.
5	**INSPECT SAS CONTROL MODULE CIRCUIT FOR OPEN CIRCUIT** • Instrument cluster and SAS control module connectors are disconnected. • Inspect for continuity between the following terminals (wiring harness-side): — Instrument cluster terminal B—SAS control module terminal 3K — Instrument cluster terminal D—SAS control module terminal 3L **Note** • Inspect for continuity while shaking the wiring harness between the SAS control module and instrument cluster. • Is there continuity?	Yes	Go to the next step.
		No	Replace the wiring harness for a possible open circuit, then go to Step 7.
6	**INSPECT SAS CONTROL MODULE CIRCUIT FOR SHORT TO POWER SUPPLY** • Instrument cluster and SAS control module connectors are disconnected. • Connect the negative battery cable. (See 01-17A-11 NEGATIVE BATTERY CABLE DISCONNECTION/CONNECTION [SKYACTIV-G 2.0].)(See 01-17A-13 NEGATIVE BATTERY CABLE DISCONNECTION/CONNECTION [SKYACTIV-G 2.0 (WITHOUT i-stop)].)(See 01-17B-9 NEGATIVE BATTERY CABLE DISCONNECTION/CONNECTION [SKYACTIV-D 2.2].) • Switch the ignition ON (engine off or on). • Measure the voltage at the following terminals (wiring harness-side): — SAS control module terminal 3K — SAS control module terminal 3L **Note** • Measure the voltage while shaking the wiring harness between the SAS control module and instrument cluster. • Is the voltage **0V**?	Yes	Go to the next step.
		No	Replace the wiring harness for a possible short to power supply, then go to the next step.

ON-BOARD DIAGNOSTIC

STEP	INSPECTION		ACTION
7	**PERFORM SAS CONTROL MODULE DTC INSPECTION** • Switch the ignition to off. • Disconnect the negative battery cable and wait for **1min or more**. (See 01-17A-11 NEGATIVE BATTERY CABLE DISCONNECTION/CONNECTION [SKYACTIV-G 2.0].)(See 01-17A-13 NEGATIVE BATTERY CABLE DISCONNECTION/CONNECTION [SKYACTIV-G 2.0 (WITHOUT i-stop)].)(See 01-17B-9 NEGATIVE BATTERY CABLE DISCONNECTION/CONNECTION [SKYACTIV-D 2.2].) • Connect the SAS control module connectors. • Reconnect all disconnected connectors. • Connect the negative battery cable. (See 01-17A-11 NEGATIVE BATTERY CABLE DISCONNECTION/CONNECTION [SKYACTIV-G 2.0].)(See 01-17A-13 NEGATIVE BATTERY CABLE DISCONNECTION/CONNECTION [SKYACTIV-G 2.0 (WITHOUT i-stop)].)(See 01-17B-9 NEGATIVE BATTERY CABLE DISCONNECTION/CONNECTION [SKYACTIV-D 2.2].) • Switch the ignition ON (engine off or on). • Clear the DTC for the SAS control module using the M-MDS. (See 08-02-10 CLEARING DTC.) • Perform the DTC inspection for the SAS control module using the M-MDS. (See 08-02-7 DTC INSPECTION.) • Are the same DTCs present?	Yes	Replace the SAS control module. (See 08-10-20 SAS CONTROL MODULE REMOVAL/INSTALLATION.)
		No	DTC troubleshooting completed.

ON-BOARD DIAGNOSTIC

DTC B1011:95

id080200823100

System malfunction location	• **SAS control module connectors are poorly connected**
Detection condition	**Warning** • **Detection conditions are for understanding the DTC outline before performing an inspection. Performing an inspection according to only the detection conditions may cause injury due to an operating error, or damage the system. When performing an inspection, always follow the inspection procedure.** • No continuity between poorly connected detector bar terminals of the SAS control module
Fail-safe	—
Possible cause	• SAS control module connectors are poorly connected • SAS control module connector malfunction • SAS control module malfunction

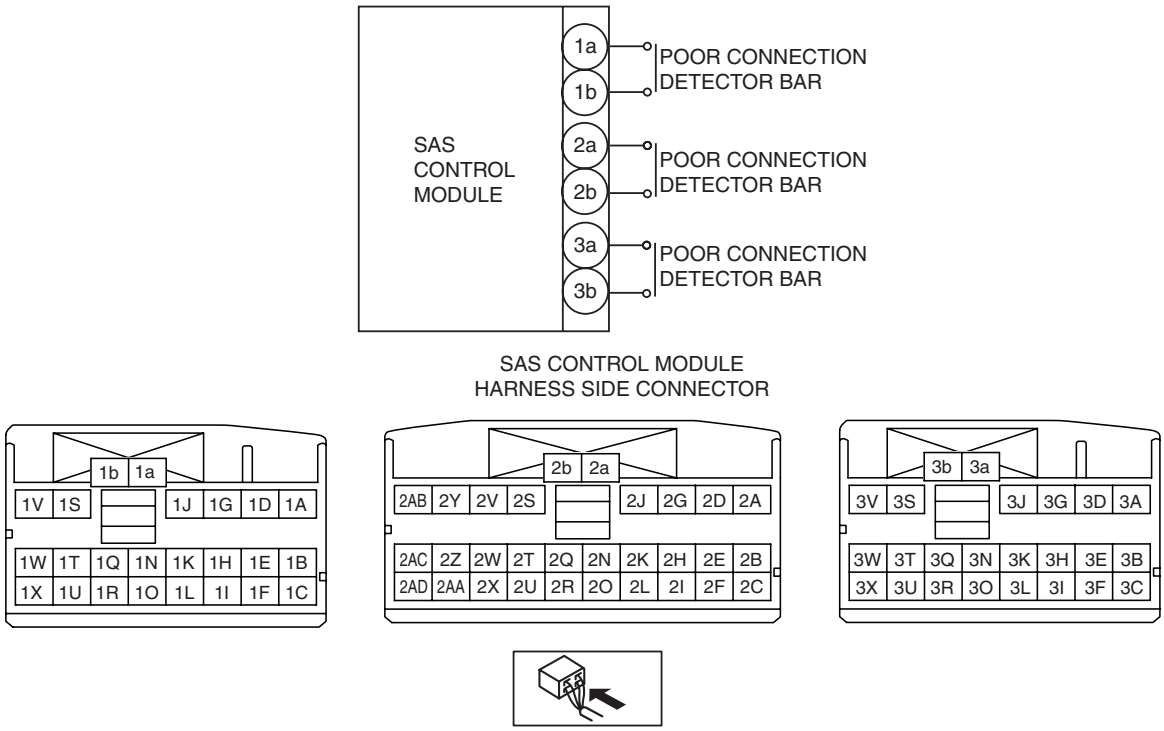

08

ON-BOARD DIAGNOSTIC

Diagnostic Procedure

Step	Inspection		Action
1	**INSPECT CONTACTS OF SAS CONTROL MODULE CONNECTORS** **Warning** • **Handling the component parts improperly can accidentally operate (deploy) the air bag module, which may seriously injure you. Read the service warnings/cautions and the workshop manual before handling the air bag system components. (See 08-10-3 AIR BAG SYSTEM SERVICE WARNINGS.) (See 08-10-5 AIR BAG SYSTEM SERVICE CAUTIONS.)** • Switch the ignition to off. • Disconnect the negative battery cable and wait for **1 min or more**. (See 01-17A-11 NEGATIVE BATTERY CABLE DISCONNECTION/CONNECTION [SKYACTIV-G 2.0].)(See 01-17A-13 NEGATIVE BATTERY CABLE DISCONNECTION/CONNECTION [SKYACTIV-G 2.0 (WITHOUT i-stop)].)(See 01-17B-9 NEGATIVE BATTERY CABLE DISCONNECTION/CONNECTION [SKYACTIV-D 2.2].) • Remove the column cover. (See 09-17-25 COLUMN COVER REMOVAL/INSTALLATION.) • Disconnect the clock spring connector. (See 08-10-24 CLOCK SPRING REMOVAL/INSTALLATION.) • Remove the glove compartment. (See 09-17-30 GLOVE COMPARTMENT REMOVAL/INSTALLATION.) • Disconnect the passenger-side air bag module connector. (See 08-10-10 PASSENGER-SIDE AIR BAG MODULE REMOVAL/INSTALLATION.) • Disconnect the driver and passenger-side front seat connector. (See 09-13-4 FRONT SEAT REMOVAL/INSTALLATION.) • Remove the headliner. (See 09-17-94 HEADLINER REMOVAL/INSTALLATION.) • Disconnect the driver and passenger-side curtain air bag module connectors. (See 08-10-15 CURTAIN AIR BAG MODULE REMOVAL/INSTALLATION.) • Remove the B-pillar lower trim. (See 09-17-57 B-PILLAR LOWER TRIM REMOVAL/INSTALLATION.) • Disconnect the driver and passenger-side pre-tensioner seat belt connectors. (See 08-11-2 FRONT SEAT BELT REMOVAL/INSTALLATION.) • Remove the rear console. (See 09-17-45 REAR CONSOLE REMOVAL/INSTALLATION.) • Are all SAS control module connectors securely connected?	Yes	Go to the next step.
		No	Reconnect the SAS control module connectors properly. Then go to Step 3.

ON-BOARD DIAGNOSTIC

Step	Inspection		Action
2	**VERIFY POORLY CONNECTED DETECTOR BARS OF SAS CONTROL MODULE CONNECTORS** • Disconnect the all SAS control module connectors. (See 08-10-20 SAS CONTROL MODULE REMOVAL/INSTALLATION.) • Verify the condition of the poorly connected detector bars of the SAS control module connectors. (Corrosion, damage, and disconnected pins) • Are the poorly connected detector bars of the SAS control module connectors normal?	Yes	Go to the next step.
		No	Replace the air bag wiring harness. Then go to the next step.
3	**PERFORM SAS CONTROL MODULE DTC INSPECTION** • Connect the SAS control module connectors. • Reconnect all disconnected connectors. • Connect the negative battery cable. (See 01-17A-11 NEGATIVE BATTERY CABLE DISCONNECTION/CONNECTION [SKYACTIV-G 2.0].)(See 01-17A-13 NEGATIVE BATTERY CABLE DISCONNECTION/CONNECTION [SKYACTIV-G 2.0 (WITHOUT i-stop)].)(See 01-17B-9 NEGATIVE BATTERY CABLE DISCONNECTION/CONNECTION [SKYACTIV-D 2.2].) • Switch the ignition ON (engine off or on). • Clear the DTC for the SAS control module using the M-MDS. (See 08-02-10 CLEARING DTC.) • Perform the DTC inspection for the SAS control module using the M-MDS. (See 08-02-7 DTC INSPECTION.) • Are the same DTCs present?	Yes	Replace the SAS control module. (See 08-10-20 SAS CONTROL MODULE REMOVAL/INSTALLATION.)
		No	DTC troubleshooting completed.

ON-BOARD DIAGNOSTIC

DTC B10FD:11/B10FD:13/B10FD:87/B10FD:96

id080200847100

System malfunction location	• **B10FD:11: Driver-side side air bag sensor No.1 circuit short to body ground or power supply** • **B10FD:13: Driver-side side air bag sensor No.1 circuit open circuit or resistance high** • **B10FD:87: Signal reception error from driver-side side air bag sensor No.1** • **B10FD:96: Driver-side side air bag sensor No.1 internal malfunction**
Detection condition	**Warning** • **Detection conditions are for understanding the DTC outline before performing an inspection. Performing an inspection according to only the detection conditions may cause injury due to an operating error, or damage the system. When performing an inspection, always follow the inspection procedure.** • Wiring harness between the driver-side side air bag sensor No.1 and SAS control module has a malfunction • Driver-side side air bag sensor No.1 has a malfunction
Fail-safe	—
Possible cause	• Driver-side side air bag sensor No.1 connector malfunction • Short circuit to power supply or body ground in the wiring harness between the driver-side side air bag sensor No.1 and SAS control module • Open circuit in the wiring harness between the driver-side side air bag sensor No.1 and SAS control module • Driver-side side air bag sensor No.1 malfunction • SAS control module malfunction

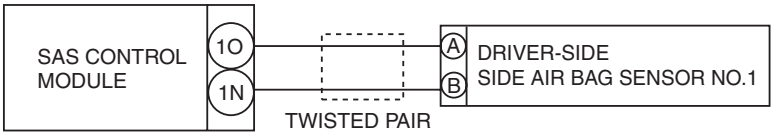

SAS CONTROL MODULE WIRING HARNESS-SIDE CONNECTOR

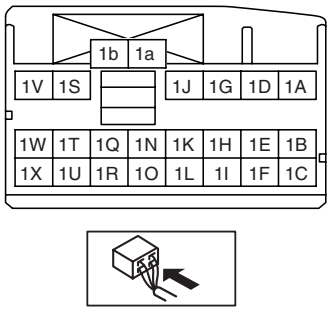

DRIVER-SIDE SIDE AIR BAG SENSOR NO.1 WIRING HARNESS-SIDE CONNECTOR

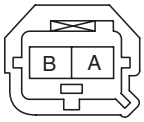

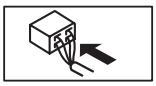

ON-BOARD DIAGNOSTIC

Diagnostic Procedure

Step	Inspection		Action
1	**INSPECT DRIVER-SIDE SIDE AIR BAG SENSOR NO.1 CONNECTOR** **Warning** • **Handling the component parts improperly can accidentally operate (deploy) the air bag module, which may seriously injure you. Read the service warnings/cautions and the workshop manual before handling the air bag system components. (See 08-10-3 AIR BAG SYSTEM SERVICE WARNINGS.) (See 08-10-5 AIR BAG SYSTEM SERVICE CAUTIONS.)** • Switch the ignition to off. • Disconnect the negative battery cable and wait for **1 min or more**. (See 01-17A-11 NEGATIVE BATTERY CABLE DISCONNECTION/CONNECTION [SKYACTIV-G 2.0].)(See 01-17A-13 NEGATIVE BATTERY CABLE DISCONNECTION/CONNECTION [SKYACTIV-G 2.0 (WITHOUT i-stop)].)(See 01-17B-9 NEGATIVE BATTERY CABLE DISCONNECTION/CONNECTION [SKYACTIV-D 2.2].) • Remove the driver-side B-pillar lower trim. (See 09-17-57 B-PILLAR LOWER TRIM REMOVAL/INSTALLATION.) • Disconnect the driver-side side air bag sensor No.1 connector. (See 08-10-22 SIDE AIR BAG SENSOR NO. 1 REMOVAL/INSTALLATION.) • Inspect the driver-side side air bag sensor No.1 connector. (Corrosion, damage, and disconnected pins) • Is there any malfunction of the driver-side side air bag sensor No.1 connector?	Yes	Replace the malfunctioning part, then go to Step 5.
		No	Go to the next step.

ON-BOARD DIAGNOSTIC

Step	Inspection		Action
2	**INSPECT DRIVER-SIDE SIDE AIR BAG SENSOR NO.1 CIRCUIT FOR SHORT TO GROUND** • Remove the column cover. (See 09-17-25 COLUMN COVER REMOVAL/ INSTALLATION.) • Disconnect the clock spring connector. (See 08-10-24 CLOCK SPRING REMOVAL/ INSTALLATION.) • Remove the glove compartment. (See 09-17-30 GLOVE COMPARTMENT REMOVAL/ INSTALLATION.) • Disconnect the passenger-side air bag module connector. (See 08-10-10 PASSENGER-SIDE AIR BAG MODULE REMOVAL/INSTALLATION.) • Disconnect the driver and passenger-side front seat connector. (See 09-13-4 FRONT SEAT REMOVAL/INSTALLATION.) • Remove the headliner. (See 09-17-94 HEADLINER REMOVAL/INSTALLATION.) • Disconnect the driver and passenger-side curtain air bag module connector. (See 08-10-15 CURTAIN AIR BAG MODULE REMOVAL/INSTALLATION.) • Remove the B-pillar lower trim. (See 09-17-57 B-PILLAR LOWER TRIM REMOVAL/ INSTALLATION.) • Disconnect the driver and passenger-side pre-tensioner seat belt connector. (See 08-11-2 FRONT SEAT BELT REMOVAL/ INSTALLATION.) • Remove the rear console. (See 09-17-45 REAR CONSOLE REMOVAL/ INSTALLATION.) • Disconnect the all SAS control module connectors. (See 08-10-20 SAS CONTROL MODULE REMOVAL/INSTALLATION.) • Inspect for continuity between the following terminals (wiring harness-side) and body ground: — SAS control module terminal 1O — SAS control module terminal 1N **Note** • Inspect for continuity while shaking the wiring harness between the SAS control module and driver-side side air bag sensor No.1. • Is there continuity?	Yes	Replace the wiring harness for a possible short to ground, then go to Step 5.
		No	Go to the next step.

ON-BOARD DIAGNOSTIC

Step	Inspection		Action
3	**INSPECT DRIVER-SIDE SIDE AIR BAG SENSOR NO.1 CIRCUIT FOR OPEN CIRCUIT** • Driver-side side air bag sensor No.1 and SAS control module connectors are disconnected. • Inspect for continuity between the following terminals (wiring harness-side): — Driver-side side air bag sensor No.1 terminal A—SAS control module terminal 1O — Driver-side side air bag sensor No.1terminal B—SAS control module terminal 1N **Note** • Inspect for continuity while shaking the wiring harness between the SAS control module and driver-side side air bag sensor No.1. • Is there continuity?	Yes	Go to the next step.
		No	Replace the wiring harness for a possible open circuit, then go to Step 5.
4	**INSPECT DRIVER-SIDE SIDE AIR BAG SENSOR NO.1 CIRCUIT FOR SHORT TO POWER SUPPLY** • Driver-side side air bag sensor No.1 and SAS control module connectors are disconnected. • Connect the negative battery cable. (See 01-17A-11 NEGATIVE BATTERY CABLE DISCONNECTION/CONNECTION [SKYACTIV-G 2.0].)(See 01-17A-13 NEGATIVE BATTERY CABLE DISCONNECTION/CONNECTION [SKYACTIV-G 2.0 (WITHOUT i-stop)].)(See 01-17B-9 NEGATIVE BATTERY CABLE DISCONNECTION/CONNECTION [SKYACTIV-D 2.2].) • Switch the ignition ON (engine off or on). • Measure the voltage at the following terminals (wiring harness-side): — SAS control module terminal 1O — SAS control module terminal 1N **Note** • Measure the voltage while shaking the wiring harness between the SAS control module and driver-side side air bag sensor No.1. • Is the voltage **0V**?	Yes	Replace the driver-side side air bag sensor No.1, then go to the next step. (See 08-10-22 SIDE AIR BAG SENSOR NO. 1 REMOVAL/INSTALLATION.)
		No	Replace the wiring harness for a possible short to power supply, then go to the next step.

ON-BOARD DIAGNOSTIC

Step	Inspection		Action
5	**PERFORM SAS CONTROL MODULE DTC INSPECTION** • Switch the ignition to off. • Disconnect the negative battery cable and wait for **1min or more**. (See 01-17A-11 NEGATIVE BATTERY CABLE DISCONNECTION/CONNECTION [SKYACTIV-G 2.0].)(See 01-17A-13 NEGATIVE BATTERY CABLE DISCONNECTION/CONNECTION [SKYACTIV-G 2.0 (WITHOUT i-stop)].)(See 01-17B-9 NEGATIVE BATTERY CABLE DISCONNECTION/CONNECTION [SKYACTIV-D 2.2].) • Connect the SAS control module connectors. • Reconnect all disconnected connectors. • Connect the negative battery cable. (See 01-17A-11 NEGATIVE BATTERY CABLE DISCONNECTION/CONNECTION [SKYACTIV-G 2.0].)(See 01-17A-13 NEGATIVE BATTERY CABLE DISCONNECTION/CONNECTION [SKYACTIV-G 2.0 (WITHOUT i-stop)].)(See 01-17B-9 NEGATIVE BATTERY CABLE DISCONNECTION/CONNECTION [SKYACTIV-D 2.2].) • Switch the ignition ON (engine off or on). • Clear the DTC for the SAS control module using the M-MDS. (See 08-02-10 CLEARING DTC.) • Perform the DTC inspection for the SAS control module using the M-MDS. (See 08-02-7 DTC INSPECTION.) • Are the same DTCs present?	Yes	Replace the SAS control module. (See 08-10-20 SAS CONTROL MODULE REMOVAL/INSTALLATION.)
		No	DTC troubleshooting completed.

ON-BOARD DIAGNOSTIC

DTC B10FD:55/B10FE:55

id080200822700

System malfunction location	• **B10FD:55: Configuration setting error (driver-side side air bag sensor No.1 structural malfunction)** • **B10FE:55: Configuration setting error (passenger-side side air bag sensor No.1 structural malfunction)**
Detection condition	**Warning** • **Detection conditions are for understanding the DTC outline before performing an inspection. Performing an inspection according to only the detection conditions may cause injury due to an operating error, or damage the system. When performing an inspection, always follow the inspection procedure.** • SAS control module configuration setting has not been done correctly • Parts which have not been set to SAS control module are assembled
Fail-safe	—
Possible cause	• SAS control module configuration setting not implemented • SAS control module configuration setting invalid • Driver or passenger-side side air bag sensor No.1 assembly incorrect • SAS control module malfunction
System wiring diagram	—

Diagnostic Procedure

Step	Inspection		Action
1	**PERFORM SAS CONTROL MODULE CONFIGURATION (AS-BUILT DATA USE)** • Perform the SAS control module configuration using the M-MDS. (See 08-10-22 SAS CONTROL MODULE CONFIGURATION (USING AS-BUILT DATA).) • Clear the DTC for the SAS control module using the M-MDS. (See 08-02-10 CLEARING DTC.) • Perform the DTC inspection for the SAS control module using the M-MDS. (See 08-02-7 DTC INSPECTION.) • Are the same DTCs present?	Yes	Go to the next step.
		No	DTC troubleshooting completed.
2	**INSPECT SIDE AIR BAG SENSOR NO.1** • Verify that the driver or passenger-side side air bag sensor No.1 is correctly installed. • Is the driver or passenger-side side air bag sensor No.1 correctly installed?	Yes	Go to the next step.
		No	Correctly Install the driver or passenger-side side air bag sensor No.1. Then go to the next step.
3	**PERFORM SAS CONTROL MODULE DTC INSPECTION** • Clear the DTC for the SAS control module using the M-MDS. (See 08-02-10 CLEARING DTC.) • Perform the DTC inspection for the SAS control module using the M-MDS. (See 08-02-7 DTC INSPECTION.) • Are the same DTCs present?	Yes	Replace the SAS control module. (See 08-10-20 SAS CONTROL MODULE REMOVAL/INSTALLATION.)
		No	DTC troubleshooting completed.

ON-BOARD DIAGNOSTIC

DTC B10FE:11/B10FE:13/B10FE:87/B10FE:96

id080200847200

System malfunction location	• **B10FE:11: Passenger-side side air bag sensor No.1 circuit short to body ground or power supply** • **B10FE:13: Passenger-side side air bag sensor No.1 circuit open circuit or resistance high** • **B10FE:87: Signal reception error from passenger-side side air bag sensor No.1** • **B10FE:96: Passenger-side side air bag sensor No.1 internal malfunction**
Detection condition	**Warning** • **Detection conditions are for understanding the DTC outline before performing an inspection. Performing an inspection according to only the detection conditions may cause injury due to an operating error, or damage the system. When performing an inspection, always follow the inspection procedure.** • Wiring harness between the passenger-side side air bag sensor No.1 and SAS control module has a malfunction • Passenger-side side air bag sensor No.1 has a malfunction
Fail-safe	—
Possible cause	• Passenger-side side air bag sensor No.1 connector malfunction • Short circuit to power supply or body ground in the wiring harness between the passenger-side side air bag sensor No.1 and SAS control module • Open circuit in the wiring harness between the passenger-side side air bag sensor No.1 and SAS control module • Passenger-side side air bag sensor No.1 malfunction • SAS control module malfunction

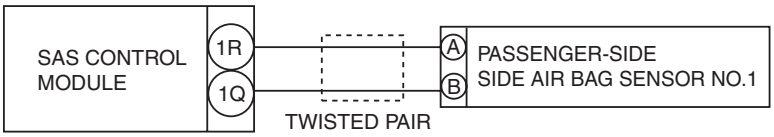

SAS CONTROL MODULE WIRING HARNESS-SIDE CONNECTOR

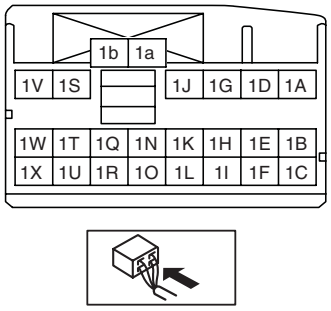

PASSENGER-SIDE SIDE AIR BAG SENSOR NO.1 WIRING HARNESS-SIDE CONNECTOR

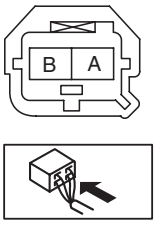

ON-BOARD DIAGNOSTIC

Diagnostic Procedure

Step	Inspection		Action
1	**INSPECT PASSENGER-SIDE SIDE AIR BAG SENSOR NO.1 CONNECTOR** **Warning** • **Handling the component parts improperly can accidentally operate (deploy) the air bag module, which may seriously injure you. Read the service warnings/cautions and the workshop manual before handling the air bag system components. (See 08-10-3 AIR BAG SYSTEM SERVICE WARNINGS.) (See 08-10-5 AIR BAG SYSTEM SERVICE CAUTIONS.)** • Switch the ignition to off. • Disconnect the negative battery cable and wait for **1 min or more**. (See 01-17A-11 NEGATIVE BATTERY CABLE DISCONNECTION/CONNECTION [SKYACTIV-G 2.0].)(See 01-17A-13 NEGATIVE BATTERY CABLE DISCONNECTION/CONNECTION [SKYACTIV-G 2.0 (WITHOUT i-stop)].)(See 01-17B-9 NEGATIVE BATTERY CABLE DISCONNECTION/CONNECTION [SKYACTIV-D 2.2].) • Remove the passenger-side B-pillar lower trim. (See 09-17-57 B-PILLAR LOWER TRIM REMOVAL/INSTALLATION.) • Disconnect the passenger-side side air bag sensor No.1 connector. (See 08-10-22 SIDE AIR BAG SENSOR NO. 1 REMOVAL/INSTALLATION.) • Inspect the passenger-side side air bag sensor No.1 connector. (Corrosion, damage, and disconnected pins) • Is there any malfunction of the passenger-side side air bag sensor No.1 connector?	Yes	Replace the malfunctioning part, then go to Step 5.
		No	Go to the next step.

ON-BOARD DIAGNOSTIC

Step	Inspection		Action
2	**INSPECT PASSENGER-SIDE SIDE AIR BAG SENSOR NO.1 CIRCUIT FOR SHORT TO GROUND** • Remove the column cover. (See 09-17-25 COLUMN COVER REMOVAL/INSTALLATION.) • Disconnect the clock spring connector. (See 08-10-24 CLOCK SPRING REMOVAL/INSTALLATION.) • Remove the glove compartment. (See 09-17-30 GLOVE COMPARTMENT REMOVAL/INSTALLATION.) • Disconnect the passenger-side air bag module connector. (See 08-10-10 PASSENGER-SIDE AIR BAG MODULE REMOVAL/INSTALLATION.) • Disconnect the driver and passenger-side front seat connector. (See 09-13-4 FRONT SEAT REMOVAL/INSTALLATION.) • Remove the headliner. (See 09-17-94 HEADLINER REMOVAL/INSTALLATION.) • Disconnect the driver and passenger-side curtain air bag module connector. (See 08-10-15 CURTAIN AIR BAG MODULE REMOVAL/INSTALLATION.) • Remove the B-pillar lower trim. (See 09-17-57 B-PILLAR LOWER TRIM REMOVAL/INSTALLATION.) • Disconnect the driver and passenger-side pre-tensioner seat belt connector. (See 08-11-2 FRONT SEAT BELT REMOVAL/INSTALLATION.) • Remove the rear console. (See 09-17-45 REAR CONSOLE REMOVAL/INSTALLATION.) • Disconnect the all SAS control module connectors. (See 08-10-20 SAS CONTROL MODULE REMOVAL/INSTALLATION.) • Inspect for continuity between the following terminals (wiring harness-side) and body ground: — SAS control module terminal 1R — SAS control module terminal 1Q **Note** • Inspect for continuity while shaking the wiring harness between the SAS control module and passenger-side side air bag sensor No.1. • Is there continuity?	Yes	Replace the wiring harness for a possible short to ground, then go to Step 5.
		No	Go to the next step.

ON-BOARD DIAGNOSTIC

Step	Inspection		Action
3	**INSPECT PASSENGER-SIDE SIDE AIR BAG SENSOR NO.1 CIRCUIT FOR OPEN CIRCUIT** • Passenger-side side air bag sensor No.1 and SAS control module connectors are disconnected. • Inspect for continuity between the following terminals (wiring harness-side): — Passenger-side side air bag sensor No.1 terminal A—SAS control module terminal 1R — Passenger-side side air bag sensor No.1 terminal B—SAS control module terminal 1Q **Note** • Inspect for continuity while shaking the wiring harness between the SAS control module and passenger-side side air bag sensor No.1. • Is there continuity?	Yes	Go to the next step.
		No	Replace the wiring harness for a possible open circuit, then go to Step 5.
4	**INSPECT PASSENGER-SIDE SIDE AIR BAG SENSOR NO.1 CIRCUIT FOR SHORT TO POWER SUPPLY** • Passenger-side side air bag sensor No.1 and SAS control module connectors are disconnected. • Connect the negative battery cable. (See 01-17A-11 NEGATIVE BATTERY CABLE DISCONNECTION/CONNECTION [SKYACTIV-G 2.0].)(See 01-17A-13 NEGATIVE BATTERY CABLE DISCONNECTION/CONNECTION [SKYACTIV-G 2.0 (WITHOUT i-stop)].)(See 01-17B-9 NEGATIVE BATTERY CABLE DISCONNECTION/CONNECTION [SKYACTIV-D 2.2].) • Switch the ignition ON (engine off or on). • Measure the voltage at the following terminals (wiring harness-side): — SAS control module terminal 1R — SAS control module terminal 1Q **Note** • Measure the voltage while shaking the wiring harness between the SAS control module and passenger-side side air bag sensor No.1. • Is the voltage **0V**?	Yes	Replace the passenger-side side air bag sensor No.1, then go to the next step. (See 08-10-22 SIDE AIR BAG SENSOR NO. 1 REMOVAL/INSTALLATION.)
		No	Replace the wiring harness for a possible short to power supply, then go to the next step.

ON-BOARD DIAGNOSTIC

Step	Inspection		Action
5	**PERFORM SAS CONTROL MODULE DTC INSPECTION** • Switch the ignition to off. • Disconnect the negative battery cable and wait for **1min or more**. (See 01-17A-11 NEGATIVE BATTERY CABLE DISCONNECTION/CONNECTION [SKYACTIV-G 2.0].)(See 01-17A-13 NEGATIVE BATTERY CABLE DISCONNECTION/CONNECTION [SKYACTIV-G 2.0 (WITHOUT i-stop)].)(See 01-17B-9 NEGATIVE BATTERY CABLE DISCONNECTION/CONNECTION [SKYACTIV-D 2.2].) • Connect the SAS control module connectors. • Reconnect all disconnected connectors. • Connect the negative battery cable. (See 01-17A-11 NEGATIVE BATTERY CABLE DISCONNECTION/CONNECTION [SKYACTIV-G 2.0].)(See 01-17A-13 NEGATIVE BATTERY CABLE DISCONNECTION/CONNECTION [SKYACTIV-G 2.0 (WITHOUT i-stop)].)(See 01-17B-9 NEGATIVE BATTERY CABLE DISCONNECTION/CONNECTION [SKYACTIV-D 2.2].) • Switch the ignition ON (engine off or on). • Clear the DTC for the SAS control module using the M-MDS. (See 08-02-10 CLEARING DTC.) • Perform the DTC inspection for the SAS control module using the M-MDS. (See 08-02-7 DTC INSPECTION.) • Are the same DTCs present?	Yes	Replace the SAS control module. (See 08-10-20 SAS CONTROL MODULE REMOVAL/INSTALLATION.)
		No	DTC troubleshooting completed.

ON-BOARD DIAGNOSTIC

DTC B1126:11/B1126:12/B1126:13/B1126:19/B1126:1A

id080200821400

System malfunction location	• **B1126:11: Driver-side side air bag module circuit short to body ground** • **B1126:12: Driver-side side air bag module circuit short to power supply** • **B1126:13: Driver-side side air bag module circuit open circuit or resistance high** • **B1126:19: Short circuit to driver-side side air bag module and other air bag module circuits** • **B1126:1A: Driver-side side air bag module circuit resistance low**
Detection condition	**Warning** • **Detection conditions are for understanding the DTC outline before performing an inspection. Performing an inspection according to only the detection conditions may cause injury due to an operating error, or damage the system. When performing an inspection, always follow the inspection procedure.** • Resistance **other than 0.81–9.85 ohms** is detected in driver-side side air bag module circuit • Wiring harness between the driver-side side air bag module and SAS control module has a malfunction
Fail-safe	—
Possible cause	• Driver-side side air bag module connector malfunction • Short circuit to power supply or body ground in the wiring harness between the driver-side side air bag module and SAS control module • Open circuit in the wiring harness between the driver-side side air bag module and SAS control module • Driver-side side air bag module malfunction • SAS control module malfunction

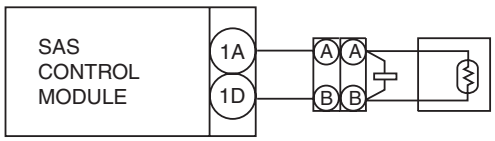

SAS CONTROL MODULE
HARNESS-SIDE CONNECTOR

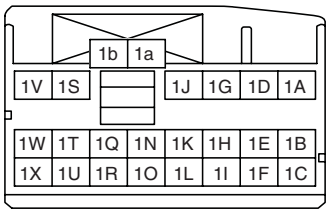

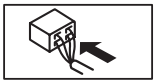

DRIVER-SIDE SIDE AIR BAG MODULE
HARNESS-SIDE CONNECTOR

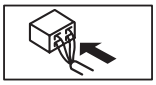

08

ON-BOARD DIAGNOSTIC

Diagnostic Procedure

Step	Inspection		Action
1	**INSPECT DRIVER-SIDE SIDE AIR BAG MODULE CONNECTOR** **Warning** • **Handling the component parts improperly can accidentally operate (deploy) the air bag module, which may seriously injure you. Read the service warnings/cautions and the workshop manual before handling the air bag system components. (See 08-10-3 AIR BAG SYSTEM SERVICE WARNINGS.) (See 08-10-5 AIR BAG SYSTEM SERVICE CAUTIONS.)** • Switch the ignition to off. • Disconnect the negative battery cable and wait for **1 min or more**. (See 01-17A-11 NEGATIVE BATTERY CABLE DISCONNECTION/CONNECTION [SKYACTIV-G 2.0].)(See 01-17A-13 NEGATIVE BATTERY CABLE DISCONNECTION/CONNECTION [SKYACTIV-G 2.0 (WITHOUT i-stop)].)(See 01-17B-9 NEGATIVE BATTERY CABLE DISCONNECTION/CONNECTION [SKYACTIV-D 2.2].) • Disconnect the driver-side side air bag module connector installed to the lower side of the seat cushion of the front seat. (See 09-13-4 FRONT SEAT REMOVAL/INSTALLATION.) • Inspect the driver-side side air bag module connector. (Corrosion, damage, and disconnected pins) • Is there any malfunction of the driver-side side air bag module connector?	Yes	Replace the malfunctioning part, then go to Step 6.
		No	Go to the next step.

ON-BOARD DIAGNOSTIC

Step	Inspection		Action
2	**INSPECT DRIVER-SIDE SIDE AIR BAG MODULE CIRCUIT FOR SHORT TO GROUND** • Remove the column cover. (See 09-17-25 COLUMN COVER REMOVAL/ INSTALLATION.) • Disconnect the clock spring connector. (See 08-10-24 CLOCK SPRING REMOVAL/ INSTALLATION.) • Remove the glove compartment. (See 09-17-30 GLOVE COMPARTMENT REMOVAL/ INSTALLATION.) • Disconnect the passenger-side air bag module connector. (See 08-10-10 PASSENGER-SIDE AIR BAG MODULE REMOVAL/INSTALLATION.) • Disconnect the passenger-side front seat connector. (See 09-13-4 FRONT SEAT REMOVAL/INSTALLATION.) • Remove the headliner. (See 09-17-94 HEADLINER REMOVAL/INSTALLATION.) • Disconnect the driver and passenger-side curtain air bag module connectors. (See 08-10-15 CURTAIN AIR BAG MODULE REMOVAL/INSTALLATION.) • Remove the B-pillar lower trim. (See 09-17-57 B-PILLAR LOWER TRIM REMOVAL/ INSTALLATION.) • Disconnect the driver and passenger-side pre-tensioner seat belt connectors. (See 08-11-2 FRONT SEAT BELT REMOVAL/ INSTALLATION.) • Remove the rear console. (See 09-17-45 REAR CONSOLE REMOVAL/ INSTALLATION.) • Disconnect the all SAS control module connectors. (See 08-10-20 SAS CONTROL MODULE REMOVAL/INSTALLATION.) • Inspect for continuity between the following terminals (wiring harness-side) and body ground: — SAS control module terminal 1A — SAS control module terminal 1D **Note** • Inspect for continuity while shaking the wiring harness between the SAS control module and the driver-side side air bag module. • Is there continuity?	Yes	Replace the wiring harness for a possible short to ground, then go to Step 6.
		No	Go to the next step.
3	**INSPECT DRIVER-SIDE SIDE AIR BAG MODULE CIRCUIT FOR OPEN CIRCUIT** • Driver-side side air bag module and SAS control module connectors are disconnected. • Inspect for continuity between the following terminals (wiring harness-side): — Driver-side side air bag module terminal A—SAS control module terminal 1A — Driver-side side air bag module terminal B—SAS control module terminal 1D **Note** • Inspect for continuity while shaking the wiring harness between the SAS control module and driver-side side air bag module. • Is there continuity?	Yes	Go to the next step.
		No	Replace the wiring harness for a possible open circuit, then go to Step 6.

ON-BOARD DIAGNOSTIC

Step	Inspection		Action
4	**INSPECT DRIVER-SIDE SIDE AIR BAG MODULE CIRCUIT FOR SHORT TO POWER SUPPLY** • Driver-side side air bag module and SAS control module connectors are disconnected. • Connect the negative battery cable. (See 01-17A-11 NEGATIVE BATTERY CABLE DISCONNECTION/CONNECTION [SKYACTIV-G 2.0].)(See 01-17A-13 NEGATIVE BATTERY CABLE DISCONNECTION/CONNECTION [SKYACTIV-G 2.0 (WITHOUT i-stop)].)(See 01-17B-9 NEGATIVE BATTERY CABLE DISCONNECTION/CONNECTION [SKYACTIV-D 2.2].) • Switch the ignition ON (engine off or on). • Measure the voltage at the following terminals (wiring harness-side): — SAS control module terminal 1A — SAS control module terminal 1D **Note** • Measure the voltage while shaking the wiring harness between the SAS control module and driver-side side air bag module. • Is the voltage **0V**?	Yes	Go to the next step.
		No	Replace the wiring harness for a possible short to power supply, then go to Step 6.

ON-BOARD DIAGNOSTIC

Step	Inspection		Action
5	**INSPECT DRIVER-SIDE SIDE AIR BAG MODULE** • Switch the ignition to off. • Disconnect the negative battery cable and wait for **1 min or more**. (See 01-17A-11 NEGATIVE BATTERY CABLE DISCONNECTION/CONNECTION [SKYACTIV-G 2.0].)(See 01-17A-13 NEGATIVE BATTERY CABLE DISCONNECTION/CONNECTION [SKYACTIV-G 2.0 (WITHOUT i-stop)].)(See 01-17B-9 NEGATIVE BATTERY CABLE DISCONNECTION/CONNECTION [SKYACTIV-D 2.2].) • Connect the SAS control module connectors. • Except for the driver-side side air bag module connector, reconnect all disconnected connectors. • Connect the **SST (Fuel and thermometer checker)** or apply **2 ohms** resistance to the driver-side side air bag module connector terminals A and B. • Set the **SST (Fuel and thermometer checker)** to **2 ohms**. • Connect the negative battery cable. (See 01-17A-11 NEGATIVE BATTERY CABLE DISCONNECTION/CONNECTION [SKYACTIV-G 2.0].)(See 01-17A-13 NEGATIVE BATTERY CABLE DISCONNECTION/CONNECTION [SKYACTIV-G 2.0 (WITHOUT i-stop)].)(See 01-17B-9 NEGATIVE BATTERY CABLE DISCONNECTION/CONNECTION [SKYACTIV-D 2.2].) • Switch the ignition ON (engine off or on). • Clear the DTC for the SAS control module using the M-MDS. (See 08-02-10 CLEARING DTC.) • Perform the DTC inspection for the SAS control module using the M-MDS. (See 08-02-7 DTC INSPECTION.) • Are the same DTCs present?	Yes	Go to the next step.
		No	Replace the driver-side side air bag module. (See 08-10-14 SIDE AIR BAG MODULE REMOVAL/INSTALLATION.) Then go to the next step.

ON-BOARD DIAGNOSTIC

Step	Inspection		Action
6	**PERFORM SAS CONTROL MODULE DTC INSPECTION** • Switch the ignition to off. • Disconnect the negative battery cable and wait for **1 min or more**. (See 01-17A-11 NEGATIVE BATTERY CABLE DISCONNECTION/CONNECTION [SKYACTIV-G 2.0].)(See 01-17A-13 NEGATIVE BATTERY CABLE DISCONNECTION/CONNECTION [SKYACTIV-G 2.0 (WITHOUT i-stop)].)(See 01-17B-9 NEGATIVE BATTERY CABLE DISCONNECTION/CONNECTION [SKYACTIV-D 2.2].) • Disconnect the **SST (Fuel and thermometer checker)** or the **2 ohms** resistance. • Connect the driver-side side air bag module connector. • Connect the negative battery cable. (See 01-17A-11 NEGATIVE BATTERY CABLE DISCONNECTION/CONNECTION [SKYACTIV-G 2.0].)(See 01-17A-13 NEGATIVE BATTERY CABLE DISCONNECTION/CONNECTION [SKYACTIV-G 2.0 (WITHOUT i-stop)].)(See 01-17B-9 NEGATIVE BATTERY CABLE DISCONNECTION/CONNECTION [SKYACTIV-D 2.2].) • Switch the ignition ON (engine off or on). • Clear the DTC for the SAS control module using the M-MDS. (See 08-02-10 CLEARING DTC.) • Perform the DTC inspection for the SAS control module using the M-MDS. (See 08-02-7 DTC INSPECTION.) • Are the same DTCs present?	Yes	Replace the SAS control module. (See 08-10-20 SAS CONTROL MODULE REMOVAL/INSTALLATION.)
		No	DTC troubleshooting completed.

ON-BOARD DIAGNOSTIC

DTC B1126:55/B1127:55

id080200822800

System malfunction location	• **B1126:55: Configuration setting error (driver-side side air bag module structural malfunction)** • **B1127:55: Configuration setting error (passenger-side side air bag module structural malfunction)**
Detection condition	**Warning** • **Detection conditions are for understanding the DTC outline before performing an inspection. Performing an inspection according to only the detection conditions may cause injury due to an operating error, or damage the system. When performing an inspection, always follow the inspection procedure.** • SAS control module configuration setting has not been done correctly • Parts which have not been set to SAS control module are assembled
Fail-safe	—
Possible cause	• SAS control module configuration setting not implemented • SAS control module configuration setting invalid • Driver or passenger-side side air bag module assembly incorrect • SAS control module malfunction
System wiring diagram	—

Diagnostic Procedure

Step	Inspection		Action
1	**PERFORM SAS CONTROL MODULE CONFIGURATION (AS-BUILT DATA USE)** • Perform the SAS control module configuration using the M-MDS. (See 08-10-22 SAS CONTROL MODULE CONFIGURATION (USING AS-BUILT DATA).) • Clear the DTC for the SAS control module using the M-MDS. (See 08-02-10 CLEARING DTC.) • Perform the DTC inspection for the SAS control module using the M-MDS. (See 08-02-7 DTC INSPECTION.) • Are the same DTCs present?	Yes	Go to the next step.
		No	DTC troubleshooting completed.
2	**INSPECT SIDE AIR BAG MODULE** • Verify that the driver or passenger-side side air bag module is correctly installed. • Is the driver or passenger-side side air bag module correctly installed?	Yes	Go to the next step.
		No	Correctly Install the driver or passenger-side side air bag module. Then go to the next step.
3	**PERFORM SAS CONTROL MODULE DTC INSPECTION** • Clear the DTC for the SAS control module using the M-MDS. (See 08-02-10 CLEARING DTC.) • Perform the DTC inspection for the SAS control module using the M-MDS. (See 08-02-7 DTC INSPECTION.) • Are the same DTCs present?	Yes	Replace the SAS control module. (See 08-10-20 SAS CONTROL MODULE REMOVAL/INSTALLATION.)
		No	DTC troubleshooting completed.

ON-BOARD DIAGNOSTIC

DTC B1127:11/B1127:12/B1127:13/B1127:19/B1127:1A

id080200821500

System malfunction location	• **B1127:11: Passenger-side side air bag module circuit short to body ground** • **B1127:12: Passenger-side side air bag module circuit short to power supply** • **B1127:13: Passenger-side side air bag module circuit open circuit or resistance high** • **B1127:19: Short circuit to passenger-side side air bag module and other air bag module circuits** • **B1127:1A: Passenger-side side air bag module circuit resistance low**
Detection condition	**Warning** • **Detection conditions are for understanding the DTC outline before performing an inspection. Performing an inspection according to only the detection conditions may cause injury due to an operating error, or damage the system. When performing an inspection, always follow the inspection procedure.** • Resistance **other than 0.81–9.85 ohms** detected in passenger-side side air bag module circuit • Wiring harness between the passenger-side side air bag module and SAS control module has a malfunction
Fail-safe	—
Possible cause	• Passenger-side side air bag module connector malfunction • Short circuit to power supply or body ground in the wiring harness between the passenger-side side air bag module and SAS control module • Open circuit in the wiring harness between the passenger-side side air bag module and SAS control module • Passenger-side side air bag module malfunction • SAS control module malfunction

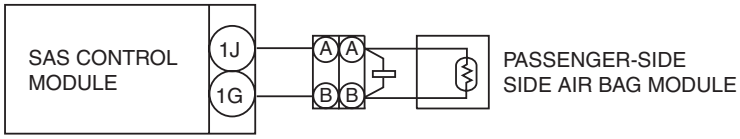

SAS CONTROL MODULE HARNESS-SIDE CONNECTOR

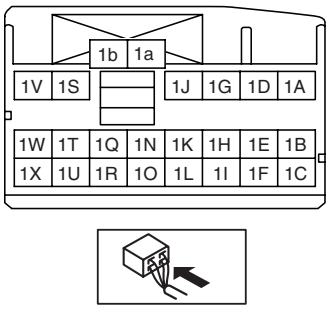

PASSENGER-SIDE SIDE AIR BAG MODULE HARNESS-SIDE CONNECTOR

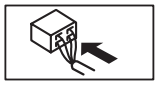

ON-BOARD DIAGNOSTIC

Diagnostic Procedure

Step	Inspection		Action
1	**INSPECT PASSENGER-SIDE SIDE AIR BAG MODULE CONNECTOR** **Warning** • **Handling the component parts improperly can accidentally operate (deploy) the air bag module, which may seriously injure you. Read the service warnings/cautions and the workshop manual before handling the air bag system components. (See 08-10-3 AIR BAG SYSTEM SERVICE WARNINGS.) (See 08-10-5 AIR BAG SYSTEM SERVICE CAUTIONS.)** • Switch the ignition to off. • Disconnect the negative battery cable and wait for **1 min or more**. (See 01-17A-11 NEGATIVE BATTERY CABLE DISCONNECTION/CONNECTION [SKYACTIV-G 2.0].)(See 01-17A-13 NEGATIVE BATTERY CABLE DISCONNECTION/CONNECTION [SKYACTIV-G 2.0 (WITHOUT i-stop)].)(See 01-17B-9 NEGATIVE BATTERY CABLE DISCONNECTION/CONNECTION [SKYACTIV-D 2.2].) • Disconnect the passenger-side side air bag module connector installed to the lower side of the seat cushion of the front seat. (See 09-13-4 FRONT SEAT REMOVAL/INSTALLATION.) • Inspect the passenger-side side air bag module connector. (Corrosion, damage, and disconnected pins) • Is there any malfunction of the passenger-side side air bag module connector?	Yes	Replace the malfunctioning part, then go to Step 6.
		No	Go to the next step.

ON-BOARD DIAGNOSTIC

Step	Inspection		Action
2	**INSPECT PASSENGER-SIDE SIDE AIR BAG MODULE CIRCUIT FOR SHORT TO GROUND** • Remove the column cover. (See 09-17-25 COLUMN COVER REMOVAL/ INSTALLATION.) • Disconnect the clock spring connector. (See 08-10-24 CLOCK SPRING REMOVAL/ INSTALLATION.) • Remove the glove compartment. (See 09-17-30 GLOVE COMPARTMENT REMOVAL/ INSTALLATION.) • Disconnect the passenger-side air bag module connector. (See 08-10-10 PASSENGER-SIDE AIR BAG MODULE REMOVAL/INSTALLATION.) • Disconnect the driver-side front seat connector. (See 09-13-4 FRONT SEAT REMOVAL/INSTALLATION.) • Remove the headliner. (See 09-17-94 HEADLINER REMOVAL/INSTALLATION.) • Disconnect the driver and passenger-side curtain air bag module connectors. (See 08-10-15 CURTAIN AIR BAG MODULE REMOVAL/INSTALLATION.) • Remove the B-pillar lower trim. (See 09-17-57 B-PILLAR LOWER TRIM REMOVAL/ INSTALLATION.) • Disconnect the driver and passenger-side pre-tensioner seat belt connectors. (See 08-11-2 FRONT SEAT BELT REMOVAL/ INSTALLATION.) • Remove the rear console. (See 09-17-45 REAR CONSOLE REMOVAL/ INSTALLATION.) • Disconnect the all SAS control module connectors. (See 08-10-20 SAS CONTROL MODULE REMOVAL/INSTALLATION.) • Inspect for continuity between the following terminals (wiring harness-side) and body ground: — SAS control module terminal 1G — SAS control module terminal 1J **Note** • Inspect for continuity while shaking the wiring harness between the SAS control module and the passenger-side side air bag module. • Is there continuity?	Yes	Replace the wiring harness for a possible short to ground, then go to Step 6.
		No	Go to the next step.

ON-BOARD DIAGNOSTIC

Step	Inspection		Action
3	**INSPECT PASSENGER-SIDE SIDE AIR BAG MODULE CIRCUIT FOR OPEN CIRCUIT** • Passenger-side side air bag module and SAS control module connectors are disconnected. • Inspect for continuity between the following terminals (wiring harness-side): — Passenger-side side air bag module terminal A—SAS control module terminal 1J — Passenger-side side air bag module terminal B—SAS control module terminal 1G **Note** • Inspect for continuity while shaking the wiring harness between the SAS control module and passenger-side side air bag module. • Is there continuity?	Yes	Go to the next step.
		No	Replace the wiring harness for a possible open circuit, then go to Step 6.
4	**INSPECT PASSENGER-SIDE SIDE AIR BAG MODULE CIRCUIT FOR SHORT TO POWER SUPPLY** • Passenger-side side air bag module and SAS control module connectors are disconnected. • Connect the negative battery cable. (See 01-17A-11 NEGATIVE BATTERY CABLE DISCONNECTION/CONNECTION [SKYACTIV-G 2.0].)(See 01-17A-13 NEGATIVE BATTERY CABLE DISCONNECTION/CONNECTION [SKYACTIV-G 2.0 (WITHOUT i-stop)].)(See 01-17B-9 NEGATIVE BATTERY CABLE DISCONNECTION/CONNECTION [SKYACTIV-D 2.2].) • Switch the ignition ON (engine off or on). • Measure the voltage at the following terminals (wiring harness-side): — SAS control module terminal 1G — SAS control module terminal 1J **Note** • Measure the voltage while shaking the wiring harness between the SAS control module and passenger-side side air bag module. • Is the voltage **0V**?	Yes	Go to the next step.
		No	Replace the wiring harness for a possible short to power supply, then go to Step 6.

ON-BOARD DIAGNOSTIC

Step	Inspection		Action
5	**INSPECT PASSENGER-SIDE SIDE AIR BAG MODULE** • Switch the ignition to off. • Disconnect the negative battery cable and wait for **1 min or more**. (See 01-17A-11 NEGATIVE BATTERY CABLE DISCONNECTION/CONNECTION [SKYACTIV-G 2.0].)(See 01-17A-13 NEGATIVE BATTERY CABLE DISCONNECTION/CONNECTION [SKYACTIV-G 2.0 (WITHOUT i-stop)].)(See 01-17B-9 NEGATIVE BATTERY CABLE DISCONNECTION/CONNECTION [SKYACTIV-D 2.2].) • Connect the SAS control module connectors. • Except for the passenger-side side air bag module connector, reconnect all disconnected connectors. • Connect the **SST (Fuel and thermometer checker)** or apply **2 ohms** resistance to the passenger-side side air bag module connector terminals A and B. • Set the **SST (Fuel and thermometer checker)** to **2 ohms**. • Connect the negative battery cable. (See 01-17A-11 NEGATIVE BATTERY CABLE DISCONNECTION/CONNECTION [SKYACTIV-G 2.0].)(See 01-17A-13 NEGATIVE BATTERY CABLE DISCONNECTION/CONNECTION [SKYACTIV-G 2.0 (WITHOUT i-stop)].)(See 01-17B-9 NEGATIVE BATTERY CABLE DISCONNECTION/CONNECTION [SKYACTIV-D 2.2].) • Switch the ignition ON (engine off or on). • Clear the DTC for the SAS control module using the M-MDS. (See 08-02-10 CLEARING DTC.) • Perform the DTC inspection for the SAS control module using the M-MDS. (See 08-02-7 DTC INSPECTION.) • Are the same DTCs present?	Yes	Go to the next step.
		No	Replace the passenger-side side air bag module. (See 08-10-14 SIDE AIR BAG MODULE REMOVAL/INSTALLATION.) Then go to the next step.

ON-BOARD DIAGNOSTIC

Step	Inspection		Action
6	**PERFORM SAS CONTROL MODULE DTC INSPECTION** • Switch the ignition to off. • Disconnect the negative battery cable and wait for **1 min or more**. (See 01-17A-11 NEGATIVE BATTERY CABLE DISCONNECTION/CONNECTION [SKYACTIV-G 2.0].)(See 01-17A-13 NEGATIVE BATTERY CABLE DISCONNECTION/CONNECTION [SKYACTIV-G 2.0 (WITHOUT i-stop)].)(See 01-17B-9 NEGATIVE BATTERY CABLE DISCONNECTION/CONNECTION [SKYACTIV-D 2.2].) • Disconnect the **SST (Fuel and thermometer checker)** or the **2 ohms** resistance. • Connect the passenger-side side air bag module connector. • Connect the negative battery cable. (See 01-17A-11 NEGATIVE BATTERY CABLE DISCONNECTION/CONNECTION [SKYACTIV-G 2.0].)(See 01-17A-13 NEGATIVE BATTERY CABLE DISCONNECTION/CONNECTION [SKYACTIV-G 2.0 (WITHOUT i-stop)].)(See 01-17B-9 NEGATIVE BATTERY CABLE DISCONNECTION/CONNECTION [SKYACTIV-D 2.2].) • Switch the ignition ON (engine off or on). • Clear the DTC for the SAS control module using the M-MDS. (See 08-02-10 CLEARING DTC.) • Perform the DTC inspection for the SAS control module using the M-MDS. (See 08-02-7 DTC INSPECTION.) • Are the same DTCs present?	Yes	Replace the SAS control module. (See 08-10-20 SAS CONTROL MODULE REMOVAL/INSTALLATION.)
		No	DTC troubleshooting completed.

ON-BOARD DIAGNOSTIC

DTC B1128:11/B1128:12/B1128:13/B1128:19/B1128:1A

id080200821600

System malfunction location	• **B1128:11: Driver-side curtain air bag module circuit short to body ground** • **B1128:12: Driver-side curtain air bag module circuit short to power supply** • **B1128:13: Driver-side curtain air bag module circuit open circuit or resistance high** • **B1128:19: Short circuit to driver-side curtain air bag module and other air bag module circuits** • **B1128:1A: Driver-side curtain air bag module circuit resistance low**
Detection condition	**Warning** • **Detection conditions are for understanding the DTC outline before performing an inspection. Performing an inspection according to only the detection conditions may cause injury due to an operating error, or damage the system. When performing an inspection, always follow the inspection procedure.** • Resistance **other than 0.81–6.42 ohms** detected in driver-side curtain air bag module circuit • Wiring harness between the driver-side curtain air bag module and SAS control module has a malfunction
Fail-safe	—
Possible cause	• Driver-side curtain air bag module connector malfunction • Short circuit to power supply or body ground in the wiring harness between the driver-side curtain air bag module and SAS control module • Open circuit in the wiring harness between the driver-side curtain air bag module and SAS control module • Driver-side curtain air bag module malfunction • SAS control module malfunction

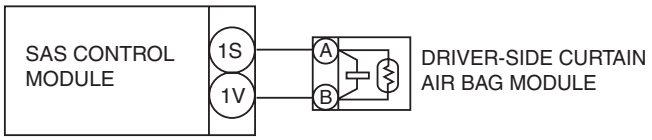

SAS CONTROL MODULE HARNESS-SIDE CONNECTOR

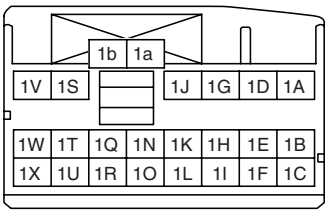

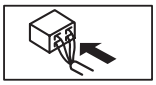

DRIVER-SIDE CURTAIN AIR BAG MODULE HARNESS-SIDE CONNECTOR

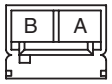

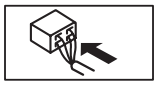

ON-BOARD DIAGNOSTIC

Diagnostic Procedure

Step	Inspection		Action
1	**INSPECT DRIVER-SIDE CURTAIN AIR BAG MODULE CONNECTOR** **Warning** • **Handling the component parts improperly can accidentally operate (deploy) the air bag module, which may seriously injure you. Read the service warnings/cautions and the workshop manual before handling the air bag system components. (See 08-10-3 AIR BAG SYSTEM SERVICE WARNINGS.) (See 08-10-5 AIR BAG SYSTEM SERVICE CAUTIONS.)** • Switch the ignition to off. • Disconnect the negative battery cable and wait for **1 min or more**. (See 01-17A-11 NEGATIVE BATTERY CABLE DISCONNECTION/CONNECTION [SKYACTIV-G 2.0].)(See 01-17A-13 NEGATIVE BATTERY CABLE DISCONNECTION/CONNECTION [SKYACTIV-G 2.0 (WITHOUT i-stop)].)(See 01-17B-9 NEGATIVE BATTERY CABLE DISCONNECTION/CONNECTION [SKYACTIV-D 2.2].) • Remove the headliner. (See 09-17-94 HEADLINER REMOVAL/INSTALLATION.) • Disconnect the driver-side curtain air bag module connector. (See 08-10-15 CURTAIN AIR BAG MODULE REMOVAL/INSTALLATION.) • Inspect the driver-side curtain air bag module connector. (Corrosion, damage, and disconnected pins) • Is there any malfunction of the driver-side curtain air bag module connector?	Yes	Replace the malfunctioning part, then go to Step 6.
		No	Go to the next step.

ON-BOARD DIAGNOSTIC

Step	Inspection		Action
2	**INSPECT DRIVER-SIDE CURTAIN AIR BAG MODULE CIRCUIT FOR SHORT TO GROUND** • Remove the column cover. (See 09-17-25 COLUMN COVER REMOVAL/ INSTALLATION.) • Disconnect the clock spring connector. (See 08-10-24 CLOCK SPRING REMOVAL/ INSTALLATION.) • Remove the glove compartment. (See 09-17-30 GLOVE COMPARTMENT REMOVAL/ INSTALLATION.) • Disconnect the passenger-side air bag module connector. (See 08-10-10 PASSENGER-SIDE AIR BAG MODULE REMOVAL/INSTALLATION.) • Disconnect the driver and passenger-side front seat connector. (See 09-13-4 FRONT SEAT REMOVAL/INSTALLATION.) • Disconnect the passenger-side curtain air bag module connector. (See 08-10-15 CURTAIN AIR BAG MODULE REMOVAL/ INSTALLATION.) • Remove the B-pillar lower trim. (See 09-17-57 B-PILLAR LOWER TRIM REMOVAL/ INSTALLATION.) • Disconnect the driver and passenger-side pre-tensioner seat belt connectors. (See 08-11-2 FRONT SEAT BELT REMOVAL/ INSTALLATION.) • Remove the rear console. (See 09-17-45 REAR CONSOLE REMOVAL/ INSTALLATION.) • Disconnect the all SAS control module connectors. (See 08-10-20 SAS CONTROL MODULE REMOVAL/INSTALLATION.) • Inspect for continuity between the following terminals (wiring harness-side) and body ground: — SAS control module terminal 1S — SAS control module terminal 1V **Note** • Inspect for continuity while shaking the wiring harness between the SAS control module and the driver-side curtain air bag module. • Is there continuity?	Yes	Replace the wiring harness for a possible short to ground, then go to Step 6.
		No	Go to the next step.
3	**INSPECT DRIVER-SIDE CURTAIN AIR BAG MODULE CIRCUIT FOR OPEN CIRCUIT** • Driver-side curtain air bag module and SAS control module connectors are disconnected. • Inspect for continuity between the following terminals (wiring harness-side): — Driver-side curtain air bag module terminal A—SAS control module terminal 1S — Driver-side curtain air bag module terminal B—SAS control module terminal 1V **Note** • Inspect for continuity while shaking the wiring harness between the SAS control module and driver-side curtain air bag module. • Is there continuity?	Yes	Go to the next step.
		No	Replace the wiring harness for a possible open circuit, then go to Step 6.

ON-BOARD DIAGNOSTIC

Step	Inspection		Action
4	**INSPECT DRIVER-SIDE CURTAIN AIR BAG MODULE CIRCUIT FOR SHORT TO POWER SUPPLY** • Driver-side curtain air bag module and SAS control module connectors are disconnected. • Connect the negative battery cable. (See 01-17A-11 NEGATIVE BATTERY CABLE DISCONNECTION/CONNECTION [SKYACTIV-G 2.0].)(See 01-17A-13 NEGATIVE BATTERY CABLE DISCONNECTION/CONNECTION [SKYACTIV-G 2.0 (WITHOUT i-stop)].)(See 01-17B-9 NEGATIVE BATTERY CABLE DISCONNECTION/CONNECTION [SKYACTIV-D 2.2].) • Switch the ignition ON (engine off or on). • Measure the voltage at the following terminals (wiring harness-side): — SAS control module terminal 1S — SAS control module terminal 1V **Note** • Measure the voltage while shaking the wiring harness between the SAS control module and driver-side curtain air bag module. • Is the voltage **0V**?	Yes	Go to the next step.
		No	Replace the wiring harness for a possible short to power supply, then go to Step 6.

ON-BOARD DIAGNOSTIC

Step	Inspection		Action
5	**INSPECT DRIVER-SIDE CURTAIN AIR BAG MODULE** • Switch the ignition to off. • Disconnect the negative battery cable and wait for **1 min or more**. (See 01-17A-11 NEGATIVE BATTERY CABLE DISCONNECTION/CONNECTION [SKYACTIV-G 2.0].)(See 01-17A-13 NEGATIVE BATTERY CABLE DISCONNECTION/CONNECTION [SKYACTIV-G 2.0 (WITHOUT i-stop)].)(See 01-17B-9 NEGATIVE BATTERY CABLE DISCONNECTION/CONNECTION [SKYACTIV-D 2.2].) • Connect the SAS control module connectors. • Except for the driver-side curtain air bag module connector, reconnect all disconnected connectors. • Connect the **SST (Fuel and thermometer checker)** or apply **2 ohms** resistance to the driver-side curtain air bag module connector terminals A and B. • Set the **SST (Fuel and thermometer checker)** to **2 ohms**. • Connect the negative battery cable. (See 01-17A-11 NEGATIVE BATTERY CABLE DISCONNECTION/CONNECTION [SKYACTIV-G 2.0].)(See 01-17A-13 NEGATIVE BATTERY CABLE DISCONNECTION/CONNECTION [SKYACTIV-G 2.0 (WITHOUT i-stop)].)(See 01-17B-9 NEGATIVE BATTERY CABLE DISCONNECTION/CONNECTION [SKYACTIV-D 2.2].) • Switch the ignition ON (engine off or on). • Clear the DTC for the SAS control module using the M-MDS. (See 08-02-10 CLEARING DTC.) • Perform the DTC inspection for the SAS control module using the M-MDS. (See 08-02-7 DTC INSPECTION.) • Are the same DTCs present?	Yes	Go to the next step.
		No	Replace the driver-side curtain air bag module. (See 08-10-15 CURTAIN AIR BAG MODULE REMOVAL/INSTALLATION.) Then go to the next step.

ON-BOARD DIAGNOSTIC

Step	Inspection		Action
6	**PERFORM SAS CONTROL MODULE DTC INSPECTION** • Switch the ignition to off. • Disconnect the negative battery cable and wait for **1 min or more**. (See 01-17A-11 NEGATIVE BATTERY CABLE DISCONNECTION/CONNECTION [SKYACTIV-G 2.0].)(See 01-17A-13 NEGATIVE BATTERY CABLE DISCONNECTION/CONNECTION [SKYACTIV-G 2.0 (WITHOUT i-stop)].)(See 01-17B-9 NEGATIVE BATTERY CABLE DISCONNECTION/CONNECTION [SKYACTIV-D 2.2].) • Disconnect the **SST (Fuel and thermometer checker)** or the **2 ohms** resistance. • Connect the driver-side curtain air bag module connector. • Connect the negative battery cable. (See 01-17A-11 NEGATIVE BATTERY CABLE DISCONNECTION/CONNECTION [SKYACTIV-G 2.0].)(See 01-17A-13 NEGATIVE BATTERY CABLE DISCONNECTION/CONNECTION [SKYACTIV-G 2.0 (WITHOUT i-stop)].)(See 01-17B-9 NEGATIVE BATTERY CABLE DISCONNECTION/CONNECTION [SKYACTIV-D 2.2].) • Switch the ignition ON (engine off or on). • Clear the DTC for the SAS control module using the M-MDS. (See 08-02-10 CLEARING DTC.) • Perform the DTC inspection for the SAS control module using the M-MDS. (See 08-02-7 DTC INSPECTION.) • Are the same DTCs present?	Yes	Replace the SAS control module. (See 08-10-20 SAS CONTROL MODULE REMOVAL/INSTALLATION.)
		No	DTC troubleshooting completed.

ON-BOARD DIAGNOSTIC

DTC B1128:55/B1129:55

id080200822900

System malfunction location	• **B1128:55: Configuration setting error (driver-side curtain air bag module structural malfunction)** • **B1129:55: Configuration setting error (passenger-side curtain air bag module structural malfunction)**
Detection condition	**Warning** • **Detection conditions are for understanding the DTC outline before performing an inspection. Performing an inspection according to only the detection conditions may cause injury due to an operating error, or damage the system. When performing an inspection, always follow the inspection procedure.** • SAS control module configuration setting has not been done correctly • Parts which have not been set to SAS control module are assembled
Fail-safe	—
Possible cause	• SAS control module configuration setting not implemented • SAS control module configuration setting invalid • Driver or passenger-side curtain air bag module assembly incorrect • SAS control module malfunction
System wiring diagram	—

Diagnostic Procedure

Step	Inspection		Action
1	**PERFORM SAS CONTROL MODULE CONFIGURATION (AS-BUILT DATA USE)** • Perform the SAS control module configuration using the M-MDS. (See 08-10-22 SAS CONTROL MODULE CONFIGURATION (USING AS-BUILT DATA).) • Clear the DTC for the SAS control module using the M-MDS. (See 08-02-10 CLEARING DTC.) • Perform the DTC inspection for the SAS control module using the M-MDS. (See 08-02-7 DTC INSPECTION.) • Are the same DTCs present?	Yes	Go to the next step.
		No	DTC troubleshooting completed.
2	**INSPECT CURTAIN AIR BAG MODULE** • Verify that the driver or passenger-side curtain air bag module is correctly installed. • Is the driver or passenger-side curtain air bag module correctly installed?	Yes	Go to the next step.
		No	Correctly install the driver or passenger-side curtain air bag module. Then go to the next step.
3	**PERFORM SAS CONTROL MODULE DTC INSPECTION** • Clear the DTC for the SAS control module using the M-MDS. (See 08-02-10 CLEARING DTC.) • Perform the DTC inspection for the SAS control module using the M-MDS. (See 08-02-7 DTC INSPECTION.) • Are the same DTCs present?	Yes	Replace the SAS control module. (See 08-10-20 SAS CONTROL MODULE REMOVAL/INSTALLATION.)
		No	DTC troubleshooting completed.

ON-BOARD DIAGNOSTIC

DTC B1129:11/B1129:12/B1129:13/B1129:19/B1129:1A

id080200821700

System malfunction location	• **B1129:11: Passenger-side curtain air bag module circuit short to body ground** • **B1129:12: Passenger-side curtain air bag module circuit short to power supply** • **B1129:13: Passenger-side curtain air bag module circuit open circuit or resistance high** • **B1129:19: Short circuit to passenger-side curtain air bag module and other air bag module circuits** • **B1129:1A: Passenger-side curtain air bag module circuit resistance low**
Detection condition	**Warning** • **Detection conditions are for understanding the DTC outline before performing an inspection. Performing an inspection according to only the detection conditions may cause injury due to an operating error, or damage the system. When performing an inspection, always follow the inspection procedure.** • Resistance **other than 0.81–6.42 ohms** detected in passenger-side curtain air bag module circuit • Wiring harness between the passenger-side curtain air bag module and SAS control module has a malfunction
Fail-safe	—
Possible cause	• Passenger-side curtain air bag module connector malfunction • Short circuit to power supply or body ground in the wiring harness between the passenger-side curtain air bag module and SAS control module • Open circuit in the wiring harness between the passenger-side curtain air bag module and SAS control module • Passenger-side curtain air bag module malfunction • SAS control module malfunction

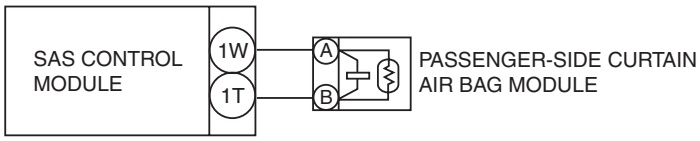

SAS CONTROL MODULE HARNESS-SIDE CONNECTOR

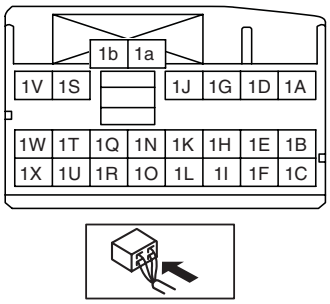

PASSENGER-SIDE CURTAIN AIR BAG MODULE HARNESS-SIDE CONNECTOR

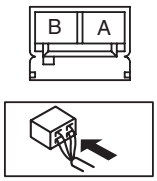

08

ON-BOARD DIAGNOSTIC

Diagnostic Procedure

Step	Inspection		Action
1	**INSPECT PASSENGER-SIDE CURTAIN AIR BAG MODULE CONNECTOR** **Warning** • **Handling the component parts improperly can accidentally operate (deploy) the air bag module, which may seriously injure you. Read the service warnings/cautions and the workshop manual before handling the air bag system components. (See 08-10-3 AIR BAG SYSTEM SERVICE WARNINGS.) (See 08-10-5 AIR BAG SYSTEM SERVICE CAUTIONS.)** • Switch the ignition to off. • Disconnect the negative battery cable and wait for **1 min or more**. (See 01-17A-11 NEGATIVE BATTERY CABLE DISCONNECTION/CONNECTION [SKYACTIV-G 2.0].)(See 01-17A-13 NEGATIVE BATTERY CABLE DISCONNECTION/CONNECTION [SKYACTIV-G 2.0 (WITHOUT i-stop)].)(See 01-17B-9 NEGATIVE BATTERY CABLE DISCONNECTION/CONNECTION [SKYACTIV-D 2.2].) • Remove the headliner. (See 09-17-94 HEADLINER REMOVAL/INSTALLATION.) • Disconnect the passenger-side curtain air bag module connector. (See 08-10-15 CURTAIN AIR BAG MODULE REMOVAL/INSTALLATION.) • Inspect the passenger-side curtain air bag module connector. (Corrosion, damage, and disconnected pins) • Is there any malfunction of the passenger-side curtain air bag module connector?	Yes	Replace the malfunctioning part, then go to Step 6.
		No	Go to the next step.

ON-BOARD DIAGNOSTIC

Step	Inspection		Action
2	**INSPECT PASSENGER-SIDE CURTAIN AIR BAG MODULE CIRCUIT FOR SHORT TO GROUND** • Remove the column cover. (See 09-17-25 COLUMN COVER REMOVAL/ INSTALLATION.) • Disconnect the clock spring connector. (See 08-10-24 CLOCK SPRING REMOVAL/ INSTALLATION.) • Remove the glove compartment. (See 09-17-30 GLOVE COMPARTMENT REMOVAL/ INSTALLATION.) • Disconnect the passenger-side air bag module connector. (See 08-10-10 PASSENGER-SIDE AIR BAG MODULE REMOVAL/INSTALLATION.) • Disconnect the driver and passenger-side front seat connector. (See 09-13-4 FRONT SEAT REMOVAL/INSTALLATION.) • Disconnect the driver-side curtain air bag module connector. (See 08-10-15 CURTAIN AIR BAG MODULE REMOVAL/ INSTALLATION.) • Remove the B-pillar lower trim. (See 09-17-57 B-PILLAR LOWER TRIM REMOVAL/ INSTALLATION.) • Disconnect the driver and passenger-side pre-tensioner seat belt connectors. (See 08-11-2 FRONT SEAT BELT REMOVAL/ INSTALLATION.) • Remove the rear console. (See 09-17-45 REAR CONSOLE REMOVAL/ INSTALLATION.) • Disconnect the all SAS control module connectors. (See 08-10-20 SAS CONTROL MODULE REMOVAL/INSTALLATION.) • Inspect for continuity between the following terminals (wiring harness-side) and body ground: — SAS control module terminal 1W — SAS control module terminal 1T **Note** • Inspect for continuity while shaking the wiring harness between the SAS control module and the passenger-side curtain air bag module. • Is there continuity?	Yes	Replace the wiring harness for a possible short to ground, then go to Step 6.
		No	Go to the next step.

ON-BOARD DIAGNOSTIC

Step	Inspection		Action
3	**INSPECT PASSENGER-SIDE CURTAIN AIR BAG MODULE CIRCUIT FOR OPEN CIRCUIT** • Passenger-side curtain air bag module and SAS control module connectors are disconnected. • Inspect for continuity between the following terminals (wiring harness-side): — Passenger-side curtain air bag module terminal A—SAS control module terminal 1W — Passenger-side curtain air bag module terminal B—SAS control module terminal 1T **Note** • Inspect for continuity while shaking the wiring harness between the SAS control module and passenger-side curtain air bag module. • Is there continuity?	Yes	Go to the next step.
		No	Replace the wiring harness for a possible open circuit, then go to Step 6.
4	**INSPECT PASSENGER-SIDE CURTAIN AIR BAG MODULE CIRCUIT FOR SHORT TO POWER SUPPLY** • Passenger-side curtain air bag module and SAS control module connectors are disconnected. • Connect the negative battery cable. (See 01-17A-11 NEGATIVE BATTERY CABLE DISCONNECTION/CONNECTION [SKYACTIV-G 2.0].)(See 01-17A-13 NEGATIVE BATTERY CABLE DISCONNECTION/CONNECTION [SKYACTIV-G 2.0 (WITHOUT i-stop)].)(See 01-17B-9 NEGATIVE BATTERY CABLE DISCONNECTION/CONNECTION [SKYACTIV-D 2.2].) • Switch the ignition ON (engine off or on). • Measure the voltage at the following terminals (wiring harness-side): — SAS control module terminal 1W — SAS control module terminal 1T **Note** • Measure the voltage while shaking the wiring harness between the SAS control module and passenger-side curtain air bag module. • Is the voltage **0V**?	Yes	Go to the next step.
		No	Replace the wiring harness for a possible short to power supply, then go to the next step.

ON-BOARD DIAGNOSTIC

Step	Inspection		Action
5	**INSPECT PASSENGER-SIDE CURTAIN AIR BAG MODULE** • Switch the ignition to off. • Disconnect the negative battery cable and wait for **1 min or more**. (See 01-17A-11 NEGATIVE BATTERY CABLE DISCONNECTION/CONNECTION [SKYACTIV-G 2.0].)(See 01-17A-13 NEGATIVE BATTERY CABLE DISCONNECTION/CONNECTION [SKYACTIV-G 2.0 (WITHOUT i-stop)].)(See 01-17B-9 NEGATIVE BATTERY CABLE DISCONNECTION/CONNECTION [SKYACTIV-D 2.2].) • Connect the SAS control module connectors. • Except for the passenger-side curtain air bag module connector, reconnect all disconnected connectors. • Connect the **SST (Fuel and thermometer checker)** or apply **2 ohms** resistance to the passenger-side curtain air bag module connector terminals A and B. • Set the **SST (Fuel and thermometer checker)** to **2 ohms**. • Connect the negative battery cable. (See 01-17A-11 NEGATIVE BATTERY CABLE DISCONNECTION/CONNECTION [SKYACTIV-G 2.0].)(See 01-17A-13 NEGATIVE BATTERY CABLE DISCONNECTION/CONNECTION [SKYACTIV-G 2.0 (WITHOUT i-stop)].)(See 01-17B-9 NEGATIVE BATTERY CABLE DISCONNECTION/CONNECTION [SKYACTIV-D 2.2].) • Switch the ignition ON (engine off or on). • Clear the DTC for the SAS control module using the M-MDS. (See 08-02-10 CLEARING DTC.) • Perform the DTC inspection for the SAS control module using the M-MDS. (See 08-02-7 DTC INSPECTION.) • Are the same DTCs present?	Yes	Go to the next step.
		No	Replace the passenger-side curtain air bag module. (See 08-10-15 CURTAIN AIR BAG MODULE REMOVAL/INSTALLATION.) Then go to the next step.

ON-BOARD DIAGNOSTIC

Step	Inspection		Action
6	**PERFORM SAS CONTROL MODULE DTC INSPECTION** • Switch the ignition to off. • Disconnect the negative battery cable and wait for **1 min or more**. (See 01-17A-11 NEGATIVE BATTERY CABLE DISCONNECTION/CONNECTION [SKYACTIV-G 2.0].)(See 01-17A-13 NEGATIVE BATTERY CABLE DISCONNECTION/CONNECTION [SKYACTIV-G 2.0 (WITHOUT i-stop)].)(See 01-17B-9 NEGATIVE BATTERY CABLE DISCONNECTION/CONNECTION [SKYACTIV-D 2.2].) • Disconnect the **SST (Fuel and thermometer checker)** or the **2 ohms** resistance. • Connect the passenger-side curtain air bag module connector. • Connect the negative battery cable. (See 01-17A-11 NEGATIVE BATTERY CABLE DISCONNECTION/CONNECTION [SKYACTIV-G 2.0].)(See 01-17A-13 NEGATIVE BATTERY CABLE DISCONNECTION/CONNECTION [SKYACTIV-G 2.0 (WITHOUT i-stop)].)(See 01-17B-9 NEGATIVE BATTERY CABLE DISCONNECTION/CONNECTION [SKYACTIV-D 2.2].) • Switch the ignition ON (engine off or on). • Clear the DTC for the SAS control module using the M-MDS. (See 08-02-10 CLEARING DTC.) • Perform the DTC inspection for the SAS control module using the M-MDS. (See 08-02-7 DTC INSPECTION.) • Are the same DTCs present?	Yes	Replace the SAS control module. (See 08-10-20 SAS CONTROL MODULE REMOVAL/INSTALLATION.)
		No	DTC troubleshooting completed.

ON-BOARD DIAGNOSTIC

DTC B1193:00

id080200822000

System malfunction location	• **SAS control module operation (deployment)**
Detection condition	**Warning** • **Detection conditions are for understanding the DTC outline before performing an inspection. Performing an inspection according to only the detection conditions may cause injury due to an operating error, or damage the system. When performing an inspection, always follow the inspection procedure.** • SAS control module operates (deploys) (air bag module or pre-tensioner seat belt)
Fail-safe	—
Possible cause	• SAS control module operation (deployment) • SAS control module malfunction
System wiring diagram	—

Diagnostic Procedure

ACTION
• Replace the SAS control module. (See SAS CONTROL MODULE REMOVAL/INSTALLATION.)

ON-BOARD DIAGNOSTIC

DTC B1196:11/B1196:13/B1196:87/B1196:96

id080200847300

System malfunction location	• **B1196:11: Driver-side side air bag sensor No.2 circuit short to body ground** • **B1196:13: Driver-side side air bag sensor No.2 circuit open circuit or short to power supply** • **B1196:87: Signal reception error from driver-side side air bag sensor No.2** • **B1196:96: Driver-side side air bag sensor No.2 internal malfunction**
Detection condition	**Warning** • **Detection conditions are for understanding the DTC outline before performing an inspection. Performing an inspection according to only the detection conditions may cause injury due to an operating error, or damage the system. When performing an inspection, always follow the inspection procedure.** • Wiring harness between the driver-side side air bag sensor No.2 and SAS control module has a malfunction • Driver-side side air bag sensor No.2 has a malfunction
Fail-safe	—
Possible cause	• Driver-side side air bag sensor No.2 connector malfunction • Short circuit to power supply or body ground in the wiring harness between the driver-side side air bag sensor No.2 and SAS control module • Open circuit in the wiring harness between the driver-side side air bag sensor No.2 and SAS control module • Driver-side side air bag sensor No.2 malfunction • SAS control module malfunction

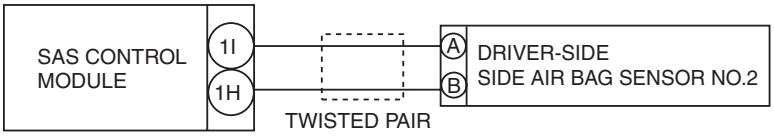

SAS CONTROL MODULE WIRING HARNESS-SIDE CONNECTOR

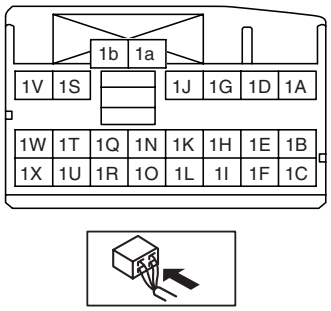

DRIVER-SIDE SIDE AIR BAG SENSOR NO.2 WIRING HARNESS-SIDE CONNECTOR

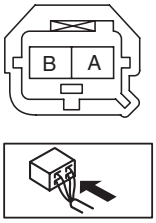

ON-BOARD DIAGNOSTIC

Diagnostic Procedure

Step	Inspection		Action
1	**INSPECT DRIVER-SIDE SIDE AIR BAG SENSOR NO.2 CONNECTOR** **Warning** • **Handling the component parts improperly can accidentally operate (deploy) the air bag module, which may seriously injure you. Read the service warnings/cautions and the workshop manual before handling the air bag system components. (See 08-10-3 AIR BAG SYSTEM SERVICE WARNINGS.) (See 08-10-5 AIR BAG SYSTEM SERVICE CAUTIONS.)** • Switch the ignition to off. • Disconnect the negative battery cable and wait for **1 min or more**. (See 01-17A-11 NEGATIVE BATTERY CABLE DISCONNECTION/CONNECTION [SKYACTIV-G 2.0].)(See 01-17A-13 NEGATIVE BATTERY CABLE DISCONNECTION/CONNECTION [SKYACTIV-G 2.0 (WITHOUT i-stop)].)(See 01-17B-9 NEGATIVE BATTERY CABLE DISCONNECTION/CONNECTION [SKYACTIV-D 2.2].) • Remove the driver-side trunk side trim. (See 09-17-80 TRUNK SIDE TRIM REMOVAL/INSTALLATION.) • Disconnect the driver-side side air bag sensor No.2 connector. (See 08-10-23 SIDE AIR BAG SENSOR NO. 2 REMOVAL/INSTALLATION.) • Inspect the driver-side side air bag sensor No.2 connector. (Corrosion, damage, and disconnected pins) • Is there any malfunction of the driver-side side air bag sensor No.2 connector?	Yes	Replace the malfunctioning part, then go to Step 5.
		No	Go to the next step.

ON-BOARD DIAGNOSTIC

Step	Inspection		Action
2	**INSPECT DRIVER-SIDE SIDE AIR BAG SENSOR NO.2 CIRCUIT FOR SHORT TO GROUND** • Remove the column cover. (See 09-17-25 COLUMN COVER REMOVAL/INSTALLATION.) • Disconnect the clock spring connector. (See 08-10-24 CLOCK SPRING REMOVAL/INSTALLATION.) • Remove the glove compartment. (See 09-17-30 GLOVE COMPARTMENT REMOVAL/INSTALLATION.) • Disconnect the passenger-side air bag module connector. (See 08-10-10 PASSENGER-SIDE AIR BAG MODULE REMOVAL/INSTALLATION.) • Disconnect the driver and passenger-side front seat connector. (See 09-13-4 FRONT SEAT REMOVAL/INSTALLATION.) • Remove the headliner. (See 09-17-94 HEADLINER REMOVAL/INSTALLATION.) • Disconnect the driver and passenger-side curtain air bag module connector. (See 08-10-15 CURTAIN AIR BAG MODULE REMOVAL/INSTALLATION.) • Remove the B-pillar lower trim. (See 09-17-57 B-PILLAR LOWER TRIM REMOVAL/INSTALLATION.) • Disconnect the driver and passenger-side pre-tensioner seat belt connector. (See 08-11-2 FRONT SEAT BELT REMOVAL/INSTALLATION.) • Remove the rear console. (See 09-17-45 REAR CONSOLE REMOVAL/INSTALLATION.) • Disconnect the all SAS control module connectors. (See 08-10-20 SAS CONTROL MODULE REMOVAL/INSTALLATION.) • Inspect for continuity between the following terminals (wiring harness-side) and body ground: — SAS control module terminal 1I — SAS control module terminal 1H **Note** • Inspect for continuity while shaking the wiring harness between the SAS control module and driver-side side air bag sensor No.2. • Is there continuity?	Yes	Replace the wiring harness for a possible short to ground, then go to Step 5.
		No	Go to the next step.

ON-BOARD DIAGNOSTIC

Step	Inspection		Action
3	**INSPECT DRIVER-SIDE SIDE AIR BAG SENSOR NO.2 CIRCUIT FOR OPEN CIRCUIT** • Driver-side side air bag sensor No.2 and SAS control module connectors are disconnected. • Inspect for continuity between the following terminals (wiring harness-side): — Driver-side side air bag sensor No.2 terminal A—SAS control module terminal 1I — Driver-side side air bag sensor No.2 terminal B—SAS control module terminal 1H **Note** • Inspect for continuity while shaking the wiring harness between the SAS control module and driver-side side air bag sensor No.2. • Is there continuity?	Yes	Go to the next step.
		No	Replace the wiring harness for a possible open circuit, then go to Step 5.
4	**INSPECT DRIVER-SIDE SIDE AIR BAG SENSOR NO.2 CIRCUIT FOR SHORT TO POWER SUPPLY** • Driver-side side air bag sensor No.2 and SAS control module connectors are disconnected. • Connect the negative battery cable. (See 01-17A-11 NEGATIVE BATTERY CABLE DISCONNECTION/CONNECTION [SKYACTIV-G 2.0].)(See 01-17A-13 NEGATIVE BATTERY CABLE DISCONNECTION/CONNECTION [SKYACTIV-G 2.0 (WITHOUT i-stop)].)(See 01-17B-9 NEGATIVE BATTERY CABLE DISCONNECTION/CONNECTION [SKYACTIV-D 2.2].) • Switch the ignition ON (engine off or on). • Measure the voltage at the following terminals (wiring harness-side): — SAS control module terminal 1I — SAS control module terminal 1H **Note** • Measure the voltage while shaking the wiring harness between the SAS control module and driver-side side air bag sensor No.2. • Is the voltage **0V**?	Yes	Replace the driver-side side air bag sensor No.2, then go to the next step. (See 08-10-23 SIDE AIR BAG SENSOR NO. 2 REMOVAL/INSTALLATION.)
		No	Replace the wiring harness for a possible short to power supply, then go to the next step.

ON-BOARD DIAGNOSTIC

Step	Inspection		Action
5	**PERFORM SAS CONTROL MODULE DTC INSPECTION** • Switch the ignition to off. • Disconnect the negative battery cable and wait for **1min or more**. (See 01-17A-11 NEGATIVE BATTERY CABLE DISCONNECTION/CONNECTION [SKYACTIV-G 2.0].)(See 01-17A-13 NEGATIVE BATTERY CABLE DISCONNECTION/CONNECTION [SKYACTIV-G 2.0 (WITHOUT i-stop)].)(See 01-17B-9 NEGATIVE BATTERY CABLE DISCONNECTION/CONNECTION [SKYACTIV-D 2.2].) • Connect the SAS control module connectors. • Reconnect all disconnected connectors. • Connect the negative battery cable. (See 01-17A-11 NEGATIVE BATTERY CABLE DISCONNECTION/CONNECTION [SKYACTIV-G 2.0].)(See 01-17A-13 NEGATIVE BATTERY CABLE DISCONNECTION/CONNECTION [SKYACTIV-G 2.0 (WITHOUT i-stop)].)(See 01-17B-9 NEGATIVE BATTERY CABLE DISCONNECTION/CONNECTION [SKYACTIV-D 2.2].) • Switch the ignition ON (engine off or on). • Clear the DTC for the SAS control module using the M-MDS. (See 08-02-10 CLEARING DTC.) • Perform the DTC inspection for the SAS control module using the M-MDS. (See 08-02-7 DTC INSPECTION.) • Are the same DTCs present?	Yes	Replace the SAS control module. (See 08-10-20 SAS CONTROL MODULE REMOVAL/INSTALLATION.)
		No	DTC troubleshooting completed.

ON-BOARD DIAGNOSTIC

DTC B1196:55/B1197:55

id080200827700

System malfunction location	• **B1196:55: Configuration setting error (driver-side side air bag sensor No.2 structural malfunction)** • **B1197:55: Configuration setting error (passenger-side side air bag sensor No.2 structural malfunction)**
Detection condition	**Warning** • **Detection conditions are for understanding the DTC outline before performing an inspection. Performing an inspection according to only the detection conditions may cause injury due to an operating error, or damage the system. When performing an inspection, always follow the inspection procedure.** • SAS control module configuration setting has not been done correctly • Parts which have not been set to SAS control module are assembled
Fail-safe	—
Possible cause	• SAS control module configuration setting not implemented • SAS control module configuration setting invalid • Driver or passenger-side side air bag sensor No.2 assembly incorrect • SAS control module malfunction
System wiring diagram	—

Diagnostic Procedure

Step	Inspection		Action
1	**PERFORM SAS CONTROL MODULE CONFIGURATION (AS-BUILT DATA USE)** • Perform the SAS control module configuration using the M-MDS. (See 08-10-22 SAS CONTROL MODULE CONFIGURATION (USING AS-BUILT DATA).) • Clear the DTC for the SAS control module using the M-MDS. (See 08-02-10 CLEARING DTC.) • Perform the DTC inspection for the SAS control module using the M-MDS. (See 08-02-7 DTC INSPECTION.) • Are the same DTCs present?	Yes	Go to the next step.
		No	DTC troubleshooting completed.
2	**INSPECT SIDE AIR BAG SENSOR NO.2** • Verify that the driver or passenger-side side air bag sensor No.2 is correctly installed. • Is the driver or passenger-side side air bag sensor No.2 correctly installed?	Yes	Go to the next step.
		No	Correctly install the driver or passenger-side side air bag sensor No.2. Then go to the next step.
3	**PERFORM SAS CONTROL MODULE DTC INSPECTION** • Clear the DTC for the SAS control module using the M-MDS. (See 08-02-10 CLEARING DTC.) • Perform the DTC inspection for the SAS control module using the M-MDS. (See 08-02-7 DTC INSPECTION.) • Are the same DTCs present?	Yes	Replace the SAS control module. (See 08-10-20 SAS CONTROL MODULE REMOVAL/INSTALLATION.)
		No	DTC troubleshooting completed.

ON-BOARD DIAGNOSTIC

DTC B1197:11/B1197:13/B1197:87/B1197:96

id080200847400

System malfunction location	• **B1197:11: Passenger-side side air bag sensor No.2 circuit short to body ground** • **B1197:13: Passenger-side side air bag sensor No.2 circuit open circuit or short to power supply** • **B1197:87: Signal reception error from passenger-side side air bag sensor No.2** • **B1197:96: Passenger-side side air bag sensor No.2 internal malfunction**
Detection condition	**Warning** • **Detection conditions are for understanding the DTC outline before performing an inspection. Performing an inspection according to only the detection conditions may cause injury due to an operating error, or damage the system. When performing an inspection, always follow the inspection procedure.** • Wiring harness between the passenger-side side air bag sensor No.2 and SAS control module has a malfunction • Passenger-side side air bag sensor No.2 has a malfunction
Fail-safe	—
Possible cause	• Passenger-side side air bag sensor No.2 connector malfunction • Short circuit to power supply or body ground in the wiring harness between the passenger-side side air bag sensor No.2 and SAS control module • Open circuit in the wiring harness between the passenger-side side air bag sensor No.2 and SAS control module • Passenger-side side air bag sensor No.2 malfunction • SAS control module malfunction

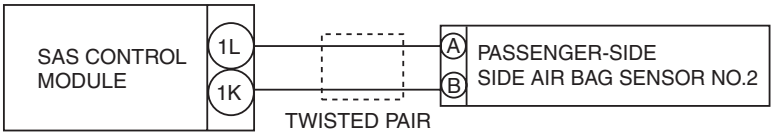

SAS CONTROL MODULE WIRING HARNESS-SIDE CONNECTOR

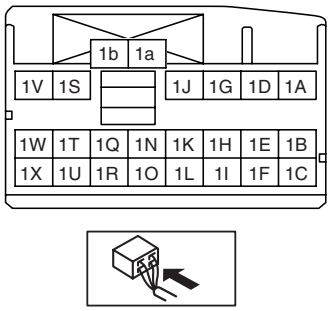

PASSENGER-SIDE SIDE AIR BAG SENSOR NO.2 WIRING HARNESS-SIDE CONNECTOR

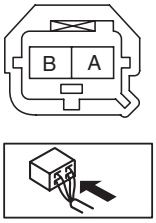

ON-BOARD DIAGNOSTIC

Diagnostic Procedure

Step	Inspection		Action
1	**INSPECT PASSENGER-SIDE SIDE AIR BAG SENSOR NO.2 CONNECTOR** **Warning** • **Handling the component parts improperly can accidentally operate (deploy) the air bag module, which may seriously injure you. Read the service warnings/cautions and the workshop manual before handling the air bag system components. (See 08-10-3 AIR BAG SYSTEM SERVICE WARNINGS.) (See 08-10-5 AIR BAG SYSTEM SERVICE CAUTIONS.)** • Switch the ignition to off. • Disconnect the negative battery cable and wait for **1 min or more**. (See 01-17A-11 NEGATIVE BATTERY CABLE DISCONNECTION/CONNECTION [SKYACTIV-G 2.0].)(See 01-17A-13 NEGATIVE BATTERY CABLE DISCONNECTION/CONNECTION [SKYACTIV-G 2.0 (WITHOUT i-stop)].)(See 01-17B-9 NEGATIVE BATTERY CABLE DISCONNECTION/CONNECTION [SKYACTIV-D 2.2].) • Remove the passenger-side trunk side trim. (See 09-17-80 TRUNK SIDE TRIM REMOVAL/INSTALLATION.) • Disconnect the passenger-side side air bag sensor No.2 connector. (See 08-10-23 SIDE AIR BAG SENSOR NO. 2 REMOVAL/INSTALLATION.) • Inspect the passenger-side side air bag sensor No.2 connector. (Corrosion, damage, and disconnected pins) • Is there any malfunction of the passenger-side side air bag sensor No.2 connector?	Yes	Replace the malfunctioning part, then go to Step 5.
		No	Go to the next step.

ON-BOARD DIAGNOSTIC

Step	Inspection		Action
2	**INSPECT PASSENGER-SIDE SIDE AIR BAG SENSOR NO.2 CIRCUIT FOR SHORT TO GROUND** • Remove the column cover. (See 09-17-25 COLUMN COVER REMOVAL/ INSTALLATION.) • Disconnect the clock spring connector. (See 08-10-24 CLOCK SPRING REMOVAL/ INSTALLATION.) • Remove the glove compartment. (See 09-17-30 GLOVE COMPARTMENT REMOVAL/ INSTALLATION.) • Disconnect the passenger-side air bag module connector. (See 08-10-10 PASSENGER-SIDE AIR BAG MODULE REMOVAL/INSTALLATION.) • Disconnect the driver and passenger-side front seat connector. (See 09-13-4 FRONT SEAT REMOVAL/INSTALLATION.) • Remove the headliner. (See 09-17-94 HEADLINER REMOVAL/INSTALLATION.) • Disconnect the driver and passenger-side curtain air bag module connector. (See 08-10-15 CURTAIN AIR BAG MODULE REMOVAL/INSTALLATION.) • Remove the B-pillar lower trim. (See 09-17-57 B-PILLAR LOWER TRIM REMOVAL/ INSTALLATION.) • Disconnect the driver and passenger-side pre-tensioner seat belt connector. (See 08-11-2 FRONT SEAT BELT REMOVAL/ INSTALLATION.) • Remove the rear console. (See 09-17-45 REAR CONSOLE REMOVAL/ INSTALLATION.) • Disconnect the all SAS control module connectors. (See 08-10-20 SAS CONTROL MODULE REMOVAL/INSTALLATION.) • Inspect for continuity between the following terminals (wiring harness-side) and body ground: — SAS control module terminal 1L — SAS control module terminal 1K **Note** • Inspect for continuity while shaking the wiring harness between the SAS control module and passenger-side side air bag sensor No.2. • Is there continuity?	Yes	Replace the wiring harness for a possible short to ground, then go to Step 5.
		No	Go to the next step.

ON-BOARD DIAGNOSTIC

Step	Inspection		Action
3	**INSPECT PASSENGER-SIDE SIDE AIR BAG SENSOR NO.2 CIRCUIT FOR OPEN CIRCUIT** • Passenger-side side air bag sensor No.2 and SAS control module connectors are disconnected. • Inspect for continuity between the following terminals (wiring harness-side): — Passenger-side side air bag sensor No.2 terminal A—SAS control module terminal 1L — Passenger-side side air bag sensor No.2 terminal B—SAS control module terminal 1K **Note** • Inspect for continuity while shaking the wiring harness between the SAS control module and passenger-side side air bag sensor No.2. • Is there continuity?	Yes	Go to the next step.
		No	Replace the wiring harness for a possible open circuit, then go to Step 5.
4	**INSPECT PASSENGER-SIDE SIDE AIR BAG SENSOR NO.2 CIRCUIT FOR SHORT TO POWER SUPPLY** • Passenger-side side air bag sensor No.2 and SAS control module connectors are disconnected. • Connect the negative battery cable. (See 01-17A-11 NEGATIVE BATTERY CABLE DISCONNECTION/CONNECTION [SKYACTIV-G 2.0].)(See 01-17A-13 NEGATIVE BATTERY CABLE DISCONNECTION/CONNECTION [SKYACTIV-G 2.0 (WITHOUT i-stop)].)(See 01-17B-9 NEGATIVE BATTERY CABLE DISCONNECTION/CONNECTION [SKYACTIV-D 2.2].) • Switch the ignition ON (engine off or on). • Measure the voltage at the following terminals (wiring harness-side): — SAS control module terminal 1L — SAS control module terminal 1K **Note** • Measure the voltage while shaking the wiring harness between the SAS control module and passenger-side side air bag sensor No.2. • Is the voltage **0V**?	Yes	Replace the passenger-side side air bag sensor No.2, then go to the next step. (See 08-10-23 SIDE AIR BAG SENSOR NO. 2 REMOVAL/INSTALLATION.)
		No	Replace the wiring harness for a possible short to power supply, then go to the next step.

ON-BOARD DIAGNOSTIC

Step	Inspection		Action
5	**PERFORM SAS CONTROL MODULE DTC INSPECTION** • Switch the ignition to off. • Disconnect the negative battery cable and wait for **1min or more**. (See 01-17A-11 NEGATIVE BATTERY CABLE DISCONNECTION/CONNECTION [SKYACTIV-G 2.0].)(See 01-17A-13 NEGATIVE BATTERY CABLE DISCONNECTION/CONNECTION [SKYACTIV-G 2.0 (WITHOUT i-stop)].)(See 01-17B-9 NEGATIVE BATTERY CABLE DISCONNECTION/CONNECTION [SKYACTIV-D 2.2].) • Connect the SAS control module connectors. • Reconnect all disconnected connectors. • Connect the negative battery cable. (See 01-17A-11 NEGATIVE BATTERY CABLE DISCONNECTION/CONNECTION [SKYACTIV-G 2.0].)(See 01-17A-13 NEGATIVE BATTERY CABLE DISCONNECTION/CONNECTION [SKYACTIV-G 2.0 (WITHOUT i-stop)].)(See 01-17B-9 NEGATIVE BATTERY CABLE DISCONNECTION/CONNECTION [SKYACTIV-D 2.2].) • Switch the ignition ON (engine off or on). • Clear the DTC for the SAS control module using the M-MDS. (See 08-02-10 CLEARING DTC.) • Perform the DTC inspection for the SAS control module using the M-MDS. (See 08-02-7 DTC INSPECTION.) • Are the same DTCs present?	Yes	Replace the SAS control module. (See 08-10-20 SAS CONTROL MODULE REMOVAL/INSTALLATION.)
		No	DTC troubleshooting completed.

ON-BOARD DIAGNOSTIC

DTC B1D75:55

id080200828000

System malfunction location	• **Configuration setting error (PAD switch structural malfunction)**
Detection condition	**Warning** • **Detection conditions are for understanding the DTC outline before performing an inspection. Performing an inspection according to only the detection conditions may cause injury due to an operating error, or damage the system. When performing an inspection, always follow the inspection procedure.** • SAS control module configuration setting has not been done correctly • Parts which have not been set to SAS control module are assembled
Fail-safe	—
Possible cause	• SAS control module configuration setting not implemented • SAS control module configuration setting invalid • PAD switch assembly incorrect • SAS control module malfunction
System wiring diagram	—

Diagnostic Procedure

Step	Inspection		Action
1	**PERFORM SAS CONTROL MODULE CONFIGURATION (AS-BUILT DATA USE)** • Perform the SAS control module configuration using the M-MDS. (See 08-10-22 SAS CONTROL MODULE CONFIGURATION (USING AS-BUILT DATA).) • Clear the DTC for the SAS control module using the M-MDS. (See 08-02-10 CLEARING DTC.) • Perform the DTC inspection for the SAS control module using the M-MDS. (See 08-02-7 DTC INSPECTION.) • Are the same DTCs present?	Yes	Go to the next step.
		No	DTC troubleshooting completed.
2	**INSPECT PAD SWITCH** • Verify that the PAD switch is correctly installed. • Is the PAD switch correctly installed?	Yes	Go to the next step.
		No	Correctly install the PAD switch. Then go to the next step.
3	**PERFORM SAS CONTROL MODULE DTC INSPECTION** • Clear the DTC for the SAS control module using the M-MDS. (See 08-02-10 CLEARING DTC.) • Perform the DTC inspection for the SAS control module using the M-MDS. (See 08-02-7 DTC INSPECTION.) • Are the same DTCs present?	Yes	Replace the SAS control module. (See 08-10-20 SAS CONTROL MODULE REMOVAL/INSTALLATION.)
		No	DTC troubleshooting completed.

ON-BOARD DIAGNOSTIC

DTC B1D75:62

id080200827900

System malfunction location	• **PAD switch circuit open circuit or short to body ground**
Detection condition	**Warning** • **Detection conditions are for understanding the DTC outline before performing an inspection. Performing an inspection according to only the detection conditions may cause injury due to an operating error, or damage the system. When performing an inspection, always follow the inspection procedure.** • Wiring harness between the PAD switch and SAS control module has a malfunction • PAD switch has a malfunction
Fail-safe	—
Possible cause	• PAD switch connector malfunction • Open or short circuit or short to ground or short to power supply in the wiring harness between the PAD switch and SAS control module • PAD switch malfunction • SAS control module malfunction

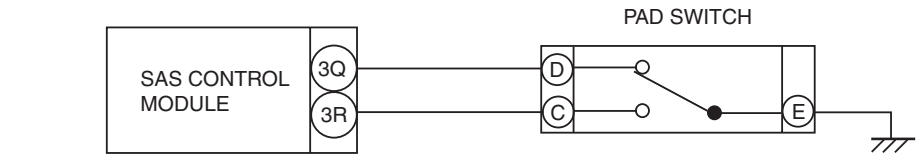

SAS CONTROL MODULE WIRING HARNESS-SIDE CONNECTOR

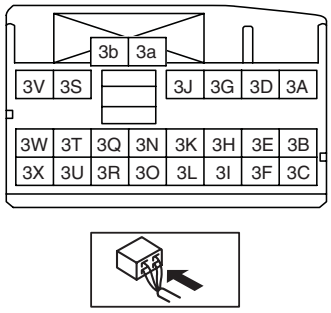

PAD SWITCH WIRING HARNESS-SIDE CONNECTOR

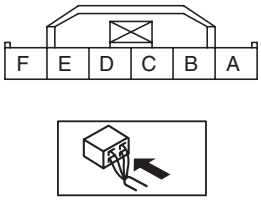

ON-BOARD DIAGNOSTIC

Diagnostic Procedure

Step	Inspection		Action
1	**INSPECT PAD SWITCH CONNECTOR** **Warning** • **Handling the component parts improperly can accidentally operate (deploy) the air bag module, which may seriously injure you. Read the service warnings/cautions and the workshop manual before handling the air bag system components. (See 08-10-3 AIR BAG SYSTEM SERVICE WARNINGS.) (See 08-10-5 AIR BAG SYSTEM SERVICE CAUTIONS.)** • Switch the ignition to off. • Disconnect the negative battery cable and wait for **1 min or more**. (See 01-17A-11 NEGATIVE BATTERY CABLE DISCONNECTION/CONNECTION [SKYACTIV-G 2.0].)(See 01-17A-13 NEGATIVE BATTERY CABLE DISCONNECTION/CONNECTION [SKYACTIV-G 2.0 (WITHOUT i-stop)].)(See 01-17B-9 NEGATIVE BATTERY CABLE DISCONNECTION/CONNECTION [SKYACTIV-D 2.2].) • Remove the passenger-side lower panel. (See 09-17-35 LOWER PANEL REMOVAL/INSTALLATION.) • Disconnect the PAD switch connector. (See 08-10-30 PASSENGER AIR BAG DEACTIVATION (PAD) SWITCH REMOVAL/INSTALLATION.) • Inspect the PAD switch connector. (Corrosion, damage, and disconnected pins) • Is there any malfunction of the PAD switch connector?	Yes	Replace the malfunctioning part, then go to Step 5.
		No	Go to the next step.

ON-BOARD DIAGNOSTIC

Step	Inspection		Action
2	**INSPECT PAD SWITCH CIRCUIT FOR SHORT TO GROUND** • Remove the column cover. (See 09-17-25 COLUMN COVER REMOVAL/ INSTALLATION.) • Disconnect the clock spring connector. (See 08-10-24 CLOCK SPRING REMOVAL/ INSTALLATION.) • Remove the glove compartment. (See 09-17-30 GLOVE COMPARTMENT REMOVAL/ INSTALLATION.) • Disconnect the passenger-side air bag module connector. (See 08-10-10 PASSENGER-SIDE AIR BAG MODULE REMOVAL/INSTALLATION.) • Disconnect the driver and passenger-side front seat connector. (See 09-13-4 FRONT SEAT REMOVAL/INSTALLATION.) • Remove the headliner. (See 09-17-94 HEADLINER REMOVAL/INSTALLATION.) • Disconnect the driver and passenger-side curtain air bag module connector. (See 08-10-15 CURTAIN AIR BAG MODULE REMOVAL/INSTALLATION.) • Remove the B-pillar lower trim. (See 09-17-57 B-PILLAR LOWER TRIM REMOVAL/ INSTALLATION.) • Disconnect the driver and passenger-side pre-tensioner seat belt connector. (See 08-11-2 FRONT SEAT BELT REMOVAL/ INSTALLATION.) • Remove the rear console. (See 09-17-45 REAR CONSOLE REMOVAL/ INSTALLATION.) • Disconnect the all SAS control module connectors. (See 08-10-20 SAS CONTROL MODULE REMOVAL/INSTALLATION.) • Inspect for continuity between the following terminals (wiring harness-side) and body ground: — SAS control module terminal 3Q — SAS control module terminal 3R **Note** • Inspect for continuity while shaking the wiring harness between the SAS control module and PAD switch. • Is there continuity?	Yes	Replace the wiring harness for a possible short to ground, then go to Step 5.
		No	Go to the next step.
3	**INSPECT PAD SWITCH CIRCUIT FOR OPEN CIRCUIT** • PAD switch and SAS control module connectors are disconnected. • Inspect for continuity between the following terminals (wiring harness-side): — PAD switch terminal D—SAS control module terminal 3Q — PAD switch terminal C—SAS control module terminal 3R **Note** • Inspect for continuity while shaking the wiring harness between the SAS control module and PAD switch. • Is there continuity?	Yes	Go to the next step.
		No	Replace the wiring harness for a possible open circuit, then go to Step 5.

ON-BOARD DIAGNOSTIC

Step	Inspection		Action
4	**INSPECT PAD SWITCH CIRCUIT FOR SHORT TO POWER SUPPLY** • PAD switch and SAS control module connectors are disconnected. • Connect the negative battery cable. (See 01-17A-11 NEGATIVE BATTERY CABLE DISCONNECTION/CONNECTION [SKYACTIV-G 2.0].)(See 01-17A-13 NEGATIVE BATTERY CABLE DISCONNECTION/CONNECTION [SKYACTIV-G 2.0 (WITHOUT i-stop)].)(See 01-17B-9 NEGATIVE BATTERY CABLE DISCONNECTION/CONNECTION [SKYACTIV-D 2.2].) • Switch the ignition ON (engine off or on). • Measure the voltage at the following terminals (wiring harness-side): — SAS control module terminal 3Q — SAS control module terminal 3R **Note** • Measure the voltage while shaking the wiring harness between the SAS control module and PAD switch. • Is the voltage **0V**?	Yes	Replace the PAD switch, then go to the next step. (See 08-10-30 PASSENGER AIR BAG DEACTIVATION (PAD) SWITCH REMOVAL/INSTALLATION.)
		No	Replace the wiring harness for a possible short to power supply, then go to the next step.
5	**PERFORM SAS CONTROL MODULE DTC INSPECTION** • Switch the ignition to off. • Disconnect the negative battery cable and wait for **1min or more**. (See 01-17A-11 NEGATIVE BATTERY CABLE DISCONNECTION/CONNECTION [SKYACTIV-G 2.0].)(See 01-17A-13 NEGATIVE BATTERY CABLE DISCONNECTION/CONNECTION [SKYACTIV-G 2.0 (WITHOUT i-stop)].)(See 01-17B-9 NEGATIVE BATTERY CABLE DISCONNECTION/CONNECTION [SKYACTIV-D 2.2].) • Connect the SAS control module connectors. • Reconnect all disconnected connectors. • Connect the negative battery cable. (See 01-17A-11 NEGATIVE BATTERY CABLE DISCONNECTION/CONNECTION [SKYACTIV-G 2.0].)(See 01-17A-13 NEGATIVE BATTERY CABLE DISCONNECTION/CONNECTION [SKYACTIV-G 2.0 (WITHOUT i-stop)].)(See 01-17B-9 NEGATIVE BATTERY CABLE DISCONNECTION/CONNECTION [SKYACTIV-D 2.2].) • Switch the ignition ON (engine off or on). • Clear the DTC for the SAS control module using the M-MDS. (See 08-02-10 CLEARING DTC.) • Perform the DTC inspection for the SAS control module using the M-MDS. (See 08-02-7 DTC INSPECTION.) • Are the same DTCs present?	Yes	Replace the SAS control module. (See 08-10-20 SAS CONTROL MODULE REMOVAL/INSTALLATION.)
		No	DTC troubleshooting completed.

ON-BOARD DIAGNOSTIC

DTC B1206:00/U2107:00

id080200890100

System malfunction location	• **B1206:00: SAS control module operation (deployment) (fuel cut signal output)** • **U2107:00: SAS control module operation (deployment) signal output**
Detection condition	**Warning** • **Detection conditions are for understanding the DTC outline before performing an inspection. Performing an inspection according to only the detection conditions may cause injury due to an operating error, or damage the system. When performing an inspection, always follow the inspection procedure.** • SAS control module operates (deploys) (air bag module or pre-tensioner seat belt)
Fail-safe	—
Possible cause	• SAS control module operation (deployment) • SAS control module malfunction
System wiring diagram	—

Diagnostic Procedure

ACTION
• Replace the SAS control module. (See SAS CONTROL MODULE REMOVAL/INSTALLATION.)

ON-BOARD DIAGNOSTIC

DTC B1211:11/B1211:12/B1211:13/B1211:19/B1211:1A

id080200880200

System malfunction location	• **B1211:11: Driver-side pre-tensioner seat belt circuit short to body ground** • **B1211:12: Driver-side pre-tensioner seat belt circuit short to power supply** • **B1211:13: Driver-side pre-tensioner seat belt circuit open circuit or resistance high** • **B1211:19: Short circuit to driver-side pre-tensioner seat belt and other air bag module circuits** • **B1211:1A: Driver-side pre-tensioner seat belt circuit resistance low**
Detection condition	**Warning** • **Detection conditions are for understanding the DTC outline before performing an inspection. Performing an inspection according to only the detection conditions may cause injury due to an operating error, or damage the system. When performing an inspection, always follow the inspection procedure.** • Resistance other than **0.81—6.42 ohms** detected in driver-side pre-tensioner seat belt circuit • Wiring harness between the driver-side pre-tensioner seat belt and SAS control module has a malfunction
Fail-safe	—
Possible cause	• Driver-side pre-tensioner seat belt connector malfunction • Short circuit to power supply or body ground in the wiring harness between the driver-side pre-tensioner seat belt and SAS control module • Open circuit in the wiring harness between the driver-side pre-tensioner seat belt and SAS control module • Driver-side pre-tensioner seat belt malfunction • SAS control module malfunction

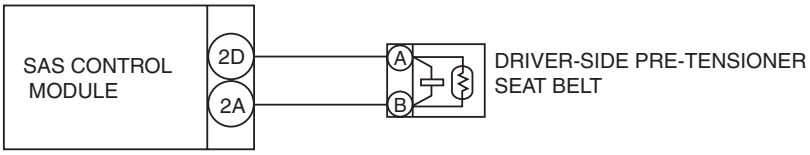

SAS CONTROL MODULE WIRING HARNESS-SIDE CONNECTOR

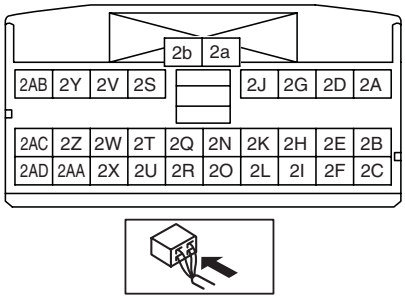

DRIVER-SIDE PRE-TENSIONER SEAT BELT WIRING HARNESS-SIDE CONNECTOR

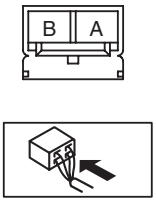

08

ON-BOARD DIAGNOSTIC

Diagnostic Procedure

Step	Inspection		Action
1	**INSPECT DRIVER-SIDE PRE-TENSIONER SEAT BELT CONNECTOR** **Warning** • **Handling the component parts improperly can accidentally operate (deploy) the air bag module, which may seriously injure you. Read the service warnings/cautions and the workshop manual before handling the air bag system components. (See 08-10-3 AIR BAG SYSTEM SERVICE WARNINGS.) (See 08-10-5 AIR BAG SYSTEM SERVICE CAUTIONS.)** • Switch the ignition to off. • Disconnect the negative battery cable and wait for **1 min or more**. (See 01-17A-11 NEGATIVE BATTERY CABLE DISCONNECTION/CONNECTION [SKYACTIV-G 2.0].)(See 01-17A-13 NEGATIVE BATTERY CABLE DISCONNECTION/CONNECTION [SKYACTIV-G 2.0 (WITHOUT i-stop)].)(See 01-17B-9 NEGATIVE BATTERY CABLE DISCONNECTION/CONNECTION [SKYACTIV-D 2.2].) • Remove the driver-side B-pillar lower trim. (See 09-17-57 B-PILLAR LOWER TRIM REMOVAL/INSTALLATION.) • Disconnect the driver-side pre-tensioner seat belt connector. (See 08-11-2 FRONT SEAT BELT REMOVAL/INSTALLATION.) • Inspect the driver-side pre-tensioner seat belt connector. (Corrosion, damage, and disconnected pins) • Is there any malfunction of the driver-side pre-tensioner seat belt connector?	Yes	Replace the malfunctioning part, then go to Step 6.
		No	Go to the next step.

ON-BOARD DIAGNOSTIC

Step	Inspection		Action
2	**INSPECT DRIVER-SIDE PRE-TENSIONER SEAT BELT CIRCUIT FOR SHORT TO GROUND** • Remove the column cover. (See 09-17-25 COLUMN COVER REMOVAL/INSTALLATION.) • Disconnect the clock spring connector. (See 08-10-24 CLOCK SPRING REMOVAL/INSTALLATION.) • Remove the glove compartment. (See 09-17-30 GLOVE COMPARTMENT REMOVAL/INSTALLATION.) • Disconnect the passenger-side air bag module connector. (See 08-10-10 PASSENGER-SIDE AIR BAG MODULE REMOVAL/INSTALLATION.) • Disconnect the driver and passenger-side front seat connector. (See 09-13-4 FRONT SEAT REMOVAL/INSTALLATION.) • Remove the headliner. (See 09-17-94 HEADLINER REMOVAL/INSTALLATION.) • Disconnect the driver and passenger-side curtain air bag module connector. (See 08-10-15 CURTAIN AIR BAG MODULE REMOVAL/INSTALLATION.) • Remove the passenger-side B-pillar lower trim. (See 09-17-57 B-PILLAR LOWER TRIM REMOVAL/INSTALLATION.) • Disconnect the passenger-side pre-tensioner seat belt connector. (See 08-11-2 FRONT SEAT BELT REMOVAL/INSTALLATION.) • Remove the rear console. (See 09-17-45 REAR CONSOLE REMOVAL/INSTALLATION.) • Disconnect the all SAS control module connectors. (See 08-10-20 SAS CONTROL MODULE REMOVAL/INSTALLATION.) • Inspect for continuity between the following terminals (wiring harness-side) and body ground: — SAS control module terminal 2D — SAS control module terminal 2A **Note** • Inspect for continuity while shaking the wiring harness between the SAS control module and driver-side pre-tensioner seat belt. • Is there continuity?	Yes	Replace the wiring harness for a possible short to ground, then go to Step 6.
		No	Go to the next step.

ON-BOARD DIAGNOSTIC

Step	Inspection		Action
3	**INSPECT DRIVER-SIDE PRE-TENSIONER SEAT BELT CIRCUIT FOR OPEN CIRCUIT** • Driver-side pre-tensioner seat belt and SAS control module connectors are disconnected. • Inspect for continuity between the following terminals (wiring harness-side): — Driver-side pre-tensioner seat belt terminal A—SAS control module terminal 2D — Driver-side pre-tensioner seat belt terminal B—SAS control module terminal 2A **Note** • Inspect for continuity while shaking the wiring harness between the SAS control module and driver-side pre-tensioner seat belt. • Is there continuity?	Yes	Go to the next step.
		No	Replace the wiring harness for a possible open circuit, then go to Step 6.
4	**INSPECT DRIVER-SIDE PRE-TENSIONER SEAT BELT CIRCUIT FOR SHORT TO POWER SUPPLY** • Driver-side pre-tensioner seat belt and SAS control module connectors are disconnected. • Connect the negative battery cable. (See 01-17A-11 NEGATIVE BATTERY CABLE DISCONNECTION/CONNECTION [SKYACTIV-G 2.0].)(See 01-17A-13 NEGATIVE BATTERY CABLE DISCONNECTION/CONNECTION [SKYACTIV-G 2.0 (WITHOUT i-stop)].)(See 01-17B-9 NEGATIVE BATTERY CABLE DISCONNECTION/CONNECTION [SKYACTIV-D 2.2].) • Switch the ignition ON (engine off or on). • Measure the voltage at the following terminals (wiring harness-side): — SAS control module terminal 2D — SAS control module terminal 2A **Note** • Measure the voltage while shaking the wiring harness between the SAS control module and driver-side pre-tensioner seat belt. • Is the voltage **0V**?	Yes	Go to the next step.
		No	Replace the wiring harness for a possible short to power supply, then go to Step 6.

ON-BOARD DIAGNOSTIC

Step	Inspection		Action
5	**INSPECT DRIVER-SIDE PRE-TENSIONER SEAT BELT** • Switch the ignition to off. • Disconnect the negative battery cable and wait for **1min or more**. (See 01-17A-11 NEGATIVE BATTERY CABLE DISCONNECTION/CONNECTION [SKYACTIV-G 2.0].)(See 01-17A-13 NEGATIVE BATTERY CABLE DISCONNECTION/CONNECTION [SKYACTIV-G 2.0 (WITHOUT i-stop)].)(See 01-17B-9 NEGATIVE BATTERY CABLE DISCONNECTION/CONNECTION [SKYACTIV-D 2.2].) • Connect the SAS control module connectors. • Except for the driver-side pre-tensioner seat belt connector, reconnect all disconnected connectors. • Connect the **SST (Fuel and thermometer checker)** or apply **2 ohms** resistance to the driver-side pre-tensioner seat belt connector terminals A–B. • Set the **SST (Fuel and thermometer checker)** to **2 ohms**. • Connect the negative battery cable. (See 01-17A-11 NEGATIVE BATTERY CABLE DISCONNECTION/CONNECTION [SKYACTIV-G 2.0].)(See 01-17A-13 NEGATIVE BATTERY CABLE DISCONNECTION/CONNECTION [SKYACTIV-G 2.0 (WITHOUT i-stop)].)(See 01-17B-9 NEGATIVE BATTERY CABLE DISCONNECTION/CONNECTION [SKYACTIV-D 2.2].) • Switch the ignition ON (engine off or on). • Clear the DTC for the SAS control module using the M-MDS. (See 08-02-10 CLEARING DTC.) • Perform the DTC inspection for the SAS control module using the M-MDS. (See 08-02-7 DTC INSPECTION.) • Are the same DTCs present?	Yes	Go to the next step.
		No	Replace the driver-side pre-tensioner seat belt. (See 08-11-2 FRONT SEAT BELT REMOVAL/INSTALLATION.) Then go to the next step.

ON-BOARD DIAGNOSTIC

Step	Inspection		Action
6	**PERFORM SAS CONTROL MODULE DTC INSPECTION** • Switch the ignition to off. • Disconnect the negative battery cable and wait for **1min or more**. (See 01-17A-11 NEGATIVE BATTERY CABLE DISCONNECTION/CONNECTION [SKYACTIV-G 2.0].)(See 01-17A-13 NEGATIVE BATTERY CABLE DISCONNECTION/CONNECTION [SKYACTIV-G 2.0 (WITHOUT i-stop)].)(See 01-17B-9 NEGATIVE BATTERY CABLE DISCONNECTION/CONNECTION [SKYACTIV-D 2.2].) • Disconnect the **SST (Fuel and thermometer checker)** or the **2 ohms** resistance. • Connect the driver-side pre-tensioner seat belt connector. • Connect the negative battery cable. (See 01-17A-11 NEGATIVE BATTERY CABLE DISCONNECTION/CONNECTION [SKYACTIV-G 2.0].)(See 01-17A-13 NEGATIVE BATTERY CABLE DISCONNECTION/CONNECTION [SKYACTIV-G 2.0 (WITHOUT i-stop)].)(See 01-17B-9 NEGATIVE BATTERY CABLE DISCONNECTION/CONNECTION [SKYACTIV-D 2.2].) • Switch the ignition ON (engine off or on). • Clear the DTC for the SAS control module using the M-MDS. (See 08-02-10 CLEARING DTC.) • Perform the DTC inspection for the SAS control module using the M-MDS. (See 08-02-7 DTC INSPECTION.) • Are the same DTCs present?	Yes	Replace the SAS control module. (See 08-10-20 SAS CONTROL MODULE REMOVAL/INSTALLATION.)
		No	DTC troubleshooting completed.

ON-BOARD DIAGNOSTIC

DTC B1211:55, B1214:55

id080200880300

System malfunction location	• **B1211:55: Configuration setting error (driver-side pre-tensioner seat belt structural malfunction)** • **B1214:55: Configuration setting error (passenger-side pre-tensioner seat belt structural malfunction)**
Detection condition	**Warning** • **Detection conditions are for understanding the DTC outline before performing an inspection. Performing an inspection according to only the detection conditions may cause injury due to an operating error, or damage the system. When performing an inspection, always follow the inspection procedure.** • SAS control module configuration setting has not been done correctly • Parts which have not been set to SAS control module are assembled
Fail-safe	—
Possible cause	• SAS control module configuration setting not implemented • SAS control module configuration setting invalid • Driver or passenger-side pre-tensioner seat belt assembly incorrect • SAS control module malfunction
System wiring diagram	—

Diagnostic Procedure

Step	Inspection		Action
1	**PERFORM SAS CONTROL MODULE CONFIGURATION (AS-BUILT DATA USE)** • Perform the SAS control module configuration using the M-MDS. (See 08-10-22 SAS CONTROL MODULE CONFIGURATION (USING AS-BUILT DATA).) • Clear the DTC for the SAS control module using the M-MDS. (See 08-02-10 CLEARING DTC.) • Perform the DTC inspection for the SAS control module using the M-MDS. (See 08-02-7 DTC INSPECTION.) • Are the same DTCs present?	Yes	Go to the next step.
		No	DTC troubleshooting completed.
2	**INSPECT PRE-TENSIONER SEAT BELT** • Verify that the driver or passenger-side pre-tensioner seat belt is correctly installed. • Is the driver or passenger-side pre-tensioner seat belt correctly installed?	Yes	Go to the next step.
		No	Correctly install the driver or passenger-side pre-tensioner seat belt. Then go to the next step.
3	**PERFORM SAS CONTROL MODULE DTC INSPECTION** • Clear the DTC for the SAS control module using the M-MDS. (See 08-02-10 CLEARING DTC.) • Perform the DTC inspection for the SAS control module using the M-MDS. (See 08-02-7 DTC INSPECTION.) • Are the same DTCs present?	Yes	Replace the SAS control module. (See 08-10-20 SAS CONTROL MODULE REMOVAL/INSTALLATION.)
		No	DTC troubleshooting completed.

ON-BOARD DIAGNOSTIC

DTC B1214:11/B1214:12/B1214:13/B1214:19/B1214:1A

id080200880400

System malfunction location	• **B1214:11: Passenger-side pre-tensioner seat belt circuit short to body ground** • **B1214:12: Passenger-side pre-tensioner seat belt circuit short to power supply** • **B1214:13: Passenger-side pre-tensioner seat belt circuit open circuit or resistance high** • **B1214:19: Short circuit to passenger-side pre-tensioner seat belt and other air bag module circuits** • **B1214:1A: Passenger-side pre-tensioner seat belt circuit resistance low**
Detection condition	**Warning** • **Detection conditions are for understanding the DTC outline before performing an inspection. Performing an inspection according to only the detection conditions may cause injury due to an operating error, or damage the system. When performing an inspection, always follow the inspection procedure.** • Resistance other than **0.81—6.42 ohms** detected in passenger-side pre-tensioner seat belt circuit • Wiring harness between the passenger-side pre-tensioner seat belt and SAS control module has a malfunction
Fail-safe	—
Possible cause	• Passenger-side pre-tensioner seat belt connector malfunction • Short circuit to power supply or body ground in the wiring harness between the passenger-side pre-tensioner seat belt and SAS control module • Open circuit in the wiring harness between the passenger-side pre-tensioner seat belt and SAS control module • Passenger-side pre-tensioner seat belt malfunction • SAS control module malfunction

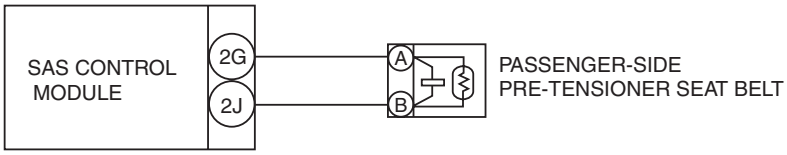

SAS CONTROL MODULE WIRING HARNESS-SIDE CONNECTOR

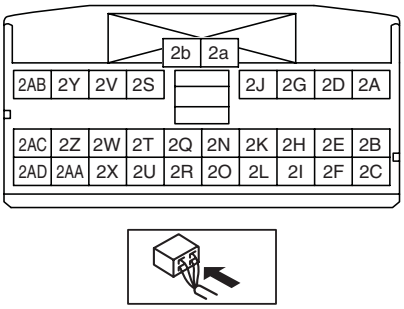

PASSENGER-SIDE PRE-TENSIONER SEAT BELT WIRING HARNESS-SIDE CONNECTOR

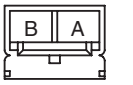

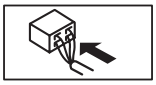

ON-BOARD DIAGNOSTIC

Diagnostic Procedure

Step	Inspection		Action
1	**INSPECT PASSENGER-SIDE PRE-TENSIONER SEAT BELT CONNECTOR** **Warning** • **Handling the component parts improperly can accidentally operate (deploy) the air bag module, which may seriously injure you. Read the service warnings/cautions and the workshop manual before handling the air bag system components. (See 08-10-3 AIR BAG SYSTEM SERVICE WARNINGS.) (See 08-10-5 AIR BAG SYSTEM SERVICE CAUTIONS.)** • Switch the ignition to off. • Disconnect the negative battery cable and wait for **1 min or more**. (See 01-17A-11 NEGATIVE BATTERY CABLE DISCONNECTION/CONNECTION [SKYACTIV-G 2.0].)(See 01-17A-13 NEGATIVE BATTERY CABLE DISCONNECTION/CONNECTION [SKYACTIV-G 2.0 (WITHOUT i-stop)].)(See 01-17B-9 NEGATIVE BATTERY CABLE DISCONNECTION/CONNECTION [SKYACTIV-D 2.2].) • Remove the passenger-side B-pillar lower trim. (See 09-17-57 B-PILLAR LOWER TRIM REMOVAL/INSTALLATION.) • Disconnect the passenger-side pre-tensioner seat belt connector. (See 08-11-2 FRONT SEAT BELT REMOVAL/INSTALLATION.) • Inspect the passenger-side pre-tensioner seat belt connector. (Corrosion, damage, and disconnected pins) • Is there any malfunction of the passenger-side pre-tensioner seat belt connector?	Yes	Replace the malfunctioning part, then go to Step 6.
		No	Go to the next step.

ON-BOARD DIAGNOSTIC

Step	Inspection		Action
2	**INSPECT PASSENGER-SIDE PRE-TENSIONER SEAT BELT CIRCUIT FOR SHORT TO GROUND** • Remove the column cover. (See 09-17-25 COLUMN COVER REMOVAL/INSTALLATION.) • Disconnect the clock spring connector. (See 08-10-24 CLOCK SPRING REMOVAL/INSTALLATION.) • Remove the glove compartment. (See 09-17-30 GLOVE COMPARTMENT REMOVAL/INSTALLATION.) • Disconnect the passenger-side air bag module connector. (See 08-10-10 PASSENGER-SIDE AIR BAG MODULE REMOVAL/INSTALLATION.) • Disconnect the driver and passenger-side front seat connector. (See 09-13-4 FRONT SEAT REMOVAL/INSTALLATION.) • Remove the headliner. (See 09-17-94 HEADLINER REMOVAL/INSTALLATION.) • Disconnect the driver and passenger-side curtain air bag module connector. (See 08-10-15 CURTAIN AIR BAG MODULE REMOVAL/INSTALLATION.) • Remove the driver-side B-pillar lower trim. (See 09-17-57 B-PILLAR LOWER TRIM REMOVAL/INSTALLATION.) • Disconnect the driver-side pre-tensioner seat belt connector. (See 08-11-2 FRONT SEAT BELT REMOVAL/INSTALLATION.) • Remove the rear console. (See 09-17-45 REAR CONSOLE REMOVAL/INSTALLATION.) • Disconnect the all SAS control module connectors. (See 08-10-20 SAS CONTROL MODULE REMOVAL/INSTALLATION.) • Inspect for continuity between the following terminals (wiring harness-side) and body ground: — SAS control module terminal 2G — SAS control module terminal 2J **Note** • Inspect for continuity while shaking the wiring harness between the SAS control module and passenger-side pre-tensioner seat belt. • Is there continuity?	Yes	Replace the wiring harness for a possible short to ground, then go to Step 6.
		No	Go to the next step.

ON-BOARD DIAGNOSTIC

Step	Inspection		Action
3	**INSPECT PASSENGER-SIDE PRE-TENSIONER SEAT BELT CIRCUIT FOR OPEN CIRCUIT** • Passenger-side pre-tensioner seat belt and SAS control module connectors are disconnected. • Inspect for continuity between the following terminals (wiring harness-side): — Passenger-side pre-tensioner seat belt terminal A—SAS control module terminal 2G — Passenger-side pre-tensioner seat belt terminal B—SAS control module terminal 2J **Note** • Inspect for continuity while shaking the wiring harness between the SAS control module and passenger-side pre-tensioner seat belt. • Is there continuity?	Yes	Go to the next step.
		No	Replace the wiring harness for a possible open circuit, then go to Step 6.
4	**INSPECT PASSENGER-SIDE PRE-TENSIONER SEAT BELT CIRCUIT FOR SHORT TO POWER SUPPLY** • Passenger-side pre-tensioner seat belt and SAS control module connectors are disconnected. • Connect the negative battery cable. (See 01-17A-11 NEGATIVE BATTERY CABLE DISCONNECTION/CONNECTION [SKYACTIV-G 2.0].)(See 01-17A-13 NEGATIVE BATTERY CABLE DISCONNECTION/CONNECTION [SKYACTIV-G 2.0 (WITHOUT i-stop)].)(See 01-17B-9 NEGATIVE BATTERY CABLE DISCONNECTION/CONNECTION [SKYACTIV-D 2.2].) • Switch the ignition ON (engine off or on). • Measure the voltage at the following terminals (wiring harness-side): — SAS control module terminal 2G — SAS control module terminal 2J **Note** • Measure the voltage while shaking the wiring harness between the SAS control module and passenger-side pre-tensioner seat belt. • Is the voltage **0V**?	Yes	Go to the next step.
		No	Replace the wiring harness for a possible short to power supply, then go to Step 6.

ON-BOARD DIAGNOSTIC

Step	Inspection		Action
5	**INSPECT PASSENGER-SIDE PRE-TENSIONER SEAT BELT** • Switch the ignition to off. • Disconnect the negative battery cable and wait for **1min or more**. (See 01-17A-11 NEGATIVE BATTERY CABLE DISCONNECTION/CONNECTION [SKYACTIV-G 2.0].)(See 01-17A-13 NEGATIVE BATTERY CABLE DISCONNECTION/CONNECTION [SKYACTIV-G 2.0 (WITHOUT i-stop)].)(See 01-17B-9 NEGATIVE BATTERY CABLE DISCONNECTION/CONNECTION [SKYACTIV-D 2.2].) • Connect the SAS control module connectors. • Except for the passenger-side pre-tensioner seat belt connector, reconnect all disconnected connectors. • Connect the **SST (Fuel and thermometer checker)** or apply **2 ohms** resistance to the passenger-side pre-tensioner seat belt connector terminals A–B. • Set the **SST (Fuel and thermometer checker)** to **2 ohms**. • Connect the negative battery cable. (See 01-17A-11 NEGATIVE BATTERY CABLE DISCONNECTION/CONNECTION [SKYACTIV-G 2.0].)(See 01-17A-13 NEGATIVE BATTERY CABLE DISCONNECTION/CONNECTION [SKYACTIV-G 2.0 (WITHOUT i-stop)].)(See 01-17B-9 NEGATIVE BATTERY CABLE DISCONNECTION/CONNECTION [SKYACTIV-D 2.2].) • Switch the ignition ON (engine off or on). • Clear the DTC for the SAS control module using the M-MDS. (See 08-02-10 CLEARING DTC.) • Perform the DTC inspection for the SAS control module using the M-MDS. (See 08-02-7 DTC INSPECTION.) • Are the same DTCs present?	Yes	Go to the next step.
		No	Replace the passenger-side pre-tensioner seat belt. (See 08-11-2 FRONT SEAT BELT REMOVAL/INSTALLATION.) Then go to the next step.

ON-BOARD DIAGNOSTIC

Step	Inspection		Action
6	**PERFORM SAS CONTROL MODULE DTC INSPECTION** • Switch the ignition to off. • Disconnect the negative battery cable and wait for **1min or more**. (See 01-17A-11 NEGATIVE BATTERY CABLE DISCONNECTION/CONNECTION [SKYACTIV-G 2.0].)(See 01-17A-13 NEGATIVE BATTERY CABLE DISCONNECTION/CONNECTION [SKYACTIV-G 2.0 (WITHOUT i-stop)].)(See 01-17B-9 NEGATIVE BATTERY CABLE DISCONNECTION/CONNECTION [SKYACTIV-D 2.2].) • Disconnect the **SST (Fuel and thermometer checker)** or the **2 ohms** resistance. • Connect the passenger-side pre-tensioner seat belt connector. • Connect the negative battery cable. (See 01-17A-11 NEGATIVE BATTERY CABLE DISCONNECTION/CONNECTION [SKYACTIV-G 2.0].)(See 01-17A-13 NEGATIVE BATTERY CABLE DISCONNECTION/CONNECTION [SKYACTIV-G 2.0 (WITHOUT i-stop)].)(See 01-17B-9 NEGATIVE BATTERY CABLE DISCONNECTION/CONNECTION [SKYACTIV-D 2.2].) • Switch the ignition ON (engine off or on). • Clear the DTC for the SAS control module using the M-MDS. (See 08-02-10 CLEARING DTC.) • Perform the DTC inspection for the SAS control module using the M-MDS. (See 08-02-7 DTC INSPECTION.) • Are the same DTCs present?	Yes	Replace the SAS control module. (See 08-10-20 SAS CONTROL MODULE REMOVAL/INSTALLATION.)
		No	DTC troubleshooting completed.

08

ON-BOARD DIAGNOSTIC

DTC B1417:11/B1417:13/B1417:87/B1417:96

id080200880700

System malfunction location	• **B1417:11: Passenger-side crash zone sensor circuit short to body ground** • **B1417:13: Passenger-side crash zone sensor circuit open circuit or short to power supply** • **B1417:87: Signal reception error from passenger-side crash zone sensor** • **B1417:96: Passenger-side crash zone sensor internal malfunction**
Detection condition	**Warning** • **Detection conditions are for understanding the DTC outline before performing an inspection. Performing an inspection according to only the detection conditions may cause injury due to an operating error, or damage the system. When performing an inspection, always follow the inspection procedure.** • Wiring harness between the passenger-side crash zone sensor and SAS control module has a malfunction • Passenger-side crash zone sensor has a malfunction
Fail-safe	—
Possible cause	• Passenger-side crash zone sensor connector malfunction • Short circuit to power supply or body ground in the wiring harness between the passenger-side crash zone sensor and SAS control module • Open circuit in the wiring harness between the passenger-side crash zone sensor and SAS control module • Passenger-side crash zone sensor malfunction • SAS control module malfunction

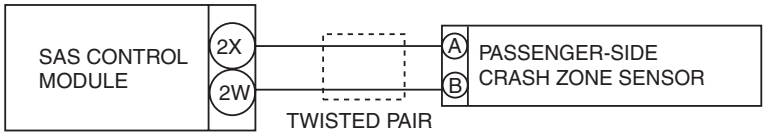

SAS CONTROL MODULE WIRING HARNESS-SIDE CONNECTOR

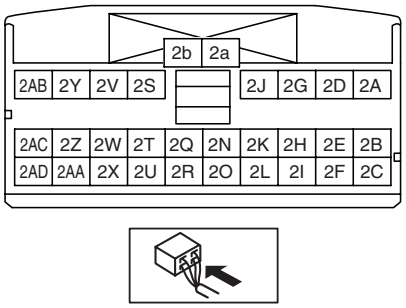

PASSENGER-SIDE CRASH ZONE SENSOR WIRING HARNESS-SIDE CONNECTOR

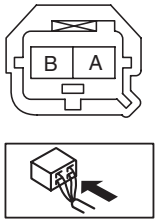

ON-BOARD DIAGNOSTIC

Diagnostic Procedure

Step	Inspection		Action
1	**INSPECT PASSENGER-SIDE CRASH ZONE SENSOR CONNECTOR** **Warning** • **Handling the component parts improperly can accidentally operate (deploy) the air bag module, which may seriously injure you. Read the service warnings/cautions and the workshop manual before handling the air bag system components. (See 08-10-3 AIR BAG SYSTEM SERVICE WARNINGS.) (See 08-10-5 AIR BAG SYSTEM SERVICE CAUTIONS.)** • Switch the ignition to off. • Disconnect the negative battery cable and wait for **1 min or more**. (See 01-17A-11 NEGATIVE BATTERY CABLE DISCONNECTION/CONNECTION [SKYACTIV-G 2.0].)(See 01-17A-13 NEGATIVE BATTERY CABLE DISCONNECTION/CONNECTION [SKYACTIV-G 2.0 (WITHOUT i-stop)].)(See 01-17B-9 NEGATIVE BATTERY CABLE DISCONNECTION/CONNECTION [SKYACTIV-D 2.2].) • Remove the front bumper. (See 09-10-10 FRONT BUMPER REMOVAL/INSTALLATION.) • Disconnect the passenger-side crash zone sensor connector. (See 08-10-19 CRASH ZONE SENSOR REMOVAL/INSTALLATION.) • Inspect the passenger-side crash zone sensor connector. (Corrosion, damage, and disconnected pins) • Is there any malfunction of the passenger-side crash zone sensor connector?	Yes	Replace the malfunctioning part, then go to Step 5.
		No	Go to the next step.

ON-BOARD DIAGNOSTIC

Step	Inspection		Action
2	**INSPECT PASSENGER-SIDE CRASH ZONE SENSOR CIRCUIT FOR SHORT TO GROUND** • Remove the column cover. (See 09-17-25 COLUMN COVER REMOVAL/ INSTALLATION.) • Disconnect the clock spring connector. (See 08-10-24 CLOCK SPRING REMOVAL/ INSTALLATION.) • Remove the glove compartment. (See 09-17-30 GLOVE COMPARTMENT REMOVAL/ INSTALLATION.) • Disconnect the passenger-side air bag module connector. (See 08-10-10 PASSENGER-SIDE AIR BAG MODULE REMOVAL/INSTALLATION.) • Disconnect the driver and passenger-side front seat connector. (See 09-13-4 FRONT SEAT REMOVAL/INSTALLATION.) • Remove the headliner. (See 09-17-94 HEADLINER REMOVAL/INSTALLATION.) • Disconnect the driver and passenger-side curtain air bag module connector. (See 08-10-15 CURTAIN AIR BAG MODULE REMOVAL/INSTALLATION.) • Remove the B-pillar lower trim. (See 09-17-57 B-PILLAR LOWER TRIM REMOVAL/ INSTALLATION.) • Disconnect the driver and passenger-side pre-tensioner seat belt connector. (See 08-11-2 FRONT SEAT BELT REMOVAL/ INSTALLATION.) • Remove the rear console. (See 09-17-45 REAR CONSOLE REMOVAL/ INSTALLATION.) • Disconnect the all SAS control module connectors. (See 08-10-20 SAS CONTROL MODULE REMOVAL/INSTALLATION.) • Inspect for continuity between the following terminals (wiring harness-side) and body ground: — SAS control module terminal 2X — SAS control module terminal 2W **Note** • Inspect for continuity while shaking the wiring harness between the SAS control module and passenger-side crash zone sensor. • Is there continuity?	Yes	Replace the wiring harness for a possible short to ground, then go to Step 5.
		No	Go to the next step.

ON-BOARD DIAGNOSTIC

Step	Inspection		Action
3	**INSPECT PASSENGER-SIDE CRASH ZONE SENSOR CIRCUIT FOR OPEN CIRCUIT** • Passenger-side crash zone sensor and SAS control module connectors are disconnected. • Inspect for continuity between the following terminals (wiring harness-side): — Passenger-side crash zone sensor terminal A—SAS control module terminal 2X — Passenger-side crash zone sensor terminal B—SAS control module terminal 2W **Note** • Inspect for continuity while shaking the wiring harness between the SAS control module and passenger-side crash zone sensor. • Is there continuity?	Yes	Go to the next step.
		No	Replace the wiring harness for a possible open circuit, then go to Step 5.
4	**INSPECT PASSENGER-SIDE CRASH ZONE SENSOR CIRCUIT FOR SHORT TO POWER SUPPLY** • Passenger-side crash zone sensor and SAS control module connectors are disconnected. • Connect the negative battery cable. (See 01-17A-11 NEGATIVE BATTERY CABLE DISCONNECTION/CONNECTION [SKYACTIV-G 2.0].)(See 01-17A-13 NEGATIVE BATTERY CABLE DISCONNECTION/CONNECTION [SKYACTIV-G 2.0 (WITHOUT i-stop)].)(See 01-17B-9 NEGATIVE BATTERY CABLE DISCONNECTION/CONNECTION [SKYACTIV-D 2.2].) • Switch the ignition ON (engine off or on). • Measure the voltage at the following terminals (wiring harness-side): — SAS control module terminal 2X — SAS control module terminal 2W **Note** • Measure the voltage while shaking the wiring harness between the SAS control module and passenger-side crash zone sensor. • Is the voltage **0V**?	Yes	Replace the passenger-side crash zone sensor, then go to the next step. (See 08-10-19 CRASH ZONE SENSOR REMOVAL/INSTALLATION.)
		No	Replace the wiring harness for a possible short to power supply, then go to the next step.

ON-BOARD DIAGNOSTIC

Step	Inspection		Action
5	**PERFORM SAS CONTROL MODULE DTC INSPECTION** • Switch the ignition to off. • Disconnect the negative battery cable and wait for **1min or more**. (See 01-17A-11 NEGATIVE BATTERY CABLE DISCONNECTION/CONNECTION [SKYACTIV-G 2.0].)(See 01-17A-13 NEGATIVE BATTERY CABLE DISCONNECTION/CONNECTION [SKYACTIV-G 2.0 (WITHOUT i-stop)].)(See 01-17B-9 NEGATIVE BATTERY CABLE DISCONNECTION/CONNECTION [SKYACTIV-D 2.2].) • Connect the SAS control module connectors. • Reconnect all disconnected connectors. • Connect the negative battery cable. (See 01-17A-11 NEGATIVE BATTERY CABLE DISCONNECTION/CONNECTION [SKYACTIV-G 2.0].)(See 01-17A-13 NEGATIVE BATTERY CABLE DISCONNECTION/CONNECTION [SKYACTIV-G 2.0 (WITHOUT i-stop)].)(See 01-17B-9 NEGATIVE BATTERY CABLE DISCONNECTION/CONNECTION [SKYACTIV-D 2.2].) • Switch the ignition ON (engine off or on). • Clear the DTC for the SAS control module using the M-MDS. (See 08-02-10 CLEARING DTC.) • Perform the DTC inspection for the SAS control module using the M-MDS. (See 08-02-7 DTC INSPECTION.) • Are the same DTCs present?	Yes	Replace the SAS control module. (See 08-10-20 SAS CONTROL MODULE REMOVAL/INSTALLATION.)
		No	DTC troubleshooting completed.

ON-BOARD DIAGNOSTIC

DTC C0061:29/C0062:29/C0063:29/P0666:29

id080200890200

System malfunction location	• **C0061:29: Low-G sensor (lateral-G) in SAS control module (internal circuit disabled)** • **C0062:29: Low-G sensor (forward-G) in SAS control module (internal circuit disabled)** • **C0063:29: Yaw rate sensor in SAS control module (internal circuit disabled)** • **P0666:29: Temperature sensor in SAS control module (internal circuit disabled)**
Detection condition	**Warning** • **Detection conditions are for understanding the DTC outline before performing an inspection. Performing an inspection according to only the detection conditions may cause injury due to an operating error, or damage the system. When performing an inspection, always follow the inspection procedure.** • SAS control module internal sensor has a malfunction
Fail-safe	—
Possible cause	• SAS control module malfunction
System wiring diagram	—

Diagnostic Procedure

STEP	INSPECTION		ACTION
1	**PERFORM SAS CONTROL MODULE DTC INSPECTION** • Clear the DTC for the SAS control module using the M-MDS. (See 08-02-10 CLEARING DTC.) • Perform the DTC inspection for the SAS control module using the M-MDS. (See 08-02-7 DTC INSPECTION.) • Are the same DTCs present?	Yes	Replace the SAS control module. (See 08-10-20 SAS CONTROL MODULE REMOVAL/INSTALLATION.)
		No	DTC troubleshooting completed.

ON-BOARD DIAGNOSTIC

DTC U0028:88

id080200847600

System malfunction location	• **DSC HU/CM communication fault**
Detection condition	**Warning** • **Detection conditions are for understanding the DTC outline before performing an inspection. Performing an inspection according to only the detection conditions may cause injury due to an operating error, or damage the system. When performing an inspection, always follow the inspection procedure.** • Communication error between SAS control module and DSC HU/CM
Fail-safe	—
Possible cause	• DSC HU/CM connector malfunction • SAS control module connector malfunction • Short circuit to power supply or body ground in wiring harness between SAS control module and DSC HU/CM • Open circuit in wiring harness between SAS control module and DSC HU/CM • DSC HU/CM connector malfunction • SAS control module malfunction

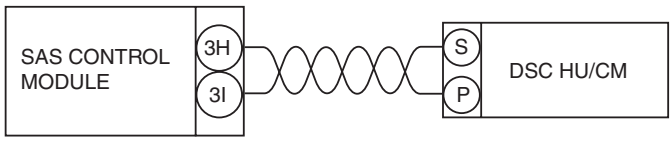

SAS CONTROL MODULE WIRING HARNESS-SIDE CONNECTOR

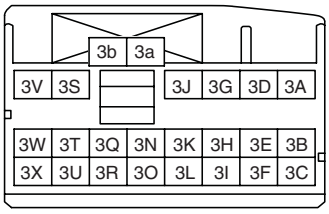

DSC HU/CM WIRING HARNESS-SIDE CONNECTOR

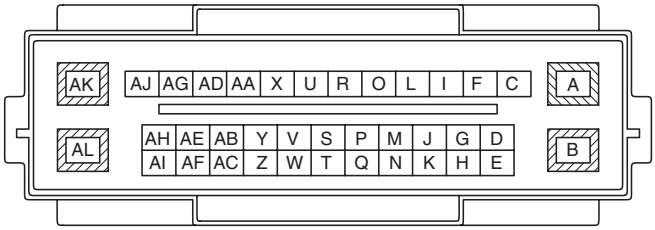

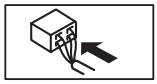

Diagnostic Procedure

STEP	INSPECTION		ACTION
1	**INSPECT DSC HU/CM CONNECTOR** • Switch the ignition to off. • Disconnect the negative battery cable and wait for **1 min or more**. (See 01-17A-11 NEGATIVE BATTERY CABLE DISCONNECTION/CONNECTION [SKYACTIV-G 2.0].)(See 01-17A-13 NEGATIVE BATTERY CABLE DISCONNECTION/CONNECTION [SKYACTIV-G 2.0 (WITHOUT i-stop)].)(See 01-17B-9 NEGATIVE BATTERY CABLE DISCONNECTION/CONNECTION [SKYACTIV-D 2.2].) • Disconnect the DSC HU/CM connector. (See 04-15-4 DSC HU/CM REMOVAL/INSTALLATION.) • Inspect the DSC HU/CM connector terminals for poor connection (such as damaged/pulled-out pins, and corrosion). • Is there any malfunction?	Yes	Replace the terminal, then go to next step.
		No	Go to the next step.

ON-BOARD DIAGNOSTIC

STEP	INSPECTION		ACTION
2	**INSPECT SAS CONTROL MODULE CONNECTOR** **Warning** • **Handling the component parts improperly can accidentally operate (deploy) the air bag module, which may seriously injure you. Read the service warnings/cautions and the workshop manual before handling the air bag system components. (See 08-10-3 AIR BAG SYSTEM SERVICE WARNINGS.) (See 08-10-5 AIR BAG SYSTEM SERVICE CAUTIONS.)** • Disconnect the clock spring connector. (See 08-10-24 CLOCK SPRING REMOVAL/INSTALLATION.) • Remove the glove compartment. (See 09-17-30 GLOVE COMPARTMENT REMOVAL/INSTALLATION.) • Disconnect the passenger-side air bag module connector. (See 08-10-10 PASSENGER-SIDE AIR BAG MODULE REMOVAL/INSTALLATION.) • Disconnect the driver and passenger-side front seat connector. (See 09-13-4 FRONT SEAT REMOVAL/INSTALLATION.) • Remove the headliner. (See 09-17-94 HEADLINER REMOVAL/INSTALLATION.) • Disconnect the driver and passenger-side curtain air bag module connectors. (See 08-10-15 CURTAIN AIR BAG MODULE REMOVAL/INSTALLATION.) • Remove the B-pillar lower trim. (See 09-17-57 B-PILLAR LOWER TRIM REMOVAL/INSTALLATION.) • Disconnect the driver and passenger-side pre-tensioner seat belt connectors. (See 08-11-2 FRONT SEAT BELT REMOVAL/INSTALLATION.) • Remove the rear console. (See 09-17-45 REAR CONSOLE REMOVAL/INSTALLATION.) • Disconnect the all SAS control module connectors. (See 08-10-20 SAS CONTROL MODULE REMOVAL/INSTALLATION.) • Inspect the SAS control module connector terminal for poor connection (such as damaged/pulled-out pins, and corrosion). • Is there any malfunction?	Yes	Replace the terminal, then go to next step.
		No	Go to the next step.
3	**INSPECT DSC HU/CM CIRCUIT FOR SHORT TO GROUND** • DSC HU/CM and SAS control module connectors are disconnected. • Inspect for continuity between the following terminals (wiring harness-side) and body ground: — SAS control module terminal 3H — SAS control module terminal 3I **Note** • Inspect for continuity while shaking the wiring harness between the SAS control module and DSC HU/CM. • Is there continuity?	Yes	Replace the wiring harness for a possible short to ground, then go to Step 6.
		No	Go to the next step.

ON-BOARD DIAGNOSTIC

STEP	INSPECTION		ACTION
4	**INSPECT DSC HU/CM CIRCUIT FOR OPEN CIRCUIT** • DSC HU/CM and SAS control module connectors are disconnected. • Inspect for continuity between the following terminals (wiring harness-side): — DSC HU/CM terminal S—SAS control module terminal 3H — DSC HU/CM terminal P—SAS control module terminal 3I **Note** • Inspect for continuity while shaking the wiring harness between the SAS control module and DSC HU/CM. • Is there continuity?	Yes	Go to the next step.
		No	Replace the wiring harness for a possible open circuit, then go to Step 6.
5	**INSPECT DSC HU/CM CIRCUIT FOR SHORT TO POWER SUPPLY** • DSC HU/CM and SAS control module connectors are disconnected. • Connect the negative battery cable. (See 01-17A-11 NEGATIVE BATTERY CABLE DISCONNECTION/CONNECTION [SKYACTIV-G 2.0].)(See 01-17A-13 NEGATIVE BATTERY CABLE DISCONNECTION/CONNECTION [SKYACTIV-G 2.0 (WITHOUT i-stop)].)(See 01-17B-9 NEGATIVE BATTERY CABLE DISCONNECTION/CONNECTION [SKYACTIV-D 2.2].) • Switch the ignition ON (engine off or on). • Measure the voltage at the following terminals (wiring harness-side): — SAS control module terminal 3H — SAS control module terminal 3I **Note** • Measure the voltage while shaking the wiring harness between the SAS control module and DSC HU/CM. • Is the voltage **0V**?	Yes	Replace the DSC HU/CM, then go to the next step. (See 04-15-4 DSC HU/CM REMOVAL/INSTALLATION.)
		No	Replace the wiring harness for a possible short to power supply, then go to the next step.

ON-BOARD DIAGNOSTIC

STEP	INSPECTION		ACTION
6	**PERFORM SAS CONTROL MODULE DTC INSPECTION** • Switch the ignition to off. • Disconnect the negative battery cable and wait for **1min or more**. (See 01-17A-11 NEGATIVE BATTERY CABLE DISCONNECTION/CONNECTION [SKYACTIV-G 2.0].)(See 01-17A-13 NEGATIVE BATTERY CABLE DISCONNECTION/CONNECTION [SKYACTIV-G 2.0 (WITHOUT i-stop)].)(See 01-17B-9 NEGATIVE BATTERY CABLE DISCONNECTION/CONNECTION [SKYACTIV-D 2.2].) • Connect the SAS control module connectors. • Reconnect all disconnected connectors. • Connect the negative battery cable. (See 01-17A-11 NEGATIVE BATTERY CABLE DISCONNECTION/CONNECTION [SKYACTIV-G 2.0].)(See 01-17A-13 NEGATIVE BATTERY CABLE DISCONNECTION/CONNECTION [SKYACTIV-G 2.0 (WITHOUT i-stop)].)(See 01-17B-9 NEGATIVE BATTERY CABLE DISCONNECTION/CONNECTION [SKYACTIV-D 2.2].) • Switch the ignition ON (engine off or on). • Clear the DTC for the SAS control module using the M-MDS. (See 08-02-10 CLEARING DTC.) • Perform the DTC inspection for the SAS control module using the M-MDS. (See 08-02-7 DTC INSPECTION.) • Are the same DTCs present?	Yes	Replace the SAS control module. (See 08-10-20 SAS CONTROL MODULE REMOVAL/INSTALLATION.)
		No	DTC troubleshooting completed.

ON-BOARD DIAGNOSTIC

DTC U0300:00/U2100:00

id080200823000

System malfunction location	• **U0300:00: Configuration setting invalid** • **U2100:00: Configuration not set**
Detection condition	**Warning** • **Detection conditions are for understanding the DTC outline before performing an inspection. Performing an inspection according to only the detection conditions may cause injury due to an operating error, or damage the system. When performing an inspection, always follow the inspection procedure.** • SAS control module configuration setting has not been done correctly
Fail-safe	—
Possible cause	• SAS control module configuration setting not implemented • SAS control module configuration setting invalid • SAS control module malfunction
System wiring diagram	—

Diagnostic Procedure

Step	Inspection		Action
1	**PERFORM SAS CONTROL MODULE CONFIGURATION (AS-BUILT DATA USE)** • Perform the SAS control module configuration using the M-MDS. (See 08-10-22 SAS CONTROL MODULE CONFIGURATION (USING AS-BUILT DATA).) • Clear the DTC for the SAS control module using the M-MDS. (See 08-02-10 CLEARING DTC.) • Perform the DTC inspection for the SAS control module using the M-MDS. (See 08-02-7 DTC INSPECTION.) • Are the same DTCs present?	Yes	Go to the next step.
		No	DTC troubleshooting completed.
2	**PERFORM SAS CONTROL MODULE DTC INSPECTION** • Clear the DTC for the SAS control module using the M-MDS. (See 08-02-10 CLEARING DTC.) • Perform the DTC inspection for the SAS control module using the M-MDS. (See 08-02-7 DTC INSPECTION.) • Are the same DTCs present?	Yes	Replace the SAS control module. (See 08-10-20 SAS CONTROL MODULE REMOVAL/INSTALLATION.)
		No	DTC troubleshooting completed.

ON-BOARD DIAGNOSTIC

DTC U2005:68

id080200881500

System malfunction location	**PCM communication error (vehicle speed signal)**
Detection condition	• The SAS control module receives vehicle speed signal error from the PCM for **5 s or more** with the ignition switched ON (engine off or on).
Fail-safe	—
Possible cause	• PCM malfunction • SAS control module malfunction
System wiring diagram	—

Diagnostic Procedure

Step	Inspection		Action
1	**VERIFY SAS CONTROL MODULE DTCs AGAIN** • Clear SAS control module DTCs using the M-MDS. (See 08-02-10 CLEARING DTC.) • Switch the ignition ON (engine off or on) and wait for **5 s or more**. • Perform the SAS control module DTC inspection using the M-MDS. (See 08-02-7 DTC INSPECTION.) • Is the DTC U2005:68 displayed?	Yes	Go to the next step.
		No	Go to Step 5.
2	**VERIFY PCM DTCs** • Perform the DTC inspection for the PCM using the M-MDS. (See 01-02-8 ON-BOARD DIAGNOSTIC TEST [SKYACTIV-G 2.0].) • Is the DTC displayed?	Yes	Repair the malfunctioning part according to the applicable DTC troubleshooting. (See 01-02-14 DTC TABLE [SKYACTIV-G 2.0].)
		No	Go to the next step.
3	**PERFORM DTC INSPECTION AND VERIFY IF MALFUNCTIONING PART IS PCM** • Clear SAS control module DTCs using the M-MDS. (See 08-02-10 CLEARING DTC.) • Switch the ignition ON (engine off or on) and wait for **5 s or more**. • Perform the SAS control module DTC inspection using the M-MDS. (See 08-02-7 DTC INSPECTION.) • Is the DTC U2005:68 displayed?	Yes	Replace the PCM, then go to the next step. (See 01-40-10 PCM REMOVAL/INSTALLATION [SKYACTIV-G 2.0].)
		No	Go to Step 5.
4	**VERIFY THAT REPAIRS HAVE BEEN COMPLETED** • Clear SAS control module DTCs using the M-MDS. (See 08-02-10 CLEARING DTC.) • Switch the ignition ON (engine off or on) and wait for **5 s or more**. • Perform the SAS control module DTC inspection using the M-MDS. (See 08-02-7 DTC INSPECTION.) • Is the DTC U2005:68 displayed?	Yes	Replace the SAS control module, then go to the next step. (See 08-10-20 SAS CONTROL MODULE REMOVAL/INSTALLATION.)
		No	Go to the next step.
5	**VERIFY IF OTHER DTCs DISPLAYED** • Are any other DTCs displayed?	Yes	Repair the malfunctioning part according to the applicable DTC troubleshooting.
		No	DTC troubleshooting completed.

ON-BOARD DIAGNOSTIC

DTC U3000:49

id080200824800

System malfunction location	• **SAS control module internal malfunction**
Detection condition	**Warning** • **Detection conditions are for understanding the DTC outline before performing an inspection. Performing an inspection according to only the detection conditions may cause injury due to an operating error, or damage the system. When performing an inspection, always follow the inspection procedure.** • SAS control module internal circuit has a malfunction
Fail-safe	—
Possible cause	• SAS control module malfunction
System wiring diagram	—

Diagnostic Procedure

ACTION
• Replace the SAS control module. (See SAS CONTROL MODULE REMOVAL/INSTALLATION.)

DTC U3003:16/U3003:17

id080200823200

System malfunction location	• **U3003:16: SAS control module power supply voltage decreases (less than 8 V)** • **U3003:17: SAS control module power supply voltage increases (18 V or more)**
Detection condition	**Warning** • **Detection conditions are for understanding the DTC outline before performing an inspection. Performing an inspection according to only the detection conditions may cause injury due to an operating error, or damage the system. When performing an inspection, always follow the inspection procedure.** • SAS control module power supply voltage is other than **8–17.9 V**
Fail-safe	—
Possible cause	• Battery malfunction • SRS1 7.5 A fuse malfunction • Open circuit or short to body ground in wiring harness between ignition switch and SAS control module • Open circuit in the wiring harness between the SAS control module and body ground • SAS control module malfunction

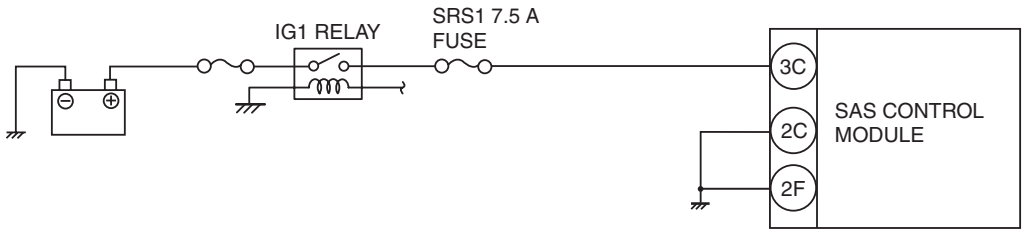

SAS CONTROL MODULE WIRING HARNESS-SIDE CONNECTOR

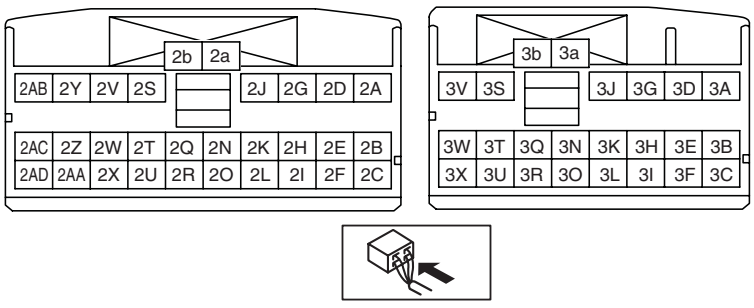

ON-BOARD DIAGNOSTIC

Diagnostic Procedure

Step	Inspection		Action
1	**BATTERY INSPECTION** • Refer to the battery inspection and inspect the battery. (See 01-17A-7 BATTERY INSPECTION [SKYACTIV-G 2.0].) (See 01-17A-8 BATTERY INSPECTION [SKYACTIV-G 2.0 (WITHOUT i-stop)].) (See 01-17B-6 BATTERY INSPECTION [SKYACTIV-D 2.2].) • Is the battery normal?	Yes	Go to the next step.
		No	Replace or charge the battery. (See 01-17A-3 BATTERY REMOVAL/INSTALLATION [SKYACTIV-G 2.0].) (See 01-17A-9 BATTERY RECHARGING [SKYACTIV-G 2.0].) (See 01-17A-10 BATTERY RECHARGING [SKYACTIV-G 2.0 (WITHOUT i-stop)].) (See 01-17B-3 BATTERY REMOVAL/INSTALLATION [SKYACTIV-D 2.2].) (See 01-17B-8 BATTERY RECHARGING [SKYACTIV-D 2.2].) Then go to Step 5.
2	**FUSE INSPECTION** • Switch the ignition to off. • Disconnect the negative battery cable and wait **1 min or more**. (See 01-17A-11 NEGATIVE BATTERY CABLE DISCONNECTION/CONNECTION [SKYACTIV-G 2.0].)(See 01-17A-13 NEGATIVE BATTERY CABLE DISCONNECTION/CONNECTION [SKYACTIV-G 2.0 (WITHOUT i-stop)].)(See 01-17B-9 NEGATIVE BATTERY CABLE DISCONNECTION/CONNECTION [SKYACTIV-D 2.2].) • Remove the SRS1 7.5 A fuse. • Is the fuse normal?	Yes	Go to the next step.
		No	Replace the SRS1 7.5 A fuse. Then go to Step 5.

ON-BOARD DIAGNOSTIC

Step	Inspection		Action
3	**INSPECT WIRING HARNESS BETWEEN SAS CONTROL MODULE AND IG1 RELAY** **Warning** • **Handling the component parts improperly can accidentally operate (deploy) the air bag module, which may seriously injure you. Read the service warnings/cautions and the workshop manual before handling the air bag system components. (See 08-10-3 AIR BAG SYSTEM SERVICE WARNINGS.) (See 08-10-5 AIR BAG SYSTEM SERVICE CAUTIONS.)** • Install the SRS1 7.5 A fuse. • Remove the column cover. (See 09-17-25 COLUMN COVER REMOVAL/INSTALLATION.) • Disconnect the clock spring connector. (See 08-10-24 CLOCK SPRING REMOVAL/INSTALLATION.) • Remove the glove compartment. (See 09-17-30 GLOVE COMPARTMENT REMOVAL/INSTALLATION.) • Disconnect the passenger-side air bag module connector. (See 08-10-10 PASSENGER-SIDE AIR BAG MODULE REMOVAL/INSTALLATION.) • Disconnect the driver and passenger-side front seat connector. (See 09-13-4 FRONT SEAT REMOVAL/INSTALLATION.) • Remove the headliner. (See 09-17-94 HEADLINER REMOVAL/INSTALLATION.) • Disconnect the driver and passenger-side curtain air bag module connectors. (See 08-10-15 CURTAIN AIR BAG MODULE REMOVAL/INSTALLATION.) • Remove the B-pillar lower trim. (See 09-17-57 B-PILLAR LOWER TRIM REMOVAL/INSTALLATION.) • Disconnect the driver and passenger-side pre-tensioner seat belt connectors. (See 08-11-2 FRONT SEAT BELT REMOVAL/INSTALLATION.) • Remove the rear console. (See 09-17-45 REAR CONSOLE REMOVAL/INSTALLATION.) • Disconnect the all SAS control module connectors. (See 08-10-20 SAS CONTROL MODULE REMOVAL/INSTALLATION.) • Connect the negative battery cable. (See 01-17A-11 NEGATIVE BATTERY CABLE DISCONNECTION/CONNECTION [SKYACTIV-G 2.0].)(See 01-17A-13 NEGATIVE BATTERY CABLE DISCONNECTION/CONNECTION [SKYACTIV-G 2.0 (WITHOUT i-stop)].)(See 01-17B-9 NEGATIVE BATTERY CABLE DISCONNECTION/CONNECTION [SKYACTIV-D 2.2].) • Switch the ignition ON (engine off or on). • Measure the voltage of SAS control module terminal 3C (wiring harness-side). **Note** • Measure the voltage while shaking the wiring harness between the SAS control module and IG1 relay. • Is the voltage between **8–17.9 V**?	Yes	Go to the next step.
		No	Replace the wiring harness between the SAS control module and IG1 relay. Then go to Step 5.

ON-BOARD DIAGNOSTIC

Step	Inspection		Action
4	**INSPECT SAS CONTROL MODULE CIRCUIT FOR OPEN CIRCUIT** • SAS control module connectors are disconnected. • Switch the ignition to off. • Disconnect the negative battery cable and wait **1 min or more**. (See 01-17A-11 NEGATIVE BATTERY CABLE DISCONNECTION/CONNECTION [SKYACTIV-G 2.0].)(See 01-17A-13 NEGATIVE BATTERY CABLE DISCONNECTION/CONNECTION [SKYACTIV-G 2.0 (WITHOUT i-stop)].)(See 01-17B-9 NEGATIVE BATTERY CABLE DISCONNECTION/CONNECTION [SKYACTIV-D 2.2].) • Inspect the wiring harness between SAS control module connector terminal 2C, 2F (wiring harness-side) and body ground. **Note** • Inspect for continuity while shaking the wiring harness between the SAS control module and body ground. • Is there continuity?	Yes	Go to the next step.
		No	Replace the wiring harness for a possible open circuit, then go the next step.
5	**PERFORM SAS CONTROL MODULE DTC INSPECTION** • Connect the SAS control module connectors. • Reconnect all disconnected connectors. • Connect the negative battery cable. (See 01-17A-11 NEGATIVE BATTERY CABLE DISCONNECTION/CONNECTION [SKYACTIV-G 2.0].)(See 01-17A-13 NEGATIVE BATTERY CABLE DISCONNECTION/CONNECTION [SKYACTIV-G 2.0 (WITHOUT i-stop)].)(See 01-17B-9 NEGATIVE BATTERY CABLE DISCONNECTION/CONNECTION [SKYACTIV-D 2.2].) • Switch the ignition ON (engine off or on). • Clear the DTC for the SAS control module using the M-MDS. (See 08-02-10 CLEARING DTC.) • Perform the DTC inspection for the SAS control module using the M-MDS. (See 08-02-7 DTC INSPECTION.) • Are the same DTCs present?	Yes	Replace the SAS control module. (See 08-10-20 SAS CONTROL MODULE REMOVAL/INSTALLATION.)
		No	DTC troubleshooting completed.

ON-BOARD DIAGNOSTIC

PID/DATA MONITOR INSPECTION

id080200080800

1. Connect the M-MDS to the DLC-2.
2. After the vehicle is identified, select the following items from the initialization screen of the M-MDS.
   (1) Select “DataLogger”.
   (2) Select “Modules”.
   (3) Select “RCM”.
3. Select the applicable PID from the PID table.
4. Verify the PID data according to the directions on the screen.

Note

- The PID data screen function is used for monitoring the calculated value of input/output signals in the module. Therefore, if the monitored value of the output parts is not within the specification, it is necessary to inspect the monitored value of input parts corresponding to the applicable output part control. In addition, because the system does not display an output part malfunction as an abnormality in the monitored value, it is necessary to inspect the output parts individually.

PID/DATA MONITOR TABLE

id080200081000

PID name (definition)	Unit/ Operation	Operation Status (Reference)
AB_WL (Air bag system warning light status)	Lamp_Off/ Lamp_On/ Plant_Mode/ Unknown	• Air bag system warning light off: Lamp_Off • Air bag system warning light on: Lamp_On • Air bag system warning light status: Plant_Mode • Air bag system warning light status: Unknown
P_SEAT_M_S (Occupancy sensor)	Off/On	• Not occupant seated in passenger-side front seat: Off • Occupant seated in passenger-side front seat: On
PAD_SW_FLT (PAD switch malfunction status)	O.K./FAULT	• PAD switch is normal: O.K. • PAD switch is abnormal: FAULT
RES_C_AB_D (Driver-side curtain air bag module resistance nominal)	ohm	Continuous: 0.81–6.42 ohms
RES_C_AB_P (Passenger-side curtain air bag module resistance nominal)	ohm	Continuous: 0.81–6.42 ohms
RES_F_AB1_D (Driver-side air bag module resistance nominal)	ohm	Continuous: 0.99–6.42 ohms
RES_F_AB1_P (Passenger-side air bag module resistance nominal)	ohm	Continuous: 0.81–6.42 ohms
RES_PCD_BAR (Poorly connected detector bar terminals resistance nominal (all of SAS control module connectors))	ohm	• Normal connected: 100 ohms or less • Poor connected: 20 kilohms or more
RES_S_AB_D (Driver-side side air bag module resistance nominal)	ohm	Continuous: 0.81–9.85 ohms
RES_S_AB_P (Passenger-side side air bag module resistance nominal)	ohm	Continuous: 0.81–9.85 ohms
RES_SB_P_D (Driver-side pre-tensioner seat belt resistance nominal)	ohm	Continuous: 0.81–6.42 ohms
RES_SB_P_P (Passenger-side pre-tensioner seat belt resistance nominal)	ohm	Continuous: 0.81–6.42 ohms
SEAT_B_D (Driver-side buckle switch status)	Unbuckled/ Buckled	• Driver-side front seat belt fastened (Driver-side buckle switch off): Buckled • Driver-side front seat belt not fastened (Driver-side buckle switch on): Unbuckled

ON-BOARD DIAGNOSTIC

PID name (definition)	Unit/ Operation	Operation Status (Reference)	
SEAT_B_P (Passenger-side buckle switch status)	Unbuckled/ Buckled	Occupant seated in passenger-side front seat: On	• Passenger-side front seat belt fastened (Passenger-side buckle switch off): Buckled • Passenger-side front seat belt not fastened (Passenger-side buckle switch on): Unbuckled
VPWR_IGA (SAS control module power voltage)	V	Ignition switch is at ON: approx. 12 V	

08-03 SYMPTOM TROUBLESHOOTING

AIR BAG SYSTEM WIRING DIAGRAM (SYMPTOM TROUBLESHOOTING) . . . 08-03–2
FOREWORD 08-03–4
Troubleshooting Procedure 08-03–4
Action for non-repeatable malfunction. 08-03–5
TROUBLESHOOTING INDEX. 08-03–5
NO.1 AIR BAG SYSTEM WARNING LIGHT DOES NOT ILLUMINATE 08-03–6
Diagnostic Procedure 08-03–6
NO.2 AIR BAG SYSTEM WARNING LIGHT ILLUMINATES CONSTANTLY 08-03–7
System Wiring Diagram 08-03–7
Diagnostic Procedure 08-03–7

SYMPTOM TROUBLESHOOTING

AIR BAG SYSTEM WIRING DIAGRAM (SYMPTOM TROUBLESHOOTING)

id080300805300

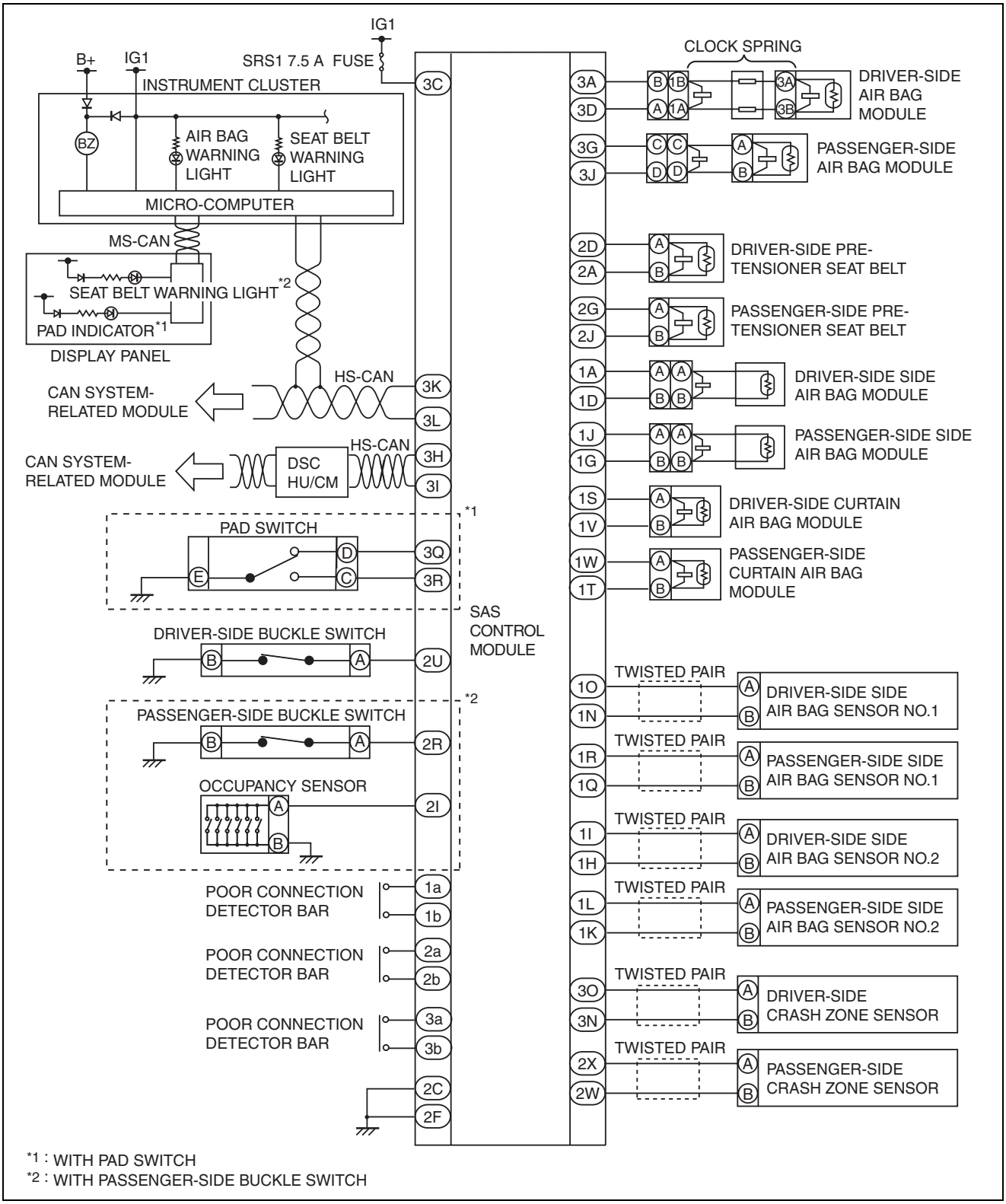

ac5wzw0000278

SYMPTOM TROUBLESHOOTING

SAS CONTROL MODULE
HARNESS-SIDE CONNECTOR

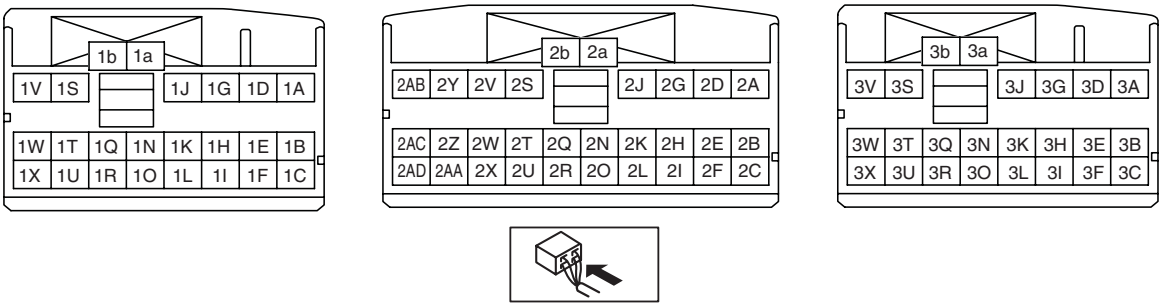

am3zzw0001108

08

SYMPTOM TROUBLESHOOTING

FOREWORD

id080300803000

- If there is any vehicle malfunction complaint lodged by a customer, perform malfunction diagnosis according to the troubleshooting procedure.

Troubleshooting Procedure

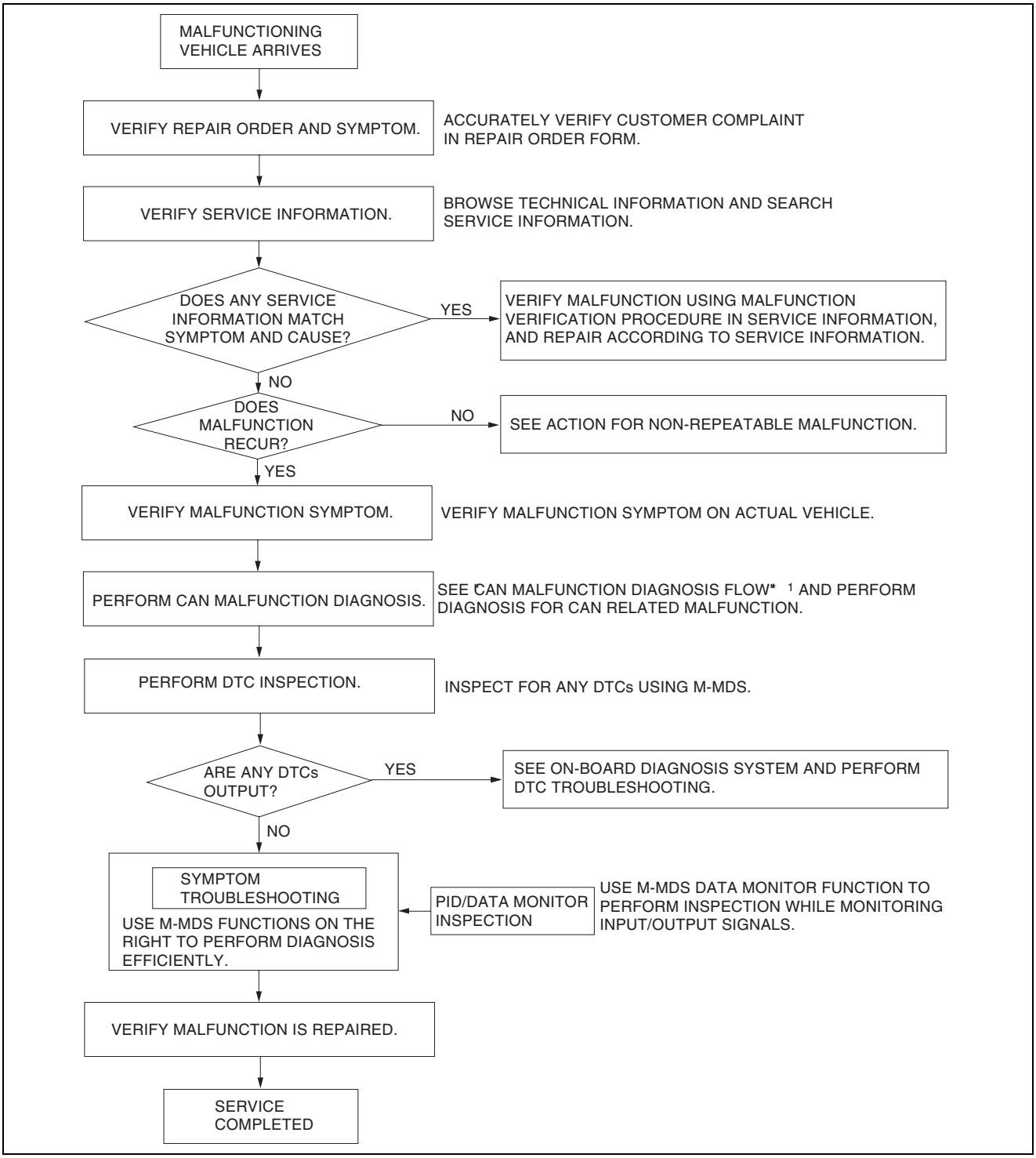

am3zzw0001144

*1 : 10-02A-3 CONTROLLER AREA NETWORK (CAN) MALFUNCTION DIAGNOSIS FLOW [SKYACTIV-G 2.0 (L.H.D.)], 10-02B-3 CONTROLLER AREA NETWORK (CAN) MALFUNCTION DIAGNOSIS FLOW [SKYACTIV-G 2.0 (R.H.D.)], 10-02C-3 CONTROLLER AREA NETWORK (CAN) MALFUNCTION DIAGNOSIS FLOW [SKYACTIV-D 2.2 (L.H.D.)], 10-02D-3 CONTROLLER AREA NETWORK (CAN) MALFUNCTION DIAGNOSIS FLOW [SKYACTIV-D 2.2 (R.H.D.)]

SYMPTOM TROUBLESHOOTING

Action for non-repeatable malfunction

- If the malfunction does not recur, verify the malfunction cause by performing the following actions:
  - — Verify that a DTC has been recorded in the memory.
  - — Based on the repair order form, attempt to drive the vehicle or perform tests to replicate the malfunction, record the data (such as CAN circuit voltage) at that time, and detect the malfunction cause.
  - — Refer to [Determining Open Circuit Location] based on the recorded DTC, shake the wiring harness or connector of the electrical component which is suspected to be the cause of the malfunction, and inspect for any changes in CAN system voltage or occurrence of any DTCs.

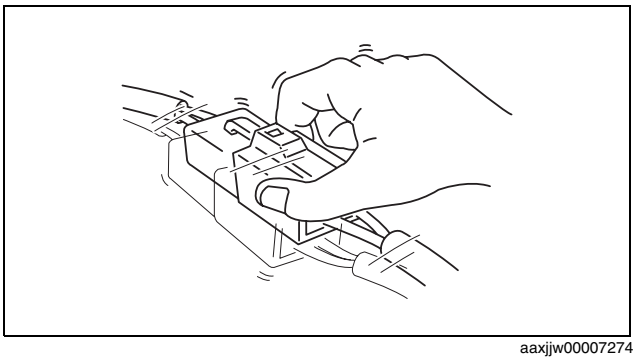

aaxjjw00007274

  - — Inspect the female terminals on the connector of the electric component which is suspected to be the cause of the malfunction for poor connection.

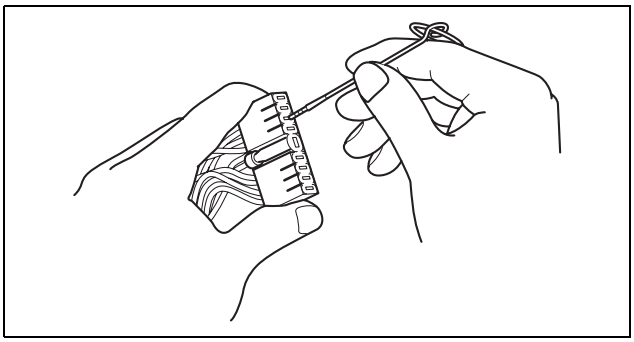

am3zzw0001144

TROUBLESHOOTING INDEX

id080300802000

- Use the chart below verify the symptoms of the trouble in order to diagnose the appropriate area.

No.	Troubleshooting item	Description	Page
1	Air bag system warning light does not illuminate.	Air bag system warning light does not illuminate while the air bag system is performing initialization.	(See 08-03-6 NO.1 AIR BAG SYSTEM WARNING LIGHT DOES NOT ILLUMINATE)
2	Air bag system warning light illuminates constantly.	Air bag system warning light is illuminated constantly and remains illuminated after 6 s have elapsed.	(See 08-03-7 NO.2 AIR BAG SYSTEM WARNING LIGHT ILLUMINATES CONSTANTLY)

SYMPTOM TROUBLESHOOTING

NO.1 AIR BAG SYSTEM WARNING LIGHT DOES NOT ILLUMINATE

id080300800200

1	**Air bag system warning light does not illuminate.**
DETECTION CONDITION	Air bag system warning light does not illuminate while the air bag system is performing initialization.
POSSIBLE CAUSE	• Air bag system warning light circuit malfunction • Air bag system warning light (LED) malfunction • Instrument cluster malfunction • Communication error between SAS control module and instrument cluster • SAS control module malfunction

Diagnostic Procedure

STEP	INSPECTION		ACTION
1	**INSPECT OTHER WARNING AND INDICATOR LIGHTS CIRCUIT IN INSTRUMENT CLUSTER** • Switch the ignition ON (engine off or on). • Do other warning and indicator lights illuminate?	Yes	Go to the next step.
		No	Inspect the instrument cluster power supply system and ground system, then go to Step 3.
2	**INSPECT DTCS IN SAS CONTROL MODULE** • Inspect the DTC for the SAS control module on-board diagnostic system. • Have DTCs been recorded in memory?	Yes	Perform the applicable DTC inspection. (See 08-02-11 DTC TABLE.) Go to the next step.
		No	Go to the next step.
3	**VERIFY WHERE MALFUNCTION IS IN WARNING LIGHTS INDICATION CIRCUIT OR ELSEWHERE** • Turn on all warning lights and indicator lights using the instrument cluster PID WL+IL of simulation function using the M-MDS. (See 09-02G-38 ACTIVE COMMAND MODES INSPECTION [INSTRUMENT CLUSTER].) • Do other waning and indicator lights illuminate?	Yes	Go to the next step.
		No	Replace the instrument cluster. (See 09-22-6 INSTRUMENT CLUSTER REMOVAL/INSTALLATION.) Then go to Step 5.
4	**INSPECT DTCS IN INSTRUMENT CLUSTER** • Inspect the DTC for the instrument cluster on-board diagnostic system. (See 09-02G-7 DTC INSPECTION [INSTRUMENT CLUSTER].) • Have DTCs been recorded in memory?	Yes	Perform the applicable DTC inspection, then go to Step 8. (See 09-02G-10 DTC TABLE [INSTRUMENT CLUSTER].)
		No	Go to the next step.
5	**CONFIRM THAT MALFUNCTION SYMPTOMS DO NOT RECUR AFTER REPAIR** • Switch the ignition ON (engine off or on). • Does the air bag system warning light operate properly?	Yes	Verify that there are no DTCs in the memory. If there are no DTCs, the troubleshooting is completed.
		No	Recheck malfunction symptoms, then repeat from Step 1 if malfunction recurs.

SYMPTOM TROUBLESHOOTING

NO.2 AIR BAG SYSTEM WARNING LIGHT ILLUMINATES CONSTANTLY

id080300800300

2	Air bag system warning light illuminates constantly
DETECTION CONDITION	Air bag system warning light is illuminated constantly and remains illuminated after 6 s have elapsed.
POSSIBLE CAUSE	• Weak battery • SAS control module malfunction • SAS control module connectors are poorly connected • Instrument cluster malfunction • Instrument cluster connector is poorly connected • Open circuit in wiring harness between instrument cluster and SAS control module

System Wiring Diagram

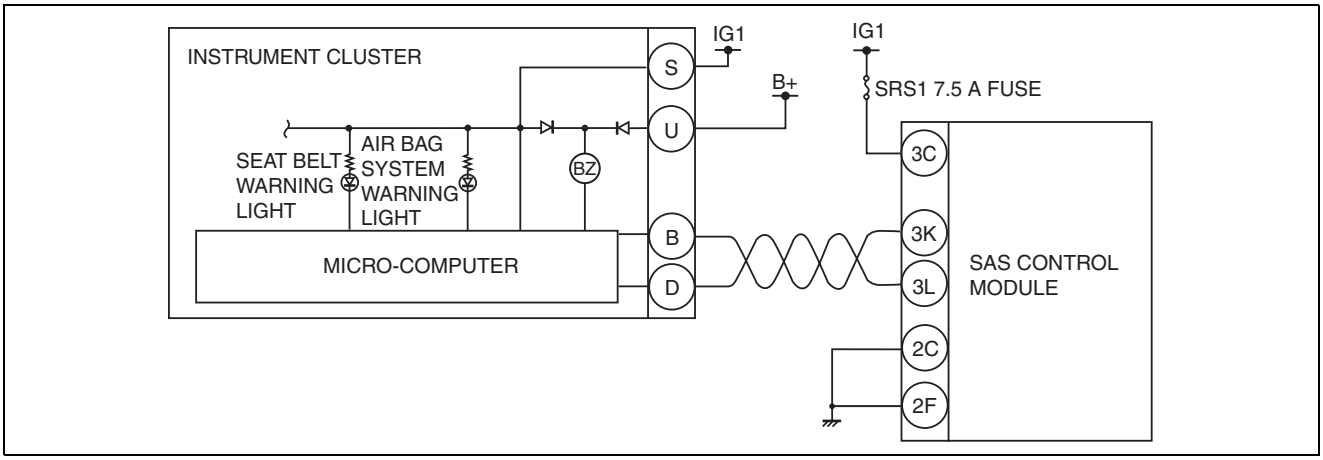

ac5wzw0000156

Diagnostic Procedure

STEP	INSPECTION		ACTION
1	**INSPECT BATTERY** • Measure the voltage of battery. • Is the voltage **8 V or more**?	Yes	Go to the next step.
		No	Battery is weak. Inspect charge/discharge system, then go to Step 8. (See 01-17A-7 BATTERY INSPECTION [SKYACTIV-G 2.0].) (See 01-17A-8 BATTERY INSPECTION [SKYACTIV-G 2.0 (WITHOUT i-stop)].) (See 01-17B-6 BATTERY INSPECTION [SKYACTIV-D 2.2].)

08

SYMPTOM TROUBLESHOOTING

STEP	INSPECTION		ACTION
2	**VERIFY THAT SAS CONTROL MODULE CONNECTOR IS CONNECTED** **Warning** • **Handling the air bag system components improperly can accidentally deploy the air bag modules and pre-tensioner seat belts, which may seriously injure you. Read the air bag system service warnings and cautions before handling the air bag system components. (See 08-10-3 AIR BAG SYSTEM SERVICE WARNINGS.) (See 08-10-5 AIR BAG SYSTEM SERVICE CAUTIONS.)** • Switch the ignition to off. • Disconnect the negative battery cable and wait for **1 min or more**. (See 01-17A-11 NEGATIVE BATTERY CABLE DISCONNECTION/CONNECTION [SKYACTIV-G 2.0].)(See 01-17A-13 NEGATIVE BATTERY CABLE DISCONNECTION/CONNECTION [SKYACTIV-G 2.0 (WITHOUT i-stop)].)(See 01-17B-9 NEGATIVE BATTERY CABLE DISCONNECTION/CONNECTION [SKYACTIV-D 2.2].) • Remove the rear console. (See 09-17-45 REAR CONSOLE REMOVAL/INSTALLATION.) • Are all SAS control module connectors securely connected?	Yes	Go to the next step.
		No	Reconnect the connector properly, then go to Step 8.
3	**INSPECT DTCS IN SAS CONTROL MODULE** • Connect the negative battery cable. (See 01-17A-11 NEGATIVE BATTERY CABLE DISCONNECTION/CONNECTION [SKYACTIV-G 2.0].)(See 01-17A-13 NEGATIVE BATTERY CABLE DISCONNECTION/CONNECTION [SKYACTIV-G 2.0 (WITHOUT i-stop)].)(See 01-17B-9 NEGATIVE BATTERY CABLE DISCONNECTION/CONNECTION [SKYACTIV-D 2.2].) • Inspect the DTC for the SAS control module on-board diagnostic system. (See 08-02-7 DTC INSPECTION.) • Have DTCs been recorded in memory?	Yes	Perform the applicable DTC inspection, then go to Step 8. (See 08-02-11 DTC TABLE.)
		No	Go to the next step.
4	**INSPECT DTCS IN INSTRUMENT CLUSTER** • Inspect the DTC for the instrument cluster on-board diagnostic system. (See 09-02G-7 DTC INSPECTION [INSTRUMENT CLUSTER].) • Have DTCs been recorded in memory?	Yes	Perform the applicable DTC inspection, then go to Step 8. (See 09-02G-10 DTC TABLE [INSTRUMENT CLUSTER].)
		No	Go to the next step.
5	**VERIFY WHERE MALFUNCTION IS IN WARNING LIGHTS INDICATION CIRCUIT OR ELSEWHERE** • Turn on all warning lights and indicator lights using the instrument cluster PID WL+IL of simulation function using the M-MDS. (See 09-02G-38 ACTIVE COMMAND MODES INSPECTION [INSTRUMENT CLUSTER].) • Do other warning and indicator lights illuminate?	Yes	Go to the next step.
		No	Repair the instrument cluster. (See 09-22-6 INSTRUMENT CLUSTER REMOVAL/INSTALLATION.) Then go to Step 8.

SYMPTOM TROUBLESHOOTING

STEP	INSPECTION		ACTION
6	**INSPECT POWER SUPPLY CIRCUIT OF SAS CONTROL MODULE (TERMINAL 3C)** **Warning** • **Handling the component parts improperly can accidentally operate (deploy) the air bag module, which may seriously injure you. Read the service warnings/cautions and the workshop manual before handling the air bag system components. (See 08-10-3 AIR BAG SYSTEM SERVICE WARNINGS.) (See 08-10-5 AIR BAG SYSTEM SERVICE CAUTIONS.)** • Switch the ignition to off. • Disconnect the negative battery cable and wait for **1 min or more**. (See 01-17A-11 NEGATIVE BATTERY CABLE DISCONNECTION/CONNECTION [SKYACTIV-G 2.0].)(See 01-17A-13 NEGATIVE BATTERY CABLE DISCONNECTION/CONNECTION [SKYACTIV-G 2.0 (WITHOUT i-stop)].)(See 01-17B-9 NEGATIVE BATTERY CABLE DISCONNECTION/CONNECTION [SKYACTIV-D 2.2].) • Remove the column cover. (See 09-17-25 COLUMN COVER REMOVAL/INSTALLATION.) • Disconnect the clock spring connector. (See 08-10-24 CLOCK SPRING REMOVAL/INSTALLATION.) • Remove the glove compartment. (See 09-17-30 GLOVE COMPARTMENT REMOVAL/INSTALLATION.) • Disconnect the passenger-side air bag module connector. (See 08-10-10 PASSENGER-SIDE AIR BAG MODULE REMOVAL/INSTALLATION.) • Disconnect the driver and passenger-side front seat connector. (See 09-13-4 FRONT SEAT REMOVAL/INSTALLATION.) • Remove the headliner. (See 09-17-94 HEADLINER REMOVAL/INSTALLATION.) • Disconnect the driver and passenger-side curtain air bag module connectors. (See 08-10-15 CURTAIN AIR BAG MODULE REMOVAL/INSTALLATION.) • Remove the B-pillar lower trim. (See 09-17-57 B-PILLAR LOWER TRIM REMOVAL/INSTALLATION.) • Disconnect the driver and passenger-side pre-tensioner seat belt connectors. (See 08-11-2 FRONT SEAT BELT REMOVAL/INSTALLATION.) • Disconnect all SAS control module connectors. (See 08-10-20 SAS CONTROL MODULE REMOVAL/INSTALLATION.) • Connect the negative battery cable. (See 01-17A-11 NEGATIVE BATTERY CABLE DISCONNECTION/CONNECTION [SKYACTIV-G 2.0].)(See 01-17A-13 NEGATIVE BATTERY CABLE DISCONNECTION/CONNECTION [SKYACTIV-G 2.0 (WITHOUT i-stop)].)(See 01-17B-9 NEGATIVE BATTERY CABLE DISCONNECTION/CONNECTION [SKYACTIV-D 2.2].) • Switch the ignition ON (engine off or on). • Measure the voltage at SAS control module at wiring harness-side connector terminal 3C. • Is the voltage **8 V—16 V**?	Yes	Go to the next step.
		No	Repair the wiring harnesses, then go to Step 8.

SYMPTOM TROUBLESHOOTING

STEP	INSPECTION		ACTION
7	**VERIFY THAT SAS CONTROL MODULE CONNECTOR TERMINAL 2C, 2F IS GROUND** • SAS control module connector disconnected. • Switch the ignition to off. • Disconnect the negative battery cable and wait for **1 min or more**. (See 01-17A-11 NEGATIVE BATTERY CABLE DISCONNECTION/CONNECTION [SKYACTIV-G 2.0].)(See 01-17A-13 NEGATIVE BATTERY CABLE DISCONNECTION/CONNECTION [SKYACTIV-G 2.0 (WITHOUT i-stop)].)(See 01-17B-9 NEGATIVE BATTERY CABLE DISCONNECTION/CONNECTION [SKYACTIV-D 2.2].) • Inspect for continuity between the following terminals (wiring harness-side): — SAS control module terminal 2C—body ground — SAS control module terminal 2F—body ground **Note** • Inspect for continuity while shaking the wiring harness between the SAS control module and body ground. • Is there continuity?	Yes	Replace the SAS control module, then go to the next step. (See 08-10-20 SAS CONTROL MODULE REMOVAL/ INSTALLATION.)
		No	Replace the wiring harnesses, then go to the next step.
8	**CONFIRM THAT MALFUNCTION SYMPTOMS DO NOT RECUR AFTER REPAIR** • Connect the SAS control module connectors. • Reconnect all disconnected connectors. • Connect the negative battery cable. (See 01-17A-11 NEGATIVE BATTERY CABLE DISCONNECTION/CONNECTION [SKYACTIV-G 2.0].)(See 01-17A-13 NEGATIVE BATTERY CABLE DISCONNECTION/CONNECTION [SKYACTIV-G 2.0 (WITHOUT i-stop)].)(See 01-17B-9 NEGATIVE BATTERY CABLE DISCONNECTION/CONNECTION [SKYACTIV-D 2.2].) • Switch the ignition ON (engine off or on). • Does the air bag system warning light illuminate for **approx. 6 s** and turn off?	Yes	Complete troubleshooting, then explain repairs to customer.
		No	Recheck malfunction symptoms, then repeat from Step 1 if malfunction recurs.

08-10 AIR BAG SYSTEM

AIR BAG SYSTEM
LOCATION INDEX **08-10–2**
AIR BAG SYSTEM
SERVICE WARNINGS **08-10–3**
Air Bag Module Inspection **08-10–3**
Air Bag Module Handling **08-10–3**
Side Air Bag Module Handling **08-10–4**
SAS Control Module Handling **08-10–4**
Crash Zone Sensor Handling **08-10–4**
Side Air Bag Sensor Handling **08-10–5**
Pre-tensioner Seat Belt Inspection . . . **08-10–5**
AIR BAG SYSTEM
SERVICE CAUTIONS **08-10–5**
Air Bag System
Component Disassembly **08-10–5**
Air Bag Module,
Pre-tensioner Seat Belt Handling **08-10–5**
Air Bag Module,
Pre-tensioner Seat Belt Reuse **08-10–6**
Air Bag Wiring Harness Repair **08-10–6**
DRIVER-SIDE
AIR BAG MODULE
REMOVAL/INSTALLATION **08-10–6**
Removal **08-10–7**
Installation **08-10–9**
PASSENGER-SIDE
AIR BAG MODULE
REMOVAL/INSTALLATION **08-10–10**
Screw Installation Note **08-10–13**
SIDE AIR BAG MODULE
REMOVAL/INSTALLATION **08-10–14**
CURTAIN AIR BAG MODULE
REMOVAL/INSTALLATION **08-10–15**
Clip Removal Note **08-10–18**
CRASH ZONE SENSOR
REMOVAL/INSTALLATION **08-10–19**
Connector Disconnect Note **08-10–20**
SAS CONTROL MODULE
REMOVAL/INSTALLATION **08-10–20**
SAS CONTROL
MODULE CONFIGURATION
(USING READ/WRITE FUNCTION) . . . **08-10–21**
SAS CONTROL
MODULE CONFIGURATION
(USING AS-BUILT DATA) **08-10–22**
SIDE AIR BAG SENSOR NO. 1
REMOVAL/INSTALLATION **08-10–22**
Connector Disconnect Note **08-10–23**
SIDE AIR BAG SENSOR NO. 2
REMOVAL/INSTALLATION **08-10–23**
Connector Disconnect Note **08-10–24**
CLOCK SPRING
REMOVAL/INSTALLATION **08-10–24**
Clock Spring Installation Note **08-10–26**
CLOCK SPRING ADJUSTMENT **08-10–26**
CLOCK SPRING INSPECTION **08-10–28**
PASSENGER AIR BAG
DEACTIVATION (PAD) SWITCH
REMOVAL/INSTALLATION **08-10–30**
PASSENGER AIR BAG
DEACTIVATION (PAD)
SWITCH INSPECTION **08-10–30**
AIR BAG MODULE AND
PRE-TENSIONER SEAT BELT
DEPLOYMENT PROCEDURES **08-10–31**
Deployment Procedure for
Inside of Vehicle **08-10–31**
Driver-side Air Bag Module **08-10–31**
Passenger-side Air Bag Module **08-10–32**
Side Air Bag Module **08-10–33**
Curtain Air Bag Module **08-10–34**
Pre-tensioner Seat Belt **08-10–35**
Deployment Procedure for
Outside of Vehicle **08-10–36**
Driver-side Air Bag Module **08-10–36**
Passenger-side Air Bag Module **08-10–37**
Side Air Bag Module **08-10–39**
Curtain Air Bag Module **08-10–41**
Pre-tensioner Seat Belt **08-10–43**
AIR BAG MODULE AND
PRE-TENSIONER SEAT BELT
DISPOSAL PROCEDURES **08-10–44**
INSPECTION OF SST
(DEPLOYMENT TOOL) **08-10–45**
Inspection Procedure **08-10–45**

AIR BAG SYSTEM

AIR BAG SYSTEM LOCATION INDEX

id081000805300

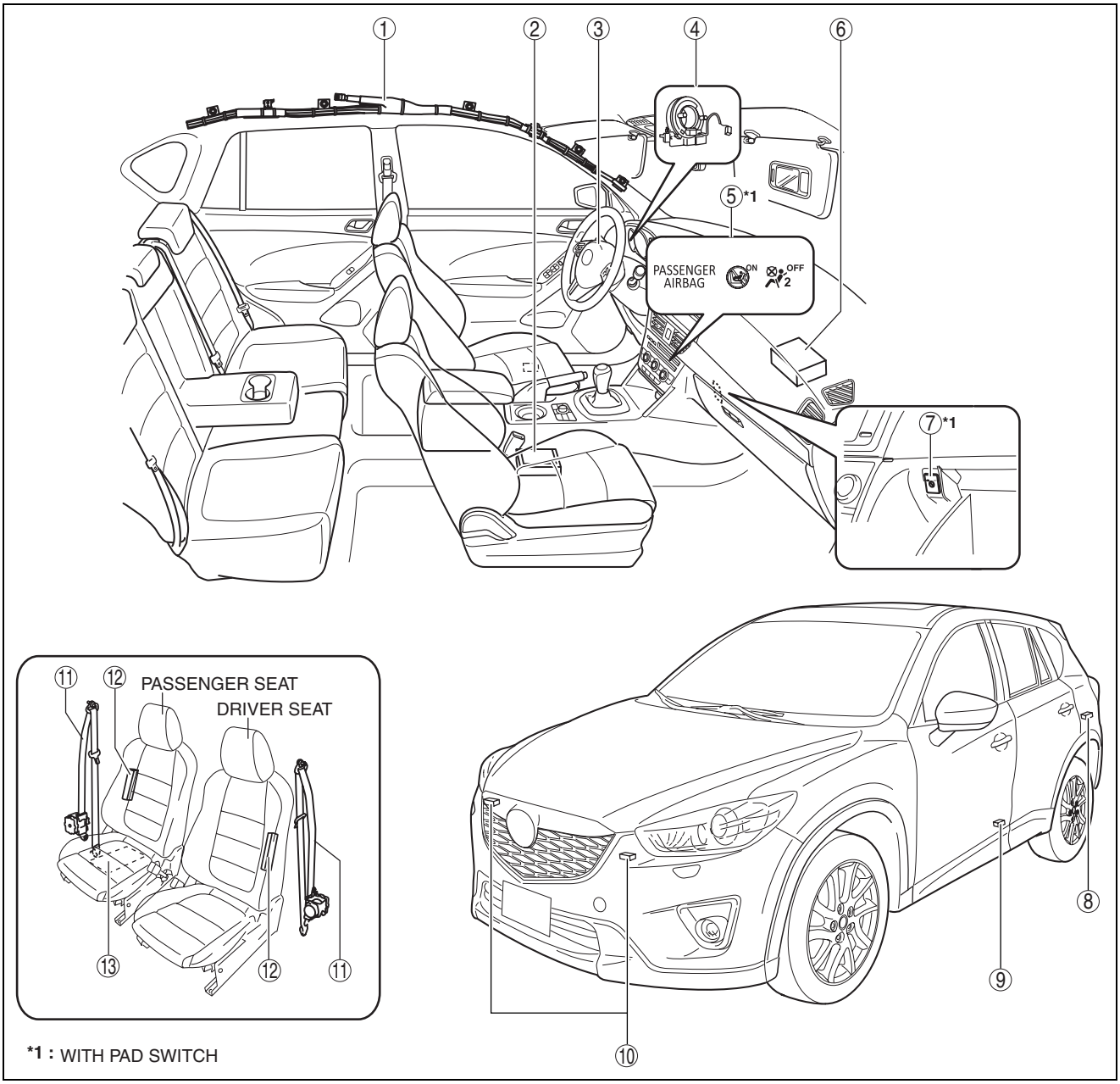

ac5wzw0000206

1	Curtain air bag module (See 08-10-15 CURTAIN AIR BAG MODULE REMOVAL/INSTALLATION.) (See 08-10-31 AIR BAG MODULE AND PRE-TENSIONER SEAT BELT DEPLOYMENT PROCEDURES.)
2	SAS control module (See 08-10-20 SAS CONTROL MODULE REMOVAL/INSTALLATION.) (See 08-10-21 SAS CONTROL MODULE CONFIGURATION (USING READ/WRITE FUNCTION).)
3	Driver-side air bag module (See 08-10-6 DRIVER-SIDE AIR BAG MODULE REMOVAL/INSTALLATION.) (See 08-10-31 AIR BAG MODULE AND PRE-TENSIONER SEAT BELT DEPLOYMENT PROCEDURES.)

4	Clock spring (See 08-10-24 CLOCK SPRING REMOVAL/INSTALLATION.) (See 08-10-28 CLOCK SPRING INSPECTION.) (See 08-10-26 CLOCK SPRING ADJUSTMENT.)
5	Passenger air bag deactivation (PAD) indicator (See 08-10-30 PASSENGER AIR BAG DEACTIVATION (PAD) SWITCH REMOVAL/INSTALLATION.)
6	Passenger-side air bag module (See 08-10-10 PASSENGER-SIDE AIR BAG MODULE REMOVAL/INSTALLATION.) (See 08-10-31 AIR BAG MODULE AND PRE-TENSIONER SEAT BELT DEPLOYMENT PROCEDURES.)

AIR BAG SYSTEM

7	Passenger air bag deactivation (PAD) switch (See 08-10-30 PASSENGER AIR BAG DEACTIVATION (PAD) SWITCH REMOVAL/INSTALLATION.) (See 08-10-30 PASSENGER AIR BAG DEACTIVATION (PAD) SWITCH INSPECTION.)
8	Side air bag sensor No.2 (See 08-10-23 SIDE AIR BAG SENSOR NO. 2 REMOVAL/INSTALLATION.)
9	Side air bag sensor No.1 (See 08-10-22 SIDE AIR BAG SENSOR NO. 1 REMOVAL/INSTALLATION.)
10	Crash zone sensor (See 08-10-19 CRASH ZONE SENSOR REMOVAL/INSTALLATION.)
11	Pre-tensioner seat belt (See 08-11-2 FRONT SEAT BELT REMOVAL/INSTALLATION.) (See 08-10-31 AIR BAG MODULE AND PRE-TENSIONER SEAT BELT DEPLOYMENT PROCEDURES.)
12	Side air bag module (See 08-10-14 SIDE AIR BAG MODULE REMOVAL/INSTALLATION.) (See 08-10-31 AIR BAG MODULE AND PRE-TENSIONER SEAT BELT DEPLOYMENT PROCEDURES.)
13	Occupancy sensor (See 09-13-55 OCCUPANCY SENSOR INSPECTION.)

AIR BAG SYSTEM SERVICE WARNINGS

id081000802400

Air Bag Module Inspection

- **Inspecting an air bag module using a tester can operate (deploy) the air bag module, which may cause serious injury. Do not use a tester to inspect an air bag module. Always use the on-board diagnostic function to diagnose the air bag module for malfunctions.**

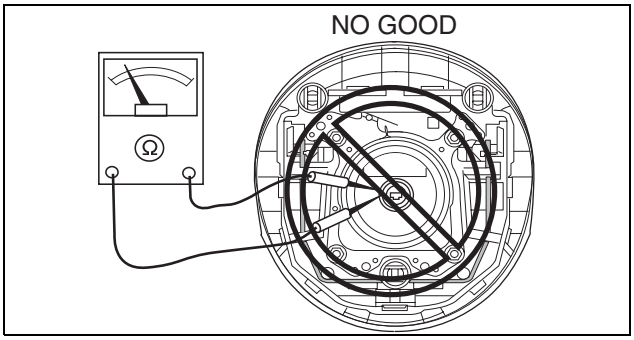

ac5wzw0000205

Air Bag Module Handling

- **Before removing the air bag module or disconnecting the air bag module connector, always switch the ignition to off, disconnect the negative battery cable, and then wait for 1 min or more to allow the backup power supply of the SAS control module to deplete its stored power.**
- **Handling a live (undeployed) air bag module that is pointed toward your body could result in serious injury if the air bag module were to accidentally operate (deploy). When carrying a live (undeployed) air bag module, point the deployment surface away from your body to lessen the chance of injury in case it operates (deploys).**

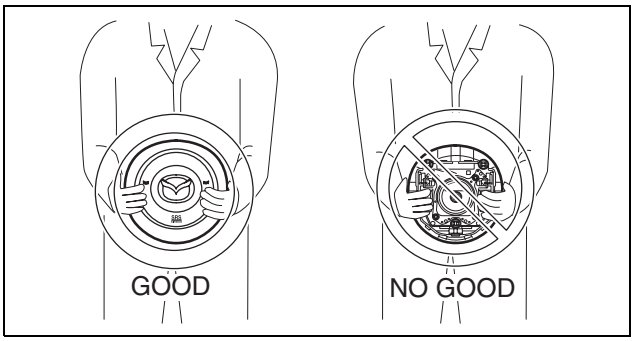

ac5wzw0000205

08

AIR BAG SYSTEM

- **A live (undeployed) air bag module placed with its deployment surface to ground is dangerous. If the air bag module were to accidentally operate (deploy), it could cause serious injury. Always place a live (undeployed) air bag module with its deployment surface up.**

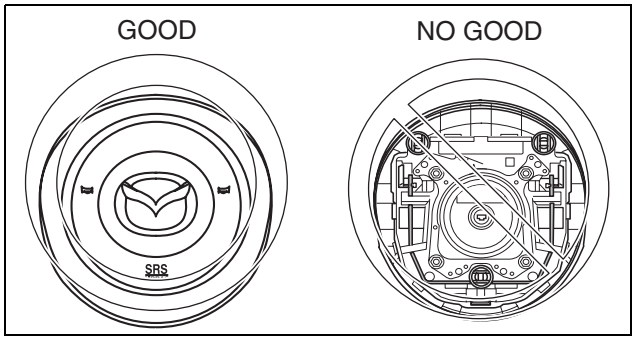

ac5wzw0000205

Side Air Bag Module Handling

- **When a side air bag module operates (deploys) due to a collision, the interior of the seat back (pad, frame, trim) may become damaged. If a side air bag does not operate (deploy) normally from a seat back that has been reused, a serious accident may result. After a side air bag has operated (deployed), always replace both the side air bag module and the seat back (pad, frame, trim) with new parts. After servicing, verify that the seat operates normally and that the wiring harness is not caught.**

SAS Control Module Handling

- **When connecting or disconnecting the SAS control module connector, a person charged with static electricity could accidentally operate (deploy) each air bag module. Before connecting or disconnecting the SAS control module connector, discharge any charged static electricity from your body.**
- **Removing the SAS control module or disconnecting the SAS control module connector with the ignition ON can activate the sensor in the SAS control module and operate (deploy) the air bags and pre-tensioner seat belts, which may cause serious injury. Before removing the SAS control module or disconnecting the SAS control module connector, always switch the ignition to off, disconnect the negative battery cable, and then wait for 1 min or more to allow the backup power supply of the SAS control module to deplete its stored power.**
- **Connecting the SAS control module connector with the SAS control module not securely fixed to the vehicle is dangerous. The sensor in the SAS control module could send an electrical signal to the air bag modules and pre-tensioner seat belts. This will operate (deploy) the air bags and pre-tensioner seat belts, which may result in serious injury. Therefore, before connecting the connector, securely fix the SAS control module to the vehicle.**
- **Because a sensor is built into the SAS control module, once the air bags and pre-tensioner seat belts have operated (deployed) due to a collision or other causes, the SAS control module must be replaced with a new one even if the used one does not have any visible external damage or deformation. The used SAS control module may have been damaged internally, which may cause improper operation. If the SAS control module is reused, the air bags and pre-tensioner seat belts may not operate (deploy) normally, which could result in a serious accident. Always replace the SAS control module with a new one. The SAS control module cannot be bench-checked or self-checked.**

Crash Zone Sensor Handling

- **Removing the crash zone sensor or disconnecting the crash zone sensor connector with the ignition ON can activate the crash zone sensor and operate (deploy) the air bags and pre-tensioner seat belts, which may cause serious injury. Before removing the crash zone sensor or disconnecting the crash zone sensor connector, always switch the ignition to off, disconnect the negative battery cable, and then wait for 1 min or more to allow the backup power supply of the SAS control module to deplete its stored power.**
- **If the crash zone sensor is subjected to shock or the sensor is disassembled, the air bags and pre-tensioner seat belts may accidentally operate (deploy) and cause injury, or the system may fail to operate normally and cause a serious accident. Do not subject the crash zone sensor to shock or disassemble the sensor.**
- **Because a sensor is built into the crash zone sensor, once the air bags and pre-tensioner seat belts have operated (deployed) due to a collision or other causes, the crash zone sensor must be replaced with a new one even if the used one does not have any visible external damage or deformation. If the crash zone sensor is reused, the air bags and pre-tensioner seat belts may not operate (deploy) normally, which could result in a serious accident. Always replace the crash zone sensor with a new one. The crash zone sensor cannot be bench-checked or self-checked.**

AIR BAG SYSTEM

Side Air Bag Sensor Handling

- **Removing the side air bag sensor or disconnecting the side air bag sensor connector with the ignition ON can activate the side air bag sensor and operate (deploy) the side air bag, which may cause serious injury. Before removing the side air bag sensor or disconnecting the side air bag sensor connector, always switch the ignition to off, disconnect the negative battery cable, and then wait for 1 min or more to allow the backup power supply of the SAS control module to deplete its stored power.**
- **If the side air bag sensor is subjected to shock or the sensor is disassembled, the side air bag may accidentally operate (deploy) and cause injury, or the system may fail to operate normally and cause a serious accident. Do not subject the side air bag sensor to shock or disassemble the sensor.**
- **Because a sensor is built into the side air bag sensor, once the air bag has operated (deployed) due to a collision or other causes, the side air bag sensor must be replaced with a new one even if the used one does not have any visible external damage or deformation. If the side air bag sensor is reused, the side air bag may not operate (deploy) normally, which could result in a serious accident. Always replace the side air bag sensor with a new one. The side air bag sensor cannot be bench-checked or self-checked.**

Pre-tensioner Seat Belt Inspection

- **Inspecting a pre-tensioner seat belt using a tester can operate (deploy) the pre-tensioner seat belt, which may cause serious injury. Do not use a tester to inspect a pre-tensioner seat belt. Always use the on-board diagnostic function to diagnose the pre-tensioner seat belt for malfunctions.**

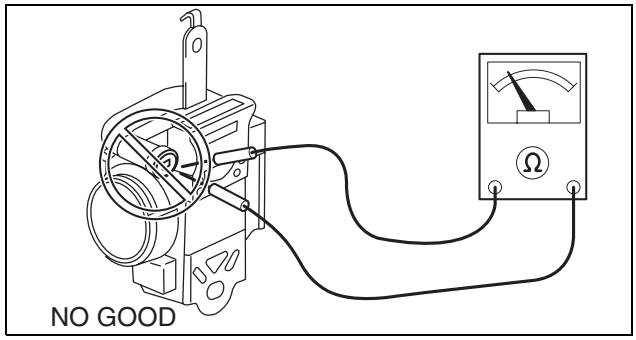

ac5wzw0000205

AIR BAG SYSTEM SERVICE CAUTIONS

id081000802300

Air Bag System Component Disassembly

- **Disassembling the air bag system components could cause it to not operate (deploy) normally. Never disassemble any air bag system components.**

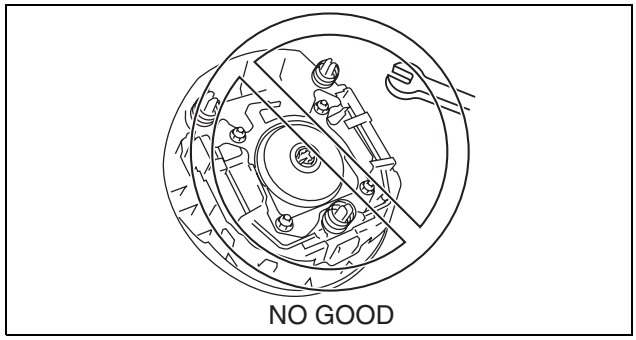

ac5wzw0000205

Air Bag Module, Pre-tensioner Seat Belt Handling

- **Oil, grease, or water on the air bag modules may cause the air bags to fail to operate (deploy) in an accident. Never allow oil, grease, or water to get on the air bag modules.**
- **Inserting a screwdriver or similar object into the connector of an air bag module or pre-tensioner seat belt may damage the connector and cause the air bag module or pre-tensioner seat belt to operate (deploy) improperly, which may cause serious injury. Never insert any foreign objects into the air bag module or pre-tensioner seat belts.**

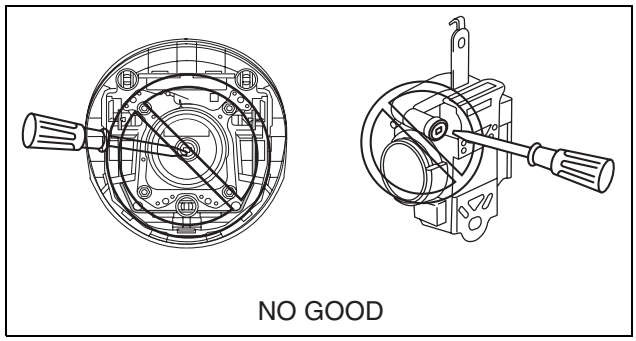

ac5wzw0000205

AIR BAG SYSTEM

Air Bag Module, Pre-tensioner Seat Belt Reuse

- **Even if an air bag module or a pre-tensioner seat belt does not operate (deploy) in a collision and does not have any external signs of damage, it may have been damaged internally, which may cause improper operation. Before reusing a live (undeployed) air bag module and the pre-tensioner seat belts, always use the on-board diagnostic to diagnose the air bag module and the pre-tensioner seat belts to verify that they have no malfunction.**

Air Bag Wiring Harness Repair

- **Incorrectly repairing an air bag wiring harness can accidentally operate (deploy) the air bag module and pre-tensioner seat belts. If a problem is found in the air bag wiring harness, always replace the wiring harness with a new one.**

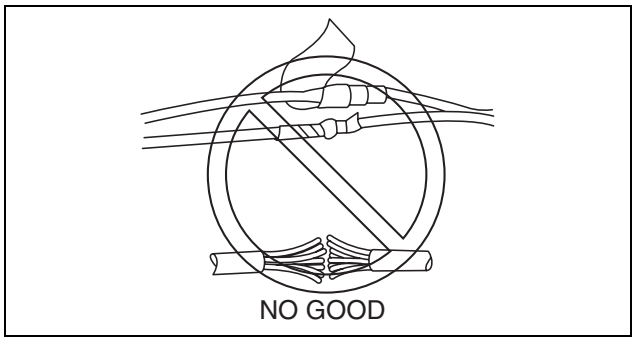

am6zzw0000094

DRIVER-SIDE AIR BAG MODULE REMOVAL/INSTALLATION

id081000801300

Warning

- **Handling the air bag module improperly can accidentally deploy the air bag module, which may seriously injure you. Read the air bag system service warnings and cautions before handling the air bag module. (See 08-10-3 AIR BAG SYSTEM SERVICE WARNINGS.) (See 08-10-5 AIR BAG SYSTEM SERVICE CAUTIONS.)**

Note

- The driver-side air bag module is installed to the steering wheel by engaging the tab.

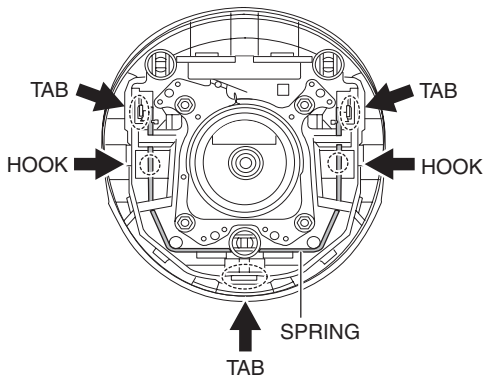

DRIVER-SIDE AIR BAG MODULE SIDE

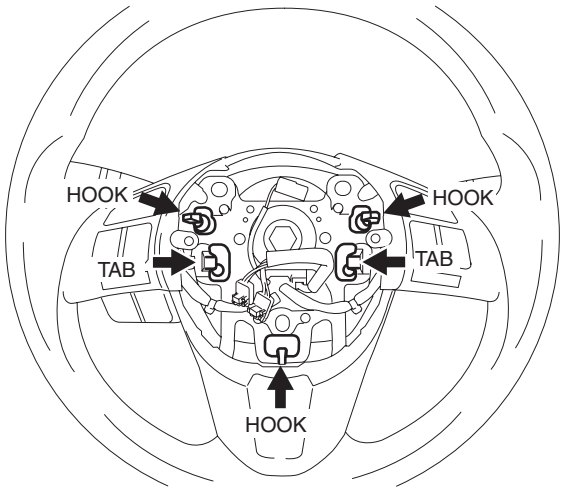

STEERING WHEEL SIDE

ac5wzw0000202

AIR BAG SYSTEM

Removal

Note
- If the ignition is switched off from ON (engine off or on) with the driver's door open, the steering lock operation can be temporarily released.

1. Switch the ignition to off.
2. Disconnect the negative battery cable and wait for **1 min or more**. (See 01-17A-11 NEGATIVE BATTERY CABLE DISCONNECTION/CONNECTION [SKYACTIV-G 2.0].)(See 01-17A-13 NEGATIVE BATTERY CABLE DISCONNECTION/CONNECTION [SKYACTIV-G 2.0 (WITHOUT i-stop)].)(See 01-17B-9 NEGATIVE BATTERY CABLE DISCONNECTION/CONNECTION [SKYACTIV-D 2.2].)
3. Rotate the steering wheel to the position shown in the figure, insert the tool from the service hole, and press the tab to release it.
   Recommended tool
   - TORX driver (T30 (diam. 6))

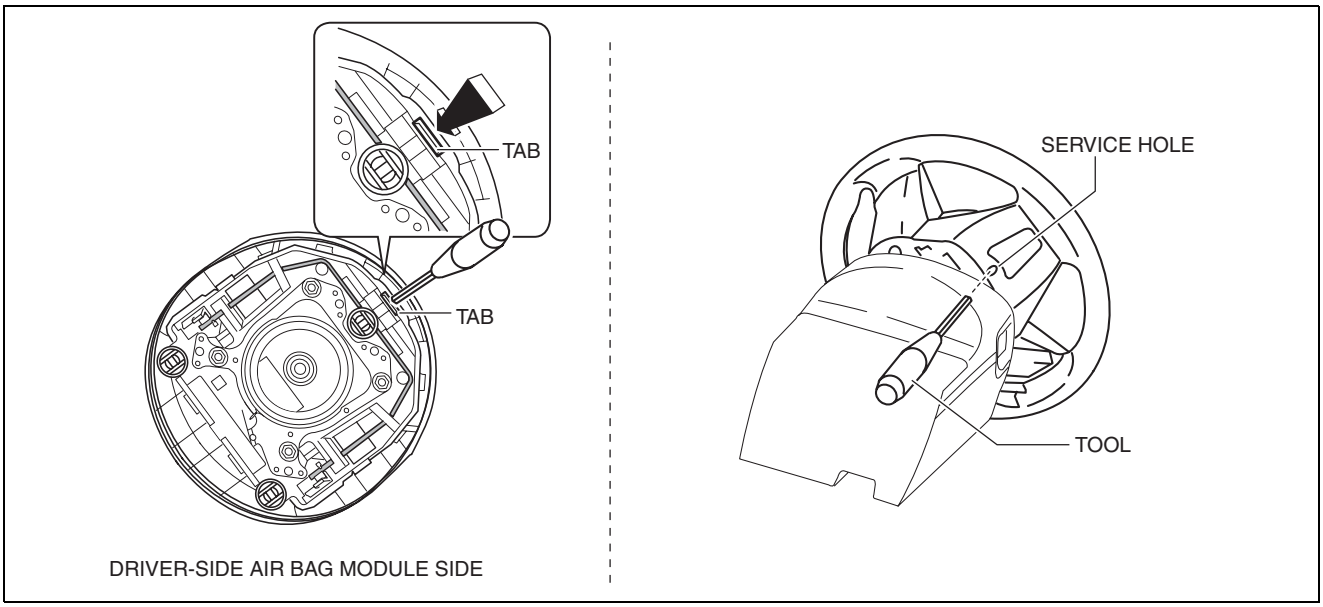

ac5wzw0000202

4. Rotate the steering wheel to the position shown in the figure, insert the tool from the service hole, press the area of the tab indicated by the arrow to release the tab and hook.

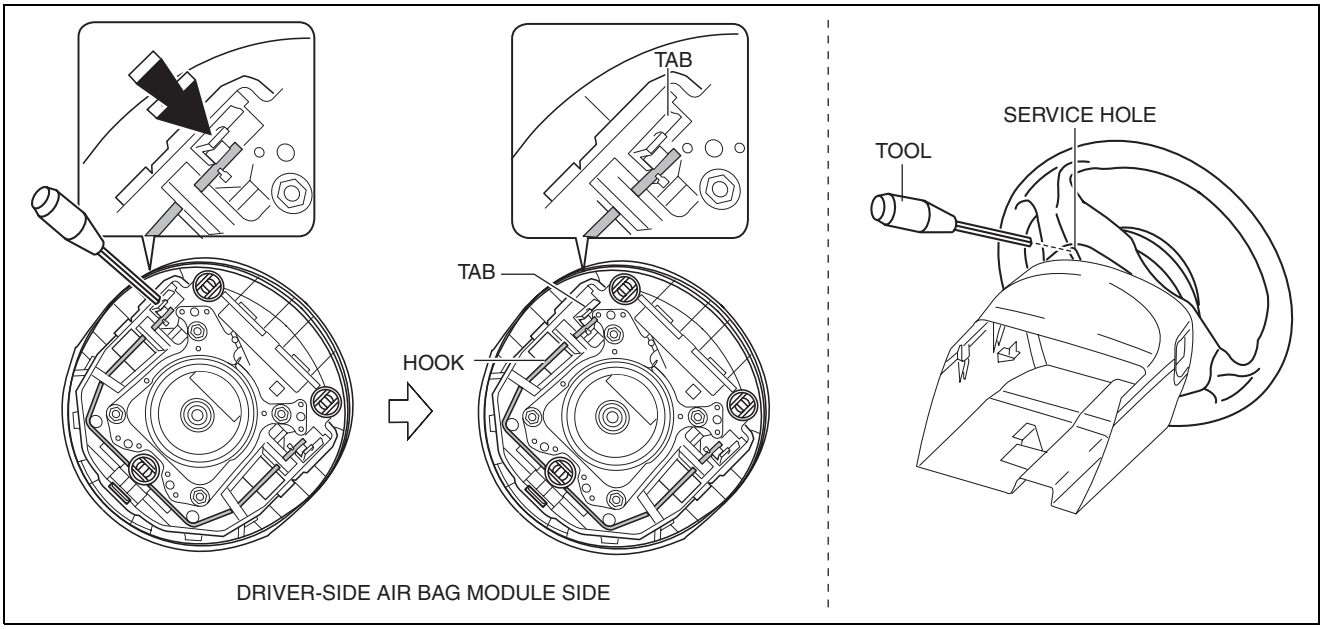

ac5wzw0000202

AIR BAG SYSTEM

5. Rotate the steering wheel to the position shown in the figure, insert the tool from the service hole, press the area of the tab indicated by the arrow to release the tab and hook. (Engagement of driver-side air bag module and steering wheel is released.)

Caution

- **Hold the driver-side air bag module when releasing its securement. Otherwise, it may fall off and be damaged.**

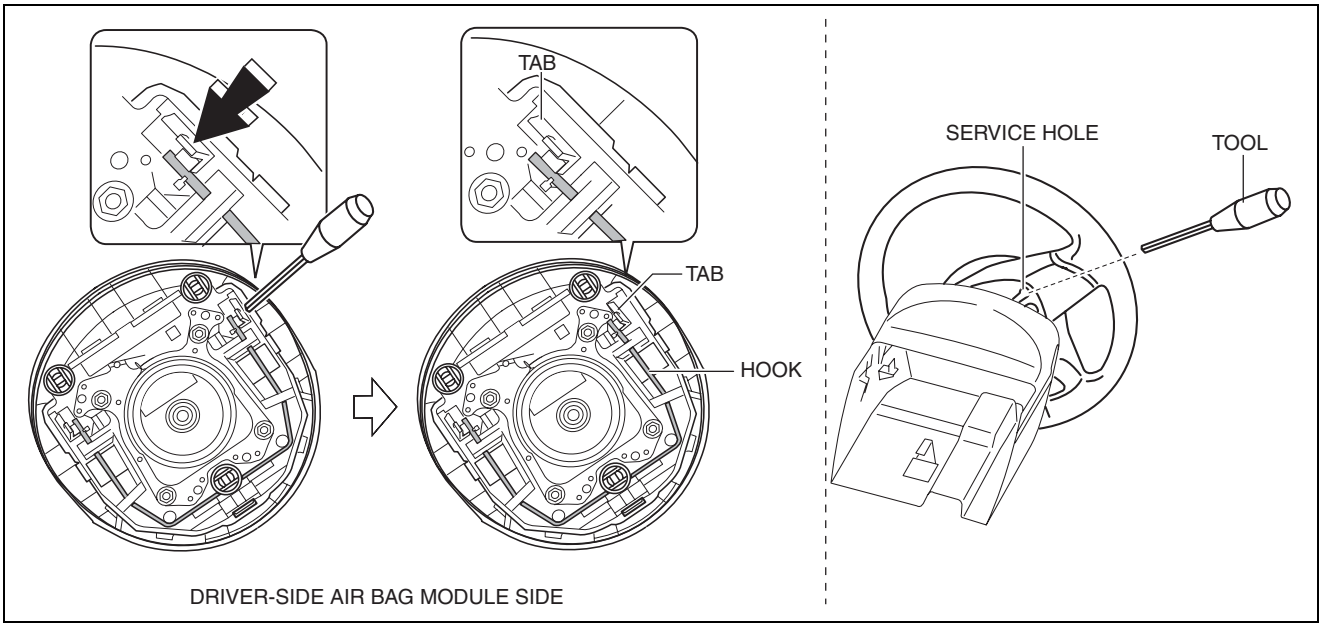

ac5wzw0000202

6. Using a flathead screwdriver, lift the locking device carefully, however do not remove it.

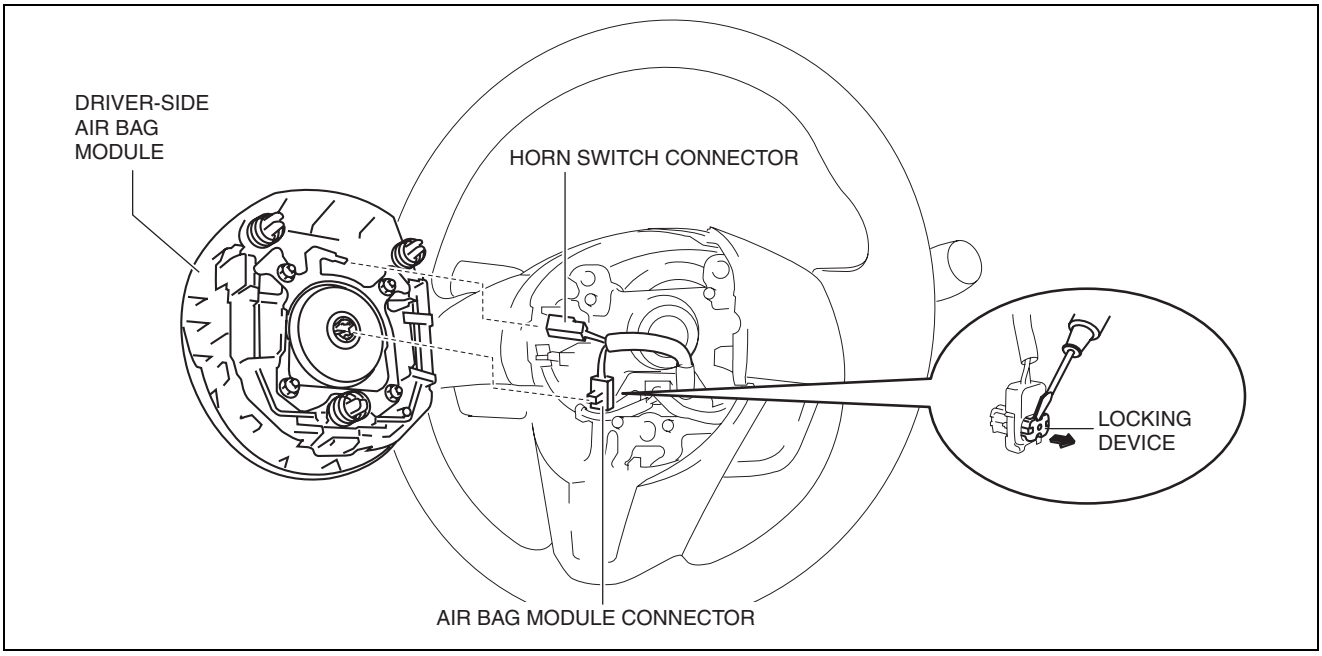

ac5wzw0000203

7. Disconnect the air bag module connector.
8. Disconnect the horn switch connector.
9. Remove the driver-side air bag module.

AIR BAG SYSTEM

Installation

Caution

- **If the driver-side air bag module is connected with the air bag module wiring harness and the horn switch wiring harness crossing over each other, the wiring harnesses could become tangled and damaged. When connecting the connectors, be careful that the wiring harnesses are not crossed over each other.**

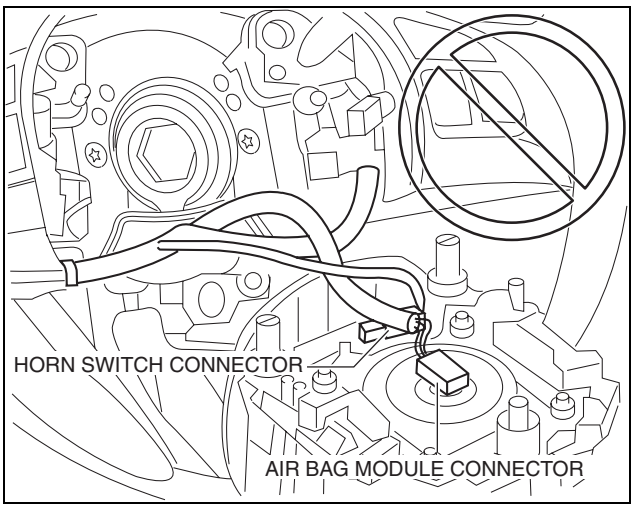

ac5wzw0000278

1. Point the upper side of the driver-side air bag module towards the steering wheel and connect the following connectors as shown in the figure.
2. Connect the air bag module connector.
3. Rotate the driver-side air bag module counterclockwise 180 degrees.

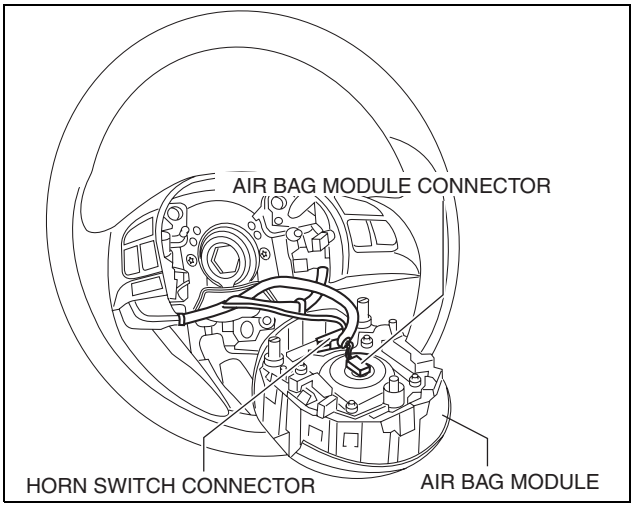

ac5wzw0000279

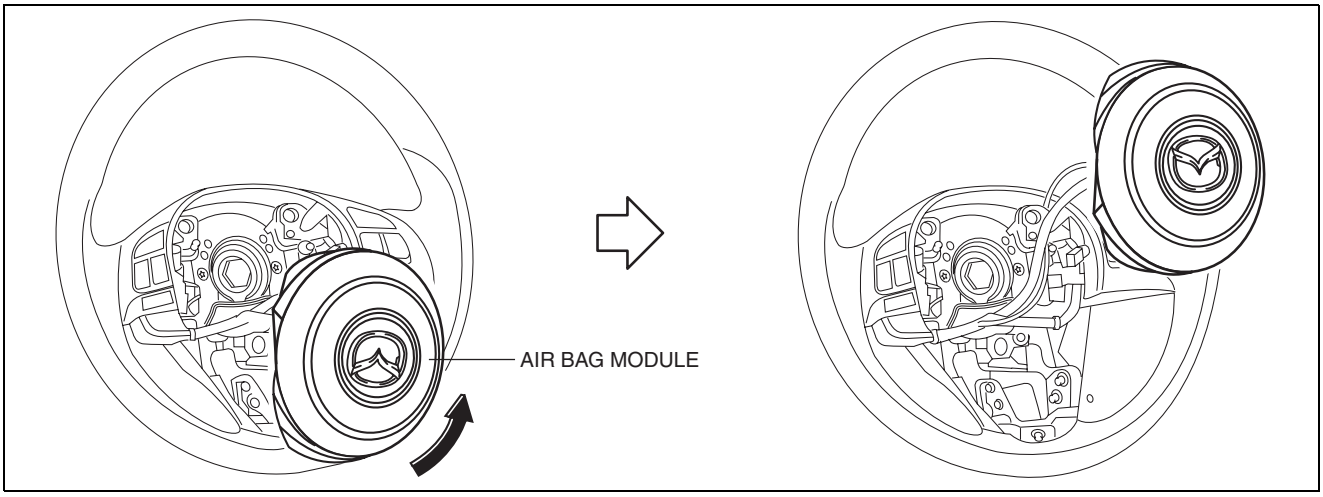

ac5wzw0000279

08

AIR BAG SYSTEM

4. Align the driver-side air bag module pin with the steering wheel hole.

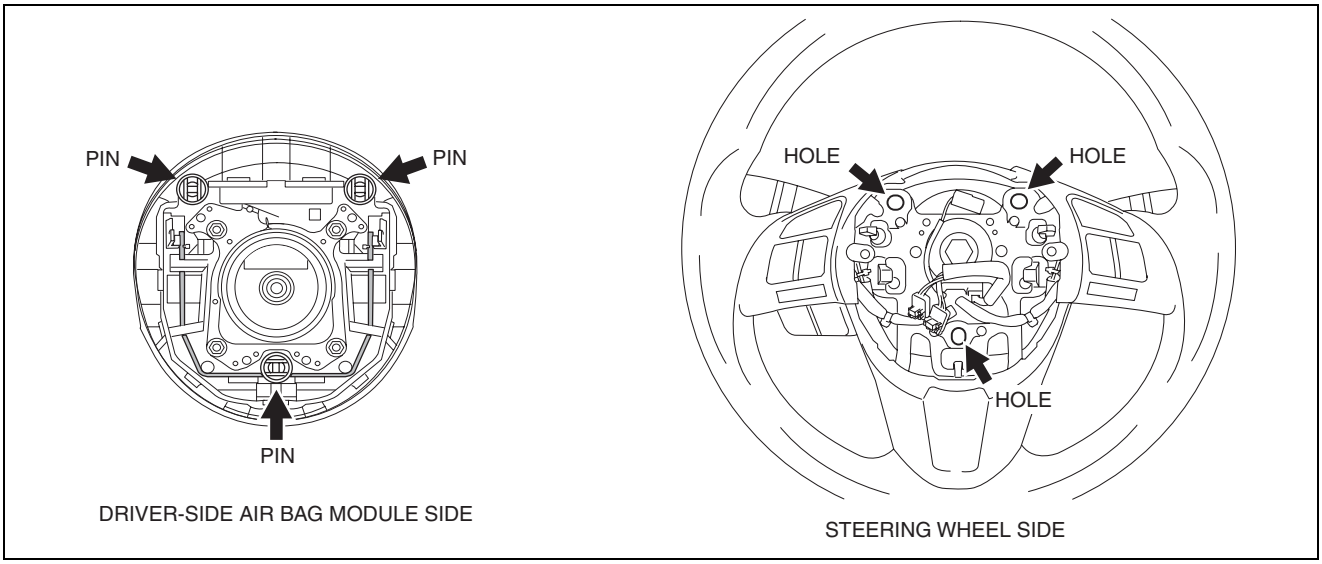

ac5wzw0000203

5. Press the pin of the driver-side air bag module until a click sound is heard.
6. Verify that the quick release connector is securely attached by lightly pulling the driver-side air bag module.
7. Switch the ignition ON (engine off or on).
8. Verify that the air bag system warning light illuminates for **approx. 6 s** and goes out.
   - If the air bag system warning light does not operate normally, refer to the on-board diagnostic system (air bag system) and perform inspection of the system. (See 08-02-5 FLOWCHART.)

PASSENGER-SIDE AIR BAG MODULE REMOVAL/INSTALLATION

id081000801900

Warning

- **Handling the air bag module improperly can accidentally deploy the air bag module, which may seriously injure you. Read the air bag system service warnings and cautions before handling the air bag module. (See 08-10-3 AIR BAG SYSTEM SERVICE WARNINGS.) (See 08-10-5 AIR BAG SYSTEM SERVICE CAUTIONS.)**

Note

- When replacing the passenger-side air bag module after the deployment, replace it together with the mid-wiring harness.
- When removing the passenger-side air bag module, perform the procedure in the posture shown in the figure.

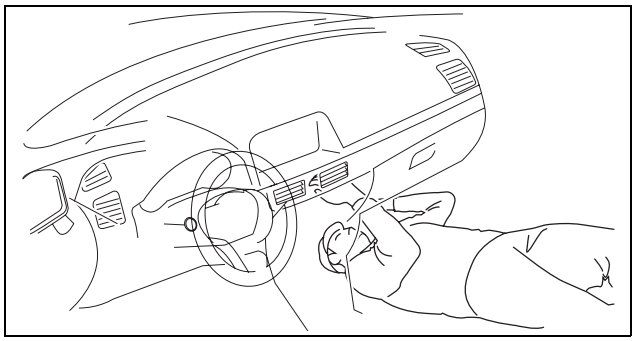

ac5wzw0000203

1. Switch the ignition to off.
2. Disconnect the negative battery cable and wait for **1 min or more**. (See 01-17A-11 NEGATIVE BATTERY CABLE DISCONNECTION/CONNECTION [SKYACTIV-G 2.0].)(See 01-17A-13 NEGATIVE BATTERY CABLE DISCONNECTION/CONNECTION [SKYACTIV-G 2.0 (WITHOUT i-stop)].)(See 01-17B-9 NEGATIVE BATTERY CABLE DISCONNECTION/CONNECTION [SKYACTIV-D 2.2].)
3. Remove the following parts:
   (1) Front scuff plate (passenger-side) (See 09-17-61 FRONT SCUFF PLATE REMOVAL/INSTALLATION.)
   (2) Front side trim (passenger-side) (See 09-17-62 FRONT SIDE TRIM REMOVAL/INSTALLATION.)
   (3) Glove compartment (See 09-17-30 GLOVE COMPARTMENT REMOVAL/INSTALLATION.)
   (4) Decoration panel (See 09-17-33 DECORATION PANEL REMOVAL/INSTALLATION.)
   (5) Dashboard under cover (See 09-17-35 DASHBOARD UNDER COVER REMOVAL/INSTALLATION.)
   (6) Lower panel (passenger-side) (See 09-17-35 LOWER PANEL REMOVAL/INSTALLATION.)
   (7) Front heat duct (passenger-side) (See 07-11-22 FRONT HEAT DUCT REMOVAL/INSTALLATION.)
   (8) Blower unit (See 07-11-5 BLOWER UNIT REMOVAL/INSTALLATION.)

AIR BAG SYSTEM

4. Disconnect the connector.

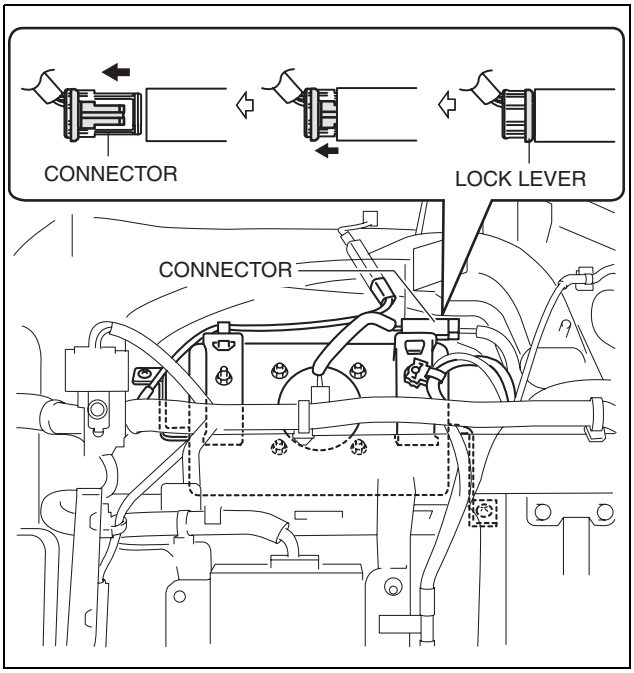

ac5wzw0000203

5. Remove clips A.
6. Remove clip B while opening the tabs outward using snap ring pliers.

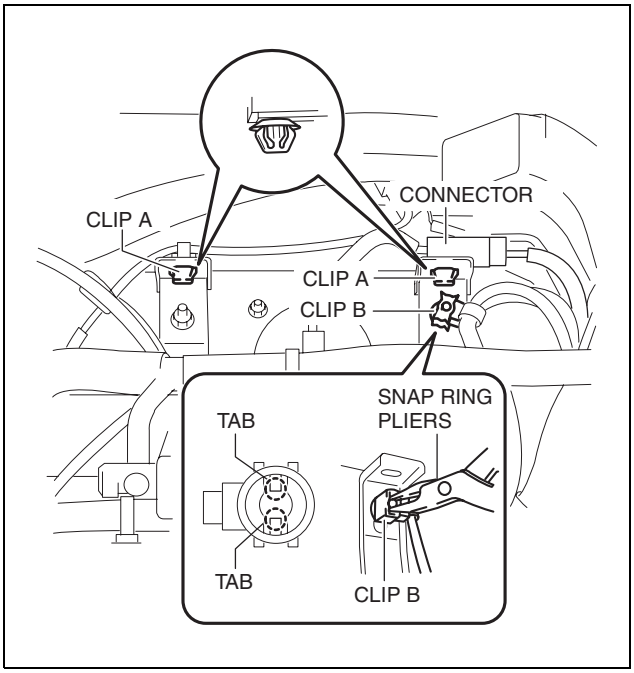

ac5wzw0000203

AIR BAG SYSTEM

7. Remove the nuts.
8. Remove the bracket.
9. Remove screws A and B while visually verifying the screw positions. (See 08-10-13 Screw Installation Note.)

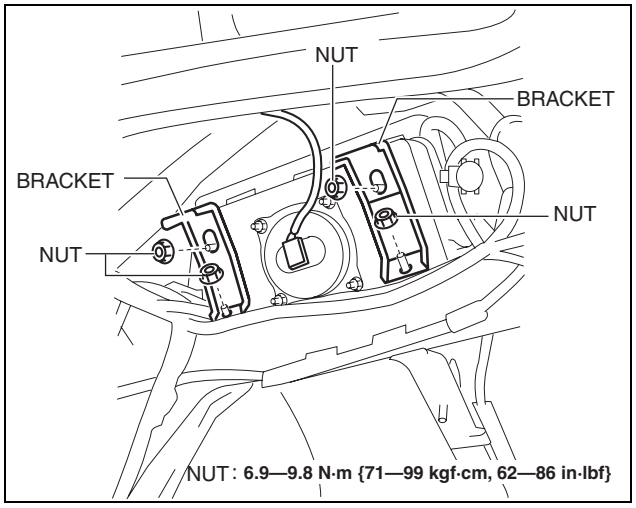

ac5wzw0000203

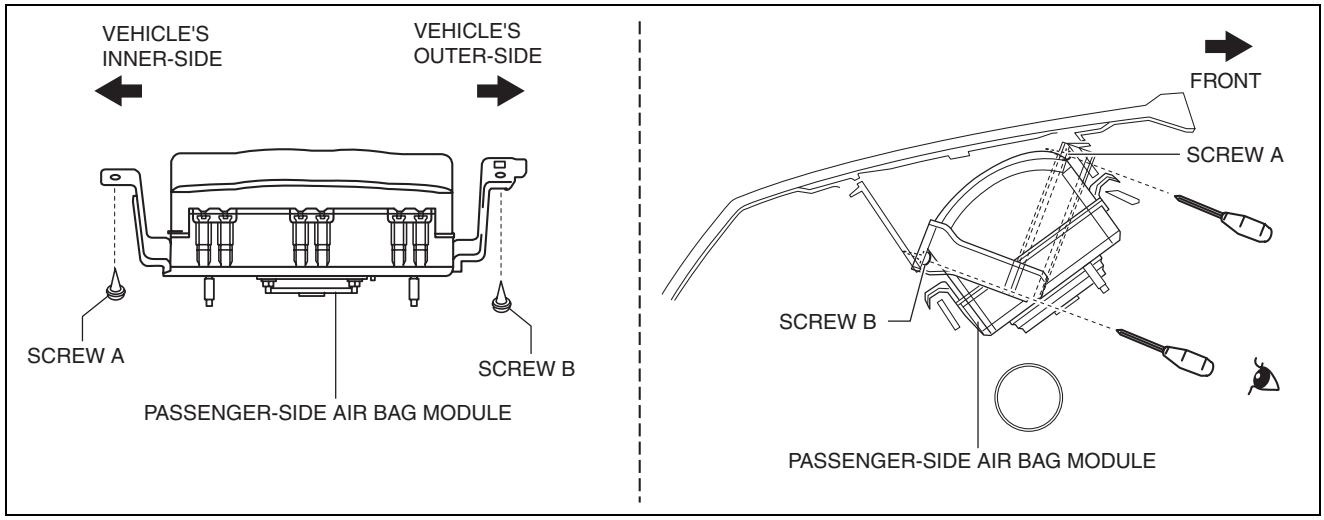

ac5wzw0000203

10. Pull the passenger-side air bag module in the direction of the arrow (2) and remove hooks A from the dashboard while spreading the dashboard in the direction of the arrow (1).

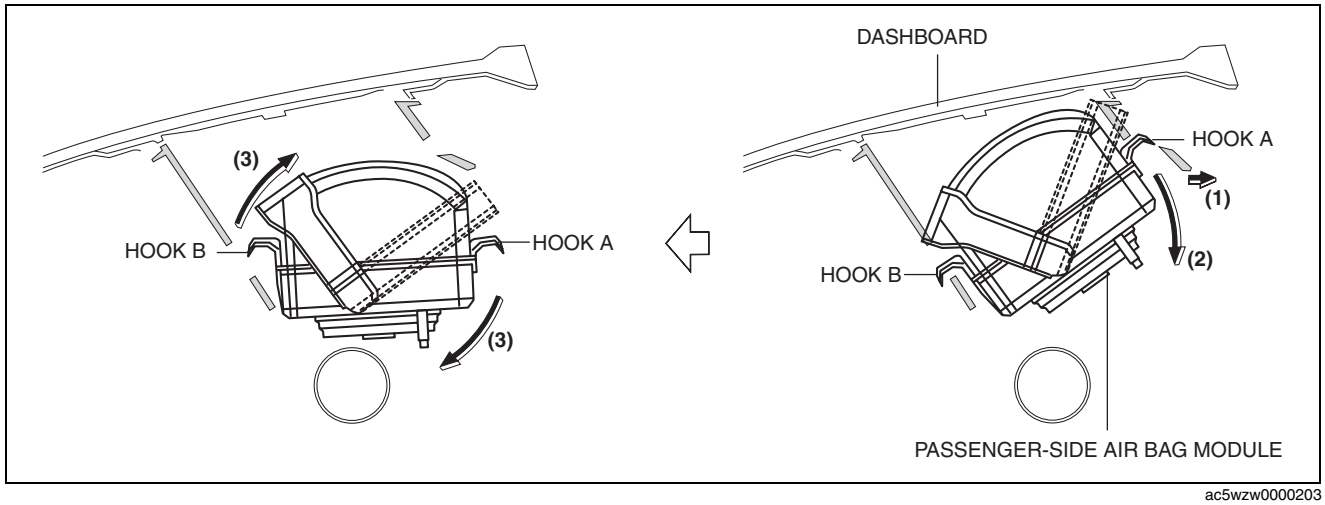

ac5wzw0000203

11. Move the passenger-side air bag module in the direction of the arrow (3) and detach hooks B from the dashboard.

AIR BAG SYSTEM

12. Set the passenger-side air bag module bracket aside from the dashboard duct (5) while sliding the passenger-side air bag module in the direction of the arrow (4).

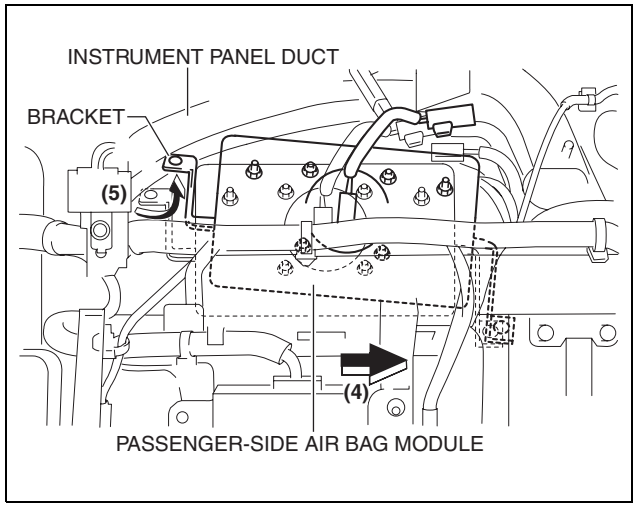

ac5wzw0000203

13. Remove the passenger-side air bag module.
14. Install in the reverse order of removal.
15. Switch the ignition ON (engine off or on).
16. Verify that the air bag system warning light illuminates for **approx. 6 s** and goes out.
    - If the air bag system warning light does not operate, refer to the on-board diagnostic system (air bag system) and perform inspection of the system. (See 08-02-5 FLOWCHART.)

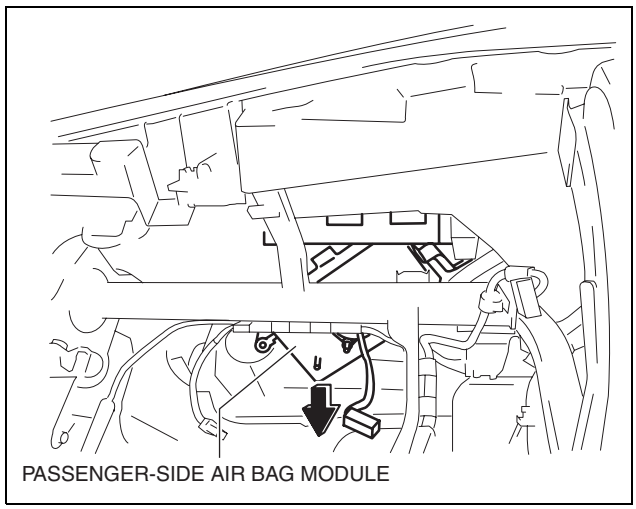

ac5wzw0000204

08

Screw Installation Note

Note
- The passenger-side air bag module fixing screws are set in the back side of the dashboard. Affix packing tape to phillips screwdriver so that the screws do not fall off while performing the work.

1. Insert a Phillips screwdriver into the screw groove and fix it with packing tape.
2. Tighten the screw halfway.
3. Remove the packing tape.

Caution
- **If the packing tape is left in the vehicle when tightening the screw, it may become a source of noise. When tightening the screw, remove the packing tape so that it does not remain in the vehicle.**

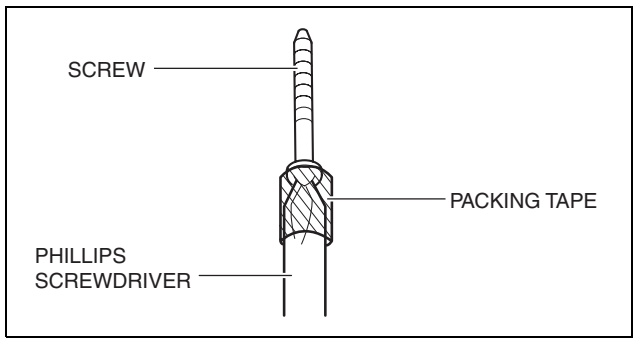

ac5wzw0000204

4. Tighten the screw completely.

AIR BAG SYSTEM

SIDE AIR BAG MODULE REMOVAL/INSTALLATION

id081000800800

Warning

- **Handling the air bag module improperly can accidentally operate (deploy) the air bag module, which may seriously injure you. Read the air bag system service warnings and cautions before handling the air bag module. (See 08-10-3 AIR BAG SYSTEM SERVICE WARNINGS.) (See 08-10-5 AIR BAG SYSTEM SERVICE CAUTIONS.)**
- **If the side air bag module is installed with debris in the seat back, the foreign material may be scattered when the side air bag module operates (deploys), causing injury. Verify that there is no foreign material in the seat back before installing the side air bag module.**

1. Switch the ignition to off.
2. Disconnect the negative battery cable and wait for **1 min or more**. (See 01-17A-11 NEGATIVE BATTERY CABLE DISCONNECTION/CONNECTION [SKYACTIV-G 2.0].)(See 01-17A-13 NEGATIVE BATTERY CABLE DISCONNECTION/CONNECTION [SKYACTIV-G 2.0 (WITHOUT i-stop)].)(See 01-17B-9 NEGATIVE BATTERY CABLE DISCONNECTION/CONNECTION [SKYACTIV-D 2.2].)
3. Remove the front seat. (See 09-13-4 FRONT SEAT REMOVAL/INSTALLATION.)
4. Remove the seat back trim and the seat back pad. (See 09-13-11 FRONT SEAT BACK TRIM REMOVAL/INSTALLATION.)
5. Disconnect the side air bag module connector.

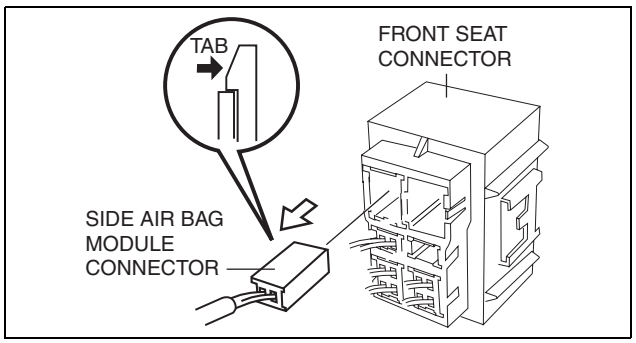

ac5wzw0000200

6. Remove the fastener.

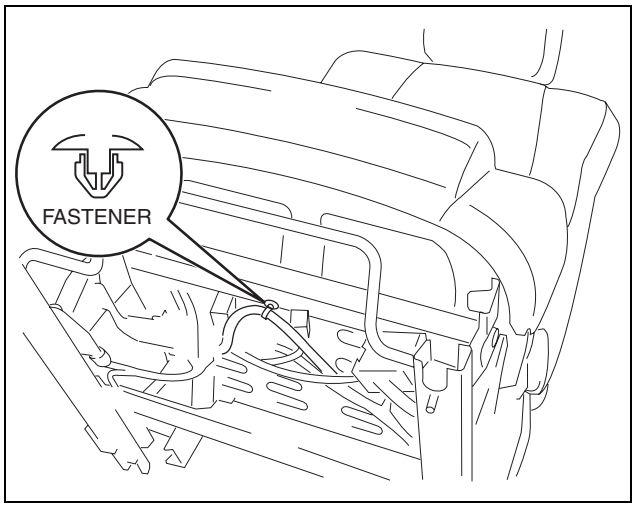

ac5wzw0000200

AIR BAG SYSTEM

7. Remove the nuts.
8. Remove the side air bag module.
9. Install in the reverse order of removal.
10. Switch the ignition ON (engine off or on).
11. Verify that the air bag system warning light illuminates for **approx. 6 s** and goes out.
    - If the air bag system warning light does not operate normally, refer to the on-board diagnostic system (air bag system) and perform inspection of the system. (See 08-02-5 FLOWCHART.)

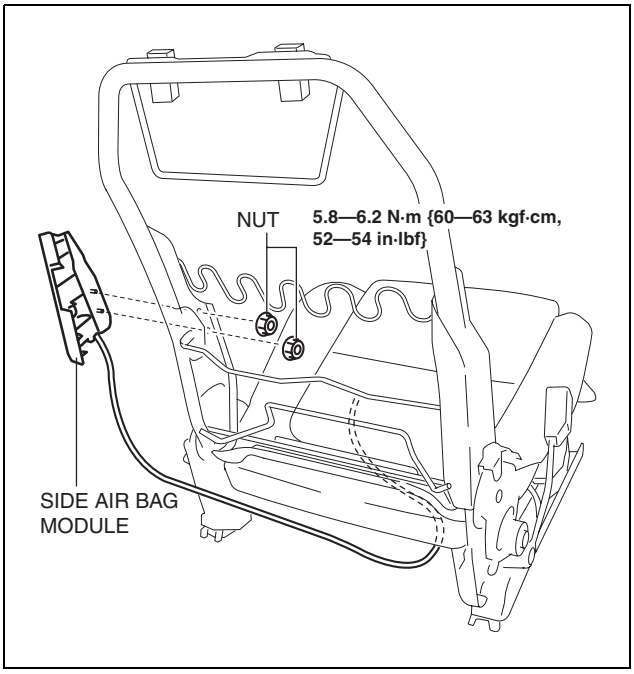

ac5wzw0000200

CURTAIN AIR BAG MODULE REMOVAL/INSTALLATION

id081000800900

Warning

- **Handling the air bag module improperly can accidentally deploy the air bag module, which may seriously injure you. Read the air bag system service warnings and cautions before handling the air bag module. (See 08-10-3 AIR BAG SYSTEM SERVICE WARNINGS.) (See 08-10-5 AIR BAG SYSTEM SERVICE CAUTIONS.)**

1. Switch the ignition to off.
2. Disconnect the negative battery cable and wait for **1 min or more**. (See 01-17A-11 NEGATIVE BATTERY CABLE DISCONNECTION/CONNECTION [SKYACTIV-G 2.0].)(See 01-17A-13 NEGATIVE BATTERY CABLE DISCONNECTION/CONNECTION [SKYACTIV-G 2.0 (WITHOUT i-stop)].)(See 01-17B-9 NEGATIVE BATTERY CABLE DISCONNECTION/CONNECTION [SKYACTIV-D 2.2].)
3. Partially peel back the seaming welts.
4. Remove the following parts:
   (1) Sunroof seaming welt (with sunroof) (See 09-15-6 SUNROOF UNIT REMOVAL/INSTALLATION.)
   (2) A-pillar trim (See 09-17-53 A-PILLAR TRIM REMOVAL/INSTALLATION.)
   (3) Front map light (See 09-18-95 MAP LIGHT REMOVAL/INSTALLATION.)
   (4) Sunvisor (See 09-17-93 SUNVISOR REMOVAL/INSTALLATION.)
   (5) Front scuff plate (See 09-17-61 FRONT SCUFF PLATE REMOVAL/INSTALLATION.)
   (6) Rear scuff plate (See 09-17-63 REAR SCUFF PLATE REMOVAL/INSTALLATION.)
   (7) B-pillar lower trim (See 09-17-57 B-PILLAR LOWER TRIM REMOVAL/INSTALLATION.)
   (8) Front seat belt adjuster cover (See 08-11-2 FRONT SEAT BELT REMOVAL/INSTALLATION.)
   (9) Upper anchor of the front seat belt (See 08-11-2 FRONT SEAT BELT REMOVAL/INSTALLATION.)
   (10) B-pillar upper trim (See 09-17-58 B-PILLAR UPPER TRIM REMOVAL/INSTALLATION.)
   (11) Assist handle (See 09-17-91 ASSIST HANDLE REMOVAL/INSTALLATION.)
   (12) Trunk board (See 09-17-85 TRUNK BOARD REMOVAL/INSTALLATION.)
   (13) Trunk end trim (See 09-17-78 TRUNK END TRIM REMOVAL/INSTALLATION.)
   (14) Trunk side trim (See 09-17-80 TRUNK SIDE TRIM REMOVAL/INSTALLATION.)
   (15) D-pillar trim (See 09-17-60 D-PILLAR TRIM REMOVAL/INSTALLATION.)
   (16) C-pillar trim (See 09-17-59 C-PILLAR TRIM REMOVAL/INSTALLATION.)
5. Remove the headliner. (See 09-17-94 HEADLINER REMOVAL/INSTALLATION.)

AIR BAG SYSTEM

6. Using a flathead screwdriver, lift the locking device carefully, however do not remove it.

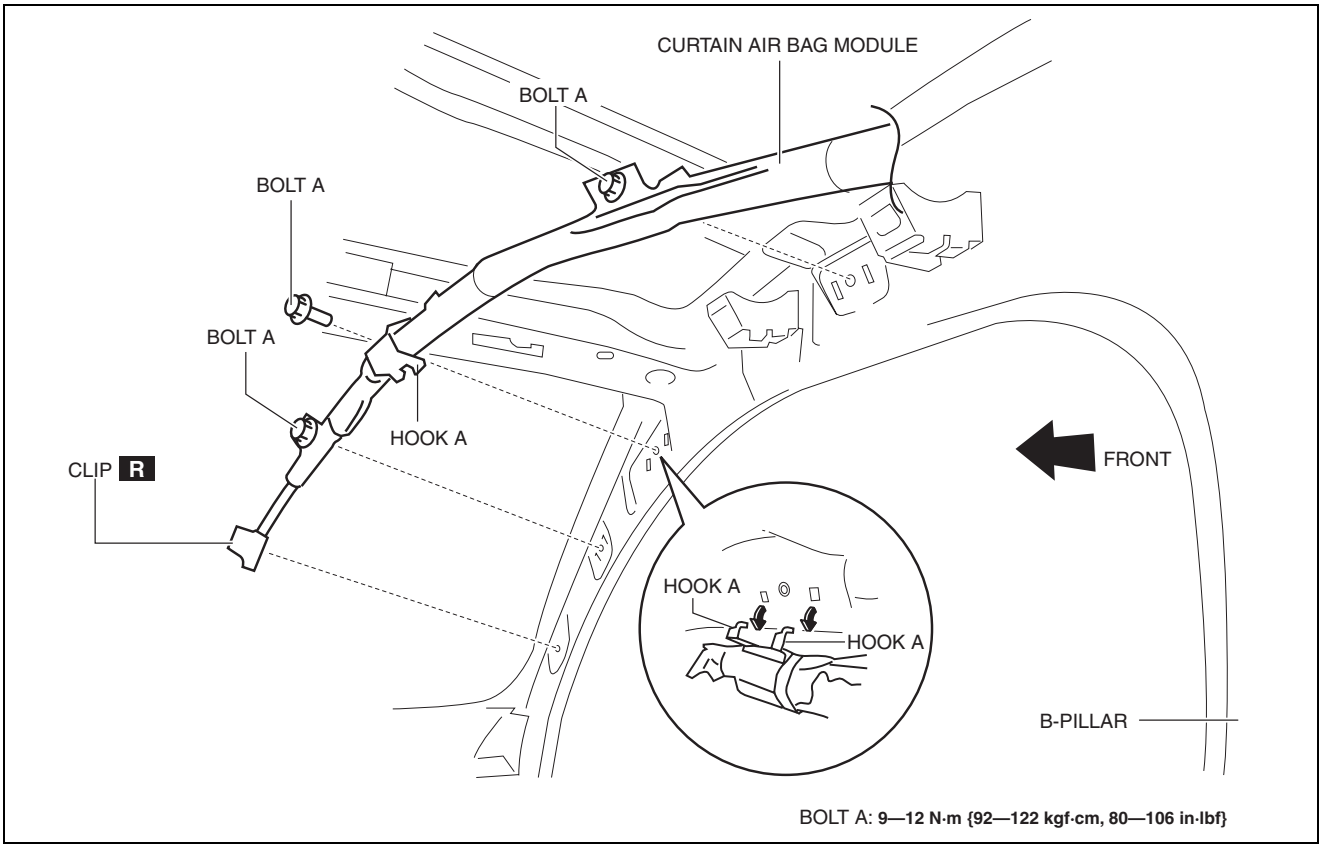

AIR BAG SYSTEM

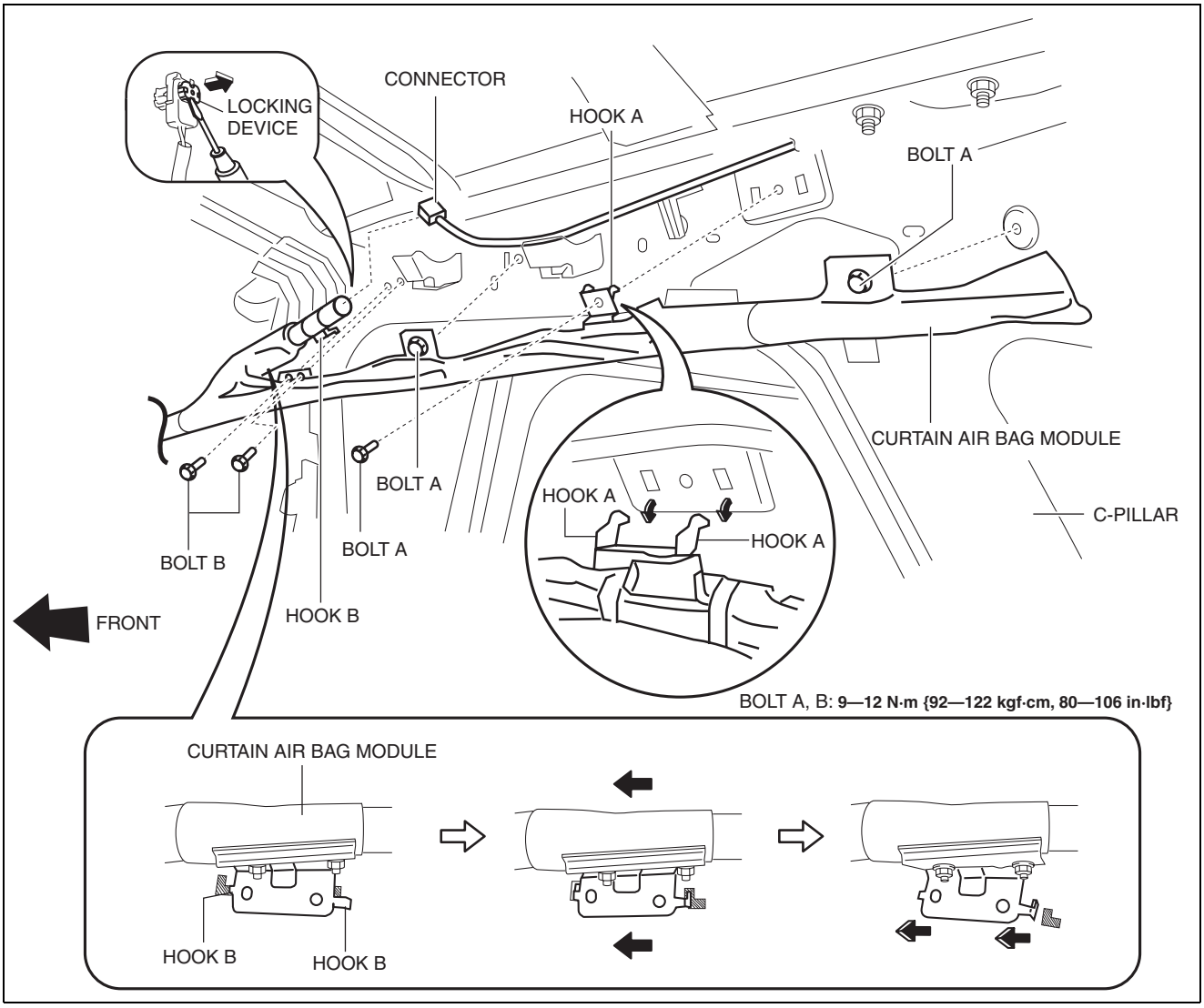

ac5wzw0000200

7. Disconnect the connector.
8. Remove the clip. (See 08-10-18 Clip Removal Note.)
9. Remove bolts A.
10. Remove bolts B.
11. Pull hook A in the direction shown in the figure and remove it from the body.
12. Pull hook B in the direction shown in the figure and remove it from the body.
13. Remove the curtain air bag module.
14. Install in the reverse order of removal.
15. When the Switch the ignition ON (engine off or on).
16. Verify that the air bag system warning light illuminates for **approx. 6 s and goes out.**
    - If the air bag system warning light does not operate normally, refer to the on-board diagnostic system (air bag system) and perform inspection of the system. (See 08-02-5 FLOWCHART.)

AIR BAG SYSTEM

Clip Removal Note

1. Pull out the pin with flathead screwdriver as shown in the figure.

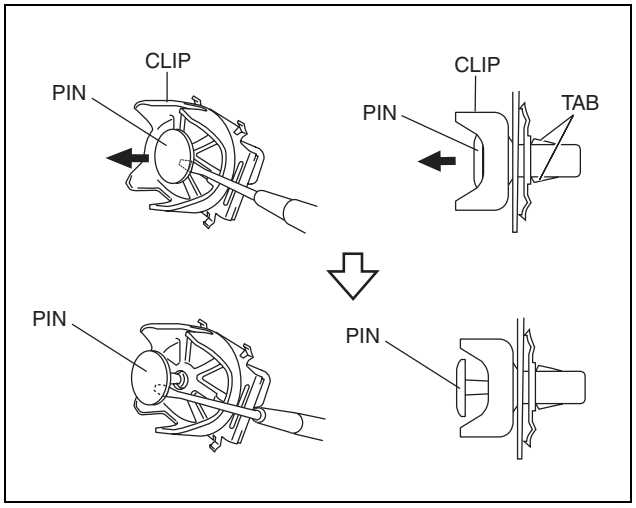

ac5wzw0000318

2. Insert a flathead screwdriver into shown in the figure.

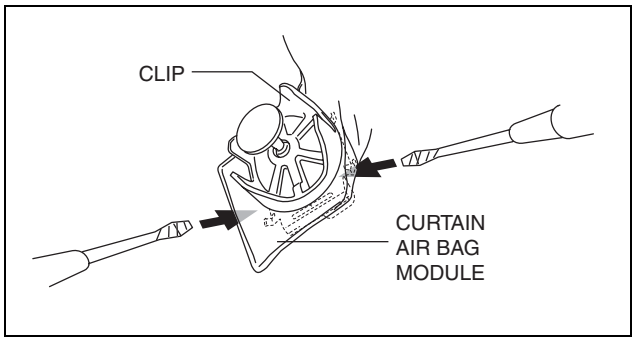

ac5wzw0000200

3. While pulling the curtain air bag in the direction of the arrow shown in the figure (1), detach tabs by prying with a flathead screwdriver in the direction of the arrow (2) (3).
4. Remove the clip from the body.

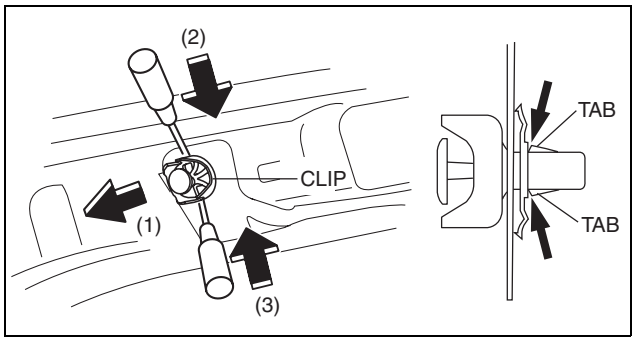

am3uuw0000422

AIR BAG SYSTEM

CRASH ZONE SENSOR REMOVAL/INSTALLATION

id081000800500

Warning

- **Handling the crash zone sensor improperly can accidentally deploy the air bags and pre-tensioner seat belts, which may seriously injure you. Read the air bag system service warnings and cautions before handling the crash zone sensor. (See 08-10-3 AIR BAG SYSTEM SERVICE WARNINGS.) (See 08-10-5 AIR BAG SYSTEM SERVICE CAUTIONS.)**

1. Switch the ignition to off.
2. Disconnect the negative battery cable and wait for **1 min or more**. (See 01-17A-11 NEGATIVE BATTERY CABLE DISCONNECTION/CONNECTION [SKYACTIV-G 2.0].)(See 01-17A-13 NEGATIVE BATTERY CABLE DISCONNECTION/CONNECTION [SKYACTIV-G 2.0 (WITHOUT i-stop)].)(See 01-17B-9 NEGATIVE BATTERY CABLE DISCONNECTION/CONNECTION [SKYACTIV-D 2.2].)
3. Remove the front bumper. (See 09-10-10 FRONT BUMPER REMOVAL/INSTALLATION.)
4. Remove the bolt.

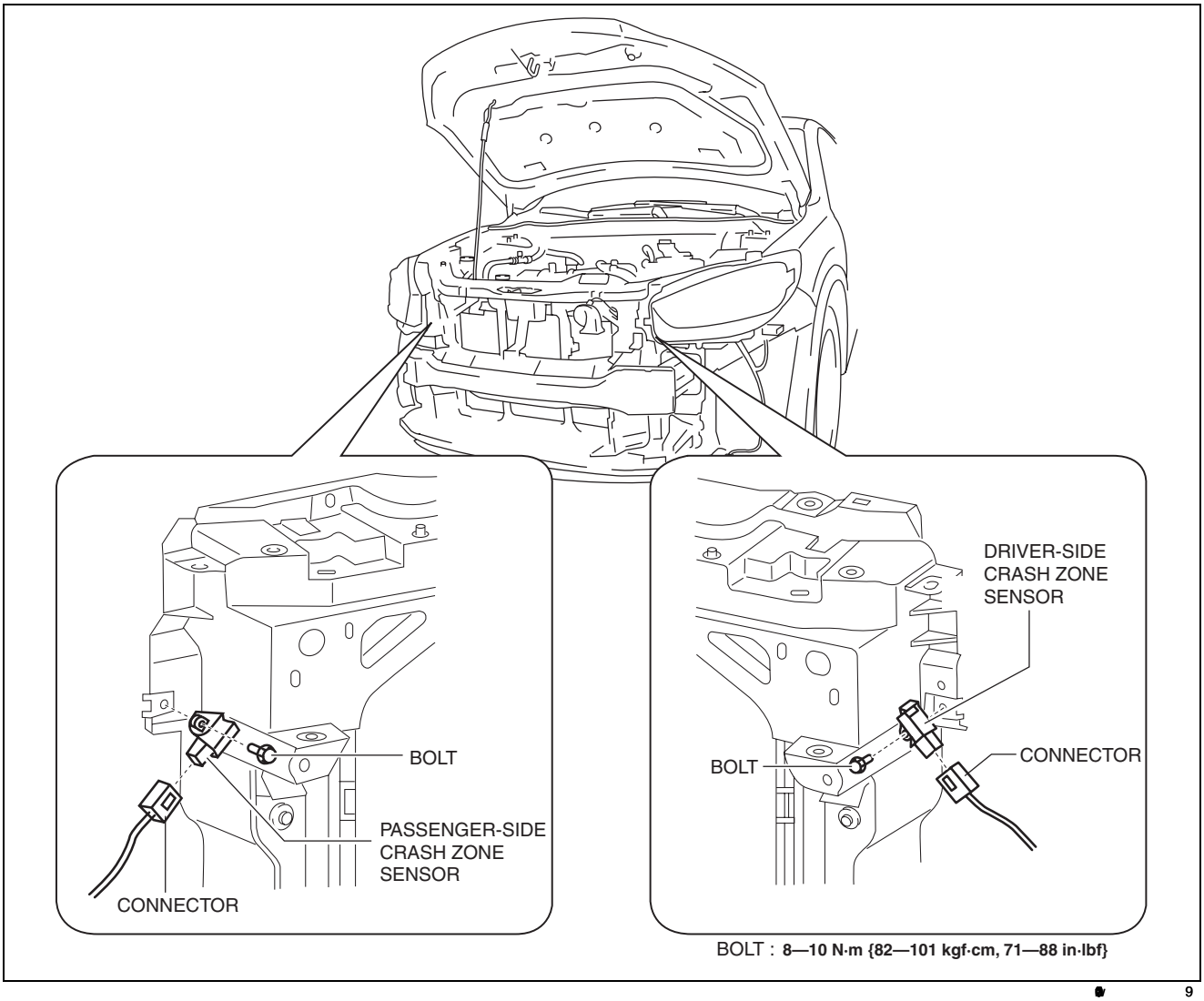

5. Disconnect the connector. (See 08-10-20 Connector Disconnect Note.)
6. Remove the crash zone sensor.
7. Install in the reverse order of removal.
8. Switch the ignition ON (engine off or on).
9. Verify that the air bag system warning light illuminates for **approx. 6 s** and goes out.
   - If the air bag system warning light does not operate normally, refer to the on-board diagnostic system (air bag system) and perform inspection of the system. (See 08-02-5 FLOWCHART.)

AIR BAG SYSTEM

Connector Disconnect Note

1. Press the area (1) indicated by the arrow and slide it as shown in the figure (2).

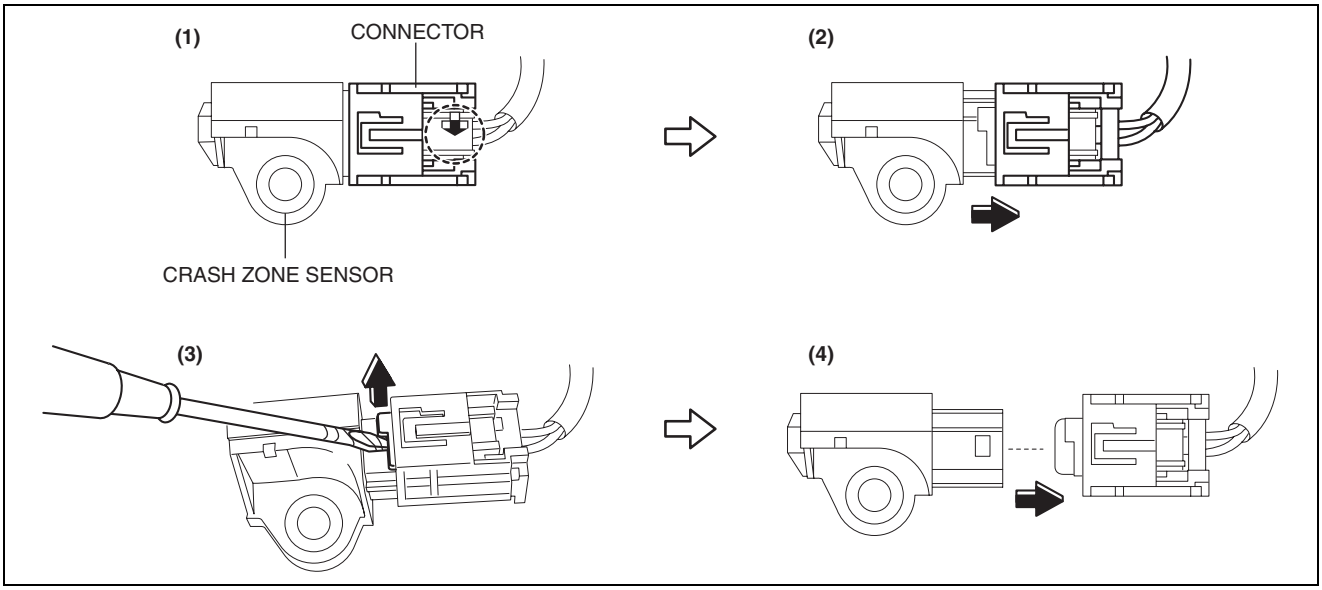

ac5wzw0000199

2. Lift up the location shown in the figure using a tape-wrapped flathead screwdriver (3) and disconnect the connector (4).

SAS CONTROL MODULE REMOVAL/INSTALLATION

id081000801400

Warning

- **Handling the SAS control module or air bag module improperly can accidentally deploy the air bag modules and pre-tensioner seat belt, which may seriously injure you. Read the air bag system service warnings and cautions before handling the air bag module. (See 08-10-3 AIR BAG SYSTEM SERVICE WARNINGS.) (See 08-10-5 AIR BAG SYSTEM SERVICE CAUTIONS.)**
- **If the connector is connected and the ignition switch is turned to the ON position with the SAS control module not secured completely using the installation nuts, the SAS control module may detect a degree of impact even when something contacts it lightly, deploying the air bag module and pre-tensioner seat belt accidentally.**
- **If the DSC sensor initialization procedure is not completed, it could result in an unexpected accident due to the DSC being inoperative. Therefore, after the SAS control module is replaced, always perform the DSC sensor initialization procedure to ensure proper DSC operation.**
- **If configuration is not performed when the SAS control module is replaced with a new one, the vehicle specification information is not stored in the SAS control module and the system will not operate normally.**

Caution

- **When replacing the SAS control module, always perform the configuration procedure before removing the SAS control module. If the configuration is not performed and the SAS control module is removed, DTC B0003:53 will be displayed.**
- **When performing configuration, it is necessary to read the vehicle specification information from the SAS control module before replacing it. Connect the M-MDS to the vehicle and perform vehicle identification before removing the SAS control module. The vehicle specification information is temporarily stored in the M-MDS.**

Note

- The SAS control module prior to replacement stores the vehicle specification information.
- A new SAS control module does not store any vehicle specification information.
- If the vehicle specification information from the SAS control module prior to replacement cannot be read, perform the configuration using As-Built data.

1. Perform SAS control module configuration when replacing it. (See 08-10-21 SAS CONTROL MODULE CONFIGURATION (USING READ/WRITE FUNCTION).)
2. Switch the ignition to off.

AIR BAG SYSTEM

3. Disconnect the negative battery cable and wait for **1 min or more**. (See 01-17A-11 NEGATIVE BATTERY CABLE DISCONNECTION/CONNECTION [SKYACTIV-G 2.0].)(See 01-17A-13 NEGATIVE BATTERY CABLE DISCONNECTION/CONNECTION [SKYACTIV-G 2.0 (WITHOUT i-stop)].)(See 01-17B-9 NEGATIVE BATTERY CABLE DISCONNECTION/CONNECTION [SKYACTIV-D 2.2].)
4. Remove the following parts:
   (1) Front console box (See 09-17-40 FRONT CONSOLE BOX REMOVAL/INSTALLATION.)
   (2) Shift lever knob (MTX) (See 05-16A-1 MANUAL TRANSAXLE SHIFT MECHANISM REMOVAL/INSTALLATION [C66M-R, C66MX-R].) (See 05-16B-1 MANUAL TRANSAXLE SHIFT MECHANISM REMOVAL/INSTALLATION [D66M-R, D66MX-R].)
   (3) Shift panel (See 09-17-42 SHIFT PANEL REMOVAL/INSTALLATION.)
   (4) Upper panel (See 09-17-44 UPPER PANEL REMOVAL/INSTALLATION.)
   (5) Rear console (See 09-17-45 REAR CONSOLE REMOVAL/INSTALLATION.)
5. Set the parking brake lever out of the way. (See 04-12-3 PARKING BRAKE LEVER REMOVAL/INSTALLATION.)
6. Disconnect the connectors.

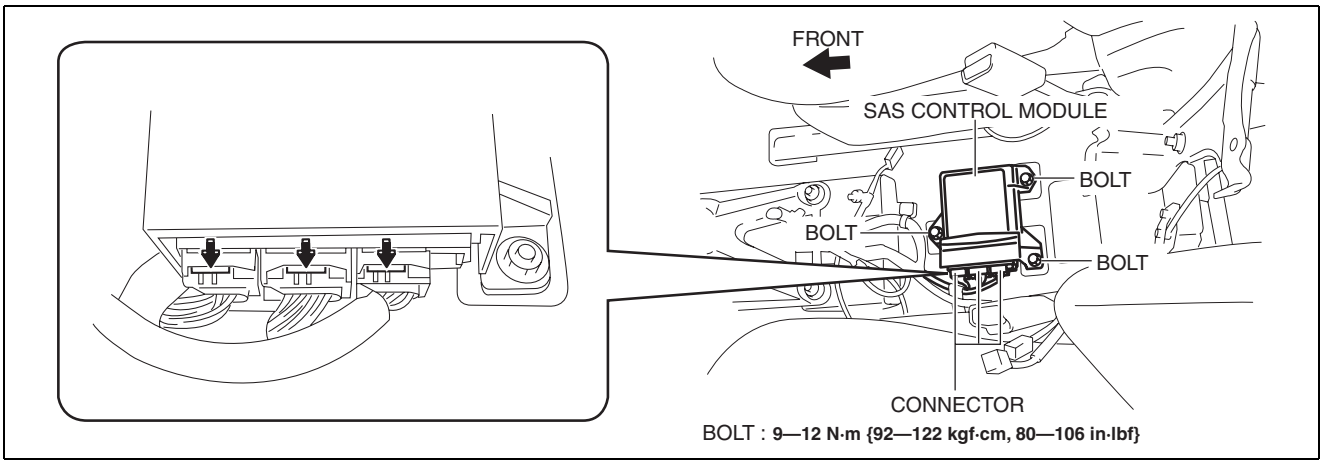

ac5wzw0000203

7. Remove the bolts.
8. Remove the SAS control module.
9. Install in the reverse order of removal.
10. Switch the ignition ON (engine off or on).
11. Verify that the air bag system warning light illuminates for **approx. 6 s** and goes out.
    - If the air bag system warning light does not operate normally, refer to the on-board diagnostic system (air bag system) and perform inspection of the system. (See 08-02-5 FLOWCHART.)
12. Perform the DSC sensor initialization procedures. (See 04-15-7 DSC RELATED PARTS SENSOR INITIALIZATION PROCEDURE.)

Note
- If configuration cannot be performed by reading/writing of the vehicle specification information, perform the configuration using As-Built information after replacing the SAS control module. (See 08-10-22 SAS CONTROL MODULE CONFIGURATION (USING AS-BUILT DATA).)

SAS CONTROL MODULE CONFIGURATION (USING READ/WRITE FUNCTION)

id081000891500

Note
- When performing configuration, it is necessary to read the vehicle specification information from the SAS control module before replacing it. Connect the M-MDS to the vehicle and perform vehicle identification before removing the SAS control module. The vehicle specification information is temporarily stored in the M-MDS.

1. Connect the M-MDS to the DLC-2.
2. After the vehicle is identified, select the following items from the initialization screen of the M-MDS.
   (1) Select “Module Programming”.
3. Then, select items from the screen menu in the following order.
   (1) Select “Programmable Module Installation”.
   (2) Select “RCM”.
4. Perform the configuration according to the directions on the screen.

AIR BAG SYSTEM

Caution
- **When the configuration is performed, CAN communication between the SAS control module and control module connected to the CAN line is cut temporarily, and communication error DTCs may be detected. After performing the configuration, verify the DTCs for the control module connected to the CAN line and clear it if any DTC is detected.**

5. Verify the DTCs for all of the control modules connected to the CAN line.
   - If any DTC is stored, clear it.
   - If the DTC is cleared, finish the procedure because the configuration has been completed normally.
   - If the DTC remains, perform troubleshooting according to the DTC.

SAS CONTROL MODULE CONFIGURATION (USING AS-BUILT DATA)

id081000890300

Note
- If the configuration is performed using As-Built data, the set value of the personalization function is reset to the initial value (condition when shipped from factory). Verify the set value with the customer and perform the personalization function setting after performing the configuration using As-Built data.

1. Connect the M-MDS to the DLC-2.
2. After the vehicle is identified, select the following items from the initialization screen of the M-MDS.
   (1) Select “Module Programming”.
3. Then, select items from the screen menu in the following order.
   (1) Select “As-Built”.
   (2) Select “RCM”.
4. Perform the as-built according to the directions on the screen.

Caution
- **When the configuration is performed, CAN communication between the SAS control module and control module connected to the CAN line is cut temporarily, and communication error DTCs may be detected. After performing the configuration, verify the DTCs for the control module connected to the CAN line and clear it if any DTC is detected.**

5. Verify the DTCs for all of the control modules connected to the CAN line.
   - If any DTC is stored, clear it.
   - If the DTC is cleared, finish the procedure because the configuration has been completed normally.
   - If the DTC remains, perform troubleshooting according to the DTC.

SIDE AIR BAG SENSOR NO. 1 REMOVAL/INSTALLATION

id081000800600

Warning
- **Handling the side air bag sensor improperly can accidentally operate (deploy) the air bag module, which may seriously injure you. Read the air bag system service warnings and cautions before handling the side air bag sensor. (See 08-10-3 AIR BAG SYSTEM SERVICE WARNINGS.) (See 08-10-5 AIR BAG SYSTEM SERVICE CAUTIONS.)**

1. Switch the ignition to off.
2. Disconnect the negative battery cable and wait for **1 min or more**. (See 01-17A-11 NEGATIVE BATTERY CABLE DISCONNECTION/CONNECTION [SKYACTIV-G 2.0].)(See 01-17A-13 NEGATIVE BATTERY CABLE DISCONNECTION/CONNECTION [SKYACTIV-G 2.0 (WITHOUT i-stop)].)(See 01-17B-9 NEGATIVE BATTERY CABLE DISCONNECTION/CONNECTION [SKYACTIV-D 2.2].)
3. Remove the front scuff plate. (See 09-17-61 FRONT SCUFF PLATE REMOVAL/INSTALLATION.)
4. Remove the rear scuff plate. (See 09-17-63 REAR SCUFF PLATE REMOVAL/INSTALLATION.)
5. Remove the B-pillar lower trim. (See 09-17-57 B-PILLAR LOWER TRIM REMOVAL/INSTALLATION.)

AIR BAG SYSTEM

6. Remove the bolt.
7. Disconnect the connector. (See 08-10-23 Connector Disconnect Note.)
8. Remove the side air bag sensor No.1.
9. Install in the reverse order of removal.
10. Switch the ignition ON (engine off or on).
11. Verify that the air bag system warning light illuminates for **approx. 6 s** and goes out.
    - If the air bag system warning light does not operate normally, refer to the on-board diagnostic system (air bag system) and perform inspection of the system. (See 08-02-5 FLOWCHART.)

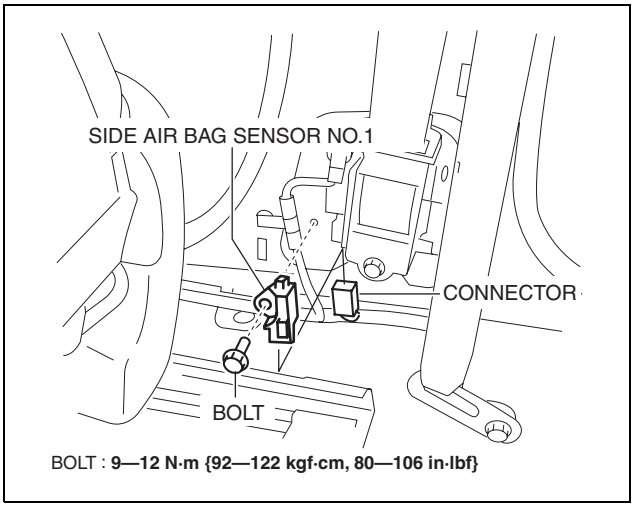

BOLT : **9—12 N·m {92—122 kgf·cm, 80—106 in·lbf}**

9

Connector Disconnect Note

1. Press the area (1) indicated by the arrow and slide it as shown in the figure (2).

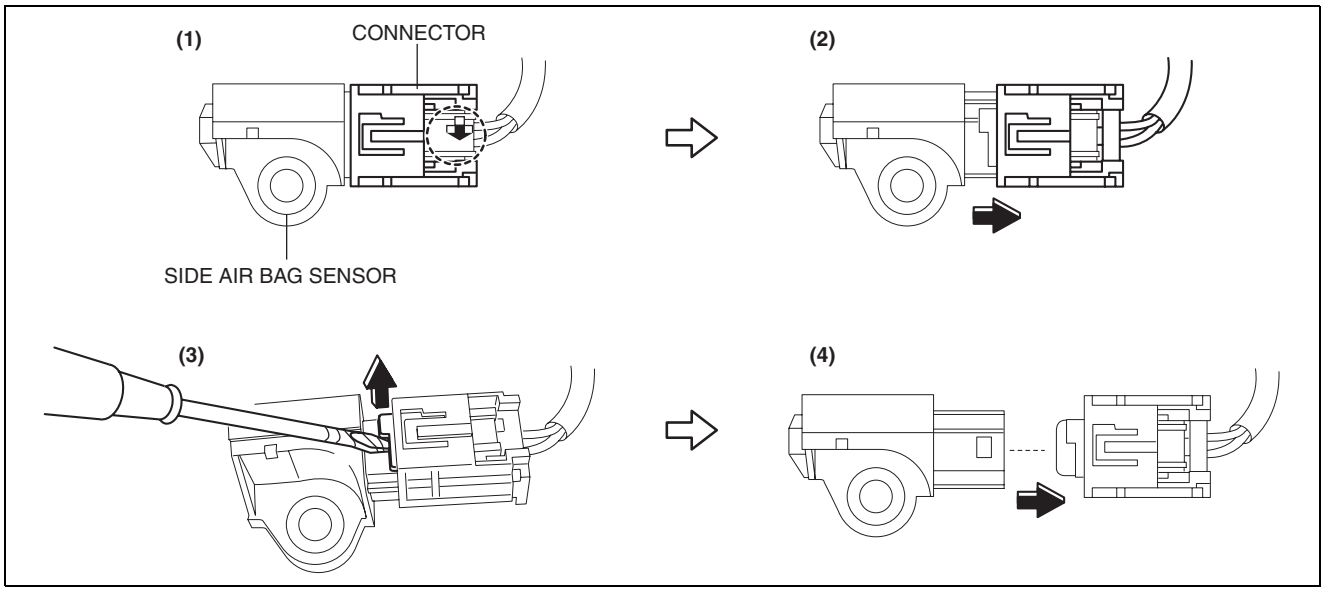

ac5wzw0000200

2. Lift up the location shown in the figure using a tape-wrapped flathead screwdriver (3) and disconnect the connector (4).

SIDE AIR BAG SENSOR NO. 2 REMOVAL/INSTALLATION

id081000800700

Warning

- **Handling the side air bag sensor improperly can accidentally operate (deploy) the air bag module, which may seriously injure you. Read the air bag system service warnings and cautions before handling the side air bag sensor. (See 08-10-3 AIR BAG SYSTEM SERVICE WARNINGS.) (See 08-10-5 AIR BAG SYSTEM SERVICE CAUTIONS.)**

1. Switch the ignition to off.
2. Disconnect the negative battery cable and wait for **1 min or more**. (See 01-17A-11 NEGATIVE BATTERY CABLE DISCONNECTION/CONNECTION [SKYACTIV-G 2.0].)(See 01-17A-13 NEGATIVE BATTERY CABLE DISCONNECTION/CONNECTION [SKYACTIV-G 2.0 (WITHOUT i-stop)].)(See 01-17B-9 NEGATIVE BATTERY CABLE DISCONNECTION/CONNECTION [SKYACTIV-D 2.2].)
3. Remove the following parts:
   (1) Remove the trunk board (See 09-17-85 TRUNK BOARD REMOVAL/INSTALLATION.)
   (2) Remove the trunk end trim (See 09-17-78 TRUNK END TRIM REMOVAL/INSTALLATION.)
   (3) Remove the rear scuff plate (See 09-17-63 REAR SCUFF PLATE REMOVAL/INSTALLATION.)
   (4) Remove the trunk side trim (See 09-17-80 TRUNK SIDE TRIM REMOVAL/INSTALLATION.)

AIR BAG SYSTEM

4. Remove the bolt.
5. Disconnect the connector. (See 08-10-24 Connector Disconnect Note.)
6. Remove the side air bag sensor No.2.
7. Install in the reverse order of removal.
8. Switch the ignition ON (engine off or on).
9. Verify that the air bag system warning light illuminates for **approx. 6 s** and goes out.
   - If the air bag system warning light does not operate normally, refer to the on-board diagnostic system (air bag system) and perform inspection of the system. (See 08-02-5 FLOWCHART.)

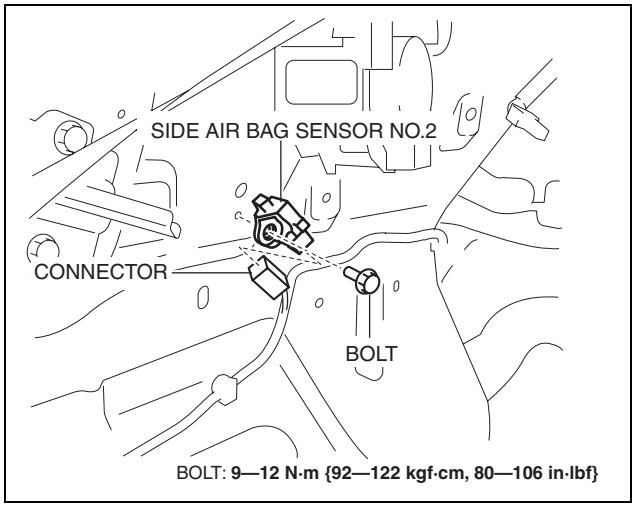

ac5wzw0000100

Connector Disconnect Note

1. Press the area (1) indicated by the arrow and slide it as shown in the figure (2).

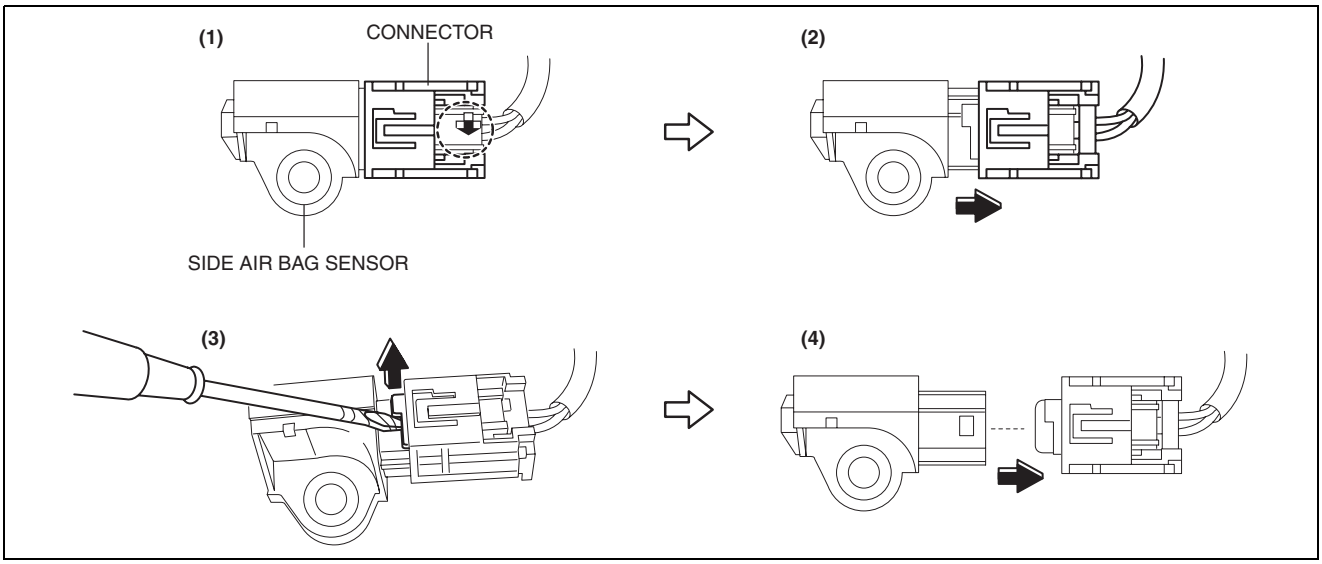

ac5wzw0000200

2. Lift up the location shown in the figure using a tape-wrapped flathead screwdriver (3) and disconnect the connector (4).

CLOCK SPRING REMOVAL/INSTALLATION

id081000802000

Caution

- **If the disc on the combination switch is deformed or has foreign material adhering to it, performance of the steering angle sensor may be reduced, causing abnormal operation. When handling the clock spring, be careful not to deform the disc and make sure there is no foreign material on it.**

1. Switch the ignition to off.
2. Disconnect the negative battery cable and wait for **1 min or more**. (See 01-17A-11 NEGATIVE BATTERY CABLE DISCONNECTION/CONNECTION [SKYACTIV-G 2.0].)(See 01-17A-13 NEGATIVE BATTERY CABLE DISCONNECTION/CONNECTION [SKYACTIV-G 2.0 (WITHOUT i-stop)].)(See 01-17B-9 NEGATIVE BATTERY CABLE DISCONNECTION/CONNECTION [SKYACTIV-D 2.2].)
3. Remove the driver-side air bag module. (See 08-10-6 DRIVER-SIDE AIR BAG MODULE REMOVAL/INSTALLATION.)
4. Remove the steering wheel. (See 06-13-4 STEERING WHEEL AND COLUMN REMOVAL/INSTALLATION.)
5. Remove the column cover. (See 09-17-25 COLUMN COVER REMOVAL/INSTALLATION.)

AIR BAG SYSTEM

6. Disconnect the clock spring connector.
7. Disconnect the steering angle sensor connector. (vehicles with steering angle sensor)
8. Remove the tab direction of the arrow shown in the figure and remove the clock spring.

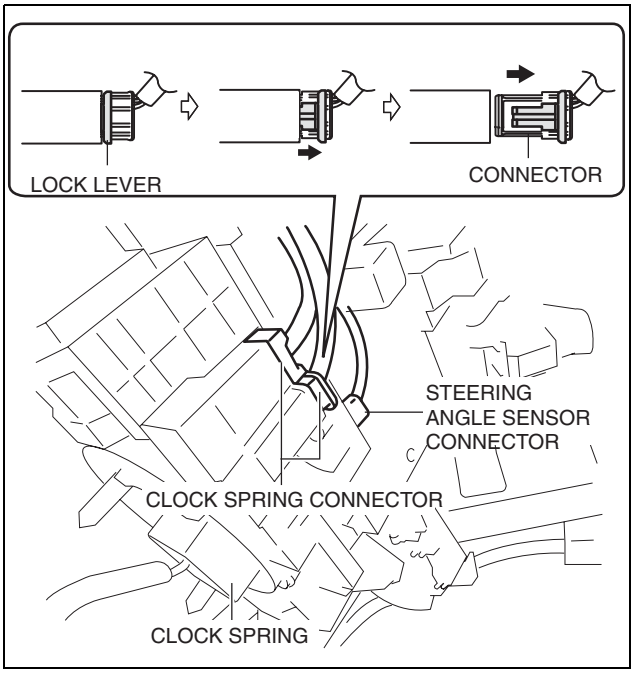

ac5wzw0000204

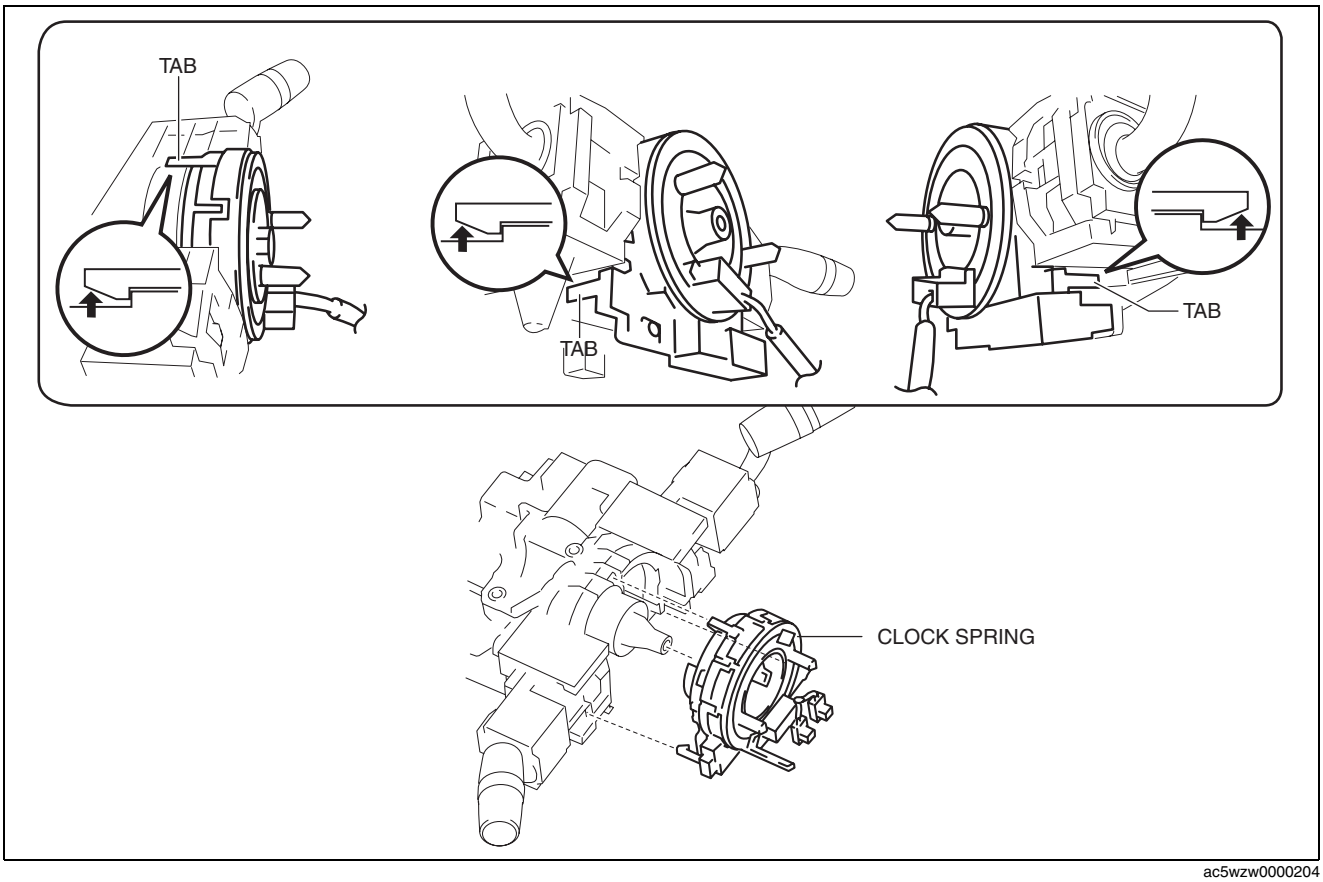

ac5wzw0000204

9. Install in the reverse order of removal. (See 08-10-26 Clock Spring Installation Note.)
10. Verify that the air bag system warning light illuminates for **approx. 6 s** and goes out.
    - If the air bag system warning light does not operate in the manner described above, there are malfunctions in the system. Inspect the system using the on-board diagnostic. (See 08-02-5 FLOWCHART.)

AIR BAG SYSTEM

Clock Spring Installation Note

Caution
- **If the clock spring is not adjusted, the spring wire in the clock spring will break due to overtension when the steering wheel is turned. Always adjust the clock spring after installing it.**

- Adjust the clock spring after installing it. (See 08-10-26 CLOCK SPRING ADJUSTMENT.)

CLOCK SPRING ADJUSTMENT

id081000802100

1. Set the front wheels straight ahead.

Caution
- **The clock spring will break if over-wound. Do not forcibly turn the clock spring.**

2. Turn the clock spring clockwise until it stops.

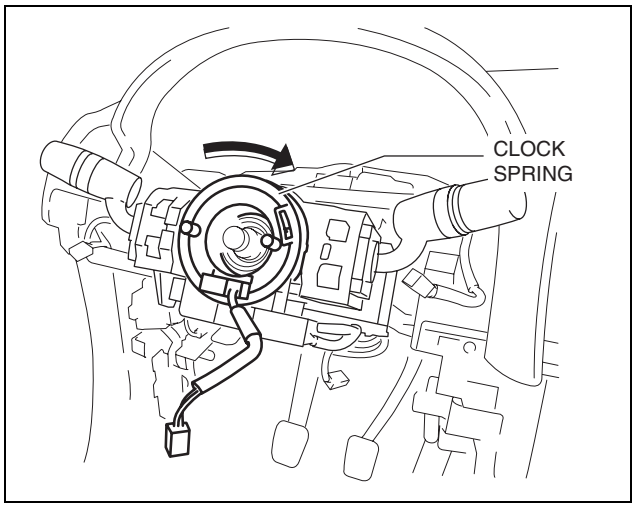

ac5wzw0000204

3. Turn the clock spring counterclockwise **approx. 2 turns**.

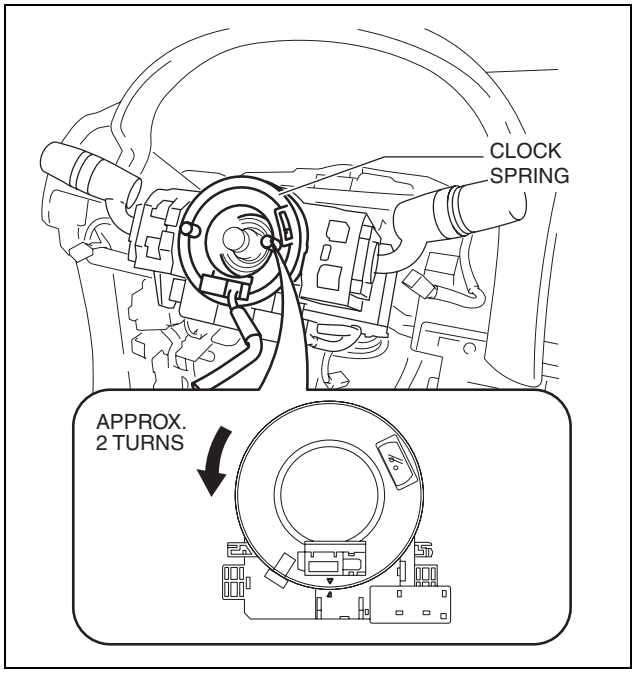

ac5wzw0000204

AIR BAG SYSTEM

4. Align the mark on the clock spring with the mark on the outer housing.

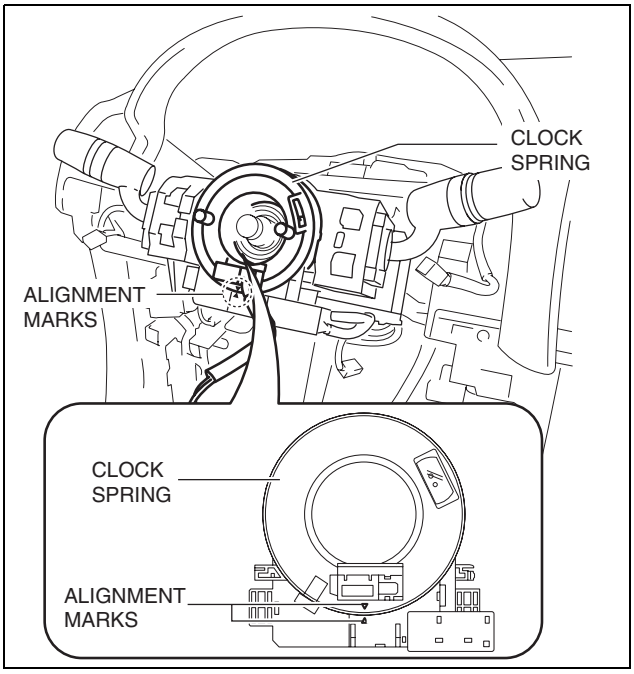

ac5wzw0000204

Note

- After adjusting the alignment marks, the guides can be verified in the viewing slots shown in the figure.

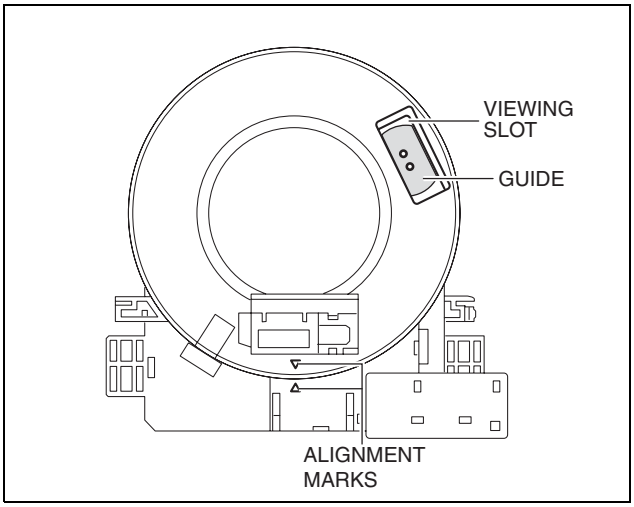

ac5wzw0000204

AIR BAG SYSTEM

CLOCK SPRING INSPECTION

id081000802200

1. Switch the ignition to off.
2. Disconnect the negative battery cable and wait for **1 min or more**. (See 01-17A-11 NEGATIVE BATTERY CABLE DISCONNECTION/CONNECTION [SKYACTIV-G 2.0].)(See 01-17A-13 NEGATIVE BATTERY CABLE DISCONNECTION/CONNECTION [SKYACTIV-G 2.0 (WITHOUT i-stop)].)(See 01-17B-9 NEGATIVE BATTERY CABLE DISCONNECTION/CONNECTION [SKYACTIV-D 2.2].)
3. Remove the driver-side air bag module. (See 08-10-6 DRIVER-SIDE AIR BAG MODULE REMOVAL/INSTALLATION.)
4. Remove the steering wheel. (See 06-13-4 STEERING WHEEL AND COLUMN REMOVAL/INSTALLATION.)
5. Remove the column cover. (See 09-17-25 COLUMN COVER REMOVAL/INSTALLATION.)
6. Remove the clock spring. (See 08-10-24 CLOCK SPRING REMOVAL/INSTALLATION.)
7. Verify that the continuity is as indicated in the table.
   - If not as indicated in the table, replace the clock spring.

Note

- When the vehicle-side connector for the clock spring is disconnected, terminals 1A, 1B are shorted to prevent unexpected operation (deployment) of the air bag module.

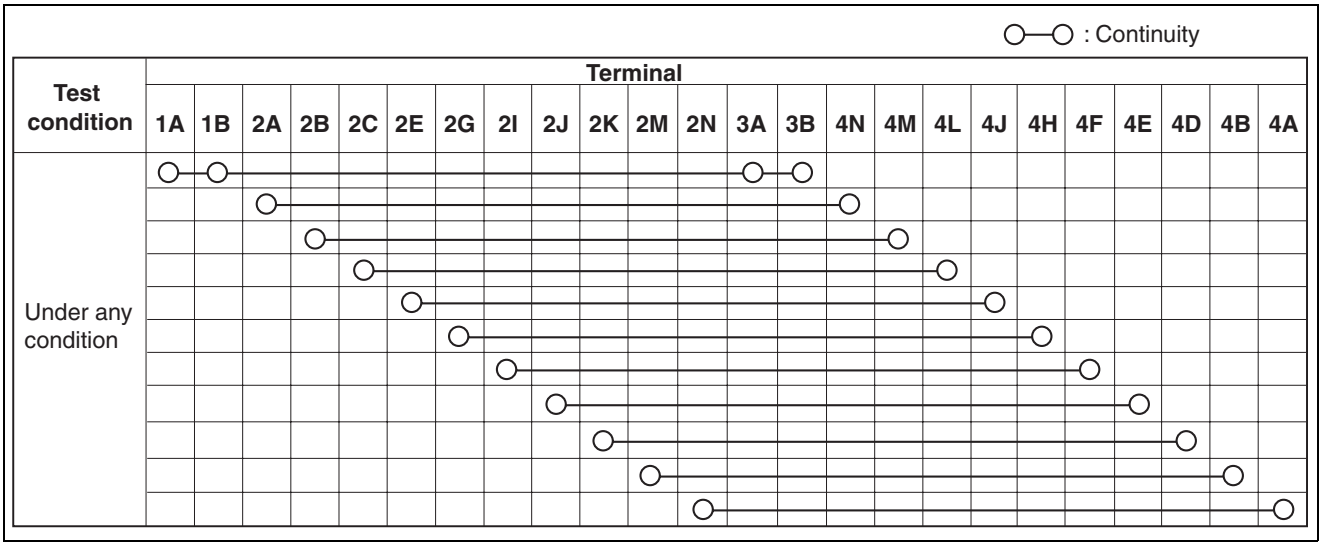

ac5wzw0000204

AIR BAG SYSTEM

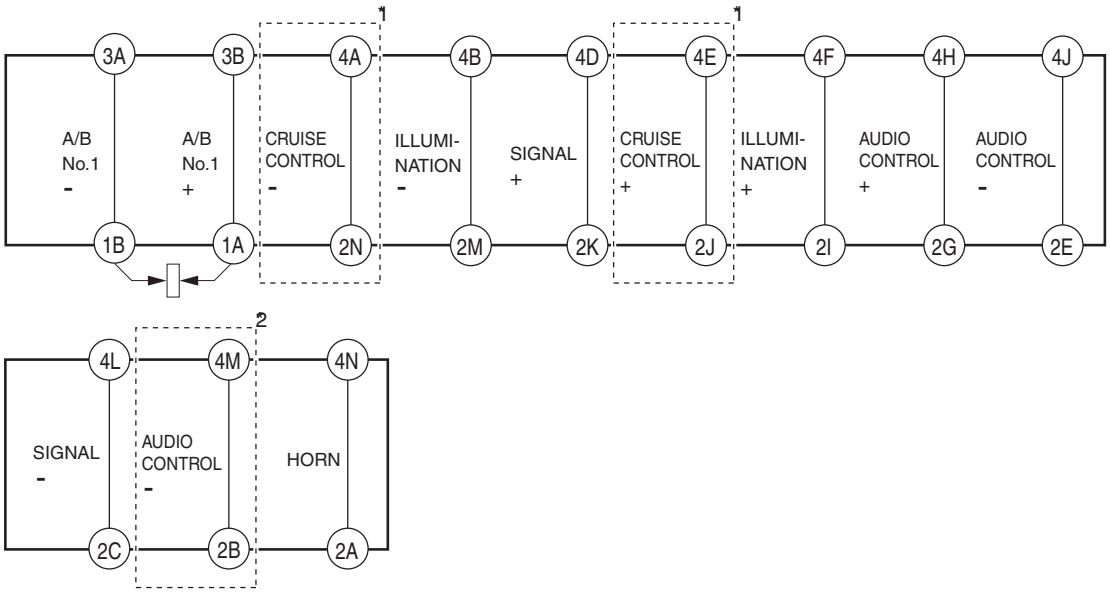

1 : WITH CRUISE CONTROL SYSTEM
2 : WITH Bluetooth SYSTEM (HANDS-FREE TELEPHONE (HF/TEL) SYSTEM)

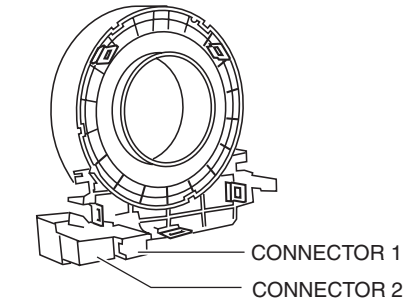

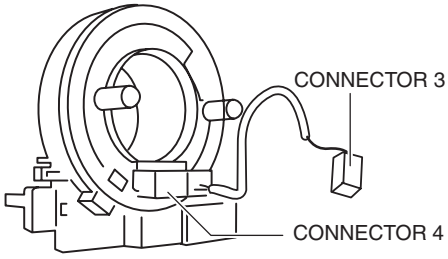

CONNECTOR 1

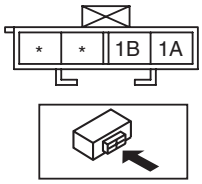

CONNECTOR 2

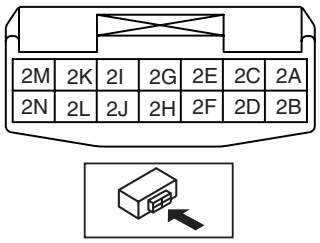

CONNECTOR 3

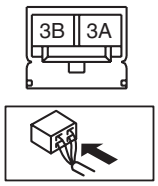

CONNECTOR 4

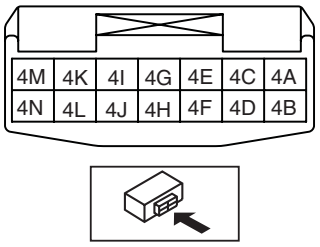

ac5wzw0000205

08

AIR BAG SYSTEM

PASSENGER AIR BAG DEACTIVATION (PAD) SWITCH REMOVAL/INSTALLATION

id081000804100

1. Switch the ignition to off.
2. Disconnect the negative battery cable and wait for **1 min or more**. (See 01-17A-11 NEGATIVE BATTERY CABLE DISCONNECTION/CONNECTION [SKYACTIV-G 2.0].)(See 01-17A-13 NEGATIVE BATTERY CABLE DISCONNECTION/CONNECTION [SKYACTIV-G 2.0 (WITHOUT i-stop)].)(See 01-17B-9 NEGATIVE BATTERY CABLE DISCONNECTION/CONNECTION [SKYACTIV-D 2.2].)
3. Remove the following parts:
   (1) Front scuff plate (passenger-side) (See 09-17-61 FRONT SCUFF PLATE REMOVAL/INSTALLATION.)
   (2) Front side trim (passenger-side) (See 09-17-62 FRONT SIDE TRIM REMOVAL/INSTALLATION.)
   (3) Glove compartment (See 09-17-30 GLOVE COMPARTMENT REMOVAL/INSTALLATION.)
   (4) Decoration panel (See 09-17-33 DECORATION PANEL REMOVAL/INSTALLATION.)
   (5) Lower panel (passenger-side) (See 09-17-35 LOWER PANEL REMOVAL/INSTALLATION.)
4. Remove the PAD switch in the direction of the arrow (2) shown in the figure while pressing the tabs in the direction of the arrow (1).
5. Install in the reverse order of removal.
6. Switch the ignition ON (engine off or on).
7. Verify that the air bag system warning light illuminates for **approx. 6 s** and goes out.
   - If the air bag system warning light does not operate normally, refer to the on-board diagnostic system (air bag system) and perform inspection of the system.

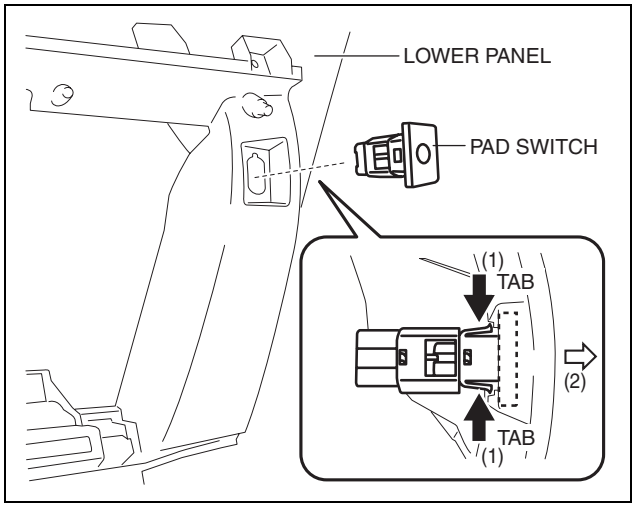

ac5wzw0000205

PASSENGER AIR BAG DEACTIVATION (PAD) SWITCH INSPECTION

id081000804000

1. Disconnect the negative battery cable and wait for **1 min or more**. (See 01-17A-11 NEGATIVE BATTERY CABLE DISCONNECTION/CONNECTION [SKYACTIV-G 2.0].)(See 01-17A-13 NEGATIVE BATTERY CABLE DISCONNECTION/CONNECTION [SKYACTIV-G 2.0 (WITHOUT i-stop)].)(See 01-17B-9 NEGATIVE BATTERY CABLE DISCONNECTION/CONNECTION [SKYACTIV-D 2.2].)
2. Remove the PAD switch. (See 08-10-30 PASSENGER AIR BAG DEACTIVATION (PAD) SWITCH REMOVAL/INSTALLATION.)
3. Verify that the continuity between the PAD switch terminals is as indicated in the table.
   - If not as indicated in the table, replace the PAD switch.

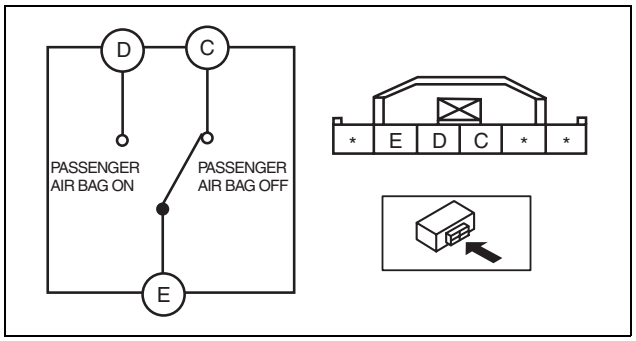

ac5wzw0000205

○—○ : Continuity

Switch position	Terminal		
	C	D	E
PASSENGER AIR BAG OFF	○		○
PASSENGER AIR BAG ON		○	○

ac5wzw0000205

AIR BAG SYSTEM

AIR BAG MODULE AND PRE-TENSIONER SEAT BELT DEPLOYMENT PROCEDURES

id081000801100

Warning

- **A live (undeployed) air bag module or pre-tensioner seat belt may accidentally operate (deploy) when it is disposed of and cause serious injury. Do not dispose of a live (undeployed) air bag module and pre-tensioner seat belt. If the SSTs (Deployment tool and Adapter harness) are not available, consult the nearest Mazda representative for assistance.**

Caution

- **Deploying the air bag modules and pre-tensioner seat belts inside the vehicle may cause damage to the vehicle interior. When the vehicle is not to be scrapped, always deploy the air bag modules and pre-tensioner seat belts outside the vehicle.**

- If the vehicle is to be scrapped, or when disposing of any air bag modules or pre-tensioner seat belts, operate (deploy) them inside the vehicle by following the deployment procedure below and using the **SST (Deployment tool)**.
- When disposing of an operated (deployed) air bag module and pre-tensioner seat belt, refer to “AIR BAG MODULE AND PRE-TENSIONER SEAT BELT DISPOSAL PROCEDURES”.

Deployment Procedure for Inside of Vehicle

1. Inspect the **SST (Deployment tool)**. (See 08-10-45 INSPECTION OF SST (DEPLOYMENT TOOL).)
2. Move the vehicle to an open space, away from strong winds, and close all of the vehicle doors and windows.
3. Switch the ignition to off.
4. Disconnect the negative battery cable and wait for **1 min or more**. (See 01-17A-11 NEGATIVE BATTERY CABLE DISCONNECTION/CONNECTION [SKYACTIV-G 2.0].)(See 01-17A-13 NEGATIVE BATTERY CABLE DISCONNECTION/CONNECTION [SKYACTIV-G 2.0 (WITHOUT i-stop)].)(See 01-17B-9 NEGATIVE BATTERY CABLE DISCONNECTION/CONNECTION [SKYACTIV-D 2.2].)
5. Follow the procedure below for operating (deploying) the applicable air bag module or pre-tensioner seat belt.

Driver-side Air Bag Module

1. Remove the driver-side air bag module. (See 08-10-6 DRIVER-SIDE AIR BAG MODULE REMOVAL/INSTALLATION.)
2. Connect the **SST (Adapter harness)** to the driver-side air bag module as shown in the figure.
3. Install the driver-side air bag module. (See 08-10-6 DRIVER-SIDE AIR BAG MODULE REMOVAL/INSTALLATION.)

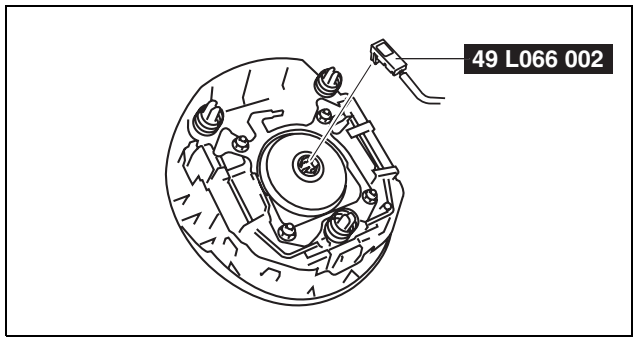

ac5wzw0000200

4. Connect the **SST (Deployment tool)** to the **SST (Adapter harness)**.
5. Connect the **SST (Deployment tool)** to the battery. Connect the power supply red clip to the positive battery terminal, and the black clip to the negative battery terminal.
6. Verify that the red lamp on the **SST (Deployment tool)** is illuminated.
7. Verify that all persons are standing **at least 6 m {20 ft}** away from the vehicle.

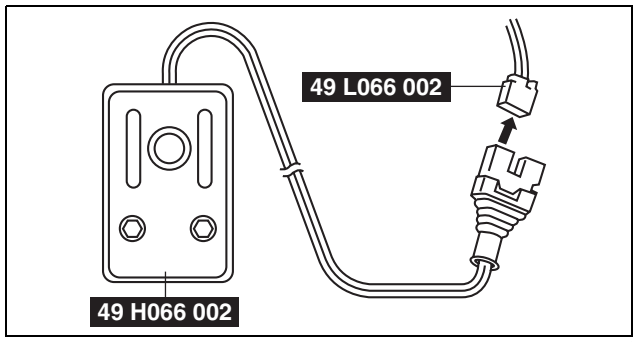

am3zzw0000581

AIR BAG SYSTEM

8. Press the activation switch on the **SST (Deployment tool)** to operate (deploy) the air bag module.

   Warning
   - **The air bag module is very hot immediately after it is operated (deployed). You can get burned. Do not touch the air bag module for at least 15 min after deployment.**

9. Disconnect the **SST (Deployment tool)** from the **SST (Adapter harness)**.

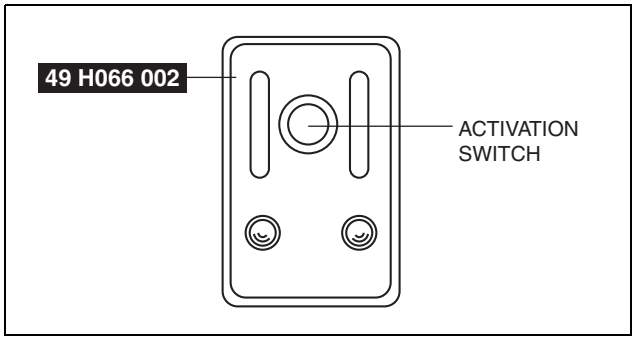

am3zzw0000970

Passenger-side Air Bag Module

1. Remove the following parts:
   (1) Front scuff plate (passenger-side) (See 09-17-61 FRONT SCUFF PLATE REMOVAL/INSTALLATION.)
   (2) Front side trim (passenger-side) (See 09-17-62 FRONT SIDE TRIM REMOVAL/INSTALLATION.)
   (3) Dashboard under cover (See 09-17-35 DASHBOARD UNDER COVER REMOVAL/INSTALLATION.)
   (4) Front heat duct (passenger-side) (See 07-11-22 FRONT HEAT DUCT REMOVAL/INSTALLATION.)
   (5) Glove compartment (See 09-17-30 GLOVE COMPARTMENT REMOVAL/INSTALLATION.)
   (6) Decoration panel (See 09-17-33 DECORATION PANEL REMOVAL/INSTALLATION.)
   (7) Lower panel (passenger-side) (See 09-17-35 LOWER PANEL REMOVAL/INSTALLATION.)
   (8) Blower unit (See 07-11-5 BLOWER UNIT REMOVAL/INSTALLATION.)
2. Disconnect the passenger-side air bag module connector.
3. Connect the **SST (Adapter harness)** to the passenger-side air bag module as shown in the figure.

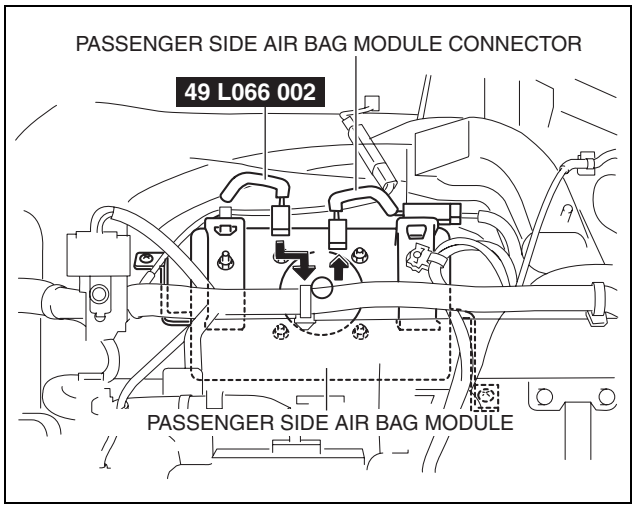

ac5wzw0000201

4. Connect the **SST (Deployment tool)** to the **SST (Adapter harness)**.
5. Connect the **SST (Deployment tool)** to the battery. Connect the power supply red clip to the positive battery terminal, and the black clip to the negative battery terminal.
6. Verify that the red lamp on the **SST (Deployment tool)** is illuminated.
7. Verify that all persons are standing **at least 6 m {20 ft}** away from the vehicle.

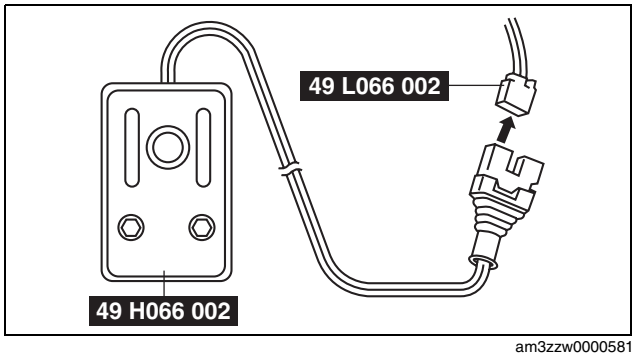

am3zzw0000581

AIR BAG SYSTEM

8. Press the activation switch on the **SST (Deployment tool)** to operate (deploy) the air bag module.

   Warning
   - **The air bag module is very hot immediately after it is operated (deployed). You can be burned. Do not touch the air bag module for at least 15 min after deployment.**

9. Disconnect the **SST (Deployment tool)** from the **SST (Adapter harness)**.

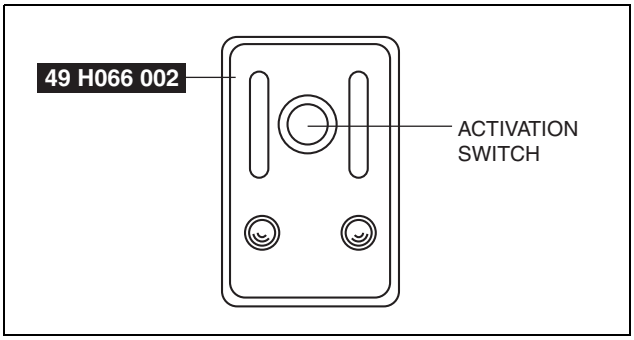

am3zzw0000970

Side Air Bag Module

1. Disconnect the front seat connector.
2. Connect the **SST (Adapter harness)** to the front seat connector as shown in the figure.

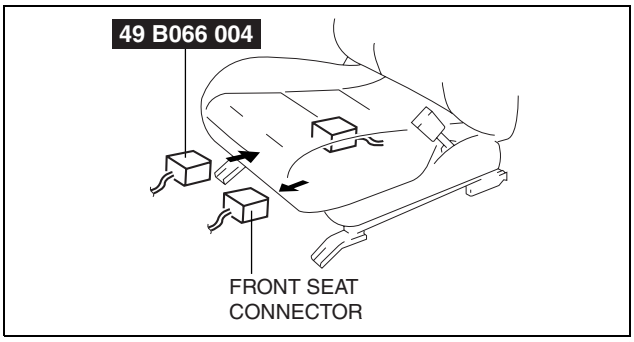

ac5wzw0000201

3. Connect the **SST (Deployment tool)** to the **SST (Adapter harness)**.
4. Connect the **SST (Deployment tool)** to the battery. Connect the power supply red clip to the positive battery terminal, and the black clip to the negative battery terminal.
5. Verify that the red lamp on the **SST (Deployment tool)** is illuminated.
6. Verify that all persons are standing **at least 6 m {20 ft}** away from the vehicle.

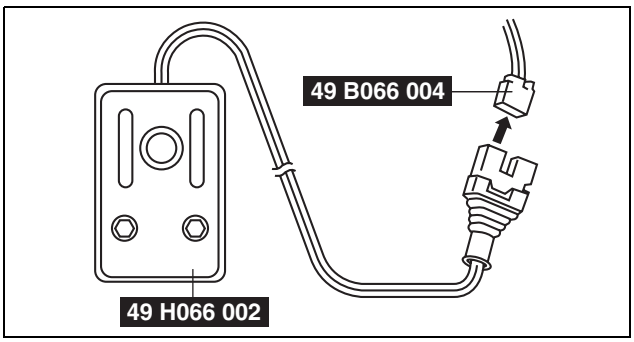

ac5wzw0000201

7. Press the activation switch on the **SST (Deployment tool)** to operate (deploy) the side air bag module.

   Warning
   - **The air bag module is very hot immediately after it is operated (deployed). You can be burned. Do not touch the air bag module for at least 15 min after deployment.**

8. Disconnect the **SST (Deployment tool)** from the **SST (Adapter harness)**.

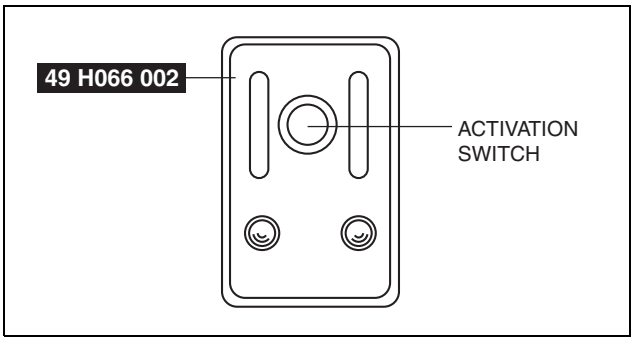

am3zzw0000970

AIR BAG SYSTEM

Curtain Air Bag Module

1. Remove the following parts:
   (1) Front scuff plate (See 09-17-61 FRONT SCUFF PLATE REMOVAL/INSTALLATION.)
   (2) Rear scuff plate (See 09-17-63 REAR SCUFF PLATE REMOVAL/INSTALLATION.)
   (3) B-pillar lower trim (See 09-17-57 B-PILLAR LOWER TRIM REMOVAL/INSTALLATION.)
   (4) Front seat belt adjuster cover (See 08-11-2 FRONT SEAT BELT REMOVAL/INSTALLATION.)
   (5) Upper anchor of the front seat belt (See 08-11-2 FRONT SEAT BELT REMOVAL/INSTALLATION.)
   (6) B-pillar upper trim (See 09-17-58 B-PILLAR UPPER TRIM REMOVAL/INSTALLATION.)
   (7) Assist handle (See 09-17-91 ASSIST HANDLE REMOVAL/INSTALLATION.)
   (8) Trunk board (See 09-17-85 TRUNK BOARD REMOVAL/INSTALLATION.)
   (9) Trunk end trim (See 09-17-78 TRUNK END TRIM REMOVAL/INSTALLATION.)
   (10)Trunk side trim (See 09-17-80 TRUNK SIDE TRIM REMOVAL/INSTALLATION.)
   (11)D-pillar trim (See 09-17-60 D-PILLAR TRIM REMOVAL/INSTALLATION.)
   (12)C-pillar trim (See 09-17-59 C-PILLAR TRIM REMOVAL/INSTALLATION.)
2. Peel back the headliner.
3. Disconnect the curtain air bag module connector.
4. Connect the **SST (Adapter harness)** to the curtain air bag module as shown in the figure.

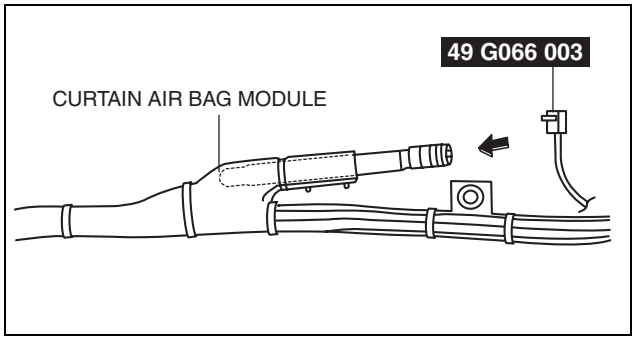

ac5wzw0000201

5. Connect the **SST (Deployment tool)** to the **SST (Adapter harness)**.
6. Connect the **SST (Deployment tool)** to the battery. Connect the power supply red clip to the positive battery terminal, and the black clip to the negative battery terminal.
7. Verify that the red lamp on the **SST (Deployment tool)** is illuminated.
8. Verify that all persons are standing **at least 6 m {20 ft}** away from the vehicle.

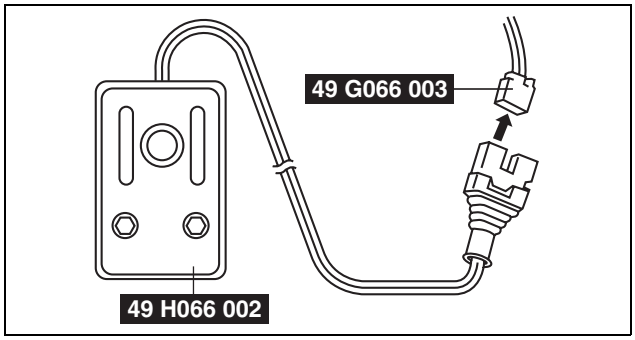

ac5wzw0000201

9. Press the activation switch on the **SST (Deployment tool)** to operate (deploy) the curtain air bag module.

   Warning
   - **The air bag module is very hot immediately after it is operated (deployed). You can be burned. Do not touch the air bag module for at least 15 min after deployment.**

10. Disconnect the **SST (Deployment tool)** from the **SST (Adapter harness)**.

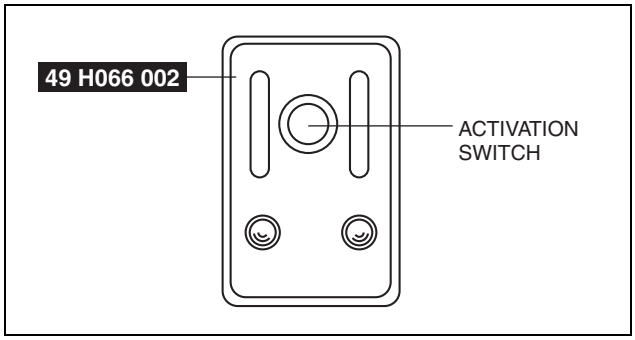

am3zzw0000970

AIR BAG SYSTEM

Pre-tensioner Seat Belt

1. Remove the front scuff plate. (See 09-17-61 FRONT SCUFF PLATE REMOVAL/INSTALLATION.)
2. Remove the rear scuff plate. (See 09-17-63 REAR SCUFF PLATE REMOVAL/INSTALLATION.)
3. Remove the B-pillar lower trim. (See 09-17-57 B-PILLAR LOWER TRIM REMOVAL/INSTALLATION.)
4. Remove the pre-tensioner seat belt and connect the **SST (Adapter harness)** as shown in the figure. (See 08-11-2 FRONT SEAT BELT REMOVAL/INSTALLATION.)
5. Install the pre-tensioner seat belt.

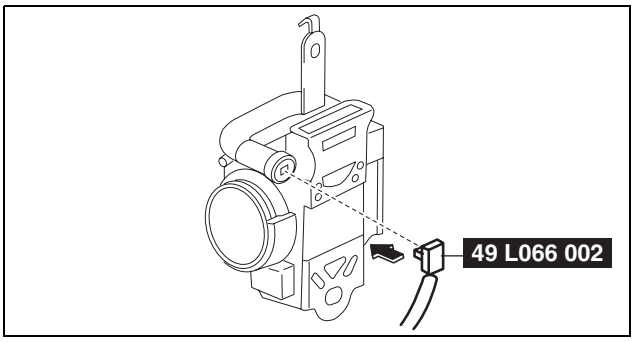

ac5wzw0000201

6. Connect the **SST (Deployment tool)** to the **SST (Adapter harness)**.
7. Connect the **SST (Deployment tool)** to the battery. Connect the power supply red clip to the positive battery terminal, and the black clip to the negative battery terminal.
8. Verify that the red lamp on the **SST (Deployment tool)** is illuminated.
9. Verify that all persons are standing **at least 6 m {20 ft}** away from the vehicle.

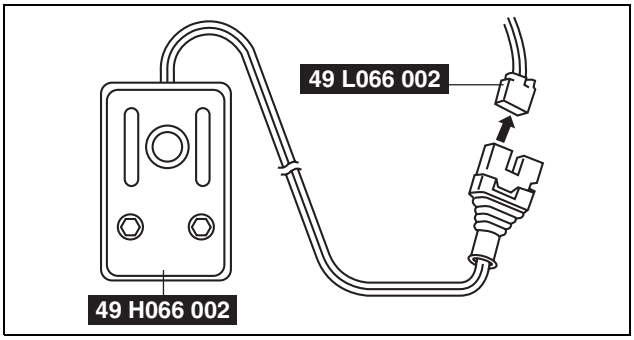

am6xuw0000203

10. Press the activation switch on the **SST (Deployment tool)** to operate (deploy) the pre-tensioner seat belt.

    Warning
    - **The pre-tensioner seat belt is very hot immediately after it is operated (deployed). You can be burned. Do not touch the pre-tensioner seat belt for at least 15 min after deployment.**

11. Disconnect the **SST (Deployment tool)** from the **SST (Adapter harness)**.

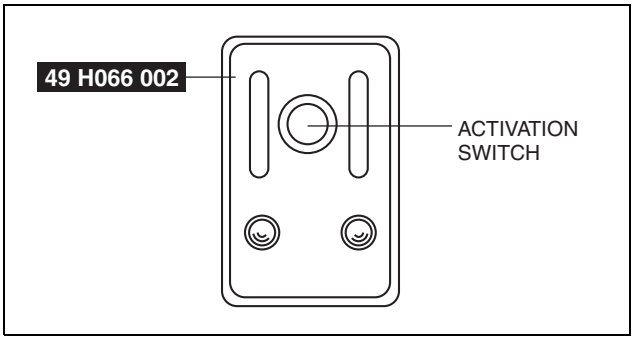

am3zzw0000970

AIR BAG SYSTEM

Deployment Procedure for Outside of Vehicle

1. Inspect the **SST (Deployment tool)**. (See 08-10-45 INSPECTION OF SST (DEPLOYMENT TOOL).)
2. Switch the ignition to off.

Driver-side Air Bag Module

1. Remove the driver-side air bag module. (See 08-10-6 DRIVER-SIDE AIR BAG MODULE REMOVAL/ INSTALLATION.)
2. Wrap the wiring harness (cross section **1.25 mm^2 {0.002 in^2} or more**) at least four times around the position shown in the figure for the driver-side air bag module.

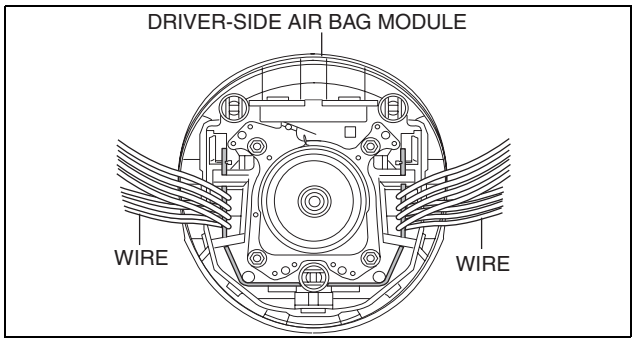

ac5wzw0000201

3. Connect the **SST (Adapter harness)** to the driver-side air bag module.

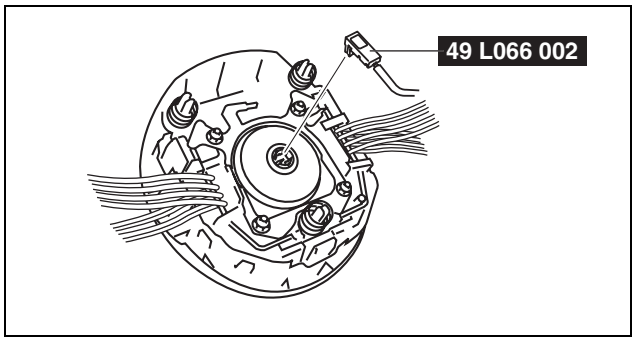

ac5wzw0000201

4. Place the driver-side air bag module on the center of the tire wheel with the padded surface facing up. To secure the air bag module to the tire wheel, wrap a wire (cross section **1.25 mm^2 {0.002 in^2} or more**) through the wheel and the bolt installation holes of the air bag module **at least 4 times**.

   Warning
   - **If the air bag module is not properly installed to the tire wheel, serious injury may occur when the module is operated (deployed). When installing the air bag module to the tire wheel, make sure the padded surface is facing up.**

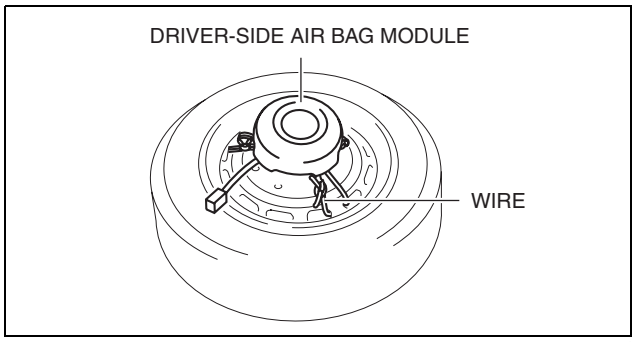

ac5wzw0000201

5. Stack three tires without wheels on top of the tire with the driver-side air bag module, and then stack another tire with a wheel on the very top.

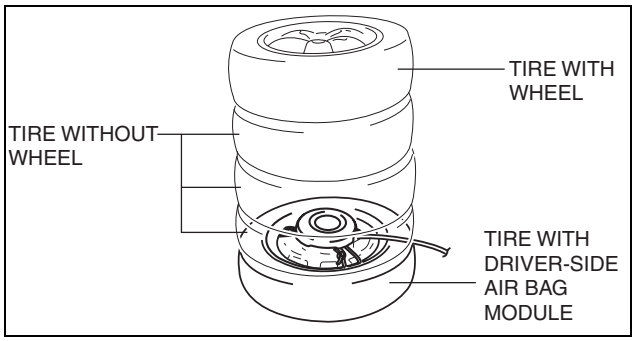

ac5wzw0000201

AIR BAG SYSTEM

6. Secure the tires with wire.

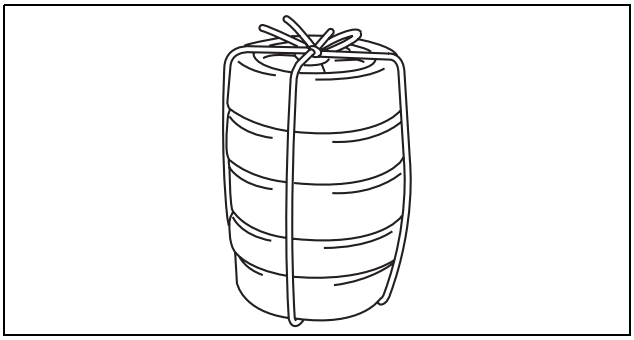
am6zzw0000096

7. Connect the **SST (Deployment tool)** to the **SST (Adapter harness)**.
8. Connect the **SST (Deployment tool)** to the battery. Connect the power supply red clip to the positive battery terminal, and the black clip to the negative battery terminal.
9. Verify that the red lamp on the **SST (Deployment tool)** is illuminated.
10. Verify that all persons are standing **at least 6 m {20 ft}** away from the vehicle.

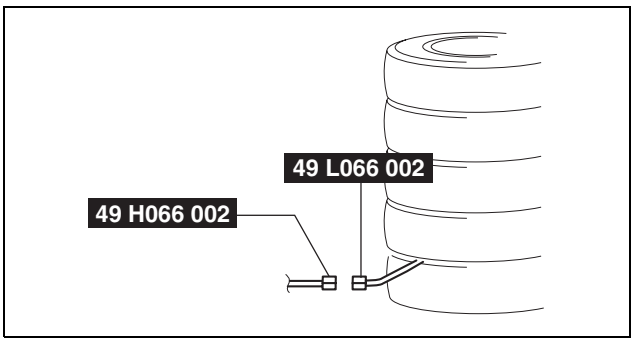

am3zzw0000581

11. Press the activation switch on the **SST (Deployment tool)** to operate (deploy) the air bag module.

    Warning
    - **The air bag module is very hot immediately after it is operated (deployed). You can be burned. Do not touch the air bag module for at least 15 min after deployment.**

12. Disconnect the **SST (Deployment tool)** from the **SST (Adapter harness)**.

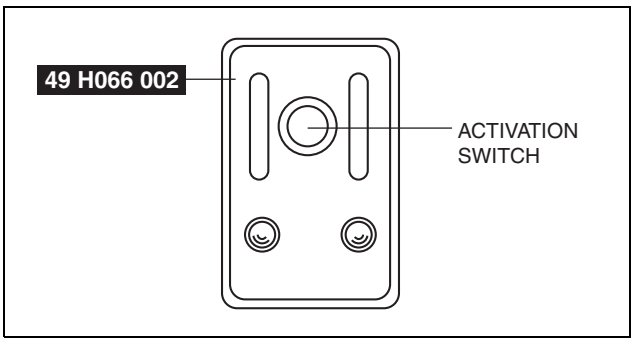

am3zzw0000970

Passenger-side Air Bag Module

1. Remove the following parts:
   (1) Front scuff plate (passenger-side) (See 09-17-61 FRONT SCUFF PLATE REMOVAL/INSTALLATION.)
   (2) Front side trim (passenger-side) (See 09-17-62 FRONT SIDE TRIM REMOVAL/INSTALLATION.)
   (3) Dashboard under cover (See 09-17-35 DASHBOARD UNDER COVER REMOVAL/INSTALLATION.)
   (4) Front heat duct (passenger-side) (See 07-11-22 FRONT HEAT DUCT REMOVAL/INSTALLATION.)
   (5) Glove compartment (See 09-17-30 GLOVE COMPARTMENT REMOVAL/INSTALLATION.)
   (6) Decoration panel (See 09-17-33 DECORATION PANEL REMOVAL/INSTALLATION.)
   (7) Lower panel (passenger-side) (See 09-17-35 LOWER PANEL REMOVAL/INSTALLATION.)
   (8) Blower unit (See 07-11-5 BLOWER UNIT REMOVAL/INSTALLATION.)

AIR BAG SYSTEM

2. Disconnect the passenger-side air bag module connector.
3. Connect the **SST (Adapter harness)** to the passenger-side air bag module as shown in the figure.

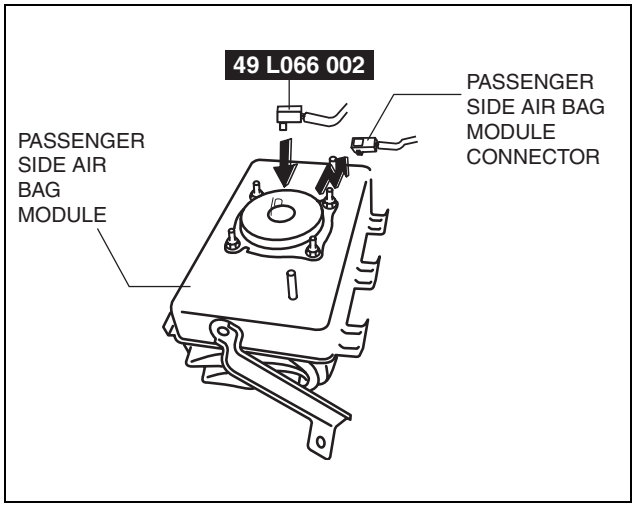

ac5wzw0000202

4. Place the padded surface of the passenger-side air bag module facing the center of the tire as shown in the figure. To secure the air bag module to the tire wheel, wrap a wire (cross section **1.25 mm^2 {0.002 in^2} or more**) through the tire and the bolt installation holes **at least 4 times** as shown in the figure.

Warning
- **If the air bag module is not properly secured to the tire, the tires may fall over by the impact of operation (deployment) and cause serious injury. To prevent this, secure the air bag module properly with the padded surface facing the center of the tire.**

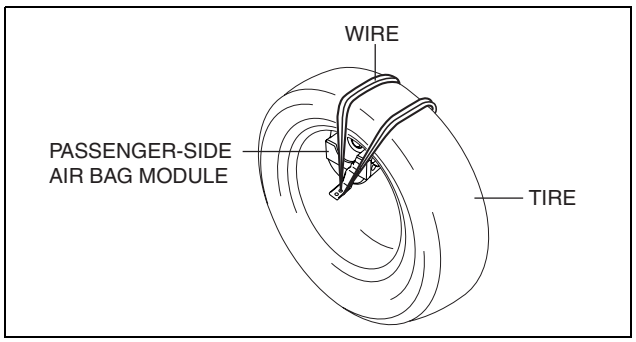

am6zzw0000096

5. Stack the tire with the passenger-side air bag module on top of two tires without wheels. Stack a tire without a wheel on top of the tire with the passenger-side air bag module, and then stack another tire with a wheel on the very top.

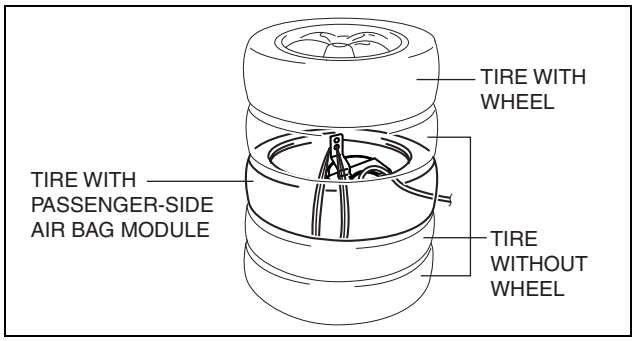

am6xuw0000182

6. Secure the tires with wire.

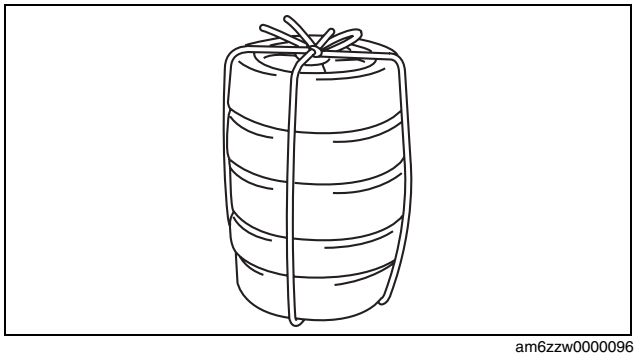
am6zzw0000096

AIR BAG SYSTEM

7. Connect the **SST (Deployment tool)** to the **SST (Adapter harness)**.
8. Connect the **SST (Deployment tool)** to the battery. Connect the power supply red clip to the positive battery terminal, and the black clip to the negative battery terminal.
9. Verify that the red lamp on the **SST (Deployment tool)** is illuminated.
10. Verify that all persons are standing **at least 6 m {20 ft}** away from the vehicle.

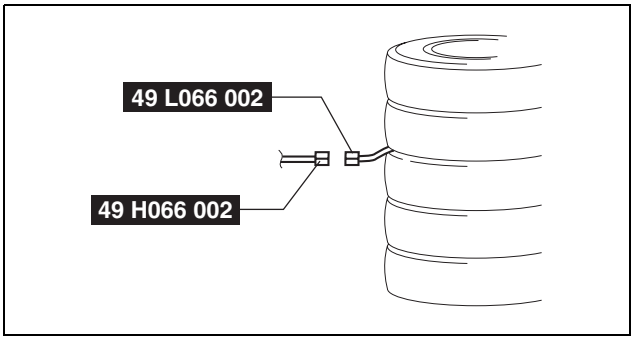

am3zzw0000581

11. Press the activation switch on the **SST (Deployment tool)** to operate (deploy) the air bag module.

Warning
- **The air bag module is very hot immediately after it is operated (deployed). You can be burned. Do not touch the air bag module for at least 15 min after deployment.**

12. Disconnect the **SST (Deployment tool)** from the **SST (Adapter harness)**.

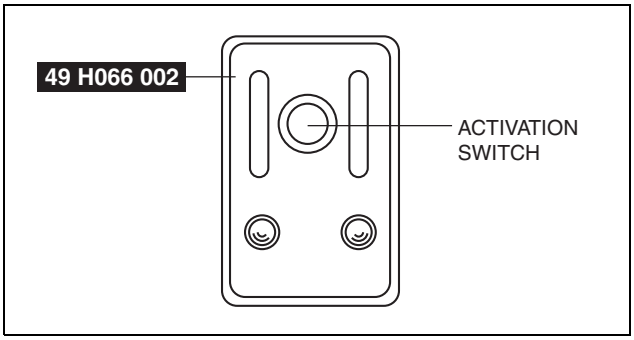

am3zzw0000970

Side Air Bag Module

1. Remove the front seat. (See 09-13-4 FRONT SEAT REMOVAL/INSTALLATION.)
2. Remove the front seat back trim and pad. (See 09-13-11 FRONT SEAT BACK TRIM REMOVAL/INSTALLATION.)
3. Remove the side air bag module. (See 08-10-14 SIDE AIR BAG MODULE REMOVAL/INSTALLATION.)
4. Connect the **SST (Adapter harness)** to the side air bag module as shown in the figure.

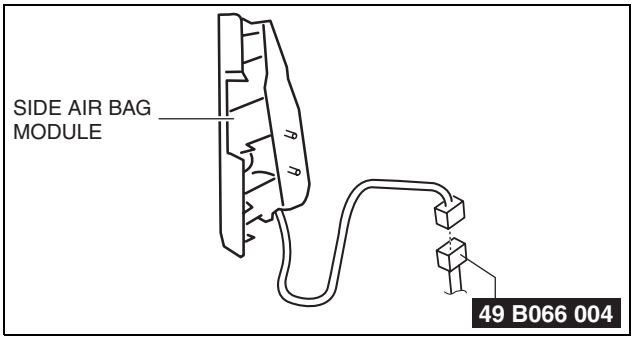

ac5wzw0000202

5. Put the side air bag module inside the tire and secure it to the tire by wrapping a wire (cross section **1.25 mm^2 {0.002 in^2} or more**) through the tire and the bolt **at least 4 times**.

Warning
- **If the air bag module is not properly secured to the tire, the tires may fall over by the impact of operation (deployment) and cause serious injury. To prevent this, secure the air bag module properly with the padded surface facing the center of the tire.**

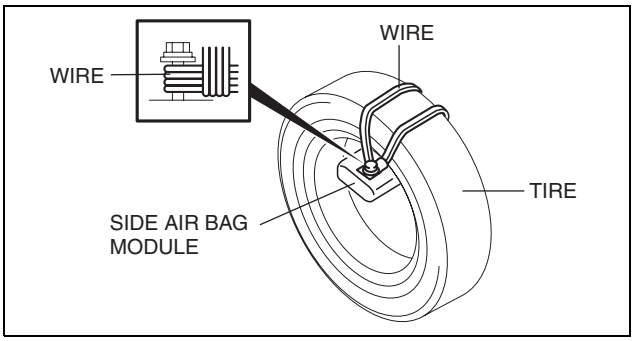

am3uuw0000424

AIR BAG SYSTEM

6. Stack the tire with the side air bag module on top of two tires without wheels. Stack a tire without a wheel on top of the tire with the side air bag module, and then stack another tire with a wheel on the very top.

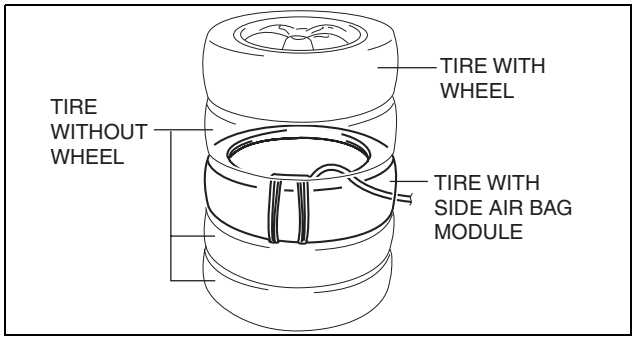

am2zzw0000037

7. Secure the tires with wire.

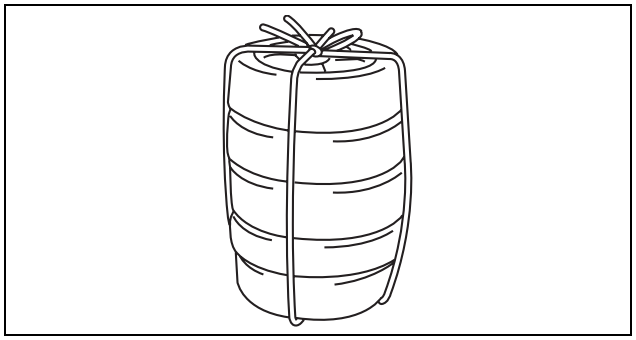
am6zzw0000096

8. Connect the **SST (Deployment tool)** to the **SST (Adapter harness).**
9. Connect the **SST (Deployment tool)** to the battery. Connect the power supply red clip to the positive battery terminal, and the black clip to the negative battery terminal.
10. Verify that the red lamp on the **SST (Deployment tool)** is illuminated.
11. Verify that all persons are standing **at least 6 m {20 ft}** away from the vehicle.

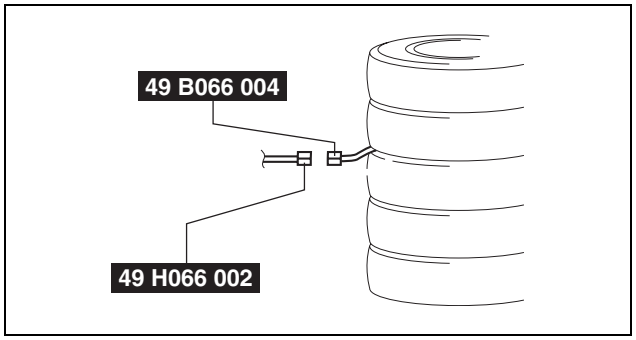

ac5wzw0000202

12. Press the activation switch on the **SST (Deployment tool)** to operate (deploy) the side air bag module.

Warning
- **The air bag module is very hot immediately after it is operated (deployed). You can be burned. Do not touch the air bag module for at least 15 min after deployment.**

13. Disconnect the **SST (Deployment tool)** from the **SST (Adapter harness)**.

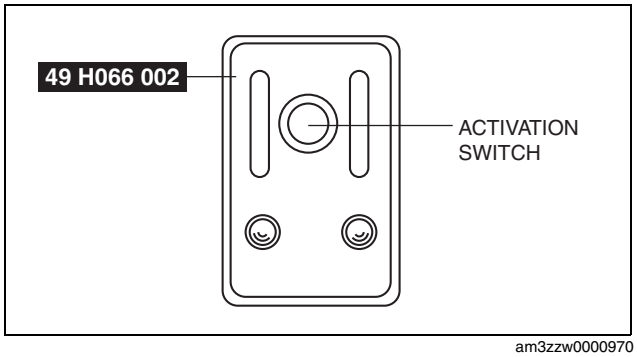

am3zzw0000970

AIR BAG SYSTEM

Curtain Air Bag Module

1. Disconnect the negative battery cable and wait for **1 min or more**. (See 01-17A-11 NEGATIVE BATTERY CABLE DISCONNECTION/CONNECTION [SKYACTIV-G 2.0].)(See 01-17A-13 NEGATIVE BATTERY CABLE DISCONNECTION/CONNECTION [SKYACTIV-G 2.0 (WITHOUT i-stop)].)(See 01-17B-9 NEGATIVE BATTERY CABLE DISCONNECTION/CONNECTION [SKYACTIV-D 2.2].)
2. Partially peel back the seaming welts.
3. Remove the following parts:
   (1) Sunroof seaming welt (vehicles with sunroof) (See 09-15-6 SUNROOF UNIT REMOVAL/INSTALLATION.)
   (2) A-pillar trim (See 09-17-53 A-PILLAR TRIM REMOVAL/INSTALLATION.)
   (3) Front map light (See 09-18-95 MAP LIGHT REMOVAL/INSTALLATION.)
   (4) Sunvisor (See 09-17-93 SUNVISOR REMOVAL/INSTALLATION.)
   (5) Front scuff plate (See 09-17-61 FRONT SCUFF PLATE REMOVAL/INSTALLATION.)
   (6) Rear scuff plate (See 09-17-63 REAR SCUFF PLATE REMOVAL/INSTALLATION.)
   (7) B-pillar lower trim (See 09-17-57 B-PILLAR LOWER TRIM REMOVAL/INSTALLATION.)
   (8) Front seat belt adjuster cover (See 08-11-2 FRONT SEAT BELT REMOVAL/INSTALLATION.)
   (9) Upper anchor of the front seat belt (See 08-11-2 FRONT SEAT BELT REMOVAL/INSTALLATION.)
   (10)B-pillar upper trim (See 09-17-58 B-PILLAR UPPER TRIM REMOVAL/INSTALLATION.)
   (11)Assist handle (See 09-17-91 ASSIST HANDLE REMOVAL/INSTALLATION.)
   (12)Trunk board (See 09-17-85 TRUNK BOARD REMOVAL/INSTALLATION.)
   (13)Trunk end trim (See 09-17-78 TRUNK END TRIM REMOVAL/INSTALLATION.)
   (14)Trunk side trim (See 09-17-80 TRUNK SIDE TRIM REMOVAL/INSTALLATION.)
   (15)D-pillar trim (See 09-17-60 D-PILLAR TRIM REMOVAL/INSTALLATION.)
   (16)C-pillar trim (See 09-17-59 C-PILLAR TRIM REMOVAL/INSTALLATION.)
4. Remove the headliner. (See 09-17-94 HEADLINER REMOVAL/INSTALLATION.)
5. Remove the curtain air bag module. (See 08-10-15 CURTAIN AIR BAG MODULE REMOVAL/INSTALLATION.)
6. Cut off the air bag part of the curtain air bag module at the position shown in the figure.

Warning

- **Be sure not to crush the pipe on the side where it is cut. If it is crushed completely, the interior pressure of the pipe will build up and can cause it to explode during air bag module operation (deployment).**

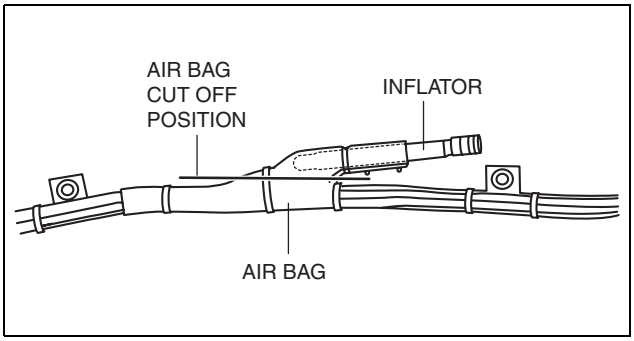

ac5wzw0000202

7. Disconnect the curtain air bag module connector.
8. Connect the **SST (Adapter harness)** to the curtain air bag module as shown in the figure.

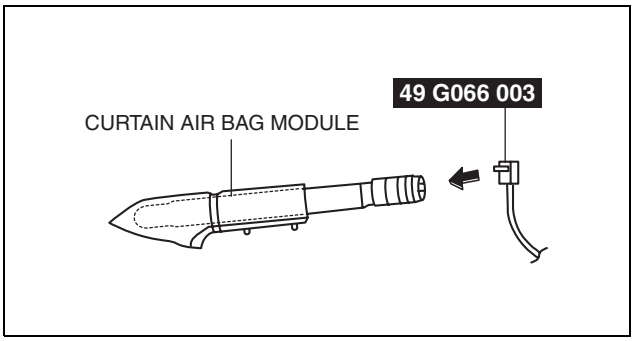

ac5wzw0000202

9. Secure the curtain air bag module to the tire, by wrapping a wire (cross section **1.25 mm^2 {0.002 in^2} or more**) through the tire and the bolt installation holes **at least 4 times** as shown in the figure.

Warning

- **If the air bag module is not properly installed to the tire, serious injury may occur when the module is operated (deployed). Make sure to install the air bag module securely.**

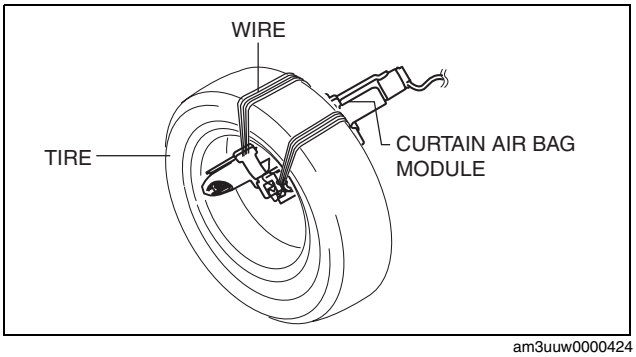

am3uuw0000424

AIR BAG SYSTEM

10. Stack the tire with the curtain air bag module on top of two tires without wheels. Stack a tire without a wheel on top of the tire with the curtain air bag module, and then stack another tire with a wheel on the very top.

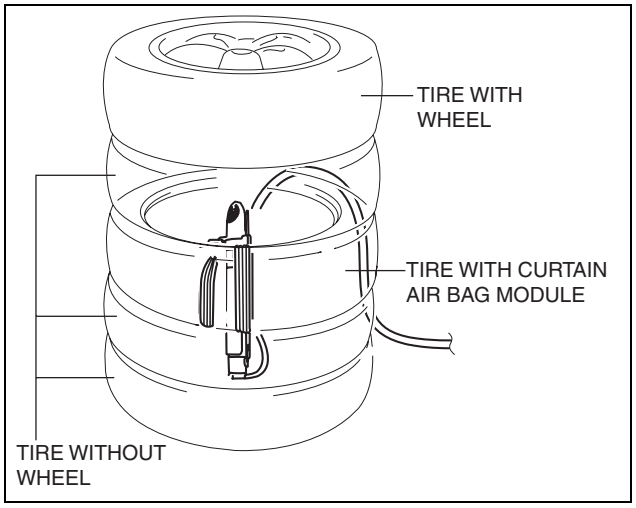

am3uuw0000424

11. Secure the tires with wire.

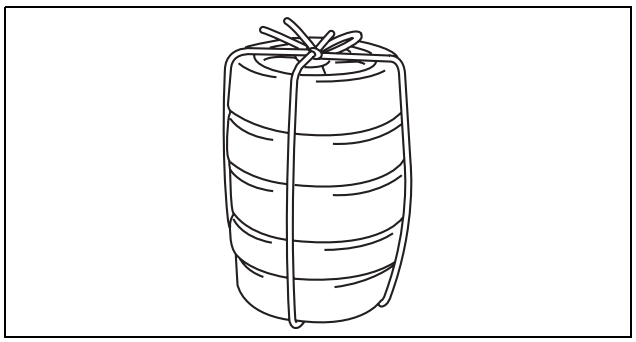
am6zzw0000096

12. Connect the **SST (Deployment tool)** to the **SST (Adapter harness)**.
13. Connect the **SST (Deployment tool)** to the battery. Connect the power supply red clip to the positive battery terminal, and the black clip to the negative battery terminal.
14. Verify that the red lamp on the **SST (Deployment tool)** is illuminated.
15. Verify that all persons are standing **at least 6 m {20 ft}** away from the vehicle.

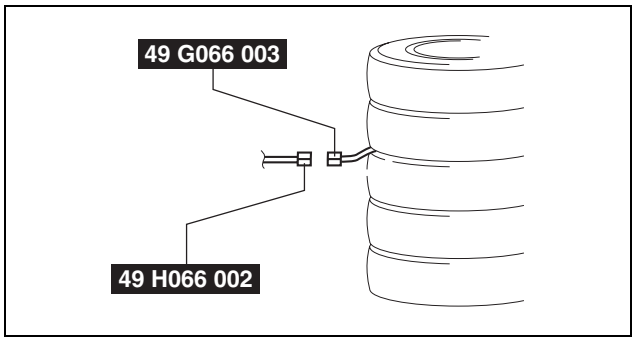

ac5wzw0000202

16. Press the activation switch on the **SST (Deployment tool)** to operate (deploy) the curtain air bag module.

Warning
- **The air bag module is very hot immediately after it is operated (deployed). You can be burned. Do not touch the air bag module for at least 15 min after deployment.**

17. Disconnect the **SST (Deployment tool)** from the **SST (Adapter harness)**.

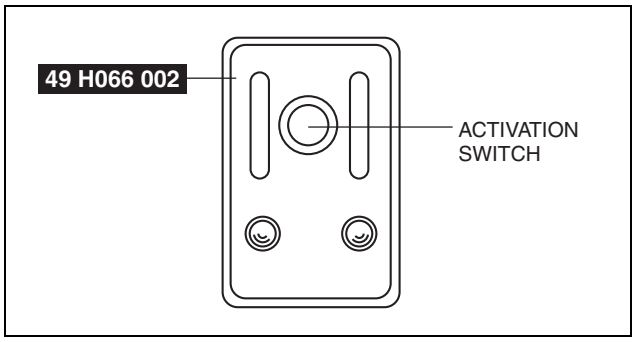

am3zzw0000970

AIR BAG SYSTEM

Pre-tensioner Seat Belt

1. Remove the front scuff plate. (See 09-17-61 FRONT SCUFF PLATE REMOVAL/INSTALLATION.)
2. Remove the rear scuff plate. (See 09-17-63 REAR SCUFF PLATE REMOVAL/INSTALLATION.)
3. Remove the B-pillar lower trim. (See 09-17-57 B-PILLAR LOWER TRIM REMOVAL/INSTALLATION.)
4. Remove the pre-tensioner seat belt and connect the **SST (Adapter harness)** as shown in the figure. (See 08-11-2 FRONT SEAT BELT REMOVAL/INSTALLATION.)

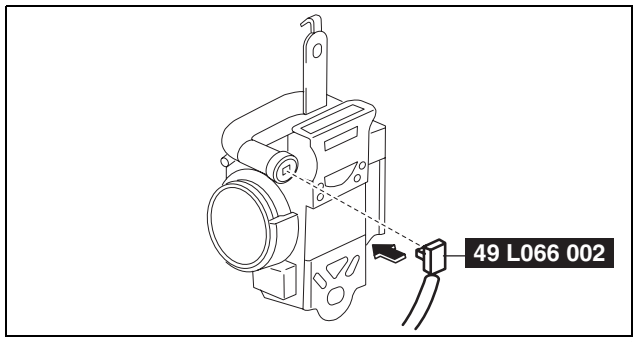

ac5wzw0000201

5. Put the pre-tensioner seat belt inside the tire and secure it to the tire by wrapping a wire (cross section **1.25 mm^2 {0.002 in^2} or more**) through the tire and the bolt installation holes **at least 4 times**.

   Warning
   - **If the pre-tensioner seat belt is not properly installed to the tire, serious injury may occur when the pre-tensioner part is operated (deployed). When installing the pre-tensioner seat belt to the tire, make sure the pre-tensioner part is inside the tire.**

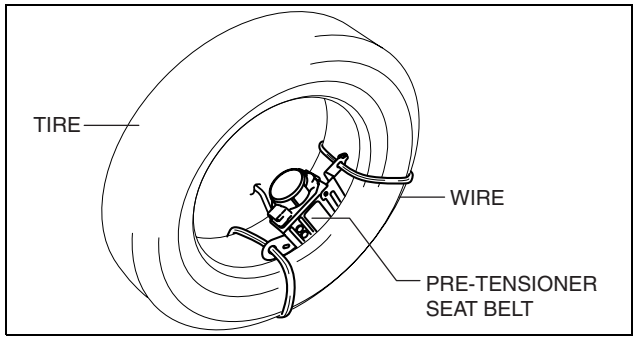

am6zzw0000097

6. Stack the tire with the pre-tensioner seat belt on to of two tires without wheels. Stack a tire without a wheel on top of the tire with the pre-tensioner seat belt, and then stack another tire with a wheel on the very top.

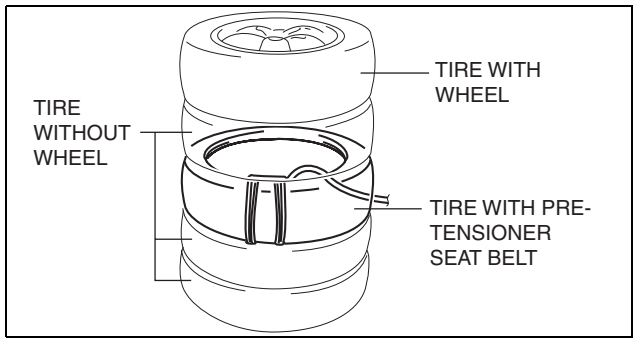

am2zzw0000037

7. Secure the tires with wire.

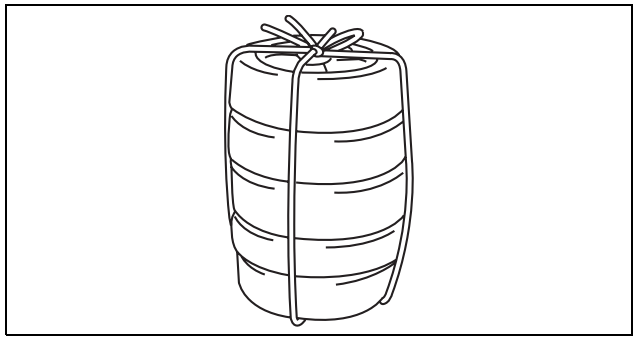
am6zzw0000096

AIR BAG SYSTEM

8. Connect the **SST (Deployment tool)** to the **SST (Adapter harness)**.
9. Connect the **SST (Deployment tool)** to the battery. Connect the power supply red clip to the positive battery terminal, and the black clip to the negative battery terminal.
10. Verify that the red lamp on the **SST (Deployment tool)** is illuminated.
11. Verify that all persons are standing **at least 6 m {20 ft}** away from the vehicle.

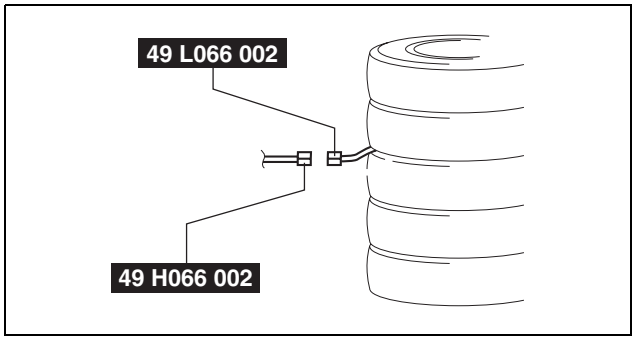

am6xuw0000203

12. Press the activation switch on the **SST (Deployment tool)** to operate (deploy) the pre-tensioner seat belt.

Warning
- **The pre-tensioner seat belt is very hot immediately after it is operated (deployed). You can be burned. Do not touch the pre-tensioner seat belt for at least 15 min after deployment.**

13. Disconnect the **SST (Deployment tool)** from the **SST (Adapter harness)**.

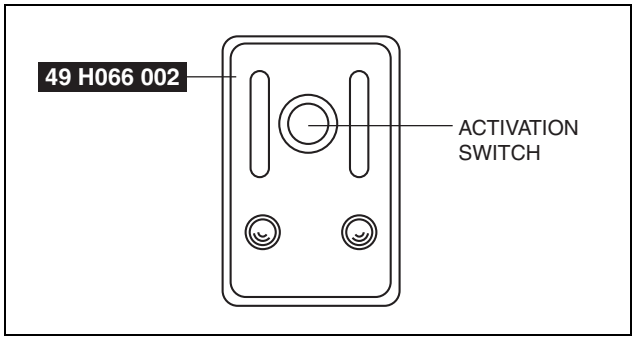

am3zzw0000970

AIR BAG MODULE AND PRE-TENSIONER SEAT BELT DISPOSAL PROCEDURES

id081000801200

Warning
- **A live (undeployed) air bag module or pre-tensioner seat belt may accidentally operate (deploy) when it is disposed of and cause serious injury. Always refer to the "AIR BAG MODULE AND PRE-TENSIONER SEAT BELT DEPLOYMENT PROCEDURES" and dispose of air bag modules and pre-tensioner seat belts in a deployed condition.**
- **The air bag modules and the pre-tensioner seat belts are very hot immediately after they are deployed. You can be burned. Do not touch an air bag module and pre-tensioner seat belt for at least 15 min after deployment.**
- **Pouring water on the deployed air bag module and pre-tensioner seat belt is dangerous. The water will mix with the residual gases to form a gas that can make breathing difficult. Do not pour water on the deployed air bag module and pre-tensioner seat belt.**
- **The deployed air bag module or pre-tensioner seat belt may contain deposits of sodium hydroxide, a caustic byproduct of the gas-generated combustion. If this substance gets into your eyes or on your hands, it can cause irritation and itching. When handling the deployed air bag module and pre-tensioner seat belt, wear gloves and safety glasses.**

1. Remove the deployed air bag module or pre-tensioner seat belt.
2. Put the air bag module or pre-tensioner seat belt in a plastic bag, seal the bag, and then dispose of it.

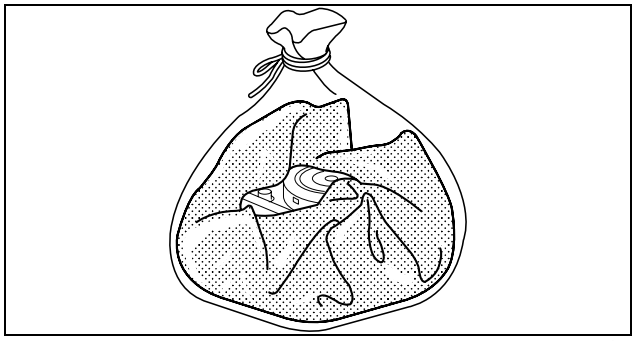
am3zzw0000107

AIR BAG SYSTEM

INSPECTION OF SST (DEPLOYMENT TOOL)

1. Before using the **SST** (49 H066 002), inspect its operation.

id081000801000

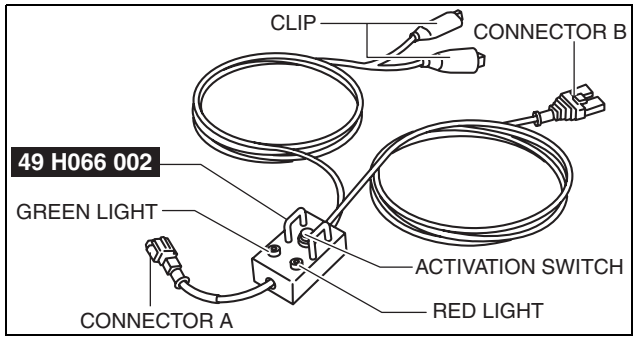

am3zzw0001108

Inspection Procedure

1. Follow the steps below to inspect the **SST** (49 H066 002).
   - If not as indicated in the table, replace the **SST** (49 H066 002) because it has a malfunction.

Warning

- **Do not use a malfunctioning SST (49 H066 002), otherwise it could cause the air bag module or pre-tensioner front buckle to accidentally operate (deploy).**

Caution

- **Because the permissible voltage for the SST (49 H066 002) is 12 V, do not connect a 24 V power source because it will damage the SST. Always connect only a 12 V power source.**

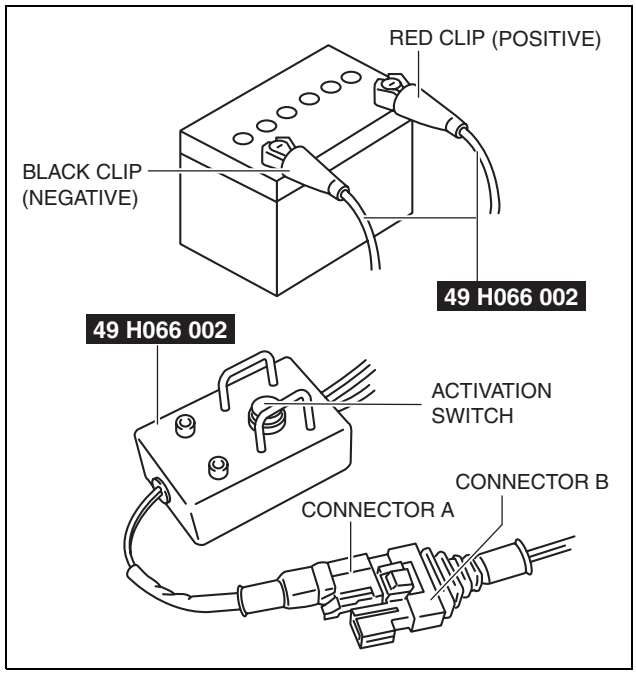

Step	Inspection procedure	Light condition	
		Green	Red
1	Connect the power supply red clip to the positive battery terminal, and the black clip to the negative battery terminal.	On	Off
2	Connect connectors A and B.	Off	On
3	Press the activation switch.	On	Off

08

08-11 SEAT BELT

SEAT BELT LOCATION INDEX **08-11–2**
FRONT SEAT BELT
REMOVAL/INSTALLATION. **08-11–2**
ADJUSTER ANCHOR
REMOVAL/INSTALLATION. **08-11–4**
REAR SEAT BELT
REMOVAL/INSTALLATION. **08-11–5**
REAR CENTER SEAT BELT
REMOVAL/INSTALLATION. **08-11–6**
Rear Center Seat Belt
Installation Note **08-11–6**
SEAT BELT INSPECTION. **08-11–7**
Belt **08-11–7**
ELR (Emergency Locking Retractor). . . **08-11–7**
ALR (Automatic Locking Retractor). . . . **08-11–8**
Load Limiter Retractor. **08-11–8**
FRONT BUCKLE
REMOVAL/INSTALLATION **08-11–9**
REAR BUCKLE
REMOVAL/INSTALLATION **08-11–10**
Rear Buckle Installation Note **08-11–11**
BUCKLE SWITCH INSPECTION. **08-11–11**
Front **08-11–11**
Rear (With Rear Seat Belt Reminder). . **08-11–12**

08

SEAT BELT

SEAT BELT LOCATION INDEX

id081100804200

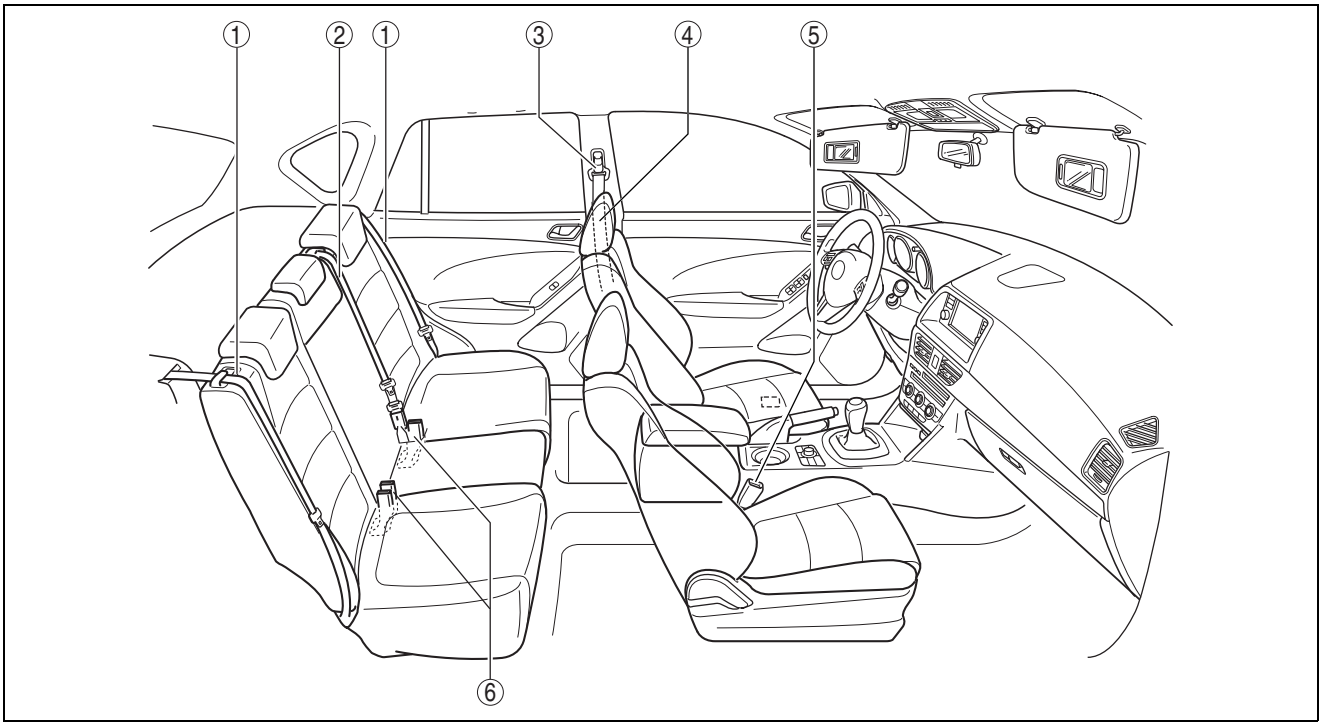

ac5wzw0000207

1	Rear seat belt (See 08-11-5 REAR SEAT BELT REMOVAL/INSTALLATION.) (See 08-11-7 SEAT BELT INSPECTION.)
2	Rear center seat belt (See 08-11-6 REAR CENTER SEAT BELT REMOVAL/INSTALLATION.)
3	Adjuster anchor (See 08-11-4 ADJUSTER ANCHOR REMOVAL/INSTALLATION.)
4	Front seat belt (See 08-11-2 FRONT SEAT BELT REMOVAL/INSTALLATION.) (See 08-11-7 SEAT BELT INSPECTION.)
5	Front buckle (See 08-11-9 FRONT BUCKLE REMOVAL/INSTALLATION.) (See 08-11-11 BUCKLE SWITCH INSPECTION.)
6	Rear buckle (See 08-11-10 REAR BUCKLE REMOVAL/INSTALLATION.) (See 08-11-11 BUCKLE SWITCH INSPECTION.)

FRONT SEAT BELT REMOVAL/INSTALLATION

id081100800600

Warning

- **Handling the front seat belt (pre-tensioner seat belt) improperly can accidentally deploy the pre-tensioner seat belt, which may seriously injure you. Read the air bag system service warnings and cautions before handling the front seat belt. (See 08-10-3 AIR BAG SYSTEM SERVICE WARNINGS.) (See 08-10-5 AIR BAG SYSTEM SERVICE CAUTIONS.)**

Warning

- **The side air bag sensor is attached to the lower part of the B-pillar. When working around the B-pillar, disconnect the negative battery cable avoiding excessive impact to the lower part of the B-pillar.**

Caution

- **If the retractor is disassembled, it will not operate correctly due to looseness and excessive play of the internal parts, therefore, do not disassemble the retractor.**

1. Switch the ignition to off.

SEAT BELT

2. Disconnect the negative battery cable and wait for **1min or more**. (See 01-17A-11 NEGATIVE BATTERY CABLE DISCONNECTION/CONNECTION [SKYACTIV-G 2.0].)(See 01-17A-13 NEGATIVE BATTERY CABLE DISCONNECTION/CONNECTION [SKYACTIV-G 2.0 (WITHOUT i-stop)].)(See 01-17B-9 NEGATIVE BATTERY CABLE DISCONNECTION/CONNECTION [SKYACTIV-D 2.2].)
3. Remove the front scuff plate. (See 09-17-61 FRONT SCUFF PLATE REMOVAL/INSTALLATION.)
4. Remove the rear scuff plate. (See 09-17-63 REAR SCUFF PLATE REMOVAL/INSTALLATION.)
5. Remove the B-pillar lower trim. (See 09-17-57 B-PILLAR LOWER TRIM REMOVAL/INSTALLATION.)
6. Using a flathead screwdriver, lift the locking device carefully, however do not remove it.

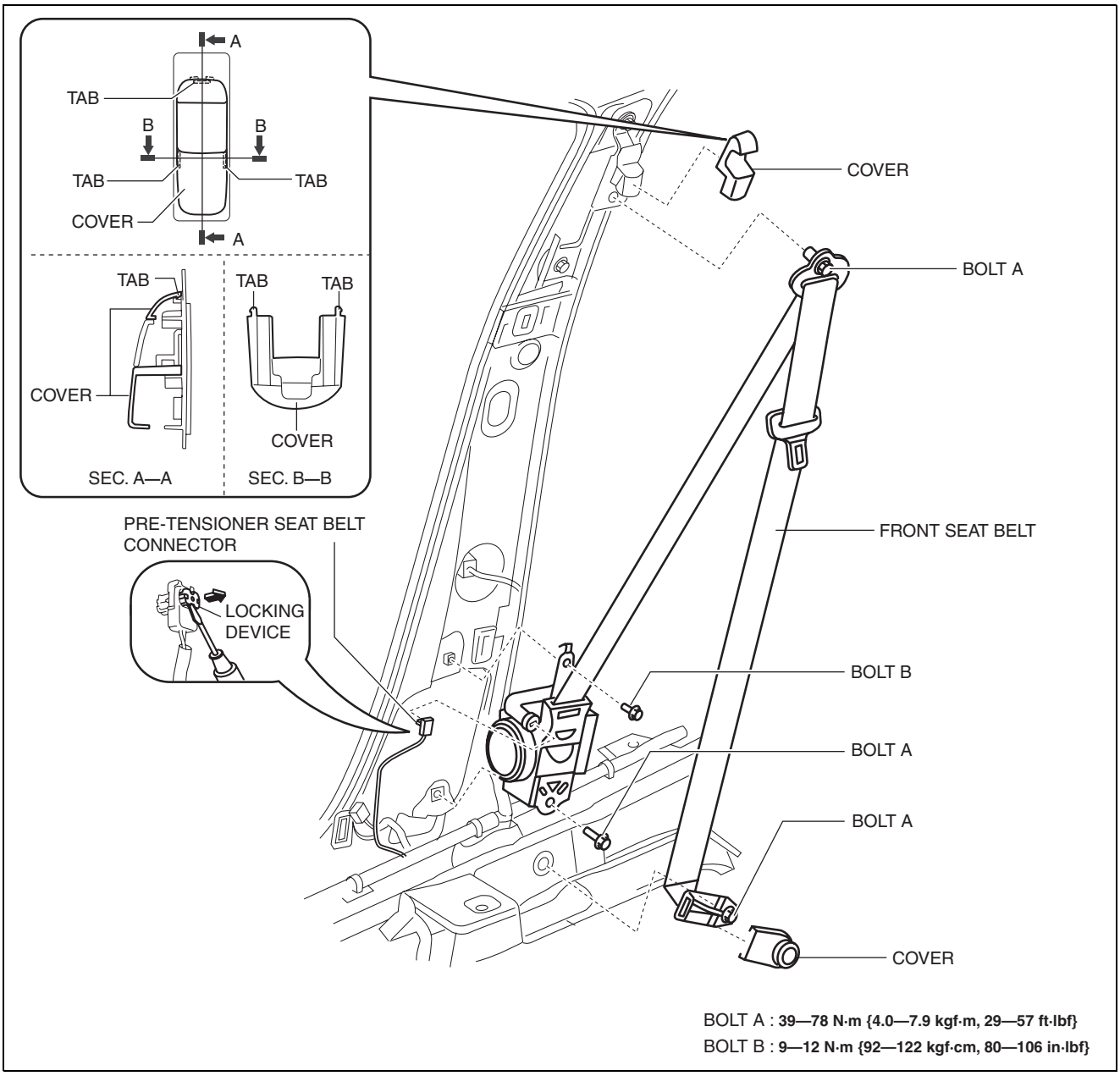

ac5wzw0000206

7. Disconnect the pre-tensioner seat belt connector.
8. Remove the cover.
9. Remove bolt A.
10. Remove bolt B.
11. Remove the front seat belt.
12. Install in the reverse order of removal.
13. Switch the ignition ON (engine off or on).
14. Verify that the air bag system warning light illuminates for **approx. 6 s** and goes out.
    - If the air bag system warning light does not operate, refer to the on-board diagnostic system (air bag system) and perform inspection of the system. (See 08-02-5 FLOWCHART.)

SEAT BELT

ADJUSTER ANCHOR REMOVAL/INSTALLATION

id081100802000

Warning

- **The side air bag sensor is attached to the lower part of the B-pillar. When working around the B-pillar, disconnect the negative battery cable or work carefully, avoiding excessive impact to the lower part of the B-pillar.**

1. Switch the ignition to off.
2. Disconnect the negative battery cable and wait for **1min or more**. (See 01-17A-11 NEGATIVE BATTERY CABLE DISCONNECTION/CONNECTION [SKYACTIV-G 2.0].)(See 01-17A-13 NEGATIVE BATTERY CABLE DISCONNECTION/CONNECTION [SKYACTIV-G 2.0 (WITHOUT i-stop)].)(See 01-17B-9 NEGATIVE BATTERY CABLE DISCONNECTION/CONNECTION [SKYACTIV-D 2.2].)
3. Set the adjuster to the lowest position.
4. Remove the following parts:
   (1) Front scuff plate (See 09-17-61 FRONT SCUFF PLATE REMOVAL/INSTALLATION.)
   (2) Rear scuff plate (See 09-17-63 REAR SCUFF PLATE REMOVAL/INSTALLATION.)
   (3) B-pillar lower trim (See 09-17-57 B-PILLAR LOWER TRIM REMOVAL/INSTALLATION.)
   (4) Front seat belt upper anchor installation bolt (See 08-11-2 FRONT SEAT BELT REMOVAL/INSTALLATION.)
   (5) B-pillar upper trim (See 09-17-58 B-PILLAR UPPER TRIM REMOVAL/INSTALLATION.)
5. Remove bolt A.

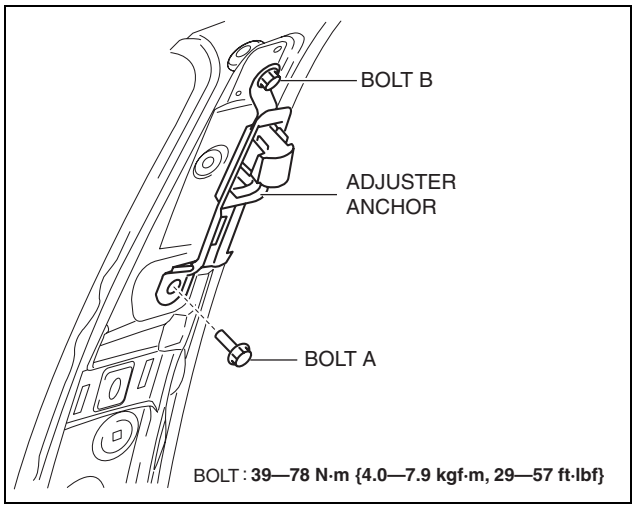

ac5wzw0000207

6. Remove bolt B.
7. Remove the tab.
8. Remove the adjuster anchor.
9. Install in the reverse order of removal.

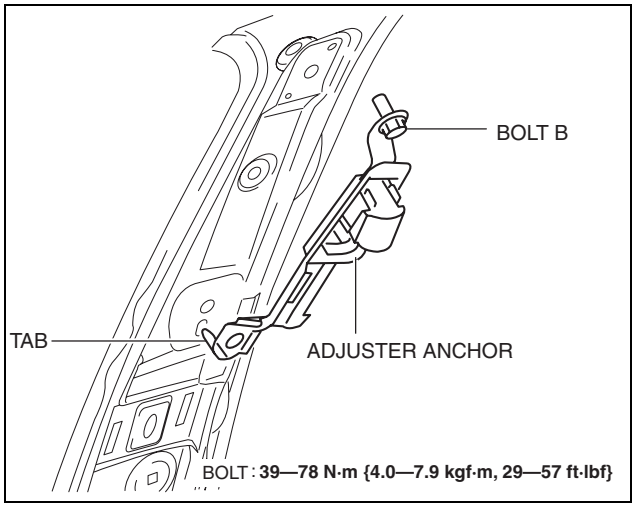

ac5wzw0000207

SEAT BELT

REAR SEAT BELT REMOVAL/INSTALLATION

id081100800800

Caution
- **If the retractor is disassembled, it will not operate correctly due to looseness and excessive play of the internal parts, therefore, do not disassemble the retractor.**

1. Remove the following parts:
   (1) Trunk board (See 09-17-85 TRUNK BOARD REMOVAL/INSTALLATION.)
   (2) Trunk end trim (See 09-17-78 TRUNK END TRIM REMOVAL/INSTALLATION.)
   (3) Rear scuff plate (See 09-17-63 REAR SCUFF PLATE REMOVAL/INSTALLATION.)
   (4) Trunk side trim (See 09-17-80 TRUNK SIDE TRIM REMOVAL/INSTALLATION.)
   (5) D-pillar trim (See 09-17-60 D-PILLAR TRIM REMOVAL/INSTALLATION.)
2. Remove the bolts.
3. Remove the tab as shown in the figure.

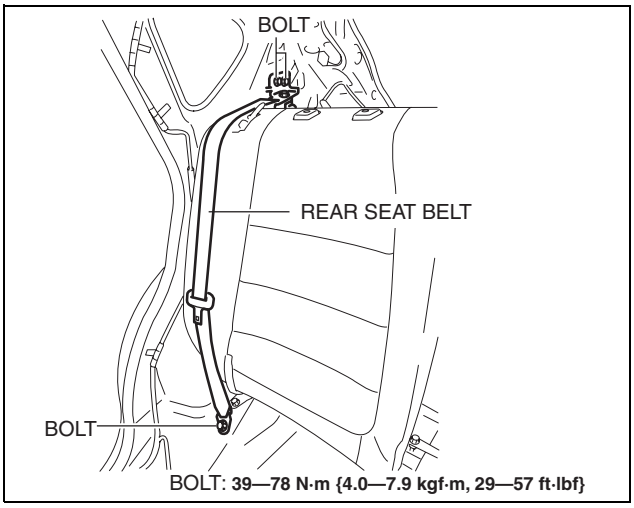

ac5wzw0000206

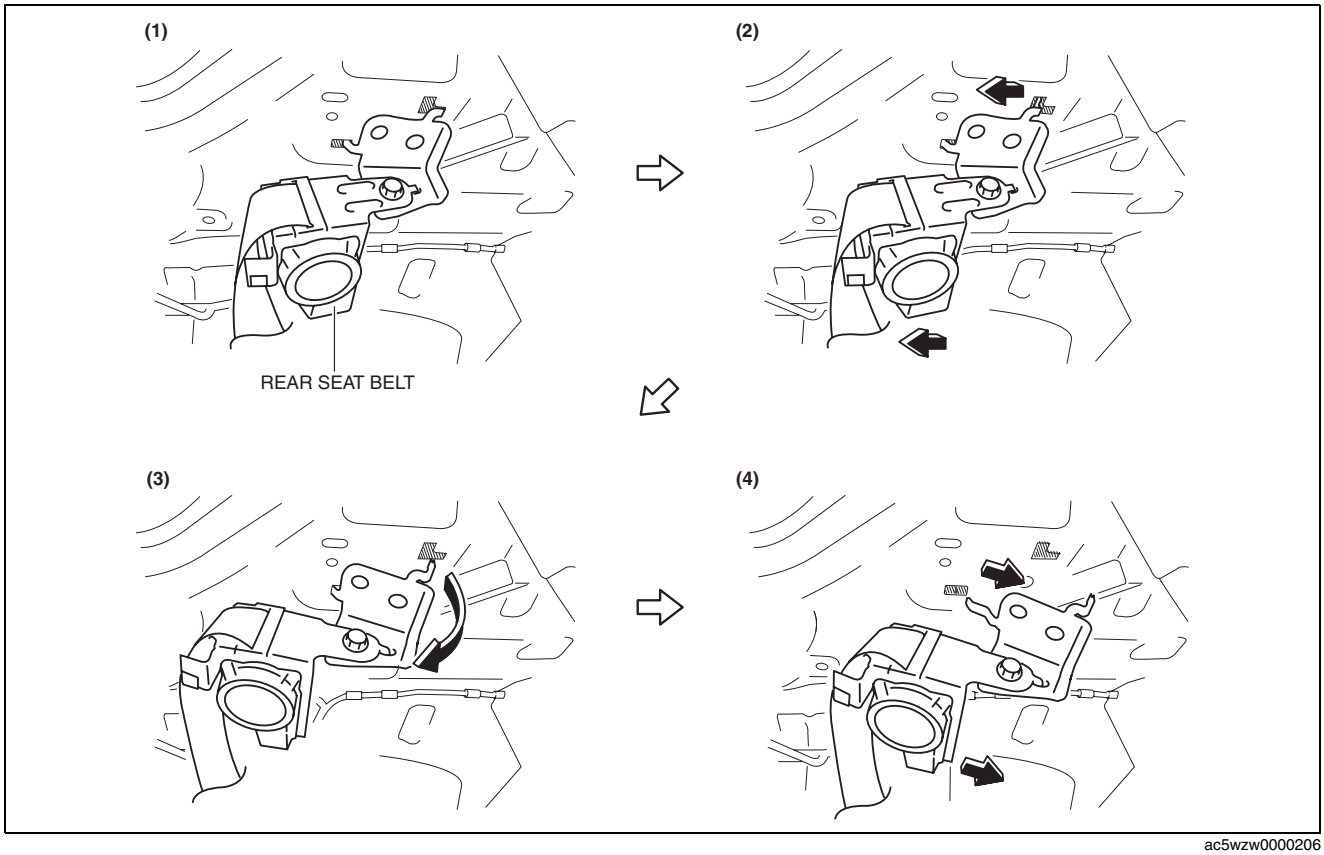

ac5wzw0000206

4. Remove the rear seat belt.
5. Install in the reverse order of removal.

SEAT BELT

REAR CENTER SEAT BELT REMOVAL/INSTALLATION

id081100800900

Caution
- **If the retractor is disassembled, it will not operate correctly due to looseness and excessive play of the internal parts, therefore, do not disassemble the retractor.**

Note
- The rear center seat belt is building into the rear seat back.

1. Press the release switch, then disconnect the rear center seat belt and rear buckle.
2. Remove the rear center seat belt with the rear seat back. (See 09-13-61 REAR SEAT BACK REMOVAL/INSTALLATION.)
3. Install in the reverse order of removal. (See 08-11-6 Rear Center Seat Belt Installation Note.)

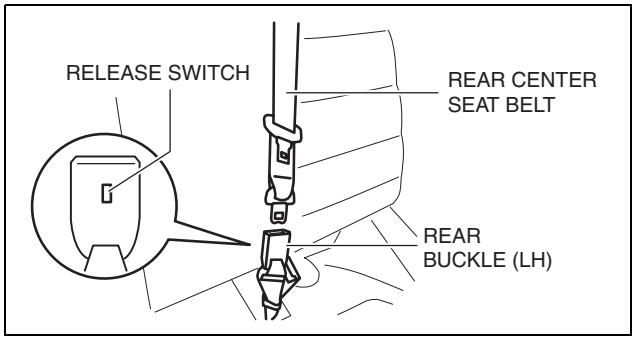

ac5wzw0000207

Rear Center Seat Belt Installation Note

1. After installing the rear center seat belt, place the release switch of the rear buckle so that it faces the vehicle's inner-side as shown in the figure.

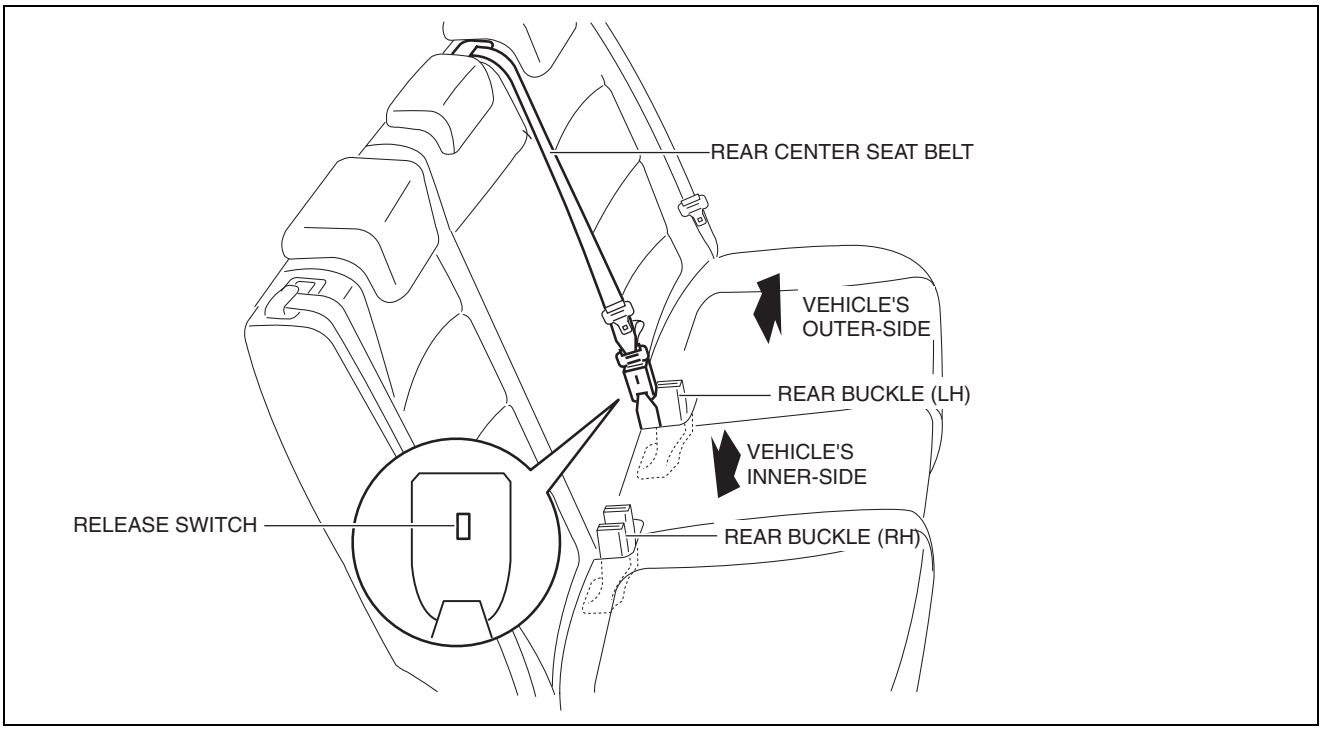

ac5wzw0000278

SEAT BELT

SEAT BELT INSPECTION

id081100800300

Belt

1. Verify that the belt is installed properly with no twists or kinks.
2. Verify that there is no damage to the seat belt and no deformation of the metal fittings.
   - If there is any malfunction, replace the seat belt.

ELR (Emergency Locking Retractor)

Except rear center seat belt

1. Verify that the belt can be pulled out smoothly, and that it retracts smoothly.
   - If there is any malfunction, replace the seat belt.
2. Verify that the retractor locks when the belt is pulled quickly.
   - If there is any malfunction, replace the seat belt.
3. Remove the retractor.

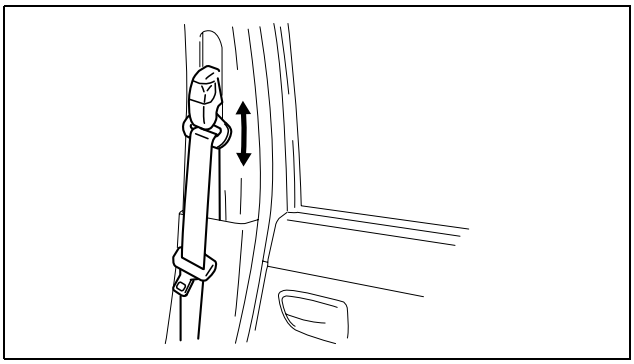

acxuuw00002083

4. While pulling the seat belt out, make sure that the seat belt does not lock when the retractor is tilted slowly up to **15**° from the mounted position and locks when the retractor is tilted **40**° **or more.**
   - If there is any malfunction, replace the seat belt.

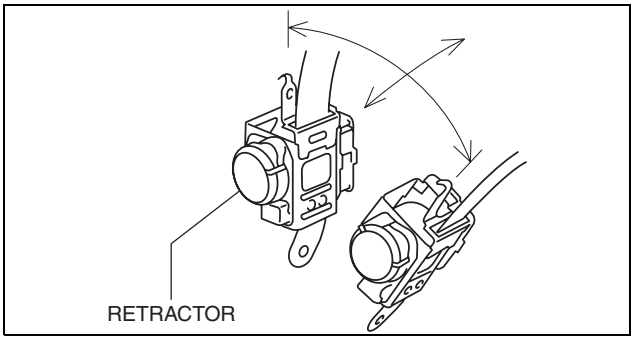

am3zzw0001109

Rear center seat belt

Caution

- **The rear center seat belt ELR only becomes operable after a certain amount of belt webbing is pulled out. For the ELR inspection, fasten the rear center seat belt to the rear buckle (center) and perform the inspection after pulling out the rear center seat belt 130 mm {5.12 in} (ELR operable condition). If the inspection is performed while the ELR is not in an operable condition, the integrity of the system cannot be determined.**

1. Fasten the rear center seat belt to the rear buckle (center) and pull out the rear center seat belt **130 mm {5.12 in}**.
2. Verify that the belt can be pulled out smoothly, and that it retracts smoothly.
   - If there is any malfunction, replace the seat belt.
3. Verify that the retractor locks when the belt is pulled quickly.
   - If there is any malfunction, replace the seat belt.
4. Remove the retractor.

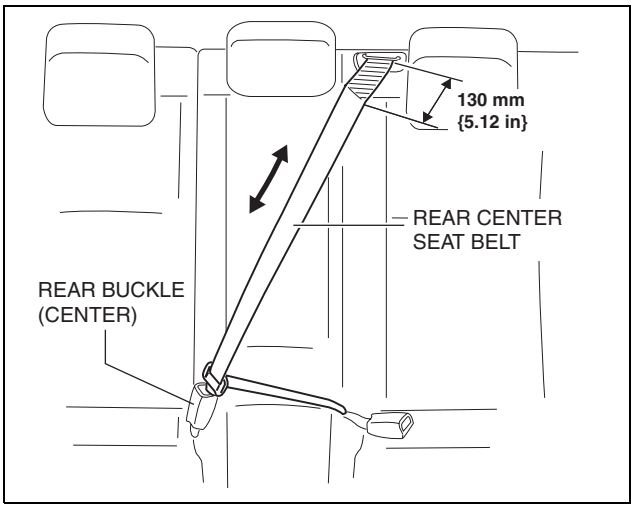

am3zzw0001110

SEAT BELT

5. While pulling the seat belt out, make sure that the seat belt does not lock when the retractor is tilted slowly up to **15**° from the mounted position and locks when the retractor is tilted **40**° **or more.**
   - If there is any malfunction, replace the seat belt.

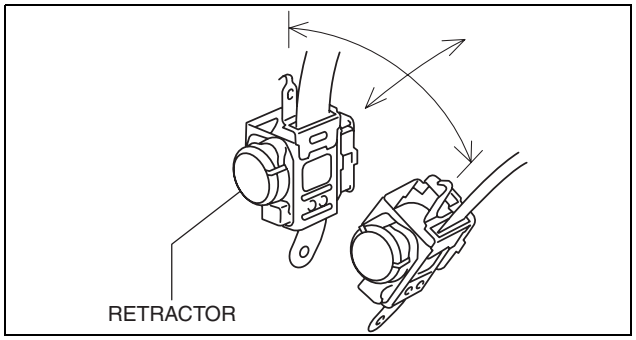

am3zzw0001109

ALR (Automatic Locking Retractor)

1. Pull the belt out fully to change the lock mode from ELR to ALR.
2. Verify that retractor makes a clicking sound as the belt slowly retracts. If no sound is heard, the lock mode has not changed to ALR. If necessary, repeat Step 1.
   - If there is any malfunction, replace the rear seat belt.
3. Verify that the retractor locks when pulled.
   - If there is any malfunction, replace the rear seat belt.
4. Verify that the lock mode changes to ELR when the belt is fully pulled out.
   - If there is any malfunction, replace the rear seat belt.

Load Limiter Retractor

Warning

- **When the load limiter operates, the belt and anchor rub against each other strongly leaving wear tracks. If the seat belt is used in this state, the seat belt will not function at its full capability and there is the possibility of serious injury to passengers. Be sure to replace the seat belt once the load limiter operates.**

1. If the vehicle has been subjected to a shock in an accident, pull the belt from the retractor and confirm that there are no wear tracks (the load limiter has not operated) by visually inspecting and feeling the belt.
   - If there is any malfunction, replace the seat belt.

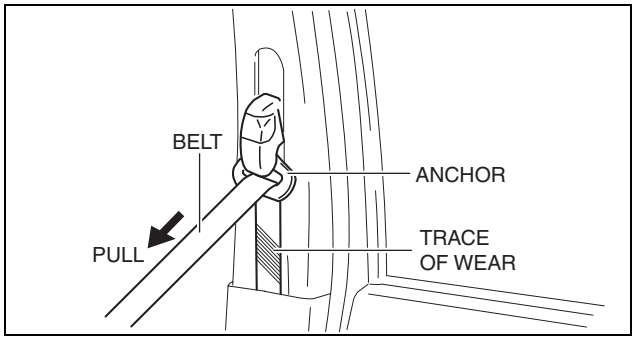

am3zzw0001110

SEAT BELT

FRONT BUCKLE REMOVAL/INSTALLATION

id081100800400

1. Switch the ignition to off.
2. Disconnect the negative battery cable and wait for **1 min or more**. (See 01-17A-11 NEGATIVE BATTERY CABLE DISCONNECTION/CONNECTION [SKYACTIV-G 2.0].)(See 01-17A-13 NEGATIVE BATTERY CABLE DISCONNECTION/CONNECTION [SKYACTIV-G 2.0 (WITHOUT i-stop)].)(See 01-17B-9 NEGATIVE BATTERY CABLE DISCONNECTION/CONNECTION [SKYACTIV-D 2.2].)
3. Remove the front seat. (See 09-13-4 FRONT SEAT REMOVAL/INSTALLATION.)
4. Disconnect the front buckle connector. (with buckle switch)

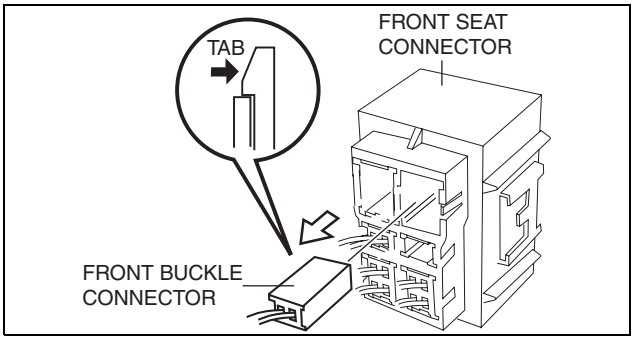

ac5wzw0000206

5. Remove the bolt.
6. Remove the front buckle.
7. Install in the reverse order of removal.

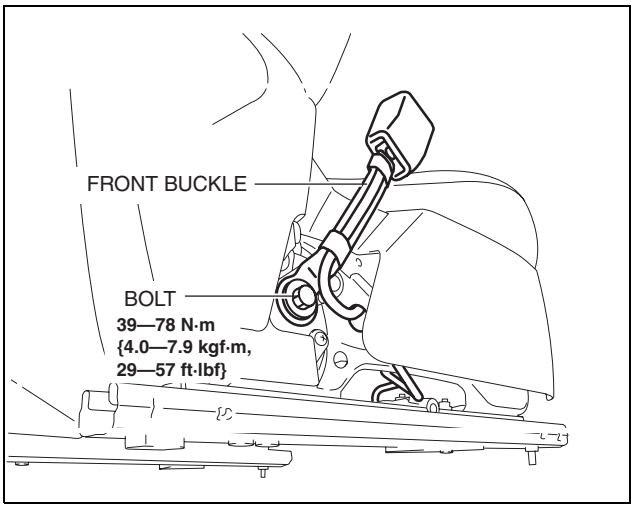

ac5wzw0000206

SEAT BELT

REAR BUCKLE REMOVAL/INSTALLATION

id081100800700

1. Switch the ignition to off.
2. Disconnect the negative battery cable and wait for **1 min or more**. (See 01-17A-11 NEGATIVE BATTERY CABLE DISCONNECTION/CONNECTION [SKYACTIV-G 2.0].)(See 01-17A-13 NEGATIVE BATTERY CABLE DISCONNECTION/CONNECTION [SKYACTIV-G 2.0 (WITHOUT i-stop)].)(See 01-17B-9 NEGATIVE BATTERY CABLE DISCONNECTION/CONNECTION [SKYACTIV-D 2.2].)
3. Press the release switch, then disconnect the rear center seat belt and rear buckle.
4. Fold down the rear seat back.
5. Remove the trunk board. (See 09-17-85 TRUNK BOARD REMOVAL/INSTALLATION.)

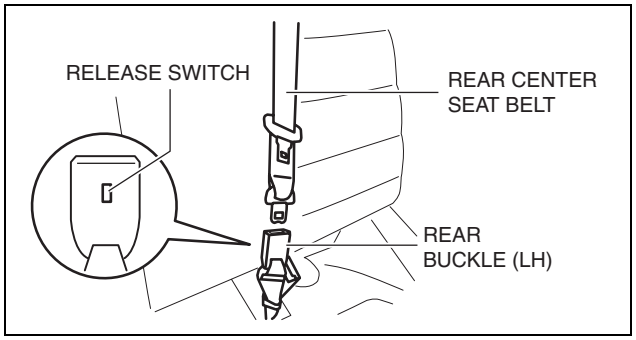

ac5wzw0000206

6. Disconnect the connector. (vehicles with rear seat belt reminder)

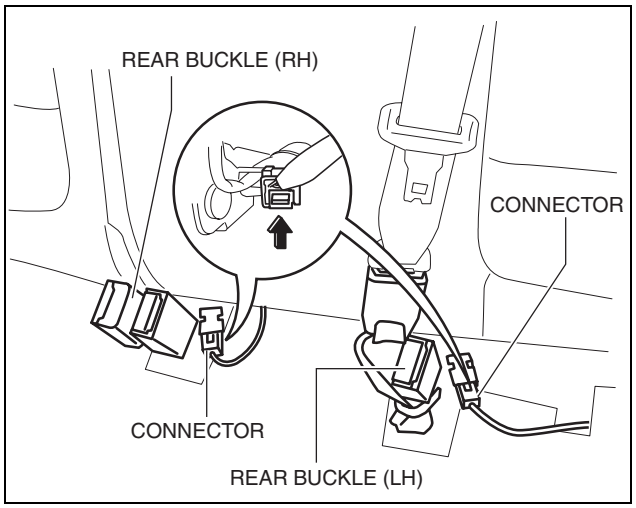

ac5wzw0000206

7. Remove the bolt.
8. Remove the rear buckle (RH) and rear buckle (LH).
9. Install in the reverse order of removal. (See 08-11-11 Rear Buckle Installation Note.)

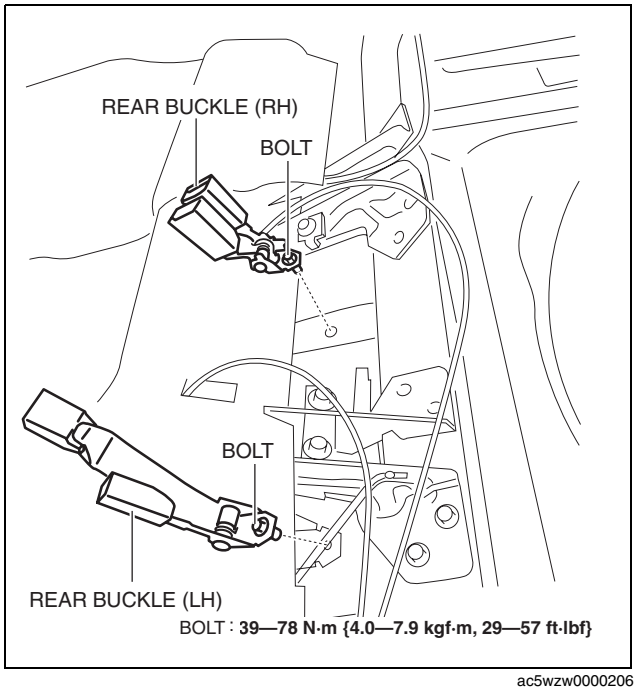

ac5wzw0000206

SEAT BELT

Rear Buckle Installation Note

1. After installing the rear center seat belt, place the release switch of the rear buckle so that it faces the vehicle's inner-side as shown in the figure.

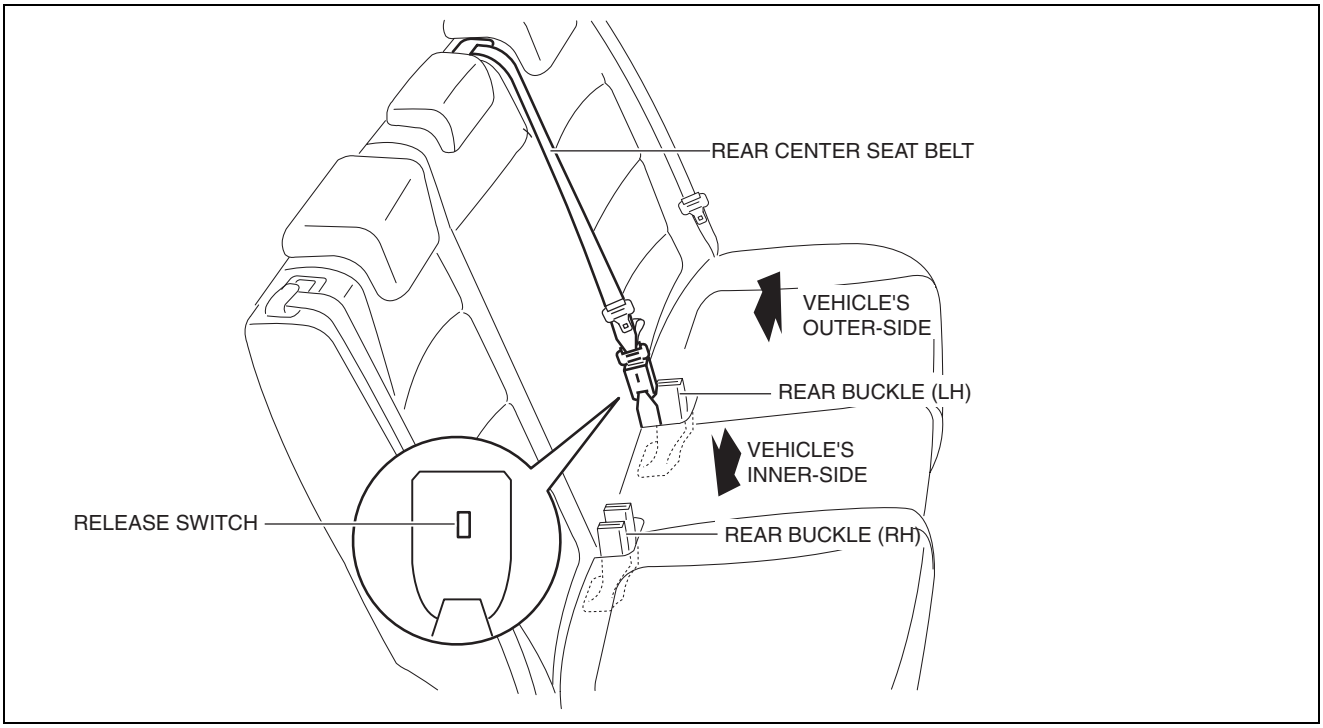

ac5wzw0000278

BUCKLE SWITCH INSPECTION

id081100803000

Front

1. Switch the ignition to off.
2. Disconnect the negative battery cable and wait for **1 min or more**. (See 01-17A-11 NEGATIVE BATTERY CABLE DISCONNECTION/CONNECTION [SKYACTIV-G 2.0].)(See 01-17A-13 NEGATIVE BATTERY CABLE DISCONNECTION/CONNECTION [SKYACTIV-G 2.0 (WITHOUT i-stop)].)(See 01-17B-9 NEGATIVE BATTERY CABLE DISCONNECTION/CONNECTION [SKYACTIV-D 2.2].)
3. Remove the front seat. (See 09-13-4 FRONT SEAT REMOVAL/INSTALLATION.)
4. Remove the front buckle. (See 08-11-9 FRONT BUCKLE REMOVAL/INSTALLATION.)
5. Inspect for continuity between the buckle switch terminals using a tester.
   - If not as indicated in the table, replace the front buckle.

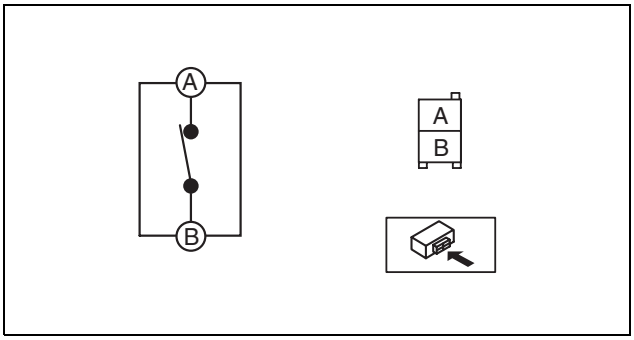

am3uuw0000376

SEAT BELT

: Continuity

Seat belt	Terminal	
	A	B
Fastened		
Unfastened	○	○

am6xuw0000184

Rear (With Rear Seat Belt Reminder)

1. Switch the ignition to off.
2. Disconnect the negative battery cable and wait for **1 min or more**. (See 01-17A-11 NEGATIVE BATTERY CABLE DISCONNECTION/CONNECTION [SKYACTIV-G 2.0].)(See 01-17A-13 NEGATIVE BATTERY CABLE DISCONNECTION/CONNECTION [SKYACTIV-G 2.0 (WITHOUT i-stop)].)(See 01-17B-9 NEGATIVE BATTERY CABLE DISCONNECTION/CONNECTION [SKYACTIV-D 2.2].)
3. Fold down the rear seat back.
4. Remove the rear buckle. (See 08-11-9 FRONT BUCKLE REMOVAL/INSTALLATION.)
5. Inspect for continuity between the buckle switch terminals using a tester.
   - If not as indicated in the table, replace the rear buckle.

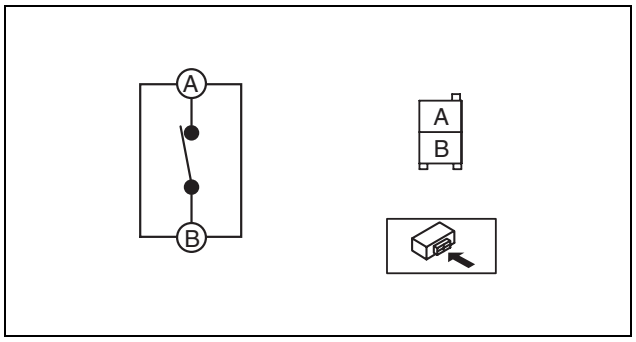

am3uuw0000376

: Continuity

Seat belt	Terminal	
	A	B
Fastened		
Unfastened	○	○

am6xuw0000184

08-60 SERVICE TOOLS

RESTRAINTS SST 08-60–1

SERVICE TOOLS

RESTRAINTS SST

id086000800100

49 H066 002 Deployment tool 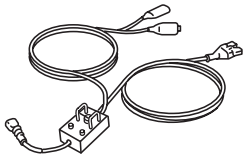	49 B066 004 Adapter harness 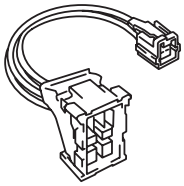	49 L066 002 Adapter harness
49 G066 003 Adapter harness 	49 N088 0A0 Fuel and Thermometer checker 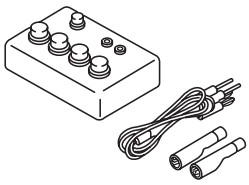	-

BODY & ACCESSORIES

09 SECTION

ON-BOARD DIAGNOSTIC [ADVANCED KEYLESS ENTRY SYSTEM] 09-02A
ON-BOARD DIAGNOSTIC [IMMOBILIZER SYSTEM] ... 09-02B
ON-BOARD DIAGNOSTIC [START STOP UNIT] 09-02C
ON-BOARD DIAGNOSTIC [ADAPTIVE FRONT LIGHTING SYSTEM (AFS)] 09-02D
ON-BOARD DIAGNOSTIC [AUDIO] 09-02E
ON-BOARD DIAGNOSTIC [Bluetooth SYSTEM (HANDS-FREE TELEPHONE (HF/TEL) SYSTEM)] 09-02F
ON-BOARD DIAGNOSTIC [INSTRUMENT CLUSTER] .. 09-02G
ON-BOARD DIAGNOSTIC [BLIND SPOT MONITORING (BSM)] 09-02H
ON-BOARD DIAGNOSTIC [REAR VEHICLE MONITORING SYSTEM] 09-02I
ON-BOARD DIAGNOSTIC [FORWARD SENSING CAMERA (FSC)] 09-02J
ON-BOARD DIAGNOSTIC [FRONT BODY CONTROL MODULE (FBCM)] 09-02K
ON-BOARD DIAGNOSTIC [REAR BODY CONTROL MODULE (RBCM)] 09-02L
SYMPTOM TROUBLESHOOTING [POWER WINDOW SYSTEMS (AUTO-OPEN/ CLOSE FUNCTION)] 09-03A
SYMPTOM TROUBLESHOOTING [SECURITY AND LOCKS] .. 09-03B
SYMPTOM TROUBLESHOOTING [THEFT-DETERRENT SYSTEM] 09-03C
SYMPTOM TROUBLESHOOTING [ADAPTIVE FRONT LIGHTING SYSTEM (AFS)] .. 09-03D
SYMPTOM TROUBLESHOOTING [EMERGENCY STOP SIGNAL SYSTEM (ESS)] 09-03E
SYMPTOM TROUBLESHOOTING [ENTIRE AUDIO SYSTEM] .. 09-03F
SYMPTOM TROUBLESHOOTING [RADIO] 09-03G
SYMPTOM TROUBLESHOOTING [CAR-NAVIGATION SYSTEM] 09-03H
SYMPTOM TROUBLESHOOTING [Bluetooth SYSTEM (HANDS-FREE TELEPHONE (HF/TEL) SYSTEM)] 09-03I
SYMPTOM TROUBLESHOOTING [CD PLAYER] 09-03J
SYMPTOM TROUBLESHOOTING [INSTRUMENT CLUSTER] .. 09-03K
SYMPTOM TROUBLESHOOTING [PARKING SENSOR] 09-03L
SYMPTOM TROUBLESHOOTING [BLIND SPOT MONITORING (BSM)] 09-03M
SYMPTOM TROUBLESHOOTING [REAR VEHICLE MONITORING SYSTEM] 09-03N
BODY PANELS 09-10
DOORS AND LIFTGATE 09-11
GLASS/WINDOWS/ MIRRORS 09-12
SEATS 09-13
SECURITY AND LOCKS 09-14
SUNROOF 09-15
EXTERIOR TRIM 09-16

BODY & ACCESSORIES

09
SECTION

INTERIOR TRIM 09-17
LIGHTING SYSTEMS. 09-18
WIPER/WASHER SYSTEM . . . 09-19
ENTERTAINMENT 09-20
POWER SYSTEMS. 09-21
INSTRUMENT
ATION/DRIVER INFO. 09-22
CONTROL SYSTEM 09-40
TECHNICAL DATA 09-50
SERVICE TOOLS 09-60

09-02A ON-BOARD DIAGNOSTIC [ADVANCED KEYLESS ENTRY SYSTEM]

ON-BOARD DIAGNOSTIC WIRING DIAGRAM [ADVANCED KEYLESS ENTRY SYSTEM] 09-02A–3
FOREWORD [ADVANCED KEYLESS ENTRY SYSTEM] 09-02A–4
Troubleshooting Procedure 09-02A–4
Action for non-repeatable malfunction. 09-02A–5
DTC INSPECTION [ADVANCED KEYLESS ENTRY SYSTEM] 09-02A–5
CMDTC Self Test 09-02A–5
ODDTC Self Test 09-02A–5
CLEARING DTC [ADVANCED KEYLESS ENTRY SYSTEM] 09-02A–5
CMDTC Memory Clearing Procedure. 09-02A–5
ODDTC Memory Clearing Procedure. 09-02A–6
DTC TABLE [ADVANCED KEYLESS ENTRY SYSTEM] 09-02A–6
DTC B10C6:1F [ADVANCED KEYLESS ENTRY SYSTEM] 09-02A–7
DTC B10C7:1F [ADVANCED KEYLESS ENTRY SYSTEM] 09-02A–10
DTC B10C9:1F [ADVANCED KEYLESS ENTRY SYSTEM] 09-02A–13
DTC B10D1:23 [ADVANCED KEYLESS ENTRY SYSTEM] 09-02A–16
DTC B10D3:23 [ADVANCED KEYLESS ENTRY SYSTEM] 09-02A–19
DTC B11C4:23 [ADVANCED KEYLESS ENTRY SYSTEM] 09-02A–21
DTC B11FD:1F [ADVANCED KEYLESS ENTRY SYSTEM] 09-02A–23
DTC B1210:1F [ADVANCED KEYLESS ENTRY SYSTEM] 09-02A–26
DTC B13C3:04 [ADVANCED KEYLESS ENTRY SYSTEM] 09-02A–29
DTC B13C3:09 [ADVANCED KEYLESS ENTRY SYSTEM] 09-02A–30
DTC B13C3:16 [ADVANCED KEYLESS ENTRY SYSTEM] 09-02A–32
DTC B13C3:29 [ADVANCED KEYLESS ENTRY SYSTEM] 09-02A–34
PID/DATA MONITOR INSPECTION [ADVANCED KEYLESS ENTRY SYSTEM] 09-02A–36
PID/DATA MONITOR TABLE [ADVANCED KEYLESS ENTRY SYSTEM] 09-02A–36
ACTIVE COMMAND MODES INSPECTION [ADVANCED KEYLESS ENTRY SYSTEM] 09-02A–37
ACTIVE COMMAND MODES TABLE [ADVANCED KEYLESS ENTRY SYSTEM] 09-02A–37

ON-BOARD DIAGNOSTIC [ADVANCED KEYLESS ENTRY SYSTEM]

ON-BOARD DIAGNOSTIC WIRING DIAGRAM [ADVANCED KEYLESS ENTRY SYSTEM]

id0902p8025600

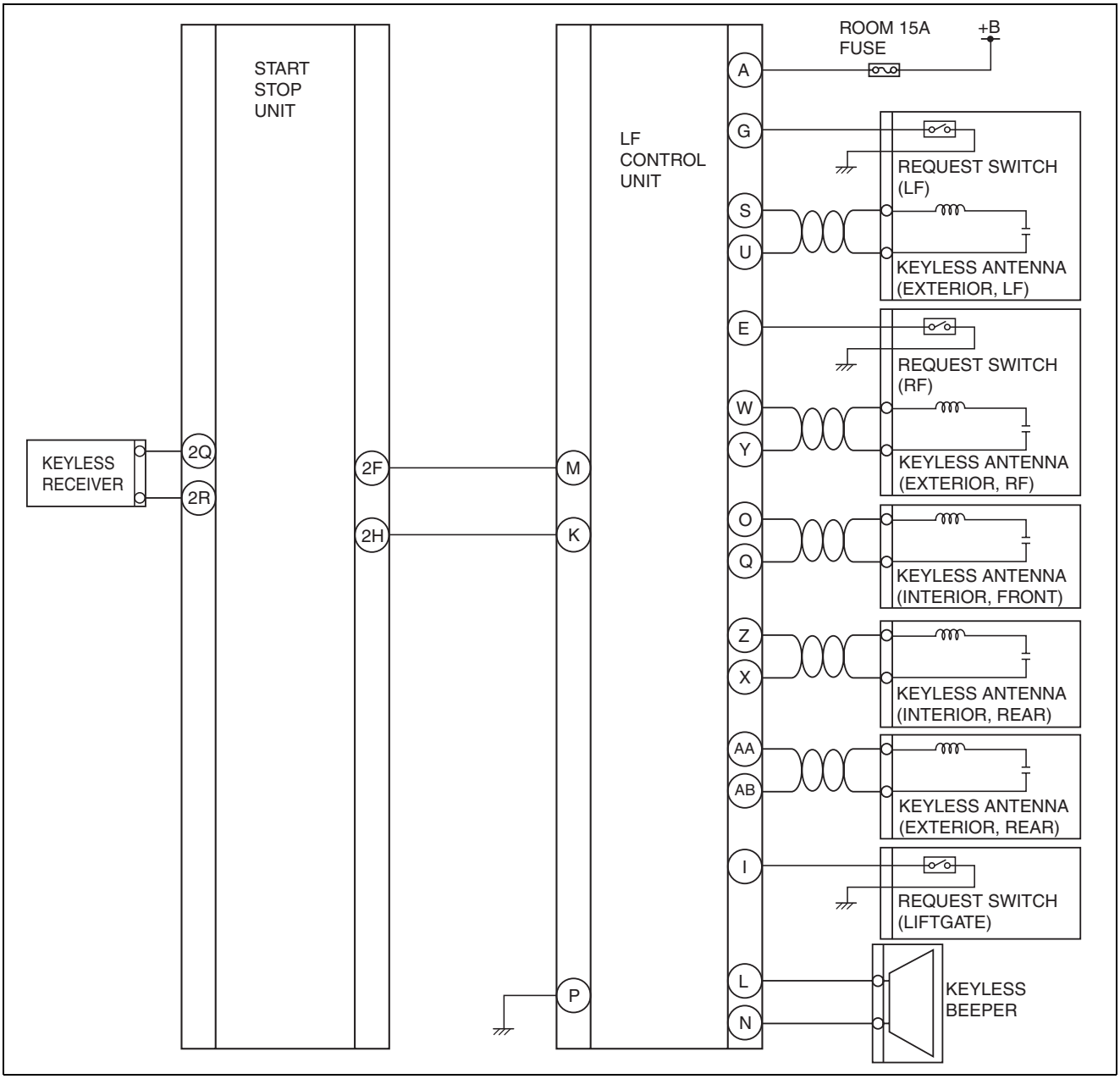

ac5wzw0000456

ON-BOARD DIAGNOSTIC [ADVANCED KEYLESS ENTRY SYSTEM]

FOREWORD [ADVANCED KEYLESS ENTRY SYSTEM]

id0902p8025700

- If there is any vehicle malfunction complaint lodged by a customer, perform malfunction diagnosis according to the troubleshooting procedure.

Troubleshooting Procedure

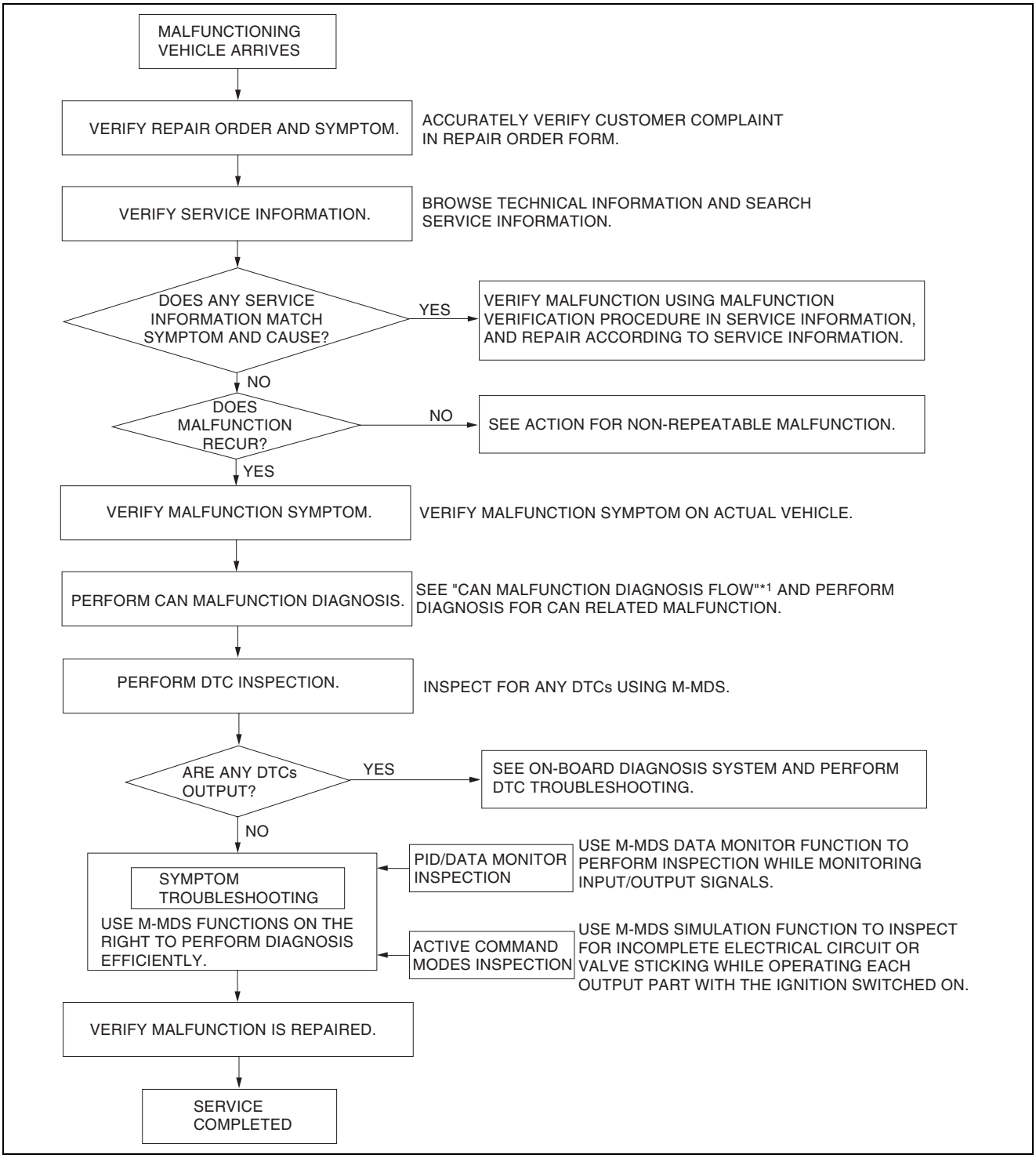

am3uuw0000731

*1 : 10-02A-3 CONTROLLER AREA NETWORK (CAN) MALFUNCTION DIAGNOSIS FLOW [SKYACTIV-G 2.0 (L.H.D.)] /10-02B-3 CONTROLLER AREA NETWORK (CAN) MALFUNCTION DIAGNOSIS FLOW [SKYACTIV-G 2.0 (R.H.D.)]/10-02C-3 CONTROLLER AREA NETWORK (CAN) MALFUNCTION DIAGNOSIS FLOW [SKYACTIV-D 2.2 (L.H.D.)]/10-02D-3 CONTROLLER AREA NETWORK (CAN) MALFUNCTION DIAGNOSIS FLOW [SKYACTIV-D 2.2 (R.H.D.)]

ON-BOARD DIAGNOSTIC [ADVANCED KEYLESS ENTRY SYSTEM]

Action for non-repeatable malfunction

- If the malfunction does not recur, verify the malfunction cause by performing the following actions:
  - — Based on the repair order form, attempt to drive the vehicle or perform tests to replicate the malfunction, record the data at that time, and detect the malfunction cause.
  - — Shake the wiring harness or connector of the electrical component which is suspected to be the cause of the malfunction, and inspect for malfunction or occurrence of any DTCs.

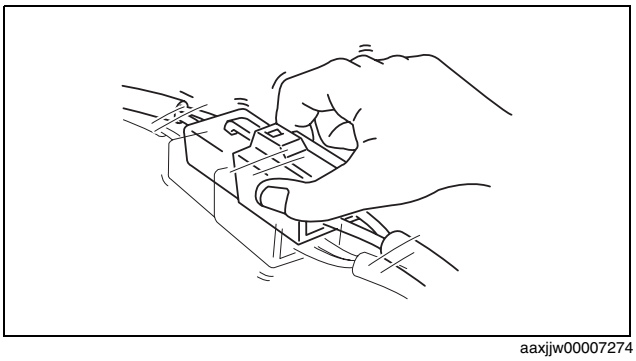

aaxjjw00007274

  - — Inspect the female terminals on the connector of the electric component which is suspected to be the cause of the malfunction for poor connection.

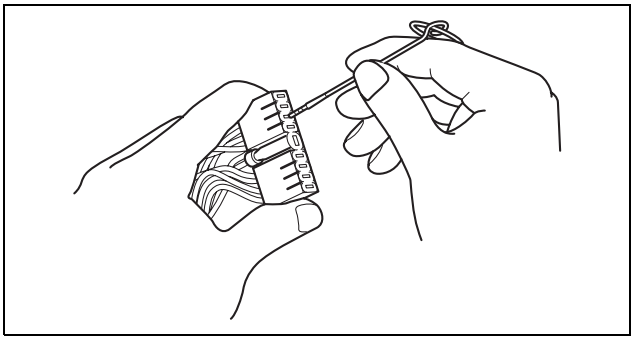

am3uuw0000750

DTC INSPECTION [ADVANCED KEYLESS ENTRY SYSTEM]

id0902p8025800

CMDTC Self Test

1. Connect the M-MDS to the DLC-2.
2. After the vehicle is identified, select the following items from the initialization screen of the M-MDS.
   (1) Select “Self Test”.
   (2) Select “All CMDTCs”.
3. Verify the DTC according to the directions on the screen.
   - If any DTCs are displayed, perform troubleshooting according to the corresponding DTC inspection.
4. After completion of repairs, clear all DTCs stored in the start stop unit. (See 09-02A-5 CLEARING DTC [ADVANCED KEYLESS ENTRY SYSTEM].)

ODDTC Self Test

1. Connect the M-MDS to the DLC-2.
2. After the vehicle is identified, select the following items from the initialization screen of the M-MDS.
   (1) Select “Self Test”.
   (2) Select “Modules”.
   (3) Select “SSU”.
3. Verify the DTC according to the directions on the screen.
   - If any DTCs are displayed, perform troubleshooting according to the corresponding DTC inspection.
4. After completion of repairs, clear all DTCs stored in the start stop unit. (See 09-02A-5 CLEARING DTC [ADVANCED KEYLESS ENTRY SYSTEM].)

CLEARING DTC [ADVANCED KEYLESS ENTRY SYSTEM]

id0902p8025900

CMDTC Memory Clearing Procedure

1. Connect the M-MDS to the DLC-2.
2. After the vehicle is identified, select the following items from the initialization screen of the M-MDS.
   (1) Select “Self Test”.
   (2) Select “All CMDTCs”.
3. Verify the DTC according to the directions on the screen.
4. Press the clear button on the DTC screen to clear the DTC.
5. Switch the ignition to off.
6. Switch the ignition ON (engine off or on) and wait for **5 s or more**.
7. Perform DTC inspection. (See 09-02A-5 DTC INSPECTION [ADVANCED KEYLESS ENTRY SYSTEM].)
8. Verify that no DTCs are displayed.

ON-BOARD DIAGNOSTIC [ADVANCED KEYLESS ENTRY SYSTEM]

ODDTC Memory Clearing Procedure

1. Connect the M-MDS to the DLC-2.
2. After the vehicle is identified, select the following items from the initialization screen of the M-MDS.
   (1) Select “Self Test”.
   (2) Select “Modules”.
   (3) Select “SSU”.
3. Verify the DTC according to the directions on the screen.
4. Press the clear button on the DTC screen to clear the DTC.
5. Switch the ignition to off.
6. Switch the ignition ON (engine off or on) and wait for **5 s or more**.
7. Perform DTC inspection. (See 09-02A-5 DTC INSPECTION [ADVANCED KEYLESS ENTRY SYSTEM].)
8. Verify that no DTCs are displayed.

DTC TABLE [ADVANCED KEYLESS ENTRY SYSTEM]

id0902p8026000

×: Applicable
—: Not applicable

DTC No.	KEY warning light (red)	Description	Fail-safe function	Drive cycle	Self test type*1	Memory function	Page
B10C6:1F	On	Keyless antenna (exterior, rear) circuit malfunction	×	—	C, D	×	(See 09-02A-7 DTC B10C6:1F [ADVANCED KEYLESS ENTRY SYSTEM].)
B10C7:1F	On	Keyless antenna (interior, rear) circuit malfunction	×	—	C, D	×	(See 09-02A-10 DTC B10C7:1F [ADVANCED KEYLESS ENTRY SYSTEM].)
B10C9:1F	On	Keyless antenna (interior, front) circuit malfunction	×	—	C, D	×	(See 09-02A-13 DTC B10C9:1F [ADVANCED KEYLESS ENTRY SYSTEM].)
B10D1:23	On	Request switch (LF) circuit malfunction	—	—	C	×	(See 09-02A-16 DTC B10D1:23 [ADVANCED KEYLESS ENTRY SYSTEM].)
B10D3:23	On	Request switch (RF) circuit malfunction	—	—	C	×	(See 09-02A-19 DTC B10D3:23 [ADVANCED KEYLESS ENTRY SYSTEM].)
B11C4:23	On	Request switch (liftgate) circuit malfunction	—	—	C	×	(See 09-02A-21 DTC B11C4:23 [ADVANCED KEYLESS ENTRY SYSTEM].)
B11FD:1F	On	Keyless antenna (exterior, LF) circuit malfunction	×	—	C, D	×	(See 09-02A-23 DTC B11FD:1F [ADVANCED KEYLESS ENTRY SYSTEM].)
B1210:1F	On	Keyless antenna (exterior, RF) circuit malfunction	×	—	C, D	×	(See 09-02A-26 DTC B1210:1F [ADVANCED KEYLESS ENTRY SYSTEM].)
B13C3:04	On	LF control unit internal malfunction	×	—	C	×	(See 09-02A-29 DTC B13C3:04 [ADVANCED KEYLESS ENTRY SYSTEM].)

ON-BOARD DIAGNOSTIC [ADVANCED KEYLESS ENTRY SYSTEM]

DTC No.	KEY warning light (red)	Description	Fail-safe function	Drive cycle	Self test type*1	Memory function	Page
B13C3:09	On	LF control unit malfunction	×	—	C	×	(See 09-02A-30 DTC B13C3:09 [ADVANCED KEYLESS ENTRY SYSTEM].)
B13C3:16	On	LF control unit power supply voltage decrease input	×	—	C	×	(See 09-02A-32 DTC B13C3:16 [ADVANCED KEYLESS ENTRY SYSTEM].)
B13C3:29	On	Communication error with LF control unit	×	—	C	×	(See 09-02A-34 DTC B13C3:29 [ADVANCED KEYLESS ENTRY SYSTEM].)

*1 : C: CMDTC self test, D: ODDTC self test

DTC B10C6:1F [ADVANCED KEYLESS ENTRY SYSTEM]

id0902p8026100

System malfunction location	Keyless antenna (exterior, rear) circuit malfunction
Detection condition	• The start stop unit detects an open circuit in the keyless antenna (exterior, rear) or a short to ground with the ignition switched off.
Fail-safe	• Inhibits the door lock/unlock control using the advanced keyless entry system.
Possible cause	• Keyless antenna (exterior, rear) connector or terminal malfunction • LF control unit connector or terminal malfunction • Short to ground in wiring harness between the following terminals: — Between LF control unit terminal AA and keyless antenna (exterior, rear) terminal B — Between LF control unit terminal AB and keyless antenna (exterior, rear) terminal A • Open circuit in wiring harness between the following terminals: — Between LF control unit terminal AA and keyless antenna (exterior, rear) terminal B — Between LF control unit terminal AB and keyless antenna (exterior, rear) terminal A • LF control unit malfunction • Keyless antenna (exterior, rear) malfunction • Start stop unit malfunction

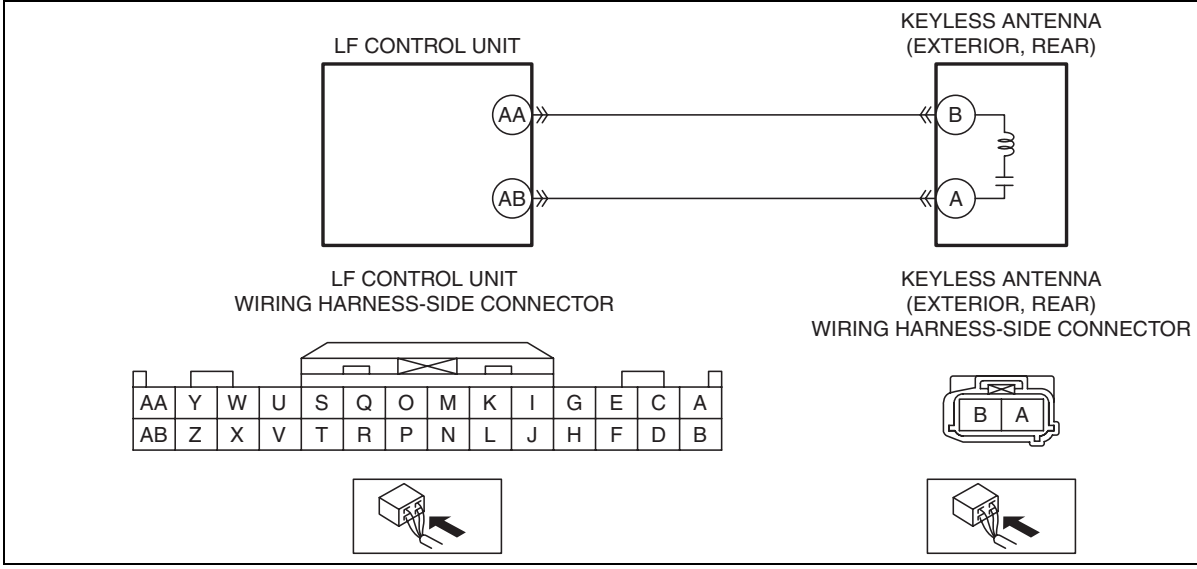

ON-BOARD DIAGNOSTIC [ADVANCED KEYLESS ENTRY SYSTEM]

Diagnostic Procedure

Step	Inspection		Action
1	**INSPECT KEYLESS ANTENNA (EXTERIOR, REAR) CONNECTOR CONDITION** • Switch the ignition to off. • Disconnect the negative battery cable. (See 01-17A-11 NEGATIVE BATTERY CABLE DISCONNECTION/CONNECTION [SKYACTIV-G 2.0].) (See 01-17A-13 NEGATIVE BATTERY CABLE DISCONNECTION/CONNECTION [SKYACTIV-G 2.0 (WITHOUT i-stop)].) (See 01-17B-9 NEGATIVE BATTERY CABLE DISCONNECTION/CONNECTION [SKYACTIV-D 2.2].) • Disconnect the keyless antenna (exterior, rear) connector. • Inspect the connector engagement and connection condition and inspect the terminals for damage, deformation, corrosion, or disconnection. • Is the connector normal?	Yes	Go to the next step.
		No	Repair or replace the connector, then go to Step 7.
2	**INSPECT LF CONTROL UNIT CONNECTOR CONDITION** • Disconnect the LF control unit connector. • Inspect the connector engagement and connection condition and inspect the terminals for damage, deformation, corrosion, or disconnection. • Is the connector normal?	Yes	Go to the next step.
		No	Repair or replace the connector, then go to Step 7.
3	**INSPECT KEYLESS ANTENNA (EXTERIOR, REAR) CIRCUIT FOR SHORT TO GROUND** • Verify that the LF control unit and keyless antenna (exterior, rear) connectors are disconnected. • Inspect for continuity between the following terminals (vehicle wiring harness side) and body ground. — Keyless antenna (exterior, rear) terminal B — Keyless antenna (exterior, rear) terminal A • Is there continuity?	Yes	Repair or replace the wiring harness which is shorted to ground, then go to Step 7.
		No	Go to the next step.
4	**INSPECT KEYLESS ANTENNA (EXTERIOR, REAR) CIRCUIT FOR OPEN CIRCUIT** • Verify that the LF control unit and keyless antenna (exterior, rear) connectors are disconnected. • Inspect the wiring harness between the following terminals (vehicle wiring harness side) for continuity. — Between LF control unit terminal AA and keyless antenna (exterior, rear) terminal B — Between LF control unit terminal AB and keyless antenna (exterior, rear) terminal A • Is there continuity?	Yes	Go to the next step.
		No	Repair or replace the wiring harness which has an open circuit, then go to Step 7.
5	**INSPECT LF CONTROL UNIT** • Inspect the LF control unit. (See 09-14-60 LF CONTROL UNIT INSPECTION.) • Is the LF control unit normal?	Yes	Go to the next step.
		No	Replace the LF control unit, then go to Step 7. (See 09-14-59 LF CONTROL UNIT REMOVAL/INSTALLATION.)

ON-BOARD DIAGNOSTIC [ADVANCED KEYLESS ENTRY SYSTEM]

Step	Inspection		Action
6	**PERFORM DTC INSPECTION AND VERIFY IF MALFUNCTIONING PART IS KEYLESS ANTENNA (EXTERIOR, REAR)** • Reconnect all the disconnected connectors. • Reconnect the disconnected negative battery cable. (See 01-17A-11 NEGATIVE BATTERY CABLE DISCONNECTION/CONNECTION [SKYACTIV-G 2.0].) (See 01-17A-13 NEGATIVE BATTERY CABLE DISCONNECTION/CONNECTION [SKYACTIV-G 2.0 (WITHOUT i-stop)].) (See 01-17B-9 NEGATIVE BATTERY CABLE DISCONNECTION/CONNECTION [SKYACTIV-D 2.2].) • Clear DTCs for the advanced keyless entry system using the M-MDS. (See 09-02A-5 CLEARING DTC [ADVANCED KEYLESS ENTRY SYSTEM].) • Perform the advanced keyless entry system DTC inspection using the M-MDS. (See 09-02A-5 DTC INSPECTION [ADVANCED KEYLESS ENTRY SYSTEM].) • Is DTC B10C6:1F displayed?	Yes	Replace the keyless antenna (exterior, rear), then go to the next step. (See 09-14-66 KEYLESS ANTENNA REMOVAL/ INSTALLATION.)
		No	Go to Step 8.
7	**VERIFY THAT REPAIRS HAVE BEEN COMPLETED** • Reconnect all the disconnected connectors. • Reconnect the disconnected negative battery cable. (See 01-17A-11 NEGATIVE BATTERY CABLE DISCONNECTION/CONNECTION [SKYACTIV-G 2.0].) (See 01-17A-13 NEGATIVE BATTERY CABLE DISCONNECTION/CONNECTION [SKYACTIV-G 2.0 (WITHOUT i-stop)].) (See 01-17B-9 NEGATIVE BATTERY CABLE DISCONNECTION/CONNECTION [SKYACTIV-D 2.2].) • Clear DTCs for the advanced keyless entry system using the M-MDS. (See 09-02A-5 CLEARING DTC [ADVANCED KEYLESS ENTRY SYSTEM].) • Perform the advanced keyless entry system DTC inspection using the M-MDS. (See 09-02A-5 DTC INSPECTION [ADVANCED KEYLESS ENTRY SYSTEM].) • Is DTC B10C6:1F displayed?	Yes	Repeat the inspection from Step 1. • If the malfunction recurs, replace the start stop unit, then go to the next step. (See 09-14-53 START STOP UNIT REMOVAL/ INSTALLATION.)
		No	Go to the next step.
8	**VERIFY IF OTHER DTCs DISPLAYED** • Are any other DTCs displayed?	Yes	Repair the malfunctioning part according to the applicable DTC troubleshooting. (See 09-02A-6 DTC TABLE [ADVANCED KEYLESS ENTRY SYSTEM].)
		No	DTC troubleshooting completed.

ON-BOARD DIAGNOSTIC [ADVANCED KEYLESS ENTRY SYSTEM]

DTC B10C7:1F [ADVANCED KEYLESS ENTRY SYSTEM]

id0902p8026200

System malfunction location	**Keyless antenna (interior, rear) circuit malfunction**
Detection condition	• The start stop unit detects an open circuit in the keyless antenna (interior, rear) or a short to ground with the ignition switched off.
Fail-safe	• Inhibits the door lock/unlock control using the advanced keyless entry system.
Possible cause	• Keyless antenna (interior, rear) connector or terminal malfunction • LF control unit connector or terminal malfunction • Short to ground in wiring harness between the following terminals: — Between LF control unit terminal Z and keyless antenna (interior, rear) terminal B — Between LF control unit terminal X and keyless antenna (interior, rear) terminal A • Open circuit in wiring harness between the following terminals: — Between LF control unit terminal Z and keyless antenna (interior, rear) terminal B — Between LF control unit terminal X and keyless antenna (interior, rear) terminal A • LF control unit malfunction • Keyless antenna (interior, rear) malfunction • Start stop unit malfunction

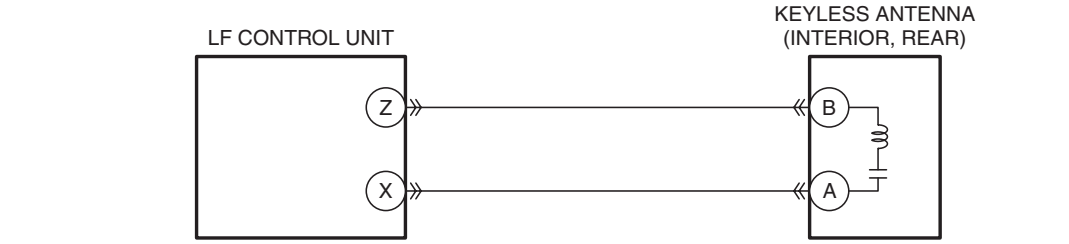

LF CONTROL UNIT
WIRING HARNESS-SIDE CONNECTOR

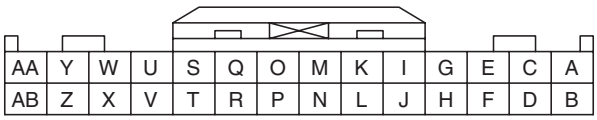

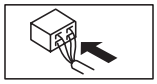

KEYLESS ANTENNA
(INTERIOR, REAR)
WIRING HARNESS-SIDE CONNECTOR

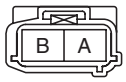

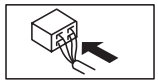

ON-BOARD DIAGNOSTIC [ADVANCED KEYLESS ENTRY SYSTEM]

Diagnostic Procedure

Step	Inspection		Action
1	**INSPECT KEYLESS ANTENNA (INTERIOR, REAR) CONNECTOR CONDITION** • Switch the ignition to off. • Disconnect the negative battery cable. (See 01-17A-11 NEGATIVE BATTERY CABLE DISCONNECTION/CONNECTION [SKYACTIV-G 2.0].) (See 01-17A-13 NEGATIVE BATTERY CABLE DISCONNECTION/CONNECTION [SKYACTIV-G 2.0 (WITHOUT i-stop)].) (See 01-17B-9 NEGATIVE BATTERY CABLE DISCONNECTION/CONNECTION [SKYACTIV-D 2.2].) • Disconnect the keyless antenna (interior, rear) connector. • Inspect the connector engagement and connection condition and inspect the terminals for damage, deformation, corrosion, or disconnection. • Is the connector normal?	Yes	Go to the next step.
		No	Repair or replace the connector, then go to Step 7.
2	**INSPECT LF CONTROL UNIT CONNECTOR CONDITION** • Disconnect the LF control unit connector. • Inspect the connector engagement and connection condition and inspect the terminals for damage, deformation, corrosion, or disconnection. • Is the connector normal?	Yes	Go to the next step.
		No	Repair or replace the connector, then go to Step 7.
3	**INSPECT KEYLESS ANTENNA (INTERIOR, REAR) CIRCUIT FOR SHORT TO GROUND** • Verify that the LF control unit and keyless antenna (interior, rear) connectors are disconnected. • Inspect for continuity between the following terminals (vehicle wiring harness side) and body ground. — Keyless antenna (interior, rear) terminal B — Keyless antenna (interior, rear) terminal A • Is there continuity?	Yes	Repair or replace the wiring harness which is shorted to ground, then go to Step 7.
		No	Go to the next step.
4	**INSPECT KEYLESS ANTENNA (INTERIOR, REAR) CIRCUIT FOR OPEN CIRCUIT** • Verify that the LF control unit and keyless antenna (interior, rear) connectors are disconnected. • Inspect the wiring harness between the following terminals (vehicle wiring harness side) for continuity. — Between LF control unit terminal Z and keyless antenna (interior, rear) terminal B — Between LF control unit terminal X and keyless antenna (interior, rear) terminal A • Is there continuity?	Yes	Go to the next step.
		No	Repair or replace the wiring harness which has an open circuit, then go to Step 7.
5	**INSPECT LF CONTROL UNIT** • Inspect the LF control unit. (See 09-14-60 LF CONTROL UNIT INSPECTION.) • Is the LF control unit normal?	Yes	Go to the next step.
		No	Replace the LF control unit, then go to Step 7. (See 09-14-59 LF CONTROL UNIT REMOVAL/INSTALLATION.)

ON-BOARD DIAGNOSTIC [ADVANCED KEYLESS ENTRY SYSTEM]

Step	Inspection		Action
6	**PERFORM DTC INSPECTION AND VERIFY IF MALFUNCTIONING PART IS KEYLESS ANTENNA (INTERIOR, REAR)** • Reconnect all the disconnected connectors. • Reconnect the disconnected negative battery cable. (See 01-17A-11 NEGATIVE BATTERY CABLE DISCONNECTION/CONNECTION [SKYACTIV-G 2.0].) (See 01-17A-13 NEGATIVE BATTERY CABLE DISCONNECTION/CONNECTION [SKYACTIV-G 2.0 (WITHOUT i-stop)].) (See 01-17B-9 NEGATIVE BATTERY CABLE DISCONNECTION/CONNECTION [SKYACTIV-D 2.2].) • Clear DTCs for the advanced keyless entry system using the M-MDS. (See 09-02A-5 CLEARING DTC [ADVANCED KEYLESS ENTRY SYSTEM].) • Perform the advanced keyless entry system DTC inspection using the M-MDS. (See 09-02A-5 DTC INSPECTION [ADVANCED KEYLESS ENTRY SYSTEM].) • Is DTC B10C7:1F displayed?	Yes	Replace the keyless antenna (interior, rear), then go to the next step. (See 09-14-66 KEYLESS ANTENNA REMOVAL/ INSTALLATION.)
		No	Go to Step 8.
7	**VERIFY THAT REPAIRS HAVE BEEN COMPLETED** • Reconnect all the disconnected connectors. • Reconnect the disconnected negative battery cable. (See 01-17A-11 NEGATIVE BATTERY CABLE DISCONNECTION/CONNECTION [SKYACTIV-G 2.0].) (See 01-17A-13 NEGATIVE BATTERY CABLE DISCONNECTION/CONNECTION [SKYACTIV-G 2.0 (WITHOUT i-stop)].) (See 01-17B-9 NEGATIVE BATTERY CABLE DISCONNECTION/CONNECTION [SKYACTIV-D 2.2].) • Clear DTCs for the advanced keyless entry system using the M-MDS. (See 09-02A-5 CLEARING DTC [ADVANCED KEYLESS ENTRY SYSTEM].) • Perform the advanced keyless entry system DTC inspection using the M-MDS. (See 09-02A-5 DTC INSPECTION [ADVANCED KEYLESS ENTRY SYSTEM].) • Is DTC B10C7:1F displayed?	Yes	Repeat the inspection from Step 1. • If the malfunction recurs, replace the start stop unit, then go to the next step. (See 09-14-53 START STOP UNIT REMOVAL/ INSTALLATION.)
		No	Go to the next step.
8	**VERIFY IF OTHER DTCs DISPLAYED** • Are any other DTCs displayed?	Yes	Repair the malfunctioning part according to the applicable DTC troubleshooting. (See 09-02A-6 DTC TABLE [ADVANCED KEYLESS ENTRY SYSTEM].)
		No	DTC troubleshooting completed.

ON-BOARD DIAGNOSTIC [ADVANCED KEYLESS ENTRY SYSTEM]

DTC B10C9:1F [ADVANCED KEYLESS ENTRY SYSTEM]

id0902p8026300

System malfunction location	**Keyless antenna (interior, front) circuit malfunction**
Detection condition	• The start stop unit detects an open circuit in the keyless antenna (interior, front) or a short to ground with the ignition switched off.
Fail-safe	• Inhibits the door lock/unlock control using the advanced keyless entry system.
Possible cause	• Keyless antenna (interior, front) connector or terminal malfunction • LF control unit connector or terminal malfunction • Short to ground in wiring harness between the following terminals: — Between LF control unit terminal O and keyless antenna (interior, front) terminal B — Between LF control unit terminal Q and keyless antenna (interior, front) terminal A • Open circuit in wiring harness between the following terminals: — Between LF control unit terminal O and keyless antenna (interior, front) terminal B — Between LF control unit terminal Q and keyless antenna (interior, front) terminal A • LF control unit malfunction • Keyless antenna (interior, front) malfunction • Start stop unit malfunction

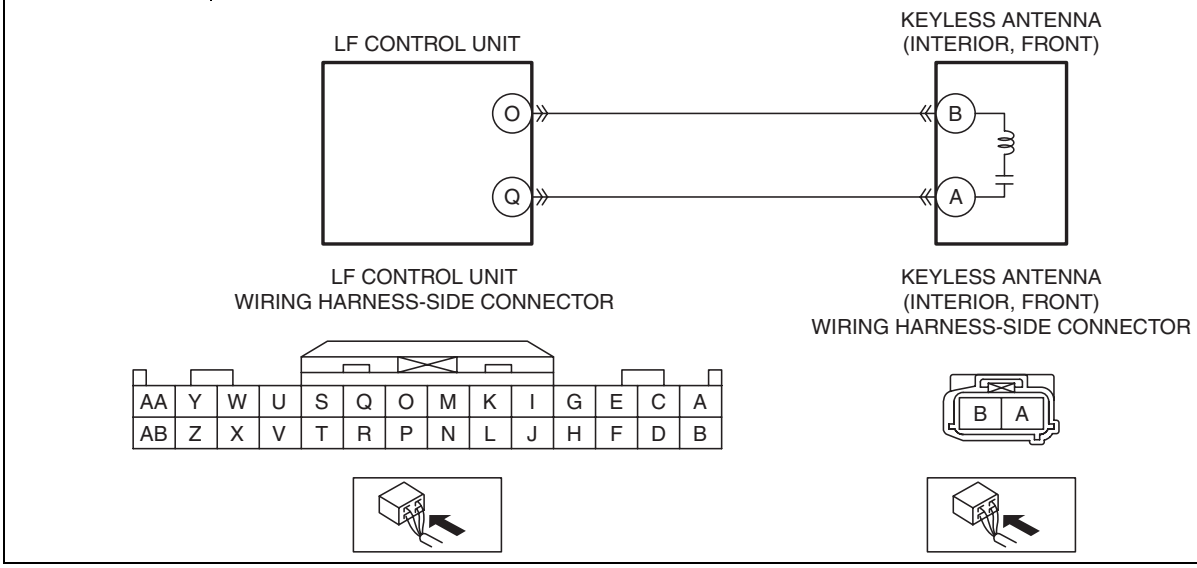

ON-BOARD DIAGNOSTIC [ADVANCED KEYLESS ENTRY SYSTEM]

Diagnostic Procedure

Step	Inspection		Action
1	**INSPECT KEYLESS ANTENNA (INTERIOR, FRONT) CONNECTOR CONDITION** • Switch the ignition to off. • Disconnect the negative battery cable. (See 01-17A-11 NEGATIVE BATTERY CABLE DISCONNECTION/CONNECTION [SKYACTIV-G 2.0].) (See 01-17A-13 NEGATIVE BATTERY CABLE DISCONNECTION/CONNECTION [SKYACTIV-G 2.0 (WITHOUT i-stop)].) (See 01-17B-9 NEGATIVE BATTERY CABLE DISCONNECTION/CONNECTION [SKYACTIV-D 2.2].) • Disconnect the keyless antenna (interior, front) connector. • Inspect the connector engagement and connection condition and inspect the terminals for damage, deformation, corrosion, or disconnection. • Is the connector normal?	Yes	Go to the next step.
		No	Repair or replace the connector, then go to Step 7.
2	**INSPECT LF CONTROL UNIT CONNECTOR CONDITION** • Disconnect the LF control unit connector. • Inspect the connector engagement and connection condition and inspect the terminals for damage, deformation, corrosion, or disconnection. • Is the connector normal?	Yes	Go to the next step.
		No	Repair or replace the connector, then go to Step 7.
3	**INSPECT KEYLESS ANTENNA (INTERIOR, FRONT) CIRCUIT FOR SHORT TO GROUND** • Verify that the LF control unit and keyless antenna (interior, front) connectors are disconnected. • Inspect for continuity between the following terminals (vehicle wiring harness side) and body ground. — Keyless antenna (interior, front) terminal B — Keyless antenna (interior, front) terminal A • Is there continuity?	Yes	Repair or replace the wiring harness which is shorted to ground, then go to Step 7.
		No	Go to the next step.
4	**INSPECT KEYLESS ANTENNA (INTERIOR, FRONT) CIRCUIT FOR OPEN CIRCUIT** • Verify that the LF control unit and keyless antenna (interior, front) connectors are disconnected. • Inspect the wiring harness between the following terminals (vehicle wiring harness side) for continuity. — Between LF control unit terminal O and keyless antenna (interior, front) terminal B — Between LF control unit terminal Q and keyless antenna (interior, front) terminal A • Is there continuity?	Yes	Go to the next step.
		No	Repair or replace the wiring harness which has an open circuit, then go to Step 7.
5	**INSPECT LF CONTROL UNIT** • Inspect the LF control unit. (See 09-14-60 LF CONTROL UNIT INSPECTION.) • Is the LF control unit normal?	Yes	Go to the next step.
		No	Replace the LF control unit, then go to Step 7. (See 09-14-59 LF CONTROL UNIT REMOVAL/INSTALLATION.)

ON-BOARD DIAGNOSTIC [ADVANCED KEYLESS ENTRY SYSTEM]

Step	Inspection		Action
6	**PERFORM DTC INSPECTION AND VERIFY IF MALFUNCTIONING PART IS KEYLESS ANTENNA (INTERIOR, FRONT)** • Reconnect all the disconnected connectors. • Reconnect the disconnected negative battery cable. (See 01-17A-11 NEGATIVE BATTERY CABLE DISCONNECTION/CONNECTION [SKYACTIV-G 2.0].) (See 01-17A-13 NEGATIVE BATTERY CABLE DISCONNECTION/CONNECTION [SKYACTIV-G 2.0 (WITHOUT i-stop)].) (See 01-17B-9 NEGATIVE BATTERY CABLE DISCONNECTION/CONNECTION [SKYACTIV-D 2.2].) • Clear DTCs for the advanced keyless entry system using the M-MDS. (See 09-02A-5 CLEARING DTC [ADVANCED KEYLESS ENTRY SYSTEM].) • Perform the advanced keyless entry system DTC inspection using the M-MDS. (See 09-02A-5 DTC INSPECTION [ADVANCED KEYLESS ENTRY SYSTEM].) • Is DTC B10C9:1F displayed?	Yes	Replace the keyless antenna (interior, front), then go to the next step. (See 09-14-66 KEYLESS ANTENNA REMOVAL/ INSTALLATION.)
		No	Go to Step 8.
7	**VERIFY THAT REPAIRS HAVE BEEN COMPLETED** • Reconnect all the disconnected connectors. • Reconnect the disconnected negative battery cable. (See 01-17A-11 NEGATIVE BATTERY CABLE DISCONNECTION/CONNECTION [SKYACTIV-G 2.0].) (See 01-17A-13 NEGATIVE BATTERY CABLE DISCONNECTION/CONNECTION [SKYACTIV-G 2.0 (WITHOUT i-stop)].) (See 01-17B-9 NEGATIVE BATTERY CABLE DISCONNECTION/CONNECTION [SKYACTIV-D 2.2].) • Clear DTCs for the advanced keyless entry system using the M-MDS. (See 09-02A-5 CLEARING DTC [ADVANCED KEYLESS ENTRY SYSTEM].) • Perform the advanced keyless entry system DTC inspection using the M-MDS. (See 09-02A-5 DTC INSPECTION [ADVANCED KEYLESS ENTRY SYSTEM].) • Is DTC B10C9:1F displayed?	Yes	Repeat the inspection from Step 1. • If the malfunction recurs, replace the start stop unit, then go to the next step. (See 09-14-53 START STOP UNIT REMOVAL/ INSTALLATION.)
		No	Go to the next step.
8	**VERIFY IF OTHER DTCs DISPLAYED** • Are any other DTCs displayed?	Yes	Repair the malfunctioning part according to the applicable DTC troubleshooting. (See 09-02A-6 DTC TABLE [ADVANCED KEYLESS ENTRY SYSTEM].)
		No	DTC troubleshooting completed.

ON-BOARD DIAGNOSTIC [ADVANCED KEYLESS ENTRY SYSTEM]

DTC B10D1:23 [ADVANCED KEYLESS ENTRY SYSTEM]

id0902p8026400

System malfunction location	**Request switch (LF) circuit malfunction**
Detection condition	• With the ignition switched ON (engine on), the start stop unit detects that the vehicle speed is **5 km/h {3 mph} or more** for a continuous **2 min or more** and the request switch (LF) is on **7 times or more** until the vehicle speed is **less than 5 km/h {3 mph}**.
Fail-safe	—
Possible cause	• Front outer handle (LH) connector or terminal malfunction • LF control unit connector or terminal malfunction • Short to ground in wiring harness between LF control unit terminal G and front outer handle (LH) terminal D • Request switch (LF) malfunction • LF control unit malfunction • Start stop unit malfunction

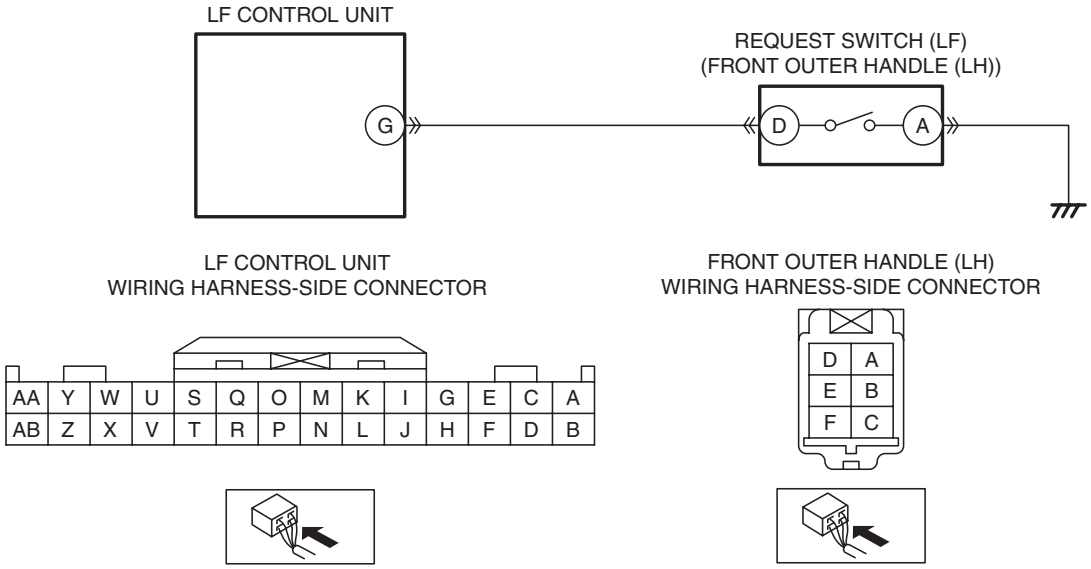

ON-BOARD DIAGNOSTIC [ADVANCED KEYLESS ENTRY SYSTEM]

Diagnostic Procedure

Step	Inspection		Action
1	**INSPECT FRONT OUTER HANDLE (LH) CONNECTOR CONDITION** • Switch the ignition to off. • Disconnect the negative battery cable. (See 01-17A-11 NEGATIVE BATTERY CABLE DISCONNECTION/CONNECTION [SKYACTIV-G 2.0].) (See 01-17A-13 NEGATIVE BATTERY CABLE DISCONNECTION/CONNECTION [SKYACTIV-G 2.0 (WITHOUT i-stop)].) (See 01-17B-9 NEGATIVE BATTERY CABLE DISCONNECTION/CONNECTION [SKYACTIV-D 2.2].) • Disconnect the front outer handle (LH) connector. • Inspect the connector engagement and connection condition and inspect the terminals for damage, deformation, corrosion, or disconnection. • Is the connector normal?	Yes	Go to the next step.
		No	Repair or replace the connector, then go to Step 6.
2	**INSPECT LF CONTROL UNIT CONNECTOR CONDITION** • Disconnect the LF control unit connector. • Inspect the connector engagement and connection condition and inspect the terminals for damage, deformation, corrosion, or disconnection. • Is the connector normal?	Yes	Go to the next step.
		No	Repair or replace the connector, then go to Step 6.
3	**INSPECT REQUEST SWITCH (LF) CIRCUIT FOR SHORT TO GROUND** • Verify that the LF control unit and front outer handle (LH) connectors are disconnected. • Inspect for continuity between front outer handle (LH) terminal D (vehicle wiring harness side) and body ground. • Is there continuity?	Yes	Repair or replace the wiring harness which is shorted to ground, then go to Step 6.
		No	Go to the next step.
4	**INSPECT REQUEST SWITCH (LF)** • Inspect the request switch (LF). (See 09-14-65 REQUEST SWITCH INSPECTION.) • Is the request switch (LF) normal?	Yes	Go to the next step.
		No	Replace the front outer handle (LH), then go to Step 6. (See 09-14-8 FRONT OUTER HANDLE REMOVAL/INSTALLATION.)
5	**INSPECT LF CONTROL UNIT** • Inspect the LF control unit. (See 09-14-60 LF CONTROL UNIT INSPECTION.) • Is the LF control unit normal?	Yes	Go to the next step.
		No	Replace the LF control unit, then go to the next step. (See 09-14-59 LF CONTROL UNIT REMOVAL/INSTALLATION.)

ON-BOARD DIAGNOSTIC [ADVANCED KEYLESS ENTRY SYSTEM]

Step	Inspection		Action
6	**VERIFY THAT REPAIRS HAVE BEEN COMPLETED** • Reconnect all the disconnected connectors. • Reconnect the disconnected negative battery cable. (See 01-17A-11 NEGATIVE BATTERY CABLE DISCONNECTION/CONNECTION [SKYACTIV-G 2.0].) (See 01-17A-13 NEGATIVE BATTERY CABLE DISCONNECTION/CONNECTION [SKYACTIV-G 2.0 (WITHOUT i-stop)].) (See 01-17B-9 NEGATIVE BATTERY CABLE DISCONNECTION/CONNECTION [SKYACTIV-D 2.2].) • Clear DTCs for the advanced keyless entry system using the M-MDS. (See 09-02A-5 CLEARING DTC [ADVANCED KEYLESS ENTRY SYSTEM].) • Drive the vehicle at **5 km/h {3 mph} or more** for **2 min or more**. • Perform the advanced keyless entry system DTC inspection using the M-MDS. (See 09-02A-5 DTC INSPECTION [ADVANCED KEYLESS ENTRY SYSTEM].) • Is DTC B10D1:23 displayed?	Yes	Repeat the inspection from Step 1. • If the malfunction recurs, replace the start stop unit, then go to the next step. (See 09-14-53 START STOP UNIT REMOVAL/INSTALLATION.)
		No	Go to the next step.
7	**VERIFY IF OTHER DTCs DISPLAYED** • Are any other DTCs displayed?	Yes	Repair the malfunctioning part according to the applicable DTC troubleshooting. (See 09-02A-6 DTC TABLE [ADVANCED KEYLESS ENTRY SYSTEM].)
		No	DTC troubleshooting completed.

ON-BOARD DIAGNOSTIC [ADVANCED KEYLESS ENTRY SYSTEM]

DTC B10D3:23 [ADVANCED KEYLESS ENTRY SYSTEM]

id0902p8026500

System malfunction location	**Request switch (RF) circuit malfunction**
Detection condition	• With the ignition switched ON (engine on), the start stop unit detects that the vehicle speed is **5 km/h {3 mph} or more** for a continuous **2 min or more** and the request switch (RF) is on **7 times or more** until the vehicle speed is **less than 5 km/h {3 mph}**.
Fail-safe	—
Possible cause	• Front outer handle (RH) connector or terminal malfunction • LF control unit connector or terminal malfunction • Short to ground in wiring harness between LF control unit terminal E and front outer handle (RH) terminal D • Request switch (RF) malfunction • LF control unit malfunction • Start stop unit malfunction

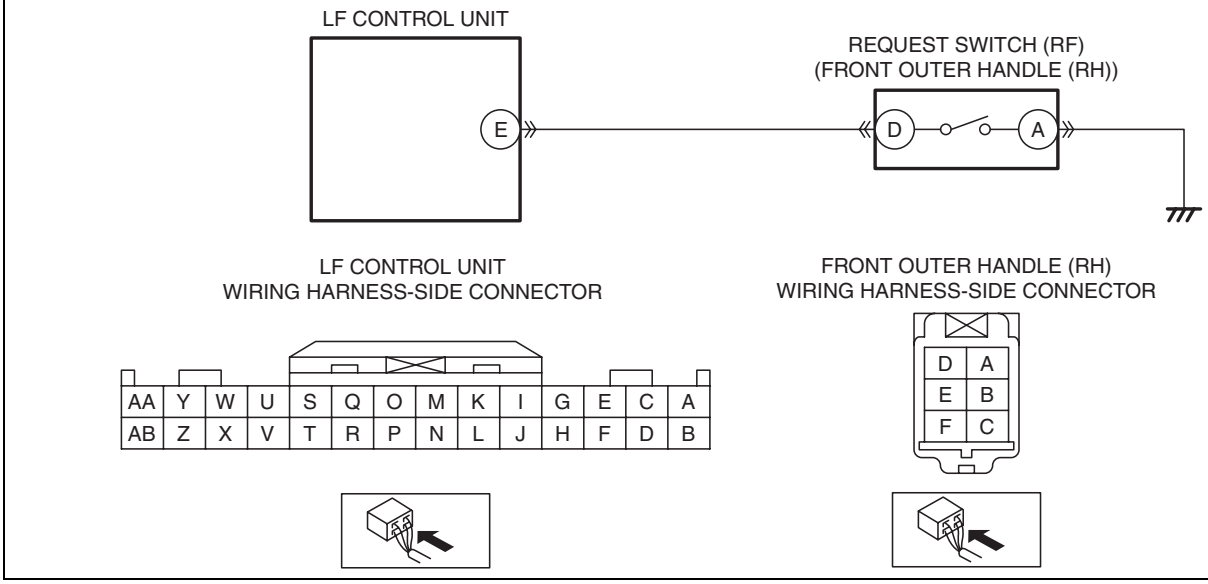

Diagnostic Procedure

Step	Inspection		Action
1	**INSPECT FRONT OUTER HANDLE (RH) CONNECTOR CONDITION** • Switch the ignition to off. • Disconnect the negative battery cable. (See 01-17A-11 NEGATIVE BATTERY CABLE DISCONNECTION/CONNECTION [SKYACTIV-G 2.0].) (See 01-17A-13 NEGATIVE BATTERY CABLE DISCONNECTION/CONNECTION [SKYACTIV-G 2.0 (WITHOUT i-stop)].) (See 01-17B-9 NEGATIVE BATTERY CABLE DISCONNECTION/CONNECTION [SKYACTIV-D 2.2].) • Disconnect the front outer handle (RH) connector. • Inspect the connector engagement and connection condition and inspect the terminals for damage, deformation, corrosion, or disconnection. • Is the connector normal?	Yes	Go to the next step.
		No	Repair or replace the connector, then go to Step 6.
2	**INSPECT LF CONTROL UNIT CONNECTOR CONDITION** • Disconnect the LF control unit connector. • Inspect the connector engagement and connection condition and inspect the terminals for damage, deformation, corrosion, or disconnection. • Is the connector normal?	Yes	Go to the next step.
		No	Repair or replace the connector, then go to Step 6.

ON-BOARD DIAGNOSTIC [ADVANCED KEYLESS ENTRY SYSTEM]

Step	Inspection		Action
3	**INSPECT REQUEST SWITCH (RF) CIRCUIT FOR SHORT TO GROUND** • Verify that the LF control unit and front outer handle (RH) connectors are disconnected. • Inspect for continuity between front outer handle (RH) terminal D (vehicle wiring harness side) and body ground. • Is there continuity?	Yes	Repair or replace the wiring harness which is shorted to ground, then go to Step 6.
		No	Go to the next step.
4	**INSPECT REQUEST SWITCH (RF)** • Inspect the request switch (RF). (See 09-14-65 REQUEST SWITCH INSPECTION.) • Is the request switch (RH) normal?	Yes	Go to the next step.
		No	Replace the front outer handle (RH), then go to Step 6. (See 09-14-8 FRONT OUTER HANDLE REMOVAL/INSTALLATION.)
5	**INSPECT LF CONTROL UNIT** • Inspect the LF control unit. (See 09-14-60 LF CONTROL UNIT INSPECTION.) • Is the LF control unit normal?	Yes	Go to the next step.
		No	Replace the LF control unit, then go to the next step. (See 09-14-59 LF CONTROL UNIT REMOVAL/INSTALLATION.)
6	**VERIFY THAT REPAIRS HAVE BEEN COMPLETED** • Reconnect all the disconnected connectors. • Reconnect the disconnected negative battery cable. (See 01-17A-11 NEGATIVE BATTERY CABLE DISCONNECTION/CONNECTION [SKYACTIV-G 2.0].) (See 01-17A-13 NEGATIVE BATTERY CABLE DISCONNECTION/CONNECTION [SKYACTIV-G 2.0 (WITHOUT i-stop)].) (See 01-17B-9 NEGATIVE BATTERY CABLE DISCONNECTION/CONNECTION [SKYACTIV-D 2.2].) • Clear DTCs for the advanced keyless entry system using the M-MDS. (See 09-02A-5 CLEARING DTC [ADVANCED KEYLESS ENTRY SYSTEM].) • Drive the vehicle at **5 km/h {3 mph} or more** for **2 min or more**. • Perform the advanced keyless entry system DTC inspection using the M-MDS. (See 09-02A-5 DTC INSPECTION [ADVANCED KEYLESS ENTRY SYSTEM].) • Is DTC B10D3:23 displayed?	Yes	Repeat the inspection from Step 1. • If the malfunction recurs, replace the start stop unit, then go to the next step. (See 09-14-53 START STOP UNIT REMOVAL/INSTALLATION.)
		No	Go to the next step.
7	**VERIFY IF OTHER DTCs DISPLAYED** • Are any other DTCs displayed?	Yes	Repair the malfunctioning part according to the applicable DTC troubleshooting. (See 09-02A-6 DTC TABLE [ADVANCED KEYLESS ENTRY SYSTEM].)
		No	DTC troubleshooting completed.

ON-BOARD DIAGNOSTIC [ADVANCED KEYLESS ENTRY SYSTEM]

DTC B11C4:23 [ADVANCED KEYLESS ENTRY SYSTEM]

id0902p8026600

System malfunction location	**Request switch (liftgate) circuit malfunction**
Detection condition	• With the ignition switched ON (engine on), the start stop unit detects that the vehicle speed is **5 km/h {3 mph} or more** for a continuous **2 min or more** and the request switch (liftgate) is on **7 times or more** until the vehicle speed is **less than 5 km/h {3 mph}**.
Fail-safe	—
Possible cause	• Request switch (liftgate) connector or terminal malfunction • LF control unit connector or terminal malfunction • Short to ground in wiring harness between LF control unit terminal I and request switch (liftgate) terminal A • Request switch (liftgate) malfunction • LF control unit malfunction • Start stop unit malfunction

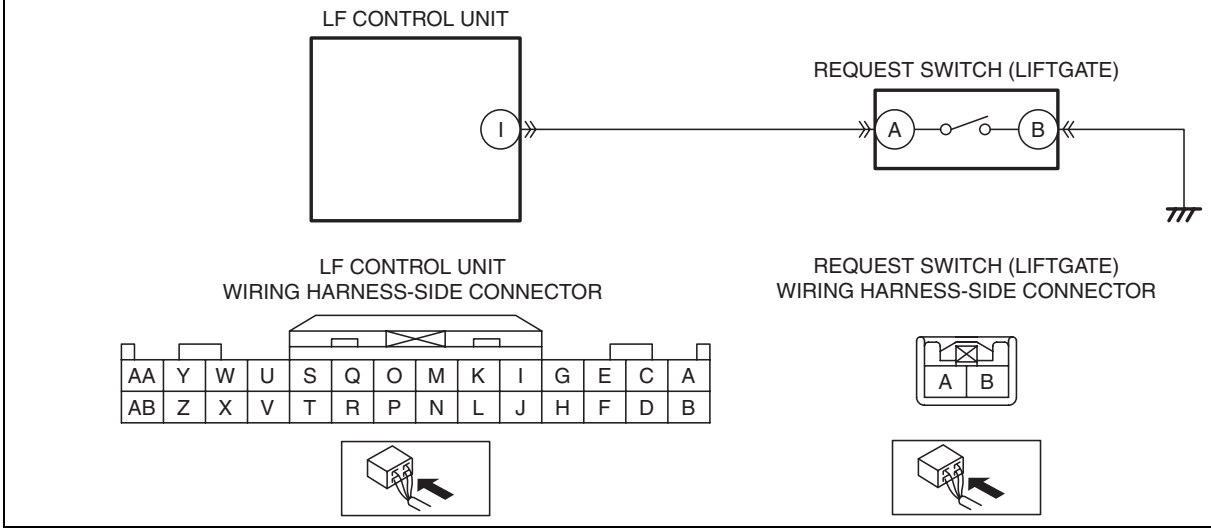

Diagnostic Procedure

Step	Inspection		Action
1	**INSPECT REQUEST SWITCH (LIFTGATE) CONNECTOR CONDITION** • Switch the ignition to off. • Disconnect the negative battery cable. (See 01-17A-11 NEGATIVE BATTERY CABLE DISCONNECTION/CONNECTION [SKYACTIV-G 2.0].) (See 01-17A-13 NEGATIVE BATTERY CABLE DISCONNECTION/CONNECTION [SKYACTIV-G 2.0 (WITHOUT i-stop)].) (See 01-17B-9 NEGATIVE BATTERY CABLE DISCONNECTION/CONNECTION [SKYACTIV-D 2.2].) • Disconnect the request switch (liftgate) connector. • Inspect the connector engagement and connection condition and inspect the terminals for damage, deformation, corrosion, or disconnection. • Is the connector normal?	Yes	Go to the next step.
		No	Repair or replace the connector, then go to Step 6.
2	**INSPECT LF CONTROL UNIT CONNECTOR CONDITION** • Disconnect the LF control unit connector. • Inspect the connector engagement and connection condition and inspect the terminals for damage, deformation, corrosion, or disconnection. • Is the connector normal?	Yes	Go to the next step.
		No	Repair or replace the connector, then go to Step 6.

ON-BOARD DIAGNOSTIC [ADVANCED KEYLESS ENTRY SYSTEM]

Step	Inspection		Action
3	**INSPECT REQUEST SWITCH (LIFTGATE) CIRCUIT FOR SHORT TO GROUND** • Verify that the LF control unit and request switch (liftgate) connectors are disconnected. • Inspect for continuity between request switch (liftgate) terminal A (vehicle wiring harness side) and body ground. • Is there continuity?	Yes	Repair or replace the wiring harness which is shorted to ground, then go to Step 6.
		No	Go to the next step.
4	**INSPECT REQUEST SWITCH (LIFTGATE)** • Inspect the request switch (liftgate). (See 09-14-65 REQUEST SWITCH INSPECTION.) • Is the request switch (liftgate) normal?	Yes	Go to the next step.
		No	Replace the request switch (liftgate), then go to Step 6. (See 09-14-64 REQUEST SWITCH REMOVAL/INSTALLATION.)
5	**INSPECT LF CONTROL UNIT** • Inspect the LF control unit. (See 09-14-60 LF CONTROL UNIT INSPECTION.) • Is the LF control unit normal?	Yes	Go to the next step.
		No	Replace the LF control unit, then go to the next step. (See 09-14-59 LF CONTROL UNIT REMOVAL/INSTALLATION.)
6	**VERIFY THAT REPAIRS HAVE BEEN COMPLETED** • Reconnect all the disconnected connectors. • Reconnect the disconnected negative battery cable. (See 01-17A-11 NEGATIVE BATTERY CABLE DISCONNECTION/CONNECTION [SKYACTIV-G 2.0].) (See 01-17A-13 NEGATIVE BATTERY CABLE DISCONNECTION/CONNECTION [SKYACTIV-G 2.0 (WITHOUT i-stop)].) (See 01-17B-9 NEGATIVE BATTERY CABLE DISCONNECTION/CONNECTION [SKYACTIV-D 2.2].) • Clear DTCs for the advanced keyless entry system using the M-MDS. (See 09-02A-5 CLEARING DTC [ADVANCED KEYLESS ENTRY SYSTEM].) • Drive the vehicle at **5 km/h {3 mph} or more** for **2 min or more**. • Perform the advanced keyless entry system DTC inspection using the M-MDS. (See 09-02A-5 DTC INSPECTION [ADVANCED KEYLESS ENTRY SYSTEM].) • Is DTC B11C4:23 displayed?	Yes	Repeat the inspection from Step 1. • If the malfunction recurs, replace the start stop unit, then go to the next step. (See 09-14-53 START STOP UNIT REMOVAL/INSTALLATION.)
		No	Go to the next step.
7	**VERIFY IF OTHER DTCs DISPLAYED** • Are any other DTCs displayed?	Yes	Repair the malfunctioning part according to the applicable DTC troubleshooting. (See 09-02A-6 DTC TABLE [ADVANCED KEYLESS ENTRY SYSTEM].)
		No	DTC troubleshooting completed.

ON-BOARD DIAGNOSTIC [ADVANCED KEYLESS ENTRY SYSTEM]

DTC B11FD:1F [ADVANCED KEYLESS ENTRY SYSTEM]

id0902p8026700

System malfunction location	**Keyless antenna (exterior, LF) circuit malfunction**
Detection condition	• The start stop unit detects an open circuit in the keyless antenna (exterior, LF) or a short to ground with the ignition switched off.
Fail-safe	• Inhibits the door lock/unlock using the advanced keyless entry system.
Possible cause	• Front outer handle (LH) connector or terminal malfunction • LF control unit connector or terminal malfunction • Short to ground in wiring harness between the following terminals: — Between LF control unit terminal S and front outer handle (LH) terminal B — Between LF control unit terminal U and front outer handle (LH) terminal E • Open circuit in wiring harness between the following terminals: — Between LF control unit terminal S and front outer handle (LH) terminal B — Between LF control unit terminal U and front outer handle (LH) terminal E • LF control unit malfunction • Keyless antenna (exterior, LF) malfunction • Start stop unit malfunction

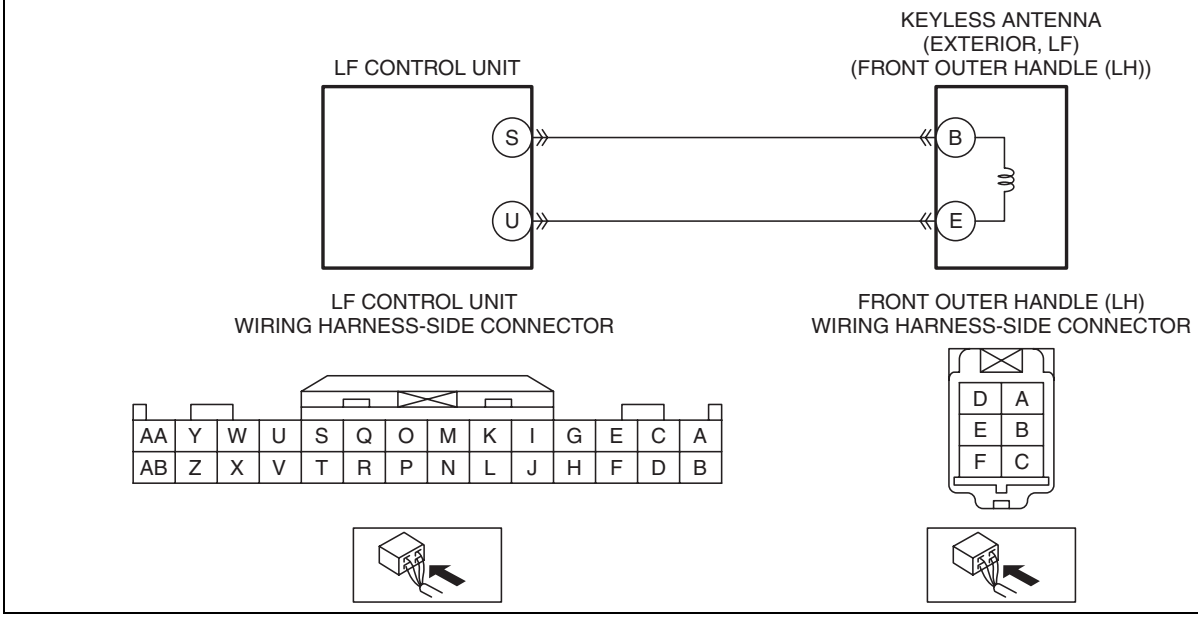

ON-BOARD DIAGNOSTIC [ADVANCED KEYLESS ENTRY SYSTEM]

Diagnostic Procedure

Step	Inspection		Action
1	**INSPECT FRONT OUTER HANDLE (LH) CONNECTOR CONDITION** • Switch the ignition to off. • Disconnect the negative battery cable. (See 01-17A-11 NEGATIVE BATTERY CABLE DISCONNECTION/CONNECTION [SKYACTIV-G 2.0].) (See 01-17A-13 NEGATIVE BATTERY CABLE DISCONNECTION/CONNECTION [SKYACTIV-G 2.0 (WITHOUT i-stop)].) (See 01-17B-9 NEGATIVE BATTERY CABLE DISCONNECTION/CONNECTION [SKYACTIV-D 2.2].) • Disconnect the front outer handle (LH) connector. • Inspect the connector engagement and connection condition and inspect the terminals for damage, deformation, corrosion, or disconnection. • Is the connector normal?	Yes	Go to the next step.
		No	Repair or replace the connector, then go to Step 7.
2	**INSPECT LF CONTROL UNIT CONNECTOR CONDITION** • Disconnect the LF control unit connector. • Inspect the connector engagement and connection condition and inspect the terminals for damage, deformation, corrosion, or disconnection. • Is the connector normal?	Yes	Go to the next step.
		No	Repair or replace the connector, then go to Step 7.
3	**INSPECT KEYLESS ANTENNA (EXTERIOR, LF) CIRCUIT FOR SHORT TO GROUND** • Verify that the LF control unit and front outer handle (LH) connectors are disconnected. • Inspect for continuity between the following terminals (vehicle wiring harness side) and body ground. — Front outer handle (LH) terminal B — Front outer handle (LH) terminal E • Is there continuity?	Yes	Repair or replace the wiring harness which is shorted to ground, then go to Step 7.
		No	Go to the next step.
4	**INSPECT FRONT OUTER HANDLE (LH) CIRCUIT FOR OPEN CIRCUIT** • Verify that the LF control unit and front outer handle (LH) connectors are disconnected. • Inspect the wiring harness between the following terminals (vehicle wiring harness side) for continuity. — Between LF control unit terminal S and front outer handle (LH) terminal B — Between LF control unit terminal U and front outer handle (LH) terminal E • Is there continuity?	Yes	Go to the next step.
		No	Repair or replace the wiring harness which has an open circuit, then go to Step 7.
5	**INSPECT LF CONTROL UNIT** • Inspect the LF control unit. (See 09-14-60 LF CONTROL UNIT INSPECTION.) • Is the LF control unit normal?	Yes	Go to the next step.
		No	Replace the LF control unit, then go to Step 7. (See 09-14-59 LF CONTROL UNIT REMOVAL/INSTALLATION.)

ON-BOARD DIAGNOSTIC [ADVANCED KEYLESS ENTRY SYSTEM]

Step	Inspection		Action
6	**PERFORM DTC INSPECTION AND VERIFY IF MALFUNCTIONING PART IS KEYLESS ANTENNA (EXTERIOR, LF)** • Reconnect all the disconnected connectors. • Reconnect the disconnected negative battery cable. (See 01-17A-11 NEGATIVE BATTERY CABLE DISCONNECTION/CONNECTION [SKYACTIV-G 2.0].) (See 01-17A-13 NEGATIVE BATTERY CABLE DISCONNECTION/CONNECTION [SKYACTIV-G 2.0 (WITHOUT i-stop)].) (See 01-17B-9 NEGATIVE BATTERY CABLE DISCONNECTION/CONNECTION [SKYACTIV-D 2.2].) • Clear DTCs for the advanced keyless entry system using the M-MDS. (See 09-02A-5 CLEARING DTC [ADVANCED KEYLESS ENTRY SYSTEM].) • Perform the advanced keyless entry system DTC inspection using the M-MDS. (See 09-02A-5 DTC INSPECTION [ADVANCED KEYLESS ENTRY SYSTEM].) • Is DTC B11FD:1F displayed?	Yes	Replace the front outer handle (LH), then go to the next step. (See 09-14-8 FRONT OUTER HANDLE REMOVAL/ INSTALLATION.)
		No	Go to Step 8.
7	**VERIFY THAT REPAIRS HAVE BEEN COMPLETED** • Reconnect all the disconnected connectors. • Reconnect the disconnected negative battery cable. (See 01-17A-11 NEGATIVE BATTERY CABLE DISCONNECTION/CONNECTION [SKYACTIV-G 2.0].) (See 01-17A-13 NEGATIVE BATTERY CABLE DISCONNECTION/CONNECTION [SKYACTIV-G 2.0 (WITHOUT i-stop)].) (See 01-17B-9 NEGATIVE BATTERY CABLE DISCONNECTION/CONNECTION [SKYACTIV-D 2.2].) • Clear DTCs for the advanced keyless entry system using the M-MDS. (See 09-02A-5 CLEARING DTC [ADVANCED KEYLESS ENTRY SYSTEM].) • Perform the advanced keyless entry system DTC inspection using the M-MDS. (See 09-02A-5 DTC INSPECTION [ADVANCED KEYLESS ENTRY SYSTEM].) • Is DTC B11FD:1F displayed?	Yes	Repeat the inspection from Step 1. • If the malfunction recurs, replace the start stop unit, then go to the next step. (See 09-14-53 START STOP UNIT REMOVAL/ INSTALLATION.)
		No	Go to the next step.
8	**VERIFY IF OTHER DTCs DISPLAYED** • Are any other DTCs displayed?	Yes	Repair the malfunctioning part according to the applicable DTC troubleshooting. (See 09-02A-6 DTC TABLE [ADVANCED KEYLESS ENTRY SYSTEM].)
		No	DTC troubleshooting completed.

ON-BOARD DIAGNOSTIC [ADVANCED KEYLESS ENTRY SYSTEM]

DTC B1210:1F [ADVANCED KEYLESS ENTRY SYSTEM]

id0902p8026800

System malfunction location	**Keyless antenna (exterior, RF) circuit malfunction**
Detection condition	• The start stop unit detects an open circuit in the keyless antenna (exterior, RF) or a short to ground with the ignition switched off.
Fail-safe	• Inhibits the door lock/unlock control using the advanced keyless entry system.
Possible cause	• Front outer handle (RH) connector or terminal malfunction • LF control unit connector or terminal malfunction • Short to ground in wiring harness between the following terminals: — Between LF control unit terminal W and front outer handle (RH) terminal B — Between LF control unit terminal Y and front outer handle (RH) terminal E • Open circuit in wiring harness between the following terminals: — Between LF control unit terminal W and front outer handle (RH) terminal B — Between LF control unit terminal Y and front outer handle (RH) terminal E • LF control unit malfunction • Keyless antenna (exterior, RF) malfunction • Start stop unit malfunction

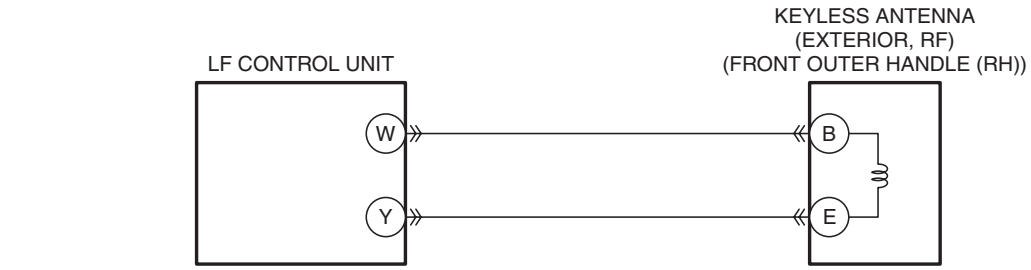

LF CONTROL UNIT
WIRING HARNESS-SIDE CONNECTOR

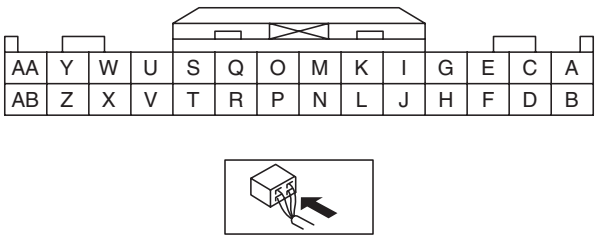

FRONT OUTER HANDLE (RH)
WIRING HARNESS-SIDE CONNECTOR

ON-BOARD DIAGNOSTIC [ADVANCED KEYLESS ENTRY SYSTEM]

Diagnostic Procedure

Step	Inspection		Action
1	**INSPECT FRONT OUTER HANDLE (RH) CONNECTOR CONDITION** • Switch the ignition to off. • Disconnect the negative battery cable. (See 01-17A-11 NEGATIVE BATTERY CABLE DISCONNECTION/CONNECTION [SKYACTIV-G 2.0].) (See 01-17A-13 NEGATIVE BATTERY CABLE DISCONNECTION/CONNECTION [SKYACTIV-G 2.0 (WITHOUT i-stop)].) (See 01-17B-9 NEGATIVE BATTERY CABLE DISCONNECTION/CONNECTION [SKYACTIV-D 2.2].) • Disconnect the front outer handle (RH) connector. • Inspect the connector engagement and connection condition and inspect the terminals for damage, deformation, corrosion, or disconnection. • Is the connector normal?	Yes	Go to the next step.
		No	Repair or replace the connector, then go to Step 7.
2	**INSPECT LF CONTROL UNIT CONNECTOR CONDITION** • Disconnect the LF control unit connector. • Inspect the connector engagement and connection condition and inspect the terminals for damage, deformation, corrosion, or disconnection. • Is the connector normal?	Yes	Go to the next step.
		No	Repair or replace the connector, then go to Step 7.
3	**INSPECT KEYLESS ANTENNA (EXTERIOR, RF) CIRCUIT FOR SHORT TO GROUND** • Verify that the LF control unit and front outer handle (RH) connectors are disconnected. • Inspect for continuity between the following terminals (vehicle wiring harness side) and body ground. — Front outer handle (RH) terminal B — Front outer handle (RH) terminal E • Is there continuity?	Yes	Repair or replace the wiring harness which is shorted to ground, then go to Step 7.
		No	Go to the next step.
4	**INSPECT FRONT OUTER HANDLE (RH) CIRCUIT FOR OPEN CIRCUIT** • Verify that the LF control unit and front outer handle (RH) connectors are disconnected. • Inspect the wiring harness between the following terminals (vehicle wiring harness side) for continuity. — Between LF control unit terminal W and front outer handle (RH) terminal B — Between LF control unit terminal Y and front outer handle (RH) terminal E • Is there continuity?	Yes	Go to the next step.
		No	Repair or replace the wiring harness which has an open circuit, then go to Step 7.
5	**INSPECT LF CONTROL UNIT** • Inspect the LF control unit. (See 09-14-60 LF CONTROL UNIT INSPECTION.) • Is the LF control unit normal?	Yes	Go to the next step.
		No	Replace the LF control unit, then go to Step 7. (See 09-14-59 LF CONTROL UNIT REMOVAL/INSTALLATION.)

ON-BOARD DIAGNOSTIC [ADVANCED KEYLESS ENTRY SYSTEM]

Step	Inspection		Action
6	**PERFORM DTC INSPECTION AND VERIFY IF MALFUNCTIONING PART IS KEYLESS ANTENNA (EXTERIOR, RF)** • Reconnect all the disconnected connectors. • Reconnect the disconnected negative battery cable. (See 01-17A-11 NEGATIVE BATTERY CABLE DISCONNECTION/CONNECTION [SKYACTIV-G 2.0].) (See 01-17A-13 NEGATIVE BATTERY CABLE DISCONNECTION/CONNECTION [SKYACTIV-G 2.0 (WITHOUT i-stop)].) (See 01-17B-9 NEGATIVE BATTERY CABLE DISCONNECTION/CONNECTION [SKYACTIV-D 2.2].) • Clear DTCs for the advanced keyless entry system using the M-MDS. (See 09-02A-5 CLEARING DTC [ADVANCED KEYLESS ENTRY SYSTEM].) • Perform the advanced keyless entry system DTC inspection using the M-MDS. (See 09-02A-5 DTC INSPECTION [ADVANCED KEYLESS ENTRY SYSTEM].) • Is DTC B1210:1F displayed?	Yes	Replace the front outer handle (RH), then go to the next step. (See 09-14-8 FRONT OUTER HANDLE REMOVAL/ INSTALLATION.)
		No	Go to Step 8.
7	**VERIFY THAT REPAIRS HAVE BEEN COMPLETED** • Reconnect all the disconnected connectors. • Reconnect the disconnected negative battery cable. (See 01-17A-11 NEGATIVE BATTERY CABLE DISCONNECTION/CONNECTION [SKYACTIV-G 2.0].) (See 01-17A-13 NEGATIVE BATTERY CABLE DISCONNECTION/CONNECTION [SKYACTIV-G 2.0 (WITHOUT i-stop)].) (See 01-17B-9 NEGATIVE BATTERY CABLE DISCONNECTION/CONNECTION [SKYACTIV-D 2.2].) • Clear DTCs for the advanced keyless entry system using the M-MDS. (See 09-02A-5 CLEARING DTC [ADVANCED KEYLESS ENTRY SYSTEM].) • Perform the advanced keyless entry system DTC inspection using the M-MDS. (See 09-02A-5 DTC INSPECTION [ADVANCED KEYLESS ENTRY SYSTEM].) • Is DTC B1210:1F displayed?	Yes	Repeat the inspection from Step 1. • If the malfunction recurs, replace the start stop unit, then go to the next step. (See 09-14-53 START STOP UNIT REMOVAL/ INSTALLATION.)
		No	Go to the next step.
8	**VERIFY IF OTHER DTCs DISPLAYED** • Are any other DTCs displayed?	Yes	Repair the malfunctioning part according to the applicable DTC troubleshooting. (See 09-02A-6 DTC TABLE [ADVANCED KEYLESS ENTRY SYSTEM].)
		No	DTC troubleshooting completed.

ON-BOARD DIAGNOSTIC [ADVANCED KEYLESS ENTRY SYSTEM]

DTC B13C3:04 [ADVANCED KEYLESS ENTRY SYSTEM]

id0902p8026900

System malfunction location	**LF control unit internal malfunction**
Detection condition	• LF control unit internal malfunction detected
Fail-safe	• Inhibits the door lock/unlock control using the advanced keyless entry system.
Possible cause	• LF control unit internal malfunction • Start stop unit malfunction
System wiring diagram	—

Diagnostic Procedure

Step	Inspection		Action
1	**INSPECT LF CONTROL UNIT** • Inspect the LF control unit. (See 09-14-60 LF CONTROL UNIT INSPECTION.) • Is the LF control unit normal?	Yes	Go to the next step.
		No	Replace the LF control unit, then go to the next step. (See 09-14-59 LF CONTROL UNIT REMOVAL/INSTALLATION.)
2	**PERFORM DTC INSPECTION AND VERIFY IF MALFUNCTIONING PART IS START STOP UNIT** • Clear DTCs for the advanced keyless entry system using the M-MDS. (See 09-02A-5 CLEARING DTC [ADVANCED KEYLESS ENTRY SYSTEM].) • Perform the advanced keyless entry system DTC inspection using the M-MDS. (See 09-02A-5 DTC INSPECTION [ADVANCED KEYLESS ENTRY SYSTEM].) • Is DTC B13C3:04 displayed?	Yes	Replace the start stop unit, then go to the next step. (See 09-14-53 START STOP UNIT REMOVAL/INSTALLATION.)
		No	Go to the next step.
3	**VERIFY IF OTHER DTCs DISPLAYED** • Are any other DTCs displayed?	Yes	Repair the malfunctioning part according to the applicable DTC troubleshooting. (See 09-02A-6 DTC TABLE [ADVANCED KEYLESS ENTRY SYSTEM].)
		No	DTC troubleshooting completed.

ON-BOARD DIAGNOSTIC [ADVANCED KEYLESS ENTRY SYSTEM]

DTC B13C3:09 [ADVANCED KEYLESS ENTRY SYSTEM]

id0902p8027000

System malfunction location	**LF control unit malfunction**
Detection condition	• The start stop unit detects that the LF State signal of the LF control unit is low for **5 s or more**. • With the communication between the start stop unit and LF control unit being performed normally, there is no response from the LF control unit even though there is a signal transmission request from the start stop unit to the LF control unit, and the LF state signal becomes low.
Fail-safe	• Inhibits the door lock/unlock control using the advanced keyless entry system.
Possible cause	• LF control unit connector or terminal malfunction • Start stop unit connector or terminal malfunction • Short to ground in wiring harness between start stop unit terminal 2H and LF control unit terminal K • Open circuit in wiring harness between start stop unit terminal 2H and LF control unit terminal K • LF control unit malfunction • Start stop unit malfunction

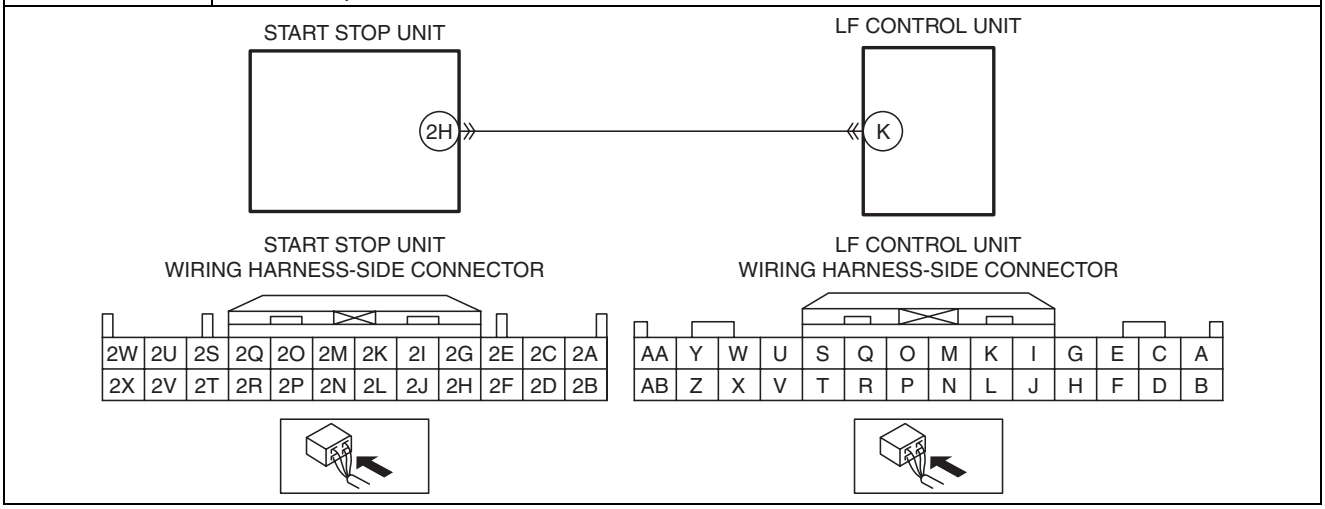

Diagnostic Procedure

Step	Inspection		Action
1	**INSPECT LF CONTROL UNIT CONNECTOR CONDITION** • Switch the ignition to off. • Disconnect the negative battery cable. (See 01-17A-11 NEGATIVE BATTERY CABLE DISCONNECTION/CONNECTION [SKYACTIV-G 2.0].) (See 01-17A-13 NEGATIVE BATTERY CABLE DISCONNECTION/CONNECTION [SKYACTIV-G 2.0 (WITHOUT i-stop)].) (See 01-17B-9 NEGATIVE BATTERY CABLE DISCONNECTION/CONNECTION [SKYACTIV-D 2.2].) • Disconnect the LF control unit connector. • Inspect the connector engagement and connection condition and inspect the terminals for damage, deformation, corrosion, or disconnection. • Is the connector normal?	Yes	Go to the next step.
		No	Repair or replace the connector, then go to Step 6.
2	**INSPECT START STOP UNIT CONNECTOR CONDITION** • Disconnect the start stop unit connector. • Inspect the connector engagement and connection condition and inspect the terminals for damage, deformation, corrosion, or disconnection. • Is the connector normal?	Yes	Go to the next step.
		No	Repair or replace the connector, then go to Step 6.

ON-BOARD DIAGNOSTIC [ADVANCED KEYLESS ENTRY SYSTEM]

Step	Inspection		Action
3	**INSPECT LF CONTROL UNIT CIRCUIT FOR SHORT TO GROUND** • Verify that the start stop unit and LF control unit connectors are disconnected. • Inspect for continuity between LF control unit terminal K (vehicle wiring harness side) and body ground. • Is there continuity?	Yes	Repair or replace the wiring harness which is shorted to ground, then go to Step 6.
		No	Go to the next step.
4	**INSPECT LF CONTROL UNIT CIRCUIT FOR OPEN CIRCUIT** • Verify that the start stop unit and LF control unit connectors are disconnected. • Inspect the wiring harness for continuity between start stop unit terminal 2H (vehicle wiring harness side) and LF control unit terminal K (vehicle wiring harness side). • Is there continuity?	Yes	Go to the next step.
		No	Repair or replace the wiring harness which has an open circuit, then go to Step 6.
5	**INSPECT LF CONTROL UNIT** • Inspect the LF control unit. (See 09-14-60 LF CONTROL UNIT INSPECTION.) • Is the LF control unit normal?	Yes	Go to the next step.
		No	Replace the LF control unit, then go to the next step. (See 09-14-59 LF CONTROL UNIT REMOVAL/INSTALLATION.)
6	**VERIFY THAT REPAIRS HAVE BEEN COMPLETED** • Reconnect all the disconnected connectors. • Reconnect the disconnected negative battery cable. (See 01-17A-11 NEGATIVE BATTERY CABLE DISCONNECTION/CONNECTION [SKYACTIV-G 2.0].) (See 01-17A-13 NEGATIVE BATTERY CABLE DISCONNECTION/CONNECTION [SKYACTIV-G 2.0 (WITHOUT i-stop)].) (See 01-17B-9 NEGATIVE BATTERY CABLE DISCONNECTION/CONNECTION [SKYACTIV-D 2.2].) • Clear DTCs for the advanced keyless entry system using the M-MDS. (See 09-02A-5 CLEARING DTC [ADVANCED KEYLESS ENTRY SYSTEM].) • Switch the ignition ON (engine off or on) and wait for **5 s or more**. • Perform the advanced keyless entry system DTC inspection using the M-MDS. (See 09-02A-5 DTC INSPECTION [ADVANCED KEYLESS ENTRY SYSTEM].) • Is DTC B13C3:09 displayed?	Yes	Repeat the inspection from Step 1. • If the malfunction recurs, replace the start stop unit, then go to the next step. (See 09-14-53 START STOP UNIT REMOVAL/INSTALLATION.)
		No	Go to the next step.
7	**VERIFY IF OTHER DTCs DISPLAYED** • Are any other DTCs displayed?	Yes	Repair the malfunctioning part according to the applicable DTC troubleshooting. (See 09-02A-6 DTC TABLE [ADVANCED KEYLESS ENTRY SYSTEM].)
		No	DTC troubleshooting completed.

ON-BOARD DIAGNOSTIC [ADVANCED KEYLESS ENTRY SYSTEM]

DTC B13C3:16 [ADVANCED KEYLESS ENTRY SYSTEM]

id0902p8027100

System malfunction location	**LF control unit power supply voltage decrease input**
Detection condition	• With the ignition switched ON (engine off), start stop unit power supply circuit (+B1) voltage of **8.5 V or more or less than 16.5 V** and LF control unit power supply circuit voltage of **5 V or more or less than 8.5 V** are detected for **5 s or more**.
Fail-safe	• Inhibits the door lock/unlock control using the advanced keyless entry system.
Possible cause	• LF control unit connector or terminal malfunction • LF control unit power supply circuit malfunction — Short to ground in the wiring harness between ROOM 15 A fuse and LF control unit terminal A — ROOM 15 A fuse malfunction — Open circuit in wiring harness between battery positive terminal and LF control unit terminal A • LF control unit malfunction • Start stop unit malfunction

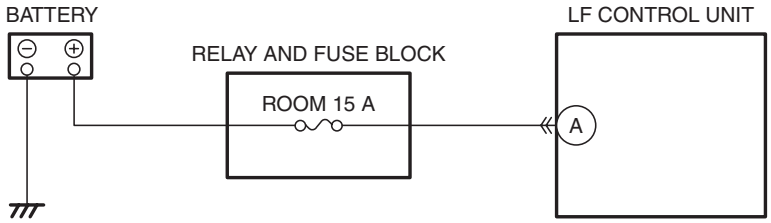

LF CONTROL UNIT
WIRING HARNESS-SIDE CONNECTOR

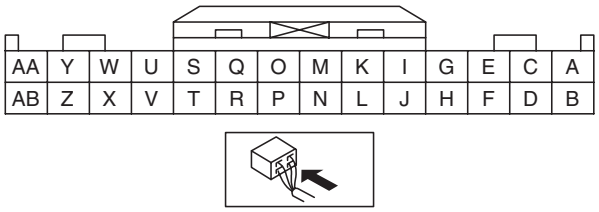

Diagnostic Procedure

Step	Inspection		Action
1	**INSPECT LF CONTROL UNIT CONNECTOR CONDITION** • Switch the ignition to off. • Disconnect the negative battery cable. (See 01-17A-11 NEGATIVE BATTERY CABLE DISCONNECTION/CONNECTION [SKYACTIV-G 2.0].) (See 01-17A-13 NEGATIVE BATTERY CABLE DISCONNECTION/CONNECTION [SKYACTIV-G 2.0 (WITHOUT i-stop)].) (See 01-17B-9 NEGATIVE BATTERY CABLE DISCONNECTION/CONNECTION [SKYACTIV-D 2.2].) • Disconnect the LF control unit connector. • Inspect the connector engagement and connection condition and inspect the terminals for damage, deformation, corrosion, or disconnection. • Is the connector normal?	Yes	Go to the next step.
		No	Repair or replace the connector, then go to Step 4.

ON-BOARD DIAGNOSTIC [ADVANCED KEYLESS ENTRY SYSTEM]

Step	Inspection		Action
2	**INSPECT LF CONTROL UNIT POWER SUPPLY CIRCUIT** • Verify that the LF control unit connector is disconnected. • Connect the negative battery cable. (See 01-17A-11 NEGATIVE BATTERY CABLE DISCONNECTION/CONNECTION [SKYACTIV-G 2.0].) (See 01-17A-13 NEGATIVE BATTERY CABLE DISCONNECTION/CONNECTION [SKYACTIV-G 2.0 (WITHOUT i-stop)].) (See 01-17B-9 NEGATIVE BATTERY CABLE DISCONNECTION/CONNECTION [SKYACTIV-D 2.2].) • Measure the voltage at LF control unit terminal A (vehicle wiring harness side). • Is the voltage **B+**?	Yes	Go to the next step.
		No	Inspect the ROOM 15 A fuse. • If a fuse is burnt out: — Repair or replace the wiring harness which is shorted to ground. — Replace the fuse. • If a fuse is damaged: — Replace the fuse. • If the fuse is normal: — Repair or replace the wiring harness which has an open circuit. Go to Step 4.
3	**INSPECT LF CONTROL UNIT** • Inspect the LF control unit. (See 09-14-60 LF CONTROL UNIT INSPECTION.) • Is the LF control unit normal?	Yes	Go to the next step.
		No	Replace the LF control unit, then go to the next step. (See 09-14-59 LF CONTROL UNIT REMOVAL/INSTALLATION.)
4	**VERIFY THAT REPAIRS HAVE BEEN COMPLETED** • Reconnect all the disconnected connectors. • Reconnect the disconnected negative battery cable. (See 01-17A-11 NEGATIVE BATTERY CABLE DISCONNECTION/CONNECTION [SKYACTIV-G 2.0].) (See 01-17A-13 NEGATIVE BATTERY CABLE DISCONNECTION/CONNECTION [SKYACTIV-G 2.0 (WITHOUT i-stop)].) (See 01-17B-9 NEGATIVE BATTERY CABLE DISCONNECTION/CONNECTION [SKYACTIV-D 2.2].) • Clear DTCs for the advanced keyless entry system using the M-MDS. (See 09-02A-5 CLEARING DTC [ADVANCED KEYLESS ENTRY SYSTEM].) • Switch the ignition ON (engine off) and wait for **5 s or more**. • Perform the advanced keyless entry system DTC inspection using the M-MDS. (See 09-02A-5 DTC INSPECTION [ADVANCED KEYLESS ENTRY SYSTEM].) • Is DTC B13C3:16 displayed?	Yes	Repeat the inspection from Step 1. • If the malfunction recurs, replace the start stop unit, then go to the next step. (See 09-14-53 START STOP UNIT REMOVAL/INSTALLATION.)
		No	Go to the next step.
5	**VERIFY IF OTHER DTCs DISPLAYED** • Are any other DTCs displayed?	Yes	Repair the malfunctioning part according to the applicable DTC troubleshooting. (See 09-02A-6 DTC TABLE [ADVANCED KEYLESS ENTRY SYSTEM].)
		No	DTC troubleshooting completed.

ON-BOARD DIAGNOSTIC [ADVANCED KEYLESS ENTRY SYSTEM]

DTC B13C3:29 [ADVANCED KEYLESS ENTRY SYSTEM]

id0902p8027200

System malfunction location	**Communication error with LF control unit**
Detection condition	• The start stop unit detects communication error with LF control unit **10 times** in a series.
Fail-safe	• Inhibits the door lock/unlock control using the advanced keyless entry system.
Possible cause	• LF control unit connector or terminal malfunction • Start stop unit connector or terminal malfunction • Short to ground in wiring harness between start stop unit terminal 2F and LF control unit terminal M • Open circuit in wiring harness between start stop unit terminal 2F and LF control unit terminal M • LF control unit malfunction • Start stop unit malfunction

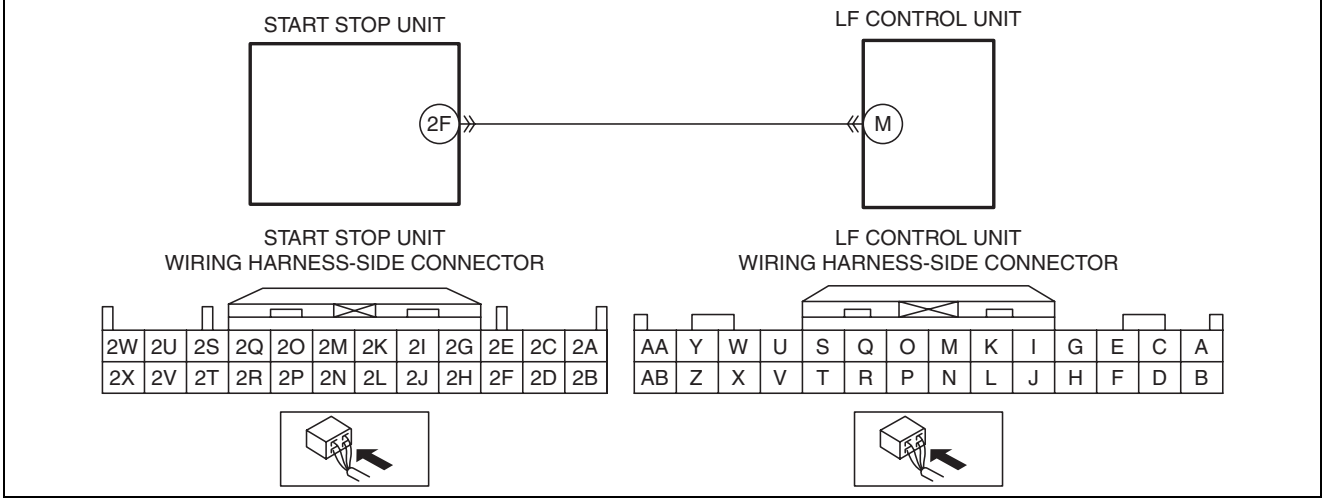

ON-BOARD DIAGNOSTIC [ADVANCED KEYLESS ENTRY SYSTEM]

Diagnostic Procedure

Step	Inspection		Action
1	**INSPECT LF CONTROL UNIT CONNECTOR CONDITION** • Switch the ignition to off. • Disconnect the negative battery cable. (See 01-17A-11 NEGATIVE BATTERY CABLE DISCONNECTION/CONNECTION [SKYACTIV-G 2.0].) (See 01-17A-13 NEGATIVE BATTERY CABLE DISCONNECTION/CONNECTION [SKYACTIV-G 2.0 (WITHOUT i-stop)].) (See 01-17B-9 NEGATIVE BATTERY CABLE DISCONNECTION/CONNECTION [SKYACTIV-D 2.2].) • Disconnect the LF control unit connector. • Inspect the connector engagement and connection condition and inspect the terminals for damage, deformation, corrosion, or disconnection. • Is the connector normal?	Yes	Go to the next step.
		No	Repair or replace the connector, then go to Step 6.
2	**INSPECT START STOP UNIT CONNECTOR CONDITION** • Disconnect the start stop unit connector. • Inspect the connector engagement and connection condition and inspect the terminals for damage, deformation, corrosion, or disconnection. • Is the connector normal?	Yes	Go to the next step.
		No	Repair or replace the connector, then go to Step 6.
3	**INSPECT LF CONTROL UNIT CIRCUIT FOR SHORT TO GROUND** • Verify that the start stop unit and LF control unit connectors are disconnected. • Inspect for continuity between LF control unit terminal M (vehicle wiring harness side) and body ground. • Is there continuity?	Yes	Repair or replace the wiring harness which is shorted to ground, then go to Step 6.
		No	Go to the next step.
4	**INSPECT LF CONTROL UNIT CIRCUIT FOR OPEN CIRCUIT** • Verify that the start stop unit and LF control unit connectors are disconnected. • Inspect the wiring harness for continuity between start stop unit terminal 2F (vehicle wiring harness side) and LF control unit terminal M (vehicle wiring harness side). • Is there continuity?	Yes	Go to the next step.
		No	Repair or replace the wiring harness which has an open circuit, then go to Step 6.
5	**INSPECT LF CONTROL UNIT** • Inspect the LF control unit. (See 09-14-60 LF CONTROL UNIT INSPECTION.) • Is the LF control unit normal?	Yes	Go to the next step.
		No	Replace the LF control unit, then go to the next step. (See 09-14-59 LF CONTROL UNIT REMOVAL/INSTALLATION.)

ON-BOARD DIAGNOSTIC [ADVANCED KEYLESS ENTRY SYSTEM]

Step	Inspection		Action
6	**VERIFY THAT REPAIRS HAVE BEEN COMPLETED** • Reconnect all the disconnected connectors. • Reconnect the disconnected negative battery cable. (See 01-17A-11 NEGATIVE BATTERY CABLE DISCONNECTION/CONNECTION [SKYACTIV-G 2.0].) (See 01-17A-13 NEGATIVE BATTERY CABLE DISCONNECTION/CONNECTION [SKYACTIV-G 2.0 (WITHOUT i-stop)].) (See 01-17B-9 NEGATIVE BATTERY CABLE DISCONNECTION/CONNECTION [SKYACTIV-D 2.2].) • Clear DTCs for the advanced keyless entry system using the M-MDS. (See 09-02A-5 CLEARING DTC [ADVANCED KEYLESS ENTRY SYSTEM].) • Perform the advanced keyless entry system DTC inspection using the M-MDS. (See 09-02A-5 DTC INSPECTION [ADVANCED KEYLESS ENTRY SYSTEM].) • Is DTC B13C3:29 displayed?	Yes	Repeat the inspection from Step 1. • If the malfunction recurs, replace the start stop unit, then go to the next step. (See 09-14-53 START STOP UNIT REMOVAL/ INSTALLATION.)
		No	Go to the next step.
7	**VERIFY IF OTHER DTCs DISPLAYED** • Are any other DTCs displayed?	Yes	Repair the malfunctioning part according to the applicable DTC troubleshooting. (See 09-02A-6 DTC TABLE [ADVANCED KEYLESS ENTRY SYSTEM].)
		No	DTC troubleshooting completed.

PID/DATA MONITOR INSPECTION [ADVANCED KEYLESS ENTRY SYSTEM]

id0902p8027300

1. Connect the M-MDS to the DLC-2.
2. After the vehicle is identified, select the following items from the initialization screen of the M-MDS.
   1. Select “DataLogger”.
   2. Select “Modules”.
   3. Select “SSU”.
3. Select the applicable PID from the PID table.
4. Verify the PID data according to the directions on the screen.

Note

- The PID data screen function is used for monitoring the calculated value of input/output signals in the module. Therefore, if the monitored value of the output parts is not within the specification, it is necessary to inspect the monitored value of input parts corresponding to the applicable output part control. In addition, because the system does not display an output part malfunction as an abnormality in the monitored value, it is necessary to inspect the output parts individually.
- When detecting DTCs, PIDs related to a malfunctioning system may not display even if the module is normal. Therefore, if a PID is not displayed, it is necessary to verify the DTC, perform malfunction diagnosis of the DTC that was detected, and do repairs.

PID/DATA MONITOR TABLE [ADVANCED KEYLESS ENTRY SYSTEM]

id0902p8027400

PID	Unit/ Operation	Data contents	Inspection item(s)
LG/ T_LK_SW	Off/On	• Off: Request switch (liftgate) is off. • On: Request switch (liftgate) is on.	Request switch (liftgate)
RQ_SW_LF	Off/On	• Off: Request switch (LF) is off. • On: Request switch (LF) is on.	Request switch (LF)
RQ_SW_RF	Off/On	• Off: Request switch (RF) is off. • On: Request switch (RF) is on.	Request switch (RF)

ON-BOARD DIAGNOSTIC [ADVANCED KEYLESS ENTRY SYSTEM]

ACTIVE COMMAND MODES INSPECTION [ADVANCED KEYLESS ENTRY SYSTEM]

id0902p8027500

1. Connect the M-MDS to the DLC-2.
2. After the vehicle is identified, select the following items from the initialization screen of the M-MDS.
   (1) Select “DataLogger”.
   (2) Select “Modules”.
   (3) Select “SSU”.
3. Select the simulation items from the PID table.
4. Perform the active command modes function, inspect the operations for each parts.
   - If the operation of output parts cannot be verified after the active command mode inspection is performed, this could indicate the possibility of an open or short circuit, sticking, or operation malfunction in the output parts.

ACTIVE COMMAND MODES TABLE [ADVANCED KEYLESS ENTRY SYSTEM]

id0902p8027600

Simulation item	Unit/ Operation	Data contents	Output part name
BZR_OUT	Off/On	• Off: Keyless beeper does not sound. • On: Keyless beeper sounds.	Keyless beeper

09-02B ON-BOARD DIAGNOSTIC [IMMOBILIZER SYSTEM]

FOREWORD
IMMOBILIZER SYSTEM] 09-02B–1
Troubleshooting Procedure 09-02B–2
Action for Non-repeatable Malfunction. 09-02B–3
DTC Inspection Note 09-02B–3
DTC INSPECTION
[IMMOBILIZER SYSTEM]. 09-02B–3
Verifying DTCs using security indicator light 09-02B–3
Detecting DTC using the M-MDS. 09-02B–4
CLEARING DTC
[IMMOBILIZER SYSTEM]. 09-02B–4
DTC TABLE
[IMMOBILIZER SYSTEM]. 09-02B–4
SECURITY INDICATOR LIGHT:
11, DTC: B10D9:87/P1260:00
[IMMOBILIZER SYSTEM]. 09-02B–7
SECURITY INDICATOR LIGHT:
13, DTC: B13D3:94/P1260:00
[IMMOBILIZER SYSTEM]. 09-02B–10
SECURITY INDICATOR LIGHT:
13, DTC: B13D3:05/P1260:00
[IMMOBILIZER SYSTEM] 09-02B–13
SECURITY INDICATOR LIGHT:
15, DTC: B13D3:51/P1260:00
[IMMOBILIZER SYSTEM] 09-02B–16
SECURITY INDICATOR LIGHT:
16, DTC: U0100:87/P1260:00
[IMMOBILIZER SYSTEM] 09-02B–17
SECURITY INDICATOR LIGHT:
21, DTC: B13D4:00/P1260:00
[IMMOBILIZER SYSTEM] 09-02B–18
SECURITY INDICATOR LIGHT:
22, DTC: B10DA:51/P1260:00
[IMMOBILIZER SYSTEM] 09-02B–19
SECURITY INDICATOR LIGHT:
23, DTC: B10DA:62/P1260:00
[IMMOBILIZER SYSTEM] 09-02B–20
SECURITY INDICATOR LIGHT:
09, DTC: U3000:96/P1260:00
[IMMOBILIZER SYSTEM] 09-02B–21
PID/DATA MONITOR INSPECTION
[IMMOBILIZER SYSTEM] 09-02B–21
PID/DATA MONITOR TABLE
[IMMOBILIZER SYSTEM] 09-02B–21

ON-BOARD DIAGNOSTIC [IMMOBILIZER SYSTEM]

FOREWORD [IMMOBILIZER SYSTEM]

id0902e4028400

- If there is any vehicle malfunction complaint lodged by a customer, perform malfunction diagnosis according to the troubleshooting procedure.
- Due to the possibility that the engine cannot be started because signal transmission between the remote transmitter and the vehicle is obstructed, do not allow the following items to contact the remote transmitter.
  - — Any metallic object
  - — Spare keys or other keys for immobilizer system
  - — Device such as a mobile phone which generates radio waves.

ON-BOARD DIAGNOSTIC [IMMOBILIZER SYSTEM]

Troubleshooting Procedure

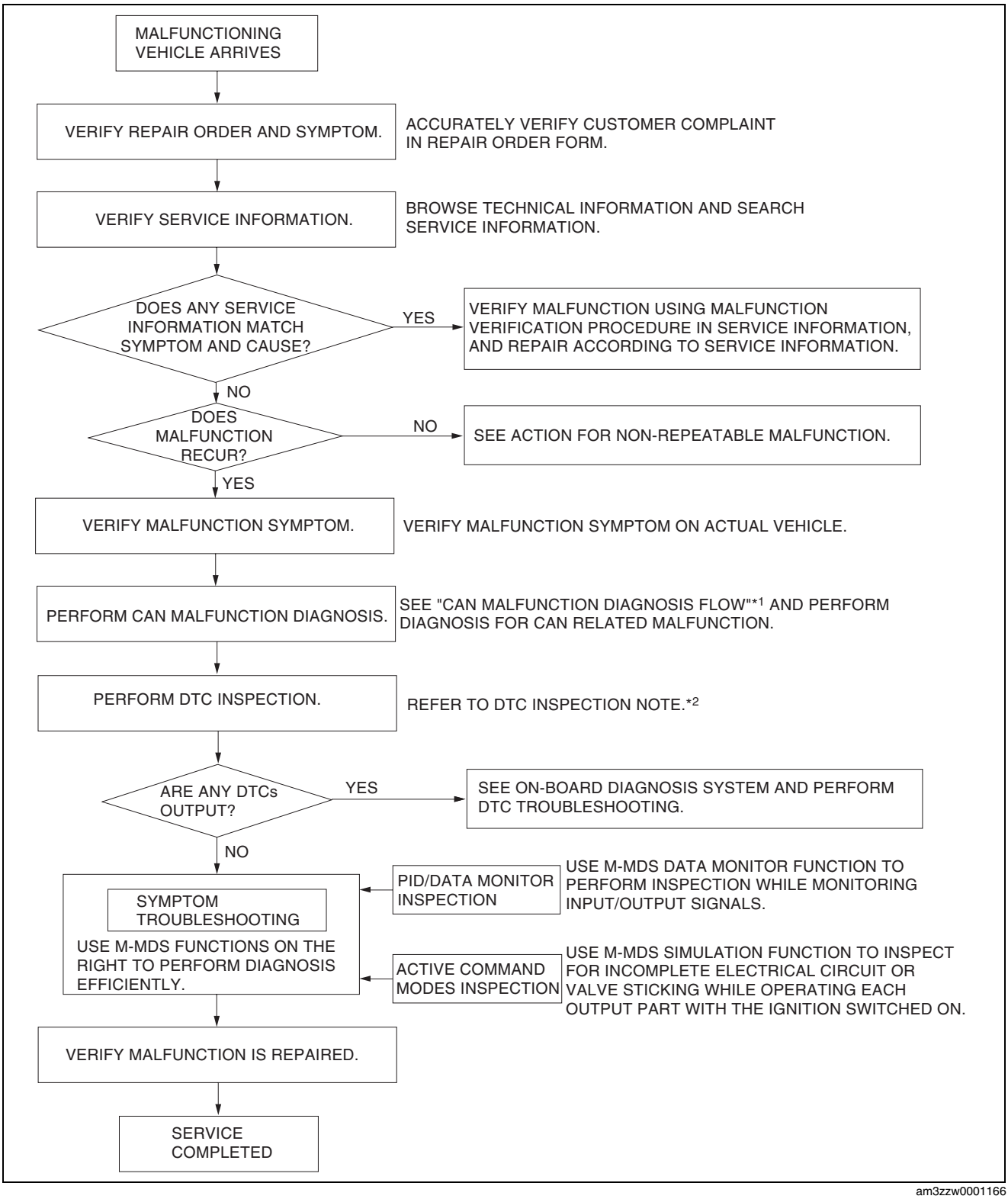

am3zzw0001166

*1 : 10-02A-3 CONTROLLER AREA NETWORK (CAN) MALFUNCTION DIAGNOSIS FLOW [SKYACTIV-G 2.0 (L.H.D.)]/10-02B-3 CONTROLLER AREA NETWORK (CAN) MALFUNCTION DIAGNOSIS FLOW [SKYACTIV-G 2.0 (R.H.D.)]/10-02C-3 CONTROLLER AREA NETWORK (CAN) MALFUNCTION DIAGNOSIS FLOW [SKYACTIV-D 2.2 (L.H.D.)]/10-02D-3 CONTROLLER AREA NETWORK (CAN) MALFUNCTION DIAGNOSIS FLOW [SKYACTIV-D 2.2 (R.H.D.)]

*2 : 09-02B-3 DTC Inspection Note

ON-BOARD DIAGNOSTIC [IMMOBILIZER SYSTEM]

Action for Non-repeatable Malfunction

- If the malfunction does not recur, verify the malfunction cause by performing the following actions:
  - — Based on the repair order form, attempt to drive the vehicle or perform tests to replicate the malfunction, record the data at that time, and detect the malfunction cause.
  - — Shake the wiring harness or connector of the electrical component which is suspected to be the cause of the malfunction, and inspect for malfunction or occurrence of any DTCs.

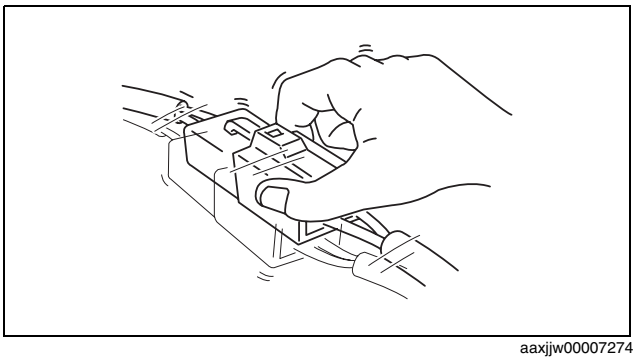

aaxjjw00007274

  - — Inspect the female terminals on the connector of the electric component which is suspected to be the cause of the malfunction for poor connection.

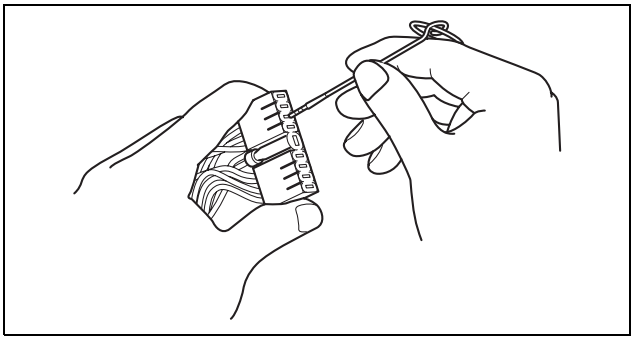

am3uuw0000750

DTC Inspection Note

- When there is a malfunction in the immobilizer system, DTCs are recorded in the start stop unit and PCM.
- The DTCs stored in the start stop unit can be verified using the flashing pattern of the security indicator light and M-MDS.
- If immobilizer system DTCs are not recorded even if the engine cannot be started, perform symptom troubleshooting. (See 01-03-19 NO.3 WILL NOT CRANK [SKYACTIV-G 2.0].)

DTC INSPECTION [IMMOBILIZER SYSTEM]

id0902e4028500

Verifying DTCs using security indicator light

Note

- If multiple DTCs are detected, only those having the lowest numbers of those detected will be indicated by the security light.
- A DTC is displayed ten times by switching the ignition ON (engine off or on) once.

1. Switch the ignition ON (engine off or on).
2. Wait for approx. 1 min until the security indicator light displays a DTC.

Note

- If the following DTCs are detected when the ignition is switched ON (engine off or on), the DTC is displayed after the security indicator light is flashed or illuminated for **approx. 1 min**.
  - — If DTCs in the nines and tens are detected, the security indicator light flashes for **approx. 1 min**.
  - — If a DTC 22 or 23 is detected, the security indicator light illuminates for **approx. 1 min**.
- DTC 21 is displayed when the ignition is switched ON (engine off or on) and the security indicator light illumination turns off after **approx. 1 min**.

3. Read DTCs by the number of times the security indicator light flashes as shown in the figure.

ON-BOARD DIAGNOSTIC [IMMOBILIZER SYSTEM]

Example: DTC 13

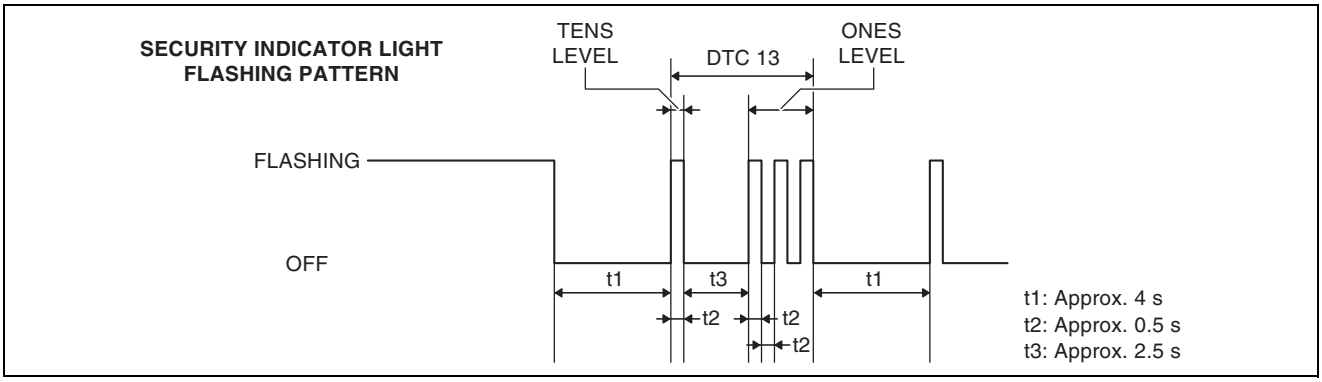

ac5wzw0000351

4. Repair the malfunctioning part according to the applicable DTC troubleshooting based on the DTC which was verified by the number of times the security indicator light flashed. (See 09-02B-4 DTC TABLE [IMMOBILIZER SYSTEM].)

Detecting DTC using the M-MDS

1. Connect the M-MDS to the DLC-2.
2. After the vehicle is identified, select the following items from the initialization screen of the M-MDS.
   (1) Select “Self Test”.
   (2) Select “All CMDTCs”.
3. Verify the DTC according to the directions on the screen.
   - If any DTCs are displayed, perform troubleshooting according to the corresponding DTC inspection.
4. After completion of repairs, clear all DTCs stored in the start stop unit. (See 09-02B-4 CLEARING DTC [IMMOBILIZER SYSTEM].)

CLEARING DTC [IMMOBILIZER SYSTEM]

id0902e4028600

1. Connect the M-MDS to the DLC-2.
2. After the vehicle is identified, select the following items from the initialization screen of the M-MDS.
   (1) Select “Self Test”.
   (2) Select “All CMDTCs”.
3. Verify the DTC according to the directions on the screen.
4. Press the clear button on the DTC screen to clear the DTC.
5. Switch the ignition to off.
6. Switch the ignition ON (engine off or on) and wait for **5 s or more**.
7. Perform DTC inspection. (See 09-02B-3 DTC INSPECTION [IMMOBILIZER SYSTEM].)
8. Verify that no DTCs are displayed.

DTC TABLE [IMMOBILIZER SYSTEM]

id0902e4028700

×: Applicable
—: Not applicable

DTC				KEY warning indicator light (red)	Push button indicator light (amber)	Description	Fail-safe function	Drive cycle	Self test type *2	Memory function	Page
M-MDS display*1		Security indicator light flash pattern									
Start stop unit	PCM										
U3000:96	P1260:00	09	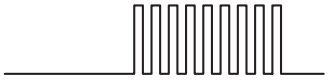	On	Flash	Start stop unit malfunction	—	—	C	×	(See 09-02B-21 SECURITY INDICATOR LIGHT: 09, DTC: U3000:96/ P1260:00 [IMMOBILIZER SYSTEM].)

ON-BOARD DIAGNOSTIC [IMMOBILIZER SYSTEM]

DTC				KEY warning indicator light (red)	Push button indicator light (amber)	Description	Fail-safe function	Drive cycle	Self test type *2	Memory function	Page
M-MDS display *1		Security indicator light flash pattern									
Start stop unit	PCM										
B10D9:87	P1260:00	11		—	Flash	Coil antenna (built into push button start) error	—	—	C	—	(See 09-02B-7 SECURITY INDICATOR LIGHT: 11, DTC: B10D9:87/ P1260:00 [IMMOBILIZER SYSTEM].)
B13D3:05	P1260:00	13		—	—	Remote transmitter programming error	—	—	C	—	(See 09-02B-13 SECURITY INDICATOR LIGHT: 13, DTC: B13D3:05/ P1260:00 [IMMOBILIZER SYSTEM].)
B13D3:94	P1260:00	13		—	—	Communication error with remote transmitter	—	—	C	—	(See 09-02B-10 SECURITY INDICATOR LIGHT: 13, DTC: B13D3:94/ P1260:00 [IMMOBILIZER SYSTEM].)
B13D3:51	P1260:00	15	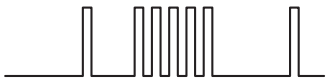	—	Flash	Unregistered remote transmitter is detected	—	—	C	—	(See 09-02B-16 SECURITY INDICATOR LIGHT: 15, DTC: B13D3:51/ P1260:00 [IMMOBILIZER SYSTEM].)
U0100:87	P1260:00	16	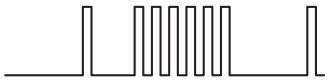	—	—	Communication error with PCM (no response or data mis-matched)	—	—	C	—	(See 09-02B-17 SECURITY INDICATOR LIGHT: 16, DTC: U0100:87/ P1260:00 [IMMOBILIZER SYSTEM].)
B13D4:00	P1260:00	21		On	—	Insufficient remote transmitter programming number	—	—	C	—	(See 09-02B-18 SECURITY INDICATOR LIGHT: 21, DTC: B13D4:00/ P1260:00 [IMMOBILIZER SYSTEM].)
B10DA:51	P1260:00	22		—	—	Communication error with PCM (data received failure)	—	—	C	—	(See 09-02B-19 SECURITY INDICATOR LIGHT: 22, DTC: B10DA:51/ P1260:00 [IMMOBILIZER SYSTEM].)

ON-BOARD DIAGNOSTIC [IMMOBILIZER SYSTEM]

DTC				KEY warning indicator light (red)	Push button indicator light (amber)	Description	Fail-safe function	Drive cycle	Self test type *2	Memory function	Page
M-MDS display*1		Security indicator light flash pattern									
Start stop unit	PCM										
B10DA:62	P1260:00	23		—	—	Communication error with PCM (code mis-matched)	—	—	C	—	(See 09-02B-20 SECURITY INDICATOR LIGHT: 23, DTC: B10DA:62/ P1260:00 [IMMOBILIZER SYSTEM].)

*1 : The letters at the beginning of each DTC are only displayed when using the M-MDS, and refer to the following: B= Body system, P= Powertrain system, U= Network communication system.
*2 : C: CMDTC self test, D: ODDTC self test

ON-BOARD DIAGNOSTIC [IMMOBILIZER SYSTEM]

SECURITY INDICATOR LIGHT: 11, DTC: B10D9:87/P1260:00 [IMMOBILIZER SYSTEM]

id0902e4908000

System malfunction location	**Coil antenna (built into push button start) error**
Detection condition	• The starter stop unit detected a malfunction in the coil antenna, and remote transmitter communication is not possible.
Fail-safe	—
Possible cause	• Push button start connector or terminal malfunction • Start stop unit connector or terminal malfunction • Short to ground in wiring harness between the following terminals: — Start stop unit terminal 1AC and push button start terminal A — Start stop unit terminal 1AE and push button start terminal B • Open circuit in wiring harness between the following terminals: — Start stop unit terminal 1AC and push button start terminal A — Start stop unit terminal 1AE and push button start terminal B • Coil antenna malfunction • Start stop unit malfunction

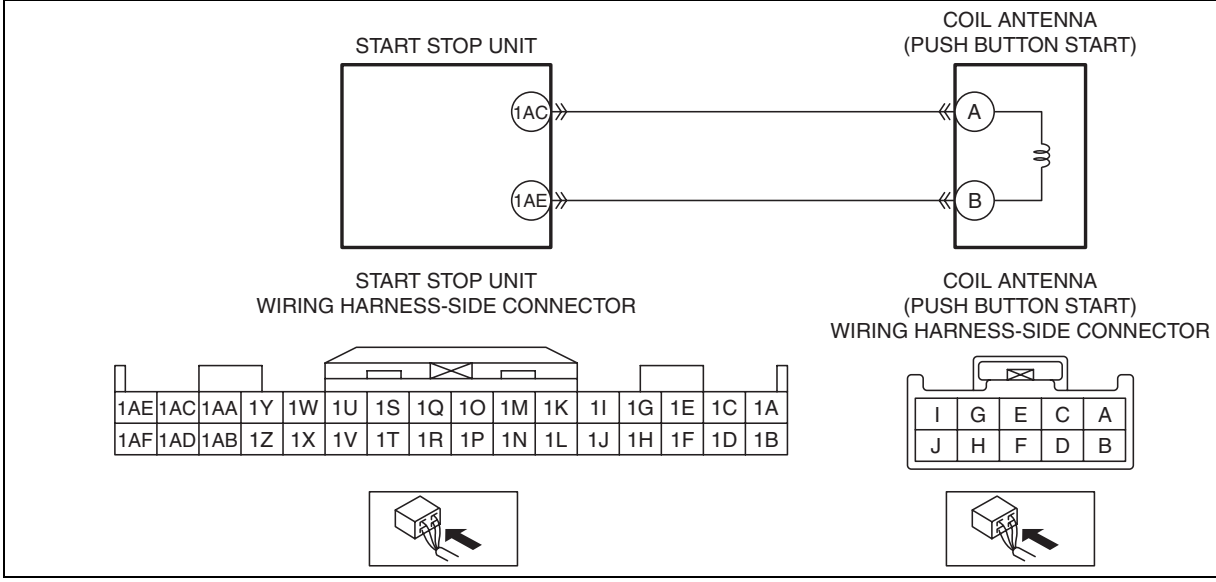

ON-BOARD DIAGNOSTIC [IMMOBILIZER SYSTEM]

Diagnostic Procedure

Step	Inspection		Action
1	**INSPECT PUSH BUTTON START CONNECTOR CONDITION** • Switch the ignition to off. • Disconnect the negative battery cable. (See 01-17A-11 NEGATIVE BATTERY CABLE DISCONNECTION/CONNECTION [SKYACTIV-G 2.0].) (See 01-17A-13 NEGATIVE BATTERY CABLE DISCONNECTION/CONNECTION [SKYACTIV-G 2.0 (WITHOUT i-stop)].) (See 01-17B-9 NEGATIVE BATTERY CABLE DISCONNECTION/CONNECTION [SKYACTIV-D 2.2].) • Disconnect the push button start connector. • Inspect the connector engagement and connection condition and inspect the terminals for damage, deformation, corrosion, or disconnection. • Is the connector normal?	Yes	Go to the next step.
		No	Repair or replace the connector, then go to Step 6.
2	**INSPECT START STOP UNIT CONNECTOR CONDITION** • Disconnect the start stop unit connector. • Inspect the connector engagement and connection condition and inspect the terminals for damage, deformation, corrosion, or disconnection. • Is the connector normal?	Yes	Go to the next step.
		No	Repair or replace the connector, then go to Step 6.
3	**INSPECT COIL ANTENNA CIRCUIT FOR SHORT TO GROUND** • Verify that the push button start and start stop unit connectors are disconnected. • Inspect for continuity between the following terminals (vehicle wiring harness side) and body ground. — Push button start terminal A — Push button start terminal B • Is there continuity?	Yes	Repair or replace the wiring harness which is shorted to ground, then go to Step 6.
		No	Go to the next step.
4	**INSPECT COIL ANTENNA CIRCUIT FOR OPEN CIRCUIT** • Verify that the push button start and start stop unit connectors are disconnected. • Inspect the wiring harness between the following terminals (vehicle wiring harness side) for continuity. — Start stop unit terminal 1AC and push button start terminal A — Start stop unit terminal 1AE and push button start terminal B • Is there continuity?	Yes	Go to the next step.
		No	Repair or replace the wiring harness which has an open circuit, then go to Step 6.

ON-BOARD DIAGNOSTIC [IMMOBILIZER SYSTEM]

Step	Inspection		Action
5	**PERFORM DTC INSPECTION AND VERIFY IF MALFUNCTIONING PART IS COIL ANTENNA** • Reconnect all the disconnected connectors. • Remove the ROOM 15 A fuse. • Reconnect the disconnected negative battery cable. (See 01-17A-11 NEGATIVE BATTERY CABLE DISCONNECTION/CONNECTION [SKYACTIV-G 2.0].) (See 01-17A-13 NEGATIVE BATTERY CABLE DISCONNECTION/CONNECTION [SKYACTIV-G 2.0 (WITHOUT i-stop)].) (See 01-17B-9 NEGATIVE BATTERY CABLE DISCONNECTION/CONNECTION [SKYACTIV-D 2.2].) • Clear DTC for the immobilizer system using the M-MDS. (See 09-02B-4 CLEARING DTC [IMMOBILIZER SYSTEM].) • Perform the DTC inspection for the immobilizer system using the M-MDS. (See 09-02B-3 DTC INSPECTION [IMMOBILIZER SYSTEM].) • Security indicator light: 11, DTC B10D9:87/ P1260:00 displayed?	Yes	Replace the push button start, then go to the next step. (See 09-21-24 PUSH BUTTON START REMOVAL/ INSTALLATION.)
		No	Go to Step 7.
6	**VERIFY THAT REPAIRS HAVE BEEN COMPLETED** • Reconnect all the disconnected connectors. • Remove the ROOM 15 A fuse. • Reconnect the disconnected negative battery cable. (See 01-17A-11 NEGATIVE BATTERY CABLE DISCONNECTION/CONNECTION [SKYACTIV-G 2.0].) (See 01-17A-13 NEGATIVE BATTERY CABLE DISCONNECTION/CONNECTION [SKYACTIV-G 2.0 (WITHOUT i-stop)].) (See 01-17B-9 NEGATIVE BATTERY CABLE DISCONNECTION/CONNECTION [SKYACTIV-D 2.2].) • Clear DTC for the immobilizer system using the M-MDS. (See 09-02B-4 CLEARING DTC [IMMOBILIZER SYSTEM].) • Perform the DTC inspection for the immobilizer system using the M-MDS. (See 09-02B-3 DTC INSPECTION [IMMOBILIZER SYSTEM].) • Security indicator light: 11, DTC B10D9:87/ P1260:00 displayed?	Yes	Repeat the inspection from Step 1. • If the malfunction recurs, replace the start stop unit, then go to the next step. (See 09-14-54 START STOP UNIT REMOVAL/ INSTALLATION.)
		No	Go to the next step.
7	**VERIFY IF OTHER DTCs DISPLAYED** • Are any other DTCs displayed?	Yes	Repair the malfunctioning part according to the applicable DTC troubleshooting. (See 09-02B-4 DTC TABLE [IMMOBILIZER SYSTEM].)
		No	DTC troubleshooting completed.

ON-BOARD DIAGNOSTIC [IMMOBILIZER SYSTEM]

SECURITY INDICATOR LIGHT: 13, DTC: B13D3:94/P1260:00 [IMMOBILIZER SYSTEM]

id0902e4027800

System malfunction location	**Communication error with remote transmitter**
Detection condition	• The starter stop unit could not detect remote transmitter communication or communication error was detected.
Fail-safe	—
Possible cause	• When the ignition is switched ON (engine off or on), it is detected that the remote transmitter is outside of the vehicle. • Push button start connector or terminal malfunction • Start stop unit connector or terminal malfunction • Remote transmitter malfunction • Start stop unit malfunction **Note** • If any of the following items are touching or near the remote transmitter, signal communication between the remote transmitter and the vehicle is negatively affected, resulting in the engine not starting. — Spare keys — Keys for other vehicles equipped with an immobilizer system — Any metallic object — Any electronic device, or any credit or other card with magnetic strips — Radio wave outputting device nearby
System wiring diagram	—

ON-BOARD DIAGNOSTIC [IMMOBILIZER SYSTEM]

Diagnostic Procedure

Step	Inspection		Action
1	**INSPECT PUSH BUTTON START CONNECTOR CONDITION** • Switch the ignition to off. • Disconnect the negative battery cable. (See 01-17A-11 NEGATIVE BATTERY CABLE DISCONNECTION/CONNECTION [SKYACTIV-G 2.0].) (See 01-17A-13 NEGATIVE BATTERY CABLE DISCONNECTION/CONNECTION [SKYACTIV-G 2.0 (WITHOUT i-stop)].) (See 01-17B-9 NEGATIVE BATTERY CABLE DISCONNECTION/CONNECTION [SKYACTIV-D 2.2].) • Disconnect the push button start connector. • Inspect the connector engagement and connection condition and inspect the terminals for damage, deformation, corrosion, or disconnection. • Is the connector normal?	Yes	Go to the next step.
		No	Repair or replace the connector, then go to Step 4.
2	**INSPECT START STOP UNIT CONNECTOR CONDITION** • Disconnect the start stop unit connector. • Inspect the connector engagement and connection condition and inspect the terminals for damage, deformation, corrosion, or disconnection. • Is the connector normal?	Yes	Go to the next step.
		No	Repair or replace the connector, then go to Step 4.
3	**VERIFY IF MALFUNCTION CAUSE IS REMOTE TRANSMITTER** • Reconnect all the disconnected connectors. • Reconnect the disconnected negative battery cable. (See 01-17A-11 NEGATIVE BATTERY CABLE DISCONNECTION/CONNECTION [SKYACTIV-G 2.0].) (See 01-17A-13 NEGATIVE BATTERY CABLE DISCONNECTION/CONNECTION [SKYACTIV-G 2.0 (WITHOUT i-stop)].) (See 01-17B-9 NEGATIVE BATTERY CABLE DISCONNECTION/CONNECTION [SKYACTIV-D 2.2].) • Re-program key ID number of the remote transmitter. (See 09-14-78 IMMOBILIZER SYSTEM-RELATED PARTS PROGRAMMING.) • Clear DTC for the immobilizer system using the M-MDS. (See 09-02B-4 CLEARING DTC [IMMOBILIZER SYSTEM].) • Perform the DTC inspection for the immobilizer system using the M-MDS. (See 09-02B-3 DTC INSPECTION [IMMOBILIZER SYSTEM].) • Security indicator light: 13, DTC B13D3:94/ P1260:00 displayed?	Yes	Replace the remote transmitter, then go to the next step. (See 09-14-78 IMMOBILIZER SYSTEM-RELATED PARTS PROGRAMMING.)
		No	Go to Step 5.

ON-BOARD DIAGNOSTIC [IMMOBILIZER SYSTEM]

Step	Inspection		Action
4	**VERIFY THAT REPAIRS HAVE BEEN COMPLETED** • Reconnect all the disconnected connectors. • Reconnect the disconnected negative battery cable. (See 01-17A-11 NEGATIVE BATTERY CABLE DISCONNECTION/CONNECTION [SKYACTIV-G 2.0].) (See 01-17A-13 NEGATIVE BATTERY CABLE DISCONNECTION/CONNECTION [SKYACTIV-G 2.0 (WITHOUT i-stop)].) (See 01-17B-9 NEGATIVE BATTERY CABLE DISCONNECTION/CONNECTION [SKYACTIV-D 2.2].) • Clear DTC for the immobilizer system using the M-MDS. (See 09-02B-4 CLEARING DTC [IMMOBILIZER SYSTEM].) • Perform the DTC inspection for the immobilizer system using the M-MDS. (See 09-02B-3 DTC INSPECTION [IMMOBILIZER SYSTEM].) • Security indicator light: 13, DTC B13D3:94/P1260:00 displayed?	Yes	Repeat the inspection from Step 1. • If the malfunction recurs, replace the start stop unit, then go to the next step. (See 09-14-54 START STOP UNIT REMOVAL/INSTALLATION.)
		No	Go to the next step.
5	**VERIFY IF OTHER DTCs DISPLAYED** • Are any other DTCs displayed?	Yes	Repair the malfunctioning part according to the applicable DTC troubleshooting. (See 09-02B-4 DTC TABLE [IMMOBILIZER SYSTEM].)
		No	DTC troubleshooting completed.

ON-BOARD DIAGNOSTIC [IMMOBILIZER SYSTEM]

SECURITY INDICATOR LIGHT: 13, DTC: B13D3:05/P1260:00 [IMMOBILIZER SYSTEM]

id0902e4027900

System malfunction location	**Remote transmitter program error**
Detection condition	• The start stop unit detects a remote transmitter program error.
Fail-safe	—
Possible cause	• Push button start connector or terminal malfunction • Start stop unit connector or terminal malfunction • Remote transmitter program error • Start stop unit malfunction **Note** • If any of the following items are touching or near the remote transmitter, signal communication between the remote transmitter and the vehicle is negatively affected, resulting in the engine not starting. — Spare keys — Keys for other vehicles equipped with an immobilizer system — Any metallic object — Any electronic device, or any credit or other card with magnetic strips — Radio wave outputting device nearby
System wiring diagram	—

ON-BOARD DIAGNOSTIC [IMMOBILIZER SYSTEM]

Diagnostic Procedure

Step	Inspection		Action
1	**INSPECT PUSH BUTTON START CONNECTOR CONDITION** • Switch the ignition to off. • Disconnect the negative battery cable. (See 01-17A-11 NEGATIVE BATTERY CABLE DISCONNECTION/CONNECTION [SKYACTIV-G 2.0].) (See 01-17A-13 NEGATIVE BATTERY CABLE DISCONNECTION/CONNECTION [SKYACTIV-G 2.0 (WITHOUT i-stop)].) (See 01-17B-9 NEGATIVE BATTERY CABLE DISCONNECTION/CONNECTION [SKYACTIV-D 2.2].) • Disconnect the push button start connector. • Inspect the connector engagement and connection condition and inspect the terminals for damage, deformation, corrosion, or disconnection. • Is the connector normal?	Yes	Go to the next step.
		No	Repair or replace the connector, then go to Step 4.
2	**INSPECT START STOP UNIT CONNECTOR CONDITION** • Disconnect the start stop unit connector. • Inspect the connector engagement and connection condition and inspect the terminals for damage, deformation, corrosion, or disconnection. • Is the connector normal?	Yes	Go to the next step.
		No	Repair or replace the connector, then go to Step 4.
3	**VERIFY IF MALFUNCTION CAUSE IS REMOTE TRANSMITTER** • Reconnect all the disconnected connectors. • Reconnect the disconnected negative battery cable. (See 01-17A-11 NEGATIVE BATTERY CABLE DISCONNECTION/CONNECTION [SKYACTIV-G 2.0].) (See 01-17A-13 NEGATIVE BATTERY CABLE DISCONNECTION/CONNECTION [SKYACTIV-G 2.0 (WITHOUT i-stop)].) (See 01-17B-9 NEGATIVE BATTERY CABLE DISCONNECTION/CONNECTION [SKYACTIV-D 2.2].) • Re-program key ID number of the remote transmitter. (See 09-14-78 IMMOBILIZER SYSTEM-RELATED PARTS PROGRAMMING.) • Clear DTC for the immobilizer system using the M-MDS. (See 09-02B-4 CLEARING DTC [IMMOBILIZER SYSTEM].) • Perform the DTC inspection for the immobilizer system using the M-MDS. (See 09-02B-3 DTC INSPECTION [IMMOBILIZER SYSTEM].) • Security indicator light: 13, DTC B13D3:05/ P1260:00 displayed?	Yes	Replace the remote transmitter, then go to the next step. (See 09-14-78 IMMOBILIZER SYSTEM-RELATED PARTS PROGRAMMING.)
		No	Go to Step 5.

ON-BOARD DIAGNOSTIC [IMMOBILIZER SYSTEM]

Step	Inspection		Action
4	**VERIFY THAT REPAIRS HAVE BEEN COMPLETED** • Reconnect all the disconnected connectors. • Reconnect the disconnected negative battery cable. (See 01-17A-11 NEGATIVE BATTERY CABLE DISCONNECTION/CONNECTION [SKYACTIV-G 2.0].) (See 01-17A-13 NEGATIVE BATTERY CABLE DISCONNECTION/CONNECTION [SKYACTIV-G 2.0 (WITHOUT i-stop)].) (See 01-17B-9 NEGATIVE BATTERY CABLE DISCONNECTION/CONNECTION [SKYACTIV-D 2.2].) • Clear DTC for the immobilizer system using the M-MDS. (See 09-02B-4 CLEARING DTC [IMMOBILIZER SYSTEM].) • Perform the DTC inspection for the immobilizer system using the M-MDS. (See 09-02B-3 DTC INSPECTION [IMMOBILIZER SYSTEM].) • Security indicator light: 13, DTC B13D3:05/ P1260:00 displayed?	Yes	Repeat the inspection from Step 1. • If the malfunction recurs, replace the start stop unit, then go to the next step. (See 09-14-54 START STOP UNIT REMOVAL/ INSTALLATION.)
		No	Go to the next step.
5	**VERIFY IF OTHER DTCs DISPLAYED** • Are any other DTCs displayed?	Yes	Repair the malfunctioning part according to the applicable DTC troubleshooting. (See 09-02B-4 DTC TABLE [IMMOBILIZER SYSTEM].)
		No	DTC troubleshooting completed.

ON-BOARD DIAGNOSTIC [IMMOBILIZER SYSTEM]

SECURITY INDICATOR LIGHT: 15, DTC: B13D3:51/P1260:00 [IMMOBILIZER SYSTEM]

id0902e4028000

System malfunction location	**Unregistered remote transmitter is detected**
Detection condition	• The start stop unit detects that the remote transmitter has not been programmed.
Fail-safe	—
Possible cause	• Remote transmitter malfunction — The remote transmitter is not programmed after replacing the start stop unit. — Unprogrammed remote transmitter was used. • Start stop unit malfunction
System wiring diagram	—

Diagnostic Procedure

Step	Inspection		Action
1	**VERIFY IF THE REMOTE TRANSMITTER BROUGHT INTO THE VEHICLE IS FOR THAT VEHICLE** • Does the remote transmitter belong to another vehicle?	Yes	Have the correct transmitter for the vehicle ready inside the vehicle and go to Step 3.
		No	Go to the next step.
2	**REGISTER REMOTE TRANSMITTER** • Perform the following work for each of the programmed remote transmitters. — Clear DTC for the immobilizer system using the M-MDS. (See 09-02B-4 CLEARING DTC [IMMOBILIZER SYSTEM].) — Perform the DTC inspection for the immobilizer system using the M-MDS. (See 09-02B-3 DTC INSPECTION [IMMOBILIZER SYSTEM].) • Security indicator light: 15, DTC B13D3:51/P1260:00 displayed?	Yes	Replace the malfunctioning remote transmitter, then go to the next step. (See 09-14-78 IMMOBILIZER SYSTEM-RELATED PARTS PROGRAMMING.)
		No	Go to Step 4.
3	**VERIFY THAT REPAIRS HAVE BEEN COMPLETED** • Clear DTC for the immobilizer system using the M-MDS. (See 09-02B-4 CLEARING DTC [IMMOBILIZER SYSTEM].) • Perform the DTC inspection for the immobilizer system using the M-MDS. (See 09-02B-3 DTC INSPECTION [IMMOBILIZER SYSTEM].) • Security indicator light: 15, DTC B13D3:51/P1260:00 displayed?	Yes	Repeat the inspection from Step 1. • If the malfunction recurs, replace the start stop unit, then go to the next step. (See 09-14-54 START STOP UNIT REMOVAL/INSTALLATION.)
		No	Go to the next step.
4	**VERIFY IF OTHER DTCs DISPLAYED** • Are any other DTCs displayed?	Yes	Repair the malfunctioning part according to the applicable DTC troubleshooting. (See 09-02B-4 DTC TABLE [IMMOBILIZER SYSTEM].)
		No	DTC troubleshooting completed.

ON-BOARD DIAGNOSTIC [IMMOBILIZER SYSTEM]

SECURITY INDICATOR LIGHT: 16, DTC: U0100:87/P1260:00 [IMMOBILIZER SYSTEM]

id0902e4908600

System malfunction location	**Communication error with PCM (no response or data mis-match)**
Detection condition	• The starter stop unit detects a communication error (no response or immobilizer system cancel not possible) with the PCM.
Fail-safe	—
Possible cause	• The immobilizer system-related parts have not been programmed when replacing the PCM or start stop unit. • Start stop unit malfunction • PCM malfunction
System wiring diagram	—

Diagnostic Procedure

Step	Inspection		Action
1	**Perform immobilizer system-related part programming.** • Perform start stop unit replacement and programming due to simultaneous replacement of start stop unit/PCM. (See 09-14-78 IMMOBILIZER SYSTEM-RELATED PARTS PROGRAMMING.) • Clear DTC for the immobilizer system using the M-MDS. (See 09-02B-4 CLEARING DTC [IMMOBILIZER SYSTEM].) • Perform the DTC inspection for the immobilizer system using the M-MDS. (See 09-02B-3 DTC INSPECTION [IMMOBILIZER SYSTEM].) • Security indicator light: 16, DTC U0100:87/P1260:00 displayed?	Yes	Go to the next step.
		No	Go to Step 4.
2	**PERFORM DTC INSPECTION AND VERIFY IF MALFUNCTIONING PART IS START STOP UNIT** • Clear DTC for the immobilizer system using the M-MDS. (See 09-02B-4 CLEARING DTC [IMMOBILIZER SYSTEM].) • Perform the DTC inspection for the immobilizer system using the M-MDS. (See 09-02B-3 DTC INSPECTION [IMMOBILIZER SYSTEM].) • Security indicator: 16, DTC U0100:87/P1260:00 displayed?	Yes	Replace the start stop unit, then go to the next step. (See 09-14-54 START STOP UNIT REMOVAL/INSTALLATION.)
		No	Go to Step 4.
3	**PERFORM DTC INSPECTION AND VERIFY IF MALFUNCTIONING PART IS PCM** • Clear DTC for the immobilizer system using the M-MDS. (See 09-02B-4 CLEARING DTC [IMMOBILIZER SYSTEM].) • Perform the DTC inspection for the immobilizer system using the M-MDS. (See 09-02B-3 DTC INSPECTION [IMMOBILIZER SYSTEM].) • Security indicator: 16, DTC U0100:87/P1260:00 displayed?	Yes	Replace the PCM, then go to the next step. (See 01-40-10 PCM REMOVAL/INSTALLATION [SKYACTIV-G 2.0].)
		No	Go to the next step.
4	**VERIFY IF OTHER DTCs DISPLAYED** • Are any other DTCs displayed?	Yes	Repair the malfunctioning part according to the applicable DTC troubleshooting. (See 09-02B-4 DTC TABLE [IMMOBILIZER SYSTEM].)
		No	DTC troubleshooting completed.

ON-BOARD DIAGNOSTIC [IMMOBILIZER SYSTEM]

SECURITY INDICATOR LIGHT: 21, DTC: B13D4:00/P1260:00 [IMMOBILIZER SYSTEM]

id0902e4028100

System malfunction location	**Insufficient remote transmitter programming number**
Detection condition	• The start stop unit detects that the number of programmed remote transmitters is less than 2.
Fail-safe	—
Possible cause	• Insufficient number of remote transmitters programmed • Start stop unit malfunction
System wiring diagram	—

Diagnostic Procedure

Step	Inspection		Action
1	**VERIFY NUMBER OF PROGRAMMED REMOTE TRANSMITTER** • Display PID NUM_TRNSMIT using the M-MDS. (See 09-02B-21 PID/DATA MONITOR INSPECTION [IMMOBILIZER SYSTEM].) • Is the number of programmed remote transmitters less than 2?	Yes	Perform additional remote transmitter programming, then go to the next step. (See 09-14-78 IMMOBILIZER SYSTEM-RELATED PARTS PROGRAMMING.)
		No	Go to the next step.
2	**VERIFY THAT REPAIRS HAVE BEEN COMPLETED** • Clear DTC for the immobilizer system using the M-MDS. (See 09-02B-4 CLEARING DTC [IMMOBILIZER SYSTEM].) • Perform the DTC inspection for the immobilizer system using the M-MDS. (See 09-02B-3 DTC INSPECTION [IMMOBILIZER SYSTEM].) • Security indicator light: 21, DTC B13D4:00/P1260:00 displayed?	Yes	Replace the start stop unit, then go to the next step. (See 09-14-54 START STOP UNIT REMOVAL/INSTALLATION.)
		No	Go to the next step.
3	**VERIFY IF OTHER DTCs DISPLAYED** • Are any other DTCs displayed?	Yes	Repair the malfunctioning part according to the applicable DTC troubleshooting. (See 09-02B-4 DTC TABLE [IMMOBILIZER SYSTEM].)
		No	DTC troubleshooting completed.

ON-BOARD DIAGNOSTIC [IMMOBILIZER SYSTEM]

SECURITY INDICATOR LIGHT: 22, DTC: B10DA:51/P1260:00 [IMMOBILIZER SYSTEM]

id0902e4908800

System malfunction location	**Communication error with PCM (data received failure)**
Detection condition	• The start stop unit detects a communication error (data received failure) with PCM.
Fail-safe	—
Possible cause	• The immobilizer system-related part programming has not been performed when replacing the PCM or start stop unit. • Start stop unit malfunction • PCM malfunction
System wiring diagram	—

Diagnostic Procedure

Step	Inspection		Action
1	**Perform immobilizer system-related part programming.** • Perform start stop unit replacement and programming due to simultaneous replacement of start stop unit/PCM. (See 09-14-78 IMMOBILIZER SYSTEM-RELATED PARTS PROGRAMMING.) • Clear DTC for the immobilizer system using the M-MDS. (See 09-02B-4 CLEARING DTC [IMMOBILIZER SYSTEM].) • Perform the DTC inspection for the immobilizer system using the M-MDS. (See 09-02B-3 DTC INSPECTION [IMMOBILIZER SYSTEM].) • Security indicator light: 22, DTC B10DA:51/P1260:00 displayed?	Yes	Go to the next step.
		No	Go to Step 4.
2	**PERFORM DTC INSPECTION AND VERIFY IF MALFUNCTIONING PART IS START STOP UNIT** • Clear DTC for the immobilizer system using the M-MDS. (See 09-02B-4 CLEARING DTC [IMMOBILIZER SYSTEM].) • Perform the DTC inspection for the immobilizer system using the M-MDS. (See 09-02B-3 DTC INSPECTION [IMMOBILIZER SYSTEM].) • Security indicator light: 22, DTC B10DA:51/P1260:00 displayed?	Yes	Replace the start stop unit, then go to the next step. (See 09-14-54 START STOP UNIT REMOVAL/INSTALLATION.)
		No	Go to Step 4.
3	**PERFORM DTC INSPECTION AND VERIFY IF MALFUNCTIONING PART IS PCM** • Clear DTC for the immobilizer system using the M-MDS. (See 09-02B-4 CLEARING DTC [IMMOBILIZER SYSTEM].) • Perform the DTC inspection for the immobilizer system using the M-MDS. (See 09-02B-3 DTC INSPECTION [IMMOBILIZER SYSTEM].) • Security indicator light: 22, DTC B10DA:51/P1260:00 displayed?	Yes	Replace the PCM, then go to the next step. (See 01-40-10 PCM REMOVAL/INSTALLATION [SKYACTIV-G 2.0].)
		No	Go to the next step.
4	**VERIFY IF OTHER DTCs DISPLAYED** • Are any other DTCs displayed?	Yes	Repair the malfunctioning part according to the applicable DTC troubleshooting. (See 09-02B-4 DTC TABLE [IMMOBILIZER SYSTEM].)
		No	DTC troubleshooting completed.

ON-BOARD DIAGNOSTIC [IMMOBILIZER SYSTEM]

SECURITY INDICATOR LIGHT: 23, DTC: B10DA:62/P1260:00 [IMMOBILIZER SYSTEM]

id0902e4909000

System malfunction location	**Communication error with PCM (code mis-matched)**
Detection condition	• The start stop unit detects a communication error (code mis-matched) with PCM.
Fail-safe	—
Possible cause	• The immobilizer system-related part programming has not been performed when replacing the PCM or start stop unit. • PCM malfunction
System wiring diagram	—

Diagnostic Procedure

Step	Inspection		Action
1	**Perform immobilizer system-related part programming.** • Perform start stop unit replacement and programming due to simultaneous replacement of start stop unit/PCM. (See 09-14-78 IMMOBILIZER SYSTEM-RELATED PARTS PROGRAMMING.) • Clear DTC for the immobilizer system using the M-MDS. (See 09-02B-4 CLEARING DTC [IMMOBILIZER SYSTEM].) • Perform the DTC inspection for the immobilizer system using the M-MDS. (See 09-02B-3 DTC INSPECTION [IMMOBILIZER SYSTEM].) • Security indicator light: 23, DTC B10DA:62/P1260:00 displayed?	Yes	Go to the next step.
		No	Go to Step 3.
2	**PERFORM DTC INSPECTION AND VERIFY IF MALFUNCTIONING PART IS PCM** • Clear DTC for the immobilizer system using the M-MDS. (See 09-02B-4 CLEARING DTC [IMMOBILIZER SYSTEM].) • Perform the DTC inspection for the immobilizer system using the M-MDS. (See 09-02B-3 DTC INSPECTION [IMMOBILIZER SYSTEM].) • Security indicator light: 23, DTC B10DA:62/P1260:00 displayed?	Yes	Replace the PCM, then go to the next step. (See 01-40-10 PCM REMOVAL/INSTALLATION [SKYACTIV-G 2.0].)
		No	Go to the next step.
3	**VERIFY IF OTHER DTCs DISPLAYED** • Are any other DTCs displayed?	Yes	Repair the malfunctioning part according to the applicable DTC troubleshooting. (See 09-02B-4 DTC TABLE [IMMOBILIZER SYSTEM].)
		No	DTC troubleshooting completed.

ON-BOARD DIAGNOSTIC [IMMOBILIZER SYSTEM]

SECURITY INDICATOR LIGHT: 09, DTC: U3000:96/P1260:00 [IMMOBILIZER SYSTEM]

id0902e4028200

System malfunction location	**Start stop unit malfunction**
Detection condition	• Start stop unit malfunction detected.
Fail-safe	—
Possible cause	• Start stop unit malfunction
System wiring diagram	—

Diagnostic Procedure

Step	Inspection		Action
1	**PERFORM DTC INSPECTION AND VERIFY IF MALFUNCTIONING PART IS START STOP UNIT** • Clear DTC for the immobilizer system using the M-MDS. (See 09-02B-4 CLEARING DTC [IMMOBILIZER SYSTEM].) • Perform the DTC inspection for the immobilizer system using the M-MDS. (See 09-02B-3 DTC INSPECTION [IMMOBILIZER SYSTEM].) • Security indicator light: 09, DTC U3000:96/P1260:00 displayed?	Yes	Replace the start stop unit, then go to the next step. (See 09-14-54 START STOP UNIT REMOVAL/INSTALLATION.)
		No	Go to the next step.
2	**VERIFY IF OTHER DTCs DISPLAYED** • Are any other DTCs displayed?	Yes	Repair the malfunctioning part according to the applicable DTC troubleshooting. (See 09-02B-4 DTC TABLE [IMMOBILIZER SYSTEM].)
		No	DTC troubleshooting completed.

PID/DATA MONITOR INSPECTION [IMMOBILIZER SYSTEM]

id0902e4028800

1. Connect the M-MDS to the DLC-2.
2. After the vehicle is identified, select the following items from the initialization screen of the M-MDS.
   (1) Select “Data Logger”.
   (2) Select “Modules”.
   (3) Select “SSU”.
3. Select the applicable PID from the PID table.
4. Verify the PID data according to the directions on the screen.

Note

- The PID data screen function is used for monitoring the calculated value of input/output signals in the module. Therefore, if the monitored value of the output parts is not within the specification, it is necessary to inspect the monitored value of input parts corresponding to the applicable output part control. In addition, because the system does not display an output part malfunction as an abnormality in the monitored value, it is necessary to inspect the output parts individually.
- When detecting DTCs, PIDs related to a malfunctioning system may not display even if the module is normal. Therefore, if a PID is not displayed, it is necessary to verify the DTC, perform malfunction diagnosis of the DTC that was detected, and do repairs.

PID/DATA MONITOR TABLE [IMMOBILIZER SYSTEM]

id0902e4028900

—: Not applicable

PID	Unit/ Operation	Data contents	Inspection item(s)
NUM_TRNSMIT	—	Displays the number of the remote transmitters programmed to the start stop unit.	Start stop unit

09-02C ON-BOARD DIAGNOSTIC [START STOP UNIT]

ON-BOARD DIAGNOSTIC WIRING DIAGRAM [START STOP UNIT] 09-02C–2
FOREWORD [START STOP UNIT] 09-02C–5
Troubleshooting Procedure 09-02C–5
Action for non-repeatable malfunction 09-02C–6
DTC INSPECTION [START STOP UNIT] 09-02C–6
CMDTC Self Test 09-02C–6
ODDTC Self Test 09-02C–6
Snap shot data 09-02C–6
CLEARING DTC [START STOP UNIT] 09-02C–7
CMDTC Memory Clearing Procedure 09-02C–7
ODDTC Memory Clearing Procedure 09-02C–7
DTC TABLE [START STOP UNIT] 09-02C–8
DTC B1026:49 [START STOP UNIT] . . . 09-02C–16
DTC B1026:96 [START STOP UNIT] . . . 09-02C–17
DTC B108B:23 [START STOP UNIT] . . . 09-02C–18
DTC B108B:24 [START STOP UNIT] . . . 09-02C–20
DTC B108C:23 [START STOP UNIT] . . . 09-02C–23
DTC B108C:24 [START STOP UNIT] . . . 09-02C–25
DTC B10AC:13 [START STOP UNIT] . . . 09-02C–28
DTC B10AC:23 [START STOP UNIT] . . . 09-02C–31
DTC B10C9:1F [START STOP UNIT] . . . 09-02C–34
DTC B10E7:11 [START STOP UNIT] . . . 09-02C–37
DTC B10E7:12 [START STOP UNIT] . . . 09-02C–39
DTC B10E7:16 [START STOP UNIT] . . . 09-02C–41
DTC B10E7:17 [START STOP UNIT] . . . 09-02C–44
DTC B112A:11 [START STOP UNIT] . . . 09-02C–46
DTC B112A:12 [START STOP UNIT] . . . 09-02C–48
DTC B1140:29 [START STOP UNIT] . . . 09-02C–50
DTC B124C:56 [START STOP UNIT] . . . 09-02C–53
DTC B13D3:16 [START STOP UNIT] . . . 09-02C–54
DTC B13D3:4A [START STOP UNIT] . . . 09-02C–55
DTC B13D3:97 [START STOP UNIT] . . . 09-02C–56
DTC B1C53:13 [START STOP UNIT] . . . 09-02C–57
DTC C0040:23 [START STOP UNIT] . . . 09-02C–58
DTC C0040:24 [START STOP UNIT] . . . 09-02C–61
DTC C0051:95 [START STOP UNIT] . . . 09-02C–63
DTC C0051:2F [START STOP UNIT] . . . 09-02C–64
DTC C0052:14 [START STOP UNIT] . . . 09-02C–65
DTC C0052:2F [START STOP UNIT] . . . 09-02C–67
DTC C0053:14 [START STOP UNIT] 09-02C–68
DTC C0053:2F [START STOP UNIT] 09-02C–70
DTC C2003:13 [START STOP UNIT] 09-02C–71
DTC P0560:16 [START STOP UNIT] 09-02C–74
DTC P0615:11 [START STOP UNIT] 09-02C–76
DTC P0615:12 [START STOP UNIT] 09-02C–79
DTC P0615:13 [START STOP UNIT] 09-02C–82
DTC P0615:16 [START STOP UNIT] 09-02C–85
DTC P0616:23 [START STOP UNIT] 09-02C–87
DTC P0616:24 [START STOP UNIT] 09-02C–90
DTC P0616:29 [START STOP UNIT] 09-02C–93
DTC P081C:23 [START STOP UNIT] 09-02C–94
DTC P081C:24 [START STOP UNIT] 09-02C–97
DTC P081D:29 [START STOP UNIT] 09-02C–100
DTC P081D:2F START STOP UNIT] . . . 09-02C–101
DTC P0830:23 [START STOP UNIT] . . . 09-02C–102
DTC P0850:23 [START STOP UNIT] . . . 09-02C–108
DTC P0850:24 [START STOP UNIT] . . . 09-02C–108
DTC P0930:71 [START STOP UNIT] . . . 09-02C–111
DTC P1708:24 [START STOP UNIT] . . . 09-02C–114
DTC P1708:29 [START STOP UNIT] . . . 09-02C–117
DTC P1794:16 [START STOP UNIT] . . . 09-02C–120
DTC U0001:88/U0100:00/U0101:00/ U0121:00/U0121:87/U0131:00/ U0140:00/U0146:00/U0151:00/ U0155:00 [START STOP UNIT] 09-02C–123
Diagnostic Procedure 09-02C–124
DTC U0028:87 [START STOP UNIT] . . . 09-02C–125
DTC U0447:86 [START STOP UNIT] . . . 09-02C–127
DTC U201F:11 [START STOP UNIT] . . . 09-02C–129
DTC U201F:12 [START STOP UNIT] . . . 09-02C–131
DTC U2100:00 [START STOP UNIT] . . . 09-02C–133
DTC U2300:00 [START STOP UNIT] . . . 09-02C–134
DTC U3000:01 [START STOP UNIT] . . . 09-02C–135
DTC U3000:49 [START STOP UNIT] . . . 09-02C–136
DTC U3000:96 [START STOP UNIT] . . . 09-02C–137
DTC U3003:16 [START STOP UNIT] . . . 09-02C–138
DTC U3004:11 [START STOP UNIT] . . . 09-02C–141
DTC U3004:12 [START STOP UNIT] . . . 09-02C–143
DTC U3004:16 [START STOP UNIT] . . . 09-02C–145
DTC U3004:17 [START STOP UNIT] . . . 09-02C–148
PID/DATA MONITOR INSPECTION START STOP UNIT] 09-02C–151
PID/DATA MONITOR TABLE [START STOP UNIT] 09-02C–151

ON-BOARD DIAGNOSTIC [START STOP UNIT]

ON-BOARD DIAGNOSTIC WIRING DIAGRAM [START STOP UNIT]

id0902p6018600

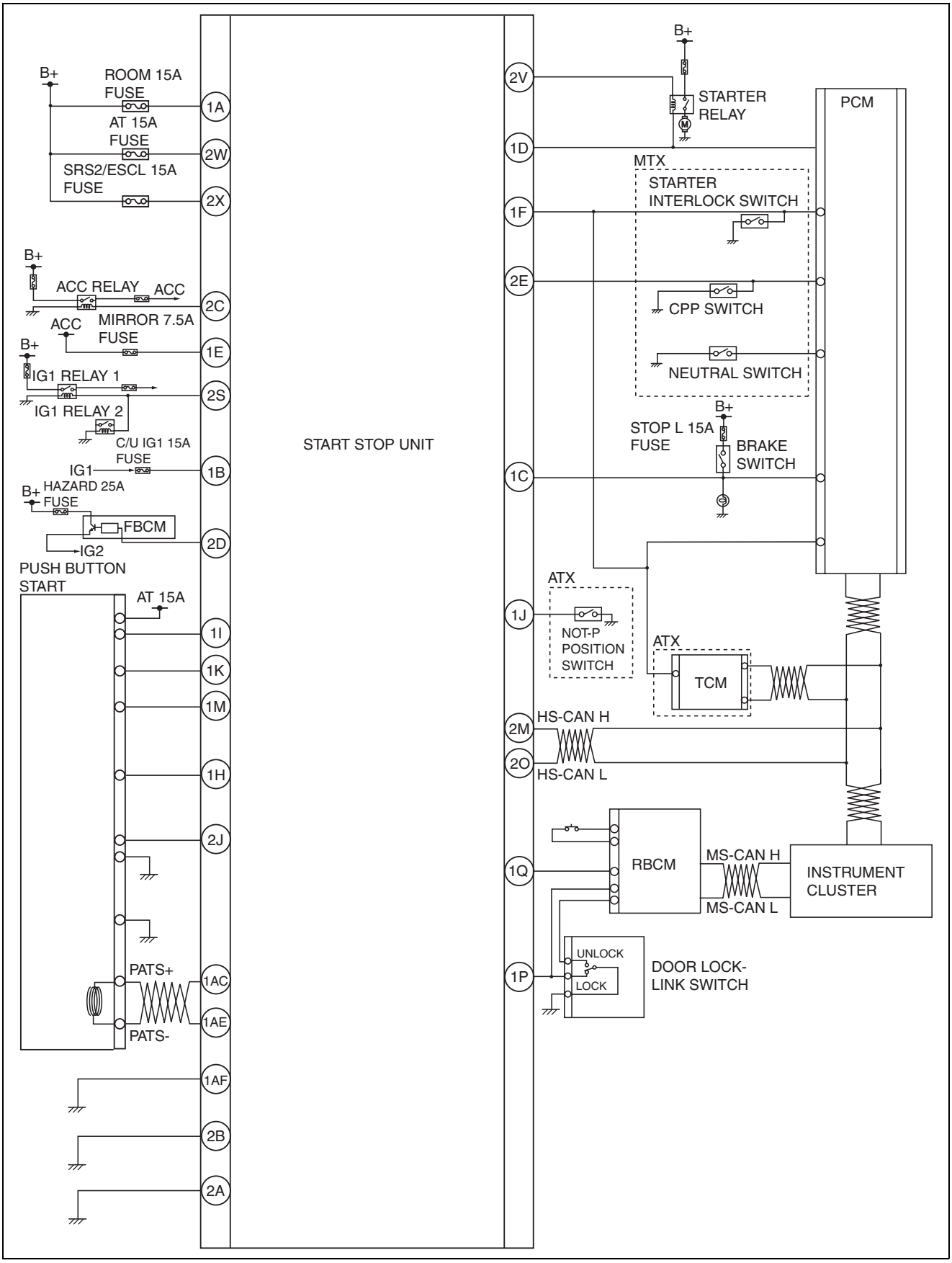

ac5wzw0000456

ON-BOARD DIAGNOSTIC [START STOP UNIT]

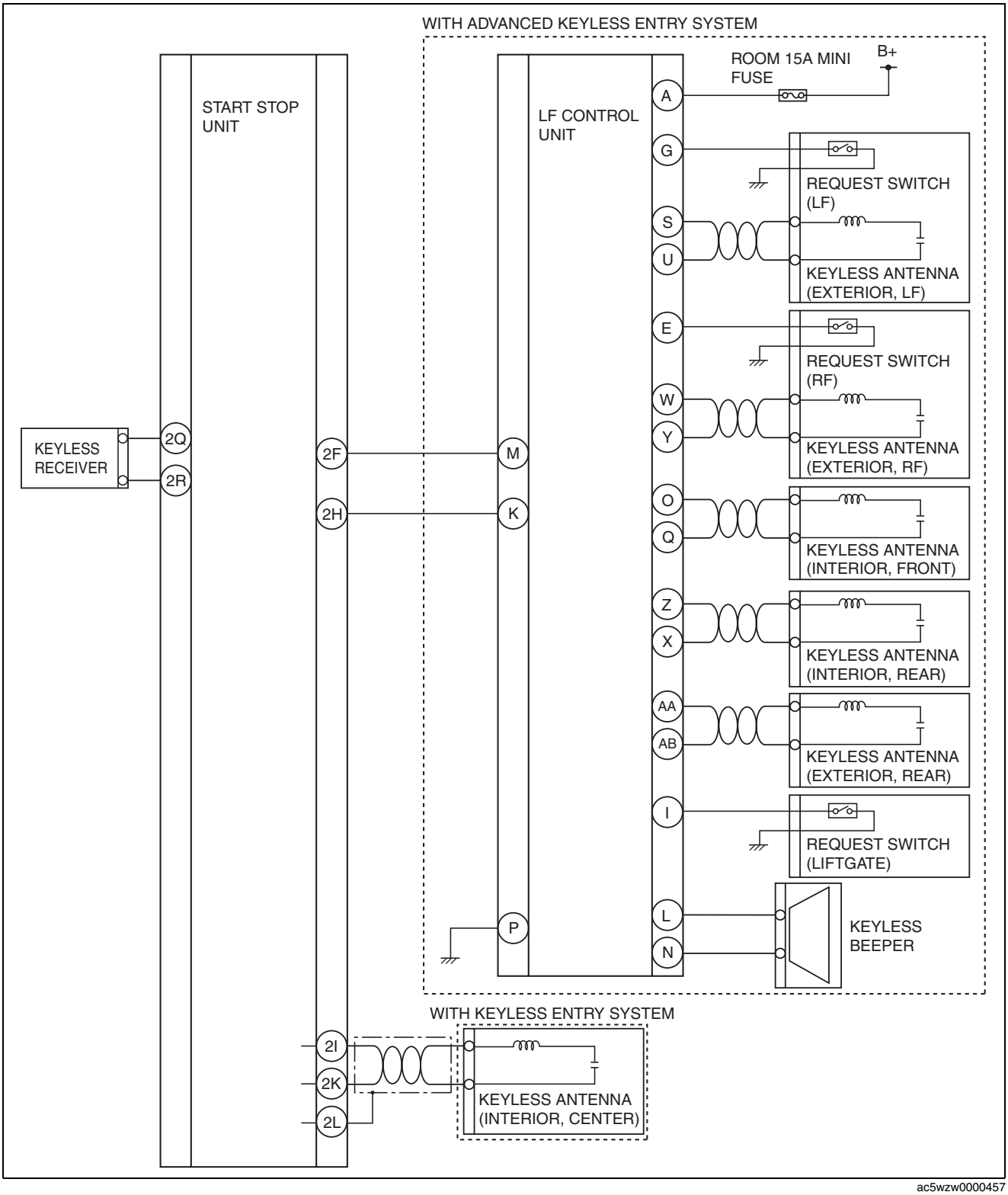

ac5wzw0000457

ON-BOARD DIAGNOSTIC [START STOP UNIT]

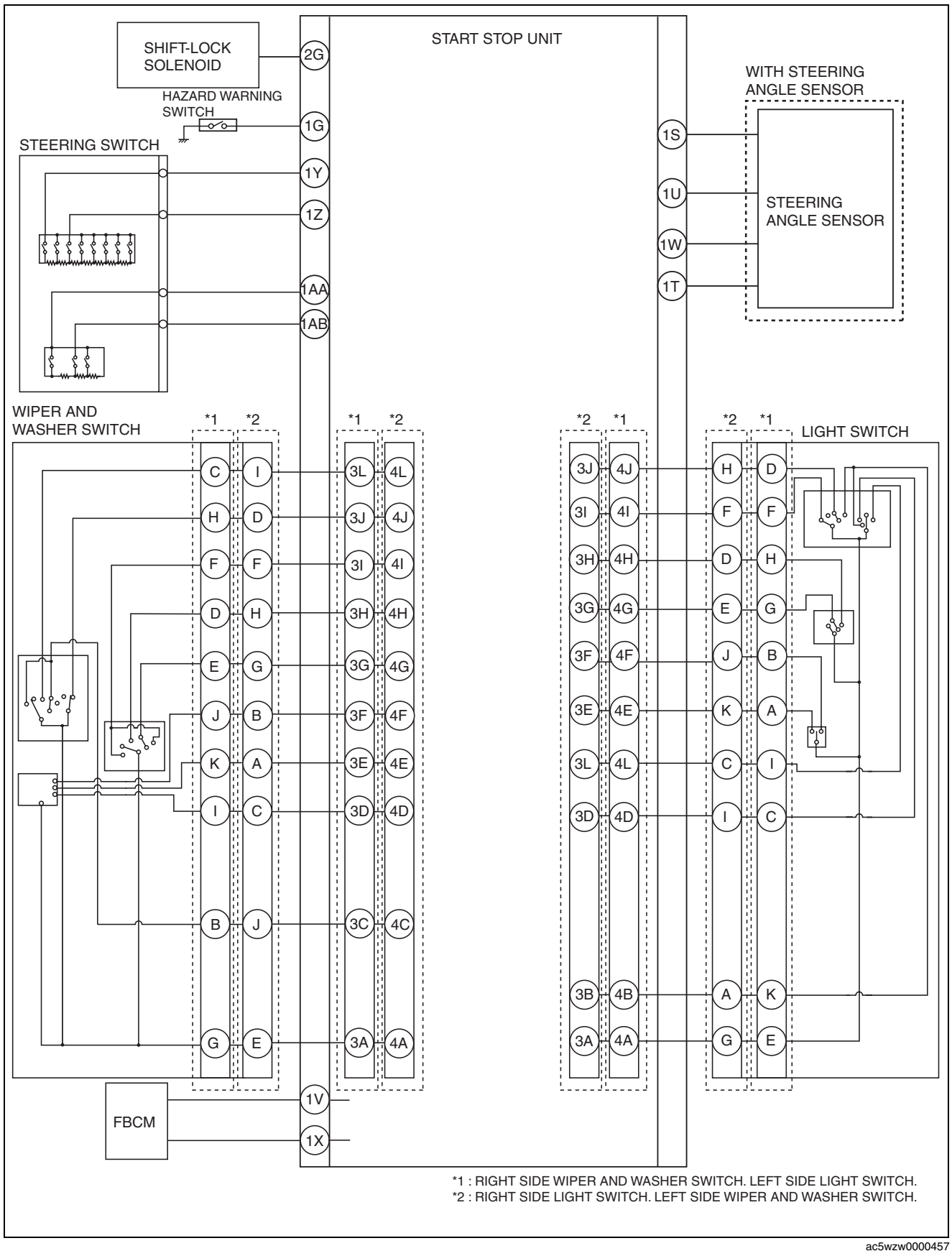

ac5wzw0000457

ON-BOARD DIAGNOSTIC [START STOP UNIT]

FOREWORD [START STOP UNIT]

id0902p6018700

- If there is any vehicle malfunction complaint lodged by a customer, perform malfunction diagnosis according to the troubleshooting procedure.

Troubleshooting Procedure

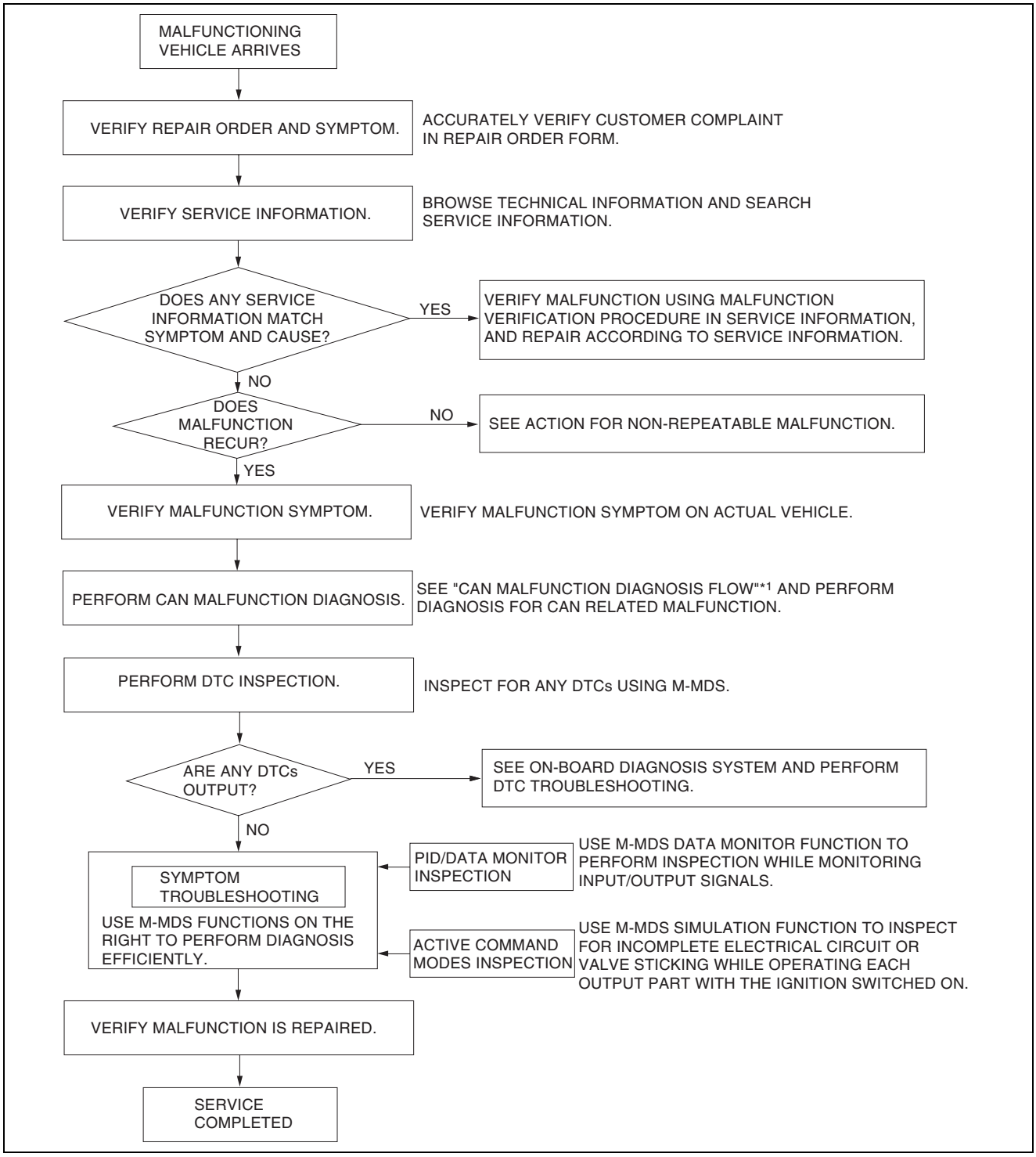

am3uuw0000731

*1 : 10-02A-3 CONTROLLER AREA NETWORK (CAN) MALFUNCTION DIAGNOSIS FLOW [SKYACTIV-G 2.0 (L.H.D.)] /10-02B-3 CONTROLLER AREA NETWORK (CAN) MALFUNCTION DIAGNOSIS FLOW [SKYACTIV-G 2.0 (R.H.D.)]/10-02C-3 CONTROLLER AREA NETWORK (CAN) MALFUNCTION DIAGNOSIS FLOW [SKYACTIV-D 2.2 (L.H.D.)]/10-02D-3 CONTROLLER AREA NETWORK (CAN) MALFUNCTION DIAGNOSIS FLOW [SKYACTIV-D 2.2 (R.H.D.)]

ON-BOARD DIAGNOSTIC [START STOP UNIT]

Action for non-repeatable malfunction

- If the malfunction does not recur, verify the malfunction cause by performing the following actions:
  - — Based on the repair order form, attempt to drive the vehicle or perform tests to replicate the malfunction, record the data at that time, and detect the malfunction cause.
  - — Shake the wiring harness or connector of the electrical component which is suspected to be the cause of the malfunction, and inspect for malfunction or occurrence of any DTCs.

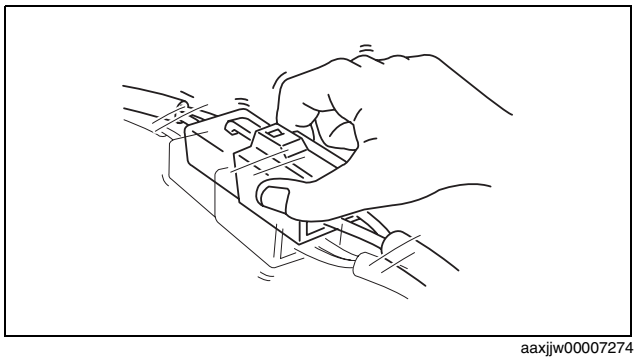

aaxjjw00007274

  - — Inspect the female terminals on the connector of the electric component which is suspected to be the cause of the malfunction for poor connection.

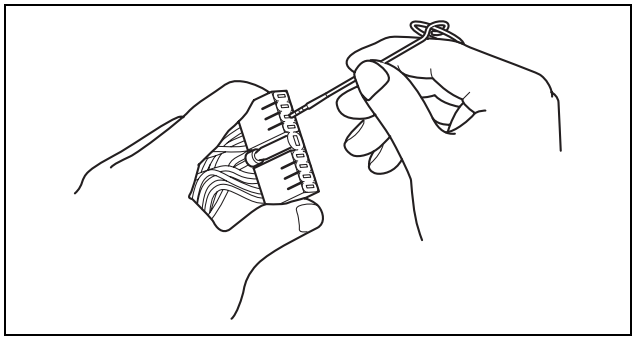

am3uuw0000750

DTC INSPECTION [START STOP UNIT]

id0902p6018800

CMDTC Self Test

1. Connect the M-MDS to the DLC-2.
2. After the vehicle is identified, select the following items from the initialization screen of the M-MDS.
   (1) Select “Self Test”.
   (2) Select “All CMDTCs”.
3. Verify the DTC according to the directions on the screen.
   - If any DTCs are displayed, perform troubleshooting according to the corresponding DTC inspection.
4. After completion of repairs, clear all DTCs stored in the start stop unit. (See 09-02C-7 CLEARING DTC [START STOP UNIT].)

ODDTC Self Test

1. Connect the M-MDS to the DLC-2.
2. After the vehicle is identified, select the following items from the initialization screen of the M-MDS.
   (1) Select “Self Test”.
   (2) Select “Modules”.
   (3) Select “SSU”.
3. Verify the DTC according to the directions on the screen.
   - If any DTCs are displayed, perform troubleshooting according to the corresponding DTC inspection.
4. After completion of repairs, clear all DTCs stored in the start stop unit. (See 09-02C-7 CLEARING DTC [START STOP UNIT].)

Snap shot data

- The data for all DTCs currently detected is stored.

Snap shot data table

Snap shot data item	Unit		Data contents	Corresponding data monitor items
AAT	°C	°F	Ambient temperature	—
APP_STATUS	Accelerator Pedal Off/Under20%/ Over20%/FAIL		Accelerator pedal position status	—
CFG_STATUS	Config Complete/Not Configured/ Config Error		Configuration status	—

ON-BOARD DIAGNOSTIC [START STOP UNIT]

Snap shot data item	Unit		Data contents	Corresponding data monitor items
ECT_STATUS	Under 0 degrees C/0-Under 80 degrees C/Over 80 degrees C/FAIL		Engine coolant temperature status	—
IC_VPWR	V		Instrument cluster power supply voltage	—
IG-ON_TIMER	hh:mm:ss		Elapsed time since ignition switched ON (engine off or on)	—
PWR_MODE_KEY	Key Out/Key Recently Out/ Key Approved (Position 0)/ Post Accessory (Position 0)/ Accessory (Position 1)/ Post Ignition (Position 1)/ ignition On (Position 2)/ Running - Starting In Progress (Position 2)/Crank (Position 3)		Push button start power position switching status	—
RPM_STATUS	Engine Stop/Under1500rpm/ Over1500rpm/FAIL		Engine speed status	—
SHIFT_STATUS	P/N/ D/ R/ FAIL		Selector lever position status	—
TOTAL_DIST	Km	miles	Accumulated total traveled distance since vehicle completion	—
TOTAL_TIME	hh:mm:ss		Accumulated total elapsed time since vehicle completion **Note** • When the ROOM fuse is removed, or the ignition is switched off (LOCK), the time is not included in the elapsed time.	—
TRNS_NUM_L	Initial/No.1/No.2/No.3/No.4/No.5/No.6		Order of remote transmitters Programmed to vehicle	—
VPWR	V		Start stop unit power supply malfunction	—
VPWR_B1	V		Start stop unit power supply malfunction	—
VSPD_STATUS	Stop/ 0-10km/h/ Over10km/h/ FAIL		Vehicle speed status	—

CLEARING DTC [START STOP UNIT]

id0902p6018900

CMDTC Memory Clearing Procedure

1. Connect the M-MDS to the DLC-2.
2. After the vehicle is identified, select the following items from the initialization screen of the M-MDS.
   (1) Select “Self Test”.
   (2) Select “All CMDTCs”.
3. Verify the DTC according to the directions on the screen.
4. Press the clear button on the DTC screen to clear the DTC.
5. Switch the ignition to off.
6. Switch the ignition ON (engine off or on) and wait for **5 s or more**.
7. Perform DTC inspection. (See 09-02C-6 DTC INSPECTION [START STOP UNIT].)
8. Verify that no DTCs are displayed.

ODDTC Memory Clearing Procedure

1. Connect the M-MDS to the DLC-2.
2. After the vehicle is identified, select the following items from the initialization screen of the M-MDS.
   (1) Select “Self Test”.
   (2) Select “Modules”.
   (3) Select “SSU”.
3. Verify the DTC according to the directions on the screen.
4. Press the clear button on the DTC screen to clear the DTC.
5. Switch the ignition to off.

ON-BOARD DIAGNOSTIC [START STOP UNIT]

6. Switch the ignition ON (engine off or on) and wait for **5 s or more**.
7. Perform DTC inspection. (See 09-02C-6 DTC INSPECTION [START STOP UNIT].)
8. Verify that no DTCs are displayed.

DTC TABLE [START STOP UNIT]

id0902p6019000

×: Applicable
—: Not applicable

DTC No.	KEY warning indicator light (red)	Push button indicator light (amber)	Description	Fail-safe function	Drive cycle	Self test type*1	Memory function	Page
B1026:49*2	—	Flash	Steering lock malfunction	×	—	C	×	(See 09-02C-16 DTC B1026:49 [START STOP UNIT].)
B1026:96*2	—	Flash	Steering lock malfunction	—	—	C	×	(See 09-02C-17 DTC B1026:96 [START STOP UNIT].)
B108B:23	—	Flash	Push button start switch No.1 circuit malfunction	×	—	C	×	(See 09-02C-18 DTC B108B:23 [START STOP UNIT].)
B108B:24	—	Flash	Push button start switch No.1 circuit malfunction	—	—	C	×	(See 09-02C-20 DTC B108B:24 [START STOP UNIT].)
B108C:23	—	Flash	Push button start switch No.2 circuit malfunction	×	—	C	×	(See 09-02C-23 DTC B108C:23 [START STOP UNIT].)
B108C:24	—	Flash	Push button start switch No.2 circuit malfunction	—	—	C	×	(See 09-02C-25 DTC B108C:24 [START STOP UNIT].)
B10AC:13*3	—	—	Cruise control switch circuit malfunction	—	—	C	×	(See 09-02C-28 DTC B10AC:13 [START STOP UNIT].)
B10AC:23*3	—	—	Cruise control switch circuit malfunction	—	—	C	×	(See 09-02C-31 DTC B10AC:23 [START STOP UNIT].)
B10C6:1F*4	On	—	Keyless antenna (exterior, rear) circuit malfunction	×	—	C, D	×	(See 09-02A-7 DTC B10C6:1F [ADVANCED KEYLESS ENTRY SYSTEM].)
B10C7:1F*4	On	—	Keyless antenna (interior, rear) circuit malfunction	×	—	C, D	×	(See 09-02A-10 DTC B10C7:1F [ADVANCED KEYLESS ENTRY SYSTEM].)
B10C9:1F	On	—	Keyless antenna (interior, center) circuit malfunction (with keyless entry system)	—	—	C, D	×	(See 09-02C-34 DTC B10C9:1F [START STOP UNIT].)
	On	—	Keyless antenna (interior, front) circuit malfunction (with advanced keyless entry system)	×	—	C, D	×	(See 09-02A-13 DTC B10C9:1F [ADVANCED KEYLESS ENTRY SYSTEM].)

ON-BOARD DIAGNOSTIC [START STOP UNIT]

DTC No.	KEY warning indicator light (red)	Push button indicator light (amber)	Description	Fail-safe function	Drive cycle	Self test type*1	Memory function	Page
B10D1:23*4	On	—	Request switch (LF) circuit malfunction	—	—	C	×	(See 09-02A-16 DTC B10D1:23 [ADVANCED KEYLESS ENTRY SYSTEM].)
B10D3:23*4	On	—	Request switch (RF) circuit malfunction	—	—	C	×	(See 09-02A-19 DTC B10D3:23 [ADVANCED KEYLESS ENTRY SYSTEM].)
B10D9:87	—	Flash	Communication error with coil antenna (built into push button start)	—	—	C	—	(See 09-02B-7 SECURITY INDICATOR LIGHT: 11, DTC: B10D9:87/ P1260:00 [IMMOBILIZER SYSTEM].)
B10DA:51	—	—	Communication error with PCM (data send failure)	—	—	C	—	(See 09-02B-19 SECURITY INDICATOR LIGHT: 22, DTC: B10DA:51/ P1260:00 [IMMOBILIZER SYSTEM].)
B10DA:62	—	—	Communication error with PCM (data mis-matched)	—	—	C	—	(See 09-02B-20 SECURITY INDICATOR LIGHT: 23, DTC: B10DA:62/ P1260:00 [IMMOBILIZER SYSTEM].)
B10E7:11	—	Flash	IG1 relay circuit malfunction	—	—	C	×	(See 09-02C-37 DTC B10E7:11 [START STOP UNIT].)
B10E7:12	—	Flash	IG1 relay circuit malfunction	—	—	C	×	(See 09-02C-39 DTC B10E7:12 [START STOP UNIT].)
B10E7:16	—	Flash	IG1 relay circuit malfunction	—	—	C	×	(See 09-02C-41 DTC B10E7:16 [START STOP UNIT].)
B10E7:17	—	Flash	IG1 relay circuit malfunction	×	—	C	×	(See 09-02C-44 DTC B10E7:17 [START STOP UNIT].)
B112A:11	—	Flash	IG2 relay circuit malfunction	—	—	C	×	(See 09-02C-46 DTC B112A:11 [START STOP UNIT].)
B112A:12	—	Flash	IG2 relay circuit malfunction	—	—	C	×	(See 09-02C-48 DTC B112A:12 [START STOP UNIT].)

ON-BOARD DIAGNOSTIC [START STOP UNIT]

DTC No.	KEY warning indicator light (red)	Push button indicator light (amber)	Description	Fail-safe function	Drive cycle	Self test type*1	Memory function	Page
B1140:29* 5	—	—	i-stop control error signal received	—	—	C	×	(See 09-02C-50 DTC B1140:29 [START STOP UNIT].)
B11C4:23* 4	On	—	Request switch (liftgate) circuit malfunction	—	—	C	×	(See 09-02A-21 DTC B11C4:23 [ADVANCED KEYLESS ENTRY SYSTEM].)
B11FD:1F *4	On	—	Keyless antenna (exterior, LF) malfunction	×	—	C, D	×	(See 09-02A-23 DTC B11FD:1F [ADVANCED KEYLESS ENTRY SYSTEM].)
B1210:1F* 4	On	—	Keyless antenna (outside vehicle, RF) malfunction	×	—	C, D	×	(See 09-02A-26 DTC B1210:1F [ADVANCED KEYLESS ENTRY SYSTEM].)
B124C:56	—	—	Turn switch circuit malfunction	—	—	C	×	(See 09-02C-53 DTC B124C:56 [START STOP UNIT].)
B13C3:04* 4	On	—	LF control unit internal malfunction	×	—	C	×	(See 09-02A-29 DTC B13C3:04 [ADVANCED KEYLESS ENTRY SYSTEM].)
B13C3:09* 4	On	—	LF control unit malfunction	×	—	C	×	(See 09-02A-30 DTC B13C3:09 [ADVANCED KEYLESS ENTRY SYSTEM].)
B13C3:16* 4	On	—	LF control unit power supply voltage (+B1) low input	×	—	C	×	(See 09-02A-32 DTC B13C3:16 [ADVANCED KEYLESS ENTRY SYSTEM].)
B13C3:29* 4	On	—	Communication error with LF control unit	×	—	C	×	(See 09-02A-34 DTC B13C3:29 [ADVANCED KEYLESS ENTRY SYSTEM].)
B13D3:05	—	—	Key ID number program error	—	—	C	—	(See 09-02B-13 SECURITY INDICATOR LIGHT: 13, DTC: B13D3:05/ P1260:00 [IMMOBILIZER SYSTEM].)
B13D3:16	On	—	Low remote transmitter battery voltage	—	—	C	×	(See 09-02C-54 DTC B13D3:16 [START STOP UNIT].)

ON-BOARD DIAGNOSTIC [START STOP UNIT]

DTC No.	KEY warning indicator light (red)	Push button indicator light (amber)	Description	Fail-safe function	Drive cycle	Self test type*1	Memory function	Page
B13D3:4A	On	—	Remote transmitter assembly malfunction	—	—	C	×	(See 09-02C-55 DTC B13D3:4A [START STOP UNIT].)
B13D3:51	—	Flash	Key code not programmed	—	—	C	—	(See 09-02B-16 SECURITY INDICATOR LIGHT: 15, DTC: B13D3:51/ P1260:00 [IMMOBILIZER SYSTEM].)
B13D3:94	—	—	Communication error with remote transmitter	—	—	C	—	(See 09-02B-10 SECURITY INDICATOR LIGHT: 13, DTC: B13D3:94/ P1260:00 [IMMOBILIZER SYSTEM].)
B13D3:97	—	—	Remote transmitter registration work not completed	—	—	C	×	(See 09-02C-56 DTC B13D3:97 [START STOP UNIT].)
B13D4:00	On	—	Insufficient key code programming number	—	—	C	—	(See 09-02B-18 SECURITY INDICATOR LIGHT: 21, DTC: B13D4:00/ P1260:00 [IMMOBILIZER SYSTEM].)
B1C53:13	—	—	Windshield wiper switch circuit malfunction	—	—	C	×	(See 09-02C-57 DTC B1C53:13 [START STOP UNIT].)
C0040:23* 7	—	Flash	Brake switch (No.1 signal) circuit malfunction	×	—	C	×	(See 09-02C-58 DTC C0040:23 [START STOP UNIT].)
C0040:24* 7	—	Flash	Brake switch (No.1 signal) circuit malfunction	×	—	C	×	(See 09-02C-61 DTC C0040:24 [START STOP UNIT].)
C0051:95* 6	—	—	Steering angle sensor assembly malfunction	—	—	C	×	(See 09-02C-63 DTC C0051:95 [START STOP UNIT].)
C0051:2F* 6	—	—	Steering angle sensor signal error	—	—	C	×	(See 09-02C-64 DTC C0051:2F [START STOP UNIT].)
C0052:14* 6	—	—	Steering angle sensor A signal circuit malfunction	—	—	C	×	(See 09-02C-65 DTC C0052:14 [START STOP UNIT].)
C0052:2F* 6	—	—	Steering angle sensor A signal malfunction	—	—	C	×	(See 09-02C-67 DTC C0052:2F [START STOP UNIT].)

ON-BOARD DIAGNOSTIC [START STOP UNIT]

DTC No.	KEY warning indicator light (red)	Push button indicator light (amber)	Description	Fail-safe function	Drive cycle	Self test type*1	Memory function	Page
C0053:14* 6	—	—	Steering angle sensor B signal circuit malfunction	—	—	C	×	(See 09-02C-68 DTC C0053:14 [START STOP UNIT].)
C0053:2F* 6	—	—	Steering angle sensor B signal malfunction	—	—	C	×	(See 09-02C-70 DTC C0053:2F [START STOP UNIT].)
C2003:13* 6	—	—	Open circuit in steering switch	—	—	C	×	(See 09-02C-71 DTC C2003:13 [START STOP UNIT].)
P0560:16* 2	—	Flash	Start stop unit power supply voltage (+B3) low input	—	—	C	×	(See 09-02C-74 DTC P0560:16 [START STOP UNIT].)
P0615:11	—	Flash	Starter relay circuit malfunction	—	—	C	×	(See 09-02C-76 DTC P0615:11 [START STOP UNIT].)
P0615:12	—	Flash	Starter relay circuit malfunction	×	—	C	×	(See 09-02C-79 DTC P0615:12 [START STOP UNIT].)
P0615:13	—	Flash	Starter relay circuit malfunction	—	—	C	×	(See 09-02C-82 DTC P0615:13 [START STOP UNIT].)
P0615:16	—	Flash	Starter relay circuit malfunction	—	—	C	×	(See 09-02C-85 DTC P0615:16 [START STOP UNIT].)
P0616:23	—	—	Circuit malfunction on downstream side of starter relay	—	—	C	×	(See 09-02C-87 DTC P0616:23 [START STOP UNIT].)
P0616:24	—	—	Circuit malfunction on downstream side of starter relay	—	—	C	×	(See 09-02C-90 DTC P0616:24 [START STOP UNIT].)
P0616:29	—	—	Starter relay signal malfunction	—	—	C	×	(See 09-02C-93 DTC P0616:29 [START STOP UNIT].)
P081C:23* 7	—	Flash	NOT P position switch circuit malfunction	×	—	C	×	(See 09-02C-94 DTC P081C:23 [START STOP UNIT].)
P081C:24* 7	—	Flash	NOT P position switch circuit malfunction	×	—	C	×	(See 09-02C-97 DTC P081C:24 [START STOP UNIT].)
P081D:29* 8	—	Flash	Neutral switch error signal received	×	—	C	×	(See 09-02C-100 DTC P081D:29 [START STOP UNIT].)
P081D:2F *8	—	Flash	Neutral switch signal mismatch	×	—	C	×	(See 09-02C-101 DTC P081D:2F [START STOP UNIT].)

ON-BOARD DIAGNOSTIC [START STOP UNIT]

DTC No.	KEY warning indicator light (red)	Push button indicator light (amber)	Description	Fail-safe function	Drive cycle	Self test type*1	Memory function	Page
P0830:23* 8	—	Flash	CPP switch circuit malfunction	×	—	C	×	(See 09-02C-102 DTC P0830:23 [START STOP UNIT].)
P0850:23* 7	—	Flash	TCM circuit malfunction	×	—	C	×	(See 09-02C-105 DTC P0850:23 [START STOP UNIT].)
P0850:24* 7	—	Flash	TCM circuit malfunction	×	—	C	×	(See 09-02C-108 DTC P0850:24 [START STOP UNIT].)
P0930:71* 7	—	—	Shift-lock solenoid circuit malfunction	×	—	C	×	(See 09-02C-111 DTC P0930:71 [START STOP UNIT].)
P1708:24* 8	—	Flash	Starter interlock switch circuit malfunction	×	—	C	×	(See 09-02C-114 DTC P1708:24 [START STOP UNIT].)
P1708:29* 8	—	Flash	Starter interlock switch circuit or CPP switch circuit malfunction	×	—	C	×	(See 09-02C-117 DTC P1708:29 [START STOP UNIT].)
P1794:16	—	Flash	Start stop unit power supply voltage (+B2) low input	—	—	C	×	(See 09-02C-120 DTC P1794:16 [START STOP UNIT].)
U0001:88	On	Flash	Module communication error (HS-CAN)	×	—	C	×	(See 09-02C-123 DTC U0001:88/ U0100:00/ U0101:00/ U0121:00/ U0121:87/ U0131:00/ U0140:00/ U0146:00/ U0151:00/ U0155:00 [START STOP UNIT].)
U0028:87	On	—	Communication error with rear body control module (RBCM)	—	—	C	×	(See 09-02C-125 DTC U0028:87 [START STOP UNIT].)

ON-BOARD DIAGNOSTIC [START STOP UNIT]

DTC No.	KEY warning indicator light (red)	Push button indicator light (amber)	Description	Fail-safe function	Drive cycle	Self test type*1	Memory function	Page
U0100:00	On	Flash	Communication error with PCM	×	—	C	×	(See 09-02C-123 DTC U0001:88/ U0100:00/ U0101:00/ U0121:00/ U0121:87/ U0131:00/ U0140:00/ U0146:00/ U0151:00/ U0155:00 [START STOP UNIT].)
U0100:87	—	—	Communication error with PCM (no response)	—	—	C	—	(See 09-02B-17 SECURITY INDICATOR LIGHT: 16, DTC: U0100:87/ P1260:00 [IMMOBILIZER SYSTEM].)
U0101:00*7	—	Flash	Communication error with TCM	×	—	C	×	(See 09-02C-123 DTC U0001:88/ U0100:00/ U0101:00/ U0121:00/ U0121:87/ U0131:00/ U0140:00/ U0146:00/ U0151:00/ U0155:00 [START STOP UNIT].)
U0121:00	On	Flash	Communication error with DSC HU/CM	×	—	C	×	
U0121:87	On	Flash	Communication error with DSC HU/CM	×	—	C	×	
U0131:00	—	—	Communication error with EPS control module	×	—	C	×	
U0140:00	—	—	Communication error with front body control module (FBCM)	×	—	C	×	
U0146:00	On	Flash	Communication error with instrument cluster	—	—	C	×	
U0151:00	On	Flash	Communication error with SAS control module	×	—	C	×	
U0155:00	On	Flash	Communication error with instrument cluster	×	—	C	×	
U0447:86	On	Flash	Error signal received from instrument cluster	—	—	C	×	(See 09-02C-127 DTC U0447:86 [START STOP UNIT].)
U201F:11	On	—	Keyless receiver circuit malfunction	—	—	C	×	(See 09-02C-129 DTC U201F:11 [START STOP UNIT].)
U201F:12	On	—	Keyless receiver circuit malfunction	—	—	C	×	(See 09-02C-131 DTC U201F:12 [START STOP UNIT].)
U2100:00	On	—	Start stop unit configuration not completed	×	—	C	×	(See 09-02C-133 DTC U2100:00 [START STOP UNIT].)

ON-BOARD DIAGNOSTIC [START STOP UNIT]

DTC No.	KEY warning indicator light (red)	Push button indicator light (amber)	Description	Fail-safe function	Drive cycle	Self test type*1	Memory function	Page
U2300:00	—	—	Configuration data not received from instrument cluster	×	—	C	×	(See 09-02C-134 DTC U2300:00 [START STOP UNIT].)
U3000:01*6	—	—	Start stop unit internal malfunction	—	—	C	×	(See 09-02C-135 DTC U3000:01 [START STOP UNIT].)
U3000:49	On	Flash	Start stop unit internal malfunction	×	—	C	×	(See 09-02C-136 DTC U3000:49 [START STOP UNIT].)
U3000:96	On	Flash	Start stop unit malfunction	×	—	C	×	(See 09-02C-137 DTC U3000:96 [START STOP UNIT].)
U3003:16	On	—	Start stop unit power supply voltage (+B1) low input	×	—	C	×	(See 09-02C-138 DTC U3003:16 [START STOP UNIT].)
U3004:11	—	Flash	ACC relay circuit malfunction	—	—	C	×	(See 09-02C-141 DTC U3004:11 [START STOP UNIT].)
U3004:12	—	Flash	ACC relay circuit malfunction	×	—	C	×	(See 09-02C-143 DTC U3004:12 [START STOP UNIT].)
U3004:16	—	—	ACC relay circuit malfunction	—	—	C	×	(See 09-02C-145 DTC U3004:16 [START STOP UNIT].)
U3004:17	—	—	ACC relay circuit malfunction	×	—	C	×	(See 09-02C-148 DTC U3004:17 [START STOP UNIT].)

*1 : C: CMDTC self test, D: ODDTC self test
*2 : With steering lock
*3 : With cruise control system
*4 : With advanced keyless entry system
*5 : With i-stop
*6 : With steering angle sensor
*7 : ATX
*8 : MTX

ON-BOARD DIAGNOSTIC [START STOP UNIT]

DTC B1026:49 [START STOP UNIT]

id0902p6019100

Warning

- **If this DTC is detected, the system will enter the fail-safe function to ensure safety. If a specified period of time has elapsed or the vehicle has been driven for a specified period of time or more while in fail-safe mode, the ignition will remain stuck in off and the engine cannot be started. Therefore, perform the malfunction diagnosis while the engine can be started. In addition, after having performed the malfunction diagnosis, verify that this DTC is not detected with the steering wheel locked. If the DTC is not detected, the system returns to normal from the fail-safe function.**

Note

- When changing to the fail-safe mode, the push button start indicator light (amber) flashes.
- In addition to the normal engine starting operation while cranking the engine in fail-safe mode, it is necessary to press the push button start.

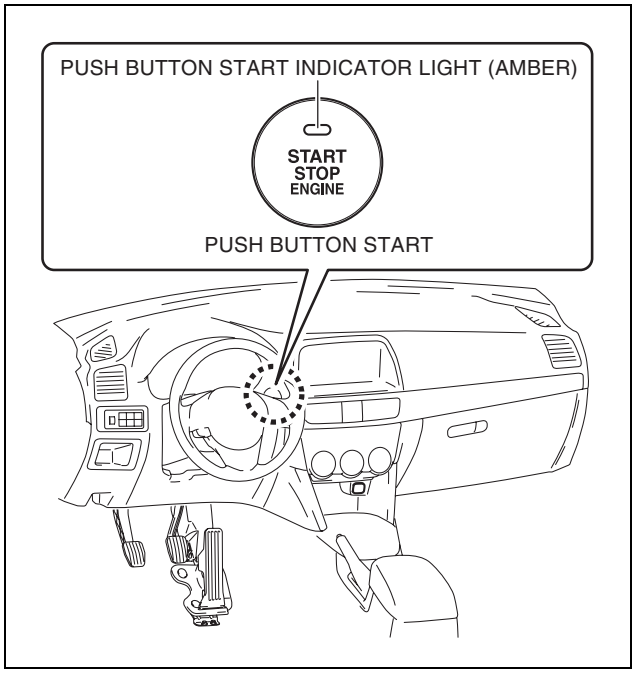

ac5wzw0000239

System malfunction location	**Steering lock malfunction**
Detection condition	• Start stop unit detects a serious malfunction in the steering lock of the internal start stop unit.
Fail-safe	• The system will enter the fail-safe function to ensure safety. If a specified period of time has elapsed or the vehicle has been driven for a specified period of time or more while in fail-safe mode, the ignition will remain stuck in off and the engine cannot be started.
Possible cause	• Start stop unit malfunction
System wiring diagram	—

ON-BOARD DIAGNOSTIC [START STOP UNIT]

Diagnostic Procedure

Step	Inspection		Action
1	**PERFORM DTC INSPECTION AND VERIFY IF MALFUNCTIONING PART IS START STOP UNIT** • Clear DTC for the start stop unit using the M-MDS. (See 09-02C-7 CLEARING DTC [START STOP UNIT].) • Perform the DTC inspection for the start stop unit using the M-MDS. (See 09-02C-6 DTC INSPECTION [START STOP UNIT].) • Is DTC B1026:49 displayed?	Yes	Replace the start stop unit, then go to the next step. (See 09-14-54 START STOP UNIT REMOVAL/ INSTALLATION.)
		No	Go to the next step.
2	**VERIFY IF OTHER DTCs DISPLAYED** • Are any other DTCs displayed?	Yes	Repair the malfunctioning part according to the applicable DTC troubleshooting. (See 09-02C-8 DTC TABLE [START STOP UNIT].)
		No	DTC troubleshooting completed.

DTC B1026:96 [START STOP UNIT]

id0902p6019200

System malfunction location	**Steering lock malfunction**
Detection condition	• Start stop unit detects malfunction in the steering lock of the internal start stop unit.
Fail-safe	—
Possible cause	• Start stop unit malfunction
System wiring diagram	—

Diagnostic Procedure

Step	Inspection		Action
1	**PERFORM DTC INSPECTION AND VERIFY IF MALFUNCTIONING PART IS START STOP UNIT** • Clear DTC for the start stop unit using the M-MDS. (See 09-02C-7 CLEARING DTC [START STOP UNIT].) • Perform the DTC inspection for the start stop unit using the M-MDS. (See 09-02C-6 DTC INSPECTION [START STOP UNIT].) • Is DTC B1026:96 displayed?	Yes	Replace the start stop unit, then go to the next step. (See 09-14-54 START STOP UNIT REMOVAL/ INSTALLATION.)
		No	Go to the next step.
2	**VERIFY IF OTHER DTCs DISPLAYED** • Are any other DTCs displayed?	Yes	Repair the malfunctioning part according to the applicable DTC troubleshooting. (See 09-02C-8 DTC TABLE [START STOP UNIT].)
		No	DTC troubleshooting completed.

ON-BOARD DIAGNOSTIC [START STOP UNIT]

DTC B108B:23 [START STOP UNIT]

id0902p6019300

System malfunction location	**Push button start switch 1 circuit malfunction**
Detection condition	• Start stop unit detects push button start switch 1 ON stuck for **120 s or more**.
Fail-safe	• Perform the control with push button start switch 1 turned off.
Possible cause	• Push button start connector or terminal malfunction • Start stop unit connector or terminal malfunction • Short to ground in wiring harness between start stop unit terminal 1H and push button start terminal C • Push button start switch 1 malfunction • Start stop unit malfunction

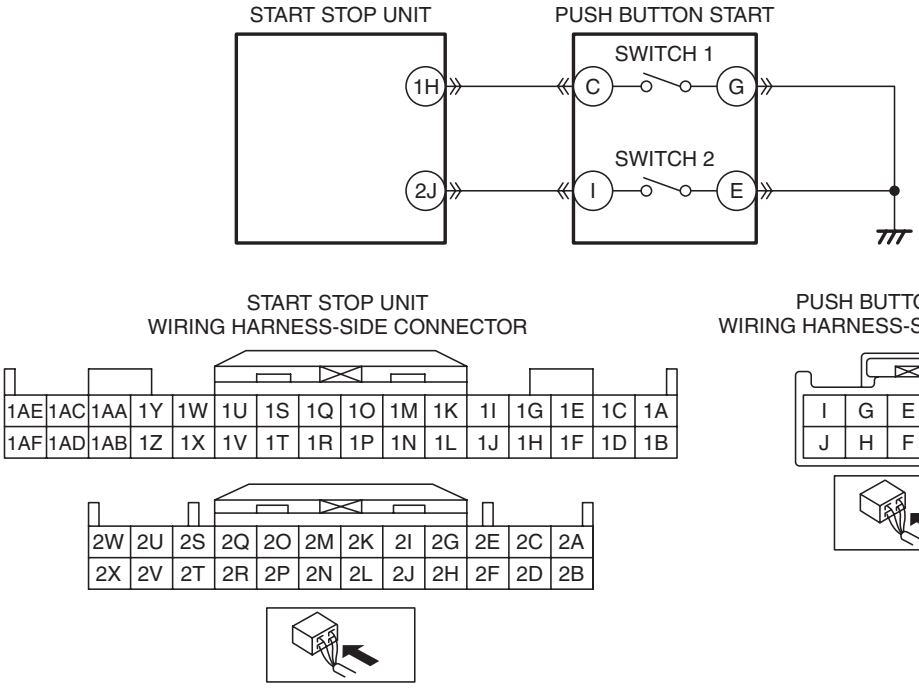

ON-BOARD DIAGNOSTIC [START STOP UNIT]

Diagnostic Procedure

Step	Inspection		Action
1	**INSPECT PUSH BUTTON START CONNECTOR CONDITION** • Switch the ignition to off. • Disconnect the negative battery cable. (See 01-17A-11 NEGATIVE BATTERY CABLE DISCONNECTION/CONNECTION [SKYACTIV-G 2.0].) (See 01-17A-13 NEGATIVE BATTERY CABLE DISCONNECTION/CONNECTION [SKYACTIV-G 2.0 (WITHOUT i-stop)].) (See 01-17B-9 NEGATIVE BATTERY CABLE DISCONNECTION/CONNECTION [SKYACTIV-D 2.2].) • Disconnect the push button start connector. • Inspect the connector engagement and connection condition and inspect the terminals for damage, deformation, corrosion, or disconnection. • Is the connector normal?	Yes	Go to the next step.
		No	Repair or replace the connector, then go to Step 5.
2	**INSPECT START STOP UNIT CONNECTOR CONDITION** • Disconnect the start stop unit connector. • Inspect the connector engagement and connection condition and inspect the terminals for damage, deformation, corrosion, or disconnection. • Is the connector normal?	Yes	Go to the next step.
		No	Repair or replace the connector, then go to Step 5.
3	**INSPECT PUSH BUTTON START SWITCH 1 CIRCUIT FOR SHORT TO GROUND** • Verify that the push button start and start stop unit connectors are disconnected. • Inspect for continuity between push button start terminal C (vehicle wiring harness) and body ground. • Is there continuity?	Yes	Repair or replace the wiring harness which is shorted to ground, then go to Step 5.
		No	Go to the next step.
4	**INSPECT PUSH BUTTON START SWITCH 1** • Inspect push button start switch 1. (See 09-21-25 PUSH BUTTON START INSPECTION.) • Is push button start switch 1 normal?	Yes	Go to the next step.
		No	Replace the push button start, then go to the next step. (See 09-21-24 PUSH BUTTON START REMOVAL/INSTALLATION.)
5	**VERIFY THAT REPAIRS HAVE BEEN COMPLETED** • Reconnect all the disconnected connectors. • Reconnect the disconnected negative battery cable. (See 01-17A-11 NEGATIVE BATTERY CABLE DISCONNECTION/CONNECTION [SKYACTIV-G 2.0].) (See 01-17A-13 NEGATIVE BATTERY CABLE DISCONNECTION/CONNECTION [SKYACTIV-G 2.0 (WITHOUT i-stop)].) (See 01-17B-9 NEGATIVE BATTERY CABLE DISCONNECTION/CONNECTION [SKYACTIV-D 2.2].) • Clear DTC for the start stop unit using the M-MDS. (See 09-02C-7 CLEARING DTC [START STOP UNIT].) • Switch the ignition ON (engine off or on) and wait for **120 s or more**. • Perform the DTC inspection for the start stop unit using the M-MDS. (See 09-02C-6 DTC INSPECTION [START STOP UNIT].) • Is DTC B108B:23 displayed?	Yes	Repeat the inspection from Step 1. • If the malfunction recurs, replace the start stop unit, then go to the next step. (See 09-14-54 START STOP UNIT REMOVAL/INSTALLATION.)
		No	Go to the next step.

ON-BOARD DIAGNOSTIC [START STOP UNIT]

Step	Inspection		Action
6	**VERIFY IF OTHER DTCs DISPLAYED** • Are any other DTCs displayed?	Yes	Repair the malfunctioning part according to the applicable DTC troubleshooting. (See 09-02C-8 DTC TABLE [START STOP UNIT].)
		No	DTC troubleshooting completed.

DTC B108B:24 [START STOP UNIT]

id0902p6019400

System malfunction location	**Push button start switch 1 circuit malfunction**
Detection condition	• The start stop unit detects that push button start switch 1 is kept in an off condition **5 times or more** even though push button start switch 2 is on.
Fail-safe	—
Possible cause	• Push button start connector or terminal malfunction • Open circuit in wiring harness between push button start terminal G and body ground • Start stop unit connector or terminal malfunction • Open circuit in wiring harness between start stop unit terminal 1H and push button start terminal C • Push button start switch 1 malfunction • Start stop unit malfunction

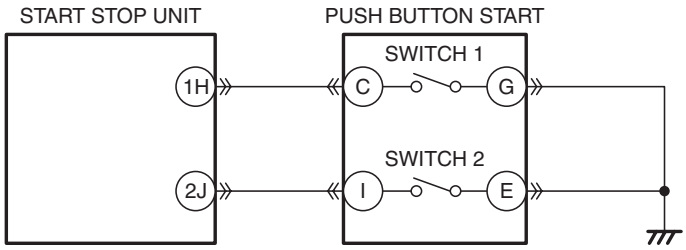

START STOP UNIT
WIRING HARNESS-SIDE CONNECTOR

1AE	1AC	1AA	1Y	1W	1U	1S	1Q	1O	1M	1K	1I	1G	1E	1C	1A
1AF	1AD	1AB	1Z	1X	1V	1T	1R	1P	1N	1L	1J	1H	1F	1D	1B

2W	2U	2S	2Q	2O	2M	2K	2I	2G	2E	2C	2A
2X	2V	2T	2R	2P	2N	2L	2J	2H	2F	2D	2B

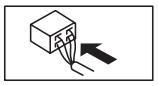

PUSH BUTTON START
WIRING HARNESS-SIDE CONNECTOR

I	G	E	C	A
J	H	F	D	B

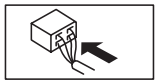

ON-BOARD DIAGNOSTIC [START STOP UNIT]

Diagnostic Procedure

Step	Inspection		Action
1	**INSPECT PUSH BUTTON START CONNECTOR CONDITION** • Switch the ignition to off. • Disconnect the negative battery cable. (See 01-17A-11 NEGATIVE BATTERY CABLE DISCONNECTION/CONNECTION [SKYACTIV-G 2.0].) (See 01-17A-13 NEGATIVE BATTERY CABLE DISCONNECTION/CONNECTION [SKYACTIV-G 2.0 (WITHOUT i-stop)].) (See 01-17B-9 NEGATIVE BATTERY CABLE DISCONNECTION/CONNECTION [SKYACTIV-D 2.2].) • Disconnect the push button start connector. • Inspect the connector engagement and connection condition and inspect the terminals for damage, deformation, corrosion, or disconnection. • Is the connector normal?	Yes	Go to the next step.
		No	Repair or replace the connector, then go to Step 6.
2	**INSPECT PUSH BUTTON START SWITCH 1 CIRCUIT FOR OPEN CIRCUIT** • Verify that the push button start connector is disconnected. • Inspect for continuity between push button start terminal G (vehicle wiring harness side) and body ground. • Is there continuity?	Yes	Go to the next step.
		No	Repair or replace the wiring harness which has an open circuit, then go to Step 6.
3	**INSPECT START STOP UNIT CONNECTOR CONDITION** • Disconnect the start stop unit connector. • Inspect the connector engagement and connection condition and inspect the terminals for damage, deformation, corrosion, or disconnection. • Is the connector normal?	Yes	Go to the next step.
		No	Repair or replace the connector, then go to Step 6.
4	**INSPECT PUSH BUTTON START SWITCH 1 CIRCUIT FOR OPEN CIRCUIT** • Verify that the push button start and start stop unit connectors are disconnected. • Inspect the wiring harness for continuity between start stop unit terminal 1H (vehicle wiring harness side) and push button start terminal C (vehicle wiring harness side). • Is there continuity?	Yes	Go to the next step.
		No	Repair or replace the wiring harness which has an open circuit, then go to Step 6.
5	**INSPECT PUSH BUTTON START SWITCH 1** • Inspect push button start switch 1. (See 09-21-25 PUSH BUTTON START INSPECTION.) • Is push button start switch 1 normal?	Yes	Go to the next step.
		No	Replace the push button start, then go to the next step. (See 09-21-24 PUSH BUTTON START REMOVAL/INSTALLATION.)

ON-BOARD DIAGNOSTIC [START STOP UNIT]

Step	Inspection		Action
6	**VERIFY THAT REPAIRS HAVE BEEN COMPLETED** • Reconnect all the disconnected connectors. • Reconnect the disconnected negative battery cable. (See 01-17A-11 NEGATIVE BATTERY CABLE DISCONNECTION/CONNECTION [SKYACTIV-G 2.0].) (See 01-17A-13 NEGATIVE BATTERY CABLE DISCONNECTION/CONNECTION [SKYACTIV-G 2.0 (WITHOUT i-stop)].) (See 01-17B-9 NEGATIVE BATTERY CABLE DISCONNECTION/CONNECTION [SKYACTIV-D 2.2].) • Clear DTC for the start stop unit using the M-MDS. (See 09-02C-7 CLEARING DTC [START STOP UNIT].) • Switch the ignition ON (engine off or on) and press the push button start **5 times or more**. • Perform the DTC inspection for the start stop unit using the M-MDS. (See 09-02C-6 DTC INSPECTION [START STOP UNIT].) • Is DTC B108B:24 displayed?	Yes	Repeat the inspection from Step 1. • If the malfunction recurs, replace the start stop unit, then go to the next step. (See 09-14-54 START STOP UNIT REMOVAL/INSTALLATION.)
		No	Go to the next step.
7	**VERIFY IF OTHER DTCs DISPLAYED** • Are any other DTCs displayed?	Yes	Repair the malfunctioning part according to the applicable DTC troubleshooting. (See 09-02C-8 DTC TABLE [START STOP UNIT].)
		No	DTC troubleshooting completed.

ON-BOARD DIAGNOSTIC [START STOP UNIT]

DTC B108C:23 [START STOP UNIT]

id0902p6019500

System malfunction location	**Push button start switch 2 circuit malfunction**
Detection condition	• Start stop unit detects push button start switch 2 ON stuck for **120 s or more**.
Fail-safe	• Perform the control with push button start switch 2 turned off.
Possible cause	• Push button start connector or terminal malfunction • Start stop unit connector or terminal malfunction • Short to ground in wiring harness between start stop unit terminal 2J and push button start terminal I • Push button start switch 2 malfunction • Start stop unit malfunction

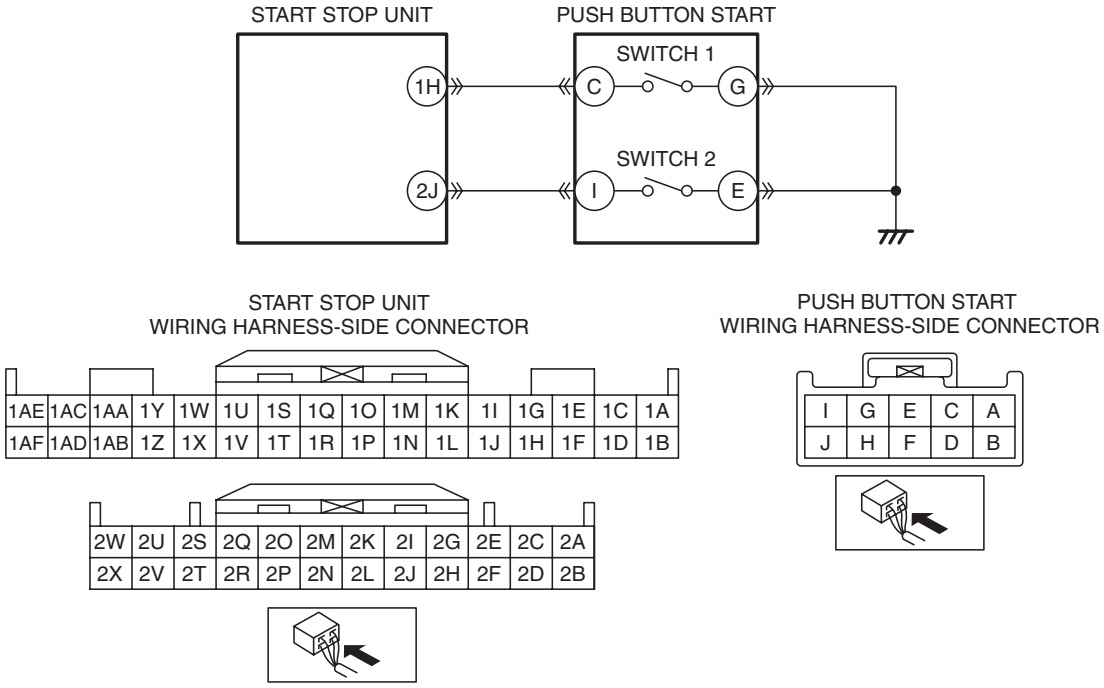

Diagnostic Procedure

Step	Inspection		Action
1	**INSPECT PUSH BUTTON START CONNECTOR CONDITION** • Switch the ignition to off. • Disconnect the negative battery cable. (See 01-17A-11 NEGATIVE BATTERY CABLE DISCONNECTION/CONNECTION [SKYACTIV-G 2.0].) (See 01-17A-13 NEGATIVE BATTERY CABLE DISCONNECTION/CONNECTION [SKYACTIV-G 2.0 (WITHOUT i-stop)].) (See 01-17B-9 NEGATIVE BATTERY CABLE DISCONNECTION/CONNECTION [SKYACTIV-D 2.2].) • Disconnect the push button start connector. • Inspect the connector engagement and connection condition and inspect the terminals for damage, deformation, corrosion, or disconnection. • Is the connector normal?	Yes	Go to the next step.
		No	Repair or replace the connector, then go to Step 5.

ON-BOARD DIAGNOSTIC [START STOP UNIT]

Step	Inspection		Action
2	**INSPECT START STOP UNIT CONNECTOR CONDITION** • Disconnect the start stop unit connector. • Inspect the connector engagement and connection condition and inspect the terminals for damage, deformation, corrosion, or disconnection. • Is the connector normal?	Yes	Go to the next step.
		No	Repair or replace the connector, then go to Step 5.
3	**INSPECT PUSH BUTTON START SWITCH 2 CIRCUIT FOR SHORT TO GROUND** • Verify that the push button start and start stop unit connectors are disconnected. • Inspect for continuity between push button start terminal I (vehicle wiring harness) and body ground. • Is there continuity?	Yes	Repair or replace the wiring harness which is shorted to ground, then go to Step 5.
		No	Go to the next step.
4	**INSPECT PUSH BUTTON START SWITCH 2** • Inspect push button start switch 2. (See 09-21-25 PUSH BUTTON START INSPECTION.) • Is push button start switch 2 normal?	Yes	Go to the next step.
		No	Replace the push button start, then go to the next step. (See 09-21-24 PUSH BUTTON START REMOVAL/INSTALLATION.)
5	**VERIFY THAT REPAIRS HAVE BEEN COMPLETED** • Reconnect all the disconnected connectors. • Reconnect the disconnected negative battery cable. (See 01-17A-11 NEGATIVE BATTERY CABLE DISCONNECTION/CONNECTION [SKYACTIV-G 2.0].) (See 01-17A-13 NEGATIVE BATTERY CABLE DISCONNECTION/CONNECTION [SKYACTIV-G 2.0 (WITHOUT i-stop)].) (See 01-17B-9 NEGATIVE BATTERY CABLE DISCONNECTION/CONNECTION [SKYACTIV-D 2.2].) • Clear DTC for the start stop unit using the M-MDS. (See 09-02C-7 CLEARING DTC [START STOP UNIT].) • Switch the ignition ON (engine off or on) and wait for **120 s or more**. • Perform the DTC inspection for the start stop unit using the M-MDS. (See 09-02C-6 DTC INSPECTION [START STOP UNIT].) • Is DTC B108C:23 displayed?	Yes	Repeat the inspection from Step 1. • If the malfunction recurs, replace the start stop unit, then go to the next step. (See 09-14-54 START STOP UNIT REMOVAL/INSTALLATION.)
		No	Go to the next step.
6	**VERIFY IF OTHER DTCs DISPLAYED** • Are any other DTCs displayed?	Yes	Repair the malfunctioning part according to the applicable DTC troubleshooting. (See 09-02C-8 DTC TABLE [START STOP UNIT].)
		No	DTC troubleshooting completed.

ON-BOARD DIAGNOSTIC [START STOP UNIT]

DTC B108C:24 [START STOP UNIT]

id0902p6019600

System malfunction location	**Push button start switch 2 circuit malfunction**
Detection condition	• The start stop unit detects that push button start switch 2 is kept in an off condition **5 times or more** even though push button start switch 1 is on.
Fail-safe	—
Possible cause	• Push button start connector or terminal malfunction • Open circuit in wiring harness between push button start terminal E and body ground • Start stop unit connector or terminal malfunction • Open circuit in wiring harness between start stop unit terminal 2J and push button start terminal I • Push button start switch 2 malfunction • Start stop unit malfunction

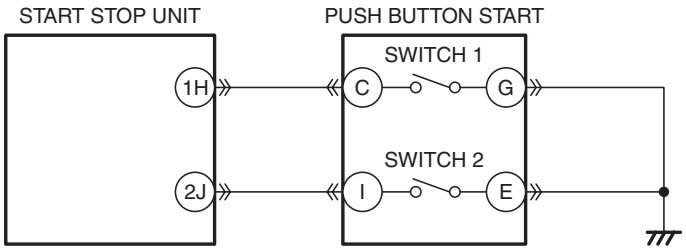

START STOP UNIT
WIRING HARNESS-SIDE CONNECTOR

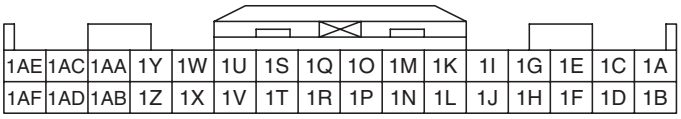

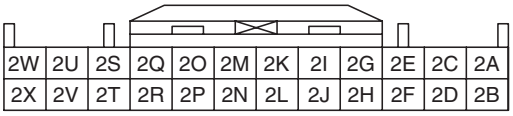

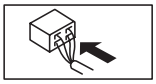

PUSH BUTTON START
WIRING HARNESS-SIDE CONNECTOR

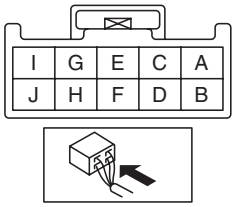

ON-BOARD DIAGNOSTIC [START STOP UNIT]

Diagnostic Procedure

Step	Inspection		Action
1	**INSPECT PUSH BUTTON START CONNECTOR CONDITION** • Switch the ignition to off. • Disconnect the negative battery cable. (See 01-17A-11 NEGATIVE BATTERY CABLE DISCONNECTION/CONNECTION [SKYACTIV-G 2.0].) (See 01-17A-13 NEGATIVE BATTERY CABLE DISCONNECTION/CONNECTION [SKYACTIV-G 2.0 (WITHOUT i-stop)].) (See 01-17B-9 NEGATIVE BATTERY CABLE DISCONNECTION/CONNECTION [SKYACTIV-D 2.2].) • Disconnect the push button start connector. • Inspect the connector engagement and connection condition and inspect the terminals for damage, deformation, corrosion, or disconnection. • Is the connector normal?	Yes	Go to the next step.
		No	Repair or replace the connector, then go to Step 6.
2	**INSPECT PUSH BUTTON START SWITCH 2 CIRCUIT FOR OPEN CIRCUIT** • Verify that the push button start connector is disconnected. • Inspect for continuity between push button start terminal E (vehicle wiring harness side) and body ground. • Is there continuity?	Yes	Go to the next step.
		No	Repair or replace the wiring harness which has an open circuit, then go to Step 6.
3	**INSPECT START STOP UNIT CONNECTOR CONDITION** • Disconnect the start stop unit connector. • Inspect the connector engagement and connection condition and inspect the terminals for damage, deformation, corrosion, or disconnection. • Is the connector normal?	Yes	Go to the next step.
		No	Repair or replace the connector, then go to Step 6.
4	**INSPECT PUSH BUTTON START SWITCH 2 CIRCUIT FOR OPEN CIRCUIT** • Verify that the push button start and start stop unit connectors are disconnected. • Inspect the wiring harness for continuity between start stop unit terminal 2J (vehicle wiring harness side) and push button start terminal I (vehicle wiring harness side). • Is there continuity?	Yes	Go to the next step.
		No	Repair or replace the wiring harness which has an open circuit, then go to Step 6.
5	**INSPECT PUSH BUTTON START SWITCH 2** • Inspect push button start switch 2. (See 09-21-25 PUSH BUTTON START INSPECTION.) • Is push button start switch 2 normal?	Yes	Go to the next step.
		No	Replace the push button start, then go to the next step. (See 09-21-24 PUSH BUTTON START REMOVAL/INSTALLATION.)

ON-BOARD DIAGNOSTIC [START STOP UNIT]

Step	Inspection		Action
6	**VERIFY THAT REPAIRS HAVE BEEN COMPLETED** • Reconnect all the disconnected connectors. • Reconnect the disconnected negative battery cable. (See 01-17A-11 NEGATIVE BATTERY CABLE DISCONNECTION/CONNECTION [SKYACTIV-G 2.0].) (See 01-17A-13 NEGATIVE BATTERY CABLE DISCONNECTION/CONNECTION [SKYACTIV-G 2.0 (WITHOUT i-stop)].) (See 01-17B-9 NEGATIVE BATTERY CABLE DISCONNECTION/CONNECTION [SKYACTIV-D 2.2].) • Clear DTC for the start stop unit using the M-MDS. (See 09-02C-7 CLEARING DTC [START STOP UNIT].) • Switch the ignition ON (engine off or on) and press the push button start **5 times or more**. • Perform the DTC inspection for the start stop unit using the M-MDS. (See 09-02C-6 DTC INSPECTION [START STOP UNIT].) • Is DTC B108C:24 displayed?	Yes	Repeat the inspection from Step 1. • If the malfunction recurs, replace the start stop unit, then go to the next step. (See 09-14-54 START STOP UNIT REMOVAL/INSTALLATION.)
		No	Go to the next step.
7	**VERIFY IF OTHER DTCs DISPLAYED** • Are any other DTCs displayed?	Yes	Repair the malfunctioning part according to the applicable DTC troubleshooting. (See 09-02C-8 DTC TABLE [START STOP UNIT].)
		No	DTC troubleshooting completed.

ON-BOARD DIAGNOSTIC [START STOP UNIT]

DTC B10AC:13 [START STOP UNIT]

id0902p6019700

System malfunction location	**Cruise control switch circuit malfunction**
Detection condition	• The start stop unit detected an open circuit in the cruise control switch circuit for **5 s or more** with the ignition switched ON (engine off or on).
Fail-safe	—
Possible cause	• Instrument cluster configuration error • Clock spring connector or terminal malfunction • Clock spring malfunction • Start stop unit connector or terminal malfunction • Open circuit in wiring harness between the following terminals: — Start stop unit terminal 1Y and clock spring (start stop unit side) terminal J — Start stop unit terminal 1Z and clock spring (start stop unit side) terminal N • Cruise control switch malfunction • Start stop unit malfunction

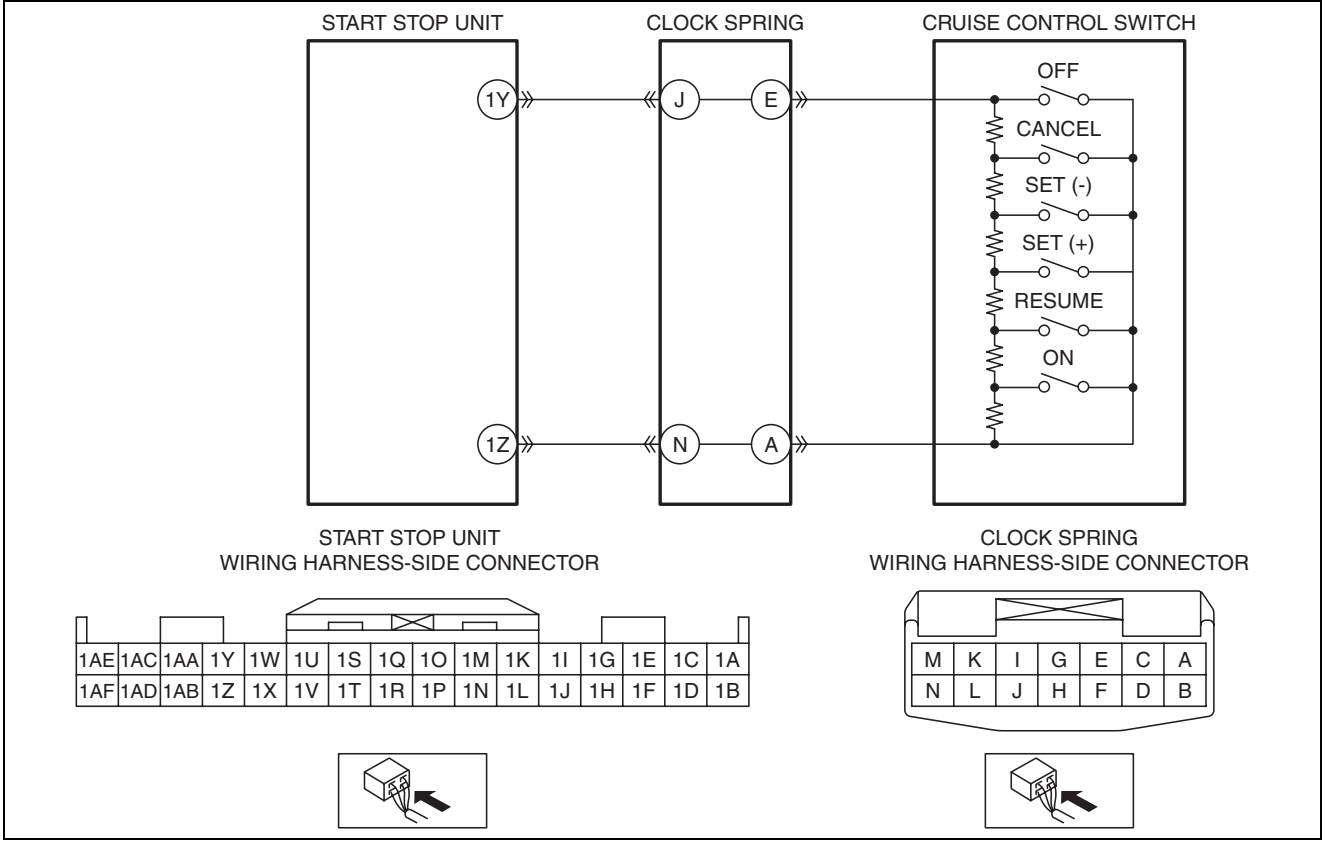

ON-BOARD DIAGNOSTIC [START STOP UNIT]

Diagnostic Procedure

Step	Inspection		Action
1	**PERFORM INSTRUMENT CLUSTER CONFIGURATION (USING AS-BUILT DATA)** • Using the M-MDS, perform the instrument cluster configuration with the As-Built data. (See 09-22-19 INSTRUMENT CLUSTER CONFIGURATION (USING AS-BUILT DATA).) • Clear DTC for the start stop unit using the M-MDS. (See 09-02C-7 CLEARING DTC [START STOP UNIT].) • Switch the ignition ON (engine off or on) and wait for **5 s or more**. • Perform the DTC inspection for the start stop unit using the M-MDS. (See 09-02C-6 DTC INSPECTION [START STOP UNIT].) • Is DTC B10AC:13 displayed?	Yes	Using the M-MDS, re-perform the instrument cluster configuration using the As-Built data, then go to the next step. (See 09-22-19 INSTRUMENT CLUSTER CONFIGURATION (USING AS-BUILT DATA).)
		No	Go to Step 8.
2	**INSPECT CLOCK SPRING CONNECTOR CONDITION** • Switch the ignition to off. • Disconnect the negative battery cable. (See 01-17A-11 NEGATIVE BATTERY CABLE DISCONNECTION/CONNECTION [SKYACTIV-G 2.0].) (See 01-17A-13 NEGATIVE BATTERY CABLE DISCONNECTION/CONNECTION [SKYACTIV-G 2.0 (WITHOUT i-stop)].) (See 01-17B-9 NEGATIVE BATTERY CABLE DISCONNECTION/CONNECTION [SKYACTIV-D 2.2].) • Disconnect the clock spring connector. • Inspect the connector engagement and connection condition and inspect the terminals for damage, deformation, corrosion, or disconnection. • Is the connector normal?	Yes	Go to the next step.
		No	Repair or replace the connector, then go to Step 7.
3	**INSPECT CLOCK SPRING** • Inspect the clock spring. (See 08-10-28 CLOCK SPRING INSPECTION.) • Is the clock spring normal?	Yes	Go to the next step.
		No	Replace the clock spring, then go to Step 7. (See 08-10-24 CLOCK SPRING REMOVAL/INSTALLATION.)
4	**INSPECT START STOP UNIT CONNECTOR CONDITION** • Disconnect the start stop unit connector. • Inspect the connector engagement and connection condition and inspect the terminals for damage, deformation, corrosion, or disconnection. • Is the connector normal?	Yes	Go to the next step.
		No	Repair or replace the connector, then go to Step 7.
5	**INSPECT CRUISE CONTROL SWITCH CIRCUIT FOR OPEN CIRCUIT** • Verify that the start stop unit and clock spring connectors are disconnected. • Inspect the wiring harness between the following terminals (vehicle wiring harness side) for continuity. — Start stop unit terminal 1Y and clock spring (start stop unit side) terminal J — Start stop unit terminal 1Z and clock spring (start stop unit side) terminal N • Is there continuity?	Yes	Go to the next step.
		No	Repair or replace the wiring harness which has an open circuit, then go to Step 7.

ON-BOARD DIAGNOSTIC [START STOP UNIT]

Step	Inspection		Action
6	**INSPECT CRUISE CONTROL SWITCH** • Inspect the cruise control switch. (See 01-20A-1 CRUISE CONTROL SWITCH INSPECTION [SKYACTIV-G 2.0].) (See 01-20B-1 CRUISE CONTROL SWITCH INSPECTION [SKYACTIV-D 2.2].) • Is the cruise control switch normal?	Yes	Go to the next step.
		No	Replace the cruise control switch, then go to the next step. (See 09-20-54 STEERING SWITCH REMOVAL/INSTALLATION.)
7	**VERIFY THAT REPAIRS HAVE BEEN COMPLETED** • Reconnect all the disconnected connectors. • Reconnect the disconnected negative battery cable. (See 01-17A-11 NEGATIVE BATTERY CABLE DISCONNECTION/CONNECTION [SKYACTIV-G 2.0].) (See 01-17A-13 NEGATIVE BATTERY CABLE DISCONNECTION/CONNECTION [SKYACTIV-G 2.0 (WITHOUT i-stop)].) (See 01-17B-9 NEGATIVE BATTERY CABLE DISCONNECTION/CONNECTION [SKYACTIV-D 2.2].) • Clear DTC for the start stop unit using the M-MDS. (See 09-02C-7 CLEARING DTC [START STOP UNIT].) • Switch the ignition ON (engine off or on) and wait for **5 s or more**. • Perform the DTC inspection for the start stop unit using the M-MDS. (See 09-02C-6 DTC INSPECTION [START STOP UNIT].) • Is DTC B10AC:13 displayed?	Yes	Repeat the inspection from Step 1. • If the malfunction recurs, replace the start stop unit, then go to the next step. (See 09-14-54 START STOP UNIT REMOVAL/INSTALLATION.)
		No	Go to the next step.
8	**VERIFY IF OTHER DTCs DISPLAYED** • Are any other DTCs displayed?	Yes	Repair the malfunctioning part according to the applicable DTC troubleshooting. (See 09-02C-8 DTC TABLE [START STOP UNIT].)
		No	DTC troubleshooting completed.

ON-BOARD DIAGNOSTIC [START STOP UNIT]

DTC B10AC:23 [START STOP UNIT]

id0902p6019800

System malfunction location	**Cruise control switch circuit malfunction**
Detection condition	• The start stop unit detects any cruise control switch stuck on for **2 min or more** with the ignition switched ON (engine off or on).
Fail-safe	—
Possible cause	• Instrument cluster configuration error • Clock spring connector or terminal malfunction • Clock spring malfunction • Start stop unit connector or terminal malfunction • Short to power supply in wiring harness between start stop unit terminal 1Z and clock spring terminal N (start stop unit side) • Cruise control switch malfunction • Start stop unit malfunction

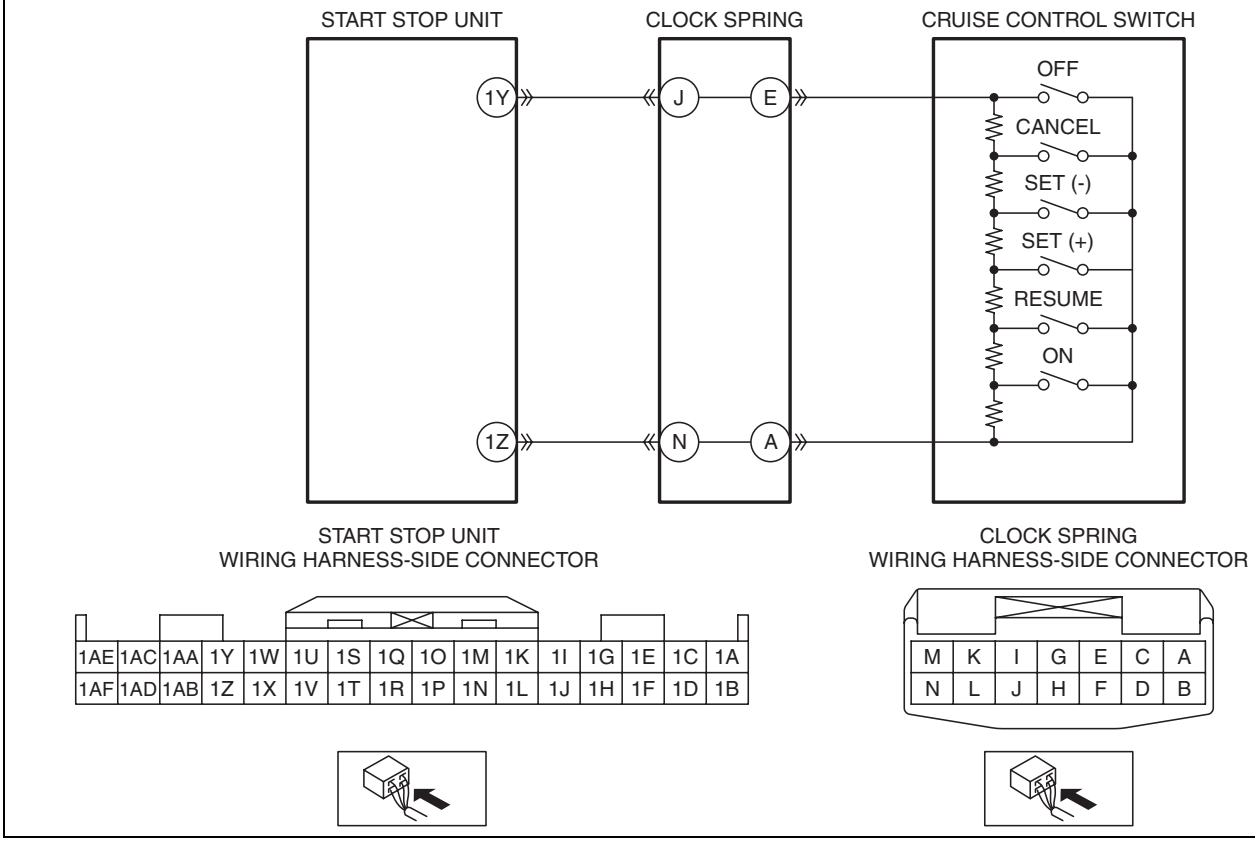

ON-BOARD DIAGNOSTIC [START STOP UNIT]

Diagnostic Procedure

Step	Inspection		Action
1	**PERFORM INSTRUMENT CLUSTER CONFIGURATION (USING AS-BUILT DATA)** • Using the M-MDS, perform the instrument cluster configuration with the As-Built data. (See 09-22-19 INSTRUMENT CLUSTER CONFIGURATION (USING AS-BUILT DATA).) • Clear DTC for the start stop unit using the M-MDS. (See 09-02C-7 CLEARING DTC [START STOP UNIT].) • Switch the ignition ON (engine off or on) and wait for **2 min or more**. • Perform the DTC inspection for the start stop unit using the M-MDS. (See 09-02C-6 DTC INSPECTION [START STOP UNIT].) • Is DTC B10AC:23 displayed?	Yes	Using the M-MDS, re-perform the instrument cluster configuration using the As-Built data, then go to the next step. (See 09-22-19 INSTRUMENT CLUSTER CONFIGURATION (USING AS-BUILT DATA).)
		No	Go to Step 8.
2	**INSPECT CLOCK SPRING CONNECTOR CONDITION** • Switch the ignition to off. • Disconnect the negative battery cable. (See 01-17A-11 NEGATIVE BATTERY CABLE DISCONNECTION/CONNECTION [SKYACTIV-G 2.0].) (See 01-17A-13 NEGATIVE BATTERY CABLE DISCONNECTION/CONNECTION [SKYACTIV-G 2.0 (WITHOUT i-stop)].) (See 01-17B-9 NEGATIVE BATTERY CABLE DISCONNECTION/CONNECTION [SKYACTIV-D 2.2].) • Disconnect the clock spring connector. • Inspect the connector engagement and connection condition and inspect the terminals for damage, deformation, corrosion, or disconnection. • Is the connector normal?	Yes	Go to the next step.
		No	Repair or replace the connector, then go to Step 7.
3	**INSPECT CLOCK SPRING** • Inspect the clock spring. (See 08-10-28 CLOCK SPRING INSPECTION.) • Is the clock spring normal?	Yes	Go to the next step.
		No	Replace the clock spring, then go to Step 7. (See 08-10-24 CLOCK SPRING REMOVAL/INSTALLATION.)
4	**INSPECT START STOP UNIT CONNECTOR CONDITION** • Disconnect the start stop unit connector. • Inspect the connector engagement and connection condition and inspect the terminals for damage, deformation, corrosion, or disconnection. • Is the connector normal?	Yes	Go to the next step.
		No	Repair or replace the connector, then go to Step 7.

ON-BOARD DIAGNOSTIC [START STOP UNIT]

Step	Inspection		Action
5	**INSPECT CRUISE CONTROL SWITCH CIRCUIT FOR SHORT TO POWER SUPPLY** • Verify that the start stop unit and clock spring connectors are disconnected. • Connect the negative battery cable. (See 01-17A-11 NEGATIVE BATTERY CABLE DISCONNECTION/CONNECTION [SKYACTIV-G 2.0].) (See 01-17A-13 NEGATIVE BATTERY CABLE DISCONNECTION/CONNECTION [SKYACTIV-G 2.0 (WITHOUT i-stop)].) (See 01-17B-9 NEGATIVE BATTERY CABLE DISCONNECTION/CONNECTION [SKYACTIV-D 2.2].) • Switch the ignition ON (engine off or on). • Measure the voltage at clock spring (start stop unit side) (vehicle wiring harness side) terminal N. • Is the voltage **0 V**?	Yes	Go to the next step.
		No	Repair or replace the wiring harness which is shorted to power supply, then go to Step 7.
6	**INSPECT CRUISE CONTROL SWITCH** • Inspect the cruise control switch. (See 01-20A-1 CRUISE CONTROL SWITCH INSPECTION [SKYACTIV-G 2.0].) (See 01-20B-1 CRUISE CONTROL SWITCH INSPECTION [SKYACTIV-D 2.2].) • Is the cruise control switch normal?	Yes	Go to the next step.
		No	Replace the cruise control switch, then go to the next step. (See 09-20-54 STEERING SWITCH REMOVAL/INSTALLATION.)
7	**VERIFY THAT REPAIRS HAVE BEEN COMPLETED** • Reconnect all the disconnected connectors. • Reconnect the disconnected negative battery cable. (See 01-17A-11 NEGATIVE BATTERY CABLE DISCONNECTION/CONNECTION [SKYACTIV-G 2.0].) (See 01-17A-13 NEGATIVE BATTERY CABLE DISCONNECTION/CONNECTION [SKYACTIV-G 2.0 (WITHOUT i-stop)].) (See 01-17B-9 NEGATIVE BATTERY CABLE DISCONNECTION/CONNECTION [SKYACTIV-D 2.2].) • Clear DTC for the start stop unit using the M-MDS. (See 09-02C-7 CLEARING DTC [START STOP UNIT].) • Switch the ignition ON (engine off or on) and wait for **2 min or more**. • Perform the DTC inspection for the start stop unit using the M-MDS. (See 09-02C-6 DTC INSPECTION [START STOP UNIT].) • Is DTC B10AC:23 displayed?	Yes	Repeat the inspection from Step 1. • If the malfunction recurs, replace the start stop unit, then go to the next step. (See 09-14-54 START STOP UNIT REMOVAL/INSTALLATION.)
		No	Go to the next step.
8	**VERIFY IF OTHER DTCs DISPLAYED** • Are any other DTCs displayed?	Yes	Repair the malfunctioning part according to the applicable DTC troubleshooting. (See 09-02C-8 DTC TABLE [START STOP UNIT].)
		No	DTC troubleshooting completed.

ON-BOARD DIAGNOSTIC [START STOP UNIT]

DTC B10C9:1F [START STOP UNIT]

id0902p6019900

System malfunction location	**Keyless antenna (interior, center) circuit malfunction**
Detection condition	• The start stop unit detects an open circuit in the keyless antenna (interior, center) or a short to ground with the ignition switched off.
Fail-safe	—
Possible cause	• Keyless antenna (interior, center) connector or terminal malfunction • Start stop unit connector or terminal malfunction • Short to ground in wiring harness between the following terminals: — Start stop unit terminal 2I and keyless antenna (interior, center) terminal B — Start stop unit terminal 2K and keyless antenna (interior, center) terminal A • Open circuit in wiring harness between the following terminals: — Start stop unit terminal 2I and keyless antenna (interior, center) terminal B — Start stop unit terminal 2K and keyless antenna (interior, center) terminal A • Keyless antenna (interior, center) malfunction • Start stop unit malfunction

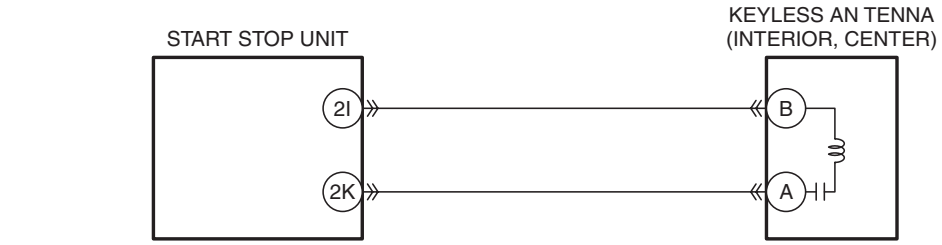

START STOP UNIT
WIRING HARNESS-SIDE CONNECTOR

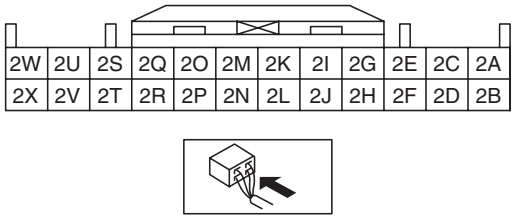

KEYLESS AN TENNA
(INTERIOR, CENTER)
WIRING HARNESS-SIDE CONNECTOR

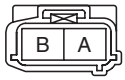

ON-BOARD DIAGNOSTIC [START STOP UNIT]

Diagnostic Procedure

Step	Inspection		Action
1	**INSPECT KEYLESS ANTENNA (INTERIOR, CENTER) CONNECTOR CONDITION** • Switch the ignition to off. • Disconnect the negative battery cable. (See 01-17A-11 NEGATIVE BATTERY CABLE DISCONNECTION/CONNECTION [SKYACTIV-G 2.0].) (See 01-17A-13 NEGATIVE BATTERY CABLE DISCONNECTION/CONNECTION [SKYACTIV-G 2.0 (WITHOUT i-stop)].) (See 01-17B-9 NEGATIVE BATTERY CABLE DISCONNECTION/CONNECTION [SKYACTIV-D 2.2].) • Disconnect the keyless antenna (interior, center) connector. • Inspect the connector engagement and connection condition and inspect the terminals for damage, deformation, corrosion, or disconnection. • Is the connector normal?	Yes	Go to the next step.
		No	Repair or replace the connector, then go to Step 6.
2	**INSPECT START STOP UNIT CONNECTOR CONDITION** • Disconnect the start stop unit connector. • Inspect the connector engagement and connection condition and inspect the terminals for damage, deformation, corrosion, or disconnection. • Is the connector normal?	Yes	Go to the next step.
		No	Repair or replace the connector, then go to Step 6.
3	**INSPECT KEYLESS ANTENNA (INTERIOR, CENTER) CIRCUIT FOR SHORT TO GROUND** • Verify that the start stop unit and keyless antenna (interior, center) connectors are disconnected. • Inspect for continuity between the following terminals (vehicle wiring harness side) and body ground. — Keyless antenna (interior, center) terminal B — Keyless antenna (interior, center) terminal A • Is there continuity?	Yes	Repair or replace the wiring harness which is shorted to ground, then go to Step 6.
		No	Go to the next step.
4	**INSPECT KEYLESS ANTENNA (INTERIOR, CENTER) CIRCUIT FOR OPEN CIRCUIT** • Verify that the start stop unit and keyless antenna (interior, center) connectors are disconnected. • Inspect the wiring harness between the following terminals (vehicle wiring harness side) for continuity. — Start stop unit terminal 2I and keyless antenna (interior, center) terminal B — Start stop unit terminal 2K and keyless antenna (interior, center) terminal A • Is there continuity?	Yes	Go to the next step.
		No	Repair or replace the wiring harness which has an open circuit, then go to Step 6.

ON-BOARD DIAGNOSTIC [START STOP UNIT]

Step	Inspection		Action
5	**PERFORM DTC INSPECTION AND VERIFY IF MALFUNCTIONING PART IS KEYLESS ANTENNA (INTERIOR, CENTER)** • Reconnect all the disconnected connectors. • Reconnect the disconnected negative battery cable. (See 01-17A-11 NEGATIVE BATTERY CABLE DISCONNECTION/CONNECTION [SKYACTIV-G 2.0].) (See 01-17A-13 NEGATIVE BATTERY CABLE DISCONNECTION/CONNECTION [SKYACTIV-G 2.0 (WITHOUT i-stop)].) (See 01-17B-9 NEGATIVE BATTERY CABLE DISCONNECTION/CONNECTION [SKYACTIV-D 2.2].) • Clear DTC for the start stop unit using the M-MDS. (See 09-02C-7 CLEARING DTC [START STOP UNIT].) • Perform the DTC inspection for the start stop unit using the M-MDS. (See 09-02C-6 DTC INSPECTION [START STOP UNIT].) • Is DTC B10C9:1F displayed?	Yes	Replace the keyless antenna (interior, center), then go to the next step. (See 09-14-67 KEYLESS ANTENNA REMOVAL/ INSTALLATION.)
		No	Go to Step 7.
6	**VERIFY THAT REPAIRS HAVE BEEN COMPLETED** • Reconnect all the disconnected connectors. • Reconnect the disconnected negative battery cable. (See 01-17A-11 NEGATIVE BATTERY CABLE DISCONNECTION/CONNECTION [SKYACTIV-G 2.0].) (See 01-17A-13 NEGATIVE BATTERY CABLE DISCONNECTION/CONNECTION [SKYACTIV-G 2.0 (WITHOUT i-stop)].) (See 01-17B-9 NEGATIVE BATTERY CABLE DISCONNECTION/CONNECTION [SKYACTIV-D 2.2].) • Clear DTC for the start stop unit using the M-MDS. (See 09-02C-7 CLEARING DTC [START STOP UNIT].) • Perform the DTC inspection for the start stop unit using the M-MDS. (See 09-02C-6 DTC INSPECTION [START STOP UNIT].) • Is DTC B10C9:1F displayed?	Yes	Repeat the inspection from Step 1. • If the malfunction recurs, replace the start stop unit, then go to the next step. (See 09-14-54 START STOP UNIT REMOVAL/ INSTALLATION.)
		No	Go to the next step.
7	**VERIFY IF OTHER DTCs DISPLAYED** • Are any other DTCs displayed?	Yes	Repair the malfunctioning part according to the applicable DTC troubleshooting. (See 09-02C-8 DTC TABLE [START STOP UNIT].)
		No	DTC troubleshooting completed.

ON-BOARD DIAGNOSTIC [START STOP UNIT]

DTC B10E7:11 [START STOP UNIT]

id0902p6020000

System malfunction location	**IG1 relay circuit malfunction**
Detection condition	• The ignition is switched ON (engine off or on) and the starter stop unit detects voltage from IG1 relay output monitor as **less than 2.5 V** for **0.5 s or more** while the engine is not being cranked.
Fail-safe	—
Possible cause	• IG1 relay malfunction • Start stop unit connector or terminal malfunction • Short to ground in wiring harness between IG1 relay terminal E and start stop unit terminal 2S • Start stop unit malfunction

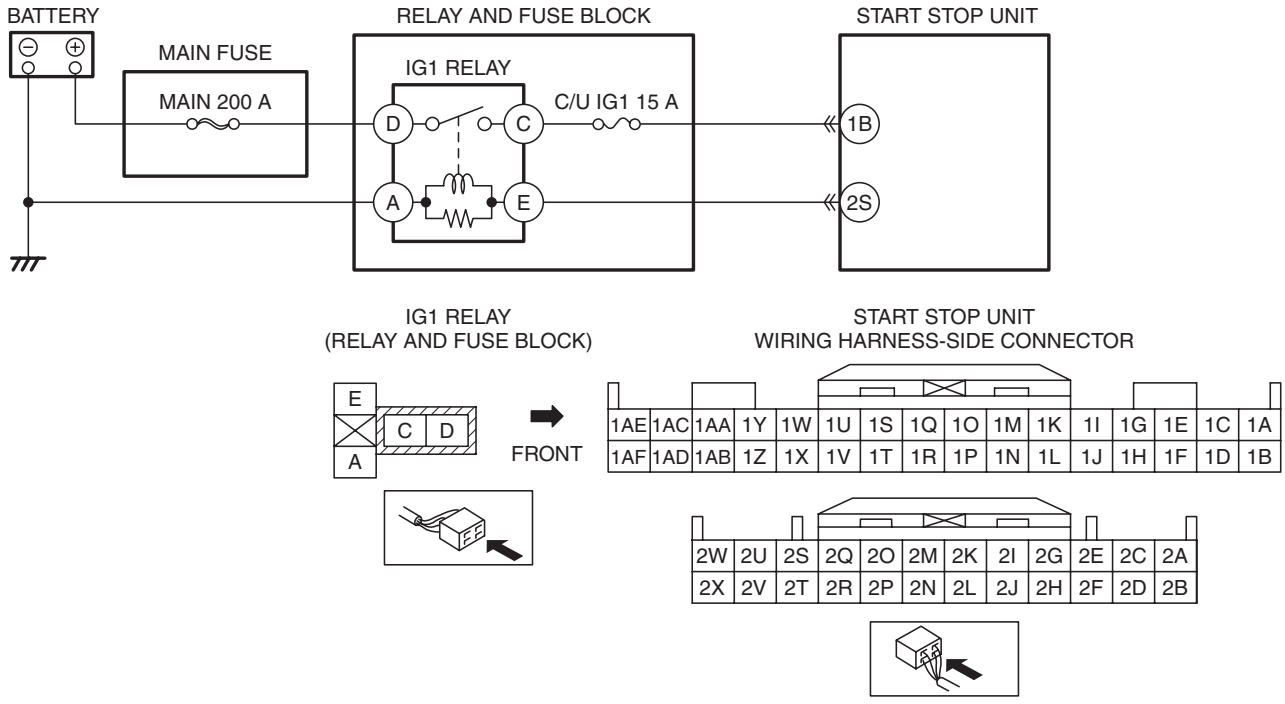

ON-BOARD DIAGNOSTIC [START STOP UNIT]

Diagnostic Procedure

Step	Inspection		Action
1	**INSPECT IG1 RELAY FOR MALFUNCTION** • Switch the ignition to off. • Disconnect the negative battery cable. (See 01-17A-11 NEGATIVE BATTERY CABLE DISCONNECTION/CONNECTION [SKYACTIV-G 2.0].) (See 01-17A-13 NEGATIVE BATTERY CABLE DISCONNECTION/CONNECTION [SKYACTIV-G 2.0 (WITHOUT i-stop)].) (See 01-17B-9 NEGATIVE BATTERY CABLE DISCONNECTION/CONNECTION [SKYACTIV-D 2.2].) • Remove the IG1 relay. (See 09-21-28 RELAY LOCATION.) • Inspect the IG1 relay. (See 09-21-29 RELAY INSPECTION.) • Is the IG1 relay normal?	Yes	Go to the next step.
		No	Replace the IG1 relay, then go to Step 4. (See 09-21-28 RELAY LOCATION.)
2	**INSPECT START STOP UNIT CONNECTOR CONDITION** • Disconnect the start stop unit connector. • Inspect the connector engagement and connection condition and inspect the terminals for damage, deformation, corrosion, or disconnection. • Is the connector normal?	Yes	Go to the next step.
		No	Repair or replace the connector, then go to Step 4.
3	**INSPECT IG1 RELAY CIRCUIT FOR SHORT TO GROUND** • Verify that the IG1 relay is removed. • Verify that the start stop unit connector is disconnected. • Inspect for continuity between IG1 relay terminal E (vehicle wiring harness side) and body ground. • Is there continuity?	Yes	Repair or replace the wiring harness which has a short to ground, then go to the next step.
		No	Go to the next step.
4	**VERIFY THAT REPAIRS HAVE BEEN COMPLETED** • Reconnect all the disconnected connectors. • Reconnect the disconnected negative battery cable. (See 01-17A-11 NEGATIVE BATTERY CABLE DISCONNECTION/CONNECTION [SKYACTIV-G 2.0].) (See 01-17A-13 NEGATIVE BATTERY CABLE DISCONNECTION/CONNECTION [SKYACTIV-G 2.0 (WITHOUT i-stop)].) (See 01-17B-9 NEGATIVE BATTERY CABLE DISCONNECTION/CONNECTION [SKYACTIV-D 2.2].) • Clear DTC for the start stop unit using the M-MDS. (See 09-02C-7 CLEARING DTC [START STOP UNIT].) • Switch the ignition ON (engine off or on) and wait for **0.5 s or more**. • Perform the DTC inspection for the start stop unit using the M-MDS. (See 09-02C-6 DTC INSPECTION [START STOP UNIT].) • Is the DTC B10E7:11 displayed?	Yes	Repeat the inspection from Step 1. • If the malfunction recurs, replace the start stop unit, then go to the next step. (See 09-14-54 START STOP UNIT REMOVAL/INSTALLATION.)
		No	Go to the next step.
5	**VERIFY IF OTHER DTCs DISPLAYED** • Are any other DTCs displayed?	Yes	Repair the malfunctioning part according to the applicable DTC troubleshooting. (See 09-02C-8 DTC TABLE [START STOP UNIT].)
		No	DTC troubleshooting completed.

ON-BOARD DIAGNOSTIC [START STOP UNIT]

DTC B10E7:12 [START STOP UNIT]

id0902p6020100

System malfunction location	**IG1 relay circuit malfunction**
Detection condition	• The start stop unit detects IG1 relay output monitor voltage of **2.5 V or more** for **0.5 s or more** with the ignition switched off or ACC.
Fail-safe	—
Possible cause	• IG1 relay malfunction • Start stop unit connector or terminal malfunction • Short to power supply in wiring harness between IG1 relay terminal E and start stop unit terminal 2S • Start stop unit malfunction

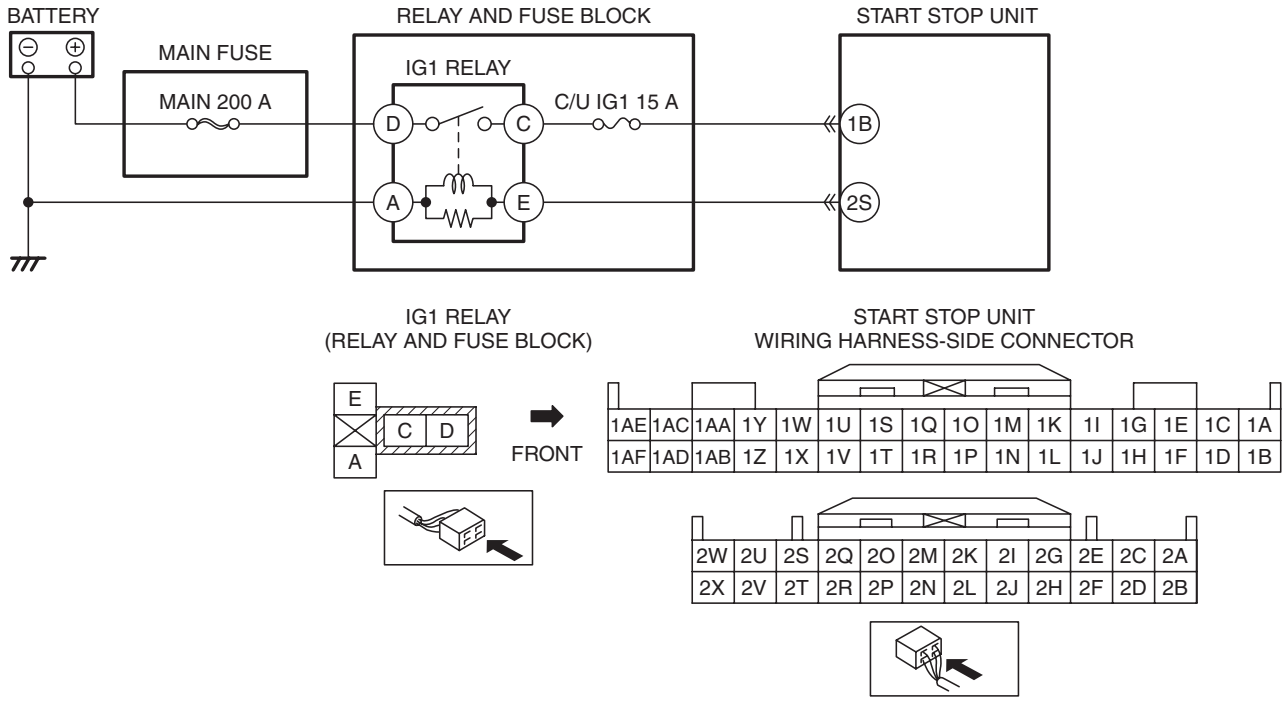

ON-BOARD DIAGNOSTIC [START STOP UNIT]

Diagnostic Procedure

Step	Inspection		Action
1	**INSPECT IG1 RELAY FOR MALFUNCTION** • Switch the ignition to off. • Disconnect the negative battery cable. (See 01-17A-11 NEGATIVE BATTERY CABLE DISCONNECTION/CONNECTION [SKYACTIV-G 2.0].) (See 01-17A-13 NEGATIVE BATTERY CABLE DISCONNECTION/CONNECTION [SKYACTIV-G 2.0 (WITHOUT i-stop)].) (See 01-17B-9 NEGATIVE BATTERY CABLE DISCONNECTION/CONNECTION [SKYACTIV-D 2.2].) • Remove the IG1 relay. (See 09-21-28 RELAY LOCATION.) • Inspect the IG1 relay. (See 09-21-29 RELAY INSPECTION.) • Is the IG1 relay normal?	Yes	Go to the next step.
		No	Replace the IG1 relay, then go to Step 4. (See 09-21-28 RELAY LOCATION.)
2	**INSPECT START STOP UNIT CONNECTOR CONDITION** • Disconnect the start stop unit connector. • Inspect the connector engagement and connection condition and inspect the terminals for damage, deformation, corrosion, or disconnection. • Is the connector normal?	Yes	Go to the next step.
		No	Repair or replace the connector, then go to Step 4.
3	**INSPECT IG1 RELAY CIRCUIT FOR SHORT TO POWER SUPPLY** • Reconnect all the disconnected connectors. • Connect the negative battery cable. (See 01-17A-11 NEGATIVE BATTERY CABLE DISCONNECTION/CONNECTION [SKYACTIV-G 2.0].) (See 01-17A-13 NEGATIVE BATTERY CABLE DISCONNECTION/CONNECTION [SKYACTIV-G 2.0 (WITHOUT i-stop)].) (See 01-17B-9 NEGATIVE BATTERY CABLE DISCONNECTION/CONNECTION [SKYACTIV-D 2.2].) • Measure the voltage at start stop unit terminal 2S (vehicle wiring harness side). • Is the voltage **2.5 V or more**?	Yes	Repair or replace the wiring harness which has a short to the power supply, then go to the next step.
		No	Go to the next step.
4	**VERIFY THAT REPAIRS HAVE BEEN COMPLETED** • Reconnect all the disconnected connectors. • Reconnect the disconnected negative battery cable. (See 01-17A-11 NEGATIVE BATTERY CABLE DISCONNECTION/CONNECTION [SKYACTIV-G 2.0].) (See 01-17A-13 NEGATIVE BATTERY CABLE DISCONNECTION/CONNECTION [SKYACTIV-G 2.0 (WITHOUT i-stop)].) (See 01-17B-9 NEGATIVE BATTERY CABLE DISCONNECTION/CONNECTION [SKYACTIV-D 2.2].) • Clear DTC for the start stop unit using the M-MDS. (See 09-02C-7 CLEARING DTC [START STOP UNIT].) • Switch the ignition to off and wait for **0.5 s or more**. • Perform the DTC inspection for the start stop unit using the M-MDS. (See 09-02C-6 DTC INSPECTION [START STOP UNIT].) • Is the DTC B10E7:12 displayed?	Yes	Repeat the inspection from Step 1. • If the malfunction recurs, replace the start stop unit, then go to the next step. (See 09-14-54 START STOP UNIT REMOVAL/INSTALLATION.)
		No	Go to the next step.

ON-BOARD DIAGNOSTIC [START STOP UNIT]

Step	Inspection		Action
5	**VERIFY IF OTHER DTCs DISPLAYED** • Are any other DTCs displayed?	Yes	Repair the malfunctioning part according to the applicable DTC troubleshooting. (See 09-02C-8 DTC TABLE [START STOP UNIT].)
		No	DTC troubleshooting completed.

DTC B10E7:16 [START STOP UNIT]

id0902p6020200

System malfunction location	**IG1 relay circuit malfunction**
Detection condition	• With the ignition switched ON (engine off or on), the start stop unit detects IG1 monitor voltage of **less than 2.5 V** for **1 s or more**.
Fail-safe	—
Possible cause	• IG1 relay malfunction • IG1 relay power supply circuit malfunction — Short to ground in wiring harness between MAIN 200 A fuse and IG1 relay terminal D — MAIN 200 A fuse malfunction — Open circuit in wiring harness between battery positive terminal and IG1 relay terminal D • Start stop unit connector or terminal malfunction • Start stop unit power supply circuit (IG1) malfunction — Short to ground in wiring harness between IG1 relay terminal C and start stop unit terminal 1B — C/U IG1 15 A fuse malfunction — Open circuit in wiring harness between IG1 relay terminal C and start stop unit terminal 1B • Start stop unit malfunction

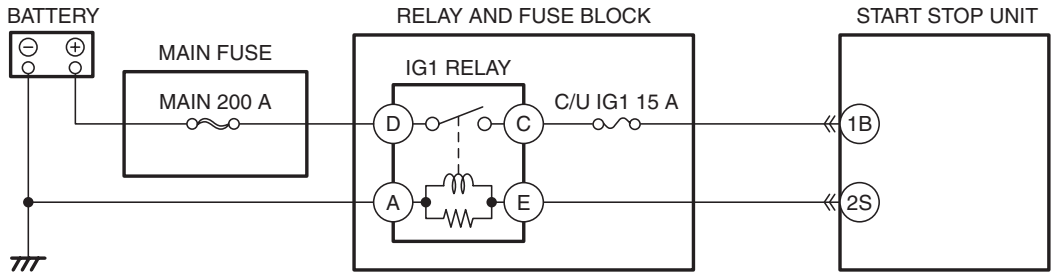

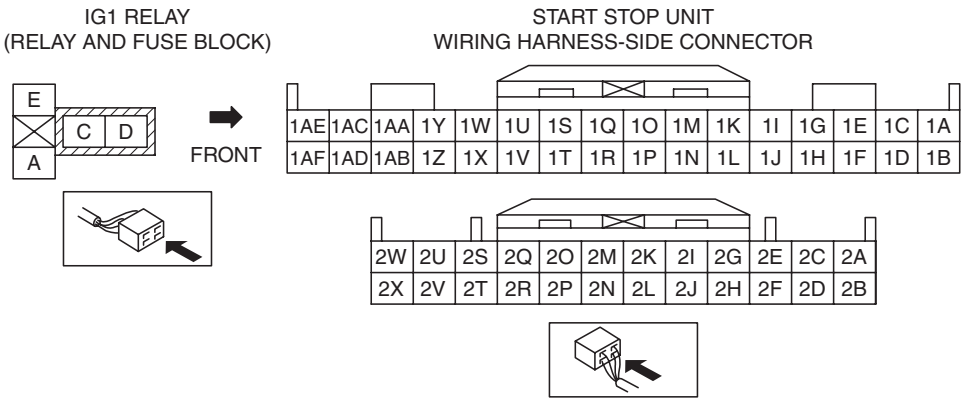

ON-BOARD DIAGNOSTIC [START STOP UNIT]

Diagnostic Procedure

Step	Inspection		Action
1	**INSPECT IG1 RELAY FOR MALFUNCTION** • Switch the ignition to off. • Disconnect the negative battery cable. (See 01-17A-11 NEGATIVE BATTERY CABLE DISCONNECTION/CONNECTION [SKYACTIV-G 2.0].) (See 01-17A-13 NEGATIVE BATTERY CABLE DISCONNECTION/CONNECTION [SKYACTIV-G 2.0 (WITHOUT i-stop)].) (See 01-17B-9 NEGATIVE BATTERY CABLE DISCONNECTION/CONNECTION [SKYACTIV-D 2.2].) • Remove the IG1 relay. (See 09-21-28 RELAY LOCATION.) • Inspect the IG1 relay. (See 09-21-29 RELAY INSPECTION.) • Is the IG1 relay normal?	Yes	Go to the next step.
		No	Replace the IG1 relay, then go to Step 5. (See 09-21-28 RELAY LOCATION.)
2	**INSPECT IG1 RELAY POWER SUPPLY CIRCUIT FOR OPEN CIRCUIT OR SHORT TO GROUND** • Verify that the IG1 relay is removed. • Connect the negative battery cable. (See 01-17A-11 NEGATIVE BATTERY CABLE DISCONNECTION/CONNECTION [SKYACTIV-G 2.0].) (See 01-17A-13 NEGATIVE BATTERY CABLE DISCONNECTION/CONNECTION [SKYACTIV-G 2.0 (WITHOUT i-stop)].) (See 01-17B-9 NEGATIVE BATTERY CABLE DISCONNECTION/CONNECTION [SKYACTIV-D 2.2].) • Switch the ignition ON (engine off or on). • Measure the voltage at IG1 relay terminal D (vehicle wiring harness side). • Is the voltage **B+**?	Yes	Go to the next step.
		No	Inspect the MAIN 200 A fuse. • If a fuse is burnt out: — Repair or replace the wiring harness which is shorted to ground. — Replace the fuse. • If a fuse is damaged: — Replace the fuse. • If the fuse is normal: — Repair or replace the wiring harness which has an open circuit. Go to Step 5.
3	**INSPECT START STOP UNIT CONNECTOR CONDITION** • Switch the ignition to off. • Disconnect the negative battery cable. (See 01-17A-11 NEGATIVE BATTERY CABLE DISCONNECTION/CONNECTION [SKYACTIV-G 2.0].) (See 01-17A-13 NEGATIVE BATTERY CABLE DISCONNECTION/CONNECTION [SKYACTIV-G 2.0 (WITHOUT i-stop)].) (See 01-17B-9 NEGATIVE BATTERY CABLE DISCONNECTION/CONNECTION [SKYACTIV-D 2.2].) • Disconnect the start stop unit connector. • Inspect the connector engagement and connection condition and inspect the terminals for damage, deformation, corrosion, or disconnection. • Is the connector normal?	Yes	Go to the next step.
		No	Repair or replace the connector, then go to Step 5.

ON-BOARD DIAGNOSTIC [START STOP UNIT]

Step	Inspection		Action
4	**INSPECT START STOP UNIT POWER SUPPLY CIRCUIT (IG1) FOR OPEN CIRCUIT OR SHORT TO GROUND** • Verify that the start stop unit connector is disconnected. • Connect the negative battery cable. (See 01-17A-11 NEGATIVE BATTERY CABLE DISCONNECTION/CONNECTION [SKYACTIV-G 2.0].) (See 01-17A-13 NEGATIVE BATTERY CABLE DISCONNECTION/CONNECTION [SKYACTIV-G 2.0 (WITHOUT i-stop)].) (See 01-17B-9 NEGATIVE BATTERY CABLE DISCONNECTION/CONNECTION [SKYACTIV-D 2.2].) • Switch the ignition ON (engine off or on). • Measure the voltage at IG1 relay terminal C (vehicle wiring harness side). • Is the voltage **B+**?	Yes	Go to the next step.
		No	Inspect the C/U IG1 15 A fuse. • If a fuse is burnt out: — Repair or replace the wiring harness which is shorted to ground. — Replace the fuse. • If a fuse is damaged: — Replace the fuse. • If the fuse is normal: — Repair or replace the wiring harness which has an open circuit. Go to the next step.
5	**VERIFY THAT REPAIRS HAVE BEEN COMPLETED** • Reconnect all the disconnected connectors. • Reconnect the disconnected negative battery cable. (See 01-17A-11 NEGATIVE BATTERY CABLE DISCONNECTION/CONNECTION [SKYACTIV-G 2.0].) (See 01-17A-13 NEGATIVE BATTERY CABLE DISCONNECTION/CONNECTION [SKYACTIV-G 2.0 (WITHOUT i-stop)].) (See 01-17B-9 NEGATIVE BATTERY CABLE DISCONNECTION/CONNECTION [SKYACTIV-D 2.2].) • Clear DTC for the start stop unit using the M-MDS. (See 09-02C-7 CLEARING DTC [START STOP UNIT].) • Switch the ignition ON (engine off or on) and wait for **1 s or more**. • Perform the DTC inspection for the start stop unit using the M-MDS. (See 09-02C-6 DTC INSPECTION [START STOP UNIT].) • Is the DTC B10E7:16 displayed?	Yes	Repeat the inspection from Step 1. • If the malfunction recurs, replace the start stop unit, then go to the next step. (See 09-14-54 START STOP UNIT REMOVAL/INSTALLATION.)
		No	Go to the next step.
6	**VERIFY IF OTHER DTCs DISPLAYED** • Are any other DTCs displayed?	Yes	Repair the malfunctioning part according to the applicable DTC troubleshooting. (See 09-02C-8 DTC TABLE [START STOP UNIT].)
		No	DTC troubleshooting completed.

ON-BOARD DIAGNOSTIC [START STOP UNIT]

DTC B10E7:17 [START STOP UNIT]

id0902p6020300

System malfunction location	**IG1 relay circuit malfunction**
Detection condition	• The start stop unit detects IG1 monitor voltage of **2.5 V or more** for **1 s or more** with the ignition switched off or ACC.
Fail-safe	• Door locking operation inhibited while under i-stop control.
Possible cause	• IG1 relay malfunction • Start stop unit connector or terminal malfunction • Short to power supply in wiring harness between IG1 relay terminal C and start stop unit terminal 1B • Start stop unit malfunction

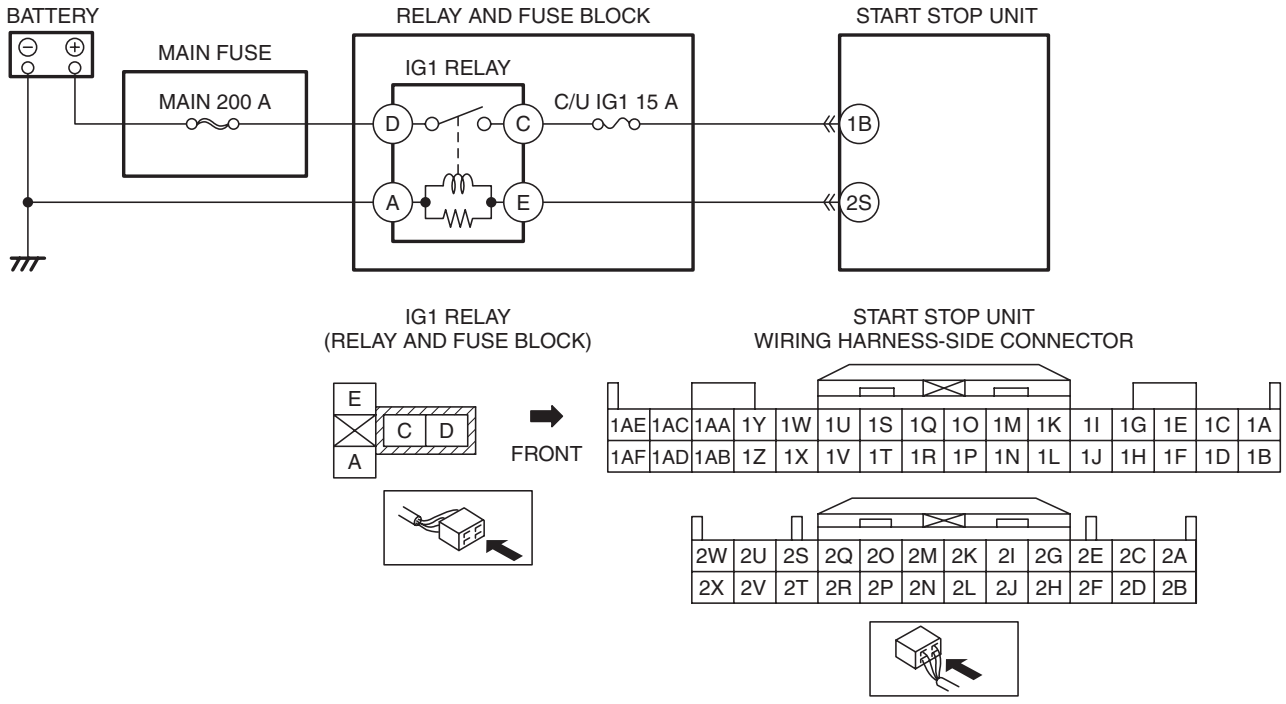

Diagnostic Procedure

Step	Inspection		Action
1	**INSPECT IG1 RELAY FOR MALFUNCTION** • Switch the ignition to off. • Disconnect the negative battery cable. (See 01-17A-11 NEGATIVE BATTERY CABLE DISCONNECTION/CONNECTION [SKYACTIV-G 2.0].) (See 01-17A-13 NEGATIVE BATTERY CABLE DISCONNECTION/CONNECTION [SKYACTIV-G 2.0 (WITHOUT i-stop)].) (See 01-17B-9 NEGATIVE BATTERY CABLE DISCONNECTION/CONNECTION [SKYACTIV-D 2.2].) • Remove the IG1 relay. (See 09-21-28 RELAY LOCATION.) • Inspect the IG1 relay. (See 09-21-29 RELAY INSPECTION.) • Is the IG1 relay normal?	Yes	Go to the next step.
		No	Replace the IG1 relay, then go to Step 4. (See 09-21-28 RELAY LOCATION.)
2	**INSPECT START STOP UNIT CONNECTOR CONDITION** • Disconnect the start stop unit connector. • Inspect the connector engagement and connection condition and inspect the terminals for damage, deformation, corrosion, or disconnection. • Is the connector normal?	Yes	Go to the next step.
		No	Repair or replace the connector, then go to Step 4.

ON-BOARD DIAGNOSTIC [START STOP UNIT]

Step	Inspection		Action
3	**INSPECT START STOP UNIT POWER SUPPLY CIRCUIT (IG1) FOR SHORT TO POWER SUPPLY** • Reconnect all the disconnected connectors. • Reconnect the disconnected negative battery cable. (See 01-17A-11 NEGATIVE BATTERY CABLE DISCONNECTION/CONNECTION [SKYACTIV-G 2.0].) (See 01-17A-13 NEGATIVE BATTERY CABLE DISCONNECTION/CONNECTION [SKYACTIV-G 2.0 (WITHOUT i-stop)].) (See 01-17B-9 NEGATIVE BATTERY CABLE DISCONNECTION/CONNECTION [SKYACTIV-D 2.2].) • Measure the voltage at start stop unit terminal 1B (vehicle wiring harness side). • Is the voltage **2.5 V or more**?	Yes	Repair or replace the wiring harness which has a short to the power supply, then go to the next step.
		No	Go to the next step.
4	**VERIFY THAT REPAIRS HAVE BEEN COMPLETED** • Reconnect all the disconnected connectors. • Reconnect the disconnected negative battery cable. (See 01-17A-11 NEGATIVE BATTERY CABLE DISCONNECTION/CONNECTION [SKYACTIV-G 2.0].) (See 01-17A-13 NEGATIVE BATTERY CABLE DISCONNECTION/CONNECTION [SKYACTIV-G 2.0 (WITHOUT i-stop)].) (See 01-17B-9 NEGATIVE BATTERY CABLE DISCONNECTION/CONNECTION [SKYACTIV-D 2.2].) • Clear DTC for the start stop unit using the M-MDS. (See 09-02C-7 CLEARING DTC [START STOP UNIT].) • Switch the ignition to off and wait for **1 s or more**. • Perform the DTC inspection for the start stop unit using the M-MDS. (See 09-02C-6 DTC INSPECTION [START STOP UNIT].) • Is the DTC B10E7:17 displayed?	Yes	Repeat the inspection from Step 1. • If the malfunction recurs, replace the start stop unit, then go to the next step. (See 09-14-54 START STOP UNIT REMOVAL/INSTALLATION.)
		No	Go to the next step.
5	**VERIFY IF OTHER DTCs DISPLAYED** • Are any other DTCs displayed?	Yes	Repair the malfunctioning part according to the applicable DTC troubleshooting. (See 09-02C-8 DTC TABLE [START STOP UNIT].)
		No	DTC troubleshooting completed.

ON-BOARD DIAGNOSTIC [START STOP UNIT]

DTC B112A:11 [START STOP UNIT]

id0902p6020400

System malfunction location	**IG2 relay circuit malfunction**
Detection condition	• With the ignition switched ON (engine off or on), the start stop unit detects IG2 relay circuit voltage of **2.5 V or less** for **0.5 s or more**.
Fail-safe	—
Possible cause	• Front body control module (FBCM) connector or terminal malfunction • Start stop unit connector or terminal malfunction • Short to ground in wiring harness between start stop unit terminal 2D and front body control module (FBCM) terminal 2U • Front body control module (FBCM) malfunction • Start stop unit malfunction

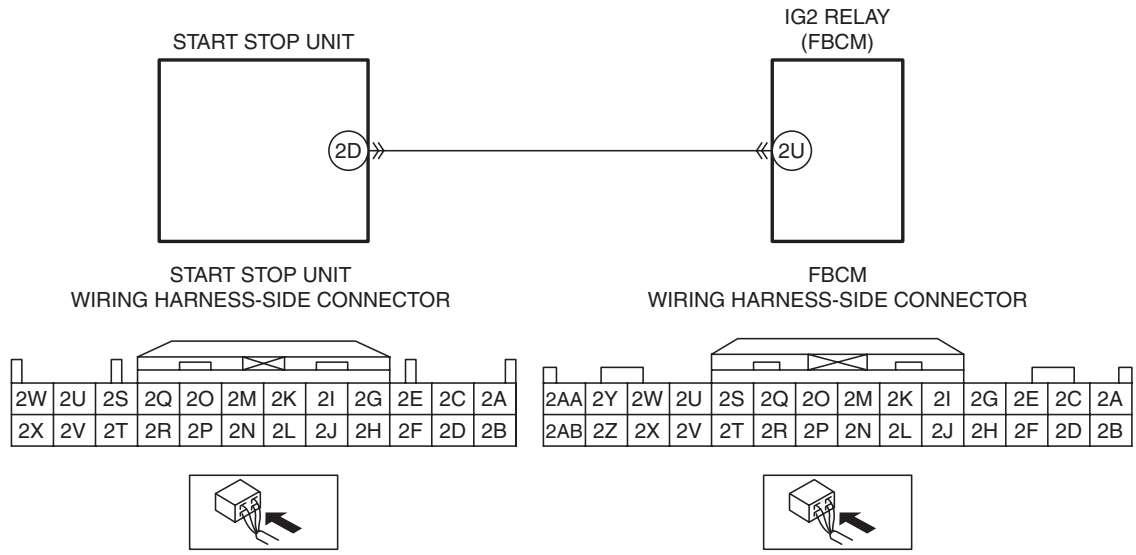

Diagnostic Procedure

Step	Inspection		Action
1	**INSPECT FRONT BODY CONTROL MODULE (FBCM) CONNECTOR CONDITION** • Switch the ignition to off. • Disconnect the negative battery cable. (See 01-17A-11 NEGATIVE BATTERY CABLE DISCONNECTION/CONNECTION [SKYACTIV-G 2.0].) (See 01-17A-13 NEGATIVE BATTERY CABLE DISCONNECTION/CONNECTION [SKYACTIV-G 2.0 (WITHOUT i-stop)].) (See 01-17B-9 NEGATIVE BATTERY CABLE DISCONNECTION/CONNECTION [SKYACTIV-D 2.2].) • Disconnect the front body control module (FBCM) connector. • Inspect the connector engagement and connection condition and inspect the terminals for damage, deformation, corrosion, or disconnection. • Is the connector normal?	Yes	Go to the next step.
		No	Repair or replace the connector, then go to Step 5.
2	**INSPECT START STOP UNIT CONNECTOR CONDITION** • Disconnect the start stop unit connector. • Inspect the connector engagement and connection condition and inspect the terminals for damage, deformation, corrosion, or disconnection. • Is the connector normal?	Yes	Go to the next step.
		No	Repair or replace the connector, then go to Step 5.

ON-BOARD DIAGNOSTIC [START STOP UNIT]

Step	Inspection		Action
3	**INSPECT IG2 RELAY CIRCUIT FOR SHORT TO GROUND** • Verify that the start stop unit and front body control module (FBCM) connectors are disconnected. • Inspect for continuity between front body control module (FBCM) terminal 2U (vehicle wiring harness side) and body ground. • Is there continuity?	Yes	Repair or replace the wiring harness which is shorted to ground, then go to Step 5.
		No	Go to the next step.
4	**PERFORM DTC INSPECTION AND VERIFY IF IG2 RELAY IS MALFUNCTIONING PART** • Reconnect all the disconnected connectors. • Reconnect the disconnected negative battery cable. (See 01-17A-11 NEGATIVE BATTERY CABLE DISCONNECTION/CONNECTION [SKYACTIV-G 2.0].) (See 01-17A-13 NEGATIVE BATTERY CABLE DISCONNECTION/CONNECTION [SKYACTIV-G 2.0 (WITHOUT i-stop)].) (See 01-17B-9 NEGATIVE BATTERY CABLE DISCONNECTION/CONNECTION [SKYACTIV-D 2.2].) • Clear DTC for the start stop unit using the M-MDS. (See 09-02C-7 CLEARING DTC [START STOP UNIT].) • Switch the ignition ON (engine off or on) and wait for **0.5 s or more**. • Perform the DTC inspection for the start stop unit using the M-MDS. (See 09-02C-6 DTC INSPECTION [START STOP UNIT].) • Is DTC B112A:11 displayed?	Yes	Replace the front body control module (FBCM), then go to the next step. (See 09-40-2 FRONT BODY CONTROL MODULE (FBCM) REMOVAL/INSTALLATION.)
		No	Go to Step 6.
5	**VERIFY THAT REPAIRS HAVE BEEN COMPLETED** • Reconnect all the disconnected connectors. • Reconnect the disconnected negative battery cable. (See 01-17A-11 NEGATIVE BATTERY CABLE DISCONNECTION/CONNECTION [SKYACTIV-G 2.0].) (See 01-17A-13 NEGATIVE BATTERY CABLE DISCONNECTION/CONNECTION [SKYACTIV-G 2.0 (WITHOUT i-stop)].) (See 01-17B-9 NEGATIVE BATTERY CABLE DISCONNECTION/CONNECTION [SKYACTIV-D 2.2].) • Clear DTC for the start stop unit using the M-MDS. (See 09-02C-7 CLEARING DTC [START STOP UNIT].) • Switch the ignition ON (engine off or on) and wait for **0.5 s or more**. • Perform the DTC inspection for the start stop unit using the M-MDS. (See 09-02C-6 DTC INSPECTION [START STOP UNIT].) • Is DTC B112A:11 displayed?	Yes	Repeat the inspection from Step 1. • If the malfunction recurs, replace the start stop unit, then go to the next step. (See 09-14-54 START STOP UNIT REMOVAL/INSTALLATION.)
		No	Go to the next step.
6	**VERIFY IF OTHER DTCs DISPLAYED** • Are any other DTCs displayed?	Yes	Repair the malfunctioning part according to the applicable DTC troubleshooting. (See 09-02C-8 DTC TABLE [START STOP UNIT].)
		No	DTC troubleshooting completed.

ON-BOARD DIAGNOSTIC [START STOP UNIT]

DTC B112A:12 [START STOP UNIT]

id0902p6020500

System malfunction location	**IG2 relay circuit malfunction**
Detection condition	• With the ignition switched off or to ACC, the start stop unit detects IG2 relay circuit voltage of **2.5 V or more** for **0.5 s or more**.
Fail-safe	—
Possible cause	• Front body control module (FBCM) connector or terminal malfunction • Start stop unit connector or terminal malfunction • Short to power supply in wiring harness between start stop unit terminal 2D and front body control module (FBCM) terminal 2U • Front body control module (FBCM) malfunction • Start stop unit malfunction

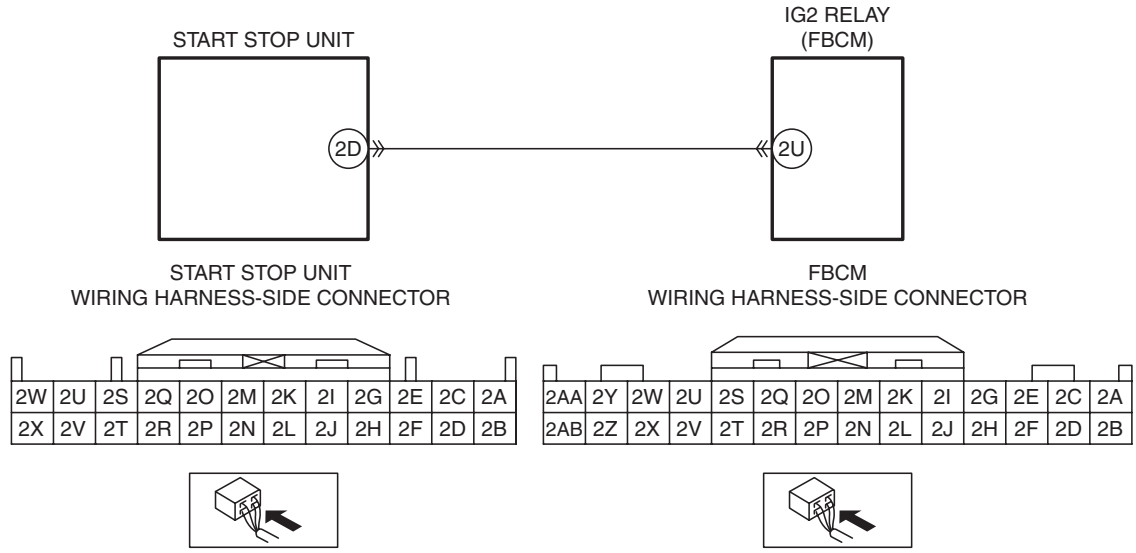

Diagnostic Procedure

Step	Inspection		Action
1	**INSPECT FRONT BODY CONTROL MODULE (FBCM) CONNECTOR CONDITION** • Switch the ignition to off. • Disconnect the negative battery cable. (See 01-17A-11 NEGATIVE BATTERY CABLE DISCONNECTION/CONNECTION [SKYACTIV-G 2.0].) (See 01-17A-13 NEGATIVE BATTERY CABLE DISCONNECTION/CONNECTION [SKYACTIV-G 2.0 (WITHOUT i-stop)].) (See 01-17B-9 NEGATIVE BATTERY CABLE DISCONNECTION/CONNECTION [SKYACTIV-D 2.2].) • Disconnect the front body control module (FBCM) connector. • Inspect the connector engagement and connection condition and inspect the terminals for damage, deformation, corrosion, or disconnection. • Is the connector normal?	Yes	Go to the next step.
		No	Repair or replace the connector, then go to Step 5.
2	**INSPECT START STOP UNIT CONNECTOR CONDITION** • Disconnect the start stop unit connector. • Inspect the connector engagement and connection condition and inspect the terminals for damage, deformation, corrosion, or disconnection. • Is the connector normal?	Yes	Go to the next step.
		No	Repair or replace the connector, then go to Step 5.

ON-BOARD DIAGNOSTIC [START STOP UNIT]

Step	Inspection		Action
3	**INSPECT IG2 RELAY CIRCUIT FOR SHORT TO POWER SUPPLY** • Reconnect all the disconnected connectors. • Connect the negative battery cable. (See 01-17A-11 NEGATIVE BATTERY CABLE DISCONNECTION/CONNECTION [SKYACTIV-G 2.0].) (See 01-17A-13 NEGATIVE BATTERY CABLE DISCONNECTION/CONNECTION [SKYACTIV-G 2.0 (WITHOUT i-stop)].) (See 01-17B-9 NEGATIVE BATTERY CABLE DISCONNECTION/CONNECTION [SKYACTIV-D 2.2].) • Measure the voltage at front body control module (FBCM) terminal 2U (vehicle wiring harness side). • Is the voltage **2.5 V or more**?	Yes	Repair or replace the wiring harness which is shorted to power supply, then go to Step 5.
		No	Go to the next step.
4	**PERFORM DTC INSPECTION AND VERIFY IF IG2 RELAY IS MALFUNCTIONING PART** • Clear DTC for the start stop unit using the M-MDS. (See 09-02C-7 CLEARING DTC [START STOP UNIT].) • Switch the ignition to off or to ACC, and wait for **0.5 s or more**. • Perform the DTC inspection for the start stop unit using the M-MDS. (See 09-02C-6 DTC INSPECTION [START STOP UNIT].) • Is DTC B112A:12 displayed?	Yes	Replace the front body control module (FBCM), then go to the next step. (See 09-40-2 FRONT BODY CONTROL MODULE (FBCM) REMOVAL/INSTALLATION.)
		No	Go to Step 6.
5	**VERIFY THAT REPAIRS HAVE BEEN COMPLETED** • Reconnect all the disconnected connectors. • Reconnect the disconnected negative battery cable. (See 01-17A-11 NEGATIVE BATTERY CABLE DISCONNECTION/CONNECTION [SKYACTIV-G 2.0].) (See 01-17A-13 NEGATIVE BATTERY CABLE DISCONNECTION/CONNECTION [SKYACTIV-G 2.0 (WITHOUT i-stop)].) (See 01-17B-9 NEGATIVE BATTERY CABLE DISCONNECTION/CONNECTION [SKYACTIV-D 2.2].) • Clear DTC for the start stop unit using the M-MDS. (See 09-02C-7 CLEARING DTC [START STOP UNIT].) • Switch the ignition to off or to ACC, and wait for **0.5 s or more**. • Perform the DTC inspection for the start stop unit using the M-MDS. (See 09-02C-6 DTC INSPECTION [START STOP UNIT].) • Is DTC B112A:12 displayed?	Yes	Repeat the inspection from Step 1. • If the malfunction recurs, replace the start stop unit, then go to the next step. (See 09-14-54 START STOP UNIT REMOVAL/INSTALLATION.)
		No	Go to the next step.
6	**VERIFY IF OTHER DTCs DISPLAYED** • Are any other DTCs displayed?	Yes	Repair the malfunctioning part according to the applicable DTC troubleshooting. (See 09-02C-8 DTC TABLE [START STOP UNIT].)
		No	DTC troubleshooting completed.

ON-BOARD DIAGNOSTIC [START STOP UNIT]

DTC B1140:29 [START STOP UNIT]

id0902p6020600

System malfunction location	**i-stop control error signal received**
Detection condition	• The starter ground circuit does not turn on even though the PCM detects an engine restart request while the engine is stopped under i-stop control, or the condition whereby an open circuit is detected for a continuous **12 s or more** for a total of five times or more.
Fail-safe	—
Possible cause	• Starter relay malfunction • PCM connector or terminal malfunction • Start stop unit connector or terminal malfunction • Open circuit in wiring harness between the following terminals: — Starter relay terminal E—PCM terminal 2AZ (SKYACTIV-G 2.0) — Starter relay terminal E—PCM terminal 2BF (SKYACTIV-D 2.2) — Start stop unit terminal 1D—PCM terminal 2AZ (SKYACTIV-G 2.0) — Start stop unit terminal 1D—PCM terminal 2BF (SKYACTIV-D 2.2) — Starter relay terminal A—Start stop unit terminal 2V • Start stop unit malfunction

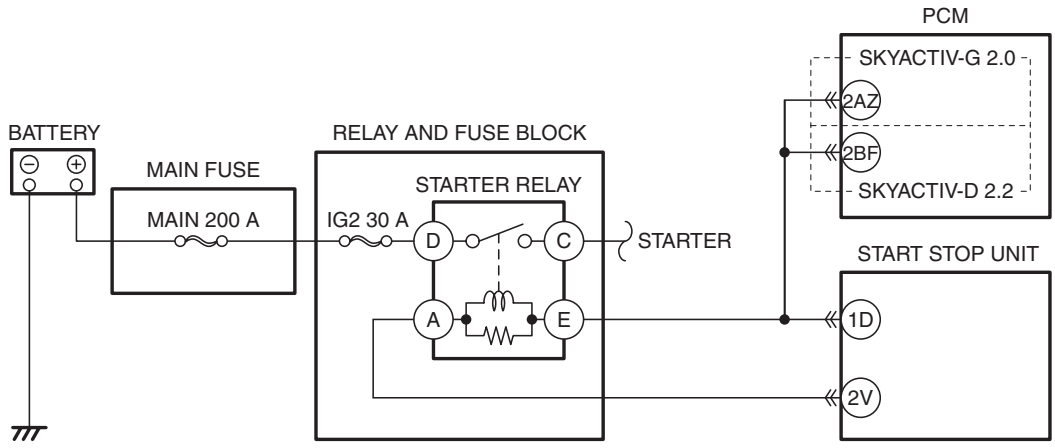

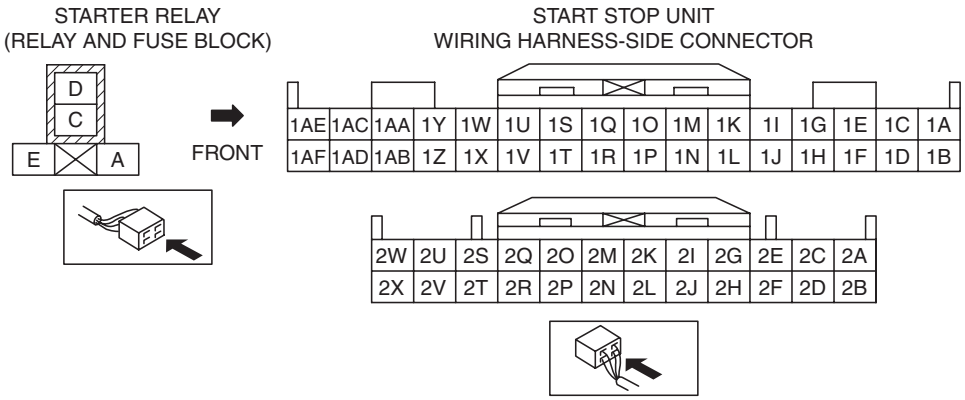

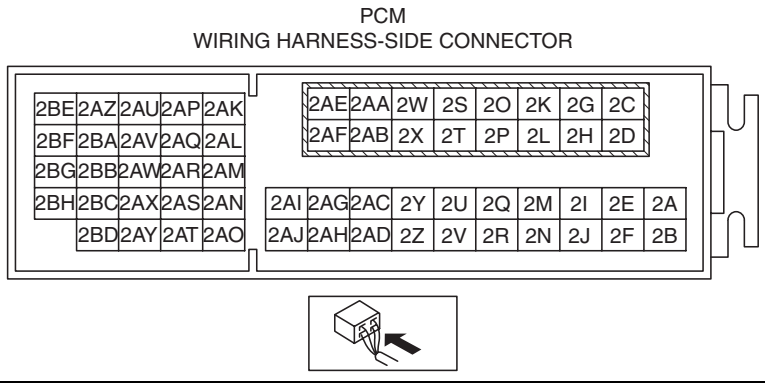

ON-BOARD DIAGNOSTIC [START STOP UNIT]

Diagnostic Procedure

Step	Inspection		Action
1	**INSPECT STARTER RELAY FOR MALFUNCTION** • Switch the ignition to off. • Disconnect the negative battery cable. (See 01-17A-11 NEGATIVE BATTERY CABLE DISCONNECTION/CONNECTION [SKYACTIV-G 2.0].) (See 01-17A-13 NEGATIVE BATTERY CABLE DISCONNECTION/CONNECTION [SKYACTIV-G 2.0 (WITHOUT i-stop)].) (See 01-17B-9 NEGATIVE BATTERY CABLE DISCONNECTION/CONNECTION [SKYACTIV-D 2.2].) • Remove the starter relay. (See 09-21-28 RELAY LOCATION.) • Inspect the starter relay. (See 09-21-29 RELAY INSPECTION.) • Is the starter relay normal?	Yes	Go to the next step.
		No	Replace the starter relay, then go to Step 5. (See 09-21-28 RELAY LOCATION.)
2	**INSPECT PCM CONNECTOR CONDITION** • Disconnect the PCM connector. • Inspect the connector engagement and connection condition and inspect the terminals for damage, deformation, corrosion, or disconnection. • Is the connector normal?	Yes	Go to the next step.
		No	Repair or replace the connector, then go to Step 5.
3	**INSPECT START STOP UNIT CONNECTOR CONDITION** • Disconnect the start stop unit connector. • Inspect the connector engagement and connection condition and inspect the terminals for damage, deformation, corrosion, or disconnection. • Is the connector normal?	Yes	Go to the next step.
		No	Repair or replace the connector, then go to Step 5.
4	**INSPECT STARTER RELAY CIRCUIT FOR OPEN CIRCUIT** • Verify that the starter relay is removed. • Verify that the PCM and start stop unit connectors are disconnected. • Inspect for continuity between the following terminals (vehicle wiring harness side). — Starter relay terminal E—PCM terminal 2AZ (SKYACTIV-G 2.0) — Starter relay terminal E—PCM terminal 2BF (SKYACTIV-D 2.2) — Start stop unit terminal 1D—PCM terminal 2AZ (SKYACTIV-G 2.0) — Start stop unit terminal 1D—PCM terminal 2BF (SKYACTIV-D 2.2) — Starter relay terminal A—Start stop unit terminal 2V • Is there continuity?	Yes	Go to the next step.
		No	Repair or replace the wiring harness which has an open circuit, then go to the next step.

ON-BOARD DIAGNOSTIC [START STOP UNIT]

Step	Inspection		Action
5	**VERIFY THAT REPAIRS HAVE BEEN COMPLETED** • Reconnect all the disconnected connectors. • Reconnect the disconnected negative battery cable. (See 01-17A-11 NEGATIVE BATTERY CABLE DISCONNECTION/CONNECTION [SKYACTIV-G 2.0].) (See 01-17A-13 NEGATIVE BATTERY CABLE DISCONNECTION/CONNECTION [SKYACTIV-G 2.0 (WITHOUT i-stop)].) (See 01-17B-9 NEGATIVE BATTERY CABLE DISCONNECTION/CONNECTION [SKYACTIV-D 2.2].) • Clear DTC for the start stop unit using the M-MDS. (See 09-02C-7 CLEARING DTC [START STOP UNIT].) • Perform the work of stopping the engine by i-stop control and then restarting the engine for five or more times. • Perform the DTC inspection for the start stop unit using the M-MDS. (See 09-02C-6 DTC INSPECTION [START STOP UNIT].) • Is DTC B1140:29 displayed?	Yes	Repeat the inspection from Step 1. • If the malfunction recurs, replace the start stop unit, then go to the next step. (See 09-14-54 START STOP UNIT REMOVAL/INSTALLATION.)
		No	Go to the next step.
6	**VERIFY IF OTHER DTCs DISPLAYED** • Are any other DTCs displayed?	Yes	Repair the malfunctioning part according to the applicable DTC troubleshooting. (See 09-02C-8 DTC TABLE [START STOP UNIT].)
		No	DTC troubleshooting completed.

ON-BOARD DIAGNOSTIC [START STOP UNIT]

DTC B124C:56 [START STOP UNIT]

id0902p6020700

System malfunction location	**Turn switch circuit malfunction**
Detection condition	• The start stop unit detects that turn switches LH and RH are turned on simultaneously for **5 s or more**.
Fail-safe	—
Possible cause	• Start stop unit configuration error • The installations of the light switch and the wiper and washer switch are reversed. • Turn switch malfunction • Start stop unit malfunction
System wiring diagram	—

Diagnostic Procedure

Step	Inspection		Action
1	**PERFORM START STOP UNIT CONFIGURATION (AS-BUILT DATA USE)** • Perform the start stop unit configuration using the M-MDS. (See 09-14-60 START STOP UNIT CONFIGURATION (USING AS-BUILT DATA).) • Clear start stop unit DTCs using the M-MDS. (See 09-02C-7 CLEARING DTC [START STOP UNIT].) • Operate the turn switch to RH position and wait for **5 s or more**. • Operate the turn switch to LH position and wait for **5 s or more**. • Perform the DTC inspection for the start stop unit using the M-MDS. (See 09-02C-6 DTC INSPECTION [START STOP UNIT].) • Is DTC B124C:56 displayed?	Yes	Using the M-MDS, re-perform the start stop unit configuration using the As-Built data, then go to the next step. (See 09-14-60 START STOP UNIT CONFIGURATION (USING AS-BUILT DATA).)
		No	Go to Step 5.
2	**VERIFY IF INSTALLATIONS OF LIGHT SWITCH AND WIPER AND WASHER SWITCH ARE REVERSED** • Verify the installation condition of the light switch and the wiper and washer switch. • Are the light switch and the wiper and washer switch installed correctly?	Yes	Go to the next step.
		No	Install the light switch and the wiper and washer switch properly, then go to Step 4.
3	**INSPECT TURN SWITCH** • Inspect the turn switch. (See 09-18-86 LIGHT SWITCH INSPECTION.) • Is the turn switch normal?	Yes	Go to the next step.
		No	Replace the turn switch, then go to the next step. (See 09-18-84 LIGHT SWITCH REMOVAL/INSTALLATION.)
4	**VERIFY THAT REPAIRS HAVE BEEN COMPLETED** • Clear start stop unit DTCs using the M-MDS. (See 09-02C-7 CLEARING DTC [START STOP UNIT].) • Operate the turn switch to RH position and wait for **5 s or more**. • Operate the turn switch to LH position and wait for **5 s or more**. • Perform the start stop unit DTC inspection using the M-MDS. (See 09-02C-6 DTC INSPECTION [START STOP UNIT].) • Is DTC B124C:56 displayed?	Yes	Repeat the inspection from Step 1. • If the malfunction recurs, replace the start stop unit, then go to the next step. (See 09-14-54 START STOP UNIT REMOVAL/INSTALLATION.)
		No	Go to the next step.
5	**VERIFY IF OTHER DTCs DISPLAYED** • Are any other DTCs displayed?	Yes	Repair the malfunctioning part according to the applicable DTC troubleshooting. (See 09-02C-8 DTC TABLE [START STOP UNIT].)
		No	DTC troubleshooting completed.

ON-BOARD DIAGNOSTIC [START STOP UNIT]

DTC B13D3:16 [START STOP UNIT]

id0902p6050100

System malfunction location	Low remote transmitter battery voltage
Detection condition	• Start stop unit detects low remote transmitter battery voltage in any of the programmed transmitters **3 times** continuously.
Fail-safe	—
Possible cause	• Soiling around remote transmitter battery, or foreign matter adhering • Remote transmitter battery is dead • Specific remote transmitter is malfunctioning • Start stop unit malfunction
System wiring diagram	—

Diagnostic Procedure

Step	Inspection		Action
1	**INSPECT AREA AROUND REMOTE TRANSMITTER BATTERY** • Inspect the area around the remote transmitter. • Is the area around the transmitter battery soiled or is there foreign mattering adhering?	Yes	Remove dirt or foreign matter, then go to Step 4.
		No	Go to the next step.
2	**VERIFY IF MALFUNCTION CAUSE IS DEAD REMOTE TRANSMITTER BATTERY** • Replace the remote transmitter battery. (See 09-14-76 REMOTE TRANSMITTER DISASSEMBLY/ASSEMBLY.) • Clear DTC for the start stop unit using the M-MDS. (See 09-02C-7 CLEARING DTC [START STOP UNIT].) • Perform the DTC inspection for the start stop unit using the M-MDS. (See 09-02C-6 DTC INSPECTION [START STOP UNIT].) • Is DTC B13D3:16 displayed?	Yes	Go to the next step.
		No	Go to Step 5.
3	**VERIFY IF MALFUNCTION CAUSE IS SPECIFIC REMOTE TRANSMITTER** **Note** • Perform the following procedure for all of the programmed remote transmitters. • Clear DTC for the start stop unit using the M-MDS. (See 09-02C-7 CLEARING DTC [START STOP UNIT].) • Perform the DTC inspection for the start stop unit using the M-MDS. (See 09-02C-6 DTC INSPECTION [START STOP UNIT].) • Can a remote transmitter which indicates DTC B13D3:16 be specified?	Yes	Replace the remote transmitter which indicates the DTC, then go to the next step. (See 09-14-78 IMMOBILIZER SYSTEM-RELATED PARTS PROGRAMMING.)
		No	Go to the next step.
4	**VERIFY THAT REPAIRS HAVE BEEN COMPLETED** • Clear DTC for the start stop unit using the M-MDS. (See 09-02C-7 CLEARING DTC [START STOP UNIT].) • Perform the DTC inspection for the start stop unit using the M-MDS. (See 09-02C-6 DTC INSPECTION [START STOP UNIT].) • Is DTC B13D3:16 displayed?	Yes	Repeat the inspection from Step 1. • If the malfunction recurs, replace the start stop unit, then go to the next step. (See 09-14-54 START STOP UNIT REMOVAL/INSTALLATION.)
		No	Go to the next step.

ON-BOARD DIAGNOSTIC [START STOP UNIT]

5	**VERIFY IF OTHER DTCs DISPLAYED** • Are any other DTCs displayed?	Yes	Repair the malfunctioning part according to the applicable DTC troubleshooting. (See 09-02C-8 DTC TABLE [START STOP UNIT].)
		No	DTC troubleshooting completed.

DTC B13D3:4A [START STOP UNIT]

id0902p6020800

System malfunction location	**Remote transmitter assembly malfunction**
Detection condition	• The start stop unit detects a remote transmitter different from the one equipped to the vehicle.
Fail-safe	—
Possible cause	• Mistaken remote transmitter registration • Start stop unit configuration error • Remote transmitter malfunction • Start stop unit malfunction
System wiring diagram	—

Diagnostic Procedure

Step	Inspection		Action
1	**VERIFY THAT THE VEHICLE AND REMOTE TRANSMITTER COMBINATION IS CORRECT** • Verify that the vehicle and remote transmitter combination is correct • Is the combination of remote transmitters correct?	Yes	Go to the next step.
		No	Re-register using correct remote transmitters, then go to the Step 3. (See 09-14-78 IMMOBILIZER SYSTEM-RELATED PARTS PROGRAMMING.)
2	**PERFORM START STOP UNIT CONFIGURATION (USING AS-BUILT DATA)** • Using the M-MDS, perform the start stop unit configuration with the As-Built data. (See 09-14-60 START STOP UNIT CONFIGURATION (USING AS-BUILT DATA).) • Clear DTC for the start stop unit using the M-MDS. (See 09-02C-7 CLEARING DTC [START STOP UNIT].) • Perform the DTC inspection for the start stop unit using the M-MDS. (See 09-02C-6 DTC INSPECTION [START STOP UNIT].) • Is DTC B13D3:4A displayed?	Yes	Using the M-MDS, re-perform the start stop unit configuration using the As-Built data, then go to the next step. (See 09-14-60 START STOP UNIT CONFIGURATION (USING AS-BUILT DATA).) • If the malfunction recurs, replace the remote transmitter, then go to the next step. (See 09-14-78 IMMOBILIZER SYSTEM-RELATED PARTS PROGRAMMING.)
		No	Go to Step 4.
3	**VERIFY THAT REPAIRS HAVE BEEN COMPLETED** • Clear DTC for the start stop unit using the M-MDS. (See 09-02C-7 CLEARING DTC [START STOP UNIT].) • Perform the DTC inspection for the start stop unit using the M-MDS. (See 09-02C-6 DTC INSPECTION [START STOP UNIT].) • Is DTC B13D3:4A displayed?	Yes	Repeat the inspection from Step 1. • If the malfunction recurs, replace the start stop unit, then go to the next step. (See 09-14-54 START STOP UNIT REMOVAL/INSTALLATION.)
		No	Go to the next step.
4	**VERIFY IF OTHER DTCs DISPLAYED** • Are any other DTCs displayed?	Yes	Repair the malfunctioning part according to the applicable DTC troubleshooting. (See 09-02C-8 DTC TABLE [START STOP UNIT].)
		No	DTC troubleshooting completed.

ON-BOARD DIAGNOSTIC [START STOP UNIT]

DTC B13D3:97 [START STOP UNIT]

id0902p6020900

System malfunction location	**Remote transmitter registration work not completed**
Detection condition	• The start stop unit detects that the registration of a remote transmitter has not been completed.
Fail-safe	—
Possible cause	• DTCs are stored in the immobilizer system. • Start stop unit configuration error • Remote transmitter registration not completed correctly. • Start stop unit malfunction
System wiring diagram	—

Diagnostic Procedure

Step	Inspection		Action
1	**VERIFY IMMOBILIZER SYSTEM DTCs** • Perform the DTC inspection for the immobilizer system using the M-MDS. (See 09-02B-3 DTC INSPECTION [IMMOBILIZER SYSTEM].) • Is the DTC displayed?	Yes	Repair the malfunctioning part according to the applicable DTC troubleshooting. (See 09-02B-3 DTC INSPECTION [IMMOBILIZER SYSTEM].)
		No	Go to the next step.
2	**PERFORM START STOP UNIT CONFIGURATION (USING AS-BUILT DATA)** • Using the M-MDS, perform the start stop unit configuration with the As-Built data. (See 09-14-60 START STOP UNIT CONFIGURATION (USING AS-BUILT DATA).) • Clear DTC for the start stop unit using the M-MDS. (See 09-02C-7 CLEARING DTC [START STOP UNIT].) • Perform the DTC inspection for the start stop unit using the M-MDS. (See 09-02C-6 DTC INSPECTION [START STOP UNIT].) • Is DTC B13D3:97 displayed?	Yes	Using the M-MDS, re-perform the start stop unit configuration using the As-Built data, then go to the next step. (See 09-14-60 START STOP UNIT CONFIGURATION (USING AS-BUILT DATA).)
		No	Go to Step 5.
3	**REGISTER REMOTE TRANSMITTER** • Register the remote transmitter. (See 09-14-78 IMMOBILIZER SYSTEM-RELATED PARTS PROGRAMMING.) • Clear DTC for the start stop unit using the M-MDS. (See 09-02C-7 CLEARING DTC [START STOP UNIT].) • Perform the DTC inspection for the start stop unit using the M-MDS. (See 09-02C-6 DTC INSPECTION [START STOP UNIT].) • Is DTC B13D3:97 displayed?	Yes	Go to the next step.
		No	Go to Step 5.
4	**VERIFY THAT REPAIRS HAVE BEEN COMPLETED** • Clear DTC for the start stop unit using the M-MDS. (See 09-02C-7 CLEARING DTC [START STOP UNIT].) • Perform the DTC inspection for the start stop unit using the M-MDS. (See 09-02C-6 DTC INSPECTION [START STOP UNIT].) • Is DTC B13D3:97 displayed?	Yes	Replace the start stop unit, then go to the next step. (See 09-14-54 START STOP UNIT REMOVAL/INSTALLATION.)
		No	Go to the next step.
5	**VERIFY IF OTHER DTCs DISPLAYED** • Are any other DTCs displayed?	Yes	Repair the malfunctioning part according to the applicable DTC troubleshooting. (See 09-02C-8 DTC TABLE [START STOP UNIT].)
		No	DTC troubleshooting completed.

ON-BOARD DIAGNOSTIC [START STOP UNIT]

DTC B1C53:13 [START STOP UNIT]

id0902p6021000

System malfunction location	**Windshield wiper switch circuit malfunction**
Detection condition	• The start stop unit detects an open circuit, short to ground, or short to power supply in the windshield wiper switch circuit for **5 s or more** with the ignition switched ON (engine off or on).
Fail-safe	—
Possible cause	• Start stop unit configuration error • The installations of the light switch and the wiper and washer switch are reversed. • Windshield wiper switch malfunction • Start stop unit malfunction
System wiring diagram	—

Diagnostic Procedure

Step	Inspection		Action
1	**PERFORM START STOP UNIT CONFIGURATION (AS-BUILT DATA USE)** • Perform the start stop unit configuration using the M-MDS. (See 09-14-60 START STOP UNIT CONFIGURATION (USING AS-BUILT DATA).) • Clear start stop unit DTCs using the M-MDS. (See 09-02C-7 CLEARING DTC [START STOP UNIT].) • Switch the INT volume switch to each step at **5 s** intervals. • Perform the DTC inspection for the start stop unit using the M-MDS. (See 09-02C-6 DTC INSPECTION [START STOP UNIT].) • Is DTC B1C53:13 displayed?	Yes	Using the M-MDS, re-perform the start stop unit configuration using the As-Built data, then go to the next step. (See 09-14-60 START STOP UNIT CONFIGURATION (USING AS-BUILT DATA).)
		No	Go to Step 5.
2	**VERIFY IF INSTALLATIONS OF LIGHT SWITCH AND WIPER AND WASHER SWITCH ARE REVERSED** • Verify the installation condition of the light switch and the wiper and washer switch. • Are the light switch and the wiper and washer switch installed correctly?	Yes	Go to the next step.
		No	Install the light switch and the wiper and washer switch properly, then go to Step 4.
3	**INSPECT WINDHIELD WIPER SWITCH** • Inspect the windshield wiper switch. (See 09-19-47 WINDSHIELD WIPER AND WASHER SWITCH INSPECTION.) • Is the windshield wiper switch normal?	Yes	Go to the next step.
		No	Replace the windshield wiper switch, then go to the next step. (See 09-19-45 WIPER AND WASHER SWITCH REMOVAL/INSTALLATION.)
4	**VERIFY THAT REPAIRS HAVE BEEN COMPLETED** • Clear start stop unit DTCs using the M-MDS. (See 09-02C-7 CLEARING DTC [START STOP UNIT].) • Switch the INT volume switch to each step at **5 s** intervals. • Perform the start stop unit DTC inspection using the M-MDS. (See 09-02C-6 DTC INSPECTION [START STOP UNIT].) • Is DTC B1C53:13 displayed?	Yes	Replace the start stop unit, then go to the next step. (See 09-14-54 START STOP UNIT REMOVAL/INSTALLATION.)
		No	Go to the next step.
5	**VERIFY IF OTHER DTCs DISPLAYED** • Are any other DTCs displayed?	Yes	Repair the malfunctioning part according to the applicable DTC troubleshooting. (See 09-02C-8 DTC TABLE [START STOP UNIT].)
		No	DTC troubleshooting completed.

ON-BOARD DIAGNOSTIC [START STOP UNIT]

DTC C0040:23 [START STOP UNIT]

id0902p6021100

System malfunction location	**Brake switch (No.1 signal) circuit malfunction**
Detection condition	• With the ignition switched ON (engine off or on), the start stop unit detects that the brake switch No.1 signal is in the off condition for **3 s or more** continuously for a continuous **5 times** even though brake switch No.2 signal changes.
Fail-safe	• Determined by brake switch No.2 with the brake pedal depressed.
Possible cause	• Brake switch connector or terminal malfunction • Brake switch (No.1 signal) malfunction • Brake switch (No.1 signal) power supply circuit malfunction — Short to ground in wiring harness between STOP 10 A fuse and brake switch terminal A — STOP 10 A fuse malfunction — Open circuit in wiring harness between battery positive terminal and brake switch terminal A • Start stop unit connector or terminal malfunction • Short to ground in wiring harness between brake switch terminal D and start stop unit terminal 1C • Open circuit in wiring harness between brake switch terminal D and start stop unit terminal 1C • Start stop unit malfunction

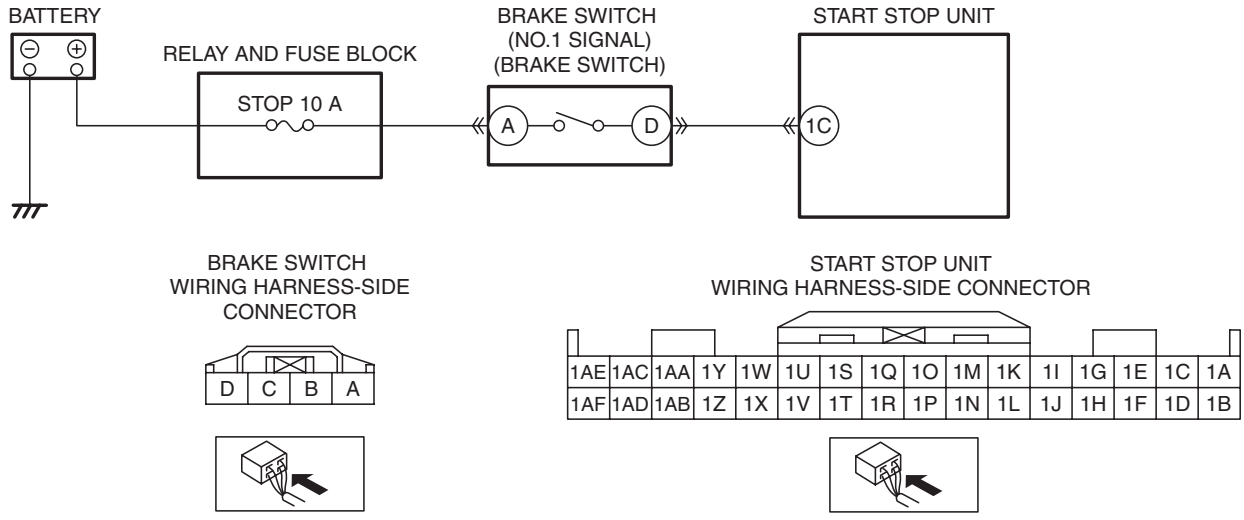

ON-BOARD DIAGNOSTIC [START STOP UNIT]

Diagnostic Procedure

Step	Inspection		Action
1	**INSPECT BRAKE SWITCH CONNECTOR CONDITION** • Switch the ignition to off. • Disconnect the negative battery cable. (See 01-17A-11 NEGATIVE BATTERY CABLE DISCONNECTION/CONNECTION [SKYACTIV-G 2.0].) (See 01-17A-13 NEGATIVE BATTERY CABLE DISCONNECTION/CONNECTION [SKYACTIV-G 2.0 (WITHOUT i-stop)].) (See 01-17B-9 NEGATIVE BATTERY CABLE DISCONNECTION/CONNECTION [SKYACTIV-D 2.2].) • Disconnect the brake switch connector. • Inspect the connector engagement and connection condition and inspect the terminals for damage, deformation, corrosion, or disconnection. • Is the connector normal?	Yes	Go to the next step.
		No	Repair or replace the connector, then go to Step 7.
2	**INSPECT BRAKE SWITCH (NO.1 SIGNAL)** • Inspect the brake switch (No.1 signal). (See 04-11-11 BRAKE SWITCH INSPECTION.) • Is the brake switch (No.1 signal) normal?	Yes	Go to the next step.
		No	Replace the brake switch, then go to Step 7. (See 04-11-8 BRAKE PEDAL REMOVAL/INSTALLATION [L.H.D.].) (See 04-11-9 BRAKE PEDAL REMOVAL/INSTALLATION [R.H.D.].)
3	**INSPECT BRAKE SWITCH (NO.1 SIGNAL) POWER SUPPLY CIRCUIT FOR OPEN CIRCUIT OR SHORT TO GROUND** • Verify that the brake switch connector is disconnected. • Connect the negative battery cable. (See 01-17A-11 NEGATIVE BATTERY CABLE DISCONNECTION/CONNECTION [SKYACTIV-G 2.0].) (See 01-17A-13 NEGATIVE BATTERY CABLE DISCONNECTION/CONNECTION [SKYACTIV-G 2.0 (WITHOUT i-stop)].) (See 01-17B-9 NEGATIVE BATTERY CABLE DISCONNECTION/CONNECTION [SKYACTIV-D 2.2].) • Switch the ignition ON (engine off or on). • Measure the voltage at brake switch terminal A (vehicle wiring harness side). • Is the voltage **B+**?	Yes	Go to the next step.
		No	Inspect the STOP 10 A fuse. • If a fuse is burnt out: — Repair or replace the wiring harness which is shorted to ground. — Replace the burnt out fuse. • If a fuse is damaged: — Replace the damaged fuse. • If the fuse is normal: — Repair or replace the wiring harness which has an open circuit. Go to Step 7.
4	**INSPECT START STOP UNIT CONNECTOR CONDITION** • Disconnect the start stop unit connector. • Switch the ignition to off. • Disconnect the negative battery cable. (See 01-17A-11 NEGATIVE BATTERY CABLE DISCONNECTION/CONNECTION [SKYACTIV-G 2.0].) (See 01-17A-13 NEGATIVE BATTERY CABLE DISCONNECTION/CONNECTION [SKYACTIV-G 2.0 (WITHOUT i-stop)].) (See 01-17B-9 NEGATIVE BATTERY CABLE DISCONNECTION/CONNECTION [SKYACTIV-D 2.2].) • Inspect the connector engagement and connection condition and inspect the terminals for damage, deformation, corrosion, or disconnection. • Is the connector normal?	Yes	Go to the next step.
		No	Repair or replace the connector, then go to Step 7.

ON-BOARD DIAGNOSTIC [START STOP UNIT]

Step	Inspection		Action
5	**INSPECT BRAKE SWITCH (NO.1 SIGNAL) CIRCUIT FOR SHORT TO GROUND** • Verify that the brake switch and start stop unit connectors are disconnected. • Inspect for continuity between brake switch terminal D (vehicle wiring harness side) and body ground. • Is there continuity?	Yes	Repair or replace the wiring harness which is shorted to ground, then go to Step 7.
		No	Go to the next step.
6	**INSPECT BRAKE SWITCH (NO.1 SIGNAL) CIRCUIT FOR OPEN CIRCUIT** • Verify that the brake switch and start stop unit connectors are disconnected. • Inspect the wiring harness for an open circuit between brake switch terminal D (vehicle wiring harness side) and start stop unit terminal 1C (vehicle wiring harness side). • Is there continuity?	Yes	Go to the next step.
		No	Repair or replace the wiring harness which has an open circuit, then go to the next step.
7	**VERIFY THAT REPAIRS HAVE BEEN COMPLETED** • Reconnect all the disconnected connectors. • Reconnect the disconnected negative battery cable. (See 01-17A-11 NEGATIVE BATTERY CABLE DISCONNECTION/CONNECTION [SKYACTIV-G 2.0].) (See 01-17A-13 NEGATIVE BATTERY CABLE DISCONNECTION/CONNECTION [SKYACTIV-G 2.0 (WITHOUT i-stop)].) (See 01-17B-9 NEGATIVE BATTERY CABLE DISCONNECTION/CONNECTION [SKYACTIV-D 2.2].) • Clear DTC for the start stop unit using the M-MDS. (See 09-02C-7 CLEARING DTC [START STOP UNIT].) • With the ignition switched ON (engine off or on), perform the work of depressing the brake pedal for **3 s or more** and then releasing it for **5 or more times**. • Perform the DTC inspection for the start stop unit using the M-MDS. (See 09-02C-6 DTC INSPECTION [START STOP UNIT].) • Is DTC C0040:23 displayed?	Yes	Repeat the inspection from Step 1. • If the malfunction recurs, replace the start stop unit, then go to the next step. (See 09-14-54 START STOP UNIT REMOVAL/ INSTALLATION.)
		No	Go to the next step.
8	**VERIFY IF OTHER DTCs DISPLAYED** • Are any other DTCs displayed?	Yes	Repair the malfunctioning part according to the applicable DTC troubleshooting. (See 09-02C-8 DTC TABLE [START STOP UNIT].)
		No	DTC troubleshooting completed.

ON-BOARD DIAGNOSTIC [START STOP UNIT]

DTC C0040:24 [START STOP UNIT]

id0902p6021200

System malfunction location	**Brake switch (No.1 signal) circuit malfunction**
Detection condition	• With the ignition switched ON (engine off or on), the start stop unit detects that the brake switch No.1 signal is in the on condition for **3 s or more** continuously for a continuous **5 times** even though brake switch No.2 signal changes.
Fail-safe	• Perform the brake switch (No.1 signal) control based on the CAN signal.
Possible cause	• Brake switch connector or terminal malfunction • Brake switch (No.1 signal) malfunction • Start stop unit connector or terminal malfunction • Short to power supply in wiring harness between brake switch terminal D and start stop unit terminal 1C • Start stop unit malfunction

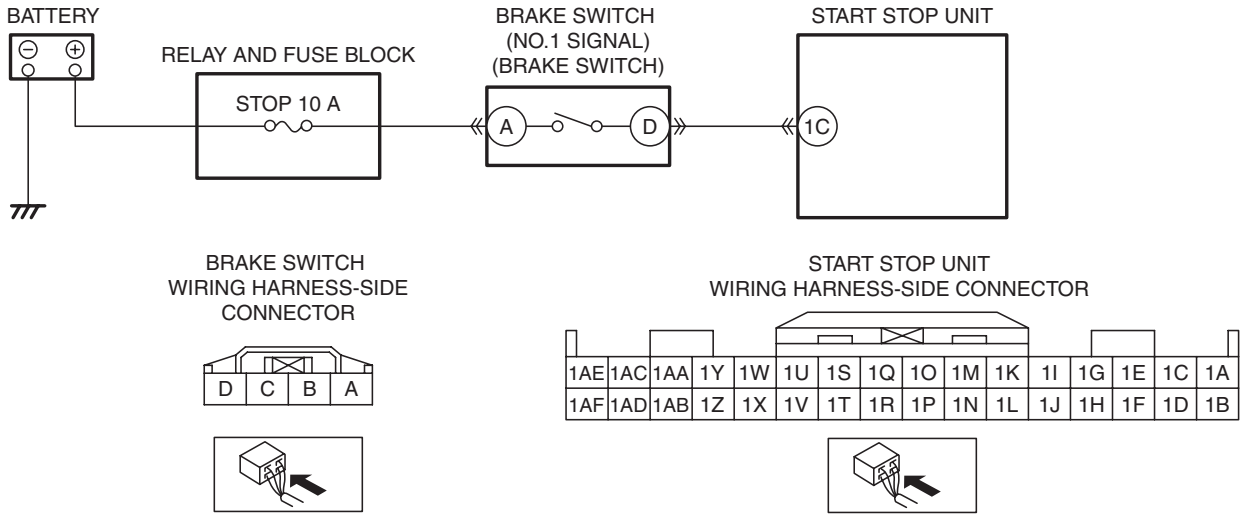

Diagnostic Procedure

Step	Inspection		Action
1	**INSPECT BRAKE SWITCH CONNECTOR CONDITION** • Switch the ignition to off. • Disconnect the negative battery cable. (See 01-17A-11 NEGATIVE BATTERY CABLE DISCONNECTION/CONNECTION [SKYACTIV-G 2.0].) (See 01-17A-13 NEGATIVE BATTERY CABLE DISCONNECTION/CONNECTION [SKYACTIV-G 2.0 (WITHOUT i-stop)].) (See 01-17B-9 NEGATIVE BATTERY CABLE DISCONNECTION/CONNECTION [SKYACTIV-D 2.2].) • Disconnect the brake switch connector. • Inspect the connector engagement and connection condition and inspect the terminals for damage, deformation, corrosion, or disconnection. • Is the connector normal?	Yes	Go to the next step.
		No	Repair or replace the connector, then go to Step 5.
2	**INSPECT BRAKE SWITCH (NO.1 SIGNAL)** • Inspect the brake switch (No.1 signal). (See 04-11-11 BRAKE SWITCH INSPECTION.) • Is the brake switch (No.1 signal) normal?	Yes	Go to the next step.
		No	Replace the brake switch, then go to Step 5. (See 04-11-8 BRAKE PEDAL REMOVAL/INSTALLATION [L.H.D.].) (See 04-11-9 BRAKE PEDAL REMOVAL/INSTALLATION [R.H.D.].)

ON-BOARD DIAGNOSTIC [START STOP UNIT]

Step	Inspection		Action
3	**INSPECT START STOP UNIT CONNECTOR CONDITION** • Disconnect the start stop unit connector. • Inspect the connector engagement and connection condition and inspect the terminals for damage, deformation, corrosion, or disconnection. • Is the connector normal?	Yes	Go to the next step.
		No	Repair or replace the connector, then go to Step 5.
4	**INSPECT BRAKE SWITCH (NO.1 SIGNAL) CIRCUIT FOR SHORT TO POWER SUPPLY** • Verify that the brake switch and start stop unit connectors are disconnected. • Connect the negative battery cable. (See 01-17A-11 NEGATIVE BATTERY CABLE DISCONNECTION/CONNECTION [SKYACTIV-G 2.0].) (See 01-17A-13 NEGATIVE BATTERY CABLE DISCONNECTION/CONNECTION [SKYACTIV-G 2.0 (WITHOUT i-stop)].) (See 01-17B-9 NEGATIVE BATTERY CABLE DISCONNECTION/CONNECTION [SKYACTIV-D 2.2].) • Switch the ignition ON (engine off or on). • Measure the voltages at brake switch terminal D (vehicle wiring harness side) when the ignition is switched OFF (LOCK) and ON (engine off or on). • Is the voltage **0 V**?	Yes	Go to the next step.
		No	Repair or replace the wiring harness which has a short to the power supply, then go to the next step.
5	**VERIFY THAT REPAIRS HAVE BEEN COMPLETED** • Reconnect all the disconnected connectors. • Reconnect the disconnected negative battery cable. (See 01-17A-11 NEGATIVE BATTERY CABLE DISCONNECTION/CONNECTION [SKYACTIV-G 2.0].) (See 01-17A-13 NEGATIVE BATTERY CABLE DISCONNECTION/CONNECTION [SKYACTIV-G 2.0 (WITHOUT i-stop)].) (See 01-17B-9 NEGATIVE BATTERY CABLE DISCONNECTION/CONNECTION [SKYACTIV-D 2.2].) • Clear DTC for the start stop unit using the M-MDS. (See 09-02C-7 CLEARING DTC [START STOP UNIT].) • With the ignition switched ON (engine off or on), perform the work of depressing the brake pedal for **3 s or more** and then releasing it for **5 or more times**. • Perform the DTC inspection for the start stop unit using the M-MDS. (See 09-02C-6 DTC INSPECTION [START STOP UNIT].) • Is DTC C0040:24 displayed?	Yes	Repeat the inspection from Step 1. • If the malfunction recurs, replace the start stop unit, then go to the next step. (See 09-14-54 START STOP UNIT REMOVAL/INSTALLATION.)
		No	Go to the next step.
6	**VERIFY IF OTHER DTCs DISPLAYED** • Are any other DTCs displayed?	Yes	Repair the malfunctioning part according to the applicable DTC troubleshooting. (See 09-02C-8 DTC TABLE [START STOP UNIT].)
		No	DTC troubleshooting completed.

ON-BOARD DIAGNOSTIC [START STOP UNIT]

DTC C0051:95 [START STOP UNIT]

id0902p6027700

System malfunction location	**Steering angle sensor assembly malfunction**
Detection condition	• The start stop unit receives the following signals with the ignition switched ON (engine off or on). — Steering angle sensor assembly malfunction from EPS control module for **1 s or more** — Improper assembly of steering angle sensor at 360° — Steering wheel angle of **720° or more** for **0.048 s or more**
Fail-safe	—
Possible cause	• DTCs are stored in the EPS control module. • Improper assembly of steering angle sensor • Start stop unit malfunction
System wiring diagram	—

Diagnostic Procedure

Step	Inspection		Action
1	**VERIFY EPS CONTROL MODULE DTCs** • Perform the DTC inspection for the EPS control module using the M-MDS. (See 06-02-5 ELECTRIC POWER STEERING (EPS) ON-BOARD DIAGNOSIS.) • Is the DTC displayed?	Yes	Repair the malfunctioning part according to the applicable DTC troubleshooting. (See 06-02-5 ELECTRIC POWER STEERING (EPS) ON-BOARD DIAGNOSIS.)
		No	Go to the next step.
2	**VERIFY STEERING ANGLE SENSOR INSTALLATION CONDITION** • Verify the steering angle sensor installation condition. (See 08-10-24 CLOCK SPRING REMOVAL/INSTALLATION.) • Is the steering angle sensor installed correctly?	Yes	Go to the next step.
		No	Install the steering angle sensor correctly, then go to the next step. (See 08-10-24 CLOCK SPRING REMOVAL/INSTALLATION.)
3	**VERIFY THAT REPAIRS HAVE BEEN COMPLETED** • Clear DTC for the start stop unit using the M-MDS. (See 09-02C-7 CLEARING DTC [START STOP UNIT].) • Switch the ignition ON (engine off or on) and wait for **1 s or more**. • Perform the DTC inspection for the start stop unit using the M-MDS. (See 09-02C-6 DTC INSPECTION [START STOP UNIT].) • Is DTC C0051:95 displayed?	Yes	Repair the malfunctioning part according to the applicable DTC troubleshooting. (See 09-02C-8 DTC TABLE [START STOP UNIT].)
		No	Go to the next step.
4	**VERIFY IF OTHER DTCs DISPLAYED** • Are any other DTCs displayed?	Yes	Repair the malfunctioning part according to the applicable DTC troubleshooting. (See 09-02C-8 DTC TABLE [START STOP UNIT].)
		No	DTC troubleshooting completed.

ON-BOARD DIAGNOSTIC [START STOP UNIT]

DTC C0051:2F [START STOP UNIT]

id0902p6021300

System malfunction location	**Steering angle sensor signal error**
Detection condition	• The start stop unit detects steering angle sensor signal error for **5 s or more** with the ignition switched ON (engine off or on).
Fail-safe	—
Possible cause	• Start stop unit malfunction
System wiring diagram	—

Diagnostic Procedure

Step	Inspection		Action
1	**PERFORM DTC INSPECTION AND VERIFY IF MALFUNCTIONING PART IS START STOP UNIT** • Clear DTC for the start stop unit using the M-MDS. (See 09-02C-7 CLEARING DTC [START STOP UNIT].) • Perform the DTC inspection for the start stop unit using the M-MDS. (See 09-02C-6 DTC INSPECTION [START STOP UNIT].) • Is DTC C0051:2F displayed?	Yes	Replace the start stop unit, then go to the next step. (See 09-14-54 START STOP UNIT REMOVAL/INSTALLATION.)
		No	Go to the next step.
2	**VERIFY IF OTHER DTCs DISPLAYED** • Are any other DTCs displayed?	Yes	Repair the malfunctioning part according to the applicable DTC troubleshooting. (See 09-02C-8 DTC TABLE [START STOP UNIT].)
		No	DTC troubleshooting completed.

ON-BOARD DIAGNOSTIC [START STOP UNIT]

DTC C0052:14 [START STOP UNIT]

id0902p6021400

System malfunction location	**Steering angle sensor A signal circuit malfunction**
Detection condition	• The start stop unit detects an open circuit or a short to ground in steering angle sensor A signal circuit for.
Fail-safe	—
Possible cause	• Steering angle sensor connector or terminal malfunction • Start stop unit connector or terminal malfunction • Short to ground in wiring harness between start stop unit terminal 1U and steering angle sensor terminal A • Open circuit in wiring harness between start stop unit terminal 1U and steering angle sensor terminal A • Steering angle sensor malfunction • Start stop unit malfunction

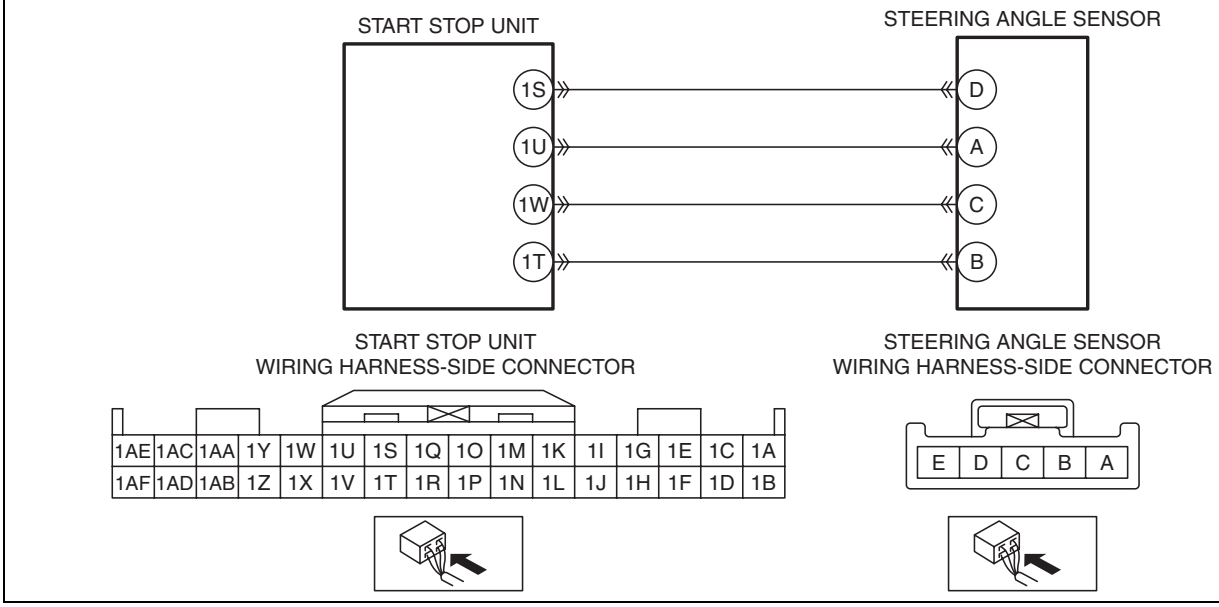

ON-BOARD DIAGNOSTIC [START STOP UNIT]

Diagnostic Procedure

Step	Inspection		Action
1	**INSPECT STEERING ANGLE SENSOR CONNECTOR CONDITION** • Switch the ignition to off. • Disconnect the negative battery cable. (See 01-17A-11 NEGATIVE BATTERY CABLE DISCONNECTION/CONNECTION [SKYACTIV-G 2.0].) (See 01-17A-13 NEGATIVE BATTERY CABLE DISCONNECTION/CONNECTION [SKYACTIV-G 2.0 (WITHOUT i-stop)].) (See 01-17B-9 NEGATIVE BATTERY CABLE DISCONNECTION/CONNECTION [SKYACTIV-D 2.2].) • Disconnect the steering angle sensor connector. • Inspect the connector engagement and connection condition and inspect the terminals for damage, deformation, corrosion, or disconnection. • Is the connector normal?	Yes	Go to the next step.
		No	Repair or replace the connector, then go to Step 6.
2	**INSPECT START STOP UNIT CONNECTOR CONDITION** • Disconnect the start stop unit connector. • Inspect the connector engagement and connection condition and inspect the terminals for damage, deformation, corrosion, or disconnection. • Is the connector normal?	Yes	Go to the next step.
		No	Repair or replace the connector, then go to Step 6.
3	**INSPECT STEERING ANGLE SENSOR CIRCUIT FOR SHORT TO GROUND** • Verify that the steering angle sensor and start stop unit connectors are disconnected. • Inspect for continuity between steering angle sensor terminal A (vehicle wiring harness side) and body ground. • Is there continuity?	Yes	Repair or replace the wiring harness which is shorted to ground, then go to Step 6.
		No	Go to the next step.
4	**INSPECT STEERING ANGLE SENSOR CIRCUIT FOR OPEN CIRCUIT** • Verify that the steering angle sensor and start stop unit connectors are disconnected. • Inspect the wiring harness for an open circuit between start stop unit terminal 1U (vehicle wiring harness side) and steering angle sensor terminal A (vehicle wiring harness side). • Is there continuity?	Yes	Go to the next step.
		No	Repair or replace the wiring harness which has an open circuit, then go to Step 6.
5	**INSPECT STEERING ANGLE SENSOR** • Inspect the steering angle sensor. (See 09-18-33 STEERING ANGLE SENSOR INSPECTION.) • Is the steering angle sensor normal?	Yes	Go to the next step.
		No	Replace the steering angle sensor, then go to the next step. (See 08-10-24 CLOCK SPRING REMOVAL/ INSTALLATION.)

ON-BOARD DIAGNOSTIC [START STOP UNIT]

Step	Inspection		Action
6	**VERIFY THAT REPAIRS HAVE BEEN COMPLETED** • Reconnect all the disconnected connectors. • Reconnect the disconnected negative battery cable. (See 01-17A-11 NEGATIVE BATTERY CABLE DISCONNECTION/CONNECTION [SKYACTIV-G 2.0].) (See 01-17A-13 NEGATIVE BATTERY CABLE DISCONNECTION/CONNECTION [SKYACTIV-G 2.0 (WITHOUT i-stop)].) (See 01-17B-9 NEGATIVE BATTERY CABLE DISCONNECTION/CONNECTION [SKYACTIV-D 2.2].) • Clear DTC for the start stop unit using the M-MDS. (See 09-02C-7 CLEARING DTC [START STOP UNIT].) • Perform the DTC inspection for the start stop unit using the M-MDS. (See 09-02C-6 DTC INSPECTION [START STOP UNIT].) • Is DTC C0052:14 displayed?	Yes	Repeat the inspection from Step 1. • If the malfunction recurs, replace the start stop unit, then go to the next step. (See 09-14-54 START STOP UNIT REMOVAL/INSTALLATION.)
		No	Go to the next step.
7	**VERIFY IF OTHER DTCs DISPLAYED** • Are any other DTCs displayed?	Yes	Repair the malfunctioning part according to the applicable DTC troubleshooting. (See 09-02C-8 DTC TABLE [START STOP UNIT].)
		No	DTC troubleshooting completed.

DTC C0052:2F [START STOP UNIT]

id0902p6021500

System malfunction location	**Steering angle sensor A signal malfunction**
Detection condition	• The start stop unit detected sudden change in steering angle sensor A signal. • The start stop unit detected that steering angle sensor A signal is stuck with the ignition switched ON (engine off or on).
Fail-safe	—
Possible cause	• Steering angle sensor malfunction • Start stop unit malfunction
System wiring diagram	—

Diagnostic Procedure

Step	Inspection		Action
1	**INSPECT STEERING ANGLE SENSOR** • Inspect the steering angle sensor. (See 09-18-33 STEERING ANGLE SENSOR INSPECTION.) • Is the steering angle sensor normal?	Yes	Go to the next step.
		No	Replace the steering angle sensor, then go to the next step. (See 08-10-24 CLOCK SPRING REMOVAL/INSTALLATION.)
2	**VERIFY THAT REPAIRS HAVE BEEN COMPLETED** • Clear DTC for the start stop unit using the M-MDS. (See 09-02C-7 CLEARING DTC [START STOP UNIT].) • Perform the DTC inspection for the start stop unit using the M-MDS. (See 09-02C-6 DTC INSPECTION [START STOP UNIT].) • Is DTC C0052:2F displayed?	Yes	Repeat the inspection from Step 1. • If the malfunction recurs, replace the start stop unit, then go to the next step. (See 09-14-54 START STOP UNIT REMOVAL/INSTALLATION.)
		No	Go to the next step.
3	**VERIFY IF OTHER DTCs DISPLAYED** • Are any other DTCs displayed?	Yes	Repair the malfunctioning part according to the applicable DTC troubleshooting. (See 09-02C-8 DTC TABLE [START STOP UNIT].)
		No	DTC troubleshooting completed.

ON-BOARD DIAGNOSTIC [START STOP UNIT]

DTC C0053:14 [START STOP UNIT]

id0902p6021600

System malfunction location	**Steering angle sensor B signal circuit malfunction**
Detection condition	• The start stop unit detects an open circuit or a short to ground in steering angle sensor B signal circuit.
Fail-safe	—
Possible cause	• Steering angle sensor connector or terminal malfunction • Start stop unit connector or terminal malfunction • Short to ground in wiring harness between start stop unit terminal 1W and steering angle sensor terminal C • Open circuit in wiring harness between start stop unit terminal 1W and steering angle sensor terminal C • Steering angle sensor malfunction • Start stop unit malfunction

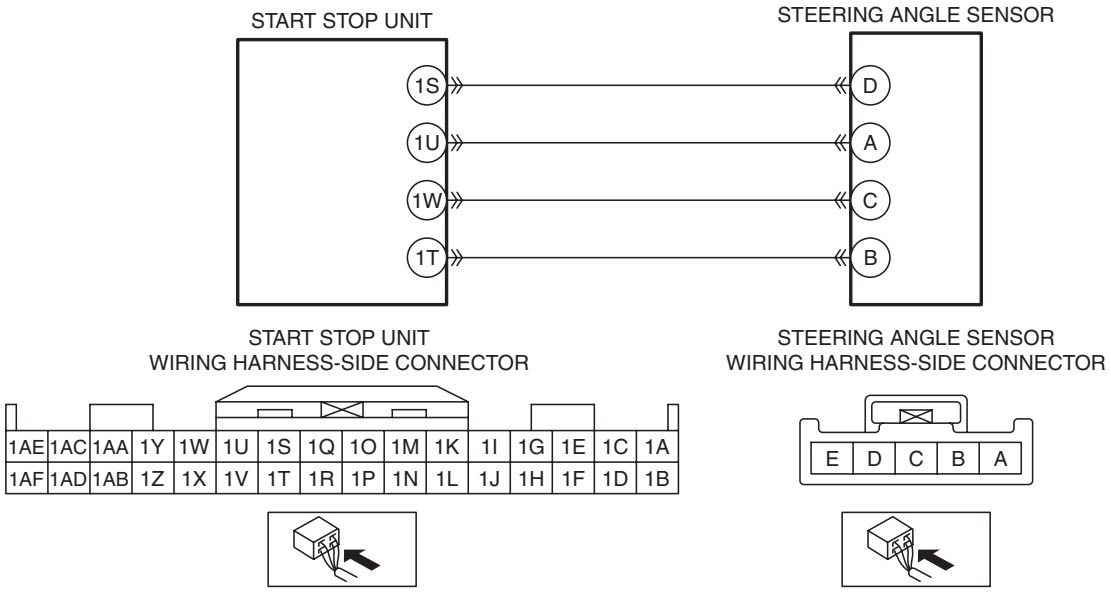

Diagnostic Procedure

Step	Inspection		Action
1	**INSPECT STEERING ANGLE SENSOR CONNECTOR CONDITION** • Switch the ignition to off. • Disconnect the negative battery cable. (See 01-17A-11 NEGATIVE BATTERY CABLE DISCONNECTION/CONNECTION [SKYACTIV-G 2.0].) (See 01-17A-13 NEGATIVE BATTERY CABLE DISCONNECTION/CONNECTION [SKYACTIV-G 2.0 (WITHOUT i-stop)].) (See 01-17B-9 NEGATIVE BATTERY CABLE DISCONNECTION/CONNECTION [SKYACTIV-D 2.2].) • Disconnect the steering angle sensor connector. • Inspect the connector engagement and connection condition and inspect the terminals for damage, deformation, corrosion, or disconnection. • Is the connector normal?	Yes	Go to the next step.
		No	Repair or replace the connector, then go to Step 6.

ON-BOARD DIAGNOSTIC [START STOP UNIT]

Step	Inspection		Action
2	**INSPECT START STOP UNIT CONNECTOR CONDITION** • Disconnect the start stop unit connector. • Inspect the connector engagement and connection condition and inspect the terminals for damage, deformation, corrosion, or disconnection. • Is the connector normal?	Yes	Go to the next step.
		No	Repair or replace the connector, then go to Step 6.
3	**INSPECT STEERING ANGLE SENSOR CIRCUIT FOR SHORT TO GROUND** • Verify that the steering angle sensor and start stop unit connectors are disconnected. • Inspect for continuity between steering angle sensor terminal C (vehicle wiring harness side) and body ground. • Is there continuity?	Yes	Repair or replace the wiring harness which is shorted to ground, then go to Step 6.
		No	Go to the next step.
4	**INSPECT STEERING ANGLE SENSOR CIRCUIT FOR OPEN CIRCUIT** • Verify that the steering angle sensor and start stop unit connectors are disconnected. • Inspect the wiring harness for an open circuit between start stop unit terminal 1W (vehicle wiring harness side) and steering angle sensor terminal C (vehicle wiring harness side). • Is there continuity?	Yes	Go to the next step.
		No	Repair or replace the wiring harness which has an open circuit, then go to Step 6.
5	**INSPECT STEERING ANGLE SENSOR** • Inspect the steering angle sensor. (See 09-18-33 STEERING ANGLE SENSOR INSPECTION.) • Is the steering angle sensor normal?	Yes	Go to the next step.
		No	Replace the steering angle sensor, then go to the next step. (See 08-10-24 CLOCK SPRING REMOVAL/INSTALLATION.)
6	**VERIFY THAT REPAIRS HAVE BEEN COMPLETED** • Reconnect all the disconnected connectors. • Reconnect the disconnected negative battery cable. (See 01-17A-11 NEGATIVE BATTERY CABLE DISCONNECTION/CONNECTION [SKYACTIV-G 2.0].) (See 01-17A-13 NEGATIVE BATTERY CABLE DISCONNECTION/CONNECTION [SKYACTIV-G 2.0 (WITHOUT i-stop)].) (See 01-17B-9 NEGATIVE BATTERY CABLE DISCONNECTION/CONNECTION [SKYACTIV-D 2.2].) • Clear DTC for the start stop unit using the M-MDS. (See 09-02C-7 CLEARING DTC [START STOP UNIT].) • Perform the DTC inspection for the start stop unit using the M-MDS. (See 09-02C-6 DTC INSPECTION [START STOP UNIT].) • Is DTC C0053:14 displayed?	Yes	Repeat the inspection from Step 1. • If the malfunction recurs, replace the start stop unit, then go to the next step. (See 09-14-54 START STOP UNIT REMOVAL/INSTALLATION.)
		No	Go to the next step.
7	**VERIFY IF OTHER DTCs DISPLAYED** • Are any other DTCs displayed?	Yes	Repair the malfunctioning part according to the applicable DTC troubleshooting. (See 09-02C-8 DTC TABLE [START STOP UNIT].)
		No	DTC troubleshooting completed.

ON-BOARD DIAGNOSTIC [START STOP UNIT]

DTC C0053:2F [START STOP UNIT]

id0902p6021700

System malfunction location	**Steering angle sensor B signal malfunction**
Detection condition	• The start stop unit detects sudden change in steering angle sensor B signal. • The start stop unit detects that steering angle sensor B signal is stuck with the ignition switched ON (engine off or on).
Fail-safe	—
Possible cause	• Steering angle sensor malfunction • Start stop unit malfunction
System wiring diagram	—

Diagnostic Procedure

Step	Inspection		Action
1	**INSPECT STEERING ANGLE SENSOR** • Inspect the steering angle sensor. (See 09-18-33 STEERING ANGLE SENSOR INSPECTION.) • Is the steering angle sensor normal?	Yes	Go to the next step.
		No	Replace the steering angle sensor, then go to the next step. (See 08-10-24 CLOCK SPRING REMOVAL/ INSTALLATION.)
2	**VERIFY THAT REPAIRS HAVE BEEN COMPLETED** • Clear DTC for the start stop unit using the M-MDS. (See 09-02C-7 CLEARING DTC [START STOP UNIT].) • Perform the DTC inspection for the start stop unit using the M-MDS. (See 09-02C-6 DTC INSPECTION [START STOP UNIT].) • Is DTC C0053:2F displayed?	Yes	Repeat the inspection from Step 1. • If the malfunction recurs, replace the start stop unit, then go to the next step. (See 09-14-54 START STOP UNIT REMOVAL/ INSTALLATION.)
		No	Go to the next step.
3	**VERIFY IF OTHER DTCs DISPLAYED** • Are any other DTCs displayed?	Yes	Repair the malfunctioning part according to the applicable DTC troubleshooting. (See 09-02C-8 DTC TABLE [START STOP UNIT].)
		No	DTC troubleshooting completed.

ON-BOARD DIAGNOSTIC [START STOP UNIT]

DTC C2003:13 [START STOP UNIT]

id0902p6021800

System malfunction location	**Open circuit in steering switch**
Detection condition	• The start stop unit detects an open circuit in the steering switch circuit for **5 s or more** with the ignition switched ON (engine off or on).
Fail-safe	—
Possible cause	• Clock spring connector or terminal malfunction • Clock spring malfunction • Start stop unit connector or terminal malfunction • Open circuit in wiring harness between the following terminals: — Start stop unit terminal 1AA and clock spring (start stop unit side) terminal K — Start stop unit terminal 1AB and clock spring (start stop unit side) terminal C • Steering switch malfunction • Start stop unit malfunction

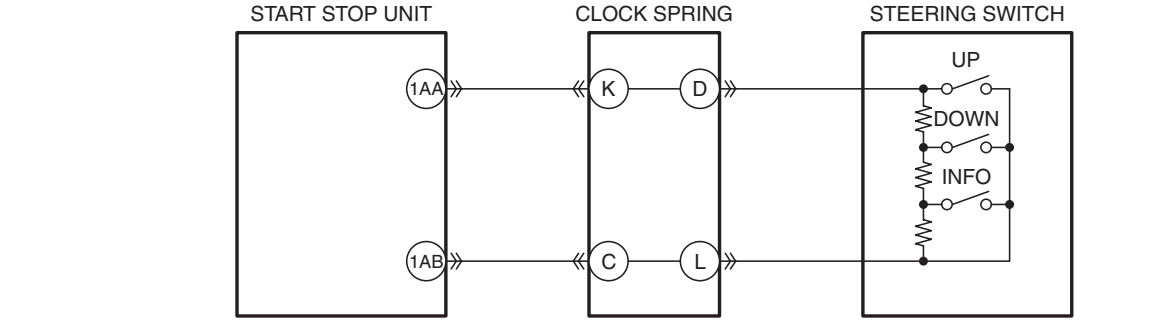

START STOP UNIT
WIRING HARNESS-SIDE CONNECTOR

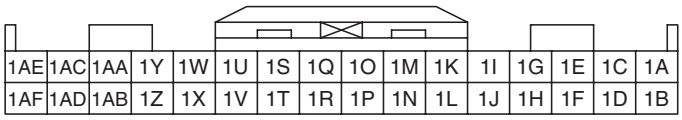

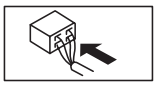

CLOCK SPRING
WIRING HARNESS-SIDE CONNECTOR

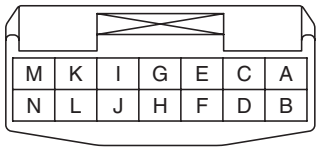

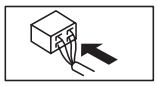

ON-BOARD DIAGNOSTIC [START STOP UNIT]

Diagnostic Procedure

Step	Inspection		Action
1	**INSPECT CLOCK SPRING CONNECTOR CONDITION** • Switch the ignition to off. • Disconnect the negative battery cable. (See 01-17A-11 NEGATIVE BATTERY CABLE DISCONNECTION/CONNECTION [SKYACTIV-G 2.0].) (See 01-17A-13 NEGATIVE BATTERY CABLE DISCONNECTION/CONNECTION [SKYACTIV-G 2.0 (WITHOUT i-stop)].) (See 01-17B-9 NEGATIVE BATTERY CABLE DISCONNECTION/CONNECTION [SKYACTIV-D 2.2].) • Disconnect the clock spring connector. • Inspect the connector engagement and connection condition and inspect the terminals for damage, deformation, corrosion, or disconnection. • Is the connector normal?	Yes	Go to the next step.
		No	Repair or replace the connector, then go to Step 6.
2	**INSPECT CLOCK SPRING** • Inspect the clock spring. (See 08-10-28 CLOCK SPRING INSPECTION.) • Is the clock spring normal?	Yes	Go to the next step.
		No	Replace the clock spring, then go to Step 6. (See 08-10-24 CLOCK SPRING REMOVAL/INSTALLATION.)
3	**INSPECT START STOP UNIT CONNECTOR CONDITION** • Disconnect the start stop unit connector. • Inspect the connector engagement and connection condition and inspect the terminals for damage, deformation, corrosion, or disconnection. • Is the connector normal?	Yes	Go to the next step.
		No	Repair or replace the connector, then go to Step 6.
4	**INSPECT STEERING SWITCH CIRCUIT FOR OPEN CIRCUIT** • Verify that the clock spring and start stop unit connectors are disconnected. • Inspect the wiring harness between the following terminals (vehicle wiring harness side) for continuity. — Start stop unit terminal 1AA and clock spring (start stop unit side) terminal K — Start stop unit terminal 1AB and clock spring (start stop unit side) terminal C • Is there continuity?	Yes	Go to the next step.
		No	Repair or replace the wiring harness which has an open circuit, then go to Step 6.
5	**INSPECT STEERING SWITCH** • Inspect the steering switch. (See 09-20-57 STEERING SWITCH INSPECTION.) • Is the steering switch normal?	Yes	Go to the next step.
		No	Replace the steering switch, then go to the next step. (See 09-20-54 STEERING SWITCH REMOVAL/INSTALLATION.)

ON-BOARD DIAGNOSTIC [START STOP UNIT]

Step	Inspection		Action
6	**VERIFY THAT REPAIRS HAVE BEEN COMPLETED** • Reconnect all the disconnected connectors. • Reconnect the disconnected negative battery cable. (See 01-17A-11 NEGATIVE BATTERY CABLE DISCONNECTION/CONNECTION [SKYACTIV-G 2.0].) (See 01-17A-13 NEGATIVE BATTERY CABLE DISCONNECTION/CONNECTION [SKYACTIV-G 2.0 (WITHOUT i-stop)].) (See 01-17B-9 NEGATIVE BATTERY CABLE DISCONNECTION/CONNECTION [SKYACTIV-D 2.2].) • Clear DTC for the start stop unit using the M-MDS. (See 09-02C-7 CLEARING DTC [START STOP UNIT].) • Switch the ignition ON (engine off or on) and wait for **5 s or more**. • Perform the DTC inspection for the start stop unit using the M-MDS. (See 09-02C-6 DTC INSPECTION [START STOP UNIT].) • Is DTC C2003:13 displayed?	Yes	Repeat the inspection from Step 1. • If the malfunction recurs, replace the start stop unit, then go to the next step. (See 09-14-54 START STOP UNIT REMOVAL/INSTALLATION.)
		No	Go to the next step.
7	**VERIFY IF OTHER DTCs DISPLAYED** • Are any other DTCs displayed?	Yes	Repair the malfunctioning part according to the applicable DTC troubleshooting. (See 09-02C-8 DTC TABLE [START STOP UNIT].)
		No	DTC troubleshooting completed.

ON-BOARD DIAGNOSTIC [START STOP UNIT]

DTC P0560:16 [START STOP UNIT]

id0902p6021900

System malfunction location	**Start stop unit power supply voltage (+B3) low input**
Detection condition	• Start stop unit power supply circuit (+B3) voltage of **less than 8.5 V** is detected for **5 s or more**.
Fail-safe	—
Possible cause	• Battery malfunction • Start stop unit connector or terminal malfunction • Start stop unit power supply circuit (+B3) malfunction — Short to ground in wiring harness between MAIN 200 A fuse and start stop unit terminal 2X — MAIN 200 A fuse malfunction — CABIN.+B 50 A fuse malfunction — SRS2/ESCL 15 A fuse malfunction — Open circuit in wiring harness between battery positive terminal and start stop unit terminal 2X • Start stop unit malfunction

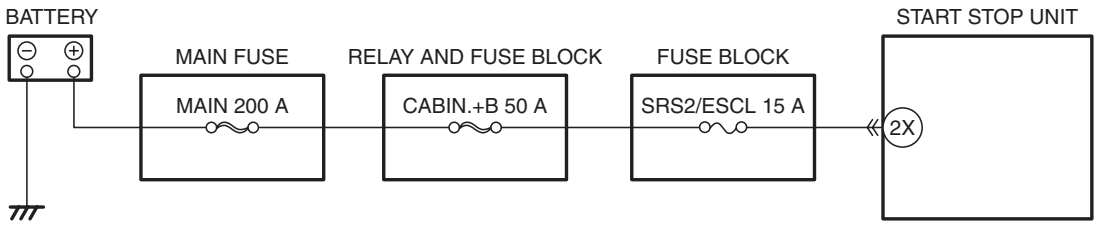

START STOP UNIT
WIRING HARNESS-SIDE CONNECTOR

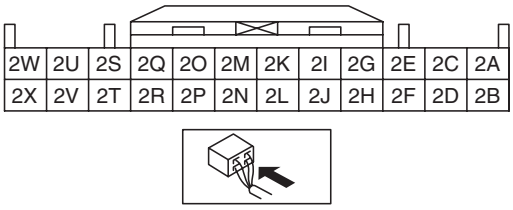

Diagnostic Procedure

Step	Inspection		Action
1	**INSPECT BATTERY** • Inspect the battery. (See 01-17A-7 BATTERY INSPECTION [SKYACTIV-G 2.0].) (See 01-17A-8 BATTERY INSPECTION [SKYACTIV-G 2.0 (WITHOUT i-stop)].) (See 01-17B-6 BATTERY INSPECTION [SKYACTIV-D 2.2].) • Is the battery normal?	Yes	Go to the next step.
		No	Recharge or replace the battery, then go to Step 4. (See 01-17A-9 BATTERY RECHARGING [SKYACTIV-G 2.0].) (See 01-17A-10 BATTERY RECHARGING [SKYACTIV-G 2.0 (WITHOUT i-stop)].) (See 01-17B-8 BATTERY RECHARGING [SKYACTIV-D 2.2].) (See 01-17A-3 BATTERY REMOVAL/INSTALLATION [SKYACTIV-G 2.0].) (See 01-17B-3 BATTERY REMOVAL/INSTALLATION [SKYACTIV-D 2.2].)

ON-BOARD DIAGNOSTIC [START STOP UNIT]

Step	Inspection		Action
2	**INSPECT START STOP UNIT CONNECTOR CONDITION** • Switch the ignition to off. • Disconnect the negative battery cable. (See 01-17A-11 NEGATIVE BATTERY CABLE DISCONNECTION/CONNECTION [SKYACTIV-G 2.0].) (See 01-17A-13 NEGATIVE BATTERY CABLE DISCONNECTION/CONNECTION [SKYACTIV-G 2.0 (WITHOUT i-stop)].) (See 01-17B-9 NEGATIVE BATTERY CABLE DISCONNECTION/CONNECTION [SKYACTIV-D 2.2].) • Disconnect the start stop unit connector. • Inspect the connector engagement and connection condition and inspect the terminals for damage, deformation, corrosion, or disconnection. • Is the connector normal?	Yes	Go to the next step.
		No	Repair or replace the connector, then go to Step 4.
3	**INSPECT START STOP UNIT POWER SUPPLY CIRCUIT (+B3)** • Reconnect all the disconnected connectors. • Connect the negative battery cable. (See 01-17A-11 NEGATIVE BATTERY CABLE DISCONNECTION/CONNECTION [SKYACTIV-G 2.0].) (See 01-17A-13 NEGATIVE BATTERY CABLE DISCONNECTION/CONNECTION [SKYACTIV-G 2.0 (WITHOUT i-stop)].) (See 01-17B-9 NEGATIVE BATTERY CABLE DISCONNECTION/CONNECTION [SKYACTIV-D 2.2].) • Display PID VPWR_B3 using the M-MDS. (See 09-02C-151 PID/DATA MONITOR INSPECTION [START STOP UNIT].) • Is the voltage **B+**?	Yes	Go to the next step.
		No	Inspect the MAIN 200 A, CABIN.+B 50 A and SRS2/ESCL 15 A fuses. • If a fuse is burnt out: — Repair or replace the wiring harness which is shorted to ground. — Replace the burnt out fuse. • If a fuse is damaged: — Replace the damaged fuse. • If the fuse is normal: — Repair or replace the wiring harness which has an open circuit. Go to the next step.
4	**VERIFY THAT REPAIRS HAVE BEEN COMPLETED** • Reconnect all the disconnected connectors. • Reconnect the disconnected negative battery cable. (See 01-17A-11 NEGATIVE BATTERY CABLE DISCONNECTION/CONNECTION [SKYACTIV-G 2.0].) (See 01-17A-13 NEGATIVE BATTERY CABLE DISCONNECTION/CONNECTION [SKYACTIV-G 2.0 (WITHOUT i-stop)].) (See 01-17B-9 NEGATIVE BATTERY CABLE DISCONNECTION/CONNECTION [SKYACTIV-D 2.2].) • Clear DTC for the start stop unit using the M-MDS. (See 09-02C-7 CLEARING DTC [START STOP UNIT].) • Switch the ignition ON (engine off or on) and wait for **5 s or more**. • Perform the DTC inspection for the start stop unit using the M-MDS. (See 09-02C-6 DTC INSPECTION [START STOP UNIT].) • Is DTC P0560:16 displayed?	Yes	Repeat the inspection from Step 1. • If the malfunction recurs, replace the start stop unit, then go to the next step. (See 09-14-54 START STOP UNIT REMOVAL/INSTALLATION.)
		No	Go to the next step.
5	**VERIFY IF OTHER DTCs DISPLAYED** • Are any other DTCs displayed?	Yes	Repair the malfunctioning part according to the applicable DTC troubleshooting. (See 09-02C-8 DTC TABLE [START STOP UNIT].)
		No	DTC troubleshooting completed.

ON-BOARD DIAGNOSTIC [START STOP UNIT]

DTC P0615:11 [START STOP UNIT]

id0902p6022000

System malfunction location	**Starter relay circuit malfunction**
Detection condition	• The start stop unit detects starter relay monitor circuit voltage of **less than 2.2 V** for **1 s or more** with the ignition switched off.
Fail-safe	—
Possible cause	• DTCs are stored in the PCM • Starter relay malfunction • Start stop unit connector or terminal malfunction • PCM connector malfunction • Short to ground in wiring harness between the following terminals: — Starter relay terminal E—Start stop unit terminal 1D — Start stop unit terminal 1D—PCM terminal 2AZ (SKYACTIV-G 2.0) — Start stop unit terminal 1D—PCM terminal 2BF (SKYACTIV-D 2.2) — Starter relay terminal A—Start stop unit terminal 2V • Start stop unit malfunction

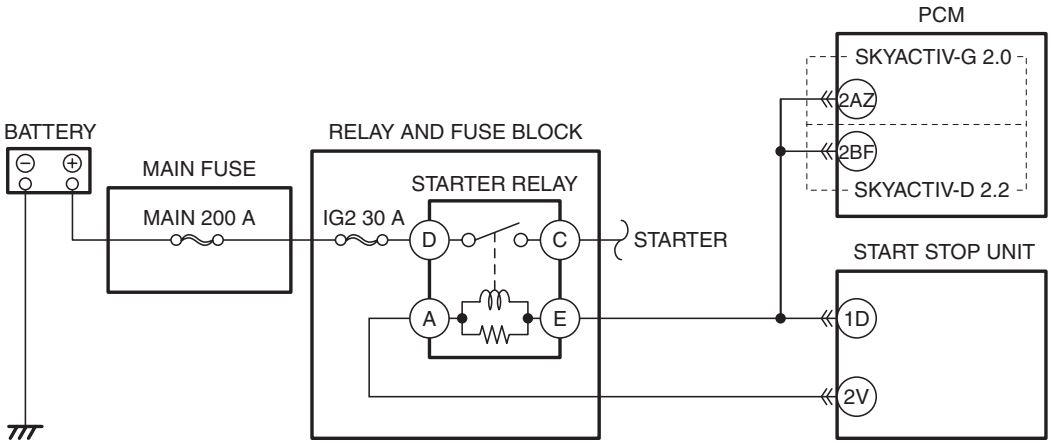

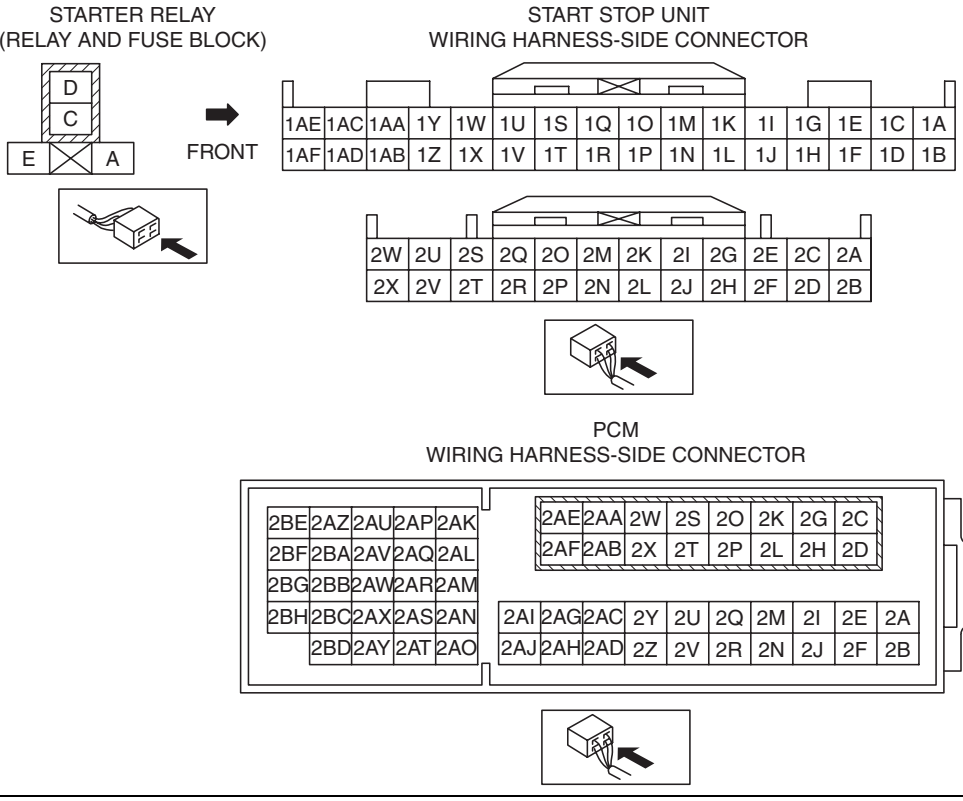

ON-BOARD DIAGNOSTIC [START STOP UNIT]

Diagnostic Procedure

Step	Inspection		Action
1	**VERIFY PCM DTCs** • Perform the DTC inspection for the PCM using the M-MDS. (See 01-02-8 ON-BOARD DIAGNOSTIC TEST [SKYACTIV-G 2.0].) • Is the DTC displayed?	Yes	Repair the malfunctioning part according to the applicable DTC troubleshooting. (See 01-02-14 DTC TABLE [SKYACTIV-G 2.0].)
		No	Go to the next step.
2	**INSPECT STARTER RELAY FOR MALFUNCTION** • Switch the ignition to off. • Disconnect the negative battery cable. (See 01-17A-11 NEGATIVE BATTERY CABLE DISCONNECTION/CONNECTION [SKYACTIV-G 2.0].) (See 01-17A-13 NEGATIVE BATTERY CABLE DISCONNECTION/CONNECTION [SKYACTIV-G 2.0 (WITHOUT i-stop)].) (See 01-17B-9 NEGATIVE BATTERY CABLE DISCONNECTION/CONNECTION [SKYACTIV-D 2.2].) • Remove the starter relay. (See 09-21-28 RELAY LOCATION.) • Inspect the starter relay. (See 09-21-29 RELAY INSPECTION.) • Is the starter relay normal?	Yes	Go to the next step.
		No	Replace the starter relay, then go to Step 6. (See 09-21-28 RELAY LOCATION.)
3	**INSPECT START STOP UNIT CONNECTOR CONDITION** • Disconnect the start stop unit connector. • Inspect the connector engagement and connection condition and inspect the terminals for damage, deformation, corrosion, or disconnection. • Is the connector normal?	Yes	Go to the next step.
		No	Repair or replace the connector, then go to Step 6.
4	**INSPECT PCM CONNECTOR CONDITION** • Disconnect the PCM connector. • Inspect the connector engagement and connection condition and inspect the terminals for damage, deformation, corrosion, or disconnection. • Is the connector normal?	Yes	Go to the next step.
		No	Repair or replace the connector, then go to Step 6.
5	**INSPECT STARTER RELAY CIRCUIT FOR SHORT TO GROUND** • Verify that the starter relay is removed. • Verify that the start stop unit and PCM connectors are disconnected. • Inspect for continuity between the following terminals (vehicle wiring harness side) and body ground. — Starter relay terminal E — Starter relay terminal A • Is there continuity?	Yes	Repair or replace the wiring harness which has a short to ground, then go to the next step.
		No	Go to the next step.

ON-BOARD DIAGNOSTIC [START STOP UNIT]

Step	Inspection		Action
6	**VERIFY THAT REPAIRS HAVE BEEN COMPLETED** • Reconnect all the disconnected connectors. • Reconnect the disconnected negative battery cable. (See 01-17A-11 NEGATIVE BATTERY CABLE DISCONNECTION/CONNECTION [SKYACTIV-G 2.0].) (See 01-17A-13 NEGATIVE BATTERY CABLE DISCONNECTION/CONNECTION [SKYACTIV-G 2.0 (WITHOUT i-stop)].) (See 01-17B-9 NEGATIVE BATTERY CABLE DISCONNECTION/CONNECTION [SKYACTIV-D 2.2].) • Clear DTC for the start stop unit using the M-MDS. (See 09-02C-7 CLEARING DTC [START STOP UNIT].) • Switch the ignition to off and wait for **1 s or more**. • Perform the DTC inspection for the start stop unit using the M-MDS. (See 09-02C-6 DTC INSPECTION [START STOP UNIT].) • Is DTC P0615:11 displayed?	Yes	Repeat the inspection from Step 1. • If the malfunction recurs, replace the start stop unit, then go to the next step. (See 09-14-54 START STOP UNIT REMOVAL/INSTALLATION.)
		No	Go to the next step.
7	**VERIFY IF OTHER DTCs DISPLAYED** • Are any other DTCs displayed?	Yes	Repair the malfunctioning part according to the applicable DTC troubleshooting. (See 09-02C-8 DTC TABLE [START STOP UNIT].)
		No	DTC troubleshooting completed.

ON-BOARD DIAGNOSTIC [START STOP UNIT]

DTC P0615:12 [START STOP UNIT]

id0902p6022100

System malfunction location	**Starter relay circuit malfunction**
Detection condition	• The start stop unit detects starter relay circuit voltage of specification or more for **1 s or more** with the ignition switched off.
Fail-safe	• Inhibits switching the ignition ON. • Inhibits the engine start.
Possible cause	• DTCs are stored in the PCM • Starter relay malfunction • Start stop unit connector or terminal malfunction • Short to power supply in wiring harness between the following terminals: — Starter relay terminal A—Start stop unit terminal 2V — Starter relay terminal E—Start stop unit terminal 1D • PCM connector malfunction • Short to ground in wiring harness between the following terminals: — Start stop unit terminal 1D—PCM terminal 2AZ (SKYACTIV-G 2.0) — Start stop unit terminal 1D—PCM terminal 2BF (SKYACTIV-G 2.2) • Start stop unit malfunction

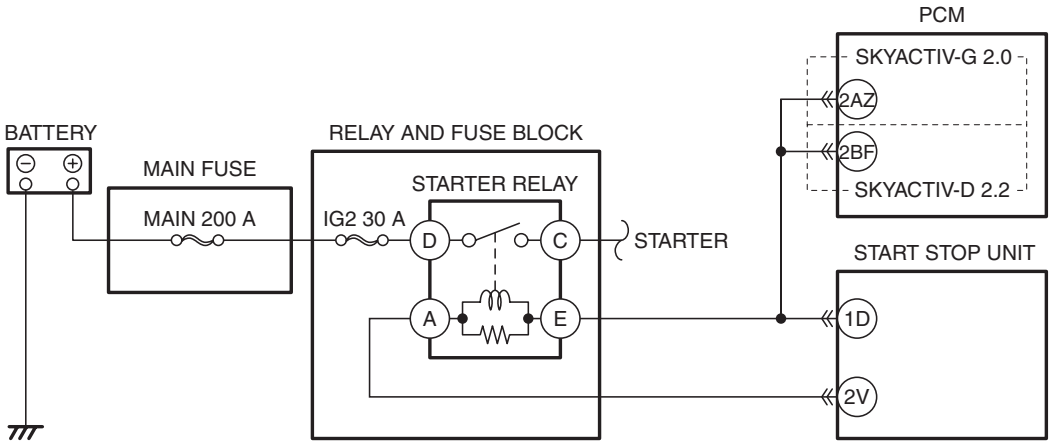

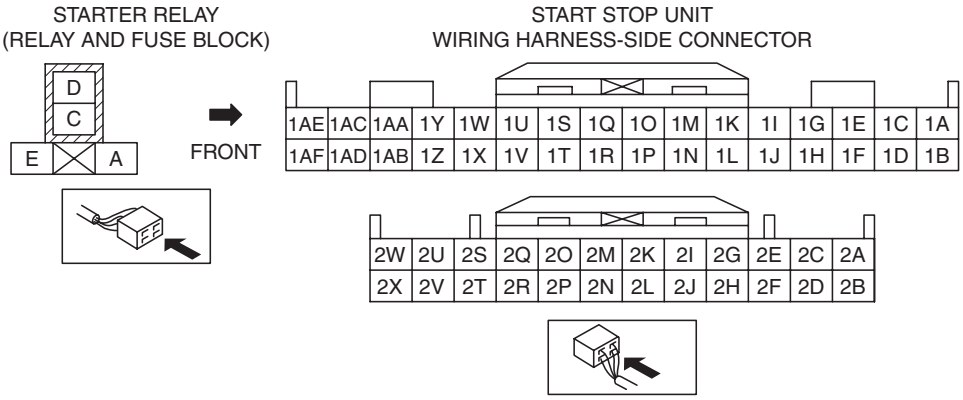

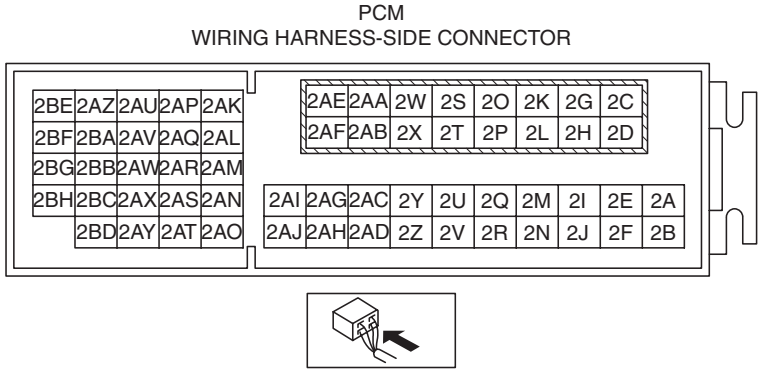

ON-BOARD DIAGNOSTIC [START STOP UNIT]

Diagnostic Procedure

Step	Inspection		Action
1	**VERIFY PCM DTCs** • Perform the DTC inspection for the PCM using the M-MDS. (See 01-02-8 ON-BOARD DIAGNOSTIC TEST [SKYACTIV-G 2.0].) • Is the DTC displayed?	Yes	Repair the malfunctioning part according to the applicable DTC troubleshooting. (See 01-02-14 DTC TABLE [SKYACTIV-G 2.0].)
		No	Go to the next step.
2	**INSPECT STARTER RELAY FOR MALFUNCTION** • Switch the ignition to off. • Disconnect the negative battery cable. (See 01-17A-11 NEGATIVE BATTERY CABLE DISCONNECTION/CONNECTION [SKYACTIV-G 2.0].) (See 01-17A-13 NEGATIVE BATTERY CABLE DISCONNECTION/CONNECTION [SKYACTIV-G 2.0 (WITHOUT i-stop)].) (See 01-17B-9 NEGATIVE BATTERY CABLE DISCONNECTION/CONNECTION [SKYACTIV-D 2.2].) • Remove the starter relay. (See 09-21-28 RELAY LOCATION.) • Inspect the starter relay. (See 09-21-29 RELAY INSPECTION.) • Is the starter relay normal?	Yes	Go to the next step.
		No	Replace the starter relay, then go to Step 7. (See 09-21-28 RELAY LOCATION.)
3	**INSPECT START STOP UNIT CONNECTOR CONDITION** • Disconnect the start stop unit connector. • Inspect the connector engagement and connection condition and inspect the terminals for damage, deformation, corrosion, or disconnection. • Is the connector normal?	Yes	Go to the next step.
		No	Repair or replace the connector, then go to Step 7.
4	**INSPECT STARTER RELAY CIRCUIT FOR SHORT TO POWER SUPPLY** • Verify that the starter relay is removed. • Verify that the start stop unit connector is disconnected. • Connect the negative battery cable. (See 01-17A-11 NEGATIVE BATTERY CABLE DISCONNECTION/CONNECTION [SKYACTIV-G 2.0].) (See 01-17A-13 NEGATIVE BATTERY CABLE DISCONNECTION/CONNECTION [SKYACTIV-G 2.0 (WITHOUT i-stop)].) (See 01-17B-9 NEGATIVE BATTERY CABLE DISCONNECTION/CONNECTION [SKYACTIV-D 2.2].) • Measure the voltage at the following terminals (vehicle wiring harness side). — Starter relay terminal A — Starter relay terminal E • Is the voltage **0 V**?	Yes	Go to the next step.
		No	Repair or replace the wiring harness which has a short to the power supply, then go to Step 7.

ON-BOARD DIAGNOSTIC [START STOP UNIT]

Step	Inspection		Action
5	**INSPECT PCM CONNECTOR CONDITION** • Disconnect the negative battery cable. (See 01-17A-11 NEGATIVE BATTERY CABLE DISCONNECTION/CONNECTION [SKYACTIV-G 2.0].) (See 01-17A-13 NEGATIVE BATTERY CABLE DISCONNECTION/CONNECTION [SKYACTIV-G 2.0 (WITHOUT i-stop)].) (See 01-17B-9 NEGATIVE BATTERY CABLE DISCONNECTION/CONNECTION [SKYACTIV-D 2.2].) • Disconnect the PCM connector. • Inspect the connector engagement and connection condition and inspect the terminals for damage, deformation, corrosion, or disconnection. • Is the connector normal?	Yes	Go to the next step.
		No	Repair or replace the connector, then go to Step 7.
6	**INSPECT STARTER RELAY CIRCUIT FOR SHORT TO GROUND** • Verify that the starter relay is removed. • Verify that the start stop unit and PCM connectors are disconnected. • Inspect for continuity the wiring harness between start stop unit terminal 1D (vehicle wiring harness side) and body ground. • Is there continuity?	Yes	Repair or replace the wiring harness which has a short to ground, then go to the next step.
		No	Go to the next step.
7	**VERIFY THAT REPAIRS HAVE BEEN COMPLETED** • Reconnect all the disconnected connectors. • Reconnect the disconnected negative battery cable. (See 01-17A-11 NEGATIVE BATTERY CABLE DISCONNECTION/CONNECTION [SKYACTIV-G 2.0].) (See 01-17A-13 NEGATIVE BATTERY CABLE DISCONNECTION/CONNECTION [SKYACTIV-G 2.0 (WITHOUT i-stop)].) (See 01-17B-9 NEGATIVE BATTERY CABLE DISCONNECTION/CONNECTION [SKYACTIV-D 2.2].) • Clear DTC for the start stop unit using the M-MDS. (See 09-02C-7 CLEARING DTC [START STOP UNIT].) • Switch the ignition to off and wait for **1 s or more**. • Perform the DTC inspection for the start stop unit using the M-MDS. (See 09-02C-6 DTC INSPECTION [START STOP UNIT].) • Is DTC P0615:12 displayed?	Yes	Repeat the inspection from Step 1. • If the malfunction recurs, replace the start stop unit, then go to the next step. (See 09-14-54 START STOP UNIT REMOVAL/INSTALLATION.)
		No	Go to the next step.
8	**VERIFY IF OTHER DTCs DISPLAYED** • Are any other DTCs displayed?	Yes	Repair the malfunctioning part according to the applicable DTC troubleshooting. (See 09-02C-8 DTC TABLE [START STOP UNIT].)
		No	DTC troubleshooting completed.

ON-BOARD DIAGNOSTIC [START STOP UNIT]

DTC P0615:13 [START STOP UNIT]

id0902p6022200

System malfunction location	**Starter relay circuit malfunction**
Detection condition	• The start stop unit detects an open circuit in the starter relay circuit for **1 s or more** with the ignition switched off.
Fail-safe	—
Possible cause	• Disconnect the starter stop unit with the battery cables connected. • Starter relay malfunction • Start stop unit connector or terminal malfunction • Open circuit in wiring harness between the following terminals: — Starter relay terminal A and start stop unit terminal 2V — Starter relay terminal E and start stop unit terminal 1D • Start stop unit malfunction

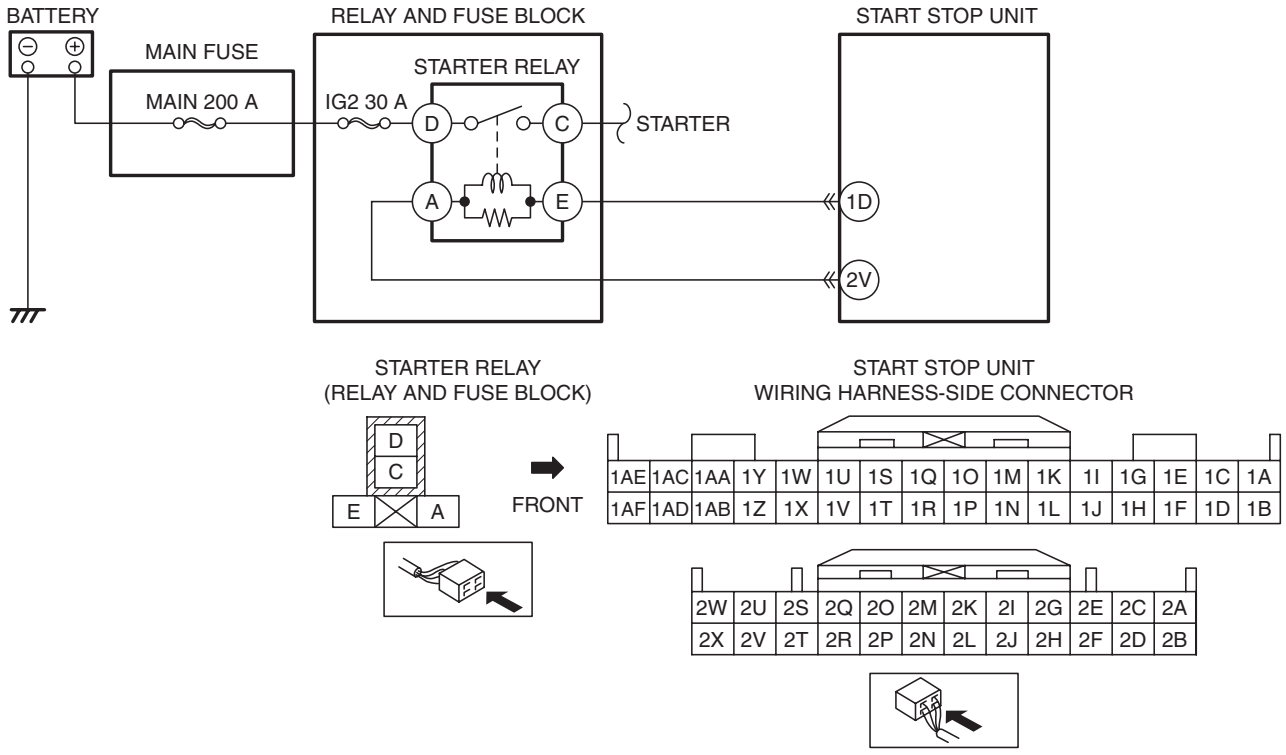

ON-BOARD DIAGNOSTIC [START STOP UNIT]

Diagnostic Procedure

Step	Inspection		Action
1	**INSPECT STARTER RELAY FOR MALFUNCTION** • Switch the ignition to off. • Disconnect the negative battery cable. (See 01-17A-11 NEGATIVE BATTERY CABLE DISCONNECTION/CONNECTION [SKYACTIV-G 2.0].) (See 01-17A-13 NEGATIVE BATTERY CABLE DISCONNECTION/CONNECTION [SKYACTIV-G 2.0 (WITHOUT i-stop)].) (See 01-17B-9 NEGATIVE BATTERY CABLE DISCONNECTION/CONNECTION [SKYACTIV-D 2.2].) • Remove the starter relay. (See 09-21-28 RELAY LOCATION.) • Inspect the starter relay. (See 09-21-29 RELAY INSPECTION.) • Is the starter relay normal?		Go to the next step.
		No	Replace the starter relay, then go to Step 4. (See 09-21-28 RELAY LOCATION.)
2	**INSPECT START STOP UNIT CONNECTOR CONDITION** • Disconnect the start stop unit connector. • Inspect the connector engagement and connection condition and inspect the terminals for damage, deformation, corrosion, or disconnection. • Is the connector normal?	Yes	Go to the next step.
		No	Repair or replace the connector, then go to Step 4.
3	**INSPECT STARTER RELAY CIRCUIT FOR OPEN CIRCUIT** • Verify that the starter relay is removed. • Verify that the start stop unit connector is disconnected. • Inspect the wiring harness between the following terminals (vehicle wiring harness side) for continuity. — Starter relay terminal A and start stop unit terminal 2V — Starter relay terminal E and start stop unit terminal 1D • Is there continuity?	Yes	Go to the next step.
		No	Repair or replace the wiring harness which has an open circuit, then go to the next step.
4	**VERIFY THAT REPAIRS HAVE BEEN COMPLETED** • Reconnect all the disconnected connectors. • Reconnect the disconnected negative battery cable. (See 01-17A-11 NEGATIVE BATTERY CABLE DISCONNECTION/CONNECTION [SKYACTIV-G 2.0].) (See 01-17A-13 NEGATIVE BATTERY CABLE DISCONNECTION/CONNECTION [SKYACTIV-G 2.0 (WITHOUT i-stop)].) (See 01-17B-9 NEGATIVE BATTERY CABLE DISCONNECTION/CONNECTION [SKYACTIV-D 2.2].) • Clear DTC for the start stop unit using the M-MDS. (See 09-02C-7 CLEARING DTC [START STOP UNIT].) • Switch the ignition to off and wait for **1 s or more**. • Perform the DTC inspection for the start stop unit using the M-MDS. (See 09-02C-6 DTC INSPECTION [START STOP UNIT].) • Is DTC P0615:13 displayed?	Yes	Repeat the inspection from Step 1. • If the malfunction recurs, replace the start stop unit, then go to the next step. (See 09-14-54 START STOP UNIT REMOVAL/INSTALLATION.)
		No	Go to the next step.

ON-BOARD DIAGNOSTIC [START STOP UNIT]

Step	Inspection		Action
5	**VERIFY IF OTHER DTCs DISPLAYED** • Are any other DTCs displayed?	Yes	Repair the malfunctioning part according to the applicable DTC troubleshooting. (See 09-02C-8 DTC TABLE [START STOP UNIT].)
		No	DTC troubleshooting completed.

ON-BOARD DIAGNOSTIC [START STOP UNIT]

DTC P0615:16 [START STOP UNIT]

id0902p6022300

System malfunction location	**Starter relay circuit malfunction**
Detection condition	• The start stop unit detects starter relay circuit voltage that is less than the specification for **1 s or more** during cranking.
Fail-safe	—
Possible cause	• Starter relay malfunction • Start stop unit connector or terminal malfunction • Short to ground in wiring harness between starter relay terminal A and start stop unit terminal 2V • Start stop unit malfunction

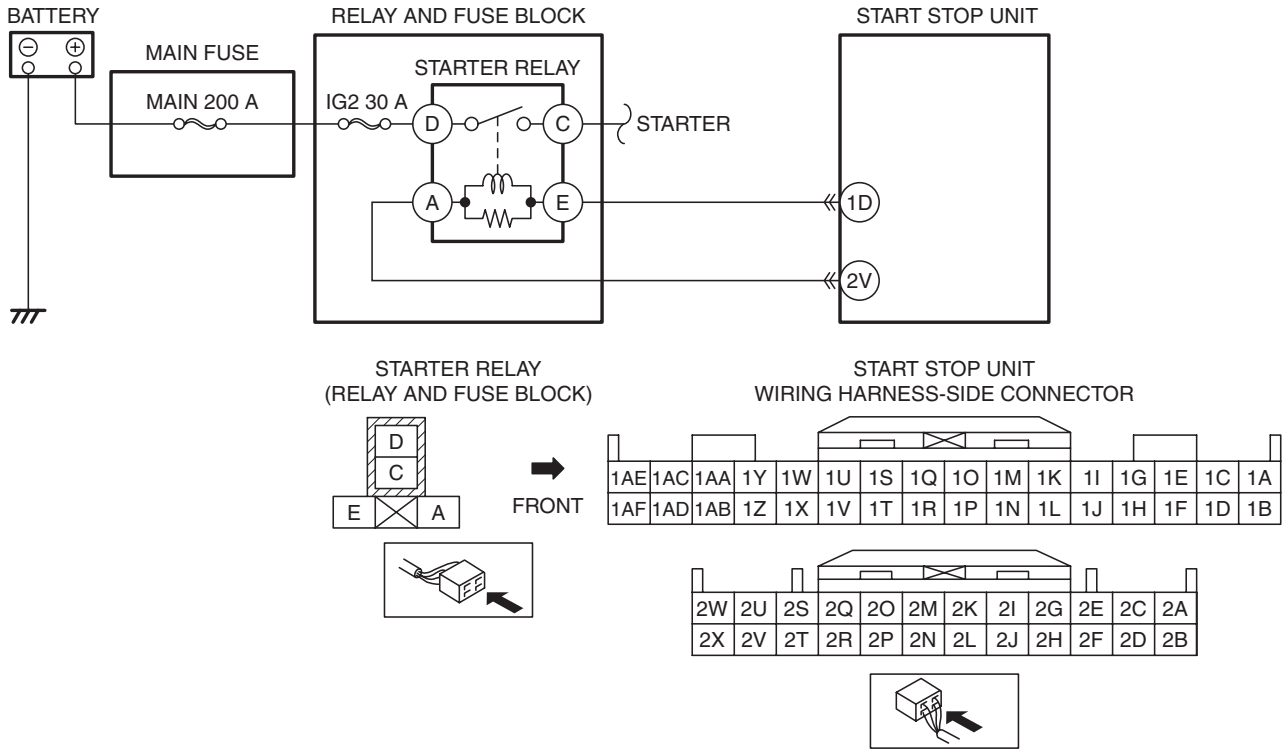

ON-BOARD DIAGNOSTIC [START STOP UNIT]

Diagnostic Procedure

Step	Inspection		Action
1	**INSPECT STARTER RELAY FOR MALFUNCTION** • Switch the ignition to off. • Disconnect the negative battery cable. (See 01-17A-11 NEGATIVE BATTERY CABLE DISCONNECTION/CONNECTION [SKYACTIV-G 2.0].) (See 01-17A-13 NEGATIVE BATTERY CABLE DISCONNECTION/CONNECTION [SKYACTIV-G 2.0 (WITHOUT i-stop)].) (See 01-17B-9 NEGATIVE BATTERY CABLE DISCONNECTION/CONNECTION [SKYACTIV-D 2.2].) • Remove the starter relay. (See 09-21-28 RELAY LOCATION.) • Inspect the starter relay. (See 09-21-29 RELAY INSPECTION.) • Is the starter relay normal?	Yes	Go to the next step.
		No	Replace the starter relay, then go to Step 4. (See 09-21-28 RELAY LOCATION.)
2	**INSPECT START STOP UNIT CONNECTOR CONDITION** • Disconnect the start stop unit connector. • Inspect the connector engagement and connection condition and inspect the terminals for damage, deformation, corrosion, or disconnection. • Is the connector normal?	Yes	Go to the next step.
		No	Repair or replace the connector, then go to Step 4.
3	**INSPECT STARTER RELAY CIRCUIT FOR SHORT TO GROUND** • Verify that the starter relay is removed. • Verify that the start stop unit connector is disconnected. • Inspect for continuity between starter relay terminal A (vehicle wiring harness side) and body ground. • Is there continuity?	Yes	Repair or replace the wiring harness which has a short to ground, then go to the next step.
		No	Go to the next step.
4	**VERIFY THAT REPAIRS HAVE BEEN COMPLETED** • Reconnect all the disconnected connectors. • Reconnect the disconnected negative battery cable. (See 01-17A-11 NEGATIVE BATTERY CABLE DISCONNECTION/CONNECTION [SKYACTIV-G 2.0].) (See 01-17A-13 NEGATIVE BATTERY CABLE DISCONNECTION/CONNECTION [SKYACTIV-G 2.0 (WITHOUT i-stop)].) (See 01-17B-9 NEGATIVE BATTERY CABLE DISCONNECTION/CONNECTION [SKYACTIV-D 2.2].) • Clear DTC for the start stop unit using the M-MDS. (See 09-02C-7 CLEARING DTC [START STOP UNIT].) • Wait until **1 s or more** have elapsed during cranking. • Perform the DTC inspection for the start stop unit using the M-MDS. (See 09-02C-6 DTC INSPECTION [START STOP UNIT].) • Is DTC P0615:16 displayed?	Yes	Repeat the inspection from Step 1. • If the malfunction recurs, replace the start stop unit, then go to the next step. (See 09-14-54 START STOP UNIT REMOVAL/INSTALLATION.)
		No	Go to the next step.
5	**VERIFY IF OTHER DTCs DISPLAYED** • Are any other DTCs displayed?	Yes	Repair the malfunctioning part according to the applicable DTC troubleshooting. (See 09-02C-8 DTC TABLE [START STOP UNIT].)
		No	DTC troubleshooting completed.

ON-BOARD DIAGNOSTIC [START STOP UNIT]

DTC P0616:23 [START STOP UNIT]

id0902p6022400

System malfunction location	**Circuit malfunction on downstream side of starter relay**
Detection condition	• The start stop unit detects a short to ground in the starter relay downstream circuit continuously for **0.5 s or more** for a continuous **5 times**.
Fail-safe	—
Possible cause	• DTCs are stored in the PCM. • PCM connector or terminal malfunction • Start stop unit connector or terminal malfunction • Short to ground in wiring harness between the following terminals: — Start stop unit terminal 1D—PCM terminal 2AZ (SKYACTIV-G 2.0) — Start stop unit terminal 1D—PCM terminal 2BF (SKYACTIV-D 2.2) • PCM malfunction • Start stop unit malfunction

SKYACTIV-G 2.0

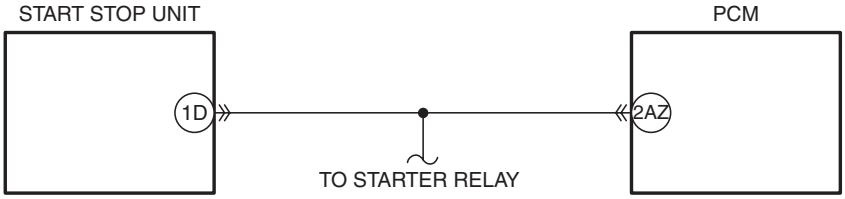

SKYACTIV-D 2.2

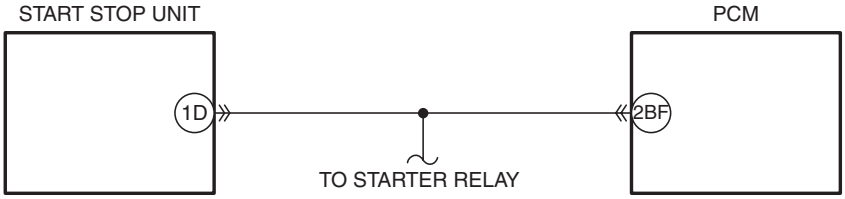

START STOP UNIT
WIRING HARNESS-SIDE CONNECTOR

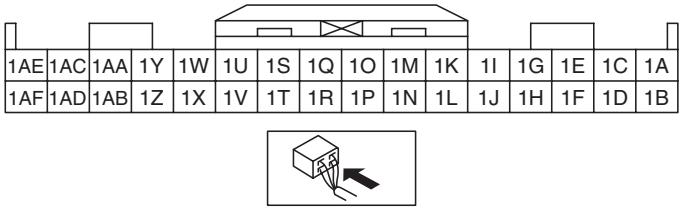

PCM
WIRING HARNESS-SIDE CONNECTOR

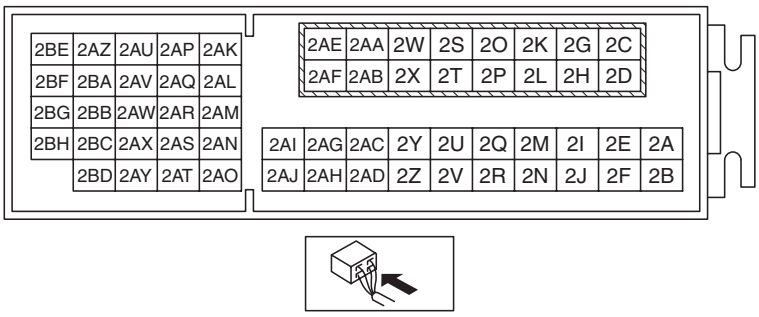

ON-BOARD DIAGNOSTIC [START STOP UNIT]

Diagnostic Procedure

Step	Inspection		Action
1	**VERIFY PCM DTCs** • Perform the DTC inspection for the PCM using the M-MDS. (See 01-02-8 ON-BOARD DIAGNOSTIC TEST [SKYACTIV-G 2.0].) • Is the DTC displayed?	Yes	Repair the malfunctioning part according to the applicable DTC troubleshooting. (See 01-02-14 DTC TABLE [SKYACTIV-G 2.0].)
		No	Go to the next step.
2	**INSPECT PCM CONNECTOR CONDITION** • Switch the ignition to off. • Disconnect the negative battery cable. (See 01-17A-11 NEGATIVE BATTERY CABLE DISCONNECTION/CONNECTION [SKYACTIV-G 2.0].) (See 01-17A-13 NEGATIVE BATTERY CABLE DISCONNECTION/CONNECTION [SKYACTIV-G 2.0 (WITHOUT i-stop)].) (See 01-17B-9 NEGATIVE BATTERY CABLE DISCONNECTION/CONNECTION [SKYACTIV-D 2.2].) • Disconnect the PCM connector. • Inspect the connector engagement and connection condition and inspect the terminals for damage, deformation, corrosion, or disconnection. • Is the connector normal?	Yes	Go to the next step.
		No	Repair or replace the connector, then go to Step 6.
3	**INSPECT START STOP UNIT CONNECTOR CONDITION** • Disconnect the start stop unit connector. • Inspect the connector engagement and connection condition and inspect the terminals for damage, deformation, corrosion, or disconnection. • Is the connector normal?	Yes	Go to the next step.
		No	Repair or replace the connector, then go to Step 6.
4	**INSPECT DOWNSTREAM SIDE OF STARTER RELAY CIRCUIT FOR SHORT TO GROUND** • Verify that the PCM and start stop unit connectors are disconnected. • Inspect for continuity between start stop unit terminal 1D (vehicle wiring harness side) and body ground. • Is there continuity?	Yes	Repair or replace the wiring harness which is shorted to ground, then go to Step 6.
		No	Go to the next step.

ON-BOARD DIAGNOSTIC [START STOP UNIT]

Step	Inspection		Action
5	**PERFORM DTC INSPECTION AND VERIFY IF MALFUNCTIONING PART IS PCM** • Reconnect all the disconnected connectors. • Reconnect the disconnected negative battery cable. (See 01-17A-11 NEGATIVE BATTERY CABLE DISCONNECTION/CONNECTION [SKYACTIV-G 2.0].) (See 01-17A-13 NEGATIVE BATTERY CABLE DISCONNECTION/CONNECTION [SKYACTIV-G 2.0 (WITHOUT i-stop)].) (See 01-17B-9 NEGATIVE BATTERY CABLE DISCONNECTION/CONNECTION [SKYACTIV-D 2.2].) • Clear DTC for the start stop unit using the M-MDS. (See 09-02C-7 CLEARING DTC [START STOP UNIT].) • With the programmed remote transmitter in the vehicle, switch the ignition ON (engine off). • Depress the clutch pedal and release it. (MTX) • Operate the selector lever to positions from other than P or N and hold for **1 s or more**, and perform this procedure **5 or more times**. (ATX) • Perform the DTC inspection for the start stop unit using the M-MDS. (See 09-02C-6 DTC INSPECTION [START STOP UNIT].) • Is DTC P0616:23 displayed?	Yes	Replace the PCM, then go to the next step. (See 01-40-10 PCM REMOVAL/INSTALLATION [SKYACTIV-G 2.0].)
		No	Go to Step 7.
6	**VERIFY THAT REPAIRS HAVE BEEN COMPLETED** • Reconnect all the disconnected connectors. • Reconnect the disconnected negative battery cable. (See 01-17A-11 NEGATIVE BATTERY CABLE DISCONNECTION/CONNECTION [SKYACTIV-G 2.0].) (See 01-17A-13 NEGATIVE BATTERY CABLE DISCONNECTION/CONNECTION [SKYACTIV-G 2.0 (WITHOUT i-stop)].) (See 01-17B-9 NEGATIVE BATTERY CABLE DISCONNECTION/CONNECTION [SKYACTIV-D 2.2].) • Clear DTC for the start stop unit using the M-MDS. (See 09-02C-7 CLEARING DTC [START STOP UNIT].) • Switch the ignition ON (engine off or on). • Depress the clutch pedal and release it. (MTX) • Operate the selector lever to positions from other than P or N and hold for **1 s or more**, and perform this procedure **5 or more times**. (ATX) • Perform the DTC inspection for the start stop unit using the M-MDS. (See 09-02C-6 DTC INSPECTION [START STOP UNIT].) • Is DTC P0616:23 displayed?	Yes	Repeat the inspection from Step 1. • If the malfunction recurs, replace the start stop unit, then go to the next step. (See 09-14-54 START STOP UNIT REMOVAL/INSTALLATION.)
		No	Go to the next step.
7	**VERIFY IF OTHER DTCs DISPLAYED** • Are any other DTCs displayed?	Yes	Repair the malfunctioning part according to the applicable DTC troubleshooting. (See 09-02C-8 DTC TABLE [START STOP UNIT].)
		No	DTC troubleshooting completed.

ON-BOARD DIAGNOSTIC [START STOP UNIT]

DTC P0616:24 [START STOP UNIT]

id0902p6022500

System malfunction location	**Circuit malfunction on downstream side of starter relay**
Detection condition	• The start stop unit detects an open circuit in the starter relay downstream circuit continuously for **0.5 s or more** for a continuous **5 times**.
Fail-safe	—
Possible cause	• DTCs are stored in the PCM. • PCM connector or terminal malfunction • Start stop unit connector or terminal malfunction • Open circuit in wiring harness between the following terminals: — Start stop unit terminal 1D—PCM terminal 2AZ (SKYACTIV-G 2.0) — Start stop unit terminal 1D—PCM terminal 2BF (SKYACTIV-D 2.2) • PCM malfunction • Start stop unit malfunction

SKYACTIV-G 2.0

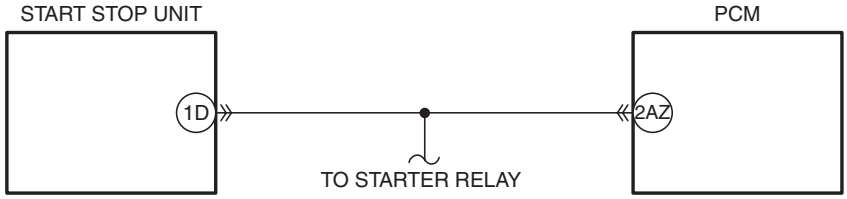

SKYACTIV-D 2.2

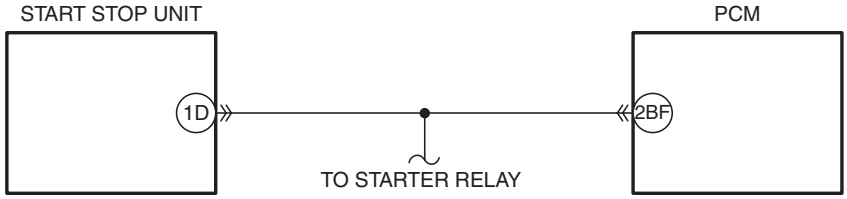

START STOP UNIT
WIRING HARNESS-SIDE CONNECTOR

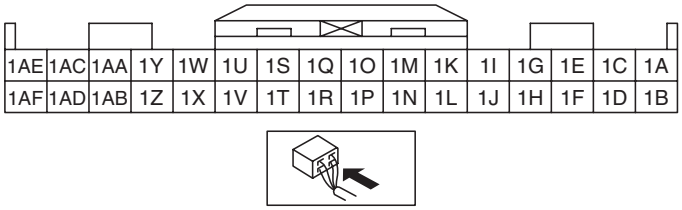

PCM
WIRING HARNESS-SIDE CONNECTOR

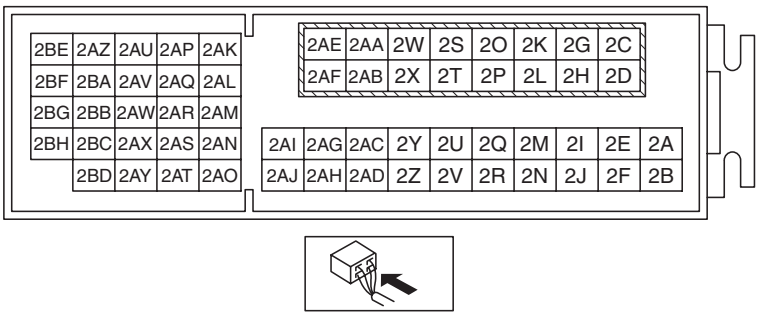

ON-BOARD DIAGNOSTIC [START STOP UNIT]

Diagnostic Procedure

Step	Inspection		Action
1	**VERIFY PCM DTCs** • Perform the DTC inspection for the PCM using the M-MDS. (See 01-02-8 ON-BOARD DIAGNOSTIC TEST [SKYACTIV-G 2.0].) • Is the DTC displayed?	Yes	Repair the malfunctioning part according to the applicable DTC troubleshooting. (See 01-02-14 DTC TABLE [SKYACTIV-G 2.0].)
		No	Go to the next step.
2	**INSPECT PCM CONNECTOR CONDITION** • Switch the ignition to off. • Disconnect the negative battery cable. (See 01-17A-11 NEGATIVE BATTERY CABLE DISCONNECTION/CONNECTION [SKYACTIV-G 2.0].) (See 01-17A-13 NEGATIVE BATTERY CABLE DISCONNECTION/CONNECTION [SKYACTIV-G 2.0 (WITHOUT i-stop)].) (See 01-17B-9 NEGATIVE BATTERY CABLE DISCONNECTION/CONNECTION [SKYACTIV-D 2.2].) • Disconnect the PCM connector. • Inspect the connector engagement and connection condition and inspect the terminals for damage, deformation, corrosion, or disconnection. • Is the connector normal?	Yes	Go to the next step.
		No	Repair or replace the connector, then go to Step 6.
3	**INSPECT START STOP UNIT CONNECTOR CONDITION** • Disconnect the start stop unit connector. • Inspect the connector engagement and connection condition and inspect the terminals for damage, deformation, corrosion, or disconnection. • Is the connector normal?	Yes	Go to the next step.
		No	Repair or replace the connector, then go to Step 6.
4	**INSPECT DOWNSTREAM SIDE OF STARTER RELAY CIRCUIT FOR OPEN CIRCUIT** • Verify that the PCM and start stop unit connectors are disconnected. • Inspect the wiring harness for continuity between the following terminals (vehicle wiring harness side). — Start stop unit terminal 1D—PCM terminal 2AZ (SKYACTIV-G 2.0) — Start stop unit terminal 1D—PCM terminal 2BF (SKYACTIV-D 2.2) • Is there continuity?	Yes	Go to the next step.
		No	Repair or replace the wiring harness which has an open circuit, then go to Step 6.

ON-BOARD DIAGNOSTIC [START STOP UNIT]

Step	Inspection		Action
5	**PERFORM DTC INSPECTION AND VERIFY IF MALFUNCTIONING PART IS PCM** • Reconnect all the disconnected connectors. • Reconnect the disconnected negative battery cable. (See 01-17A-11 NEGATIVE BATTERY CABLE DISCONNECTION/CONNECTION [SKYACTIV-G 2.0].) (See 01-17A-13 NEGATIVE BATTERY CABLE DISCONNECTION/CONNECTION [SKYACTIV-G 2.0 (WITHOUT i-stop)].) (See 01-17B-9 NEGATIVE BATTERY CABLE DISCONNECTION/CONNECTION [SKYACTIV-D 2.2].) • Clear DTC for the start stop unit using the M-MDS. (See 09-02C-7 CLEARING DTC [START STOP UNIT].) • With the programmed remote transmitter in the vehicle, switch the ignition ON (engine off). • Depress the clutch pedal and release it. (MTX) • Operate the selector lever to positions from other than P or N and hold for **1 s or more**, and perform this procedure **5 or more times**. (ATX) • Perform the DTC inspection for the start stop unit using the M-MDS. (See 09-02C-6 DTC INSPECTION [START STOP UNIT].) • Is DTC P0616:24 displayed?	Yes	Replace the PCM, then go to the next step. (See 01-40-10 PCM REMOVAL/INSTALLATION [SKYACTIV-G 2.0].)
		No	Go to Step 7.
6	**VERIFY THAT REPAIRS HAVE BEEN COMPLETED** • Reconnect all the disconnected connectors. • Reconnect the disconnected negative battery cable. (See 01-17A-11 NEGATIVE BATTERY CABLE DISCONNECTION/CONNECTION [SKYACTIV-G 2.0].) (See 01-17A-13 NEGATIVE BATTERY CABLE DISCONNECTION/CONNECTION [SKYACTIV-G 2.0 (WITHOUT i-stop)].) (See 01-17B-9 NEGATIVE BATTERY CABLE DISCONNECTION/CONNECTION [SKYACTIV-D 2.2].) • Clear DTC for the start stop unit using the M-MDS. (See 09-02C-7 CLEARING DTC [START STOP UNIT].) • Switch the ignition ON (engine off or on). • Depress the clutch pedal and release it. (MTX) • Operate the selector lever to positions from other than P or N and hold for **1 s or more**, and perform this procedure **5 or more times**. (ATX) • Perform the DTC inspection for the start stop unit using the M-MDS. (See 09-02C-6 DTC INSPECTION [START STOP UNIT].) • Is DTC P0616:24 displayed?	Yes	Repeat the inspection from Step 1. • If the malfunction recurs, replace the start stop unit, then go to the next step. (See 09-14-54 START STOP UNIT REMOVAL/INSTALLATION.)
		No	Go to the next step.
7	**VERIFY IF OTHER DTCs DISPLAYED** • Are any other DTCs displayed?	Yes	Repair the malfunctioning part according to the applicable DTC troubleshooting. (See 09-02C-8 DTC TABLE [START STOP UNIT].)
		No	DTC troubleshooting completed.

ON-BOARD DIAGNOSTIC [START STOP UNIT]

DTC P0616:29 [START STOP UNIT]

id0902p6022600

System malfunction location	**Starter relay signal malfunction**
Detection condition	• If the following CAN signals are unmatched for **0.5 s or more** continuously, and this condition is detected for a continuous **5 or more times**. — Transaxle range sensor (ATX) or starter interlock switch (MTX) condition — Starter relay downstream circuit condition — PCM control result — CAN signal condition output from PCM
Fail-safe	—
Possible cause	• PCM stores DTCs • Start stop unit malfunction
System wiring diagram	—

Diagnostic Procedure

Step	Inspection		Action
1	**VERIFY PCM DTCs** • Perform the DTC inspection for the PCM using the M-MDS. (See 01-02-8 ON-BOARD DIAGNOSTIC TEST [SKYACTIV-G 2.0].) • Is the DTC displayed?	Yes	Repair the malfunctioning part according to the applicable DTC troubleshooting. (See 01-02-14 DTC TABLE [SKYACTIV-G 2.0].)
		No	Go to the next step.
2	**PERFORM DTC INSPECTION AND VERIFY IF MALFUNCTIONING PART IS START STOP UNIT** • Clear DTC for the start stop unit using the M-MDS. (See 09-02C-7 CLEARING DTC [START STOP UNIT].) • With the programmed remote transmitter in the vehicle, switch the ignition ON (engine off). • Depress the clutch pedal and release it. (MTX) • Operate the selector lever to positions from other than P or N and hold for **1 s or more**, and perform this procedure **5 or more times**. (ATX) • Perform the DTC inspection for the start stop unit using the M-MDS. (See 09-02C-6 DTC INSPECTION [START STOP UNIT].) • Is DTC P0616:29 displayed?	Yes	Replace the start stop unit, then go to the next step. (See 09-14-54 START STOP UNIT REMOVAL/INSTALLATION.)
		No	Go to the next step.
3	**VERIFY IF OTHER DTCs DISPLAYED** • Are any other DTCs displayed?	Yes	Repair the malfunctioning part according to the applicable DTC troubleshooting. (See 09-02C-8 DTC TABLE [START STOP UNIT].)
		No	DTC troubleshooting completed.

ON-BOARD DIAGNOSTIC [START STOP UNIT]

DTC P081C:23 [START STOP UNIT]

id0902p6022700

System malfunction location	**NOT P position switch circuit malfunction**
Detection condition	• The start stop unit detects NOT P position switch is stuck on for **5 s or more** for a continuous **5 times** with the ignition switched ON (engine off or on).
Fail-safe	• Perform the NOT P position switch control in a position other than P.
Possible cause	• Selector lever component connector or terminal malfunction • NOT P position switch malfunction • Start stop unit connector or terminal malfunction • Short to ground in wiring harness between start stop unit terminal 1J and selector lever component terminal B • Start stop unit malfunction

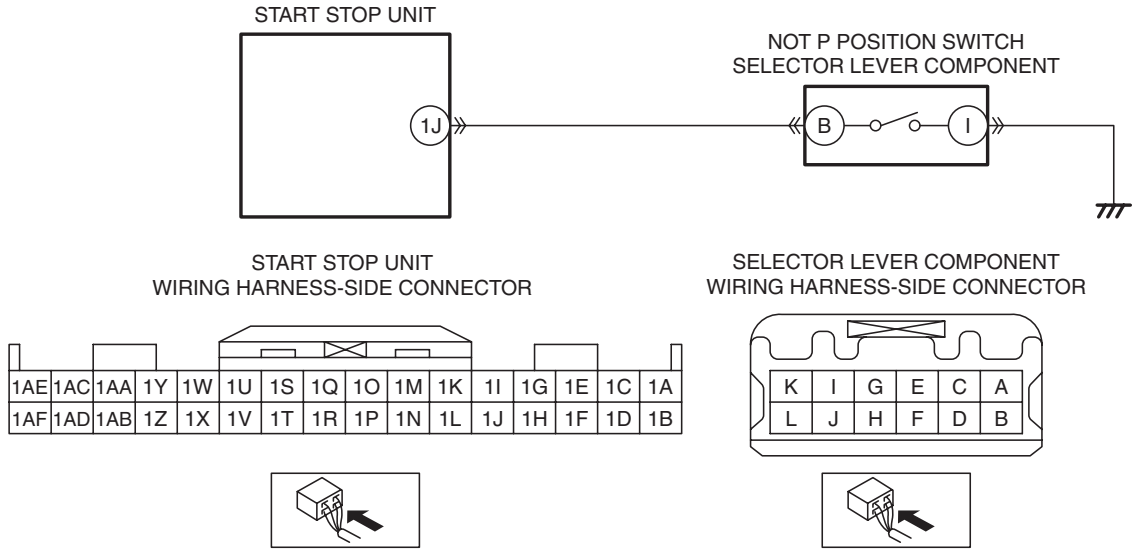

ON-BOARD DIAGNOSTIC [START STOP UNIT]

Diagnostic Procedure

Step	Inspection		Action
1	**INSPECT SELECTOR LEVER COMPONENT CONNECTOR CONDITION** • Switch the ignition to off. • Disconnect the negative battery cable. (See 01-17A-11 NEGATIVE BATTERY CABLE DISCONNECTION/CONNECTION [SKYACTIV-G 2.0].) (See 01-17A-13 NEGATIVE BATTERY CABLE DISCONNECTION/CONNECTION [SKYACTIV-G 2.0 (WITHOUT i-stop)].) (See 01-17B-9 NEGATIVE BATTERY CABLE DISCONNECTION/CONNECTION [SKYACTIV-D 2.2].) • Disconnect the selector lever component connector. • Inspect the connector engagement and connection condition and inspect the terminals for damage, deformation, corrosion, or disconnection. • Is the connector normal?	Yes	Go to the next step.
		No	Repair or replace the connector, then go to Step 5.
2	**INSPECT NOT P POSITION SWITCH** • Inspect the NOT P position switch. (See 05-18-14 NOT P POSITION SWITCH INSPECTION.) • Is the NOT P position switch normal?	Yes	Go to the next step.
		No	Replace the selector lever component, then go to Step 5. (See 05-18-2 AUTOMATIC TRANSAXLE SHIFT MECHANISM REMOVAL/INSTALLATION.)
3	**INSPECT START STOP UNIT CONNECTOR CONDITION** • Disconnect the start stop unit connector. • Inspect the connector engagement and connection condition and inspect the terminals for damage, deformation, corrosion, or disconnection. • Is the connector normal?	Yes	Go to the next step.
		No	Repair or replace the connector, then go to Step 5.
4	**INSPECT NOT P POSITION SWITCH CIRCUIT FOR SHORT TO GROUND** • Verify that the start stop unit and selector lever component connectors are disconnected. • Inspect for continuity between selector lever component terminal B (vehicle wiring harness) and body ground. • Is there continuity?	Yes	Repair or replace the wiring harness which has a short to ground, then go to the next step.
		No	Go to the next step.

ON-BOARD DIAGNOSTIC [START STOP UNIT]

Step	Inspection		Action
5	**VERIFY THAT REPAIRS HAVE BEEN COMPLETED** • Reconnect all the disconnected connectors. • Reconnect the disconnected negative battery cable. (See 01-17A-11 NEGATIVE BATTERY CABLE DISCONNECTION/CONNECTION [SKYACTIV-G 2.0].) (See 01-17A-13 NEGATIVE BATTERY CABLE DISCONNECTION/CONNECTION [SKYACTIV-G 2.0 (WITHOUT i-stop)].) (See 01-17B-9 NEGATIVE BATTERY CABLE DISCONNECTION/CONNECTION [SKYACTIV-D 2.2].) • Clear DTC for the start stop unit using the M-MDS. (See 09-02C-7 CLEARING DTC [START STOP UNIT].) • Switch the ignition ON (engine off). • Perform the following work **5 or more times**. — Operate the selector lever to positions from other than P and hold for **5 s or more**. — Operate the selector lever to position P and hold for **5 s or more**. — Operate the selector lever to positions from other than P. • Perform the DTC inspection for the start stop unit using the M-MDS. (See 09-02C-6 DTC INSPECTION [START STOP UNIT].) • Is DTC P081C:23 displayed?	Yes	Repeat the inspection from Step 1. • If the malfunction recurs, replace the start stop unit, then go to the next step. (See 09-14-54 START STOP UNIT REMOVAL/INSTALLATION.)
		No	Go to the next step.
6	**VERIFY IF OTHER DTCs DISPLAYED** • Are any other DTCs displayed?	Yes	Repair the malfunctioning part according to the applicable DTC troubleshooting. (See 09-02C-8 DTC TABLE [START STOP UNIT].)
		No	DTC troubleshooting completed.

ON-BOARD DIAGNOSTIC [START STOP UNIT]

DTC P081C:24 [START STOP UNIT]

id0902p6022800

System malfunction location	**NOT P position switch circuit malfunction**
Detection condition	• The start stop unit detects NOT P position switch is stuck off for **5 s or more** for a continuous **5 times** with the ignition switched ON (engine off or on).
Fail-safe	• Perform the NOT P position switch control in a position other than P.
Possible cause	• Selector lever component connector or terminal malfunction • Open circuit in wiring harness between selector lever component terminal I and body ground • NOT P position switch malfunction • Start stop unit connector or terminal malfunction • Open circuit in wiring harness between start stop unit terminal 1J and selector lever component terminal B • Start stop unit malfunction

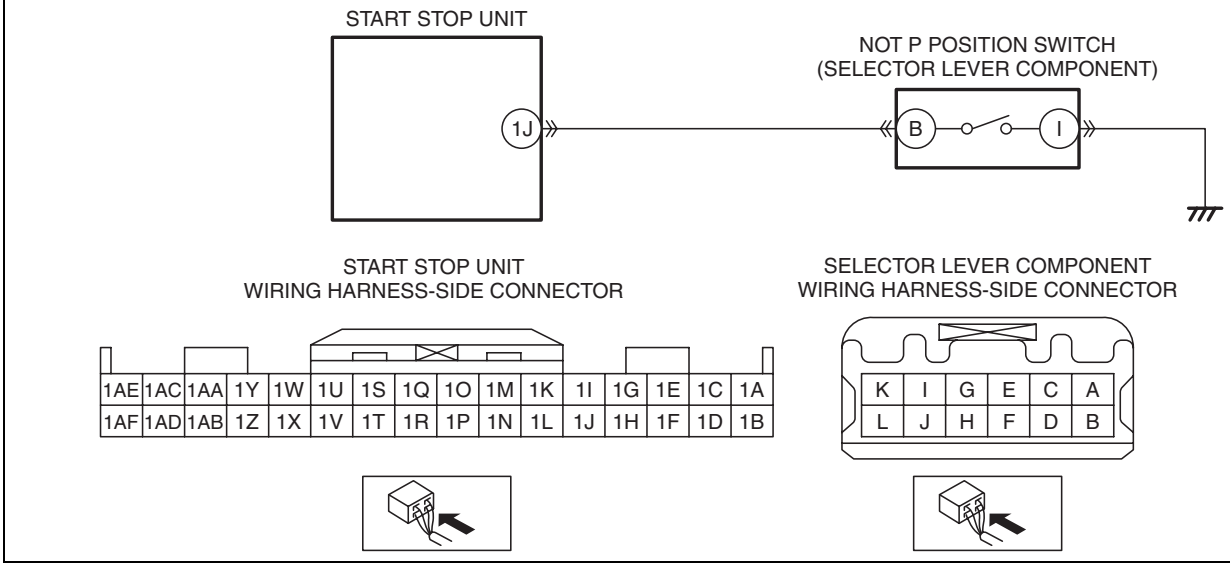

ON-BOARD DIAGNOSTIC [START STOP UNIT]

Diagnostic Procedure

Step	Inspection		Action
1	**INSPECT SELECTOR LEVER COMPONENT CONNECTOR CONDITION** • Switch the ignition to off. • Disconnect the negative battery cable. (See 01-17A-11 NEGATIVE BATTERY CABLE DISCONNECTION/CONNECTION [SKYACTIV-G 2.0].) (See 01-17A-13 NEGATIVE BATTERY CABLE DISCONNECTION/CONNECTION [SKYACTIV-G 2.0 (WITHOUT i-stop)].) (See 01-17B-9 NEGATIVE BATTERY CABLE DISCONNECTION/CONNECTION [SKYACTIV-D 2.2].) • Disconnect the selector lever component connector. • Inspect the connector engagement and connection condition and inspect the terminals for damage, deformation, corrosion, or disconnection. • Is the connector normal?	Yes	Go to the next step.
		No	Repair or replace the connector, then go to Step 6.
2	**INSPECT NOT P POSITION SWITCH GROUND CIRCUIT FOR OPEN CIRCUIT** • Verify that the selector lever component connector is disconnected. • Inspect for continuity between selector lever component terminal I (vehicle wiring harness side) and body ground. • Is there continuity?	Yes	Go to the next step.
		No	Repair or replace the wiring harness which has an open circuit, then go to Step 6.
3	**INSPECT NOT P POSITION SWITCH** • Inspect the NOT P position switch. (See 05-18-14 NOT P POSITION SWITCH INSPECTION.) • Is the NOT P position switch normal?	Yes	Go to the next step.
		No	Replace the selector lever component, then go to Step 6. (See 05-18-2 AUTOMATIC TRANSAXLE SHIFT MECHANISM REMOVAL/INSTALLATION.)
4	**INSPECT START STOP UNIT CONNECTOR CONDITION** • Disconnect the start stop unit connector. • Inspect the connector engagement and connection condition and inspect the terminals for damage, deformation, corrosion, or disconnection. • Is the connector normal?	Yes	Go to the next step.
		No	Repair or replace the connector, then go to Step 6.
5	**INSPECT NOT P POSITION SWITCH CIRCUIT FOR OPEN CIRCUIT** • Verify that the start stop unit and selector lever component connectors are disconnected. • Inspect the wiring harness for continuity between start stop unit terminal 1J (vehicle wiring harness side) and selector lever component terminal B (vehicle wiring harness side). • Is there continuity?	Yes	Go to the next step.
		No	Repair or replace the wiring harness which has an open circuit, then go to the next step.

ON-BOARD DIAGNOSTIC [START STOP UNIT]

Step	Inspection		Action
6	**VERIFY THAT REPAIRS HAVE BEEN COMPLETED** • Reconnect all the disconnected connectors. • Reconnect the disconnected negative battery cable. (See 01-17A-11 NEGATIVE BATTERY CABLE DISCONNECTION/CONNECTION [SKYACTIV-G 2.0].) (See 01-17A-13 NEGATIVE BATTERY CABLE DISCONNECTION/CONNECTION [SKYACTIV-G 2.0 (WITHOUT i-stop)].) (See 01-17B-9 NEGATIVE BATTERY CABLE DISCONNECTION/CONNECTION [SKYACTIV-D 2.2].) • Clear DTC for the start stop unit using the M-MDS. (See 09-02C-7 CLEARING DTC [START STOP UNIT].) • Switch the ignition ON (engine off). • Perform the following work **5 or more times**. — Operate the selector lever to positions from other than P and hold for **5 s or more**. — Operate the selector lever to position P and hold for **5 s or more**. — Operate the selector lever to positions from other than P. • Perform the DTC inspection for the start stop unit using the M-MDS. (See 09-02C-6 DTC INSPECTION [START STOP UNIT].) • Is DTC P081C:24 displayed?	Yes	Repeat the inspection from Step 1. • If the malfunction recurs, replace the start stop unit, then go to the next step. (See 09-14-54 START STOP UNIT REMOVAL/INSTALLATION.)
		No	Go to the next step.
7	**VERIFY IF OTHER DTCs DISPLAYED** • Are any other DTCs displayed?	Yes	Repair the malfunctioning part according to the applicable DTC troubleshooting. (See 09-02C-8 DTC TABLE [START STOP UNIT].)
		No	DTC troubleshooting completed.

ON-BOARD DIAGNOSTIC [START STOP UNIT]

DTC P081D:29 [START STOP UNIT]

id0902p6022900

System malfunction location	**Neutral switch error signal received**
Detection condition	• The start stop unit receives neutral switch signal error signal from the PCM for **1 min or more** with the ignition switched ON (engine off or on).
Fail-safe	• Perform the control with neutral switch signal turned off.
Possible cause	• DTCs are stored in the PCM • Neutral switch malfunction • PCM malfunction • Start stop unit malfunction
System wiring diagram	—

Diagnostic Procedure

Step	Inspection		Action
1	**VERIFY PCM DTCs** • Perform the DTC inspection for the PCM using the M-MDS. (See 01-02-8 ON-BOARD DIAGNOSTIC TEST [SKYACTIV-G 2.0].) • Is the DTC displayed?	Yes	Repair the malfunctioning part according to the applicable DTC troubleshooting. (See 01-02-14 DTC TABLE [SKYACTIV-G 2.0].)
		No	Go to the next step.
2	**INSPECT NEUTRAL SWITCH** • Inspect the neutral switch. (See 01-40-40 NEUTRAL SWITCH INSPECTION [SKYACTIV-G 2.0].) • Is the neutral switch normal?	Yes	Go to the next step.
		No	Replace the neutral switch, then go to Step 4. (See 05-15A-2 NEUTRAL SWITCH REMOVAL/ INSTALLATION [C66M-R, C66MX-R].) (See 05-15B-2 NEUTRAL SWITCH REMOVAL/ INSTALLATION [D66M-R, D66MX-R].)
3	**VERIFY PCM DTCs** • Perform the DTC inspection for the PCM using the M-MDS. (See 01-02-8 ON-BOARD DIAGNOSTIC TEST [SKYACTIV-G 2.0].) • Is the DTC displayed?	Yes	Repair the malfunctioning part according to the applicable DTC troubleshooting. (See 01-02-14 DTC TABLE [SKYACTIV-G 2.0].)
		No	Go to the next step.
4	**VERIFY THAT REPAIRS HAVE BEEN COMPLETED** • Clear DTC for the start stop unit using the M-MDS. (See 09-02C-7 CLEARING DTC [START STOP UNIT].) • Switch the ignition ON (engine off or on) and wait for **1 min or more**. • Perform the DTC inspection for the start stop unit using the M-MDS. (See 09-02C-6 DTC INSPECTION [START STOP UNIT].) • Is DTC P081D:29 displayed?	Yes	Replace the start stop unit, then go to the next step. (See 09-14-54 START STOP UNIT REMOVAL/ INSTALLATION.)
		No	Go to the next step.
5	**VERIFY IF OTHER DTCs DISPLAYED** • Are any other DTCs displayed?	Yes	Repair the malfunctioning part according to the applicable DTC troubleshooting. (See 09-02C-8 DTC TABLE [START STOP UNIT].)
		No	DTC troubleshooting completed.

ON-BOARD DIAGNOSTIC [START STOP UNIT]

DTC P081D:2F [START STOP UNIT]

id0902p6023000

System malfunction location	**Neutral switch signal mismatch**
Detection condition	• With the ignition switched ON (engine off or on), the start unit detects that the vehicle speed changes from **0 km/h {0 mph}** to **10 km/h** {6.2 mph} for a continuous **5 or more times** even though the neutral signal from the PCM is being received.
Fail-safe	• Perform the control with neutral switch signal turned off.
Possible cause	• DTCs are stored in the PCM. • Neutral switch malfunction • PCM malfunction • Start stop unit malfunction
System wiring diagram	—

Diagnostic Procedure

Step	Inspection		Action
1	**VERIFY PCM DTCs** • Perform the DTC inspection for the PCM using the M-MDS. (See 01-02-8 ON-BOARD DIAGNOSTIC TEST [SKYACTIV-G 2.0].) • Is the DTC displayed?	Yes	Repair the malfunctioning part according to the applicable DTC troubleshooting. (See 01-02-14 DTC TABLE [SKYACTIV-G 2.0].)
		No	Go to the next step.
2	**INSPECT NEUTRAL SWITCH** • Inspect the neutral switch. (See 01-40-40 NEUTRAL SWITCH INSPECTION [SKYACTIV-G 2.0].) • Is the neutral switch normal?	Yes	Go to the next step.
		No	Replace the neutral switch, then go to Step 4. (See 05-15A-2 NEUTRAL SWITCH REMOVAL/INSTALLATION [C66M-R, C66MX-R].) (See 05-15B-2 NEUTRAL SWITCH REMOVAL/INSTALLATION [D66M-R, D66MX-R].)
3	**VERIFY PCM DTCs** • Perform the DTC inspection for the PCM using the M-MDS. (See 01-02-8 ON-BOARD DIAGNOSTIC TEST [SKYACTIV-G 2.0].) • Is the DTC displayed?	Yes	Repair the malfunctioning part according to the applicable DTC troubleshooting. (See 01-02-14 DTC TABLE [SKYACTIV-G 2.0].)
		No	Go to the next step.
4	**VERIFY THAT REPAIRS HAVE BEEN COMPLETED** • Clear DTC for the start stop unit using the M-MDS. (See 09-02C-7 CLEARING DTC [START STOP UNIT].) • Perform the following work **5 or more times**. — Drive the vehicle. — Vehicle speed changes from **0 km/h {0 mph}** to **10 km/h {6.2 mph}**. • Perform the DTC inspection for the start stop unit using the M-MDS. (See 09-02C-6 DTC INSPECTION [START STOP UNIT].) • Is DTC P081D:2F displayed?	Yes	Replace the start stop unit, then go to the next step. (See 09-14-54 START STOP UNIT REMOVAL/INSTALLATION.)
		No	Go to the next step.
5	**VERIFY IF OTHER DTCs DISPLAYED** • Are any other DTCs displayed?	Yes	Repair the malfunctioning part according to the applicable DTC troubleshooting. (See 09-02C-8 DTC TABLE [START STOP UNIT].)
		No	DTC troubleshooting completed.

ON-BOARD DIAGNOSTIC [START STOP UNIT]

DTC P0830:23 [START STOP UNIT]

id0902p6023100

System malfunction location	**CPP switch circuit malfunction**
Detection condition	• Start stop unit detects clutch switch is stuck on for **10 s or more**.
Fail-safe	• Change to the back-up mode. • Perform the control with CPP switch turned off.
Possible cause	• DTCs are stored in the PCM. • CPP switch connector or terminal malfunction • CPP switch malfunction • PCM connector or terminal malfunction • Short to ground in the wiring harness between the following terminals: — CPP switch terminal A—PCM terminal 2J (SKYACTIV-G 2.0) — CPP switch terminal A—PCM terminal 2AG (SKYACTIV-D 2.2) • Start stop unit connector or terminal malfunction • Short to ground in wiring harness between start stop unit terminal 2E and CPP switch terminal A • Start stop unit malfunction

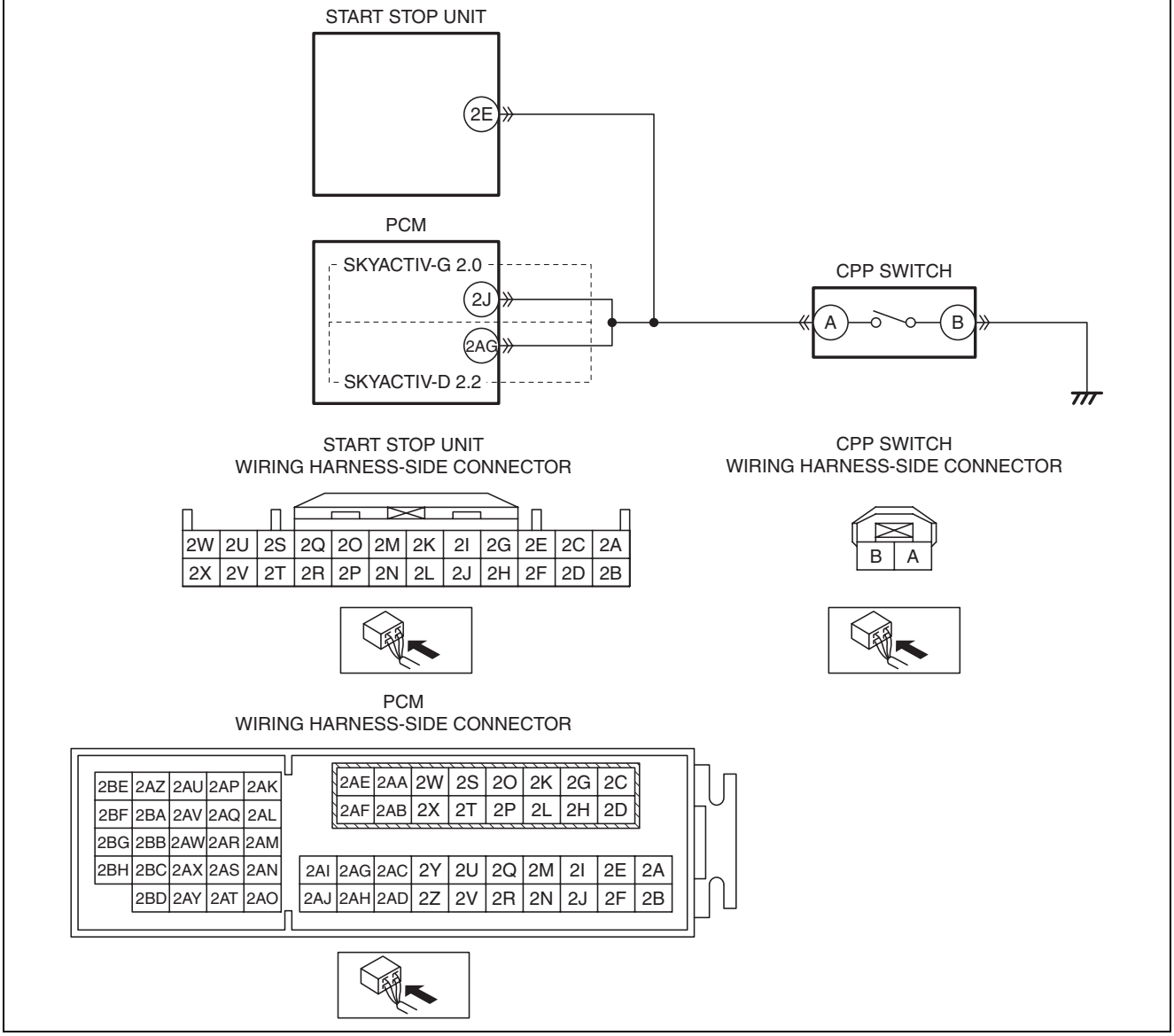

ON-BOARD DIAGNOSTIC [START STOP UNIT]

Diagnostic Procedure

Step	Inspection		Action
1	**VERIFY PCM DTCs** • Perform the DTC inspection for the PCM using the M-MDS. (See 01-02-8 ON-BOARD DIAGNOSTIC TEST [SKYACTIV-G 2.0].) • Is the DTC displayed?	Yes	Repair the malfunctioning part according to the applicable DTC troubleshooting. (See 01-02-14 DTC TABLE [SKYACTIV-G 2.0].)
		No	Go to the next step.
2	**INSPECT CPP SWITCH CONNECTOR CONDITION** • Switch the ignition to off. • Disconnect the negative battery cable. (See 01-17A-11 NEGATIVE BATTERY CABLE DISCONNECTION/CONNECTION [SKYACTIV-G 2.0].) (See 01-17A-13 NEGATIVE BATTERY CABLE DISCONNECTION/CONNECTION [SKYACTIV-G 2.0 (WITHOUT i-stop)].) (See 01-17B-9 NEGATIVE BATTERY CABLE DISCONNECTION/CONNECTION [SKYACTIV-D 2.2].) • Disconnect the CPP switch connector. • Inspect the connector engagement and connection condition and inspect the terminals for damage, deformation, corrosion, or disconnection. • Is the connector normal?	Yes	Go to the next step.
		No	Repair or replace the connector, then go to Step 8.
3	**INSPECT CPP SWITCH** • Inspect the CPP switch. (See 01-40-40 CLUTCH PEDAL POSITION (CPP) SWITCH INSPECTION [SKYACTIV-G 2.0].) • Is the CPP switch normal?	Yes	Go to the next step.
		No	Replace the CPP switch, then go to the Step 8. (See 05-10A-13 CLUTCH PEDAL POSITION SWITCH REMOVAL/INSTALLATION [C66M-R, C66MX-R].) (See 05-10B-13 CLUTCH PEDAL POSITION SWITCH REMOVAL/INSTALLATION [D66M-R, D66MX-R].)
4	**INSPECT PCM CONNECTOR CONDITION** • Disconnect the PCM connector. • Inspect the connector engagement and connection condition and inspect the terminals for damage, deformation, corrosion, or disconnection. • Is the connector normal?	Yes	Go to the next step.
		No	Repair or replace the connector, then go to Step 8.
5	**INSPECT CPP SWITCH CIRCUIT FOR SHORT TO GROUND** • Verify that the PCM and CPP switch connectors are disconnected. • Inspect for continuity between CPP switch terminal A (vehicle wiring harness side) and body ground. • Is there continuity?	Yes	Repair or replace the wiring harness which is shorted to ground, then go to Step 8.
		No	Go to the next step.
6	**INSPECT START STOP UNIT CONNECTOR CONDITION** • Disconnect the start stop unit connector. • Inspect the connector engagement and connection condition and inspect the terminals for damage, deformation, corrosion, or disconnection. • Is the connector normal?	Yes	Go to the next step.
		No	Repair or replace the connector, then go to Step 8.
7	**INSPECT CPP SWITCH CIRCUIT FOR SHORT TO GROUND** • Verify that the start stop unit and CPP switch connectors are disconnected. • Inspect for continuity between CPP switch terminal A (vehicle wiring harness side) and body ground. • Is there continuity?	Yes	Repair or replace the wiring harness which has a short to ground, then go to the next step.
		No	Go to the next step.

ON-BOARD DIAGNOSTIC [START STOP UNIT]

Step	Inspection		Action
8	**VERIFY THAT REPAIRS HAVE BEEN COMPLETED** • Reconnect all the disconnected connectors. • Reconnect the disconnected negative battery cable. (See 01-17A-11 NEGATIVE BATTERY CABLE DISCONNECTION/CONNECTION [SKYACTIV-G 2.0].) (See 01-17A-13 NEGATIVE BATTERY CABLE DISCONNECTION/CONNECTION [SKYACTIV-G 2.0 (WITHOUT i-stop)].) (See 01-17B-9 NEGATIVE BATTERY CABLE DISCONNECTION/CONNECTION [SKYACTIV-D 2.2].) • Clear DTC for the start stop unit using the M-MDS. (See 09-02C-7 CLEARING DTC [START STOP UNIT].) • Switch the ignition ON (engine off or on) and wait for **10 min or more**. • Perform the DTC inspection for the start stop unit using the M-MDS. (See 09-02C-6 DTC INSPECTION [START STOP UNIT].) • Is DTC P0830:23 displayed?	Yes	Repeat the inspection from Step 1. • If the malfunction recurs, replace the start stop unit, then go to the next step. (See 09-14-54 START STOP UNIT REMOVAL/INSTALLATION.)
		No	Go to the next step.
9	**VERIFY IF OTHER DTCs DISPLAYED** • Are any other DTCs displayed?	Yes	Repair the malfunctioning part according to the applicable DTC troubleshooting. (See 09-02C-8 DTC TABLE [START STOP UNIT].)
		No	DTC troubleshooting completed.

ON-BOARD DIAGNOSTIC [START STOP UNIT]

DTC P0850:23 [START STOP UNIT]

id0902p6023200

System malfunction location	**TCM circuit malfunction**
Detection condition	• With the ignition switched ON (engine off or on), it is detected that the transaxle range sensor CAN signal is P or N position for **1 s or more** continuously for a continuous **5 or more times** even though the TCM CAN signal is other than P and N position.
Fail-safe	• Perform control of the internal signal for control of the transaxle range sensor as position other than P, N positions.
Possible cause	• TCM connector or terminal malfunction • Start stop unit connector or terminal malfunction • Short to power supply in wiring harness between start stop unit terminal 1F and TCM terminal J • Transaxle range sensor malfunction • Start stop unit malfunction

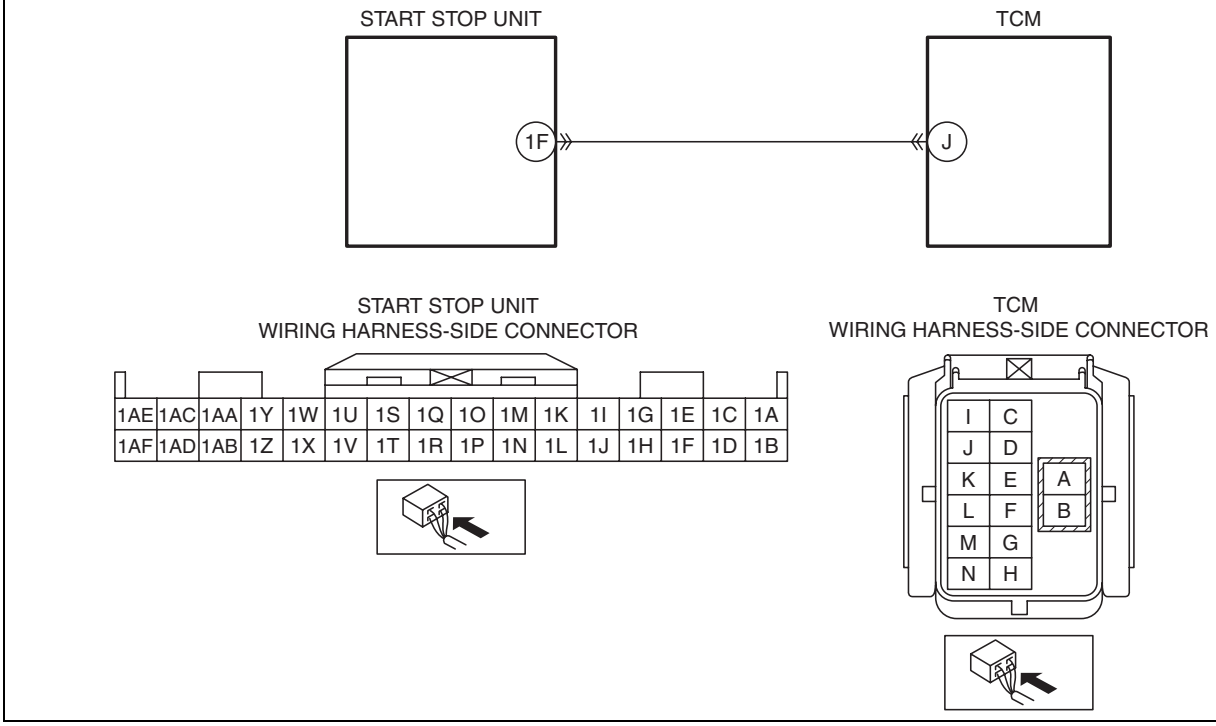

ON-BOARD DIAGNOSTIC [START STOP UNIT]

Diagnostic Procedure

Step	Inspection		Action
1	**INSPECT TCM CONNECTOR CONDITION** • Switch the ignition to off. • Disconnect the negative battery cable. (See 01-17A-11 NEGATIVE BATTERY CABLE DISCONNECTION/CONNECTION [SKYACTIV-G 2.0].) (See 01-17A-13 NEGATIVE BATTERY CABLE DISCONNECTION/CONNECTION [SKYACTIV-G 2.0 (WITHOUT i-stop)].) (See 01-17B-9 NEGATIVE BATTERY CABLE DISCONNECTION/CONNECTION [SKYACTIV-D 2.2].) • Disconnect the TCM connector. • Inspect the connector engagement and connection condition and inspect the terminals for damage, deformation, corrosion, or disconnection. • Is the connector normal?	Yes	Go to the next step.
		No	Repair or replace the connector, then go to Step 5.
2	**INSPECT START STOP UNIT CONNECTOR CONDITION** • Disconnect the start stop unit connector. • Inspect the connector engagement and connection condition and inspect the terminals for damage, deformation, corrosion, or disconnection. • Is the connector normal?	Yes	Go to the next step.
		No	Repair or replace the connector, then go to Step 5.
3	**INSPECT TCM CIRCUIT FOR SHORT TO POWER SUPPLY** • Reconnect all the disconnected connectors. • Connect the negative battery cable. (See 01-17A-11 NEGATIVE BATTERY CABLE DISCONNECTION/CONNECTION [SKYACTIV-G 2.0].) (See 01-17A-13 NEGATIVE BATTERY CABLE DISCONNECTION/CONNECTION [SKYACTIV-G 2.0 (WITHOUT i-stop)].) (See 01-17B-9 NEGATIVE BATTERY CABLE DISCONNECTION/CONNECTION [SKYACTIV-D 2.2].) • Operate the selector lever to positions P or N. • Measure the voltage at start stop unit terminal 1F (vehicle wiring harness side). • Is the voltage **1.0 V or less**?	Yes	Go to the next step.
		No	Repair or replace the wiring harness which is shorted to power supply, then go to Step 5.
4	**PERFORM DTC INSPECTION AND VERIFY IF MALFUNCTIONING PART IS TRANSAXLE RANGE SENSOR** • Clear DTC for the start stop unit using the M-MDS. (See 09-02C-7 CLEARING DTC [START STOP UNIT].) • Switch the ignition ON (engine off). • Perform the following work five or more times. — Operate the selector lever to positions P or N and wait for **1 s or more**. — Operate the selector lever to positions R or D and wait for **1 s or more**. — Operate the selector lever to positions P or N. • Perform the DTC inspection for the start stop unit using the M-MDS. (See 09-02C-6 DTC INSPECTION [START STOP UNIT].) • Is DTC P0850:23 displayed?	Yes	Replace the TCM, then go to the next step. (See 05-17A-67 CONTROL VALVE BODY REMOVAL/INSTALLATION [FW6A-EL, FW6AX-EL].)
		No	Go to Step 6.

ON-BOARD DIAGNOSTIC [START STOP UNIT]

Step	Inspection		Action
5	**VERIFY THAT REPAIRS HAVE BEEN COMPLETED** • Reconnect all the disconnected connectors. • Reconnect the negative battery cable. (See 01-17A-11 NEGATIVE BATTERY CABLE DISCONNECTION/CONNECTION [SKYACTIV-G 2.0].) (See 01-17A-13 NEGATIVE BATTERY CABLE DISCONNECTION/CONNECTION [SKYACTIV-G 2.0 (WITHOUT i-stop)].) (See 01-17B-9 NEGATIVE BATTERY CABLE DISCONNECTION/CONNECTION [SKYACTIV-D 2.2].) • Clear DTC for the start stop unit using the M-MDS. (See 09-02C-7 CLEARING DTC [START STOP UNIT].) • Switch the ignition ON (engine off). • Perform the following work five or more times. — Operate the selector lever to positions P or N and wait for **1 s or more**. — Operate the selector lever to positions R or D and wait for **1 s or more**. — Operate the selector lever to positions P or N. • Perform the DTC inspection for the start stop unit using the M-MDS. (See 09-02C-6 DTC INSPECTION [START STOP UNIT].) • Is DTC P0850:23 displayed?	Yes	Replace the start stop unit, then go to the next step. (See 09-14-54 START STOP UNIT REMOVAL/ INSTALLATION.)
		No	Go to the next step.
6	**VERIFY IF OTHER DTCs DISPLAYED** • Are any other DTCs displayed?	Yes	Repair the malfunctioning part according to the applicable DTC troubleshooting. (See 09-02C-8 DTC TABLE [START STOP UNIT].)
		No	DTC troubleshooting completed.

ON-BOARD DIAGNOSTIC [START STOP UNIT]

DTC P0850:24 [START STOP UNIT]

id0902p6023300

System malfunction location	**TCM circuit malfunction**
Detection condition	• With the ignition switched ON (engine off or on), it is detected that the transaxle range sensor CAN signal is other than P and N position for **1 s or more** continuously for a continuous **5 or more times** even though the TCM CAN signal is other than P or N position.
Fail-safe	• Perform control of the internal signal for control of the transaxle range sensor as position other than P, N positions.
Possible cause	• TCM connector or terminal malfunction • Start stop unit connector or terminal malfunction • Short to ground in wiring harness between start stop unit terminal 1F and TCM terminal J • Open circuit in wiring harness between start stop unit terminal 1F and TCM terminal J • Transaxle range sensor malfunction • Start stop unit malfunction

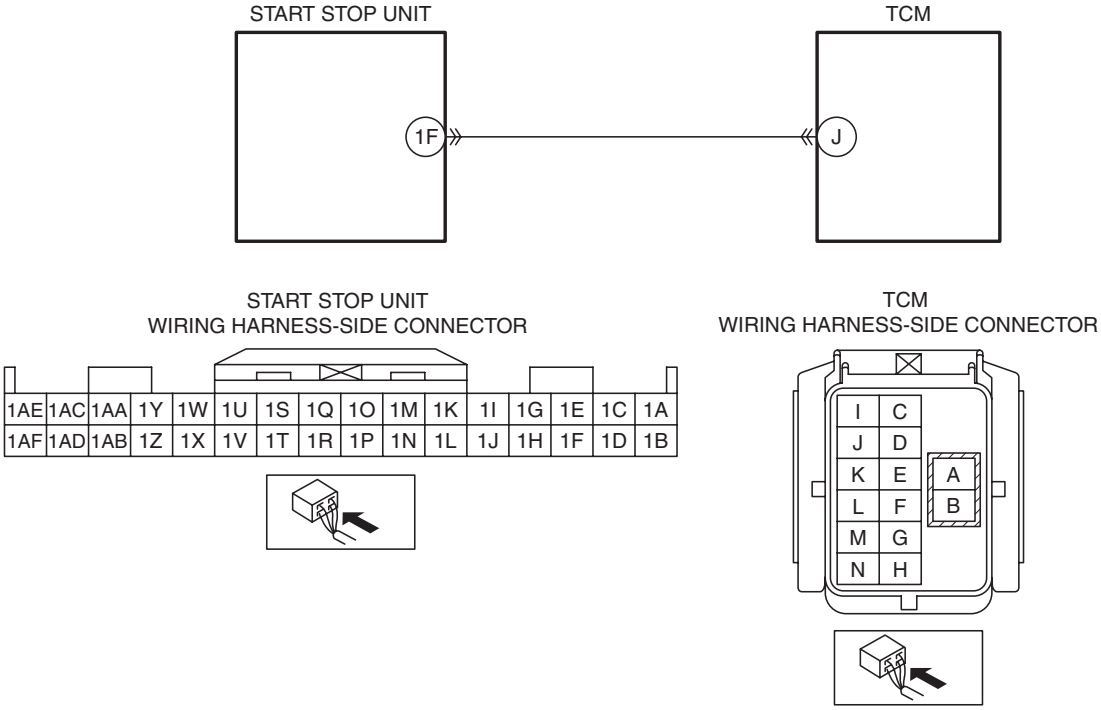

ON-BOARD DIAGNOSTIC [START STOP UNIT]

Diagnostic Procedure

Step	Inspection		Action
1	**INSPECT TCM CONNECTOR CONDITION** • Switch the ignition to off. • Disconnect the negative battery cable. (See 01-17A-11 NEGATIVE BATTERY CABLE DISCONNECTION/CONNECTION [SKYACTIV-G 2.0].) (See 01-17A-13 NEGATIVE BATTERY CABLE DISCONNECTION/CONNECTION [SKYACTIV-G 2.0 (WITHOUT i-stop)].) (See 01-17B-9 NEGATIVE BATTERY CABLE DISCONNECTION/CONNECTION [SKYACTIV-D 2.2].) • Disconnect the TCM connector. • Inspect the connector engagement and connection condition and inspect the terminals for damage, deformation, corrosion, or disconnection. • Is the connector normal?	Yes	Go to the next step.
		No	Repair or replace the connector, then go to Step 6.
2	**INSPECT START STOP UNIT CONNECTOR CONDITION** • Disconnect the start stop unit connector. • Inspect the connector engagement and connection condition and inspect the terminals for damage, deformation, corrosion, or disconnection. • Is the connector normal?	Yes	Go to the next step.
		No	Repair or replace the connector, then go to Step 6.
3	**INSPECT TCM CIRCUIT FOR SHORT TO GROUND** • Verify that the start stop unit and TCM connectors are disconnected. • Inspect for continuity between TCM terminal J (vehicle wiring harness side) and body ground. • Is there continuity?	Yes	Repair or replace the wiring harness which is shorted to ground, then go to Step 6.
		No	Go to the next step.
4	**INSPECT TCM CIRCUIT FOR OPEN CIRCUIT** • Verify that the start stop unit and TCM connectors are disconnected. • Inspect the wiring harness for continuity between start stop unit terminal 1F (vehicle wiring harness side) and TCM terminal J (vehicle wiring harness side). • Is there continuity?	Yes	Go to the next step.
		No	Repair or replace the wiring harness which has an open circuit, then go to Step 6.

ON-BOARD DIAGNOSTIC [START STOP UNIT]

Step	Inspection		Action
5	**PERFORM DTC INSPECTION AND VERIFY IF MALFUNCTIONING PART IS TRANSAXLE RANGE SENSOR** • Reconnect all the disconnected connectors. • Reconnect the disconnected negative battery cable. (See 01-17A-11 NEGATIVE BATTERY CABLE DISCONNECTION/CONNECTION [SKYACTIV-G 2.0].) (See 01-17A-13 NEGATIVE BATTERY CABLE DISCONNECTION/CONNECTION [SKYACTIV-G 2.0 (WITHOUT i-stop)].) (See 01-17B-9 NEGATIVE BATTERY CABLE DISCONNECTION/CONNECTION [SKYACTIV-D 2.2].) • Clear DTC for the start stop unit using the M-MDS. (See 09-02C-7 CLEARING DTC [START STOP UNIT].) • Switch the ignition ON (engine off). • Perform the following work five or more times. — Operate the selector lever to positions to other than P and N and wiat for **1 s or more**. — Operate the selector lever to positions to P or N and wiat for **1 s or more**. — Operate the selector lever to positions to other than P and N. • Perform the DTC inspection for the start stop unit using the M-MDS. (See 09-02C-6 DTC INSPECTION [START STOP UNIT].) • Is DTC P0850:24 displayed?	Yes	Replace the TCM, then go to the next step. (See 05-17A-67 CONTROL VALVE BODY REMOVAL/ INSTALLATION [FW6A-EL, FW6AX-EL].)
		No	Go to Step 7.
6	**VERIFY THAT REPAIRS HAVE BEEN COMPLETED** • Reconnect all the disconnected connectors. • Reconnect the disconnected negative battery cable. (See 01-17A-11 NEGATIVE BATTERY CABLE DISCONNECTION/CONNECTION [SKYACTIV-G 2.0].) (See 01-17A-13 NEGATIVE BATTERY CABLE DISCONNECTION/CONNECTION [SKYACTIV-G 2.0 (WITHOUT i-stop)].) (See 01-17B-9 NEGATIVE BATTERY CABLE DISCONNECTION/CONNECTION [SKYACTIV-D 2.2].) • Clear DTC for the start stop unit using the M-MDS. (See 09-02C-7 CLEARING DTC [START STOP UNIT].) • Switch the ignition ON (engine off). • Perform the following work five or more times. — Operate the selector lever to positions to other than P and N and wiat for **1 s or more**. — Operate the selector lever to positions to P or N and wiat for **1 s or more**. — Operate the selector lever to positions to other than P and N. • Perform the DTC inspection for the start stop unit using the M-MDS. (See 09-02C-6 DTC INSPECTION [START STOP UNIT].) • Is DTC P0850:24 displayed?	Yes	Replace the start stop unit, then go to the next step. (See 09-14-54 START STOP UNIT REMOVAL/ INSTALLATION.)
		No	Go to the next step.

ON-BOARD DIAGNOSTIC [START STOP UNIT]

Step	Inspection		Action
7	**VERIFY IF OTHER DTCs DISPLAYED** • Are any other DTCs displayed?	Yes	Repair the malfunctioning part according to the applicable DTC troubleshooting. (See 09-02C-8 DTC TABLE [START STOP UNIT].)
		No	DTC troubleshooting completed.

DTC P0930:71 [START STOP UNIT]

id0902p6023400

System malfunction location	**Shift-lock solenoid circuit malfunction**
Detection condition	• The start stop unit detects shift-lock solenoid is stuck on for **30 s or more** with the ignition switched ON (engine off or on).
Fail-safe	• Inhibits the shift lock control.
Possible cause	• Selector lever component connector or terminal malfunction • Shift-lock solenoid power supply circuit malfunction — Short to ground in wiring harness between ENGINE.IG1 7.5 A fuse and selector lever component terminal A — ENGINE.IG1 7.5 A fuse malfunction — Open circuit in wiring harness between IG1 relay and selector lever component terminal A • Start stop unit connector or terminal malfunction • Short to ground in the wiring harness between selector lever component terminal H and start stop unit terminal 2G • Open circuit in the wiring harness between selector lever component terminal H and start stop unit terminal 2G • Shift-lock solenoid malfunction • Start stop unit malfunction

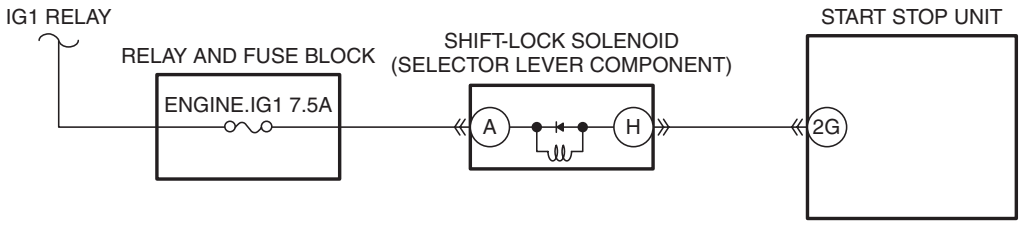

SELECTOR LEVER COMPONENT WIRING HARNESS-SIDE CONNECTOR

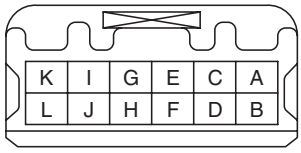

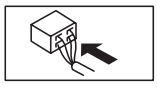

START STOP UNIT WIRING HARNESS-SIDE CONNECTOR

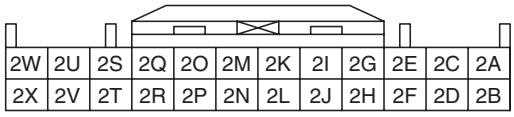

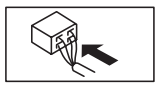

ON-BOARD DIAGNOSTIC [START STOP UNIT]

Diagnostic Procedure

Step	Inspection		Action
1	**INSPECT SELECTOR LEVER COMPONENT CONNECTOR CONDITION** • Switch the ignition to off. • Disconnect the negative battery cable. (See 01-17A-11 NEGATIVE BATTERY CABLE DISCONNECTION/CONNECTION [SKYACTIV-G 2.0].) (See 01-17A-13 NEGATIVE BATTERY CABLE DISCONNECTION/CONNECTION [SKYACTIV-G 2.0 (WITHOUT i-stop)].) (See 01-17B-9 NEGATIVE BATTERY CABLE DISCONNECTION/CONNECTION [SKYACTIV-D 2.2].) • Disconnect the selector lever component connector. • Inspect the connector engagement and connection condition and inspect the terminals for damage, deformation, corrosion, or disconnection. • Is the connector normal?	Yes	Go to the next step.
		No	Repair or replace the connector, then go to Step 7.
2	**INSPECT SHIFT-LOCK SOLENOID POWER SUPPLY CIRCUIT FOR OPEN CIRCUIT OR SHORT TO GROUND** • Verify that the selector lever component connector is disconnected. • Connect the negative battery cable. (See 01-17A-11 NEGATIVE BATTERY CABLE DISCONNECTION/CONNECTION [SKYACTIV-G 2.0].) (See 01-17A-13 NEGATIVE BATTERY CABLE DISCONNECTION/CONNECTION [SKYACTIV-G 2.0 (WITHOUT i-stop)].) (See 01-17B-9 NEGATIVE BATTERY CABLE DISCONNECTION/CONNECTION [SKYACTIV-D 2.2].) • Switch the ignition ON (engine off or on). • Measure the voltage at selector lever component terminal A (vehicle wiring harness side). • Is the voltage **B+**?	Yes	Go to the next step.
		No	Inspect the ENGINE.IG1 7.5 A fuse. • If a fuse is burnt out: — Repair or replace the wiring harness which is shorted to ground. — Replace the burnt out fuse. • If a fuse is damaged: — Replace the damaged fuse. • If the fuse is normal: — Repair or replace the wiring harness which has an open circuit. Go to Step 7.
3	**INSPECT START STOP UNIT CONNECTOR CONDITION** • Switch the ignition to off. • Disconnect the negative battery cable. (See 01-17A-11 NEGATIVE BATTERY CABLE DISCONNECTION/CONNECTION [SKYACTIV-G 2.0].) (See 01-17A-13 NEGATIVE BATTERY CABLE DISCONNECTION/CONNECTION [SKYACTIV-G 2.0 (WITHOUT i-stop)].) (See 01-17B-9 NEGATIVE BATTERY CABLE DISCONNECTION/CONNECTION [SKYACTIV-D 2.2].) • Disconnect the start stop unit connector. • Inspect the connector engagement and connection condition and inspect the terminals for damage, deformation, corrosion, or disconnection. • Is the connector normal?	Yes	Go to the next step.
		No	Repair or replace the connector, then go to Step 7.
4	**INSPECT SHIFT-LOCK SOLENOID CIRCUIT FOR SHORT TO GROUND** • Verify that the selector lever component and start stop unit connectors are disconnected. • Inspect for continuity between selector lever component terminal H (vehicle wiring harness) and body ground. • Is there continuity?	Yes	Repair or replace the wiring harness which is shorted to ground, then go to Step 7.
		No	Go to the next step.

ON-BOARD DIAGNOSTIC [START STOP UNIT]

Step	Inspection		Action
5	**INSPECT SHIFT-LOCK SOLENOID CIRCUIT FOR OPEN CIRCUIT** • Verify that the selector lever component and start stop unit connectors are disconnected. • Inspect the wiring harness for continuity between selector lever component terminal H (vehicle wiring harness side) and start stop unit terminal 2G (vehicle wiring harness side). • Is there continuity?	Yes	Go to the next step.
		No	Repair or replace the wiring harness which has an open circuit, then go to Step 7.
6	**INSPECT SHIFT-LOCK SOLENOID** • Inspect the shift-lock solenoid. (See 05-18-12 SHIFT-LOCK SYSTEM INSPECTION.) • Is the shift-lock solenoid normal?	Yes	Go to the next step.
		No	Replace the selector lever component, then go to the next step. (See 05-18-2 AUTOMATIC TRANSAXLE SHIFT MECHANISM REMOVAL/INSTALLATION.)
7	**VERIFY THAT REPAIRS HAVE BEEN COMPLETED** • Reconnect all the disconnected connectors. • Reconnect the disconnected negative battery cable. (See 01-17A-11 NEGATIVE BATTERY CABLE DISCONNECTION/CONNECTION [SKYACTIV-G 2.0].) (See 01-17A-13 NEGATIVE BATTERY CABLE DISCONNECTION/CONNECTION [SKYACTIV-G 2.0 (WITHOUT i-stop)].) (See 01-17B-9 NEGATIVE BATTERY CABLE DISCONNECTION/CONNECTION [SKYACTIV-D 2.2].) • Clear DTC for the start stop unit using the M-MDS. (See 09-02C-7 CLEARING DTC [START STOP UNIT].) • Switch the ignition ON (engine off or on) and wait for **30 min or more**. • Perform the DTC inspection for the start stop unit using the M-MDS. (See 09-02C-6 DTC INSPECTION [START STOP UNIT].) • Is DTC P0930:71 displayed?	Yes	Repeat the inspection from Step 1. • If the malfunction recurs, replace the start stop unit, then go to the next step. (See 09-14-54 START STOP UNIT REMOVAL/INSTALLATION.)
		No	Go to the next step.
8	**VERIFY IF OTHER DTCs DISPLAYED** • Are any other DTCs displayed?	Yes	Repair the malfunctioning part according to the applicable DTC troubleshooting. (See 09-02C-8 DTC TABLE [START STOP UNIT].)
		No	DTC troubleshooting completed.

ON-BOARD DIAGNOSTIC [START STOP UNIT]

DTC P1708:24 [START STOP UNIT]

id0902p6023500

System malfunction location	**Starter interlock switch circuit malfunction**
Detection condition	• The start stop unit detects an open circuit in the starter interlock switch circuit for **1 s or more** for a continuous **5 times** with the ignition switched ON (engine off or on).
Fail-safe	• Change to the back-up mode.
Possible cause	• Starter interlock switch connector or terminal malfunction • Open circuit in wiring harness between starter interlock switch terminal B and body ground • Starter interlock switch malfunction • Start stop unit connector or terminal malfunction • Open circuit in wiring harness between start stop unit terminal 1F and starter interlock switch terminal A • Start stop unit malfunction

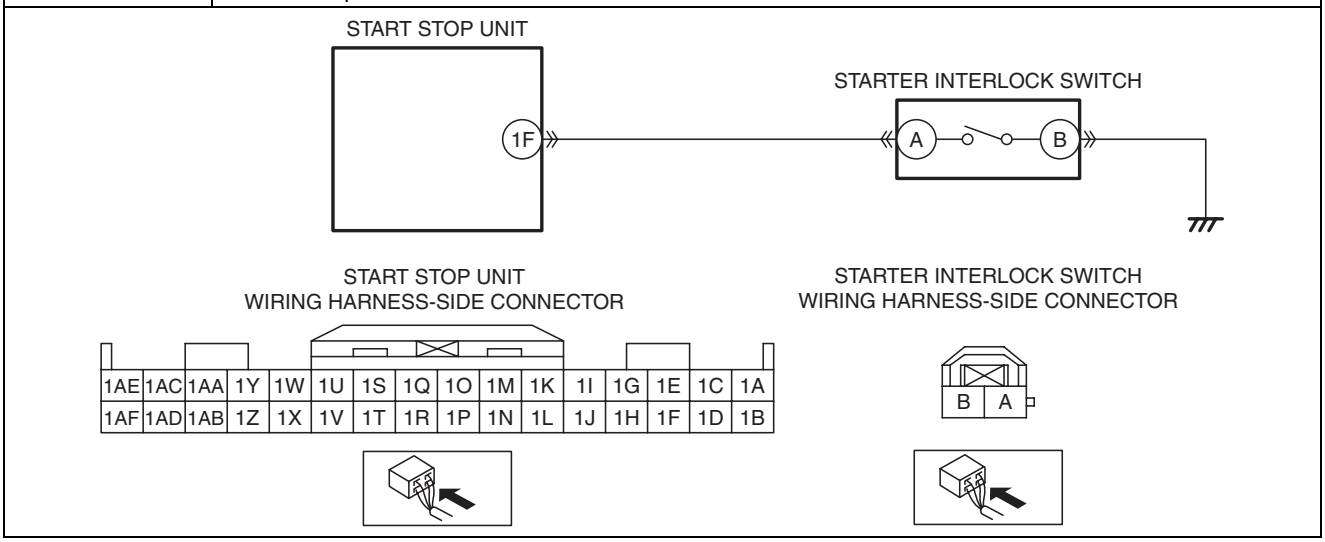

ON-BOARD DIAGNOSTIC [START STOP UNIT]

Diagnostic Procedure

Step	Inspection		Action
1	**STARTER INTERLOCK SWITCH CONNECTOR INSPECTION** • Switch the ignition to off. • Disconnect the negative battery cable. (See 01-17A-11 NEGATIVE BATTERY CABLE DISCONNECTION/CONNECTION [SKYACTIV-G 2.0].) (See 01-17A-13 NEGATIVE BATTERY CABLE DISCONNECTION/CONNECTION [SKYACTIV-G 2.0 (WITHOUT i-stop)].) (See 01-17B-9 NEGATIVE BATTERY CABLE DISCONNECTION/CONNECTION [SKYACTIV-D 2.2].) • Disconnect the starter interlock switch connector. • Inspect the connector engagement and connection condition and inspect the terminals for damage, deformation, corrosion, or disconnection. • Is the connector normal?	Yes	Go to the next step.
		No	Repair or replace the connector, then go to Step 6.
2	**INSPECT STARTER INTERLOCK SWITCH GROUND CIRCUIT FOR OPEN CIRCUIT** • Verify that the start stop unit and starter interlock switch connectors are disconnected. • Inspect for continuity between starter interlock switch terminal B (vehicle wiring harness side) and body ground. • Is there continuity?	Yes	Go to the next step.
		No	Repair or replace the wiring harness which has an open circuit, then go to Step 6.
3	**INSPECT STARTER INTERLOCK SWITCH** • Inspect the starter interlock switch. (See 01-19A-9 STARTER INTERLOCK SWITCH INSPECTION [SKYACTIV-G 2.0].) (See 01-19B-5 STARTER INTERLOCK SWITCH INSPECTION [SKYACTIV-D 2.2].) • Is the starter interlock switch normal?	Yes	Go to the next step.
		No	Replace the starter interlock switch, then go to Step 6. (See 05-10A-14 STARTER INTERLOCK SWITCH REMOVAL/INSTALLATION [C66M-R, C66MX-R].) (See 05-10B-14 STARTER INTERLOCK SWITCH REMOVAL/INSTALLATION [D66M-R, D66MX-R].)
4	**INSPECT START STOP UNIT CONNECTOR CONDITION** • Disconnect the start stop unit connector. • Inspect the connector engagement and connection condition and inspect the terminals for damage, deformation, corrosion, or disconnection. • Is the connector normal?	Yes	Go to the next step.
		No	Repair or replace the connector, then go to Step 6.
5	**INSPECT STARTER INTERLOCK SWITCH CIRCUIT FOR OPEN CIRCUIT** • Verify that the start stop unit and starter interlock switch connectors are disconnected. • Inspect the wiring harness for continuity between start stop unit terminal 1F (vehicle wiring harness side) and starter interlock switch terminal A (vehicle wiring harness side). • Is there continuity?	Yes	Go to the next step.
		No	Repair or replace the wiring harness which has an open circuit, then go to the next step.

ON-BOARD DIAGNOSTIC [START STOP UNIT]

Step	Inspection		Action
6	**VERIFY THAT REPAIRS HAVE BEEN COMPLETED** • Reconnect all the disconnected connectors. • Reconnect the disconnected negative battery cable. (See 01-17A-11 NEGATIVE BATTERY CABLE DISCONNECTION/CONNECTION [SKYACTIV-G 2.0].) (See 01-17A-13 NEGATIVE BATTERY CABLE DISCONNECTION/CONNECTION [SKYACTIV-G 2.0 (WITHOUT i-stop)].) (See 01-17B-9 NEGATIVE BATTERY CABLE DISCONNECTION/CONNECTION [SKYACTIV-D 2.2].) • Clear DTC for the start stop unit using the M-MDS. (See 09-02C-7 CLEARING DTC [START STOP UNIT].) • Switch the ignition ON (engine off or on). • Perform the work of depressing the clutch pedal for **1 s or more** and releasing it for **1 s or more** for **5 or more times**. • Perform the DTC inspection for the start stop unit using the M-MDS. (See 09-02C-6 DTC INSPECTION [START STOP UNIT].) • Is DTC P1708:24 displayed?	Yes	Repeat the inspection from Step 1. • If the malfunction recurs, replace the start stop unit, then go to the next step. (See 09-14-54 START STOP UNIT REMOVAL/INSTALLATION.)
		No	Go to the next step.
7	**VERIFY IF OTHER DTCs DISPLAYED** • Are any other DTCs displayed?	Yes	Repair the malfunctioning part according to the applicable DTC troubleshooting. (See 09-02C-8 DTC TABLE [START STOP UNIT].)
		No	DTC troubleshooting completed.

ON-BOARD DIAGNOSTIC [START STOP UNIT]

DTC P1708:29 [START STOP UNIT]

id0902p6023600

System malfunction location	**Starter interlock switch circuit or clutch pedal position switch circuit malfunction**
Detection condition	• The start stop unit detects that the start interlock switch circuit is stuck on for **0.2 s or more**, or the clutch pedal position switch circuit is stuck off for **0.25 s or more**.
Fail-safe	• Change to the back-up mode.
Possible cause	• Starter interlock switch connector or terminal malfunction • Starter interlock switch malfunction • Start stop unit connector or terminal malfunction • Short to ground in wiring harness between start stop unit terminal 1F and starter interlock switch terminal A • Clutch pedal position switch connector or terminal malfunction • Open circuit in wiring harness between clutch pedal position switch terminal B and body ground • CPP switch malfunction • Open circuit in wiring harness between start stop unit terminal 2E and clutch pedal position switch terminal A • Start stop unit malfunction

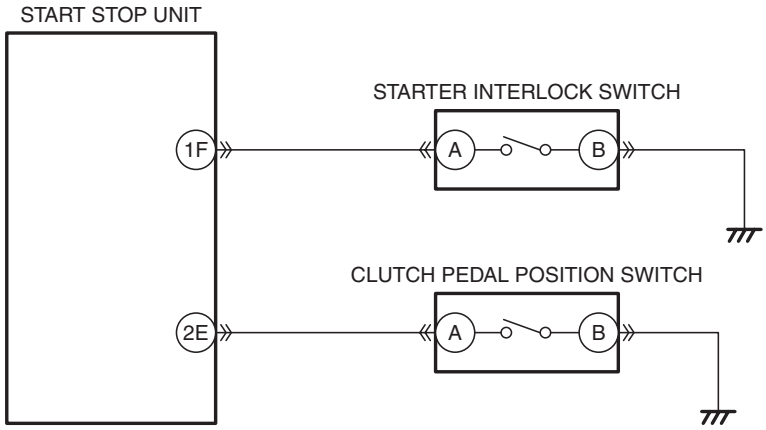

START STOP UNIT
WIRING HARNESS-SIDE CONNECTOR

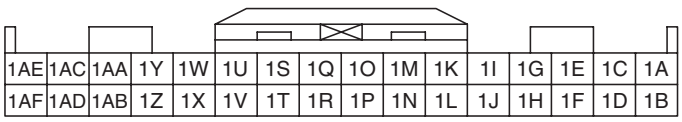

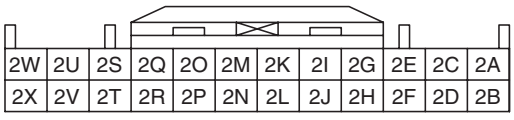

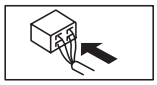

CLUTCH PEDAL POSITION SWITCH
WIRING HARNESS-SIDE CONNECTOR

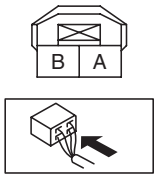

STARTER INTERLOCK SWITCH
WIRING HARNESS-SIDE CONNECTOR

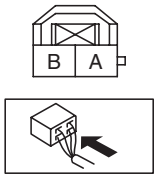

ON-BOARD DIAGNOSTIC [START STOP UNIT]

Diagnostic Procedure

Step	Inspection		Action
1	**STARTER INTERLOCK SWITCH CONNECTOR INSPECTION** • Switch the ignition to off. • Disconnect the negative battery cable. (See 01-17A-11 NEGATIVE BATTERY CABLE DISCONNECTION/CONNECTION [SKYACTIV-G 2.0].) (See 01-17A-13 NEGATIVE BATTERY CABLE DISCONNECTION/CONNECTION [SKYACTIV-G 2.0 (WITHOUT i-stop)].) (See 01-17B-9 NEGATIVE BATTERY CABLE DISCONNECTION/CONNECTION [SKYACTIV-D 2.2].) • Disconnect the starter interlock switch connector. • Inspect the connector engagement and connection condition and inspect the terminals for damage, deformation, corrosion, or disconnection. • Is the connector normal?	Yes	Go to the next step.
		No	Repair or replace the connector, then go to Step 9.
2	**INSPECT STARTER INTERLOCK SWITCH** • Inspect the starter interlock switch. (See 01-19A-9 STARTER INTERLOCK SWITCH INSPECTION [SKYACTIV-G 2.0].) (See 01-19B-5 STARTER INTERLOCK SWITCH INSPECTION [SKYACTIV-D 2.2].) • Is the starter interlock switch normal?	Yes	Go to the next step.
		No	Replace the starter interlock switch, then go to Step 9. (See 05-10A-14 STARTER INTERLOCK SWITCH REMOVAL/INSTALLATION [C66M-R, C66MX-R].) (See 05-10B-14 STARTER INTERLOCK SWITCH REMOVAL/INSTALLATION [D66M-R, D66MX-R].)
3	**INSPECT START STOP UNIT CONNECTOR CONDITION** • Disconnect the start stop unit connector. • Inspect the connector engagement and connection condition and inspect the terminals for damage, deformation, corrosion, or disconnection. • Is the connector normal?	Yes	Go to the next step.
		No	Repair or replace the connector, then go to Step 9.
4	**INSPECT STARTER INTERLOCK SWITCH CIRCUIT FOR SHORT TO GROUND** • Verify that the start stop unit and starter interlock switch connectors are disconnected. • Inspect for continuity between starter interlock switch terminal A (vehicle wiring harness side) and body ground. • Is there continuity?	Yes	Repair or replace the wiring harness which is shorted to ground, then go to Step 9.
		No	Go to the next step.
5	**INSPECT CPP SWITCH CONNECTOR CONDITION** • Disconnect the CPP switch connector. • Inspect the connector engagement and connection condition and inspect the terminals for damage, deformation, corrosion, or disconnection. • Is the connector normal?	Yes	Go to the next step.
		No	Repair or replace the connector, then go to Step 9.
6	**INSPECT CPP SWITCH GROUND CIRCUIT FOR OPEN CIRCUIT** • Verify that the CPP switch connector is disconnected. • Inspect for continuity between CPP switch terminal B (vehicle wiring harness side) and body ground. • Is there continuity?	Yes	Go to the next step.
		No	Repair or replace the wiring harness which has an open circuit, then go to Step 9.

ON-BOARD DIAGNOSTIC [START STOP UNIT]

Step	Inspection		Action
7	**INSPECT CPP SWITCH** • Inspect the CPP switch. (See 01-40-40 CLUTCH PEDAL POSITION (CPP) SWITCH INSPECTION [SKYACTIV-G 2.0].) • Is the clutch pedal position switch normal?	Yes	Go to the next step.
		No	Replace the clutch pedal position switch, then go to the Step 9. (See 05-10A-13 CLUTCH PEDAL POSITION SWITCH REMOVAL/INSTALLATION [C66M-R, C66MX-R].) (See 05-10B-13 CLUTCH PEDAL POSITION SWITCH REMOVAL/INSTALLATION [D66M-R, D66MX-R].)
8	**INSPECT CPP SWITCH CIRCUIT FOR OPEN CIRCUIT** • Verify that the start stop unit and clutch pedal position switch connectors are disconnected. • Inspect the wiring harness for an open circuit between start stop unit terminal 2E (vehicle wiring harness side) and clutch pedal position switch terminal A (vehicle wiring harness side). • Is there continuity?	Yes	Go to the next step.
		No	Repair or replace the wiring harness which has an open circuit, then go to the next step.
9	**VERIFY THAT REPAIRS HAVE BEEN COMPLETED** • Reconnect all the disconnected connectors. • Reconnect the disconnected negative battery cable. (See 01-17A-11 NEGATIVE BATTERY CABLE DISCONNECTION/CONNECTION [SKYACTIV-G 2.0].) (See 01-17A-13 NEGATIVE BATTERY CABLE DISCONNECTION/CONNECTION [SKYACTIV-G 2.0 (WITHOUT i-stop)].) (See 01-17B-9 NEGATIVE BATTERY CABLE DISCONNECTION/CONNECTION [SKYACTIV-D 2.2].) • Clear DTC for the start stop unit using the M-MDS. (See 09-02C-7 CLEARING DTC [START STOP UNIT].) • Switch the ignition ON (engine off or on). • Perform the work of depressing and releasing the clutch pedal **3 times**. • Perform the DTC inspection for the start stop unit using the M-MDS. (See 09-02C-6 DTC INSPECTION [START STOP UNIT].) • Is DTC P1708:29 displayed?	Yes	Repeat the inspection from Step 1. • If the malfunction recurs, replace the start stop unit, then go to the next step. (See 09-14-54 START STOP UNIT REMOVAL/INSTALLATION.)
		No	Go to the next step.
10	**VERIFY IF OTHER DTCs DISPLAYED** • Are any other DTCs displayed?	Yes	Repair the malfunctioning part according to the applicable DTC troubleshooting. (See 09-02C-8 DTC TABLE [START STOP UNIT].)
		No	DTC troubleshooting completed.

ON-BOARD DIAGNOSTIC [START STOP UNIT]

DTC P1794:16 [START STOP UNIT]

id0902p6023700

System malfunction location	**Start stop unit power supply voltage (+B2) low input**
Detection condition	• Start stop unit power supply circuit (+B2) voltage of **less than 6.5 V** is detected for **5 s or more**.
Fail-safe	—
Possible cause	• DTCs are stored in the PCM. • Battery malfunction • Generator malfunction • Start stop unit connector or terminal malfunction • Start stop unit power supply circuit (+B2) malfunction — Short to ground in wiring harness between AT 15 A 15 A fuse and start stop unit terminal 2W — AT 15 A fuse malfunction — Open circuit in wiring harness between battery positive terminal and start stop unit terminal 2W • Start stop unit malfunction

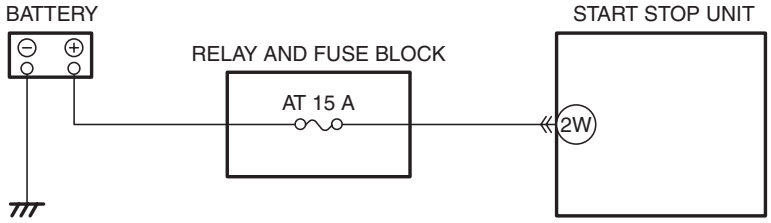

START STOP UNIT
WIRING HARNESS-SIDE CONNECTOR

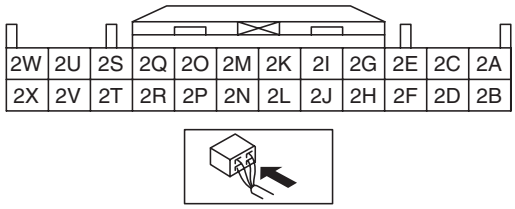

ON-BOARD DIAGNOSTIC [START STOP UNIT]

Diagnostic Procedure

Step	Inspection		Action
1	**VERIFY PCM DTCs** • Perform the DTC inspection for the PCM using the M-MDS. (See 01-02-8 ON-BOARD DIAGNOSTIC TEST [SKYACTIV-G 2.0].) • Is the DTC displayed?	Yes	Repair the malfunctioning part according to the applicable DTC troubleshooting. (See 01-02-14 DTC TABLE [SKYACTIV-G 2.0].)
		No	Go to the next step.
2	**INSPECT BATTERY** • Inspect the battery. (See 01-17A-7 BATTERY INSPECTION [SKYACTIV-G 2.0].) (See 01-17A-8 BATTERY INSPECTION [SKYACTIV-G 2.0 (WITHOUT i-stop)].) (See 01-17B-6 BATTERY INSPECTION [SKYACTIV-D 2.2].) • Is the battery normal?	Yes	Go to the next step.
		No	Recharge or replace the battery, then go to Step 6. (See 01-17A-9 BATTERY RECHARGING [SKYACTIV-G 2.0].) (See 01-17A-10 BATTERY RECHARGING [SKYACTIV-G 2.0 (WITHOUT i-stop)].) (See 01-17B-8 BATTERY RECHARGING [SKYACTIV-D 2.2].) (See 01-17A-3 BATTERY REMOVAL/INSTALLATION [SKYACTIV-G 2.0].) (See 01-17B-3 BATTERY REMOVAL/INSTALLATION [SKYACTIV-D 2.2].)
3	**INSPECT GENERATOR** • Inspect the generator. (See 01-17A-19 GENERATOR INSPECTION [SKYACTIV-G 2.0].) (See 01-17B-16 GENERATOR INSPECTION [SKYACTIV-D 2.2].) • Is the generator normal?	Yes	Go to the next step.
		No	Replace the generator, then go to Step 6. (See 01-17A-17 GENERATOR REMOVAL/ INSTALLATION [SKYACTIV-G 2.0].) (See 01-17B-14 GENERATOR REMOVAL/ INSTALLATION [SKYACTIV-D 2.2].)
4	**INSPECT START STOP UNIT CONNECTOR CONDITION** • Switch the ignition to off. • Disconnect the negative battery cable. (See 01-17A-11 NEGATIVE BATTERY CABLE DISCONNECTION/CONNECTION [SKYACTIV-G 2.0].) (See 01-17A-13 NEGATIVE BATTERY CABLE DISCONNECTION/CONNECTION [SKYACTIV-G 2.0 (WITHOUT i-stop)].) (See 01-17B-9 NEGATIVE BATTERY CABLE DISCONNECTION/CONNECTION [SKYACTIV-D 2.2].) • Disconnect the start stop unit connector. • Inspect the connector engagement and connection condition and inspect the terminals for damage, deformation, corrosion, or disconnection. • Is the connector normal?	Yes	Go to the next step.
		No	Repair or replace the connector, then go to Step 6.
5	**INSPECT START STOP UNIT POWER SUPPLY CIRCUIT (+B2)** • Reconnect all the disconnected connectors. • Connect the negative battery cable. (See 01-17A-11 NEGATIVE BATTERY CABLE DISCONNECTION/CONNECTION [SKYACTIV-G 2.0].) (See 01-17A-13 NEGATIVE BATTERY CABLE DISCONNECTION/CONNECTION [SKYACTIV-G 2.0 (WITHOUT i-stop)].) (See 01-17B-9 NEGATIVE BATTERY CABLE DISCONNECTION/CONNECTION [SKYACTIV-D 2.2].) • Display PID VPWR_B2 using the M-MDS. (See 09-02C-151 PID/DATA MONITOR INSPECTION [START STOP UNIT].) • Is the voltage **B+**?	Yes	Go to the next step.
		No	Inspect the AT 15 A fuse. • If a fuse is burnt out: — Repair or replace the wiring harness which is shorted to ground. — Replace the fuse. • If a fuse is damaged: — Replace the fuse. • If the fuse is normal: — Repair or replace the wiring harness which has an open circuit. Go to the next step.

ON-BOARD DIAGNOSTIC [START STOP UNIT]

Step	Inspection		Action
6	**VERIFY THAT REPAIRS HAVE BEEN COMPLETED** • Reconnect all the disconnected connectors. • Reconnect the disconnected negative battery cable. (See 01-17A-11 NEGATIVE BATTERY CABLE DISCONNECTION/CONNECTION [SKYACTIV-G 2.0].) (See 01-17A-13 NEGATIVE BATTERY CABLE DISCONNECTION/CONNECTION [SKYACTIV-G 2.0 (WITHOUT i-stop)].) (See 01-17B-9 NEGATIVE BATTERY CABLE DISCONNECTION/CONNECTION [SKYACTIV-D 2.2].) • Clear DTC for the start stop unit using the M-MDS. (See 09-02C-7 CLEARING DTC [START STOP UNIT].) • Switch the ignition ON (engine off or on) and wait for **5 s or more**. • Perform the DTC inspection for the start stop unit using the M-MDS. (See 09-02C-6 DTC INSPECTION [START STOP UNIT].) • Is DTC P1794:16 displayed?	Yes	Repeat the inspection from Step 1. • If the malfunction recurs, replace the start stop unit, then go to the next step. (See 09-14-54 START STOP UNIT REMOVAL/INSTALLATION.)
		No	Go to the next step.
7	**VERIFY IF OTHER DTCs DISPLAYED** • Are any other DTCs displayed?	Yes	Repair the malfunctioning part according to the applicable DTC troubleshooting. (See 09-02C-8 DTC TABLE [START STOP UNIT].)
		No	DTC troubleshooting completed.

ON-BOARD DIAGNOSTIC [START STOP UNIT]

DTC U0001:88/U0100:00/U0101:00/U0121:00/U0121:87/U0131:00/U0140:00/U0146:00/U0151:00/U0155:00 [START STOP UNIT]

id0902p6023800

System malfunction location	**U0001:88** • **Module communication error (HS-CAN)** **U0100:00** • **Communication error with PCM** **U0101:00** • **Communication error with TCM** **U0121:00** • **Communication error with DSC HU/CM** **U0121:87** • **Communication error with DSC HU/CM** **U0131:00** • **Communication error with EPS control module** **U0140:00** • **Communication error with front body control module (FBCM)** **U0146:00** • **Communication error with instrument cluster** **U0151:00** • **SAS control module communication error** **U0155:00** • **Communication error with instrument cluster**
Detection condition	• U0001:88 — The start stop unit detects CAN bus communication line (HS-CAN) malfunction **10 times** continuously. • U0100:00 — The start stop unit could not receive CAN signal from the PCM for **1 s or more**. • U0101:00 — The start stop unit could not receive CAN signal from the TCM for **1 s or more**. • U0121:00 — The start stop unit could not receive CAN signal from the DSC HU/CM for **1 s or more**. • U0121:87 — The start stop unit could not receive CAN signal from the DSC HU/CM for **10 s or more**. • U0131:00 — The start stop unit could not receive CAN signal from the EPS control module for **1.2 s or more**. • U0140:00 — The start stop unit could not receive CAN signal from the front body control module (FBCM) for **5 s or more**. • U0146:00 — The start stop unit cannot receive CAN signals from the instrument cluster for **5 s or more** with the ignition switched ON (engine off or on). • U0151:00 — The start stop unit could not receive CAN signal from the SAS control module for **1 s or more**. • U0155:00 — The start stop unit could not receive CAN signal from the instrument cluster for **5 s or more**.
Fail-safe	• U0001:88 — Sets to default signal. — Cancel the i-stop control. (With i-stop) • U0100:00 — Sets to default signal. — Cancel the i-stop control. (With i-stop) • U0101:00 — Sets to default signal. • U0121:00 — Sets to default signal. • U0121:87 — Sets to default signal. • U0131:00 — Sets to default signal. • U0140:00 — Sets to default signal. • U0146:00 — Sets to default signal. • U0151:00 — Sets to default signal. • U0155:00 — Sets to default signal.

ON-BOARD DIAGNOSTIC [START STOP UNIT]

System malfunction location	**U0001:88** • **Module communication error (HS-CAN)** **U0100:00** • **Communication error with PCM** **U0101:00** • **Communication error with TCM** **U0121:00** • **Communication error with DSC HU/CM** **U0121:87** • **Communication error with DSC HU/CM** **U0131:00** • **Communication error with EPS control module** **U0140:00** • **Communication error with front body control module (FBCM)** **U0146:00** • **Communication error with instrument cluster** **U0151:00** • **SAS control module communication error** **U0155:00** • **Communication error with instrument cluster**
Possible cause	• Malfunction in CAN bus communication line • Malfunction in CAN line between the PCM and start stop unit • Malfunction in CAN line between the TCM and start stop unit • Malfunction in CAN line between the DSC HU/CM and start stop unit • Malfunction in CAN line between the EPS control module and start stop unit • Malfunction in CAN line between the front body control module (FBCM) and start stop unit • Malfunction in CAN line between the SAS control module and start stop unit • Malfunction in CAN line between the instrument cluster and start stop unit
System wiring diagram	—

Diagnostic Procedure

- Perform the malfunction diagnosis according to the troubleshooting procedure for the multiplex communication system. (See 10-02A-1 FOREWORD [SKYACTIV-G 2.0 (L.H.D.)].)(See 10-02B-1 FOREWORD [SKYACTIV-G 2.0 (R.H.D.)].)(See 10-02C-1 FOREWORD [SKYACTIV-D 2.2 (L.H.D.)].)(See 10-02D-1 FOREWORD [SKYACTIV-D 2.2 (R.H.D.)].)

ON-BOARD DIAGNOSTIC [START STOP UNIT]

DTC U0028:87 [START STOP UNIT]

id0902p6023900

System malfunction location	**Communication error with rear body control module (RBCM)**
Detection condition	• Start stop unit detects communication error with rear body control module (RBCM) **10 times continuously**.
Fail-safe	—
Possible cause	• Rear body control module (RBCM) connector or terminal malfunction • Start stop unit connector or terminal malfunction • Short to ground in wiring harness between start stop unit terminal 1Q and rear body control module (RBCM) terminal 3B • Open circuit in wiring harness between start stop unit terminal 1Q and rear body control module (RBCM) terminal 3B • Rear body control module (RBCM) malfunction • Start stop unit malfunction

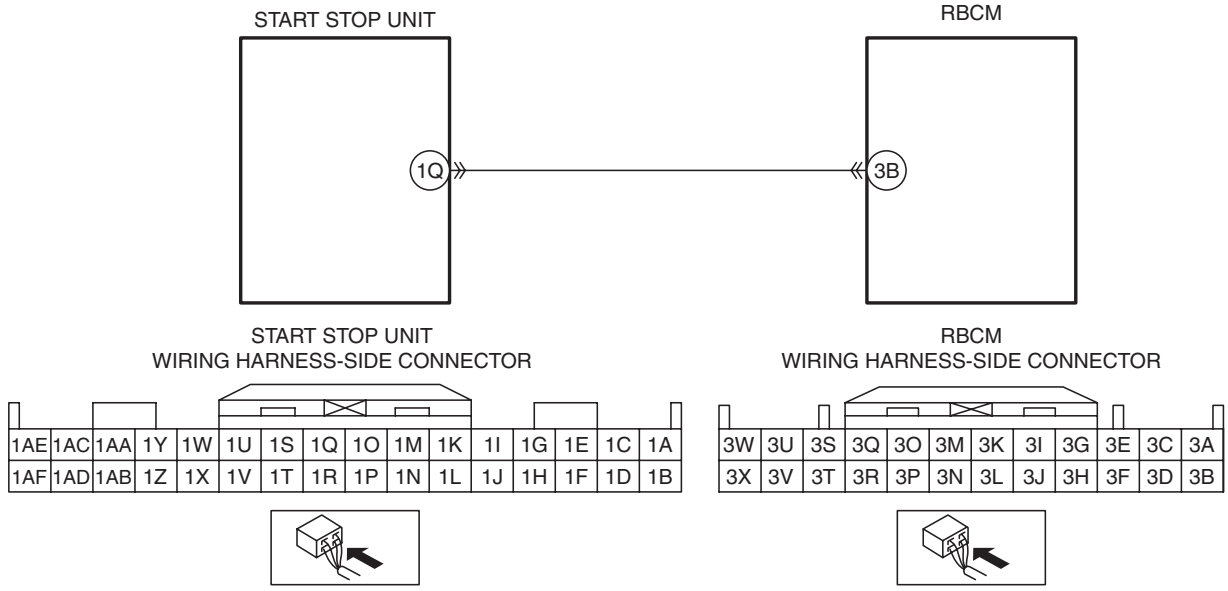

ON-BOARD DIAGNOSTIC [START STOP UNIT]

Diagnostic Procedure

Step	Inspection		Action
1	**INSPECT REAR BODY CONTROL MODULE (RBCM) CONNECTOR CONDITION** • Switch the ignition to off. • Disconnect the negative battery cable. (See 01-17A-11 NEGATIVE BATTERY CABLE DISCONNECTION/CONNECTION [SKYACTIV-G 2.0].) (See 01-17A-13 NEGATIVE BATTERY CABLE DISCONNECTION/CONNECTION [SKYACTIV-G 2.0 (WITHOUT i-stop)].) (See 01-17B-9 NEGATIVE BATTERY CABLE DISCONNECTION/CONNECTION [SKYACTIV-D 2.2].) • Disconnect the rear body control module (RBCM) connector. • Inspect the connector engagement and connection condition and inspect the terminals for damage, deformation, corrosion, or disconnection. • Is the connector normal?	Yes	Go to the next step.
		No	Repair or replace the connector, then go to Step 6.
2	**INSPECT START STOP UNIT CONNECTOR CONDITION** • Disconnect the start stop unit connector. • Inspect the connector engagement and connection condition and inspect the terminals for damage, deformation, corrosion, or disconnection. • Is the connector normal?	Yes	Go to the next step.
		No	Repair or replace the connector, then go to Step 6.
3	**INSPECT REAR BODY CONTROL MODULE (RBCM) CIRCUIT FOR SHORT TO GROUND** • Verify that the rear body control module (RBCM) connector and start stop unit connector are disconnected. • Inspect for continuity between rear body control module (RBCM) terminal 3B (vehicle wiring harness side) and body ground. • Is there continuity?	Yes	Repair or replace the wiring harness which is shorted to ground, then go to Step 6.
		No	Go to the next step.
4	**INSPECT REAR BODY CONTROL MODULE (RBCM) CIRCUIT FOR OPEN CIRCUIT** • Verify that the rear body control module (RBCM) connector and start stop unit connector are disconnected. • Inspect the wiring harness for an open circuit between start stop unit terminal 1Q (vehicle wiring harness side) and rear body control module (RBCM) terminal 3B (vehicle wiring harness side). • Is there continuity?	Yes	Go to the next step.
		No	Repair or replace the wiring harness which has an open circuit, then go to Step 6.
5	**INSPECT REAR BODY CONTROL MODULE (RBCM)** • Inspect the rear body control module (RBCM). (See 09-40-11 REAR BODY CONTROL MODULE (RBCM) INSPECTION.) • Is the rear body control module (RBCM) normal?	Yes	Go to the next step.
		No	Replace the rear body control module (RBCM), then go to the next step. (See 09-40-9 REAR BODY CONTROL MODULE (RBCM) REMOVAL/INSTALLATION.)

ON-BOARD DIAGNOSTIC [START STOP UNIT]

Step	Inspection		Action
6	**VERIFY THAT REPAIRS HAVE BEEN COMPLETED** • Reconnect all the disconnected connectors. • Reconnect the disconnected negative battery cable. (See 01-17A-11 NEGATIVE BATTERY CABLE DISCONNECTION/CONNECTION [SKYACTIV-G 2.0].) (See 01-17A-13 NEGATIVE BATTERY CABLE DISCONNECTION/CONNECTION [SKYACTIV-G 2.0 (WITHOUT i-stop)].) (See 01-17B-9 NEGATIVE BATTERY CABLE DISCONNECTION/CONNECTION [SKYACTIV-D 2.2].) • Clear DTC for the start stop unit using the M-MDS. (See 09-02C-7 CLEARING DTC [START STOP UNIT].) • Perform the DTC inspection for the start stop unit using the M-MDS. (See 09-02C-6 DTC INSPECTION [START STOP UNIT].) • Is DTC U0028:87 displayed?	Yes	Repeat the inspection from Step 1. • If the malfunction recurs, replace the start stop unit, then go to the next step. (See 09-14-54 START STOP UNIT REMOVAL/INSTALLATION.)
		No	Go to the next step.
7	**VERIFY IF OTHER DTCs DISPLAYED** • Are any other DTCs displayed?	Yes	Repair the malfunctioning part according to the applicable DTC troubleshooting. (See 09-02C-8 DTC TABLE [START STOP UNIT].)
		No	DTC troubleshooting completed.

DTC U0447:86 [START STOP UNIT]

id0902p6024200

System malfunction location	**Error signal received from instrument cluster**
Detection condition	• The start stop unit receives error signals from the instrument cluster for **5 s or more** with the ignition switched ON (engine off or on).
Fail-safe	—
Possible cause	• DTCs are stored in the instrument cluster. • Instrument cluster malfunction • Start stop unit malfunction
System wiring diagram	—

ON-BOARD DIAGNOSTIC [START STOP UNIT]

Diagnostic Procedure

Step	Inspection		Action
1	**VERIFY INSTRUMENT CLUSTER DTCs** • Perform the DTC inspection for the instrument cluster using the M-MDS. (See 09-02G-7 DTC INSPECTION [INSTRUMENT CLUSTER].) • Is the DTC displayed?	Yes	Repair the malfunctioning part according to the applicable DTC troubleshooting. (See 09-02G-10 DTC TABLE [INSTRUMENT CLUSTER].)
		No	Go to the next step.
2	**PERFORM DTC INSPECTION AND VERIFY IF MALFUNCTIONING PART IS INSTRUMENT CLUSTER** • Clear DTC for the instrument cluster using the M-MDS. (See 09-02G-9 CLEARING DTC [INSTRUMENT CLUSTER].) • Switch the ignition ON (engine off or on) and wait for **5 s or more**. • Perform the DTC inspection for the instrument cluster using the M-MDS. (See 09-02G-2 ON-BOARD DIAGNOSTIC WIRING DIAGRAM [INSTRUMENT CLUSTER].) • Is the DTC U0447:86 displayed?	Yes	Replace the instrument cluster, then go to the next step. (See 09-22-6 INSTRUMENT CLUSTER REMOVAL/ INSTALLATION.)
		No	Go to step 4.
3	**PERFORM DTC INSPECTION AND VERIFY IF MALFUNCTIONING PART IS START STOP UNIT** • Clear DTC for the start stop unit using the M-MDS. (See 09-02C-7 CLEARING DTC [START STOP UNIT].) • Switch the ignition ON (engine off or on) and wait for **5 s or more**. • Perform the DTC inspection for the start stop unit using the M-MDS. (See 09-02C-6 DTC INSPECTION [START STOP UNIT].) • Is the DTC U0447:86 displayed?	Yes	Replace the start stop unit, then go to the next step. (See 09-14-54 START STOP UNIT REMOVAL/ INSTALLATION.)
		No	Go to the next step.
4	**VERIFY IF OTHER DTCs DISPLAYED** • Are any other DTCs displayed?	Yes	Repair the malfunctioning part according to the applicable DTC troubleshooting. (See 09-02C-8 DTC TABLE [START STOP UNIT].)
		No	DTC troubleshooting completed.

ON-BOARD DIAGNOSTIC [START STOP UNIT]

DTC U201F:11 [START STOP UNIT]

id0902p6024300

System malfunction location	**Keyless receiver circuit malfunction**
Detection condition	• Start stop unit detects keyless receiver circuit voltage of **less than 3.4 V** for **0.5 s or more**.
Fail-safe	—
Possible cause	• Keyless receiver connector or terminal malfunction • Start stop unit connector or terminal malfunction • Short to ground in wiring harness between start stop unit terminal 2Q and keyless receiver terminal A • Keyless receiver malfunction • Start stop unit malfunction

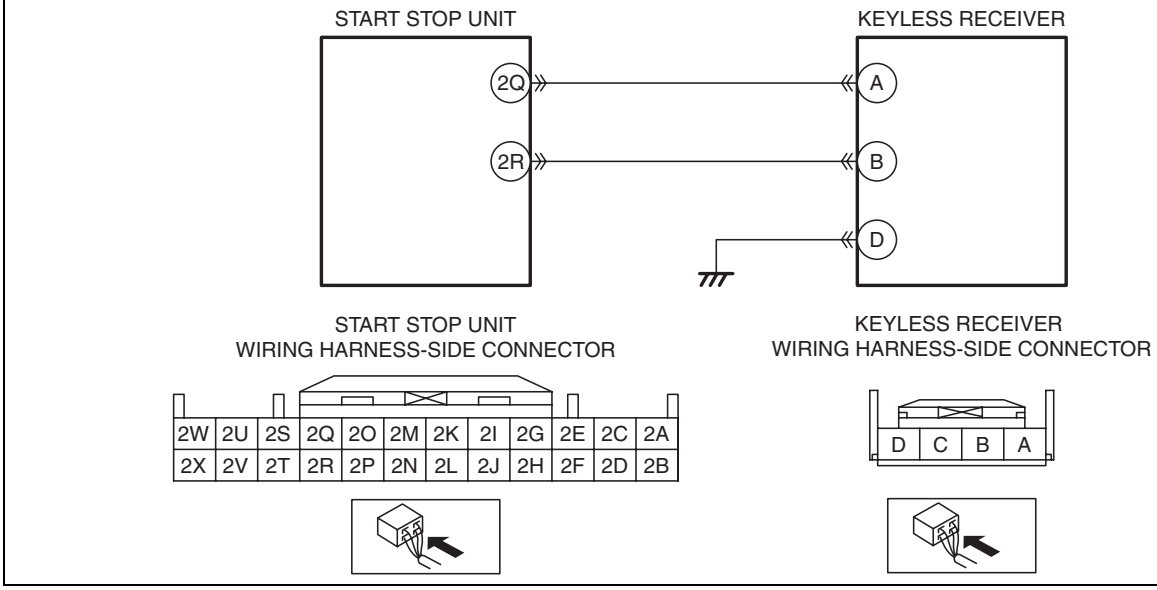

Diagnostic Procedure

Step	Inspection		Action
1	**INSPECT KEYLESS RECEIVER CONNECTOR CONDITION** • Switch the ignition to off. • Disconnect the negative battery cable. (See 01-17A-11 NEGATIVE BATTERY CABLE DISCONNECTION/CONNECTION [SKYACTIV-G 2.0].) (See 01-17A-13 NEGATIVE BATTERY CABLE DISCONNECTION/CONNECTION [SKYACTIV-G 2.0 (WITHOUT i-stop)].) (See 01-17B-9 NEGATIVE BATTERY CABLE DISCONNECTION/CONNECTION [SKYACTIV-D 2.2].) • Disconnect the keyless receiver connector • Inspect the connector engagement and connection condition and inspect the terminals for damage, deformation, corrosion, or disconnection. • Is the connector normal?	Yes	Go to the next step.
		No	Repair or replace the connector, then go to Step 5.
2	**INSPECT START STOP UNIT CONNECTOR CONDITION** • Disconnect the start stop unit connector. • Inspect the connector engagement and connection condition and inspect the terminals for damage, deformation, corrosion, or disconnection. • Is the connector normal?	Yes	Go to the next step.
		No	Repair or replace the connector, then go to Step 5.

ON-BOARD DIAGNOSTIC [START STOP UNIT]

Step	Inspection		Action
3	**INSPECT KEYLESS RECEIVER CIRCUIT FOR SHORT TO GROUND** • Verify that the keyless receiver and start stop unit connectors are disconnected. • Inspect for continuity between keyless receiver terminal A (vehicle wiring harness side) and body ground. • Is there continuity?	Yes	Repair or replace the wiring harness which is shorted to ground, then go to Step 5.
		No	Go to the next step.
4	**INSPECT KEYLESS RECEIVER** • Inspect the keyless receiver. (See 09-14-75 KEYLESS RECEIVER INSPECTION.) • Is the keyless receiver normal?	Yes	Go to the next step.
		No	Replace the keyless receiver, then go to the next step. (See 09-14-74 KEYLESS RECEIVER REMOVAL/INSTALLATION.)
5	**VERIFY THAT REPAIRS HAVE BEEN COMPLETED** • Reconnect all the disconnected connectors. • Reconnect the disconnected negative battery cable. (See 01-17A-11 NEGATIVE BATTERY CABLE DISCONNECTION/CONNECTION [SKYACTIV-G 2.0].) (See 01-17A-13 NEGATIVE BATTERY CABLE DISCONNECTION/CONNECTION [SKYACTIV-G 2.0 (WITHOUT i-stop)].) (See 01-17B-9 NEGATIVE BATTERY CABLE DISCONNECTION/CONNECTION [SKYACTIV-D 2.2].) • Clear DTC for the start stop unit using the M-MDS. (See 09-02C-7 CLEARING DTC [START STOP UNIT].) • Switch the ignition ON (engine off or on) and wait for **0.5 s or more**. • Perform the DTC inspection for the start stop unit using the M-MDS. (See 09-02C-6 DTC INSPECTION [START STOP UNIT].) • Is DTC U201F:11 displayed?	Yes	Repeat the inspection from Step 1. • If the malfunction recurs, replace the start stop unit, then go to the next step. (See 09-14-54 START STOP UNIT REMOVAL/INSTALLATION.)
		No	Go to the next step.
6	**VERIFY IF OTHER DTCs DISPLAYED** • Are any other DTCs displayed?	Yes	Repair the malfunctioning part according to the applicable DTC troubleshooting. (See 09-02C-8 DTC TABLE [START STOP UNIT].)
		No	DTC troubleshooting completed.

ON-BOARD DIAGNOSTIC [START STOP UNIT]

DTC U201F:12 [START STOP UNIT]

id0902p6024400

System malfunction location	**Keyless receiver circuit malfunction**
Detection condition	• Start stop unit detects keyless receiver circuit voltage of **6.2 V or more** for **0.5 s or more**.
Fail-safe	—
Possible cause	• Keyless receiver connector or terminal malfunction • Start stop unit connector or terminal malfunction • Short to power supply in wiring harness between start stop unit terminal 2Q and keyless receiver terminal A • Keyless receiver malfunction • Start stop unit malfunction

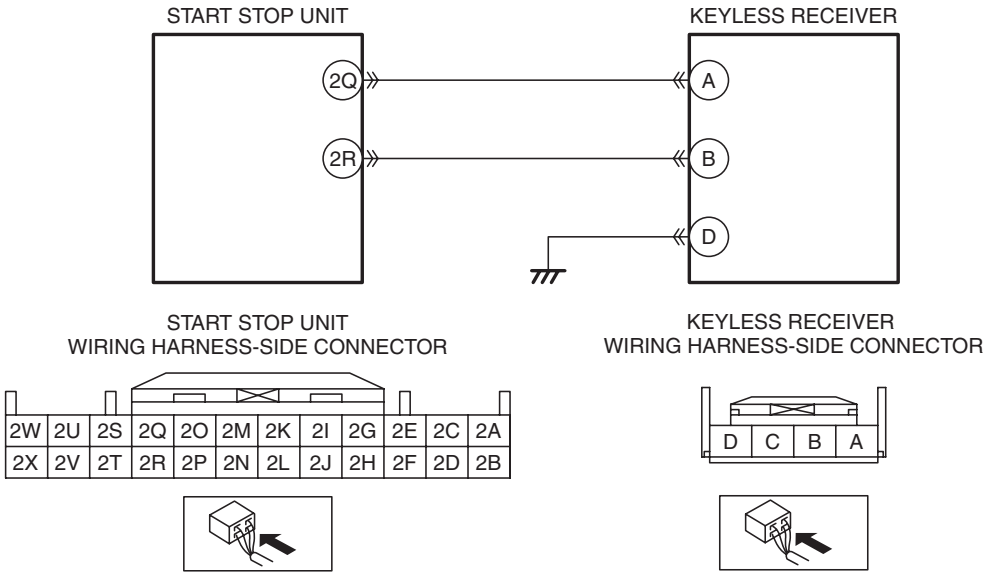

Diagnostic Procedure

Step	Inspection		Action
1	**INSPECT KEYLESS RECEIVER CONNECTOR CONDITION** • Switch the ignition to off. • Disconnect the negative battery cable. (See 01-17A-11 NEGATIVE BATTERY CABLE DISCONNECTION/CONNECTION [SKYACTIV-G 2.0].) (See 01-17A-13 NEGATIVE BATTERY CABLE DISCONNECTION/CONNECTION [SKYACTIV-G 2.0 (WITHOUT i-stop)].) (See 01-17B-9 NEGATIVE BATTERY CABLE DISCONNECTION/CONNECTION [SKYACTIV-D 2.2].) • Disconnect the keyless receiver connector • Inspect the connector engagement and connection condition and inspect the terminals for damage, deformation, corrosion, or disconnection. • Is the connector normal?	Yes	Go to the next step.
		No	Repair or replace the connector, then go to Step 5.
2	**INSPECT START STOP UNIT CONNECTOR CONDITION** • Disconnect the start stop unit connector. • Inspect the connector engagement and connection condition and inspect the terminals for damage, deformation, corrosion, or disconnection. • Is the connector normal?	Yes	Go to the next step.
		No	Repair or replace the connector, then go to Step 5.

ON-BOARD DIAGNOSTIC [START STOP UNIT]

Step	Inspection		Action
3	**INSPECT KEYLESS RECEIVER CIRCUIT FOR SHORT TO POWER SUPPLY** • Reconnect the start stop unit connector. • Verify that the keyless receiver connector is disconnected. • Connect the negative battery cable. (See 01-17A-11 NEGATIVE BATTERY CABLE DISCONNECTION/CONNECTION [SKYACTIV-G 2.0].) (See 01-17A-13 NEGATIVE BATTERY CABLE DISCONNECTION/CONNECTION [SKYACTIV-G 2.0 (WITHOUT i-stop)].) (See 01-17B-9 NEGATIVE BATTERY CABLE DISCONNECTION/CONNECTION [SKYACTIV-D 2.2].) • Switch the ignition ON (engine off or on). • Measure the voltage at the following terminals (vehicle wiring harness side). — Keyless receiver terminal A — Start stop unit terminal 2Q • Is the voltage 0 V?	Yes	Go to the next step.
		No	Repair or replace the wiring harness which is shorted to power supply, then go to Step 5.
4	**INSPECT KEYLESS RECEIVER** • Inspect the keyless receiver. (See 09-14-75 KEYLESS RECEIVER INSPECTION.) • Is the keyless receiver normal?	Yes	Go to the next step.
		No	Replace the keyless receiver, then go to the next step. (See 09-14-74 KEYLESS RECEIVER REMOVAL/INSTALLATION.)
5	**VERIFY THAT REPAIRS HAVE BEEN COMPLETED** • Reconnect all the disconnected connectors. • Reconnect the disconnected negative battery cable. (See 01-17A-11 NEGATIVE BATTERY CABLE DISCONNECTION/CONNECTION [SKYACTIV-G 2.0].) (See 01-17A-13 NEGATIVE BATTERY CABLE DISCONNECTION/CONNECTION [SKYACTIV-G 2.0 (WITHOUT i-stop)].) (See 01-17B-9 NEGATIVE BATTERY CABLE DISCONNECTION/CONNECTION [SKYACTIV-D 2.2].) • Clear DTC for the start stop unit using the M-MDS. (See 09-02C-7 CLEARING DTC [START STOP UNIT].) • Switch the ignition ON (engine off or on) and wait for **0.5 s or more**. • Perform the DTC inspection for the start stop unit using the M-MDS. (See 09-02C-6 DTC INSPECTION [START STOP UNIT].) • Is DTC U201F:12 displayed?	Yes	Repeat the inspection from Step 1. • If the malfunction recurs, replace the start stop unit, then go to the next step. (See 09-14-54 START STOP UNIT REMOVAL/INSTALLATION.)
		No	Go to the next step.
6	**VERIFY IF OTHER DTCs DISPLAYED** • Are any other DTCs displayed?	Yes	Repair the malfunctioning part according to the applicable DTC troubleshooting. (See 09-02C-8 DTC TABLE [START STOP UNIT].)
		No	DTC troubleshooting completed.

ON-BOARD DIAGNOSTIC [START STOP UNIT]

DTC U2100:00 [START STOP UNIT]

id0902p6024500

System malfunction location	**Start stop unit configuration not completed**
Detection condition	• Start stop unit configuration not completed.
Fail-safe	• Inhibits switching to cranking status directly after the ignition is switched off (LOCK) or to ACC. • Switches the engine start condition (ATX/MTX) setting automatically by receiving the CAN communication after the ignition is switched on (engine off). If it cannot be received, set as ATX and start the engine.
Possible cause	• Start stop unit configuration error • Start stop unit malfunction
System wiring diagram	—

Diagnostic Procedure

Step	Inspection		Action
1	**PERFORM START STOP UNIT CONFIGURATION** • Perform the start stop unit configuration using the M-MDS. (See 09-14-60 START STOP UNIT CONFIGURATION (USING AS-BUILT DATA).) • Clear DTC for the start stop unit using the M-MDS. (See 09-02C-7 CLEARING DTC [START STOP UNIT].) • Perform the DTC inspection for the start stop unit using the M-MDS. (See 09-02C-6 DTC INSPECTION [START STOP UNIT].) • Is DTC U2100:00 displayed?	Yes	Perform the start stop unit configuration again, then go to the next step. (See 09-14-60 START STOP UNIT CONFIGURATION (USING AS-BUILT DATA).)
		No	Go to Step 3.
2	**VERIFY THAT REPAIRS HAVE BEEN COMPLETED** • Clear DTC for the start stop unit using the M-MDS. (See 09-02C-7 CLEARING DTC [START STOP UNIT].) • Perform the DTC inspection for the start stop unit using the M-MDS. (See 09-02C-6 DTC INSPECTION [START STOP UNIT].) • Is DTC U2100:00 displayed?	Yes	Replace the start stop unit, then go to the next step. (See 09-14-54 START STOP UNIT REMOVAL/INSTALLATION.)
		No	Go to the next step.
3	**VERIFY IF OTHER DTCs DISPLAYED** • Are any other DTCs displayed?	Yes	Repair the malfunctioning part according to the applicable DTC troubleshooting. (See 09-02C-8 DTC TABLE [START STOP UNIT].)
		No	DTC troubleshooting completed.

ON-BOARD DIAGNOSTIC [START STOP UNIT]

DTC U2300:00 [START STOP UNIT]

id0902p6024600

System malfunction location	**Configuration data not received from instrument cluster**
Detection condition	• The start stop unit cannot receive configuration data from the instrument cluster for **1 s or more** with the ignition switched ON (engine off or on).
Fail-safe	• Secures the correct data received right before the malfunction.
Possible cause	• DTCs are stored in the instrument cluster. • Instrument cluster malfunction • Start stop unit malfunction
System wiring diagram	—

Diagnostic Procedure

Step	Inspection		Action
1	**VERIFY INSTRUMENT CLUSTER DTCs** • Perform the DTC inspection for the instrument cluster using the M-MDS. (See 09-02G-7 DTC INSPECTION [INSTRUMENT CLUSTER].) • Is the DTC displayed?	Yes	Repair the malfunctioning part according to the applicable DTC troubleshooting. (See 09-02G-10 DTC TABLE [INSTRUMENT CLUSTER].)
		No	Go to the next step.
2	**PERFORM DTC INSPECTION AND VERIFY IF MALFUNCTIONING PART IS INSTRUMENT CLUSTER** • Clear DTC for the instrument cluster using the M-MDS. (See 09-02G-9 CLEARING DTC [INSTRUMENT CLUSTER].) • Switch the ignition ON (engine off or on) and wait for **1 s or more**. • Perform the DTC inspection for the instrument cluster using the M-MDS. (See 09-02G-2 ON-BOARD DIAGNOSTIC WIRING DIAGRAM [INSTRUMENT CLUSTER].) • Is the DTC U2300:00 displayed?	Yes	Replace the instrument cluster, then go to the next step. (See 09-22-6 INSTRUMENT CLUSTER REMOVAL/ INSTALLATION.)
		No	Go to Step 4.
3	**VERIFY THAT REPAIRS HAVE BEEN COMPLETED** • Clear DTC for the start stop unit using the M-MDS. (See 09-02C-7 CLEARING DTC [START STOP UNIT].) • Switch the ignition ON (engine off or on) and wait for **1 s or more**. • Perform the DTC inspection for the start stop unit using the M-MDS. (See 09-02C-6 DTC INSPECTION [START STOP UNIT].) • Is DTC U2300:00 displayed?	Yes	Replace the start stop unit, then go to the next step. (See 09-14-54 START STOP UNIT REMOVAL/ INSTALLATION.)
		No	Go to the next step.
4	**VERIFY IF OTHER DTCs DISPLAYED** • Are any other DTCs displayed?	Yes	Repair the malfunctioning part according to the applicable DTC troubleshooting. (See 09-02C-8 DTC TABLE [START STOP UNIT].)
		No	DTC troubleshooting completed.

ON-BOARD DIAGNOSTIC [START STOP UNIT]

DTC U3000:01 [START STOP UNIT]

id0902p6024700

System malfunction location	**Start stop unit internal malfunction**
Detection condition	• Malfunction inside start stop unit detected.
Fail-safe	—
Possible cause	• Start stop unit internal malfunction
System wiring diagram	—

Diagnostic Procedure

Step	Inspection		Action
1	**PERFORM DTC INSPECTION AND VERIFY IF MALFUNCTIONING PART IS START STOP UNIT** • Clear DTC for the start stop unit using the M-MDS. (See 09-02C-7 CLEARING DTC [START STOP UNIT].) • Perform the DTC inspection for the start stop unit using the M-MDS. (See 09-02C-6 DTC INSPECTION [START STOP UNIT].) • Is DTC U3000:01 displayed?	Yes	Replace the start stop unit, then go to the next step. (See 09-14-54 START STOP UNIT REMOVAL/INSTALLATION.)
		No	Go to the next step.
2	**VERIFY IF OTHER DTCs DISPLAYED** • Are any other DTCs displayed?	Yes	Repair the malfunctioning part according to the applicable DTC troubleshooting. (See 09-02C-8 DTC TABLE [START STOP UNIT].)
		No	DTC troubleshooting completed.

ON-BOARD DIAGNOSTIC [START STOP UNIT]

DTC U3000:49 [START STOP UNIT]

id0902p6024800

Warning

- **If this DTC is detected, the system will enter the fail-safe function to ensure safety. If a specified period of time has elapsed or the vehicle has been driven for a specified period of time or more while in fail-safe mode, the ignition will remain stuck in off and the engine cannot be started. Therefore, perform the malfunction diagnosis while the engine can be started. In addition, after having performed the malfunction diagnosis. If the DTC is not detected, the system returns to normal from the fail-safe function.**

Note

- If the vehicle is in the following condition while in fail-safe mode, the KEY warning indicator light (red) illuminates and the push button start indicator light (amber) flashes.
  - — Switch the ignition to ACC or ON (engine off or on).
  - — Depress the brake pedal (ATX) / clutch pedal (MTX).
- In addition to the normal engine starting operation while cranking the engine in fail-safe mode, it is necessary to press the push button start.

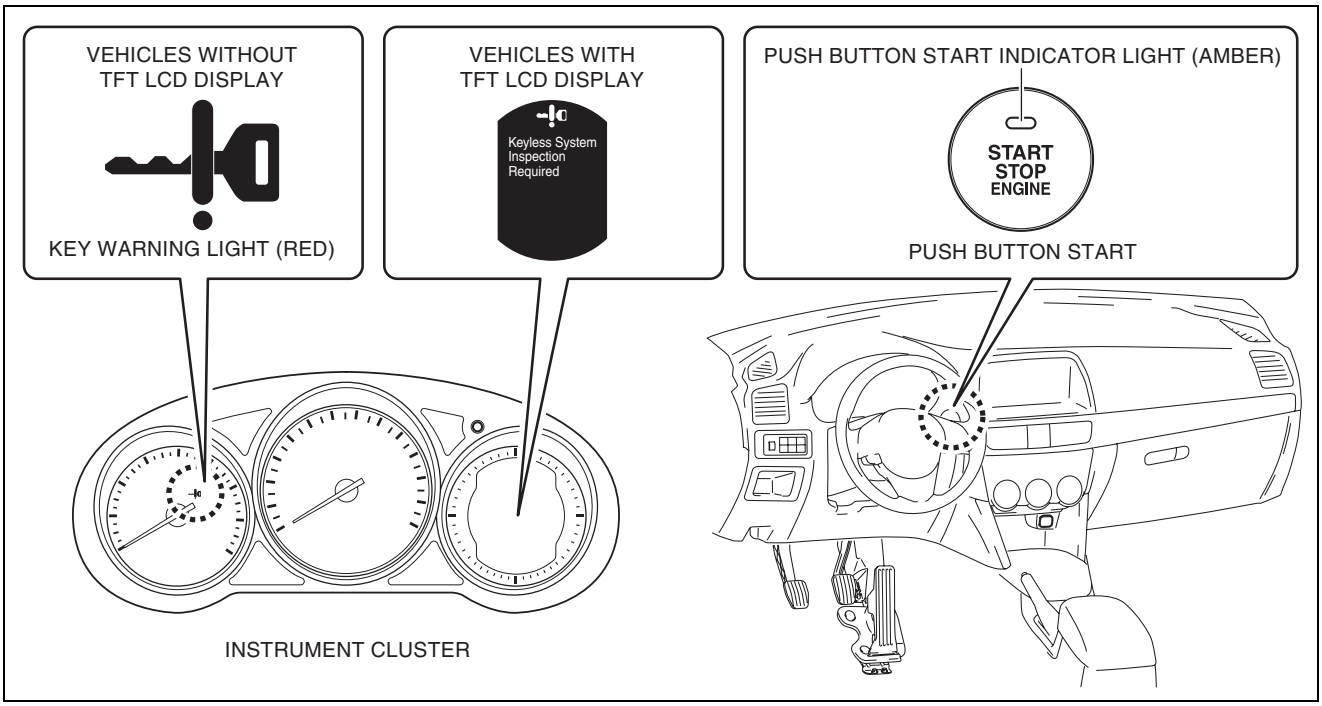

ac5wzw0000325

System malfunction location	**Start stop unit internal malfunction**
Detection condition	• Malfunction inside start stop unit detected.
Fail-safe	• The system will enter the fail-safe function to ensure safety. If a specified period of time has elapsed or the vehicle has been driven for a specified period of time or more while in fail-safe mode, the ignition will remain stuck in off and the engine cannot be started.
Possible cause	• Start stop unit internal malfunction
System wiring diagram	—

ON-BOARD DIAGNOSTIC [START STOP UNIT]

Diagnostic Procedure

Step	Inspection		Action
1	**PERFORM DTC INSPECTION AND VERIFY IF MALFUNCTIONING PART IS START STOP UNIT** • Clear DTC for the start stop unit using the M-MDS. (See 09-02C-7 CLEARING DTC [START STOP UNIT].) • Perform the DTC inspection for the start stop unit using the M-MDS. (See 09-02C-6 DTC INSPECTION [START STOP UNIT].) • Is DTC U3000:49 displayed?	Yes	Replace the start stop unit, then go to the next step. (See 09-14-54 START STOP UNIT REMOVAL/ INSTALLATION.)
		No	Go to the next step.
2	**VERIFY IF OTHER DTCs DISPLAYED** • Are any other DTCs displayed?	Yes	Repair the malfunctioning part according to the applicable DTC troubleshooting. (See 09-02C-8 DTC TABLE [START STOP UNIT].)
		No	DTC troubleshooting completed.

DTC U3000:96 [START STOP UNIT]

id0902p6050000

System malfunction location	**Start stop unit malfunction**
Detection condition	• Start stop unit malfunction detected.
Fail-safe	• Cancel the i-stop control. (With i-stop)
Possible cause	• Start stop unit malfunction
System wiring diagram	—

Diagnostic Procedure

Step	Inspection		Action
1	**PERFORM DTC INSPECTION AND VERIFY IF MALFUNCTIONING PART IS START STOP UNIT** • Clear DTC for the start stop unit using the M-MDS. (See 09-02C-7 CLEARING DTC [START STOP UNIT].) • Perform the DTC inspection for the start stop unit using the M-MDS. (See 09-02C-6 DTC INSPECTION [START STOP UNIT].) • Is DTC U3000:96 displayed?	Yes	Replace the start stop unit, then go to the next step. (See 09-14-54 START STOP UNIT REMOVAL/ INSTALLATION.)
		No	Go to the next step.
2	**VERIFY IF OTHER DTCs DISPLAYED** • Are any other DTCs displayed?	Yes	Repair the malfunctioning part according to the applicable DTC troubleshooting. (See 09-02C-8 DTC TABLE [START STOP UNIT].)
		No	DTC troubleshooting completed.

ON-BOARD DIAGNOSTIC [START STOP UNIT]

DTC U3003:16 [START STOP UNIT]

id0902p6024900

System malfunction location	**Start stop unit power supply voltage (+B1) low input**
Detection condition	• Start stop unit power supply circuit (+B1) voltage of **5V or more, less than 8.5 V** is detected for **5 s or more**.
Fail-safe	• Inhibits the door lock/unlock control using the advanced keyless entry system. (With advanced keyless entry system).
Possible cause	• DTCs are stored in the PCM. • Battery malfunction • Generator malfunction • Start stop unit connector or terminal malfunction • Start stop unit power supply circuit (+B1) malfunction — Short to ground in the wiring harness between ROOM 15 A fuse and start stop unit terminal 1A — ROOM 15 A fuse malfunction — Open circuit in wiring harness between battery positive terminal and start stop unit terminal 1A • Start stop unit malfunction

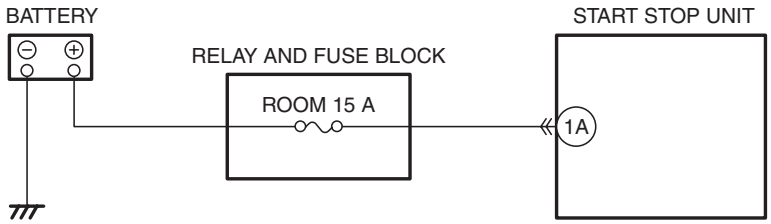

START STOP UNIT
WIRING HARNESS-SIDE CONNECTOR

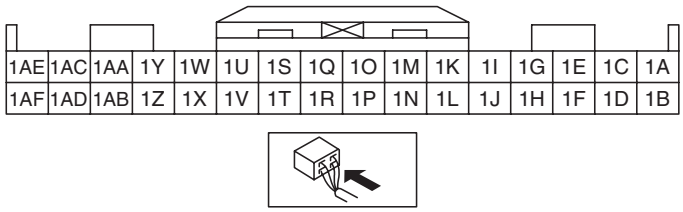

ON-BOARD DIAGNOSTIC [START STOP UNIT]

Diagnostic Procedure

Step	Inspection		Action
1	**VERIFY PCM DTCs** • Perform the DTC inspection for the PCM using the M-MDS. (See 01-02-8 ON-BOARD DIAGNOSTIC TEST [SKYACTIV-G 2.0].) • Is the DTC displayed?	Yes	Repair the malfunctioning part according to the applicable DTC troubleshooting. (See 01-02-14 DTC TABLE [SKYACTIV-G 2.0].)
		No	Go to the next step.
2	**INSPECT BATTERY** • Inspect the battery. (See 01-17A-7 BATTERY INSPECTION [SKYACTIV-G 2.0].) (See 01-17A-8 BATTERY INSPECTION [SKYACTIV-G 2.0 (WITHOUT i-stop)].) (See 01-17B-6 BATTERY INSPECTION [SKYACTIV-D 2.2].) • Is the battery normal?	Yes	Go to the next step.
		No	Recharge or replace the battery, then go to Step 6. (See 01-17A-9 BATTERY RECHARGING [SKYACTIV-G 2.0].) (See 01-17A-10 BATTERY RECHARGING [SKYACTIV-G 2.0 (WITHOUT i-stop)].) (See 01-17B-8 BATTERY RECHARGING [SKYACTIV-D 2.2].) (See 01-17A-3 BATTERY REMOVAL/INSTALLATION [SKYACTIV-G 2.0].) (See 01-17B-3 BATTERY REMOVAL/INSTALLATION [SKYACTIV-D 2.2].)
3	**INSPECT GENERATOR** • Inspect the generator. (See 01-17A-19 GENERATOR INSPECTION [SKYACTIV-G 2.0].) (See 01-17B-16 GENERATOR INSPECTION [SKYACTIV-D 2.2].) • Is the generator normal?	Yes	Go to the next step.
		No	Replace the generator, then go to Step 6. (See 01-17A-17 GENERATOR REMOVAL/ INSTALLATION [SKYACTIV-G 2.0].) (See 01-17B-14 GENERATOR REMOVAL/ INSTALLATION [SKYACTIV-D 2.2].)
4	**INSPECT START STOP UNIT CONNECTOR CONDITION** • Switch the ignition to off. • Disconnect the negative battery cable. (See 01-17A-11 NEGATIVE BATTERY CABLE DISCONNECTION/CONNECTION [SKYACTIV-G 2.0].) (See 01-17A-13 NEGATIVE BATTERY CABLE DISCONNECTION/CONNECTION [SKYACTIV-G 2.0 (WITHOUT i-stop)].) (See 01-17B-9 NEGATIVE BATTERY CABLE DISCONNECTION/CONNECTION [SKYACTIV-D 2.2].) • Disconnect the start stop unit connector. • Inspect the connector engagement and connection condition and inspect the terminals for damage, deformation, corrosion, or disconnection. • Is the connector normal?	Yes	Go to the next step.
		No	Repair or replace the connector, then go to Step 6.
5	**INSPECT START STOP UNIT POWER SUPPLY CIRCUIT (+B1)** • Reconnect all the disconnected connectors. • Connect the negative battery cable. (See 01-17A-11 NEGATIVE BATTERY CABLE DISCONNECTION/CONNECTION [SKYACTIV-G 2.0].) (See 01-17A-13 NEGATIVE BATTERY CABLE DISCONNECTION/CONNECTION [SKYACTIV-G 2.0 (WITHOUT i-stop)].) (See 01-17B-9 NEGATIVE BATTERY CABLE DISCONNECTION/CONNECTION [SKYACTIV-D 2.2].) • Display PID VPWR_B1 using the M-MDS. (See 09-02C-151 PID/DATA MONITOR INSPECTION [START STOP UNIT].) • Is the voltage **B+**?	Yes	Go to the next step.
		No	Inspect the ROOM 15 A fuse. • If a fuse is burnt out: — Repair or replace the wiring harness which is shorted to ground. — Replace the fuse. • If a fuse is damaged: — Replace the fuse. • If the fuse is normal: — Repair or replace the wiring harness which has an open circuit. Go to the next step.

ON-BOARD DIAGNOSTIC [START STOP UNIT]

Step	Inspection		Action
6	**VERIFY THAT REPAIRS HAVE BEEN COMPLETED** • Reconnect all the disconnected connectors. • Reconnect the disconnected negative battery cable. (See 01-17A-11 NEGATIVE BATTERY CABLE DISCONNECTION/CONNECTION [SKYACTIV-G 2.0].) (See 01-17A-13 NEGATIVE BATTERY CABLE DISCONNECTION/CONNECTION [SKYACTIV-G 2.0 (WITHOUT i-stop)].) (See 01-17B-9 NEGATIVE BATTERY CABLE DISCONNECTION/CONNECTION [SKYACTIV-D 2.2].) • Clear DTC for the start stop unit using the M-MDS. (See 09-02C-7 CLEARING DTC [START STOP UNIT].) • Switch the ignition ON (engine off or on) and wait for **5 s or more**. • Perform the DTC inspection for the start stop unit using the M-MDS. (See 09-02C-6 DTC INSPECTION [START STOP UNIT].) • Is DTC U3003:16 displayed?	Yes	Repeat the inspection from Step 1. • If the malfunction recurs, replace the start stop unit, then go to the next step. (See 09-14-54 START STOP UNIT REMOVAL/INSTALLATION.)
		No	Go to the next step.
7	**VERIFY IF OTHER DTCs DISPLAYED** • Are any other DTCs displayed?	Yes	Repair the malfunctioning part according to the applicable DTC troubleshooting. (See 09-02C-8 DTC TABLE [START STOP UNIT].)
		No	DTC troubleshooting completed.

ON-BOARD DIAGNOSTIC [START STOP UNIT]

DTC U3004:11 [START STOP UNIT]

id0902p6025000

System malfunction location	**ACC relay circuit malfunction**
Detection condition	• With the ignition switched to ACC or ON (engine off or on), the start stop unit detects ACC relay output monitor voltage of **less than specification** for **0.05 s or more**.
Fail-safe	—
Possible cause	• ACC relay malfunction • Start stop unit connector or terminal malfunction • Short to ground in wiring harness between ACC relay terminal E and start stop unit terminal 2C • Start stop unit malfunction

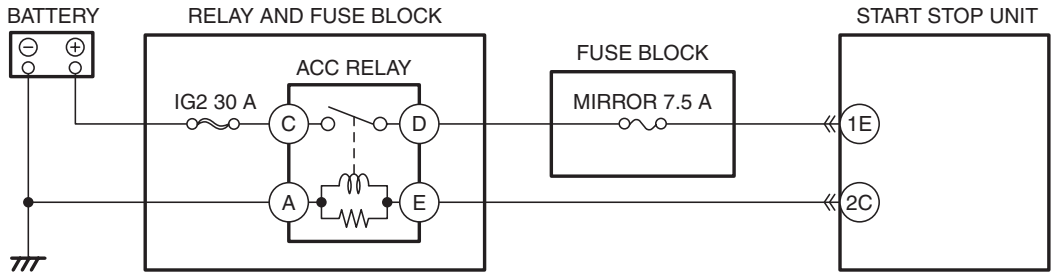

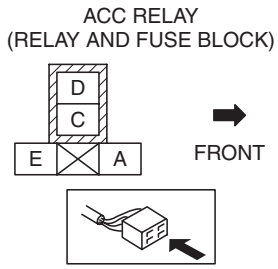

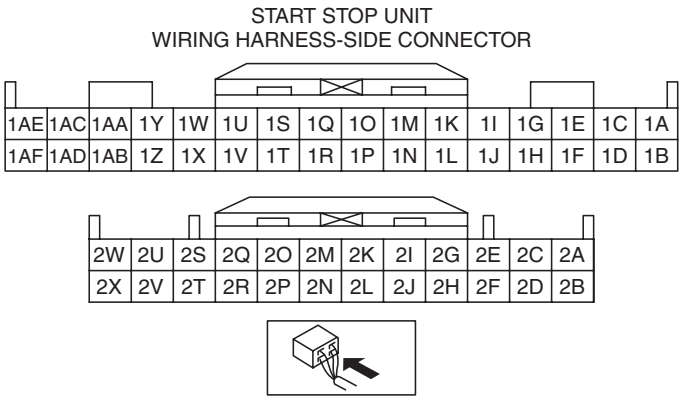

ON-BOARD DIAGNOSTIC [START STOP UNIT]

Diagnostic Procedure

Step	Inspection		Action
1	**INSPECT ACC RELAY FOR MALFUNCTION** • Switch the ignition to off. • Disconnect the negative battery cable. (See 01-17A-11 NEGATIVE BATTERY CABLE DISCONNECTION/CONNECTION [SKYACTIV-G 2.0].) (See 01-17A-13 NEGATIVE BATTERY CABLE DISCONNECTION/CONNECTION [SKYACTIV-G 2.0 (WITHOUT i-stop)].) (See 01-17B-9 NEGATIVE BATTERY CABLE DISCONNECTION/CONNECTION [SKYACTIV-D 2.2].) • Remove the ACC relay. (See 09-21-28 RELAY LOCATION.) • Inspect the ACC relay. (See 09-21-29 RELAY INSPECTION.) • Is the ACC relay normal?	Yes	Go to the next step.
		No	Replace the ACC relay, then go to Step 4. (See 09-21-28 RELAY LOCATION.)
2	**INSPECT START STOP UNIT CONNECTOR CONDITION** • Disconnect the start stop unit connector. • Inspect the connector engagement and connection condition and inspect the terminals for damage, deformation, corrosion, or disconnection. • Is the connector normal?	Yes	Go to the next step.
		No	Repair or replace the connector, then go to Step 4.
3	**INSPECT ACC RELAY CIRCUIT FOR SHORT TO GROUND** • Verify that the ACC relay is removed. • Verify that the start stop unit connector is disconnected. • Inspect for continuity between ACC relay terminal E (vehicle wiring harness side) and body ground. • Is there continuity?	Yes	Repair or replace the wiring harness which is shorted to ground, then go to Step 4.
		No	Go to the next step.
4	**VERIFY THAT REPAIRS HAVE BEEN COMPLETED** • Reconnect all the disconnected connectors. • Reconnect the disconnected negative battery cable. (See 01-17A-11 NEGATIVE BATTERY CABLE DISCONNECTION/CONNECTION [SKYACTIV-G 2.0].) (See 01-17A-13 NEGATIVE BATTERY CABLE DISCONNECTION/CONNECTION [SKYACTIV-G 2.0 (WITHOUT i-stop)].) (See 01-17B-9 NEGATIVE BATTERY CABLE DISCONNECTION/CONNECTION [SKYACTIV-D 2.2].) • Clear DTC for the start stop unit using the M-MDS. (See 09-02C-7 CLEARING DTC [START STOP UNIT].) • Switch the ignition to ACC or ON (engine off or on) and wait for **0.05 s or more**. • Perform the DTC inspection for the start stop unit using the M-MDS. (See 09-02C-6 DTC INSPECTION [START STOP UNIT].) • Is the DTC U3004:11 displayed?	Yes	Repeat the inspection from Step 1. • If the malfunction recurs, replace the start stop unit, then go to the next step. (See 09-14-54 START STOP UNIT REMOVAL/INSTALLATION.)
		No	Go to the next step.
5	**VERIFY IF OTHER DTCs DISPLAYED** • Are any other DTCs displayed?	Yes	Repair the malfunctioning part according to the applicable DTC troubleshooting. (See 09-02C-8 DTC TABLE [START STOP UNIT].)
		No	DTC troubleshooting completed.

ON-BOARD DIAGNOSTIC [START STOP UNIT]

DTC U3004:12 [START STOP UNIT]

id0902p6025100

System malfunction location	**ACC relay circuit malfunction**
Detection condition	• The start stop unit detects ACC relay output monitor voltage of **2.5 V or more** for **0.5 s or more** with the ignition switched off.
Fail-safe	• Door locking operation inhibited while under i-stop control.
Possible cause	• ACC relay malfunction • Start stop unit connector or terminal malfunction • Short to power supply in wiring harness between ACC relay terminal E and start stop unit terminal 2C • Start stop unit malfunction

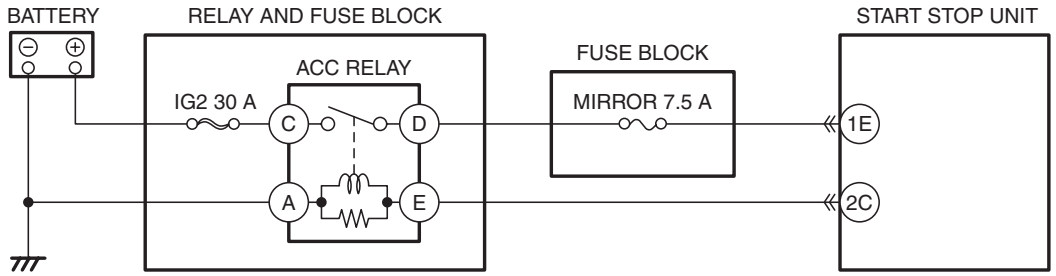

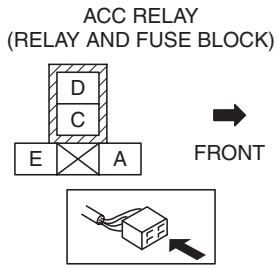

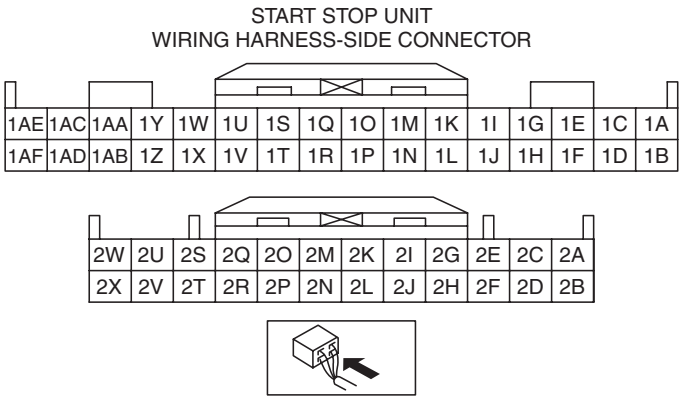

ON-BOARD DIAGNOSTIC [START STOP UNIT]

Diagnostic Procedure

Step	Inspection		Action
1	**INSPECT ACC RELAY FOR MALFUNCTION** • Switch the ignition to off. • Disconnect the negative battery cable. (See 01-17A-11 NEGATIVE BATTERY CABLE DISCONNECTION/CONNECTION [SKYACTIV-G 2.0].) (See 01-17A-13 NEGATIVE BATTERY CABLE DISCONNECTION/CONNECTION [SKYACTIV-G 2.0 (WITHOUT i-stop)].) (See 01-17B-9 NEGATIVE BATTERY CABLE DISCONNECTION/CONNECTION [SKYACTIV-D 2.2].) • Remove the ACC relay. (See 09-21-28 RELAY LOCATION.) • Inspect the ACC relay. (See 09-21-29 RELAY INSPECTION.) • Is the ACC relay normal?	Yes	Go to the next step.
		No	Replace the ACC relay, then go to Step 4. (See 09-21-28 RELAY LOCATION.)
2	**INSPECT START STOP UNIT CONNECTOR CONDITION** • Disconnect the start stop unit connector. • Inspect the connector engagement and connection condition and inspect the terminals for damage, deformation, corrosion, or disconnection. • Is the connector normal?	Yes	Go to the next step.
		No	Repair or replace the connector, then go to Step 4.
3	**INSPECT ACC RELAY CIRCUIT FOR SHORT TO POWER SUPPLY** • Reconnect all the disconnected connectors. • Connect the negative battery cable. (See 01-17A-11 NEGATIVE BATTERY CABLE DISCONNECTION/CONNECTION [SKYACTIV-G 2.0].) (See 01-17A-13 NEGATIVE BATTERY CABLE DISCONNECTION/CONNECTION [SKYACTIV-G 2.0 (WITHOUT i-stop)].) (See 01-17B-9 NEGATIVE BATTERY CABLE DISCONNECTION/CONNECTION [SKYACTIV-D 2.2].) • Measure the voltage at start stop unit terminal 2C (vehicle wiring harness side). • Is the voltage **2.5 V or more**?	Yes	Repair or replace the wiring harness which has a short to the power supply, then go to the next step.
		No	Go to the next step.
4	**VERIFY THAT REPAIRS HAVE BEEN COMPLETED** • Reconnect all the disconnected connectors. • Reconnect the disconnected negative battery cable. (See 01-17A-11 NEGATIVE BATTERY CABLE DISCONNECTION/CONNECTION [SKYACTIV-G 2.0].) (See 01-17A-13 NEGATIVE BATTERY CABLE DISCONNECTION/CONNECTION [SKYACTIV-G 2.0 (WITHOUT i-stop)].) (See 01-17B-9 NEGATIVE BATTERY CABLE DISCONNECTION/CONNECTION [SKYACTIV-D 2.2].) • Clear DTC for the start stop unit using the M-MDS. (See 09-02C-7 CLEARING DTC [START STOP UNIT].) • Switch the ignition to off and wait for **0.5 s or more**. • Perform the DTC inspection for the start stop unit using the M-MDS. (See 09-02C-6 DTC INSPECTION [START STOP UNIT].) • Is the DTC U3004:12 displayed?	Yes	Repeat the inspection from Step 1. • If the malfunction recurs, replace the start stop unit, then go to the next step. (See 09-14-54 START STOP UNIT REMOVAL/INSTALLATION.)
		No	Go to the next step.

ON-BOARD DIAGNOSTIC [START STOP UNIT]

Step	Inspection		Action
5	**VERIFY IF OTHER DTCs DISPLAYED** • Are any other DTCs displayed?	Yes	Repair the malfunctioning part according to the applicable DTC troubleshooting. (See 09-02C-8 DTC TABLE [START STOP UNIT].)
		No	DTC troubleshooting completed.

DTC U3004:16 [START STOP UNIT]

id0902p6025200

System malfunction location	**ACC relay circuit malfunction**
Detection condition	• With the ignition switched to ACC or ON (engine off or on), the start stop unit detects ACC monitor voltage of **less than 2.5 V** for **1 s or more**.
Fail-safe	—
Possible cause	• ACC relay malfunction • ACC relay power supply circuit malfunction — Short to ground in wiring harness between IG2 30 A fuse and ACC terminal C — IG2 30 A fuse malfunction — Open circuit in wiring harness between battery positive terminal and ACC relay terminal C • Start stop unit connector or terminal malfunction • Start stop unit power supply circuit (ACC) malfunction — Short to ground in wiring harness between ACC relay terminal D and start stop unit terminal 1E — MIRROR 7.5 A fuse malfunction — Open circuit in wiring harness between ACC relay terminal D and start stop unit terminal 1E • Start stop unit malfunction

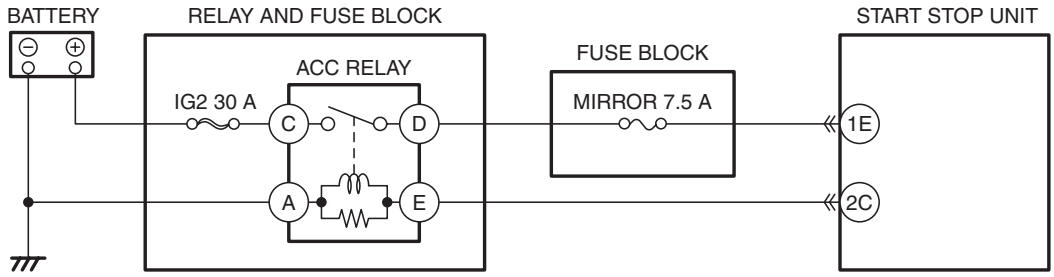

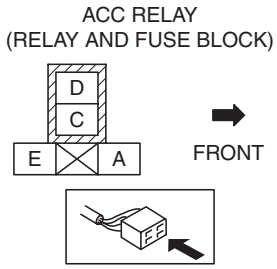

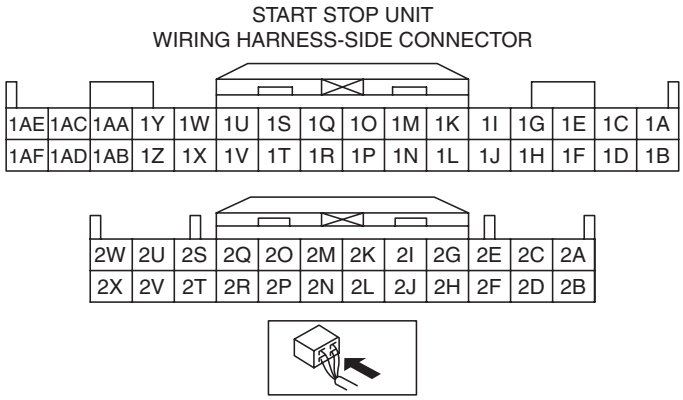

ON-BOARD DIAGNOSTIC [START STOP UNIT]

Diagnostic Procedure

Step	Inspection		Action
1	**INSPECT ACC RELAY FOR MALFUNCTION** • Switch the ignition to off. • Disconnect the negative battery cable. (See 01-17A-11 NEGATIVE BATTERY CABLE DISCONNECTION/CONNECTION [SKYACTIV-G 2.0].) (See 01-17A-13 NEGATIVE BATTERY CABLE DISCONNECTION/CONNECTION [SKYACTIV-G 2.0 (WITHOUT i-stop)].) (See 01-17B-9 NEGATIVE BATTERY CABLE DISCONNECTION/CONNECTION [SKYACTIV-D 2.2].) • Remove the ACC relay. (See 09-21-28 RELAY LOCATION.) • Inspect the ACC relay. (See 09-21-29 RELAY INSPECTION.) • Is the ACC relay normal?	Yes	Go to the next step.
		No	Replace the ACC relay, then go to Step 5. (See 09-21-28 RELAY LOCATION.)
2	**INSPECT ACC RELAY POWER SUPPLY CIRCUIT FOR OPEN CIRCUIT OR SHORT TO GROUND** • Verify that the ACC relay is removed. • Connect the negative battery cable. (See 01-17A-11 NEGATIVE BATTERY CABLE DISCONNECTION/CONNECTION [SKYACTIV-G 2.0].) (See 01-17A-13 NEGATIVE BATTERY CABLE DISCONNECTION/CONNECTION [SKYACTIV-G 2.0 (WITHOUT i-stop)].) (See 01-17B-9 NEGATIVE BATTERY CABLE DISCONNECTION/CONNECTION [SKYACTIV-D 2.2].) • Switch the ignition to ACC or ON (engine off or on). • Measure the voltage at ACC relay terminal C (vehicle wiring harness side). • Is the voltage **B+**?	Yes	Go to the next step.
		No	Inspect the IG2 30 A fuse. • If a fuse is burnt out: — Repair or replace the wiring harness which is shorted to ground. — Replace the fuse. • If a fuse is damaged: — Replace the fuse. • If the fuse is normal: — Repair or replace the wiring harness which has an open circuit. Go to Step 5.
3	**INSPECT START STOP UNIT CONNECTOR CONDITION** • Disconnect the negative battery cable. (See 01-17A-11 NEGATIVE BATTERY CABLE DISCONNECTION/CONNECTION [SKYACTIV-G 2.0].) (See 01-17A-13 NEGATIVE BATTERY CABLE DISCONNECTION/CONNECTION [SKYACTIV-G 2.0 (WITHOUT i-stop)].) (See 01-17B-9 NEGATIVE BATTERY CABLE DISCONNECTION/CONNECTION [SKYACTIV-D 2.2].) • Disconnect the start stop unit connector. • Inspect the connector engagement and connection condition and inspect the terminals for damage, deformation, corrosion, or disconnection. • Is the connector normal?	Yes	Go to the next step.
		No	Repair or replace the connector, then go to Step 5.

ON-BOARD DIAGNOSTIC [START STOP UNIT]

Step	Inspection		Action
4	**INSPECT START STOP UNIT POWER SUPPLY CIRCUIT (ACC) FOR OPEN CIRCUIT OR SHORT TO GROUND** • Verify that the start stop unit connector is disconnected. • Connect the negative battery cable. (See 01-17A-11 NEGATIVE BATTERY CABLE DISCONNECTION/CONNECTION [SKYACTIV-G 2.0].) (See 01-17A-13 NEGATIVE BATTERY CABLE DISCONNECTION/CONNECTION [SKYACTIV-G 2.0 (WITHOUT i-stop)].) (See 01-17B-9 NEGATIVE BATTERY CABLE DISCONNECTION/CONNECTION [SKYACTIV-D 2.2].) • Switch the ignition to ACC or ON (engine off or on). • Measure the voltage at ACC relay terminal E (vehicle wiring harness side). • Is the voltage **B+**?	Yes	Go to the next step.
		No	Inspect the MIRROR 7.5 A fuse. • If a fuse is burnt out: — Repair or replace the wiring harness which is shorted to ground. — Replace the fuse. • If a fuse is damaged: — Replace the fuse. • If the fuse is normal: — Repair or replace the wiring harness which has an open circuit. Go to the next step.
5	**VERIFY THAT REPAIRS HAVE BEEN COMPLETED** • Reconnect all the disconnected connectors. • Reconnect the disconnected negative battery cable. (See 01-17A-11 NEGATIVE BATTERY CABLE DISCONNECTION/CONNECTION [SKYACTIV-G 2.0].) (See 01-17A-13 NEGATIVE BATTERY CABLE DISCONNECTION/CONNECTION [SKYACTIV-G 2.0 (WITHOUT i-stop)].) (See 01-17B-9 NEGATIVE BATTERY CABLE DISCONNECTION/CONNECTION [SKYACTIV-D 2.2].) • Clear DTC for the start stop unit using the M-MDS. (See 09-02C-7 CLEARING DTC [START STOP UNIT].) • Switch the ignition to ACC or ON (engine off or on) and wait for **1 s or more**. • Perform the DTC inspection for the start stop unit using the M-MDS. (See 09-02C-6 DTC INSPECTION [START STOP UNIT].) • Is the DTC U3004:16 displayed?	Yes	Repeat the inspection from Step 1. • If the malfunction recurs, replace the start stop unit, then go to the next step. (See 09-14-54 START STOP UNIT REMOVAL/INSTALLATION.)
		No	Go to the next step.
6	**VERIFY IF OTHER DTCs DISPLAYED** • Are any other DTCs displayed?	Yes	Repair the malfunctioning part according to the applicable DTC troubleshooting. (See 09-02C-8 DTC TABLE [START STOP UNIT].)
		No	DTC troubleshooting completed.

ON-BOARD DIAGNOSTIC [START STOP UNIT]

DTC U3004:17 [START STOP UNIT]

id0902p6025300

System malfunction location	**ACC relay circuit malfunction**
Detection condition	• The start stop unit detects ACC monitor voltage of **2.5 V or more** for **5 s or more** with the ignition switched off.
Fail-safe	• Door locking operation inhibited while under i-stop control.
Possible cause	• ACC relay malfunction • Start stop unit connector or terminal malfunction • Short to power supply in wiring harness between ACC relay terminal D and start stop unit terminal 1E • Start stop unit malfunction

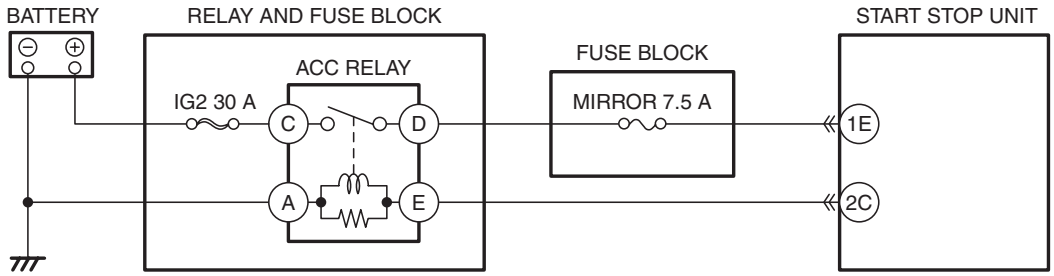

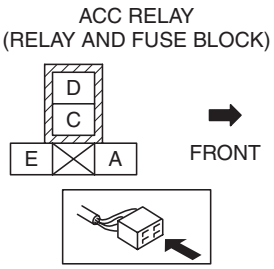

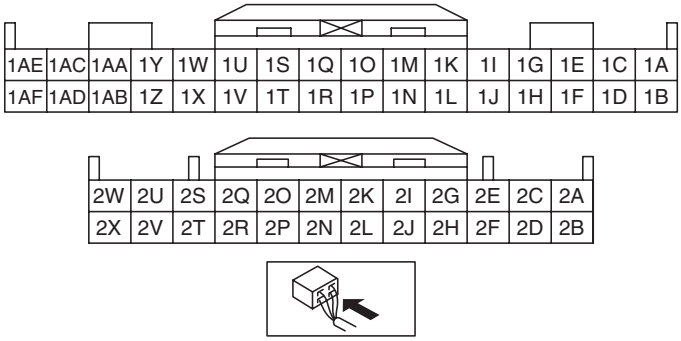

ON-BOARD DIAGNOSTIC [START STOP UNIT]

Diagnostic Procedure

Step	Inspection		Action
1	**INSPECT ACC RELAY FOR MALFUNCTION** • Switch the ignition to off. • Disconnect the negative battery cable. (See 01-17A-11 NEGATIVE BATTERY CABLE DISCONNECTION/CONNECTION [SKYACTIV-G 2.0].) (See 01-17A-13 NEGATIVE BATTERY CABLE DISCONNECTION/CONNECTION [SKYACTIV-G 2.0 (WITHOUT i-stop)].) (See 01-17B-9 NEGATIVE BATTERY CABLE DISCONNECTION/CONNECTION [SKYACTIV-D 2.2].) • Remove the ACC relay. (See 09-21-28 RELAY LOCATION.) • Inspect the ACC relay. (See 09-21-29 RELAY INSPECTION.) • Is the ACC relay normal?	Yes	Go to the next step.
		No	Replace the ACC relay, then go to Step 4. (See 09-21-28 RELAY LOCATION.)
2	**INSPECT START STOP UNIT CONNECTOR CONDITION** • Disconnect the start stop unit connector. • Inspect the connector engagement and connection condition and inspect the terminals for damage, deformation, corrosion, or disconnection. • Is the connector normal?	Yes	Go to the next step.
		No	Repair or replace the connector, then go to Step 4.
3	**INSPECT START STOP UNIT POWER SUPPLY CIRCUIT (ACC) FOR SHORT TO POWER SUPPLY** • Reconnect all the disconnected connectors. • Reconnect the disconnected negative battery cable. (See 01-17A-11 NEGATIVE BATTERY CABLE DISCONNECTION/CONNECTION [SKYACTIV-G 2.0].) (See 01-17A-13 NEGATIVE BATTERY CABLE DISCONNECTION/CONNECTION [SKYACTIV-G 2.0 (WITHOUT i-stop)].) (See 01-17B-9 NEGATIVE BATTERY CABLE DISCONNECTION/CONNECTION [SKYACTIV-D 2.2].) • Measure the voltage at start stop unit terminal 1E (vehicle wiring harness side). • Is the voltage **2.5 V or more**?	Yes	Repair or replace the wiring harness which has a short to the power supply, then go to the next step.
		No	Go to the next step.

ON-BOARD DIAGNOSTIC [START STOP UNIT]

Step	Inspection		Action
4	**VERIFY THAT REPAIRS HAVE BEEN COMPLETED** • Reconnect all the disconnected connectors. • Reconnect the disconnected negative battery cable. (See 01-17A-11 NEGATIVE BATTERY CABLE DISCONNECTION/CONNECTION [SKYACTIV-G 2.0].) (See 01-17A-13 NEGATIVE BATTERY CABLE DISCONNECTION/CONNECTION [SKYACTIV-G 2.0 (WITHOUT i-stop)].) (See 01-17B-9 NEGATIVE BATTERY CABLE DISCONNECTION/CONNECTION [SKYACTIV-D 2.2].) • Clear DTC for the start stop unit using the M-MDS. (See 09-02C-7 CLEARING DTC [START STOP UNIT].) • Switch the ignition to off and wait for **5 s or more**. • Perform the DTC inspection for the start stop unit using the M-MDS. (See 09-02C-6 DTC INSPECTION [START STOP UNIT].) • Is the DTC U3004:17 displayed?	Yes	Repeat the inspection from Step 1. • If the malfunction recurs, replace the start stop unit, then go to the next step. (See 09-14-54 START STOP UNIT REMOVAL/INSTALLATION.)
		No	Go to the next step.
5	**VERIFY IF OTHER DTCs DISPLAYED** • Are any other DTCs displayed?	Yes	Repair the malfunctioning part according to the applicable DTC troubleshooting. (See 09-02C-8 DTC TABLE [START STOP UNIT].)
		No	DTC troubleshooting completed.

ON-BOARD DIAGNOSTIC [START STOP UNIT]

PID/DATA MONITOR INSPECTION [START STOP UNIT]

id0902p6025400

1. Connect the M-MDS to the DLC-2.
2. After the vehicle is identified, select the following items from the initialization screen of the M-MDS.
   1. Select “DataLogger”.
   2. Select “Modules”.
   3. Select “SSU”.
3. Select the applicable PID from the PID table.
4. Verify the PID data according to the directions on the screen.

Note

- The PID data screen function is used for monitoring the calculated value of input/output signals in the module. Therefore, if the monitored value of the output parts is not within the specification, it is necessary to inspect the monitored value of input parts corresponding to the applicable output part control. In addition, because the system does not display an output part malfunction as an abnormality in the monitored value, it is necessary to inspect the output parts individually.
- When detecting DTCs, PIDs related to a malfunctioning system may not display even if the module is normal. Therefore, if a PID is not displayed, it is necessary to verify the DTC, perform malfunction diagnosis of the DTC that was detected, and do repairs.

PID/DATA MONITOR TABLE [START STOP UNIT]

id0902p6025500

PID	Unit/ Operation	Data contents	Inspection item(s)
BRAKE_SW 1*1	Off/On	• Off: Brake switched is off. • On: Brake switch is on.	Brake switch
CLUT_CUT _SW*2	Off/On	• Off: Starter interlock switch is off. • On: Starter interlock switch is on.	Starter interlock switch
CLUTCH_S W*2	Off/On	• Off: CPP switch is off. • On: CPP switch is on.	CPP switch
COMM_ST_ TSP	Off/On	• Off: Remote transmitter is not communicated. • On: Remote transmitter is communicated.	Start stop unit
CRU_CON_ SW*3	Not_Presse d/On/Off/ Cancel/ Resume/ Fault/Set (+)/Set (-)	• Not_Pressed: Each switch of cruise control switch is not pressed. • On: Cruise ON switch is pressed. • Off: Cruise OFF switch is pressed. • Cancel: CANCEL switch is pressed. • Resume: RESUME switch is pressed. • Fault: Cruise control switch has a malfunction. • Set (+): SET (+) switch is pressed. • Set (-): SET (-) switch is pressed.	Cruise control switch
ES_UL_SW	Not_Unlock/ Unlock	• Not_Unlock: Steering lock unlock switch is off. • Unlock: Steering lock unlock switch is on.	Start stop unit
ES_UL_SW _M	Not_Unlock/ Unlock	• Not_Unlock: Memory value of steering lock unlock switch is not unlocked. • Unlock: Memory value of steering lock unlock switch is unlocked.	Start stop unit
ES_ULL_S W	Off/On	• Not_Unlock: Steering lock unlock/lock switch is off. • Unlock: Steering lock unlock/lock switch is on.	Start stop unit
ES_ULL_S W_M	Off/On	• Not_Unlock: Memory value of steering lock unlock/lock switch is not unlocked. • Unlock: Memory value of steering lock unlock/lock switch is unlocked.	Start stop unit
F_FOG_SW	Off/On	• Off: Fog light switch is not in F.FOG position. • On: Fog light switch is in F.FOG position.	Front fog light switch
H/L_SW_HI	Off/On	• Off: Light switch is not in HI position. • On: Light switch is in HI position.	Light switch
H/ L_SW_LOW	Off/On	• Off: Light switch is not in LO position. • On: Light switch is in LO position.	Light switch
H/ L_SW_OFF	Off/On	• Off: Light switch is not in OFF position. • On: Light switch is in OFF position.	Light switch
H/ L_SW_PAS S	Off/On	• Off: Light switch is not in passing position. • On: Light switch is in passing position.	Light switch

ON-BOARD DIAGNOSTIC [START STOP UNIT]

PID	Unit/ Operation	Data contents	Inspection item(s)
H/ L_SW_TNS	Off/On	• Off: Light switch is not in TNS position. • On: Light switch in TNS position.	Light switch
HAZARD_SW	Off/On	• Off: Hazard warning switch is off. • On: Hazard warning switch is on.	Hazard warning switch
IG_POSITION	OFF/ACC/ ON/CRANK	• OFF: Ignition is switched off. • ACC: Ignition is switched to ACC. • ON: Ignition is switched ON (engine off or on). • CRANK: During engine cranking	Ignition switch
INFO_SW	Off/ SW1_On/ SW2_On/ SW3_On/ Unknown/ Invalid	• Off: Steering switch UP/DOWN/INFO switch is not pressed. • SW1_On: UP switch is pressed. • SW2_On: DOWN switch is pressed. • SW3_On: INFO switch is pressed. • Unknown: Steering switch UP/DOWN/INFO switch signal is not determined. • Invalid: Steering switch malfunction is received.	Steering switch
INHIBIT_SW*1	Off/On	• Off: Selector lever is not in P and N positions. • On: Selector lever is in P or N position.	Transaxle range sensor
LG/ T_LK_SW*5	Off/On	• Off: Request switch (liftgate) is off. • On: Request switch (liftgate) is on.	Request switch (liftgate)
LG/ T_UNL_SW	Off/On	• Off: Liftgate opener switch is off. • On: Liftgate opener switch is on.	Liftgate opener switch
LL_SW_D_LK	Off/On	• Off: Front door lock-link switch (driver's side) is in unlock. • On: Front door lock-link switch (driver's side) is in lock.	Front door lock-link switch (driver's door)
NUM_TRNSMIT	—	Displays the number of the remote transmitters programmed to the start stop unit.	Start stop unit
P_RANGE_SW*1	Off/On	• Off: NOT P position switch is off. • On: NOT P position switch is on.	NOT P position switch
R_FOG_SW	Off/On	• Off: Fog light switch is not in R.FOG position. • On: Fog light switch is in R.FOG position.	Rear fog light switch
RELAY_ACC	Off/On	• Off: ACC relay drive is off. • On: ACC relay drive is on.	ACC relay
RELAY_IG1	Off/On	• Off: IG1 relay drive is off. • On: IG1 relay drive is on.	IG1 relay
RELAY_IG2	Off/On	• Off: IG2 relay drive is off. • On: IG2 relay drive is on.	Front body control module (FBCM)
RF_RECEP_ST	Initial/ Transmitter/ RF_Response	• Initial: Signal from remote transmitter is not received. • Transmitter: Signal is received using remote transmitter button. • RF_Response: Signal is received by remote transmitter radio wave.	Keyless receiver
RQ_SW_LF *4	Off/On	• Off: Request switch (LF) is off. • On: Request switch (LF) is on.	Request switch (LF)
RQ_SW_RF *4	Off/On	• Off: Request switch (RF) is off. • On: Request switch (RF) is on.	Request switch (RF)
SECURITY_I	Off/On	• Off: Security indicator light is turned off. • On: Security indicator light is illuminated.	Instrument cluster
SFT_LK_SOL*1	Off (Lock)/ On (Unlock)	• Off (Lock): Shift-lock is operated. • On (Unlock): Shift-lock is released.	Selector lever component
SSB_1	Off/On	• Off: Push button start switch 1 is off. • On: Push button start switch 1 is on.	Push button start
SSB_2	Off/On	• Off: Push button start switch 2 is off. • On: Push button start switch 2 is on.	Push button start
SSB_AMBER	Off/On	• Off: Push button start indicator light (amber) is turned off. • On: Push button start indicator light (amber) is illuminated.	Push button start
SSB_GREEN	Off/On	• Off: Push button start indicator light (green) is turned off. • On: Push button start indicator light (green) is illuminated.	Push button start
SSB_ILLMI	Off/On	• Off: START/STOP/ENGINE indicator light is turned off. • On: START/STOP/ENGINE indicator light is illuminated.	Push button start
START_RLY_1	V	Voltage at start stop unit terminal 2V is displayed.	Starter relay

ON-BOARD DIAGNOSTIC [START STOP UNIT]

PID	Unit/ Operation	Data contents	Inspection item(s)
START_RLY_2	V	Voltage at start stop unit terminal 1D is displayed.	Starter relay
STR_A_ANG_A	° (deg)	Steering angle sensor A signal aiming angle is displayed.	Steering angle sensor
STR_A_ANG_B	° (deg)	Steering angle sensor B signal aiming angle is displayed.	Steering angle sensor
STR_AB_ANG	° (deg)	Steering wheel absolute steering angle is displayed.	Steering angle sensor
STR_ANG_S	Without/ With	• Without: Steering angle sensor is not equipped. • With: Steering angle sensor is equipped.	Steering angle sensor
STR_ANG_S_A	V	Voltage at the steering angle sensor A signal is displayed.	Steering angle sensor
STR_ANG_S_B	V	Voltage at the steering angle sensor B signal is displayed.	Steering angle sensor
STR_ANG_S_V	V	Steering angle sensor power supply voltage is displayed.	Steering angle sensor
TURN_SW_L	Off/On	• Off: Turn switch is in position other tha.n LH. • On: Turn switch is in LH position	Turn Switch
TURN_SW_R	Off/On	• Off: Turn switch is in position other than RH. • On: Turn switch is in RH position.	Turn Switch
VPWR_ACC	V	Voltage at start stop unit terminal 1E (ACC power supply) is displayed.	• Start stop unit • ACC relay • Battery
VPWR_B1	V	Voltage at start stop unit terminal 1A (+B1 power supply) is displayed.	• Start stop unit • Battery
VPWR_B2	V	Voltage at start stop unit terminal 2W (+B2 power supply) is displayed.	• Start stop unit • Battery
VPWR_B3	V	Voltage at start stop unit terminal 2X (+B3 power supply) is displayed.	• Start stop unit • Battery
VPWR_IG1	V	Voltage at start stop unit terminal 1B (IG1 power supply) is displayed.	• Start stop unit • IG1 relay • Battery
WASHER_F	Off/On	• Off: Windshield washer switch is in OFF position. • On: Windshield washer switch is in ON position.	Windshield washer switch
WASHER_R	Off/On	• Off: Rear washer switch is not in ON position. • On: Rear washer switch is in ON position.	Rear washer switch
WIP_F_INT	Off/On	• Off: Windshield wiper switch is not in INT and AUTO positions. • On: Windshield wiper switch is in INT or AUTO position.	Windshield wiper switch
WIP_F_LOW	Off/On	• Off: Windshield wiper switch is not in LO position. • On: Windshield wiper switch is in LO position.	Windshield wiper switch
WIP_INT_E_A	Low/High	• Low: Windshield wiper switch INT encoder A value is low. • High: Windshield wiper switch INT encoder A value is high.	Windshield wiper and washer switch
WIP_INT_E_B	Low/High	• Low: Windshield wiper switch INT encoder B value is low. • High: Windshield wiper switch INT encoder B value is high.	Windshield wiper and washer switch
WIP_INT_E_C	Low/High	• Low: Windshield wiper switch INT encoder C value is low. • High: Windshield wiper switch INT encoder C value is high.	Windshield wiper and washer switch
WIP_R_INT	Off/On	• Off: Rear wiper switch is not in INT position. • On: Rear wiper switch is in INT position.	Rear wiper switch
WIP_R_ON	Off/On	• Off: Rear wiper switch is not in ON position. • On: Rear wiper switch is in ON position.	Rear wiper switch

*1 : ATX
*2 : MTX
*3 : With cruise control system
*4 : With advanced keyless entry system

09-02D ON-BOARD DIAGNOSTIC [ADAPTIVE FRONT LIGHTING SYSTEM (AFS)]

ON-BOARD DIAGNOSTIC
WIRING DIAGRAM
[ADAPTIVE FRONT LIGHTING SYSTEM (AFS)] 09-02D–2
FOREWORD
[ADAPTIVE FRONT LIGHTING SYSTEM (AFS)] 09-02D–3
Troubleshooting Procedure 09-02D–3
Action for Non-repeatable Malfunction. 09-02D–4
DTC INSPECTION
[ADAPTIVE FRONT LIGHTING SYSTEM (AFS)] 09-02D–5
CMDTC Self Test 09-02D–5
ODDTC Self Test 09-02D–5
CLEARING DTC
[ADAPTIVE FRONT LIGHTING SYSTEM (AFS)] 09-02D–6
CMDTC Memory Clearing Procedure 09-02D–6
ODDTC Memory Clearing Procedure 09-02D–6
DTC TABLE
[ADAPTIVE FRONT LIGHTING SYSTEM (AFS)] 09-02D–6
DTC B1041:14
[ADAPTIVE FRONT LIGHTING SYSTEM (AFS)] 09-02D–9
DTC B1041:54
[ADAPTIVE FRONT LIGHTING SYSTEM (AFS)] 09-02D–12
DTC B1044:01
[ADAPTIVE FRONT LIGHTING SYSTEM (AFS)] 09-02D–13
DTC B10A3:86
[ADAPTIVE FRONT LIGHTING SYSTEM (AFS)] 09-02D–16
DTC B10A3:87
[ADAPTIVE FRONT LIGHTING SYSTEM (AFS)] 09-02D–17
DTC B10A4:86
[ADAPTIVE FRONT LIGHTING SYSTEM (AFS)] 09-02D–21
DTC B10A4:87
[ADAPTIVE FRONT LIGHTING SYSTEM (AFS)] 09-02D–22
DTC C0051:86
[ADAPTIVE FRONT LIGHTING SYSTEM (AFS)] 09-02D–26
DTC U0001:88/U0100:00/U0131:00/U0140:00/U0155:00
[ADAPTIVE FRONT LIGHTING SYSTEM (AFS)] 09-02D–27
Diagnostic Procedure 09-02D–27
DTC U0320:09
[ADAPTIVE FRONT LIGHTING SYSTEM (AFS)] 09-02D–28
DTC U0420:68
[ADAPTIVE FRONT LIGHTING SYSTEM (AFS)] 09-02D–29
DTC U0423:68
[ADAPTIVE FRONT LIGHTING SYSTEM (AFS)] 09-02D–30
DTC U2005:86
[ADAPTIVE FRONT LIGHTING SYSTEM (AFS)] 09-02D–31
DTC U2300:54
[ADAPTIVE FRONT LIGHTING SYSTEM (AFS)] 09-02D–32
DTC U2300:55
[ADAPTIVE FRONT LIGHTING SYSTEM (AFS)] 09-02D–33
DTC U2300:56
[ADAPTIVE FRONT LIGHTING SYSTEM (AFS)] 09-02D–34
DTC U3000:42
[ADAPTIVE FRONT LIGHTING SYSTEM (AFS)] 09-02D–35
DTC U3000:49
[ADAPTIVE FRONT LIGHTING SYSTEM (AFS)] 09-02D–35
DTC U3003:16
[ADAPTIVE FRONT LIGHTING SYSTEM (AFS)] 09-02D–36
DTC U3003:17
[ADAPTIVE FRONT LIGHTING SYSTEM (AFS)] 09-02D–38
PID/DATA MONITOR INSPECTION
[ADAPTIVE FRONT LIGHTING SYSTEM (AFS)] 09-02D–40
PID/DATA MONITOR TABLE
[ADAPTIVE FRONT LIGHTING SYSTEM (AFS)] 09-02D–40
HEADLIGHT LEVELING ACTUATOR OPERATION CHECK MODE
[ADAPTIVE FRONT LIGHTING SYSTEM (AFS)] 09-02D–41

ON-BOARD DIAGNOSTIC [ADAPTIVE FRONT LIGHTING SYSTEM (AFS)]

ON-BOARD DIAGNOSTIC WIRING DIAGRAM [ADAPTIVE FRONT LIGHTING SYSTEM (AFS)]

id09021n960000

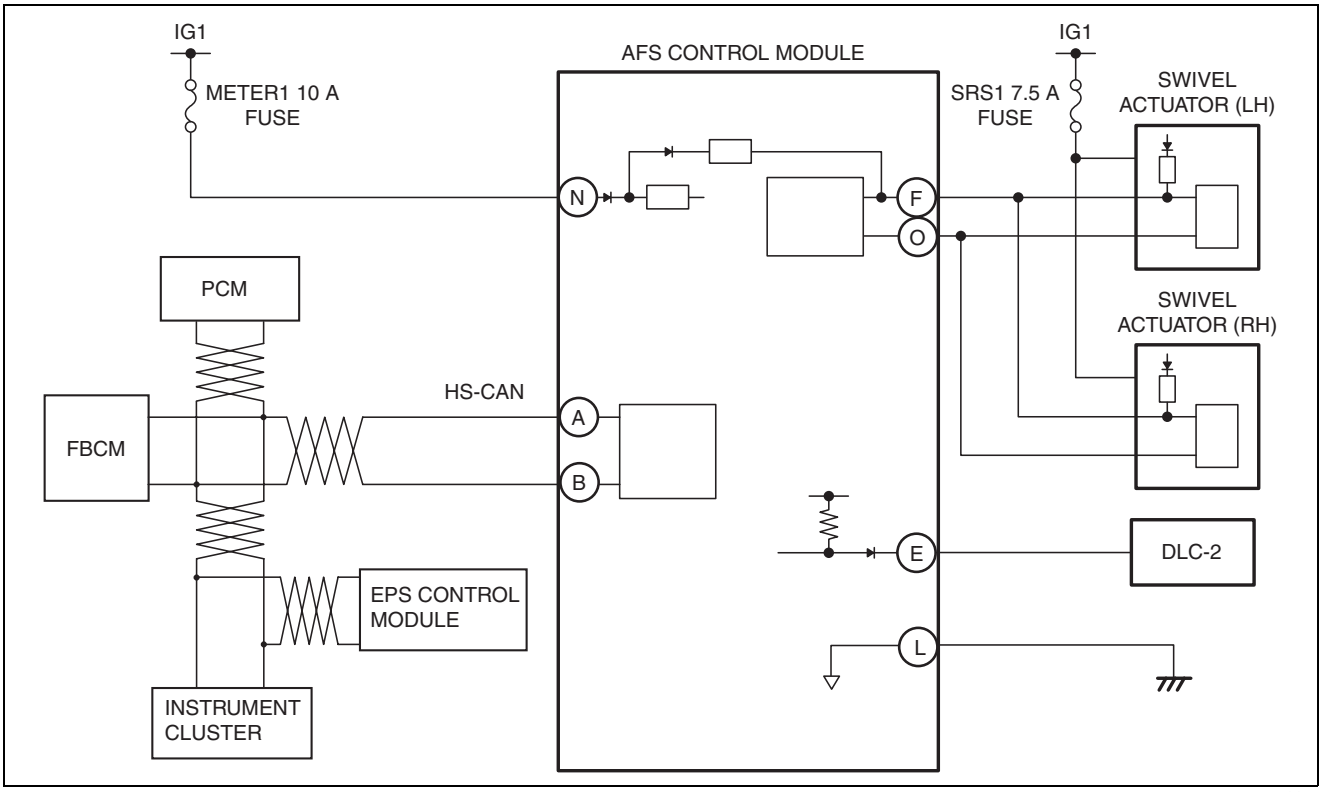

ac5uun00001103

ON-BOARD DIAGNOSTIC [ADAPTIVE FRONT LIGHTING SYSTEM (AFS)]

FOREWORD [ADAPTIVE FRONT LIGHTING SYSTEM (AFS)]

id09021n960100

- If there is any vehicle malfunction complaint lodged by a customer, perform malfunction diagnosis according to the troubleshooting procedure.

Troubleshooting Procedure

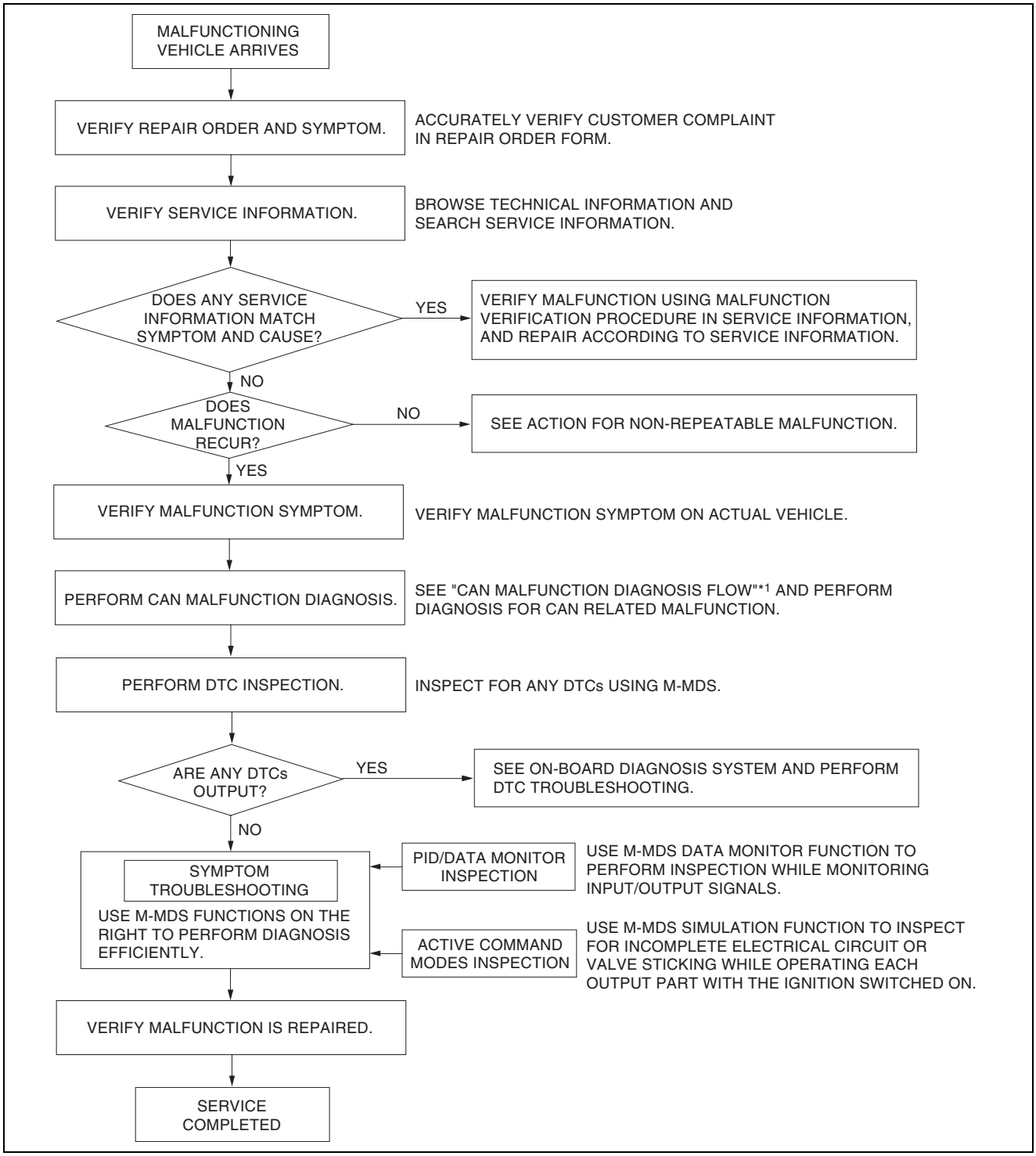

am3zzw0001242

*1 : 10-02A-3 CONTROLLER AREA NETWORK (CAN) MALFUNCTION DIAGNOSIS FLOW [SKYACTIV-G 2.0 (L.H.D.)]/10-02B-3 CONTROLLER AREA NETWORK (CAN) MALFUNCTION DIAGNOSIS FLOW [SKYACTIV-G 2.0 (R.H.D.)]/10-02C-3 CONTROLLER AREA NETWORK (CAN) MALFUNCTION DIAGNOSIS FLOW [SKYACTIV-D 2.2 (L.H.D.)]/10-02D-3 CONTROLLER AREA NETWORK (CAN) MALFUNCTION DIAGNOSIS FLOW [SKYACTIV-D 2.2 (R.H.D.)]

ON-BOARD DIAGNOSTIC [ADAPTIVE FRONT LIGHTING SYSTEM (AFS)]

Action for Non-repeatable Malfunction

- If the malfunction does not recur, verify the malfunction cause by performing the following actions:
  - — Based on the repair order form, attempt to drive the vehicle or perform tests to replicate the malfunction, record the data at that time, and detect the malfunction cause.
  - — Shake the wiring harness or connector of the electrical component which is suspected to be the cause of the malfunction, and inspect for malfunction or occurrence of any DTCs.

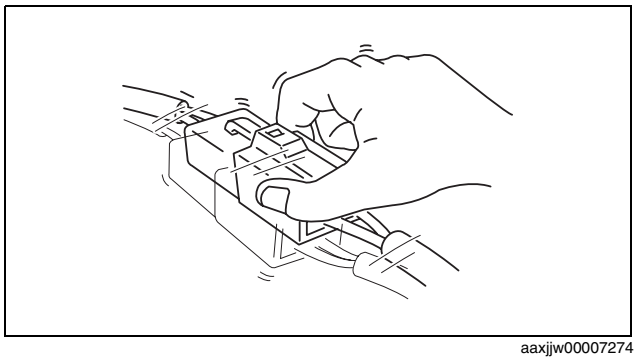

aaxjjw00007274

  - — Inspect the female terminals on the connector of the electric component which is suspected to be the cause of the malfunction for poor connection.

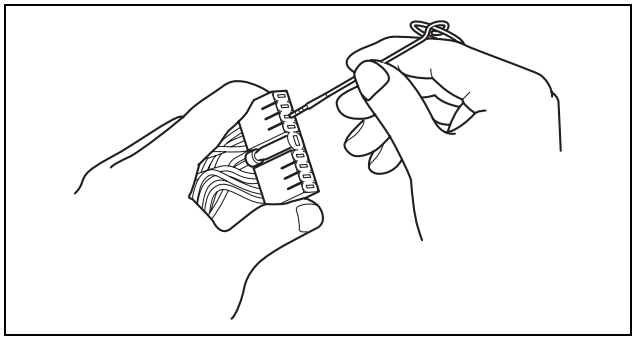

am3uuw0000750

ON-BOARD DIAGNOSTIC [ADAPTIVE FRONT LIGHTING SYSTEM (AFS)]

DTC INSPECTION [ADAPTIVE FRONT LIGHTING SYSTEM (AFS)]

id09021n960300

CMDTC Self Test

1. Connect the M-MDS to the DLC-2.
2. After the vehicle is identified, select the following items from the initialization screen of the M-MDS.
   (1) Select “Self Test”.
   (2) Select “All CMDTCs”.
3. Verify the DTC according to the directions on the screen.
   - If any DTCs are displayed, perform troubleshooting according to the corresponding DTC inspection.
4. After completion of repairs, clear all DTCs stored in the AFS control module. (See 09-02D-6 CLEARING DTC [ADAPTIVE FRONT LIGHTING SYSTEM (AFS)].)

ODDTC Self Test

1. Connect the M-MDS to the DLC-2.
2. After the vehicle is identified, select the following items from the initialization screen of the M-MDS.
   (1) Select “Self Test”.
   (2) Select “Modules”.
   (3) Select “AFS”.
3. Verify the DTC according to the directions on the screen.
   - If any DTCs are displayed, perform troubleshooting according to the corresponding DTC inspection.
4. After completion of repairs, clear all DTCs stored in the AFS control module. (See 09-02D-6 CLEARING DTC [ADAPTIVE FRONT LIGHTING SYSTEM (AFS)].)

Snapshot data

- The data for all DTCs currently detected is stored.

Snapshot data table

—: Not applicable

Snap shot data item	Unit	Unit	Data contents	Corresponding data monitor items
AAT	°C	°F	Ambient temperature	—
APP_STATUS	Accelerator Pedal Off/Under20%/Over20%/FAIL		Accelerator pedal position status	—
CFG_STATUS	Config Complete/Not Configured/Config Error		Configuration status	—
ECT_STATUS	Under 0 degrees C/0-Under 80 degrees C/Over 80 degrees C/FAIL		Engine coolant temperature status	—
IC_VPWR	V		Instrument cluster power supply voltage	—
IG-ON_TIMER	hh:mm:ss		Elapsed time since ignition switched ON (engine off or on)	—
PWR_MODE_KEY	Key Out/Key Recently Out/ Key Approved (Position 0)/ Post Accessory (Position 0)/ Accessory (Position 1)/ Post Ignition (Position 1)/ ignition On (Position 2)/ Running - Starting In Progress (Position 2)/Crank (Position 3)		Push button start power position switching status	—
RPM_STATUS	Engine Stop/Under1500rpm/Over1500rpm/FAIL		Engine speed status	—
SHIFT_STATUS	P/N/ D/ R/ FAIL		Selector lever position status	—
TOTAL_DIST	Km	miles	Accumulated total traveled distance since vehicle completion	—
TOTAL_TIME	hh:mm:ss		Accumulated total elapsed time since vehicle completion **Note** • When the ROOM fuse is removed, or the ignition is switched off (LOCK), the time is not included in the elapsed time.	—

ON-BOARD DIAGNOSTIC [ADAPTIVE FRONT LIGHTING SYSTEM (AFS)]

Snap shot data item	Unit	Unit	Data contents	Corresponding data monitor items
VPWR	V		AFS control module power supply malfunction	VPWR_IG
VSPD_STATUS	Stop/ 0-10km/h/ Over10km/h/ FAIL		Vehicle speed status	VSPD

CLEARING DTC [ADAPTIVE FRONT LIGHTING SYSTEM (AFS)]

id09021n960400

CMDTC Memory Clearing Procedure

1. Connect the M-MDS to the DLC-2.
2. After the vehicle is identified, select the following items from the initialization screen of the M-MDS.
   (1) Select “Self Test”.
   (2) Select “All CMDTCs”.
3. Verify the DTC according to the directions on the screen.
4. Press the clear button on the DTC screen to clear the DTC.
5. Switch the ignition to off.
6. Switch the ignition ON (engine off or on) and wait for **5 s or more**.
7. Perform DTC inspection. (See 09-02D-5 DTC INSPECTION [ADAPTIVE FRONT LIGHTING SYSTEM (AFS)].)
8. Verify that no DTCs are displayed.

ODDTC Memory Clearing Procedure

1. Connect the M-MDS to the DLC-2.
2. After the vehicle is identified, select the following items from the initialization screen of the M-MDS.
   (1) Select “Self Test”.
   (2) Select “Modules”.
   (3) Select “AFS”.
3. Verify the DTC according to the directions on the screen.
4. Press the clear button on the DTC screen to clear the DTC.
5. Switch the ignition to off.
6. Switch the ignition ON (engine off or on) and wait for **5 s or more**.
7. Perform DTC inspection. (See 09-02D-5 DTC INSPECTION [ADAPTIVE FRONT LIGHTING SYSTEM (AFS)].)
8. Verify that no DTCs are displayed.

DTC TABLE [ADAPTIVE FRONT LIGHTING SYSTEM (AFS)]

id09021n960500

Note

- The AFS control module flashes the AFS OFF indicator light as follows if there is a malfunction in the system.

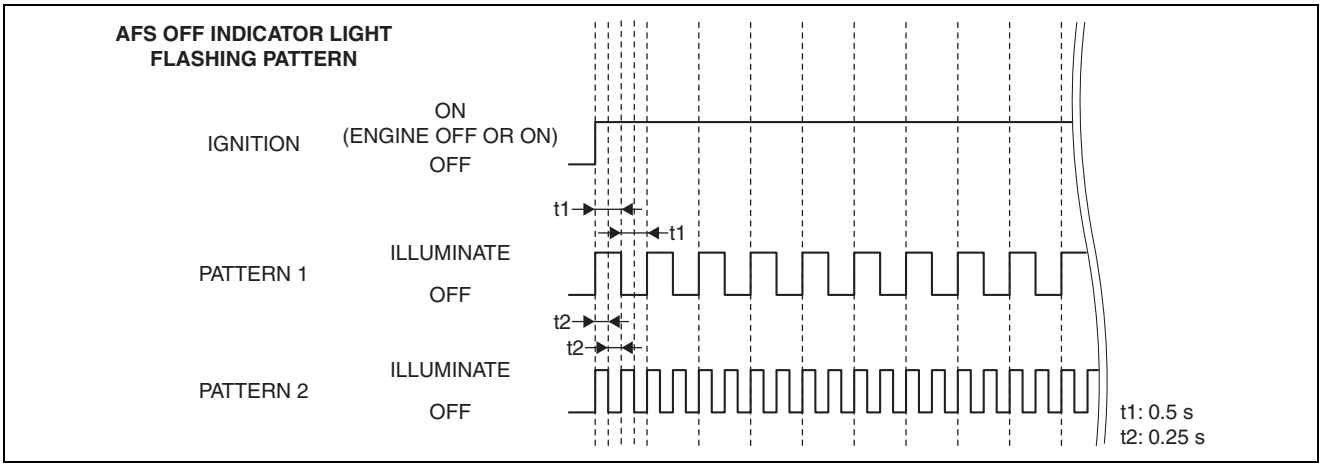

ac5wzw0000253

×: Applicable

ON-BOARD DIAGNOSTIC [ADAPTIVE FRONT LIGHTING SYSTEM (AFS)]

—: Not applicable

DTC No.	AFS OFF indicator light	Description	Fail-safe function	Drive cycle	Self test type*1	Memory function	Page
B1041:14	Flash (Pattern 1)	Headlight leveling actuator circuit malfunction	×	—	D	×	(See 09-02D-9 DTC B1041:14 [ADAPTIVE FRONT LIGHTING SYSTEM (AFS)].)
B1041:54	Flash (Pattern 2)	Headlight auto leveling system initialization error	×	—	D	×	(See 09-02D-12 DTC B1041:54 [ADAPTIVE FRONT LIGHTING SYSTEM (AFS)].)
B1044:01	Flash (Pattern 1)	Auto leveling sensor circuit malfunction	×	—	D	×	(See 09-02D-13 DTC B1044:01 [ADAPTIVE FRONT LIGHTING SYSTEM (AFS)].)
B10A3:86	Flash (Pattern 1)	Communication error with swivel actuator (LH)	×	—	D	×	(See 09-02D-16 DTC B10A3:86 [ADAPTIVE FRONT LIGHTING SYSTEM (AFS)].)
B10A3:87	Flash (Pattern 1)	Communication error with swivel actuator (LH)	×	—	D	×	(See 09-02D-17 DTC B10A3:87 [ADAPTIVE FRONT LIGHTING SYSTEM (AFS)].)
B10A4:86	Flash (Pattern 1)	Communication error with swivel actuator (RH)	×	—	D	×	(See 09-02D-21 DTC B10A4:86 [ADAPTIVE FRONT LIGHTING SYSTEM (AFS)].)
B10A4:87	Flash (Pattern 1)	Communication error with swivel actuator (RH)	×	—	D	×	(See 09-02D-22 DTC B10A4:87 [ADAPTIVE FRONT LIGHTING SYSTEM (AFS)].)
C0051:86	Flash (Pattern 1)	Error steering angle signal received from EPS control module	×	—	C, D	×	(See 09-02D-26 DTC C0051:86 [ADAPTIVE FRONT LIGHTING SYSTEM (AFS)].)
U0001:88	Flash (Pattern 1)	Unit communication error (HS-CAN)	×	—	C, D	×	(See 09-02D-27 DTC U0001:88/U0100:00/ U0131:00/U0140:00/ U0155:00 [ADAPTIVE FRONT LIGHTING SYSTEM (AFS)].)
U0100:00	Flash (Pattern 1)	Communication error with PCM	×	—	C, D	×	
U0131:00	Flash (Pattern 1)	Communication error with EPS control module	×	—	C, D	×	
U0140:00	Flash (Pattern 1)	Communication error with front body control module (FBCM)	×	—	C, D	×	
U0155:00	Flash (Pattern 1)	Communication error with instrument cluster	×	—	C, D	×	
U0320:09	Flash (Pattern 1)	EPS control module malfunction	×	—	C, D	×	(See 09-02D-28 DTC U0320:09 [ADAPTIVE FRONT LIGHTING SYSTEM (AFS)].)
U0420:68	Flash (Pattern 1)	Error signal received from EPS control module	×	—	C, D	×	(See 09-02D-29 DTC U0420:68 [ADAPTIVE FRONT LIGHTING SYSTEM (AFS)].)

ON-BOARD DIAGNOSTIC [ADAPTIVE FRONT LIGHTING SYSTEM (AFS)]

DTC No.	AFS OFF indicator light	Description	Fail-safe function	Drive cycle	Self test type*1	Memory function	Page
U0423:68	—	Error signal received from instrument cluster • AFS OFF switch error signal	×	—	C, D	—	(See 09-02D-30 DTC U0423:68 [ADAPTIVE FRONT LIGHTING SYSTEM (AFS)].)
	—	Error signal received from instrument cluster • Ignition switch error signal	×	—	C, D	—	
	Flash (Pattern 1)	Error signal received from instrument cluster • Selector lever position (R position) (ATX)/Reverse (MTX) signal error	×	—	C, D	×	
	—	Error signal received from instrument cluster • Selector lever position (R position) (ATX)/Reverse (MTX) signal not determined	×	—	C, D	—	
U2005:86	Flash (Pattern 1)	Error signal received from PCM	×	—	C, D	×	(See 09-02D-31 DTC U2005:86 [ADAPTIVE FRONT LIGHTING SYSTEM (AFS)].)
U2300:54	Flash (Pattern 1)	Error configuration data received from instrument cluster	×	—	C, D	×	(See 09-02D-32 DTC U2300:54 [ADAPTIVE FRONT LIGHTING SYSTEM (AFS)].)
U2300:55	—	Instrument cluster configuration not implemented	×	—	C, D	×	(See 09-02D-33 DTC U2300:55 [ADAPTIVE FRONT LIGHTING SYSTEM (AFS)].)
U2300:56	Flash (Pattern 1)	Configuration data unmatched with instrument cluster	×	—	C, D	×	(See 09-02D-34 DTC U2300:56 [ADAPTIVE FRONT LIGHTING SYSTEM (AFS)].)
U3000:42	Flash (Pattern 1)	AFS control module internal malfunction	×	—	C, D	×	(See 09-02D-35 DTC U3000:42 [ADAPTIVE FRONT LIGHTING SYSTEM (AFS)].)
U3000:49	—	AFS control module internal malfunction • RAM/ROM malfunction	×	—	C, D	×	(See 09-02D-35 DTC U3000:49 [ADAPTIVE FRONT LIGHTING SYSTEM (AFS)].)
	—	AFS control module internal malfunction • AFS function malfunction	—	—	C, D	—	
	—	AFS control module internal malfunction • CAN hardware malfunction	×	—	C, D	×	
U3003:16	—	AFS control module low power supply voltage input	×	—	C, D	—	(See 09-02D-36 DTC U3003:16 [ADAPTIVE FRONT LIGHTING SYSTEM (AFS)].)
U3003:17	—	AFS control module high power supply voltage input	×	—	C, D	—	(See 09-02D-38 DTC U3003:17 [ADAPTIVE FRONT LIGHTING SYSTEM (AFS)].)

*1 : C: CMDTC self test, D: ODDTC self test

ON-BOARD DIAGNOSTIC [ADAPTIVE FRONT LIGHTING SYSTEM (AFS)]

DTC B1041:14 [ADAPTIVE FRONT LIGHTING SYSTEM (AFS)]

id09021n017100

System malfunction location	**Headlight leveling actuator circuit malfunction**
Detection condition	• Headlight leveling actuator circuit voltage of **3.2 V or less** is detected for **5 s or more** with the ignition switched ON (engine off or on).
Fail-safe	• The swivel actuator is moved to the center. • The headlight leveling actuator is stopped at the position when the malfunction is determined.
Possible cause	• Front combination light (LH) connector or terminal malfunction • Front combination light (RH) connector or terminal malfunction • AFS control module connector or terminal malfunction • Short to ground in wiring harness between the following terminals: — AFS control module terminal P and front combination light (LH) terminal I — AFS control module terminal O and front combination light (LH) terminal F — AFS control module terminal P and front combination light (RH) terminal I — AFS control module terminal O and front combination light (RH) terminal F • Open circuit in wiring harness between the following terminals: — AFS control module terminal P and front combination light (LH) terminal I — AFS control module terminal O and front combination light (LH) terminal F — AFS control module terminal P and front combination light (RH) terminal I — AFS control module terminal O and front combination light (RH) terminal F • Headlight leveling actuator malfunction • AFS control module malfunction

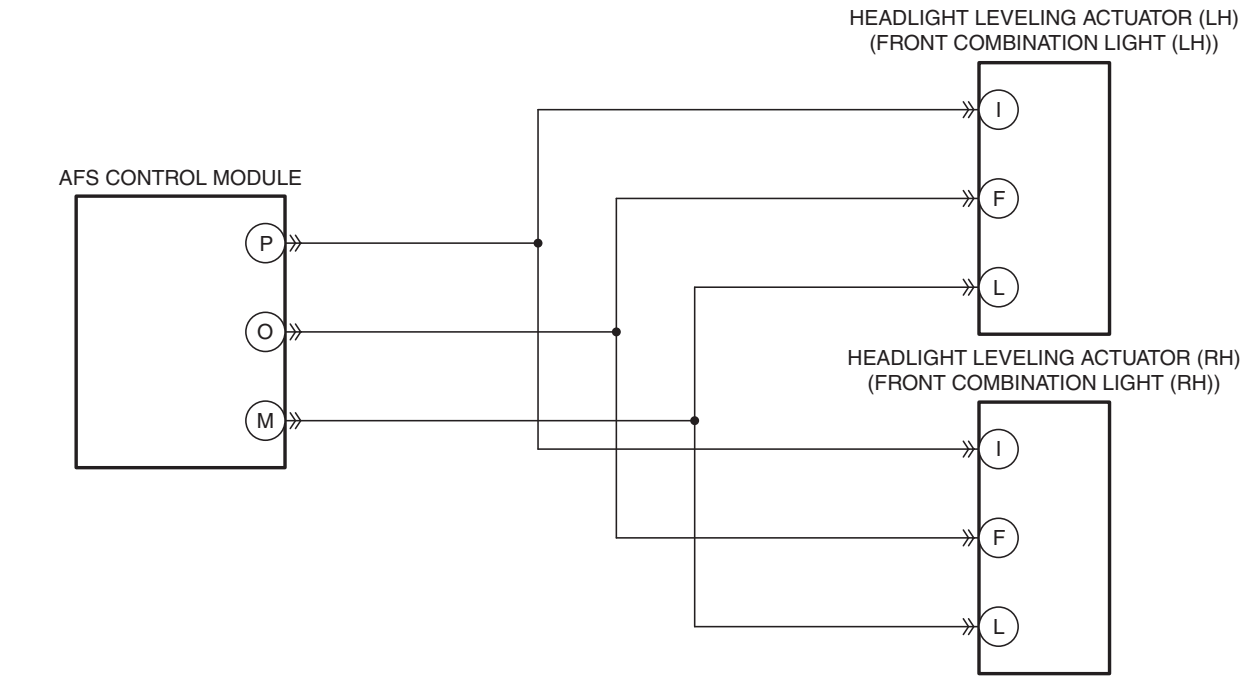

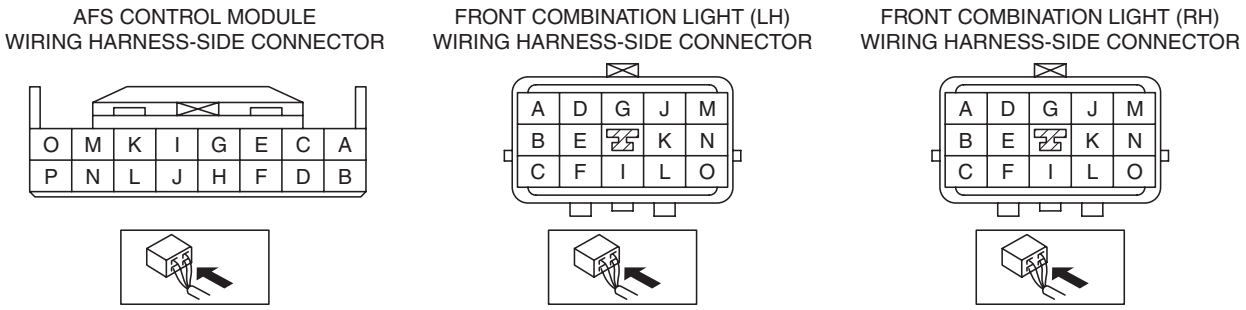

ON-BOARD DIAGNOSTIC [ADAPTIVE FRONT LIGHTING SYSTEM (AFS)]

Diagnostic Procedure

Step	Inspection		Action
1	**INSPECT FRONT COMBINATION LIGHT (LH) CONNECTOR CONDITION** • Switch the ignition to off. • Disconnect the negative battery cable. (See 01-17A-13 NEGATIVE BATTERY CABLE DISCONNECTION/CONNECTION [SKYACTIV-G 2.0 (WITHOUT i-stop)].) (See 01-17A-11 NEGATIVE BATTERY CABLE DISCONNECTION/CONNECTION [SKYACTIV-G 2.0].) (See 01-17B-9 NEGATIVE BATTERY CABLE DISCONNECTION/CONNECTION [SKYACTIV-D 2.2].) • Disconnect the front combination light (LH) connector. • Inspect the connector engagement and connection condition and inspect the terminals for damage, deformation, corrosion, or disconnection. • Is the connector normal?	Yes	Go to the next step.
		No	Repair or replace the connector, then go to Step 7.
2	**INSPECT FRONT COMBINATION LIGHT (RH) CONNECTOR CONDITION** • Disconnect the front combination light (RH) connector. • Inspect the connector engagement and connection condition and inspect the terminals for damage, deformation, corrosion, or disconnection. • Is the connector normal?	Yes	Go to the next step.
		No	Repair or replace the connector, then go to Step 7.
3	**INSPECT AFS CONTROL MODULE CONNECTOR CONDITION** • Disconnect the AFS control module connector. • Inspect the connector engagement and connection condition and inspect the terminals for damage, deformation, corrosion, or disconnection. • Is the connector normal?	Yes	Go to the next step.
		No	Repair or replace the connector, then go to Step 7.
4	**INSPECT HEADLIGHT LEVELING ACTUATOR CIRCUIT FOR SHORT TO GROUND** • Verify that the following connectors are disconnected. — Front combination light (LH) — Front combination light (RH) — AFS control module • Inspect for continuity between the following terminals (vehicle wiring harness side) and body ground. — Front combination light (LH) terminal I — Front combination light (LH) terminal F — Front combination light (RH) terminal I — Front combination light (RH) terminal F • Is there continuity?	Yes	Repair or replace the wiring harness which is shorted to ground, then go to Step 7.
		No	Go to the next step.

ON-BOARD DIAGNOSTIC [ADAPTIVE FRONT LIGHTING SYSTEM (AFS)]

Step	Inspection		Action
5	**INSPECT HEADLIGHT LEVELING ACTUATOR CIRCUIT FOR OPEN CIRCUIT** • Verify that the following connectors are disconnected. — Front combination light (LH) — Front combination light (RH) — AFS control module • Inspect the wiring harness between the following terminals (vehicle wiring harness side) for continuity. — AFS control module terminal P and front combination light (LH) terminal I — AFS control module terminal O and front combination light (LH) terminal F — AFS control module terminal P and front combination light (RH) terminal I — AFS control module terminal O and front combination light (RH) terminal F • Is there continuity?	Yes	Go to the next step.
		No	Repair or replace the wiring harness which has an open circuit, then go to Step 7.
6	**INSPECT HEADLIGHT LEVELING ACTUATOR OPERATION** • Perform the headlight leveling actuator operation check mode. (See 09-02D-41 HEADLIGHT LEVELING ACTUATOR OPERATION CHECK MODE [ADAPTIVE FRONT LIGHTING SYSTEM (AFS)].) • Does the headlight leveling actuator operate normally?	Yes	Go to the next step.
		No	Replace the front combination light, then go to the next step. (See 09-18-7 FRONT COMBINATION LIGHT REMOVAL/INSTALLATION.)
7	**VERIFY THAT REPAIRS HAVE BEEN COMPLETED** • Reconnect all the disconnected connectors. • Reconnect the disconnected negative battery cable. (See 01-17A-13 NEGATIVE BATTERY CABLE DISCONNECTION/CONNECTION [SKYACTIV-G 2.0 (WITHOUT i-stop)].) (See 01-17A-11 NEGATIVE BATTERY CABLE DISCONNECTION/CONNECTION [SKYACTIV-G 2.0].) (See 01-17B-9 NEGATIVE BATTERY CABLE DISCONNECTION/CONNECTION [SKYACTIV-D 2.2].) • Clear the AFS control module DTCs using the M-MDS. (See 09-02D-6 CLEARING DTC [ADAPTIVE FRONT LIGHTING SYSTEM (AFS)].) • Switch the ignition ON (engine off or on) and wait for **5 s or more**. • Perform the DTC inspection for the AFS control module using the M-MDS. (See 09-02D-5 DTC INSPECTION [ADAPTIVE FRONT LIGHTING SYSTEM (AFS)].) • Is DTC B1041:14 displayed?	Yes	Repeat the inspection from Step 1. • If the malfunction recurs, replace the AFS control module, then go to the next step. (See 09-18-30 ADAPTIVE FRONT LIGHTING SYSTEM (AFS) CONTROL MODULE REMOVAL/INSTALLATION.)
		No	Go to the next step.
8	**VERIFY IF OTHER DTCs DISPLAYED** • Are any other DTCs displayed?	Yes	Repair the malfunctioning part according to the applicable DTC troubleshooting. (See 09-02D-6 DTC TABLE [ADAPTIVE FRONT LIGHTING SYSTEM (AFS)].)
		No	DTC troubleshooting completed.

ON-BOARD DIAGNOSTIC [ADAPTIVE FRONT LIGHTING SYSTEM (AFS)]

DTC B1041:54 [ADAPTIVE FRONT LIGHTING SYSTEM (AFS)]

id09021n934000

System malfunction location	**Headlight auto leveling system initialization error**
Detection condition	• Ignition is switched ON (engine off or on) and headlight auto leveling system initialization is not performed.
Fail-safe	• The swivel actuator is moved to the center. • The headlight leveling actuator is stopped at the position when the malfunction is determined.
Possible cause	• Headlight auto leveling system initialization error • AFS control module malfunction
System wiring diagram	—

Diagnostic Procedure

Step	Inspection		Action
1	**PERFORM HEADLIGHT AUTO LEVELING SYSTEM INITIALIZATION** • Perform headlight auto leveling system initialization. (See 09-18-82 HEADLIGHT AUTO LEVELING SYSTEM INITIALIZATION.) • Clear the AFS control module DTCs using the M-MDS. (See 09-02D-6 CLEARING DTC [ADAPTIVE FRONT LIGHTING SYSTEM (AFS)].) • Perform the DTC inspection for the AFS control module using the M-MDS. (See 09-02D-5 DTC INSPECTION [ADAPTIVE FRONT LIGHTING SYSTEM (AFS)].) • Is DTC B1041:54 displayed?	Yes	Perform the headlight auto leveling system initialization again, then go to the next step. (See 09-18-82 HEADLIGHT AUTO LEVELING SYSTEM INITIALIZATION.)
		No	Go to Step 3.
2	**VERIFY THAT REPAIRS HAVE BEEN COMPLETED** • Clear the AFS control module DTCs using the M-MDS. (See 09-02D-6 CLEARING DTC [ADAPTIVE FRONT LIGHTING SYSTEM (AFS)].) • Perform the DTC inspection for the AFS control module using the M-MDS. (See 09-02D-5 DTC INSPECTION [ADAPTIVE FRONT LIGHTING SYSTEM (AFS)].) • Is DTC B1041:54 displayed?	Yes	Replace the AFS control module, then go to the next step. (See 09-18-30 ADAPTIVE FRONT LIGHTING SYSTEM (AFS) CONTROL MODULE REMOVAL/INSTALLATION.)
		No	Go to the next step.
3	**VERIFY IF OTHER DTCs DISPLAYED** • Are any other DTCs displayed?	Yes	Repair the malfunctioning part according to the applicable DTC troubleshooting. (See 09-02D-6 DTC TABLE [ADAPTIVE FRONT LIGHTING SYSTEM (AFS)].)
		No	DTC troubleshooting completed.

ON-BOARD DIAGNOSTIC [ADAPTIVE FRONT LIGHTING SYSTEM (AFS)]

DTC B1044:01 [ADAPTIVE FRONT LIGHTING SYSTEM (AFS)]

id09021n934200

System malfunction location	**Auto leveling sensor circuit malfunction**
Detection condition	• Auto leveling sensor circuit voltage of **0.25 V or less** or **4.75 V or more** is detected by AFS control module for **10 s or more** with the ignition switched ON (engine off or on).
Fail-safe	• The swivel actuator is moved to the center. • The headlight leveling actuator is stopped at the position when the malfunction is determined.
Possible cause	• Auto leveling sensor connector or terminal malfunction • AFS control module connector or terminal malfunction • Short to ground in wiring harness between the following terminals: — AFS control module terminal I and auto leveling sensor terminal C — AFS control module terminal K and auto leveling sensor terminal B — AFS control module terminal C and auto leveling sensor terminal A • Short to power supply in wiring harness between the following terminals: — AFS control module terminal I and auto leveling sensor terminal C — AFS control module terminal K and auto leveling sensor terminal B — AFS control module terminal C and auto leveling sensor terminal A • Open circuit in wiring harness between the following terminals: — AFS control module terminal I and auto leveling sensor terminal C — AFS control module terminal K and auto leveling sensor terminal B — AFS control module terminal C and auto leveling sensor terminal A • Auto leveling sensor malfunction • AFS control module malfunction

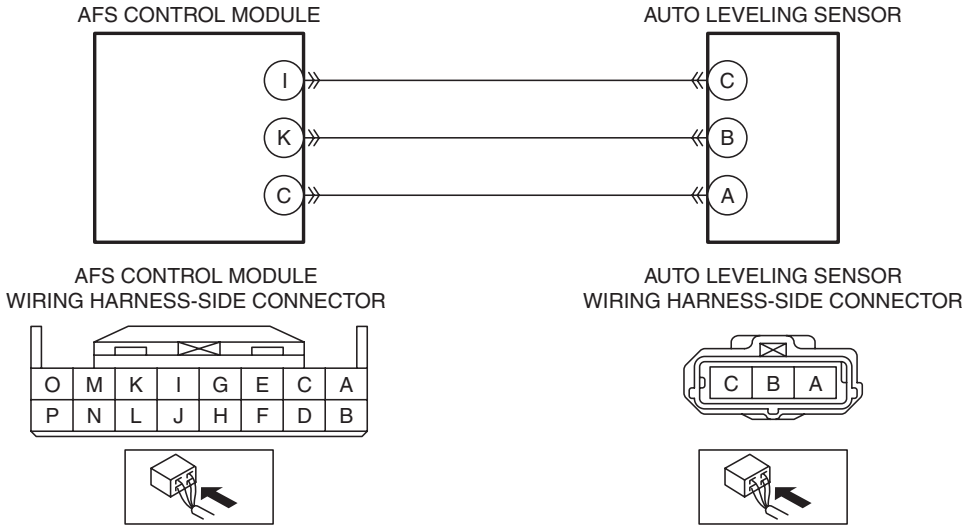

ON-BOARD DIAGNOSTIC [ADAPTIVE FRONT LIGHTING SYSTEM (AFS)]

Diagnostic Procedure

Step	Inspection		Action
1	**INSPECT AUTO LEVELING SENSOR CONNECTOR CONDITION** • Switch the ignition to off. • Disconnect the negative battery cable. (See 01-17A-13 NEGATIVE BATTERY CABLE DISCONNECTION/CONNECTION [SKYACTIV-G 2.0 (WITHOUT i-stop)].) (See 01-17A-11 NEGATIVE BATTERY CABLE DISCONNECTION/CONNECTION [SKYACTIV-G 2.0].) (See 01-17B-9 NEGATIVE BATTERY CABLE DISCONNECTION/CONNECTION [SKYACTIV-D 2.2].) • Disconnect the auto leveling sensor connector. • Inspect the connector engagement and connection condition and inspect the terminals for damage, deformation, corrosion, or disconnection. • Is the connector normal?	Yes	Go to the next step.
		No	Repair or replace the connector, then go to Step 7.
2	**INSPECT AFS CONTROL MODULE CONNECTOR CONDITION** • Disconnect the AFS control module connector. • Inspect the connector engagement and connection condition and inspect the terminals for damage, deformation, corrosion, or disconnection. • Is the connector normal?	Yes	Go to the next step.
		No	Repair or replace the connector, then go to Step 7.
3	**INSPECT AUTO LEVELING SENSOR CIRCUIT FOR SHORT TO GROUND** • Verify that the auto leveling sensor and AFS control module connectors are disconnected. • Inspect for continuity between the following terminals (vehicle wiring harness side) and body ground. — Auto leveling sensor terminal C — Auto leveling sensor terminal B — Auto leveling sensor terminal A • Is there continuity?	Yes	Repair or replace the wiring harness which is shorted to ground, then go to Step 7.
		No	Go to the next step.
4	**INSPECT AUTO LEVELING SENSOR CIRCUIT FOR SHORT TO POWER SUPPLY** • Verify that the auto leveling sensor and AFS control module connectors are disconnected. • Connect the negative battery cable. (See 01-17A-13 NEGATIVE BATTERY CABLE DISCONNECTION/CONNECTION [SKYACTIV-G 2.0 (WITHOUT i-stop)].) (See 01-17A-11 NEGATIVE BATTERY CABLE DISCONNECTION/CONNECTION [SKYACTIV-G 2.0].) (See 01-17B-9 NEGATIVE BATTERY CABLE DISCONNECTION/CONNECTION [SKYACTIV-D 2.2].) • Switch the ignition ON (engine off or on). • Measure the voltage at the following terminals (vehicle wiring harness side). — Auto leveling sensor terminal C — Auto leveling sensor terminal B — Auto leveling sensor terminal A • Is the voltage **0 V**?	Yes	Go to the next step.
		No	Repair or replace the wiring harness which is shorted to power supply, then go to Step 7.

ON-BOARD DIAGNOSTIC [ADAPTIVE FRONT LIGHTING SYSTEM (AFS)]

Step	Inspection		Action
5	**INSPECT AUTO LEVELING SENSOR CIRCUIT FOR OPEN CIRCUIT** • Verify that the auto leveling sensor and AFS control module connectors are disconnected. • Switch the ignition to off. • Disconnect the negative battery cable. (See 01-17A-13 NEGATIVE BATTERY CABLE DISCONNECTION/CONNECTION [SKYACTIV-G 2.0 (WITHOUT i-stop)].) (See 01-17A-11 NEGATIVE BATTERY CABLE DISCONNECTION/CONNECTION [SKYACTIV-G 2.0].) (See 01-17B-9 NEGATIVE BATTERY CABLE DISCONNECTION/CONNECTION [SKYACTIV-D 2.2].) • Inspect the wiring harness between the following terminals (vehicle wiring harness side) for continuity. — AFS control module terminal I and auto leveling sensor terminal C — AFS control module terminal K and auto leveling sensor terminal B — AFS control module terminal C and auto leveling sensor terminal A • Is there continuity?	Yes	Go to the next step.
		No	Repair or replace the wiring harness which has an open circuit, then go to Step 7.
6	**INSPECT AUTO LEVELING SENSOR** • Inspect the auto leveling sensor. (See 09-18-80 AUTO LEVELING SENSOR INSPECTION.) • Is the auto leveling sensor normal?	Yes	Go to the next step.
		No	Replace the auto leveling sensor, then go to the next step. (See 09-18-79 AUTO LEVELING SENSOR REMOVAL/INSTALLATION.)
7	**VERIFY THAT REPAIRS HAVE BEEN COMPLETED** • Reconnect all the disconnected connectors. • Reconnect the disconnected negative battery cable. (See 01-17A-13 NEGATIVE BATTERY CABLE DISCONNECTION/CONNECTION [SKYACTIV-G 2.0 (WITHOUT i-stop)].) (See 01-17A-11 NEGATIVE BATTERY CABLE DISCONNECTION/CONNECTION [SKYACTIV-G 2.0].) (See 01-17B-9 NEGATIVE BATTERY CABLE DISCONNECTION/CONNECTION [SKYACTIV-D 2.2].) • Clear the AFS control module DTCs using the M-MDS. (See 09-02D-6 CLEARING DTC [ADAPTIVE FRONT LIGHTING SYSTEM (AFS)].) • Switch the ignition ON (engine off or on) and wait for **10 s or more**. • Perform the DTC inspection for the AFS control module using the M-MDS. (See 09-02D-5 DTC INSPECTION [ADAPTIVE FRONT LIGHTING SYSTEM (AFS)].) • Is DTC B1044:01 displayed?	Yes	Repeat the inspection from Step 1. • If the malfunction recurs, replace the AFS control module, then go to the next step. (See 09-18-30 ADAPTIVE FRONT LIGHTING SYSTEM (AFS) CONTROL MODULE REMOVAL/INSTALLATION.)
		No	Go to the next step.
8	**VERIFY IF OTHER DTCs DISPLAYED** • Are any other DTCs displayed?	Yes	Repair the malfunctioning part according to the applicable DTC troubleshooting. (See 09-02D-6 DTC TABLE [ADAPTIVE FRONT LIGHTING SYSTEM (AFS)].)
		No	DTC troubleshooting completed.

ON-BOARD DIAGNOSTIC [ADAPTIVE FRONT LIGHTING SYSTEM (AFS)]

DTC B10A3:86 [ADAPTIVE FRONT LIGHTING SYSTEM (AFS)]

id09021n934400

System malfunction location	**Communication error with swivel actuator (LH)**
Detection condition	• The AFS control module received error signals from the swivel actuator (LH) **three times** continuously with the ignition switched ON (engine off or on). • The AFS control module could not receive the signal from the swivel actuator (LH) for **5 s or more** with the ignition switched ON (engine off or on).
Fail-safe	• The swivel actuator (LH) is stopped at the position when the malfunction is determined. • The swivel actuator (RH) is moved to the center. • Control of the headlight auto leveling system is continued with the headlight leveling actuator positioned −**0.6**° from where the malfunction is determined.
Possible cause	• Front combination light (LH) poor connection • Swivel actuator (LH) malfunction • AFS control module malfunction
System wiring diagram	—

Diagnostic Procedure

Step	Inspection		Action
1	**VERIFY IGNITER INSTALLATION CONDITION** • Verify the installation condition of the igniter. (See 09-18-26 IGNITER REMOVAL/INSTALLATION.) • Is the igniter installed correctly?	Yes	Go to the next step.
		No	Install the igniter correctly, then go to Step 3. (See 09-18-26 IGNITER REMOVAL/INSTALLATION.)
2	**PERFORM DTC INSPECTION AND VERIFY IF MALFUNCTIONING PART IS SWIVEL ACTUATOR (LH)** • Clear the AFS control module DTCs using the M-MDS. (See 09-02D-6 CLEARING DTC [ADAPTIVE FRONT LIGHTING SYSTEM (AFS)].) • Switch the ignition ON (engine off or on) and wait for **5 s or more**. • Perform the DTC inspection for the AFS control module using the M-MDS. (See 09-02D-5 DTC INSPECTION [ADAPTIVE FRONT LIGHTING SYSTEM (AFS)].) • Is DTC B10A3:86 displayed?	Yes	Replace the front combination light (LH), then go to the next step. (See 09-18-7 FRONT COMBINATION LIGHT REMOVAL/INSTALLATION.)
		No	Go to Step 4.
3	**VERIFY THAT REPAIRS HAVE BEEN COMPLETED** • Clear the AFS control module DTCs using the M-MDS. (See 09-02D-6 CLEARING DTC [ADAPTIVE FRONT LIGHTING SYSTEM (AFS)].) • Switch the ignition ON (engine off or on) and wait for **5 s or more**. • Perform the DTC inspection for the AFS control module using the M-MDS. (See 09-02D-5 DTC INSPECTION [ADAPTIVE FRONT LIGHTING SYSTEM (AFS)].) • Is DTC B10A3:86 displayed?	Yes	Repeat the inspection from Step 1. • If the malfunction recurs, replace the AFS control module, then go to the next step. (See 09-18-30 ADAPTIVE FRONT LIGHTING SYSTEM (AFS) CONTROL MODULE REMOVAL/INSTALLATION.)
		No	Go to the next step.
4	**VERIFY IF OTHER DTCs DISPLAYED** • Are any other DTCs displayed?	Yes	Repair the malfunctioning part according to the applicable DTC troubleshooting. (See 09-02D-6 DTC TABLE [ADAPTIVE FRONT LIGHTING SYSTEM (AFS)].)
		No	DTC troubleshooting completed.

ON-BOARD DIAGNOSTIC [ADAPTIVE FRONT LIGHTING SYSTEM (AFS)]

DTC B10A3:87 [ADAPTIVE FRONT LIGHTING SYSTEM (AFS)]

id09021n934500

System malfunction location	**Communication error with swivel actuator (LH)**
Detection condition	• The AFS control module detected communication error with the swivel actuator (LH) for **5 s or more** with the ignition switched ON (engine off or on).
Fail-safe	• The swivel actuator (LH) is stopped at the position when the malfunction is determined. • The swivel actuator (LH) is moved to the center, or the swivel actuators (LH) and (RH) are moved to the center. • Control of the headlight auto leveling system is continued with the headlight leveling actuator positioned −**0.6**° from where the malfunction is determined.
Possible cause	• Front combination light (LH) connector or terminal malfunction • AFS control module connector or terminal malfunction • Short to ground in wiring harness between the following terminals: — AFS control module terminal D and front combination light (LH) terminal K — AFS control module terminal F and front combination light (LH) terminal J • Short to power supply in wiring harness between the following terminals: — AFS control module terminal D and front combination light (LH) terminal K — AFS control module terminal F and front combination light (LH) terminal J • Open circuit in wiring harness between the following terminals: — AFS control module terminal D and front combination light (LH) terminal K — AFS control module terminal F and front combination light (LH) terminal J • Swivel actuator (LH) malfunction • AFS control module malfunction

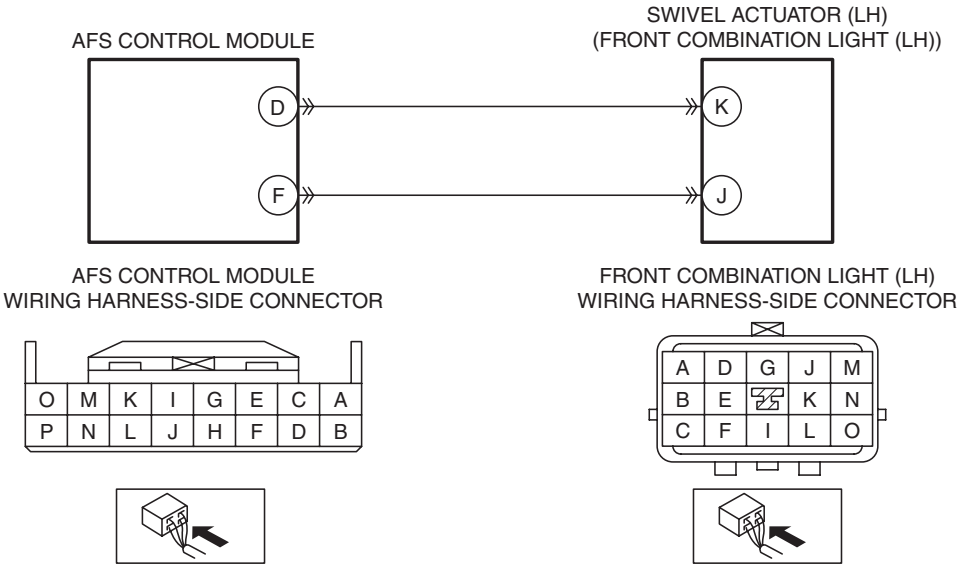

ON-BOARD DIAGNOSTIC [ADAPTIVE FRONT LIGHTING SYSTEM (AFS)]

Diagnostic Procedure

Step	Inspection		Action
1	**INSPECT FRONT COMBINATION LIGHT (LH) CONNECTOR CONDITION** • Switch the ignition to off. • Disconnect the negative battery cable. (See 01-17A-13 NEGATIVE BATTERY CABLE DISCONNECTION/CONNECTION [SKYACTIV-G 2.0 (WITHOUT i-stop)].) (See 01-17A-11 NEGATIVE BATTERY CABLE DISCONNECTION/CONNECTION [SKYACTIV-G 2.0].) (See 01-17B-9 NEGATIVE BATTERY CABLE DISCONNECTION/CONNECTION [SKYACTIV-D 2.2].) • Disconnect the front combination light (LH) connector. • Inspect the connector engagement and connection condition and inspect the terminals for damage, deformation, corrosion, or disconnection. • Is the connector normal?	Yes	Go to the next step.
		No	Repair or replace the connector, then go to Step 7.
2	**INSPECT AFS CONTROL MODULE CONNECTOR CONDITION** • Disconnect the AFS control module connector. • Inspect the connector engagement and connection condition and inspect the terminals for damage, deformation, corrosion, or disconnection. • Is the connector normal?	Yes	Go to the next step.
		No	Repair or replace the connector, then go to Step 7.
3	**INSPECT SWIVEL ACTUATOR (LH) CIRCUIT FOR SHORT TO GROUND** • Verify that the front combination light (LH) and AFS control module connectors are disconnected. • Inspect for continuity between the following terminals (vehicle wiring harness side) and body ground. — Front combination light (LH) terminal K — Front combination light (LH) terminal J • Is there continuity?	Yes	Repair or replace the wiring harness which is shorted to ground, then go to Step 7.
		No	Go to the next step.
4	**INSPECT SWIVEL ACTUATOR (LH) CIRCUIT FOR SHORT TO POWER SUPPLY** • Verify that the front combination light (LH) and AFS control module connectors are disconnected. • Connect the negative battery cable. (See 01-17A-13 NEGATIVE BATTERY CABLE DISCONNECTION/CONNECTION [SKYACTIV-G 2.0 (WITHOUT i-stop)].) (See 01-17A-11 NEGATIVE BATTERY CABLE DISCONNECTION/CONNECTION [SKYACTIV-G 2.0].) (See 01-17B-9 NEGATIVE BATTERY CABLE DISCONNECTION/CONNECTION [SKYACTIV-D 2.2].) • Switch the ignition ON (engine off or on). • Measure the voltage at the following terminals (vehicle wiring harness side). — Front combination light (LH) terminal K — Front combination light (LH) terminal J • Is the voltage **0 V**?	Yes	Repair or replace the wiring harness which is shorted to power supply, then go to Step 7.
		No	Go to the next step.

ON-BOARD DIAGNOSTIC [ADAPTIVE FRONT LIGHTING SYSTEM (AFS)]

Step	Inspection		Action
5	**INSPECT SWIVEL ACTUATOR (LH) CIRCUIT FOR OPEN CIRCUIT** • Verify that the front combination light (LH) and AFS control module connectors are disconnected. • Switch the ignition to off. • Disconnect the negative battery cable. (See 01-17A-13 NEGATIVE BATTERY CABLE DISCONNECTION/CONNECTION [SKYACTIV-G 2.0 (WITHOUT i-stop)].) (See 01-17A-11 NEGATIVE BATTERY CABLE DISCONNECTION/CONNECTION [SKYACTIV-G 2.0].) (See 01-17B-9 NEGATIVE BATTERY CABLE DISCONNECTION/CONNECTION [SKYACTIV-D 2.2].) • Inspect the wiring harness between the following terminals (vehicle wiring harness side) for continuity. — AFS control module terminal D and front combination light (LH) terminal K — AFS control module terminal F and front combination light (LH) terminal J • Is there continuity?	Yes	Go to the next step.
		No	Repair or replace the wiring harness which has an open circuit, then go to Step 7.
6	**PERFORM DTC INSPECTION AND VERIFY IF MALFUNCTIONING PART IS SWIVEL ACTUATOR (LH)** • Reconnect all the disconnected connectors. • Reconnect the disconnected negative battery cable. (See 01-17A-13 NEGATIVE BATTERY CABLE DISCONNECTION/CONNECTION [SKYACTIV-G 2.0 (WITHOUT i-stop)].) (See 01-17A-11 NEGATIVE BATTERY CABLE DISCONNECTION/CONNECTION [SKYACTIV-G 2.0].) (See 01-17B-9 NEGATIVE BATTERY CABLE DISCONNECTION/CONNECTION [SKYACTIV-D 2.2].) • Clear the AFS control module DTCs using the M-MDS. (See 09-02D-6 CLEARING DTC [ADAPTIVE FRONT LIGHTING SYSTEM (AFS)].) • Switch the ignition ON (engine off or on) and wait for **5 s or more**. • Perform the DTC inspection for the AFS control module using the M-MDS. (See 09-02D-5 DTC INSPECTION [ADAPTIVE FRONT LIGHTING SYSTEM (AFS)].) • Is DTC B10A3:87 displayed?	Yes	Replace the front combination light (LH), then go to the next step. (See 09-18-7 FRONT COMBINATION LIGHT REMOVAL/INSTALLATION.)
		No	Go to Step 8.

ON-BOARD DIAGNOSTIC [ADAPTIVE FRONT LIGHTING SYSTEM (AFS)]

Step	Inspection		Action
7	**VERIFY THAT REPAIRS HAVE BEEN COMPLETED** • Reconnect all the disconnected connectors. • Reconnect the disconnected negative battery cable. (See 01-17A-13 NEGATIVE BATTERY CABLE DISCONNECTION/CONNECTION [SKYACTIV-G 2.0 (WITHOUT i-stop)].) (See 01-17A-11 NEGATIVE BATTERY CABLE DISCONNECTION/CONNECTION [SKYACTIV-G 2.0].) (See 01-17B-9 NEGATIVE BATTERY CABLE DISCONNECTION/CONNECTION [SKYACTIV-D 2.2].) • Clear the AFS control module DTCs using the M-MDS. (See 09-02D-6 CLEARING DTC [ADAPTIVE FRONT LIGHTING SYSTEM (AFS)].) • Switch the ignition ON (engine off or on) and wait for **5 s or more**. • Perform the DTC inspection for the AFS control module using the M-MDS. (See 09-02D-5 DTC INSPECTION [ADAPTIVE FRONT LIGHTING SYSTEM (AFS)].) • Is DTC B10A3:87 displayed?	Yes	Repeat the inspection from Step 1. • If the malfunction recurs, replace the AFS control module, then go to the next step. (See 09-18-30 ADAPTIVE FRONT LIGHTING SYSTEM (AFS) CONTROL MODULE REMOVAL/INSTALLATION.)
		No	Go to the next step.
8	**VERIFY IF OTHER DTCs DISPLAYED** • Are any other DTCs displayed?	Yes	Repair the malfunctioning part according to the applicable DTC troubleshooting. (See 09-02D-6 DTC TABLE [ADAPTIVE FRONT LIGHTING SYSTEM (AFS)].)
		No	DTC troubleshooting completed.

ON-BOARD DIAGNOSTIC [ADAPTIVE FRONT LIGHTING SYSTEM (AFS)]

DTC B10A4:86 [ADAPTIVE FRONT LIGHTING SYSTEM (AFS)]

id09021n934600

System malfunction location	**Communication error with swivel actuator (RH)**
Detection condition	• The AFS control module received error signal from the swivel actuator (RH) **three times** continuously with the ignition switched ON (engine off or on). • The AFS control module could not receive signal from the swivel actuator (RH) for **5 s or more** with the ignition switched ON (engine off or on).
Fail-safe	• The swivel actuator (RH) is stopped at the position when the malfunction is determined. • The swivel actuator (LH) is moved to the center. • Control of the headlight auto leveling system is continued with the headlight leveling actuator positioned −**0.6**° from where the malfunction is determined.
Possible cause	• Front combination light (RH) poor connection • Swivel actuator (RH) malfunction • AFS control module malfunction
System wiring diagram	—

Diagnostic Procedure

Step	Inspection		Action
1	**VERIFY IGNITER INSTALLATION CONDITION** • Verify the installation condition of the igniter. (See 09-18-26 IGNITER REMOVAL/INSTALLATION.) • Is the igniter installed correctly?	Yes	Go to the next step.
		No	Install the igniter correctly, then go to Step 3. (See 09-18-26 IGNITER REMOVAL/INSTALLATION.)
2	**PERFORM DTC INSPECTION AND VERIFY IF MALFUNCTIONING PART IS SWIVEL ACTUATOR (RH)** • Clear the AFS control module DTCs using the M-MDS. (See 09-02D-6 CLEARING DTC [ADAPTIVE FRONT LIGHTING SYSTEM (AFS)].) • Switch the ignition ON (engine off or on) and wait for **5 s or more**. • Perform the DTC inspection for the AFS control module using the M-MDS. (See 09-02D-5 DTC INSPECTION [ADAPTIVE FRONT LIGHTING SYSTEM (AFS)].) • Is DTC B10A4:86 displayed?	Yes	Replace the front combination light (RH), then go to the next step. (See 09-18-7 FRONT COMBINATION LIGHT REMOVAL/INSTALLATION.)
		No	Go to Step 4.
3	**VERIFY THAT REPAIRS HAVE BEEN COMPLETED** • Clear the AFS control module DTCs using the M-MDS. (See 09-02D-6 CLEARING DTC [ADAPTIVE FRONT LIGHTING SYSTEM (AFS)].) • Switch the ignition ON (engine off or on) and wait for **5 s or more**. • Perform the DTC inspection for the AFS control module using the M-MDS. (See 09-02D-5 DTC INSPECTION [ADAPTIVE FRONT LIGHTING SYSTEM (AFS)].) • Is DTC B10A4:86 displayed?	Yes	Repeat the inspection from Step 1. • If the malfunction recurs, replace the AFS control module, then go to the next step. (See 09-18-30 ADAPTIVE FRONT LIGHTING SYSTEM (AFS) CONTROL MODULE REMOVAL/INSTALLATION.)
		No	Go to the next step.
4	**VERIFY IF OTHER DTCs DISPLAYED** • Are any other DTCs displayed?	Yes	Repair the malfunctioning part according to the applicable DTC troubleshooting. (See 09-02D-6 DTC TABLE [ADAPTIVE FRONT LIGHTING SYSTEM (AFS)].)
		No	DTC troubleshooting completed.

ON-BOARD DIAGNOSTIC [ADAPTIVE FRONT LIGHTING SYSTEM (AFS)]

DTC B10A4:87 [ADAPTIVE FRONT LIGHTING SYSTEM (AFS)]

id09021n934700

System malfunction location	**Communication error with swivel actuator (RH)**
Detection condition	• The AFS control module detected communication error with the swivel actuator (RH) for **5 s or more** with the ignition switched ON (engine off or on).
Fail-safe	• The swivel actuator (RH) is stopped at the position when the malfunction is determined. • The swivel actuator (LH) is moved to the center, or the swivel actuators (LH) and (RH) are moved to the center. • Control of the headlight auto leveling system is continued with the headlight leveling actuator positioned –**0.6**° from where the malfunction is determined.
Possible cause	• Front combination light (RH) connector or terminal malfunction • AFS control module connector or terminal malfunction • Short to ground in wiring harness between the following terminals: — AFS control module terminal D and front combination light (RH) terminal K — AFS control module terminal F and front combination light (RH) terminal J • Short to power supply in wiring harness between the following terminals: — AFS control module terminal D and front combination light (RH) terminal K — AFS control module terminal F and front combination light (RH) terminal J • Open circuit in wiring harness between the following terminals: — AFS control module terminal D and front combination light (RH) terminal K — AFS control module terminal F and front combination light (RH) terminal J • Swivel actuator (RH) malfunction • AFS control module malfunction

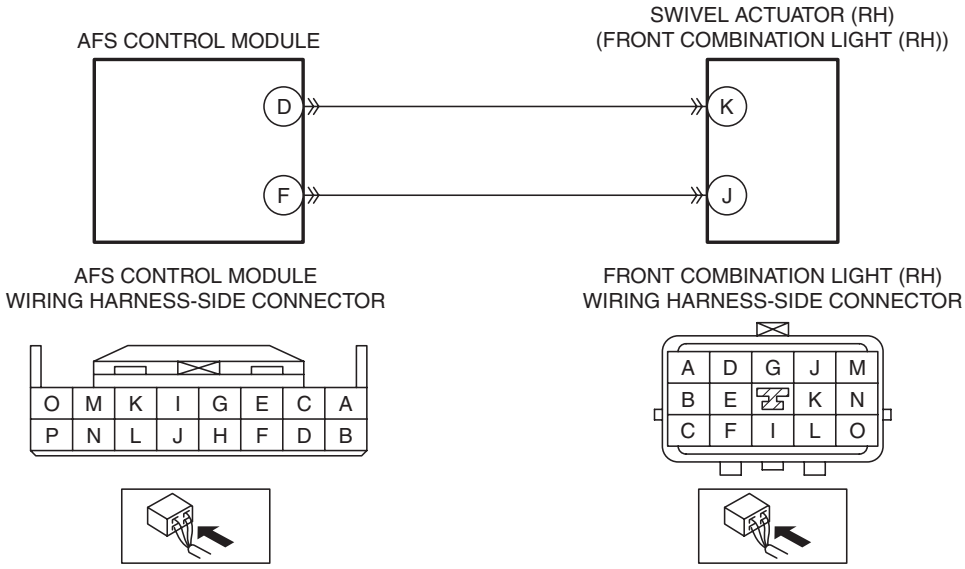

ON-BOARD DIAGNOSTIC [ADAPTIVE FRONT LIGHTING SYSTEM (AFS)]

Diagnostic Procedure

Step	Inspection		Action
1	**INSPECT FRONT COMBINATION LIGHT (RH) CONNECTOR CONDITION** • Switch the ignition to off. • Disconnect the negative battery cable. (See 01-17A-13 NEGATIVE BATTERY CABLE DISCONNECTION/CONNECTION [SKYACTIV-G 2.0 (WITHOUT i-stop)].) (See 01-17A-11 NEGATIVE BATTERY CABLE DISCONNECTION/CONNECTION [SKYACTIV-G 2.0].) (See 01-17B-9 NEGATIVE BATTERY CABLE DISCONNECTION/CONNECTION [SKYACTIV-D 2.2].) • Disconnect the front combination light (RH) connector. • Inspect the connector engagement and connection condition and inspect the terminals for damage, deformation, corrosion, or disconnection. • Is the connector normal?	Yes	Go to the next step.
		No	Repair or replace the connector, then go to Step 7.
2	**INSPECT AFS CONTROL MODULE CONNECTOR CONDITION** • Disconnect the AFS control module connector. • Inspect the connector engagement and connection condition and inspect the terminals for damage, deformation, corrosion, or disconnection. • Is the connector normal?	Yes	Go to the next step.
		No	Repair or replace the connector, then go to Step 7.
3	**INSPECT SWIVEL ACTUATOR (RH) CIRCUIT FOR SHORT TO GROUND** • Verify that the front combination light (RH) and AFS control module connectors are disconnected. • Inspect for continuity between the following terminals (vehicle wiring harness side) and body ground. — Front combination light (RH) terminal K — Front combination light (RH) terminal J • Is there continuity?	Yes	Repair or replace the wiring harness which is shorted to ground, then go to Step 7.
		No	Go to the next step.
4	**INSPECT SWIVEL ACTUATOR (RH) CIRCUIT FOR SHORT TO POWER SUPPLY** • Verify that the front combination light (RH) and AFS control module connectors are disconnected. • Connect the negative battery cable. (See 01-17A-13 NEGATIVE BATTERY CABLE DISCONNECTION/CONNECTION [SKYACTIV-G 2.0 (WITHOUT i-stop)].) (See 01-17A-11 NEGATIVE BATTERY CABLE DISCONNECTION/CONNECTION [SKYACTIV-G 2.0].) (See 01-17B-9 NEGATIVE BATTERY CABLE DISCONNECTION/CONNECTION [SKYACTIV-D 2.2].) • Switch the ignition ON (engine off or on). • Measure the voltage at the following terminals (vehicle wiring harness side). — Front combination light (RH) terminal K — Front combination light (RH) terminal J • Is the voltage **0 V**?	Yes	Go to the next step.
		No	Repair or replace the wiring harness which is shorted to power supply, then go to Step 7.

ON-BOARD DIAGNOSTIC [ADAPTIVE FRONT LIGHTING SYSTEM (AFS)]

Step	Inspection		Action
5	**INSPECT SWIVEL ACTUATOR (RH) CIRCUIT FOR OPEN CIRCUIT** • Verify that the front combination light (RH) and AFS control module connectors are disconnected. • Switch the ignition to off. • Disconnect the negative battery cable. (See 01-17A-13 NEGATIVE BATTERY CABLE DISCONNECTION/CONNECTION [SKYACTIV-G 2.0 (WITHOUT i-stop)].) (See 01-17A-11 NEGATIVE BATTERY CABLE DISCONNECTION/CONNECTION [SKYACTIV-G 2.0].) (See 01-17B-9 NEGATIVE BATTERY CABLE DISCONNECTION/CONNECTION [SKYACTIV-D 2.2].) • Inspect the wiring harness between the following terminals (vehicle wiring harness side) for continuity. — AFS control module terminal D and front combination light (RH) terminal K — AFS control module terminal F and front combination light (RH) terminal J • Is there continuity?	Yes	Go to the next step.
		No	Repair or replace the wiring harness which has an open circuit, then go to Step 7.
6	**PERFORM DTC INSPECTION AND VERIFY IF MALFUNCTIONING PART IS SWIVEL ACTUATOR (RH)** • Reconnect all the disconnected connectors. • Reconnect the disconnected negative battery cable. (See 01-17A-13 NEGATIVE BATTERY CABLE DISCONNECTION/CONNECTION [SKYACTIV-G 2.0 (WITHOUT i-stop)].) (See 01-17A-11 NEGATIVE BATTERY CABLE DISCONNECTION/CONNECTION [SKYACTIV-G 2.0].) (See 01-17B-9 NEGATIVE BATTERY CABLE DISCONNECTION/CONNECTION [SKYACTIV-D 2.2].) • Clear the AFS control module DTCs using the M-MDS. (See 09-02D-6 CLEARING DTC [ADAPTIVE FRONT LIGHTING SYSTEM (AFS)].) • Switch the ignition ON (engine off or on) and wait for **5 s or more**. • Perform the DTC inspection for the AFS control module using the M-MDS. (See 09-02D-5 DTC INSPECTION [ADAPTIVE FRONT LIGHTING SYSTEM (AFS)].) • Is DTC B10A4:87 displayed?	Yes	Replace the front combination light (RH), then go to the next step. (See 09-18-7 FRONT COMBINATION LIGHT REMOVAL/INSTALLATION.)
		No	Go to Step 8.

ON-BOARD DIAGNOSTIC [ADAPTIVE FRONT LIGHTING SYSTEM (AFS)]

Step	Inspection		Action
7	**VERIFY THAT REPAIRS HAVE BEEN COMPLETED** • Reconnect all the disconnected connectors. • Reconnect the disconnected negative battery cable. (See 01-17A-13 NEGATIVE BATTERY CABLE DISCONNECTION/CONNECTION [SKYACTIV-G 2.0 (WITHOUT i-stop)].) (See 01-17A-11 NEGATIVE BATTERY CABLE DISCONNECTION/CONNECTION [SKYACTIV-G 2.0].) (See 01-17B-9 NEGATIVE BATTERY CABLE DISCONNECTION/CONNECTION [SKYACTIV-D 2.2].) • Clear the AFS control module DTCs using the M-MDS. (See 09-02D-6 CLEARING DTC [ADAPTIVE FRONT LIGHTING SYSTEM (AFS)].) • Switch the ignition ON (engine off or on) and wait for **5 s or more**. • Perform the DTC inspection for the AFS control module using the M-MDS. (See 09-02D-5 DTC INSPECTION [ADAPTIVE FRONT LIGHTING SYSTEM (AFS)].) • Is DTC B10A4:87 displayed?	Yes	Repeat the inspection from Step 1. • If the malfunction recurs, replace the AFS control module, then go to the next step. (See 09-18-30 ADAPTIVE FRONT LIGHTING SYSTEM (AFS) CONTROL MODULE REMOVAL/INSTALLATION.)
		No	Go to the next step.
8	**VERIFY IF OTHER DTCs DISPLAYED** • Are any other DTCs displayed?	Yes	Repair the malfunctioning part according to the applicable DTC troubleshooting. (See 09-02D-6 DTC TABLE [ADAPTIVE FRONT LIGHTING SYSTEM (AFS)].)
		No	DTC troubleshooting completed.

ON-BOARD DIAGNOSTIC [ADAPTIVE FRONT LIGHTING SYSTEM (AFS)]

DTC C0051:86 [ADAPTIVE FRONT LIGHTING SYSTEM (AFS)]

id09021n017200

System malfunction location	**Error steering angle signal received from EPS control module**
Detection condition	• Either a condition in which the steering angle sensor has a malfunction and the EPS control module has not performed steering angle neutral position auto learning, or a condition in which the EPS control module has a malfunction is detected for **5 s or more**.
Fail-safe	• The swivel actuator is moved to the center. • Control of the headlight auto leveling system is continued.
Possible cause	• DTCs are stored in the start stop unit. • DTCs are stored in the EPS control module. • EPS control module malfunction • AFS control module malfunction
System wiring diagram	—

Diagnostic Procedure

Step	Inspection		Action
1	**VERIFY START STOP UNIT DTCs** • Perform the DTC inspection for the start stop unit using the M-MDS. (See 09-02C-6 DTC INSPECTION [START STOP UNIT].) • Is the DTC displayed?	Yes	Repair the malfunctioning part according to the applicable DTC troubleshooting. (See 09-02C-8 DTC TABLE [START STOP UNIT].)
		No	Go to the next step.
2	**VERIFY EPS CONTROL MODULE DTCs** • Perform the DTC inspection for the EPS control module using the M-MDS. (See 06-02-5 ELECTRIC POWER STEERING (EPS) ON-BOARD DIAGNOSIS.) • Is the DTC displayed?	Yes	Repair the malfunctioning part according to the applicable DTC troubleshooting. (See 06-02-5 ELECTRIC POWER STEERING (EPS) ON-BOARD DIAGNOSIS.)
		No	Go to the next step.
3	**PERFORM DTC INSPECTION AND VERIFY IF MALFUNCTIONING PART IS EPS CONTROL MODULE** • Clear the AFS control module DTCs using the M-MDS. (See 09-02D-6 CLEARING DTC [ADAPTIVE FRONT LIGHTING SYSTEM (AFS)].) • Switch the ignition ON (engine off or on) and wait for **5 s or more**. • Perform the DTC inspection for the AFS control module using the M-MDS. (See 09-02D-5 DTC INSPECTION [ADAPTIVE FRONT LIGHTING SYSTEM (AFS)].) • Is DTC C0051:86 displayed?	Yes	Replace the EPS control module, then go to the next step. (See 06-13-4 STEERING WHEEL AND COLUMN REMOVAL/INSTALLATION.)
		No	Go to Step 5.
4	**VERIFY THAT REPAIRS HAVE BEEN COMPLETED** • Clear the AFS control module DTCs using the M-MDS. (See 09-02D-6 CLEARING DTC [ADAPTIVE FRONT LIGHTING SYSTEM (AFS)].) • Switch the ignition ON (engine off or on) and wait for **5 s or more**. • Perform the DTC inspection for the AFS control module using the M-MDS. (See 09-02D-5 DTC INSPECTION [ADAPTIVE FRONT LIGHTING SYSTEM (AFS)].) • Is DTC C0051:86 displayed?	Yes	Replace the AFS control module, then go to the next step. (See 09-18-30 ADAPTIVE FRONT LIGHTING SYSTEM (AFS) CONTROL MODULE REMOVAL/INSTALLATION.)
		No	Go to the next step.
5	**VERIFY IF OTHER DTCs DISPLAYED** • Are any other DTCs displayed?	Yes	Repair the malfunctioning part according to the applicable DTC troubleshooting. (See 09-02D-6 DTC TABLE [ADAPTIVE FRONT LIGHTING SYSTEM (AFS)].)
		No	DTC troubleshooting completed.

ON-BOARD DIAGNOSTIC [ADAPTIVE FRONT LIGHTING SYSTEM (AFS)]

DTC U0001:88/U0100:00/U0131:00/U0140:00/U0155:00 [ADAPTIVE FRONT LIGHTING SYSTEM (AFS)]

id09021n017300

System malfunction location	**U0001:88** • **Unit communication error (HS-CAN)** **U0100:00** • **Communication error with PCM** **U0131:00** • **Communication error with EPS control module** **U0140:00** • **Communication error with front body control module (FBCM)** **U0155:00** • **Communication error with instrument cluster**
Detection condition	• U0001:88 — The AFS control module detected CAN bus communication line (HS-CAN) malfunction **ten times** continuously. • U0100:00 — The AFS control module could not receive CAN signal from the PCM for **5 s or more**. • U0131:00 — The AFS control module could not receive CAN signal from the EPS control module for **5 s or more**. • U0140:00 — The AFS control module could not receive CAN signal from the front body control module (FBCM) for **5 s or more**. • U0155:00 — The AFS control module could not receive CAN signal from the instrument cluster for **5 s or more**.
Fail-safe	• U0001:88 — The swivel actuator is moved to the center. — The headlight leveling actuator is stopped at the position when the malfunction is determined. • U0100:00 — The swivel actuator is moved to the center. — The headlight leveling actuator is stopped at the position when the malfunction is determined. • U0131:00 — The swivel actuator is moved to the center. — Control of the headlight auto leveling system is continued. • U0140:00 — The swivel actuator is moved to the center. — The headlight leveling actuator is stopped at the position when the malfunction is determined. • U0155:00 — The swivel actuator is moved to the center. — Control of the headlight auto leveling system is continued.
Possible cause	• Malfunction in CAN bus communication line • Malfunction in CAN communication line between PCM and AFS control module • Malfunction in CAN communication line between EPS control module and AFS control module • Malfunction in CAN communication line between front body control module (FBCM) and AFS control module • Malfunction in CAN communication line between instrument cluster and AFS control module
System wiring diagram	—

Diagnostic Procedure

- Perform the malfunction diagnosis according to the troubleshooting procedure for the multiplex communication system. (See 10-02A-1 FOREWORD [SKYACTIV-G 2.0 (L.H.D.)].) (See 10-02B-1 FOREWORD [SKYACTIV-G 2.0 (R.H.D.)].) (See 10-02C-1 FOREWORD [SKYACTIV-D 2.2 (L.H.D.)].) (See 10-02D-1 FOREWORD [SKYACTIV-D 2.2 (R.H.D.)].)

ON-BOARD DIAGNOSTIC [ADAPTIVE FRONT LIGHTING SYSTEM (AFS)]

DTC U0320:09 [ADAPTIVE FRONT LIGHTING SYSTEM (AFS)]

id09021n017400

System malfunction location	**EPS control module malfunction**
Detection condition	• The AFS control module received CAN error signal from the EPS control module for **5 s or more** with the ignition switched ON (engine off or on).
Fail-safe	• The swivel actuator is moved to the center. • Control of the headlight auto leveling system is continued.
Possible cause	• DTCs are stored in the EPS control module. • EPS control module malfunction • AFS control module malfunction
System wiring diagram	—

Diagnostic Procedure

Step	Inspection		Action
1	**VERIFY EPS CONTROL MODULE DTCs** • Perform the DTC inspection for the EPS control module using the M-MDS. (See 06-02-5 ELECTRIC POWER STEERING (EPS) ON-BOARD DIAGNOSIS.) • Is the DTC displayed?	Yes	Repair the malfunctioning part according to the applicable DTC troubleshooting. (See 06-02-5 ELECTRIC POWER STEERING (EPS) ON-BOARD DIAGNOSIS.)
		No	Go to the next step.
2	**PERFORM DTC INSPECTION AND VERIFY IF MALFUNCTIONING PART IS EPS CONTROL MODULE** • Clear the AFS control module DTCs using the M-MDS. (See 09-02D-6 CLEARING DTC [ADAPTIVE FRONT LIGHTING SYSTEM (AFS)].) • Switch the ignition ON (engine off or on) and wait for **5 s or more**. • Perform the DTC inspection for the AFS control module using the M-MDS. (See 09-02D-5 DTC INSPECTION [ADAPTIVE FRONT LIGHTING SYSTEM (AFS)].) • Is the DTC U0320:09 displayed?	Yes	Replace the EPS control module, then go to the next step. (See 06-13-4 STEERING WHEEL AND COLUMN REMOVAL/INSTALLATION.)
		No	Go to Step 4.
3	**VERIFY THAT REPAIRS HAVE BEEN COMPLETED** • Clear the AFS control module DTCs using the M-MDS. (See 09-02D-6 CLEARING DTC [ADAPTIVE FRONT LIGHTING SYSTEM (AFS)].) • Switch the ignition ON (engine off or on) and wait for **5 s or more**. • Perform the DTC inspection for the AFS control module using the M-MDS. (See 09-02D-5 DTC INSPECTION [ADAPTIVE FRONT LIGHTING SYSTEM (AFS)].) • Is the DTC U0320:09 displayed?	Yes	Replace the AFS control module, then go to the next step. (See 09-18-30 ADAPTIVE FRONT LIGHTING SYSTEM (AFS) CONTROL MODULE REMOVAL/INSTALLATION.)
		No	Go to the next step.
4	**VERIFY IF OTHER DTCs DISPLAYED** • Are any other DTCs displayed?	Yes	Repair the malfunctioning part according to the applicable DTC troubleshooting. (See 09-02D-6 DTC TABLE [ADAPTIVE FRONT LIGHTING SYSTEM (AFS)].)
		No	DTC troubleshooting completed.

ON-BOARD DIAGNOSTIC [ADAPTIVE FRONT LIGHTING SYSTEM (AFS)]

DTC U0420:68 [ADAPTIVE FRONT LIGHTING SYSTEM (AFS)]

id09021n017500

System malfunction location	**Error signal received from EPS control module**
Detection condition	• The AFS control module received error signal from the EPS control module for **5 s or more** with the ignition switched ON (engine off or on).
Fail-safe	• The swivel actuator is moved to the center. • Control of the headlight auto leveling system is continued.
Possible cause	• DTCs are stored in the EPS control module. • EPS control module malfunction • AFS control module malfunction
System wiring diagram	—

Diagnostic Procedure

Step	Inspection		Action
1	**VERIFY EPS CONTROL MODULE DTCs** • Perform the DTC inspection for the EPS control module using the M-MDS. (See 06-02-5 ELECTRIC POWER STEERING (EPS) ON-BOARD DIAGNOSIS.) • Is the DTC displayed?	Yes	Repair the malfunctioning part according to the applicable DTC troubleshooting. (See 06-02-5 ELECTRIC POWER STEERING (EPS) ON-BOARD DIAGNOSIS.)
		No	Go to the next step.
2	**PERFORM DTC INSPECTION AND VERIFY IF MALFUNCTIONING PART IS EPS CONTROL MODULE** • Clear the AFS control module DTCs using the M-MDS. (See 09-02D-6 CLEARING DTC [ADAPTIVE FRONT LIGHTING SYSTEM (AFS)].) • Switch the ignition ON (engine off or on) and wait for **5 s or more**. • Perform the DTC inspection for the AFS control module using the M-MDS. (See 09-02D-5 DTC INSPECTION [ADAPTIVE FRONT LIGHTING SYSTEM (AFS)].) • Is the DTC U0420:68 displayed?	Yes	Replace the EPS control module, then go to the next step. (See 06-13-4 STEERING WHEEL AND COLUMN REMOVAL/INSTALLATION.)
		No	Go to Step 4.
3	**VERIFY THAT REPAIRS HAVE BEEN COMPLETED** • Clear the AFS control module DTCs using the M-MDS. (See 09-02D-6 CLEARING DTC [ADAPTIVE FRONT LIGHTING SYSTEM (AFS)].) • Switch the ignition ON (engine off or on) and wait for **5 s or more**. • Perform the DTC inspection for the AFS control module using the M-MDS. (See 09-02D-5 DTC INSPECTION [ADAPTIVE FRONT LIGHTING SYSTEM (AFS)].) • Is DTC U0420:68 displayed?	Yes	Replace the AFS control module, then go to the next step. (See 09-18-30 ADAPTIVE FRONT LIGHTING SYSTEM (AFS) CONTROL MODULE REMOVAL/INSTALLATION.)
		No	Go to the next step.
4	**VERIFY IF OTHER DTCs DISPLAYED** • Are any other DTCs displayed?	Yes	Repair the malfunctioning part according to the applicable DTC troubleshooting. (See 09-02D-6 DTC TABLE [ADAPTIVE FRONT LIGHTING SYSTEM (AFS)].)
		No	DTC troubleshooting completed.

ON-BOARD DIAGNOSTIC [ADAPTIVE FRONT LIGHTING SYSTEM (AFS)]

DTC U0423:68 [ADAPTIVE FRONT LIGHTING SYSTEM (AFS)]

id09021n017600

System malfunction location	**Error signal received from instrument cluster** • **AFS OFF switch error signal** • **Ignition switch error signal** • **Selector lever position (R position) (ATX)/Reverse (MTX) signal error** • **Selector lever position (R position) (ATX)/Reverse (MTX) signal not determined**
Detection condition	• AFS OFF switch error signal — The AFS control module received AFS OFF switch error signal for **5 s or more** with the ignition switched ON (engine off or on). • Ignition switch error signal — The AFS control module received ignition switch error signal for **5 s or more** with the ignition switched ON (engine off or on). • Selector lever position (R position) (ATX)/Reverse (MTX) signal error — The AFS control module received selector lever position (R position) (ATX)/Reverse (MTX) signal error for **5 s or more** with the ignition switched ON (engine off or on). • Selector lever position (R position) (ATX)/Reverse (MTX) signal not determined — The AFS control module detected undetermined selector lever position (R position) (ATX)/Reverse (MTX) signal.
Fail-safe	• AFS OFF switch error signal — Control of the swivel actuator is continued with the AFS OFF switch fixed in the condition when the malfunction is detected. — Control of the headlight auto leveling system is continued. • Ignition switch error signal — Control of the AFS is continued with the ignition switched ON (engine on). — Control of the headlight auto leveling system is continued. • Selector lever position (R position) (ATX)/Reverse (MTX) signal error — The swivel actuator is moved to the center. — Control of the headlight auto leveling system is continued. • Selector lever position (R position) (ATX)/Reverse (MTX) signal not determined — Control of the swivel actuator is continued with the transaxle range sensor (ATX)/back-up light switch (MTX) fixed in the condition when the malfunction is determined. — Control of the headlight auto leveling system is continued.
Possible cause	• DTCs are stored in the instrument cluster. • Instrument cluster malfunction • AFS control module malfunction
System wiring diagram	—

Diagnostic Procedure

Step	Inspection		Action
1	**VERIFY INSTRUMENT CLUSTER DTCs** • Perform the DTC inspection for the instrument cluster using the M-MDS. (See 09-02G-7 DTC INSPECTION [INSTRUMENT CLUSTER].) • Is the DTC displayed?	Yes	Repair the malfunctioning part according to the applicable DTC troubleshooting. (See 09-02G-10 DTC TABLE [INSTRUMENT CLUSTER].)
		No	Go to the next step.
2	**PERFORM DTC INSPECTION AND VERIFY IF MALFUNCTIONING PART IS INSTRUMENT CLUSTER** • Clear the AFS control module DTCs using the M-MDS. (See 09-02D-6 CLEARING DTC [ADAPTIVE FRONT LIGHTING SYSTEM (AFS)].) • Switch the ignition ON (engine off or on) and wait for **5 s or more**. • Perform the DTC inspection for the AFS control module using the M-MDS. (See 09-02D-5 DTC INSPECTION [ADAPTIVE FRONT LIGHTING SYSTEM (AFS)].) • Is the DTC U0423:68 displayed?	Yes	Replace the instrument cluster, then go to the next step. (See 09-22-6 INSTRUMENT CLUSTER REMOVAL/INSTALLATION.)
		No	Go to Step 4.

ON-BOARD DIAGNOSTIC [ADAPTIVE FRONT LIGHTING SYSTEM (AFS)]

Step	Inspection		Action
3	**VERIFY THAT REPAIRS HAVE BEEN COMPLETED** • Clear the AFS control module DTCs using the M-MDS. (See 09-02D-6 CLEARING DTC [ADAPTIVE FRONT LIGHTING SYSTEM (AFS)].) • Switch the ignition ON (engine off or on) and wait for **5 s or more**. • Perform the DTC inspection for the AFS control module using the M-MDS. (See 09-02D-5 DTC INSPECTION [ADAPTIVE FRONT LIGHTING SYSTEM (AFS)].) • Is the DTC U0423:68 displayed?	Yes	Replace the AFS control module, then go to the next step. (See 09-18-30 ADAPTIVE FRONT LIGHTING SYSTEM (AFS) CONTROL MODULE REMOVAL/INSTALLATION.)
		No	Go to the next step.
4	**VERIFY IF OTHER DTCs DISPLAYED** • Are any other DTCs displayed?	Yes	Repair the malfunctioning part according to the applicable DTC troubleshooting. (See 09-02D-6 DTC TABLE [ADAPTIVE FRONT LIGHTING SYSTEM (AFS)].)
		No	DTC troubleshooting completed.

DTC U2005:86 [ADAPTIVE FRONT LIGHTING SYSTEM (AFS)]

id09021n017700

System malfunction location	Error signal received from PCM
Detection condition	• The AFS control module received vehicle speed signal error from the PCM for **5 s or more** with the ignition switched ON (engine off or on).
Fail-safe	• The swivel actuator is moved to the center. • The headlight leveling actuator is stopped at the position when the malfunction is determined.
Possible cause	• DTCs are stored in the PCM. • PCM malfunction • AFS control module malfunction
System wiring diagram	—

Diagnostic Procedure

Step	Inspection		Action
1	**VERIFY PCM DTCs** • Perform the DTC inspection for the PCM using the M-MDS. (See 01-02-8 ON-BOARD DIAGNOSTIC TEST [SKYACTIV-G 2.0].) • Is the DTC displayed?	Yes	Repair the malfunctioning part according to the applicable DTC troubleshooting. (See 01-02-14 DTC TABLE [SKYACTIV-G 2.0].)
		No	Go to the next step.
2	**PERFORM DTC INSPECTION AND VERIFY IF MALFUNCTIONING PART IS PCM** • Clear the AFS control module DTCs using the M-MDS. (See 09-02D-6 CLEARING DTC [ADAPTIVE FRONT LIGHTING SYSTEM (AFS)].) • Switch the ignition ON (engine off or on) and wait for **5 s or more**. • Perform the DTC inspection for the AFS control module using the M-MDS. (See 09-02D-5 DTC INSPECTION [ADAPTIVE FRONT LIGHTING SYSTEM (AFS)].) • Is the DTC U2005:86 displayed?	Yes	Replace the PCM, then go to the next step. (See 01-40-10 PCM REMOVAL/INSTALLATION [SKYACTIV-G 2.0].)
		No	Go to Step 4.

ON-BOARD DIAGNOSTIC [ADAPTIVE FRONT LIGHTING SYSTEM (AFS)]

Step	Inspection		Action
3	**VERIFY THAT REPAIRS HAVE BEEN COMPLETED** • Clear the AFS control module DTCs using the M-MDS. (See 09-02D-6 CLEARING DTC [ADAPTIVE FRONT LIGHTING SYSTEM (AFS)].) • Switch the ignition ON (engine off or on) and wait for **5 s or more**. • Perform the DTC inspection for the AFS control module using the M-MDS. (See 09-02D-5 DTC INSPECTION [ADAPTIVE FRONT LIGHTING SYSTEM (AFS)].) • Is the DTC U2005:86 displayed?	Yes	Replace the AFS control module, then go to the next step. (See 09-18-30 ADAPTIVE FRONT LIGHTING SYSTEM (AFS) CONTROL MODULE REMOVAL/INSTALLATION.)
		No	Go to the next step.
4	**VERIFY IF OTHER DTCs DISPLAYED** • Are any other DTCs displayed?	Yes	Repair the malfunctioning part according to the applicable DTC troubleshooting. (See 09-02D-6 DTC TABLE [ADAPTIVE FRONT LIGHTING SYSTEM (AFS)].)
		No	DTC troubleshooting completed.

DTC U2300:54 [ADAPTIVE FRONT LIGHTING SYSTEM (AFS)]

id09021n017800

System malfunction location	**Error configuration data received from instrument cluster**
Detection condition	• The AFS control module received error configuration data from the instrument cluster for **30 s or more** with the ignition switched ON (engine off or on).
Fail-safe	• Control of the AFS is continued. • Control of the headlight auto leveling system is continued.
Possible cause	• DTCs are stored in the instrument cluster. — Instrument cluster configuration not implemented — Instrument cluster internal memory malfunction • Instrument cluster configuration data error • AFS control module malfunction
System wiring diagram	—

Diagnostic Procedure

Step	Inspection		Action
1	**VERIFY INSTRUMENT CLUSTER DTCs** • Perform the DTC inspection for the instrument cluster using the M-MDS. (See 09-02G-7 DTC INSPECTION [INSTRUMENT CLUSTER].) • Is the DTC displayed?	Yes	Repair the malfunctioning part according to the applicable DTC troubleshooting. (See 09-02G-10 DTC TABLE [INSTRUMENT CLUSTER].)
		No	Go to the next step.
2	**RESET INSTRUMENT CLUSTER CONFIGURATION DATA** • Using the M-MDS, perform the instrument cluster configuration with the As-Built data. (See 09-22-19 INSTRUMENT CLUSTER CONFIGURATION (USING AS-BUILT DATA).) • Clear the AFS control module DTCs using the M-MDS. (See 09-02G-9 CLEARING DTC [INSTRUMENT CLUSTER].) • Switch the ignition ON (engine off or on) and wait for **30 s or more**. • Perform the DTC inspection for the AFS control module using the M-MDS. (See 09-02G-7 DTC INSPECTION [INSTRUMENT CLUSTER].) • Is the DTC U2300:54 displayed?	Yes	Replace the AFS control module, then go to the next step. (See 09-18-30 ADAPTIVE FRONT LIGHTING SYSTEM (AFS) CONTROL MODULE REMOVAL/INSTALLATION.)
		No	Go to the next step.

ON-BOARD DIAGNOSTIC [ADAPTIVE FRONT LIGHTING SYSTEM (AFS)]

Step	Inspection		Action
3	**VERIFY IF OTHER DTCs DISPLAYED** • Are any other DTCs displayed?	Yes	Repair the malfunctioning part according to the applicable DTC troubleshooting. (See 09-02D-6 DTC TABLE [ADAPTIVE FRONT LIGHTING SYSTEM (AFS)].)
		No	DTC troubleshooting completed.

DTC U2300:55 [ADAPTIVE FRONT LIGHTING SYSTEM (AFS)]

id09021n017900

System malfunction location	**Instrument cluster configuration not implemented**
Detection condition	• The AFS control module received a signal which indicates the instrument cluster configuration is not performed.
Fail-safe	• The swivel actuator is moved to the center. • The headlight leveling actuator is stopped at the position when the malfunction is determined.
Possible cause	**Note** • To correctly write the configuration data sent from the instrument cluster to the AFS control module, **30 s or more** have to be elapsed since the ignition is switched ON (engine off or on). • Instrument cluster configuration is not completed. • AFS control module malfunction
System wiring diagram	—

Diagnostic Procedure

Step	Inspection		Action
1	**RESET CONFIGURATION DATA FROM INSTRUMENT CLUSTER TO AFS CONTROL MODULE** • Clear the AFS control module DTCs using the M-MDS. (See 09-02D-6 CLEARING DTC [ADAPTIVE FRONT LIGHTING SYSTEM (AFS)].) • Switch the ignition ON (engine off or on) and wait for **30 s or more**. • Perform the DTC inspection for the AFS control module using the M-MDS. (See 09-02D-5 DTC INSPECTION [ADAPTIVE FRONT LIGHTING SYSTEM (AFS)].) • Is the DTC U2300:55 displayed?	Yes	Replace the AFS control module, then go to the next step. (See 09-18-30 ADAPTIVE FRONT LIGHTING SYSTEM (AFS) CONTROL MODULE REMOVAL/INSTALLATION.)
		No	Go to the next step.
2	**VERIFY IF OTHER DTCs DISPLAYED** • Are any other DTCs displayed?	Yes	Repair the malfunctioning part according to the applicable DTC troubleshooting. (See 09-02D-6 DTC TABLE [ADAPTIVE FRONT LIGHTING SYSTEM (AFS)].)
		No	DTC troubleshooting completed.

ON-BOARD DIAGNOSTIC [ADAPTIVE FRONT LIGHTING SYSTEM (AFS)]

DTC U2300:56 [ADAPTIVE FRONT LIGHTING SYSTEM (AFS)]

id09021n018000

System malfunction location	**Configuration data unmatched with instrument cluster**
Detection condition	• Configuration data of the AFS control module and instrument cluster are not matched.
Fail-safe	• Control of the AFS is continued. • Control of the headlight auto leveling system is continued.
Possible cause	• DTCs are stored in the instrument cluster. — Instrument cluster configuration not implemented — Instrument cluster internal memory malfunction • Instrument cluster configuration data error • AFS control module malfunction
System wiring diagram	—

Diagnostic Procedure

Step	Inspection		Action
1	**VERIFY INSTRUMENT CLUSTER DTCs** • Perform the DTC inspection for the instrument cluster using the M-MDS. (See 09-02G-7 DTC INSPECTION [INSTRUMENT CLUSTER].) • Is the DTC displayed?	Yes	Repair the malfunctioning part according to the applicable DTC troubleshooting. (See 09-02G-10 DTC TABLE [INSTRUMENT CLUSTER].)
		No	Go to the next step.
2	**RESET INSTRUMENT CLUSTER CONFIGURATION DATA** • Using the M-MDS, perform the instrument cluster configuration with the As-Built data. (See 09-22-19 INSTRUMENT CLUSTER CONFIGURATION (USING AS-BUILT DATA).) • Clear the AFS control module DTCs using the M-MDS. (See 09-02D-6 CLEARING DTC [ADAPTIVE FRONT LIGHTING SYSTEM (AFS)].) • Perform the DTC inspection for the AFS control module using the M-MDS. (See 09-02D-5 DTC INSPECTION [ADAPTIVE FRONT LIGHTING SYSTEM (AFS)].) • Is the DTC U2300:56 displayed?	Yes	Replace the AFS control module, then go to the next step. (See 09-18-30 ADAPTIVE FRONT LIGHTING SYSTEM (AFS) CONTROL MODULE REMOVAL/INSTALLATION.)
		No	Go to the next step.
3	**VERIFY IF OTHER DTCs DISPLAYED** • Are any other DTCs displayed?	Yes	Repair the malfunctioning part according to the applicable DTC troubleshooting. (See 09-02D-6 DTC TABLE [ADAPTIVE FRONT LIGHTING SYSTEM (AFS)].)
		No	DTC troubleshooting completed.

ON-BOARD DIAGNOSTIC [ADAPTIVE FRONT LIGHTING SYSTEM (AFS)]

DTC U3000:42 [ADAPTIVE FRONT LIGHTING SYSTEM (AFS)]

id09021n018100

System malfunction location	**AFS control module internal malfunction**
Detection condition	• Malfunction in the AFS control module internal EEPROM is detected.
Fail-safe	• The swivel actuator is moved to the center. • The headlight leveling actuator is stopped at the position when the malfunction is determined.
Possible cause	• AFS control module internal malfunction
System wiring diagram	—

Diagnostic Procedure

Step	Inspection		Action
1	**PERFORM DTC INSPECTION AND VERIFY IF MALFUNCTIONING PART IS AFS CONTROL MODULE** • Clear the AFS control module DTCs using the M-MDS. (See 09-02D-6 CLEARING DTC [ADAPTIVE FRONT LIGHTING SYSTEM (AFS)].) • Perform the DTC inspection for the AFS control module using the M-MDS. (See 09-02D-5 DTC INSPECTION [ADAPTIVE FRONT LIGHTING SYSTEM (AFS)].) • Is DTC U3000:42 displayed?	Yes	Replace the AFS control module, then go to the next step. (See 09-18-30 ADAPTIVE FRONT LIGHTING SYSTEM (AFS) CONTROL MODULE REMOVAL/INSTALLATION.)
		No	Go to the next step.
2	**VERIFY IF OTHER DTCs DISPLAYED** • Are any other DTCs displayed?	Yes	Repair the malfunctioning part according to the applicable DTC troubleshooting. (See 09-02D-6 DTC TABLE [ADAPTIVE FRONT LIGHTING SYSTEM (AFS)].)
		No	DTC troubleshooting completed.

DTC U3000:49 [ADAPTIVE FRONT LIGHTING SYSTEM (AFS)]

id09021n935100

System malfunction location	**AFS control module internal malfunction** • **RAM/ROM malfunction** • **AFS function malfunction** • **CAN hardware malfunction**
Detection condition	• RAM/ROM malfunction — The AFS control module detected a malfunction in the internal RAM/ROM. • AFS function malfunction — The AFS control module detected AFS function malfunction **three times**. • CAN hardware malfunction — The AFS control module detected CAN hardware malfunction **three times**.
Fail-safe	• RAM/ROM malfunction — The swivel actuator is moved to the center. — The headlight leveling actuator is stopped at the position when the malfunction is determined. • AFS function malfunction — — • CAN hardware malfunction — The swivel actuator is moved to the center. — The headlight leveling actuator is stopped at the position when the malfunction is determined.
Possible cause	• AFS control module internal malfunction
System wiring diagram	—

ON-BOARD DIAGNOSTIC [ADAPTIVE FRONT LIGHTING SYSTEM (AFS)]

Diagnostic Procedure

Step	Inspection		Action
1	**PERFORM DTC INSPECTION AND VERIFY IF MALFUNCTIONING PART IS AFS CONTROL MODULE** • Clear the AFS control module DTCs using the M-MDS. (See 09-02D-6 CLEARING DTC [ADAPTIVE FRONT LIGHTING SYSTEM (AFS)].) • Perform the DTC inspection for the AFS control module using the M-MDS. (See 09-02D-5 DTC INSPECTION [ADAPTIVE FRONT LIGHTING SYSTEM (AFS)].) • Is DTC U3000:49 displayed?	Yes	Replace the AFS control module, then go to the next step. (See 09-18-30 ADAPTIVE FRONT LIGHTING SYSTEM (AFS) CONTROL MODULE REMOVAL/INSTALLATION.)
		No	Go to the next step.
2	**VERIFY IF OTHER DTCs DISPLAYED** • Are any other DTCs displayed?	Yes	Repair the malfunctioning part according to the applicable DTC troubleshooting. (See 09-02D-6 DTC TABLE [ADAPTIVE FRONT LIGHTING SYSTEM (AFS)].)
		No	DTC troubleshooting completed.

DTC U3003:16 [ADAPTIVE FRONT LIGHTING SYSTEM (AFS)]

id09021n935200

System malfunction location	**AFS control module low power supply voltage input**
Detection condition	• AFS control module power supply circuit voltage of **9 V or less** is detected for **5 s or more** with the ignition switched ON (engine off or on).
Fail-safe	• The swivel actuator is stopped at the position when the malfunction is determined. • The headlight leveling actuator is stopped at the position when the malfunction is determined.
Possible cause	• DTCs are stored in the PCM. • Battery malfunction • Generator malfunction • AFS control module connector or terminal malfunction • AFS control module power supply circuit malfunction — Short to ground in wiring harness between METER1 10 A fuse and AFS control module terminal N — METER1 10 A fuse malfunction — Open circuit in wiring harness between IG1 relay and AFS control module terminal N • AFS control module malfunction

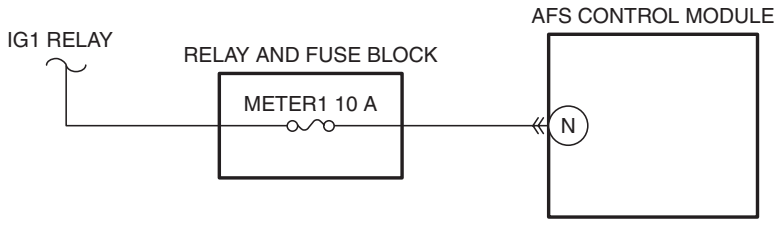

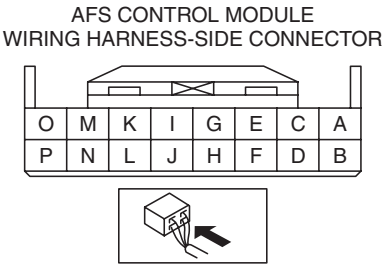

ON-BOARD DIAGNOSTIC [ADAPTIVE FRONT LIGHTING SYSTEM (AFS)]

Diagnostic Procedure

Step	Inspection		Action
1	**VERIFY PCM DTCs** • Perform the DTC inspection for the PCM using the M-MDS. (See 01-02-8 ON-BOARD DIAGNOSTIC TEST [SKYACTIV-G 2.0].) • Is the DTC displayed?	Yes	Repair the malfunctioning part according to the applicable DTC troubleshooting. (See 01-02-14 DTC TABLE [SKYACTIV-G 2.0].)
		No	Go to the next step.
2	**INSPECT BATTERY** • Inspect the battery. (See 01-17A-8 BATTERY INSPECTION [SKYACTIV-G 2.0 (WITHOUT i-stop)].) (See 01-17A-7 BATTERY INSPECTION [SKYACTIV-G 2.0].) (See 01-17B-6 BATTERY INSPECTION [SKYACTIV-D 2.2].) • Is the battery normal?	Yes	Go to the next step.
		No	Recharge or replace the battery, then go to Step 6. (See 01-17A-10 BATTERY RECHARGING [SKYACTIV-G 2.0 (WITHOUT i-stop)].) (See 01-17A-9 BATTERY RECHARGING [SKYACTIV-G 2.0].) (See 01-17B-8 BATTERY RECHARGING [SKYACTIV-D 2.2].) (See 01-17A-3 BATTERY REMOVAL/INSTALLATION [SKYACTIV-G 2.0].) (See 01-17B-3 BATTERY REMOVAL/INSTALLATION [SKYACTIV-D 2.2].)
3	**INSPECT GENERATOR** • Inspect the generator. (See 01-17A-19 GENERATOR INSPECTION [SKYACTIV-G 2.0].) (See 01-17B-16 GENERATOR INSPECTION [SKYACTIV-D 2.2].) • Is the generator normal?	Yes	Go to the next step.
		No	Replace the generator, then go to Step 6. (See 01-17A-17 GENERATOR REMOVAL/INSTALLATION [SKYACTIV-G 2.0].) (See 01-17B-14 GENERATOR REMOVAL/INSTALLATION [SKYACTIV-D 2.2].)
4	**INSPECT AFS CONTROL MODULE CONNECTOR CONDITION** • Switch the ignition to off. • Disconnect the negative battery cable. (See 01-17A-13 NEGATIVE BATTERY CABLE DISCONNECTION/CONNECTION [SKYACTIV-G 2.0 (WITHOUT i-stop)].) (See 01-17A-11 NEGATIVE BATTERY CABLE DISCONNECTION/CONNECTION [SKYACTIV-G 2.0].) (See 01-17B-9 NEGATIVE BATTERY CABLE DISCONNECTION/CONNECTION [SKYACTIV-D 2.2].) • Disconnect the AFS control module connector. • Inspect the connector engagement and connection condition and inspect the terminals for damage, deformation, corrosion, or disconnection. • Is the connector normal?	Yes	Go to the next step.
		No	Repair or replace the connector, then go to Step 6.
5	**VERIFY AFS CONTROL MODULE POWER SUPPLY VOLTAGE** • Reconnect all the disconnected connectors. • Connect the negative battery cable. (See 01-17A-13 NEGATIVE BATTERY CABLE DISCONNECTION/CONNECTION [SKYACTIV-G 2.0 (WITHOUT i-stop)].) (See 01-17A-11 NEGATIVE BATTERY CABLE DISCONNECTION/CONNECTION [SKYACTIV-G 2.0].) (See 01-17B-9 NEGATIVE BATTERY CABLE DISCONNECTION/CONNECTION [SKYACTIV-D 2.2].) • Display PID VPWR_IG using the M-MDS. (See 09-02D-40 PID/DATA MONITOR INSPECTION [ADAPTIVE FRONT LIGHTING SYSTEM (AFS)].) • Is the voltage **B+**?	Yes	Go to the next step.
		No	Inspect the METER1 10 A fuse. • If a fuse is burnt out: — Repair or replace the wiring harness which is shorted to ground. — Replace the fuse. • If a fuse is damaged: — Replace the fuse. • If the fuse is normal: — Repair or replace the wiring harness which has an open circuit. Go to the next step.

ON-BOARD DIAGNOSTIC [ADAPTIVE FRONT LIGHTING SYSTEM (AFS)]

Step	Inspection		Action
6	**VERIFY THAT REPAIRS HAVE BEEN COMPLETED** • Reconnect all the disconnected connectors. • Reconnect the disconnected negative battery cable. (See 01-17A-13 NEGATIVE BATTERY CABLE DISCONNECTION/CONNECTION [SKYACTIV-G 2.0 (WITHOUT i-stop)].) (See 01-17A-11 NEGATIVE BATTERY CABLE DISCONNECTION/CONNECTION [SKYACTIV-G 2.0].) (See 01-17B-9 NEGATIVE BATTERY CABLE DISCONNECTION/CONNECTION [SKYACTIV-D 2.2].) • Clear the AFS control module DTCs using the M-MDS. (See 09-02D-6 CLEARING DTC [ADAPTIVE FRONT LIGHTING SYSTEM (AFS)].) • Switch the ignition ON (engine off or on) and wait for **5 s or more**. • Perform the DTC inspection for the AFS control module using the M-MDS. (See 09-02D-5 DTC INSPECTION [ADAPTIVE FRONT LIGHTING SYSTEM (AFS)].) • Is DTC U3003:16 displayed?	Yes	Repeat the inspection from Step 1. • If the malfunction recurs, replace the AFS control module, then go to the next step. (See 09-18-30 ADAPTIVE FRONT LIGHTING SYSTEM (AFS) CONTROL MODULE REMOVAL/INSTALLATION.)
		No	Go to the next step.
7	**VERIFY IF OTHER DTCs DISPLAYED** • Are any other DTCs displayed?	Yes	Repair the malfunctioning part according to the applicable DTC troubleshooting. (See 09-02D-6 DTC TABLE [ADAPTIVE FRONT LIGHTING SYSTEM (AFS)].)
		No	DTC troubleshooting completed.

DTC U3003:17 [ADAPTIVE FRONT LIGHTING SYSTEM (AFS)]

id09021n935300

System malfunction location	**AFS control module high power supply voltage input**
Detection condition	• AFS control module power supply circuit voltage of **18.1 V or more** is detected for **5 s or more** with the ignition switched ON (engine off or on).
Fail-safe	• The swivel actuator is stopped at the position when the malfunction is determined. • The headlight leveling actuator is stopped at the position when the malfunction is determined.
Possible cause	• DTCs are stored in the PCM. • Battery malfunction • Generator malfunction • AFS control module malfunction
System wiring diagram	—

ON-BOARD DIAGNOSTIC [ADAPTIVE FRONT LIGHTING SYSTEM (AFS)]

Diagnostic Procedure

Step	Inspection		Action
1	**VERIFY PCM DTCs** • Perform the DTC inspection for the PCM using the M-MDS. (See 01-02-8 ON-BOARD DIAGNOSTIC TEST [SKYACTIV-G 2.0].) • Is the DTC displayed?	Yes	Repair the malfunctioning part according to the applicable DTC troubleshooting. (See 01-02-14 DTC TABLE [SKYACTIV-G 2.0].)
		No	Go to the next step.
2	**INSPECT BATTERY** • Inspect the battery. (See 01-17A-8 BATTERY INSPECTION [SKYACTIV-G 2.0 (WITHOUT i-stop)].) (See 01-17A-7 BATTERY INSPECTION [SKYACTIV-G 2.0].) (See 01-17B-6 BATTERY INSPECTION [SKYACTIV-D 2.2].) • Is the battery normal?	Yes	Go to the next step.
		No	Replace the battery, then go to Step 4. (See 01-17A-3 BATTERY REMOVAL/INSTALLATION [SKYACTIV-G 2.0].) (See 01-17B-3 BATTERY REMOVAL/INSTALLATION [SKYACTIV-D 2.2].)
3	**INSPECT GENERATOR** • Inspect the generator. (See 01-17A-19 GENERATOR INSPECTION [SKYACTIV-G 2.0].) (See 01-17B-16 GENERATOR INSPECTION [SKYACTIV-D 2.2].) • Is the generator normal?	Yes	Go to the next step.
		No	Replace the generator, then go to the next step. (See 01-17A-17 GENERATOR REMOVAL/INSTALLATION [SKYACTIV-G 2.0].) (See 01-17B-14 GENERATOR REMOVAL/INSTALLATION [SKYACTIV-D 2.2].)
4	**VERIFY THAT REPAIRS HAVE BEEN COMPLETED** • Clear the AFS control module DTCs using the M-MDS. (See 09-02D-6 CLEARING DTC [ADAPTIVE FRONT LIGHTING SYSTEM (AFS)].) • Switch the ignition ON (engine off or on) and wait for **5 s or more**. • Perform the DTC inspection for the AFS control module using the M-MDS. (See 09-02D-5 DTC INSPECTION [ADAPTIVE FRONT LIGHTING SYSTEM (AFS)].) • Is DTC U3003:17 displayed?	Yes	Repeat the inspection from Step 1. • If the malfunction recurs, replace the AFS control module, then go to the next step. (See 09-18-30 ADAPTIVE FRONT LIGHTING SYSTEM (AFS) CONTROL MODULE REMOVAL/INSTALLATION.)
		No	Go to the next step.
5	**VERIFY IF OTHER DTCs DISPLAYED** • Are any other DTCs displayed?	Yes	Repair the malfunctioning part according to the applicable DTC troubleshooting. (See 09-02D-6 DTC TABLE [ADAPTIVE FRONT LIGHTING SYSTEM (AFS)].)
		No	DTC troubleshooting completed.

ON-BOARD DIAGNOSTIC [ADAPTIVE FRONT LIGHTING SYSTEM (AFS)]

PID/DATA MONITOR INSPECTION [ADAPTIVE FRONT LIGHTING SYSTEM (AFS)]

id09021n960600

1. Connect the M-MDS to the DLC-2.
2. After the vehicle is identified, select the following items from the initialization screen of the M-MDS.
   (1) Select “DataLogger”.
   (2) Select “Modules”.
   (3) Select “AFS”.
3. Select the applicable PID from the PID table.
4. Verify the PID data according to the directions on the screen.

Note

- The PID data screen function is used for monitoring the calculated value of input/output signals in the module. Therefore, if the monitored value of the output parts is not within the specification, it is necessary to inspect the monitored value of input parts corresponding to the applicable output part control. In addition, because the system does not display an output part malfunction as an abnormality in the monitored value, it is necessary to inspect the output parts individually.
- When detecting DTCs, PIDs related to a malfunctioning system may not display even if the module is normal. Therefore, if a PID is not displayed, it is necessary to verify the DTC, perform malfunction diagnosis of the DTC that was detected, and do repairs.

PID/DATA MONITOR TABLE [ADAPTIVE FRONT LIGHTING SYSTEM (AFS)]

id09021n960700

—: Not applicable

PID	Unit/ Operation	Data contents	Inspection item(s)
AFS_ST	Off/On	• Off: AFS is not operated. • On: AFS is operated.	• AFS OFF switch • AFS control module
H/L_CS	OFF/DRL/ TNS/H/ L_LOW/H/ L_HI	• OFF: Light switch at OFF position • DRL: Light switch at AUTO position and auto light sensor sends turn-off signal • TNS: Light switch at TNS position • H/L_LOW: Light switch at LO position • H/L_HI: Light switch at HI position	Light switch
R_HGT_S	V	Voltage at auto leveling sensor is displayed.	Auto leveling sensor
R_HGT_S_INI	V	Voltage at headlight auto leveling system initial setting is displayed.	Auto leveling sensor
R_LMP_CS	Off/On/ Unknown/ Fault	ATX: • Off: Selector lever position signal (R position) is not received. • On: Selector lever position signal (R position) is received. • Unknown: Selector lever position signal (R position) is not determined. • Fault: Selector lever position signal (R position) error is received. MTX: • Off: Reverse signal is not received. • On: Reverse signal is received. • Unknown: Reverse signal is not determined. • Fault: Reverse signal error is received.	ATX: • Transaxle range sensor (TCM) MTX: • Back-up light switch
STR_AB_ANG	° (deg)	Steering angle is displayed.	Steering angle sensor
VPWR_IG	V	AFS control module power supply voltage is displayed.	• AFS control module • IG1 relay • Battery
VSPD	KPH, MPH	Vehicle speed is displayed.	—

ON-BOARD DIAGNOSTIC [ADAPTIVE FRONT LIGHTING SYSTEM (AFS)]

HEADLIGHT LEVELING ACTUATOR OPERATION CHECK MODE [ADAPTIVE FRONT LIGHTING SYSTEM (AFS)]

id09021n961000

1. Connect the M-MDS to the DLC-2.
2. Switch the ignition ON (engine off or on).
3. Verify that AFS OFF indicator light is illuminated for **3 s** and then turned off.
4. Turn on the headlights.
5. After vehicle identification, select in the following order from the M-MDS initial screen.
   (1) "Electrical"
   (2) "ExteriorLighting"
   (3) "Headlamp"
   (4) "Auto Leveling Sensor"
   (5) "Auto Leveling Actuator Test"
6. Verify that the headlight optical axis lowers from the current position and returns the original position after **2 s**.
   - If the headlight leveling actuator does not operate normally, replace the front combination light. (See 09-18-7 FRONT COMBINATION LIGHT REMOVAL/ INSTALLATION.)

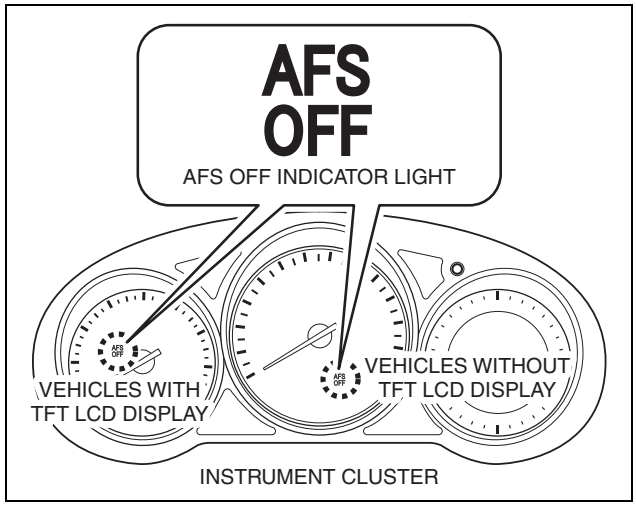

ac5wzw0000212

09-02E ON-BOARD DIAGNOSTIC [AUDIO]

FOREWORD [AUDIO] **09-02E–2**
Troubleshooting Procedure **09-02E–2**
Action for non-repeatable malfunction. **09-02E–3**
DTC INSPECTION [AUDIO] **09-02E–3**
Audio unit (with color LCD) **09-02E–3**
Audio unit (without color LCD) **09-02E–5**
SUPPLIER IDENTIFICATION PROCEDURE [AUDIO] **09-02E–6**
Verification procedure using label or inscribed lettering **09-02E–6**
Verification procedure using on-board diagnostic assist function **09-02E–7**
CLEARING DTC [AUDIO] **09-02E–9**
Audio unit (with color LCD) **09-02E–9**
Audio unit (without color LCD) **09-02E–10**
DTC TABLE [AUDIO] **09-02E–10**
Audio unit (with color LCD) **09-02E–10**
Audio unit (without color LCD) **09-02E–11**
DTC: 28:Er01 [AUDIO] **09-02E–13**
Audio unit (with color LCD) **09-02E–13**
Audio unit (without color LCD). **09-02E–15**
DTC: 29:Er01 [AUDIO]. **09-02E–18**
Audio unit (with color LCD) **09-02E–18**
Audio unit (without color LCD). **09-02E–20**
DTC: B1188:64, 10:Er07 [AUDIO] **09-02E–23**
DTC: B1D19:71, 10:ER02 [AUDIO] **09-02E–24**
DTC: B1D19:79, 10:Er01 [AUDIO]. **09-02E–25**
DTC: B1D19:96, 10:Er10 [AUDIO]. **09-02E–26**
DTC: U3000:04, 09:Er22 [AUDIO] **09-02E–27**
DTC: U3000:09, 09:Er21 [AUDIO] **09-02E–27**
Without Bose®. **09-02E–27**
With Bose® **09-02E–30**
DTC: U3003:16, 09:Er20 [AUDIO] **09-02E–32**
Without i-stop System **09-02E–32**
With i-stop System **09-02E–35**
DIAGNOSTIC ASSIST FUNCTION [AUDIO]. **09-02E–39**
Audio unit (with color LCD) **09-02E–39**
Audio unit (without color LCD). **09-02E–46**

ON-BOARD DIAGNOSTIC [AUDIO]

FOREWORD [AUDIO]

id0902f6441800

- If there is any vehicle malfunction complaint lodged by a customer, perform malfunction diagnosis according to the troubleshooting procedure.

Troubleshooting Procedure

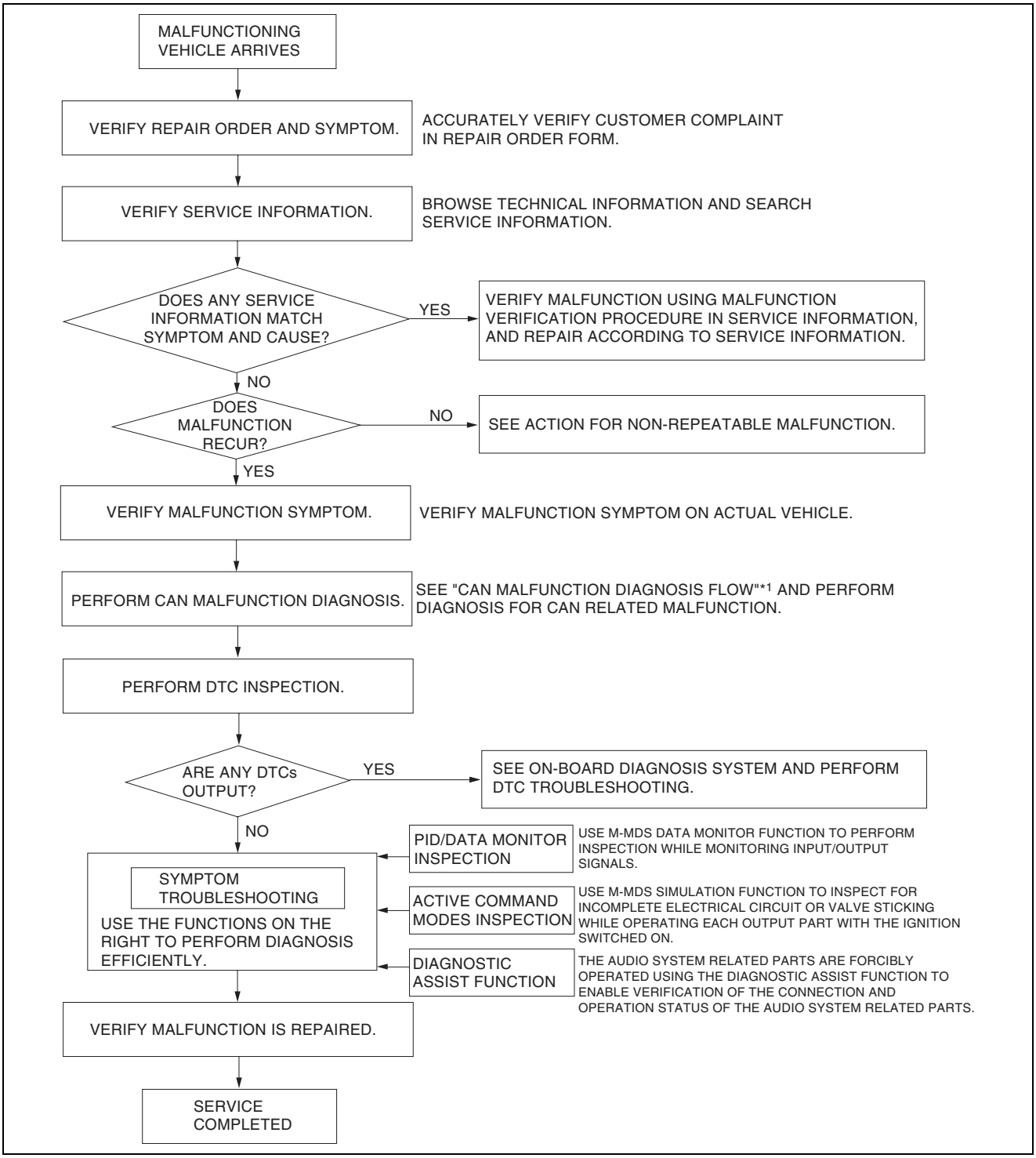

ac5wzw0000263

*1 : 10-02A-3 CONTROLLER AREA NETWORK (CAN) MALFUNCTION DIAGNOSIS FLOW [SKYACTIV-G 2.0 (L.H.D.)] / 10-02B-3 CONTROLLER AREA NETWORK (CAN) MALFUNCTION DIAGNOSIS FLOW [SKYACTIV-G 2.0 (R.H.D.)] / 10-02C-3 CONTROLLER AREA NETWORK (CAN) MALFUNCTION DIAGNOSIS FLOW [SKYACTIV-D 2.2 (L.H.D.)] / 10-02D-3 CONTROLLER AREA NETWORK (CAN) MALFUNCTION DIAGNOSIS FLOW [SKYACTIV-D 2.2 (R.H.D.)]

ON-BOARD DIAGNOSTIC [AUDIO]

Action for non-repeatable malfunction

- If the malfunction does not recur, verify the malfunction cause by performing the following actions:
  - — Verify that a DTC has been recorded in the memory. (See 09-02E-3 DTC INSPECTION [AUDIO].)
  - — Based on the repair order form, attempt to drive the vehicle or perform tests to replicate the malfunction, record the data at that time, and detect the malfunction cause.
  - — Shake the wiring harness or connector of the electrical component which is suspected to be the cause of the malfunction, and inspect for occurrence of any malfunction or DTCs.

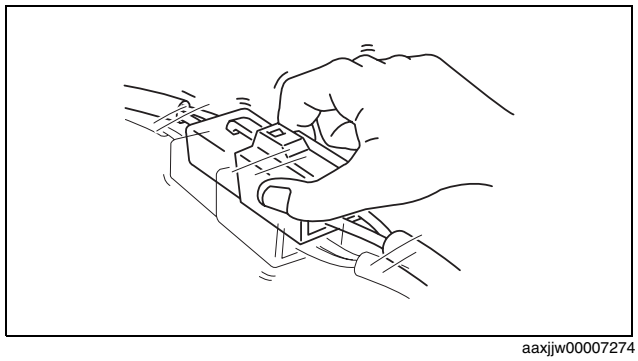

aaxjjw00007274

  - — Inspect the female terminals on the connector of the electric component which is suspected to be the cause of the malfunction for poor connection.

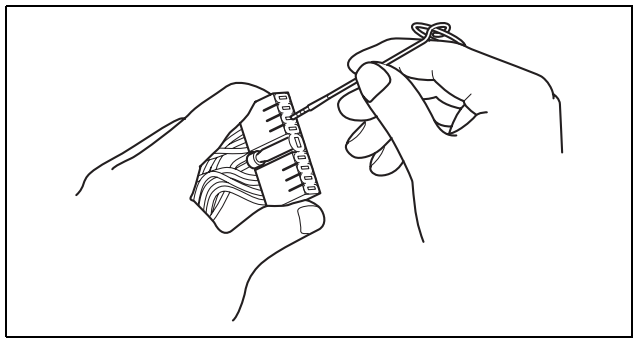

am3uuw0000750

DTC INSPECTION [AUDIO]

id0902f6440500

Caution

- **If the battery is disconnected or the audio unit power supply is cut, input all of the displayed DTCs to the Audio Repair Order Form because the DTCs will be cleared. (When using the M-MDS)**

Note

- For the DTC inspection of the audio unit (with color LCD), there is a method using the M-MDS and one that does not (on-board diagnostic test mode). Because the DTCs differ if using or not using the M-MDS, perform the DTC inspection using the M-MDS method and the method not using it.

Audio unit (with color LCD)
When using the M-MDS
CMDTC self test

1. Connect the M-MDS to the DLC-2.
2. After vehicle identification, select the following from the M-MDS initialization screen.
   1. “Self-test”
   2. “All CMDTCs”
3. Verify the DTC according to the directions on the screen.
   - If a DTC is displayed, repair the malfunctioning part according to the applicable DTC troubleshooting. (See 09-02E-10 DTC TABLE [AUDIO].)

ODDTC self test

1. Connect the M-MDS to the DLC-2.
2. After vehicle identification, select the following from the M-MDS initialization screen.
   1. “Self-test”
   2. “Module”
   3. “ACU”
3. Verify the DTC according to the directions on the screen.
   - If a DTC is displayed, repair the malfunctioning part according to the applicable DTC troubleshooting. (See 09-02E-10 DTC TABLE [AUDIO].)

Not using M-MDS (on-board diagnostic test mode)

1. Switch the ignition to ACC or ON (engine off).
2. Verify that the audio is turned off. If the audio is turned on, press the POWER/VOLUME switch to turn it off.

ON-BOARD DIAGNOSTIC [AUDIO]

3. Press the POWER/VOLUME switch and SETUP switch simultaneously to launch the on-board diagnostic test mode.

With POWER/VOLUME switch on left side

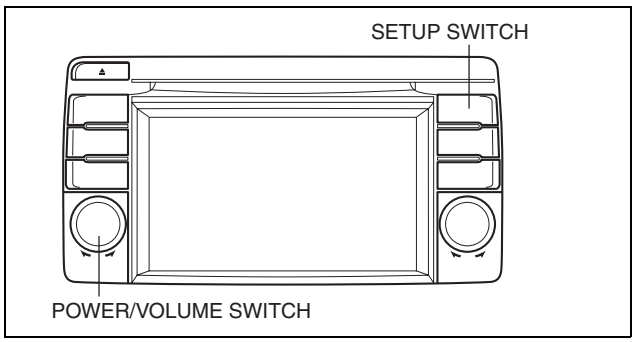

ac5wzw0000333

With POWER/VOLUME switch on right side

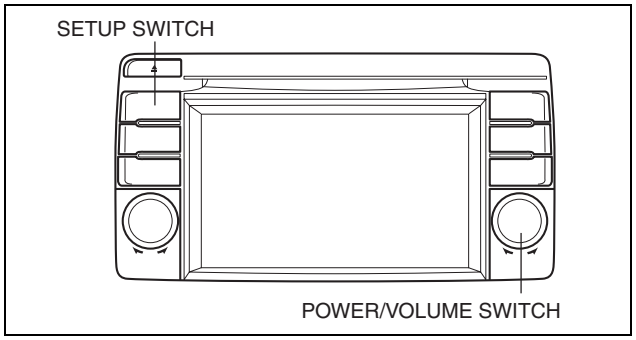

ac5wzw0000333

4. Verify that the launched on-board diagnostic test mode is displayed on the screen.

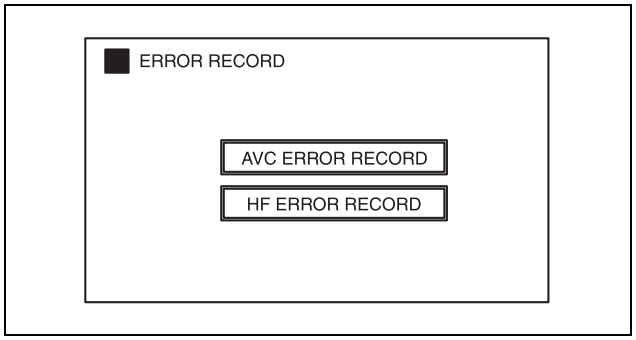

ac5jjw00001761

5. Select AVC ERROR RECORD.

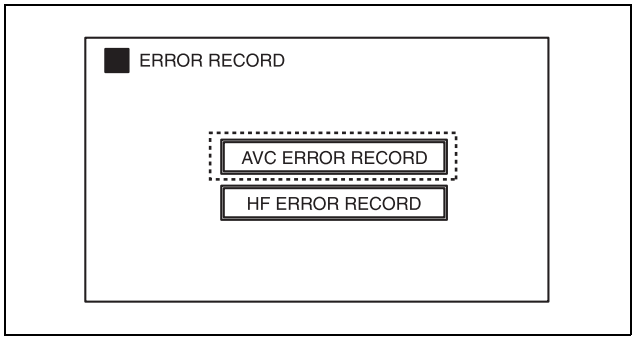

ac5wzw0000072

ON-BOARD DIAGNOSTIC [AUDIO]

6. If several DTCs are in the memory, they can be displayed using the UP switch/DOWN switch.
7. Complete the on-board diagnostic test mode by pressing the POWER/VOLUME switch to return to the on-board diagnostic mode screen and pressing the POWER/VOLUME switch again, or by switching the ignition off (LOCK).

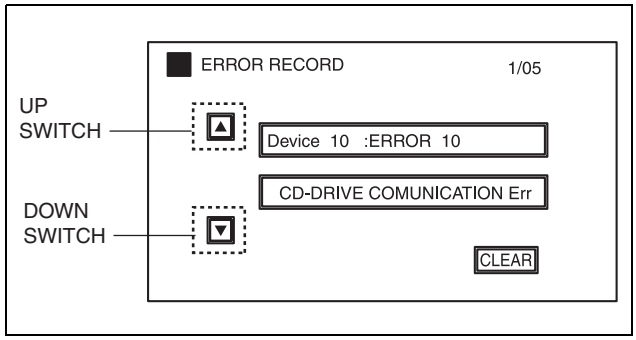

ac5wzw0000072

Audio unit (without color LCD)

1. Switch the ignition to ACC or ON (engine off).
2. Verify that the audio is turned off. If the audio is turned on, press the POWER/VOLUME switch to turn it off.
3. Press the FM/AM switch and CD switch simultaneously for 3 s or more while pressing the POWER/VOLUME switch to launch the on-board diagnostic test mode.

With POWER/VOLUME switch on left side

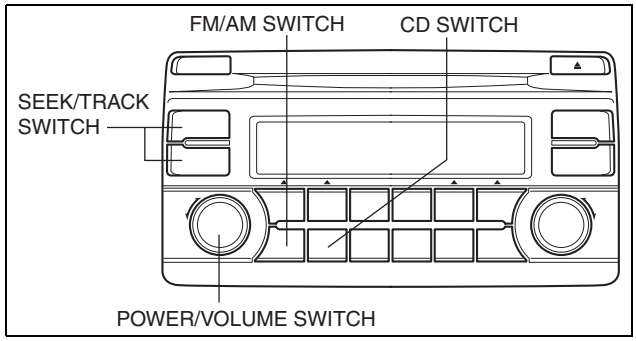

ac5wzw0000333

With POWER/VOLUME switch on right side

4. If several DTCs are in the memory, they can be displayed using the SEEK/TRACK switch.
5. Switch the ignition off (LOCK) to complete the on-board diagnostic test mode.

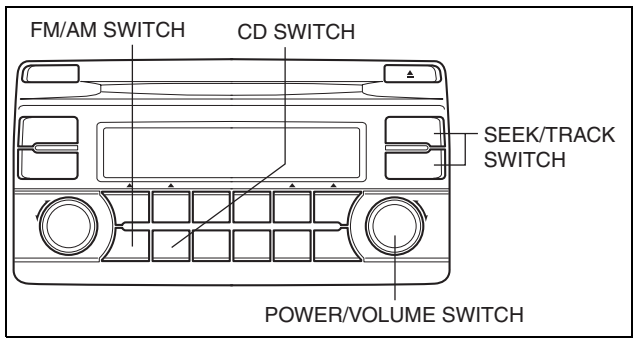

ac5wzw0000334

ON-BOARD DIAGNOSTIC [AUDIO]

SUPPLIER IDENTIFICATION PROCEDURE [AUDIO]

id0902f6803800

Note
- The unit supplier can vary. When asking the supplier (service center) for repair or replacement, identify the supplier and fill in the Audio Repair Order Form using the following procedures.

Verification procedure using label or inscribed lettering
1. Disconnect the negative battery cable. (See 01-17A-11 NEGATIVE BATTERY CABLE DISCONNECTION/CONNECTION [SKYACTIV-G 2.0].) (See 01-17A-13 NEGATIVE BATTERY CABLE DISCONNECTION/CONNECTION [SKYACTIV-G 2.0 (WITHOUT i-stop)].) (See 01-17B-9 NEGATIVE BATTERY CABLE DISCONNECTION/CONNECTION [SKYACTIV-D 2.2].)
2. Remove the decoration panel. (See 09-17-33 DECORATION PANEL REMOVAL/INSTALLATION.)
3. Remove the audio unit. (See 09-20-4 AUDIO UNIT REMOVAL/INSTALLATION.)
4. Verify the supplier name by referring to the label attached to the unit.

Audio unit (with color LCD)

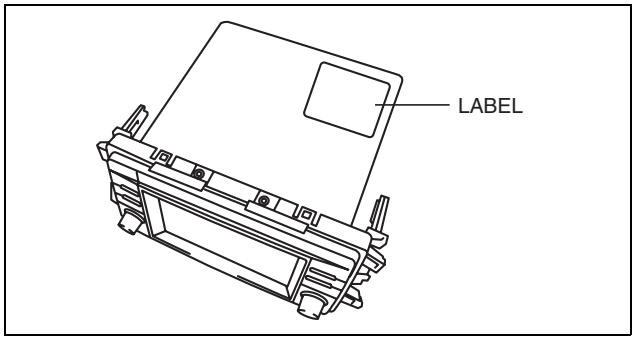

ac5wzw0000072

Audio unit (without color LCD)

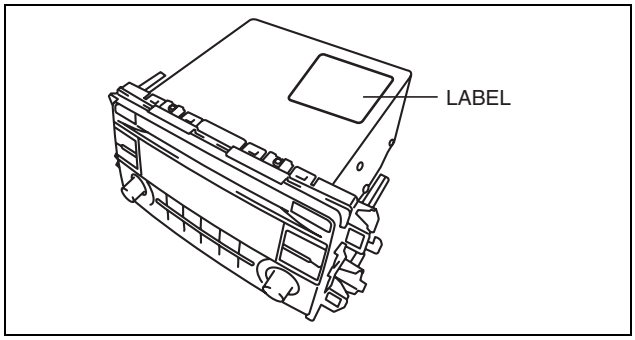

ac5wzw0000072

ON-BOARD DIAGNOSTIC [AUDIO]

Verification procedure using on-board diagnostic assist function
Audio unit (with color LCD)

1. Switch the ignition to ACC or ON (engine off).
2. Verify that the audio is turned on. If the audio is turned off, press the POWER/VOLUME switch to turn it on.
3. Press the POWER/VOLUME switch and SEEK switch (up) simultaneously to launch the diagnostic assist function.

With POWER/VOLUME switch on left side

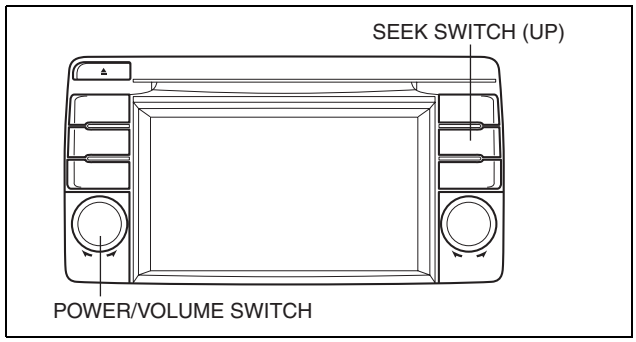

ac5wzw0000331

With POWER/VOLUME switch on right side

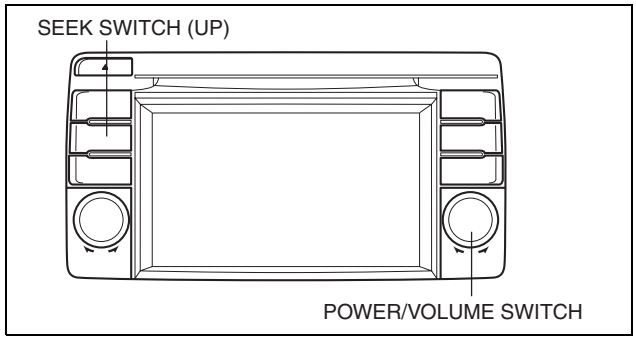

ac5jjw00001766

4. Verify that the launched diagnostic assist function is displayed on the screen.

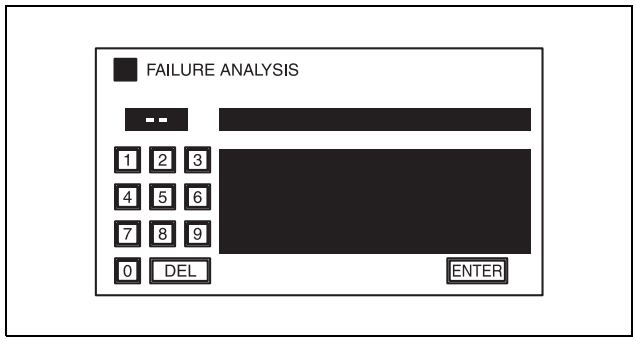

ac5jjw00001767

5. Input diagnostic assist code "06".
6. Select "ENTER switch".

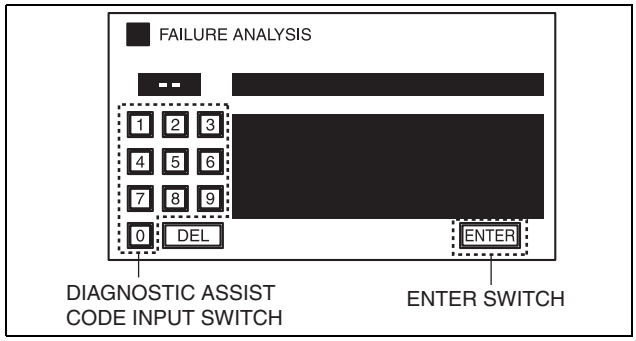

ac5jjw00001768

ON-BOARD DIAGNOSTIC [AUDIO]

7. Identify the supplier code by referring to the display.

Supplier code	Supplier name
M-01	SANYO Automedia
M-02	Panasonic
M-03	Clarion
M-04	Pioneer
M-05	VISTEON

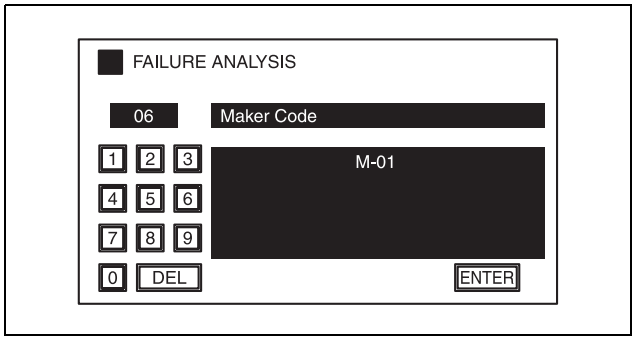

ac5jjw00001769

8. Press the POWER/VOLUME switch and return to the diagnostic assist screen.
9. Press the POWER/VOLUME switch and end the diagnostic assist function.

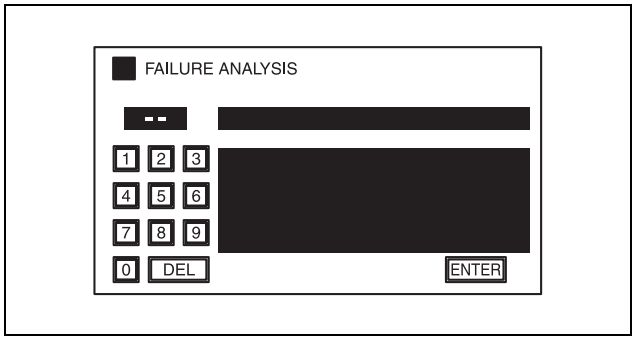

ac5jjw00001767

Audio unit (without color LCD)

1. Switch the ignition to ACC or ON (engine off).
2. Verify that the audio is turned on. If the audio is turned off, press the POWER/VOLUME switch to turn it on.
3. Press PRESET switch 5 for 3 s or more while simultaneously pressing the POWER/VOLUME switch to launch the supplier verification mode.

With POWER/VOLUME switch on left side

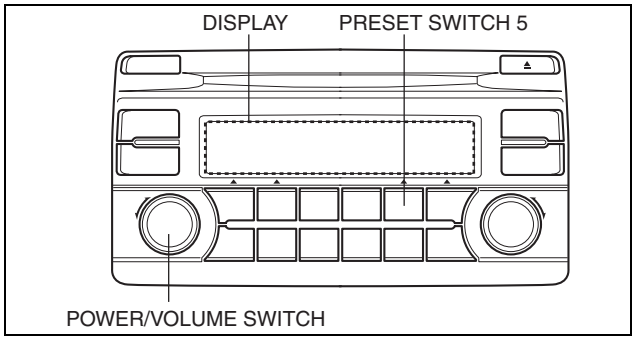

ac5jjw00001770

With POWER/VOLUME switch on right side

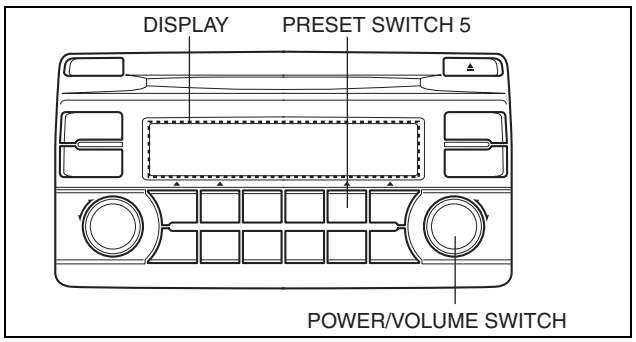

ac5jjw00001771

ON-BOARD DIAGNOSTIC [AUDIO]

4. Identify the supplier code by referring to the audio display.

Supplier code	Supplier name
M-01	SANYO Automedia
M-02	Panasonic
M-03	Clarion
M-04	Pioneer
M-05	VISTEON

ac5jjw00001772

5. Switch the ignition off (LOCK) to complete the manufacturer code verification mode.

CLEARING DTC [AUDIO]

id0902f6855600

Caution
- **If the memory is cleared, past malfunctions may no longer be displayed, therefore before clearing DTCs, record all DTCs displayed in the DTC inspection on the Audio Repair Order Form.**

Audio unit (with color LCD)
When using the M-MDS
1. Connect the M-MDS to the DLC-2.
2. After vehicle identification, select the following from the M-MDS initialization screen.
   1. “Self-test”
   2. “Module”
   3. “ACU”
3. Verify the DTC according to the directions on the screen.
4. Press the clear button on the DTC screen to clear the DTC.
5. Switch the ignition off (LOCK).
6. Switch the ignition ON (engine off) and wait for 5 s or more.
7. Perform DTC inspection. (See 09-02E-3 DTC INSPECTION [AUDIO].)
8. Verify that no DTCs are displayed.

Not using M-MDS (on-board diagnostic test mode)
1. Switch the ignition to ACC or ON (engine off).
2. Launch the on-board diagnostic test mode. (See 09-02E-3 DTC INSPECTION [AUDIO].)
3. Select the DTC and press the CLEAR switch to clear the DTC.
4. Switch the ignition off (LOCK) to complete the on-board diagnostic test mode.

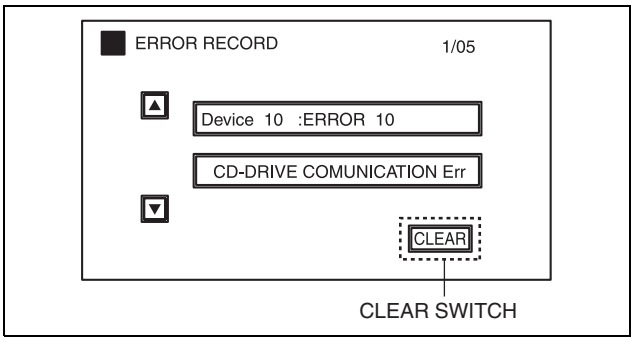

ac5jjw00001779

ON-BOARD DIAGNOSTIC [AUDIO]

Audio unit (without color LCD)

1. Switch the ignition to ACC or ON (engine off).
2. Launch the on-board diagnostic test mode and display the DTCs. (See 09-02E-3 DTC INSPECTION [AUDIO].)
3. Press the TUNE/AUDIO switch for 3 s or more while simultaneously pressing the POWER/VOLUME switch to clear the DTCs.

With POWER/VOLUME switch on left side

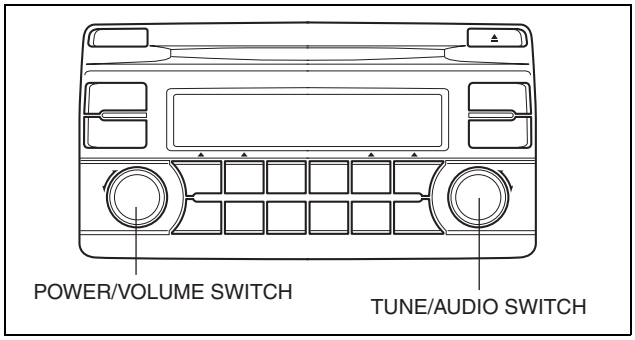

ac5wzw0000331

With POWER/VOLUME switch on right side

4. Switch the ignition off (LOCK) to complete the on-board diagnostic test mode.

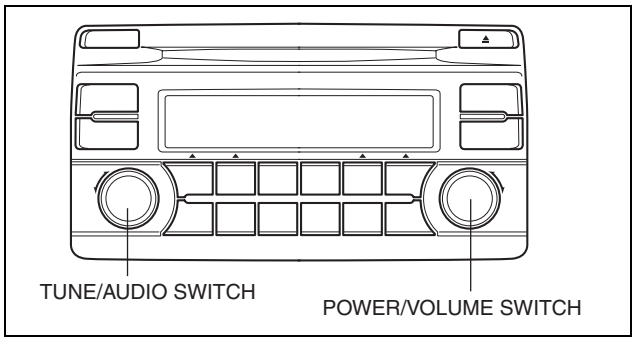

ac5wzw0000332

DTC TABLE [AUDIO]

id0902f6855700

Note

- There are two types of procedures for the audio unit (with color LCD) inspection; one using the M-MDS and the other which does not (on-board diagnostic test mode). Because the DTCs differ if using or not using the M-MDS, perform the DTC inspection using the M-MDS method and the method not using it. (See 09-02E-3 DTC INSPECTION [AUDIO].)
- “iPod” is a registered trademark of Apple Inc. in the United States and other countries.

Audio unit (with color LCD)

× : Applicable
— : Not applicable

DTC		Security indicator light	Description	Fail-safe	Drive cycle	Self-test type*1	Memory function	Reference
Method using M-MDS	On-board diagnostic test mode							
B116A:13	—*2	—	Open circuit in microphone circuit	—	—	D	×	(See 09-02F-9 DTC: B116A:13 [Bluetooth SYSTEM (HANDS-FREE TELEPHONE (HF/TEL) SYSTEM)].)
B1188:64	10:Er07	—	Audio unit internal malfunction	—	—	C	×	(See 09-02E-23 DTC: B1188:64, 10:Er07 [AUDIO].)
B1D19:71	10:Er02	—	Audio unit internal malfunction	—	—	C	×	(See 09-02E-24 DTC: B1D19:71, 10:ER02 [AUDIO].)
B1D19:79	10:Er01	—	Audio unit internal malfunction	—	—	C	×	(See 09-02E-25 DTC: B1D19:79, 10:Er01 [AUDIO].)
B1D19:96	10:Er10	—	Audio unit internal malfunction	—	—	C	×	(See 09-02E-26 DTC: B1D19:96, 10:Er10 [AUDIO].)

ON-BOARD DIAGNOSTIC [AUDIO]

DTC		Security indicator light	Description	Fail-safe	Drive cycle	Self-test type*1	Memory function	Reference
Method using M-MDS	On-board diagnostic test mode							
U0010:88	16:Er12	—	CAN system communication error	—	—	C	×	(See 10-02A-1 FOREWORD [SKYACTIV-G 2.0 (L.H.D.)].)(See 10-02B-1 FOREWORD [SKYACTIV-G 2.0 (R.H.D.)].) (See. 10-02C-1 FOREWORD [SKYACTIV-D 2.2 (L.H.D.)].) (See 10-02D-1 FOREWORD [SKYACTIV-D 2.2 (R.H.D.)].)
U0155:00	—*2	—	Instrument cluster communication error	—	—	C, D	×	(See 10-02A-1 FOREWORD [SKYACTIV-G 2.0 (L.H.D.)].)(See 10-02B-1 FOREWORD [SKYACTIV-G 2.0 (R.H.D.)].) (See. 10-02C-1 FOREWORD [SKYACTIV-D 2.2 (L.H.D.)].) (See 10-02D-1 FOREWORD [SKYACTIV-D 2.2 (R.H.D.)].)
U0197:00	—*2	—	Communication error with audio unit	—	—	D	×	(See 09-02F-11 DTC: U0197:00 [Bluetooth SYSTEM (HANDS-FREE TELEPHONE (HF/TEL) SYSTEM)].)
U3000:04	09:Er22	—	Audio unit internal malfunction	×	—	C	×	(See 09-02E-27 DTC: U3000:04, 09:Er22 [AUDIO].)
U3000:09	09:Er21	—	Audio unit internal malfunction	×	—	C	×	(See 09-02E-27 DTC: U3000:09, 09:Er21 [AUDIO].)
U3003:16	09:Er20	—	Voltage decrease input from battery	—	—	C	×	(See 09-02E-32 DTC: U3003:16, 09:Er20 [AUDIO].)
—	28:Er01	—	Poor connection with auxiliary jack/USB port, or read error	—	—	—	×	(See 09-02E-13 DTC: 28:Er01 [AUDIO].)
—	29:Er01	—	Audio unit internal malfunction, or iPod malfunction	—	—	—	×	(See 09-02E-18 DTC: 29:Er01 [AUDIO].)
—	—*2	—	DTCs not stored	—	—	—	—	—

*1 : C: CMDTC self test, D: ODDTC self test

*2 : It is not displayed in the audio display because the on-board diagnostic test mode is not available.

Audio unit (without color LCD)

× : Applicable
— : Not applicable

DTC	Security indicator light	Description	Fail-safe	Drive cycle	Self-test type*1	Memory function	Reference
09:Er20	—	Voltage decrease input from battery	—	—	C	×	(See 09-02E-32 DTC: U3003:16, 09:Er20 [AUDIO].)
09:Er21	—	Audio unit internal malfunction	×	—	C	×	(See 09-02E-27 DTC: U3000:09, 09:Er21 [AUDIO].)
09:Er22	—	Audio unit internal malfunction	×	—	C	×	(See 09-02E-27 DTC: U3000:04, 09:Er22 [AUDIO].)
10:Er01	—	Audio unit internal malfunction	—	—	C	×	(See 09-02E-25 DTC: B1D19:79, 10:Er01 [AUDIO].)
10:Er02	—	Audio unit internal malfunction	—	—	C	×	(See 09-02E-24 DTC: B1D19:71, 10:ER02 [AUDIO].)
10:Er07	—	Audio unit internal malfunction	—	—	C	×	(See 09-02E-23 DTC: B1188:64, 10:Er07 [AUDIO].)

ON-BOARD DIAGNOSTIC [AUDIO]

DTC	Security indicator light	Description	Fail-safe	Drive cycle	Self-test type*1	Memory function	Reference
10:Er10	—	Audio unit internal malfunction	—	—	C	×	(See 09-02E-26 DTC: B1D19:96, 10:Er10 [AUDIO].)
28:Er01	—	Poor connection with auxiliary jack/USB port, or read error	—	—	—	×	(See 09-02E-13 DTC: 28:Er01 [AUDIO].)
29:Er01	—	Audio unit internal malfunction, or iPod malfunction	—	—	—	×	(See 09-02E-18 DTC: 29:Er01 [AUDIO].)
No Err	—	DTCs not stored	—	—	—	—	—

*1 : C: CMDTC self test

ON-BOARD DIAGNOSTIC [AUDIO]

DTC: 28:Er01 [AUDIO]

id0902f6452300

Note
- "iPod" is a registered trademark of Apple Inc. in the United States and other countries.

Audio unit (with color LCD)

Description	Poor connection with auxiliary jack/USB port, or read error
Detection condition	• When USB device/iPod connected, connection error detected • When USB device/iPod connected, audio unit internal malfunction detected • When USB device connected, read error detected
Fail-safe function	—
Possible cause	• USB device/iPod malfunction • Incompatible USB device (format) used • Audio unit connector or terminal malfunction • Auxiliary jack/USB port connector or terminal malfunction • Open circuit in wiring harness between the following terminals: — Audio unit terminal 4A and auxiliary jack/USB port terminal UD — Audio unit terminal 4B and auxiliary jack/USB port terminal UC — Audio unit terminal 4C and auxiliary jack/USB port terminal UA — Audio unit terminal 4D and auxiliary jack/USB port terminal UB • Short to ground in wiring harness between the following terminals: — Audio unit terminal 4A and auxiliary jack/USB port terminal UD — Audio unit terminal 4B and auxiliary jack/USB port terminal UC — Audio unit terminal 4C and auxiliary jack/USB port terminal UA — Audio unit terminal 4D and auxiliary jack/USB port terminal UB • Auxiliary jack/USB port malfunction • Audio unit malfunction

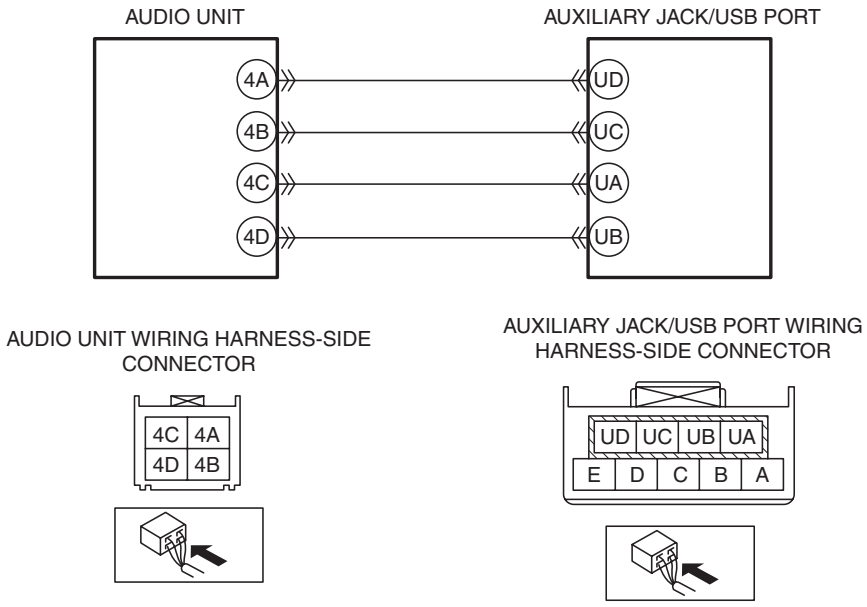

Diagnostic Procedure

Step	Inspection		Action
1	**INSPECT USB DEVICE/iPod** • Connect the USB device/iPod to a same-model vehicle (model/unit). • Is the USB device/iPod connection detected/unit plays back.	Yes	Go to the next step.
		No	System is normal. (USB device/iPod malfunction or incompatible USB device.) Go to Step 7.

ON-BOARD DIAGNOSTIC [AUDIO]

Step	Inspection		Action
2	**INSPECT AUDIO UNIT CONNECTOR CONDITION** • Switch the ignition off (LOCK). • Disconnect the negative battery cable. (See 01-17A-11 NEGATIVE BATTERY CABLE DISCONNECTION/CONNECTION [SKYACTIV-G 2.0].) (See 01-17A-13 NEGATIVE BATTERY CABLE DISCONNECTION/CONNECTION [SKYACTIV-G 2.0 (WITHOUT i-stop)].) (See 01-17B-9 NEGATIVE BATTERY CABLE DISCONNECTION/CONNECTION [SKYACTIV-D 2.2].) • Disconnect the audio unit connector. • Inspect the connector engagement and connection condition and inspect the terminals for damage, deformation, corrosion, or disconnection. • Is there any malfunctioning part?	Yes	Repair or replace the connector, then go to Step 7.
		No	Go to the next step.
3	**INSPECT AUXILIARY JACK/USB PORT CONNECTOR CONDITION** • Disconnect the auxiliary jack/USB port connector. • Inspect the connector engagement and connection condition and inspect the terminals for damage, deformation, corrosion, or disconnection. • Is there any malfunctioning part?	Yes	Repair or replace the connector, then go to Step 7.
		No	Go to the next step.
4	**INSPECT WIRING HARNESS FOR OPEN CIRCUIT BETWEEN AUDIO UNIT AND AUXILIARY JACK/USB PORT** • Verify that the connectors for the audio unit and the auxiliary jack/USB port are not disconnected. • Inspect for continuity between the following terminals (vehicle wiring harness). — Audio unit terminal 4A and auxiliary jack/USB port terminal UD — Audio unit terminal 4B and auxiliary jack/USB port terminal UC — Audio unit terminal 4C and auxiliary jack/USB port terminal UA — Audio unit terminal 4D and auxiliary jack/USB port terminal UB • Is there continuity?	Yes	Go to the next step.
		No	Repair or replace the wiring harness, then go to Step 7.
5	**INSPECT WIRING HARNESS FOR SHORT TO GROUND BETWEEN AUDIO UNIT AND AUXILIARY JACK/USB PORT** • Inspect for continuity between the following wiring harness terminals (vehicle wiring harness side) and body ground. — Auxiliary jack/USB port terminal UD — Auxiliary jack/USB port terminal UC — Auxiliary jack/USB port terminal UA — Auxiliary jack/USB port terminal UB • Is there continuity?	Yes	Repair or replace the wiring harness, then go to Step 7.
		No	Go to the next step.
6	**INSPECT AUXILIARY JACK/USB PORT** • Inspect the auxiliary jack/USB port. (See 09-20-77 AUXILIARY JACK/USB PORT INSPECTION.) • Is there any malfunctioning part?	Yes	Replace the auxiliary jack/USB port, then go to Step 7. (See 09-20-77 AUXILIARY JACK/USB PORT REMOVAL/INSTALLATION.)
		No	Go to the next step.

ON-BOARD DIAGNOSTIC [AUDIO]

Step	Inspection		Action
7	**VERIFY THAT REPAIRS HAVE BEEN COMPLETED** • Reconnect all the disconnected connectors. • Connect the negative battery cable. (See 01-17A-11 NEGATIVE BATTERY CABLE DISCONNECTION/CONNECTION [SKYACTIV-G 2.0].) (See 01-17A-13 NEGATIVE BATTERY CABLE DISCONNECTION/CONNECTION [SKYACTIV-G 2.0 (WITHOUT i-stop)].) (See 01-17B-9 NEGATIVE BATTERY CABLE DISCONNECTION/CONNECTION [SKYACTIV-D 2.2].) • Clear the audio unit DTCs. (See 09-02E-9 CLEARING DTC [AUDIO].) • Perform the audio unit DTC inspection. (See 09-02E-3 DTC INSPECTION [AUDIO].) • Is the same DTC displayed?	Yes	Return to Step 1 and inspect for other possible causes. If the malfunction recurs, replace the audio unit, then go to the next step. (See 09-02E-10 DTC TABLE [AUDIO].)
		No	Go to the next step.
8	**VERIFY IF OTHER DTCs DISPLAYED** • Are any other DTCs displayed?	Yes	Repair the malfunctioning part according to the applicable DTC troubleshooting. (See 09-02E-10 DTC TABLE [AUDIO].)
		No	DTC troubleshooting completed.

Audio unit (without color LCD)

Description	Poor connection with auxiliary jack/USB port, or read error
Detection condition	• When USB device/iPod connected, connection error detected • When USB device/iPod connected, audio unit internal malfunction detected • When USB device connected, read error detected
Fail-safe function	—
Possible cause	• USB device/iPod malfunction • Incompatible USB device (format) used • Audio unit connector or terminal malfunction • Auxiliary jack/USB port connector or terminal malfunction • Open circuit in wiring harness between the following terminals: — Audio unit terminal 3A and auxiliary jack/USB port terminal UD — Audio unit terminal 3B and auxiliary jack/USB port terminal UC — Audio unit terminal 3C and auxiliary jack/USB port terminal UA — Audio unit terminal 3D and auxiliary jack/USB port terminal UB • Short to ground in wiring harness between the following terminals: — Audio unit terminal 3A and auxiliary jack/USB port terminal UD — Audio unit terminal 3B and auxiliary jack/USB port terminal UC — Audio unit terminal 3C and auxiliary jack/USB port terminal UA — Audio unit terminal 3D and auxiliary jack/USB port terminal UB • Auxiliary jack/USB port malfunction • Audio unit malfunction

ON-BOARD DIAGNOSTIC [AUDIO]

Description	Poor connection with auxiliary jack/USB port, or read error

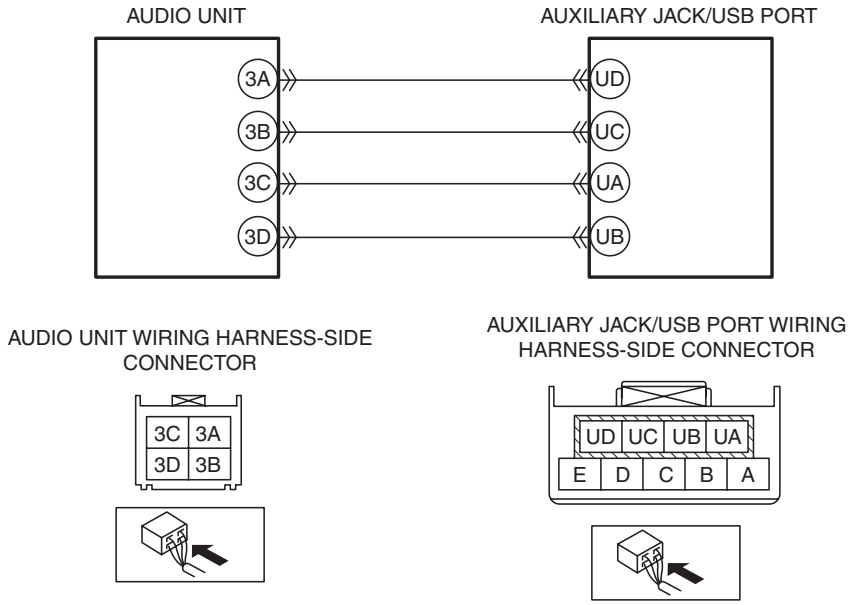

Diagnostic Procedure

Step	Inspection		Action
1	**INSPECT USB DEVICE/iPod** • Connect the USB device/iPod to another vehicle (model/unit). • Is the USB device/iPod connection detected/ unit plays back.	Yes	Go to the next step.
		No	System is normal. (USB device/iPod malfunction or incompatible USB device.) Go to Step 7.
2	**INSPECT AUXILIARY JACK/USB PORT CONNECTOR CONDITION** • Disconnect the auxiliary jack/USB port connector. • Inspect the connector engagement and connection condition and inspect the terminals for damage, deformation, corrosion, or disconnection. • Is there any malfunctioning part?	Yes	Repair or replace the connector, then go to Step 7.
		No	Go to the next step.
3	**INSPECT AUXILIARY JACK/USB PORT** • Inspect the auxiliary jack/USB port. (See 09-20-77 AUXILIARY JACK/USB PORT INSPECTION.) • Is there any malfunctioning part?	Yes	Replace the auxiliary jack/USB port, then go to Step 7. (See 09-20-77 AUXILIARY JACK/USB PORT REMOVAL/ INSTALLATION.)
		No	Go to the next step.
4	**INSPECT AUDIO UNIT CONNECTOR CONDITION** • Switch the ignition off (LOCK). • Disconnect the negative battery cable. (See 01-17A-11 NEGATIVE BATTERY CABLE DISCONNECTION/CONNECTION [SKYACTIV-G 2.0].) (See 01-17A-13 NEGATIVE BATTERY CABLE DISCONNECTION/CONNECTION [SKYACTIV-G 2.0 (WITHOUT i-stop)].) (See 01-17B-9 NEGATIVE BATTERY CABLE DISCONNECTION/CONNECTION [SKYACTIV-D 2.2].) • Disconnect the audio unit connector. • Inspect the connector engagement and connection condition and inspect the terminals for damage, deformation, corrosion, or disconnection. • Is there any malfunctioning part?	Yes	Repair or replace the connector, then go to Step 7.
		No	Go to the next step.

ON-BOARD DIAGNOSTIC [AUDIO]

Step	Inspection		Action
5	**INSPECT WIRING HARNESS FOR OPEN CIRCUIT BETWEEN AUDIO UNIT AND AUXILIARY JACK/USB PORT** • Verify that the connectors for the audio unit and the auxiliary jack/USB port are disconnected. • Inspect for continuity between the following terminals (vehicle wiring harness). — Audio unit terminal 3A and auxiliary jack/USB port terminal UD — Audio unit terminal 3B and auxiliary jack/USB port terminal UC — Audio unit terminal 3C and auxiliary jack/USB port terminal UA — Audio unit terminal 3D and auxiliary jack/USB port terminal UB • Is there continuity?	Yes	Go to the next step.
		No	Repair or replace the wiring harness, then go to Step 7.
6	**INSPECT WIRING HARNESS FOR SHORT TO GROUND BETWEEN AUDIO UNIT AND AUXILIARY JACK/USB PORT** • Inspect for continuity between the following wiring harness terminals (vehicle wiring harness side) and body ground. — Auxiliary jack/USB port terminal UD — Auxiliary jack/USB port terminal UC — Auxiliary jack/USB port terminal UA — Auxiliary jack/USB port terminal UB • Is there continuity?	Yes	Repair or replace the wiring harness, then go to Step 7.
		No	Go to the next step.
7	**VERIFY THAT REPAIRS HAVE BEEN COMPLETED** • Reconnect all the disconnected connectors. • Connect the negative battery cable. (See 01-17A-11 NEGATIVE BATTERY CABLE DISCONNECTION/CONNECTION [SKYACTIV-G 2.0].) (See 01-17A-13 NEGATIVE BATTERY CABLE DISCONNECTION/CONNECTION [SKYACTIV-G 2.0 (WITHOUT i-stop)].) (See 01-17B-9 NEGATIVE BATTERY CABLE DISCONNECTION/CONNECTION [SKYACTIV-D 2.2].) • Clear the audio unit DTCs. (See 09-02E-9 CLEARING DTC [AUDIO].) • Perform the audio unit DTC inspection. (See 09-02E-3 DTC INSPECTION [AUDIO].) • Is the same DTC displayed?	Yes	Return to Step 1 and inspect for other possible causes. If the malfunction recurs, replace the audio unit, then go to the next step. (See 09-20-4 AUDIO UNIT REMOVAL/INSTALLATION.)
		No	Go to the next step.
8	**VERIFY IF OTHER DTCs DISPLAYED** • Are any other DTCs displayed?	Yes	Repair the malfunctioning part according to the applicable DTC troubleshooting. (See 09-02E-10 DTC TABLE [AUDIO].)
		No	DTC troubleshooting completed.

ON-BOARD DIAGNOSTIC [AUDIO]

DTC: 29:Er01 [AUDIO]

id0902f6452400

Note
- “iPod” is a registered trademark of Apple Inc. in the United States and other countries.

Audio unit (with color LCD)

Description	Audio unit internal malfunction, or iPod malfunction
Detection condition	When iPod is connected, audio unit read error is detected
Fail-safe function	—
Possible cause	• USB device/iPod malfunction • Incompatible USB device (format) used • Audio unit connector or terminal malfunction • Auxiliary jack/USB port connector or terminal malfunction • Open circuit in wiring harness between the following terminals: — Audio unit terminal 4A and auxiliary jack/USB port terminal UD — Audio unit terminal 4B and auxiliary jack/USB port terminal UC — Audio unit terminal 4C and auxiliary jack/USB port terminal UA — Audio unit terminal 4D and auxiliary jack/USB port terminal UB • Short to ground in wiring harness between the following terminals: — Audio unit terminal 4A and auxiliary jack/USB port terminal UD — Audio unit terminal 4B and auxiliary jack/USB port terminal UC — Audio unit terminal 4C and auxiliary jack/USB port terminal UA — Audio unit terminal 4D and auxiliary jack/USB port terminal UB • Auxiliary jack/USB port malfunction • Audio unit malfunction

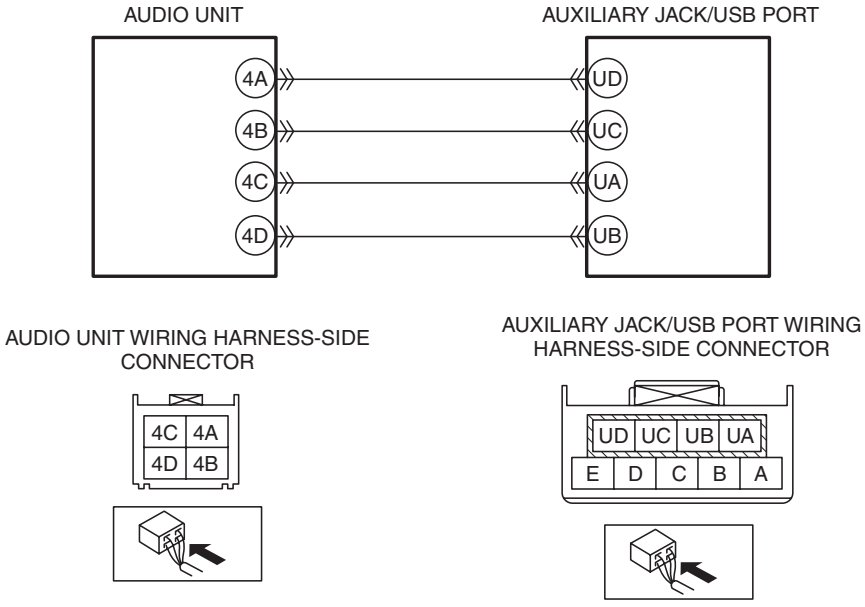

Diagnostic Procedure

Step	Inspection		Action
1	**INSPECT USB DEVICE/iPod** • Connect the USB device/iPod to a same-model vehicle (model/unit). • Is the USB device/iPod connection detected/unit plays back.	Yes	Go to the next step.
		No	System is normal. (USB device/iPod malfunction or incompatible USB device.) Go to Step 7.

ON-BOARD DIAGNOSTIC [AUDIO]

Step	Inspection		Action
2	**INSPECT AUDIO UNIT CONNECTOR CONDITION** • Switch the ignition off (LOCK). • Disconnect the negative battery cable. (See 01-17A-11 NEGATIVE BATTERY CABLE DISCONNECTION/CONNECTION [SKYACTIV-G 2.0].) (See 01-17A-13 NEGATIVE BATTERY CABLE DISCONNECTION/CONNECTION [SKYACTIV-G 2.0 (WITHOUT i-stop)].) (See 01-17B-9 NEGATIVE BATTERY CABLE DISCONNECTION/CONNECTION [SKYACTIV-D 2.2].) • Disconnect the audio unit connector. • Inspect the connector engagement and connection condition and inspect the terminals for damage, deformation, corrosion, or disconnection. • Is there any malfunctioning part?	Yes	Repair or replace the connector, then go to Step 7.
		No	Go to the next step.
3	**INSPECT AUXILIARY JACK/USB PORT CONNECTOR CONDITION** • Disconnect the auxiliary jack/USB port connector. • Inspect the connector engagement and connection condition and inspect the terminals for damage, deformation, corrosion, or disconnection. • Is there any malfunctioning part?	Yes	Repair or replace the connector, then go to Step 7.
		No	Go to the next step.
4	**INSPECT WIRING HARNESS FOR OPEN CIRCUIT BETWEEN AUDIO UNIT AND AUXILIARY JACK/USB PORT** • Verify that the connectors for the audio unit and the auxiliary jack/USB port are not disconnected. • Inspect for continuity between the following terminals (vehicle wiring harness). — Audio unit terminal 4A and auxiliary jack/USB port terminal UD — Audio unit terminal 4B and auxiliary jack/USB port terminal UC — Audio unit terminal 4C and auxiliary jack/USB port terminal UA — Audio unit terminal 4D and auxiliary jack/USB port terminal UB • Is there continuity?	Yes	Go to the next step.
		No	Repair or replace the wiring harness, then go to Step 7.
5	**INSPECT WIRING HARNESS FOR SHORT TO GROUND BETWEEN AUDIO UNIT AND AUXILIARY JACK/USB PORT** • Inspect for continuity between the following wiring harness terminals (vehicle wiring harness side) and body ground. — Auxiliary jack/USB port terminal UD — Auxiliary jack/USB port terminal UC — Auxiliary jack/USB port terminal UA — Auxiliary jack/USB port terminal UB • Is there continuity?	Yes	Repair or replace the wiring harness, then go to Step 7.
		No	Go to the next step.
6	**INSPECT AUXILIARY JACK/USB PORT** • Inspect the auxiliary jack/USB port. (See 09-20-77 AUXILIARY JACK/USB PORT INSPECTION.) • Is there any malfunctioning part?	Yes	Replace the auxiliary jack/USB port, then go to Step 7. (See 09-20-77 AUXILIARY JACK/USB PORT REMOVAL/INSTALLATION.)
		No	Go to the next step.

ON-BOARD DIAGNOSTIC [AUDIO]

Step	Inspection		Action
7	**VERIFY THAT REPAIRS HAVE BEEN COMPLETED** • Reconnect all the disconnected connectors. • Connect the negative battery cable. (See 01-17A-11 NEGATIVE BATTERY CABLE DISCONNECTION/CONNECTION [SKYACTIV-G 2.0].) (See 01-17A-13 NEGATIVE BATTERY CABLE DISCONNECTION/CONNECTION [SKYACTIV-G 2.0 (WITHOUT i-stop)].) (See 01-17B-9 NEGATIVE BATTERY CABLE DISCONNECTION/CONNECTION [SKYACTIV-D 2.2].) • Clear the audio unit DTCs. (See 09-02E-9 CLEARING DTC [AUDIO].) • Perform the audio unit DTC inspection. (See 09-02E-3 DTC INSPECTION [AUDIO].) • Is the same DTC displayed?	Yes	Return to Step 1 and inspect for other possible causes. If the malfunction recurs, replace the audio unit, then go to the next step. (See 09-02E-10 DTC TABLE [AUDIO].)
		No	Go to the next step.
8	**VERIFY IF OTHER DTCs DISPLAYED** • Are any other DTCs displayed?	Yes	Repair the malfunctioning part according to the applicable DTC troubleshooting. (See 09-02E-10 DTC TABLE [AUDIO].)
		No	DTC troubleshooting completed.

Audio unit (without color LCD)

Description	Audio unit internal malfunction, or iPod malfunction
Detection condition	When iPod is connected, audio unit read error is detected
Fail-safe function	—
Possible cause	• USB device/iPod malfunction • Incompatible USB device (format) used • Audio unit connector or terminal malfunction • Auxiliary jack/USB port connector or terminal malfunction • Open circuit in wiring harness between the following terminals: — Audio unit terminal 3A and auxiliary jack/USB port terminal UD — Audio unit terminal 3B and auxiliary jack/USB port terminal UC — Audio unit terminal 3C and auxiliary jack/USB port terminal UA — Audio unit terminal 3D and auxiliary jack/USB port terminal UB • Short to ground in wiring harness between the following terminals: — Audio unit terminal 3A and auxiliary jack/USB port terminal UD — Audio unit terminal 3B and auxiliary jack/USB port terminal UC — Audio unit terminal 3C and auxiliary jack/USB port terminal UA — Audio unit terminal 3D and auxiliary jack/USB port terminal UB • Auxiliary jack/USB port malfunction • Audio unit malfunction

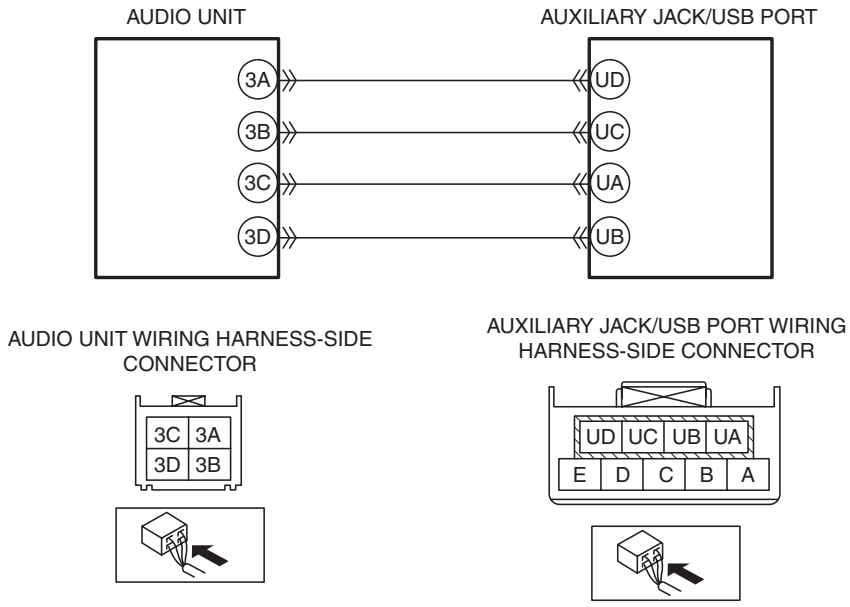

ON-BOARD DIAGNOSTIC [AUDIO]

Diagnostic Procedure

Step	Inspection		Action
1	**INSPECT USB DEVICE/iPod** • Connect the USB device/iPod to another vehicle (model/unit). • Is the USB device/iPod connection detected/ unit plays back.	Yes	Go to the next step.
		No	System is normal. (USB device/iPod malfunction or incompatible USB device.) Go to Step 7.
2	**INSPECT AUXILIARY JACK/USB PORT CONNECTOR CONDITION** • Disconnect the auxiliary jack/USB port connector. • Inspect the connector engagement and connection condition and inspect the terminals for damage, deformation, corrosion, or disconnection. • Is there any malfunctioning part?	Yes	Repair or replace the connector, then go to Step 7.
		No	Go to the next step.
3	**INSPECT AUXILIARY JACK/USB PORT** • Inspect the auxiliary jack/USB port. (See 09-20-77 AUXILIARY JACK/USB PORT INSPECTION.) • Is there any malfunctioning part?	Yes	Replace the auxiliary jack/USB port, then go to Step 7. (See 09-20-77 AUXILIARY JACK/USB PORT REMOVAL/ INSTALLATION.)
		No	Go to the next step.
4	**INSPECT AUDIO UNIT CONNECTOR CONDITION** • Switch the ignition off (LOCK). • Disconnect the negative battery cable. (See 01-17A-11 NEGATIVE BATTERY CABLE DISCONNECTION/CONNECTION [SKYACTIV-G 2.0].) (See 01-17A-13 NEGATIVE BATTERY CABLE DISCONNECTION/CONNECTION [SKYACTIV-G 2.0 (WITHOUT i-stop)].) (See 01-17B-9 NEGATIVE BATTERY CABLE DISCONNECTION/CONNECTION [SKYACTIV-D 2.2].) • Disconnect the audio unit connector. • Inspect the connector engagement and connection condition and inspect the terminals for damage, deformation, corrosion, or disconnection. • Is there any malfunctioning part?	Yes	Repair or replace the connector, then go to Step 7.
		No	Go to the next step.
5	**INSPECT WIRING HARNESS FOR OPEN CIRCUIT BETWEEN AUDIO UNIT AND AUXILIARY JACK/USB PORT** • Verify that the connectors for the audio unit and the auxiliary jack/USB port are disconnected. • Inspect for continuity between the following terminals (vehicle wiring harness). — Audio unit terminal 3A and auxiliary jack/ USB port terminal UD — Audio unit terminal 3B and auxiliary jack/ USB port terminal UC — Audio unit terminal 3C and auxiliary jack/ USB port terminal UA — Audio unit terminal 3D and auxiliary jack/ USB port terminal UB • Is there continuity?	Yes	Go to the next step.
		No	Repair or replace the wiring harness, then go to Step 7.

ON-BOARD DIAGNOSTIC [AUDIO]

Step	Inspection		Action
6	**INSPECT WIRING HARNESS FOR SHORT TO GROUND BETWEEN AUDIO UNIT AND AUXILIARY JACK/ USB PORT** • Inspect for continuity between the following wiring harness terminals (vehicle wiring harness side) and body ground. — Auxiliary jack/USB port terminal UD — Auxiliary jack/USB port terminal UC — Auxiliary jack/USB port terminal UA — Auxiliary jack/USB port terminal UB • Is there continuity?	Yes	Repair or replace the wiring harness, then go to Step 7.
		No	Go to the next step.
7	**VERIFY THAT REPAIRS HAVE BEEN COMPLETED** • Reconnect all the disconnected connectors. • Connect the negative battery cable. (See 01-17A-11 NEGATIVE BATTERY CABLE DISCONNECTION/CONNECTION [SKYACTIV-G 2.0].) (See 01-17A-13 NEGATIVE BATTERY CABLE DISCONNECTION/CONNECTION [SKYACTIV-G 2.0 (WITHOUT i-stop)].) (See 01-17B-9 NEGATIVE BATTERY CABLE DISCONNECTION/CONNECTION [SKYACTIV-D 2.2].) • Clear the audio unit DTCs. (See 09-02E-9 CLEARING DTC [AUDIO].) • Perform the audio unit DTC inspection. (See 09-02E-3 DTC INSPECTION [AUDIO].) • Is the same DTC displayed?	Yes	Return to Step 1 and inspect for other possible causes. If the malfunction recurs, replace the audio unit, then go to the next step. (See 09-20-4 AUDIO UNIT REMOVAL/INSTALLATION.)
		No	Go to the next step.
8	**VERIFY IF OTHER DTCs DISPLAYED** • Are any other DTCs displayed?	Yes	Repair the malfunctioning part according to the applicable DTC troubleshooting. (See 09-02E-10 DTC TABLE [AUDIO].)
		No	DTC troubleshooting completed.

ON-BOARD DIAGNOSTIC [AUDIO]

DTC: B1188:64, 10:Er07 [AUDIO]

id0902f6442400

Description	Audio unit internal malfunction
Detection condition	Audio unit detects CD read error
Fail-safe function	—
Possible cause	• CD insertion direction mistaken • CD scratching or soiling • Incompatible CD used • Audio unit malfunction
System wiring diagram	—

Diagnostic Procedure

Step	Inspection		Action
1	**INSPECT FOR MISTAKEN CD INSERTION DIRECTION** • Verify the CD insertion direction. • Is the CD inserted with the printed label pointed up?	Yes	Go to Step 3.
		No	Insert the CD with the printed label pointed up, then go to the next step.
2	**PERFORM DTC INSPECTION AND VERIFY IF CD IS MALFUNCTIONING PART** • Clear the audio unit DTCs. (See 09-02E-9 CLEARING DTC [AUDIO].) • Perform the audio unit DTC inspection. (See 09-02E-3 DTC INSPECTION [AUDIO].) • Is the same DTC displayed?	Yes	Go to the next step.
		No	Go to Step 6.
3	**CD INSPECTION** • Verify on another vehicle of the same model (model/unit) using the CD in which the malfunction occurred. • Does the CD play?	Yes	Go to the next step.
		No	Replace the CD then, go to the next step. **Note** • Refer to the following for a playable CD. (See 09-03J-11 REFERENCE [CD PLAYER].)
4	**PERFORM DTC INSPECTION AND VERIFY IF MALFUNCTIONING PART IS AUDIO UNIT** • Clear the audio unit DTCs. (See 09-02E-9 CLEARING DTC [AUDIO].) • Play the CD for 12 s or more. • Perform the audio unit DTC inspection. (See 09-02E-3 DTC INSPECTION [AUDIO].) • Is the same DTC displayed?	Yes	Replace the audio unit. (See 09-20-4 AUDIO UNIT REMOVAL/INSTALLATION.)
		No	Go to the next step.
5	**VERIFY THAT REPAIRS HAVE BEEN COMPLETED** • Clear the audio unit DTCs. (See 09-02E-9 CLEARING DTC [AUDIO].) • Perform the audio unit DTC inspection. (See 09-02E-3 DTC INSPECTION [AUDIO].) • Is the same DTC displayed?	Yes	Replace the audio unit, then go to the next step. (See 09-20-4 AUDIO UNIT REMOVAL/INSTALLATION.)
		No	Go to the next step.
6	**VERIFY IF OTHER DTCs DISPLAYED** • Are any other DTCs displayed?	Yes	Repair the malfunctioning part according to the applicable DTC troubleshooting. (See 09-02E-10 DTC TABLE [AUDIO].)
		No	DTC troubleshooting completed.

ON-BOARD DIAGNOSTIC [AUDIO]

DTC: B1D19:71, 10:ER02 [AUDIO]

id0902f6442500

Description	Audio unit internal malfunction
Detection condition	Audio unit detects CD drive servo malfunction
Fail-safe function	—
Possible cause	• CD insertion direction mistaken • CD scratching or soiling • Incompatible CD used • Audio unit malfunction
System wiring diagram	—

Diagnostic Procedure

Step	Inspection		Action
1	**INSPECT FOR MISTAKEN CD INSERTION DIRECTION** • Verify the CD insertion direction. • Is the CD inserted with the printed label pointed up?	Yes	Go to Step 3.
		No	Insert the CD with the printed label pointed up, then go to the next step.
2	**PERFORM DTC INSPECTION AND VERIFY IF CD IS MALFUNCTIONING PART** • Clear the audio unit DTCs. (See 09-02E-9 CLEARING DTC [AUDIO].) • Perform the audio unit DTC inspection. (See 09-02E-3 DTC INSPECTION [AUDIO].) • Is the same DTC displayed?	Yes	Go to the next step.
		No	Go to Step 6.
3	**CD INSPECTION** • Verify on another vehicle of the same model (model/unit) using the CD in which the malfunction occurred. • Does the CD play?	Yes	Go to the next step.
		No	Replace the CD, then go to the next step. **Note** • Refer to the following for a playable CD. (See 09-03J-11 REFERENCE [CD PLAYER].)
4	**PERFORM DTC INSPECTION AND VERIFY IF MALFUNCTIONING PART IS AUDIO UNIT** • Clear the audio unit DTCs. (See 09-02E-9 CLEARING DTC [AUDIO].) • Play the CD for 12 s or more. • Perform the audio unit DTC inspection. (See 09-02E-3 DTC INSPECTION [AUDIO].) • Is the same DTC displayed?	Yes	Replace the audio unit. (See 09-20-4 AUDIO UNIT REMOVAL/INSTALLATION.)
		No	Go to the next step.
5	**VERIFY THAT REPAIRS HAVE BEEN COMPLETED** • Clear the audio unit DTCs. (See 09-02E-9 CLEARING DTC [AUDIO].) • Perform the audio unit DTC inspection. (See 09-02E-3 DTC INSPECTION [AUDIO].) • Is the same DTC displayed?	Yes	Replace the audio unit, then go to the next step. (See 09-20-4 AUDIO UNIT REMOVAL/INSTALLATION.)
		No	Go to the next step.
6	**VERIFY IF OTHER DTCs DISPLAYED** • Are any other DTCs displayed?	Yes	Repair the malfunctioning part according to the applicable DTC troubleshooting. (See 09-02E-10 DTC TABLE [AUDIO].)
		No	DTC troubleshooting completed.

ON-BOARD DIAGNOSTIC [AUDIO]

DTC: B1D19:79, 10:Er01 [AUDIO]

id0902f6442600

Description	Audio unit internal malfunction
Detection condition	Audio unit detects CD drive mechanism malfunction
Fail-safe function	—
Possible cause	• CD insertion direction mistaken • CD scratching or soiling • Incompatible CD used • Audio unit malfunction
System wiring diagram	—

Diagnostic Procedure

Step	Inspection		Action
1	**INSPECT FOR MISTAKEN CD INSERTION DIRECTION** • Verify the CD insertion direction. • Is the CD inserted with the printed label pointed up?	Yes	Go to Step 3.
		No	Insert the CD with the printed label pointed up, then go to the next step.
2	**PERFORM DTC INSPECTION AND VERIFY IF CD IS MALFUNCTIONING PART** • Clear the audio unit DTCs. (See 09-02E-9 CLEARING DTC [AUDIO].) • Perform the audio unit DTC inspection. (See 09-02E-3 DTC INSPECTION [AUDIO].) • Is the same DTC displayed?	Yes	Go to the next step.
		No	Go to Step 6.
3	**CD INSPECTION** • Verify on another vehicle of the same model (model/unit) using the CD in which the malfunction occurred. • Does the CD play?	Yes	Go to the next step.
		No	Replace the CD, then go to the next step. **Note** • Refer to the following for a playable CD. (See 09-03J-11 REFERENCE [CD PLAYER].)
4	**PERFORM DTC INSPECTION AND VERIFY IF MALFUNCTIONING PART IS AUDIO UNIT** • Clear the audio unit DTCs. (See 09-02E-9 CLEARING DTC [AUDIO].) • Play the CD for 12 s or more. • Perform the audio unit DTC inspection. (See 09-02E-3 DTC INSPECTION [AUDIO].) • Is the same DTC displayed?	Yes	Replace the audio unit. (See 09-20-4 AUDIO UNIT REMOVAL/INSTALLATION.)
		No	Go to the next step.
5	**VERIFY THAT REPAIRS HAVE BEEN COMPLETED** • Clear the audio unit DTCs. (See 09-02E-9 CLEARING DTC [AUDIO].) • Perform the audio unit DTC inspection. (See 09-02E-3 DTC INSPECTION [AUDIO].) • Is the same DTC displayed?	Yes	Replace the audio unit, then go to the next step. (See 09-20-4 AUDIO UNIT REMOVAL/INSTALLATION.)
		No	Go to the next step.
6	**VERIFY IF OTHER DTCs DISPLAYED** • Are any other DTCs displayed?	Yes	Repair the malfunctioning part according to the applicable DTC troubleshooting. (See 09-02E-10 DTC TABLE [AUDIO].)
		No	DTC troubleshooting completed.

ON-BOARD DIAGNOSTIC [AUDIO]

DTC: B1D19:96, 10:Er10 [AUDIO]

id0902f6442700

Description	Audio unit internal malfunction
Detection condition	Audio unit detects audio control circuit and CD drive communication error
Fail-safe function	—
Possible cause	• CD insertion direction mistaken • CD scratching or soiling • Incompatible CD used • Audio unit malfunction
System wiring diagram	—

Diagnostic Procedure

Step	Inspection		Action
1	**INSPECT FOR MISTAKEN CD INSERTION DIRECTION** • Verify the CD insertion direction. • Is the CD inserted with the printed label pointed up?	Yes	Go to Step 3.
		No	Insert the CD with the printed label pointed up, then go to the next step.
2	**PERFORM DTC INSPECTION AND VERIFY IF CD IS MALFUNCTIONING PART** • Clear the audio unit DTCs. (See 09-02E-9 CLEARING DTC [AUDIO].) • Perform the audio unit DTC inspection. (See 09-02E-3 DTC INSPECTION [AUDIO].) • Is the same DTC displayed?	Yes	Go to the next step.
		No	Go to Step 6.
3	**CD INSPECTION** • Verify on another vehicle of the same model (model/unit) using the CD in which the malfunction occurred. • Does the CD play?	Yes	Go to the next step.
		No	Replace the CD, then go to the next step. **Note** • Refer to the following for a playable CD. (See 09-03J-11 REFERENCE [CD PLAYER].)
4	**PERFORM DTC INSPECTION AND VERIFY IF MALFUNCTIONING PART IS AUDIO UNIT** • Clear the audio unit DTCs. (See 09-02E-9 CLEARING DTC [AUDIO].) • Play the CD for 12 s or more. • Perform the audio unit DTC inspection. (See 09-02E-3 DTC INSPECTION [AUDIO].) • Is the same DTC displayed?	Yes	Replace the audio unit. (See 09-20-4 AUDIO UNIT REMOVAL/INSTALLATION.)
		No	Go to the next step.
5	**VERIFY THAT REPAIRS HAVE BEEN COMPLETED** • Clear the audio unit DTCs. (See 09-02E-9 CLEARING DTC [AUDIO].) • Perform the audio unit DTC inspection. (See 09-02E-3 DTC INSPECTION [AUDIO].) • Is the same DTC displayed?	Yes	Replace the audio unit, then go to the next step. (See 09-20-4 AUDIO UNIT REMOVAL/INSTALLATION.)
		No	Go to the next step.
6	**VERIFY IF OTHER DTCs DISPLAYED** • Are any other DTCs displayed?	Yes	Repair the malfunctioning part according to the applicable DTC troubleshooting. (See 09-02E-10 DTC TABLE [AUDIO].)
		No	DTC troubleshooting completed.

ON-BOARD DIAGNOSTIC [AUDIO]

DTC: U3000:04, 09:Er22 [AUDIO]

id0902f6441500

Description	Audio unit internal malfunction
Detection condition	Audio unit internal ECU (Tuner peripheral circuit) is faulted.
Fail-safe function	—
Possible cause	Audio unit malfunction
System wiring diagram	—

Diagnostic Procedure

Step	Inspection		Action
1	**CONFIRM AUDIO UNIT DTC** • Clear the DTC from the audio unit memory. (See 09-02E-9 CLEARING DTC [AUDIO].) • Perform the audio unit DTC inspection. (See 09-02E-3 DTC INSPECTION [AUDIO].) • Is the same DTC present?	Yes	Replace the audio unit, then go to the next step. (See 09-20-4 AUDIO UNIT REMOVAL/INSTALLATION.)
		No	Go to the next step.
2	**VERIFY IF OTHER DTCs DISPLAYED** • Are any other DTCs displayed?	Yes	Repair the malfunctioning part according to the applicable DTC troubleshooting. (See 09-02E-10 DTC TABLE [AUDIO].)
		No	DTC troubleshooting completed.

DTC: U3000:09, 09:Er21 [AUDIO]

id0902f6441600

Without Bose®

Description	Audio unit internal malfunction
Detection condition	• Audio unit (circuit around power amplifier) malfunction detected • Audio unit protection function operates due to short to ground in speaker wiring harness and speaker lead wire
Fail-safe function	Output to speakers stops
Possible cause	• Audio unit connector or terminal malfunction • Speaker connector or terminal malfunction • Open circuit in wiring harness between the following terminals: — Audio unit terminal 1A and front door speaker (LH) terminal C — Audio unit terminal 1C and front door speaker (LH) terminal B — Audio unit terminal 1D and front door speaker (RH) terminal C — Audio unit terminal 1F and front door speaker (RH) terminal B — Audio unit terminal 1S and rear door speaker (LH) terminal C — Audio unit terminal 1U and front door speaker (LH) terminal B — Audio unit terminal 1V and rear door speaker (RH) terminal C — Audio unit terminal 1X and rear door speaker (RH) terminal B • Short to ground in wiring harness between the following terminals: — Audio unit terminal 1A and front door speaker (LH) terminal C — Audio unit terminal 1C and front door speaker (LH) terminal B — Audio unit terminal 1D and front door speaker (RH) terminal C — Audio unit terminal 1F and front door speaker (RH) terminal B — Audio unit terminal 1S and rear door speaker (LH) terminal C — Audio unit terminal 1U and front door speaker (LH) terminal B — Audio unit terminal 1V and rear door speaker (RH) terminal C — Audio unit terminal 1X and rear door speaker (RH) terminal B • Speaker malfunction • Audio unit malfunction

ON-BOARD DIAGNOSTIC [AUDIO]

Description	Audio unit internal malfunction

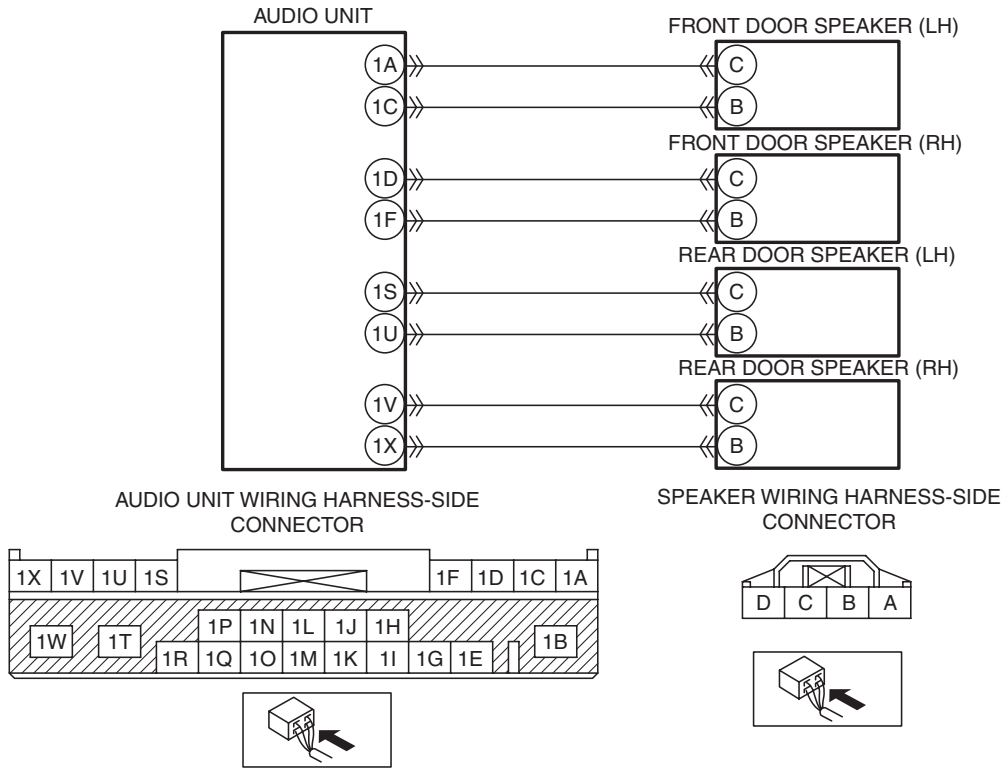

Diagnostic Procedure

Step	Inspection		Action
1	**INSPECT AUDIO UNIT CONNECTOR CONDITION** • Switch the ignition off (LOCK). • Disconnect the negative battery cable. (See 01-17A-11 NEGATIVE BATTERY CABLE DISCONNECTION/CONNECTION [SKYACTIV-G 2.0].) (See 01-17A-13 NEGATIVE BATTERY CABLE DISCONNECTION/CONNECTION [SKYACTIV-G 2.0 (WITHOUT i-stop)].) (See 01-17B-9 NEGATIVE BATTERY CABLE DISCONNECTION/CONNECTION [SKYACTIV-D 2.2].) • Disconnect the audio unit connector. • Inspect the connector engagement and connection condition and inspect the terminals for damage, deformation, corrosion, or disconnection. • Is there any malfunctioning part?	Yes	Repair or replace the connector, then go to Step 6.
		No	Go to the next step.
2	**INSPECT SPEAKER CONNECTOR CONDITION** • Disconnect the speaker connector. • Inspect the connector engagement and connection condition and inspect the terminals for damage, deformation, corrosion, or disconnection. • Is there any malfunctioning part?	Yes	Repair or replace the connector, then go to Step 6.
		No	Go to the next step.

ON-BOARD DIAGNOSTIC [AUDIO]

Step	Inspection		Action
3	**INSPECT SPEAKER CIRCUIT FOR OPEN CIRCUIT** • Audio unit connector and speaker connector are disconnected. • Inspect for continuity between the following terminals (vehicle wiring harness). — Audio unit terminal 1A and front door speaker (LH) terminal C — Audio unit terminal 1C and front door speaker (LH) terminal B — Audio unit terminal 1D and front door speaker (RH) terminal C — Audio unit terminal 1F and front door speaker (RH) terminal B — Audio unit terminal 1S and rear door speaker (LH) terminal C — Audio unit terminal 1U and front door speaker (LH) terminal B — Audio unit terminal 1V and rear door speaker (RH) terminal C — Audio unit terminal 1X and rear door speaker (RH) terminal B • Is there continuity?	Yes	Go to the next step.
		No	Repair or replace the wiring harness, then go to Step 6.
4	**INSPECT SPEAKER CIRCUIT FOR SHORT TO GROUND** • Inspect for continuity between the following wiring harness terminals (vehicle wiring harness side) and body ground. — Speaker terminal C — Speaker terminal B • Is there continuity?	Yes	Repair or replace the wiring harness, then go to Step 6.
		No	Go to the next step.
5	**INSPECT SPEAKERS** • Inspect the speakers. (See 09-20-18 FRONT DOOR SPEAKER INSPECTION.) (See 09-20-21 REAR DOOR SPEAKER INSPECTION.) • Is there any malfunctioning part?	Yes	Replace the speaker, then go to Step 6. (See 09-20-15 FRONT DOOR SPEAKER REMOVAL/INSTALLATION.) (See 09-20-19 REAR DOOR SPEAKER REMOVAL/INSTALLATION.)
		No	Go to the next step.
6	**VERIFY THAT REPAIRS HAVE BEEN COMPLETED** • Reconnect all the disconnected connectors. • Connect the negative battery cable. (See 01-17A-11 NEGATIVE BATTERY CABLE DISCONNECTION/CONNECTION [SKYACTIV-G 2.0].) (See 01-17A-13 NEGATIVE BATTERY CABLE DISCONNECTION/CONNECTION [SKYACTIV-G 2.0 (WITHOUT i-stop)].) (See 01-17B-9 NEGATIVE BATTERY CABLE DISCONNECTION/CONNECTION [SKYACTIV-D 2.2].) • Clear the audio unit DTCs. (See 09-02E-9 CLEARING DTC [AUDIO].) • Perform the audio unit DTC inspection. (See 09-02E-3 DTC INSPECTION [AUDIO].) • Is the same DTC displayed?	Yes	Return to Step 1 and inspect for other possible causes. If the malfunction recurs, replace the audio unit, then go to the next step. (See 09-20-4 AUDIO UNIT REMOVAL/INSTALLATION.)
		No	Go to the next step.
7	**VERIFY IF OTHER DTCs DISPLAYED** • Are any other DTCs displayed?	Yes	Repair the malfunctioning part according to the applicable DTC troubleshooting. (See 09-02E-10 DTC TABLE [AUDIO].)
		No	DTC troubleshooting completed.

ON-BOARD DIAGNOSTIC [AUDIO]

With Bose®

Description	Audio unit internal malfunction
Detection condition	• Audio unit (circuit around power amplifier) malfunction detected • Audio unit protection function operates due to short to ground in speaker wiring harness and speaker lead wire
Fail-safe function	Output to speakers stops
Possible cause	• Audio unit connector or terminal malfunction • Speaker connector or terminal malfunction • Open circuit in wiring harness between the following terminals: — Audio unit terminal 1A and audio amplifier terminal 1F (L.H.D.)/ terminal 1G (R.H.D.) — Audio unit terminal 1C and audio amplifier terminal 1E (L.H.D.)/ terminal 1H (R.H.D.) — Audio unit terminal 1D and audio amplifier terminal 1G (L.H.D.)/ terminal 1F (R.H.D.) — Audio unit terminal 1F and audio amplifier terminal 1H (L.H.D.)/ terminal 1E (R.H.D.) — Audio unit terminal 1S and audio amplifier terminal 1J (L.H.D.)/ terminal 1K (R.H.D.) — Audio unit terminal 1U and audio amplifier terminal 1I (L.H.D.)/ terminal 1L (R.H.D.) — Audio unit terminal 1V and audio amplifier terminal 1K (L.H.D.)/ terminal 1J (R.H.D.) — Audio unit terminal 1X and audio amplifier terminal 1L (L.H.D.)/ terminal 1I (R.H.D.) • Short to ground in wiring harness between the following terminals: — Audio unit terminal 1A and audio amplifier terminal 1F (L.H.D.)/ terminal 1G (R.H.D.) — Audio unit terminal 1C and audio amplifier terminal 1E (L.H.D.)/ terminal 1H (R.H.D.) — Audio unit terminal 1D and audio amplifier terminal 1G (L.H.D.)/ terminal 1F (R.H.D.) — Audio unit terminal 1F and audio amplifier terminal 1H (L.H.D.)/ terminal 1E (R.H.D.) — Audio unit terminal 1S and audio amplifier terminal 1J (L.H.D.)/ terminal 1K (R.H.D.) — Audio unit terminal 1U and audio amplifier terminal 1I (L.H.D.)/ terminal 1L (R.H.D.) — Audio unit terminal 1V and audio amplifier terminal 1K (L.H.D.)/ terminal 1J (R.H.D.) — Audio unit terminal 1X and audio amplifier terminal 1L (L.H.D.)/ terminal 1I (R.H.D.) • Speaker malfunction • Audio unit malfunction

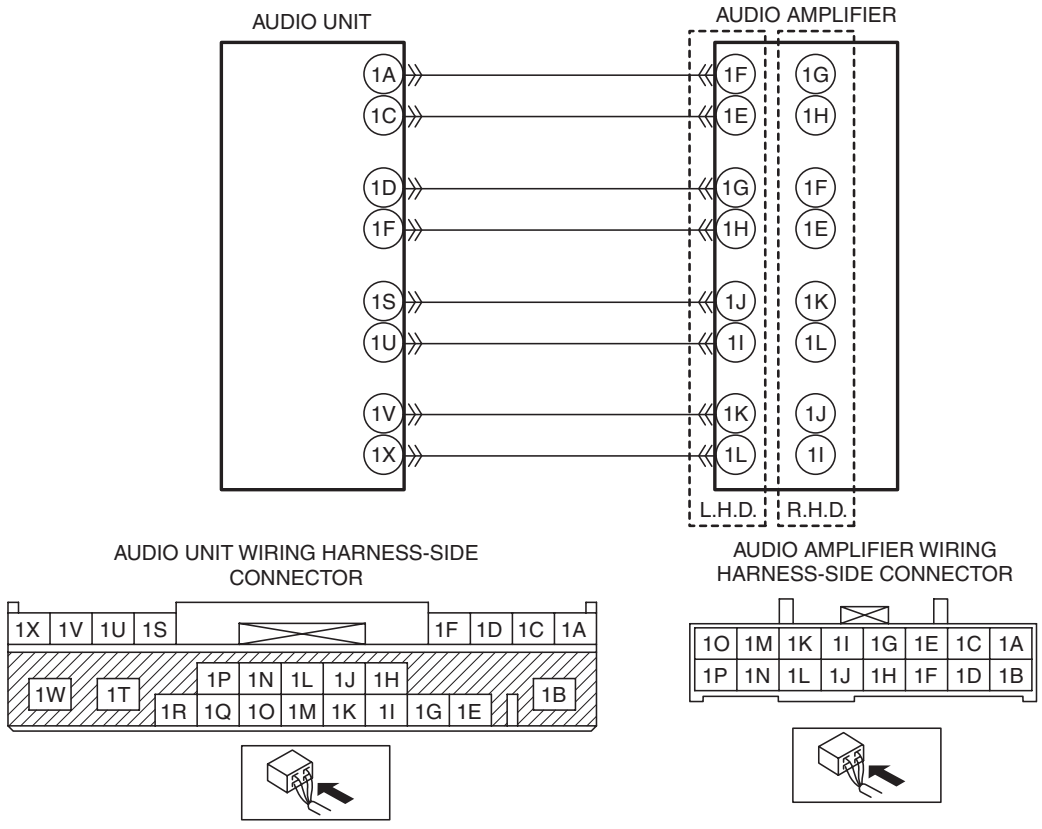

ON-BOARD DIAGNOSTIC [AUDIO]

Diagnostic Procedure

Step	Inspection		Action
1	**INSPECT AUDIO UNIT CONNECTOR CONDITION** • Switch the ignition off (LOCK). • Disconnect the negative battery cable. (See 01-17A-11 NEGATIVE BATTERY CABLE DISCONNECTION/CONNECTION [SKYACTIV-G 2.0].) (See 01-17A-13 NEGATIVE BATTERY CABLE DISCONNECTION/CONNECTION [SKYACTIV-G 2.0 (WITHOUT i-stop)].) (See 01-17B-9 NEGATIVE BATTERY CABLE DISCONNECTION/CONNECTION [SKYACTIV-D 2.2].) • Disconnect the audio unit connector. • Inspect the connector engagement and connection condition and inspect the terminals for damage, deformation, corrosion, or disconnection. • Is there any malfunctioning part?	Yes	Repair or replace the connector, then go to Step 5.
		No	Go to the next step.
2	**INSPECT AUDIO AMPLIFIER CONNECTOR CONDITION** • Disconnect the audio amplifier connector. • Inspect the connector engagement and connection condition and inspect the terminals for damage, deformation, corrosion, or disconnection. • Is there any malfunctioning part?	Yes	Repair or replace the connector, then go to Step 5.
		No	Go to the next step.
3	**INSPECT AUDIO AMPLIFIER CIRCUIT FOR OPEN CIRCUIT** • Audio unit connector and audio amplifier connector are disconnected. • Inspect for continuity between the following terminals (vehicle wiring harness). — Audio unit terminal 1A and audio amplifier terminal 1F (L.H.D.)/ terminal 1G (R.H.D.) — Audio unit terminal 1C and audio amplifier terminal 1E (L.H.D.)/ terminal 1H (R.H.D.) — Audio unit terminal 1D and audio amplifier terminal 1G (L.H.D.)/ terminal 1F (R.H.D.) — Audio unit terminal 1F and audio amplifier terminal 1H (L.H.D.)/ terminal 1E (R.H.D.) — Audio unit terminal 1S and audio amplifier terminal 1J (L.H.D.)/ terminal 1K (R.H.D.) — Audio unit terminal 1U and audio amplifier terminal 1I (L.H.D.)/ terminal 1L (R.H.D.) — Audio unit terminal 1V and audio amplifier terminal 1K (L.H.D.)/ terminal 1J (R.H.D.) — Audio unit terminal 1X and audio amplifier terminal 1L (L.H.D.)/ terminal 1I (R.H.D.) • Is there continuity?	Yes	Go to the next step.
		No	Repair or replace the wiring harness, then go to Step 5.

ON-BOARD DIAGNOSTIC [AUDIO]

Step	Inspection		Action
4	**INSPECT AUDIO AMPLIFIER CIRCUIT FOR SHORT TO GROUND** • Inspect for continuity between the following wiring harness terminals (vehicle wiring harness side) and body ground. — Audio amplifier terminal 1F (L.H.D.)/ terminal 1G (R.H.D.) — Audio amplifier terminal 1E (L.H.D.)/ terminal 1H (R.H.D.) — Audio amplifier terminal 1G (L.H.D.)/ terminal 1F (R.H.D.) — Audio amplifier terminal 1H (L.H.D.)/ terminal 1E (R.H.D.) — Audio amplifier terminal 1J (L.H.D.)/ terminal 1K (R.H.D.) — Audio amplifier terminal 1I (L.H.D.)/ terminal 1L (R.H.D.) — Audio amplifier terminal 1K (L.H.D.)/ terminal 1J (R.H.D.) — Audio amplifier terminal 1L (L.H.D.)/ terminal 1I (R.H.D.) • Is there continuity?	Yes	Repair or replace the wiring harness, then go to Step 5.
		No	Go to the next step.
5	**VERIFY THAT REPAIRS HAVE BEEN COMPLETED** • Reconnect all the disconnected connectors. • Connect the negative battery cable. (See 01-17A-11 NEGATIVE BATTERY CABLE DISCONNECTION/CONNECTION [SKYACTIV-G 2.0].) (See 01-17A-13 NEGATIVE BATTERY CABLE DISCONNECTION/CONNECTION [SKYACTIV-G 2.0 (WITHOUT i-stop)].) (See 01-17B-9 NEGATIVE BATTERY CABLE DISCONNECTION/CONNECTION [SKYACTIV-D 2.2].) • Clear the audio unit DTCs. (See 09-02E-9 CLEARING DTC [AUDIO].) • Perform the audio unit DTC inspection. (See 09-02E-3 DTC INSPECTION [AUDIO].) • Is the same DTC displayed?	Yes	Return to Step 1 and inspect for other possible causes. If the malfunction recurs, replace the audio unit, then go to the next step. (See 09-20-4 AUDIO UNIT REMOVAL/INSTALLATION.)
		No	Go to the next step.
6	**VERIFY IF OTHER DTCs DISPLAYED** • Are any other DTCs displayed?	Yes	Repair the malfunctioning part according to the applicable DTC troubleshooting. (See 09-02E-10 DTC TABLE [AUDIO].)
		No	DTC troubleshooting completed.

DTC: U3003:16, 09:Er20 [AUDIO]

id0902f6441700

Without i-stop System

Description	Voltage decrease input from battery
Detection condition	With the ignition switched to ACC or ON, the audio unit detects voltage from the battery of 10 V or less for 30 s or more.
Fail-safe function	—
Possible cause	• Battery malfunction • Generator malfunction • Audio unit connector or terminal malfunction • Audio unit power supply circuit malfunction — Short to ground in the wiring harness between audio unit terminal 1B and battery (+) terminal. — Short to ground in wiring harness between audio unit terminal 1R and ACC RELAY — AUDIO1 15 A fuse malfunction — AUDIO2 15 A fuse malfunction — CABIN. +B 50 A fuse malfunction — MAIN 200 A fuse malfunction — Open circuit in wiring harness between audio unit terminal 1B and battery (+) terminal — Open circuit in wiring harness between audio unit and terminal 1R • Audio unit malfunction

ON-BOARD DIAGNOSTIC [AUDIO]

Description	Voltage decrease input from battery

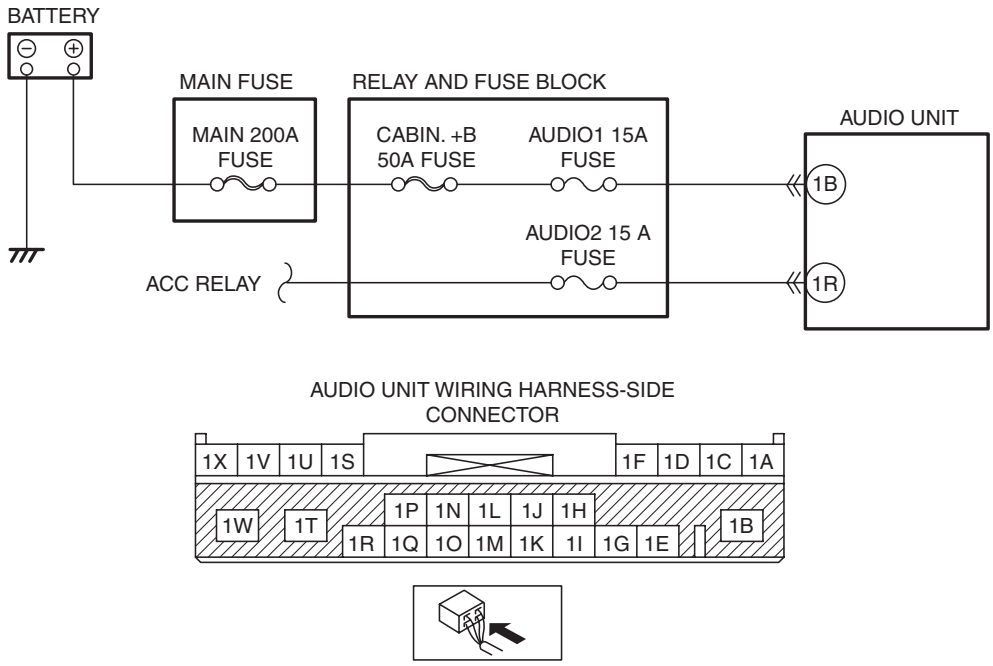

Diagnostic Procedure

Step	Inspection		Action
1	**VERIFY PCM DTCs** • Perform the DTC inspection for the PCM using the M-MDS. (See 10-02A-1 FOREWORD [SKYACTIV-G 2.0 (L.H.D.)].) (See 10-02B-1 FOREWORD [SKYACTIV-G 2.0 (R.H.D.)].) • Is the DTC displayed?	Yes	Repair the malfunctioning part according to the applicable DTC troubleshooting. (See 01-02-14 DTC TABLE [SKYACTIV-G 2.0].)
		No	Go to the next step.
2	**INSPECT BATTERY** • Inspect the battery. (See 01-17A-8 BATTERY INSPECTION [SKYACTIV-G 2.0 (WITHOUT i-stop)].) • Is there any malfunctioning part?	Yes	Recharge or replace the battery, then go to Step 8. (See 01-17A-10 BATTERY RECHARGING [SKYACTIV-G 2.0 (WITHOUT i-stop)].) (See 01-17A-3 BATTERY REMOVAL/INSTALLATION [SKYACTIV-G 2.0].)
		No	Go to the next step.
3	**INSPECT GENERATOR** • Inspect the generator. (See 01-17A-19 GENERATOR INSPECTION [SKYACTIV-G 2.0].) • Is there any malfunctioning part?	Yes	Replace the generator, then go to Step 8. (See 01-17A-17 GENERATOR REMOVAL/INSTALLATION [SKYACTIV-G 2.0].)
		No	Go to the next step.
4	**INSPECT AUDIO UNIT CONNECTOR CONDITION** • Switch the ignition off (LOCK). • Disconnect the negative battery cable. (See 01-17A-13 NEGATIVE BATTERY CABLE DISCONNECTION/CONNECTION [SKYACTIV-G 2.0 (WITHOUT i-stop)].) • Disconnect the audio unit connector. • Inspect the connector engagement and connection condition and inspect the terminals for damage, deformation, corrosion, or disconnection. • Is there any malfunctioning part?	Yes	Repair or replace the connector, then go to Step 8.
		No	Go to the next step.

ON-BOARD DIAGNOSTIC [AUDIO]

Step	Inspection		Action
5	**INSPECT POWER SUPPLY CIRCUIT OF AUDIO UNIT FOR MALFUNCTION** • Verify that the following audio unit connectors are disconnected. • Connect the negative battery cable. (See 01-17A-13 NEGATIVE BATTERY CABLE DISCONNECTION/CONNECTION [SKYACTIV-G 2.0 (WITHOUT i-stop)].) • Switch the ignition to ACC (engine off). • Measure the voltage at the following terminals (vehicle wiring harness side). — Audio unit terminal 1B — Audio unit terminal 1R • Is the voltage B+?	Yes	Go to Step 8.
		No	• Terminal 1B voltage is not B+ — Go to Step 7. • Terminal 1R voltage is not B+ — Go to the next step.
6	**INSPECT AUDIO UNIT POWER SUPPLY CIRCUIT FOR OPEN CIRCUIT OR SHORT TO GROUND** • Switch the ignition off (LOCK). • Disconnect the negative battery cable. (See 01-17A-13 NEGATIVE BATTERY CABLE DISCONNECTION/CONNECTION [SKYACTIV-G 2.0 (WITHOUT i-stop)].) • Inspect the AUDIO2 15 A fuse. • Is there any malfunctioning part?	Yes	• If a fuse is burnt out: — Repair or replace the wiring harness which is shorted to ground. — Replace the malfunctioning fuse. • If a fuse is damaged: — Replace the malfunctioning fuse.
		No	Repair or replace the wiring harness which is shorted to ground, then go to Step 8.
7	**INSPECT AUDIO UNIT POWER SUPPLY CIRCUIT FOR OPEN CIRCUIT OR SHORT TO GROUND** • Switch the ignition off (LOCK). • Disconnect the negative battery cable. (See 01-17A-13 NEGATIVE BATTERY CABLE DISCONNECTION/CONNECTION [SKYACTIV-G 2.0 (WITHOUT i-stop)].) • Inspect the CABIN. +B 50 A fuse, AUDIO1 15A fuse and MAIN 200 A fuse. • Is there any malfunctioning part?	Yes	• If a fuse is burnt out: — Repair or replace the wiring harness which is shorted to ground. — Replace the malfunctioning fuse. • If a fuse is damaged: — Replace the malfunctioning fuse.
		No	Repair or replace the wiring harness which has a short to ground, then go to the next step.
8	**VERIFY THAT REPAIRS HAVE BEEN COMPLETED** • Switch the ignition off (LOCK). • Reconnect all the disconnected connectors. • Connect the negative battery cable. (See 01-17A-13 NEGATIVE BATTERY CABLE DISCONNECTION/CONNECTION [SKYACTIV-G 2.0 (WITHOUT i-stop)].) • Clear the audio unit DTCs. (See 09-02E-9 CLEARING DTC [AUDIO].) • Perform the audio unit DTC inspection. (See 09-02E-3 DTC INSPECTION [AUDIO].) • Is the same DTC displayed?	Yes	Return to Step 1 and inspect for other possible causes. If the malfunction recurs, replace the audio unit, then go to the next step. (See 09-20-4 AUDIO UNIT REMOVAL/INSTALLATION.)
		No	Go to the next step.
9	**VERIFY IF OTHER DTCs DISPLAYED** • Verify if other DTCs are displayed. • Are any other DTCs displayed?	Yes	Repair the malfunctioning part according to the applicable DTC troubleshooting. (See 09-02E-10 DTC TABLE [AUDIO].)
		No	DTC troubleshooting completed.

ON-BOARD DIAGNOSTIC [AUDIO]

With i-stop System

Description	Voltage decrease input from battery
Detection condition	With the ignition switched to ACC or ON, the audio unit detects voltage from the battery of 10 V or less for 30 s or more.
Fail-safe function	—
Possible cause	• Battery malfunction • Generator malfunction • Audio unit connector or terminal malfunction • Audio unit power supply circuit malfunction — Short to ground in wiring harness between AUDIO1 15A fuse and audio unit terminal 1B — AUDIO1 15 A fuse malfunction — AUDIO2 7.5 A fuse malfunction — Open circuit between audio unit terminal 1R and ignition relay (ACC_STAB) terminal C • Ignition relay (ACC_STAB) malfunction • DC-DC converter connector terminal malfunction • Open circuit in wiring harness between DC-DC converter terminal K and ignition relay terminal D • Short to ground in wiring harness between DC-DC converter terminal K and audio unit terminal 1B • Open circuit in wiring harness between DC-DC converter terminal K and audio unit terminal 1B • DC-DC converter malfunction • Audio unit malfunction

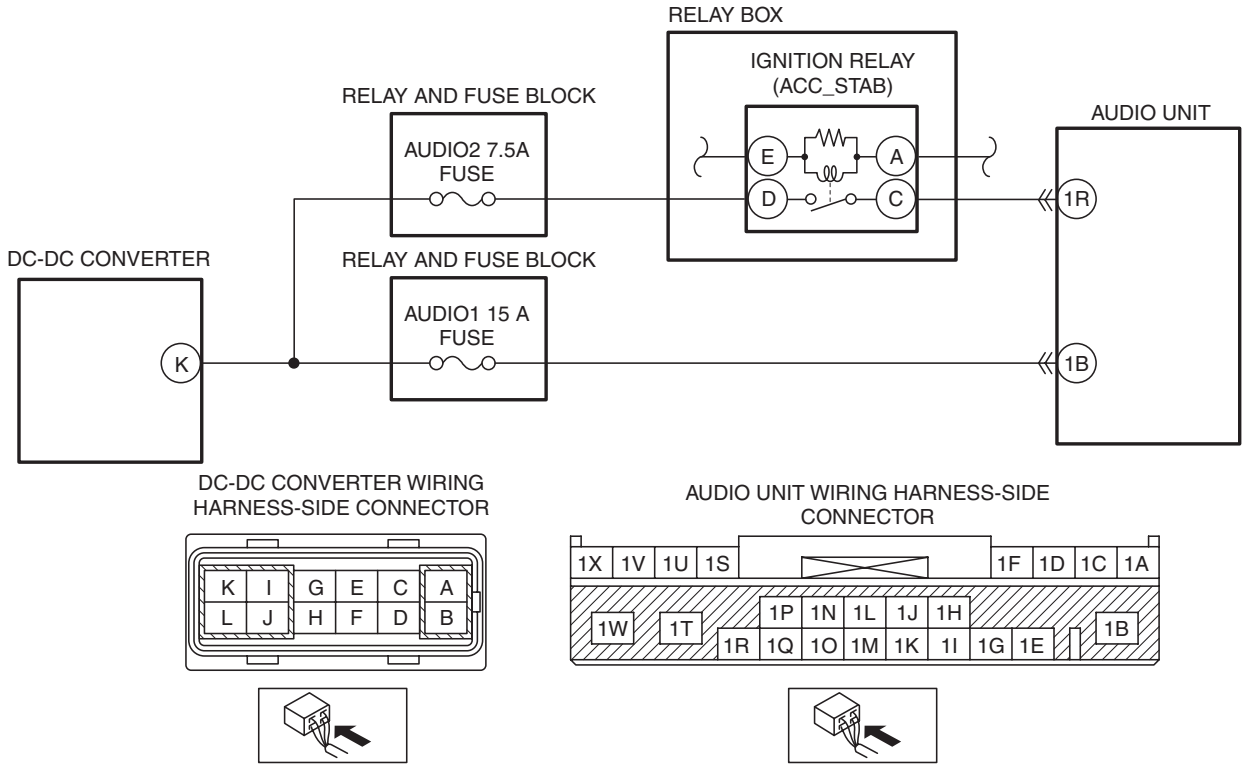

Diagnostic Procedure

Step	Inspection		Action
1	**VERIFY PCM DTCs** • Perform the DTC inspection for the PCM using the M-MDS. (See 10-02A-1 FOREWORD [SKYACTIV-G 2.0 (L.H.D.)].) (See 10-02B-1 FOREWORD [SKYACTIV-G 2.0 (R.H.D.)].) (See 10-02C-1 FOREWORD [SKYACTIV-D 2.2 (L.H.D.)].) (See 10-02D-1 FOREWORD [SKYACTIV-D 2.2 (R.H.D.)].) • Is the DTC displayed?	Yes	Repair the malfunctioning part according to the applicable DTC troubleshooting. (See 01-02-14 DTC TABLE [SKYACTIV-G 2.0].)
		No	Go to the next step.

ON-BOARD DIAGNOSTIC [AUDIO]

Step	Inspection		Action
2	**INSPECT BATTERY** • Inspect the battery. (See 01-17A-7 BATTERY INSPECTION [SKYACTIV-G 2.0].) (See 01-17B-6 BATTERY INSPECTION [SKYACTIV-D 2.2].) • Is there any malfunctioning part?	Yes	Recharge or replace the battery, then go to Step 14. (See 01-17A-9 BATTERY RECHARGING [SKYACTIV-G 2.0].) (See 01-17B-8 BATTERY RECHARGING [SKYACTIV-D 2.2].) (See 01-17A-3 BATTERY REMOVAL/INSTALLATION [SKYACTIV-G 2.0].) (See 01-17B-3 BATTERY REMOVAL/INSTALLATION [SKYACTIV-D 2.2].)
		No	Go to the next step.
3	**INSPECT GENERATOR** • Inspect the generator. (See 01-17A-19 GENERATOR INSPECTION [SKYACTIV-G 2.0].) (See 01-17B-16 GENERATOR INSPECTION [SKYACTIV-D 2.2].) • Is there any malfunctioning part?	Yes	Replace the generator, then go to Step 14. (See 01-17A-17 GENERATOR REMOVAL/INSTALLATION [SKYACTIV-G 2.0].) (See 01-17B-14 GENERATOR REMOVAL/INSTALLATION [SKYACTIV-D 2.2].)
		No	Go to the next step.
4	**INSPECT AUDIO UNIT CONNECTOR CONDITION** • Switch the ignition off (LOCK). • Disconnect the negative battery cable. (See 01-17A-11 NEGATIVE BATTERY CABLE DISCONNECTION/CONNECTION [SKYACTIV-G 2.0].) (See 01-17B-9 NEGATIVE BATTERY CABLE DISCONNECTION/CONNECTION [SKYACTIV-D 2.2].) • Disconnect the audio unit connector. • Inspect the connector engagement and connection condition and inspect the terminals for damage, deformation, corrosion, or disconnection. • Is there any malfunctioning part?	Yes	Repair or replace the connector, then go to Step 14.
		No	Go to the next step.
5	**INSPECT POWER SUPPLY CIRCUIT OF AUDIO UNIT FOR MALFUNCTION** • Verify that the following audio unit connectors are disconnected. • Connect the negative battery cable. (See 01-17A-11 NEGATIVE BATTERY CABLE DISCONNECTION/CONNECTION [SKYACTIV-G 2.0].) (See 01-17B-9 NEGATIVE BATTERY CABLE DISCONNECTION/CONNECTION [SKYACTIV-D 2.2].) • Switch the ignition to ACC (engine off). • Measure the voltage at the following terminals (vehicle wiring harness side). — Audio unit terminal 1B — Audio unit terminal 1R • Is the voltage B+?	Yes	Go to Step 14.
		No	**Terminal 1B voltage is not B+** • Go to Step 10. **Terminal 1R voltage is not B+** • Go to Step 7.
6	**INSPECT AUDIO UNIT POWER SUPPLY CIRCUIT FOR OPEN CIRCUIT OR SHORT TO GROUND** • Switch the ignition off (LOCK). • Disconnect the negative battery cable. (See 01-17A-11 NEGATIVE BATTERY CABLE DISCONNECTION/CONNECTION [SKYACTIV-G 2.0].) (See 01-17B-9 NEGATIVE BATTERY CABLE DISCONNECTION/CONNECTION [SKYACTIV-D 2.2].) • Inspect the AUDIO1 15 A fuse. • Is there any malfunctioning part?	Yes	• If a fuse is burnt out: — Repair or replace the wiring harness which is shorted to ground. — Replace the malfunctioning fuse. • If a fuse is damaged: — Replace the malfunctioning fuse.
		No	Repair or replace the wiring harness which is shorted to ground, then go to Step 14.

ON-BOARD DIAGNOSTIC [AUDIO]

Step	Inspection		Action
7	**INSPECT AUDIO UNIT POWER SUPPLY CIRCUIT FOR OPEN CIRCUIT OR SHORT TO GROUND** • Switch the ignition off (LOCK). • Disconnect the negative battery cable. (See 01-17A-11 NEGATIVE BATTERY CABLE DISCONNECTION/CONNECTION [SKYACTIV-G 2.0].) (See 01-17B-9 NEGATIVE BATTERY CABLE DISCONNECTION/CONNECTION [SKYACTIV-D 2.2].) • Inspect the AUDIO2 7.5 A fuse. • Is there any malfunctioning part?	Yes	• If a fuse is burnt out: — Repair or replace the wiring harness which is shorted to ground. — Replace the malfunctioning fuse. • If a fuse is damaged: — Replace the malfunctioning fuse.
		No	Repair or replace the wiring harness which is shorted to ground, then go to Step 14.
8	**VERIFY MALFUNCTION IN POWER SUPPLY CIRCUIT OF AUDIO UNIT** • Verify that the following audio unit connectors are disconnected. • Measure the voltage at ignition relay coil (ACC_STAB) terminal D (vehicle wiring harness side). • Is the voltage B+?	Yes	Go to the next step.
		No	Go to Step 10.
9	**Inspect ignition relay (ACC_STAB).** • Switch the ignition off (LOCK). • Disconnect the negative battery cable. (See 01-17A-11 NEGATIVE BATTERY CABLE DISCONNECTION/CONNECTION [SKYACTIV-G 2.0].) (See 01-17B-9 NEGATIVE BATTERY CABLE DISCONNECTION/CONNECTION [SKYACTIV-D 2.2].) • Remove the ignition relay (ACC_STAB). (See 09-21-28 RELAY LOCATION.) • Inspect ignition relay (ACC_STAB). (See 09-21-29 RELAY INSPECTION.) • Is there any malfunctioning part?	Yes	Repair or replace the ignition relay (ACC_STAB), then go to Step 14.
		No	Go to the next step.
10	**INSPECT DC-DC CONVERTER CONNECTOR AND TERMINAL CONDITION** • Switch the ignition off (LOCK). • Disconnect the negative battery cable. (See 01-17A-11 NEGATIVE BATTERY CABLE DISCONNECTION/CONNECTION [SKYACTIV-G 2.0].) (See 01-17B-9 NEGATIVE BATTERY CABLE DISCONNECTION/CONNECTION [SKYACTIV-D 2.2].) • Disconnect the DC-DC converter connector. • Inspect the connector engagement and connection condition and inspect the terminals for damage, deformation, corrosion, or disconnection. • Is there any malfunctioning part?	Yes	Repair or replace the connector, then go to Step 14.
		No	Go to the next step.
11	**INSPECT WIRING HARNESS FOR SHORT TO GROUND BETWEEN DC-DC CONVERTER AND IGNITION RELAY** • Verify that the DC-DC connector is disconnected. • Inspect for continuity between ignition relay (ACC_STAB) and terminal D (vehicle wiring harness side) and body ground. • Is there continuity?	Yes	Repair or replace the wiring harness which is shorted to ground, then go to Step 14.
		No	Go to the next step.

ON-BOARD DIAGNOSTIC [AUDIO]

Step	Inspection		Action
12	**INSPECT FOR OPEN CIRCUIT IN WIRING HARNESS BETWEEN DC-DC CONVERTER AND IGNITION RELAY** • Verify that the DC-DC connector is disconnected. • Inspect for continuity in the wiring harness between the ignition relay (ACC_STAB) terminal D (vehicle wiring harness side) and the DC-DC converter terminal K (vehicle wiring harness side). • Is there continuity?	Yes	Connect the DC-DC connector and go to the next step.
		No	Repair or replace the wiring harness which has an open circuit, then go to Step 14.
13	**INSPECT DC-DC CONVERTER** • Inspect the DC-DC converter. (See 01-17A-27 DC-DC CONVERTER INSPECTION [SKYACTIV-G 2.0].) • Is there any malfunctioning part?	Yes	Repair or replace the DC-DC converter and go to the next step. (See 01-17A-26 DC-DC CONVERTER REMOVAL/INSTALLATION [SKYACTIV-G 2.0].) (See 01-17B-22 DC-DC CONVERTER REMOVAL/INSTALLATION [SKYACTIV-D 2.2].)
		No	Go to the next step.
14	**VERIFY THAT REPAIRS HAVE BEEN COMPLETED** • Switch the ignition off (LOCK). • Reconnect all the disconnected connectors. • Connect the negative battery cable. (See 01-17A-11 NEGATIVE BATTERY CABLE DISCONNECTION/CONNECTION [SKYACTIV-G 2.0].) (See 01-17B-9 NEGATIVE BATTERY CABLE DISCONNECTION/CONNECTION [SKYACTIV-D 2.2].) • Clear the audio unit DTCs. (See 09-02E-9 CLEARING DTC [AUDIO].) • Perform the audio unit DTC inspection. (See 09-02E-3 DTC INSPECTION [AUDIO].) • Is the same DTC displayed?	Yes	Return to Step 1 and inspect for other possible causes. If the malfunction recurs, replace the audio unit, then go to the next step. (See 09-20-4 AUDIO UNIT REMOVAL/INSTALLATION.)
		No	Go to the next step.
15	**VERIFY IF OTHER DTCs DISPLAYED** • Verify if other DTCs are displayed. • Are any other DTCs displayed?	Yes	Repair the malfunctioning part according to the applicable DTC troubleshooting. (See 09-02E-10 DTC TABLE [AUDIO].)
		No	DTC troubleshooting completed.

ON-BOARD DIAGNOSTIC [AUDIO]

DIAGNOSTIC ASSIST FUNCTION [AUDIO]

id0902f6804500

Audio unit (with color LCD)
Activation procedure

1. Switch the ignition to ACC or ON (engine off).
2. Press the POWER/VOLUME switch to turn the audio on.
3. Press the POWER/VOLUME switch and SEEK switch (up) simultaneously to launch the diagnostic assist function.

With POWER/VOLUME switch on left side

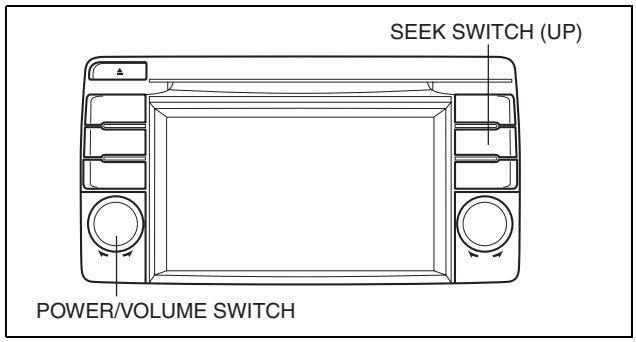

With POWER/VOLUME switch on right side

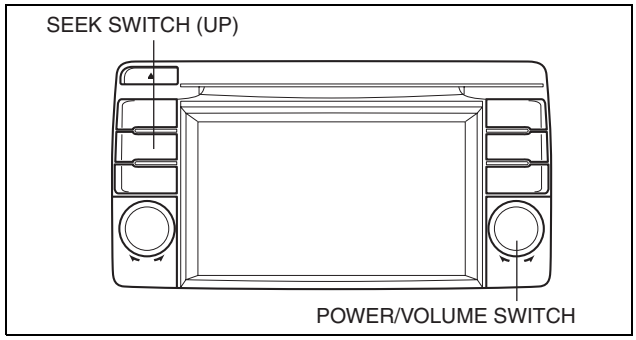

4. Verify that the launched diagnostic assist function is displayed on the screen.
5. Input each diagnostic assist code using the diagnostic assist screen. (See 09-02E-40 Diagnostic assist code list.)

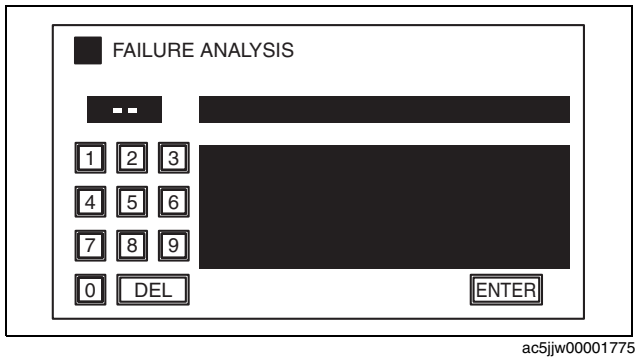

ac5jjw00001775

Diagnostic assist screen

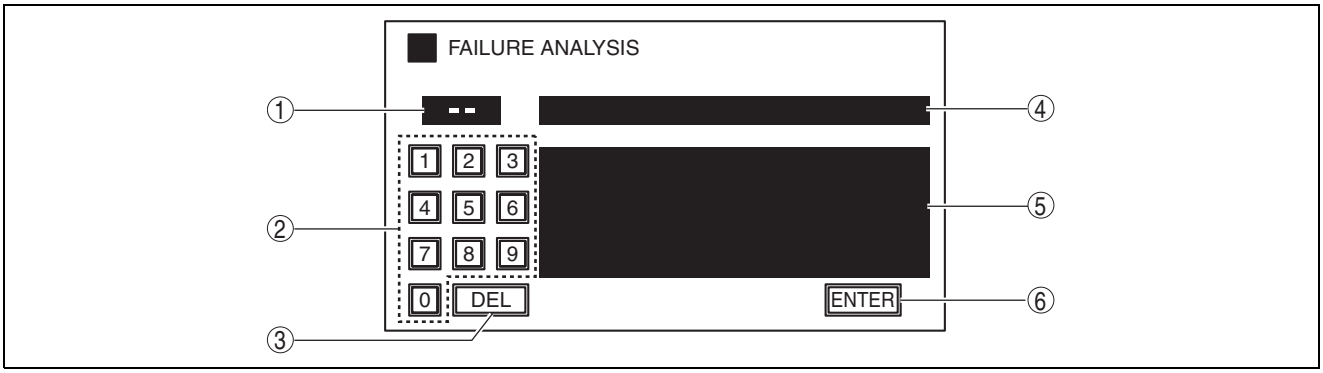

ac5wzw0000073

ON-BOARD DIAGNOSTIC [AUDIO]

No.	Name	Content/function
1	Diagnostic assist code display screen	Displays the diagnostic assist code.
2	Diagnostic assist code input switch	Inputs the diagnostic assist code.
3	DEL switch	Clears the diagnostic assist code.
4	Diagnostic content display screen	Displays the diagnostic content.
5	Diagnostic results display screen	Displays the diagnostic results.
6	ENTER switch	Transfers to the diagnostic assist function.

Diagnostic assist code list

Diagnostic assist code	Content/function
01	09-02E-40 Diagnostic assist code "01" display inspection
02	09-02E-40 Diagnostic assist code "02" switch inspection
03	09-02E-41 Diagnostic assist code "03"speaker inspection
04	09-02E-41 Diagnostic assist code "04"radio reception condition inspection
05	09-02E-42 Diagnostic assist code "05" antenna control output condition inspection
06	09-02E-43 Diagnostic assist code "06" manufacturer verification
07	09-02E-44 Diagnostic assist code "07"audio amplifier specification verification
09	09-02E-44 Diagnostic assist code "09" radio SEEK inspection
11	09-02E-44 Diagnostic assist code "11" CD diagnostic inspection
14	09-02E-45 Diagnostic assist code "14" dial inspection verification
15	09-02E-45 Diagnostic assist code "15" vehicle NAVI signal verification
16	09-02E-46 Diagnostic assist code "16" exterior device connection information clearing

Diagnostic assist code "01" display inspection

1. Launch the diagnostic assist function. (See 09-02E-39 Activation procedure.)
2. Input the diagnostic assist code "01"using the diagnostic input screen.
3. Select "ENTER".
4. Inspect according to the following table:

Inspection	Display	Action	
• Verify that the launched display inspection mode is displayed on the screen. • Verify the display.	Red→Green→Blue→White→ Black→Color bar→Gray bar	Display functions normally.	Display is normal.
		Display does not function normally.	If the display does not display/ operate normally, replace the audio unit. (See 09-20-4 AUDIO UNIT REMOVAL/INSTALLATION.)

5. Press the POWER/VOLUME switch and return to the diagnostic assist screen.
6. Press the POWER/VOLUME switch and end the diagnostic assist function.

Diagnostic assist code "02" switch inspection

1. Launch the diagnostic assist function. (See 09-02E-39 Activation procedure.)
2. Input the diagnostic assist code "02"using the diagnostic input screen.
3. Select "ENTER".
4. Inspect according to the following table:

Inspection	Display	Action	
• Verify that the launched switch inspection mode is displayed on the screen. • Operate all of the switches (press). • Does the buzzer sound?	Check SW	Yes	The switch is normal.
		No	Replace the audio unit. (See 09-20-4 AUDIO UNIT REMOVAL/ INSTALLATION.)

5. Press the POWER/VOLUME switch and return to the diagnostic assist screen.
6. Press the POWER/VOLUME switch and end the diagnostic assist function.

ON-BOARD DIAGNOSTIC [AUDIO]

Diagnostic assist code "03"speaker inspection

1. Launch the diagnostic assist function. (See 09-02E-39 Activation procedure.)
2. Input the diagnostic assist code "03"using the diagnostic input screen.
3. Select "ENTER".
4. Inspect according to the following table:

Inspection	Display	Action	
• Verify that the launched speaker inspection mode is displayed on the screen. • Does each speaker output sound in the following order?: **Without Bose®** 1. Front door speaker (LH) and tweeter (LH) 2. Front door speaker (RH) and tweeter (RH) 3. Rear door speaker (RH) 4. Rear door speaker (LH) **With Bose®** 1. Front door speaker (LH) and tweeter (LH)/front center speaker (LH) 2. Front door speaker (RH) and tweeter (RH)/front center speaker (RH) 3. Rear door speaker (RH) and D pillar speaker (RH) 4. Rear door speaker (LH) and D pillar speaker (LH)	Check Speaker	Yes	The speakers and the wiring harness between the audio unit/audio amplifier and speakers are normal.
		No	• If no sound is produced from all of the speakers. (See 09-03F-13 NO SOUND FROM ALL SPEAKERS [ENTIRE AUDIO SYSTEM].) • If no sound is produced from some of the speakers. (See 09-03F-19 NO SOUND FROM SOME SPEAKERS [ENTIRE AUDIO SYSTEM].)

5. Press the POWER/VOLUME switch and return to the diagnostic assist screen.
6. Press the POWER/VOLUME switch and end the diagnostic assist function.

Diagnostic assist code "04"radio reception condition inspection

1. Launch the diagnostic assist function. (See 09-02E-39 Activation procedure.)
2. Input the diagnostic assist code "04"using the diagnostic input screen.
3. Select "ENTER".
4. Inspect according to the following table:

Caution

- **Even if the system is normal, radio reception may be difficult depending on where the system is inspected (indoors/outdoors, or conditions at the location). Before inspecting the system, verify that radio reception is adequate.**
- **When performing the inspection, select the best area for receiving radio frequencies.**

ON-BOARD DIAGNOSTIC [AUDIO]

Inspection	Display	Action
Verify that the launched radio reception condition inspection mode is displayed on the screen.	LEVEL-10 879—LEVEL-5 879	Glass antenna, center roof antenna, antenna feeder and audio unit are normal.
	LEVEL-4 879—LEVEL-3 879	Change frequencies and re-perform the inspection.
	LEVEL-2 879—LEVEL-0 879	Inspect the glass antenna, center roof antenna, and antenna feeder. (See 09-20-31 GLASS ANTENNA INSPECTION.) (See 09-20-29 CENTER ROOF ANTENNA INSPECTION.) (See 09-20-38 ANTENNA FEEDER NO.1 INSPECTION.) (See 09-20-45 ANTENNA FEEDER NO.2 INSPECTION.) (See 09-20-52 ANTENNA FEEDER NO.3 INSPECTION.) • If the glass antenna, center roof antenna, or antenna feeder is not normal, replace the malfunctioning part. (See 09-12-38 FILAMENT REPAIR.) (See 09-20-28 CENTER ROOF ANTENNA REMOVAL/INSTALLATION.) (See 09-20-34 ANTENNA FEEDER NO.1 REMOVAL/INSTALLATION.) (See 09-20-43 ANTENNA FEEDER NO.2 REMOVAL/INSTALLATION.) (See 09-20-47 ANTENNA FEEDER NO.3 REMOVAL/INSTALLATION.) • If the glass antenna, center roof antenna, and antenna feeder are normal, replace the audio unit. (See 09-20-4 AUDIO UNIT REMOVAL/INSTALLATION.)

5. Press the POWER/VOLUME switch and return to the diagnostic assist screen.
6. Press the POWER/VOLUME switch and end the diagnostic assist function.

Diagnostic assist code "05" antenna control output condition inspection

1. Launch the diagnostic assist function. (See 09-02E-39 Activation procedure.)
2. Input the diagnostic assist code "05"using the diagnostic input screen.
3. Select "ENTER".
4. Inspect according to the following table:

Caution

- **Even if the system is normal, radio reception may be difficult depending on where the system is inspected (indoors/outdoors, or conditions at the location). Before inspecting the system, verify that radio reception is adequate.**
- **When performing the inspection, select the best area for receiving radio frequencies.**

ON-BOARD DIAGNOSTIC [AUDIO]

<table>
<tr><th>Inspection</th><th>Display</th><th colspan="2">Action</th></tr>
<tr><td rowspan="3">Verify that the launched antenna control output condition inspection mode is displayed on the screen.</td><td rowspan="2">ANT-ON</td><td>Good sound quality</td><td>System is normal.</td></tr>
<tr><td>Bad sound quality</td><td>Inspect the glass antenna, center roof antenna, and antenna feeder.
(See 09-20-31 GLASS ANTENNA INSPECTION.)
(See 09-20-29 CENTER ROOF ANTENNA INSPECTION.)
(See 09-20-38 ANTENNA FEEDER NO.1 INSPECTION.)
(See 09-20-45 ANTENNA FEEDER NO.2 INSPECTION.)
(See 09-20-52 ANTENNA FEEDER NO.3 INSPECTION.)
• If the glass antenna, center roof antenna, or antenna feeder is not normal, replace the malfunctioning part.
(See 09-12-38 FILAMENT REPAIR.)
(See 09-20-28 CENTER ROOF ANTENNA REMOVAL/INSTALLATION.)
(See 09-20-34 ANTENNA FEEDER NO.1 REMOVAL/INSTALLATION.)
(See 09-20-43 ANTENNA FEEDER NO.2 REMOVAL/INSTALLATION.)
(See 09-20-47 ANTENNA FEEDER NO.3 REMOVAL/INSTALLATION.)
• If the glass antenna, center roof antenna, and antenna feeder are normal, replace the audio unit.
(See 09-20-4 AUDIO UNIT REMOVAL/INSTALLATION.)</td></tr>
<tr><td>ANT-OFF</td><td colspan="2">Replace the audio unit.
(See 09-20-4 AUDIO UNIT REMOVAL/INSTALLATION.)</td></tr>
</table>

5. Press the POWER/VOLUME switch and return to the diagnostic assist screen.
6. Press the POWER/VOLUME switch and end the diagnostic assist function.

Diagnostic assist code "06" manufacturer verification

1. Refer to the manufacturer verification procedure. (See 09-02E-6 SUPPLIER IDENTIFICATION PROCEDURE [AUDIO].)

ON-BOARD DIAGNOSTIC [AUDIO]

Diagnostic assist code "07"audio amplifier specification verification

1. Launch the diagnostic assist function. (See 09-02E-39 Activation procedure.)
2. Input the diagnostic assist code "07"using the diagnostic input screen.
3. Select "ENTER".
4. Inspect according to the following table:

Inspection	Display	Action	
• Verify that the launched audio amplifier specification inspection mode is displayed on the screen. • Verify the audio amplifier specifications. • Are the audio amplifier specifications correct?	**Without Bose®** •N **With Bose®** •L	Yes	System is normal.
		No	Replace the audio unit. (See 09-20-4 AUDIO UNIT REMOVAL/ INSTALLATION.)

5. Press the POWER/VOLUME switch and return to the diagnostic assist screen.
6. Press the POWER/VOLUME switch and end the diagnostic assist function.

Diagnostic assist code "09" radio SEEK inspection

1. Tune in the radio.
2. Launch the diagnostic assist function. (See 09-02E-39 Activation procedure.)
3. Input the diagnostic assist code "09"using the diagnostic input screen.
4. Select "ENTER".
5. Inspect according to the following table:

Inspection	Display	Action	
• Verify that the launched radio SEEK inspection mode is displayed on the screen. • Verify “ANY-CONT ON” is displayed and select “OK”. • Verify “MOV SIG AREA” is displayed and select “OK”. • “Now SEEKING” is displayed. • Is the inspection result normal?	--ch RECEIVED	Yes	System is normal.
		No	Replace the audio unit. (See 09-20-4 AUDIO UNIT REMOVAL/ INSTALLATION.)

6. Press the POWER/VOLUME switch and return to the diagnostic assist screen.
7. Press the POWER/VOLUME switch and end the diagnostic assist function.

Diagnostic assist code "11" CD diagnostic inspection

1. Verify that a CD is not inserted.
2. Launch the diagnostic assist function. (See 09-02E-39 Activation procedure.)
3. Input the diagnostic assist code "11"using the diagnostic input screen.
4. Select "ENTER".
5. Inspect according to the following table:

Inspection	Display	Action	
• Verify that the launched CD diagnostic inspection mode is displayed on the screen. • Verify “INSERT NEW DISC” is displayed and insert a disc. • “NOW CHECKING USER DISC DEFECT” is displayed. • Verify the inspection results.	OK/DISC DEFECT	Yes	System is normal.
	MALFUNCTION	No	Replace the audio unit. (See 09-20-4 AUDIO UNIT REMOVAL/ INSTALLATION.)

6. Press the POWER/VOLUME switch and return to the diagnostic assist screen.
7. Press the POWER/VOLUME switch and end the diagnostic assist function.

ON-BOARD DIAGNOSTIC [AUDIO]

Diagnostic assist code "14" dial inspection verification

1. Launch the diagnostic assist function. (See 09-02E-39 Activation procedure.)
2. Input the diagnostic assist code "14"using the diagnostic input screen.
3. Select "ENTER".
4. Inspect according to the following table:

Inspection	Display	Action	
• Verify that the dial inspection screen is displayed. • Rotate the dial switch. • Does the switch rotation direction correspond to the direction displayed in the diagnostic assist screen?	VOL ENC ←→ TUNE ENC ←→ COMMANDAR ENC ←→	Yes	System is normal.
		No	Replace the audio unit. (See 09-20-4 AUDIO UNIT REMOVAL/ INSTALLATION.)

5. Press the POWER/VOLUME switch and return to the diagnostic assist screen.
6. Press the POWER/VOLUME switch and end the diagnostic assist function.

Diagnostic assist code "15" vehicle NAVI signal verification

1. Launch the diagnostic assist function. (See 09-02E-39 Activation procedure.)
2. Input the diagnostic assist code "15"using the diagnostic input screen.
3. Select "ENTER".
4. Verify that the vehicle NAVI signal verification screen is displayed.

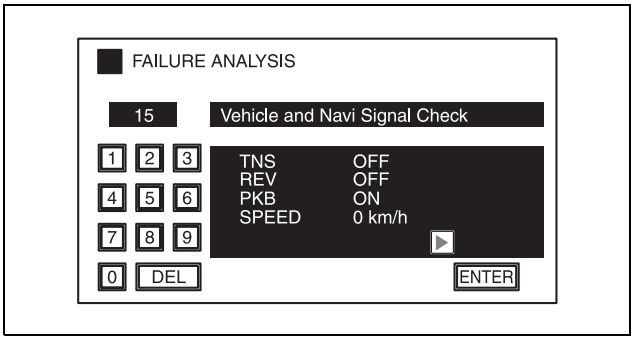

ac5jjw00001776

5. Verify the vehicle NAVI signal status displayed in the display.

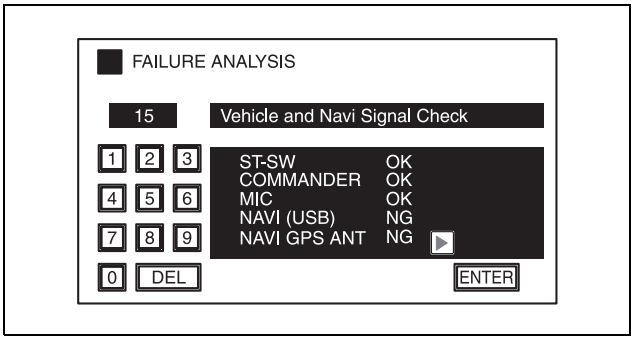

ac5jjw00001777

Name	Content/function
TNS	Displays the TNS signal status.
REV	Displays the reverse signal status.
PKB	Displays the parking brake signal status.
SPEED	Vehicle speed is displayed.
ST-SW	Displays the steering switch connection status.
COMMANDER	Displays the commander switch connection status.
MIC	Verifies the microphone connection status.
NAVI (USB)	Verifies the NAVI (USB) connection status.
NAVI GPS ANT	Verifies the GPS antenna connection status.

6. Press the POWER/VOLUME switch and return to the diagnostic assist screen.
7. Press the POWER/VOLUME switch and end the diagnostic assist function.

ON-BOARD DIAGNOSTIC [AUDIO]

Diagnostic assist code "16" exterior device connection information clearing

Note
- Car navigation unit, Bluetooth unit, SIRIUS satellite radio unit, rear mount camera connection information, and commander connection information, which are detected when the ignition is switched to ACC or ON the first time after connecting the negative battery cable, are recorded. The exterior device connection information clearing is a function which clears this connection information.

1. Launch the diagnostic assist function. (See 09-02E-39 Activation procedure.)
2. Input the diagnostic assist code "16"using the diagnostic input screen.
3. Select "ENTER".
4. Verify that the exterior device connection information clearing screen is displayed.
5. Perform the exterior device connection information clearing according to the screen display.
6. Press the POWER/VOLUME switch and return to the diagnostic assist screen.
7. Press the POWER/VOLUME switch and end the diagnostic assist function.

Audio unit (without color LCD)
Display inspection
1. Switch the ignition to ACC or ON (engine off).
2. Press the POWER/VOLUME switch to turn the audio on.
3. Press the SEEK switch (up) for 0.2 s or more while simultaneously pressing the POWER/VOLUME switch to launch the display inspection mode.

With POWER/VOLUME switch on left side

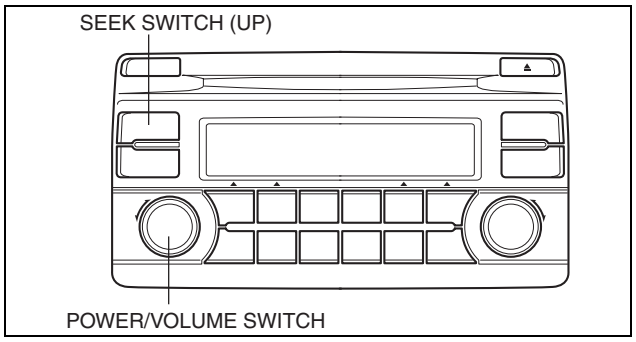

ac5wzw0000332

With POWER/VOLUME switch on right side

4. Inspect according to the following table:

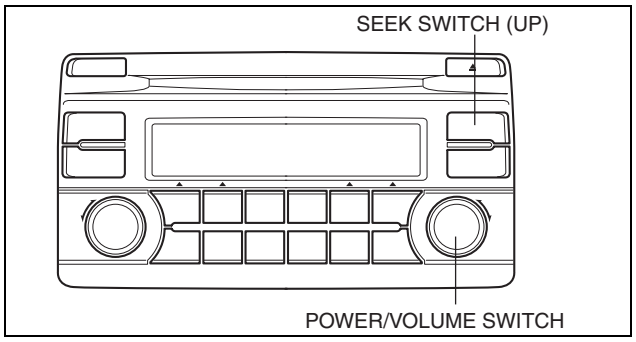

ac5wzw0000332

Inspection	Display	Action	
• Verify that the launched display inspection mode is displayed on the screen. • Are the characters displayed normally in the display (no truncation or faintness)?		Yes	Display is normal.
		No	Replace the audio unit. (See 09-20-4 AUDIO UNIT REMOVAL/ INSTALLATION.)

5. Switch the ignition off (LOCK) to complete the LCD display inspection mode.

ON-BOARD DIAGNOSTIC [AUDIO]

Switch Inspection

1. Switch the ignition to ACC or ON (engine off).
2. Press the POWER/VOLUME switch to turn the audio on.
3. Press PRESET switch 3 for 0.2 s or more while simultaneously pressing the POWER/VOLUME switch to launch the switch inspection mode.

With POWER/VOLUME switch on left side

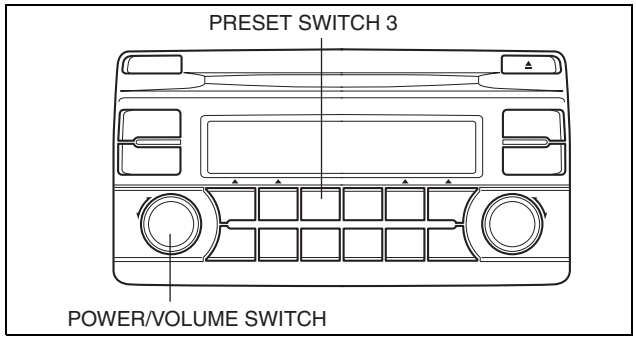

ac5wzw0000332

With POWER/VOLUME switch on right side

4. Inspect according to the following table:

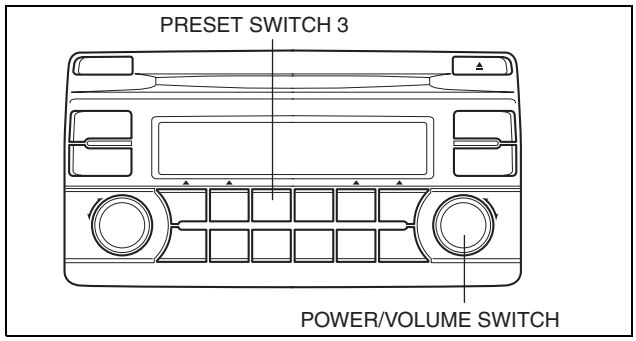

ac5wzw0000332

Inspection	Display	Action	
• Verify that the launched switch inspection mode is displayed on the screen. • Operate all of the switches (press). • Does the buzzer sound?	—	Yes	The switch is normal.
		No	Verify the switch. (See 09-03F-7 CONFIRMATION STEP 1: AUDIO PANEL SWITCH CONFIRMATION [ENTIRE AUDIO SYSTEM].)

5. Switch the audio power supply off or switch the ignition off (LOCK) to complete the switch inspection mode.

Speaker Inspection

1. Switch the ignition to ACC or ON (engine off).
2. Press the POWER/VOLUME switch to turn the audio on.
3. Press the AUTO-M switch for 0.2 s or more while simultaneously pressing the POWER/VOLUME switch to launch the speaker inspection mode.

Note

- The AUTO-M function operates when the AUTO-M switch is pressed, however, press and hold it until the speaker inspection mode launches.

ON-BOARD DIAGNOSTIC [AUDIO]

With POWER/VOLUME switch on left side

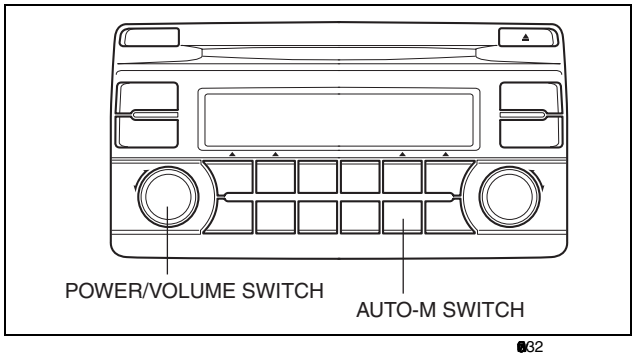

With POWER/VOLUME switch on right side

4. Inspect according to the following table:

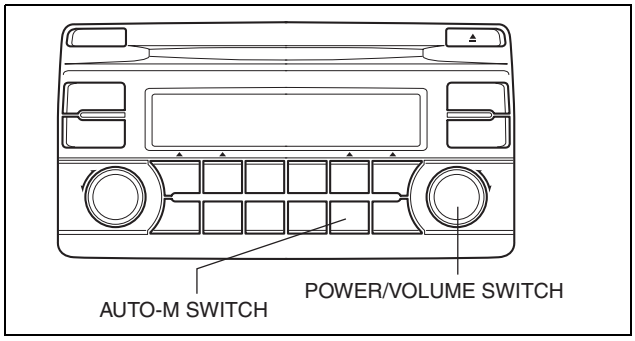

Inspection	Display	Action	
• Verify that the launched speaker inspection mode is displayed on the screen. • Does each speaker output sound in the following order?: 1. Front door speaker (LH) and tweeter (LH) 2. Front door speaker (RH) and tweeter (RH) 3. Rear door speaker (RH) 4. Rear door speaker (LH)	—	Yes	The speakers and the wiring harness between the audio unit and speakers are normal.
		No	• If no sound is produced from all of the speakers. (See 09-03F-13 NO SOUND FROM ALL SPEAKERS [ENTIRE AUDIO SYSTEM].) • If no sound is produced from some of the speakers. (See 09-03F-19 NO SOUND FROM SOME SPEAKERS [ENTIRE AUDIO SYSTEM].)

5. Switch the audio power supply off or switch the ignition off (LOCK) to complete the speaker inspection mode.

Radio Reception Condition Inspection

1. Switch the ignition to ACC or ON (engine off).
2. Press the POWER/VOLUME switch to turn the audio on.
3. Tune in the radio.
4. Press PRESET switch 2 for 0.2 s or more while simultaneously pressing the POWER/VOLUME switch to launch the radio reception condition inspection mode.

With POWER/VOLUME switch on left side

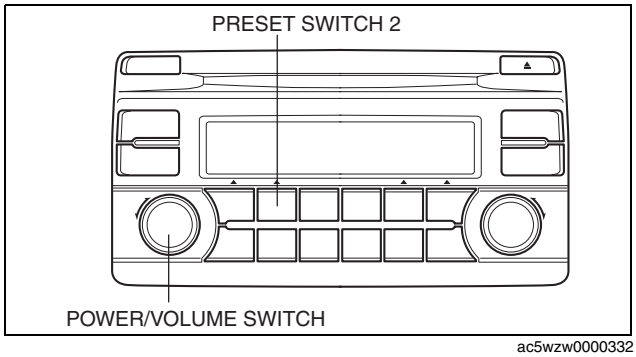

ac5wzw0000332

ON-BOARD DIAGNOSTIC [AUDIO]

With POWER/VOLUME switch on right side

5. Inspect according to the following table:

Caution

- **Even if the system is normal, radio reception may be difficult depending on where the system is inspected (indoors/ outdoors, or conditions at the location). Before inspecting the system, verify that radio reception is adequate.**
- **When performing the inspection, select the best area for receiving radio frequencies.**

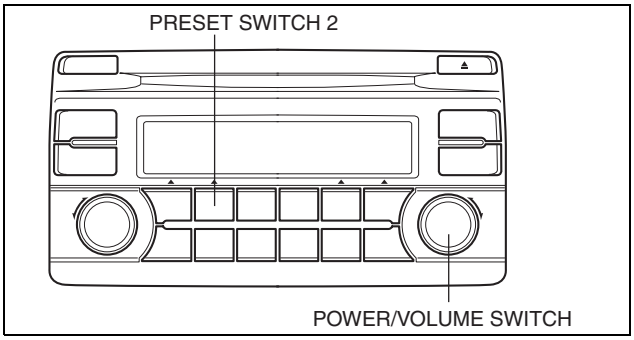

ac5wzw0000332

Inspection	Display	Action
Verify that the launched radio reception condition inspection mode is displayed on the screen.	LEV 10 — LEV 5	Glass antenna, center roof antenna, antenna feeder and audio unit are normal.
	LEV 4 — LEV 3	Change frequencies and re-perform the inspection.
	LEV 2 — LEV 0	Inspect the glass antenna, center roof antenna, and antenna feeder. (See 09-20-31 GLASS ANTENNA INSPECTION.) (See 09-20-29 CENTER ROOF ANTENNA INSPECTION.) (See 09-20-38 ANTENNA FEEDER NO.1 INSPECTION.) (See 09-20-45 ANTENNA FEEDER NO.2 INSPECTION.) (See 09-20-52 ANTENNA FEEDER NO.3 INSPECTION.) • If the glass antenna, center roof antenna, or antenna feeder is not normal, replace the malfunctioning part. (See 09-12-38 FILAMENT REPAIR.) (See 09-20-28 CENTER ROOF ANTENNA REMOVAL/INSTALLATION.) (See 09-20-34 ANTENNA FEEDER NO.1 REMOVAL/INSTALLATION.) (See 09-20-43 ANTENNA FEEDER NO.2 REMOVAL/INSTALLATION.) (See 09-20-47 ANTENNA FEEDER NO.3 REMOVAL/INSTALLATION.) • If the glass antenna, center roof antenna, and antenna feeder are normal, replace the audio unit. (See 09-20-4 AUDIO UNIT REMOVAL/ INSTALLATION.)

6. Switch the audio power supply off or switch the ignition off (LOCK) to complete the radio reception condition inspection mode.

Antenna control inspection

1. Switch the ignition to ACC or ON (engine off).
2. Press the POWER/VOLUME switch to turn the audio on.
3. Tune in the radio.
4. Press the FM/AM switch for 0.2 s or more while simultaneously pressing the POWER/VOLUME switch to launch the antenna control inspection mode.

ON-BOARD DIAGNOSTIC [AUDIO]

With POWER/VOLUME switch on left side

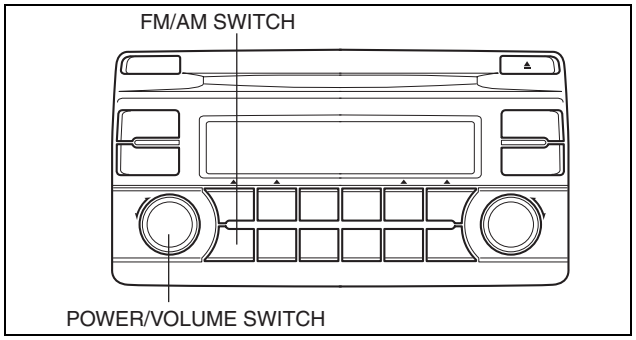

ac5wzw0000332

With POWER/VOLUME switch on right side

5. Inspect according to the following table:

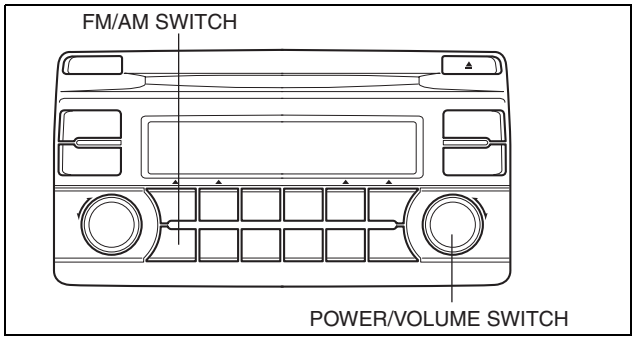

ac5wzw0000333

Inspection	Display	Action	
Verify that the launched antenna control inspection mode is displayed on the screen.	ANT—ON	Good sound quality	System is normal.
		Bad sound quality	Inspect the glass antenna, center roof antenna, and antenna feeder. (See 09-20-31 GLASS ANTENNA INSPECTION.) (See 09-20-29 CENTER ROOF ANTENNA INSPECTION.) (See 09-20-38 ANTENNA FEEDER NO.1 INSPECTION.) (See 09-20-45 ANTENNA FEEDER NO.2 INSPECTION.) (See 09-20-52 ANTENNA FEEDER NO.3 INSPECTION.) • If the glass antenna, center roof antenna, or antenna feeder is not normal, replace the malfunctioning part. (See 09-12-38 FILAMENT REPAIR.) (See 09-20-28 CENTER ROOF ANTENNA REMOVAL/INSTALLATION.) (See 09-20-34 ANTENNA FEEDER NO.1 REMOVAL/INSTALLATION.) (See 09-20-43 ANTENNA FEEDER NO.2 REMOVAL/INSTALLATION.) (See 09-20-47 ANTENNA FEEDER NO.3 REMOVAL/INSTALLATION.) • If the glass antenna, center roof antenna, and antenna feeder are normal, replace the audio unit. (See 09-20-4 AUDIO UNIT REMOVAL/INSTALLATION.)
	ANT—OFF	Replace the audio unit. (See 09-20-4 AUDIO UNIT REMOVAL/INSTALLATION.)	

6. Switch the audio power supply off or switch the ignition off (LOCK) to complete the antenna control inspection mode.

ON-BOARD DIAGNOSTIC [AUDIO]

Dial inspection verification

1. Switch the ignition to ACC or ON (engine off).
2. Press the POWER/VOLUME switch to turn the audio on.
3. Simultaneously press the AUTO-M switch and PRESET switch 1 for 3 s or more to launch the dial inspection mode.

Note

- The AUTO-M function operates when the AUTO-M switch is pressed, however, press and hold it until the dial inspection mode launches.

4. Inspect according to the following table:

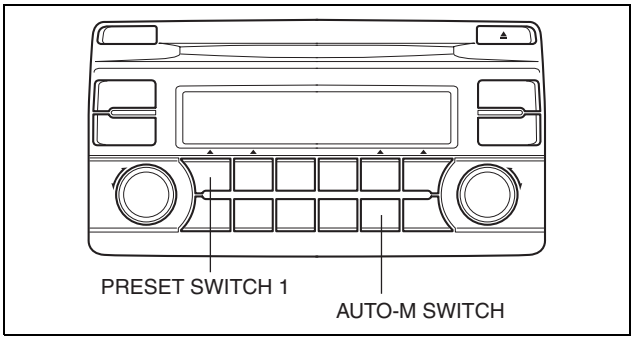

ac5wzw0000333

Inspection	Display	Action	
• Verify that the launched dial inspection mode is displayed on the screen. • Rotate the dial switch. • Does the switch rotation direction correspond to the direction displayed in audio display?	→ ←	Yes	System is normal.
		No	Replace the audio unit. (See 09-20-4 AUDIO UNIT REMOVAL/ INSTALLATION.)

5. Switch the audio power supply off or switch the ignition off (LOCK) to complete the dial inspection mode.

Audio amplifier specification verification.

1. Switch the ignition to ACC or ON (engine off).
2. Press the SEEK switch (down) for 3 s or more while simultaneously pressing the POWER/VOLUME switch to launch the audio amplifier specification inspection mode.

With POWER/VOLUME switch on left side

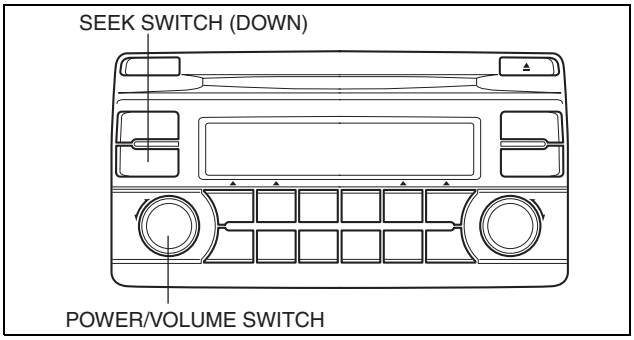

ac5wzw0000333

ON-BOARD DIAGNOSTIC [AUDIO]

With POWER/VOLUME switch on right side

3. Inspect according to the following table:

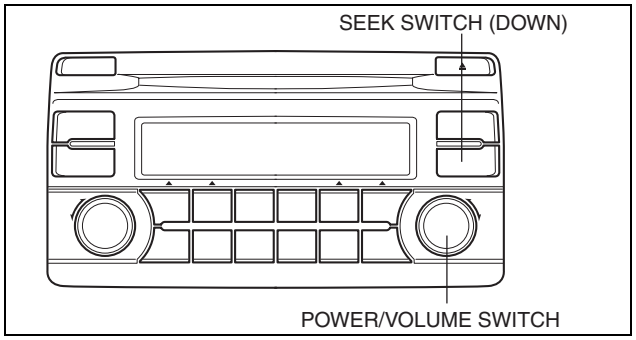

ac5wzw0000333

Inspection	Display	Action
• Verify that the launched audio amplifier specification inspection mode is displayed on the screen. • Verify the audio amplifier specifications. • Are the audio amplifier specifications correct?	**Without Bose** •N (Normal) **With Bose** •L (Line out)	System is normal.
		Replace the audio unit. (See 09-20-4 AUDIO UNIT REMOVAL/ INSTALLATION.)

4. Switch the ignition off (LOCK) to complete the audio amplifier specification inspection mode.

AUTO-M inspection mode

1. Switch the ignition to ACC or ON (engine off).
2. Press the POWER/VOLUME switch to turn the audio on.
3. Press PRESET switch 1 for 3 s or more while simultaneously pressing the POWER/VOLUME switch to launch the AUTO-M inspection mode.

With POWER/VOLUME switch on left side

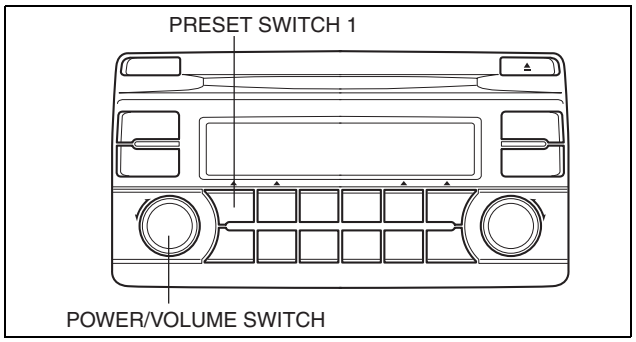

ac5wzw0000333

With POWER/VOLUME switch on right side

4. Inspect according to the following table:

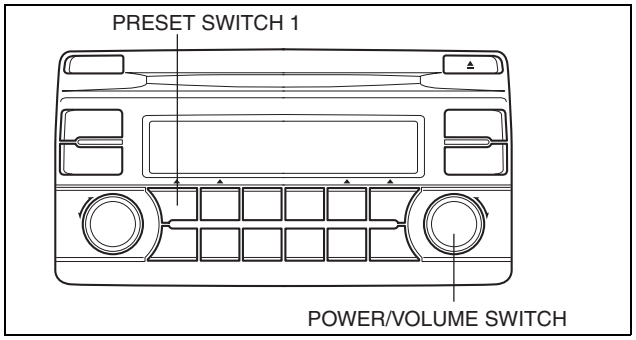

ac5wzw0000333

ON-BOARD DIAGNOSTIC [AUDIO]

Inspection	Display	Action	
• Verify that the launched AUTO-M inspection mode is displayed on the screen. • Perform the AUTO-M inspection according to the screen instructions. • Is the inspection result normal?	--ch RECEIVED	Yes	System is normal.
		No	Inspect the glass antenna, center roof antenna, and antenna feeder. (See 09-20-31 GLASS ANTENNA INSPECTION.) (See 09-20-29 CENTER ROOF ANTENNA INSPECTION.) (See 09-20-38 ANTENNA FEEDER NO.1 INSPECTION.) (See 09-20-45 ANTENNA FEEDER NO.2 INSPECTION.) (See 09-20-52 ANTENNA FEEDER NO.3 INSPECTION.) • If the glass antenna, center roof antenna, or antenna feeder is not normal, replace the malfunctioning part. (See 09-12-38 FILAMENT REPAIR.) (See 09-20-28 CENTER ROOF ANTENNA REMOVAL/INSTALLATION.) (See 09-20-34 ANTENNA FEEDER NO.1 REMOVAL/INSTALLATION.) (See 09-20-43 ANTENNA FEEDER NO.2 REMOVAL/INSTALLATION.) (See 09-20-47 ANTENNA FEEDER NO.3 REMOVAL/INSTALLATION.) • If the glass antenna, center roof antenna, and antenna feeder are normal, replace the audio unit. (See 09-20-4 AUDIO UNIT REMOVAL/INSTALLATION.)

5. Switch the audio power supply off or switch the ignition off (LOCK) to complete the AUTO-M inspection mode.

CD diagnostic inspection

1. Switch the ignition to ACC or ON (engine off).
2. Press PRESET switch 6 for 3 s or more while simultaneously pressing the POWER/VOLUME switch to launch the CD diagnostic inspection mode.

With POWER/VOLUME switch on left side

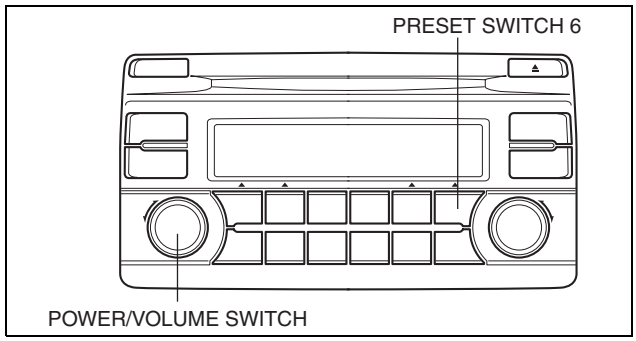

ac5wzw0000305

With POWER/VOLUME switch on right side

3. Inspect according to the following table:

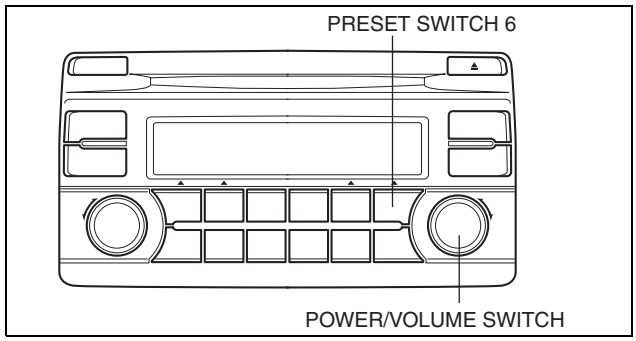

ac5wzw0000333

ON-BOARD DIAGNOSTIC [AUDIO]

Inspection	Display	Action
• Verify that the launched CD diagnostic inspection mode is displayed on the screen. • After LOAD NEWDISC is displayed, insert the CD. • Is the inspection result normal?	CD DEFECTIVE	System is normal.
	MALFUNCTION	Replace the audio unit. (See 09-20-4 AUDIO UNIT REMOVAL/ INSTALLATION.)

4. Press the POWER/VOLUME switch to complete the CD diagnostic inspection mode.

09-02F ON-BOARD DIAGNOSTIC [Bluetooth SYSTEM (HANDS-FREE TELEPHONE (HF/TEL) SYSTEM)]

FOREWORD
[Bluetooth SYSTEM (HANDS-FREE TELEPHONE (HF/TEL) SYSTEM)] **09-02F–2**
Troubleshooting Procedure **09-02F–2**
Action for non-repeatable malfunction. **09-02F–3**
DTC INSPECTION
[Bluetooth SYSTEM (HANDS-FREE TELEPHONE (HF/TEL) SYSTEM)] **09-02F–4**
When using the M-MDS. **09-02F–4**
Not using M-MDS (on-board diagnostic test mode) **09-02F–4**
DTC TABLE
[Bluetooth SYSTEM (HANDS-FREE TELEPHONE (HF/TEL) SYSTEM)] **09-02F–6**
DTC: B116A:12, 26:Er82
[Bluetooth SYSTEM (HANDS-FREE TELEPHONE (HF/TEL) SYSTEM)] **09-02F–7**
DTC: B116A:13
[Bluetooth SYSTEM (HANDS-FREE TELEPHONE (HF/TEL) SYSTEM)] **09-02F–9**
DTC: B116A:44, 26:Er86
[Bluetooth SYSTEM (HANDS-FREE TELEPHONE (HF/TEL) SYSTEM)] **09-02F–10**
DTC: U0197:00
[Bluetooth SYSTEM (HANDS-FREE TELEPHONE (HF/TEL) SYSTEM)] **09-02F–11**
DIAGNOSTIC ASSIST FUNCTION
[Bluetooth SYSTEM (HANDS-FREE TELEPHONE (HF/TEL) SYSTEM)] **09-02F–17**
Activation procedure **09-02F–17**
Diagnostic assist code table **09-02F–18**
Diagnostic assist code "37" HF unit connection information **09-02F–18**
Diagnostic assist code "38" HF unit software version **09-02F–18**

ON-BOARD DIAGNOSTIC [Bluetooth SYSTEM (HANDS-FREE TELEPHONE (HF/TEL) SYSTEM)]

FOREWORD [Bluetooth SYSTEM (HANDS-FREE TELEPHONE (HF/TEL) SYSTEM)]

id0902g8441800

- If there is any vehicle malfunction complaint lodged by a customer, perform malfunction diagnosis according to the troubleshooting procedure.

Troubleshooting Procedure

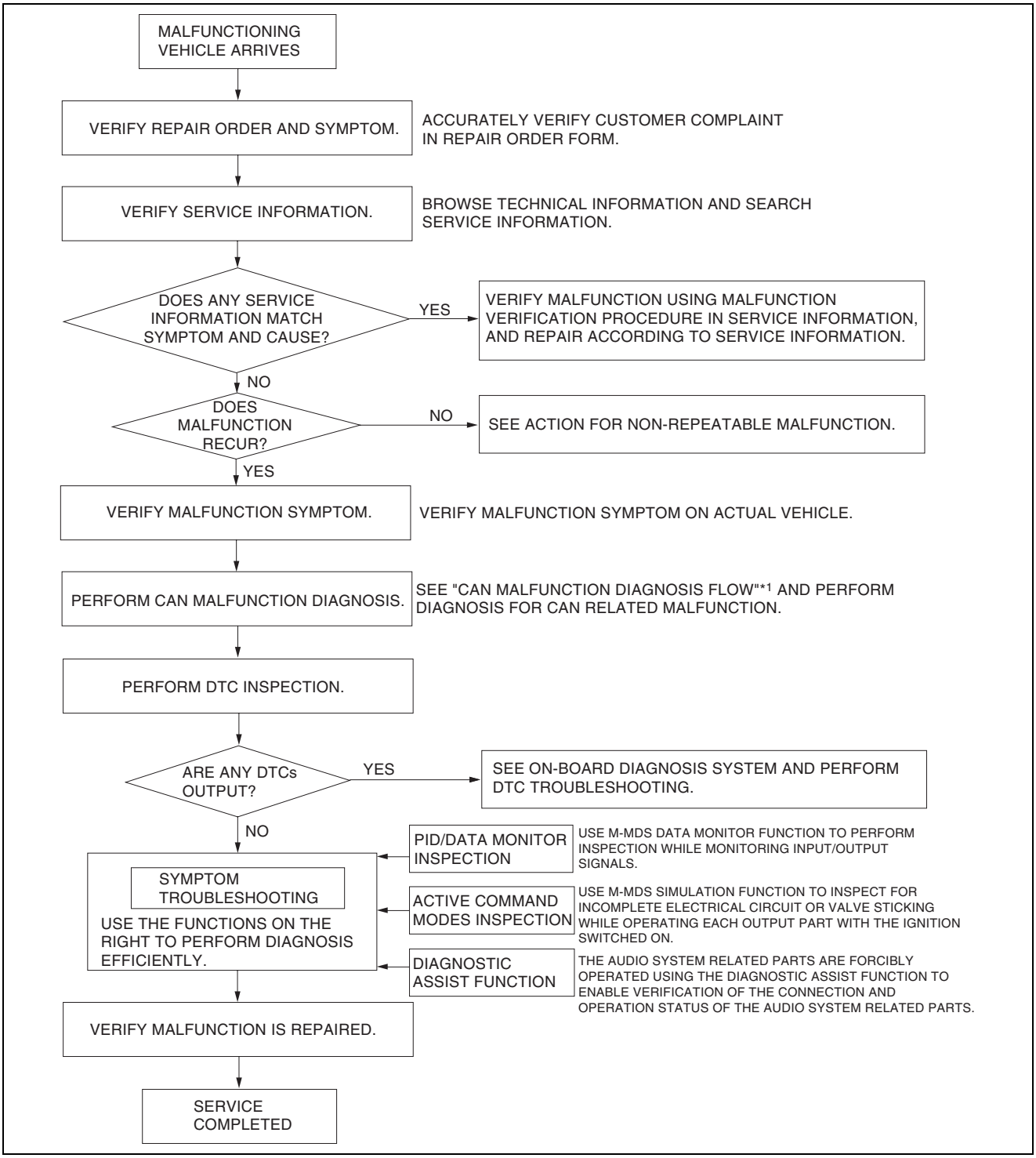

ac5wzw0000266

*1 : 10-02A-3 CONTROLLER AREA NETWORK (CAN) MALFUNCTION DIAGNOSIS FLOW [SKYACTIV-G 2.0 (L.H.D.)] / 10-02B-3 CONTROLLER AREA NETWORK (CAN) MALFUNCTION DIAGNOSIS FLOW [SKYACTIV-G 2.0 (R.H.D.)] / 10-02C-3 CONTROLLER AREA NETWORK (CAN) MALFUNCTION DIAGNOSIS FLOW [SKYACTIV-D 2.2 (L.H.D.)] / 10-02D-3 CONTROLLER AREA NETWORK (CAN) MALFUNCTION DIAGNOSIS FLOW [SKYACTIV-D 2.2 (R.H.D.)]

ON-BOARD DIAGNOSTIC [Bluetooth SYSTEM (HANDS-FREE TELEPHONE (HF/TEL) SYSTEM)]

Action for non-repeatable malfunction

- If the malfunction does not recur, verify the malfunction cause by performing the following actions:
  - — Verify that a DTC has been recorded in the memory. (See 09-02F-6 DTC TABLE [Bluetooth SYSTEM (HANDS-FREE TELEPHONE (HF/TEL) SYSTEM)].)
  - — Based on the repair order form, attempt to drive the vehicle or perform tests to replicate the malfunction, record the data at that time, and detect the malfunction cause.
  - — Shake the wiring harness or connector of the electrical component which is suspected to be the cause of the malfunction, and inspect for occurrence of any malfunction or DTCs.

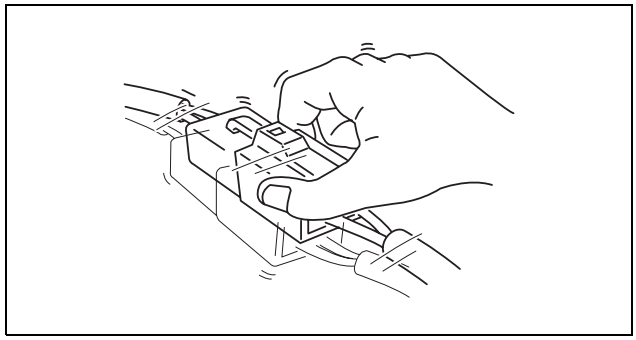

aaxjjw00007274

  - — Inspect the female terminals on the connector of the electric component which is suspected to be the cause of the poor connection malfunction.

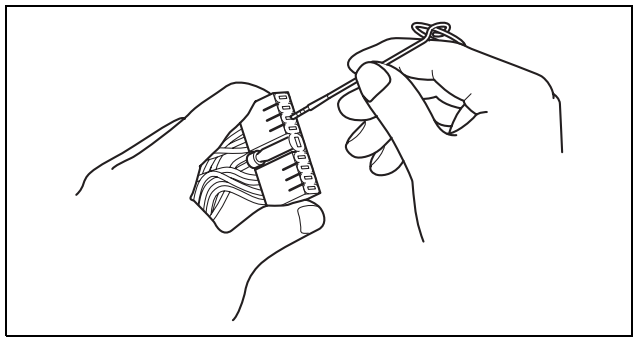

am3uuw0000750

ON-BOARD DIAGNOSTIC [Bluetooth SYSTEM (HANDS-FREE TELEPHONE (HF/TEL) SYSTEM)]

DTC INSPECTION [Bluetooth SYSTEM (HANDS-FREE TELEPHONE (HF/TEL) SYSTEM)]

id0902g8440500

Note

- For the DTC inspection, there is a method using the M-MDS and one that does not use it (on-board diagnostic test mode).
- Because the DTCs differ if using or not using the M-MDS, perform the DTC inspection using the M-MDS method and the method not using it.
- The DTCs are cleared if the ignition is switched off or the battery cable is disconnected.
- When performing the DTC inspection, input all of the displayed DTCs in the Audio Repair Order Form.
- If the malfunction persists even if the engine is switched off or the battery cable is disconnected, the DTCs are displayed again.

When using the M-MDS
ODDTC self test

1. Connect the M-MDS to the DLC-2.
2. After vehicle identification, select the following from the M-MDS initialization screen.
    1. “Self-test”
    2. “Module”
    3. “ACU”
3. Verify the DTC according to the directions on the screen.
    - If a DTC is displayed, repair the malfunctioning part according to the applicable DTC troubleshooting. (See 09-02F-6 DTC TABLE [Bluetooth SYSTEM (HANDS-FREE TELEPHONE (HF/TEL) SYSTEM)].)

Not using M-MDS (on-board diagnostic test mode)

1. Switch the ignition to ACC or ON (engine off).
2. Verify that the audio is turned off. If the audio is turned on, press the POWER/VOLUME switch to turn it off.
3. Press the POWER/VOLUME switch and SETUP switch simultaneously to launch the on-board diagnostic test mode.

With POWER/VOLUME switch on left side

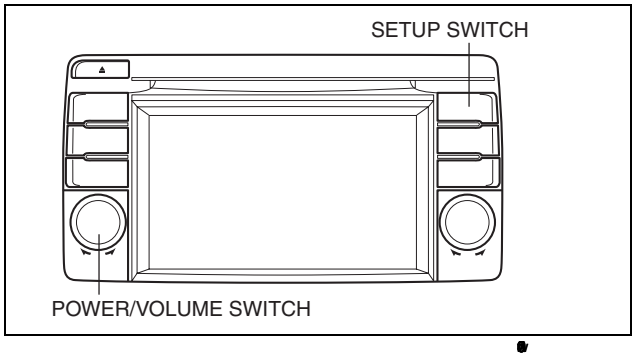

With POWER/VOLUME switch on right side

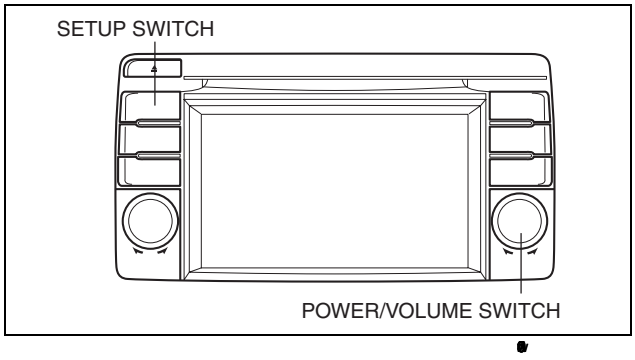

ON-BOARD DIAGNOSTIC [Bluetooth SYSTEM (HANDS-FREE TELEPHONE (HF/TEL) SYSTEM)]

4. Verify that the launched on-board diagnostic test mode is displayed on the screen.

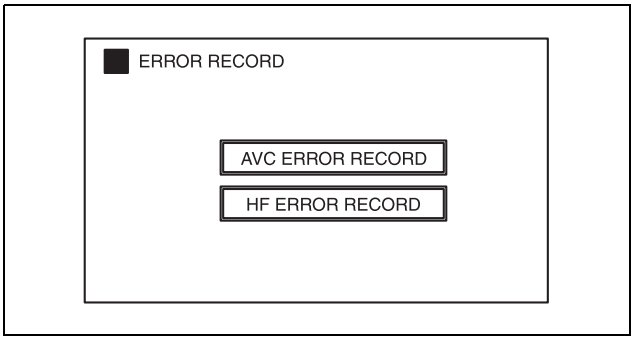

ac5jjw00001783

5. Select HF ERROR RECORD.

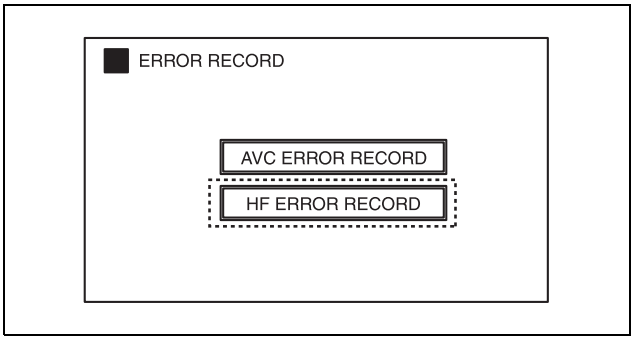

ac5wzw0000076

6. Verify the displayed DTCs.

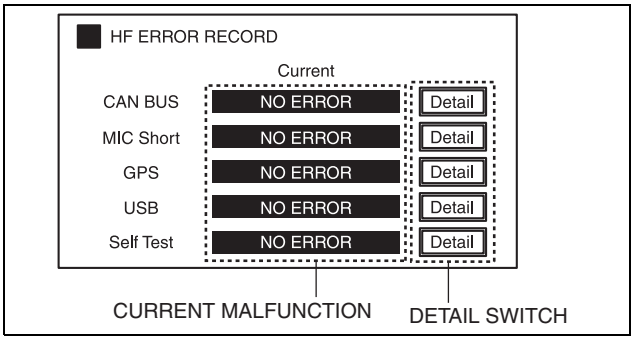

ac5wzw0000076

7. If DTCs are displayed, press the Detail switch and verify the DTC details.
8. Complete the on-board diagnostic test mode by pressing the POWER/VOLUME switch to return to the on-board diagnostic mode screen and pressing the POWER/VOLUME switch again, or by switching the ignition off (LOCK).

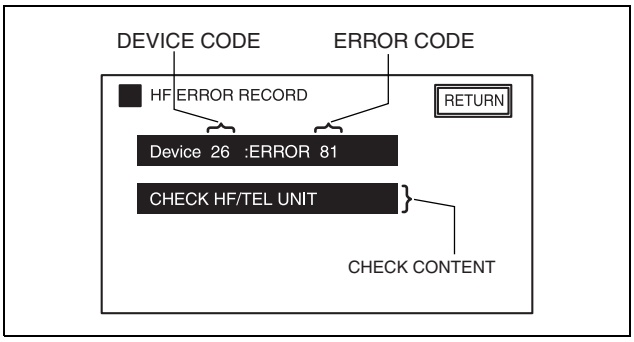

ac5wzw0000305

ON-BOARD DIAGNOSTIC [Bluetooth SYSTEM (HANDS-FREE TELEPHONE (HF/TEL) SYSTEM)]

DTC TABLE [Bluetooth SYSTEM (HANDS-FREE TELEPHONE (HF/TEL) SYSTEM)]

id0902g8855700

— : Not applicable

DTC		Security indicator light	Description	Fail-safe	Drive cycle	Self-test type*1	Memory function	Reference
Method using M-MDS	On-board diagnostic test mode							
B116A:12	26:Er82	—	Open circuit in microphone circuit	—	—	D	—	(See 09-02F-7 DTC: B116A:12, 26:Er82 [Bluetooth SYSTEM (HANDS-FREE TELEPHONE (HF/TEL) SYSTEM)].)
B116A:13	—*2	—	Open circuit in microphone circuit	—	—	D	—	(See 09-02F-9 DTC: B116A:13 [Bluetooth SYSTEM (HANDS-FREE TELEPHONE (HF/TEL) SYSTEM)].)
B116A:44	26:Er86	—	Bluetooth unit internal malfunction	—	—	D	—	(See 09-02F-10 DTC: B116A:44, 26:Er86 [Bluetooth SYSTEM (HANDS-FREE TELEPHONE (HF/TEL) SYSTEM)].)
—	26:Er81	—	CAN system communication error	—	—	—	—	(See 10-02A-1 FOREWORD [SKYACTIV-G 2.0 (L.H.D.)].)(See 10-02B-3 CONTROLLER AREA NETWORK (CAN) MALFUNCTION DIAGNOSIS FLOW [SKYACTIV-G 2.0 (R.H.D.)].)(See 10-02C-1 FOREWORD [SKYACTIV-D 2.2 (L.H.D.)].)(See 10-02D-1 FOREWORD [SKYACTIV-D 2.2 (R.H.D.)].)
U0197:00	—*2	—	Communication error with audio unit	—	—	D	—	(See 09-02F-11 DTC: U0197:00 [Bluetooth SYSTEM (HANDS-FREE TELEPHONE (HF/TEL) SYSTEM)].)
—	—*2	—	DTCs not stored	—	—	—	—	—

*1 : D: ODDTC self test

*2 : It is not displayed in the audio display because the on-board diagnostic test mode is not available.

ON-BOARD DIAGNOSTIC [Bluetooth SYSTEM (HANDS-FREE TELEPHONE (HF/TEL) SYSTEM)]

DTC: B116A:12, 26:Er82 [Bluetooth SYSTEM (HANDS-FREE TELEPHONE (HF/TEL) SYSTEM)]

id0902g8440100

Description	Open circuit in microphone circuit
Detection condition	Short to power supply detected in microphone input circuit
Fail-safe function	—
Possible cause	• Connector or terminal malfunction • Open circuit in wiring harness between Bluetooth unit terminal A and microphone terminal A • Microphone malfunction • Bluetooth unit malfunction

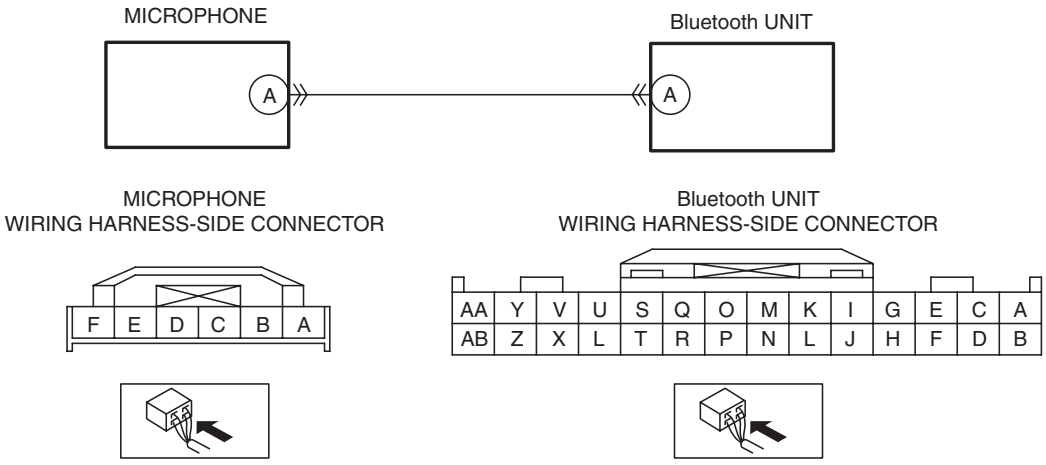

Diagnostic Procedure

Step	Inspection		Action
1	**INSPECT MICROPHONE CONNECTOR STATUS** • Switch the ignition off (LOCK). • Disconnect the negative battery cable. (See 01-17A-11 NEGATIVE BATTERY CABLE DISCONNECTION/CONNECTION [SKYACTIV-G 2.0].) (See 01-17A-13 NEGATIVE BATTERY CABLE DISCONNECTION/CONNECTION [SKYACTIV-G 2.0 (WITHOUT i-stop)].) (See 01-17B-9 NEGATIVE BATTERY CABLE DISCONNECTION/CONNECTION [SKYACTIV-D 2.2].) • Disconnect the microphone connector. • Inspect the connector engagement and connection condition and inspect the terminals for damage, deformation, corrosion, or disconnection. • Is there any malfunctioning part?	Yes	Repair or replace the connector, then go to Step 4.
		No	Go to the next step.
2	**INSPECT BLUETOOTH UNIT CONDITION** • Disconnect the Bluetooth unit connector. • Inspect the connector engagement and connection condition and inspect the terminals for damage, deformation, corrosion, or disconnection. • Is there any malfunctioning part?	Yes	Repair or replace the connector, then go to Step 4.
		No	Go to the next step.

ON-BOARD DIAGNOSTIC [Bluetooth SYSTEM (HANDS-FREE TELEPHONE (HF/TEL) SYSTEM)]

Step	Inspection		Action
3	**INSPECT FOR SHORT TO POWER SUPPLY IN MICROPHONE INPUT CIRCUIT** • Reconnect all the disconnected connectors. • Connect the negative battery cable. (See 01-17A-11 NEGATIVE BATTERY CABLE DISCONNECTION/CONNECTION [SKYACTIV-G 2.0].) (See 01-17A-13 NEGATIVE BATTERY CABLE DISCONNECTION/CONNECTION [SKYACTIV-G 2.0 (WITHOUT i-stop)].) (See 01-17B-9 NEGATIVE BATTERY CABLE DISCONNECTION/CONNECTION [SKYACTIV-D 2.2].) • Switch the ignition ON (engine off). • Measure the voltage of Bluetooth unit terminal A (vehicle wiring harness side). • Is the voltage B+?	Yes	Repair or replace the wiring harness which has a short to the power supply, then go to the next step.
		No	Go to the next step.
4	**PERFORM DTC INSPECTION AND VERIFY IF MALFUNCTIONING PART IS MICROPHONE OR BLUETOOTH UNIT** • Perform an inspection of the Bluetooth unit DTCs. (See 09-02F-4 DTC INSPECTION [Bluetooth SYSTEM (HANDS-FREE TELEPHONE (HF/TEL) SYSTEM)].) • Is the same DTC displayed?	Yes	Replace the microphone, then go to the next step. (See 09-20-65 MICROPHONE REMOVAL/INSTALLATION.)
		No	Go to Step 6.
5	**VERIFY THAT REPAIRS HAVE BEEN COMPLETED** • Perform an inspection of the Bluetooth unit DTCs. (See 09-02F-4 DTC INSPECTION [Bluetooth SYSTEM (HANDS-FREE TELEPHONE (HF/TEL) SYSTEM)].) • Is the same DTC displayed?	Yes	Replace the Bluetooth unit, then go to the next step. (See 09-20-67 Bluetooth UNIT REMOVAL/INSTALLATION.)
		No	Go to the next step.
6	**VERIFY IF OTHER DTCs DISPLAYED** • Are any other DTCs displayed?	Yes	Repair the malfunctioning part according to the applicable DTC troubleshooting. (See 09-02F-6 DTC TABLE [Bluetooth SYSTEM (HANDS-FREE TELEPHONE (HF/TEL) SYSTEM)].)
		No	DTC troubleshooting completed.

ON-BOARD DIAGNOSTIC [Bluetooth SYSTEM (HANDS-FREE TELEPHONE (HF/TEL) SYSTEM)]

DTC: B116A:13 [Bluetooth SYSTEM (HANDS-FREE TELEPHONE (HF/TEL) SYSTEM)]

id0902g8452100

Description	Open circuit in microphone circuit
Detection condition	Microphone non-connection signal constantly detected
Fail-safe function	—
Possible cause	• Connector or terminal malfunction • Open circuit in wiring harness between Bluetooth unit terminal B and microphone terminal B • Short to ground in wiring harness between Bluetooth unit terminal A and microphone terminal A • Microphone malfunction • Bluetooth unit malfunction

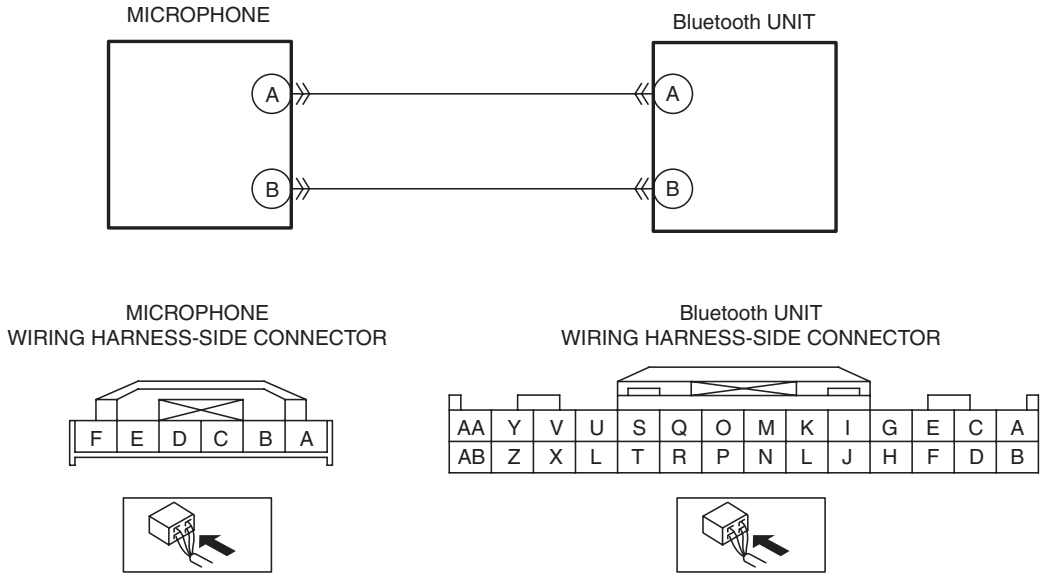

Diagnostic Procedure

Step	Inspection		Action
1	**INSPECT MICROPHONE CONNECTOR STATUS** • Switch the ignition off (LOCK). • Disconnect the negative battery cable. (See 01-17A-11 NEGATIVE BATTERY CABLE DISCONNECTION/CONNECTION [SKYACTIV-G 2.0].) (See 01-17A-13 NEGATIVE BATTERY CABLE DISCONNECTION/CONNECTION [SKYACTIV-G 2.0 (WITHOUT i-stop)].) (See 01-17B-9 NEGATIVE BATTERY CABLE DISCONNECTION/CONNECTION [SKYACTIV-D 2.2].) • Disconnect the microphone connector. • Inspect the connector engagement and connection condition and inspect the terminals for damage, deformation, corrosion, or disconnection. • Is there any malfunctioning part?	Yes	Repair or replace the connector, then go to Step 5.
		No	Go to the next step.
2	**INSPECT BLUETOOTH UNIT CONDITION** • Disconnect the Bluetooth unit connector. • Inspect the connector engagement and connection condition and inspect the terminals for damage, deformation, corrosion, or disconnection. • Is there any malfunctioning part?	Yes	Repair or replace the connector, then go to Step 5.
		No	Go to the next step.
3	**INSPECT MICROPHONE CIRCUIT FOR OPEN CIRCUIT** • Inspect the wiring harness for continuity between Bluetooth unit terminal B and microphone terminal B (vehicle wiring harness side). • Is there continuity?	Yes	Go to the next step.
		No	Repair or replace the wiring harness which has an open circuit, then go to Step 5.

Step	Inspection		Action
4	**INSPECT FOR SHORT TO GROUND IN MICROPHONE INPUT CIRCUIT** • Inspect for continuity between Bluetooth unit terminal A (vehicle wiring harness side) and body ground. • Is there continuity?	Yes	Repair or replace the wiring harness which has a short to ground, then go to the next step.
		No	Go to the next step.
5	**PERFORM DTC INSPECTION AND VERIFY IF MALFUNCTIONING PART IS MICROPHONE OR BLUETOOTH UNIT** • Reconnect all the disconnected connectors. • Connect the negative battery cable. (See 01-17A-11 NEGATIVE BATTERY CABLE DISCONNECTION/CONNECTION [SKYACTIV-G 2.0].) (See 01-17A-13 NEGATIVE BATTERY CABLE DISCONNECTION/CONNECTION [SKYACTIV-G 2.0 (WITHOUT i-stop)].) (See 01-17B-9 NEGATIVE BATTERY CABLE DISCONNECTION/CONNECTION [SKYACTIV-D 2.2].) • Perform an inspection of the Bluetooth unit DTCs. (See 09-02F-4 DTC INSPECTION [Bluetooth SYSTEM (HANDS-FREE TELEPHONE (HF/TEL) SYSTEM)].) • Is the same DTC displayed?	Yes	Replace the microphone, then go to the next step. (See 09-20-65 MICROPHONE REMOVAL/INSTALLATION.)
		No	Go to Step 7.
6	**VERIFY THAT REPAIRS HAVE BEEN COMPLETED** • Perform an inspection of the Bluetooth unit DTCs. (See 09-02F-4 DTC INSPECTION [Bluetooth SYSTEM (HANDS-FREE TELEPHONE (HF/TEL) SYSTEM)].) • Is the same DTC displayed?	Yes	Replace the Bluetooth unit, then go to the next step. (See 09-20-67 Bluetooth UNIT REMOVAL/INSTALLATION.)
		No	Go to the next step.
7	**VERIFY IF OTHER DTCs DISPLAYED** • Are any other DTCs displayed?	Yes	Repair the malfunctioning part according to the applicable DTC troubleshooting. (See 09-02F-6 DTC TABLE [Bluetooth SYSTEM (HANDS-FREE TELEPHONE (HF/TEL) SYSTEM)].)
		No	DTC troubleshooting completed.

DTC: B116A:44, 26:Er86 [Bluetooth SYSTEM (HANDS-FREE TELEPHONE (HF/TEL) SYSTEM)]

id0902g8440400

Description	Bluetooth unit internal malfunction
Detection condition	Bluetooth unit internal malfunction detected
Fail-safe function	—
Possible cause	Bluetooth unit malfunction
System wiring diagram	—

Diagnostic Procedure

Step	Inspection		Action
1	**PERFORM INSPECTION OF BLUETOOTH UNIT DTCs** • Perform an inspection of the Bluetooth unit DTCs. (See 09-02F-4 DTC INSPECTION [Bluetooth SYSTEM (HANDS-FREE TELEPHONE (HF/TEL) SYSTEM)].) • Is the same DTC displayed?	Yes	Replace the Bluetooth unit, then go to the next step. (See 09-20-67 Bluetooth UNIT REMOVAL/INSTALLATION.)
		No	Go to the next step.
2	**VERIFY IF OTHER DTCs DISPLAYED** • Are any other DTCs displayed?	Yes	Repair the malfunctioning part according to the applicable DTC troubleshooting. (See 09-02F-6 DTC TABLE [Bluetooth SYSTEM (HANDS-FREE TELEPHONE (HF/TEL) SYSTEM)].)
		No	DTC troubleshooting completed.

ON-BOARD DIAGNOSTIC [Bluetooth SYSTEM (HANDS-FREE TELEPHONE (HF/TEL) SYSTEM)]

DTC: U0197:00 [Bluetooth SYSTEM (HANDS-FREE TELEPHONE (HF/TEL) SYSTEM)]

id0902g8441300

Description	Communication error with audio unit
Detection condition	CAN signal is not sent from Bluetooth unit
Fail-safe function	—
Possible cause	• Short in wiring harness between Bluetooth unit and audio unit, short to power supply, short or open circuit to ground • Audio unit malfunction • Bluetooth unit malfunction

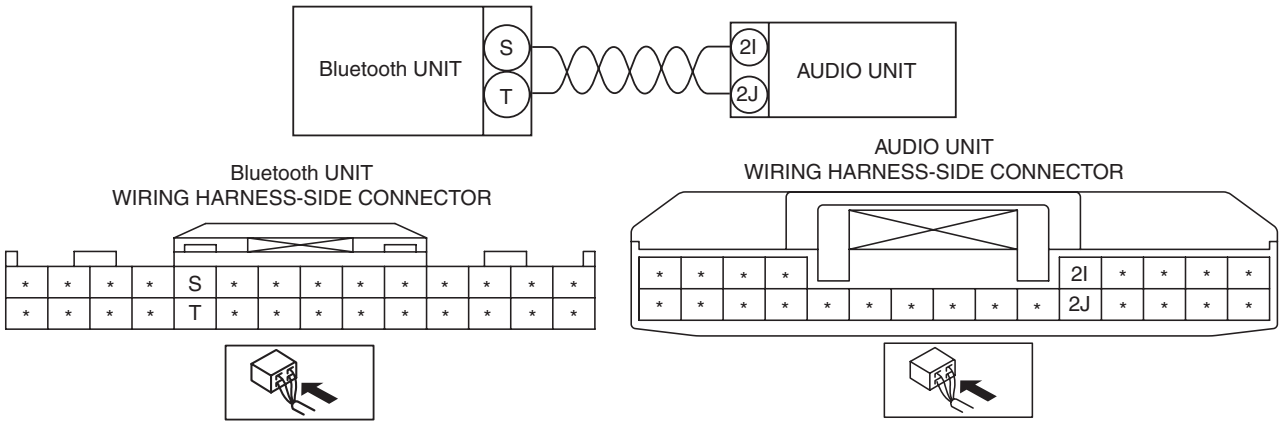

Diagnostic Procedure

Step	Inspection		Action
1	**INSPECT FOR SHORT BETWEEN CAN CIRCUITS** • Remove the glove compartment. (See 09-17-30 GLOVE COMPARTMENT REMOVAL/INSTALLATION.) • Switch the ignition ON (engine off or on). • Measure the voltage between the following terminals: — Between Bluetooth unit terminal S and body ground — Between Bluetooth unit terminal T and body ground • Are the measured voltage values between the 2 terminals the same?	Yes	Go to the next step.
		No	Go to Step 4.

ON-BOARD DIAGNOSTIC [Bluetooth SYSTEM (HANDS-FREE TELEPHONE (HF/TEL) SYSTEM)]

Step	Inspection		Action
2	**DETERMINE IF SHORT OCCURRING BETWEEN LINES IS IN AUDIO UNIT** • Switch the ignition off (LOCK). • Disconnect the negative battery cable. (See 01-17A-11 NEGATIVE BATTERY CABLE DISCONNECTION/CONNECTION [SKYACTIV-G 2.0].) (See 01-17A-13 NEGATIVE BATTERY CABLE DISCONNECTION/CONNECTION [SKYACTIV-G 2.0 (WITHOUT i-stop)].) (See 01-17B-9 NEGATIVE BATTERY CABLE DISCONNECTION/CONNECTION [SKYACTIV-D 2.2].) • Remove the audio unit. (See 09-20-4 AUDIO UNIT REMOVAL/INSTALLATION.) • Disconnect the audio unit connector. • Connect the negative battery cable. (See 01-17A-11 NEGATIVE BATTERY CABLE DISCONNECTION/CONNECTION [SKYACTIV-G 2.0].) (See 01-17A-13 NEGATIVE BATTERY CABLE DISCONNECTION/CONNECTION [SKYACTIV-G 2.0 (WITHOUT i-stop)].) (See 01-17B-9 NEGATIVE BATTERY CABLE DISCONNECTION/CONNECTION [SKYACTIV-D 2.2].) • Switch the ignition ON (engine off or on). • Measure the voltage between the following terminals: — Audio unit connector (vehicle wiring harness) terminal 2I and body ground — Audio unit connector (vehicle wiring harness) terminal 2J and body ground • Are the measured voltage values between the 2 terminals the same?	Yes	Go to the next step.
		No	Replace the audio unit because there is a short between circuits in the audio unit. (See 09-20-4 AUDIO UNIT REMOVAL/INSTALLATION.) After replacement, go to Step 13.

ON-BOARD DIAGNOSTIC [Bluetooth SYSTEM (HANDS-FREE TELEPHONE (HF/TEL) SYSTEM)]

Step	Inspection		Action
3	**DETERMINE IF SHORT OCCURRING BETWEEN LINES IS IN BLUETOOTH UNIT** • Switch the ignition off (LOCK). • Disconnect the negative battery cable. (See 01-17A-11 NEGATIVE BATTERY CABLE DISCONNECTION/CONNECTION [SKYACTIV-G 2.0].) (See 01-17A-13 NEGATIVE BATTERY CABLE DISCONNECTION/CONNECTION [SKYACTIV-G 2.0 (WITHOUT i-stop)].) (See 01-17B-9 NEGATIVE BATTERY CABLE DISCONNECTION/CONNECTION [SKYACTIV-D 2.2].) • Remove the Bluetooth unit. (See 09-20-67 Bluetooth UNIT REMOVAL/ INSTALLATION.) • Disconnect the Bluetooth unit connector. • Connect the negative battery cable. (See 01-17A-11 NEGATIVE BATTERY CABLE DISCONNECTION/CONNECTION [SKYACTIV-G 2.0].) (See 01-17A-13 NEGATIVE BATTERY CABLE DISCONNECTION/CONNECTION [SKYACTIV-G 2.0 (WITHOUT i-stop)].) (See 01-17B-9 NEGATIVE BATTERY CABLE DISCONNECTION/CONNECTION [SKYACTIV-D 2.2].) • Switch the ignition ON (engine off or on). • Measure the voltage between the following terminals: — Audio unit connector (vehicle wiring harness) terminal 2I and body ground — Audio unit connector (vehicle wiring harness) terminal 2J and body ground • Are the measured voltage values between the 2 terminals the same?	Yes	Repair or replace the wiring harness between the audio unit and the Bluetooth unit because the wiring harness is shorted between circuits, then go to Step 13.
		No	Replace the Bluetooth unit because there is a short between circuits in the Bluetooth unit. (See 09-20-67 Bluetooth UNIT REMOVAL/ INSTALLATION.) After replacement, go to Step 13.
4	**INSPECT FOR SHORT TO POWER SUPPLY IN CAN CIRCUIT** • Measure the voltage between the following terminals: — Between Bluetooth unit terminal S and body ground — Between Bluetooth unit terminal T and body ground • Can B+ voltage be measured? **Note** • If a short to power supply other than the B+ power supply has occurred, a constant voltage other than B+ can be measured.	Yes	Go to the next step.
		No	Go to Step 7.

ON-BOARD DIAGNOSTIC [Bluetooth SYSTEM (HANDS-FREE TELEPHONE (HF/TEL) SYSTEM)]

Step	Inspection		Action
5	**DETERMINE IF SHORT TO POWER SUPPLY IS OCCURRING IN AUDIO UNIT** • Switch the ignition off (LOCK). • Disconnect the negative battery cable. (See 01-17A-11 NEGATIVE BATTERY CABLE DISCONNECTION/CONNECTION [SKYACTIV-G 2.0].) (See 01-17A-13 NEGATIVE BATTERY CABLE DISCONNECTION/CONNECTION [SKYACTIV-G 2.0 (WITHOUT i-stop)].) (See 01-17B-9 NEGATIVE BATTERY CABLE DISCONNECTION/CONNECTION [SKYACTIV-D 2.2].) • Remove the audio unit. (See 09-20-4 AUDIO UNIT REMOVAL/INSTALLATION.) • Disconnect the audio unit connector. • Connect the negative battery cable. (See 01-17A-11 NEGATIVE BATTERY CABLE DISCONNECTION/CONNECTION [SKYACTIV-G 2.0].) (See 01-17A-13 NEGATIVE BATTERY CABLE DISCONNECTION/CONNECTION [SKYACTIV-G 2.0 (WITHOUT i-stop)].) (See 01-17B-9 NEGATIVE BATTERY CABLE DISCONNECTION/CONNECTION [SKYACTIV-D 2.2].) • Switch the ignition ON (engine off or on). • Measure the voltage between the following terminals: — Audio unit connector (vehicle wiring harness) terminal 2I and body ground — Audio unit connector (vehicle wiring harness) terminal 2J and body ground • Can B+ voltage be measured? **Note** • If a short to power supply other than the B+ power supply has occurred, a constant voltage other than B+ can be measured.	Yes	Go to the next step.
		No	Replace the audio unit because there is a short to the power supply in the audio unit. (See 09-20-4 AUDIO UNIT REMOVAL/INSTALLATION.) After replacement, go to Step 13.

ON-BOARD DIAGNOSTIC [Bluetooth SYSTEM (HANDS-FREE TELEPHONE (HF/TEL) SYSTEM)]

Step	Inspection		Action
6	**DETERMINE IF SHORT TO POWER IS OCCURRING IN BLUETOOTH UNIT** • Switch the ignition off (LOCK). • Disconnect the negative battery cable. (See 01-17A-11 NEGATIVE BATTERY CABLE DISCONNECTION/CONNECTION [SKYACTIV-G 2.0].) (See 01-17A-13 NEGATIVE BATTERY CABLE DISCONNECTION/CONNECTION [SKYACTIV-G 2.0 (WITHOUT i-stop)].) (See 01-17B-9 NEGATIVE BATTERY CABLE DISCONNECTION/CONNECTION [SKYACTIV-D 2.2].) • Remove the Bluetooth unit. (See 09-20-67 Bluetooth UNIT REMOVAL/ INSTALLATION.) • Disconnect the Bluetooth unit connector. • Connect the negative battery cable. (See 01-17A-11 NEGATIVE BATTERY CABLE DISCONNECTION/CONNECTION [SKYACTIV-G 2.0].) (See 01-17A-13 NEGATIVE BATTERY CABLE DISCONNECTION/CONNECTION [SKYACTIV-G 2.0 (WITHOUT i-stop)].) (See 01-17B-9 NEGATIVE BATTERY CABLE DISCONNECTION/CONNECTION [SKYACTIV-D 2.2].) • Switch the ignition ON (engine off or on). • Measure the voltage between the following terminals: — Audio unit connector (vehicle wiring harness) terminal 2I and body ground — Audio unit connector (vehicle wiring harness) terminal 2J and body ground • Can B+ voltage be measured? **Note** • If a short to power supply other than the B+ power supply has occurred, a constant voltage other than B+ can be measured.	Yes	Repair or replace the wiring harness between the audio unit and the Bluetooth unit because the wiring harness is shorted to the power supply, then go to Step 13.
		No	Replace the Bluetooth unit because there is a short to the power supply in the Bluetooth unit. (See 09-20-67 Bluetooth UNIT REMOVAL/ INSTALLATION.) After replacement, go to Step 13.
7	**INSPECT FOR SHORT TO GROUND IN CAN CIRCUIT** • Switch the ignition off (LOCK). • Disconnect the negative battery cable. (See 01-17A-11 NEGATIVE BATTERY CABLE DISCONNECTION/CONNECTION [SKYACTIV-G 2.0].) (See 01-17A-13 NEGATIVE BATTERY CABLE DISCONNECTION/CONNECTION [SKYACTIV-G 2.0 (WITHOUT i-stop)].) (See 01-17B-9 NEGATIVE BATTERY CABLE DISCONNECTION/CONNECTION [SKYACTIV-D 2.2].) • Inspect for continuity between the following terminals: — Between Bluetooth unit terminal S and body ground — Between Bluetooth unit terminal T and body ground • Is there continuity?	Yes	Go to the next step.
		No	Go to Step 10.

ON-BOARD DIAGNOSTIC [Bluetooth SYSTEM (HANDS-FREE TELEPHONE (HF/TEL) SYSTEM)]

Step	Inspection		Action
8	**DETERMINE IF SHORT TO GROUND IS OCCURRING IN AUDIO UNIT** • Remove the audio unit. (See 09-20-4 AUDIO UNIT REMOVAL/INSTALLATION.) • Disconnect the audio unit connector. • Inspect for continuity between the following terminals: — Audio unit connector (vehicle wiring harness) terminal 2I and body ground — Audio unit connector (vehicle wiring harness) terminal 2J and body ground • Is there continuity?	Yes	Go to the next step.
		No	Replace the audio unit because there is a short to ground inside the unit. (See 09-20-4 AUDIO UNIT REMOVAL/INSTALLATION.) After replacement, go to Step 13.
9	**DETERMINE IF SHORT TO GROUND IS OCCURRING IN BLUETOOTH UNIT** • Remove the Bluetooth unit. (See 09-20-67 Bluetooth UNIT REMOVAL/INSTALLATION.) • Disconnect the Bluetooth unit connector. • Inspect for continuity between the following terminals: — Audio unit connector (vehicle wiring harness) terminal 2I and body ground — Audio unit connector (vehicle wiring harness) terminal 2J and body ground • Is there continuity?	Yes	Repair or replace the wiring harness between the audio unit and the Bluetooth unit because the wiring harness is shorted to ground, then go to Step 13.
		No	Replace the Bluetooth unit because there is a short to ground inside the unit. (See 09-20-67 Bluetooth UNIT REMOVAL/INSTALLATION.) After replacement, go to Step 13.
10	**INSPECT CAN CIRCUIT FOR OPEN CIRCUIT** • Remove the audio unit. (See 09-20-4 AUDIO UNIT REMOVAL/INSTALLATION.) • Disconnect the audio unit connector. • Remove the Bluetooth unit. (See 09-20-67 Bluetooth UNIT REMOVAL/INSTALLATION.) • Disconnect the Bluetooth unit connector. • Inspect for continuity between the following terminals: — Inspect the wiring harness for continuity between Bluetooth unit connector (vehicle wiring harness side) terminal S and audio unit connector (vehicle wiring harness side) terminal 2I. — Inspect the wiring harness for continuity between Bluetooth unit connector (vehicle wiring harness side) terminal T and audio unit connector (vehicle wiring harness side) terminal 2J. • Is there continuity?	Yes	Go to the next step.
		No	Go to Step 13.
11	**INSPECT AUDIO UNIT RESISTANCE** • Inspect the resistance between the audio unit terminal 2I and terminal 2J (part side). • Is the resistance **118**—**130** Ω?	Yes	Go to the next step.
		No	Replace the audio unit. (See 09-20-4 AUDIO UNIT REMOVAL/INSTALLATION.) After replacement, go to Step 13.
12	**INSPECT BLUETOOTH UNIT RESISTANCE** • Inspect the resistance between Bluetooth unit terminals S and T (part side). • Is the resistance **118**—**130** Ω?	Yes	Go to the next step.
		No	Replace the Bluetooth unit. (See 09-20-67 Bluetooth UNIT REMOVAL/INSTALLATION.) After replacement, go to the next step.
13	**VERIFY THAT REPAIRS HAVE BEEN COMPLETED** • Connect all the connectors. • Perform an inspection of the Bluetooth unit DTCs. (See 09-02F-4 DTC INSPECTION [Bluetooth SYSTEM (HANDS-FREE TELEPHONE (HF/TEL) SYSTEM)].) • Is the same DTC displayed?	Yes	Return to Step 1 and inspect for other possible causes. If the malfunction recurs, replace the Bluetooth unit, then go to the next step. (See 09-20-67 Bluetooth UNIT REMOVAL/INSTALLATION.)
		No	Go to the next step.

ON-BOARD DIAGNOSTIC [Bluetooth SYSTEM (HANDS-FREE TELEPHONE (HF/TEL) SYSTEM)]

Step	Inspection		Action
14	**VERIFY IF OTHER DTCs DISPLAYED** • Are any other DTCs displayed?	Yes	Repair the malfunctioning part according to the applicable DTC troubleshooting.
		No	DTC troubleshooting completed.

DIAGNOSTIC ASSIST FUNCTION [Bluetooth SYSTEM (HANDS-FREE TELEPHONE (HF/TEL) SYSTEM)]

id0902g8804500

Activation procedure

1. Switch the ignition to ACC or ON (engine off).
2. Press the POWER/VOLUME switch to turn the audio on.
3. Press the POWER/VOLUME switch and SEEK switch (up) simultaneously to launch the diagnostic assist function.

With POWER/VOLUME switch on left side

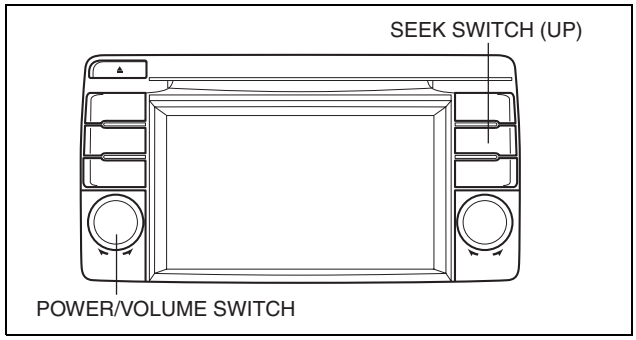

With POWER/VOLUME switch on right side

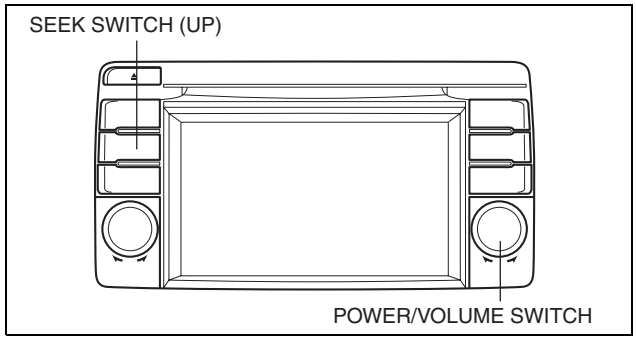

4. Verify that the launched diagnostic assist function is displayed on the screen.
5. Input each diagnostic assist code using the diagnostic assist code input screen. (See 09-02F-18 Diagnostic assist code table.)

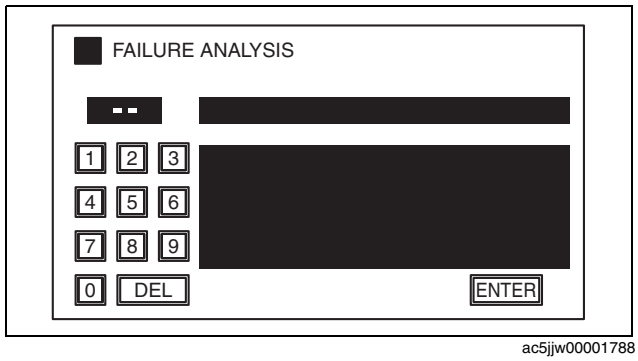

ac5jjw00001788

ON-BOARD DIAGNOSTIC [Bluetooth SYSTEM (HANDS-FREE TELEPHONE (HF/TEL) SYSTEM)]

Diagnostic assist code input screen

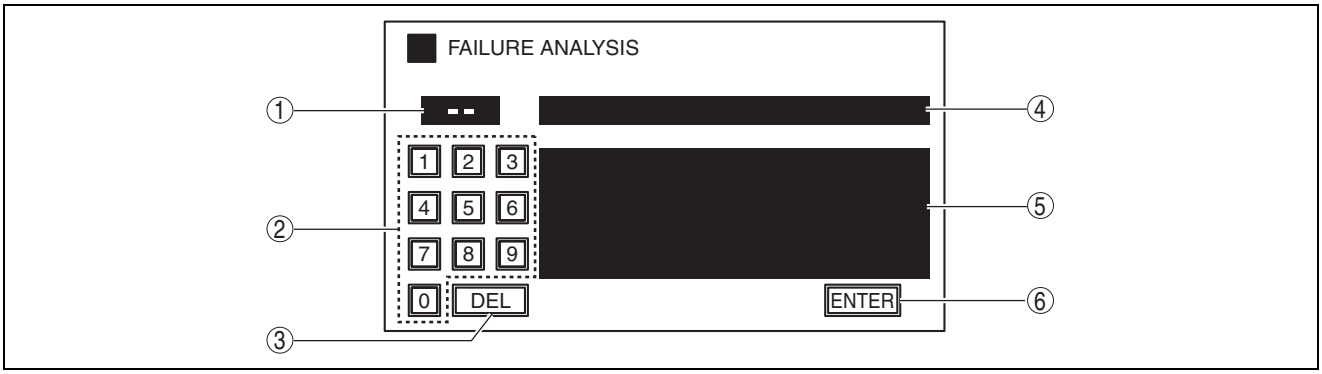

ac5wzw0000077

No.	Name	Content/function
1	Diagnostic assist code display screen	Displays the diagnostic assist code.
2	Diagnostic assist code input switch	Inputs the diagnostic assist code.
3	DEL switch	Clears the diagnostic assist code.
4	Diagnostic content display screen	Displays the diagnostic content.
5	Diagnostic results display screen	Displays the diagnostic results.
6	ENTER switch	Transfers to the diagnostic assist function.

Diagnostic assist code table

Diagnostic assist code	Content/function
37	09-02F-18 Diagnostic assist code "37" HF unit connection information
38	09-02F-18 Diagnostic assist code "38" HF unit software version

Diagnostic assist code "37" HF unit connection information

1. Launch the diagnostic assist function. (See 09-02F-17 Activation procedure.)
2. Input the diagnostic assist code "37"using the diagnostic assist code input screen.
3. Select "ENTER".

Inspection	Display	Action
• Launch the connection information mode. • Verify the connection status.	CONNECT	The Bluetooth unit connection status is normal.
	CON ERR	Verify the Bluetooth unit connection status. (See 09-20-67 Bluetooth UNIT REMOVAL/ INSTALLATION.)

4. Press the POWER/VOLUME switch and return to the diagnostic assist code input screen.
5. Press the POWER/VOLUME switch and cancel the diagnostic assist mode.

Diagnostic assist code "38" HF unit software version

1. Launch the diagnostic assist function. (See 09-02F-17 Activation procedure.)
2. Input the diagnostic assist code "38"using the diagnostic assist code input screen.
3. Select "ENTER".

Inspection	Display	Action
• Launch the software version mode. • Verify the version.	Display the software version	—

4. Press the POWER/VOLUME switch and return to the diagnostic assist code input screen.
5. Press the POWER/VOLUME switch and end the diagnostic assist mode.

09-02G ON-BOARD DIAGNOSTIC [INSTRUMENT CLUSTER]

ON-BOARD DIAGNOSTIC
WIRING DIAGRAM
[INSTRUMENT CLUSTER] **09-02G–2**
FOREWORD
[INSTRUMENT CLUSTER] **09-02G–5**
Troubleshooting Procedure **09-02G–5**
Action for Non-repeatable Malfunction. **09-02G–6**
DTC INSPECTION
[INSTRUMENT CLUSTER] **09-02G–7**
CMDTC Self Test **09-02G–7**
ODDTC Self Test **09-02G–7**
CLEARING DTC
[INSTRUMENT CLUSTER] **09-02G–9**
CMDTC Memory Clearing Procedure **09-02G–9**
ODDTC Memory Clearing Procedure **09-02G–9**
DTC TABLE
[INSTRUMENT CLUSTER] **09-02G–10**
DTC B11D4:53
[INSTRUMENT CLUSTER] **09-02G–12**
DTC U0001:88/U0010:88/ U0100:00/U0101:00/U0114:00/ U0121:00/U0131:00/U0140:00/ U0142:00/U0151:00/U0182:00/ U0214:00/U0232:00/U0233:00/ U0235:00/U023A:00
[INSTRUMENT CLUSTER] **09-02G–13**
Diagnostic Procedure. **09-02G–14**
DTC U0300:00
[INSTRUMENT CLUSTER] **09-02G–15**
DTC U0401:68
[INSTRUMENT CLUSTER] **09-02G–16**
DTC U0402:68
[INSTRUMENT CLUSTER] **09-02G–17**
Diagnostic Procedure. **09-02G–17**
DTC U0422:68
[INSTRUMENT CLUSTER] **09-02G–18**
DTC U0433:00
[INSTRUMENT CLUSTER] **09-02G–19**
DTC U0433:68
[INSTRUMENT CLUSTER] **09-02G–20**
DTC U0515:68
[INSTRUMENT CLUSTER] **09-02G–21**
DTC U053B:00
[INSTRUMENT CLUSTER] **09-02G–22**
DTC U2005:86
[INSTRUMENT CLUSTER] **09-02G–23**
DTC U2013:13
[INSTRUMENT CLUSTER] **09-02G–24**
DTC U2100:00
[INSTRUMENT CLUSTER] **09-02G–26**
DTC U2300:41
[INSTRUMENT CLUSTER] **09-02G–27**
DTC U2300:51
[INSTRUMENT CLUSTER] **09-02G–28**
DTC U2300:56
[INSTRUMENT CLUSTER] **09-02G–28**
DTC U2300:57
[INSTRUMENT CLUSTER] **09-02G–30**
DTC U3000:41
[INSTRUMENT CLUSTER] **09-02G–30**
DTC U3003:16
[INSTRUMENT CLUSTER] **09-02G–31**
Without i-stop System **09-02G–31**
With i-stop System **09-02G–33**
PID/DATA MONITOR INSPECTION
[INSTRUMENT CLUSTER] **09-02G–37**
PID/DATA MONITOR TABLE
[INSTRUMENT CLUSTER] **09-02G–37**
ACTIVE COMMAND MODES INSPECTION
[INSTRUMENT CLUSTER] **09-02G–38**
ACTIVE COMMAND MODES TABLE
[INSTRUMENT CLUSTER] **09-02G–38**

ON-BOARD DIAGNOSTIC [INSTRUMENT CLUSTER]

ON-BOARD DIAGNOSTIC WIRING DIAGRAM [INSTRUMENT CLUSTER]

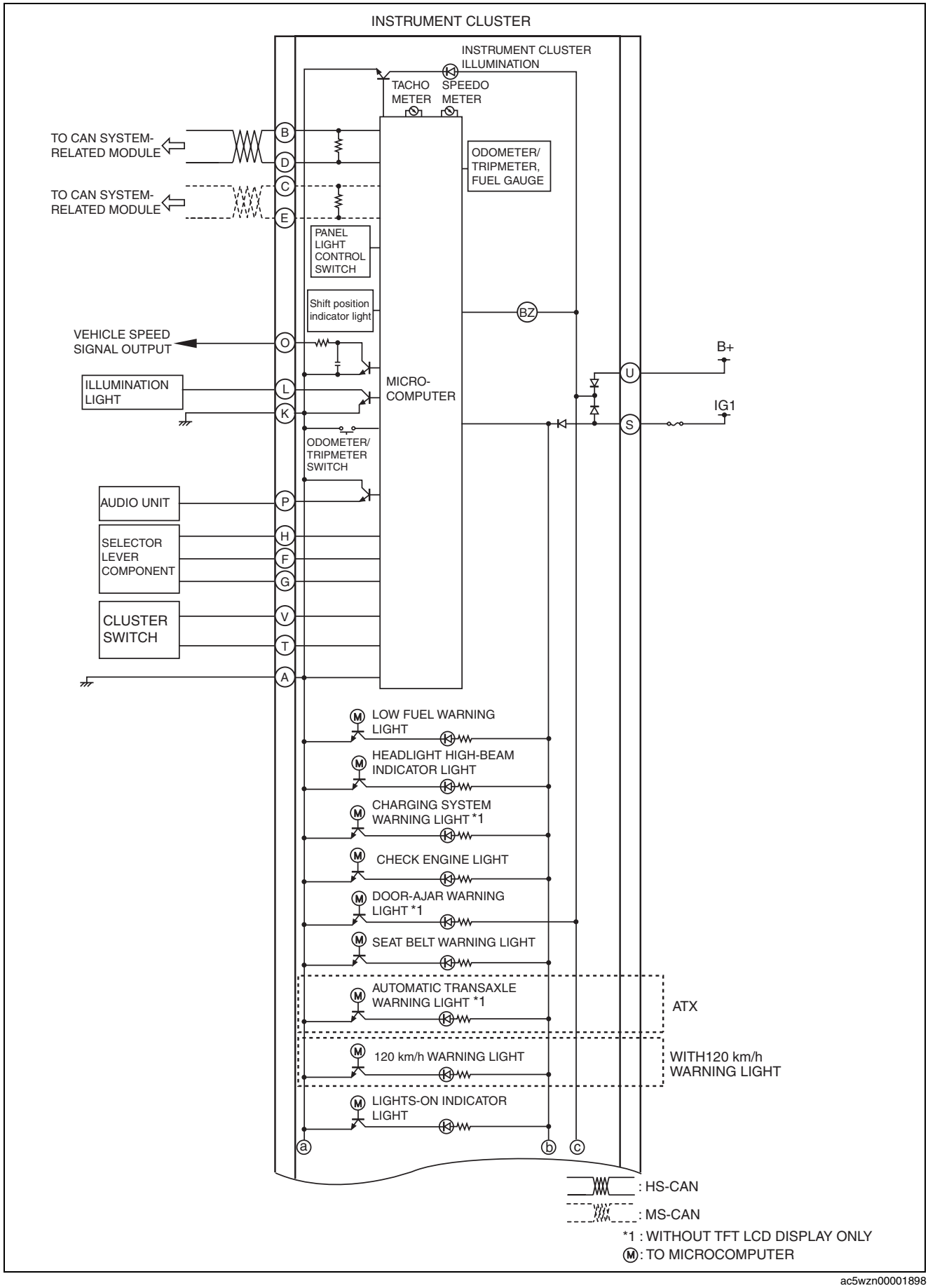

ac5wzn00001898

ON-BOARD DIAGNOSTIC [INSTRUMENT CLUSTER]

id0902e8960000

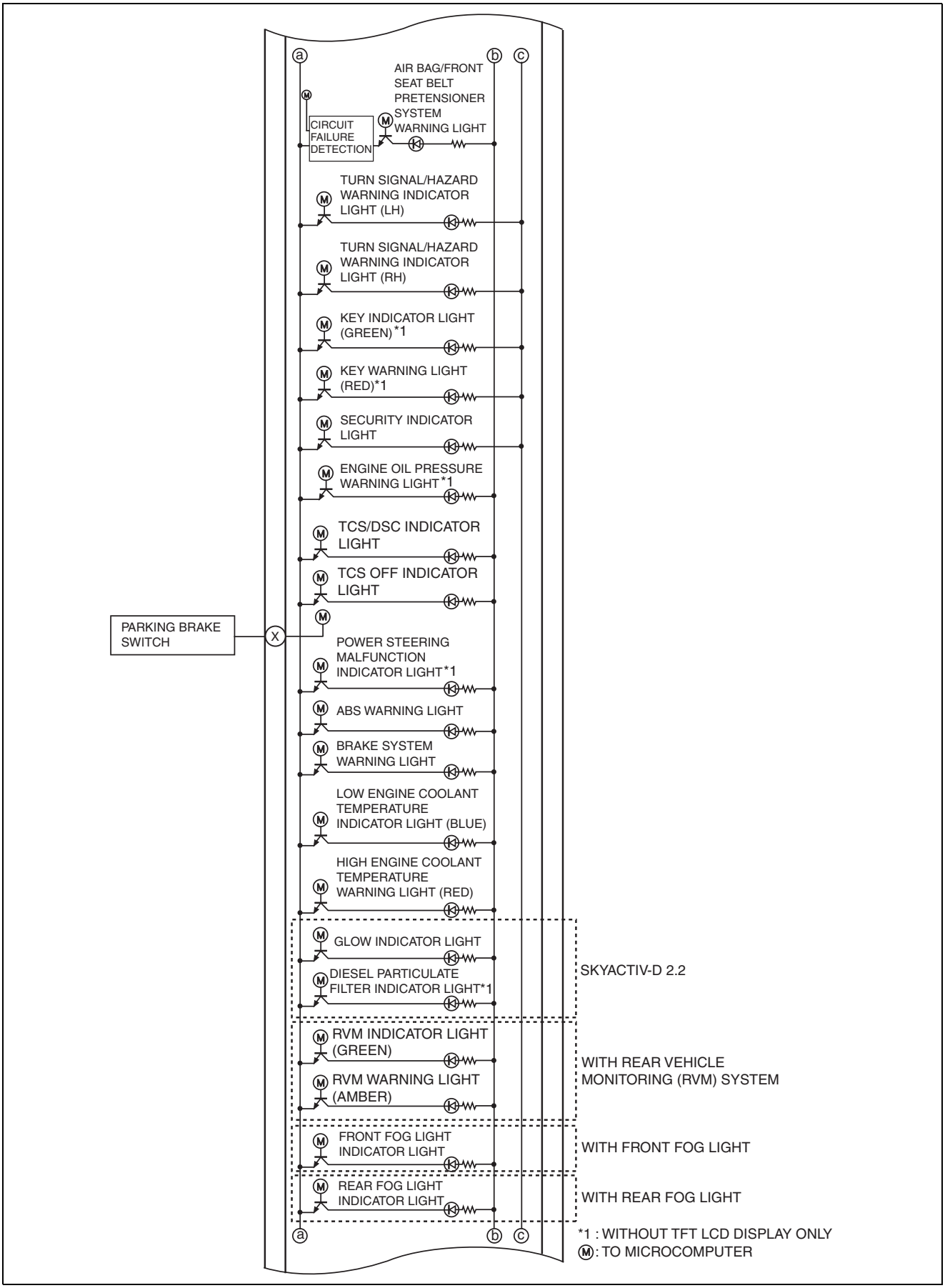

ac5wzn00001899

ON-BOARD DIAGNOSTIC [INSTRUMENT CLUSTER]

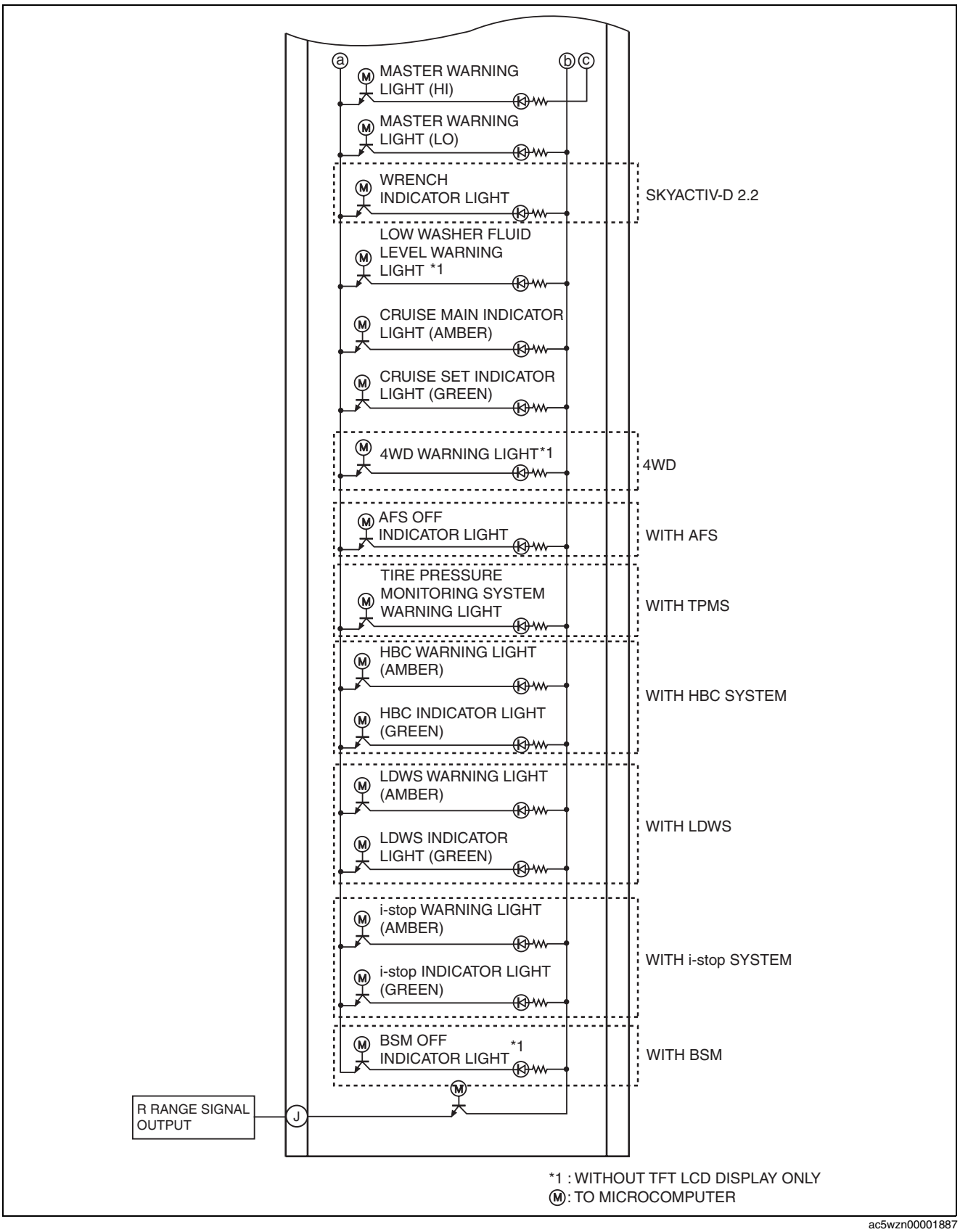

ac5wzn00001887

ON-BOARD DIAGNOSTIC [INSTRUMENT CLUSTER]

FOREWORD [INSTRUMENT CLUSTER]

id0902e8960100

- If there is any vehicle malfunction complaint lodged by a customer, perform malfunction diagnosis according to the troubleshooting procedure.

Troubleshooting Procedure

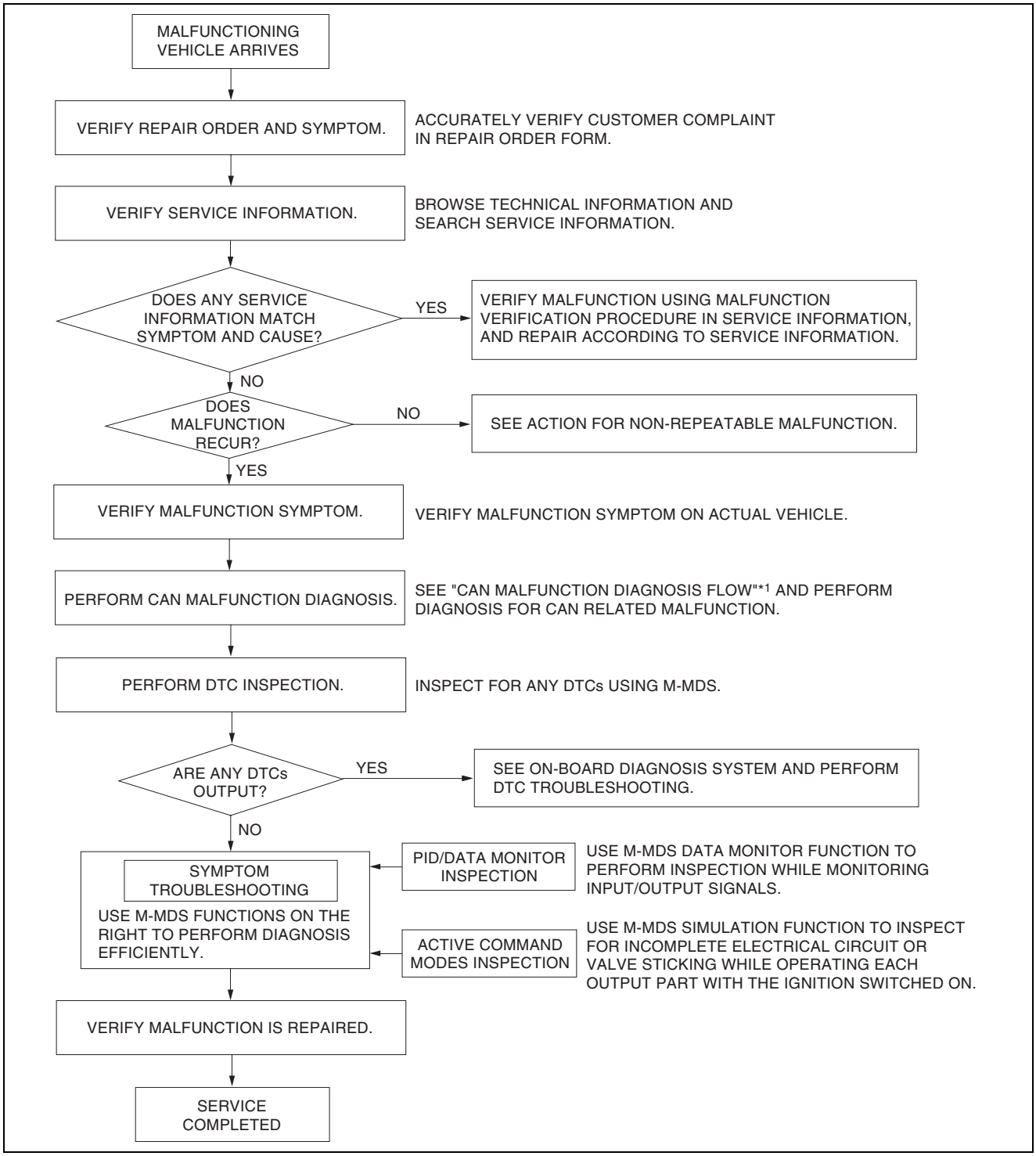

am3zzw0001242

*1 : 10-02A-3 CONTROLLER AREA NETWORK (CAN) MALFUNCTION DIAGNOSIS FLOW [SKYACTIV-G 2.0 (L.H.D.)]/10-02B-3 CONTROLLER AREA NETWORK (CAN) MALFUNCTION DIAGNOSIS FLOW [SKYACTIV-G 2.0 (R.H.D.)]/10-02C-3 CONTROLLER AREA NETWORK (CAN) MALFUNCTION DIAGNOSIS FLOW [SKYACTIV-D 2.2 (L.H.D.)]/10-02D-3 CONTROLLER AREA NETWORK (CAN) MALFUNCTION DIAGNOSIS FLOW [SKYACTIV-D 2.2 (R.H.D.)]

ON-BOARD DIAGNOSTIC [INSTRUMENT CLUSTER]

Action for Non-repeatable Malfunction

- If the malfunction does not recur, verify the malfunction cause by performing the following actions:
  - — Based on the repair order form, attempt to drive the vehicle or perform tests to replicate the malfunction, record the data at that time, and detect the malfunction cause.
  - — Shake the wiring harness or connector of the electrical component which is suspected to be the cause of the malfunction, and inspect for malfunction or occurrence of any DTCs.

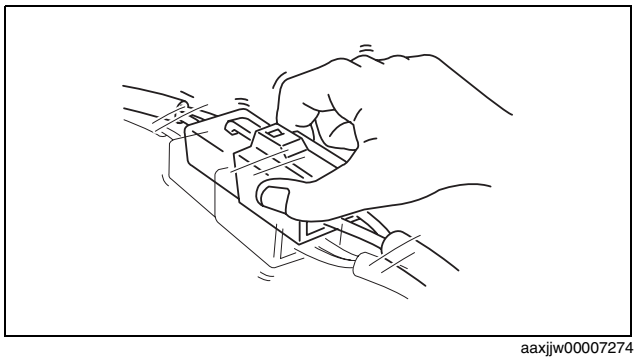

aaxjjw00007274

  - — Inspect the female terminals on the connector of the electric component which is suspected to be the cause of the malfunction for poor connection.

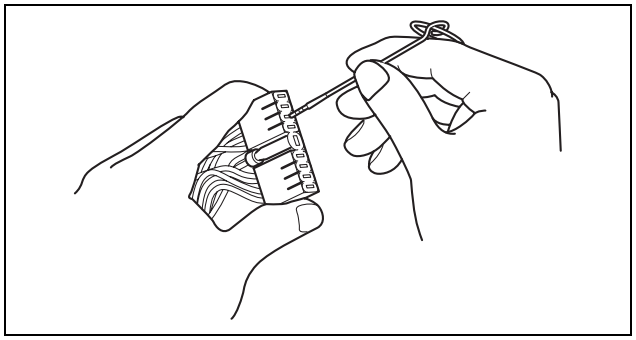

am3uuw0000750

ON-BOARD DIAGNOSTIC [INSTRUMENT CLUSTER]

DTC INSPECTION [INSTRUMENT CLUSTER]

id0902e8960300

CMDTC Self Test

1. Connect the M-MDS to the DLC-2.
2. After the vehicle is identified, select the following items from the initialization screen of the M-MDS.
   (1) Select “Self Test”.
   (2) Select “All CMDTCs”.
3. Verify the DTC according to the directions on the screen.
   - If any DTCs are displayed, perform troubleshooting according to the corresponding DTC inspection after recording the snapshot data.
4. After completion of repairs, clear all DTCs stored in the instrument cluster. (See 09-02G-9 CLEARING DTC [INSTRUMENT CLUSTER].)

ODDTC Self Test

1. Connect the M-MDS to the DLC-2.
2. After the vehicle is identified, select the following items from the initialization screen of the M-MDS.
   (1) Select “Self Test”.
   (2) Select “Modules”.
   (3) Select “IC”.
3. Verify the DTC according to the directions on the screen.
   - If any DTCs are displayed, perform troubleshooting according to the corresponding DTC inspection after recording the snapshot data.
4. After completion of repairs, clear all DTCs stored in the instrument cluster. (See 09-02G-9 CLEARING DTC [INSTRUMENT CLUSTER].)

ON-BOARD DIAGNOSTIC [INSTRUMENT CLUSTER]

Snapshot data

- The data for all DTCs currently detected is stored.

Snapshot data table

—: Not applicable

Snapshot data item	Unit		Data contents	Corresponding data monitor items
AAT	°C	°F	Ambient temperature	—
APP_STATUS	Accelerator Pedal Off/Under20%/Over20%/FAIL		Accelerator pedal position status	—
CFG_STATUS	Config Complete/Not Configured/Config Error		Configuration status	—
ECT_STATUS	Under 0 degrees C/0-Under 80 degrees C/Over 80 degrees C/FAIL		Engine coolant temperature status	—
IC_VPWR	V		Instrument cluster power supply voltage	—
IG-ON_TIMER	hh:mm:ss		Elapsed time since ignition switched ON (engine off or on)	—
PWR_MODE_KEY	Key Out/Key Recently Out/ Key Approved (Position 0)/ Post Accessory (Position 0)/ Accessory (Position 1)/ Post Ignition (Position 1)/ ignition On (Position 2)/ Running - Starting In Progress (Position 2)/ Crank (Position 3)		Push button start power position switching status	—
RPM_STATUS	Engine Stop/Under1500rpm/Over1500rpm/FAIL		Engine speed status	—
SHIFT_STATUS	P/N/ D/ R/ FAIL		Selector lever position status	—
TOTAL_DIST	Km	miles	Accumulated total traveled distance since vehicle completion	—
TOTAL_TIME	hh:mm:ss		Accumulated total elapsed time since vehicle completion **Note** • When the ROOM fuse is removed, or the ignition is switched off (LOCK), the time is not included in the elapsed time.	TOTAL_TIME
VPWR	V		Instrument cluster power supply voltage	VPWR
VSPD_STATUS	Stop/ 0-10km/h/ Over10km/h/ FAIL		Vehicle speed status	—
VSS	KPH, MPH		Vehicle speed	—

ON-BOARD DIAGNOSTIC [INSTRUMENT CLUSTER]

CLEARING DTC [INSTRUMENT CLUSTER]

id0902e8960400

CMDTC Memory Clearing Procedure

1. Connect the M-MDS to the DLC-2.
2. After the vehicle is identified, select the following items from the initialization screen of the M-MDS.
   (1) Select “Self Test”.
   (2) Select “All CMDTCs”.
3. Verify the DTC according to the directions on the screen.
4. Press the clear button on the DTC screen to clear the DTC.
5. Switch the ignition to off.
6. Switch the ignition ON (engine off or on) and wait for **5 s or more**.
7. Perform DTC inspection. (See 09-02G-7 DTC INSPECTION [INSTRUMENT CLUSTER].)
8. Verify that no DTCs are displayed.

ODDTC Memory Clearing Procedure

1. Connect the M-MDS to the DLC-2.
2. After the vehicle is identified, select the following items from the initialization screen of the M-MDS.
   (1) Select “Self Test”.
   (2) Select “Modules”.
   (3) Select “IC”.
3. Verify the DTC according to the directions on the screen.
4. Press the clear button on the DTC screen to clear the DTC.
5. Switch the ignition to off.
6. Switch the ignition ON (engine off or on) and wait for **5 s or more**.
7. Perform DTC inspection. (See 09-02G-7 DTC INSPECTION [INSTRUMENT CLUSTER].)
8. Verify that no DTCs are displayed.

ON-BOARD DIAGNOSTIC [INSTRUMENT CLUSTER]

DTC TABLE [INSTRUMENT CLUSTER]

id0902e8960500

×: Applicable
—: Not applicable

DTC No.	Warning/ indicator light	Description	Fail-safe function	Drive cycle	Self test type*1	Memory function	Page
B11D4:53 *2	—	Laser sensor malfunction	×	—	C, D	×	(See 09-02G-12 DTC B11D4:53 [INSTRUMENT CLUSTER].)
U0001:88	—	Unit communication error (HS-CAN)	—	—	C, D	×	(See 09-02G-13 DTC U0001:88/U0010:88/ U0100:00/U0101:00/ U0114:00/U0121:00/ U0131:00/U0140:00/ U0142:00/U0151:00/ U0182:00/U0214:00/ U0232:00/U0233:00/ U0235:00/U023A:00 [INSTRUMENT CLUSTER].)
U0010:88	—	Unit communication error (MS-CAN)	—	—	C, D	×	
U0100:00	—	Communication error with PCM	—	—	C, D	×	
U0101:00* 3	—	Communication error with TCM	—	—	C, D	×	
U0114:00* 4	—	4WD control module communication error	—	—	C, D	×	
U0121:00	—	Communication error with DSC HU/CM	—	—	C, D	×	
U0131:00	—	Communication error with EPS control module	—	—	C, D	×	
U0140:00	—	Communication error with front body control module (FBCM)	—	—	C, D	×	
U0142:00	—	Communication error with rear body control module (RBCM)	—	—	C, D	×	
U0151:00	—	Communication error with SAS control module	—	—	C, D	×	
U0182:00* 5	—	Communication error with AFS control module	—	—	C, D	×	
U0214:00	—	Communication error with start stop unit	—	—	C, D	×	
U0232:00* 6	—	Communication error with rear vehicle monitoring control module (RH)	—	—	C, D	×	
U0233:00* 7	—	Communication error with BSM control module (RH)	—	—	C, D	×	
U0235:00* 2	—	Communication error with laser sensor	—	—	C, D	×	
U023A:00 *8	—	Communication error with forward sensing camera (FSC)	—	—	C, D	×	
U0300:00	—	Instrument cluster configuration error	—	—	C, D	×	(See 09-02G-15 DTC U0300:00 [INSTRUMENT CLUSTER].)
U0401:68	—	Error signal received from PCM	—	—	C, D	×	(See 09-02G-16 DTC U0401:68 [INSTRUMENT CLUSTER].)
U0402:68* 3	—	Error signal received from transmission/transaxle	—	—	C, D	×	(See 09-02G-17 DTC U0402:68 [INSTRUMENT CLUSTER].)
U0422:68	—	Error signal received from front body control module (FBCM)	—	—	C, D	×	(See 09-02G-18 DTC U0422:68 [INSTRUMENT CLUSTER].)

ON-BOARD DIAGNOSTIC [INSTRUMENT CLUSTER]

DTC No.	Warning/ indicator light	Description	Fail-safe function	Drive cycle	Self test type*1	Memory function	Page
U0433:00*2	—	Error signal received from laser sensor	×	—	C, D	×	(See 09-02G-19 DTC U0433:00 [INSTRUMENT CLUSTER].)
U0433:68*2	—	Error signal received from laser sensor	×	—	C, D	×	(See 09-02G-20 DTC U0433:68 [INSTRUMENT CLUSTER].)
U0515:68	—	Error signal received from start stop unit	—	—	C, D	×	(See 09-02G-21 DTC U0515:68 [INSTRUMENT CLUSTER].)
U053B:00*8	—	Error signal received from forward sensing camera (FSC)	—	—	C, D	×	(See 09-02G-22 DTC U053B:00 [INSTRUMENT CLUSTER].)
U2005:86	—	Error signal received from PCM	—	—	C, D	×	(See 09-02G-23 DTC U2005:86 [INSTRUMENT CLUSTER].)
U2013:13	—	Cluster switch circuit malfunction	—	—	C, D	×	(See 09-02G-24 DTC U2013:13 [INSTRUMENT CLUSTER].)
U2100:00	—	Instrument cluster configuration error	—	—	C, D	×	(See 09-02G-26 DTC U2100:00 [INSTRUMENT CLUSTER].)
U2300:41	—	Instrument cluster configuration error	—	—	C, D	×	(See 09-02G-27 DTC U2300:41 [INSTRUMENT CLUSTER].)
U2300:51	—	Instrument cluster configuration error	—	—	C, D	×	(See 09-02G-28 DTC U2300:51 [INSTRUMENT CLUSTER].)
U2300:56	—	Instrument cluster configuration error	—	—	C, D	×	(See 09-02G-28 DTC U2300:56 [INSTRUMENT CLUSTER].)
U2300:57	—	Instrument cluster configuration error	—	—	C, D	×	(See 09-02G-30 DTC U2300:57 [INSTRUMENT CLUSTER].)
U3000:41	—	Malfunction inside instrument cluster	—	—	C, D	×	(See 09-02G-30 DTC U3000:41 [INSTRUMENT CLUSTER].)
U3003:16	—	Low power supply voltage input to instrument cluster	—	—	C, D	×	(See 09-02G-31 DTC U3003:16 [INSTRUMENT CLUSTER].)

*1 : C: CMDTC self test, D: ODDTC self test
*2 : With smart city brake support
*3 : ATX
*4 : 4WD
*5 : With AFS
*6 : With rear vehicle monitoring system
*7 : With BSM
*8 : With forward sensing camera (FSC)

ON-BOARD DIAGNOSTIC [INSTRUMENT CLUSTER]

DTC B11D4:53 [INSTRUMENT CLUSTER]

id0902e8016100

System malfunction location	**Laser sensor malfunction**
Detection condition	• Instrument cluster detects the following malfunctions] — Laser sensor malfunction — Malfunction in smart city brake support related system (laser sensor, DSC HU/CM, PCM)
Fail-safe	• Inhibits the smart city brake support control. • Warning message related to the smart city brake support is displayed in the TFT LCD display.
Possible cause	• System related to the smart city brake support stores DTCs. • Laser sensor malfunction
System wiring diagram	—

Diagnostic Procedure

Step	Inspection		Action
1	**VERIFY ALL SYSTEM DTCs** • Switch the ignition to off. • Switch the ignition ON (engine off or on) and wait for **10 s or more**. • Perform a CMDTC self-test using the M-MDS. (See 09-02G-7 DTC INSPECTION [INSTRUMENT CLUSTER].) • Are any DTCs other than DTC B11D4:53?	Yes	Repair the malfunctioning part according to the applicable system DTC troubleshooting.
		No	Go to the next step.
2	**VERIFY THAT REPAIRS HAVE BEEN COMPLETED** • Clear DTC for the instrument cluster using the M-MDS. (See 09-02G-9 CLEARING DTC [INSTRUMENT CLUSTER].) • Switch the ignition ON (engine off or on) and wait for **10 s or more**. • Perform a CMDTC self-test using the M-MDS. (See 09-02G-7 DTC INSPECTION [INSTRUMENT CLUSTER].) • Is DTC B11D4:53 displayed?	Yes	Replace the laser sensor, then go to the next step. (See 04-15-17 LASER SENSOR REMOVAL/ INSTALLATION.)
		No	Go to the next step.
3	**VERIFY IF OTHER DTCs DISPLAYED** • Are any other DTCs displayed?	Yes	Repair the malfunctioning part according to the applicable system DTC troubleshooting.
		No	DTC troubleshooting completed.

ON-BOARD DIAGNOSTIC [INSTRUMENT CLUSTER]

DTC U0001:88/U0010:88/U0100:00/U0101:00/U0114:00/U0121:00/U0131:00/U0140:00/U0142:00/U0151:00/U0182:00/U0214:00/U0232:00/U0233:00/U0235:00/U023A:00 [INSTRUMENT CLUSTER]

id0902e8016200

System malfunction location	**U0001:88** • **Module communication error (HS-CAN)** **U0010:88** • **Unit communication error (MS-CAN)** **U0100:00** • **Communication error with PCM** **U0101:00** • **Communication error with TCM** **U0114:00** • **4WD control module communication error** **U0121:00** • **Communication error with DSC HU/CM** **U0131:00** • **Communication error with EPS control module** **U0140:00** • **Communication error with front body control module (FBCM)** **U0142:00** • **Communication error with rear body control module (RBCM)** **U0151:00** • **Communication error with SAS control module** **U0182:00** • **Communication error with AFS control module** **U0214:00** • **Communication error with start stop unit** **U0232:00** • **Communication error with rear vehicle monitoring control module (RH)** **U0233:00** • **Communication error with BSM control module (RH)** **U0235:00** • **Communication error with laser sensor** **U023A:00** • **Communication error with forward sensing camera (FSC)**
Detection condition	• U0001:88 — The instrument cluster detects a CAN bus communication line (HS-CAN) malfunction. • U0010:88 — The instrument cluster detects a CAN bus communication line (MS-CAN) malfunction. • U0100:00 — The instrument cluster cannot receive CAN signal from the PCM. • U0101:00 — The instrument cluster cannot receive CAN signal from the TCM for **1 s or more**. • U0114:00 — The instrument cluster cannot receive CAN signal from the 4WD control module for **1 s or more**. • U0121:00 — The instrument cluster cannot receive CAN signal from the DSC HU/CM for **1 s or more**. • U0131:00 — The instrument cluster could not receive CAN signal from the EPS control module for **1 s or more**. • U0140:00 — The instrument cluster cannot receive CAN signal from the front body control module (FBCM) for **5 s or more**. • U0142:00 — The instrument cluster cannot receive CAN signal from the rear body control module (RBCM) for **5 s or more**. • U0151:00 — The instrument cluster cannot receive CAN signal from the SAS control module for **2 s or more**. • U0182:00 — The instrument cluster cannot receive CAN signal from the AFS control module for **5 s or more**. • U0214:00 — The instrument cluster could not receive CAN signal from the start stop unit. • U0232:00 — The instrument cluster cannot receive CAN signal from the rear vehicle monitoring control module (RH) for **5 s or more**. • U0233:00 — The instrument cluster cannot receive CAN signal from the BSM control module (RH) for **1.5 s or more**. • U0235:00 — The instrument cluster cannot receive CAN signal from the laser sensor for **1 s or more**. • U023A:00 — The instrument cluster cannot receive CAN signal from the forward sensing camera (FSC) for **1 s or more**.
Fail-safe	—

ON-BOARD DIAGNOSTIC [INSTRUMENT CLUSTER]

System malfunction location	**U0001:88** • **Module communication error (HS-CAN)** **U0010:88** • **Unit communication error (MS-CAN)** **U0100:00** • **Communication error with PCM** **U0101:00** • **Communication error with TCM** **U0114:00** • **4WD control module communication error** **U0121:00** • **Communication error with DSC HU/CM** **U0131:00** • **Communication error with EPS control module** **U0140:00** • **Communication error with front body control module (FBCM)** **U0142:00** • **Communication error with rear body control module (RBCM)** **U0151:00** • **Communication error with SAS control module** **U0182:00** • **Communication error with AFS control module** **U0214:00** • **Communication error with start stop unit** **U0232:00** • **Communication error with rear vehicle monitoring control module (RH)** **U0233:00** • **Communication error with BSM control module (RH)** **U0235:00** • **Communication error with laser sensor** **U023A:00** • **Communication error with forward sensing camera (FSC)**
Possible cause	• Malfunction in CAN bus communication line • Malfunction in CAN line between the PCM and instrument cluster • Malfunction in CAN line between the TCM and instrument cluster • Malfunction in CAN communication line between AFS control module and instrument cluster • Malfunction in CAN line between the DSC HU/CM and instrument cluster • Malfunction in CAN line between the EPS control module and instrument cluster • Malfunction in CAN line between the front body control module (FBCM) and instrument cluster • Malfunction in CAN line between the rear body control module (RBCM) and instrument cluster • Malfunction in CAN line between the SAS control module and instrument cluster • Malfunction in CAN line between the AFS control module and instrument cluster • Malfunction in CAN line between the start stop unit and instrument cluster • Malfunction in CAN line between the rear vehicle monitoring control module (RH) and instrument cluster • Malfunction in CAN line between the BSM control module (RH) and instrument cluster • Malfunction in CAN line between the laser sensor and instrument cluster • Malfunction in CAN line between the forward sensing camera (FSC) and instrument cluster
System wiring diagram	—

Diagnostic Procedure

- Perform the malfunction diagnosis according to the troubleshooting procedure for the multiplex communication system. (See 10-02A-1 FOREWORD [SKYACTIV-G 2.0 (L.H.D.)].) (See 10-02B-1 FOREWORD [SKYACTIV-G 2.0 (R.H.D.)].) (See 10-02C-1 FOREWORD [SKYACTIV-D 2.2 (L.H.D.)].) (See 10-02D-1 FOREWORD [SKYACTIV-D 2.2 (R.H.D.)].)

ON-BOARD DIAGNOSTIC [INSTRUMENT CLUSTER]

DTC U0300:00 [INSTRUMENT CLUSTER]

id0902e8999700

System malfunction location	**Instrument cluster configuration error**
Detection condition	• Instrument cluster configuration error (incorrect value write) detected.
Fail-safe	—
Possible cause	• Instrument cluster configuration error • Instrument cluster malfunction
System wiring diagram	—

Diagnostic Procedure

Step	Inspection		Action
1	**PERFORM INSTRUMENT CLUSTER CONFIGURATION (USING AS-BUILT DATA)** • Using the M-MDS, perform the instrument cluster configuration with the As-Built data. (See 09-22-19 INSTRUMENT CLUSTER CONFIGURATION (USING AS-BUILT DATA).) • Clear DTC for the instrument cluster using the M-MDS. (See 09-02G-9 CLEARING DTC [INSTRUMENT CLUSTER].) • Perform the DTC inspection for the instrument cluster using the M-MDS. (See 09-02G-7 DTC INSPECTION [INSTRUMENT CLUSTER].) • Is DTC U0300:00 displayed?	Yes	Using the M-MDS, re-perform the instrument cluster configuration using the As-Built data, then go to the next step. (See 09-22-19 INSTRUMENT CLUSTER CONFIGURATION (USING AS-BUILT DATA).)
		No	Go to Step 3.
2	**VERIFY THAT REPAIRS HAVE BEEN COMPLETED** • Clear DTC for the instrument cluster using the M-MDS. (See 09-02G-9 CLEARING DTC [INSTRUMENT CLUSTER].) • Perform the DTC inspection for the instrument cluster using the M-MDS. (See 09-02G-7 DTC INSPECTION [INSTRUMENT CLUSTER].) • Is DTC U0300:00 displayed?	Yes	Replace the instrument cluster, then go to the next step. (See 09-22-6 INSTRUMENT CLUSTER REMOVAL/INSTALLATION.)
		No	Go to the next step.
3	**VERIFY IF OTHER DTCs DISPLAYED** • Are any other DTCs displayed?	Yes	Repair the malfunctioning part according to the applicable DTC troubleshooting. (See 09-02G-10 DTC TABLE [INSTRUMENT CLUSTER].)
		No	DTC troubleshooting completed.

ON-BOARD DIAGNOSTIC [INSTRUMENT CLUSTER]

DTC U0401:68 [INSTRUMENT CLUSTER]

id0902e8988800

System malfunction location	**Error signal received from PCM**
Detection condition	• The instrument cluster receives error signals from the PCM with the ignition switched ON (engine off or on).
Fail-safe	—
Possible cause	• DTCs are stored in the PCM. • Instrument cluster malfunction
System wiring diagram	—

Diagnostic Procedure

Step	Inspection		Action
1	**VERIFY INSTRUMENT CLUSTER DTCs** • Perform the DTC inspection for the instrument cluster using the M-MDS. (See 09-02G-7 DTC INSPECTION [INSTRUMENT CLUSTER].) • Is the DTC displayed?	Yes	Repair the malfunctioning part according to the applicable DTC troubleshooting. (See 09-02G-10 DTC TABLE [INSTRUMENT CLUSTER].)
		No	Go to the next step.
2	**VERIFY PCM DTCs** • Perform the DTC inspection for the PCM using the M-MDS. (See 01-02-8 ON-BOARD DIAGNOSTIC TEST [SKYACTIV-G 2.0].) • Is the DTC displayed?	Yes	Repair the malfunctioning part according to the applicable DTC troubleshooting. (See 01-02-14 DTC TABLE [SKYACTIV-G 2.0].)
		No	Go to the next step.
3	**VERIFY THAT REPAIRS HAVE BEEN COMPLETED** • Clear DTC for the instrument cluster using the M-MDS. (See 09-02G-9 CLEARING DTC [INSTRUMENT CLUSTER].) • Switch the ignition ON (engine off or on) and wait for **20 s or more**. • Perform the DTC inspection for the instrument cluster using the M-MDS. (See 09-02G-7 DTC INSPECTION [INSTRUMENT CLUSTER].) • Is DTC U0401:68 displayed?	Yes	Replace the instrument cluster, then go to the next step. (See 09-22-6 INSTRUMENT CLUSTER REMOVAL/INSTALLATION.)
		No	Go to the next step.
4	**VERIFY IF OTHER DTCs DISPLAYED** • Are any other DTCs displayed?	Yes	Repair the malfunctioning part according to the applicable DTC troubleshooting. (See 09-02G-10 DTC TABLE [INSTRUMENT CLUSTER].)
		No	DTC troubleshooting completed.

ON-BOARD DIAGNOSTIC [INSTRUMENT CLUSTER]

DTC U0402:68 [INSTRUMENT CLUSTER]

id0902e8988900

System malfunction location	**Error signal received from transmission/transaxle**
Detection condition	• The instrument cluster received error signals from the transmission/transaxle for **1 s or more** with the ignition switched ON (engine off or on).
Fail-safe	—
Possible cause	• The transaxle could not send a normal signal temporarily. (DTCs are stored in the TCM.) • TCM malfunction • Instrument cluster malfunction
System wiring diagram	—

Diagnostic Procedure

Step	Inspection	Results	Action
1	**VERIFY DTCs FOR TCM** • Verify DTCs for the TCM using the M-MDS. (See 05-02A-7 ON-BOARD DIAGNOSTIC SYSTEM DTC INSPECTION [FW6A-EL, FW6AX-EL].) (See 05-02B-6 ON-BOARD DIAGNOSTIC SYSTEM DTC INSPECTION [GW6A-EL, GW6AX-EL].) • Is the DTC displayed?	Yes	Repair the malfunctioning part according to the applicable DTC troubleshooting. (See 05-02A-11 ON-BOARD DIAGNOSTIC SYSTEM DTC TABLE [FW6A-EL, FW6AX-EL].) (See 05-02B-10 ON-BOARD DIAGNOSTIC SYSTEM DTC TABLE [GW6A-EL, GW6AX-EL].)
		No	Go to the next step.
2	**DRIVE VEHICLE THEN VERIFY DTCs FOR TCM AGAIN** • Drive the vehicle at a vehicle speed of **30 km/h {19 mph} or more** for **100 s or more**. • Verify DTCs for the TCM using the M-MDS. (See 05-02A-7 ON-BOARD DIAGNOSTIC SYSTEM DTC INSPECTION [FW6A-EL, FW6AX-EL].) (See 05-02B-6 ON-BOARD DIAGNOSTIC SYSTEM DTC INSPECTION [GW6A-EL, GW6AX-EL].) • Is the DTC displayed?	Yes	Repair the malfunctioning part according to the applicable DTC troubleshooting. (See 05-02A-11 ON-BOARD DIAGNOSTIC SYSTEM DTC TABLE [FW6A-EL, FW6AX-EL].) (See 05-02B-10 ON-BOARD DIAGNOSTIC SYSTEM DTC TABLE [GW6A-EL, GW6AX-EL].)
		No	Go to the next step.
3	**VERIFY THAT REPAIRS HAVE BEEN COMPLETED** • Clear DTC for the instrument cluster using the M-MDS. (See 09-02G-9 CLEARING DTC [INSTRUMENT CLUSTER].) • Switch the ignition ON and wait for **20 s or more**. • Perform the DTC inspection for the instrument cluster using the M-MDS. (See 09-02G-7 DTC INSPECTION [INSTRUMENT CLUSTER].) • Is DTC U0402:68 displayed?	Yes	Replace the instrument cluster, then go to the next step. (See 09-22-6 INSTRUMENT CLUSTER REMOVAL/INSTALLATION.)
		No	Go to the next step.
4	**VERIFY IF OTHER DTCs DISPLAYED** • Are any other DTCs displayed?	Yes	Repair the malfunctioning part according to the applicable DTC troubleshooting. (See 09-02G-10 DTC TABLE [INSTRUMENT CLUSTER].)
		No	DTC troubleshooting completed.

ON-BOARD DIAGNOSTIC [INSTRUMENT CLUSTER]

DTC U0422:68 [INSTRUMENT CLUSTER]

id0902e8950800

System malfunction location	**Error signal received from front body control module (FBCM)**
Detection condition	• The instrument cluster receives error signals from the front body control module (FBCM) for **5 s or more** with the ignition switched ON (engine off or on).
Fail-safe	—
Possible cause	• DTCs are stored in the front body control module (FBCM). • Instrument cluster malfunction
System wiring diagram	—

Diagnostic Procedure

Step	Inspection		Action
1	**VERIFY INSTRUMENT CLUSTER DTCs** • Perform the DTC inspection for the instrument cluster using the M-MDS. (See 09-02G-7 DTC INSPECTION [INSTRUMENT CLUSTER].) • Is the DTC displayed?	Yes	Repair the malfunctioning part according to the applicable DTC troubleshooting. (See 09-02G-10 DTC TABLE [INSTRUMENT CLUSTER].)
		No	Go to the next step.
2	**VERIFY FRONT BODY CONTROL MODULE (FBCM) DTCs** • Perform the DTC inspection for the front body control module (FBCM) using the M-MDS. (See 09-02K-10 DTC INSPECTION [FRONT BODY CONTROL MODULE (FBCM)].) • Is the DTC displayed?	Yes	Repair the malfunctioning part according to the applicable DTC troubleshooting. (See 09-02K-13 DTC TABLE [FRONT BODY CONTROL MODULE (FBCM)].)
		No	Go to the next step.
3	**VERIFY THAT REPAIRS HAVE BEEN COMPLETED** • Clear DTC for the instrument cluster using the M-MDS. (See 09-02G-9 CLEARING DTC [INSTRUMENT CLUSTER].) • Switch the ignition ON (engine off or on) and wait for **20 s or more**. • Perform the DTC inspection for the instrument cluster using the M-MDS. (See 09-02G-7 DTC INSPECTION [INSTRUMENT CLUSTER].) • Is the DTC U0422:68 displayed?	Yes	Replace the instrument cluster, then go to the next step. (See 09-22-6 INSTRUMENT CLUSTER REMOVAL/INSTALLATION.)
		No	Go to the next step.
4	**VERIFY IF OTHER DTCs DISPLAYED** • Are any other DTCs displayed?	Yes	Repair the malfunctioning part according to the applicable DTC troubleshooting. (See 09-02G-10 DTC TABLE [INSTRUMENT CLUSTER].)
		No	DTC troubleshooting completed.

ON-BOARD DIAGNOSTIC [INSTRUMENT CLUSTER]

DTC U0433:00 [INSTRUMENT CLUSTER]

id0902e8016300

System malfunction location	**Error signal received from laser sensor**
Detection condition	• Instrument cluster detects the following conditions: — The smart city brake support operated normally in the past. — Malfunction of laser sensor or smart city brake support related system (laser sensor, DSC HU/CM, PCM) — Laser sensor control is temporarily inhibited.
Fail-safe	• Detection condition: The smart city brake support operated normally in the past. — Function not equipped. • Detection condition: Malfunction in laser sensor or smart city brake support related system (laser sensor, DSC HU/CM, PCM) — Inhibits the smart city brake support control. — Warning message related to the smart city brake support is displayed on the TFT LCD display. • Detection condition: Laser sensor control is temporarily inhibited. — Temporarily inhibits the smart city brake support control.
Possible cause	**Note** • The instrument cluster stores DTC U0433:00 as a record that the smart city brake support operated normally. • System related to the smart city brake support stores DTCs. • The laser sensor cannot temporarily function due to dirt on the windshield. • Laser sensor malfunction • Instrument cluster malfunction
System wiring diagram	—

Diagnostic Procedure

Step	Inspection		Action
1	**VERIFY ALL SYSTEM DTCs** • Switch the ignition to off. • Switch the ignition ON (engine off or on) and wait for **10 s or more**. • Perform a CMDTC self-test using the M-MDS. (See 09-02G-7 DTC INSPECTION [INSTRUMENT CLUSTER].) • Are any DTCs other than DTC U0433:00 displayed?	Yes	Repair the malfunctioning part according to the applicable system DTC troubleshooting. (See 09-02G-10 DTC TABLE [INSTRUMENT CLUSTER].)
		No	Go to the next step.
2	**VERIFY DTCs AGAIN** • Clear DTC for the instrument cluster using the M-MDS. (See 09-02G-9 CLEARING DTC [INSTRUMENT CLUSTER].) • Switch the ignition ON (engine off or on) and wait for **10 s or more**. • Perform a CMDTC self-test using the M-MDS. (See 09-02G-7 DTC INSPECTION [INSTRUMENT CLUSTER].) • Is DTC U0433:00 displayed?	Yes	Go to the next step.
		No	Go to Step 6.
3	**VERIFY TFT LCD DISPLAY** • Verify the TFT LCD display. • Is “SCBS Clear windshield completely” or “SCBS Not Available” displayed in the TFT LCD display?	Yes	Clean the windshield, then go to the next step.
		No	Go to Step 5.

ON-BOARD DIAGNOSTIC [INSTRUMENT CLUSTER]

Step	Inspection		Action
4	**PERFORM DTC INSPECTION AND VERIFY IF MALFUNCTION CAUSE IS LASER SENSOR** • Clear DTC for the instrument cluster using the M-MDS. (See 09-02G-9 CLEARING DTC [INSTRUMENT CLUSTER].) • Switch the ignition ON (engine off or on) and wait for **10 s or more**. • Perform a CMDTC self-test using the M-MDS. (See 09-02G-7 DTC INSPECTION [INSTRUMENT CLUSTER].) • Is DTC U0433:00 displayed?	Yes	Repeat the inspection from Step 1. • If the malfunction recurs, replace the laser sensor, then go to the next step. (See 04-15-17 LASER SENSOR REMOVAL/ INSTALLATION.)
		No	Go to Step 6.
5	**VERIFY THAT REPAIRS HAVE BEEN COMPLETED** • Clear DTC for the instrument cluster using the M-MDS. (See 09-02G-9 CLEARING DTC [INSTRUMENT CLUSTER].) • Switch the ignition ON (engine off or on) and wait for **10 s or more**. • Perform a CMDTC self-test using the M-MDS. (See 09-02G-7 DTC INSPECTION [INSTRUMENT CLUSTER].) • Is DTC U0433:00 displayed?	Yes	Repeat the inspection from Step 1. • If the malfunction recurs, replace the instrument cluster, then go to the next step. (See 09-22-6 INSTRUMENT CLUSTER REMOVAL/ INSTALLATION.)
		No	Go to the next step.
6	**VERIFY IF OTHER DTCs DISPLAYED** • Are any other DTCs displayed?	Yes	Repair the malfunctioning part according to the applicable system DTC troubleshooting. (See 09-02G-10 DTC TABLE [INSTRUMENT CLUSTER].)
		No	DTC troubleshooting completed.

DTC U0433:68 [INSTRUMENT CLUSTER]

id0902e8016400

System malfunction location	**Error signal received from laser sensor**
Detection condition	• Instrument cluster detects a malfunction in the laser sensor.
Fail-safe	• Inhibits the smart city brake support control. • Warning message related to the smart city brake support is displayed in the TFT LCD display.
Possible cause	• Laser sensor stores DTCs. • Laser sensor malfunction
System wiring diagram	—

Diagnostic Procedure

Step	Inspection		Action
1	**VERIFY OTHER LASER SENSOR DTCs** • Switch the ignition to off. • Switch the ignition ON (engine off or on) and wait for **10 s or more**. • Perform the DTC inspection for the laser sensor using the M-MDS. (See 04-02B-6 ON-BOARD DIAGNOSIS [LASER SENSOR].) • Is the DTC displayed?	Yes	Repair the malfunctioning part according to the applicable DTC troubleshooting. (See 04-02B-6 ON-BOARD DIAGNOSIS [LASER SENSOR].)
		No	Go to the next step.

ON-BOARD DIAGNOSTIC [INSTRUMENT CLUSTER]

Step	Inspection		Action
2	**VERIFY THAT REPAIRS HAVE BEEN COMPLETED** • Clear DTC for the instrument cluster using the M-MDS. (See 09-02G-9 CLEARING DTC [INSTRUMENT CLUSTER].) • Switch the ignition ON (engine off or on) and wait for **10 s or more**. • Perform the DTC inspection for the instrument cluster using the M-MDS. (See 09-02G-7 DTC INSPECTION [INSTRUMENT CLUSTER].) • Is the DTC U0433:68 displayed?	Yes	Replace the laser sensor, then go to the next step. (See 04-15-17 LASER SENSOR REMOVAL/ INSTALLATION.)
		No	Go to the next step.
3	**VERIFY IF OTHER DTCs DISPLAYED** • Are any other DTCs displayed?	Yes	Repair the malfunctioning part according to the applicable DTC troubleshooting. (See 09-02G-10 DTC TABLE [INSTRUMENT CLUSTER].)
		No	DTC troubleshooting completed.

DTC U0515:68 [INSTRUMENT CLUSTER]

id0902e8988000

System malfunction location	**Error signal received from start stop unit**
Detection condition	• The instrument cluster receives error signals from the start stop unit with the ignition switched ON (engine off or on).
Fail-safe	—
Possible cause	• DTCs are stored in the start stop unit. • Instrument cluster malfunction
System wiring diagram	—

Diagnostic Procedure

Step	Inspection		Action
1	**VERIFY INSTRUMENT CLUSTER DTCs** • Perform the DTC inspection for the instrument cluster using the M-MDS. (See 09-02G-7 DTC INSPECTION [INSTRUMENT CLUSTER].) • Is the DTC displayed?	Yes	Repair the malfunctioning part according to the applicable DTC troubleshooting. (See 09-02G-10 DTC TABLE [INSTRUMENT CLUSTER].)
		No	Go to the next step.
2	**VERIFY START STOP UNIT DTCs** • Perform the DTC inspection for the start stop unit using the M-MDS. (See 09-02C-6 DTC INSPECTION [START STOP UNIT].) • Is the DTC displayed?	Yes	Repair the malfunctioning part according to the applicable DTC troubleshooting. (See 09-02C-8 DTC TABLE [START STOP UNIT].)
		No	Go to the next step.
3	**VERIFY THAT REPAIRS HAVE BEEN COMPLETED** • Clear DTC for the instrument cluster using the M-MDS. (See 09-02G-9 CLEARING DTC [INSTRUMENT CLUSTER].) • Switch the ignition ON (engine off or on) and wait for **20 s or more**. • Perform the DTC inspection for the instrument cluster using the M-MDS. (See 09-02G-7 DTC INSPECTION [INSTRUMENT CLUSTER].) • Is DTC U0515:68 displayed?	Yes	Replace the instrument cluster, then go to the next step. (See 09-22-6 INSTRUMENT CLUSTER REMOVAL/ INSTALLATION.)
		No	Go to the next step.
4	**VERIFY IF OTHER DTCs DISPLAYED** • Are any other DTCs displayed?	Yes	Repair the malfunctioning part according to the applicable DTC troubleshooting. (See 09-02G-10 DTC TABLE [INSTRUMENT CLUSTER].)
		No	DTC troubleshooting completed.

ON-BOARD DIAGNOSTIC [INSTRUMENT CLUSTER]

DTC U053B:00 [INSTRUMENT CLUSTER]

id0902e8016500

System malfunction location	**Error signal received from forward sensing camera (FSC)**
Detection condition	• The instrument cluster receives error signals from the forward sensing camera (FSC) for **1 s or more** with the ignition switched ON (engine off or on).
Fail-safe	—
Possible cause	• DTCs are stored in the forward sensing camera (FSC). • Instrument cluster malfunction
System wiring diagram	—

Diagnostic Procedure

Step	Inspection		Action
1	**VERIFY INSTRUMENT CLUSTER DTCs** • Perform the DTC inspection for the instrument cluster using the M-MDS. (See 09-02G-7 DTC INSPECTION [INSTRUMENT CLUSTER].) • Is the DTC displayed?	Yes	Repair the malfunctioning part according to the applicable DTC troubleshooting. (See 09-02G-10 DTC TABLE [INSTRUMENT CLUSTER].)
		No	Go to the next step.
2	**VERIFY FORWARD SENSING CAMERA (FSC) DTCs** • Perform the DTC inspection for the forward sensing camera (FSC) using the M-MDS. (See 09-02J-4 DTC INSPECTION [FORWARD SENSING CAMERA (FSC)].) • Is the DTC displayed?	Yes	Repair the malfunctioning part according to the applicable DTC troubleshooting. (See 09-02J-5 DTC TABLE [FORWARD SENSING CAMERA (FSC)].)
		No	Go to the next step.
3	**VERIFY THAT REPAIRS HAVE BEEN COMPLETED** • Clear DTC for the instrument cluster using the M-MDS. (See 09-02G-9 CLEARING DTC [INSTRUMENT CLUSTER].) • Switch the ignition ON (engine off or on) and wait for **20 s or more**. • Perform the DTC inspection for the instrument cluster using the M-MDS. (See 09-02G-7 DTC INSPECTION [INSTRUMENT CLUSTER].) • Is DTC U053B:00 displayed?	Yes	Replace the instrument cluster, then go to the next step. (See 09-22-6 INSTRUMENT CLUSTER REMOVAL/INSTALLATION.)
		No	Go to the next step.
4	**VERIFY IF OTHER DTCs DISPLAYED** • Are any other DTCs displayed?	Yes	Repair the malfunctioning part according to the applicable DTC troubleshooting. (See 09-02G-10 DTC TABLE [INSTRUMENT CLUSTER].)
		No	DTC troubleshooting completed.

ON-BOARD DIAGNOSTIC [INSTRUMENT CLUSTER]

DTC U2005:86 [INSTRUMENT CLUSTER]

id0902e8509800

System malfunction location	**Error signal received from PCM**
Detection condition	• The instrument cluster receives vehicle speed signal error from the PCM for **1 s or more** with the ignition switched ON (engine off or on).
Fail-safe	—
Possible cause	• DTCs are stored in the PCM. • Instrument cluster malfunction
System wiring diagram	—

Diagnostic Procedure

Step	Inspection		Action
1	**VERIFY INSTRUMENT CLUSTER DTCs** • Perform the DTC inspection for the instrument cluster using the M-MDS. (See 09-02G-7 DTC INSPECTION [INSTRUMENT CLUSTER].) • Is the DTC displayed?	Yes	Repair the malfunctioning part according to the applicable DTC troubleshooting. (See 09-02G-10 DTC TABLE [INSTRUMENT CLUSTER].)
		No	Go to the next step.
2	**VERIFY PCM DTCs** • Perform the DTC inspection for the PCM using the M-MDS. (See 01-02-8 ON-BOARD DIAGNOSTIC TEST [SKYACTIV-G 2.0].) • Is the DTC displayed?	Yes	Repair the malfunctioning part according to the applicable DTC troubleshooting. (See 01-02-14 DTC TABLE [SKYACTIV-G 2.0].)
		No	Go to the next step.
3	**VERIFY THAT REPAIRS HAVE BEEN COMPLETED** • Clear DTC for the instrument cluster using the M-MDS. (See 09-02G-9 CLEARING DTC [INSTRUMENT CLUSTER].) • Switch the ignition ON (engine off or on) and wait for **20 s or more**. • Perform the DTC inspection for the instrument cluster using the M-MDS. (See 09-02G-7 DTC INSPECTION [INSTRUMENT CLUSTER].) • Is the DTC U2005:86 displayed?	Yes	Replace the instrument cluster, then go to the next step. (See 09-22-6 INSTRUMENT CLUSTER REMOVAL/INSTALLATION.)
		No	Go to the next step.
4	**VERIFY IF OTHER DTCs DISPLAYED** • Are any other DTCs displayed?	Yes	Repair the malfunctioning part according to the applicable DTC troubleshooting. (See 09-02G-10 DTC TABLE [INSTRUMENT CLUSTER].)
		No	DTC troubleshooting completed.

ON-BOARD DIAGNOSTIC [INSTRUMENT CLUSTER]

DTC U2013:13 [INSTRUMENT CLUSTER]

id0902e8016600

System malfunction location	**Cluster switch circuit malfunction**
Detection condition	• The instrument cluster detects an open circuit in the cluster switch circuit for **5 s or more** with the ignition switched ON (engine off or on).
Fail-safe	—
Possible cause	• Cluster switch connector or terminal malfunction • Instrument cluster connector or terminal malfunction • Open circuit in wiring harness between the following terminals: — Instrument cluster terminal V and cluster switch terminal B — Instrument cluster terminal T and cluster switch terminal C • Cluster switch malfunction • Instrument cluster malfunction

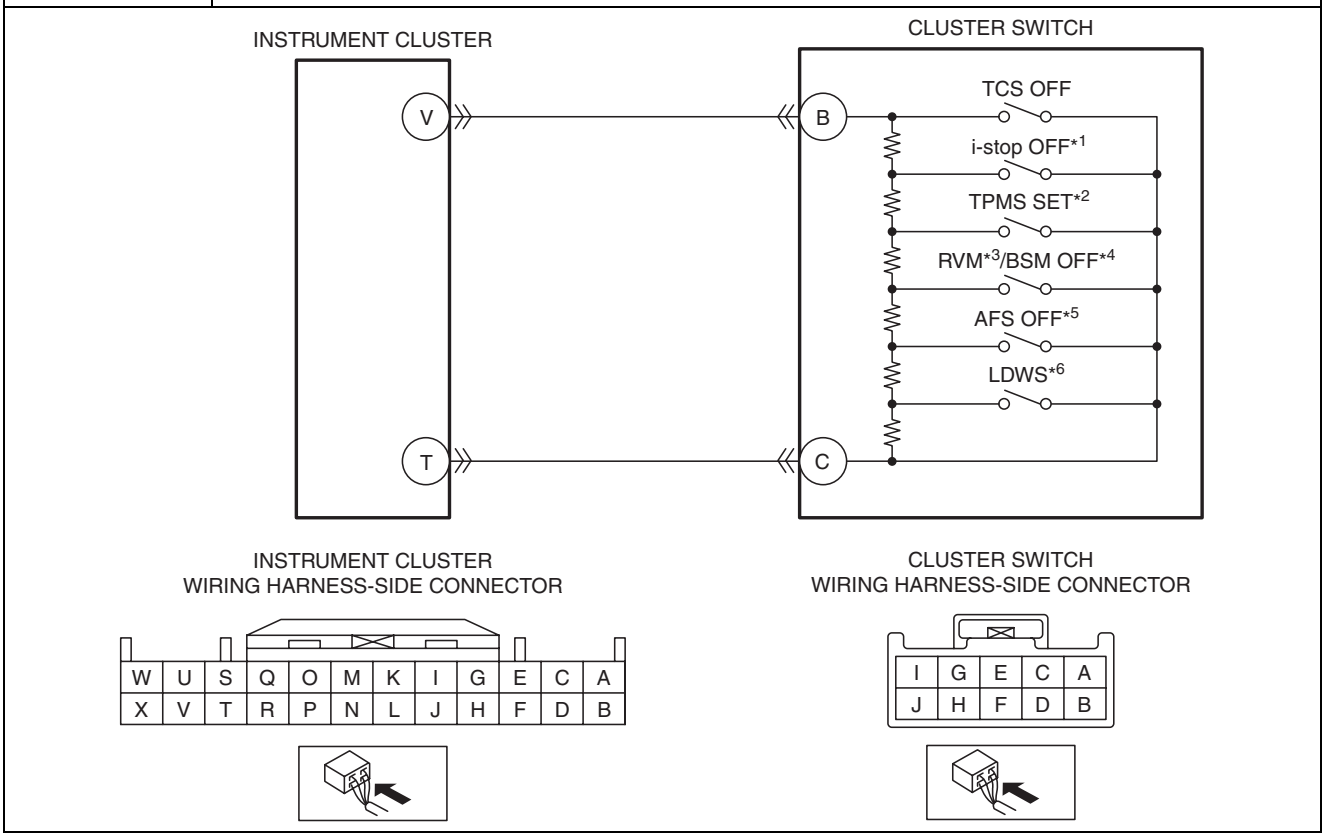

*1 : With i-stop system
*2 : With tire pressure monitoring system (TPMS)
*3 : With rear vehicle monitoring system
*4 : With BSM
*5 : With AFS
*6 : With LDWS

ON-BOARD DIAGNOSTIC [INSTRUMENT CLUSTER]

Diagnostic Procedure

Step	Inspection		Action
1	**INSPECT CLUSTER SWITCH CONNECTOR CONDITION** • Switch the ignition to off. • Disconnect the negative battery cable. (See 01-17A-13 NEGATIVE BATTERY CABLE DISCONNECTION/CONNECTION [SKYACTIV-G 2.0 (WITHOUT i-stop)].) (See 01-17A-11 NEGATIVE BATTERY CABLE DISCONNECTION/CONNECTION [SKYACTIV-G 2.0].) (See 01-17B-9 NEGATIVE BATTERY CABLE DISCONNECTION/CONNECTION [SKYACTIV-D 2.2].) • Disconnect the cluster switch connector. • Inspect the connector engagement and connection condition and inspect the terminals for damage, deformation, corrosion, or disconnection. • Is the connector normal?	Yes	Go to the next step.
		No	Repair or replace the connector, then go to Step 5.
2	**INSPECT INSTRUMENT CLUSTER CONNECTOR CONDITION** • Disconnect the instrument cluster connector. • Inspect the connector engagement and connection condition and inspect the terminals for damage, deformation, corrosion, or disconnection. • Is the connector normal?	Yes	Go to the next step.
		No	Repair or replace the connector, then go to Step 5.
3	**INSPECT CLUSTER SWITCH CIRCUIT FOR OPEN CIRCUIT** • Verify that the cluster switch and instrument cluster connectors are disconnected. • Inspect the wiring harness between the following terminals (vehicle wiring harness side) for continuity. — Instrument cluster terminal V and cluster switch terminal B — Instrument cluster terminal T and cluster switch terminal C • Is there continuity?	Yes	Go to the next step.
		No	Repair or replace the wiring harness, then go to Step 5.
4	**INSPECT CLUSTER SWITCH** • Inspect the cluster switch. (See 04-15-15 TCS OFF SWITCH INSPECTION.) (See 01-40-66 i-stop OFF SWITCH INSPECTION [SKYACTIV-G 2.0].) (See 02-12-5 TIRE PRESSURE MONITORING SYSTEM SET SWITCH INSPECTION.) (See 09-22-91 RVM SWITCH INSPECTION.) (See 09-22-76 BLIND SPOT MONITORING (BSM) OFF SWITCH INSPECTION.) (See 09-18-32 ADAPTIVE FRONT LIGHTING SYSTEM (AFS) OFF SWITCH INSPECTION.) (See 09-22-118 LDWS SWITCH INSPECTION.) • Is the cluster switch normal?	Yes	Go to the next step.
		No	Replace the cluster switch, then go to the next step. (See 09-17-18 SWITCH PANEL REMOVAL/ INSTALLATION.)

ON-BOARD DIAGNOSTIC [INSTRUMENT CLUSTER]

Step	Inspection		Action
5	**VERIFY THAT REPAIRS HAVE BEEN COMPLETED** • Reconnect all the disconnected connectors. • Reconnect the disconnected negative battery cable. (See 01-17A-13 NEGATIVE BATTERY CABLE DISCONNECTION/CONNECTION [SKYACTIV-G 2.0 (WITHOUT i-stop)].) (See 01-17A-11 NEGATIVE BATTERY CABLE DISCONNECTION/CONNECTION [SKYACTIV-G 2.0].) (See 01-17B-9 NEGATIVE BATTERY CABLE DISCONNECTION/CONNECTION [SKYACTIV-D 2.2].) • Clear DTC for the instrument cluster using the M-MDS. (See 09-02G-9 CLEARING DTC [INSTRUMENT CLUSTER].) • Switch the ignition ON (engine off or on) and wait for **5 s or more**. • Perform the DTC inspection for the instrument cluster using the M-MDS. (See 09-02G-7 DTC INSPECTION [INSTRUMENT CLUSTER].) • Is the DTC U2013:13 displayed?	Yes	Repeat the inspection from Step 1. • If the malfunction recurs, replace the instrument cluster, then go to the next step. (See 09-22-6 INSTRUMENT CLUSTER REMOVAL/INSTALLATION.)
		No	Go to the next step.
6	**VERIFY IF OTHER DTCs DISPLAYED** • Are any other DTCs displayed?	Yes	Repair the malfunctioning part according to the applicable DTC troubleshooting. (See 09-02G-10 DTC TABLE [INSTRUMENT CLUSTER].)
		No	DTC troubleshooting completed.

DTC U2100:00 [INSTRUMENT CLUSTER]

id0902e8999600

System malfunction location	**Instrument cluster configuration error**
Detection condition	• Instrument cluster configuration error detected as follows: — No configuration of instrument cluster — Instrument cluster configuration has not been correctly performed.
Fail-safe	—
Possible cause	• Instrument cluster configuration error • Instrument cluster malfunction
System wiring diagram	—

Diagnostic Procedure

Step	Inspection		Action
1	**PERFORM INSTRUMENT CLUSTER CONFIGURATION (USING AS-BUILT DATA)** • Using the M-MDS, perform the instrument cluster configuration with the As-Built data. (See 09-22-19 INSTRUMENT CLUSTER CONFIGURATION (USING AS-BUILT DATA).) • Clear DTC for the instrument cluster using the M-MDS. (See 09-02G-9 CLEARING DTC [INSTRUMENT CLUSTER].) • Perform the DTC inspection for the instrument cluster using the M-MDS. (See 09-02G-7 DTC INSPECTION [INSTRUMENT CLUSTER].) • Is DTC U2100:00 displayed?	Yes	Using the M-MDS, re-perform the instrument cluster configuration using the As-Built data, then go to the next step. (See 09-22-19 INSTRUMENT CLUSTER CONFIGURATION (USING AS-BUILT DATA).)
		No	Go to Step 3.

ON-BOARD DIAGNOSTIC [INSTRUMENT CLUSTER]

Step	Inspection		Action
2	**VERIFY THAT REPAIRS HAVE BEEN COMPLETED** • Clear DTC for the instrument cluster using the M-MDS. (See 09-02G-9 CLEARING DTC [INSTRUMENT CLUSTER].) • Perform the DTC inspection for the instrument cluster using the M-MDS. (See 09-02G-7 DTC INSPECTION [INSTRUMENT CLUSTER].) • Is DTC U2100:00 displayed?	Yes	Replace the instrument cluster, then go to the next step. (See 09-22-6 INSTRUMENT CLUSTER REMOVAL/ INSTALLATION.)
		No	Go to the next step.
3	**VERIFY IF OTHER DTCs DISPLAYED** • Are any other DTCs displayed?	Yes	Repair the malfunctioning part according to the applicable DTC troubleshooting. (See 09-02G-10 DTC TABLE [INSTRUMENT CLUSTER].)
		No	DTC troubleshooting completed.

DTC U2300:41 [INSTRUMENT CLUSTER]

id0902e8016700

System malfunction location	**Instrument cluster configuration error**
Detection condition	• Instrument cluster configuration error (data error) detected.
Fail-safe	—
Possible cause	• Instrument cluster configuration error • Instrument cluster malfunction
System wiring diagram	—

Diagnostic Procedure

Step	Inspection		Action
1	**PERFORM INSTRUMENT CLUSTER CONFIGURATION (USING AS-BUILT DATA)** • Using the M-MDS, perform the instrument cluster configuration using the As-Built data. (See 09-22-19 INSTRUMENT CLUSTER CONFIGURATION (USING AS-BUILT DATA).) • Clear DTC for the instrument cluster using the M-MDS. (See 09-02G-9 CLEARING DTC [INSTRUMENT CLUSTER].) • Perform the DTC inspection for the instrument cluster using the M-MDS. (See 09-02G-7 DTC INSPECTION [INSTRUMENT CLUSTER].) • Is the DTC U2300:41 displayed?	Yes	Using the M-MDS, re-perform the instrument cluster configuration using the As-Built data, then go to the next step. (See 09-22-19 INSTRUMENT CLUSTER CONFIGURATION (USING AS-BUILT DATA).)
		No	Go to Step 3.
2	**VERIFY THAT REPAIRS HAVE BEEN COMPLETED** • Clear DTC for the instrument cluster using the M-MDS. (See 09-02G-9 CLEARING DTC [INSTRUMENT CLUSTER].) • Perform the DTC inspection for the instrument cluster using the M-MDS. (See 09-02G-7 DTC INSPECTION [INSTRUMENT CLUSTER].) • Is the DTC U2300:41 displayed?	Yes	Replace the instrument cluster, then go to the next step. (See 09-22-6 INSTRUMENT CLUSTER REMOVAL/ INSTALLATION.)
		No	Go to the next step.
3	**VERIFY IF OTHER DTCs DISPLAYED** • Are any other DTCs displayed?	Yes	Repair the malfunctioning part according to the applicable DTC troubleshooting. (See 09-02G-10 DTC TABLE [INSTRUMENT CLUSTER].)
		No	DTC troubleshooting completed.

ON-BOARD DIAGNOSTIC [INSTRUMENT CLUSTER]

DTC U2300:51 [INSTRUMENT CLUSTER]

id0902e8016800

System malfunction location	**Instrument cluster configuration error**
Detection condition	• Instrument cluster configuration error (no configuration) detected.
Fail-safe	—
Possible cause	• Instrument cluster configuration error • Instrument cluster malfunction
System wiring diagram	—

Diagnostic Procedure

Step	Inspection		Action
1	**PERFORM INSTRUMENT CLUSTER CONFIGURATION (USING AS-BUILT DATA)** • Using the M-MDS, perform the instrument cluster configuration using the As-Built data. (See 09-22-19 INSTRUMENT CLUSTER CONFIGURATION (USING AS-BUILT DATA).) • Clear DTC for the instrument cluster using the M-MDS. (See 09-02G-9 CLEARING DTC [INSTRUMENT CLUSTER].) • Perform the DTC inspection for the instrument cluster using the M-MDS. (See 09-02G-7 DTC INSPECTION [INSTRUMENT CLUSTER].) • Is the DTC U2300:51 displayed?	Yes	Using the M-MDS, re-perform the instrument cluster configuration using the As-Built data, then go to the next step. (See 09-22-19 INSTRUMENT CLUSTER CONFIGURATION (USING AS-BUILT DATA).)
		No	Go to Step 3.
2	**VERIFY THAT REPAIRS HAVE BEEN COMPLETED** • Clear DTC for the instrument cluster using the M-MDS. (See 09-02G-9 CLEARING DTC [INSTRUMENT CLUSTER].) • Perform the DTC inspection for the instrument cluster using the M-MDS. (See 09-02G-7 DTC INSPECTION [INSTRUMENT CLUSTER].) • Is the DTC U2300:51 displayed?	Yes	Replace the instrument cluster, then go to the next step. (See 09-22-6 INSTRUMENT CLUSTER REMOVAL/INSTALLATION.)
		No	Go to the next step.
3	**VERIFY IF OTHER DTCs DISPLAYED** • Are any other DTCs displayed?	Yes	Repair the malfunctioning part according to the applicable DTC troubleshooting. (See 09-02G-10 DTC TABLE [INSTRUMENT CLUSTER].)
		No	DTC troubleshooting completed.

DTC U2300:56 [INSTRUMENT CLUSTER]

id0902e8016900

System malfunction location	**Instrument cluster configuration error**
Detection condition	• Instrument cluster configuration error (incorrect value write) detected.
Fail-safe	—
Possible cause	• Instrument cluster configuration error • Instrument cluster malfunction
System wiring diagram	—

ON-BOARD DIAGNOSTIC [INSTRUMENT CLUSTER]

Diagnostic Procedure

Step	Inspection		Action
1	**PERFORM INSTRUMENT CLUSTER CONFIGURATION (USING AS-BUILT DATA)** • Using the M-MDS, perform the instrument cluster configuration with the As-Built data. (See 09-22-19 INSTRUMENT CLUSTER CONFIGURATION (USING AS-BUILT DATA).) • Clear DTC for the instrument cluster using the M-MDS. (See 09-02G-9 CLEARING DTC [INSTRUMENT CLUSTER].) • Perform the DTC inspection for the instrument cluster using the M-MDS. (See 09-02G-7 DTC INSPECTION [INSTRUMENT CLUSTER].) • Is the DTC U2300:56 displayed?	Yes	Using the M-MDS, re-perform the instrument cluster configuration using the As-Built data, then go to the next step. (See 09-22-19 INSTRUMENT CLUSTER CONFIGURATION (USING AS-BUILT DATA).)
		No	Go to Step 3.
2	**VERIFY THAT REPAIRS HAVE BEEN COMPLETED** • Clear DTC for the instrument cluster using the M-MDS. (See 09-02G-9 CLEARING DTC [INSTRUMENT CLUSTER].) • Perform the DTC inspection for the instrument cluster using the M-MDS. (See 09-02G-7 DTC INSPECTION [INSTRUMENT CLUSTER].) • Is the DTC U2300:56 displayed?	Yes	Replace the instrument cluster, then go to the next step. (See 09-22-6 INSTRUMENT CLUSTER REMOVAL/ INSTALLATION.)
		No	Go to the next step.
3	**VERIFY IF OTHER DTCs DISPLAYED** • Are any other DTCs displayed?	Yes	Repair the malfunctioning part according to the applicable DTC troubleshooting. (See 09-02G-10 DTC TABLE [INSTRUMENT CLUSTER].)
		No	DTC troubleshooting completed.

ON-BOARD DIAGNOSTIC [INSTRUMENT CLUSTER]

DTC U2300:57 [INSTRUMENT CLUSTER]

id0902e8017000

System malfunction location	**Instrument cluster configuration error**
Detection condition	• Instrument cluster configuration error (data size error) detected.
Fail-safe	—
Possible cause	• Instrument cluster configuration error • Instrument cluster malfunction
System wiring diagram	—

Diagnostic Procedure

Step	Inspection		Action
1	**PERFORM INSTRUMENT CLUSTER CONFIGURATION (USING AS-BUILT DATA)** • Using the M-MDS, perform the instrument cluster configuration using the As-Built data. (See 09-22-19 INSTRUMENT CLUSTER CONFIGURATION (USING AS-BUILT DATA).) • Clear DTC for the instrument cluster using the M-MDS. (See 09-02G-9 CLEARING DTC [INSTRUMENT CLUSTER].) • Perform the DTC inspection for the instrument cluster using the M-MDS. (See 09-02G-7 DTC INSPECTION [INSTRUMENT CLUSTER].) • Is the DTC U2300:57 displayed?	Yes	Using the M-MDS, re-perform the instrument cluster configuration using the As-Built data, then go to the next step. (See 09-22-19 INSTRUMENT CLUSTER CONFIGURATION (USING AS-BUILT DATA).)
		No	Go to Step 3.
2	**VERIFY THAT REPAIRS HAVE BEEN COMPLETED** • Clear DTC for the instrument cluster using the M-MDS. (See 09-02G-9 CLEARING DTC [INSTRUMENT CLUSTER].) • Perform the DTC inspection for the instrument cluster using the M-MDS. (See 09-02G-7 DTC INSPECTION [INSTRUMENT CLUSTER].) • Is the DTC U2300:57 displayed?	Yes	Replace the instrument cluster, then go to the next step. (See 09-22-6 INSTRUMENT CLUSTER REMOVAL/ INSTALLATION.)
		No	Go to the next step.
3	**VERIFY IF OTHER DTCs DISPLAYED** • Are any other DTCs displayed?	Yes	Repair the malfunctioning part according to the applicable DTC troubleshooting. (See 09-02G-10 DTC TABLE [INSTRUMENT CLUSTER].)
		No	DTC troubleshooting completed.

DTC U3000:41 [INSTRUMENT CLUSTER]

id0902e8999500

System malfunction location	**Malfunction inside instrument cluster**
Detection condition	• Malfunction inside instrument cluster detected.
Fail-safe	—
Possible cause	• Instrument cluster malfunction
System wiring diagram	—

ON-BOARD DIAGNOSTIC [INSTRUMENT CLUSTER]

Diagnostic Procedure

Step	Inspection		Action
1	**PERFORM DTC INSPECTION AND VERIFY IF MALFUNCTIONING PART IS INSTRUMENT CLUSTER** • Clear DTC for the instrument cluster using the M-MDS. (See 09-02G-9 CLEARING DTC [INSTRUMENT CLUSTER].) • Perform the DTC inspection for the instrument cluster using the M-MDS. (See 09-02G-7 DTC INSPECTION [INSTRUMENT CLUSTER].) • Is DTC U3000:41 displayed?	Yes	Replace the instrument cluster, then go to the next step. (See 09-22-6 INSTRUMENT CLUSTER REMOVAL/ INSTALLATION.)
		No	Go to the next step.
2	**VERIFY IF OTHER DTCs DISPLAYED** • Are any other DTCs displayed?	Yes	Repair the malfunctioning part according to the applicable DTC troubleshooting. (See 09-02G-10 DTC TABLE [INSTRUMENT CLUSTER].)
		No	DTC troubleshooting completed.

DTC U3003:16 [INSTRUMENT CLUSTER]

id0902e8999400

Without i-stop System

System malfunction location	**Low power supply voltage input to instrument cluster**
Detection condition	• Instrument cluster power supply circuit voltage of **10 V or less** is detected with the ignition switched ON (engine off or on).
Fail-safe	—
Possible cause	• DTCs are stored in the PCM. • Battery malfunction • Generator malfunction • Instrument cluster connector or terminal malfunction • Instrument cluster power supply circuit malfunction — Short to ground in wiring harness between METER1 10 A fuse and instrument cluster terminal S — METER1 10 A fuse malfunction — Open circuit in wiring harness between IG1 relay and instrument cluster terminal S • Instrument cluster malfunction

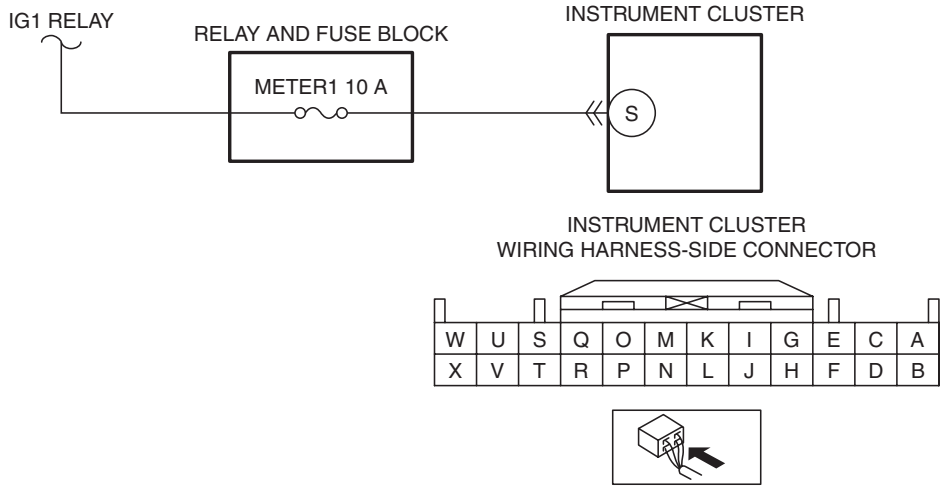

ON-BOARD DIAGNOSTIC [INSTRUMENT CLUSTER]

Diagnostic Procedure

Step	Inspection		Action
1	**VERIFY PCM DTCs** • Perform the DTC inspection for the PCM using the M-MDS. (See 01-02-8 ON-BOARD DIAGNOSTIC TEST [SKYACTIV-G 2.0].) • Is the DTC displayed?	Yes	Repair the malfunctioning part according to the applicable DTC troubleshooting. (See 01-02-14 DTC TABLE [SKYACTIV-G 2.0].)
		No	Go to the next step.
2	**INSPECT BATTERY** • Inspect the battery. (See 01-17A-8 BATTERY INSPECTION [SKYACTIV-G 2.0 (WITHOUT i-stop)].) • Is the battery normal?	Yes	Go to the next step.
		No	Recharge or replace the battery, then go to Step 6. (See 01-17A-10 BATTERY RECHARGING [SKYACTIV-G 2.0 (WITHOUT i-stop)].) (See 01-17A-3 BATTERY REMOVAL/INSTALLATION [SKYACTIV-G 2.0].)
3	**INSPECT GENERATOR** • Inspect the generator. (See 01-17A-19 GENERATOR INSPECTION [SKYACTIV-G 2.0].) • Is the generator normal?	Yes	Go to the next step.
		No	Replace the generator, then go to Step 6. (See 01-17A-17 GENERATOR REMOVAL/ INSTALLATION [SKYACTIV-G 2.0].)
4	**INSPECT INSTRUMENT CLUSTER CONNECTOR CONDITION** • Switch the ignition to off. • Disconnect the negative battery cable. (See 01-17A-13 NEGATIVE BATTERY CABLE DISCONNECTION/CONNECTION [SKYACTIV-G 2.0 (WITHOUT i-stop)].) • Disconnect the instrument cluster connector. • Inspect the connector engagement and connection condition and inspect the terminals for damage, deformation, corrosion, or disconnection. • Is the connector normal?	Yes	Go to the next step.
		No	Repair or replace the connector, then go to Step 6.
5	**VERIFY INSTRUMENT CLUSTER POWER SUPPLY VOLTAGE** • Reconnect all the disconnected connectors. • Connect the negative battery cable. (See 01-17A-13 NEGATIVE BATTERY CABLE DISCONNECTION/CONNECTION [SKYACTIV-G 2.0 (WITHOUT i-stop)].) • Display PID VPWR using the M-MDS. (See 09-02G-37 PID/DATA MONITOR INSPECTION [INSTRUMENT CLUSTER].) • Is the VPWR monitor value **B+**?	Yes	Go to the next step.
		No	Inspect the METER1 10 A fuse. • If a fuse is burnt out: — Repair or replace the wiring harness which is shorted to ground. — Replace the fuse. • If a fuse is damaged: — Replace the fuse. • If the fuse is normal: — Repair or replace the wiring harness which has an open circuit. Go to the next step.
6	**VERIFY THAT REPAIRS HAVE BEEN COMPLETED** • Reconnect all the disconnected connectors. • Reconnect the disconnected negative battery cable. (See 01-17A-13 NEGATIVE BATTERY CABLE DISCONNECTION/CONNECTION [SKYACTIV-G 2.0 (WITHOUT i-stop)].) • Clear DTC for the instrument cluster using the M-MDS. (See 09-02G-9 CLEARING DTC [INSTRUMENT CLUSTER].) • Switch the ignition ON (engine off or on). • Perform the DTC inspection for the instrument cluster using the M-MDS. (See 09-02G-7 DTC INSPECTION [INSTRUMENT CLUSTER].) • Is DTC U3003:16 displayed?	Yes	Repeat the inspection from Step 1. • If the malfunction recurs, replace the instrument cluster, then go to the next step. (See 09-22-6 INSTRUMENT CLUSTER REMOVAL/ INSTALLATION.)
		No	Go to the next step.
7	**VERIFY IF OTHER DTCs DISPLAYED** • Are any other DTCs displayed?	Yes	Repair the malfunctioning part according to the applicable DTC troubleshooting. (See 09-02G-10 DTC TABLE [INSTRUMENT CLUSTER].)
		No	DTC troubleshooting completed.

ON-BOARD DIAGNOSTIC [INSTRUMENT CLUSTER]

With i-stop System

System malfunction location	**Low power supply voltage input to instrument cluster**
Detection condition	• Instrument cluster power supply circuit voltage of **10 V or less** is detected with the ignition switched ON (engine off or on).
Fail-safe	—
Possible cause	• DTCs are stored in the PCM. • Battery malfunction • Generator malfunction • Instrument cluster connector or terminal malfunction • Instrument cluster power supply circuit malfunction — Short to ground in wiring harness between METER1 10 A fuse and instrument cluster terminal S — METER1 10 A fuse malfunction — Open circuit in wiring harness between IG1 relay and instrument cluster terminal S • Ignition relay (IG1_STAB) malfunction • DC-DC converter connector or terminal malfunction • Short to ground in wiring harness between the following terminals: — DC-DC converter terminal K—Ignition relay (IG1_STAB) terminal D — Ignition relay (IG1_STAB) terminal C—Instrument cluster terminal I • Open circuit in wiring harness between the following terminals: — DC-DC converter terminal K—Ignition relay (IG1_STAB) terminal D — Ignition relay (IG1_STAB) terminal C—Instrument cluster terminal I • DC-DC converter malfunction • Instrument cluster malfunction

ON-BOARD DIAGNOSTIC [INSTRUMENT CLUSTER]

System malfunction location	Low power supply voltage input to instrument cluster

SKYACTIV-G 2.0

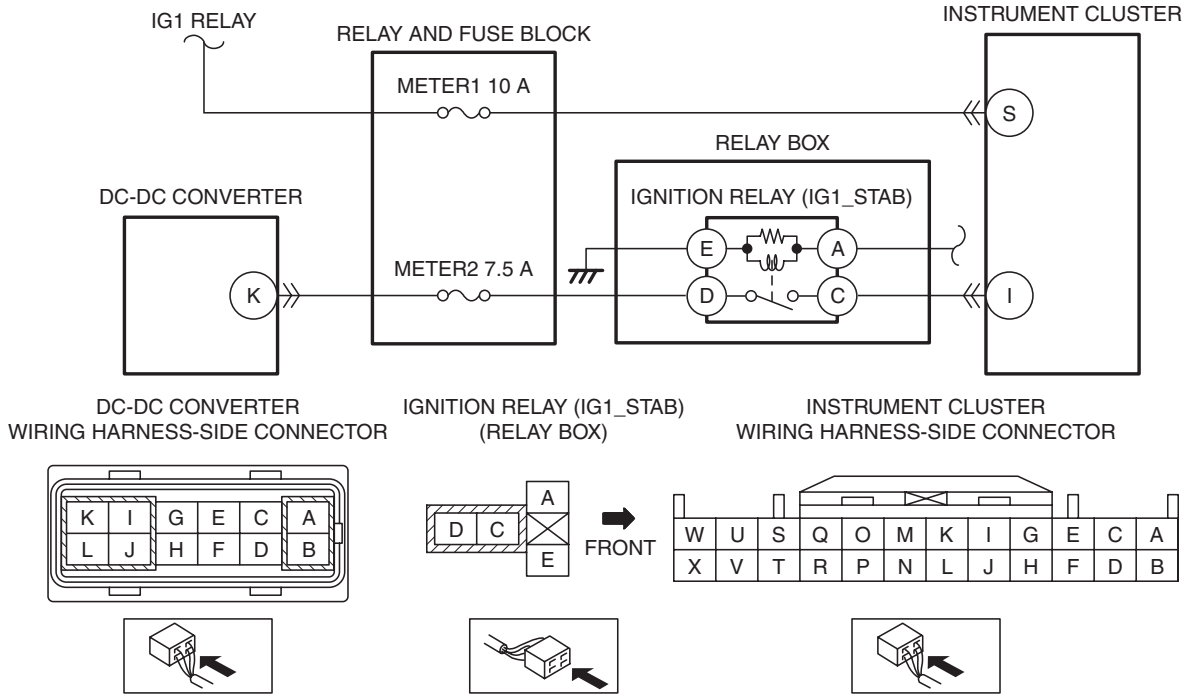

SKYACTIV-D 2.2

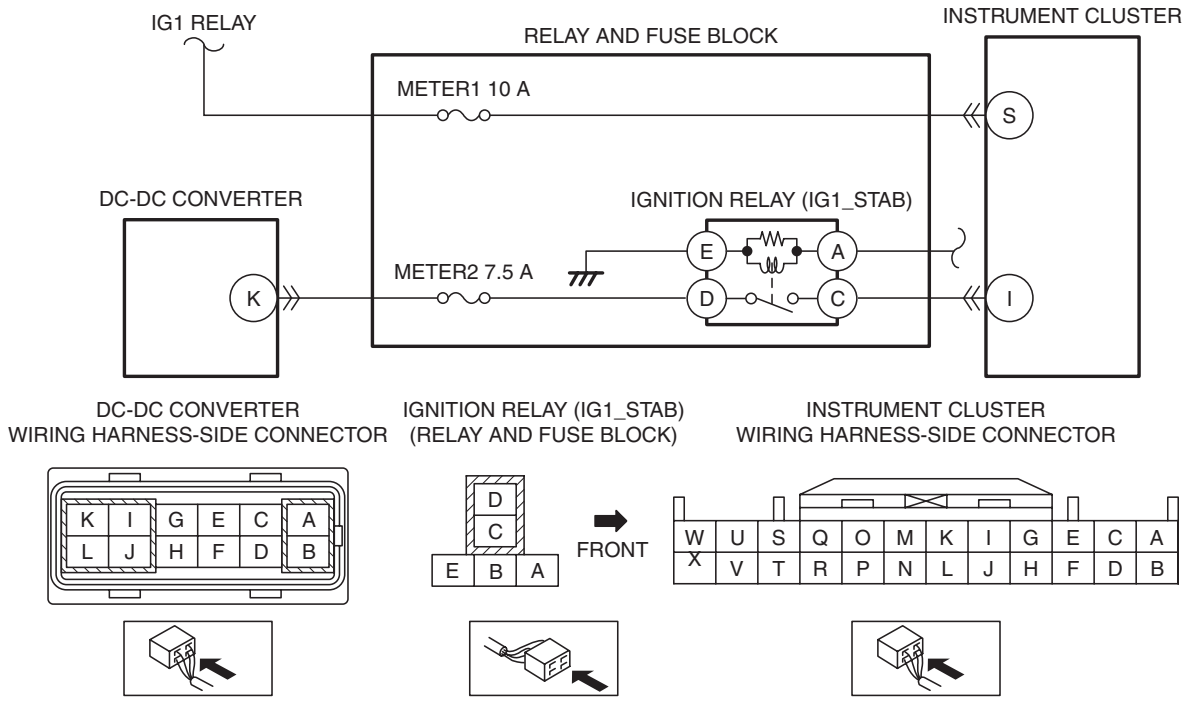

ON-BOARD DIAGNOSTIC [INSTRUMENT CLUSTER]

Diagnostic Procedure

Step	Inspection		Action
1	**VERIFY PCM DTCs** • Perform the DTC inspection for the PCM using the M-MDS. (See 01-02-8 ON-BOARD DIAGNOSTIC TEST [SKYACTIV-G 2.0].) • Is the DTC displayed?	Yes	Repair the malfunctioning part according to the applicable DTC troubleshooting. (See 01-02-14 DTC TABLE [SKYACTIV-G 2.0].)
		No	Go to the next step.
2	**INSPECT BATTERY** • Inspect the battery. (See 01-17A-7 BATTERY INSPECTION [SKYACTIV-G 2.0].) (See 01-17B-6 BATTERY INSPECTION [SKYACTIV-D 2.2].) • Is the battery normal?	Yes	Go to the next step.
		No	Recharge or replace the battery, then go to Step 11. (See 01-17A-9 BATTERY RECHARGING [SKYACTIV-G 2.0].) (See 01-17B-8 BATTERY RECHARGING [SKYACTIV-D 2.2].) (See 01-17A-3 BATTERY REMOVAL/INSTALLATION [SKYACTIV-G 2.0].) (See 01-17B-3 BATTERY REMOVAL/INSTALLATION [SKYACTIV-D 2.2].)
3	**INSPECT GENERATOR** • Inspect the generator. (See 01-17A-19 GENERATOR INSPECTION [SKYACTIV-G 2.0].) (See 01-17B-16 GENERATOR INSPECTION [SKYACTIV-D 2.2].) • Is the generator normal?	Yes	Go to the next step.
		No	Replace the generator, then go to Step 11. (See 01-17A-17 GENERATOR REMOVAL/INSTALLATION [SKYACTIV-G 2.0].) (See 01-17B-14 GENERATOR REMOVAL/INSTALLATION [SKYACTIV-D 2.2].)
4	**INSPECT INSTRUMENT CLUSTER CONNECTOR CONDITION** • Switch the ignition to off. • Disconnect the negative battery cable. (See 01-17A-11 NEGATIVE BATTERY CABLE DISCONNECTION/CONNECTION [SKYACTIV-G 2.0].) (See 01-17B-9 NEGATIVE BATTERY CABLE DISCONNECTION/CONNECTION [SKYACTIV-D 2.2].) • Disconnect the instrument cluster connector. • Inspect the connector engagement and connection condition and inspect the terminals for damage, deformation, corrosion, or disconnection. • Is the connector normal?	Yes	Go to the next step.
		No	Repair or replace the connector, then go to Step 11.
5	**VERIFY INSTRUMENT CLUSTER POWER SUPPLY VOLTAGE** • Reconnect all the disconnected connectors. • Connect the negative battery cable. (See 01-17A-11 NEGATIVE BATTERY CABLE DISCONNECTION/CONNECTION [SKYACTIV-G 2.0].) (See 01-17B-9 NEGATIVE BATTERY CABLE DISCONNECTION/CONNECTION [SKYACTIV-D 2.2].) • Display PID VPWR using the M-MDS. (See 09-02G-37 PID/DATA MONITOR INSPECTION [INSTRUMENT CLUSTER].) • Is the VPWR monitor value **B+**?	Yes	Go to the next step.
		No	Inspect the METER1 10 A fuse. • If a fuse is burnt out: — Repair or replace the wiring harness which is shorted to ground. — Replace the fuse. • If a fuse is damaged: — Replace the fuse. • If the fuse is normal: — Repair or replace the wiring harness which has an open circuit. Go to Step 11.
6	**INSPECT IGNITION RELAY (IG1_STAB)** • Switch the ignition to off. • Disconnect the negative battery cable. (See 01-17A-11 NEGATIVE BATTERY CABLE DISCONNECTION/CONNECTION [SKYACTIV-G 2.0].) (See 01-17B-9 NEGATIVE BATTERY CABLE DISCONNECTION/CONNECTION [SKYACTIV-D 2.2].) • Remove the ignition relay (IG1_STAB). (See 09-21-28 RELAY LOCATION.) • Inspect the ignition relay (IG1_STAB). (See 09-21-29 RELAY INSPECTION.) • Is the ignition relay (IG1_STAB) normal?	Yes	Go to the next step.
		No	Replace the ignition relay (IG1_STAB), then go to Step 11. (See 09-21-28 RELAY LOCATION.)

ON-BOARD DIAGNOSTIC [INSTRUMENT CLUSTER]

Step	Inspection		Action
7	**INSPECT DC-DC CONVERTER CONNECTOR CONDITION** • Disconnect the DC-DC converter connector. • Inspect the connector engagement and connection condition and inspect the terminals for damage, deformation, corrosion, or disconnection. • Is the connector normal?	Yes	Go to the next step.
		No	Repair or replace the connector, then go to Step 11.
8	**INSPECT DC-DC CONVERTER CIRCUIT FOR SHORT TO GROUND** • Verify that the DC-DC converter connector is disconnected. • Disconnect the instrument cluster connector. • Inspect the wiring harness between the following terminals (vehicle wiring harness side) and body ground for continuity. — DC-DC converter terminal K — Ignition relay (IG1_STAB) terminal D — Instrument cluster terminal I • Is there continuity?	Yes	Repair or replace the wiring harness which is shorted to ground, go to Step 11.
		No	Go to the next step.
9	**INSPECT DC-DC CONVERTER CIRCUIT FOR OPEN CIRCUIT** • Verify that the instrument cluster and DC-DC converter connectors are disconnected. • Inspect the wiring harness between the following terminals (vehicle wiring harness side) for continuity. — DC-DC converter terminal K—Ignition relay (IG1_STAB) terminal D — Ignition relay (IG1_STAB) terminal C—Instrument cluster terminal I • Is there continuity?	Yes	Go to the next step.
		No	Repair or replace the wiring harness which has an open circuit, go to Step 11.
10	**INSPECT DC-DC CONVERTER** • Inspect the DC-DC converter. (See 01-17A-27 DC-DC CONVERTER INSPECTION [SKYACTIV-G 2.0].) • Is the DC-DC converter normal?	Yes	Go to the next step.
		No	Replace the DC-DC converter, then go to the next step. (See 01-17A-26 DC-DC CONVERTER REMOVAL/INSTALLATION [SKYACTIV-G 2.0].) (See 01-17B-22 DC-DC CONVERTER REMOVAL/INSTALLATION [SKYACTIV-D 2.2].)
11	**VERIFY THAT REPAIRS HAVE BEEN COMPLETED** • Reconnect all the disconnected connectors. • Reconnect the disconnected negative battery cable. (See 01-17A-11 NEGATIVE BATTERY CABLE DISCONNECTION/CONNECTION [SKYACTIV-G 2.0].) (See 01-17B-9 NEGATIVE BATTERY CABLE DISCONNECTION/CONNECTION [SKYACTIV-D 2.2].) • Clear DTC for the instrument cluster using the M-MDS. (See 09-02G-9 CLEARING DTC [INSTRUMENT CLUSTER].) • Switch the ignition ON (engine off or on). • Perform the DTC inspection for the instrument cluster using the M-MDS. (See 09-02G-7 DTC INSPECTION [INSTRUMENT CLUSTER].) • Is DTC U3003:16 displayed?	Yes	Repeat the inspection from Step 1. • If the malfunction recurs, replace the instrument cluster, then go to the next step. (See 09-22-6 INSTRUMENT CLUSTER REMOVAL/INSTALLATION.)
		No	Go to the next step.
12	**VERIFY IF OTHER DTCs DISPLAYED** • Are any other DTCs displayed?	Yes	Repair the malfunctioning part according to the applicable DTC troubleshooting. (See 09-02G-10 DTC TABLE [INSTRUMENT CLUSTER].)
		No	DTC troubleshooting completed.

ON-BOARD DIAGNOSTIC [INSTRUMENT CLUSTER]

PID/DATA MONITOR INSPECTION [INSTRUMENT CLUSTER]

id0902e8960600

1. Connect the M-MDS to the DLC-2.
2. After the vehicle is identified, select the following items from the initialization screen of the M-MDS.
   (1) Select “DataLogger”.
   (2) Select “Modules”.
   (3) Select “IC”.
3. Select the applicable PID from the PID table.
4. Verify the PID data according to the directions on the screen.

Note

- The PID data screen function is used for monitoring the calculated value of input/output signals in the module. Therefore, if the monitored value of the output parts is not within the specification, it is necessary to inspect the monitored value of input parts corresponding to the applicable output part control. In addition, because the system does not display an output part malfunction as an abnormality in the monitored value, it is necessary to inspect the output parts individually.
- When detecting DTCs, PIDs related to a malfunctioning system may not display even if the module is normal. Therefore, if a PID is not displayed, it is necessary to verify the DTC, perform malfunction diagnosis of the DTC that was detected, and do repairs.

PID/DATA MONITOR TABLE [INSTRUMENT CLUSTER]

id0902e8960700

PID	Unit/ Operation	Data contents	Inspection item(s)
AFS_OFF_SW*1	Off/On	• Off: AFS OFF switch is off. • On: AFS off switch is on.	AFS OFF switch
AFS_ST*1	Off/On	• Off: AFS not operated • On: AFS operated	• AFS OFF switch • AFS control module
AT_MAN_M_SW*2	Off/On/ Reserved/ Unknown	• Off: M range switch is off. • On: M range switch is on. • Unknown: M range switch signal is not determined.	M position switch
AT_S_DWN_SW*2	Off/On/ Reserved/ Unknown	• Off: Down switch switch is off. • On: Down switch is on. • Unknown: Down switch is not determined.	Down switch
AT_S_UP_SW*2	Off/On/ Reserved/ Unknown	• Off: Up switch is off. • On: Up switch is on. • Unknown: Up switch is not determined.	Up switch
BSM/ RVM_SW*3	Off/On	• Off: Off: BSM OFF switch is off. • On: BSM OFF switch is on.	BSM OFF switch
BSM/ RVM_SW*4	Off/On	• Off: RVM OFF switch is off. • On: RVM switch is on.	RVM switch
DSC_OFF_SW	Off/On	• Off: TCS OFF switch is off. • On: TCS off switch is on.	TCS OFF switch
FUEL_GAUGE	L	Fuel gauge is displayed.	Fuel gauge (instrument cluster)
FUEL_SEN_M	ohm	Fuel gauge sender unit resistance is displayed.	• Fuel gauge sender unit • Rear body control module (RBCM)
FUEL_SEN_S*5	ohm	Displays the fuel gauge sender unit (sub) resistance value.	• Fuel gauge sender unit (sub) • Rear body control module (RBCM)
I_ILLUMI_M	Off (Day)/On (Night)	• Off (Day): TNS switch is off. • On (Night): TNS switch is on.	• Instrument cluster • Front body control module (FBCM)
I-ST_OFF_SW*6	Off/On	• Off: i-stop OFF switch is off. • On: i-stop OFF switch is on.	i-stop OFF switch
LDWS_ON_SW*7	Off/On	• Off: LDWS switch is off. • On: LDWS switch is on.	LDWS switch
MULTI_SW_ST	O.K./FAULT	• O.K.: Cluster switch is normal. • FAULT: Cluster switch is malfunctioning.	Cluster switch
ODO_CNT	km, ft, mi	Displays the rolling count of the odometer.	Odometer (instrument cluster)

ON-BOARD DIAGNOSTIC [INSTRUMENT CLUSTER]

PID	Unit/ Operation	Data contents	Inspection item(s)
P_BRAKE_ SW	Off/On	• Off: Parking brake not applied • On: Parking brake applied	Parking brake switch
R_GEAR_S W	Off/On	ATX: • Off: Selector lever is in R position. • On: Selector lever is in R position. MTX: • Off: Back-up light switch is off. • On: Back-up light switch is on.	ATX: • Transaxle range sensor (TCM) • TCM MTX: • Back-up light switch • PCM
R_LMP	Off/On/ Unknown/ Fault	• Off: Back-up light is turned off. • On: Back-up light is turned on. • Unknown: Back-up light signal is not determined. • Fault: Back-up light malfunction	ATX: • Transaxle range sensor (TCM) • TCM • Instrument cluster MTX: • Back-up light switch • PCM • Instrument cluster
SPEEDOMT R	KPH, MPH	Vehicle speed is displayed. (100 % = 300 km/h {186 mph})	Speedometer (instrument cluster)
TACHOMTR	RPM	Displays the engine speed. (100 % = 10,000 rpm)	Tachometer (instrument cluster)
TOTAL_TIM E	hh:mm:ss	Cumulative elapsed time since vehicle completion is displayed.	Instrument cluster
TPMS_CAL _SW	Off/On	• Off: Tire pressure monitoring system set switch is off. • On: Tire pressure monitoring system set switch is on.	Tire pressure monitoring system set switch
VPWR	V	Displays the power supply voltage.	• Instrument cluster • IG1 relay • Battery

*1 : With AFS
*2 : ATX
*3 : With BSM
*4 : With rear vehicle monitoring system
*5 : 4WD
*6 : With i-stop
*7 : With LDWS

ACTIVE COMMAND MODES INSPECTION [INSTRUMENT CLUSTER]

id0902e8960800

1. Connect the M-MDS to the DLC-2.
2. After the vehicle is identified, select the following items from the initialization screen of the M-MDS.
   (1) Select “DataLogger”.
   (2) Select “Modules”.
   (3) Select “IC”.
3. Select the simulation items from the PID table.
4. Perform the active command modes function, inspect the operations for each parts.
   - If the operation of output parts cannot be verified after the active command mode inspection is performed, this could indicate the possibility of an open or short circuit, sticking, or operation malfunction in the output parts.

ACTIVE COMMAND MODES TABLE [INSTRUMENT CLUSTER]

id0902e8960900

Simulation item	Unit/ Operation	Data contents	Output part name
ALARM	On/Off	• On: Warning alarm sounds. • Off: Warning alarm does not sound.	Warning alarm (instrument cluster)
LCD_SEG	Off/On	Vehicles without TFT LCD display: • Off: Turns off the LCD. • On: Fully displays LCD. Vehicles with TFT LCD display: • Off: Turns off the LCD. • On: Illuminates the LCD.	Vehicles without TFT LCD display: • LCD (instrument cluster) Vehicles with TFT LCD display: • TFT LCD display (instrument cluster)

ON-BOARD DIAGNOSTIC [INSTRUMENT CLUSTER]

Simulation item	Unit/ Operation	Data contents	Output part name
SPEEDOMTR	Off/60 Km/h/ 120 Km/h	European (L.H.D./U.K.), General (L.H.D./R.H.D.) specs., Australian specs.: • Off: Moves speedometer needle to the bottom-most position. • 60 Km/h: Moves speedometer needle to **61—66 km/h {38—41 mph}**. • 120 Km/h: Moves speedometer needle to **122—129 km/h {75.9—80.1 mph}**. General (L.H.D./R.H.D.) specs.: • Off: Moves speedometer needle to the bottom-most position. • 60 Km/h: Moves speedometer needle to **58—62 km/h {36—39 mph}**. • 120 Km/h: Moves speedometer needle to **117—123 km/h {72.8—76.4 mph}**.	Speedometer (instrument cluster)
TACHOMTR	Off/3000 RPM/6000 RPM	• Off: Moves tachometer needle to the bottom-most position. • 3000 RPM: Moves tachometer needle to **approx. 3,050 rpm**. • 6000 RPM: Moves tachometer needle to **approx. 6,100 rpm**.	Tachometer (instrument cluster)
WL+IL	Off/On	• Off: Turns off all warning lights, indicator lights. • On: Illuminates all warning lights, indicator lights.	Warning lights, indicator lights (instrument cluster)

09-02H ON-BOARD DIAGNOSTIC [BLIND SPOT MONITORING (BSM)]

ON-BOARD DIAGNOSTIC WIRING DIAGRAM [BLIND SPOT MONITORING (BSM)] 09-02H–2
FOREWORD [BLIND SPOT MONITORING (BSM)] 09-02H–3
Troubleshooting Procedure 09-02H–3
Action for Non-repeatable Malfunction. 09-02H–4
DTC INSPECTION [BLIND SPOT MONITORING (BSM)] 09-02H–5
CMDTC Self Test 09-02H–5
ODDTC Self Test 09-02H–5
CLEARING DTC [BLIND SPOT MONITORING (BSM)] 09-02H–5
CMDTC Memory Clearing Procedure 09-02H–5
ODDTC Memory Clearing Procedure 09-02H–5
DTC TABLE [BLIND SPOT MONITORING (BSM)] 09-02H–6
BSM Control Module (LH) 09-02H–6
BSM Control Module (RH) 09-02H–7
DTC B118C:11 [BLIND SPOT MONITORING (BSM)] 09-02H–8
DTC B118C:15 [BLIND SPOT MONITORING (BSM)] 09-02H–10
DTC B118D:11 [BLIND SPOT MONITORING (BSM)] 09-02H–13
DTC B118D:15 [BLIND SPOT MONITORING (BSM)] 09-02H–15
DTC U0001:88/U0100:00/ U0131:00/U0155:00/U0214:00/ U0232:00/U0233:00 [BLIND SPOT MONITORING (BSM)] 09-02H–18
Diagnostic Procedure. 09-02H–18
DTC U0401:68 [BLIND SPOT MONITORING (BSM)] 09-02H–19
DTC U0420:68 [BLIND SPOT MONITORING (BSM)] 09-02H–20
DTC U0423:68 [BLIND SPOT MONITORING (BSM)] 09-02H–21
DTC U0515:68 [BLIND SPOT MONITORING (BSM)] 09-02H–22
DTC U0533:68 [BLIND SPOT MONITORING (BSM)] 09-02H–23
DTC U0534:68 [BLIND SPOT MONITORING (BSM)] 09-02H–24
DTC U3000:01 [BLIND SPOT MONITORING (BSM)] 09-02H–25
DTC U3000:09 [BLIND SPOT MONITORING (BSM)] 09-02H–25
DTC U3000:4A [BLIND SPOT MONITORING (BSM)] 09-02H–26
DTC U3000:97 [BLIND SPOT MONITORING (BSM)] 09-02H–28
DTC U3003:16 [BLIND SPOT MONITORING (BSM)] 09-02H–29
DTC U3003:17 [BLIND SPOT MONITORING (BSM)] 09-02H–31
PID/DATA MONITOR INSPECTION [BLIND SPOT MONITORING (BSM)] 09-02H–33
PID/DATA MONITOR TABLE [BLIND SPOT MONITORING (BSM)] 09-02H–33
BSM Control Module (LH) 09-02H–33
BSM Control Module (RH) 09-02H–33
ACTIVE COMMAND MODES INSPECTION [BLIND SPOT MONITORING (BSM)] 09-02H–34
ACTIVE COMMAND MODES TABLE [BLIND SPOT MONITORING (BSM)] 09-02H–34
BSM Control Module (LH) 09-02H–34
BSM Control Module (RH) 09-02H–34

ON-BOARD DIAGNOSTIC [BLIND SPOT MONITORING (BSM)]

ON-BOARD DIAGNOSTIC WIRING DIAGRAM [BLIND SPOT MONITORING (BSM)]

id0902i3960000

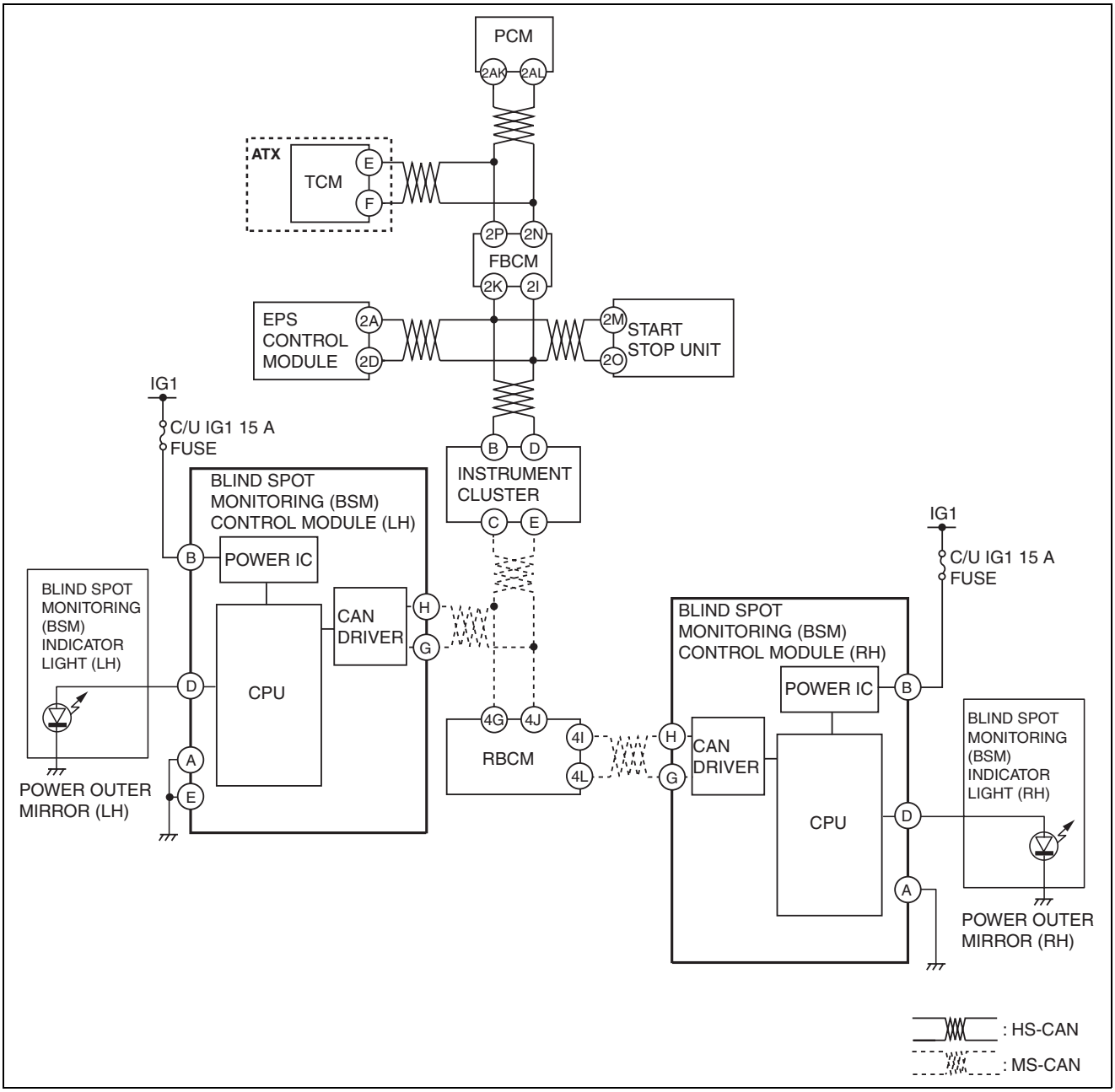

ac5wzn00001453

ON-BOARD DIAGNOSTIC [BLIND SPOT MONITORING (BSM)]

FOREWORD [BLIND SPOT MONITORING (BSM)]

id0902i3960100

- If there is any vehicle malfunction complaint lodged by a customer, perform malfunction diagnosis according to the troubleshooting procedure.

Troubleshooting Procedure

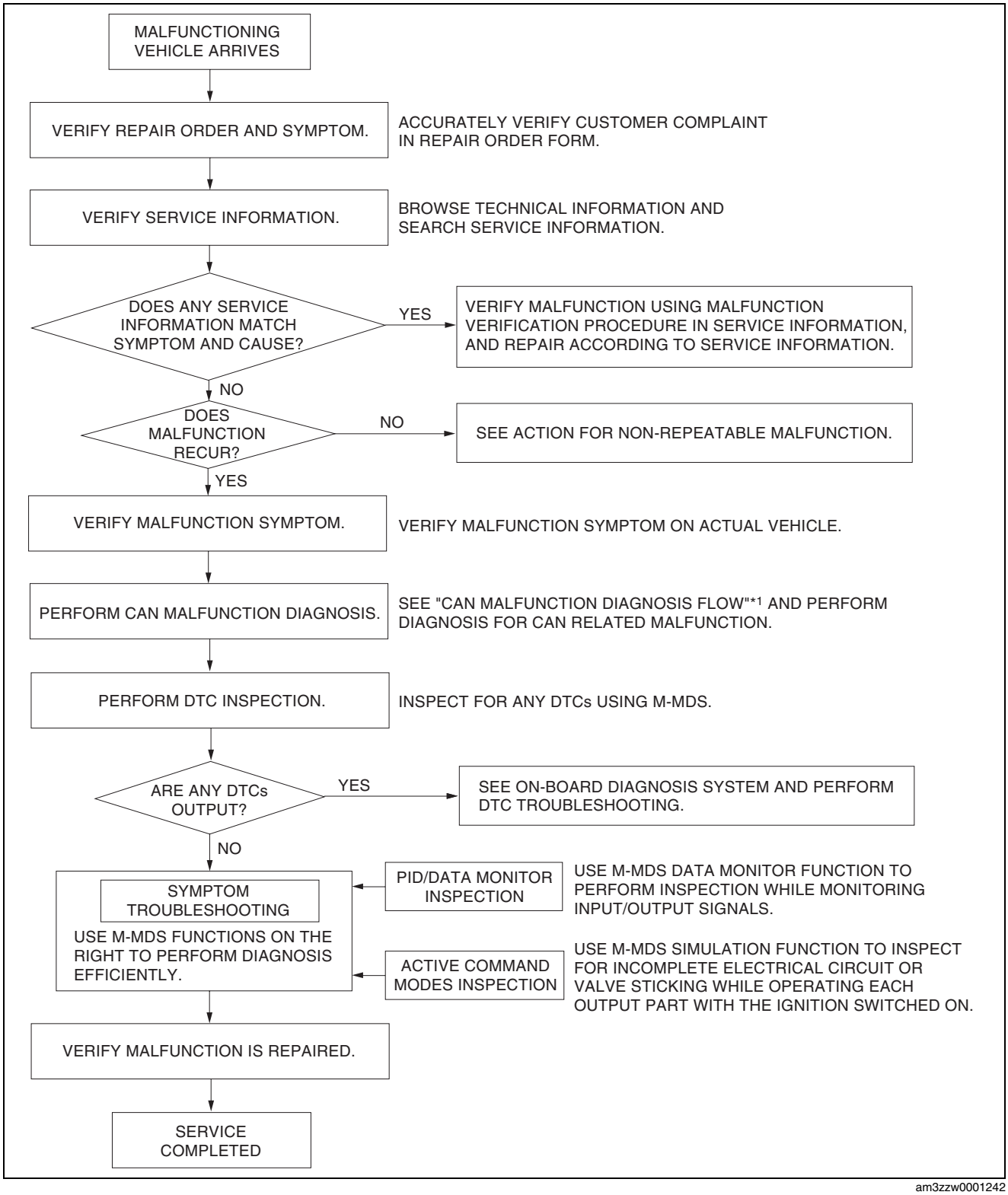

am3zzw0001242

*1 : 10-02B-3 CONTROLLER AREA NETWORK (CAN) MALFUNCTION DIAGNOSIS FLOW [SKYACTIV-G 2.0 (R.H.D.)]/10-02D-3 CONTROLLER AREA NETWORK (CAN) MALFUNCTION DIAGNOSIS FLOW [SKYACTIV-D 2.2 (R.H.D.)]

ON-BOARD DIAGNOSTIC [BLIND SPOT MONITORING (BSM)]

Action for Non-repeatable Malfunction

- If the malfunction does not recur, verify the malfunction cause by performing the following actions:
  - — Based on the repair order form, attempt to drive the vehicle or perform tests to replicate the malfunction, record the data at that time, and detect the malfunction cause.
  - — Shake the wiring harness or connector of the electrical component which is suspected to be the cause of the malfunction, and inspect for malfunction or occurrence of any DTCs.

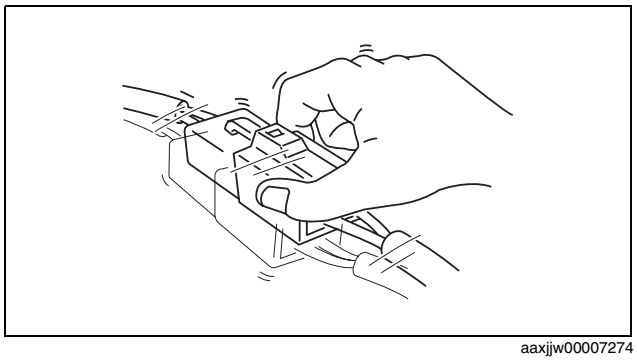

aaxjjw00007274

  - — Inspect the female terminals on the connector of the electric component which is suspected to be the cause of the malfunction for poor connection.

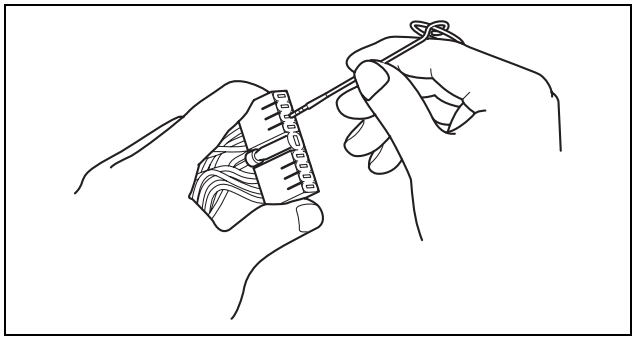

am3uuw0000750

ON-BOARD DIAGNOSTIC [BLIND SPOT MONITORING (BSM)]

DTC INSPECTION [BLIND SPOT MONITORING (BSM)]

id0902i3960300

CMDTC Self Test

1. Connect the M-MDS to the DLC-2.
2. After the vehicle is identified, select the following items from the initialization screen of the M-MDS.
   (1) Select “Self Test”.
   (2) Select “All CMDTCs”.
3. Verify the DTC according to the directions on the screen.
   - If any DTCs are displayed, perform troubleshooting according to the corresponding DTC inspection.
4. After completion of repairs, clear all DTCs stored in the BSM control module (LH) or (RH). (See 09-02H-5 CLEARING DTC [BLIND SPOT MONITORING (BSM)].)

ODDTC Self Test

1. Connect the M-MDS to the DLC-2.
2. After the vehicle is identified, select the following items from the initialization screen of the M-MDS.
   (1) Select “Self Test”.
   (2) Select “Modules”.
   (3) Select “BSML” or “BSMR”.
3. Verify the DTC according to the directions on the screen.
   - If any DTCs are displayed, perform troubleshooting according to the corresponding DTC inspection.
4. After completion of repairs, clear all DTCs stored in the BSM control module (LH) or (RH). (See 09-02H-5 CLEARING DTC [BLIND SPOT MONITORING (BSM)].)

CLEARING DTC [BLIND SPOT MONITORING (BSM)]

id0902i3960400

CMDTC Memory Clearing Procedure

1. Connect the M-MDS to the DLC-2.
2. After the vehicle is identified, select the following items from the initialization screen of the M-MDS.
   (1) Select “Self Test”.
   (2) Select “All CMDTCs”.
3. Verify the DTC according to the directions on the screen.
4. Press the clear button on the DTC screen to clear the DTC.
5. Switch the ignition to off.
6. Switch the ignition ON (engine off or on) and wait for **5 s or more**.
7. Perform DTC inspection. (See 09-02H-5 DTC INSPECTION [BLIND SPOT MONITORING (BSM)].)
8. Verify that no DTCs are displayed.

ODDTC Memory Clearing Procedure

1. Connect the M-MDS to the DLC-2.
2. After the vehicle is identified, select the following items from the initialization screen of the M-MDS.
   (1) Select “Self Test”.
   (2) Select “Modules”.
   (3) Select “BSML” or “BSMR”.
3. Verify the DTC according to the directions on the screen.
4. Press the clear button on the DTC screen to clear the DTC.
5. Switch the ignition to off.
6. Switch the ignition ON (engine off or on) and wait for **5 s or more**.
7. Perform DTC inspection. (See 09-02H-5 DTC INSPECTION [BLIND SPOT MONITORING (BSM)].)
8. Verify that no DTCs are displayed.

ON-BOARD DIAGNOSTIC [BLIND SPOT MONITORING (BSM)]

DTC TABLE [BLIND SPOT MONITORING (BSM)]

id0902i3960500

BSM Control Module (LH)

×: Applicable
—: Not applicable

DTC No.	BSM OFF indicator light	Description	Fail-safe function	Drive cycle	Self test type*1	Memory function	Page
B118C:11	Flash	BSM indicator light (LH) circuit malfunction	×	—	C, D	×	(See 09-02H-8 DTC B118C:11 [BLIND SPOT MONITORING (BSM)].)
B118C:15	Flash	BSM indicator light (LH) circuit malfunction	×	—	C, D	×	(See 09-02H-10 DTC B118C:15 [BLIND SPOT MONITORING (BSM)].)
U0001:88	Flash	Module communication error (HS-CAN)	×	—	C	×	(See 09-02H-18 DTC U0001:88/U0100:00/U0131:00/U0155:00/U0214:00/U0232:00/U0233:00 [BLIND SPOT MONITORING (BSM)].)
U0100:00	Flash	Communication error with PCM	×	—	C	×	
U0131:00	Flash	Communication error with EPS control module	×	—	C	×	
U0155:00	Flash	Communication error with instrument cluster	×	—	C	×	
U0214:00	Flash	Communication error with start stop unit	×	—	C	×	
U0233:00	Flash	Communication error with BSM control module (RH)	×	—	C	×	
U0401:68	Flash	Error signal received from PCM	×	—	C	×	(See 09-02H-19 DTC U0401:68 [BLIND SPOT MONITORING (BSM)].)
U0420:68	Flash	Error signal received from EPS control module	×	—	C	×	(See 09-02H-20 DTC U0420:68 [BLIND SPOT MONITORING (BSM)].)
U0423:68	Flash	Error signal received from instrument cluster	×	—	C	×	(See 09-02H-21 DTC U0423:68 [BLIND SPOT MONITORING (BSM)].)
U0515:68	Flash	Error signal received from start stop unit	×	—	C	×	(See 09-02H-22 DTC U0515:68 [BLIND SPOT MONITORING (BSM)].)
U0534:68	Flash	Error signal received from BSM control module (RH)	×	—	C	×	(See 09-02H-24 DTC U0534:68 [BLIND SPOT MONITORING (BSM)].)
U3000:01	Flash	Electrical malfunction inside BSM control module	×	—	C, D	×	(See 09-02H-25 DTC U3000:01 [BLIND SPOT MONITORING (BSM)].)
U3000:09	Flash	BSM control module internal malfunction	×	—	C, D	×	(See 09-02H-25 DTC U3000:09 [BLIND SPOT MONITORING (BSM)].)
U3000:4A	—	BSM control module (LH) assembly malfunction	—	—	C	×	(See 09-02H-26 DTC U3000:4A [BLIND SPOT MONITORING (BSM)].)
U3000:97	—	Radar performance malfunction	—	—	C	×	(See 09-02H-28 DTC U3000:97 [BLIND SPOT MONITORING (BSM)].)

ON-BOARD DIAGNOSTIC [BLIND SPOT MONITORING (BSM)]

DTC No.	BSM OFF indicator light	Description	Fail-safe function	Drive cycle	Self test type*1	Memory function	Page
U3003:16	Flash	BSM control module low power supply voltage input (**less than 9 V**)	×	—	C, D	×	(See 09-02H-29 DTC U3003:16 [BLIND SPOT MONITORING (BSM)].)
U3003:17	Flash	BSM control module high power supply voltage input (**16 V or more**)	×	—	C, D	×	(See 09-02H-31 DTC U3003:17 [BLIND SPOT MONITORING (BSM)].)

*1 : C: CMDTC self test, D: ODDTC self test

BSM Control Module (RH)

×: Applicable
—: Not applicable

DTC No.	BSM OFF indicator light	Description	Fail-safe function	Drive cycle	Self test type*1	Memory function	Page
B118D:11	Flash	BSM indicator light (RH) circuit malfunction	×	—	C, D	×	(See 09-02H-13 DTC B118D:11 [BLIND SPOT MONITORING (BSM)].)
B118D:15	Flash	BSM indicator light (RH) circuit malfunction	×	—	C, D	×	(See 09-02H-15 DTC B118D:15 [BLIND SPOT MONITORING (BSM)].)
U0001:88	Flash	Module communication error (HS-CAN)	×	—	C	×	(See 09-02H-18 DTC U0001:88/U0100:00/ U0131:00/U0155:00/ U0214:00/U0232:00/ U0233:00 [BLIND SPOT MONITORING (BSM)].)
U0100:00	Flash	Communication error with PCM	×	—	C	×	
U0131:00	Flash	Communication error with EPS control module	×	—	C	×	
U0155:00	Flash	Communication error with instrument cluster	×	—	C	×	
U0214:00	Flash	Communication error with start stop unit	×	—	C	×	
U0232:00	Flash	Communication error with BSM control module (LH)	×	—	C	×	
U0401:68	Flash	Error signal received from PCM	×	—	C	×	(See 09-02H-19 DTC U0401:68 [BLIND SPOT MONITORING (BSM)].)
U0420:68	Flash	Error signal received from EPS control module	×	—	C	×	(See 09-02H-20 DTC U0420:68 [BLIND SPOT MONITORING (BSM)].)
U0423:68	Flash	Error signal received from instrument cluster	×	—	C	×	(See 09-02H-21 DTC U0423:68 [BLIND SPOT MONITORING (BSM)].)
U0515:68	Flash	Error signal received from start stop unit	×	—	C	×	(See 09-02H-22 DTC U0515:68 [BLIND SPOT MONITORING (BSM)].)
U0533:68	Flash	Error signal received from BSM control module (LH)	×	—	C	×	(See 09-02H-23 DTC U0533:68 [BLIND SPOT MONITORING (BSM)].)
U3000:01	Flash	Electrical malfunction inside BSM control module	×	—	C, D	×	(See 09-02H-25 DTC U3000:01 [BLIND SPOT MONITORING (BSM)].)

ON-BOARD DIAGNOSTIC [BLIND SPOT MONITORING (BSM)]

DTC No.	BSM OFF indicator light	Description	Fail-safe function	Drive cycle	Self test type*1	Memory function	Page
U3000:09	Flash	BSM control module internal malfunction	×	—	C, D	×	(See 09-02H-25 DTC U3000:09 [BLIND SPOT MONITORING (BSM)].)
U3000:4A	—	BSM control module (RH) assembly malfunction	—	—	C	×	(See 09-02H-26 DTC U3000:4A [BLIND SPOT MONITORING (BSM)].)
U3000:97	—	Radar performance malfunction	—	—	C	×	(See 09-02H-28 DTC U3000:97 [BLIND SPOT MONITORING (BSM)].)
U3003:16	Flash	BSM control module low power supply voltage input (**less than 9 V**)	×	—	C, D	×	(See 09-02H-29 DTC U3003:16 [BLIND SPOT MONITORING (BSM)].)
U3003:17	Flash	BSM control module high power supply voltage input (**16 V or more**)	×	—	C, D	×	(See 09-02H-31 DTC U3003:17 [BLIND SPOT MONITORING (BSM)].)

*1 : C: CMDTC self test, D: ODDTC self test

DTC B118C:11 [BLIND SPOT MONITORING (BSM)]

id0902i3354500

System malfunction location	BSM indicator light (LH) circuit malfunction
Detection condition	• While the BSM indicator light (LH) is operated, the BSM control module (LH) monitors the BSM indicator light (LH) load voltage. Increase in the monitored BSM indicator light (LH) load voltage is the specified value or more, and the BSM control module (LH) determined that there is a short to ground in the BSM indicator light (LH) circuit.
Fail-safe	• BSM is stopped.
Possible cause	• Malfunction in power outer mirror (LH) connector or terminal • Malfunction in BSM control module (LH) connector or terminal • Short to ground in wiring harness between BSM control module (LH) terminal D and power outer mirror (LH) terminal D • Power outer mirror (LH) malfunction • BSM indicator light (LH) malfunction • BSM control module (LH) malfunction

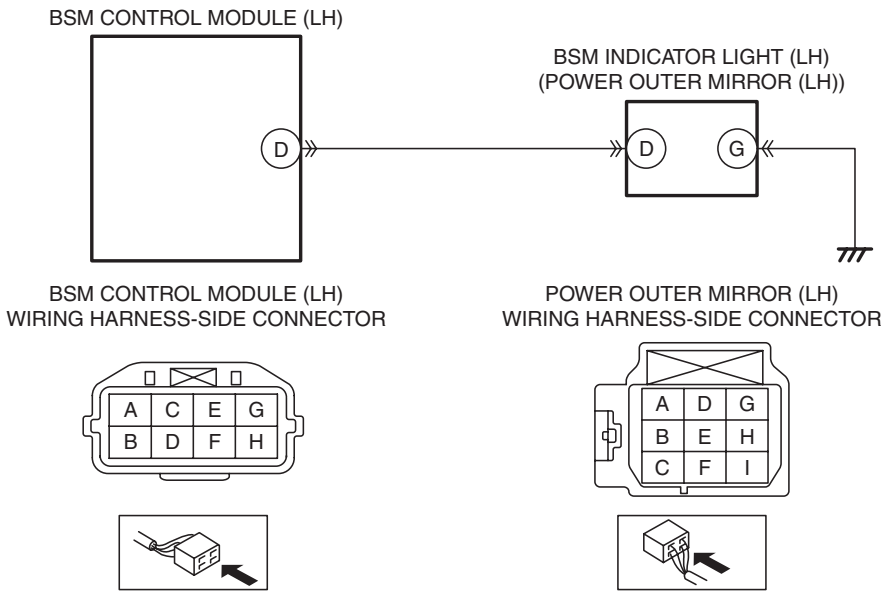

ON-BOARD DIAGNOSTIC [BLIND SPOT MONITORING (BSM)]

Diagnostic Procedure

Step	Inspection		Action
1	**INSPECT POWER OUTER MIRROR (LH) CONNECTOR CONDITION** • Switch the ignition to off. • Disconnect the negative battery cable. (See 01-17A-11 NEGATIVE BATTERY CABLE DISCONNECTION/CONNECTION [SKYACTIV-G 2.0].) (See 01-17B-9 NEGATIVE BATTERY CABLE DISCONNECTION/CONNECTION [SKYACTIV-D 2.2].) • Disconnect the power outer mirror (LH) connector. • Inspect the connector engagement and connection condition and inspect the terminals for damage, deformation, corrosion, or disconnection. • Is the connector normal?	Yes	Go to the next step.
		No	Repair or replace the connector, then go to Step 6.
2	**INSPECT BSM CONTROL MODULE (LH) CONNECTOR CONDITION** • Disconnect the BSM control module (LH) connector. • Inspect the connector engagement and connection condition and inspect the terminals for damage, deformation, corrosion, or disconnection. • Is the connector normal?	Yes	Go to the next step.
		No	Repair or replace the connector, then go to Step 6.
3	**INSPECT BSM INDICATOR LIGHT (LH) CIRCUIT FOR SHORT TO GROUND** • Verify that the BSM control module (LH) and power outer mirror (LH) connectors are disconnected. • Inspect for continuity between power outer mirror (LH) terminal D (vehicle wiring harness side) and body ground. • Is there continuity?	Yes	Repair or replace the wiring harness which is shorted to ground, then go to Step 6.
		No	Go to the next step.
4	**INSPECT POWER OUTER MIRROR (LH)** • Inspect the power outer mirror (LH). (See 09-12-69 POWER OUTER MIRROR INSPECTION.) • Is the power outer mirror (LH) normal?	Yes	Go to the next step.
		No	Replace the power outer mirror (LH), then go to Step 6. (See 09-12-67 POWER OUTER MIRROR REMOVAL/INSTALLATION.)
5	**INSPECT BSM INDICATOR LIGHT (LH)** • Inspect the BSM indicator light (LH). (See 09-12-81 OUTER MIRROR GLASS INSPECTION.) • Is the BSM indicator light (LH) normal?	Yes	Go to the next step.
		No	Replace the outer mirror glass (LH), then go to the next step. (See 09-12-73 OUTER MIRROR GLASS REMOVAL.) (See 09-12-78 OUTER MIRROR GLASS INSTALLATION.)
6	**VERIFY THAT REPAIRS HAVE BEEN COMPLETED** • Reconnect all the disconnected connectors. • Reconnect the disconnected negative battery cable. (See 01-17A-11 NEGATIVE BATTERY CABLE DISCONNECTION/CONNECTION [SKYACTIV-G 2.0].) (See 01-17B-9 NEGATIVE BATTERY CABLE DISCONNECTION/CONNECTION [SKYACTIV-D 2.2].) • Clear the BSM control module (LH) DTCs using the M-MDS. (See 09-02H-5 CLEARING DTC [BLIND SPOT MONITORING (BSM)].) • Perform the DTC inspection for the BSM control module (LH) using the M-MDS. (See 09-02H-5 DTC INSPECTION [BLIND SPOT MONITORING (BSM)].) • Is DTC B118C:11 displayed?	Yes	Repeat the inspection from Step 1. • If the malfunction recurs, replace the BSM control module (LH), then go to the next step. (See 09-22-67 BLIND SPOT MONITORING (BSM) CONTROL MODULE REMOVAL/INSTALLATION.)
		No	Go to the next step.

ON-BOARD DIAGNOSTIC [BLIND SPOT MONITORING (BSM)]

Step	Inspection		Action
7	**VERIFY IF OTHER DTCs DISPLAYED** • Are any other DTCs displayed?	Yes	Repair the malfunctioning part according to the applicable DTC troubleshooting. (See 09-02H-6 DTC TABLE [BLIND SPOT MONITORING (BSM)].)
		No	DTC troubleshooting completed.

DTC B118C:15 [BLIND SPOT MONITORING (BSM)]

id0902i3354600

System malfunction location	**BSM indicator light (LH) circuit malfunction**
Detection condition	• While the BSM indicator light (LH) is operated, the BSM control module (LH) monitors the BSM indicator light (LH) load voltage. Decrease in the BSM indicator light (LH) load voltage is the specified value or less, and the BSM control module (LH) determined that there is a short to power supply or an open circuit in the BSM indicator light (LH) circuit.
Fail-safe	• BSM is stopped.
Possible cause	• Malfunction in power outer mirror (LH) connector or terminal • Open circuit in wiring harness between power outer mirror (LH) terminal G and body ground • Malfunction in BSM control module (LH) connector or terminal • Short to power supply in wiring harness between BSM control module (LH) terminal D and power outer mirror (LH) terminal D • Power outer mirror (LH) malfunction • BSM indicator light (LH) malfunction • Open circuit in wiring harness between BSM control module (LH) terminal D and power outer mirror (LH) terminal D • BSM control module (LH) malfunction

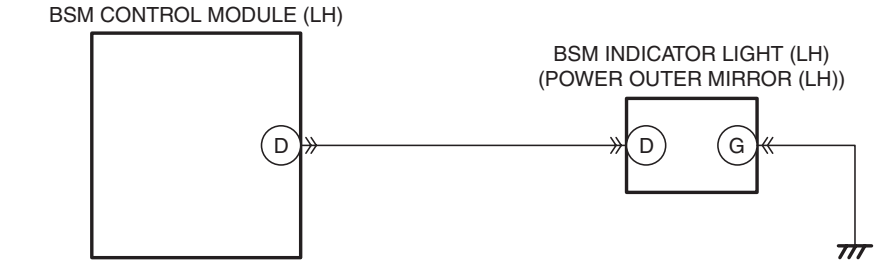

BSM CONTROL MODULE (LH)
WIRING HARNESS-SIDE CONNECTOR

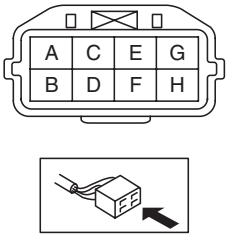

POWER OUTER MIRROR (LH)
WIRING HARNESS-SIDE CONNECTOR

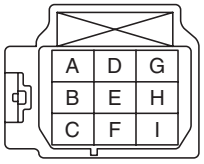

ON-BOARD DIAGNOSTIC [BLIND SPOT MONITORING (BSM)]

Diagnostic Procedure

Step	Inspection		Action
1	**INSPECT POWER OUTER MIRROR (LH) CONNECTOR CONDITION** • Switch the ignition to off. • Disconnect the negative battery cable. (See 01-17A-11 NEGATIVE BATTERY CABLE DISCONNECTION/CONNECTION [SKYACTIV-G 2.0].) (See 01-17B-9 NEGATIVE BATTERY CABLE DISCONNECTION/CONNECTION [SKYACTIV-D 2.2].) • Disconnect the power outer mirror (LH) connector. • Inspect the connector engagement and connection condition and inspect the terminals for damage, deformation, corrosion, or disconnection. • Is the connector normal?	Yes	Go to the next step.
		No	Repair or replace the connector, then go to Step 8.
2	**INSPECT BSM INDICATOR LIGHT (LH) GROUND CIRCUIT FOR OPEN CIRCUIT** • Verify that the power outer mirror (LH) connector is disconnected. • Inspect for continuity between power outer mirror (LH) terminal G (vehicle wiring harness side) and body ground. • Is there continuity?	Yes	Go to the next step.
		No	Repair or replace the wiring harness which has an open circuit, then go to Step 8.
3	**INSPECT BSM CONTROL MODULE (LH) CONNECTOR CONDITION** • Disconnect the BSM control module (LH) connector. • Inspect the connector engagement and connection condition and inspect the terminals for damage, deformation, corrosion, or disconnection. • Is the connector normal?	Yes	Go to the next step.
		No	Repair or replace the connector, then go to Step 8.
4	**INSPECT BSM INDICATOR LIGHT (LH) SIGNAL CIRCUIT FOR SHORT TO POWER SUPPLY** • Verify that the BSM control module (LH) and power outer mirror (LH) connectors are disconnected. • Connect the negative battery cable. (See 01-17A-11 NEGATIVE BATTERY CABLE DISCONNECTION/CONNECTION [SKYACTIV-G 2.0].) (See 01-17B-9 NEGATIVE BATTERY CABLE DISCONNECTION/CONNECTION [SKYACTIV-D 2.2].) • Switch the ignition ON (engine off or on). • Measure the voltage at power outer mirror (LH) terminal D (vehicle wiring harness side). • Is the voltage **0 V**?	Yes	Go to the next step.
		No	Repair or replace the wiring harness which is shorted to power supply, then go to Step 8.
5	**INSPECT POWER OUTER MIRROR (LH)** • Inspect the power outer mirror (LH). (See 09-12-69 POWER OUTER MIRROR INSPECTION.) • Is the power outer mirror (LH) normal?	Yes	Go to the next step.
		No	Replace the power outer mirror (LH), then go to Step 8. (See 09-12-67 POWER OUTER MIRROR REMOVAL/ INSTALLATION.)
6	**INSPECT BSM INDICATOR LIGHT (LH)** • Inspect the BSM indicator light (LH). (See 09-12-81 OUTER MIRROR GLASS INSPECTION.) • Is the BSM indicator light (LH) normal?	Yes	Go to the next step.
		No	Replace the outer mirror glass (LH), then go to Step 8. (See 09-12-73 OUTER MIRROR GLASS REMOVAL.) (See 09-12-78 OUTER MIRROR GLASS INSTALLATION.)

ON-BOARD DIAGNOSTIC [BLIND SPOT MONITORING (BSM)]

Step	Inspection		Action
7	**INSPECT BSM INDICATOR LIGHT (LH) SIGNAL CIRCUIT FOR OPEN CIRCUIT** • Verify that the BSM control module (LH) and power outer mirror (LH) connectors are disconnected. • Switch the ignition to off. • Disconnect the negative battery cable. (See 01-17A-11 NEGATIVE BATTERY CABLE DISCONNECTION/CONNECTION [SKYACTIV-G 2.0].) (See 01-17B-9 NEGATIVE BATTERY CABLE DISCONNECTION/CONNECTION [SKYACTIV-D 2.2].) • Inspect for continuity between BSM control module (LH) terminal D (vehicle wiring harness side) and power outer mirror (LH) terminal D (vehicle wiring harness side). • Is there continuity?	Yes	Go to the next step.
		No	Repair or replace the wiring harness which has an open circuit, then go to the next step.
8	**VERIFY THAT REPAIRS HAVE BEEN COMPLETED** • Reconnect all the disconnected connectors. • Reconnect the disconnected negative battery cable. (See 01-17A-11 NEGATIVE BATTERY CABLE DISCONNECTION/CONNECTION [SKYACTIV-G 2.0].) (See 01-17B-9 NEGATIVE BATTERY CABLE DISCONNECTION/CONNECTION [SKYACTIV-D 2.2].) • Clear the BSM control module (LH) DTCs using the M-MDS. (See 09-02H-5 CLEARING DTC [BLIND SPOT MONITORING (BSM)].) • Perform the DTC inspection for the BSM control module (LH) using the M-MDS. (See 09-02H-5 DTC INSPECTION [BLIND SPOT MONITORING (BSM)].) • Is DTC B118C:15 displayed?	Yes	Repeat the inspection from Step 1. • If the malfunction recurs, replace the BSM control module (LH), then go to the next step. (See 09-22-67 BLIND SPOT MONITORING (BSM) CONTROL MODULE REMOVAL/INSTALLATION.)
		No	Go to the next step.
9	**VERIFY IF OTHER DTCs DISPLAYED** • Are any other DTCs displayed?	Yes	Repair the malfunctioning part according to the applicable DTC troubleshooting. (See 09-02H-6 DTC TABLE [BLIND SPOT MONITORING (BSM)].)
		No	DTC troubleshooting completed.

ON-BOARD DIAGNOSTIC [BLIND SPOT MONITORING (BSM)]

DTC B118D:11 [BLIND SPOT MONITORING (BSM)]

id0902i3354700

System malfunction location	**BSM indicator light (RH) circuit malfunction**
Detection condition	• While the BSM indicator light (RH) is operated, the BSM control module (RH) monitors the BSM indicator light (RH) load voltage. Increase in the monitored BSM indicator light (RH) load voltage is the specified value or more, and the BSM control module (RH) determined that there is a short to ground in the BSM indicator light (RH) circuit.
Fail-safe	• BSM is stopped.
Possible cause	• Malfunction in power outer mirror (RH) connector or terminal • Malfunction in BSM control module (RH) connector or terminal • Short to ground in wiring harness between BSM control module (RH) terminal D and power outer mirror (RH) terminal D • Power outer mirror (RH) malfunction • BSM indicator light (RH) malfunction • BSM control module (RH) malfunction

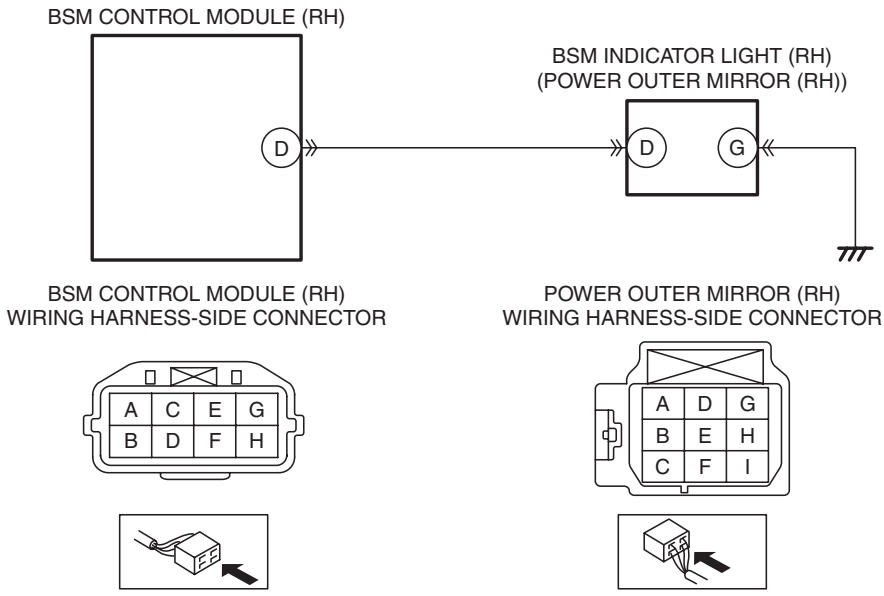

Diagnostic Procedure

Step	Inspection		Action
1	**INSPECT POWER OUTER MIRROR (RH) CONNECTOR CONDITION** • Switch the ignition to off. • Disconnect the negative battery cable. (See 01-17A-11 NEGATIVE BATTERY CABLE DISCONNECTION/CONNECTION [SKYACTIV-G 2.0].) (See 01-17B-9 NEGATIVE BATTERY CABLE DISCONNECTION/CONNECTION [SKYACTIV-D 2.2].) • Disconnect the power outer mirror (RH) connector. • Inspect the connector engagement and connection condition and inspect the terminals for damage, deformation, corrosion, or disconnection. • Is the connector normal?	Yes	Go to the next step.
		No	Repair or replace the connector, then go to Step 6.
2	**INSPECT BSM CONTROL MODULE (RH) CONNECTOR CONDITION** • Disconnect the BSM control module (RH) connector. • Inspect the connector engagement and connection condition and inspect the terminals for damage, deformation, corrosion, or disconnection. • Is the connector normal?	Yes	Go to the next step.
		No	Repair or replace the connector, then go to Step 6.

ON-BOARD DIAGNOSTIC [BLIND SPOT MONITORING (BSM)]

Step	Inspection		Action
3	**INSPECT BSM INDICATOR LIGHT (RH) CIRCUIT FOR SHORT TO GROUND** • Verify that the BSM control module (RH) and power outer mirror (RH) connectors are disconnected. • Inspect for continuity between power outer mirror (RH) terminal D (vehicle wiring harness side) and body ground. • Is there continuity?	Yes	Repair or replace the wiring harness which is shorted to ground, then go to Step 6.
		No	Go to the next step.
4	**INSPECT POWER OUTER MIRROR (RH)** • Inspect the power outer mirror (RH). (See 09-12-69 POWER OUTER MIRROR INSPECTION.) • Is the power outer mirror (RH) normal?	Yes	Go to the next step.
		No	Replace the power outer mirror (RH), then go to Step 6. (See 09-12-67 POWER OUTER MIRROR REMOVAL/INSTALLATION.)
5	**INSPECT BSM INDICATOR LIGHT (RH)** • Inspect the BSM indicator light (RH). (See 09-12-81 OUTER MIRROR GLASS INSPECTION.) • Is the BSM indicator light (RH) normal?	Yes	Go to the next step.
		No	Replace the outer mirror glass (RH), then go to the next step. (See 09-12-73 OUTER MIRROR GLASS REMOVAL.) (See 09-12-78 OUTER MIRROR GLASS INSTALLATION.)
6	**VERIFY THAT REPAIRS HAVE BEEN COMPLETED** • Reconnect all the disconnected connectors. • Reconnect the disconnected negative battery cable. (See 01-17A-11 NEGATIVE BATTERY CABLE DISCONNECTION/CONNECTION [SKYACTIV-G 2.0].) (See 01-17B-9 NEGATIVE BATTERY CABLE DISCONNECTION/CONNECTION [SKYACTIV-D 2.2].) • Clear the BSM control module (RH) DTCs using the M-MDS. (See 09-02H-5 CLEARING DTC [BLIND SPOT MONITORING (BSM)].) • Perform the DTC inspection for the BSM control module (RH) using the M-MDS. (See 09-02H-5 DTC INSPECTION [BLIND SPOT MONITORING (BSM)].) • Is DTC B118D:11 displayed?	Yes	Repeat the inspection from Step 1. • If the malfunction recurs, replace the BSM control module (RH), then go to the next step. (See 09-22-67 BLIND SPOT MONITORING (BSM) CONTROL MODULE REMOVAL/INSTALLATION.)
		No	Go to the next step.
7	**VERIFY IF OTHER DTCs DISPLAYED** • Are any other DTCs displayed?	Yes	Repair the malfunctioning part according to the applicable DTC troubleshooting. (See 09-02H-6 DTC TABLE [BLIND SPOT MONITORING (BSM)].)
		No	DTC troubleshooting completed.

ON-BOARD DIAGNOSTIC [BLIND SPOT MONITORING (BSM)]

DTC B118D:15 [BLIND SPOT MONITORING (BSM)]

id0902i3393000

System malfunction location	**BSM indicator light (RH) circuit malfunction**
Detection condition	• While the BSM indicator light (RH) is operated, the BSM control module (RH) monitors the BSM indicator light (RH) load voltage. Decrease in the BSM indicator light (RH) load voltage is the specified value or less, and the BSM control module (RH) determined that there is a short to power supply or an open circuit in the BSM indicator light (RH) circuit.
Fail-safe	• BSM is stopped.
Possible cause	• Malfunction in power outer mirror (RH) connector or terminal • Open circuit in wiring harness between power outer mirror (RH) terminal G and body ground • Malfunction in BSM control module (RH) connector or terminal • Short to power supply in wiring harness between BSM control module (RH) terminal D and power outer mirror (RH) terminal D • Power outer mirror (RH) malfunction • BSM indicator light (RH) malfunction • Open circuit in wiring harness between BSM control module (RH) terminal D and power outer mirror (RH) terminal D • BSM control module (RH) malfunction

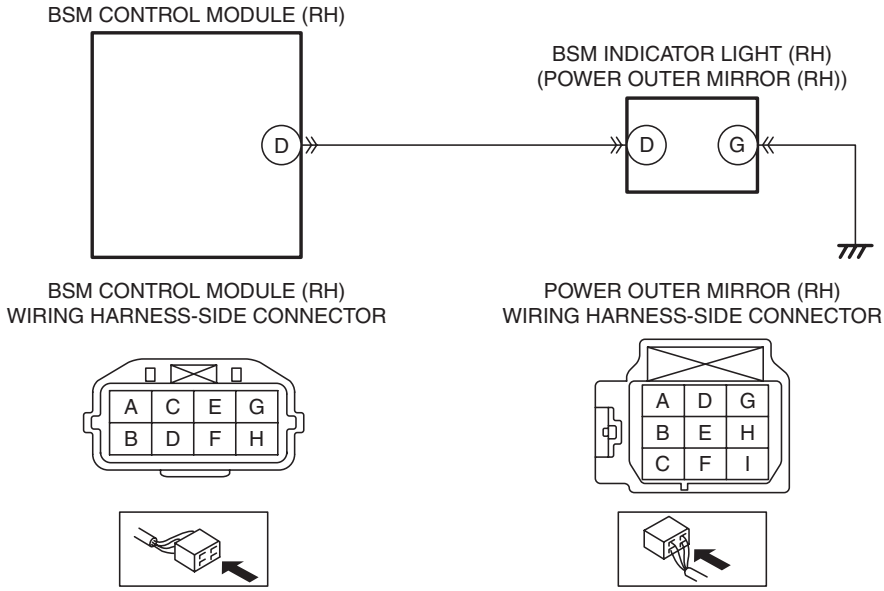

Diagnostic Procedure

Step	Inspection		Action
1	**INSPECT POWER OUTER MIRROR (RH) CONNECTOR CONDITION** • Switch the ignition to off. • Disconnect the negative battery cable. (See 01-17A-11 NEGATIVE BATTERY CABLE DISCONNECTION/CONNECTION [SKYACTIV-G 2.0].) (See 01-17B-9 NEGATIVE BATTERY CABLE DISCONNECTION/CONNECTION [SKYACTIV-D 2.2].) • Disconnect the power outer mirror (RH) connector. • Inspect the connector engagement and connection condition and inspect the terminals for damage, deformation, corrosion, or disconnection. • Is the connector normal?	Yes	Go to the next step.
		No	Repair or replace the connector, then go to Step 8.

ON-BOARD DIAGNOSTIC [BLIND SPOT MONITORING (BSM)]

Step	Inspection		Action
2	**INSPECT BSM INDICATOR LIGHT (RH) GROUND CIRCUIT FOR OPEN CIRCUIT** • Verify that the power outer mirror (RH) connector is disconnected. • Inspect for continuity between power outer mirror (RH) terminal G (vehicle wiring harness side) and body ground. • Is there continuity?	Yes	Go to the next step.
		No	Repair or replace the wiring harness which has an open circuit, then go to Step 8.
3	**INSPECT BSM CONTROL MODULE (RH) CONNECTOR CONDITION** • Disconnect the BSM control module (RH) connector. • Inspect the connector engagement and connection condition and inspect the terminals for damage, deformation, corrosion, or disconnection. • Is the connector normal?	Yes	Go to the next step.
		No	Repair or replace the connector, then go to Step 8.
4	**INSPECT BSM INDICATOR LIGHT (RH) SIGNAL CIRCUIT FOR SHORT TO POWER SUPPLY** • Verify that the BSM control module (RH) and power outer mirror (RH) connectors are disconnected. • Connect the negative battery cable. (See 01-17A-11 NEGATIVE BATTERY CABLE DISCONNECTION/CONNECTION [SKYACTIV-G 2.0].) (See 01-17B-9 NEGATIVE BATTERY CABLE DISCONNECTION/CONNECTION [SKYACTIV-D 2.2].) • Switch the ignition ON (engine off or on). • Measure the voltage at power outer mirror (RH) terminal D (vehicle wiring harness side). • Is the voltage **0 V**?	Yes	Go to the next step.
		No	Repair or replace the wiring harness which is shorted to power supply, then go to Step 8.
5	**INSPECT POWER OUTER MIRROR (RH)** • Inspect the power outer mirror (RH). (See 09-12-69 POWER OUTER MIRROR INSPECTION.) • Is the power outer mirror (RH) normal?	Yes	Go to the next step.
		No	Replace the power outer mirror (RH), then go to Step 8. (See 09-12-67 POWER OUTER MIRROR REMOVAL/INSTALLATION.)
6	**INSPECT BSM INDICATOR LIGHT (RH)** • Inspect the BSM indicator light (RH). (See 09-12-81 OUTER MIRROR GLASS INSPECTION.) • Is the BSM indicator light (RH) normal?	Yes	Go to the next step.
		No	Replace the outer mirror glass (RH), then go to Step 8. (See 09-12-73 OUTER MIRROR GLASS REMOVAL.) (See 09-12-78 OUTER MIRROR GLASS INSTALLATION.)
7	**INSPECT BSM INDICATOR LIGHT (RH) SIGNAL CIRCUIT FOR OPEN CIRCUIT** • Verify that the BSM control module (RH) and power outer mirror (RH) connectors are disconnected. • Switch the ignition to off. • Disconnect the negative battery cable. (See 01-17A-11 NEGATIVE BATTERY CABLE DISCONNECTION/CONNECTION [SKYACTIV-G 2.0].) (See 01-17B-9 NEGATIVE BATTERY CABLE DISCONNECTION/CONNECTION [SKYACTIV-D 2.2].) • Inspect for continuity between BSM control module (RH) (vehicle wiring harness side) terminal D and power outer mirror (RH) terminal D (vehicle wiring harness side). • Is there continuity?	Yes	Go to the next step.
		No	Repair or replace the wiring harness which has an open circuit, then go to the next step.

ON-BOARD DIAGNOSTIC [BLIND SPOT MONITORING (BSM)]

Step	Inspection		Action
8	**VERIFY THAT REPAIRS HAVE BEEN COMPLETED** • Reconnect all the disconnected connectors. • Reconnect the disconnected negative battery cable. (See 01-17A-11 NEGATIVE BATTERY CABLE DISCONNECTION/CONNECTION [SKYACTIV-G 2.0].) (See 01-17B-9 NEGATIVE BATTERY CABLE DISCONNECTION/CONNECTION [SKYACTIV-D 2.2].) • Clear the BSM control module (RH) DTCs using the M-MDS. (See 09-02H-5 CLEARING DTC [BLIND SPOT MONITORING (BSM)].) • Perform the DTC inspection for the BSM control module (RH) using the M-MDS. (See 09-02H-5 DTC INSPECTION [BLIND SPOT MONITORING (BSM)].) • Is DTC B118D:15 displayed?	Yes	Repeat the inspection from Step 1. • If the malfunction recurs, replace the BSM control module (RH), then go to the next step. (See 09-22-67 BLIND SPOT MONITORING (BSM) CONTROL MODULE REMOVAL/INSTALLATION.)
		No	Go to the next step.
9	**VERIFY IF OTHER DTCs DISPLAYED** • Are any other DTCs displayed?	Yes	Repair the malfunctioning part according to the applicable DTC troubleshooting. (See 09-02H-6 DTC TABLE [BLIND SPOT MONITORING (BSM)].)
		No	DTC troubleshooting completed.

ON-BOARD DIAGNOSTIC [BLIND SPOT MONITORING (BSM)]

DTC U0001:88/U0100:00/U0131:00/U0155:00/U0214:00/U0232:00/U0233:00 [BLIND SPOT MONITORING (BSM)]

id0902i3018200

System malfunction location	**U0001:88** • **Module communication error (HS-CAN)** **U0100:00** • **Communication error with PCM** **U0131:00** • **Communication error with EPS control module** **U0155:00** • **Communication error with instrument cluster** **U0214:00** • **Communication error with start stop unit** **U0232:00** • **Communication error with BSM control module (LH)** **U0233:00** • **Communication error with BSM control module (RH)**
Detection condition	• U0001:88 — The BSM control module detected a CAN bus communication line (HS-CAN) malfunction. • U0100:00 — The BSM control module could not receive a CAN signal from the PCM. • U0131:00 — The BSM control module could not receive a CAN signal from the EPS control module. • U0155:00 — The BSM control module could not receive a CAN signal from the instrument cluster. • U0214:00 — The BSM control module could not receive a CAN signal from the start stop unit. • U0232:00 — The BSM control module (RH) could not receive a CAN signal from the BSM control module (LH). • U0233:00 — The BSM control module (LH) could not receive a CAN signal from the BSM control module (RH).
Fail-safe	• U0001:88 — BSM is stopped. • U0100:00 — BSM is stopped. • U0131:00 — BSM is stopped. • U0155:00 — BSM is stopped. • U0214:00 — BSM is stopped. • U0232:00 — BSM is stopped. • U0233:00 — BSM is stopped.
Possible cause	• Malfunction in CAN bus communication line • Malfunction in CAN communication line between PCM and BSM control module • Malfunction in CAN communication line between EPS control module and BSM control module • Malfunction in CAN communication line between instrument cluster and BSM control module • Malfunction in CAN communication line between start stop unit and BSM control module • Malfunction in CAN communication line between BSM control module (RH) and BSM control module (LH)
System wiring diagram	—

Diagnostic Procedure

- Perform the malfunction diagnosis according to the troubleshooting procedure for the multiplex communication system. (See 10-02B-1 FOREWORD [SKYACTIV-G 2.0 (R.H.D.)].) (See 10-02D-1 FOREWORD [SKYACTIV-D 2.2 (R.H.D.)].)

ON-BOARD DIAGNOSTIC [BLIND SPOT MONITORING (BSM)]

DTC U0401:68 [BLIND SPOT MONITORING (BSM)]

id0902i3952000

System malfunction location	**Error signal received from PCM**
Detection condition	• The BSM control module received an error signal from the PCM.
Fail-safe	• BSM is stopped.
Possible cause	• DTCs are stored in the PCM. • PCM malfunction • BSM control module malfunction
System wiring diagram	—

Diagnostic Procedure

Step	Inspection		Action
1	**VERIFY PCM DTCs** • Perform the DTC inspection for the PCM using the M-MDS. (See 01-02-8 ON-BOARD DIAGNOSTIC TEST [SKYACTIV-G 2.0].) • Is the DTC displayed?	Yes	Repair the malfunctioning part according to the applicable DTC troubleshooting. (See 01-02-14 DTC TABLE [SKYACTIV-G 2.0].)
		No	Go to the next step.
2	**PERFORM DTC INSPECTION AND VERIFY IF MALFUNCTIONING PART IS PCM** • Clear BSM control module DTCs using the M-MDS. (See 09-02H-5 CLEARING DTC [BLIND SPOT MONITORING (BSM)].) • Perform the DTC inspection for the BSM control module using the M-MDS. (See 09-02H-5 DTC INSPECTION [BLIND SPOT MONITORING (BSM)].) • Is DTC U0401:68 displayed?	Yes	Replace the PCM, then go to the next step. (See 01-40-10 PCM REMOVAL/INSTALLATION [SKYACTIV-G 2.0].)
		No	Go to Step 4.
3	**VERIFY THAT REPAIRS HAVE BEEN COMPLETED** • Clear BSM control module DTCs using the M-MDS. (See 09-02H-5 CLEARING DTC [BLIND SPOT MONITORING (BSM)].) • Perform the DTC inspection for the BSM control module using the M-MDS. (See 09-02H-5 DTC INSPECTION [BLIND SPOT MONITORING (BSM)].) • Is DTC U0401:68 displayed?	Yes	Repeat the inspection from Step 1. • If the malfunction recurs, replace the BSM control module, then go to the next step. (See 09-22-67 BLIND SPOT MONITORING (BSM) CONTROL MODULE REMOVAL/INSTALLATION.)
		No	Go to the next step.
4	**VERIFY IF OTHER DTCs DISPLAYED** • Are any other DTCs displayed?	Yes	Repair the malfunctioning part according to the applicable DTC troubleshooting. (See 09-02H-6 DTC TABLE [BLIND SPOT MONITORING (BSM)].)
		No	DTC troubleshooting completed.

ON-BOARD DIAGNOSTIC [BLIND SPOT MONITORING (BSM)]

DTC U0420:68 [BLIND SPOT MONITORING (BSM)]

id0902i3018300

System malfunction location	**Error signal received from EPS control module**
Detection condition	• The BSM control module received an error signal from the EPS control module.
Fail-safe	• BSM is stopped.
Possible cause	• DTCs are stored in the EPS control module. • EPS control module malfunction • BSM control module malfunction
System wiring diagram	—

Diagnostic Procedure

Step	Inspection		Action
1	**VERIFY EPS CONTROL MODULE DTCs** • Perform the DTC inspection for the EPS control module using the M-MDS. (See 06-02-5 ELECTRIC POWER STEERING (EPS) ON-BOARD DIAGNOSIS.) • Is the DTC displayed?	Yes	Repair the malfunctioning part according to the applicable DTC troubleshooting. (See 06-02-5 ELECTRIC POWER STEERING (EPS) ON-BOARD DIAGNOSIS.)
		No	Go to the next step.
2	**PERFORM DTC INSPECTION AND VERIFY IF MALFUNCTIONING PART IS EPS CONTROL MODULE** • Clear BSM control module DTCs using the M-MDS. (See 09-02H-5 CLEARING DTC [BLIND SPOT MONITORING (BSM)].) • Perform the DTC inspection for the BSM control module using the M-MDS. (See 09-02H-5 DTC INSPECTION [BLIND SPOT MONITORING (BSM)].) • Is DTC U0420:68 displayed?	Yes	Replace the EPS control module, then go to the next step. (See 06-13-4 STEERING WHEEL AND COLUMN REMOVAL/INSTALLATION.)
		No	Go to Step 4.
3	**VERIFY THAT REPAIRS HAVE BEEN COMPLETED** • Clear BSM control module DTCs using the M-MDS. (See 09-02H-5 CLEARING DTC [BLIND SPOT MONITORING (BSM)].) • Perform the DTC inspection for the BSM control module using the M-MDS. (See 09-02H-5 DTC INSPECTION [BLIND SPOT MONITORING (BSM)].) • Is DTC U0420:68 displayed?	Yes	Repeat the inspection from Step 1. • If the malfunction recurs, replace the BSM control module, then go to the next step. (See 09-22-67 BLIND SPOT MONITORING (BSM) CONTROL MODULE REMOVAL/INSTALLATION.)
		No	Go to the next step.
4	**VERIFY IF OTHER DTCs DISPLAYED** • Are any other DTCs displayed?	Yes	Repair the malfunctioning part according to the applicable DTC troubleshooting. (See 09-02H-6 DTC TABLE [BLIND SPOT MONITORING (BSM)].)
		No	DTC troubleshooting completed.

ON-BOARD DIAGNOSTIC [BLIND SPOT MONITORING (BSM)]

DTC U0423:68 [BLIND SPOT MONITORING (BSM)]

id0902i3018400

System malfunction location	**Error signal received from instrument cluster**
Detection condition	• The BSM control module received an error signal from the instrument cluster.
Fail-safe	• BSM is stopped.
Possible cause	• DTCs are stored in the instrument cluster. • Instrument cluster malfunction • BSM control module malfunction
System wiring diagram	—

Diagnostic Procedure

Step	Inspection		Action
1	**VERIFY INSTRUMENT CLUSTER DTCs** • Perform the DTC inspection for the instrument cluster using the M-MDS. (See 09-02G-7 DTC INSPECTION [INSTRUMENT CLUSTER].) • Is the DTC displayed?	Yes	Repair the malfunctioning part according to the applicable DTC troubleshooting. (See 09-02G-10 DTC TABLE [INSTRUMENT CLUSTER].)
		No	Go to the next step.
2	**PERFORM DTC INSPECTION AND VERIFY IF MALFUNCTIONING PART IS INSTRUMENT CLUSTER** • Clear BSM control module DTCs using the M-MDS. (See 09-02H-5 CLEARING DTC [BLIND SPOT MONITORING (BSM)].) • Perform the DTC inspection for the BSM control module using the M-MDS. (See 09-02H-5 DTC INSPECTION [BLIND SPOT MONITORING (BSM)].) • Is the DTC U0423:68 displayed?	Yes	Replace the instrument cluster, then go to the next step. (See 09-22-6 INSTRUMENT CLUSTER REMOVAL/INSTALLATION.)
		No	Go to Step 4.
3	**VERIFY THAT REPAIRS HAVE BEEN COMPLETED** • Clear BSM control module DTCs using the M-MDS. (See 09-02H-5 CLEARING DTC [BLIND SPOT MONITORING (BSM)].) • Perform the DTC inspection for the BSM control module using the M-MDS. (See 09-02H-5 DTC INSPECTION [BLIND SPOT MONITORING (BSM)].) • Is the DTC U0423:68 displayed?	Yes	Repeat the inspection from Step 1. • If the malfunction recurs, replace the BSM control module, then go to the next step. (See 09-22-67 BLIND SPOT MONITORING (BSM) CONTROL MODULE REMOVAL/INSTALLATION.)
		No	Go to the next step.
4	**VERIFY IF OTHER DTCs DISPLAYED** • Are any other DTCs displayed?	Yes	Repair the malfunctioning part according to the applicable DTC troubleshooting. (See 09-02H-6 DTC TABLE [BLIND SPOT MONITORING (BSM)].)
		No	DTC troubleshooting completed.

ON-BOARD DIAGNOSTIC [BLIND SPOT MONITORING (BSM)]

DTC U0515:68 [BLIND SPOT MONITORING (BSM)]

id0902i3018500

System malfunction location	**Error signal received from start stop unit**
Detection condition	• The BSM control module received an error signal from the start stop unit.
Fail-safe	• BSM is stopped.
Possible cause	• DTCs are stored in the start stop unit. • Start stop unit malfunction • BSM control module malfunction
System wiring diagram	—

Diagnostic Procedure

Step	Inspection		Action
1	**VERIFY START STOP UNIT DTCs** • Perform the DTC inspection for the start stop unit using the M-MDS. (See 09-02C-6 DTC INSPECTION [START STOP UNIT].) • Is the DTC displayed?	Yes	Repair the malfunctioning part according to the applicable DTC troubleshooting. (See 09-02C-8 DTC TABLE [START STOP UNIT].)
		No	Go to the next step.
2	**PERFORM DTC INSPECTION AND VERIFY IF MALFUNCTIONING PART IS START STOP UNIT** • Clear BSM control module DTCs using the M-MDS. (See 09-02H-5 CLEARING DTC [BLIND SPOT MONITORING (BSM)].) • Perform the DTC inspection for the BSM control module using the M-MDS. (See 09-02H-5 DTC INSPECTION [BLIND SPOT MONITORING (BSM)].) • Is DTC U0515:68 displayed?	Yes	Replace the start stop unit, then go to the next step. (See 09-14-54 START STOP UNIT REMOVAL/INSTALLATION.)
		No	Go to Step 4.
3	**VERIFY THAT REPAIRS HAVE BEEN COMPLETED** • Clear BSM control module DTCs using the M-MDS. (See 09-02H-5 CLEARING DTC [BLIND SPOT MONITORING (BSM)].) • Perform the DTC inspection for the BSM control module using the M-MDS. (See 09-02H-5 DTC INSPECTION [BLIND SPOT MONITORING (BSM)].) • Is DTC U0515:68 displayed?	Yes	Repeat the inspection from Step 1. • If the malfunction recurs, replace the BSM control module, then go to the next step. (See 09-22-67 BLIND SPOT MONITORING (BSM) CONTROL MODULE REMOVAL/INSTALLATION.)
		No	Go to the next step.
4	**VERIFY IF OTHER DTCs DISPLAYED** • Are any other DTCs displayed?	Yes	Repair the malfunctioning part according to the applicable DTC troubleshooting. (See 09-02H-6 DTC TABLE [BLIND SPOT MONITORING (BSM)].)
		No	DTC troubleshooting completed.

ON-BOARD DIAGNOSTIC [BLIND SPOT MONITORING (BSM)]

DTC U0533:68 [BLIND SPOT MONITORING (BSM)]

id0902i3393300

System malfunction location	**Error signal received from BSM control module (LH)**
Detection condition	• The BSM control module (RH) received an error signal from the BSM control module (LH).
Fail-safe	• BSM is stopped.
Possible cause	• BSM control module (LH) malfunction • BSM control module (RH) malfunction
System wiring diagram	—

Diagnostic Procedure

Step	Inspection		Action
1	**PERFORM DTC INSPECTION AND VERIFY IF MALFUNCTIONING PART IS BSM CONTROL MODULE (LH)** • Clear the BSM control module (RH) DTCs using the M-MDS. (See 09-02H-5 CLEARING DTC [BLIND SPOT MONITORING (BSM)].) • Perform the DTC inspection for the BSM control module (RH) using the M-MDS. (See 09-02H-5 DTC INSPECTION [BLIND SPOT MONITORING (BSM)].) • Is the DTC U0533:68 displayed?	Yes	Replace the BSM control module (LH), then go to the next step. (See 09-22-67 BLIND SPOT MONITORING (BSM) CONTROL MODULE REMOVAL/INSTALLATION.)
		No	Go to Step 3.
2	**PERFORM DTC INSPECTION AND VERIFY IF MALFUNCTIONING PART IS BSM CONTROL MODULE (RH)** • Clear the BSM control module (RH) DTCs using the M-MDS. (See 09-02H-5 CLEARING DTC [BLIND SPOT MONITORING (BSM)].) • Perform the DTC inspection for the BSM control module (RH) using the M-MDS. (See 09-02H-5 DTC INSPECTION [BLIND SPOT MONITORING (BSM)].) • Is the DTC U0533:68 displayed?	Yes	Replace the BSM control module (RH), then go to the next step. (See 09-22-67 BLIND SPOT MONITORING (BSM) CONTROL MODULE REMOVAL/INSTALLATION.)
		No	Go to the next step.
3	**VERIFY IF OTHER DTCs DISPLAYED** • Are any other DTCs displayed?	Yes	Repair the malfunctioning part according to the applicable DTC troubleshooting. (See 09-02H-6 DTC TABLE [BLIND SPOT MONITORING (BSM)].)
		No	DTC troubleshooting completed.

ON-BOARD DIAGNOSTIC [BLIND SPOT MONITORING (BSM)]

DTC U0534:68 [BLIND SPOT MONITORING (BSM)]

id0902i3393400

System malfunction location	**Error signal received from BSM control module (RH)**
Detection condition	• The BSM control module (LH) received an error signal from the BSM control module (RH).
Fail-safe	• BSM is stopped.
Possible cause	• BSM control module (RH) malfunction • BSM control module (LH) malfunction
System wiring diagram	—

Diagnostic Procedure

Step	Inspection		Action
1	**PERFORM DTC INSPECTION AND VERIFY IF MALFUNCTIONING PART IS BSM CONTROL MODULE (RH)** • Clear the BSM control module (LH) DTCs using the M-MDS. (See 09-02H-5 CLEARING DTC [BLIND SPOT MONITORING (BSM)].) • Perform the DTC inspection for the BSM control module (LH) using the M-MDS. (See 09-02H-5 DTC INSPECTION [BLIND SPOT MONITORING (BSM)].) • Is the DTC U0534:68 displayed?	Yes	Replace the BSM control module (RH), then go to the next step. (See 09-22-67 BLIND SPOT MONITORING (BSM) CONTROL MODULE REMOVAL/INSTALLATION.)
		No	Go to Step 3.
2	**PERFORM DTC INSPECTION AND VERIFY IF MALFUNCTIONING PART IS BSM CONTROL MODULE (LH)** • Clear the BSM control module (LH) DTCs using the M-MDS. (See 09-02H-5 CLEARING DTC [BLIND SPOT MONITORING (BSM)].) • Perform the DTC inspection for the BSM control module (LH) using the M-MDS. (See 09-02H-5 DTC INSPECTION [BLIND SPOT MONITORING (BSM)].) • Is the DTC U0534:68 displayed?	Yes	Replace the BSM control module (LH), then go to the next step. (See 09-22-67 BLIND SPOT MONITORING (BSM) CONTROL MODULE REMOVAL/INSTALLATION.)
		No	Go to the next step.
3	**VERIFY IF OTHER DTCs DISPLAYED** • Are any other DTCs displayed?	Yes	Repair the malfunctioning part according to the applicable DTC troubleshooting. (See 09-02H-6 DTC TABLE [BLIND SPOT MONITORING (BSM)].)
		No	DTC troubleshooting completed.

ON-BOARD DIAGNOSTIC [BLIND SPOT MONITORING (BSM)]

DTC U3000:01 [BLIND SPOT MONITORING (BSM)]

id0902i3393200

System malfunction location	**Electrical malfunction inside BSM control module**
Detection condition	• An electrical malfunction inside BSM control module is detected.
Fail-safe	• BSM is stopped.
Possible cause	• BSM control module malfunction
System wiring diagram	—

Diagnostic Procedure

Step	Inspection		Action
1	**PERFORM DTC INSPECTION AND VERIFY IF MALFUNCTIONING PART IS BSM CONTROL MODULE** • Clear BSM control module DTCs using the M-MDS. (See 09-02H-5 CLEARING DTC [BLIND SPOT MONITORING (BSM)].) • Perform the DTC inspection for the BSM control module using the M-MDS. (See 09-02H-5 DTC INSPECTION [BLIND SPOT MONITORING (BSM)].) • Is DTC U3000:01 displayed?	Yes	Replace the BSM control module, then go to the next step. (See 09-22-67 BLIND SPOT MONITORING (BSM) CONTROL MODULE REMOVAL/INSTALLATION.)
		No	Go to the next step.
2	**VERIFY IF OTHER DTCs DISPLAYED** • Are any other DTCs displayed?	Yes	Repair the malfunctioning part according to the applicable DTC troubleshooting. (See 09-02H-6 DTC TABLE [BLIND SPOT MONITORING (BSM)].)
		No	DTC troubleshooting completed.

DTC U3000:09 [BLIND SPOT MONITORING (BSM)]

id0902i3393100

System malfunction location	**BSM control module internal malfunction**
Detection condition	• The BSM control module detected a malfunction inside the voltage control oscillator.
Fail-safe	• BSM is stopped.
Possible cause	• BSM control module malfunction
System wiring diagram	—

Diagnostic Procedure

Step	Inspection		Action
1	**PERFORM DTC INSPECTION AND VERIFY IF MALFUNCTIONING PART IS BSM CONTROL MODULE** • Clear BSM control module DTCs using the M-MDS. (See 09-02H-5 CLEARING DTC [BLIND SPOT MONITORING (BSM)].) • Perform the DTC inspection for the BSM control module using the M-MDS. (See 09-02H-5 DTC INSPECTION [BLIND SPOT MONITORING (BSM)].) • Is the DTC U3000:09 displayed?	Yes	Replace the BSM control module, then go to the next step. (See 09-22-67 BLIND SPOT MONITORING (BSM) CONTROL MODULE REMOVAL/INSTALLATION.)
		No	Go to the next step.
2	**VERIFY IF OTHER DTCs DISPLAYED** • Are any other DTCs displayed?	Yes	Repair the malfunctioning part according to the applicable DTC troubleshooting. (See 09-02H-6 DTC TABLE [BLIND SPOT MONITORING (BSM)].)
		No	DTC troubleshooting completed.

ON-BOARD DIAGNOSTIC [BLIND SPOT MONITORING (BSM)]

DTC U3000:4A [BLIND SPOT MONITORING (BSM)]

id0902i3393500

System malfunction location	**BSM control module assembly malfunction**
Detection condition	• The left and right BSM control modules are installed in reverse, or an open circuit is detected in the BSM control module circuit.
Fail-safe	—
Possible cause	• The BSM control modules (LH) and (RH) are installed in reverse. • Malfunction in BSM control module (LH) connector or terminal • Open circuit in wiring harness between the following terminals: — BSM control module (LH) terminal A and body ground — BSM control module (LH) terminal E and body ground • Malfunction in BSM control module (RH) connector or terminal • Open circuit in wiring harness between BSM control module (RH) terminal A and body ground • BSM control module malfunction

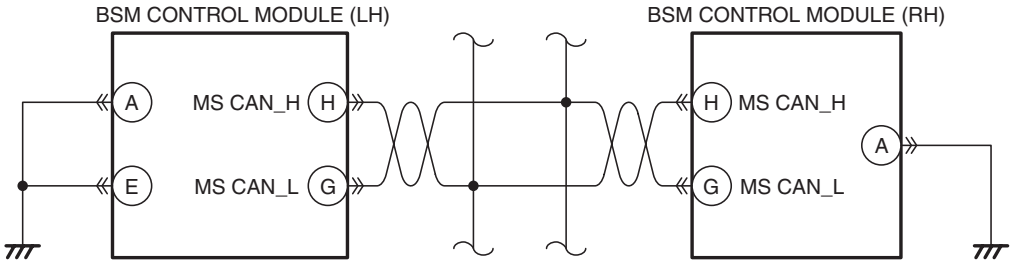

BSM CONTROL MODULE (LH)/(RH)
WIRING HARNESS-SIDE CONNECTOR

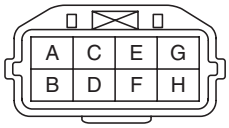

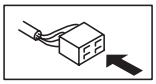

Diagnostic Procedure

Step	Inspection		Action
1	**VERIFY IF LEFT AND RIGHT BSM CONTROL MODULES ARE INSTALLED IN REVERSE** • Verify that the left and right indication labels are attached to the BSM control modules. (See 09-22-67 BLIND SPOT MONITORING (BSM) CONTROL MODULE REMOVAL/INSTALLATION.) • Are the left and right BSM control modules installed correctly?	Yes	Go to the next step.
		No	Install the BSM control modules in their proper positions, then go to Step 6.
2	**INSPECT BSM CONTROL MODULE (LH) CONNECTOR CONDITION** • Switch the ignition to off. • Disconnect the negative battery cable. (See 01-17A-11 NEGATIVE BATTERY CABLE DISCONNECTION/CONNECTION [SKYACTIV-G 2.0].) (See 01-17B-9 NEGATIVE BATTERY CABLE DISCONNECTION/CONNECTION [SKYACTIV-D 2.2].) • Disconnect the BSM control module (LH) connector. • Inspect the connector engagement and connection condition and inspect the terminals for damage, deformation, corrosion, or disconnection. • Is the connector normal?	Yes	Go to the next step.
		No	Repair or replace the connector, then go to Step 6.

ON-BOARD DIAGNOSTIC [BLIND SPOT MONITORING (BSM)]

Step	Inspection		Action
3	**INSPECT BSM CONTROL MODULE (LH) CIRCUIT FOR OPEN CIRCUIT** • Verify that the BSM control module (LH) connector is disconnected. • Inspect the wiring harness between the following terminals (vehicle wiring harness side) and body ground for continuity. — BSM control module (LH) terminal A — BSM control module (LH) terminal E • Is there continuity?	Yes	Go to the next step.
		No	Repair or replace the wiring harness which has an open circuit, then go to Step 6.
4	**INSPECT BSM CONTROL MODULE (RH) CONNECTOR CONDITION** • Disconnect the BSM control module (RH) connector. • Inspect the connector engagement and connection condition and inspect the terminals for damage, deformation, corrosion, or disconnection. • Is the connector normal?	Yes	Go to the next step.
		No	Repair or replace the connector, then go to Step 6.
5	**INSPECT BSM CONTROL MODULE (RH) CIRCUIT FOR OPEN CIRCUIT** • Verify that the BSM control module (RH) connector is disconnected. • Inspect for continuity between BSM control module (RH) terminal A (vehicle wiring harness side) and body ground. • Is there continuity?	Yes	Go to the next step.
		No	Repair or replace the wiring harness which has an open circuit, then go to the next step.
6	**VERIFY THAT REPAIRS HAVE BEEN COMPLETED** • Reconnect all the disconnected connectors. • Reconnect the disconnected negative battery cable. (See 01-17A-11 NEGATIVE BATTERY CABLE DISCONNECTION/CONNECTION [SKYACTIV-G 2.0].) (See 01-17B-9 NEGATIVE BATTERY CABLE DISCONNECTION/CONNECTION [SKYACTIV-D 2.2].) • Clear BSM control module DTCs using the M-MDS. (See 09-02H-5 CLEARING DTC [BLIND SPOT MONITORING (BSM)].) • Perform the DTC inspection for the BSM control module using the M-MDS. (See 09-02H-5 DTC INSPECTION [BLIND SPOT MONITORING (BSM)].) • Is DTC U3000:4A displayed?	Yes	Repeat the inspection from Step 1. • If the malfunction recurs, replace the BSM control module, then go to the next step. (See 09-22-67 BLIND SPOT MONITORING (BSM) CONTROL MODULE REMOVAL/INSTALLATION.)
		No	Go to the next step.
7	**VERIFY IF OTHER DTCs DISPLAYED** • Are any other DTCs displayed?	Yes	Repair the malfunctioning part according to the applicable DTC troubleshooting. (See 09-02H-6 DTC TABLE [BLIND SPOT MONITORING (BSM)].)
		No	DTC troubleshooting completed.

ON-BOARD DIAGNOSTIC [BLIND SPOT MONITORING (BSM)]

DTC U3000:97 [BLIND SPOT MONITORING (BSM)]

id0902i3393600

System malfunction location	**Radar performance malfunction**
Detection condition	• BSM control module internal radar sensor sensitivity is decreased. • BSM control module internal radar sensor axis is deviated.
Fail-safe	—
Possible cause	• Rear bumper malfunction (Dirt or foreign material (reflective object) is adhered.) • BSM control module malfunction (Dirt or foreign material (reflective object) is adhered.) • Concavity and convexity on the surface of the repaired rear bumper • BSM control module malfunction
System wiring diagram	—

Diagnostic Procedure

Step	Inspection		Action
1	**INSPECT REAR BUMPER SURFACE** • Visually inspect the rear bumper surface for the following: — Dirt — Adhered foreign material (reflective object) • Is the rear bumper normal?	Yes	Go to the next step.
		No	Remove dirt or foreign material (reflective object), then go to Step 4.
2	**INSPECT AREA AROUND BSM CONTROL MODULE** • Visually inspect the area around the BSM control module for the following: — Dirt — Adhered foreign material (reflective object) • Is the area around the BSM control module normal?	Yes	Go to the next step.
		No	Remove dirt or foreign material (reflective object), then go to Step 4.
3	**VERIFY REAR BUMPER REPAIR HISTORY** • Verify if the rear bumper had been repaired or repainted before. • Is the paint Mazda genuine?	Yes	Go to the next step.
		No	Replace the rear bumper, then go to the next step. (See 09-10-24 REAR BUMPER REMOVAL/INSTALLATION.)
4	**VERIFY THAT REPAIRS HAVE BEEN COMPLETED** • Clear BSM control module DTCs using the M-MDS. (See 09-02H-5 CLEARING DTC [BLIND SPOT MONITORING (BSM)].) • Perform the DTC inspection for the BSM control module using the M-MDS. (See 09-02H-5 DTC INSPECTION [BLIND SPOT MONITORING (BSM)].) • Is DTC U3000:97 displayed?	Yes	Repeat the inspection from Step 1. • If the malfunction recurs, replace the BSM control module, then go to the next step. (See 09-22-67 BLIND SPOT MONITORING (BSM) CONTROL MODULE REMOVAL/INSTALLATION.)
		No	Go to the next step.
5	**VERIFY IF OTHER DTCs DISPLAYED** • Are any other DTCs displayed?	Yes	Repair the malfunctioning part according to the applicable DTC troubleshooting. (See 09-02H-6 DTC TABLE [BLIND SPOT MONITORING (BSM)].)
		No	DTC troubleshooting completed.

ON-BOARD DIAGNOSTIC [BLIND SPOT MONITORING (BSM)]

DTC U3003:16 [BLIND SPOT MONITORING (BSM)]

id0902i3394000

System malfunction location	**BSM control module low power supply voltage input (less than 9 V)**
Detection condition	• BSM control module power supply voltage of **less than 9 V** is detected for **10 s or more**.
Fail-safe	• BSM is stopped.
Possible cause	• DTCs are stored in the PCM. • Battery malfunction • Generator malfunction • Malfunction in BSM control module (LH) connector or terminal • Malfunction in BSM control module (RH) connector or terminal • BSM control module power supply circuit malfunction — Short to ground in wiring harness between C/U IG1 15 A fuse and BSM control module terminal B — C/U IG1 15 A fuse malfunction — Open circuit in wiring harness between IG1 relay and BSM control module terminal B • BSM control module malfunction

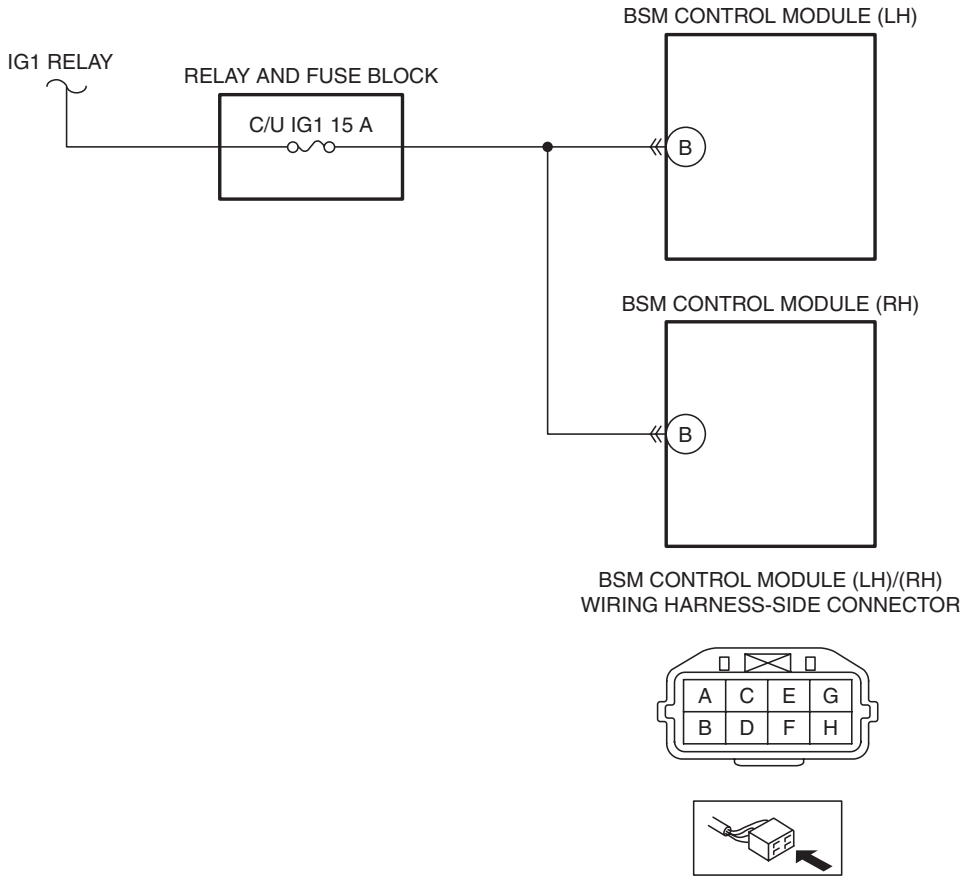

ON-BOARD DIAGNOSTIC [BLIND SPOT MONITORING (BSM)]

Diagnostic Procedure

Step	Inspection		Action
1	**VERIFY PCM DTCs** • Perform the DTC inspection for the PCM using the M-MDS. (See 01-02-8 ON-BOARD DIAGNOSTIC TEST [SKYACTIV-G 2.0].) • Is the DTC displayed?	Yes	Repair the malfunctioning part according to the applicable DTC troubleshooting. (See 01-02-14 DTC TABLE [SKYACTIV-G 2.0].)
		No	Go to the next step.
2	**INSPECT BATTERY** • Inspect the battery. (See 01-17A-7 BATTERY INSPECTION [SKYACTIV-G 2.0].) (See 01-17B-6 BATTERY INSPECTION [SKYACTIV-D 2.2].) • Is the battery normal?	Yes	Go to the next step.
		No	Recharge or replace the battery, then go to Step 7. (See 01-17A-9 BATTERY RECHARGING [SKYACTIV-G 2.0].) (See 01-17B-8 BATTERY RECHARGING [SKYACTIV-D 2.2].) (See 01-17A-3 BATTERY REMOVAL/INSTALLATION [SKYACTIV-G 2.0].) (See 01-17B-3 BATTERY REMOVAL/INSTALLATION [SKYACTIV-D 2.2].)
3	**INSPECT GENERATOR** • Inspect the generator. (See 01-17A-19 GENERATOR INSPECTION [SKYACTIV-G 2.0].) (See 01-17B-16 GENERATOR INSPECTION [SKYACTIV-D 2.2].) • Is the generator normal?	Yes	Go to the next step.
		No	Replace the generator, then go to Step 7. (See 01-17A-17 GENERATOR REMOVAL/INSTALLATION [SKYACTIV-G 2.0].) (See 01-17B-14 GENERATOR REMOVAL/INSTALLATION [SKYACTIV-D 2.2].)
4	**INSPECT BSM CONTROL MODULE (LH) CONNECTOR CONDITION** • Switch the ignition to off. • Disconnect the negative battery cable. (See 01-17A-11 NEGATIVE BATTERY CABLE DISCONNECTION/CONNECTION [SKYACTIV-G 2.0].) (See 01-17B-9 NEGATIVE BATTERY CABLE DISCONNECTION/CONNECTION [SKYACTIV-D 2.2].) • Disconnect the BSM control module (LH) connector. • Inspect the connector engagement and connection condition and inspect the terminals for damage, deformation, corrosion, or disconnection. • Is the connector normal?	Yes	Go to the next step.
		No	Repair or replace the connector, then go to Step 7.
5	**INSPECT BSM CONTROL MODULE (RH) CONNECTOR CONDITION** • Disconnect the BSM control module (RH) connector. • Inspect the connector engagement and connection condition and inspect the terminals for damage, deformation, corrosion, or disconnection. • Is the connector normal?	Yes	Go to the next step.
		No	Repair or replace the connector, then go to Step 7.
6	**VERIFY BSM CONTROL MODULE POWER SUPPLY VOLTAGE** • Reconnect all the disconnected connectors. • Connect the negative battery cable. (See 01-17A-11 NEGATIVE BATTERY CABLE DISCONNECTION/CONNECTION [SKYACTIV-G 2.0].) (See 01-17B-9 NEGATIVE BATTERY CABLE DISCONNECTION/CONNECTION [SKYACTIV-D 2.2].) • Display PID VPWR_IG1 using the M-MDS. (See 09-02H-33 PID/DATA MONITOR INSPECTION [BLIND SPOT MONITORING (BSM)].) • Is the voltage **B+**?	Yes	Go to the next step.
		No	Inspect the C/U IG1 15 A fuse. • If a fuse is burnt out: — Repair or replace the wiring harness which is shorted to ground. — Replace the fuse. • If a fuse is damaged: — Replace the fuse. • If the fuse is normal: — Repair or replace the wiring harness which has an open circuit. Go to the next step.

ON-BOARD DIAGNOSTIC [BLIND SPOT MONITORING (BSM)]

Step	Inspection		Action
7	**VERIFY THAT REPAIRS HAVE BEEN COMPLETED** • Reconnect all the disconnected connectors. • Reconnect the disconnected negative battery cable. (See 01-17A-11 NEGATIVE BATTERY CABLE DISCONNECTION/CONNECTION [SKYACTIV-G 2.0].) (See 01-17B-9 NEGATIVE BATTERY CABLE DISCONNECTION/CONNECTION [SKYACTIV-D 2.2].) • Clear BSM control module DTCs using the M-MDS. (See 09-02H-5 CLEARING DTC [BLIND SPOT MONITORING (BSM)].) • Switch the ignition ON (engine off or on) and wait for **10 s or more**. • Perform the DTC inspection for the BSM control module using the M-MDS. (See 09-02H-5 DTC INSPECTION [BLIND SPOT MONITORING (BSM)].) • Is DTC U3003:16 displayed?	Yes	Repeat the inspection from Step 1. • If the malfunction recurs, replace the BSM control module, then go to the next step. (See 09-22-67 BLIND SPOT MONITORING (BSM) CONTROL MODULE REMOVAL/INSTALLATION.)
		No	Go to the next step.
8	**VERIFY IF OTHER DTCs DISPLAYED** • Are any other DTCs displayed?	Yes	Repair the malfunctioning part according to the applicable DTC troubleshooting. (See 09-02H-6 DTC TABLE [BLIND SPOT MONITORING (BSM)].)
		No	DTC troubleshooting completed.

DTC U3003:17 [BLIND SPOT MONITORING (BSM)]

id0902i3394100

System malfunction location	**BSM control module high power supply voltage input (16 V or more)**
Detection condition	• BSM control module power supply voltage of **16 V or more** is detected for **10 s or more**.
Fail-safe	• BSM is stopped.
Possible cause	• DTCs are stored in the PCM. • Battery malfunction • Generator malfunction • BSM control module malfunction
System wiring diagram	—

ON-BOARD DIAGNOSTIC [BLIND SPOT MONITORING (BSM)]

Diagnostic Procedure

Step	Inspection		Action
1	**VERIFY PCM DTCs** • Perform the DTC inspection for the PCM using the M-MDS. (See 01-02-8 ON-BOARD DIAGNOSTIC TEST [SKYACTIV-G 2.0].) • Is the DTC displayed?	Yes	Repair the malfunctioning part according to the applicable DTC troubleshooting. (See 01-02-14 DTC TABLE [SKYACTIV-G 2.0].)
		No	Go to the next step.
2	**INSPECT BATTERY** • Inspect the battery. (See 01-17A-7 BATTERY INSPECTION [SKYACTIV-G 2.0].) (See 01-17B-6 BATTERY INSPECTION [SKYACTIV-D 2.2].) • Is the battery normal?	Yes	Go to the next step.
		No	Replace the battery, then go to Step 4. (See 01-17A-3 BATTERY REMOVAL/INSTALLATION [SKYACTIV-G 2.0].) (See 01-17B-3 BATTERY REMOVAL/INSTALLATION [SKYACTIV-D 2.2].)
3	**INSPECT GENERATOR** • Inspect the generator. (See 01-17A-19 GENERATOR INSPECTION [SKYACTIV-G 2.0].) (See 01-17B-16 GENERATOR INSPECTION [SKYACTIV-D 2.2].) • Is the generator normal?	Yes	Go to the next step.
		No	Replace the generator, then go to the next step. (See 01-17A-17 GENERATOR REMOVAL/ INSTALLATION [SKYACTIV-G 2.0].) (See 01-17B-14 GENERATOR REMOVAL/ INSTALLATION [SKYACTIV-D 2.2].)
4	**VERIFY THAT REPAIRS HAVE BEEN COMPLETED** • Clear BSM control module DTCs using the M-MDS. (See 09-02H-5 CLEARING DTC [BLIND SPOT MONITORING (BSM)].) • Switch the ignition ON (engine off or on) and wait for **10 s or more**. • Perform the DTC inspection for the BSM control module using the M-MDS. (See 09-02H-5 DTC INSPECTION [BLIND SPOT MONITORING (BSM)].) • Is DTC U3003:17 displayed?	Yes	Repeat the inspection from Step 1. • If the malfunction recurs, replace the BSM control module, then go to the next step. (See 09-22-67 BLIND SPOT MONITORING (BSM) CONTROL MODULE REMOVAL/INSTALLATION.)
		No	Go to the next step.
5	**VERIFY IF OTHER DTCs DISPLAYED** • Are any other DTCs displayed?	Yes	Repair the malfunctioning part according to the applicable DTC troubleshooting. (See 09-02H-6 DTC TABLE [BLIND SPOT MONITORING (BSM)].)
		No	DTC troubleshooting completed.

ON-BOARD DIAGNOSTIC [BLIND SPOT MONITORING (BSM)]

PID/DATA MONITOR INSPECTION [BLIND SPOT MONITORING (BSM)]

id0902i3960600

1. Connect the M-MDS to the DLC-2.
2. After the vehicle is identified, select the following items from the initialization screen of the M-MDS.
   (1) Select “DataLogger”.
   (2) Select “Modules”.
   (3) Select “BSML” or “BSMR”.
3. Select the applicable PID from the PID table.
4. Verify the PID data according to the directions on the screen.

Note

- The PID data screen function is used for monitoring the calculated value of input/output signals in the module. Therefore, if the monitored value of the output parts is not within the specification, it is necessary to inspect the monitored value of input parts corresponding to the applicable output part control. In addition, because the system does not display an output part malfunction as an abnormality in the monitored value, it is necessary to inspect the output parts individually.
- When detecting DTCs, PIDs related to a malfunctioning system may not display even if the module is normal. Therefore, if a PID is not displayed, it is necessary to verify the DTC, perform malfunction diagnosis of the DTC that was detected, and do repairs.

PID/DATA MONITOR TABLE [BLIND SPOT MONITORING (BSM)]

id0902i3960700

BSM Control Module (LH)

—: Not applicable

PID name	Unit/Status	Data contents	Inspection item(s)
BSM_ST	On/Off	• On: BSM is operated. • Off: BSM is not operated.	BSM control module (LH)
DTC_CNT	—	Number of DTCs stored in the BSM control module (LH) is displayed.	BSM control module (LH)
SHIFT_R	Not_R/R	ATX: • Not_R: Selector lever is in position other than R. • R: Selector lever is in R position. MTX: • Not_R: Shift lever is in position other than reverse. • R: Shift lever is in reverse position.	ATX: • Transaxle range sensor (TCM) MTX: • Back-up light switch
SWA_POS	° (deg)	Steering angle is displayed.	Steering angle sensor
TURN_SW_L	On/Off	• On: Turn switch is in LH position. • Off: Turn switch is in position other than LH.	Turn Switch
TURN_SW_R	On/Off	• On: Turn switch is in RH position. • Off: Turn switch is in position other than RH.	Turn Switch
VPWR_IG1	V	BSM control module (LH) power supply voltage is displayed.	• BSM control module (LH) • IG1 relay • Battery
VSPD	KPH, MPH	Vehicle speed is displayed.	—
WRN_IND_L	Off/On	• Off: BSM indicator light (LH) is not illuminated. • On: BSM indicator light (LH) is illuminated.	BSM indicator light (LH)

BSM Control Module (RH)

—: Not applicable

PID name	Unit/Status	Data contents	Inspection item(s)
BSM_OFF_IL	On/Off	• On: BSM OFF indicator light is illuminated. • Off: BSM OFF indicator light is not illuminated.	• BSM OFF switch • Instrument cluster
BSM_ST	On/Off	• On: BSM is operated. • Off: BSM is not operated.	BSM control module (RH)
Buzzer	On/Off	• On: BSM buzzer is operated. • Off: BSM buzzer is not operated.	• BSM control module • Instrument cluster
DTC_CNT	—	Number of DTCs stored in the BSM control module (RH) is displayed.	BSM control module (RH)

ON-BOARD DIAGNOSTIC [BLIND SPOT MONITORING (BSM)]

PID name	Unit/Status	Data contents	Inspection item(s)
SHIFT_R	Not_R/R	ATX: • Not_R: Selector lever is in position other than R. • R: Selector lever is in R position. MTX: • Not_R: Shift lever is in position other than reverse. • R: Shift lever is in reverse position.	ATX: • Transaxle range sensor (TCM) MTX: • Back-up light switch
SWA_POS	° (deg)	Steering angle is displayed.	Steering angle sensor
TURN_SW_L	On/Off	• On: Turn switch is in LH position. • Off: Turn switch is in position other than LH.	Turn Switch
TURN_SW_R	On/Off	• On: Turn switch is in RH position. • Off: Turn switch is in position other than RH.	Turn Switch
VPWR_IG1	V	BSM control module (RH) power supply voltage is displayed.	• BSM control module (RH) • IG1 relay • Battery
VSPD	KPH, MPH	Vehicle speed is displayed.	—
WRN_IND_R	Off/On	• Off: BSM indicator light (RH) is not illuminated. • On: BSM indicator light (RH) is illuminated.	BSM indicator light (RH)

ACTIVE COMMAND MODES INSPECTION [BLIND SPOT MONITORING (BSM)]

id0902i3960800

1. Connect the M-MDS to the DLC-2.
2. After the vehicle is identified, select the following items from the initialization screen of the M-MDS.
   (1) Select “DataLogger”.
   (2) Select “Modules”.
   (3) Select “BSML” or “BSMR”.
3. Select the simulation items from the PID table.
4. Perform the active command modes function, inspect the operations for each parts.
   - If the operation of output parts cannot be verified after the active command mode inspection is performed, this could indicate the possibility of an open or short circuit, sticking, or operation malfunction in the output parts.

ACTIVE COMMAND MODES TABLE [BLIND SPOT MONITORING (BSM)]

id0902i3960900

BSM Control Module (LH)

Command name	Unit/ Operation	Data contents	Output part name
VSPD	OFF/ON	• OFF: Does not input vehicle speed. • ON: Inputs vehicle speed of **34 km/h {21 mph}**.	BSM control module (LH)
WRN_IND_L	Off/On	• Off: Turns off BSM indicator light (LH). • On: Illuminates BSM indicator light (LH).	BSM indicator light (LH)

BSM Control Module (RH)

Command name	Unit/ Operation	Data contents	Output part name
BSM_OFF_IL	On/Off	• On: Illuminates BSM OFF indicator light. • On: Turns off BSM OFF indicator light.	BSM OFF indicator light (Instrument cluster)
Buzzer	On/Off	• On: Operates BSM warning alarm. • Off: Stops BSM warning alarm.	BSM warning alarm (Instrument cluster)
VSPD	OFF/ON	• OFF: Does not input vehicle speed. • ON: Inputs vehicle speed of **34 km/h {21 mph}**.	BSM control module (RH)
WRN_IND_R	Off/On	• Off: Turns off BSM indicator light (RH). • On: Illuminates BSM indicator light (RH).	BSM indicator light (RH)

09-02I ON-BOARD DIAGNOSTIC [REAR VEHICLE MONITORING SYSTEM]

ON-BOARD DIAGNOSTIC WIRING DIAGRAM [REAR VEHICLE MONITORING SYSTEM] 09-02I–2
FOREWORD [REAR VEHICLE MONITORING SYSTEM] 09-02I–3
Troubleshooting Procedure 09-02I–3
Action for Non-repeatable Malfunction 09-02I–4
DTC INSPECTION [REAR VEHICLE MONITORING SYSTEM] 09-02I–4
CMDTC Self Test 09-02I–4
ODDTC Self Test 09-02I–4
CLEARING DTC [REAR VEHICLE MONITORING SYSTEM] 09-02I–5
CMDTC Memory Clearing Procedure 09-02I–5
ODDTC Memory Clearing Procedure 09-02I–5
DTC TABLE [REAR VEHICLE MONITORING SYSTEM] 09-02I–5
DTC B11CB:11 [REAR VEHICLE MONITORING SYSTEM] 09-02I–9
DTC B11CB:15 [REAR VEHICLE MONITORING SYSTEM] 09-02I–11
DTC B11D3:11 [REAR VEHICLE MONITORING SYSTEM] 09-02I–14
DTC B11D3:15 [REAR VEHICLE MONITORING SYSTEM] 09-02I–17
DTC B11F2:23 [REAR VEHICLE MONITORING SYSTEM] 09-02I–20
DTC U0001:88/U0100:00/U0121:00/ U0155:00/U0214:00 [REAR VEHICLE MONITORING SYSTEM] 09-02I–22
Diagnostic Procedure 09-02I–22
DTC U0028:87 [REAR VEHICLE MONITORING SYSTEM] 09-02I–23
DTC U0401:68 [REAR VEHICLE MONITORING SYSTEM] 09-02I–27
DTC U0415:68 [REAR VEHICLE MONITORING SYSTEM] 09-02I–28
DTC U0423:68 [REAR VEHICLE MONITORING SYSTEM] 09-02I–29
DTC U0515:68 [REAR VEHICLE MONITORING SYSTEM] 09-02I–30
DTC U1A4B:16 [REAR VEHICLE MONITORING SYSTEM] 09-02I–32
DTC U1A4B:17 [REAR VEHICLE MONITORING SYSTEM] 09-02I–34
DTC U1A4B:43, U1A4B:44, U1A4B:45, U1A4B:46, U1A4B:47, U1A4B:48, U1A4B:49, U1A4B:96 [REAR VEHICLE MONITORING SYSTEM] 09-02I–36
DTC U1A4B:54 [REAR VEHICLE MONITORING SYSTEM] 09-02I–37
DTC U2100:00 [REAR VEHICLE MONITORING SYSTEM] 09-02I–38
DTC U3000:43, U3000:44, U3000:45, U3000:46, U3000:47, U3000:48, U3000:49, U3000:96 [REAR VEHICLE MONITORING SYSTEM] 09-02I–39
DTC U3000:4B [REAR VEHICLE MONITORING SYSTEM] 09-02I–40
DTC U3000:54 [REAR VEHICLE MONITORING SYSTEM] 09-02I–41
DTC U3000:97 [REAR VEHICLE MONITORING SYSTEM] 09-02I–42
DTC U3003:16 [REAR VEHICLE MONITORING SYSTEM] 09-02I–43
DTC U3003:17 [REAR VEHICLE MONITORING SYSTEM] 09-02I–46
PID/DATA MONITOR INSPECTION [REAR VEHICLE MONITORING SYSTEM] 09-02I–47
PID/DATA MONITOR TABLE [REAR VEHICLE MONITORING SYSTEM] 09-02I–47
ACTIVE COMMAND MODES INSPECTION [REAR VEHICLE MONITORING SYSTEM] 09-02I–48
ACTIVE COMMAND MODES TABLE [REAR VEHICLE MONITORING SYSTEM] 09-02I–48

ON-BOARD DIAGNOSTIC [REAR VEHICLE MONITORING SYSTEM]

ON-BOARD DIAGNOSTIC WIRING DIAGRAM [REAR VEHICLE MONITORING SYSTEM]

id0902z2960000

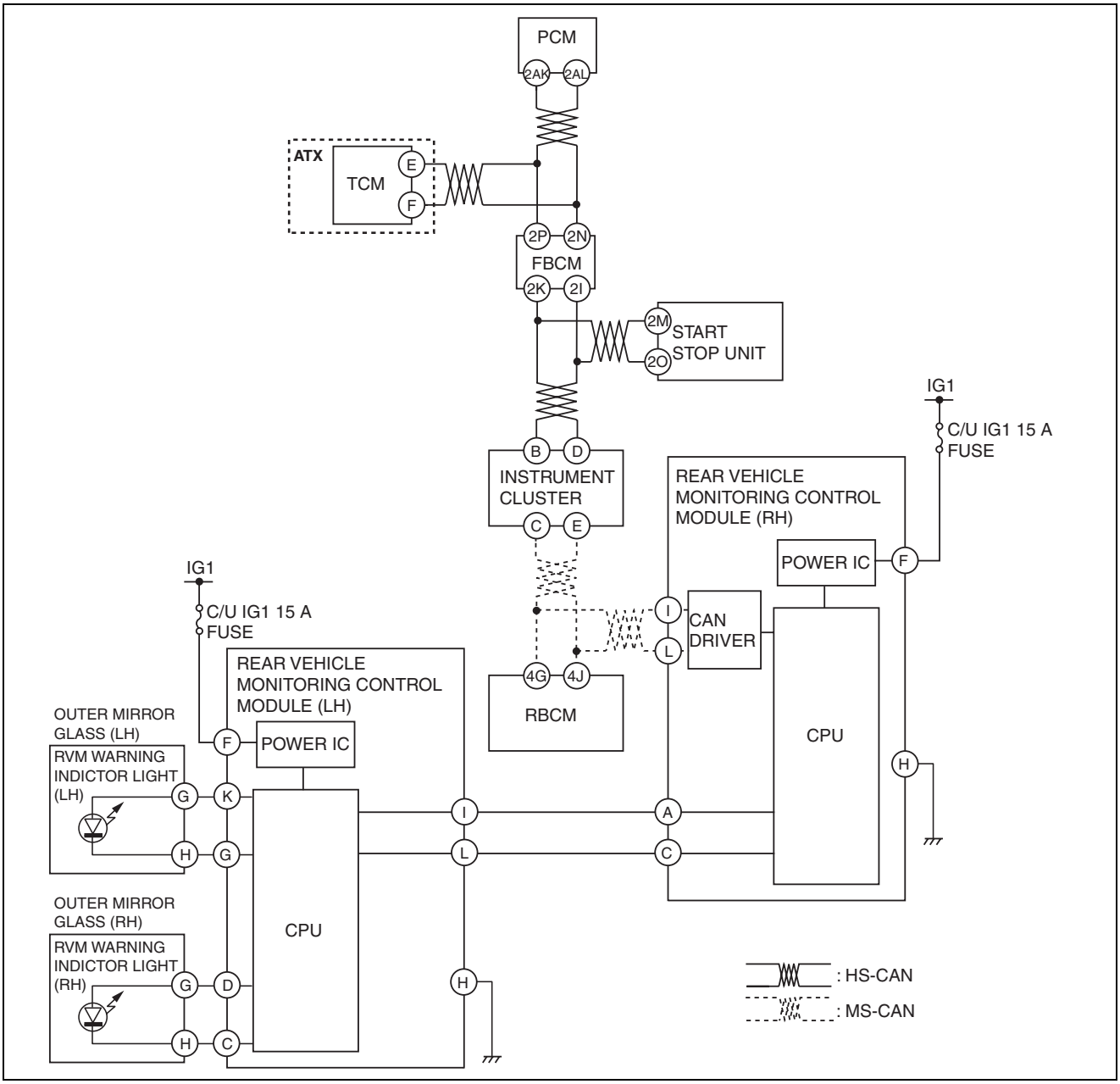

ac5wzn00001435

ON-BOARD DIAGNOSTIC [REAR VEHICLE MONITORING SYSTEM]

FOREWORD [REAR VEHICLE MONITORING SYSTEM]

id0902z2960100

- If there is any vehicle malfunction complaint lodged by a customer, perform malfunction diagnosis according to the troubleshooting procedure.

Troubleshooting Procedure

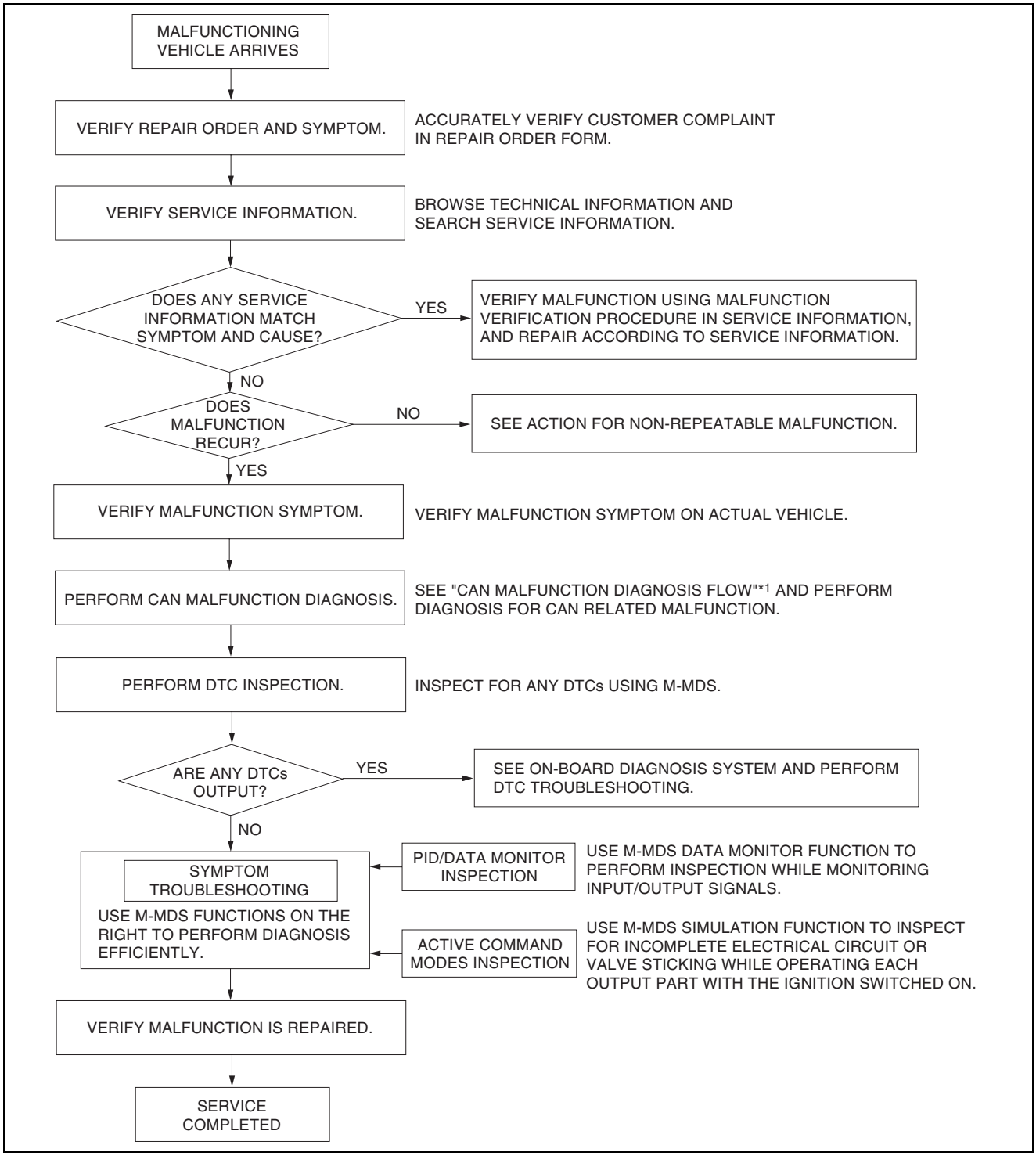

am3zzw0001242

*1 : 10-02A-3 CONTROLLER AREA NETWORK (CAN) MALFUNCTION DIAGNOSIS FLOW [SKYACTIV-G 2.0 (L.H.D.)]/10-02B-3 CONTROLLER AREA NETWORK (CAN) MALFUNCTION DIAGNOSIS FLOW [SKYACTIV-G 2.0 (R.H.D.)]/10-02C-3 CONTROLLER AREA NETWORK (CAN) MALFUNCTION DIAGNOSIS FLOW [SKYACTIV-D 2.2 (L.H.D.)]/10-02D-3 CONTROLLER AREA NETWORK (CAN) MALFUNCTION DIAGNOSIS FLOW [SKYACTIV-D 2.2 (R.H.D.)]

ON-BOARD DIAGNOSTIC [REAR VEHICLE MONITORING SYSTEM]

Action for Non-repeatable Malfunction

- If the malfunction does not recur, verify the malfunction cause by performing the following actions:
  - — Based on the repair order form, attempt to drive the vehicle or perform tests to replicate the malfunction, record the data at that time, and detect the malfunction cause.
  - — Shake the wiring harness or connector of the electrical component which is suspected to be the cause of the malfunction, and inspect for malfunction or occurrence of any DTCs.

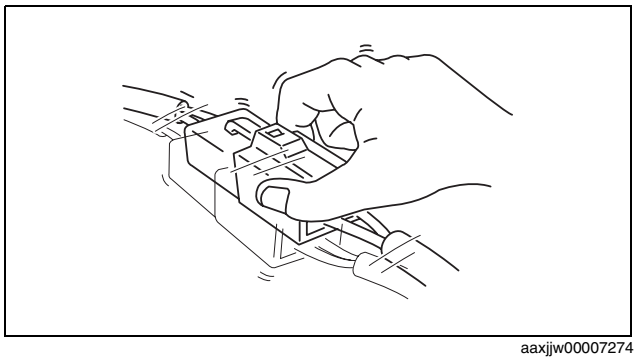

aaxjjw00007274

  - — Inspect the female terminals on the connector of the electric component which is suspected to be the cause of the malfunction for poor connection.

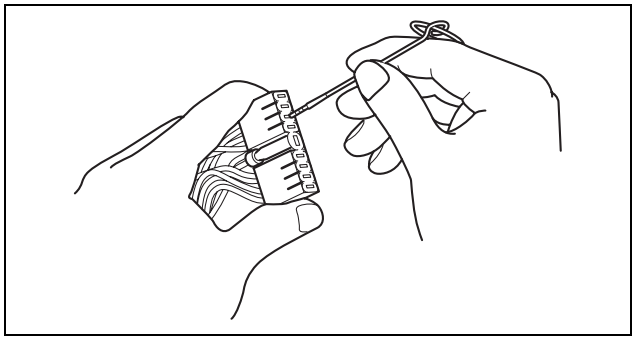

am3uuw0000750

DTC INSPECTION [REAR VEHICLE MONITORING SYSTEM]

id0902z2345400

CMDTC Self Test

1. Connect the M-MDS to the DLC-2.
2. After the vehicle is identified, select the following items from the initialization screen of the M-MDS.
   (1) Select “Self Test”.
   (2) Select “All CMDTCs”.
3. Verify the DTC according to the directions on the screen.
   - If any DTCs are displayed, perform troubleshooting according to the corresponding DTC inspection.
4. After completion of repairs, clear all DTCs stored in the rear vehicle monitoring control module. (See 09-02I-5 CLEARING DTC [REAR VEHICLE MONITORING SYSTEM].)

ODDTC Self Test

1. Connect the M-MDS to the DLC-2.
2. After the vehicle is identified, select the following items from the initialization screen of the M-MDS.
   (1) Select “Self Test”.
   (2) Select “Modules”.
   (3) Select “RVM”.
3. Verify the DTC according to the directions on the screen.
   - If any DTCs are displayed, perform troubleshooting according to the corresponding DTC inspection.
4. After completion of repairs, clear all DTCs stored in the rear vehicle monitoring control module. (See 09-02I-5 CLEARING DTC [REAR VEHICLE MONITORING SYSTEM].)

ON-BOARD DIAGNOSTIC [REAR VEHICLE MONITORING SYSTEM]

CLEARING DTC [REAR VEHICLE MONITORING SYSTEM]

id0902z2400300

CMDTC Memory Clearing Procedure

1. Connect the M-MDS to the DLC-2.
2. After the vehicle is identified, select the following items from the initialization screen of the M-MDS.
   (1) Select “Self Test”.
   (2) Select “All CMDTCs”.
3. Verify the DTC according to the directions on the screen.
4. Press the clear button on the DTC screen to clear the DTC.
5. Switch the ignition to off.
6. Switch the ignition ON (engine off or on) and wait for **5 s or more**.
7. Perform DTC inspection. (See 09-02I-4 DTC INSPECTION [REAR VEHICLE MONITORING SYSTEM].)
8. Verify that no DTCs are displayed.

ODDTC Memory Clearing Procedure

1. Connect the M-MDS to the DLC-2.
2. After the vehicle is identified, select the following items from the initialization screen of the M-MDS.
   (1) Select “Self Test”.
   (2) Select “Modules”.
   (3) Select “RVM”.
3. Verify the DTC according to the directions on the screen.
4. Press the clear button on the DTC screen to clear the DTC.
5. Switch the ignition to off.
6. Switch the ignition ON (engine off or on) and wait for **5 s or more**.
7. Perform DTC inspection. (See 09-02I-4 DTC INSPECTION [REAR VEHICLE MONITORING SYSTEM].)
8. Verify that no DTCs are displayed.

DTC TABLE [REAR VEHICLE MONITORING SYSTEM]

id0902z2347100

×: Applicable
—: Not applicable

DTC No.	Rear vehicle monitoring (RVM) system warning light (amber)	Description	Fail-safe function	Drive cycle	Self test type*1	Memory function	Page
B11CB:11	On	RVM warning indicator light (RH) circuit malfunction	×	—	C, D	×	(See 09-02I-9 DTC B11CB:11 [REAR VEHICLE MONITORING SYSTEM].)
B11CB:15	On	RVM warning indicator light (RH) circuit malfunction	×	—	C, D	×	(See 09-02I-11 DTC B11CB:15 [REAR VEHICLE MONITORING SYSTEM].)
B11D3:11	On	RVM warning indicator light (LH) circuit malfunction	×	—	C, D	×	(See 09-02I-14 DTC B11D3:11 [REAR VEHICLE MONITORING SYSTEM].)
B11D3:15	On	RVM warning indicator light (LH) circuit malfunction	×	—	C, D	×	(See 09-02I-17 DTC B11D3:15 [REAR VEHICLE MONITORING SYSTEM].)
B11F2:23	On	RVM switch circuit malfunction	×	—	C	×	(See 09-02I-20 DTC B11F2:23 [REAR VEHICLE MONITORING SYSTEM].)

ON-BOARD DIAGNOSTIC [REAR VEHICLE MONITORING SYSTEM]

DTC No.	Rear vehicle monitoring (RVM) system warning light (amber)	Description	Fail-safe function	Drive cycle	Self test type*1	Memory function	Page
U0001:88	On	Unit communication error (MS-CAN)	×	—	C	×	(See 09-02I-22 DTC U0001:88/U0100:00/ U0121:00/U0155:00/ U0214:00 [REAR VEHICLE MONITORING SYSTEM].)
U0028:87	On	Rear vehicle monitoring control module (LH) and (RH) communication error	×	—	C	×	(See 09-02I-23 DTC U0028:87 [REAR VEHICLE MONITORING SYSTEM].)
U0100:00	On	Communication error with PCM	×	—	C	×	(See 09-02I-22 DTC U0001:88/U0100:00/ U0121:00/U0155:00/ U0214:00 [REAR VEHICLE MONITORING SYSTEM].)
U0121:00	On	Communication error with DSC HU/CM	×	—	C	×	
U0155:00	On	Communication error with instrument cluster	×	—	C	×	
U0214:00	On	Communication error with start stop unit	×	—	C	×	
U0401:68	On	Error signal received from PCM	×	—	C	×	(See 09-02I-27 DTC U0401:68 [REAR VEHICLE MONITORING SYSTEM].)
U0415:68	On	Error signal received from DSC HU/CM	×	—	C	×	(See 09-02I-28 DTC U0415:68 [REAR VEHICLE MONITORING SYSTEM].)
U0423:68	On	Error signal received from instrument cluster	×	—	C	×	(See 09-02I-29 DTC U0423:68 [REAR VEHICLE MONITORING SYSTEM].)
U0515:68	On	Error signal received from start stop unit	×	—	C	×	(See 09-02I-30 DTC U0515:68 [REAR VEHICLE MONITORING SYSTEM].)
U1A4B:16	On	Rear vehicle monitoring control module (LH) low power supply input	×	—	C	×	(See 09-02I-32 DTC U1A4B:16 [REAR VEHICLE MONITORING SYSTEM].)
U1A4B:17	On	Rear vehicle monitoring control module (LH) high power supply input	×	—	C	×	(See 09-02I-34 DTC U1A4B:17 [REAR VEHICLE MONITORING SYSTEM].)

ON-BOARD DIAGNOSTIC [REAR VEHICLE MONITORING SYSTEM]

DTC No.	Rear vehicle monitoring (RVM) system warning light (amber)	Description	Fail-safe function	Drive cycle	Self test type*1	Memory function	Page
U1A4B:43	On	Rear vehicle monitoring control module (LH) malfunction	×	—	C	×	(See 09-02I-36 DTC U1A4B:43, U1A4B:44, U1A4B:45, U1A4B:46, U1A4B:47, U1A4B:48, U1A4B:49, U1A4B:96 [REAR VEHICLE MONITORING SYSTEM].)
U1A4B:44	On	Rear vehicle monitoring control module (LH) malfunction	×	—	C	×	
U1A4B:45	On	Rear vehicle monitoring control module (LH) malfunction	×	—	C	×	
U1A4B:46	On	Rear vehicle monitoring control module (LH) malfunction	×	—	C	×	
U1A4B:47	On	Rear vehicle monitoring control module (LH) malfunction	×	—	C	×	
U1A4B:48	On	Rear vehicle monitoring control module (LH) malfunction	×	—	C	×	
U1A4B:49	On	Rear vehicle monitoring control module (LH) malfunction	×	—	C	×	
U1A4B:54	On	Radar aiming is not performed or radar sensor axis is deviated (rear vehicle monitoring control module (LH))	×	—	C	×	(See 09-02I-37 DTC U1A4B:54 [REAR VEHICLE MONITORING SYSTEM].)
U1A4B:96	On	Rear vehicle monitoring control module (LH) malfunction	×	—	C	×	(See 09-02I-36 DTC U1A4B:43, U1A4B:44, U1A4B:45, U1A4B:46, U1A4B:47, U1A4B:48, U1A4B:49, U1A4B:96 [REAR VEHICLE MONITORING SYSTEM].)
U2100:00	On	Rear vehicle monitoring control module (RH) configuration error	×	—	C, D	×	(See 09-02I-38 DTC U2100:00 [REAR VEHICLE MONITORING SYSTEM].)
U3000:43	On	Rear vehicle monitoring control module (RH) malfunction	×	—	C	×	(See 09-02I-39 DTC U3000:43, U3000:44, U3000:45, U3000:46, U3000:47, U3000:48, U3000:49, U3000:96 [REAR VEHICLE MONITORING SYSTEM].)
U3000:44	On	Rear vehicle monitoring control module (RH) malfunction	×	—	C	×	
U3000:45	On	Rear vehicle monitoring control module (RH) malfunction	×	—	C	×	
U3000:46	On	Rear vehicle monitoring control module (RH) malfunction	×	—	C	×	
U3000:47	On	Rear vehicle monitoring control module (RH) malfunction	×	—	C	×	
U3000:48	On	Rear vehicle monitoring control module (RH) malfunction	×	—	C	×	
U3000:49	On	Rear vehicle monitoring control module (RH) malfunction	×	—	C	×	
U3000:4B	On	Temperature temporarily increases depending on various external and environmental factors (rear vehicle monitoring control module (LH) or (RH))	×	—	C	×	(See 09-02I-40 DTC U3000:4B [REAR VEHICLE MONITORING SYSTEM].)
U3000:54	On	Radar aiming is not performed or radar sensor axis is deviated (rear vehicle monitoring control module (RH))	×	—	C, D	×	(See 09-02I-41 DTC U3000:54 [REAR VEHICLE MONITORING SYSTEM].)

ON-BOARD DIAGNOSTIC [REAR VEHICLE MONITORING SYSTEM]

DTC No.	Rear vehicle monitoring (RVM) system warning light (amber)	Description	Fail-safe function	Drive cycle	Self test type*1	Memory function	Page
U3000:96	On	Rear vehicle monitoring control module (RH) malfunction	×	—	C	×	(See 09-02I-39 DTC U3000:43, U3000:44, U3000:45, U3000:46, U3000:47, U3000:48, U3000:49, U3000:96 [REAR VEHICLE MONITORING SYSTEM].)
U3000:97	On	Radar sensor sensitivity temporarily decreases depending on various external and environmental factors (rear vehicle monitoring control module (LH) or (RH))	×	—	C	×	(See 09-02I-42 DTC U3000:97 [REAR VEHICLE MONITORING SYSTEM].)
U3003:16	On	Rear vehicle monitoring control module (RH) low power supply input	×	—	C, D	×	(See 09-02I-43 DTC U3003:16 [REAR VEHICLE MONITORING SYSTEM].)
U3003:17	On	Rear vehicle monitoring control module (RH) high power supply voltage input	×	—	C, D	×	(See 09-02I-46 DTC U3003:17 [REAR VEHICLE MONITORING SYSTEM].)

*1 : C: CMDTC self test, D: ODDTC self test

ON-BOARD DIAGNOSTIC [REAR VEHICLE MONITORING SYSTEM]

DTC B11CB:11 [REAR VEHICLE MONITORING SYSTEM]

id0902z2886200

System malfunction location	**RVM warning indicator light (RH) circuit malfunction**
Detection condition	• Rear vehicle monitoring control module (LH) detects short to ground in RVM warning indicator light (RH).
Fail-safe	• Inhibits the rear vehicle monitoring system.
Possible cause	• RVM warning indicator light (RH) connector or terminal malfunction • Rear vehicle monitoring control module (LH) connector or terminal malfunction • Short to ground in wiring harness between the following terminals: — Rear vehicle monitoring control module (LH) terminal D and RVM warning indicator light (RH) terminal G — Rear vehicle monitoring control module (LH) terminal C and RVM warning indicator light (RH) terminal H • RVM warning indicator light (RH) malfunction • Rear vehicle monitoring control module (LH) malfunction

REAR VEHICLE MONITORING CONTROL MODULE (LH)

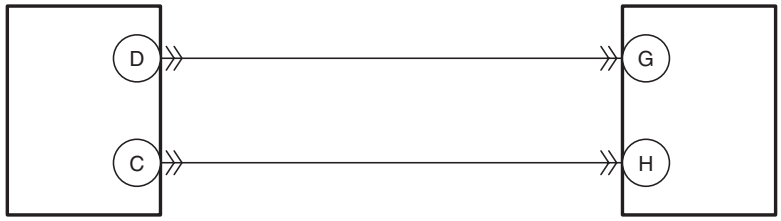

RVM WARNING INDICATOR LIGHT (RH)

REAR VEHICLE MONITORING CONTROL MODULE (LH) WIRING HARNESS-SIDE CONNECTOR

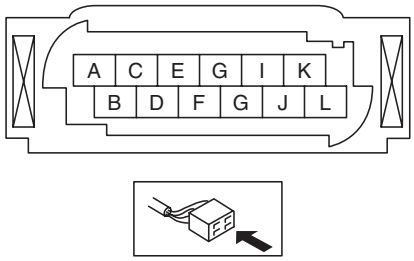

RVM WARNING INDICATOR LIGHT (RH) WIRING HARNESS-SIDE CONNECTOR

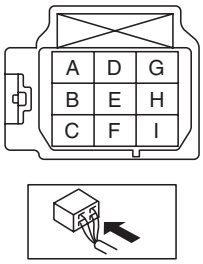

Diagnostic Procedure

Step	Inspection		Action
1	**INSPECT RVM WARNING INDICATOR LIGHT (RH) CONNECTOR** • Switch the ignition to off. • Disconnect the negative battery cable. (See 01-17A-13 NEGATIVE BATTERY CABLE DISCONNECTION/CONNECTION [SKYACTIV-G 2.0 (WITHOUT i-stop)].) (See 01-17A-11 NEGATIVE BATTERY CABLE DISCONNECTION/CONNECTION [SKYACTIV-G 2.0].) (See 01-17B-9 NEGATIVE BATTERY CABLE DISCONNECTION/CONNECTION [SKYACTIV-D 2.2].) • Disconnect the RVM warning indicator light (RH) connector. • Inspect the connector engagement and connection condition and inspect the terminals for damage, deformation, corrosion, or disconnection. • Is the connector normal?	Yes	Go to the next step.
		No	Repair or replace the connector, then go to Step 5.

ON-BOARD DIAGNOSTIC [REAR VEHICLE MONITORING SYSTEM]

Step	Inspection		Action
2	**INSPECT REAR VEHICLE MONITORING CONTROL MODULE (LH) CONNECTOR** • Disconnect the rear vehicle monitoring control module (LH) connector. • Inspect the connector engagement and connection condition and inspect the terminals for damage, deformation, corrosion, or disconnection. • Is the connector normal?	Yes	Go to the next step.
		No	Repair or replace the connector, then go to Step 5.
3	**INSPECT RVM WARNING INDICATOR LIGHT (RH) CIRCUIT FOR SHORT TO GROUND** • Verify that the rear vehicle monitoring control module (LH) connector and RVM warning indicator light (RH) connector are disconnected. • Inspect for continuity between the following terminals (vehicle wiring harness side) and body ground. — RVM warning indicator light (RH) terminal G — RVM warning indicator light (RH) terminal H • Is there continuity?	Yes	Repair or replace the wiring harness which is shorted to ground, then go to Step 5.
		No	Go to the next step.
4	**INSPECT RVM WARNING INDICATOR LIGHT (RH)** • Inspect the RVM warning indicator light (RH). (See 09-22-92 RVM WARNING INDICATOR LIGHT INSPECTION.) • Is the RVM warning indicator light (RH) normal?	Yes	Go to the next step.
		No	Replace the RVM warning indicator light (RH), then go to the next step. (See 09-22-92 RVM WARNING INDICATOR LIGHT REMOVAL/INSTALLATION.)
5	**VERIFY THAT REPAIRS HAVE BEEN COMPLETED** • Reconnect all the disconnected connectors. • Reconnect the disconnected negative battery cable. (See 01-17A-13 NEGATIVE BATTERY CABLE DISCONNECTION/CONNECTION [SKYACTIV-G 2.0 (WITHOUT i-stop)].) (See 01-17A-11 NEGATIVE BATTERY CABLE DISCONNECTION/CONNECTION [SKYACTIV-G 2.0].) (See 01-17B-9 NEGATIVE BATTERY CABLE DISCONNECTION/CONNECTION [SKYACTIV-D 2.2].) • Clear the DTC for the rear vehicle monitoring control module using the M-MDS. (See 09-02I-5 CLEARING DTC [REAR VEHICLE MONITORING SYSTEM].) • Illuminate the RVM warning indicator light (RH) using the simulation item WRN_IND_R. (See 09-02I-48 ACTIVE COMMAND MODES INSPECTION [REAR VEHICLE MONITORING SYSTEM].) • Perform the DTC inspection for the rear vehicle monitoring control module using the M-MDS. (See 09-02I-4 DTC INSPECTION [REAR VEHICLE MONITORING SYSTEM].) • Is DTC B11CB:11 displayed?	Yes	Repeat the inspection from Step 1. • If the malfunction recurs, replace the rear vehicle monitoring control module (LH), then go to the next step. (See 09-22-77 REAR VEHICLE MONITORING CONTROL MODULE REMOVAL/INSTALLATION.)
		No	Go to the next step.
6	**VERIFY IF OTHER DTCs DISPLAYED** • Are any other DTCs displayed?	Yes	Repair the malfunctioning part according to the applicable DTC troubleshooting. (See 09-02I-5 DTC TABLE [REAR VEHICLE MONITORING SYSTEM].)
		No	DTC troubleshooting completed.

ON-BOARD DIAGNOSTIC [REAR VEHICLE MONITORING SYSTEM]

DTC B11CB:15 [REAR VEHICLE MONITORING SYSTEM]

id0902z2886300

System malfunction location	**RVM warning indicator light (RH) circuit malfunction**
Detection condition	• Rear vehicle monitoring control module (LH) detects an open or short circuit to ground in RVM warning indicator light (RH) power supply circuit.
Fail-safe	• Inhibits the rear vehicle monitoring system.
Possible cause	• RVM warning indicator light (RH) connector or terminal malfunction • Rear vehicle monitoring control module (LH) connector or terminal malfunction • Short to power supply in wiring harness between the following terminals: — Rear vehicle monitoring control module (LH) terminal D and RVM warning indicator light (RH) terminal G — Rear vehicle monitoring control module (LH) terminal C and RVM warning indicator light (RH) terminal H • RVM warning indicator light (RH) malfunction • Open circuit in wiring harness between the following terminals: — Rear vehicle monitoring control module (LH) terminal D and RVM warning indicator light (RH) terminal G — Rear vehicle monitoring control module (LH) terminal C and RVM warning indicator light (RH) terminal H • Rear vehicle monitoring control module (LH) malfunction

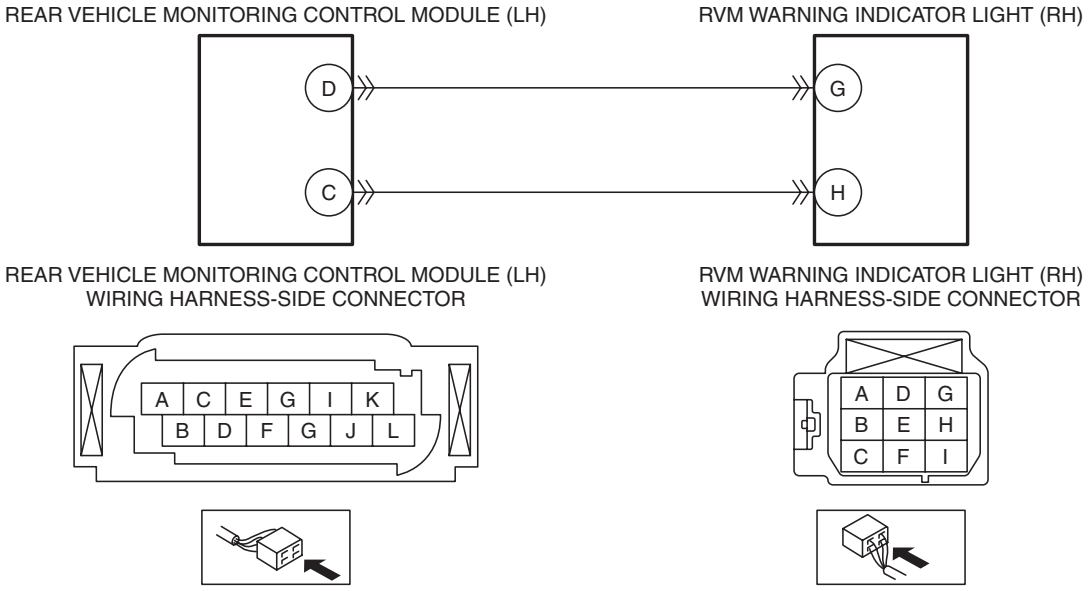

ON-BOARD DIAGNOSTIC [REAR VEHICLE MONITORING SYSTEM]

Diagnostic Procedure

Step	Inspection		Action
1	**INSPECT RVM WARNING INDICATOR LIGHT (RH) CONNECTOR** • Switch the ignition to off. • Disconnect the negative battery cable. (See 01-17A-13 NEGATIVE BATTERY CABLE DISCONNECTION/CONNECTION [SKYACTIV-G 2.0 (WITHOUT i-stop)].) (See 01-17A-11 NEGATIVE BATTERY CABLE DISCONNECTION/CONNECTION [SKYACTIV-G 2.0].) (See 01-17B-9 NEGATIVE BATTERY CABLE DISCONNECTION/CONNECTION [SKYACTIV-D 2.2].) • Disconnect the RVM warning indicator light (RH) connector. • Inspect the connector engagement and connection condition and inspect the terminals for damage, deformation, corrosion, or disconnection. • Is the connector normal?	Yes	Go to the next step.
		No	Repair or replace the connector, then go to Step 6.
2	**INSPECT REAR VEHICLE MONITORING CONTROL MODULE (LH) CONNECTOR** • Disconnect the rear vehicle monitoring control module (LH) connector. • Inspect the connector engagement and connection condition and inspect the terminals for damage, deformation, corrosion, or disconnection. • Is the connector normal?	Yes	Go to the next step.
		No	Repair or replace the connector, then go to Step 6.
3	**INSPECT RVM WARNING INDICATOR LIGHT (RH) CIRCUIT FOR SHORT TO POWER SUPPLY** • Verify that the rear vehicle monitoring control module (LH) connector and RVM warning indicator light (RH) connector are disconnected. • Connect the negative battery cable. (See 01-17A-13 NEGATIVE BATTERY CABLE DISCONNECTION/CONNECTION [SKYACTIV-G 2.0 (WITHOUT i-stop)].) (See 01-17A-11 NEGATIVE BATTERY CABLE DISCONNECTION/CONNECTION [SKYACTIV-G 2.0].) (See 01-17B-9 NEGATIVE BATTERY CABLE DISCONNECTION/CONNECTION [SKYACTIV-D 2.2].) • Switch the ignition ON (engine off or on). • Measure the voltage at the following terminals (vehicle wiring harness side). — RVM warning indicator light (RH) terminal G — RVM warning indicator light (RH) terminal H • Is the voltage **0 V**?	Yes	Go to the next step.
		No	Repair or replace the wiring harness which is shorted to power supply, then go to Step 6.
4	**INSPECT RVM WARNING INDICATOR LIGHT (RH)** • Inspect the RVM warning indicator light (RH). (See 09-22-92 RVM WARNING INDICATOR LIGHT INSPECTION.) • Is the RVM warning indicator light (RH) normal?	Yes	Go to the next step.
		No	Replace the RVM warning indicator light (RH), then go to Step 6. (See 09-22-92 RVM WARNING INDICATOR LIGHT REMOVAL/INSTALLATION.)

ON-BOARD DIAGNOSTIC [REAR VEHICLE MONITORING SYSTEM]

Step	Inspection		Action
5	**INSPECT RVM WARNING INDICATOR LIGHT (RH) CIRCUIT FOR OPEN CIRCUIT** • Verify that the rear vehicle monitoring control module (LH) connector and RVM warning indicator light (RH) connector are disconnected. • Switch the ignition to off. • Disconnect the negative battery cable. (See 01-17A-13 NEGATIVE BATTERY CABLE DISCONNECTION/CONNECTION [SKYACTIV-G 2.0 (WITHOUT i-stop)].) (See 01-17A-11 NEGATIVE BATTERY CABLE DISCONNECTION/CONNECTION [SKYACTIV-G 2.0].) (See 01-17B-9 NEGATIVE BATTERY CABLE DISCONNECTION/CONNECTION [SKYACTIV-D 2.2].) • Inspect the wiring harness between the following terminals (vehicle wiring harness side) for continuity. — Rear vehicle monitoring control module (LH) terminal D and RVM warning indicator light (RH) terminal G — Rear vehicle monitoring control module (LH) terminal C and RVM warning indicator light (RH) terminal H • Is there continuity?	Yes	Go to the next step.
		No	Repair or replace the wiring harness which has an open circuit, then go to the next step.
6	**VERIFY THAT REPAIRS HAVE BEEN COMPLETED** • Reconnect all the disconnected connectors. • Reconnect the disconnected negative battery cable. (See 01-17A-13 NEGATIVE BATTERY CABLE DISCONNECTION/CONNECTION [SKYACTIV-G 2.0 (WITHOUT i-stop)].) (See 01-17A-11 NEGATIVE BATTERY CABLE DISCONNECTION/CONNECTION [SKYACTIV-G 2.0].) (See 01-17B-9 NEGATIVE BATTERY CABLE DISCONNECTION/CONNECTION [SKYACTIV-D 2.2].) • Clear the DTC for the rear vehicle monitoring control module using the M-MDS. (See 09-02I-5 CLEARING DTC [REAR VEHICLE MONITORING SYSTEM].) • Illuminate the RVM warning indicator light (RH) using the simulation item WRN_IND_R. (See 09-02I-48 ACTIVE COMMAND MODES INSPECTION [REAR VEHICLE MONITORING SYSTEM].) • Perform the DTC inspection for the rear vehicle monitoring control module using the M-MDS. (See 09-02I-4 DTC INSPECTION [REAR VEHICLE MONITORING SYSTEM].) • Is DTC B11CB:15 displayed?	Yes	Repeat the inspection from Step 1. • If the malfunction recurs, replace the rear vehicle monitoring control module (LH), then go to the next step. (See 09-22-77 REAR VEHICLE MONITORING CONTROL MODULE REMOVAL/INSTALLATION.)
		No	Go to the next step.
7	**VERIFY IF OTHER DTCs DISPLAYED** • Are any other DTCs displayed?	Yes	Repair the malfunctioning part according to the applicable DTC troubleshooting. (See 09-02I-5 DTC TABLE [REAR VEHICLE MONITORING SYSTEM].)
		No	DTC troubleshooting completed.

ON-BOARD DIAGNOSTIC [REAR VEHICLE MONITORING SYSTEM]

DTC B11D3:11 [REAR VEHICLE MONITORING SYSTEM]

id0902z2886400

System malfunction location	**RVM warning indicator light (LH) circuit malfunction**
Detection condition	• Rear vehicle monitoring control module (LH) detects short to ground in RVM warning indicator light (LH).
Fail-safe	• Inhibits the rear vehicle monitoring system.
Possible cause	• RVM warning indicator light (LH) connector or terminal malfunction • Rear vehicle monitoring control module (LH) connector or terminal malfunction • Short to ground in wiring harness between the following terminals: — Rear vehicle monitoring control module (LH) terminal K and RVM warning indicator light (LH) terminal G — Rear vehicle monitoring control module (LH) terminal G and RVM warning indicator light (LH) terminal H • RVM warning indicator light (LH) malfunction • Rear vehicle monitoring control module (LH) malfunction

REAR VEHICLE MONITORING CONTROL MODULE (LH)

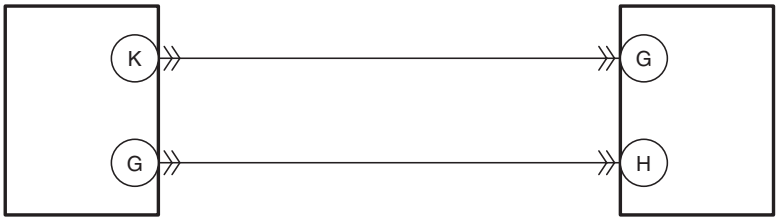

RVM WARNING INDICATOR LIGHT (LH)

REAR VEHICLE MONITORING CONTROL MODULE (LH) WIRING HARNESS-SIDE CONNECTOR

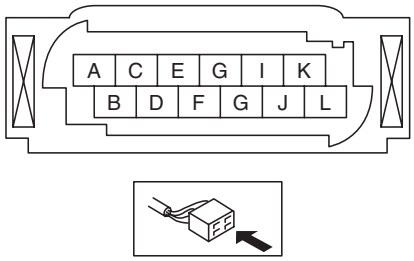

RVM WARNING INDICATOR LIGHT (LH) WIRING HARNESS-SIDE CONNECTOR

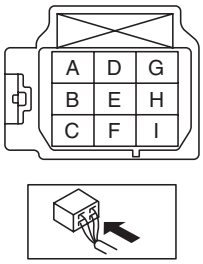

ON-BOARD DIAGNOSTIC [REAR VEHICLE MONITORING SYSTEM]

Diagnostic Procedure

Step	Inspection		Action
1	**INSPECT RVM WARNING INDICATOR LIGHT (LH) CONNECTOR** • Switch the ignition to off. • Disconnect the negative battery cable. (See 01-17A-13 NEGATIVE BATTERY CABLE DISCONNECTION/CONNECTION [SKYACTIV-G 2.0 (WITHOUT i-stop)].) (See 01-17A-11 NEGATIVE BATTERY CABLE DISCONNECTION/CONNECTION [SKYACTIV-G 2.0].) (See 01-17B-9 NEGATIVE BATTERY CABLE DISCONNECTION/CONNECTION [SKYACTIV-D 2.2].) • Disconnect the RVM warning indicator light (LH) connector. • Inspect the connector engagement and connection condition and inspect the terminals for damage, deformation, corrosion, or disconnection. • Is the connector normal?	Yes	Go to the next step.
		No	Repair or replace the connector, then go to Step 5.
2	**INSPECT REAR VEHICLE MONITORING CONTROL MODULE (LH) CONNECTOR** • Disconnect the rear vehicle monitoring control module (LH) connector. • Inspect the connector engagement and connection condition and inspect the terminals for damage, deformation, corrosion, or disconnection. • Is the connector normal?	Yes	Go to the next step.
		No	Repair or replace the connector, then go to Step 5.
3	**INSPECT RVM WARNING INDICATOR LIGHT (LH) CIRCUIT FOR SHORT TO GROUND** • Verify that the rear vehicle monitoring control module (LH) connector and RVM warning indicator light (LH) connector are disconnected. • Inspect for continuity between the following terminals (vehicle wiring harness side) and body ground. — RVM warning indicator light (LH) terminal G — RVM warning indicator light (LH) terminal H • Is there continuity?	Yes	Repair or replace the wiring harness which is shorted to ground, then go to Step 5.
		No	Go to the next step.
4	**INSPECT RVM WARNING INDICATOR LIGHT (LH)** • Inspect the RVM warning indicator light (LH). (See 09-22-92 RVM WARNING INDICATOR LIGHT INSPECTION.) • Is the RVM warning indicator light (LH) normal?	Yes	Go to the next step.
		No	Replace the RVM warning indicator light (LH), then go to the next step. (See 09-22-92 RVM WARNING INDICATOR LIGHT REMOVAL/INSTALLATION.)

ON-BOARD DIAGNOSTIC [REAR VEHICLE MONITORING SYSTEM]

Step	Inspection		Action
5	**VERIFY THAT REPAIRS HAVE BEEN COMPLETED** • Reconnect all the disconnected connectors. • Reconnect the disconnected negative battery cable. (See 01-17A-13 NEGATIVE BATTERY CABLE DISCONNECTION/CONNECTION [SKYACTIV-G 2.0 (WITHOUT i-stop)].) (See 01-17A-11 NEGATIVE BATTERY CABLE DISCONNECTION/CONNECTION [SKYACTIV-G 2.0].) (See 01-17B-9 NEGATIVE BATTERY CABLE DISCONNECTION/CONNECTION [SKYACTIV-D 2.2].) • Clear the DTC for the rear vehicle monitoring control module using the M-MDS. (See 09-02I-5 CLEARING DTC [REAR VEHICLE MONITORING SYSTEM].) • Illuminate the RVM warning indicator light (LH) using the simulation item WRN_IND_L. (See 09-02I-48 ACTIVE COMMAND MODES INSPECTION [REAR VEHICLE MONITORING SYSTEM].) • Perform the DTC inspection for the rear vehicle monitoring control module using the M-MDS. (See 09-02I-4 DTC INSPECTION [REAR VEHICLE MONITORING SYSTEM].) • Is DTC B11D3:11 displayed?	Yes	Repeat the inspection from Step 1. • If the malfunction recurs, replace the rear vehicle monitoring control module (LH), then go to the next step. (See 09-22-77 REAR VEHICLE MONITORING CONTROL MODULE REMOVAL/INSTALLATION.)
		No	Go to the next step.
6	**VERIFY IF OTHER DTCs DISPLAYED** • Are any other DTCs displayed?	Yes	Repair the malfunctioning part according to the applicable DTC troubleshooting. (See 09-02I-5 DTC TABLE [REAR VEHICLE MONITORING SYSTEM].)
		No	DTC troubleshooting completed.

ON-BOARD DIAGNOSTIC [REAR VEHICLE MONITORING SYSTEM]

DTC B11D3:15 [REAR VEHICLE MONITORING SYSTEM]

id0902z2886500

System malfunction location	**RVM warning indicator light (LH) circuit malfunction**
Detection condition	• Rear vehicle monitoring control module (LH) detects an open or short circuit to ground in RVM warning indicator light (LH) power supply circuit.
Fail-safe	• Inhibits the rear vehicle monitoring system.
Possible cause	• RVM warning indicator light (LH) connector or terminal malfunction • Rear vehicle monitoring control module (LH) connector or terminal malfunction • Short to power supply in wiring harness between the following terminals: — Rear vehicle monitoring control module (LH) terminal K and RVM warning indicator light (LH) terminal G — Rear vehicle monitoring control module (LH) terminal G and RVM warning indicator light (LH) terminal H • RVM warning indicator light (LH) malfunction • Open circuit in wiring harness between the following terminals: — Rear vehicle monitoring control module (LH) terminal K and RVM warning indicator light (LH) terminal G — Rear vehicle monitoring control module (LH) terminal G and RVM warning indicator light (LH) terminal H • Rear vehicle monitoring control module (LH) malfunction

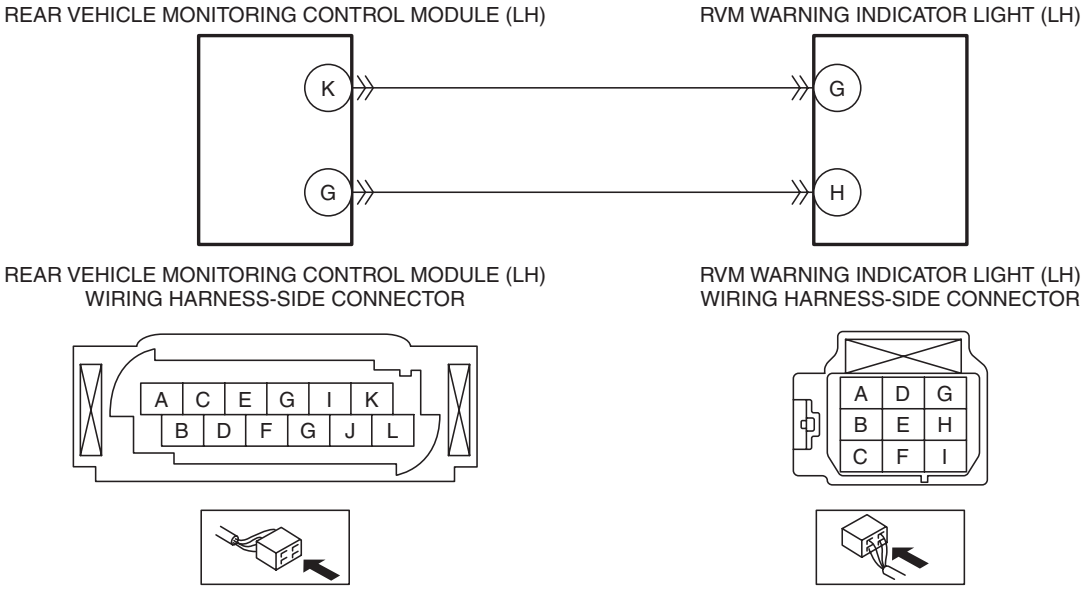

ON-BOARD DIAGNOSTIC [REAR VEHICLE MONITORING SYSTEM]

Diagnostic Procedure

Step	Inspection		Action
1	**INSPECT RVM WARNING INDICATOR LIGHT (LH) CONNECTOR** • Switch the ignition to off. • Disconnect the negative battery cable. (See 01-17A-13 NEGATIVE BATTERY CABLE DISCONNECTION/CONNECTION [SKYACTIV-G 2.0 (WITHOUT i-stop)].) (See 01-17A-11 NEGATIVE BATTERY CABLE DISCONNECTION/CONNECTION [SKYACTIV-G 2.0].) (See 01-17B-9 NEGATIVE BATTERY CABLE DISCONNECTION/CONNECTION [SKYACTIV-D 2.2].) • Disconnect the RVM warning indicator light (LH) connector. • Inspect the connector engagement and connection condition and inspect the terminals for damage, deformation, corrosion, or disconnection. • Is the connector normal?	Yes	Go to the next step.
		No	Repair or replace the connector, then go to Step 6.
2	**INSPECT REAR VEHICLE MONITORING CONTROL MODULE (LH) CONNECTOR** • Disconnect the rear vehicle monitoring control module (LH) connector. • Inspect the connector engagement and connection condition and inspect the terminals for damage, deformation, corrosion, or disconnection. • Is the connector normal?	Yes	Go to the next step.
		No	Repair or replace the connector, then go to Step 6.
3	**INSPECT RVM WARNING INDICATOR LIGHT (LH) CIRCUIT FOR SHORT TO POWER SUPPLY** • Verify that the rear vehicle monitoring control module (LH) connector and RVM warning indicator light (LH) connector are disconnected. • Connect the negative battery cable. (See 01-17A-13 NEGATIVE BATTERY CABLE DISCONNECTION/CONNECTION [SKYACTIV-G 2.0 (WITHOUT i-stop)].) (See 01-17A-11 NEGATIVE BATTERY CABLE DISCONNECTION/CONNECTION [SKYACTIV-G 2.0].) (See 01-17B-9 NEGATIVE BATTERY CABLE DISCONNECTION/CONNECTION [SKYACTIV-D 2.2].) • Switch the ignition ON (engine off or on). • Measure the voltage at the following terminals (vehicle wiring harness side). — RVM warning indicator light (LH) terminal G — RVM warning indicator light (LH) terminal H • Is the voltage **0 V**?	Yes	Go to the next step.
		No	Repair or replace the wiring harness which is shorted to power supply, then go to Step 6.
4	**INSPECT RVM WARNING INDICATOR LIGHT (LH)** • Inspect the RVM warning indicator light (LH). (See 09-22-92 RVM WARNING INDICATOR LIGHT INSPECTION.) • Is the RVM warning indicator light (LH) normal?	Yes	Go to the next step.
		No	Replace the RVM warning indicator light (LH), then go to Step 6. (See 09-22-92 RVM WARNING INDICATOR LIGHT REMOVAL/INSTALLATION.)

ON-BOARD DIAGNOSTIC [REAR VEHICLE MONITORING SYSTEM]

Step	Inspection		Action
5	**INSPECT RVM WARNING INDICATOR LIGHT (LH) CIRCUIT FOR OPEN CIRCUIT** • Verify that the rear vehicle monitoring control module (LH) connector and RVM warning indicator light (LH) connector are disconnected. • Switch the ignition to off. • Disconnect the negative battery cable. (See 01-17A-13 NEGATIVE BATTERY CABLE DISCONNECTION/CONNECTION [SKYACTIV-G 2.0 (WITHOUT i-stop)].) (See 01-17A-11 NEGATIVE BATTERY CABLE DISCONNECTION/CONNECTION [SKYACTIV-G 2.0].) (See 01-17B-9 NEGATIVE BATTERY CABLE DISCONNECTION/CONNECTION [SKYACTIV-D 2.2].) • Inspect the wiring harness between the following terminals (vehicle wiring harness side) for continuity. — Rear vehicle monitoring control module (LH) terminal K and RVM warning indicator light (LH) terminal G — Rear vehicle monitoring control module (LH) terminal G and RVM warning indicator light (LH) terminal H • Is there continuity?	Yes	Go to the next step.
		No	Repair or replace the wiring harness which has an open circuit, then go to the next step.
6	**VERIFY THAT REPAIRS HAVE BEEN COMPLETED** • Reconnect all the disconnected connectors. • Reconnect the disconnected negative battery cable. (See 01-17A-13 NEGATIVE BATTERY CABLE DISCONNECTION/CONNECTION [SKYACTIV-G 2.0 (WITHOUT i-stop)].) (See 01-17A-11 NEGATIVE BATTERY CABLE DISCONNECTION/CONNECTION [SKYACTIV-G 2.0].) (See 01-17B-9 NEGATIVE BATTERY CABLE DISCONNECTION/CONNECTION [SKYACTIV-D 2.2].) • Clear the DTC for the rear vehicle monitoring control module using the M-MDS. (See 09-02I-5 CLEARING DTC [REAR VEHICLE MONITORING SYSTEM].) • Illuminate the RVM warning indicator light (LH) using the simulation item WRN_IND_L. (See 09-02I-48 ACTIVE COMMAND MODES INSPECTION [REAR VEHICLE MONITORING SYSTEM].) • Perform the DTC inspection for the rear vehicle monitoring control module using the M-MDS. (See 09-02I-4 DTC INSPECTION [REAR VEHICLE MONITORING SYSTEM].) • Is DTC B11D3:15 displayed?	Yes	Repeat the inspection from Step 1. • If the malfunction recurs, replace the rear vehicle monitoring control module (LH), then go to the next step. (See 09-22-77 REAR VEHICLE MONITORING CONTROL MODULE REMOVAL/INSTALLATION.)
		No	Go to the next step.
7	**VERIFY IF OTHER DTCs DISPLAYED** • Are any other DTCs displayed?	Yes	Repair the malfunctioning part according to the applicable DTC troubleshooting. (See 09-02I-5 DTC TABLE [REAR VEHICLE MONITORING SYSTEM].)
		No	DTC troubleshooting completed.

ON-BOARD DIAGNOSTIC [REAR VEHICLE MONITORING SYSTEM]

DTC B11F2:23 [REAR VEHICLE MONITORING SYSTEM]

id0902z2885300

System malfunction location	**RVM switch circuit malfunction**
Detection condition	• The rear vehicle monitoring control module (RH) receives RVM switch ON signal from the instrument cluster for **2 min or more**.
Fail-safe	• Inhibits the rear vehicle monitoring system.
Possible cause	• DTCs are stored in the instrument cluster. • Cluster switch connector or terminal malfunction • RVM switch malfunction • Instrument cluster connector or terminal malfunction • Short to ground in wiring harness between the following terminals: — Instrument cluster terminal V and cluster switch terminal B — Instrument cluster terminal T and cluster switch terminal C • Instrument cluster malfunction • Rear vehicle monitoring control module (RH) malfunction

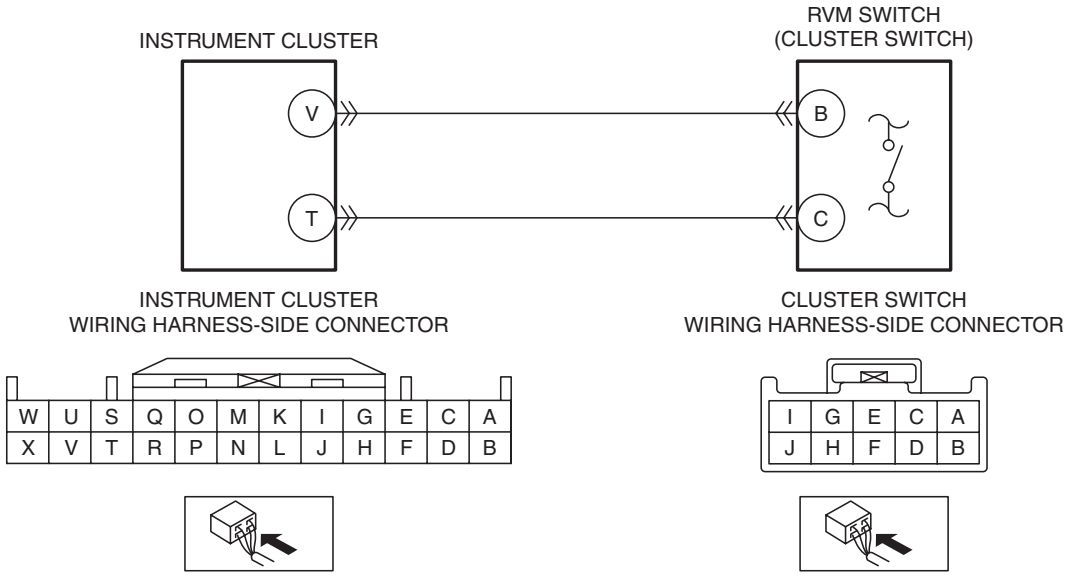

Diagnostic Procedure

Step	Inspection		Action
1	**VERIFY INSTRUMENT CLUSTER DTCs** • Perform the DTC inspection for the instrument cluster using the M-MDS. (See 09-02G-7 DTC INSPECTION [INSTRUMENT CLUSTER].) • Is the DTC displayed?	Yes	Repair the malfunctioning part according to the applicable DTC troubleshooting. (See 09-02G-10 DTC TABLE [INSTRUMENT CLUSTER].)
		No	Go to the next step.
2	**INSPECT CLUSTER SWITCH CONNECTOR** • Switch the ignition to off. • Disconnect the negative battery cable. (See 01-17A-13 NEGATIVE BATTERY CABLE DISCONNECTION/CONNECTION [SKYACTIV-G 2.0 (WITHOUT i-stop)].) (See 01-17A-11 NEGATIVE BATTERY CABLE DISCONNECTION/CONNECTION [SKYACTIV-G 2.0].) (See 01-17B-9 NEGATIVE BATTERY CABLE DISCONNECTION/CONNECTION [SKYACTIV-D 2.2].) • Disconnect the cluster switch connector. • Inspect the connector engagement and connection condition and inspect the terminals for damage, deformation, corrosion, or disconnection. • Is the connector normal?	Yes	Go to the next step.
		No	Repair or replace the connector, then go to Step 7.

ON-BOARD DIAGNOSTIC [REAR VEHICLE MONITORING SYSTEM]

Step	Inspection		Action
3	**INSPECT RVM SWITCH** • Inspect the RVM switch. (See 09-22-91 RVM SWITCH INSPECTION.) • Is the RVM switch normal?	Yes	Go to the next step.
		No	Replace the cluster switch, then go to Step 7. (See 09-17-18 SWITCH PANEL REMOVAL/INSTALLATION.)
4	**INSPECT INSTRUMENT CLUSTER CONNECTOR** • Disconnect the instrument cluster connector. • Inspect the connector engagement and connection condition and inspect the terminals for damage, deformation, corrosion, or disconnection. • Is the connector normal?	Yes	Go to the next step.
		No	Repair or replace the connector, then go to Step 7.
5	**INSPECT RVM SWITCH CIRCUIT FOR SHORT TO GROUND** • Verify that the cluster switch connector and instrument cluster connector are disconnected. • Inspect for continuity between the following terminals (vehicle wiring harness side) and body ground. — Cluster switch terminal B — Cluster switch terminal C • Is there continuity?	Yes	Repair or replace the wiring harness which is shorted to ground, then go to Step 7.
		No	Go to the next step.
6	**INSPECT INSTRUMENT CLUSTER** • Inspect the instrument cluster. (See 09-22-11 INSTRUMENT CLUSTER INSPECTION.) • Is the instrument cluster normal?	Yes	Go to the next step.
		No	Replace the instrument cluster, then go to the next step. (See 09-22-6 INSTRUMENT CLUSTER REMOVAL/INSTALLATION.)
7	**VERIFY THAT REPAIRS HAVE BEEN COMPLETED** • Reconnect all the disconnected connectors. • Reconnect the disconnected negative battery cable. (See 01-17A-13 NEGATIVE BATTERY CABLE DISCONNECTION/CONNECTION [SKYACTIV-G 2.0 (WITHOUT i-stop)].) (See 01-17A-11 NEGATIVE BATTERY CABLE DISCONNECTION/CONNECTION [SKYACTIV-G 2.0].) (See 01-17B-9 NEGATIVE BATTERY CABLE DISCONNECTION/CONNECTION [SKYACTIV-D 2.2].) • Clear the DTC for the rear vehicle monitoring control module using the M-MDS. (See 09-02I-5 CLEARING DTC [REAR VEHICLE MONITORING SYSTEM].) • Switch the ignition ON (engine off or on) and wait for **2 min or more**. • Perform the DTC inspection for the rear vehicle monitoring control module using the M-MDS. (See 09-02I-4 DTC INSPECTION [REAR VEHICLE MONITORING SYSTEM].) • Is DTC B11F2:23 displayed?	Yes	Repeat the inspection from Step 1. • If the malfunction recurs, replace the rear vehicle monitoring control module (RH), then go to the next step. (See 09-22-77 REAR VEHICLE MONITORING CONTROL MODULE REMOVAL/INSTALLATION.)
		No	Go to the next step.
8	**VERIFY IF OTHER DTCs DISPLAYED** • Are any other DTCs displayed?	Yes	Repair the malfunctioning part according to the applicable DTC troubleshooting. (See 09-02I-5 DTC TABLE [REAR VEHICLE MONITORING SYSTEM].)
		No	DTC troubleshooting completed.

ON-BOARD DIAGNOSTIC [REAR VEHICLE MONITORING SYSTEM]

DTC U0001:88/U0100:00/U0121:00/U0155:00/U0214:00 [REAR VEHICLE MONITORING SYSTEM]

id0902z2841700

System malfunction location	**U0001:88** • **Unit communication error (MS-CAN)** **U0100:00** • **Communication error with PCM** **U0121:00** • **Communication error with DSC HU/CM** **U0155:00** • **Communication error with instrument cluster** **U0214:00** • **Communication error with start stop unit**
Detection condition	• U0001:88 — The rear vehicle monitoring control module (RH) detects a CAN bus communication line (MS-CAN) malfunction. • U0100:00 — The rear vehicle monitoring control module (RH) cannot receive CAN signal from the PCM for **2 s or more**. • U0121:00 — Rear vehicle monitoring control module (RH) cannot receive CAN signal from the DSC HU/CM for **2 s or more**. • U0155:00 — The rear vehicle monitoring control module (RH) cannot receive CAN signal from the instrument cluster for **2 s or more**. • U0214:00 — The rear vehicle monitoring control module (RH) cannot receive CAN signal from the start stop unit for **2 s or more**.
Fail-safe	• U0001:88 — Inhibits the rear vehicle monitoring system. • U0100:00 — Inhibits the rear vehicle monitoring system. • U0121:00 — Inhibits the rear vehicle monitoring system. • U0155:00 — Inhibits the rear vehicle monitoring system. • U0214:00 — Inhibits the rear vehicle monitoring system.
Possible cause	• Malfunction in CAN bus communication line • Malfunction in CAN communication line between PCM and rear vehicle monitoring control module (RH) — Instrument cluster communication error (vehicle speed signal is not sent via instrument cluster from PCM) • Malfunction in CAN line between the DSC HU/CM and rear vehicle monitoring control module (RH) — Instrument cluster communication error (yaw rate signal is not sent via instrument cluster from DSC HU/CM) • Malfunction in CAN communication line between instrument cluster and rear vehicle monitoring control module (RH) • Malfunction in CAN communication line between start stop unit and rear vehicle monitoring control module (RH) — Instrument cluster communication error (turn switch signal is not sent via instrument cluster from start stop unit)
System wiring diagram	—

Diagnostic Procedure

- Perform the malfunction diagnosis according to the troubleshooting procedure for the multiplex communication system. (See 10-02A-1 FOREWORD [SKYACTIV-G 2.0 (L.H.D.)].) (See 10-02B-1 FOREWORD [SKYACTIV-G 2.0 (R.H.D.)].) (See 10-02C-1 FOREWORD [SKYACTIV-D 2.2 (L.H.D.)].) (See 10-02D-1 FOREWORD [SKYACTIV-D 2.2 (R.H.D.)].)

ON-BOARD DIAGNOSTIC [REAR VEHICLE MONITORING SYSTEM]

DTC U0028:87 [REAR VEHICLE MONITORING SYSTEM]

id0902z2886700

System malfunction location	**Rear vehicle monitoring control module (LH) and (RH) communication error**
Detection condition	• No communication between rear vehicle monitoring control modules (LH) and (RH) for **1 s or more**.
Fail-safe	• Inhibits the rear vehicle monitoring system.
Possible cause	• Rear vehicle monitoring control module (LH) connector or terminal malfunction • Rear vehicle monitoring control module (RH) connector or terminal malfunction • Short to ground in wiring harness between the following terminals: — Rear vehicle monitoring control module (LH) terminal L to rear vehicle monitoring control module (RH) terminal C — Rear vehicle monitoring control module (LH) terminal I to rear vehicle monitoring control module (RH) terminal A • Short to power supply in wiring harness between the following terminals: — Rear vehicle monitoring control module (LH) terminal L to rear vehicle monitoring control module (RH) terminal C — Rear vehicle monitoring control module (LH) terminal I to rear vehicle monitoring control module (RH) terminal A • Open circuit in wiring harness between the following terminals: — Rear vehicle monitoring control module (LH) terminal L to rear vehicle monitoring control module (RH) terminal C — Rear vehicle monitoring control module (LH) terminal I to rear vehicle monitoring control module (RH) terminal A • Rear vehicle monitoring control module (LH) malfunction • Rear vehicle monitoring control module (RH) malfunction

REAR VEHICLE MONITORING CONTROL MODULE (LH) REAR VEHICLE MONITORING CONTROL MODULE (RH)

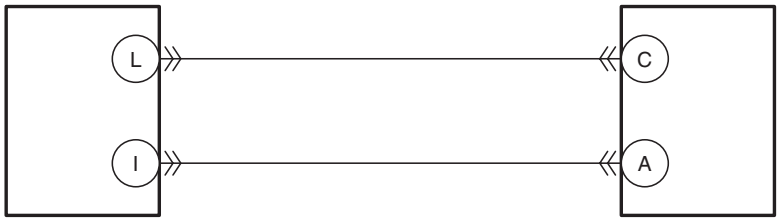

REAR VEHICLE MONITORING CONTROL MODULE (LH)/(RH)
WIRING HARNESS-SIDE CONNECTOR

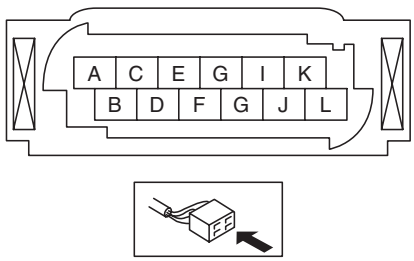

ON-BOARD DIAGNOSTIC [REAR VEHICLE MONITORING SYSTEM]

Diagnostic Procedure

Step	Inspection		Action
1	**INSPECT REAR VEHICLE MONITORING CONTROL MODULE (LH) CONNECTOR** • Switch the ignition to off. • Disconnect the negative battery cable. (See 01-17A-13 NEGATIVE BATTERY CABLE DISCONNECTION/CONNECTION [SKYACTIV-G 2.0 (WITHOUT i-stop)].) (See 01-17A-11 NEGATIVE BATTERY CABLE DISCONNECTION/CONNECTION [SKYACTIV-G 2.0].) (See 01-17B-9 NEGATIVE BATTERY CABLE DISCONNECTION/CONNECTION [SKYACTIV-D 2.2].) • Disconnect the rear vehicle monitoring control module (LH) connector. • Inspect the connector engagement and connection condition and inspect the terminals for damage, deformation, corrosion, or disconnection. • Is the connector normal?	Yes	Go to the next step.
		No	Repair or replace the connector, then go to Step 6.
2	**INSPECT REAR VEHICLE MONITORING CONTROL MODULE (RH) CONNECTOR** • Disconnect the rear vehicle monitoring control modules (RH) connector. • Inspect the connector engagement and connection condition and inspect the terminals for damage, deformation, corrosion, or disconnection. • Is the connector normal?	Yes	Go to the next step.
		No	Repair or replace the connector, then go to Step 6.
3	**INSPECT FOR SHORT TO GROUND IN CAN COMMUNICATION CIRCUIT BETWEEN REAR VEHICLE MONITORING CONTROL MODULES (LH) AND (RH)** • Verify that the rear vehicle monitoring control module (LH) and (RH) connectors are disconnected. • Inspect for continuity between the following terminals (vehicle wiring harness side) and body ground. — Rear vehicle monitoring control module (LH) terminal L — Rear vehicle monitoring control module (LH) terminal I • Is there continuity?	Yes	Repair or replace the wiring harness which is shorted to ground, then go to Step 6.
		No	Go to the next step.

ON-BOARD DIAGNOSTIC [REAR VEHICLE MONITORING SYSTEM]

Step	Inspection		Action
4	**INSPECT FOR SHORT TO POWER SUPPLY IN CAN COMMUNICATION CIRCUIT BETWEEN REAR VEHICLE MONITORING CONTROL MODULES (LH) AND (RH)** • Verify that the rear vehicle monitoring control module (LH) and (RH) connectors are disconnected. • Connect the negative battery cable. (See 01-17A-13 NEGATIVE BATTERY CABLE DISCONNECTION/CONNECTION [SKYACTIV-G 2.0 (WITHOUT i-stop)].) (See 01-17A-11 NEGATIVE BATTERY CABLE DISCONNECTION/CONNECTION [SKYACTIV-G 2.0].) (See 01-17B-9 NEGATIVE BATTERY CABLE DISCONNECTION/CONNECTION [SKYACTIV-D 2.2].) • Switch the ignition ON (engine off or on). • Measure the voltage at the following terminals (vehicle wiring harness side). — Rear vehicle monitoring control module (LH) terminal L — Rear vehicle monitoring control module (LH) terminal I • Is the voltage **0 V**?	Yes	Go to the next step.
		No	Repair or replace the wiring harness which is shorted to power supply, then go to Step 6.
5	**INSPECT FOR OPEN CIRCUIT IN CAN COMMUNICATION CIRCUIT BETWEEN REAR VEHICLE MONITORING CONTROL MODULES (LH) AND (RH)** • Verify that the rear vehicle monitoring control module (LH) and (RH) connectors are disconnected. • Switch the ignition to off. • Disconnect the negative battery cable. (See 01-17A-13 NEGATIVE BATTERY CABLE DISCONNECTION/CONNECTION [SKYACTIV-G 2.0 (WITHOUT i-stop)].) (See 01-17A-11 NEGATIVE BATTERY CABLE DISCONNECTION/CONNECTION [SKYACTIV-G 2.0].) (See 01-17B-9 NEGATIVE BATTERY CABLE DISCONNECTION/CONNECTION [SKYACTIV-D 2.2].) • Inspect the wiring harness between the following terminals (vehicle wiring harness side) for continuity. — Rear vehicle monitoring control module (LH) terminal L to rear vehicle monitoring control module (RH) terminal C — Rear vehicle monitoring control module (LH) terminal I to rear vehicle monitoring control module (RH) terminal A • Is there continuity?	Yes	Go to the next step.
		No	Repair or replace the wiring harness, then go to the next step.

ON-BOARD DIAGNOSTIC [REAR VEHICLE MONITORING SYSTEM]

Step	Inspection		Action
6	**PERFORM DTC INSPECTION AND VERIFY REAR VEHICLE MONITORING CONTROL MODULE (LH) MALFUNCTION** • Reconnect all the disconnected connectors. • Reconnect the disconnected negative battery cable. (See 01-17A-13 NEGATIVE BATTERY CABLE DISCONNECTION/CONNECTION [SKYACTIV-G 2.0 (WITHOUT i-stop)].) (See 01-17A-11 NEGATIVE BATTERY CABLE DISCONNECTION/CONNECTION [SKYACTIV-G 2.0].) (See 01-17B-9 NEGATIVE BATTERY CABLE DISCONNECTION/CONNECTION [SKYACTIV-D 2.2].) • Clear the DTC for the rear vehicle monitoring control module using the M-MDS. (See 09-02I-5 CLEARING DTC [REAR VEHICLE MONITORING SYSTEM].) • Switch the ignition ON (engine off or on) and wait for **1.5 s or more**. • Perform the DTC inspection for the rear vehicle monitoring control module using the M-MDS. (See 09-02I-4 DTC INSPECTION [REAR VEHICLE MONITORING SYSTEM].) • Is DTC U0028:87 displayed?	Yes	Repeat the inspection from Step 1. • If the malfunction recurs, replace the rear vehicle monitoring control module (LH), then go to the next step. (See 09-22-77 REAR VEHICLE MONITORING CONTROL MODULE REMOVAL/INSTALLATION.)
		No	Go to Step 8.
7	**PERFORM DTC INSPECTION AND VERIFY REAR VEHICLE MONITORING CONTROL MODULE (RH) MALFUNCTION** • Clear the DTC for the rear vehicle monitoring control module using the M-MDS. (See 09-02I-5 CLEARING DTC [REAR VEHICLE MONITORING SYSTEM].) • Switch the ignition ON (engine off or on) and wait for **1.5 s or more**. • Perform the DTC inspection for the rear vehicle monitoring control module using the M-MDS. (See 09-02I-4 DTC INSPECTION [REAR VEHICLE MONITORING SYSTEM].) • Is DTC U0028:87 displayed?	Yes	Replace the rear vehicle monitoring control module (RH), then go to the next step. (See 09-22-77 REAR VEHICLE MONITORING CONTROL MODULE REMOVAL/INSTALLATION.)
		No	Go to the next step.
8	**VERIFY IF OTHER DTCs DISPLAYED** • Are any other DTCs displayed?	Yes	Repair the malfunctioning part according to the applicable DTC troubleshooting. (See 09-02I-5 DTC TABLE [REAR VEHICLE MONITORING SYSTEM].)
		No	DTC troubleshooting completed.

ON-BOARD DIAGNOSTIC [REAR VEHICLE MONITORING SYSTEM]

DTC U0401:68 [REAR VEHICLE MONITORING SYSTEM]

id0902z2885600

System malfunction location	**Error signal received from PCM**
Detection condition	• The rear vehicle monitoring control module (RH) receives malfunction signal from the PCM for **2 s or more**.
Fail-safe	• Inhibits the rear vehicle monitoring system.
Possible cause	• DTCs are stored in the PCM. • DTCs are stored in the instrument cluster. • Instrument cluster malfunction • PCM malfunction • Rear vehicle monitoring control module (RH) malfunction
System wiring diagram	—

Diagnostic Procedure

Step	Inspection		Action
1	**VERIFY PCM DTCs** • Perform the DTC inspection for the PCM using the M-MDS. (See 01-02-8 ON-BOARD DIAGNOSTIC TEST [SKYACTIV-G 2.0].) • Is the DTC displayed?	Yes	Repair the malfunctioning part according to the applicable DTC troubleshooting. (See 01-02-14 DTC TABLE [SKYACTIV-G 2.0].)
		No	Go to the next step.
2	**VERIFY INSTRUMENT CLUSTER DTCs** • Perform the DTC inspection for the instrument cluster using the M-MDS. (See 09-02G-7 DTC INSPECTION [INSTRUMENT CLUSTER].) • Is the DTC displayed?	Yes	Repair the malfunctioning part according to the applicable DTC troubleshooting. (See 09-02G-10 DTC TABLE [INSTRUMENT CLUSTER].)
		No	Go to the next step.
3	**INSPECT INSTRUMENT CLUSTER** • Inspect the instrument cluster. (See 09-22-11 INSTRUMENT CLUSTER INSPECTION.) • Is the instrument cluster normal?	Yes	Go to the next step.
		No	Replace the instrument cluster, then go to the next step. (See 09-22-6 INSTRUMENT CLUSTER REMOVAL/INSTALLATION.)
4	**PERFORM DTC INSPECTION AND VERIFY IF MALFUNCTIONING PART IS PCM** • Clear the DTC for the rear vehicle monitoring control module using the M-MDS. (See 09-02I-5 CLEARING DTC [REAR VEHICLE MONITORING SYSTEM].) • Switch the ignition ON (engine off or on) and wait for **2 s or more**. • Perform the DTC inspection for the rear vehicle monitoring control module using the M-MDS. (See 09-02I-4 DTC INSPECTION [REAR VEHICLE MONITORING SYSTEM].) • Is DTC U0401:68 displayed?	Yes	Replace the PCM, then go to the next step. (See 01-40-10 PCM REMOVAL/INSTALLATION [SKYACTIV-G 2.0].)
		No	Go to Step 6.
5	**VERIFY THAT REPAIRS HAVE BEEN COMPLETED** • Clear the DTC for the rear vehicle monitoring control module using the M-MDS. (See 09-02I-5 CLEARING DTC [REAR VEHICLE MONITORING SYSTEM].) • Switch the ignition ON (engine off or on) and wait for **2 s or more**. • Perform the DTC inspection for the rear vehicle monitoring control module using the M-MDS. (See 09-02I-4 DTC INSPECTION [REAR VEHICLE MONITORING SYSTEM].) • Is DTC U0401:68 displayed?	Yes	Repeat the inspection from Step 1. • If the malfunction recurs, replace the rear vehicle monitoring control module (RH), then go to the next step. (See 09-22-77 REAR VEHICLE MONITORING CONTROL MODULE REMOVAL/INSTALLATION.)
		No	Go to the next step.

ON-BOARD DIAGNOSTIC [REAR VEHICLE MONITORING SYSTEM]

Step	Inspection		Action
6	**VERIFY IF OTHER DTCs DISPLAYED** • Are any other DTCs displayed?	Yes	Repair the malfunctioning part according to the applicable DTC troubleshooting. (See 09-02I-5 DTC TABLE [REAR VEHICLE MONITORING SYSTEM].)
		No	DTC troubleshooting completed.

DTC U0415:68 [REAR VEHICLE MONITORING SYSTEM]

id0902z2885500

System malfunction location	**Error signal received from DSC HU/CM**
Detection condition	• The rear vehicle monitoring control module (RH) receives malfunction signal from the DSC HU/CM for **2 s or more**.
Fail-safe	• Inhibits the rear vehicle monitoring system.
Possible cause	• DSC HU/CM stores DTCs. • DTCs are stored in the instrument cluster. • Instrument cluster malfunction • DSC HU/CM malfunction • Rear vehicle monitoring control module (RH) malfunction
System wiring diagram	—

Diagnostic Procedure

Step	Inspection		Action
1	**VERIFY DSC HU/CM DTCs** • Perform the DTC inspection for the DSC HU/CM using the M-MDS. (See 04-02A-7 ON-BOARD DIAGNOSIS [DYNAMIC STABILITY CONTROL (DSC)].) • Is the DTC displayed?	Yes	Repair the malfunctioning part according to the applicable DTC troubleshooting. (See 04-02A-7 ON-BOARD DIAGNOSIS [DYNAMIC STABILITY CONTROL (DSC)].)
		No	Go to the next step.
2	**VERIFY INSTRUMENT CLUSTER DTCs** • Perform the DTC inspection for the instrument cluster using the M-MDS. (See 09-02G-7 DTC INSPECTION [INSTRUMENT CLUSTER].) • Is the DTC displayed?	Yes	Repair the malfunctioning part according to the applicable DTC troubleshooting. (See 09-02G-10 DTC TABLE [INSTRUMENT CLUSTER].)
		No	Go to the next step.
3	**INSPECT INSTRUMENT CLUSTER** • Inspect the instrument cluster. (See 09-22-11 INSTRUMENT CLUSTER INSPECTION.) • Is the instrument cluster normal?	Yes	Go to the next step.
		No	Replace the instrument cluster, then go to the next step. (See 09-22-6 INSTRUMENT CLUSTER REMOVAL/INSTALLATION.)
4	**PERFORM DTC INSPECTION AND VERIFY IF MALFUNCTIONING PART IS DSC HU/CM** • Clear the DTC for the rear vehicle monitoring control module using the M-MDS. (See 09-02I-5 CLEARING DTC [REAR VEHICLE MONITORING SYSTEM].) • Switch the ignition ON (engine off or on) and wait for **2 s or more**. • Perform the DTC inspection for the rear vehicle monitoring control module using the M-MDS. (See 09-02I-4 DTC INSPECTION [REAR VEHICLE MONITORING SYSTEM].) • Is DTC U0415:68 displayed?	Yes	Replace the DSC HU/CM, then go to the next step. (See 04-15-4 DSC HU/CM REMOVAL/INSTALLATION.)
		No	Go to Step 6.

ON-BOARD DIAGNOSTIC [REAR VEHICLE MONITORING SYSTEM]

Step	Inspection		Action
5	**VERIFY THAT REPAIRS HAVE BEEN COMPLETED** • Clear the DTC for the rear vehicle monitoring control module using the M-MDS. (See 09-02I-5 CLEARING DTC [REAR VEHICLE MONITORING SYSTEM].) • Switch the ignition ON (engine off or on) and wait for **2 s or more**. • Perform the DTC inspection for the rear vehicle monitoring control module using the M-MDS. (See 09-02I-4 DTC INSPECTION [REAR VEHICLE MONITORING SYSTEM].) • Is DTC U0415:68 displayed?	Yes	Repeat the inspection from Step 1. • If the malfunction recurs, replace the rear vehicle monitoring control module (RH), then go to the next step. (See 09-22-77 REAR VEHICLE MONITORING CONTROL MODULE REMOVAL/INSTALLATION.)
		No	Go to the next step.
6	**VERIFY IF OTHER DTCs DISPLAYED** • Are any other DTCs displayed?	Yes	Repair the malfunctioning part according to the applicable DTC troubleshooting. (See 09-02I-5 DTC TABLE [REAR VEHICLE MONITORING SYSTEM].)
		No	DTC troubleshooting completed.

DTC U0423:68 [REAR VEHICLE MONITORING SYSTEM]

id0902z2888900

System malfunction location	**Error signal received from instrument cluster**
Detection condition	• The rear vehicle monitoring control module (RH) receives malfunction signal from the instrument cluster for **2 s or more**.
Fail-safe	• Inhibits the rear vehicle monitoring system.
Possible cause	• DTCs are stored in the instrument cluster. • Instrument cluster malfunction • Rear vehicle monitoring control module (RH) malfunction
System wiring diagram	—

Diagnostic Procedure

Step	Inspection		Action
1	**VERIFY INSTRUMENT CLUSTER DTCs** • Perform the DTC inspection for the instrument cluster using the M-MDS. (See 09-02G-7 DTC INSPECTION [INSTRUMENT CLUSTER].) • Is the DTC displayed?	Yes	Repair the malfunctioning part according to the applicable DTC troubleshooting. (See 09-02G-10 DTC TABLE [INSTRUMENT CLUSTER].)
		No	Go to the next step.
2	**INSPECT INSTRUMENT CLUSTER** • Inspect the instrument cluster. (See 09-22-11 INSTRUMENT CLUSTER INSPECTION.) • Is the instrument cluster normal?	Yes	Go to the next step.
		No	Replace the instrument cluster, then go to the next step. (See 09-22-6 INSTRUMENT CLUSTER REMOVAL/INSTALLATION.)
3	**PERFORM DTC INSPECTION AND VERIFY IF MALFUNCTIONING PART IS INSTRUMENT CLUSTER** • Clear the DTC for the rear vehicle monitoring control module using the M-MDS. (See 09-02I-5 CLEARING DTC [REAR VEHICLE MONITORING SYSTEM].) • Switch the ignition ON (engine off or on) and wait for **2 s or more**. • Perform the DTC inspection for the rear vehicle monitoring control module using the M-MDS. (See 09-02I-4 DTC INSPECTION [REAR VEHICLE MONITORING SYSTEM].) • Is DTC U0423:68 displayed?	Yes	Replace the instrument cluster, then go to the next step. (See 09-22-6 INSTRUMENT CLUSTER REMOVAL/INSTALLATION.)
		No	Go to Step 5.

ON-BOARD DIAGNOSTIC [REAR VEHICLE MONITORING SYSTEM]

Step	Inspection		Action
4	**VERIFY THAT REPAIRS HAVE BEEN COMPLETED** • Clear the DTC for the rear vehicle monitoring control module using the M-MDS. (See 09-02I-5 CLEARING DTC [REAR VEHICLE MONITORING SYSTEM].) • Switch the ignition ON (engine off or on) and wait for **2 s or more**. • Perform the DTC inspection for the rear vehicle monitoring control module using the M-MDS. (See 09-02I-4 DTC INSPECTION [REAR VEHICLE MONITORING SYSTEM].) • Is DTC U0423:68 displayed?	Yes	Repeat the inspection from Step 1. • If the malfunction recurs, replace the rear vehicle monitoring control module (RH), then go to the next step. (See 09-22-77 REAR VEHICLE MONITORING CONTROL MODULE REMOVAL/INSTALLATION.)
		No	Go to the next step.
5	**VERIFY IF OTHER DTCs DISPLAYED** • Are any other DTCs displayed?	Yes	Repair the malfunctioning part according to the applicable DTC troubleshooting. (See 09-02I-5 DTC TABLE [REAR VEHICLE MONITORING SYSTEM].)
		No	DTC troubleshooting completed.

DTC U0515:68 [REAR VEHICLE MONITORING SYSTEM]

id0902z2842200

System malfunction location	**Error signal received from start stop unit**
Detection condition	• The rear vehicle monitoring control module (RH) receives malfunction signal from the start stop unit for **2 s or more**.
Fail-safe	• Inhibits the rear vehicle monitoring system.
Possible cause	• DTCs are stored in the start stop unit. • DTCs are stored in the instrument cluster. • Instrument cluster malfunction • Start stop unit malfunction • Rear vehicle monitoring control module (RH) malfunction
System wiring diagram	—

Diagnostic Procedure

Step	Inspection		Action
1	**VERIFY START STOP UNIT DTCs** • Perform the DTC inspection for the start stop unit using the M-MDS. (See 09-02C-6 DTC INSPECTION [START STOP UNIT].) • Is the DTC displayed?	Yes	Repair the malfunctioning part according to the applicable DTC troubleshooting. (See 09-02C-6 DTC INSPECTION [START STOP UNIT].)
		No	Go to the next step.
2	**VERIFY INSTRUMENT CLUSTER DTCs** • Perform the DTC inspection for the instrument cluster using the M-MDS. (See 09-02G-7 DTC INSPECTION [INSTRUMENT CLUSTER].) • Is the DTC displayed?	Yes	Repair the malfunctioning part according to the applicable DTC troubleshooting. (See 09-02G-10 DTC TABLE [INSTRUMENT CLUSTER].)
		No	Go to the next step.
3	**INSPECT INSTRUMENT CLUSTER** • Inspect the instrument cluster. (See 09-22-11 INSTRUMENT CLUSTER INSPECTION.) • Is the instrument cluster normal?	Yes	Go to the next step.
		No	Replace the instrument cluster, then go to the next step. (See 09-22-6 INSTRUMENT CLUSTER REMOVAL/INSTALLATION.)

ON-BOARD DIAGNOSTIC [REAR VEHICLE MONITORING SYSTEM]

Step	Inspection		Action
4	**PERFORM DTC INSPECTION AND VERIFY IF MALFUNCTIONING PART IS START STOP UNIT** • Clear the DTC for the rear vehicle monitoring control module using the M-MDS. (See 09-02I-5 CLEARING DTC [REAR VEHICLE MONITORING SYSTEM].) • Switch the ignition ON (engine off or on) and wait for **2 s or more**. • Perform the DTC inspection for the rear vehicle monitoring control module using the M-MDS. (See 09-02I-4 DTC INSPECTION [REAR VEHICLE MONITORING SYSTEM].) • Is DTC U0515:68 displayed?	Yes	Replace the start stop unit, then go to the next step. (See 09-14-54 START STOP UNIT REMOVAL/INSTALLATION.)
		No	Go to Step 6.
5	**VERIFY THAT REPAIRS HAVE BEEN COMPLETED** • Clear the DTC for the rear vehicle monitoring control module using the M-MDS. (See 09-02I-5 CLEARING DTC [REAR VEHICLE MONITORING SYSTEM].) • Switch the ignition ON (engine off or on) and wait for **2 s or more**. • Perform the DTC inspection for the rear vehicle monitoring control module using the M-MDS. (See 09-02I-4 DTC INSPECTION [REAR VEHICLE MONITORING SYSTEM].) • Is DTC U0515:68 displayed?	Yes	Repeat the inspection from Step 1. • If the malfunction recurs, replace the rear vehicle monitoring control module (RH), then go to the next step. (See 09-22-77 REAR VEHICLE MONITORING CONTROL MODULE REMOVAL/INSTALLATION.)
		No	Go to the next step.
6	**VERIFY IF OTHER DTCs DISPLAYED** • Are any other DTCs displayed?	Yes	Repair the malfunctioning part according to the applicable DTC troubleshooting. (See 09-02I-5 DTC TABLE [REAR VEHICLE MONITORING SYSTEM].)
		No	DTC troubleshooting completed.

ON-BOARD DIAGNOSTIC [REAR VEHICLE MONITORING SYSTEM]

DTC U1A4B:16 [REAR VEHICLE MONITORING SYSTEM]

id0902z2950200

System malfunction location	**Rear vehicle monitoring control module (LH) low power supply voltage input**
Detection condition	• Power supply circuit voltage of **9 V or less** is detected in rear vehicle monitoring control module (LH) for **1 s or more**.
Fail-safe	• Inhibits the rear vehicle monitoring system.
Possible cause	• DTCs are stored in the PCM. • Battery malfunction • Generator malfunction • Rear vehicle monitoring control module (LH) connector or terminal malfunction • Rear vehicle monitoring control module (LH) power supply circuit malfunction — Short to ground in wiring harness between C/U IG1 15 A fuse and rear vehicle monitoring control module (LH) terminal F — C/U IG1 15 A fuse malfunction — Open circuit in wiring harness between IG1 relay and rear vehicle monitoring control module (LH) terminal F • Rear vehicle monitoring control module (LH) malfunction

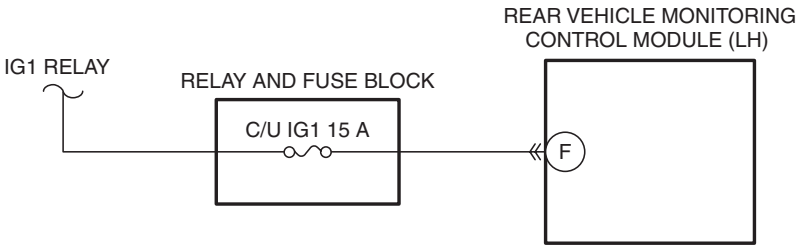

REAR VEHICLE MONITORING CONTROL MODULE (LH) WIRING HARNESS-SIDE CONNECTOR

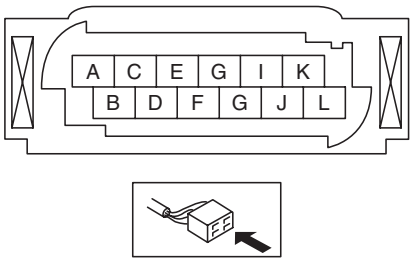

Diagnostic Procedure

Step	Inspection		Action
1	**VERIFY PCM DTCs** • Perform the DTC inspection for the PCM using the M-MDS. (See 01-02-8 ON-BOARD DIAGNOSTIC TEST [SKYACTIV-G 2.0].) • Is the DTC displayed?	Yes	Repair the malfunctioning part according to the applicable DTC troubleshooting. (See 01-02-14 DTC TABLE [SKYACTIV-G 2.0].)
		No	Go to the next step.
2	**INSPECT BATTERY** • Inspect the battery. (See 01-17A-8 BATTERY INSPECTION [SKYACTIV-G 2.0 (WITHOUT i-stop)].) (See 01-17A-7 BATTERY INSPECTION [SKYACTIV-G 2.0].) (See 01-17B-6 BATTERY INSPECTION [SKYACTIV-D 2.2].) • Is the battery normal?	Yes	Go to the next step.
		No	Recharge or replace the battery, then go to Step 6. (See 01-17A-10 BATTERY RECHARGING [SKYACTIV-G 2.0 (WITHOUT i-stop)].) (See 01-17A-9 BATTERY RECHARGING [SKYACTIV-G 2.0].) (See 01-17B-8 BATTERY RECHARGING [SKYACTIV-D 2.2].) (See 01-17A-3 BATTERY REMOVAL/INSTALLATION [SKYACTIV-G 2.0].) (See 01-17B-3 BATTERY REMOVAL/INSTALLATION [SKYACTIV-D 2.2].)

ON-BOARD DIAGNOSTIC [REAR VEHICLE MONITORING SYSTEM]

Step	Inspection		Action
3	**INSPECT GENERATOR** • Inspect the generator. (See 01-17A-19 GENERATOR INSPECTION [SKYACTIV-G 2.0].) (See 01-17B-16 GENERATOR INSPECTION [SKYACTIV-D 2.2].) • Is the generator normal?	Yes	Go to the next step.
		No	Replace the generator, then go to Step 6. (See 01-17A-17 GENERATOR REMOVAL/INSTALLATION [SKYACTIV-G 2.0].) (See 01-17B-14 GENERATOR REMOVAL/INSTALLATION [SKYACTIV-D 2.2].)
4	**INSPECT REAR VEHICLE MONITORING CONTROL MODULE (LH) CONNECTOR** • Switch the ignition to off. • Disconnect the negative battery cable. (See 01-17A-13 NEGATIVE BATTERY CABLE DISCONNECTION/CONNECTION [SKYACTIV-G 2.0 (WITHOUT i-stop)].) (See 01-17A-11 NEGATIVE BATTERY CABLE DISCONNECTION/CONNECTION [SKYACTIV-G 2.0].) (See 01-17B-9 NEGATIVE BATTERY CABLE DISCONNECTION/CONNECTION [SKYACTIV-D 2.2].) • Disconnect the rear vehicle monitoring control module (LH) connector. • Inspect the connector engagement and connection condition and inspect the terminals for damage, deformation, corrosion, or disconnection. • Is the connector normal?	Yes	Go to the next step.
		No	Repair or replace the connector, then go to Step 6.
5	**VERIFY REAR VEHICLE MONITORING CONTROL MODULE (LH) POWER SUPPLY VOLTAGE** • Reconnect all the disconnected connectors. • Connect the negative battery cable. (See 01-17A-13 NEGATIVE BATTERY CABLE DISCONNECTION/CONNECTION [SKYACTIV-G 2.0 (WITHOUT i-stop)].) (See 01-17A-11 NEGATIVE BATTERY CABLE DISCONNECTION/CONNECTION [SKYACTIV-G 2.0].) (See 01-17B-9 NEGATIVE BATTERY CABLE DISCONNECTION/CONNECTION [SKYACTIV-D 2.2].) • Display PID VPWR_L using the M-MDS. (See 09-02I-47 PID/DATA MONITOR INSPECTION [REAR VEHICLE MONITORING SYSTEM].) • Is the voltage **B+**?	Yes	Go to the next step.
		No	Inspect the C/U IG1 15 A fuse. • If a fuse is burnt out: — Repair or replace the wiring harness which is shorted to ground. — Replace the fuse. • If a fuse is damaged: — Replace the fuse. • If the fuse is normal: — Repair or replace the wiring harness which has an open circuit. Go to the next step.

ON-BOARD DIAGNOSTIC [REAR VEHICLE MONITORING SYSTEM]

Step	Inspection		Action
6	**VERIFY THAT REPAIRS HAVE BEEN COMPLETED** • Reconnect all the disconnected connectors. • Reconnect the disconnected negative battery cable. (See 01-17A-13 NEGATIVE BATTERY CABLE DISCONNECTION/CONNECTION [SKYACTIV-G 2.0 (WITHOUT i-stop)].) (See 01-17A-11 NEGATIVE BATTERY CABLE DISCONNECTION/CONNECTION [SKYACTIV-G 2.0].) (See 01-17B-9 NEGATIVE BATTERY CABLE DISCONNECTION/CONNECTION [SKYACTIV-D 2.2].) • Clear the DTC for the rear vehicle monitoring control module using the M-MDS. (See 09-02I-5 CLEARING DTC [REAR VEHICLE MONITORING SYSTEM].) • Switch the ignition ON (engine off or on) and wait for **1.5 s or more**. • Perform the DTC inspection for the rear vehicle monitoring control module using the M-MDS. (See 09-02I-4 DTC INSPECTION [REAR VEHICLE MONITORING SYSTEM].) • Is DTC U1A4B:16 displayed?	Yes	Repeat the inspection from Step 1. • If the malfunction recurs, replace the rear vehicle monitoring control module (LH), then go to the next step. (See 09-22-77 REAR VEHICLE MONITORING CONTROL MODULE REMOVAL/INSTALLATION.)
		No	Go to the next step.
7	**VERIFY IF OTHER DTCs DISPLAYED** • Are any other DTCs displayed?	Yes	Repair the malfunctioning part according to the applicable DTC troubleshooting. (See 09-02I-5 DTC TABLE [REAR VEHICLE MONITORING SYSTEM].)
		No	DTC troubleshooting completed.

DTC U1A4B:17 [REAR VEHICLE MONITORING SYSTEM]

id0902z2888500

System malfunction location	**Rear vehicle monitoring control module (LH) high power supply voltage input**
Detection condition	• Power supply circuit voltage of **16 V or more** is detected in rear vehicle monitoring control module (LH) for **1 s or more**.
Fail-safe	• Inhibits the rear vehicle monitoring system.
Possible cause	• DTCs are stored in the PCM. • Battery malfunction • Generator malfunction • Rear vehicle monitoring control module (LH) malfunction
System wiring diagram	—

Diagnostic Procedure

Step	Inspection		Action
1	**VERIFY PCM DTCs** • Perform the DTC inspection for the PCM using the M-MDS. (See 01-02-8 ON-BOARD DIAGNOSTIC TEST [SKYACTIV-G 2.0].) • Is the DTC displayed?	Yes	Repair the malfunctioning part according to the applicable DTC troubleshooting. (See 01-02-14 DTC TABLE [SKYACTIV-G 2.0].)
		No	Go to the next step.
2	**INSPECT BATTERY** • Inspect the battery. (See 01-17A-8 BATTERY INSPECTION [SKYACTIV-G 2.0 (WITHOUT i-stop)].) (See 01-17A-7 BATTERY INSPECTION [SKYACTIV-G 2.0].) (See 01-17B-6 BATTERY INSPECTION [SKYACTIV-D 2.2].) • Is the battery normal?	Yes	Go to the next step.
		No	Replace the battery, then go to Step 4. (See 01-17A-3 BATTERY REMOVAL/INSTALLATION [SKYACTIV-G 2.0].) (See 01-17B-3 BATTERY REMOVAL/INSTALLATION [SKYACTIV-D 2.2].)

ON-BOARD DIAGNOSTIC [REAR VEHICLE MONITORING SYSTEM]

Step	Inspection		Action
3	**INSPECT GENERATOR** • Inspect the generator. (See 01-17A-19 GENERATOR INSPECTION [SKYACTIV-G 2.0].) (See 01-17B-16 GENERATOR INSPECTION [SKYACTIV-D 2.2].) • Is the generator normal?	Yes	Go to the next step.
		No	Replace the generator, then go to the next step. (See 01-17A-17 GENERATOR REMOVAL/INSTALLATION [SKYACTIV-G 2.0].) (See 01-17B-14 GENERATOR REMOVAL/INSTALLATION [SKYACTIV-D 2.2].)
4	**VERIFY THAT REPAIRS HAVE BEEN COMPLETED** • Clear the DTC for the rear vehicle monitoring control module using the M-MDS. (See 09-02I-5 CLEARING DTC [REAR VEHICLE MONITORING SYSTEM].) • Switch the ignition ON (engine off or on) and wait for **1.5 s or more**. • Perform the DTC inspection for the rear vehicle monitoring control module using the M-MDS. (See 09-02I-4 DTC INSPECTION [REAR VEHICLE MONITORING SYSTEM].) • Is DTC U1A4B:17 displayed?	Yes	Repeat the inspection from Step 1. • If the malfunction recurs, replace the rear vehicle monitoring control module (LH), then go to the next step. (See 09-22-77 REAR VEHICLE MONITORING CONTROL MODULE REMOVAL/INSTALLATION.)
		No	Go to the next step.
5	**VERIFY IF OTHER DTCs DISPLAYED** • Are any other DTCs displayed?	Yes	Repair the malfunctioning part according to the applicable DTC troubleshooting. (See 09-02I-5 DTC TABLE [REAR VEHICLE MONITORING SYSTEM].)
		No	DTC troubleshooting completed.

ON-BOARD DIAGNOSTIC [REAR VEHICLE MONITORING SYSTEM]

DTC U1A4B:43, U1A4B:44, U1A4B:45, U1A4B:46, U1A4B:47, U1A4B:48, U1A4B:49, U1A4B:96 [REAR VEHICLE MONITORING SYSTEM]

id0902z2887800

System malfunction location	Rear vehicle monitoring control module (LH) malfunction
Detection condition	• U1A4B:43 — Rear vehicle monitoring control module (LH) external RAM malfunction detected. • U1A4B:44 — Rear vehicle monitoring control module (LH) internal RAM malfunction detected. • U1A4B:45 — Rear vehicle monitoring control module (LH) ROM malfunction detected. • U1A4B:46 — Rear vehicle monitoring control module (LH) EEPROM malfunction detected. • U1A4B:47 — Rear vehicle monitoring control module (LH) monitoring system malfunction detected. • U1A4B:48 — Rear vehicle monitoring control module (LH) communication circuit malfunction detected. • U1A4B:49 — Rear vehicle monitoring control module (LH) voltage control circuit malfunction detected. • U1A4B:96 — Rear vehicle monitoring control module (LH) internal circuit malfunction detected.
Fail-safe	• U1A4B:43 — Inhibits the rear vehicle monitoring system. • U1A4B:44 — Inhibits the rear vehicle monitoring system. • U1A4B:45 — Inhibits the rear vehicle monitoring system. • U1A4B:46 — Inhibits the rear vehicle monitoring system. • U1A4B:47 — Inhibits the rear vehicle monitoring system. • U1A4B:48 — Inhibits the rear vehicle monitoring system. • U1A4B:49 — Inhibits the rear vehicle monitoring system. • U1A4B:96 — Inhibits the rear vehicle monitoring system.
Possible cause	• Rear vehicle monitoring control module (LH) malfunction
System wiring diagram	—

Diagnostic Procedure

Step	Inspection		Action
1	**PERFORM DTC INSPECTION AND VERIFY REAR VEHICLE MONITORING CONTROL MODULE (LH) MALFUNCTION** • Clear the DTC for the rear vehicle monitoring control module using the M-MDS. (See 09-02I-5 CLEARING DTC [REAR VEHICLE MONITORING SYSTEM].) • Switch the ignition ON (engine off or on) and wait for **1.5 s or more**. • Perform the DTC inspection for the rear vehicle monitoring control module using the M-MDS. (See 09-02I-4 DTC INSPECTION [REAR VEHICLE MONITORING SYSTEM].) • Are DTCs U1A4B:43/U1A4B:44/U1A4B:45/U1A4B:46/U1A4B:47/U1A4B:48/U1A4B:49/U1A4B:96 displayed?	Yes	Replace the rear vehicle monitoring control module (LH), then go to the next step. (See 09-22-77 REAR VEHICLE MONITORING CONTROL MODULE REMOVAL/INSTALLATION.)
		No	Go to the next step.
2	**VERIFY IF OTHER DTCs DISPLAYED** • Are any other DTCs displayed?	Yes	Repair the malfunctioning part according to the applicable DTC troubleshooting. (See 09-02I-5 DTC TABLE [REAR VEHICLE MONITORING SYSTEM].)
		No	DTC troubleshooting completed.

ON-BOARD DIAGNOSTIC [REAR VEHICLE MONITORING SYSTEM]

DTC U1A4B:54 [REAR VEHICLE MONITORING SYSTEM]

id0902z2668600

System malfunction location	**Radar aiming is not performed or radar sensor axis is deviated (rear vehicle monitoring control module (LH))**
Detection condition	• Malfunction in radar aiming of rear vehicle monitoring control module (LH) detected for **1 s or more**.
Fail-safe	• Inhibits the rear vehicle monitoring system.
Possible cause	• Rear vehicle monitoring control module (LH) radar aiming was not performed. • Deviation of rear vehicle monitoring control module (LH) radar sensor axis • Rear vehicle monitoring control module (LH) malfunction
System wiring diagram	—

Diagnostic Procedure

Step	Inspection		Action
1	**PERFORM REAR VEHICLE MONITORING CONTROL MODULE (LH) RADAR AIMING** • Perform the rear vehicle monitoring control module (LH) radar aiming. PERFORM REAR VEHICLE MONITORING CONTROL MODULE (LH) RADAR AIMING (See 09-22-83 REAR VEHICLE MONITORING RADAR AIMING.) • Clear the DTC for the rear vehicle monitoring control module using the M-MDS. (See 09-02I-5 CLEARING DTC [REAR VEHICLE MONITORING SYSTEM].) • Switch the ignition ON (engine off or on) and wait for **1.5 s or more**. • Perform the DTC inspection for the rear vehicle monitoring control module using the M-MDS. (See 09-02I-4 DTC INSPECTION [REAR VEHICLE MONITORING SYSTEM].) • Is DTC U1A4B:54 displayed?	Yes	Perform the rear vehicle monitoring control module (LH) radar aiming again, then go to the next step. (See 09-22-83 REAR VEHICLE MONITORING RADAR AIMING.)
		No	Go to Step 3.
2	**VERIFY THAT REPAIRS HAVE BEEN COMPLETED** • Clear the DTC for the rear vehicle monitoring control module using the M-MDS. (See 09-02I-5 CLEARING DTC [REAR VEHICLE MONITORING SYSTEM].) • Switch the ignition ON (engine off or on) and wait for **1.5 s or more**. • Perform the DTC inspection for the rear vehicle monitoring control module using the M-MDS. (See 09-02I-4 DTC INSPECTION [REAR VEHICLE MONITORING SYSTEM].) • Is DTC U1A4B:54 displayed?	Yes	Replace the rear vehicle monitoring control module (LH), then go to the next step. (See 09-22-77 REAR VEHICLE MONITORING CONTROL MODULE REMOVAL/INSTALLATION.)
		No	Go to the next step.
3	**VERIFY IF OTHER DTCs DISPLAYED** • Are any other DTCs displayed?	Yes	Repair the malfunctioning part according to the applicable DTC troubleshooting. (See 09-02I-5 DTC TABLE [REAR VEHICLE MONITORING SYSTEM].)
		No	DTC troubleshooting completed.

ON-BOARD DIAGNOSTIC [REAR VEHICLE MONITORING SYSTEM]

DTC U2100:00 [REAR VEHICLE MONITORING SYSTEM]

id0902z2462600

System malfunction location	**Rear vehicle monitoring control module (RH) configuration error**
Detection condition	• Rear vehicle monitoring control module (RH) configuration error detected.
Fail-safe	• Inhibits the rear vehicle monitoring system.
Possible cause	• Rear vehicle monitoring control module (RH) configuration error • Rear vehicle monitoring control module (RH) malfunction
System wiring diagram	—

Diagnostic Procedure

Step	Inspection		Action
1	**PERFORM REAR VEHICLE MONITORING CONTROL MODULE (RH) CONFIGURATION (USING AS-BUILT DATA)** • Using the M-MDS, perform the rear vehicle monitoring control module (RH) configuration with the As-Built data. (See 09-22-83 REAR VEHICLE MONITORING CONTROL MODULE CONFIGURATION (USING AS-BUILT DATA).) • Clear the DTC for the rear vehicle monitoring control module using the M-MDS. (See 09-02I-5 CLEARING DTC [REAR VEHICLE MONITORING SYSTEM].) • Perform the DTC inspection for the rear vehicle monitoring control module using the M-MDS. (See 09-02I-4 DTC INSPECTION [REAR VEHICLE MONITORING SYSTEM].) • Is DTC U2100:00 displayed?	Yes	Using the M-MDS, re-perform the rear vehicle monitoring control module (RH) configuration using the As-Built data, then go to the next step. (See 09-22-83 REAR VEHICLE MONITORING CONTROL MODULE CONFIGURATION (USING AS-BUILT DATA).)
		No	Go to Step 3.
2	**VERIFY THAT REPAIRS HAVE BEEN COMPLETED** • Clear the DTC for the rear vehicle monitoring control module using the M-MDS. (See 09-02I-5 CLEARING DTC [REAR VEHICLE MONITORING SYSTEM].) • Perform the DTC inspection for the rear vehicle monitoring control module using the M-MDS. (See 09-02I-4 DTC INSPECTION [REAR VEHICLE MONITORING SYSTEM].) • Is DTC U2100:00 displayed?	Yes	Replace the rear vehicle monitoring control module (RH), then go to the next step. (See 09-22-77 REAR VEHICLE MONITORING CONTROL MODULE REMOVAL/INSTALLATION.)
		No	Go to the next step.
3	**VERIFY IF OTHER DTCs DISPLAYED** • Are any other DTCs displayed?	Yes	Repair the malfunctioning part according to the applicable DTC troubleshooting. (See 09-02I-5 DTC TABLE [REAR VEHICLE MONITORING SYSTEM].)
		No	DTC troubleshooting completed.

ON-BOARD DIAGNOSTIC [REAR VEHICLE MONITORING SYSTEM]

DTC U3000:43, U3000:44, U3000:45, U3000:46, U3000:47, U3000:48, U3000:49, U3000:96 [REAR VEHICLE MONITORING SYSTEM]

id0902z2888300

System malfunction location	Rear vehicle monitoring control module (RH) malfunction
Detection condition	• U3000:43 — Rear vehicle monitoring control module (RH) external RAM malfunction detected. • U3000:44 — Rear vehicle monitoring control module (RH) internal RAM malfunction detected. • U3000:45 — Rear vehicle monitoring control module (RH) ROM malfunction detected. • U3000:46 — Rear vehicle monitoring control module (RH) EEPROM malfunction detected. • U3000:47 — Rear vehicle monitoring control module (RH) monitoring system malfunction detected. • U3000:48 — Rear vehicle monitoring control module (RH) communication circuit malfunction detected. • U3000:49 — Rear vehicle monitoring control module (RH) voltage control circuit malfunction detected. • U3000:96 — Rear vehicle monitoring control module (RH) internal circuit malfunction detected.
Fail-safe	• U3000:43 — Inhibits the rear vehicle monitoring system. • U3000:44 — Inhibits the rear vehicle monitoring system. • U3000:45 — Inhibits the rear vehicle monitoring system. • U3000:46 — Inhibits the rear vehicle monitoring system. • U3000:47 — Inhibits the rear vehicle monitoring system. • U3000:48 — Inhibits the rear vehicle monitoring system. • U3000:49 — Inhibits the rear vehicle monitoring system. • U3000:96 — Inhibits the rear vehicle monitoring system.
Possible cause	• Rear vehicle monitoring control module (RH) malfunction
System wiring diagram	—

Diagnostic Procedure

Step	Inspection		Action
1	**PERFORM DTC INSPECTION AND VERIFY REAR VEHICLE MONITORING CONTROL MODULE (RH) MALFUNCTION** • Clear the DTC for the rear vehicle monitoring control module using the M-MDS. (See 09-02I-5 CLEARING DTC [REAR VEHICLE MONITORING SYSTEM].) • Switch the ignition ON (engine off or on) and wait for **1.5 s or more**. • Perform the DTC inspection for the rear vehicle monitoring control module using the M-MDS. (See 09-02I-4 DTC INSPECTION [REAR VEHICLE MONITORING SYSTEM].) • Are DTCs U3000:43/U3000:44/U3000:45/U3000:46/U3000:47/U3000:48/U3000:49/U3000:96 displayed?	Yes	Replace the rear vehicle monitoring control module (RH), then go to the next step. (See 09-22-77 REAR VEHICLE MONITORING CONTROL MODULE REMOVAL/INSTALLATION.)
		No	Go to the next step.
2	**VERIFY IF OTHER DTCs DISPLAYED** • Are any other DTCs displayed?	Yes	Repair the malfunctioning part according to the applicable DTC troubleshooting. (See 09-02I-5 DTC TABLE [REAR VEHICLE MONITORING SYSTEM].)
		No	DTC troubleshooting completed.

ON-BOARD DIAGNOSTIC [REAR VEHICLE MONITORING SYSTEM]

DTC U3000:4B [REAR VEHICLE MONITORING SYSTEM]

id0902z2888400

System malfunction location	**Temperature temporarily increases depending on various external and environmental factors (rear vehicle monitoring control module (LH) or (RH))**
Detection condition	• Rear vehicle monitoring control module internal temperature of **85°C {185 °F} or more** detected for **10 s or more**.
Fail-safe	• Inhibits the rear vehicle monitoring system.
Possible cause	• Temporary rise in temperature due to some external environment factor • Rear vehicle monitoring control module (LH) malfunction • Rear vehicle monitoring control module (RH) malfunction
System wiring diagram	—

Diagnostic Procedure

Step	Inspection		Action
1	**VERIFY REAR VEHICLE MONITORING CONTROL MODULE INTERNAL TEMPERATURE** • Using the M-MDS, display the following PIDs. (See 09-02I-47 PID/DATA MONITOR INSPECTION [REAR VEHICLE MONITORING SYSTEM].) — INTNL_TMP_L — INTNL_TMP_R • Is the monitor value **85 °C {185 °F} or more**?	Yes	Replace the malfunctioning rear vehicle monitoring control module, then go to the next step. (See 09-22-77 REAR VEHICLE MONITORING CONTROL MODULE REMOVAL/INSTALLATION.)
		No	Go to the next step.
2	**PERFORM DTC INSPECTION AND VERIFY IF MALFUNCTIONING PART IS REAR VEHICLE MONITORING CONTROL MODULE (LH)** • Clear the DTC for the rear vehicle monitoring control module using the M-MDS. (See 09-02I-5 CLEARING DTC [REAR VEHICLE MONITORING SYSTEM].) • Switch the ignition ON (engine off or on) and wait for **10 s or more**. • Perform the DTC inspection for the rear vehicle monitoring control module using the M-MDS. (See 09-02I-4 DTC INSPECTION [REAR VEHICLE MONITORING SYSTEM].) • Is DTC U3000:4B displayed?	Yes	Replace the rear vehicle monitoring control module (LH), then go to the next step. (See 09-22-77 REAR VEHICLE MONITORING CONTROL MODULE REMOVAL/INSTALLATION.)
		No	Go to Step 4.
3	**PERFORM DTC INSPECTION AND VERIFY IF MALFUNCTIONING PART IS REAR VEHICLE MONITORING CONTROL MODULE (RH)** • Clear the DTC for the rear vehicle monitoring control module using the M-MDS. (See 09-02I-5 CLEARING DTC [REAR VEHICLE MONITORING SYSTEM].) • Switch the ignition ON (engine off or on) and wait for **10 s or more**. • Perform the DTC inspection for the rear vehicle monitoring control module using the M-MDS. (See 09-02I-4 DTC INSPECTION [REAR VEHICLE MONITORING SYSTEM].) • Is DTC U3000:4B displayed?	Yes	Replace the rear vehicle monitoring control module (RH), then go to the next step. (See 09-22-77 REAR VEHICLE MONITORING CONTROL MODULE REMOVAL/INSTALLATION.)
		No	Go to the next step.
4	**VERIFY IF OTHER DTCs DISPLAYED** • Are any other DTCs displayed?	Yes	Repair the malfunctioning part according to the applicable DTC troubleshooting. (See 09-02I-5 DTC TABLE [REAR VEHICLE MONITORING SYSTEM].)
		No	DTC troubleshooting completed.

ON-BOARD DIAGNOSTIC [REAR VEHICLE MONITORING SYSTEM]

DTC U3000:54 [REAR VEHICLE MONITORING SYSTEM]

id0902z2569200

System malfunction location	**Radar aiming is not performed or radar sensor axis is deviated (rear vehicle monitoring control module (RH))**
Detection condition	• Malfunction in radar aiming of rear vehicle monitoring control module (RH) detected for **1 s or more**.
Fail-safe	• Inhibits the rear vehicle monitoring system.
Possible cause	• Rear vehicle monitoring control module (RH) radar aiming was not performed. • Deviation of rear vehicle monitoring control module (RH) radar sensor axis • Rear vehicle monitoring control module (RH) malfunction
System wiring diagram	—

Diagnostic Procedure

Step	Inspection		Action
1	**PERFORM REAR VEHICLE MONITORING CONTROL MODULE (RH) RADAR AIMING** • Perform the rear vehicle monitoring control module (RH) radar aiming. (See 09-22-83 REAR VEHICLE MONITORING RADAR AIMING.) • Clear the DTC for the rear vehicle monitoring control module using the M-MDS. (See 09-02I-5 CLEARING DTC [REAR VEHICLE MONITORING SYSTEM].) • Switch the ignition ON (engine off or on) and wait for **1.5 s or more**. • Perform the DTC inspection for the rear vehicle monitoring control module using the M-MDS. (See 09-02I-4 DTC INSPECTION [REAR VEHICLE MONITORING SYSTEM].) • Is DTC U3000:54 displayed?	Yes	Perform the rear vehicle monitoring control module (RH) radar aiming again, then go to the next step. (See 09-22-83 REAR VEHICLE MONITORING RADAR AIMING.)
		No	Go to Step 3.
2	**VERIFY THAT REPAIRS HAVE BEEN COMPLETED** • Clear the DTC for the rear vehicle monitoring control module using the M-MDS. (See 09-02I-5 CLEARING DTC [REAR VEHICLE MONITORING SYSTEM].) • Switch the ignition ON (engine off or on) and wait for **1.5 s or more**. • Perform the DTC inspection for the rear vehicle monitoring control module using the M-MDS. (See 09-02I-4 DTC INSPECTION [REAR VEHICLE MONITORING SYSTEM].) • Is DTC U3000:54 displayed?	Yes	Replace the rear vehicle monitoring control module (RH), then go to the next step. (See 09-22-77 REAR VEHICLE MONITORING CONTROL MODULE REMOVAL/INSTALLATION.)
		No	Go to the next step.
3	**VERIFY IF OTHER DTCs DISPLAYED** • Are any other DTCs displayed?	Yes	Repair the malfunctioning part according to the applicable DTC troubleshooting. (See 09-02I-5 DTC TABLE [REAR VEHICLE MONITORING SYSTEM].)
		No	DTC troubleshooting completed.

ON-BOARD DIAGNOSTIC [REAR VEHICLE MONITORING SYSTEM]

DTC U3000:97 [REAR VEHICLE MONITORING SYSTEM]

id0902z2885200

System malfunction location	**Radar sensor sensitivity temporarily decreases depending on various external and environmental factors (rear vehicle monitoring control module (LH) or (RH))**
Detection condition	• Radar sensor sensitivity in rear vehicle monitoring control module (LH) or (RH) temporarily decreases
Fail-safe	• Inhibits the rear vehicle monitoring system.
Possible cause	• Rear bumper soiling or foreign material (reflective object) is adhered. • Dirt or foreign material (reflective object) on rear vehicle monitoring control module (LH) or (RH) • Concavity and convexity on the surface of the repaired rear bumper • Rear vehicle monitoring control module (LH) malfunction • Rear vehicle monitoring control module (RH) malfunction
System wiring diagram	—

Diagnostic Procedure

Step	Inspection		Action
1	**INSPECT REAR BUMPER SURFACE** • Visually inspect the rear bumper surface for the following: — Dirt — Adhered foreign material (reflective object) • Is the rear bumper normal?	Yes	Go to the next step.
		No	Remove dirt or foreign material (reflective object), then go to Step 4.
2	**INSPECT AREA AROUND REAR VEHICLE MONITORING CONTROL MODULE (LH/RH)** • Visually inspect the area around the rear vehicle monitoring control module (LH/RH) for the following. — Dirt — Adhered foreign material (reflective object) • Is the area around the rear vehicle monitoring control module (LH/RH) normal?	Yes	Go to the next step.
		No	Remove dirt or foreign material (reflective object), then go to Step 4.
3	**VERIFY REAR BUMPER REPAIR HISTORY** • Verify if the rear bumper had been repaired or repainted before. • Is there a problem with the repair? (Is the paint Mazda genuine?)	Yes	Go to the next step.
		No	Replace the rear bumper, then go to the next step. (See 09-10-24 REAR BUMPER REMOVAL/INSTALLATION.)
4	**PERFORM DTC INSPECTION AND VERIFY IF MALFUNCTIONING PART IS REAR VEHICLE MONITORING CONTROL MODULE (LH)** • Clear the DTC for the rear vehicle monitoring control module using the M-MDS. (See 09-02I-5 CLEARING DTC [REAR VEHICLE MONITORING SYSTEM].) • Drive the vehicle at **40 km/h or more**. • Perform the DTC inspection for the rear vehicle monitoring control module using the M-MDS. (See 09-02I-4 DTC INSPECTION [REAR VEHICLE MONITORING SYSTEM].) • Is DTC U3000:97 displayed?	Yes	Repeat the inspection from Step 1. • If the malfunction recurs, replace the rear vehicle monitoring control module (LH), then go to the next step. (See 09-22-77 REAR VEHICLE MONITORING CONTROL MODULE REMOVAL/INSTALLATION.)
		No	Go to Step 6.

ON-BOARD DIAGNOSTIC [REAR VEHICLE MONITORING SYSTEM]

Step	Inspection		Action
5	**PERFORM DTC INSPECTION AND VERIFY IF MALFUNCTIONING PART IS REAR VEHICLE MONITORING CONTROL MODULE (RH)** • Clear the DTC for the rear vehicle monitoring control module using the M-MDS. (See 09-02I-5 CLEARING DTC [REAR VEHICLE MONITORING SYSTEM].) • Drive the vehicle at **40 km/h or more**. • Perform the DTC inspection for the rear vehicle monitoring control module using the M-MDS. (See 09-02I-4 DTC INSPECTION [REAR VEHICLE MONITORING SYSTEM].) • Is DTC U3000:97 displayed?	Yes	Replace the rear vehicle monitoring control module (RH), then go to the next step. (See 09-22-77 REAR VEHICLE MONITORING CONTROL MODULE REMOVAL/INSTALLATION.)
		No	Go to the next step.
6	**VERIFY IF OTHER DTCs DISPLAYED** • Are any other DTCs displayed?	Yes	Repair the malfunctioning part according to the applicable DTC troubleshooting. (See 09-02I-5 DTC TABLE [REAR VEHICLE MONITORING SYSTEM].)
		No	DTC troubleshooting completed.

DTC U3003:16 [REAR VEHICLE MONITORING SYSTEM]

id0902z2888800

System malfunction location	**Rear vehicle monitoring control module (RH) low power supply voltage input**
Detection condition	• Power supply circuit voltage of **9 V or less** is detected in rear vehicle monitoring control module (RH) for **1 s or more**.
Fail-safe	• Inhibits the rear vehicle monitoring system.
Possible cause	• DTCs are stored in the PCM. • Battery malfunction • Generator malfunction • Rear vehicle monitoring control module (RH) connector or terminal malfunction • Rear vehicle monitoring control module (RH) power supply circuit malfunction — Short to ground in wiring harness between C/U IG1 15 A fuse and rear vehicle monitoring control module (RH) terminal F — C/U IG1 15 A fuse malfunction — Open circuit in wiring harness between IG1 relay and rear vehicle monitoring control module (RH) terminal F • Rear vehicle monitoring control module (RH) malfunction

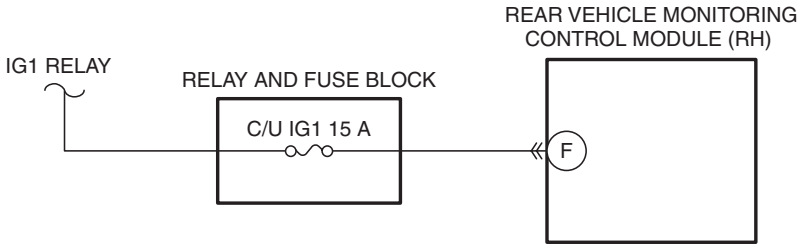

REAR VEHICLE MONITORING CONTROL MODULE (RH) WIRING HARNESS-SIDE CONNECTOR

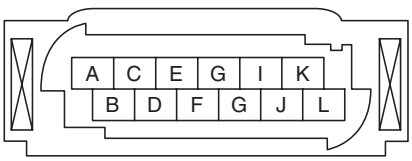

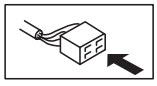

ON-BOARD DIAGNOSTIC [REAR VEHICLE MONITORING SYSTEM]

Diagnostic Procedure

Step	Inspection		Action
1	**VERIFY PCM DTCs** • Perform the DTC inspection for the PCM using the M-MDS. (See 01-02-8 ON-BOARD DIAGNOSTIC TEST [SKYACTIV-G 2.0].) • Is the DTC displayed?	Yes	Repair the malfunctioning part according to the applicable DTC troubleshooting. (See 01-02-14 DTC TABLE [SKYACTIV-G 2.0].)
		No	Go to the next step.
2	**INSPECT BATTERY** • Inspect the battery. (See 01-17A-8 BATTERY INSPECTION [SKYACTIV-G 2.0 (WITHOUT i-stop)].) (See 01-17A-7 BATTERY INSPECTION [SKYACTIV-G 2.0].) (See 01-17B-6 BATTERY INSPECTION [SKYACTIV-D 2.2].) • Is the battery normal?	Yes	Go to the next step.
		No	Recharge or replace the battery, then go to Step 6. (See 01-17A-10 BATTERY RECHARGING [SKYACTIV-G 2.0 (WITHOUT i-stop)].) (See 01-17A-9 BATTERY RECHARGING [SKYACTIV-G 2.0].) (See 01-17B-8 BATTERY RECHARGING [SKYACTIV-D 2.2].) (See 01-17A-3 BATTERY REMOVAL/INSTALLATION [SKYACTIV-G 2.0].) (See 01-17B-3 BATTERY REMOVAL/INSTALLATION [SKYACTIV-D 2.2].)
3	**INSPECT GENERATOR** • Inspect the generator. (See 01-17A-19 GENERATOR INSPECTION [SKYACTIV-G 2.0].) (See 01-17B-16 GENERATOR INSPECTION [SKYACTIV-D 2.2].) • Is the generator normal?	Yes	Go to the next step.
		No	Replace the generator, then go to Step 6. (See 01-17A-17 GENERATOR REMOVAL/INSTALLATION [SKYACTIV-G 2.0].) (See 01-17B-14 GENERATOR REMOVAL/INSTALLATION [SKYACTIV-D 2.2].)
4	**INSPECT REAR VEHICLE MONITORING CONTROL MODULE (RH) CONNECTOR** • Switch the ignition to off. • Disconnect the negative battery cable. (See 01-17A-13 NEGATIVE BATTERY CABLE DISCONNECTION/CONNECTION [SKYACTIV-G 2.0 (WITHOUT i-stop)].) (See 01-17A-11 NEGATIVE BATTERY CABLE DISCONNECTION/CONNECTION [SKYACTIV-G 2.0].) (See 01-17B-9 NEGATIVE BATTERY CABLE DISCONNECTION/CONNECTION [SKYACTIV-D 2.2].) • Disconnect the rear vehicle monitoring control modules (RH) connector. • Inspect the connector engagement and connection condition and inspect the terminals for damage, deformation, corrosion, or disconnection. • Is the connector normal?	Yes	Go to the next step.
		No	Repair or replace the connector, then go to Step 6.
5	**VERIFY REAR VEHICLE MONITORING CONTROL MODULE (RH) POWER SUPPLY VOLTAGE** • Reconnect all the disconnected connectors. • Connect the negative battery cable. (See 01-17A-13 NEGATIVE BATTERY CABLE DISCONNECTION/CONNECTION [SKYACTIV-G 2.0 (WITHOUT i-stop)].) (See 01-17A-11 NEGATIVE BATTERY CABLE DISCONNECTION/CONNECTION [SKYACTIV-G 2.0].) (See 01-17B-9 NEGATIVE BATTERY CABLE DISCONNECTION/CONNECTION [SKYACTIV-D 2.2].) • Display PID VPWR_R using the M-MDS. (See 09-02I-47 PID/DATA MONITOR INSPECTION [REAR VEHICLE MONITORING SYSTEM].) • Is the voltage **B+**?	Yes	Go to the next step.
		No	Inspect the C/U IG1 15 A fuse. • If a fuse is burnt out: — Repair or replace the wiring harness which is shorted to ground. — Replace the fuse. • If a fuse is damaged: — Replace the fuse. • If the fuse is normal: — Repair or replace the wiring harness which has an open circuit. Go to the next step.

ON-BOARD DIAGNOSTIC [REAR VEHICLE MONITORING SYSTEM]

Step	Inspection		Action
6	**VERIFY THAT REPAIRS HAVE BEEN COMPLETED** • Reconnect all the disconnected connectors. • Reconnect the disconnected negative battery cable. (See 01-17A-13 NEGATIVE BATTERY CABLE DISCONNECTION/CONNECTION [SKYACTIV-G 2.0 (WITHOUT i-stop)].) (See 01-17A-11 NEGATIVE BATTERY CABLE DISCONNECTION/CONNECTION [SKYACTIV-G 2.0].) (See 01-17B-9 NEGATIVE BATTERY CABLE DISCONNECTION/CONNECTION [SKYACTIV-D 2.2].) • Clear the DTC for the rear vehicle monitoring control module using the M-MDS. (See 09-02I-5 CLEARING DTC [REAR VEHICLE MONITORING SYSTEM].) • Switch the ignition ON (engine off or on) and wait for **1.5 s or more**. • Perform the DTC inspection for the rear vehicle monitoring control module using the M-MDS. (See 09-02I-4 DTC INSPECTION [REAR VEHICLE MONITORING SYSTEM].) • Is DTC U3003:16 displayed?	Yes	Repeat the inspection from Step 1. • If the malfunction recurs, replace the rear vehicle monitoring control module (RH), then go to the next step. (See 09-22-77 REAR VEHICLE MONITORING CONTROL MODULE REMOVAL/INSTALLATION.)
		No	Go to the next step.
7	**VERIFY IF OTHER DTCs DISPLAYED** • Are any other DTCs displayed?	Yes	Repair the malfunctioning part according to the applicable DTC troubleshooting. (See 09-02I-5 DTC TABLE [REAR VEHICLE MONITORING SYSTEM].)
		No	DTC troubleshooting completed.

ON-BOARD DIAGNOSTIC [REAR VEHICLE MONITORING SYSTEM]

DTC U3003:17 [REAR VEHICLE MONITORING SYSTEM]

id0902z2888700

System malfunction location	**Rear vehicle monitoring control module (RH) high power supply voltage input**
Detection condition	• Power supply circuit voltage of **16 V or more** is detected in rear vehicle monitoring control module (RH) for **1 s or more**.
Fail-safe	• Inhibits the rear vehicle monitoring system.
Possible cause	• DTCs are stored in the PCM. • Battery malfunction • Generator malfunction • Rear vehicle monitoring control module (RH) malfunction
System wiring diagram	—

Diagnostic Procedure

Step	Inspection		Action
1	**VERIFY PCM DTCs** • Perform the DTC inspection for the PCM using the M-MDS. (See 01-02-8 ON-BOARD DIAGNOSTIC TEST [SKYACTIV-G 2.0].) • Is the DTC displayed?	Yes	Repair the malfunctioning part according to the applicable DTC troubleshooting. (See 01-02-14 DTC TABLE [SKYACTIV-G 2.0].)
		No	Go to the next step.
2	**INSPECT BATTERY** • Inspect the battery. (See 01-17A-8 BATTERY INSPECTION [SKYACTIV-G 2.0 (WITHOUT i-stop)].) (See 01-17A-7 BATTERY INSPECTION [SKYACTIV-G 2.0].) (See 01-17B-6 BATTERY INSPECTION [SKYACTIV-D 2.2].) • Is the battery normal?	Yes	Go to the next step.
		No	Replace the battery, then go to Step 4. (See 01-17A-3 BATTERY REMOVAL/INSTALLATION [SKYACTIV-G 2.0].) (See 01-17B-3 BATTERY REMOVAL/INSTALLATION [SKYACTIV-D 2.2].)
3	**INSPECT GENERATOR** • Inspect the generator. (See 01-17A-19 GENERATOR INSPECTION [SKYACTIV-G 2.0].) (See 01-17B-16 GENERATOR INSPECTION [SKYACTIV-D 2.2].) • Is the generator normal?	Yes	Go to the next step.
		No	Replace the generator, then go to the next step. (See 01-17A-17 GENERATOR REMOVAL/INSTALLATION [SKYACTIV-G 2.0].) (See 01-17B-14 GENERATOR REMOVAL/INSTALLATION [SKYACTIV-D 2.2].)
4	**VERIFY THAT REPAIRS HAVE BEEN COMPLETED** • Clear the DTC for the rear vehicle monitoring control module using the M-MDS. (See 09-02I-5 CLEARING DTC [REAR VEHICLE MONITORING SYSTEM].) • Switch the ignition ON (engine off or on) and wait for **1.5 s or more**. • Perform the DTC inspection for the rear vehicle monitoring control module using the M-MDS. (See 09-02I-4 DTC INSPECTION [REAR VEHICLE MONITORING SYSTEM].) • Is DTC U3003:17 displayed?	Yes	Repeat the inspection from Step 1. • If the malfunction recurs, replace the rear vehicle monitoring control module (RH), then go to the next step. (See 09-22-77 REAR VEHICLE MONITORING CONTROL MODULE REMOVAL/INSTALLATION.)
		No	Go to the next step.
5	**VERIFY IF OTHER DTCs DISPLAYED** • Are any other DTCs displayed?	Yes	Repair the malfunctioning part according to the applicable DTC troubleshooting. (See 09-02I-5 DTC TABLE [REAR VEHICLE MONITORING SYSTEM].)
		No	DTC troubleshooting completed.

ON-BOARD DIAGNOSTIC [REAR VEHICLE MONITORING SYSTEM]

PID/DATA MONITOR INSPECTION [REAR VEHICLE MONITORING SYSTEM]

id0902z2960600

1. Connect the M-MDS to the DLC-2.
2. After the vehicle is identified, select the following items from the initialization screen of the M-MDS.
   (1) Select “DataLogger”.
   (2) Select “Modules”.
   (3) Select “RVM”.
3. Select the applicable PID from the PID table.
4. Verify the PID data according to the directions on the screen.

Note

- The PID data screen function is used for monitoring the calculated value of input/output signals in the module. Therefore, if the monitored value of the output parts is not within the specification, it is necessary to inspect the monitored value of input parts corresponding to the applicable output part control. In addition, because the system does not display an output part malfunction as an abnormality in the monitored value, it is necessary to inspect the output parts individually.
- When detecting DTCs, PIDs related to a malfunctioning system may not display even if the module is normal. Therefore, if a PID is not displayed, it is necessary to verify the DTC, perform malfunction diagnosis of the DTC that was detected, and do repairs.

PID/DATA MONITOR TABLE [REAR VEHICLE MONITORING SYSTEM]

id0902z2960700

—: Not applicable

PID name	Unit/Status	Data contents	Inspection item(s)
AIM_ANGL_L	° (deg)	Displays rear vehicle monitoring control module (LH) radar aiming angle.	Rear vehicle monitoring control module (LH)
AIM_ANGL_R	° (deg)	Displays rear vehicle monitoring control module (RH) radar aiming angle.	Rear vehicle monitoring control module (RH)
Buzzer	Off/On	• Off: Rear vehicle monitoring warning alarm does not sound. • On: Rear vehicle warning alarm sounds.	Instrument cluster
INTNL_TMP_L	°C,°F	Displays rear vehicle monitoring control module (LH) internal temperature.	Rear vehicle monitoring control module (LH)
INTNL_TMP_R	°C,°F	Displays rear vehicle monitoring control module (RH) internal temperature.	Rear vehicle monitoring control module (RH)
MAIN_SW	Off/On	• Off: RVM switch not pressed • On: RVM switch pressed	RVM switch
OP_BRT_L	—	Displays the RVM warning indicator light (LH) output brightness.	RVM warning indicator light (LH)
OP_BRT_R	—	Displays the RVM warning indicator light (RH) output brightness.	RVM warning indicator light (RH)
RVM_SYS_ST	Off/ Passive_On/ Active_On/ Failure	• Off: Rear vehicle monitoring system does not operate. • Passive_On: Rear vehicle monitoring system is on standby. • Active_On: Rear vehicle monitoring system operates. • Failure: Rear vehicle monitoring system malfunction	Rear vehicle monitoring control module
TURN_SW_L	Off/On	• Off: Turn switch is in position other than LH. • On: Turn switch is in LH position.	Turn Switch
TURN_SW_R	Off/On	• Off: Turn switch is in position other than RH. • On: Turn switch is in RH position.	Turn Switch
VPWR_L	V	Displays rear vehicle monitoring control module (LH) power supply voltage.	Rear vehicle monitoring control module (LH)
VPWR_R	V	Displays rear vehicle monitoring control module (RH) power supply voltage.	Rear vehicle monitoring control module (RH)
VSPD	KPH, MPH	Vehicle speed is displayed.	—
YAW_RATE	°/s	• —: Vehicle is stopped or while moving straight ahead. • Exceeds 0°/s: Vehicle tilted left. • Less than 0°/s: Vehicle tilted right.	SAS control module

ON-BOARD DIAGNOSTIC [REAR VEHICLE MONITORING SYSTEM]

ACTIVE COMMAND MODES INSPECTION [REAR VEHICLE MONITORING SYSTEM]

id0902z2960800

1. Connect the M-MDS to the DLC-2.
2. After the vehicle is identified, select the following items from the initialization screen of the M-MDS.
   (1) Select “DataLogger”.
   (2) Select “Modules”.
   (3) Select “RVM”.
3. Select the simulation items from the PID table.
4. Perform the active command modes function, inspect the operations for each parts.
   - If the operation of output parts cannot be verified after the active command mode inspection is performed, this could indicate the possibility of an open or short circuit, sticking, or operation malfunction in the output parts.

ACTIVE COMMAND MODES TABLE [REAR VEHICLE MONITORING SYSTEM]

id0902z2960900

Command name	Unit/ Operation	Data contents	Output part name
Buzzer	Off/On	• Off: Rear vehicle monitoring warning alarm does not sound. • On: Rear vehicle monitoring warning alarm sounds.	Rear vehicle monitoring warning alarm (instrument cluster)
WRN_IND_L	Off/On	• Off: Turns off the RVM warning indicator light (LH). • On: Illuminates the RVM warning indicator light (LH).	RVM warning indicator light (LH)
WRN_IND_R	Off/On	• Off: Turns off the RVM warning indicator light (RH). • On: Illuminates the RVM warning indicator light (RH).	RVM warning indicator light (RH)

09-02J ON-BOARD DIAGNOSTIC [FORWARD SENSING CAMERA (FSC)]

ON-BOARD DIAGNOSTIC WIRING DIAGRAM [FORWARD SENSING CAMERA (FSC)] **09-02J–2**
FOREWORD [FORWARD SENSING CAMERA (FSC)] **09-02J–3**
Troubleshooting Procedure **09-02J–3**
Action for Non-repeatable Malfunction. **09-02J–4**
DTC INSPECTION [FORWARD SENSING CAMERA (FSC)] **09-02J–4**
CMDTC Self Test **09-02J–4**
ODDTC Self Test **09-02J–4**
CLEARING DTC [FORWARD SENSING CAMERA (FSC)] **09-02J–5**
CMDTC Memory Clearing Procedure **09-02J–5**
ODDTC Memory Clearing Procedure **09-02J–5**
DTC TABLE [FORWARD SENSING CAMERA (FSC)] **09-02J–5**
DTC B115E:54 [FORWARD SENSING CAMERA (FSC)] **09-02J–8**
DTC B13A6:11 [FORWARD SENSING CAMERA (FSC)] **09-02J–9**
DTC C1001:92 [FORWARD SENSING CAMERA (FSC)] **09-02J–10**
DTC C1001:97 [FORWARD SENSING CAMERA (FSC)] **09-02J–11**
DTC U0001:88/U0100:00/U0121:00/ U0131:00/U0140:00/U0155:00/ U0214:00 [FORWARD SENSING CAMERA (FSC)] **09-02J–12**
Diagnostic Procedure **09-02J–13**
DTC U0401:68 [FORWARD SENSING CAMERA (FSC)] **09-02J–13**
DTC U0415:68 [FORWARD SENSING CAMERA (FSC)] **09-02J–14**
DTC U0420:68 [FORWARD SENSING CAMERA (FSC)] **09-02J–15**
DTC U0423:68 [FORWARD SENSING CAMERA (FSC)] **09-02J–16**
DTC U0515:68 [FORWARD SENSING CAMERA (FSC)] **09-02J–17**
DTC U2005:86 [FORWARD SENSING CAMERA (FSC)] **09-02J–18**
DTC U2100:00 [FORWARD SENSING CAMERA (FSC)] **09-02J–19**
DTC U2101:00 [FORWARD SENSING CAMERA (FSC)] **09-02J–20**
DTC U3000:04/U3000:09/U3000:42/ U3000:49 [FORWARD SENSING CAMERA (FSC)] **09-02J–21**
DTC U3003:16 [FORWARD SENSING CAMERA (FSC)] **09-02J–22**
DTC U3003:17 [FORWARD SENSING CAMERA (FSC)] **09-02J–24**
PID/DATA MONITOR INSPECTION [FORWARD SENSING CAMERA (FSC)] **09-02J–25**
PID/DATA MONITOR TABLE [FORWARD SENSING CAMERA (FSC)] **09-02J–25**

ON-BOARD DIAGNOSTIC [FORWARD SENSING CAMERA (FSC)]

ON-BOARD DIAGNOSTIC WIRING DIAGRAM [FORWARD SENSING CAMERA (FSC)]

id0902p9029000

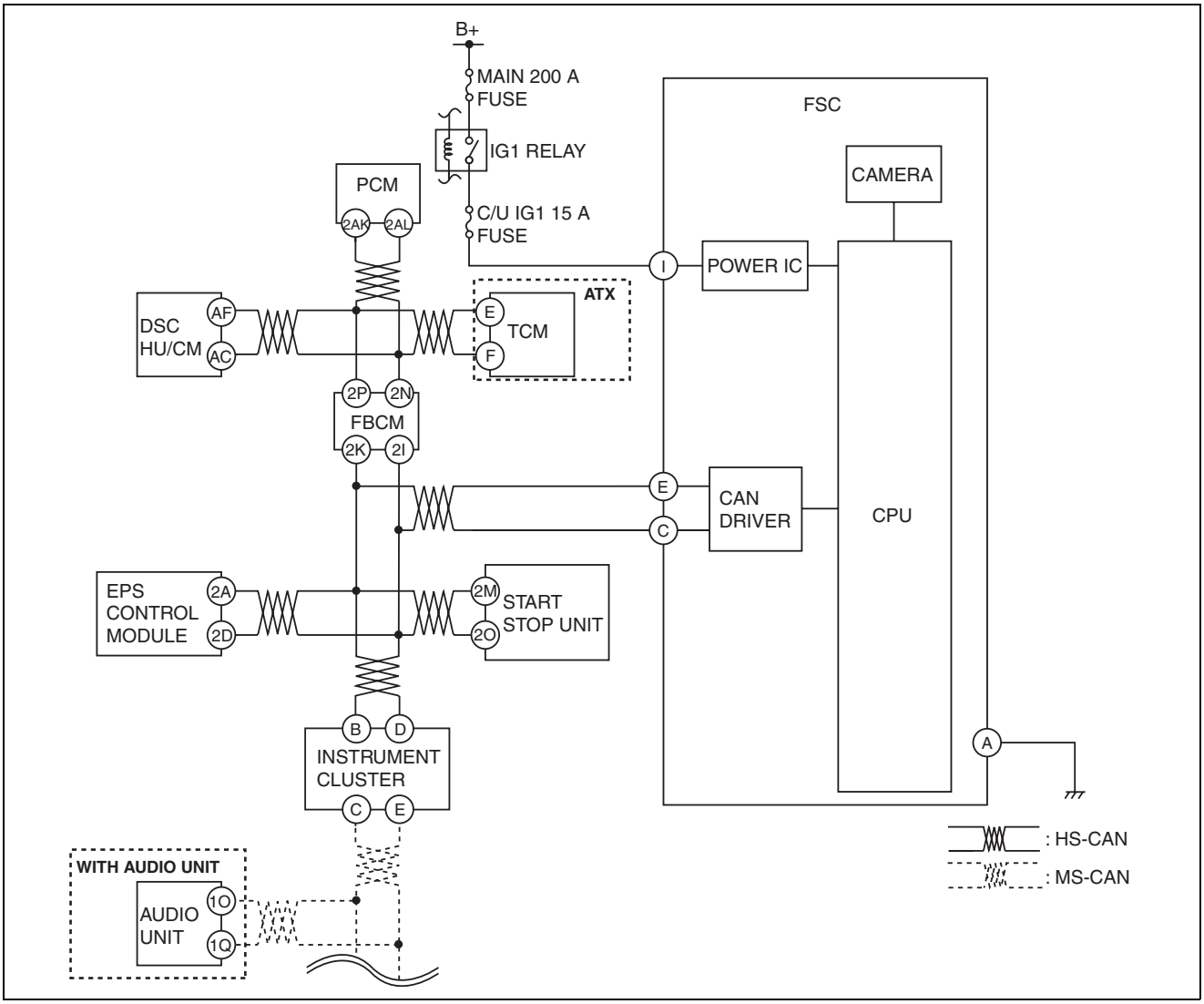

ac5wzn00001454

ON-BOARD DIAGNOSTIC [FORWARD SENSING CAMERA (FSC)]

FOREWORD [FORWARD SENSING CAMERA (FSC)]

id0902p9029100

- If there is any vehicle malfunction complaint lodged by a customer, perform malfunction diagnosis according to the troubleshooting procedure.

Troubleshooting Procedure

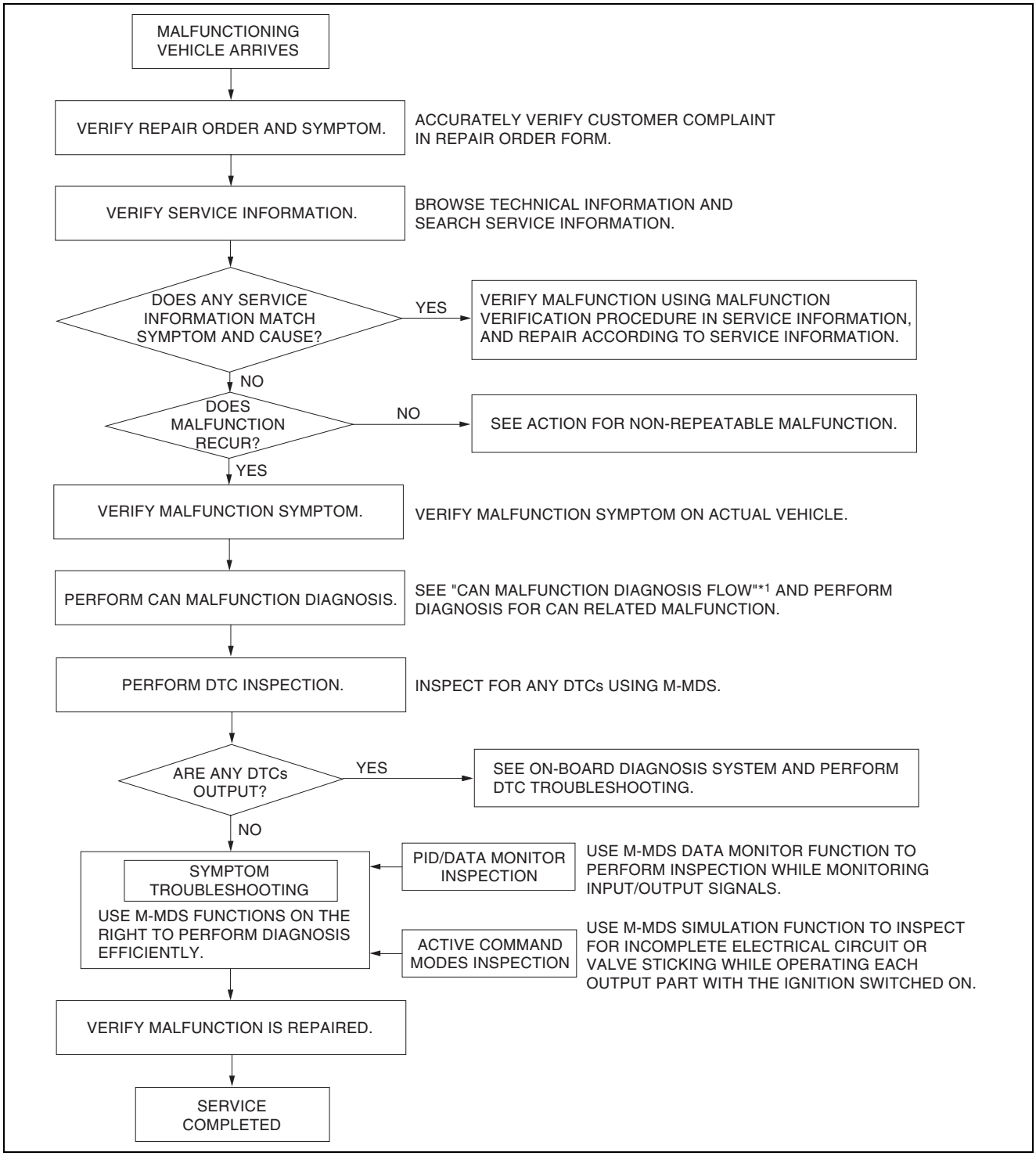

am3zzw0001242

*1 : 10-02A-3 CONTROLLER AREA NETWORK (CAN) MALFUNCTION DIAGNOSIS FLOW [SKYACTIV-G 2.0 (L.H.D.)]/10-02B-3 CONTROLLER AREA NETWORK (CAN) MALFUNCTION DIAGNOSIS FLOW [SKYACTIV-G 2.0 (R.H.D.)]/10-02C-3 CONTROLLER AREA NETWORK (CAN) MALFUNCTION DIAGNOSIS FLOW [SKYACTIV-D 2.2 (L.H.D.)]/10-02D-3 CONTROLLER AREA NETWORK (CAN) MALFUNCTION DIAGNOSIS FLOW [SKYACTIV-D 2.2 (R.H.D.)]

ON-BOARD DIAGNOSTIC [FORWARD SENSING CAMERA (FSC)]

Action for Non-repeatable Malfunction

- If the malfunction does not recur, verify the malfunction cause by performing the following actions:
  - — Based on the repair order form, attempt to drive the vehicle or perform tests to replicate the malfunction, record the data at that time, and detect the malfunction cause.
  - — Shake the wiring harness or connector of the electrical component which is suspected to be the cause of the malfunction, and inspect for malfunction or occurrence of any DTCs.

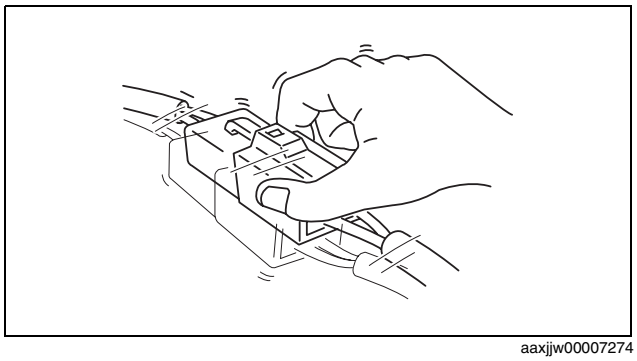

aaxjjw00007274

  - — Inspect the female terminals on the connector of the electric component which is suspected to be the cause of the malfunction for poor connection.

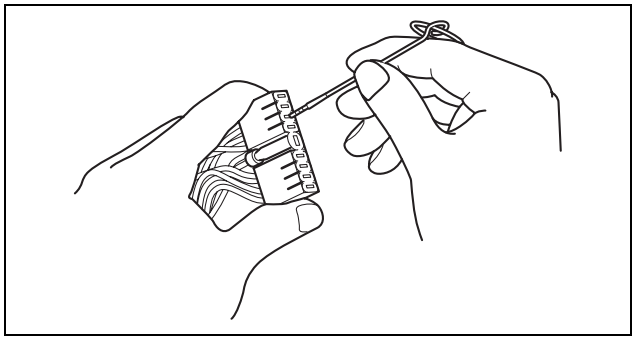

am3uuw0000750

DTC INSPECTION [FORWARD SENSING CAMERA (FSC)]

id0902p9029200

CMDTC Self Test

1. Connect the M-MDS to the DLC-2.
2. After the vehicle is identified, select the following items from the initialization screen of the M-MDS.
   (1) Select “Self Test”.
   (2) Select “All CMDTCs”.
3. Verify the DTC according to the directions on the screen.
   - If any DTCs are displayed, perform troubleshooting according to the corresponding DTC inspection.
4. After completion of repairs, clear all DTCs stored in the forward sensing camera (FSC). (See 09-02J-5 CLEARING DTC [FORWARD SENSING CAMERA (FSC)].)

ODDTC Self Test

1. Connect the M-MDS to the DLC-2.
2. After the vehicle is identified, select the following items from the initialization screen of the M-MDS.
   (1) Select “Self Test”.
   (2) Select “Modules”.
   (3) Select “FSC”.
3. Verify the DTC according to the directions on the screen.
   - If any DTCs are displayed, perform troubleshooting according to the corresponding DTC inspection.
4. After completion of repairs, clear all DTCs stored in the forward sensing camera (FSC). (See 09-02J-5 CLEARING DTC [FORWARD SENSING CAMERA (FSC)].)

Snapshot data

- The data for all DTCs currently detected is stored.

—: Not applicable

Snapshot data item	Unit		Data contents	Corresponding data monitor items
IG-ON_TIMER	hh:mm:ss		Elapsed time since ignition switched ON (engine off or on)	—
OPE_MODE	Normal/CALIBRATION/ EMERGENCY		Operation Mode	—
ECU_IN_TMP	°C	°F	ECU Internal Temperature	—
VSPD	KPH	MPH	Vehicle speed status	VSPD

ON-BOARD DIAGNOSTIC [FORWARD SENSING CAMERA (FSC)]

CLEARING DTC [FORWARD SENSING CAMERA (FSC)]

id0902p9029300

CMDTC Memory Clearing Procedure

1. Connect the M-MDS to the DLC-2.
2. After the vehicle is identified, select the following items from the initialization screen of the M-MDS.
   (1) Select “Self Test”.
   (2) Select “All CMDTCs”.
3. Verify the DTC according to the directions on the screen.
4. Press the clear button on the DTC screen to clear the DTC.
5. Switch the ignition to off.
6. Switch the ignition ON (engine off or on) and wait for **5 s or more**.
7. Perform DTC inspection. (See 09-02J-4 DTC INSPECTION [FORWARD SENSING CAMERA (FSC)].)
8. Verify that no DTCs are displayed.

ODDTC Memory Clearing Procedure

1. Connect the M-MDS to the DLC-2.
2. After the vehicle is identified, select the following items from the initialization screen of the M-MDS.
   (1) Select “Self Test”.
   (2) Select “Modules”.
   (3) Select “FSC”.
3. Verify the DTC according to the directions on the screen.
4. Press the clear button on the DTC screen to clear the DTC.
5. Switch the ignition to off.
6. Switch the ignition ON (engine off or on) and wait for **5 s or more**.
7. Perform DTC inspection. (See 09-02J-4 DTC INSPECTION [FORWARD SENSING CAMERA (FSC)].)
8. Verify that no DTCs are displayed.

DTC TABLE [FORWARD SENSING CAMERA (FSC)]

id0902p9029400

×: Applicable
—: Not applicable

DTC No.	High beam control system (HBC) warning light (amber)/ Lane departure warning system (LDWS) warning light (amber)	Description	Fail-safe function	Drive cycle	Self test type*1	Memory function	Page
B115E:54	Flash	Forward sensing camera (FSC) aiming not completed	×	—	C, D	×	(See 09-02J-8 DTC B115E:54 [FORWARD SENSING CAMERA (FSC)].)
B13A6:11	Flash	LDWS switch circuit malfunction	×	—	C, D	×	(See 09-02J-9 DTC B13A6:11 [FORWARD SENSING CAMERA (FSC)].)
C1001:92	Illuminate	Poor functioning of forward sensing camera (FSC)	×	—	C, D	×	(See 09-02J-10 DTC C1001:92 [FORWARD SENSING CAMERA (FSC)].)
C1001:97	Illuminate	Forward sensing camera (FSC) poor visibility	×	—	C, D	×	(See 09-02J-11 DTC C1001:97 [FORWARD SENSING CAMERA (FSC)].)

ON-BOARD DIAGNOSTIC [FORWARD SENSING CAMERA (FSC)]

DTC No.	High beam control system (HBC) warning light (amber)/ Lane departure warning system (LDWS) warning light (amber)	Description	Fail-safe function	Drive cycle	Self test type*1	Memory function	Page
U0001:88	Flash	Module communication error (HS-CAN)	×	—	C, D	×	(See 09-02J-12 DTC U0001:88/U0100:00/ U0121:00/U0131:00/ U0140:00/U0155:00/ U0214:00 [FORWARD SENSING CAMERA (FSC)].)
U0100:00	Flash	Communication error with PCM	×	—	C, D	×	
U0121:00	Flash	Communication error with DSC HU/CM	×	—	C, D	×	
U0131:00	Flash	Communication error with EPS control module	×	—	C, D	×	
U0140:00	Flash	Communication error with front body control module (FBCM)	×	—	C, D	×	
U0155:00	Flash	Communication error with instrument cluster	×	—	C, D	×	
U0214:00	Flash	Communication error with start stop unit	×	—	C, D	×	
U0401:68	Flash	Error signal received from PCM	×	—	C, D	×	(See 09-02J-13 DTC U0401:68 [FORWARD SENSING CAMERA (FSC)].)
U0415:68	Flash	Error signal received from DSC HU/CM	×	—	C, D	×	(See 09-02J-14 DTC U0415:68 [FORWARD SENSING CAMERA (FSC)].)
U0420:68	Flash	Error signal received from EPS control module	×	—	C, D	×	(See 09-02J-15 DTC U0420:68 [FORWARD SENSING CAMERA (FSC)].)
U0423:68	Flash	Error signal received from instrument cluster	×	—	C, D	×	(See 09-02J-16 DTC U0423:68 [FORWARD SENSING CAMERA (FSC)].)
U0515:68	Flash	Error signal received from start stop unit	×	—	C, D	×	(See 09-02J-17 DTC U0515:68 [FORWARD SENSING CAMERA (FSC)].)
U2005:86	Flash	Error signal received from PCM	×	—	C, D	×	(See 09-02J-18 DTC U2005:86 [FORWARD SENSING CAMERA (FSC)].)
U2100:00	Illuminate	Forward sensing camera (FSC) configuration error	×	—	C, D	×	(See 09-02J-19 DTC U2100:00 [FORWARD SENSING CAMERA (FSC)].)
U2101:00	Illuminate	Forward sensing camera (FSC) configuration error	×	—	C, D	×	(See 09-02J-20 DTC U2101:00 [FORWARD SENSING CAMERA (FSC)].)

ON-BOARD DIAGNOSTIC [FORWARD SENSING CAMERA (FSC)]

DTC No.	High beam control system (HBC) warning light (amber)/ Lane departure warning system (LDWS) warning light (amber)	Description	Fail-safe function	Drive cycle	Self test type*1	Memory function	Page
U3000:04	Flash	Forward sensing camera (FSC) internal malfunction	×	—	C, D	×	(See 09-02J-21 DTC U3000:04/U3000:09/ U3000:42/U3000:49 [FORWARD SENSING CAMERA (FSC)].)
U3000:09	Flash	Forward sensing camera (FSC) internal malfunction	×	—	C, D	×	
U3000:42	Flash	Forward sensing camera (FSC) internal malfunction	×	—	C, D	×	
U3000:49	Flash	Forward sensing camera (FSC) internal malfunction	×	—	C, D	×	
U3003:16	Flash	Forward sensing camera (FSC) low power supply voltage input	×	—	C, D	×	(See 09-02J-22 DTC U3003:16 [FORWARD SENSING CAMERA (FSC)].)
U3003:17	Flash	Forward sensing camera (FSC) high power supply voltage input	×	—	C, D	×	(See 09-02J-24 DTC U3003:17 [FORWARD SENSING CAMERA (FSC)].)

*1 : C: CMDTC self test, D: ODDTC self test

ON-BOARD DIAGNOSTIC [FORWARD SENSING CAMERA (FSC)]

DTC B115E:54 [FORWARD SENSING CAMERA (FSC)]

id0902p9029500

System malfunction location	**Forward sensing camera (FSC) aiming not completed**
Detection condition	• Forward sensing camera (FSC) aiming not completed is detected.
Fail-safe	• Inhibits the lane departure warning system (LDWS). • Inhibits the high beam control system (HBC).
Possible cause	• Forward sensing camera (FSC) aiming not performed. • Forward sensing camera (FSC) malfunction
System wiring diagram	—

Diagnostic Procedure

Step	Inspection		Action
1	**PERFORM FORWARD SENSING CAMERA (FSC) AIMING** • Perform the forward sensing camera (FSC) aiming. (See 09-22-106 FORWARD SENSING CAMERA (FSC) AIMING.) • Clear the forward sensing camera (FSC) DTCs using the M-MDS. (See 09-02J-5 CLEARING DTC [FORWARD SENSING CAMERA (FSC)].) • Perform the DTC inspection for the forward sensing camera (FSC) using the M-MDS. (See 09-02J-4 DTC INSPECTION [FORWARD SENSING CAMERA (FSC)].) • Is DTC B115E:54 displayed?	Yes	Perform the forward sensing camera (FSC) aiming again, then go to the next step. (See 09-22-106 FORWARD SENSING CAMERA (FSC) AIMING.)
		No	Go to Step 3.
2	**VERIFY THAT REPAIRS HAVE BEEN COMPLETED** • Clear the forward sensing camera (FSC) DTCs using the M-MDS. (See 09-02J-5 CLEARING DTC [FORWARD SENSING CAMERA (FSC)].) • Perform the DTC inspection for the forward sensing camera (FSC) using the M-MDS. (See 09-02J-4 DTC INSPECTION [FORWARD SENSING CAMERA (FSC)].) • Is DTC B115E:54 displayed?	Yes	Replace the forward sensing camera (FSC), then go to the next step. (See 09-22-98 FORWARD SENSING CAMERA (FSC) REMOVAL/INSTALLATION.)
		No	Go to the next step.
3	**VERIFY IF OTHER DTCs DISPLAYED** • Are any other DTCs displayed?	Yes	Repair the malfunctioning part according to the applicable DTC troubleshooting. (See 09-02J-5 DTC TABLE [FORWARD SENSING CAMERA (FSC)].)
		No	DTC troubleshooting completed.

ON-BOARD DIAGNOSTIC [FORWARD SENSING CAMERA (FSC)]

DTC B13A6:11 [FORWARD SENSING CAMERA (FSC)]

id0902p9029600

System malfunction location	**LDWS switch circuit malfunction**
Detection condition	• Forward sensing camera (FSC) detects that LDWS switch is held pressed for **10 s or more**
Fail-safe	• Inhibits the lane departure warning system (LDWS).
Possible cause	• DTCs are stored in the instrument cluster. • LDWS switch malfunction • Instrument cluster malfunction • Forward sensing camera (FSC) malfunction
System wiring diagram	—

Diagnostic Procedure

Step	Inspection		Action
1	**VERIFY INSTRUMENT CLUSTER DTCs** • Perform the DTC inspection for the instrument cluster using the M-MDS. (See 09-02G-7 DTC INSPECTION [INSTRUMENT CLUSTER].) • Is the DTC displayed?	Yes	Repair the malfunctioning part according to the applicable DTC troubleshooting. (See 09-02G-10 DTC TABLE [INSTRUMENT CLUSTER].)
		No	Go to the next step.
2	**INSPECT LDWS SWITCH** • Inspect the LDWS switch. (See 09-22-118 LDWS SWITCH INSPECTION.) • Is the LDWS switch normal?	Yes	Go to the next step.
		No	Replace the cluster switch, then go to Step 4. (See 09-17-18 SWITCH PANEL REMOVAL/INSTALLATION.)
3	**PERFORM DTC INSPECTION AND VERIFY IF MALFUNCTIONING PART IS INSTRUMENT CLUSTER** • Clear the forward sensing camera (FSC) DTCs using the M-MDS. (See 09-02J-5 CLEARING DTC [FORWARD SENSING CAMERA (FSC)].) • Switch the ignition ON (engine off or on) and wait for **10 s or more**. • Perform the DTC inspection for the forward sensing camera (FSC) using the M-MDS. (See 09-02J-4 DTC INSPECTION [FORWARD SENSING CAMERA (FSC)].) • Is DTC B13A6:11 displayed?	Yes	Replace the instrument cluster, then go to the next step. (See 09-22-6 INSTRUMENT CLUSTER REMOVAL/INSTALLATION.)
		No	Go to Step 5.
4	**VERIFY THAT REPAIRS HAVE BEEN COMPLETED** • Clear the forward sensing camera (FSC) DTCs using the M-MDS. (See 09-02J-5 CLEARING DTC [FORWARD SENSING CAMERA (FSC)].) • Switch the ignition ON (engine off or on) and wait for **10 s or more**. • Perform the DTC inspection for the forward sensing camera (FSC) using the M-MDS. (See 09-02J-4 DTC INSPECTION [FORWARD SENSING CAMERA (FSC)].) • Is DTC B13A6:11 displayed?	Yes	Repeat the inspection from Step 1. • If the malfunction recurs, replace the forward sensing camera (FSC), then go to the next step. (See 09-22-98 FORWARD SENSING CAMERA (FSC) REMOVAL/INSTALLATION.)
		No	Go to the next step.
5	**VERIFY IF OTHER DTCs DISPLAYED** • Are any other DTCs displayed?	Yes	Repair the malfunctioning part according to the applicable DTC troubleshooting. (See 09-02J-5 DTC TABLE [FORWARD SENSING CAMERA (FSC)].)
		No	DTC troubleshooting completed.

ON-BOARD DIAGNOSTIC [FORWARD SENSING CAMERA (FSC)]

DTC C1001:92 [FORWARD SENSING CAMERA (FSC)]

id0902p9029700

System malfunction location	**Poor functioning of forward sensing camera (FSC)**
Detection condition	• With the LDWS switch on or the high beam control (HBC) system operating, it is detected that the area around the forward sensing camera (FSC) is excessively bright, and the system is inoperable for **10 min**.
Fail-safe	• Inhibits the lane departure warning system (LDWS). • Inhibits the high beam control system (HBC).
Possible cause	• Windshield fogging • Forward sensing camera (FSC) lens fogging • Forward sensing camera (FSC) malfunction
System wiring diagram	—

Diagnostic Procedure

Step	Inspection		Action
1	**VERIFY WINDSHIELD FOGGING** • Verify if the windshield is fogged. • Is the windshield fogged?	Yes	Clear the fogging, then go to Step 3.
		No	Go to the next step.
2	**VERIFY FOGGING ON FORWARD SENSING CAMERA (FSC) LENS AREA** • Verify if there is any fogging on the forward sensing camera (FSC) lens. • Is the forward sensing camera (FSC) lens fogged?	Yes	Clear the fogging from the forward sensing camera (FSC) lens, then go to the next step.
		No	Go to the next step.
3	**VERIFY THAT REPAIRS HAVE BEEN COMPLETED** • Clear the forward sensing camera (FSC) DTCs using the M-MDS. (See 09-02J-5 CLEARING DTC [FORWARD SENSING CAMERA (FSC)].) • Drive the vehicle at a vehicle speed of **20 km/h {12 mph} or more** for **3 min** or more. • Perform the DTC inspection for the forward sensing camera (FSC) using the M-MDS. (See 09-02J-4 DTC INSPECTION [FORWARD SENSING CAMERA (FSC)].) • Is DTC C1001:92 displayed?	Yes	Repeat the inspection from Step 1. • If the malfunction recurs, replace the forward sensing camera (FSC), then go to the next step. (See 09-22-98 FORWARD SENSING CAMERA (FSC) REMOVAL/INSTALLATION.)
		No	Go to the next step.
4	**VERIFY IF OTHER DTCs DISPLAYED** • Are any other DTCs displayed?	Yes	Repair the malfunctioning part according to the applicable DTC troubleshooting. (See 09-02J-5 DTC TABLE [FORWARD SENSING CAMERA (FSC)].)
		No	DTC troubleshooting completed.

ON-BOARD DIAGNOSTIC [FORWARD SENSING CAMERA (FSC)]

DTC C1001:97 [FORWARD SENSING CAMERA (FSC)]

id0902p9029800

System malfunction location	**Forward sensing camera (FSC) poor visibility**
Detection condition	• With the LDWS switch on or the high beam control (HBC) system operating, it is detected that the forward sensing camera (FSC) field of view is obstructed for **10 min**.
Fail-safe	• Inhibits the lane departure warning system (LDWS). • Inhibits the high beam control system (HBC).
Possible cause	• Windshield soiled • Forward sensing camera (FSC) lens soiled • Forward sensing camera (FSC) malfunction
System wiring diagram	—

Diagnostic Procedure

Step	Inspection		Action
1	**VERIFY WINDSHIELD SOILING** • Verify if the windshield is soiled. • Is the windshield soiled?	Yes	Remove the soiling from the windshield, then go to Step 3.
		No	Go to the next step.
2	**VERIFY FORWARD SENSING CAMERA (FSC) LEN SOILING** • Verify if the forward sensing camera (FSC) lens is soiled. • Is the forward sensing camera (FSC) lens soiled?	Yes	Remove the soiling on the forward sensing camera (FSC) lens, then go to the next step.
		No	Go to the next step.
3	**VERIFY THAT REPAIRS HAVE BEEN COMPLETED** • Clear the forward sensing camera (FSC) DTCs using the M-MDS. (See 09-02J-5 CLEARING DTC [FORWARD SENSING CAMERA (FSC)].) • Drive the vehicle at a vehicle speed of **20 km/h {12 mph} or more** for **3 min** or more. • Perform the DTC inspection for the forward sensing camera (FSC) using the M-MDS. (See 09-02J-4 DTC INSPECTION [FORWARD SENSING CAMERA (FSC)].) • Is DTC C1001:97 displayed?	Yes	Repeat the inspection from Step 1. • If the malfunction recurs, replace the forward sensing camera (FSC), then go to the next step. (See 09-22-98 FORWARD SENSING CAMERA (FSC) REMOVAL/INSTALLATION.)
		No	Go to the next step.
4	**VERIFY IF OTHER DTCs DISPLAYED** • Are any other DTCs displayed?	Yes	Repair the malfunctioning part according to the applicable DTC troubleshooting. (See 09-02J-5 DTC TABLE [FORWARD SENSING CAMERA (FSC)].)
		No	DTC troubleshooting completed.

ON-BOARD DIAGNOSTIC [FORWARD SENSING CAMERA (FSC)]

DTC U0001:88/U0100:00/U0121:00/U0131:00/U0140:00/U0155:00/U0214:00 [FORWARD SENSING CAMERA (FSC)]

id0902p9029900

System malfunction location	**U0001:88** • **Module communication error (HS-CAN)** **U0100:00** • **Communication error with PCM** **U0121:00** • **Communication error with DSC HU/CM** **U0131:00** • **Communication error with EPS control module** **U0140:00** • **Communication error with front body control module (FBCM)** **U0155:00** • **Communication error with instrument cluster** **U0214:00** • **Communication error with start stop unit**
Detection condition	• U0001:88 — Forward sensing camera (FSC) cannot receive CAN bus communication signal (HS-CAN) for **1 s or more**. — Forward sensing camera (FSC) detects CAN bus communication line (HS-CAN) malfunction **10 times** continuously. • U0100:00 — Forward sensing camera (FSC) cannot receive CAN signal from the PCM for **1 s or more**. • U0121:00 — Forward sensing camera (FSC) cannot receive CAN signal from the DSC HU/CM for **1 s or more**. • U0131:00 — Forward sensing camera (FSC) cannot receive CAN signal from the EPS control module for **1 s or more**. • U0140:00 — Forward sensing camera (FSC) cannot receive CAN signal from front body control module (FBCM) for **5 s or more**. • U0155:00 — Forward sensing camera (FSC) cannot receive CAN signal from instrument cluster for **5 s or more**. • U0214:00 — Forward sensing camera (FSC) cannot receive CAN signal from the start stop unit for **1 s or more**.
Fail-safe	• U0001:88 — Inhibits the lane departure warning system (LDWS). — Inhibits the high beam control system (HBC). • U0100:00 — Inhibits the lane departure warning system (LDWS). — Inhibits the high beam control system (HBC). • U0121:00 — Inhibits the lane departure warning system (LDWS). — Inhibits the high beam control system (HBC). • U0131:00 — Inhibits the lane departure warning system (LDWS). • U0140:00 — Inhibits the lane departure warning system (LDWS). — Inhibits the high beam control system (HBC). • U0155:00 — Inhibits the lane departure warning system (LDWS). — Inhibits the high beam control system (HBC). • U0214:00 — Inhibits the lane departure warning system (LDWS). — Inhibits the high beam control system (HBC).
Possible cause	• Malfunction in CAN bus communication line • Malfunction in CAN line between the PCM and forward sensing camera (FSC) • Malfunction in CAN line between the DSC HU/CM and forward sensing camera (FSC) • Malfunction in CAN line between the EPS control module and forward sensing camera (FSC) • Malfunction in CAN line between the front body control module (FBCM) and forward sensing camera (FSC) • Malfunction in CAN line between the instrument cluster and forward sensing camera (FSC) • Malfunction in CAN line between the start stop unit and forward sensing camera (FSC)
System wiring diagram	—

ON-BOARD DIAGNOSTIC [FORWARD SENSING CAMERA (FSC)]

Diagnostic Procedure

- Perform the malfunction diagnosis according to the troubleshooting procedure for the multiplex communication system. (See 10-02A-1 FOREWORD [SKYACTIV-G 2.0 (L.H.D.)].) (See 10-02B-1 FOREWORD [SKYACTIV-G 2.0 (R.H.D.)].) (See 10-02C-1 FOREWORD [SKYACTIV-D 2.2 (L.H.D.)].) (See 10-02D-1 FOREWORD [SKYACTIV-D 2.2 (R.H.D.)].)

DTC U0401:68 [FORWARD SENSING CAMERA (FSC)]

id0902p9030000

System malfunction location	Error signal received from PCM
Detection condition	• Forward sensing camera (FSC) receives error signal from the PCM for **1 s or more**.
Fail-safe	• Inhibits the lane departure warning system (LDWS). • Inhibits the high beam control system (HBC).
Possible cause	• DTCs are stored in the PCM. • PCM malfunction • Forward sensing camera (FSC) malfunction
System wiring diagram	—

Diagnostic Procedure

Step	Inspection		Action
1	**VERIFY PCM DTCs** • Perform the DTC inspection for the PCM using the M-MDS. (See 01-02-8 ON-BOARD DIAGNOSTIC TEST [SKYACTIV-G 2.0].) • Is the DTC displayed?	Yes	Repair the malfunctioning part according to the applicable DTC troubleshooting. (See 01-02-14 DTC TABLE [SKYACTIV-G 2.0].)
		No	Go to the next step.
2	**PERFORM DTC INSPECTION AND VERIFY IF MALFUNCTIONING PART IS PCM** • Clear the forward sensing camera (FSC) DTCs using the M-MDS. (See 09-02J-5 CLEARING DTC [FORWARD SENSING CAMERA (FSC)].) • Switch the ignition ON (engine off or on) and wait for **2.5 s or more**. • Perform the DTC inspection for the forward sensing camera (FSC) using the M-MDS. (See 09-02J-4 DTC INSPECTION [FORWARD SENSING CAMERA (FSC)].) • Is DTC U0401:68 displayed?	Yes	Replace the PCM, then go to the next step. (See 01-40-10 PCM REMOVAL/INSTALLATION [SKYACTIV-G 2.0].)
		No	Go to Step 4.
3	**VERIFY THAT REPAIRS HAVE BEEN COMPLETED** • Clear the forward sensing camera (FSC) DTCs using the M-MDS. (See 09-02J-5 CLEARING DTC [FORWARD SENSING CAMERA (FSC)].) • Switch the ignition ON (engine off or on) and wait for **2.5 s or more**. • Perform the DTC inspection for the forward sensing camera (FSC) using the M-MDS. (See 09-02J-4 DTC INSPECTION [FORWARD SENSING CAMERA (FSC)].) • Is DTC U0401:68 displayed?	Yes	Replace the forward sensing camera (FSC), then go to the next step. (See 09-22-98 FORWARD SENSING CAMERA (FSC) REMOVAL/INSTALLATION.)
		No	Go to the next step.
4	**VERIFY IF OTHER DTCs DISPLAYED** • Are any other DTCs displayed?	Yes	Repair the malfunctioning part according to the applicable DTC troubleshooting. (See 09-02J-5 DTC TABLE [FORWARD SENSING CAMERA (FSC)].)
		No	DTC troubleshooting completed.

ON-BOARD DIAGNOSTIC [FORWARD SENSING CAMERA (FSC)]

DTC U0415:68 [FORWARD SENSING CAMERA (FSC)]

id0902p9030100

System malfunction location	**Error signal received from DSC HU/CM**
Detection condition	• Forward sensing camera (FSC) receives error signal from the DSC HU/CM for **1 s or more**.
Fail-safe	• Inhibits the lane departure warning system (LDWS). • Inhibits the high beam control system (HBC).
Possible cause	• DSC HU/CM stores DTCs. • DSC HU/CM malfunction • Forward sensing camera (FSC) malfunction
System wiring diagram	—

Diagnostic Procedure

Step	Inspection		Action
1	**VERIFY DSC HU/CM DTCs** • Perform the DTC inspection for the DSC HU/CM using the M-MDS. (See 04-02A-7 ON-BOARD DIAGNOSIS [DYNAMIC STABILITY CONTROL (DSC)].) • Is the DTC displayed?	Yes	Repair the malfunctioning part according to the applicable DTC troubleshooting. (See 04-02A-7 ON-BOARD DIAGNOSIS [DYNAMIC STABILITY CONTROL (DSC)].)
		No	Go to the next step.
2	**PERFORM DTC INSPECTION AND VERIFY IF MALFUNCTIONING PART IS DSC HU/CM** • Clear the forward sensing camera (FSC) DTCs using the M-MDS. (See 09-02J-5 CLEARING DTC [FORWARD SENSING CAMERA (FSC)].) • Switch the ignition ON (engine off or on) and wait for **2.5 s or more**. • Perform the DTC inspection for the forward sensing camera (FSC) using the M-MDS. (See 09-02J-4 DTC INSPECTION [FORWARD SENSING CAMERA (FSC)].) • Is DTC U0415:68 displayed?	Yes	Replace the DSC HU/CM, then go to the next step. (See 04-15-4 DSC HU/CM REMOVAL/INSTALLATION.)
		No	Go to Step 4.
3	**VERIFY THAT REPAIRS HAVE BEEN COMPLETED** • Clear the forward sensing camera (FSC) DTCs using the M-MDS. (See 09-02J-5 CLEARING DTC [FORWARD SENSING CAMERA (FSC)].) • Switch the ignition ON (engine off or on) and wait for **2.5 s or more**. • Perform the DTC inspection for the forward sensing camera (FSC) using the M-MDS. (See 09-02J-4 DTC INSPECTION [FORWARD SENSING CAMERA (FSC)].) • Is DTC U0415:68 displayed?	Yes	Replace the forward sensing camera (FSC), then go to the next step. (See 09-22-98 FORWARD SENSING CAMERA (FSC) REMOVAL/INSTALLATION.)
		No	Go to the next step.
4	**VERIFY IF OTHER DTCs DISPLAYED** • Are any other DTCs displayed?	Yes	Repair the malfunctioning part according to the applicable DTC troubleshooting. (See 09-02J-5 DTC TABLE [FORWARD SENSING CAMERA (FSC)].)
		No	DTC troubleshooting completed.

ON-BOARD DIAGNOSTIC [FORWARD SENSING CAMERA (FSC)]

DTC U0420:68 [FORWARD SENSING CAMERA (FSC)]

id0902p9030200

System malfunction location	**Error signal received from EPS control module**
Detection condition	• Forward sensing camera (FSC) receives error signal from the EPS control module for **1 s or more**.
Fail-safe	• Inhibits the lane departure warning system (LDWS).
Possible cause	• DTCs are stored in the EPS control module. • EPS control module malfunction • Forward sensing camera (FSC) malfunction
System wiring diagram	—

Diagnostic Procedure

Step	Inspection		Action
1	**VERIFY EPS CONTROL MODULE DTCs** • Perform the DTC inspection for the EPS control module using the M-MDS. (See 06-02-5 ELECTRIC POWER STEERING (EPS) ON-BOARD DIAGNOSIS.) • Is the DTC displayed?	Yes	Repair the malfunctioning part according to the applicable DTC troubleshooting. (See 06-02-5 ELECTRIC POWER STEERING (EPS) ON-BOARD DIAGNOSIS.)
		No	Go to the next step.
2	**PERFORM DTC INSPECTION AND VERIFY IF MALFUNCTIONING PART IS EPS CONTROL MODULE** • Clear the forward sensing camera (FSC) DTCs using the M-MDS. (See 09-02J-5 CLEARING DTC [FORWARD SENSING CAMERA (FSC)].) • Switch the ignition ON (engine off or on) and wait for **2.5 s or more**. • Perform the DTC inspection for the forward sensing camera (FSC) using the M-MDS. (See 09-02J-4 DTC INSPECTION [FORWARD SENSING CAMERA (FSC)].) • Is DTC U0420:68 displayed?	Yes	Replace the EPS control module, then go to the next step. (See 06-13-4 STEERING WHEEL AND COLUMN REMOVAL/INSTALLATION.)
		No	Go to Step 4.
3	**VERIFY THAT REPAIRS HAVE BEEN COMPLETED** • Clear the forward sensing camera (FSC) DTCs using the M-MDS. (See 09-02J-5 CLEARING DTC [FORWARD SENSING CAMERA (FSC)].) • Switch the ignition ON (engine off or on) and wait for **2.5 s or more**. • Perform the DTC inspection for the forward sensing camera (FSC) using the M-MDS. (See 09-02J-4 DTC INSPECTION [FORWARD SENSING CAMERA (FSC)].) • Is DTC U0420:68 displayed?	Yes	Replace the forward sensing camera (FSC), then go to the next step. (See 09-22-98 FORWARD SENSING CAMERA (FSC) REMOVAL/INSTALLATION.)
		No	Go to the next step.
4	**VERIFY IF OTHER DTCs DISPLAYED** • Are any other DTCs displayed?	Yes	Repair the malfunctioning part according to the applicable DTC troubleshooting. (See 09-02J-5 DTC TABLE [FORWARD SENSING CAMERA (FSC)].)
		No	DTC troubleshooting completed.

ON-BOARD DIAGNOSTIC [FORWARD SENSING CAMERA (FSC)]

DTC U0423:68 [FORWARD SENSING CAMERA (FSC)]

id0902p9030300

System malfunction location	**Error signal received from instrument cluster**
Detection condition	• Forward sensing camera (FSC) receives error signal from the instrument cluster for **5 s or more**.
Fail-safe	• Inhibits the lane departure warning system (LDWS).
Possible cause	• DTCs are stored in the instrument cluster. • Instrument cluster malfunction • Forward sensing camera (FSC) malfunction
System wiring diagram	—

Diagnostic Procedure

Step	Inspection		Action
1	**VERIFY INSTRUMENT CLUSTER DTCs** • Perform the DTC inspection for the instrument cluster using the M-MDS. (See 09-02G-7 DTC INSPECTION [INSTRUMENT CLUSTER].) • Is the DTC displayed?	Yes	Repair the malfunctioning part according to the applicable DTC troubleshooting. (See 09-02G-10 DTC TABLE [INSTRUMENT CLUSTER].)
		No	Go to the next step.
2	**PERFORM DTC INSPECTION AND VERIFY IF MALFUNCTIONING PART IS INSTRUMENT CLUSTER** • Clear the forward sensing camera (FSC) DTCs using the M-MDS. (See 09-02J-5 CLEARING DTC [FORWARD SENSING CAMERA (FSC)].) • Switch the ignition ON (engine off or on) and wait for **6.5 s or more**. • Perform the DTC inspection for the forward sensing camera (FSC) using the M-MDS. (See 09-02J-4 DTC INSPECTION [FORWARD SENSING CAMERA (FSC)].) • Is the DTC U0423:68 displayed?	Yes	Replace the instrument cluster, then go to the next step. (See 09-22-6 INSTRUMENT CLUSTER REMOVAL/INSTALLATION.)
		No	Go to Step 4.
3	**VERIFY THAT REPAIRS HAVE BEEN COMPLETED** • Clear the forward sensing camera (FSC) DTCs using the M-MDS. (See 09-02J-5 CLEARING DTC [FORWARD SENSING CAMERA (FSC)].) • Switch the ignition ON (engine off or on) and wait for **6.5 s or more**. • Perform the DTC inspection for the forward sensing camera (FSC) using the M-MDS. (See 09-02J-4 DTC INSPECTION [FORWARD SENSING CAMERA (FSC)].) • Is the DTC U0423:68 displayed?	Yes	Replace the forward sensing camera (FSC), then go to the next step. (See 09-22-98 FORWARD SENSING CAMERA (FSC) REMOVAL/INSTALLATION.)
		No	Go to the next step.
4	**VERIFY IF OTHER DTCs DISPLAYED** • Are any other DTCs displayed?	Yes	Repair the malfunctioning part according to the applicable DTC troubleshooting. (See 09-02J-5 DTC TABLE [FORWARD SENSING CAMERA (FSC)].)
		No	DTC troubleshooting completed.

ON-BOARD DIAGNOSTIC [FORWARD SENSING CAMERA (FSC)]

DTC U0515:68 [FORWARD SENSING CAMERA (FSC)]

id0902p9030400

System malfunction location	**Error signal received from start stop unit**
Detection condition	• Forward sensing camera (FSC) receives error signal from the start stop unit for **1 s or more**.
Fail-safe	• Inhibits the lane departure warning system (LDWS). • Inhibits the high beam control system (HBC).
Possible cause	• DTCs are stored in the start stop unit. • Start stop unit malfunction • Forward sensing camera (FSC) malfunction
System wiring diagram	—

Diagnostic Procedure

Step	Inspection		Action
1	**VERIFY START STOP UNIT DTCs** • Perform the DTC inspection for the start stop unit using the M-MDS. (See 09-02C-6 DTC INSPECTION [START STOP UNIT].) • Is the DTC displayed?	Yes	Repair the malfunctioning part according to the applicable DTC troubleshooting. (See 09-02C-8 DTC TABLE [START STOP UNIT].)
		No	Go to the next step.
2	**PERFORM DTC INSPECTION AND VERIFY IF MALFUNCTIONING PART IS START STOP UNIT** • Clear the forward sensing camera (FSC) DTCs using the M-MDS. (See 09-02J-5 CLEARING DTC [FORWARD SENSING CAMERA (FSC)].) • Switch the ignition ON (engine off or on) and wait for **2.5 s or more**. • Perform the DTC inspection for the forward sensing camera (FSC) using the M-MDS. (See 09-02J-4 DTC INSPECTION [FORWARD SENSING CAMERA (FSC)].) • Is DTC U0515:68 displayed?	Yes	Replace the start stop unit, then go to the next step. (See 09-14-54 START STOP UNIT REMOVAL/INSTALLATION.)
		No	Go to Step 4.
3	**VERIFY THAT REPAIRS HAVE BEEN COMPLETED** • Clear the forward sensing camera (FSC) DTCs using the M-MDS. (See 09-02J-5 CLEARING DTC [FORWARD SENSING CAMERA (FSC)].) • Switch the ignition ON (engine off or on) and wait for **2.5 s or more**. • Perform the DTC inspection for the forward sensing camera (FSC) using the M-MDS. (See 09-02J-4 DTC INSPECTION [FORWARD SENSING CAMERA (FSC)].) • Is DTC U0515:68 displayed?	Yes	Replace the forward sensing camera (FSC), then go to the next step. (See 09-22-98 FORWARD SENSING CAMERA (FSC) REMOVAL/INSTALLATION.)
		No	Go to the next step.
4	**VERIFY IF OTHER DTCs DISPLAYED** • Are any other DTCs displayed?	Yes	Repair the malfunctioning part according to the applicable DTC troubleshooting. (See 09-02J-5 DTC TABLE [FORWARD SENSING CAMERA (FSC)].)
		No	DTC troubleshooting completed.

ON-BOARD DIAGNOSTIC [FORWARD SENSING CAMERA (FSC)]

DTC U2005:86 [FORWARD SENSING CAMERA (FSC)]

id0902p9030500

System malfunction location	**Error signal received from PCM**
Detection condition	• Forward sensing camera (FSC) receives vehicle speed signal error from the PCM for **1 s or more**.
Fail-safe	• Inhibits the lane departure warning system (LDWS). • Inhibits the high beam control system (HBC).
Possible cause	• DTCs are stored in the PCM. • PCM malfunction • Forward sensing camera (FSC) malfunction
System wiring diagram	—

Diagnostic Procedure

Step	Inspection		Action
1	**VERIFY PCM DTCs** • Perform the DTC inspection for the PCM using the M-MDS. (See 01-02-8 ON-BOARD DIAGNOSTIC TEST [SKYACTIV-G 2.0].) • Is the DTC displayed?	Yes	Repair the malfunctioning part according to the applicable DTC troubleshooting. (See 01-02-14 DTC TABLE [SKYACTIV-G 2.0].)
		No	Go to the next step.
2	**PERFORM DTC INSPECTION AND VERIFY IF MALFUNCTIONING PART IS PCM** • Clear the forward sensing camera (FSC) DTCs using the M-MDS. (See 09-02J-5 CLEARING DTC [FORWARD SENSING CAMERA (FSC)].) • Switch the ignition ON (engine off or on) and wait for **2.5 s or more**. • Perform the DTC inspection for the forward sensing camera (FSC) using the M-MDS. (See 09-02J-4 DTC INSPECTION [FORWARD SENSING CAMERA (FSC)].) • Is the DTC U2005:86 displayed?	Yes	Replace the PCM, then go to the next step. (See 01-40-10 PCM REMOVAL/INSTALLATION [SKYACTIV-G 2.0].)
		No	Go to Step 4.
3	**VERIFY THAT REPAIRS HAVE BEEN COMPLETED** • Clear the forward sensing camera (FSC) DTCs using the M-MDS. (See 09-02J-5 CLEARING DTC [FORWARD SENSING CAMERA (FSC)].) • Switch the ignition ON (engine off or on) and wait for **2.5 s or more**. • Perform the DTC inspection for the forward sensing camera (FSC) using the M-MDS. (See 09-02J-4 DTC INSPECTION [FORWARD SENSING CAMERA (FSC)].) • Is the DTC U2005:86 displayed?	Yes	Replace the forward sensing camera (FSC), then go to the next step. (See 09-22-98 FORWARD SENSING CAMERA (FSC) REMOVAL/INSTALLATION.)
		No	Go to the next step.
4	**VERIFY IF OTHER DTCs DISPLAYED** • Are any other DTCs displayed?	Yes	Repair the malfunctioning part according to the applicable DTC troubleshooting. (See 09-02J-5 DTC TABLE [FORWARD SENSING CAMERA (FSC)].)
		No	DTC troubleshooting completed.

ON-BOARD DIAGNOSTIC [FORWARD SENSING CAMERA (FSC)]

DTC U2100:00 [FORWARD SENSING CAMERA (FSC)]

id0902p9030600

System malfunction location	**Forward sensing camera (FSC) configuration error**
Detection condition	• Forward sensing camera (FSC) configuration not completed is detected.
Fail-safe	• Inhibits the lane departure warning system (LDWS). • Inhibits the high beam control system (HBC).
Possible cause	• Forward sensing camera (FSC) configuration error • Forward sensing camera (FSC) malfunction
System wiring diagram	—

Diagnostic Procedure

Step	Inspection		Action
1	**PERFORM FORWARD SENSING CAMERA (FSC) CONFIGURATION (USING AS-BUILT DATA)** • Using the M-MDS, perform the forward sensing camera (FSC) configuration with the As-Built data. (See 09-22-118 FORWARD SENSING CAMERA (FSC) CONFIGURATION (USING AS-BUILT DATA).) • Clear the forward sensing camera (FSC) DTCs using the M-MDS. (See 09-02J-5 CLEARING DTC [FORWARD SENSING CAMERA (FSC)].) • Perform the DTC inspection for the forward sensing camera (FSC) using the M-MDS. (See 09-02J-4 DTC INSPECTION [FORWARD SENSING CAMERA (FSC)].) • Is DTC U2100:00 displayed?	Yes	Perform the configuration of the forward sensing camera (FSC) using the As-Built data again, then go to the next step. (See 09-22-118 FORWARD SENSING CAMERA (FSC) CONFIGURATION (USING AS-BUILT DATA).)
		No	Go to Step 3.
2	**VERIFY THAT REPAIRS HAVE BEEN COMPLETED** • Clear the forward sensing camera (FSC) DTCs using the M-MDS. (See 09-02J-5 CLEARING DTC [FORWARD SENSING CAMERA (FSC)].) • Perform the DTC inspection for the forward sensing camera (FSC) using the M-MDS. (See 09-02J-4 DTC INSPECTION [FORWARD SENSING CAMERA (FSC)].) • Is DTC U2100:00 displayed?	Yes	Replace the forward sensing camera (FSC), then go to the next step. (See 09-22-98 FORWARD SENSING CAMERA (FSC) REMOVAL/INSTALLATION.)
		No	Go to the next step.
3	**VERIFY IF OTHER DTCs DISPLAYED** • Are any other DTCs displayed?	Yes	Repair the malfunctioning part according to the applicable DTC troubleshooting. (See 09-02J-5 DTC TABLE [FORWARD SENSING CAMERA (FSC)].)
		No	DTC troubleshooting completed.

ON-BOARD DIAGNOSTIC [FORWARD SENSING CAMERA (FSC)]

DTC U2101:00 [FORWARD SENSING CAMERA (FSC)]

id0902p9030700

System malfunction location	**Forward sensing camera (FSC) configuration error**
Detection condition	• Detects that forward sensing camera (FSC) has unsupported configuration data.
Fail-safe	• Inhibits the lane departure warning system (LDWS). • Inhibits the high beam control system (HBC).
Possible cause	• Forward sensing camera (FSC) configuration error
System wiring diagram	—

Diagnostic Procedure

Step	Inspection		Action
1	**PERFORM FORWARD SENSING CAMERA (FSC) CONFIGURATION (USING AS-BUILT DATA)** • Using the M-MDS, perform the forward sensing camera (FSC) configuration with the As-Built data. (See 09-22-118 FORWARD SENSING CAMERA (FSC) CONFIGURATION (USING AS-BUILT DATA).) • Clear the forward sensing camera (FSC) DTCs using the M-MDS. (See 09-02J-5 CLEARING DTC [FORWARD SENSING CAMERA (FSC)].) • Perform the DTC inspection for the forward sensing camera (FSC) using the M-MDS. (See 09-02J-4 DTC INSPECTION [FORWARD SENSING CAMERA (FSC)].) • Is DTC U2101:00 displayed?	Yes	Perform the configuration of the forward sensing camera (FSC) using the As-Built data again, then go to the next step. (See 09-22-118 FORWARD SENSING CAMERA (FSC) CONFIGURATION (USING AS-BUILT DATA).)
		No	Go to Step 3.
2	**VERIFY THAT REPAIRS HAVE BEEN COMPLETED** • Clear the forward sensing camera (FSC) DTCs using the M-MDS. (See 09-02J-5 CLEARING DTC [FORWARD SENSING CAMERA (FSC)].) • Perform the DTC inspection for the forward sensing camera (FSC) using the M-MDS. (See 09-02J-4 DTC INSPECTION [FORWARD SENSING CAMERA (FSC)].) • Is DTC U2101:00 displayed?	Yes	Replace the forward sensing camera (FSC), then go to the next step. (See 09-22-98 FORWARD SENSING CAMERA (FSC) REMOVAL/INSTALLATION.)
		No	Go to the next step.
3	**VERIFY IF OTHER DTCs DISPLAYED** • Are any other DTCs displayed?	Yes	Repair the malfunctioning part according to the applicable DTC troubleshooting. (See 09-02J-5 DTC TABLE [FORWARD SENSING CAMERA (FSC)].)
		No	DTC troubleshooting completed.

ON-BOARD DIAGNOSTIC [FORWARD SENSING CAMERA (FSC)]

DTC U3000:04/U3000:09/U3000:42/U3000:49 [FORWARD SENSING CAMERA (FSC)]

id0902p9030800

System malfunction location	Forward sensing camera (FSC) internal malfunction
Detection condition	• U3000:04 — The front body control module (FBCM) detects an error in the image-related circuit in the forward sensing camera (FSC) with the ignition switched ON (engine off or on). • U3000:09 — The front body control module (FBCM) detects an internal temperature sensor malfunction in the forward sensing camera (FSC) with the ignition switched ON (engine off or on). • U3000:42 — The front body control module (FBCM) detects a NVRAM error in the forward sensing camera (FSC) with the ignition switched ON (engine off or on). • U3000:49 — The front body control module (FBCM) detects a malfunction in the forward sensing camera (FSC) with the ignition switched ON (engine off or on).
Fail-safe	• U3000:04 — Inhibits the lane departure warning system (LDWS). — Inhibits the high beam control system (HBC). • U3000:09 — Inhibits the lane departure warning system (LDWS). — Inhibits the high beam control system (HBC). • U3000:42 — Inhibits the lane departure warning system (LDWS). — Inhibits the high beam control system (HBC). • U3000:49 — Inhibits the lane departure warning system (LDWS). — Inhibits the high beam control system (HBC).
Possible cause	• Forward sensing camera (FSC) malfunction
System wiring diagram	—

Diagnostic Procedure

Step	Inspection		Action
1	**PERFORM DTC INSPECTION AND VERIFY FORWARD SENSING CAMERA (FSC) MALFUNCTION** • Clear the forward sensing camera (FSC) DTCs using the M-MDS. (See 09-02J-5 CLEARING DTC [FORWARD SENSING CAMERA (FSC)].) • Perform the DTC inspection for the forward sensing camera (FSC) using the M-MDS. (See 09-02J-4 DTC INSPECTION [FORWARD SENSING CAMERA (FSC)].) • Are DTCs U3000:04/U3000:09/U3000:42/U3000:49 displayed?	Yes	Replace the forward sensing camera (FSC), then go to the next step. (See 09-22-98 FORWARD SENSING CAMERA (FSC) REMOVAL/INSTALLATION.)
		No	Go to the next step.
2	**VERIFY IF OTHER DTCs DISPLAYED** • Are any other DTCs displayed?	Yes	Repair the malfunctioning part according to the applicable DTC troubleshooting. (See 09-02J-5 DTC TABLE [FORWARD SENSING CAMERA (FSC)].)
		No	DTC troubleshooting completed.

ON-BOARD DIAGNOSTIC [FORWARD SENSING CAMERA (FSC)]

DTC U3003:16 [FORWARD SENSING CAMERA (FSC)]

id0902p9030900

System malfunction location	**Forward sensing camera (FSC) low power supply voltage input**
Detection condition	• Forward sensing camera (FSC) power supply circuit voltage of **7.2 V or less** is detected for **5 s or more** with the ignition switched ON (engine off or on).
Fail-safe	• Inhibits the lane departure warning system (LDWS). • Inhibits the high beam control system (HBC).
Possible cause	• DTCs are stored in the PCM. • Battery malfunction • Generator malfunction • Forward sensing camera (FSC) connector or terminal malfunction • Forward sensing camera (FSC) power supply circuit malfunction — Short to ground in wiring harness between C/U IG1 15 A fuse and forward sensing camera (FSC) terminal I — C/U IG1 15 A fuse malfunction — Open circuit in wiring harness between IG1 relay and forward sensing camera (FSC) terminal I • Forward sensing camera (FSC) malfunction

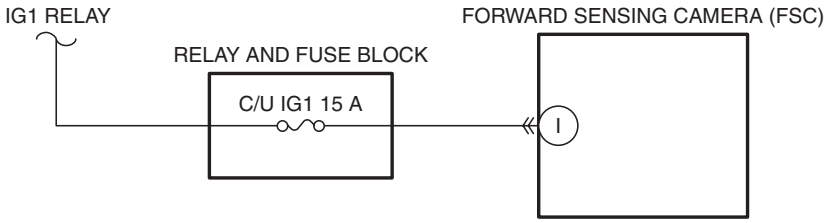

FORWARD SENSING CAMERA (FSC)
WIRING HARNESS-SIDE CONNECTOR

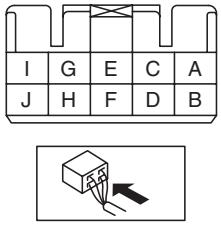

ON-BOARD DIAGNOSTIC [FORWARD SENSING CAMERA (FSC)]

Diagnostic Procedure

Step	Inspection		Action
1	**VERIFY PCM DTCs** • Perform the DTC inspection for the PCM using the M-MDS. (See 01-02-8 ON-BOARD DIAGNOSTIC TEST [SKYACTIV-G 2.0].) • Is the DTC displayed?	Yes	Repair the malfunctioning part according to the applicable DTC troubleshooting. (See 01-02-14 DTC TABLE [SKYACTIV-G 2.0].)
		No	Go to the next step.
2	**INSPECT BATTERY** • Inspect the battery. (See 01-17A-7 BATTERY INSPECTION [SKYACTIV-G 2.0].) (See 01-17B-6 BATTERY INSPECTION [SKYACTIV-D 2.2].) • Is the battery normal?	Yes	Go to the next step.
		No	Recharge or replace the battery, then go to Step 6. (See 01-17A-9 BATTERY RECHARGING [SKYACTIV-G 2.0].) (See 01-17B-8 BATTERY RECHARGING [SKYACTIV-D 2.2].) (See 01-17A-3 BATTERY REMOVAL/INSTALLATION [SKYACTIV-G 2.0].) (See 01-17B-3 BATTERY REMOVAL/INSTALLATION [SKYACTIV-D 2.2].)
3	**INSPECT GENERATOR** • Inspect the generator. (See 01-17A-19 GENERATOR INSPECTION [SKYACTIV-G 2.0].) (See 01-17B-16 GENERATOR INSPECTION [SKYACTIV-D 2.2].) • Is the generator normal?	Yes	Go to the next step.
		No	Replace the generator, then go to Step 6. (See 01-17A-17 GENERATOR REMOVAL/INSTALLATION [SKYACTIV-G 2.0].) (See 01-17B-14 GENERATOR REMOVAL/INSTALLATION [SKYACTIV-D 2.2].)
4	**INSPECT FORWARD SENSING CAMERA (FSC) CONNECTOR** • Switch the ignition to off. • Disconnect the negative battery cable. (See 01-17A-11 NEGATIVE BATTERY CABLE DISCONNECTION/CONNECTION [SKYACTIV-G 2.0].) (See 01-17B-9 NEGATIVE BATTERY CABLE DISCONNECTION/CONNECTION [SKYACTIV-D 2.2].) • Disconnect the forward sensing camera (FSC) connector. • Inspect the connector engagement and connection condition and inspect the terminals for damage, deformation, corrosion, or disconnection. • Is the connector normal?	Yes	Go to the next step.
		No	Repair or replace the connector, then go to Step 6.
5	**VERIFY FORWARD SENSING CAMERA (FSC) POWER SUPPLY VOLTAGE** • Reconnect all the disconnected connectors. • Connect the negative battery cable. (See 01-17A-11 NEGATIVE BATTERY CABLE DISCONNECTION/CONNECTION [SKYACTIV-G 2.0].) (See 01-17B-9 NEGATIVE BATTERY CABLE DISCONNECTION/CONNECTION [SKYACTIV-D 2.2].) • Display PID VPWR_IG1 using the M-MDS. (See 09-02J-25 PID/DATA MONITOR INSPECTION [FORWARD SENSING CAMERA (FSC)].) • Is the voltage B+?	Yes	Go to the next step.
		No	Inspect the C/U IG1 15 A fuse. • If a fuse is burnt out: — Repair or replace the wiring harness which is shorted to ground. — Replace the fuse. • If a fuse is damaged: — Replace the fuse. • If the fuse is normal: — Repair or replace the wiring harness which has an open circuit. Go to the next step.

ON-BOARD DIAGNOSTIC [FORWARD SENSING CAMERA (FSC)]

Step	Inspection		Action
6	**VERIFY THAT REPAIRS HAVE BEEN COMPLETED** • Reconnect all the disconnected connectors. • Reconnect the disconnected negative battery cable. (See 01-17A-11 NEGATIVE BATTERY CABLE DISCONNECTION/CONNECTION [SKYACTIV-G 2.0].) (See 01-17B-9 NEGATIVE BATTERY CABLE DISCONNECTION/CONNECTION [SKYACTIV-D 2.2].) • Clear the forward sensing camera (FSC) DTCs using the M-MDS. (See 09-02J-5 CLEARING DTC [FORWARD SENSING CAMERA (FSC)].) • Switch the ignition ON (engine off or on) and wait for **6.5 s or more**. • Perform the DTC inspection for the forward sensing camera (FSC) using the M-MDS. (See 09-02J-4 DTC INSPECTION [FORWARD SENSING CAMERA (FSC)].) • Is DTC U3003:16 displayed?	Yes	Repeat the inspection from Step 1. • If the malfunction recurs, replace the forward sensing camera (FSC), then go to the next step. (See 09-22-98 FORWARD SENSING CAMERA (FSC) REMOVAL/INSTALLATION.)
		No	Go to the next step.
7	**VERIFY IF OTHER DTCs DISPLAYED** • Are any other DTCs displayed?	Yes	Repair the malfunctioning part according to the applicable DTC troubleshooting. (See 09-02J-5 DTC TABLE [FORWARD SENSING CAMERA (FSC)].)
		No	DTC troubleshooting completed.

DTC U3003:17 [FORWARD SENSING CAMERA (FSC)]

id0902p9031000

System malfunction location	**Forward sensing camera (FSC) high power supply input**
Detection condition	• Forward sensing camera (FSC) power supply circuit voltage of **16.8 V or more** is detected for **5 s or more** with the ignition switched ON (engine off or on).
Fail-safe	• Inhibits the lane departure warning system (LDWS). • Inhibits the high beam control system (HBC).
Possible cause	• DTCs are stored in the PCM. • Battery malfunction • Generator malfunction • Forward sensing camera (FSC) malfunction
System wiring diagram	—

Diagnostic Procedure

Step	Inspection		Action
1	**VERIFY PCM DTCs** • Perform the DTC inspection for the PCM using the M-MDS. (See 01-02-8 ON-BOARD DIAGNOSTIC TEST [SKYACTIV-G 2.0].) • Is the DTC displayed?	Yes	Repair the malfunctioning part according to the applicable DTC troubleshooting. (See 01-02-14 DTC TABLE [SKYACTIV-G 2.0].)
		No	Go to the next step.
2	**INSPECT BATTERY** • Inspect the battery. (See 01-17A-7 BATTERY INSPECTION [SKYACTIV-G 2.0].) (See 01-17B-6 BATTERY INSPECTION [SKYACTIV-D 2.2].) • Is the battery normal?	Yes	Go to the next step.
		No	Replace the battery, then go to Step 4. (See 01-17A-3 BATTERY REMOVAL/INSTALLATION [SKYACTIV-G 2.0].) (See 01-17B-3 BATTERY REMOVAL/INSTALLATION [SKYACTIV-D 2.2].)

ON-BOARD DIAGNOSTIC [FORWARD SENSING CAMERA (FSC)]

Step	Inspection		Action
3	**INSPECT GENERATOR** • Inspect the generator. (See 01-17A-19 GENERATOR INSPECTION [SKYACTIV-G 2.0].) (See 01-17B-16 GENERATOR INSPECTION [SKYACTIV-D 2.2].) • Is the generator normal?	Yes	Go to the next step.
		No	Replace the generator, then go to the next step. (See 01-17A-17 GENERATOR REMOVAL/INSTALLATION [SKYACTIV-G 2.0].) (See 01-17B-14 GENERATOR REMOVAL/INSTALLATION [SKYACTIV-D 2.2].)
4	**VERIFY THAT REPAIRS HAVE BEEN COMPLETED** • Clear the forward sensing camera (FSC) DTCs using the M-MDS. (See 09-02J-5 CLEARING DTC [FORWARD SENSING CAMERA (FSC)].) • Switch the ignition ON (engine off or on) and wait for **6.5 s or more**. • Perform the DTC inspection for the forward sensing camera (FSC) using the M-MDS. (See 09-02J-4 DTC INSPECTION [FORWARD SENSING CAMERA (FSC)].) • Is DTC U3003:17 displayed?	Yes	Repeat the inspection from Step 1. • If the malfunction recurs, replace the forward sensing camera (FSC), then go to the next step. (See 09-22-98 FORWARD SENSING CAMERA (FSC) REMOVAL/INSTALLATION.)
		No	Go to the next step.
5	**VERIFY IF OTHER DTCs DISPLAYED** • Are any other DTCs displayed?	Yes	Repair the malfunctioning part according to the applicable DTC troubleshooting. (See 09-02J-5 DTC TABLE [FORWARD SENSING CAMERA (FSC)].)
		No	DTC troubleshooting completed.

PID/DATA MONITOR INSPECTION [FORWARD SENSING CAMERA (FSC)]

id0902p9032500

1. Connect the M-MDS to the DLC-2.
2. After the vehicle is identified, select the following items from the initialization screen of the M-MDS.
   (1) Select “DataLogger”.
   (2) Select “Modules”.
   (3) Select “FSC”.
3. Select the applicable PID from the PID table.
4. Verify the PID data according to the directions on the screen.

Note

- The PID data screen function is used for monitoring the calculated value of input/output signals in the module. Therefore, if the monitored value of the output parts is not within the specification, it is necessary to inspect the monitored value of input parts corresponding to the applicable output part control. In addition, because the system does not display an output part malfunction as an abnormality in the monitored value, it is necessary to inspect the output parts individually.
- When detecting DTCs, PIDs related to a malfunctioning system may not display even if the module is normal. Therefore, if a PID is not displayed, it is necessary to verify the DTC, perform malfunction diagnosis of the DTC that was detected, and do repairs.

PID/DATA MONITOR TABLE [FORWARD SENSING CAMERA (FSC)]

id0902p9032600

—: Not applicable

PID	Unit/ Operation	Data contents	Inspection item(s)
A_ANG_PITCH	° (deg)	Displays forward sensing camera (FSC) aiming angle (pitch).	Forward sensing camera (FSC)
A_ANG_ROLL	° (deg)	Displays forward sensing camera (FSC) aiming angle (roll).	Forward sensing camera (FSC)
A_ANG_YAW	° (deg)	Displays forward sensing camera (FSC) aiming angle (yaw).	Forward sensing camera (FSC)
BRAKE_SW	Off/On	• Off: Brake switch (No. 2) is off. (Brake pedal is depressed.) • On: Brake switch (No. 2) is on. (Brake pedal is not depressed.)	Brake switch

ON-BOARD DIAGNOSTIC [FORWARD SENSING CAMERA (FSC)]

PID	Unit/ Operation	Data contents	Inspection item(s)
DSP_LANE_ST	Off/ Dash_Lane/ Solid_Lane	• Off: Vehicle lanes not displayed in TFT LCD display • DashLane: Displays broken lines in TFT LCD display. • Lane: Displays actual lanes in TFT LCD display.	TFT LCD display (instrument cluster)
DSP_WRN_ST	Off/ LDWS_Left/ LDWS_Right/ LDWS_Fail/ HBC_Fail/ Camera_BLK/FSC_Fail/ Camera_DRDT	• Off: Warning not displayed in TFT LCD display • LDWS_Left: Warning related to lane departure on vehicle left side is displayed in TFT LCD display. • LDWS_Right: Warning related to lane departure on vehicle right side is displayed in TFT LCD display. • LDWS_Fail: Warning related to malfunction in lane departure warning system (LDWS) is displayed in TFT LCD display. • LDWS_Fail: Warning related to malfunction in high beam control (HBC) system is displayed in TFT LCD display. • Camera_BLK: Warning related to soiling of the forward sensing camera (FSC) is displayed in the TFT LCD display. • FSC_Fail: Warning related to malfunction in forward sensing camera (FSC) is displayed in the TFT LCD display. • Camera_DRDT: Warning related to soiling of the forward sensing camera (FSC) is displayed in the TFT LCD display.	TFT LCD display (instrument cluster)
HBC_H/ L_CS	Hi_Request/ Low_Request/Invalid	• HiRequest: HI beam switch signal received • Low_Request: LO beam switch signal received • Invalid: Error in HI/LO beam switch request signal	Forward sensing camera (FSC)
IL_ST_HBC	Off/ Green_On/ Green_Flash/ Amber_On/ Amber_Flash	• On: HBC indicator light illuminated • Green_On: HBC indicator light (green) is illuminated. • Green_Flash: HBC indicator light (green) is flashing. • Amber_On: HBC indicator light (amber) is illuminated. • Amber_Flash: HBC indicator light (amber) is flashing.	HBC indicator light (instrument cluster)
IL_ST_LDWS	Off/ Green_On/ Green_Flash/ Amber_On/ Amber_Flash	• On: LDWS indicator light illuminated • Green_On: LDWS indicator light (green) illuminated • Green_Flash: LDWS indicator light (green) is flashing. • Amber_On: LDWS indicator light (amber) is illuminated. • Amber_Flash: LDWS indicator light (amber) is flashing.	LDWS indicator light (instrument cluster)
LDWS_BUZZER	Off/On	• Off: LDWS warning alarm does not sound. • On: LDWS warning alarms sounds.	LDWS warning alarm (instrument cluster)
LDWS_SW	Off/On	• Off: LDWS switch is off. • On: LDWS switch is on.	LDWS switch
RS_SOUND_CS	Off/Left/ Right	• Off: Rumble strip sound is not heard. • Left: Left side rumble strip sound heard • Right: Right side rumble strip sound heard	Audio unit
VPWR_IG1	V	Displays forward sensing camera (FSC) power supply voltage.	Forward sensing camera (FSC)
VSPD	KPH, MPH	Vehicle speed is displayed.	—

09-02K ON-BOARD DIAGNOSTIC [FRONT BODY CONTROL MODULE (FBCM)]

ON-BOARD DIAGNOSTIC WIRING DIAGRAM [FRONT BODY CONTROL MODULE (FBCM)] 09-02K–3
FOREWORD [FRONT BODY CONTROL MODULE (FBCM)] 09-02K–8
Troubleshooting Procedure 09-02K–8
Action for non-repeatable malfunction. 09-02K–9
DTC INSPECTION [FRONT BODY CONTROL MODULE (FBCM)] 09-02K–10
CMDTC Self Test 09-02K–10
ODDTC Self Test 09-02K–10
CLEARING DTC [FRONT BODY CONTROL MODULE (FBCM)] 09-02K–12
CMDTC Memory Clearing Procedure 09-02K–12
ODDTC Memory Clearing Procedure 09-02K–12
DTC TABLE [FRONT BODY CONTROL MODULE (FBCM)] 09-02K–13
DTC B1008:02 [FRONT BODY CONTROL MODULE (FBCM)] 09-02K–17
DTC B1008:62 [FRONT BODY CONTROL MODULE (FBCM)] 09-02K–18
DTC B1048:7B [FRONT BODY CONTROL MODULE (FBCM)] 09-02K–21
DTC B1087:88 [FRONT BODY CONTROL MODULE (FBCM)] 09-02K–24
DTC B1088:88 [FRONT BODY CONTROL MODULE (FBCM)] 09-02K–25
DTC B1095:72/B1095:73 [FRONT BODY CONTROL MODULE (FBCM)]. 09-02K–26
DTC B109A:12 [FRONT BODY CONTROL MODULE (FBCM)] 09-02K–31
DTC B109A:14 [FRONT BODY CONTROL MODULE (FBCM)] 09-02K–34
DTC B10A6:64 [FRONT BODY CONTROL MODULE (FBCM)] 09-02K–37
DTC B10A8:12 [FRONT BODY CONTROL MODULE (FBCM)] 09-02K–38
DTC B10AD:86 [FRONT BODY CONTROL MODULE (FBCM)] 09-02K–41
DTC B10AF:12 [FRONT BODY CONTROL MODULE (FBCM)]. 09-02K–42
DTC B1142:13 [FRONT BODY CONTROL MODULE (FBCM)] 09-02K–45
DTC B1143:13 [FRONT BODY CONTROL MODULE (FBCM)] 09-02K–48
DTC B11DB:86 [FRONT BODY CONTROL MODULE (FBCM)] 09-02K–51
DTC B1314:11 [FRONT BODY CONTROL MODULE (FBCM)] 09-02K–55
DTC B134D:02 [FRONT BODY CONTROL MODULE (FBCM)] 09-02K–58
DTC B13AF:62 [FRONT BODY CONTROL MODULE (FBCM)] 09-02K–59
DTC B13CF:19 [FRONT BODY CONTROL MODULE (FBCM)] 09-02K–62
DTC B13D0:11 [FRONT BODY CONTROL MODULE (FBCM)] 09-02K–65
DTC B13D2:12 [FRONT BODY CONTROL MODULE (FBCM)]. 09-02K–68
DTC B13FE:12 [FRONT BODY CONTROL MODULE (FBCM)]. 09-02K–71
DTC B13FE:14 [FRONT BODY CONTROL MODULE (FBCM)]. 09-02K–74
DTC B141E:12 [FRONT BODY CONTROL MODULE (FBCM)]. 09-02K–77
DTC B1C79:97 [FRONT BODY CONTROL MODULE (FBCM)]. 09-02K–80
DTC B1C82:97 [FRONT BODY CONTROL MODULE (FBCM)]. 09-02K–81
DTC B1C84:12 [FRONT BODY CONTROL MODULE (FBCM)]. 09-02K–82
DTC B1C84:14 [FRONT BODY CONTROL MODULE (FBCM)]. 09-02K–85
DTC B1D06:11 [FRONT BODY CONTROL MODULE (FBCM)]. 09-02K–88
DTC B1D06:13 [FRONT BODY CONTROL MODULE (FBCM)]. 09-02K–92
DTC B1D07:11 [FRONT BODY CONTROL MODULE (FBCM)]. 09-02K–97
DTC B1D07:13 [FRONT BODY CONTROL MODULE (FBCM)]. 09-02K–101
DTC C1126:11 [FRONT BODY CONTROL MODULE (FBCM)]. 09-02K–106
DTC C1126:13 [FRONT BODY CONTROL MODULE (FBCM)]. 09-02K–110
DTC U0001:88/U0100:00/U0101:00/U0121:00/U0155:00/U0214:00/U023A:00/U0515:00 [FRONT BODY CONTROL MODULE (FBCM)] 09-02K–114
Diagnostic Procedure 09-02K–115
DTC U0164:68 [FRONT BODY CONTROL MODULE (FBCM)]. 09-02K–115
DTC U0231:68 [FRONT BODY CONTROL MODULE (FBCM)] 09-02K–119
DTC U0298:68 [FRONT BODY CONTROL MODULE (FBCM)]. 09-02K–123
DTC U0338:09 [FRONT BODY CONTROL MODULE (FBCM)]. 09-02K–127
DTC U0401:68 [FRONT BODY CONTROL MODULE (FBCM)]. 09-02K–128
DTC U0415:68 [FRONT BODY CONTROL MODULE (FBCM)]. 09-02K–130
DTC U053B:68 [FRONT BODY CONTROL MODULE (FBCM)]. 09-02K–132
DTC U0599:68 [FRONT BODY CONTROL MODULE (FBCM)]. 09-02K–134
DTC U1007:68 [FRONT BODY CONTROL MODULE (FBCM)]. 09-02K–135
DTC U2005:68 [FRONT BODY CONTROL MODULE (FBCM)]. 09-02K–139
DTC U2100:00 [FRONT BODY CONTROL MODULE (FBCM)]. 09-02K–140
DTC U2101:00 [FRONT BODY CONTROL MODULE (FBCM)]. 09-02K–141

ON-BOARD DIAGNOSTIC [FRONT BODY CONTROL MODULE (FBCM)]

DTC U3000:49 [FRONT BODY CONTROL MODULE (FBCM)] 09-02K–142
DTC U3000:56 [FRONT BODY CONTROL MODULE (FBCM)] 09-02K–143
DTC U3003:16 [FRONT BODY CONTROL MODULE (FBCM)] 09-02K–144
DTC U3003:17 [FRONT BODY CONTROL MODULE (FBCM)] 09-02K–148
DTC U3006:62 [FRONT BODY CONTROL MODULE (FBCM)] 09-02K–150
PID/DATA MONITOR INSPECTION [FRONT BODY CONTROL MODULE (FBCM)] 09-02K–153
PID/DATA MONITOR TABLE [FRONT BODY CONTROL MODULE (FBCM)] 09-02K–154
ACTIVE COMMAND MODES INSPECTION [FRONT BODY CONTROL MODULE (FBCM)] 09-02K–158
ACTIVE COMMAND MODES TABLE [FRONT BODY CONTROL MODULE (FBCM)] 09-02K–158

ON-BOARD DIAGNOSTIC [FRONT BODY CONTROL MODULE (FBCM)]

ON-BOARD DIAGNOSTIC WIRING DIAGRAM [FRONT BODY CONTROL MODULE (FBCM)]

id0902p2005900

Rear defroster, blower motor

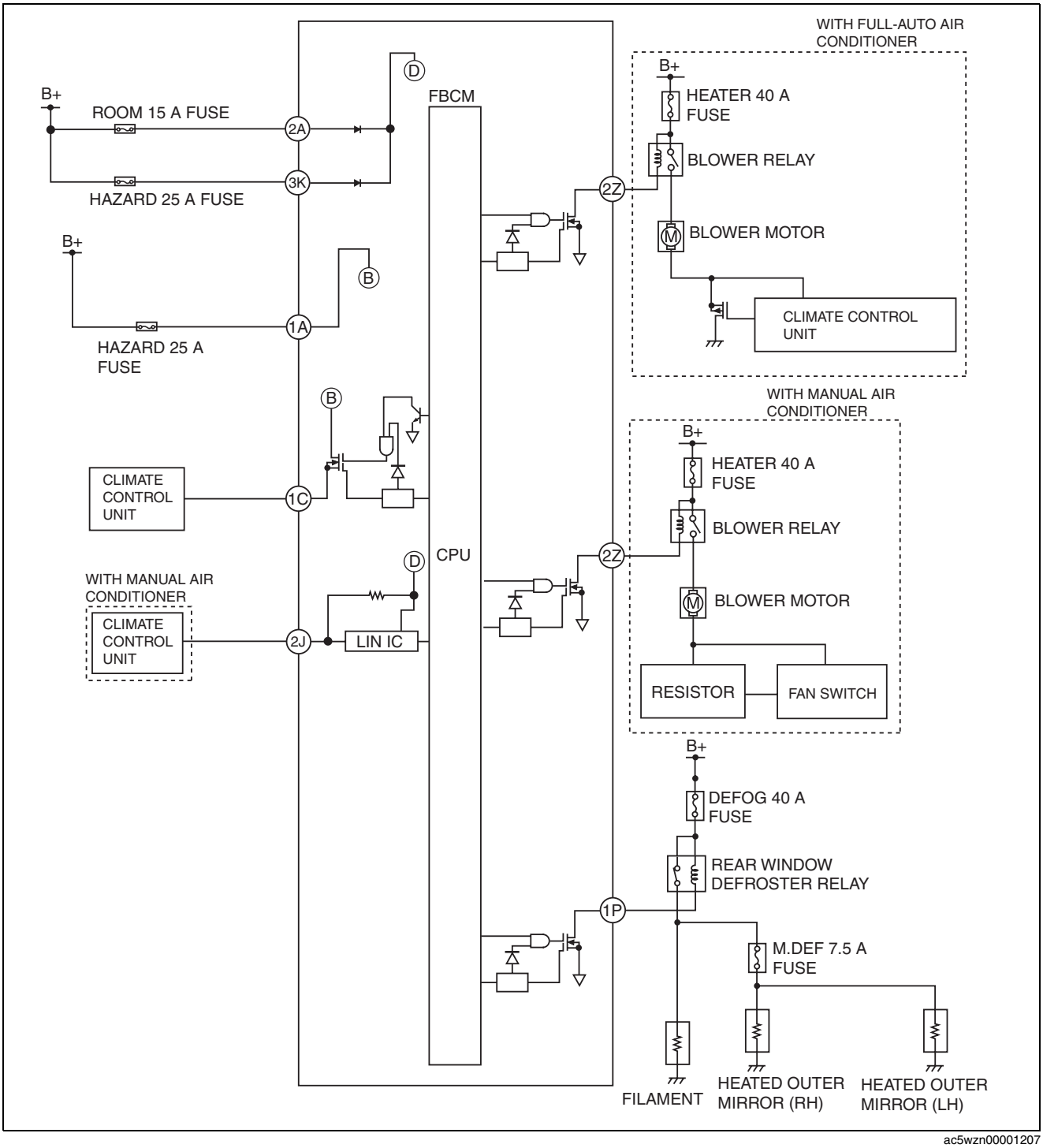

ac5wzn00001207

ON-BOARD DIAGNOSTIC [FRONT BODY CONTROL MODULE (FBCM)]

Headlights, turn lights, front fog lights

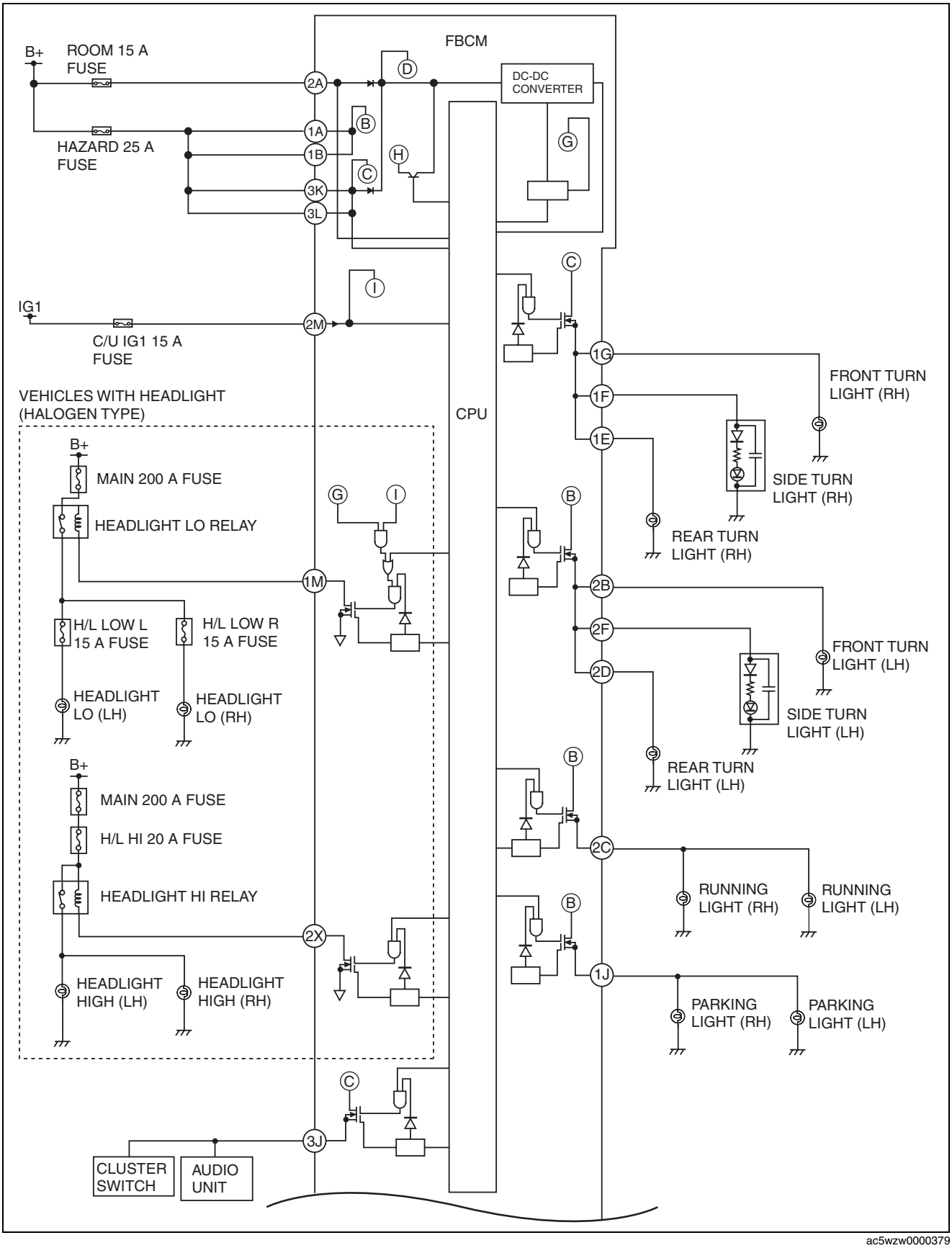

ac5wzw0000379

ON-BOARD DIAGNOSTIC [FRONT BODY CONTROL MODULE (FBCM)]

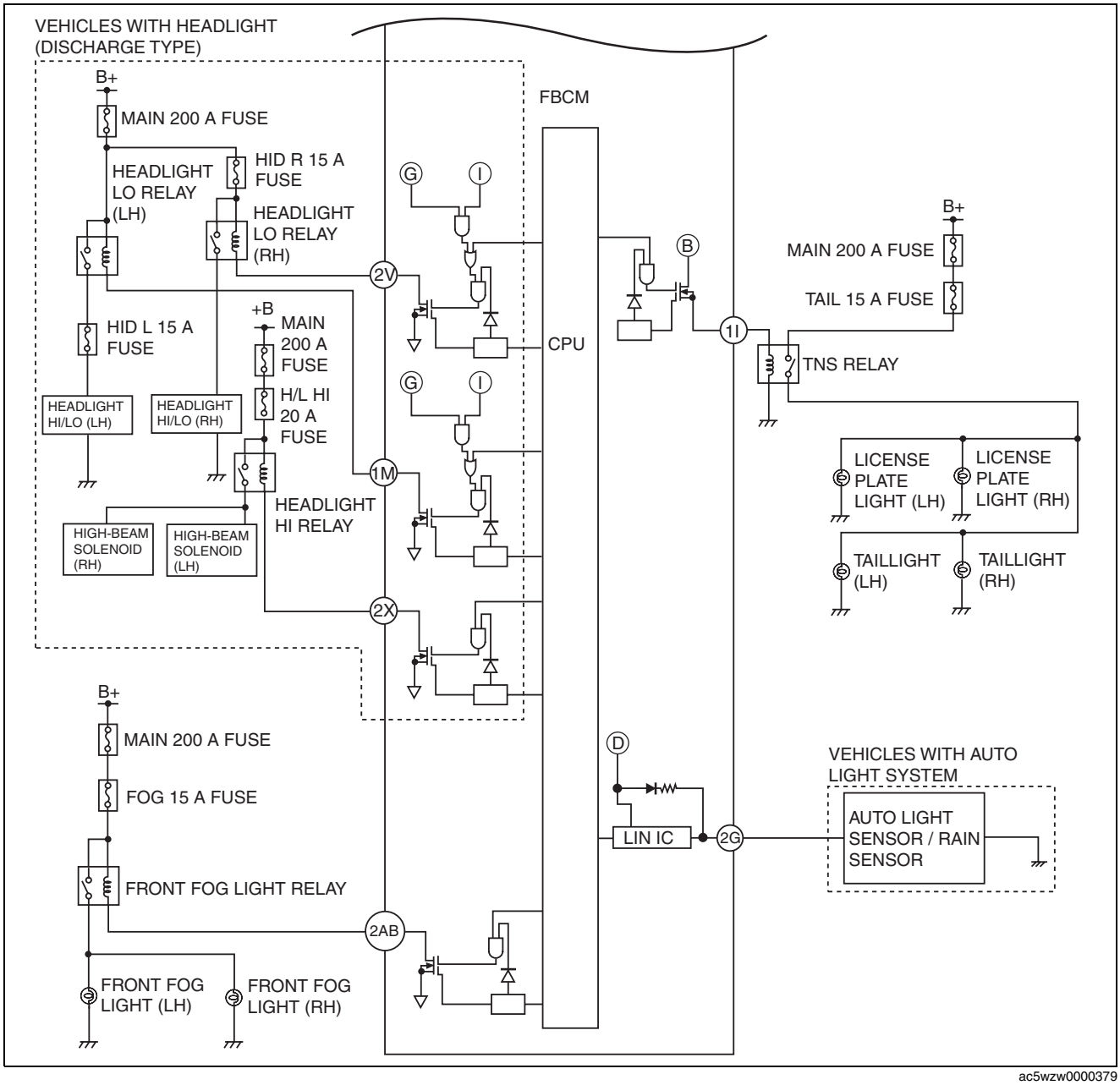

ac5wzw0000379

ON-BOARD DIAGNOSTIC [FRONT BODY CONTROL MODULE (FBCM)]

Windshield wipers, front/rear washers

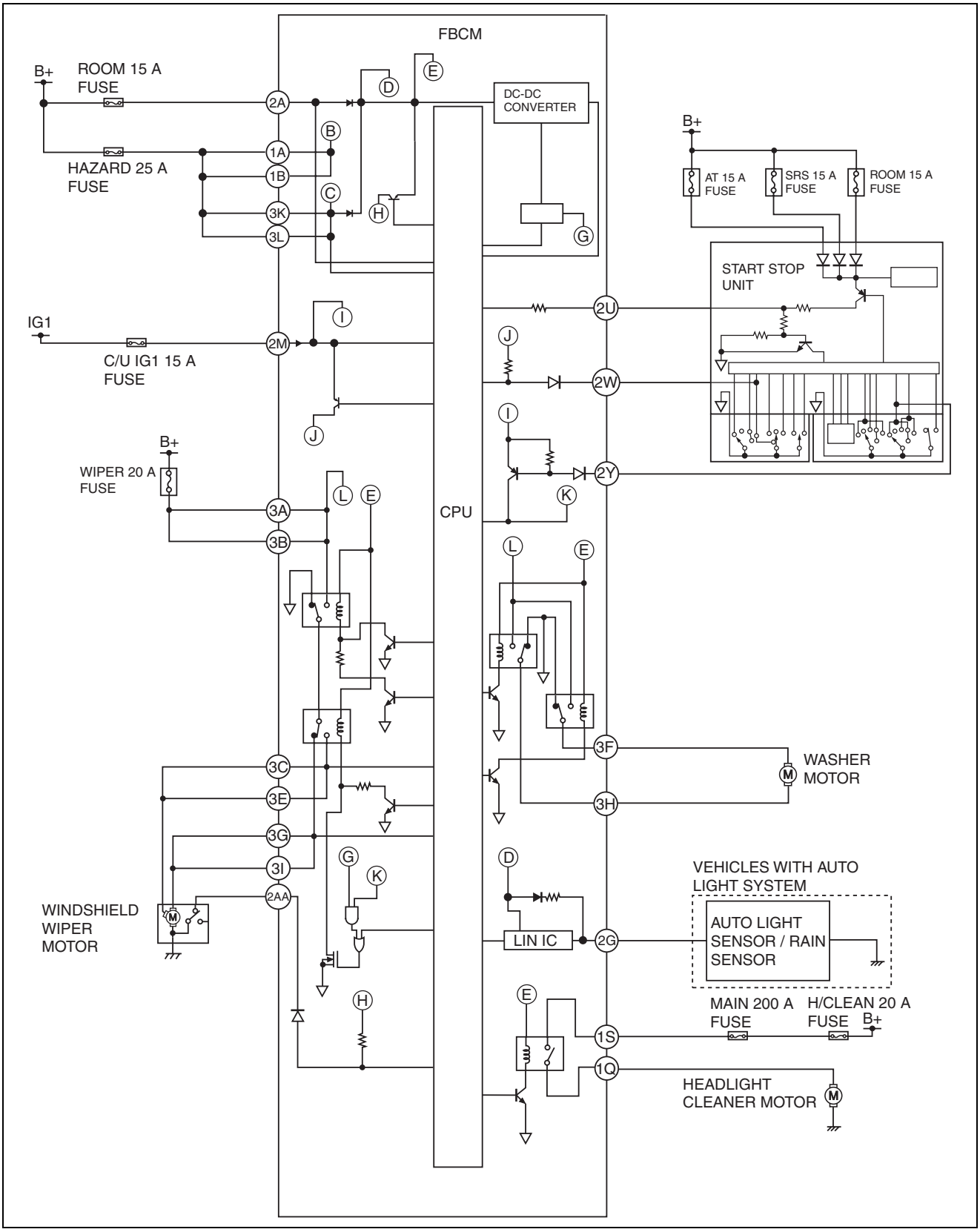

ac5wzn00001491

ON-BOARD DIAGNOSTIC [FRONT BODY CONTROL MODULE (FBCM)]

Horn, sensors

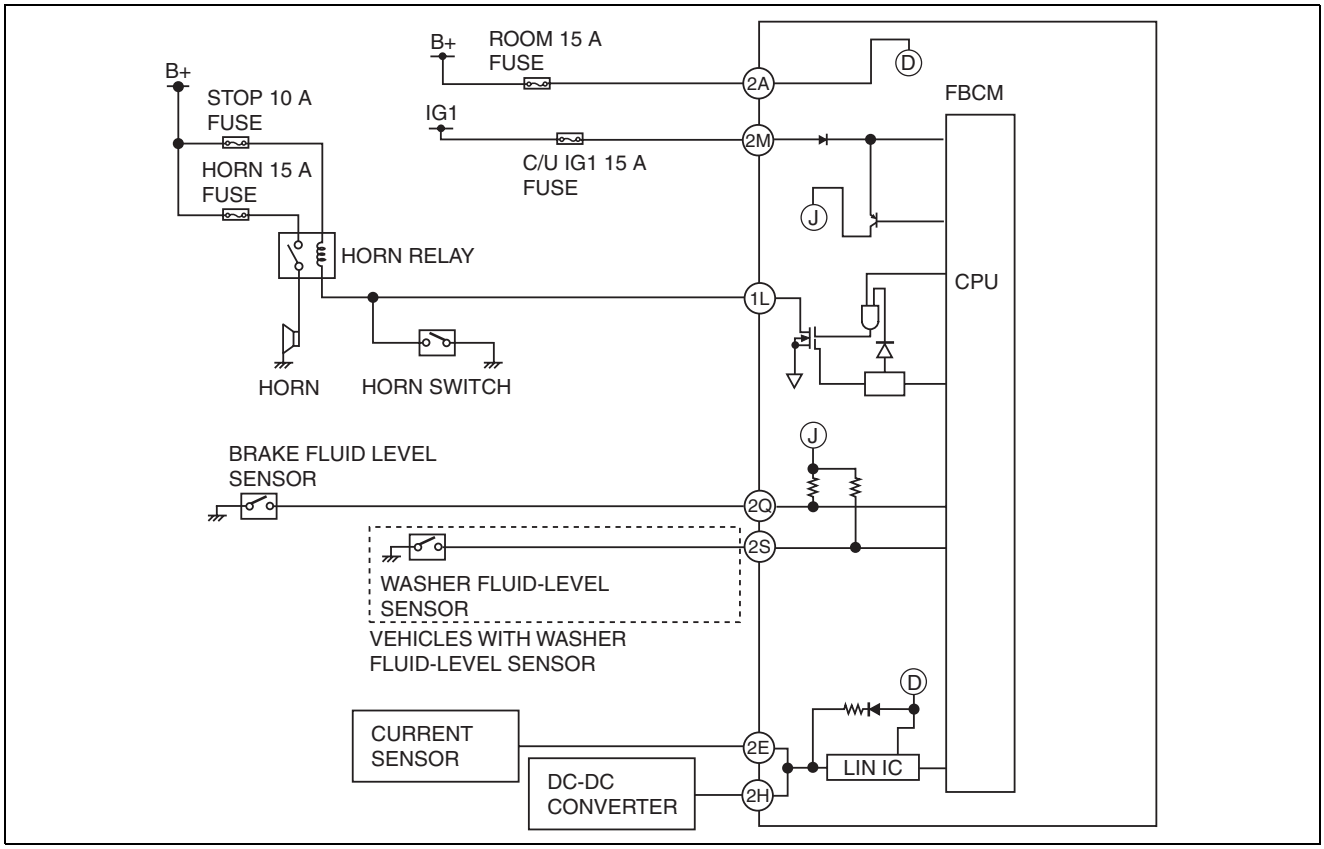

ac5wzn00000972

CAN system

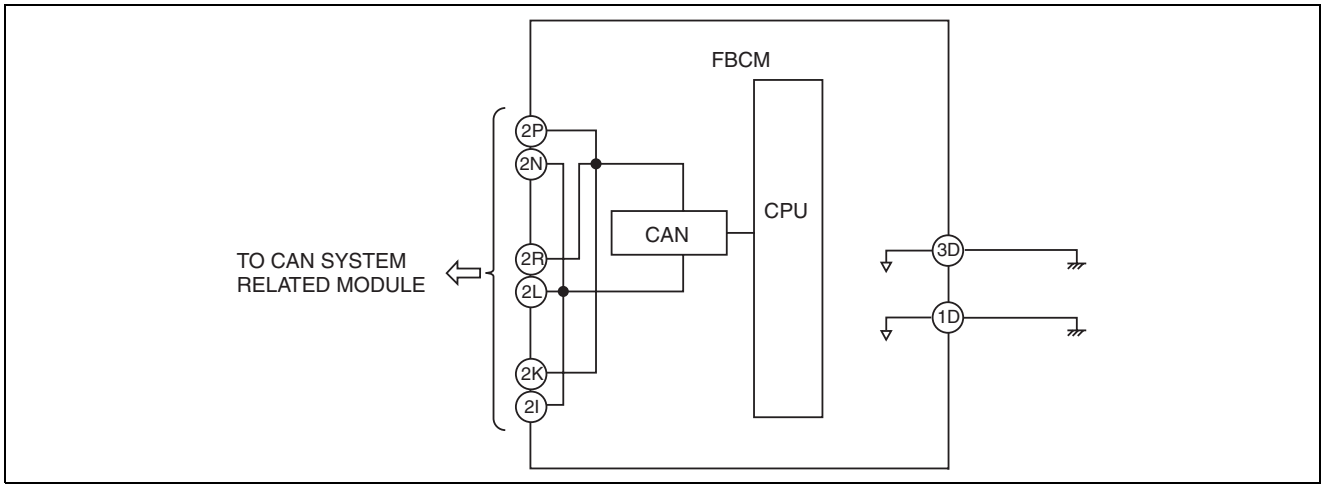

ac5uun00000174

ON-BOARD DIAGNOSTIC [FRONT BODY CONTROL MODULE (FBCM)]

FOREWORD [FRONT BODY CONTROL MODULE (FBCM)]

id0902p2006000

- If there is any vehicle malfunction complaint lodged by a customer, perform malfunction diagnosis according to the troubleshooting procedure.

Troubleshooting Procedure

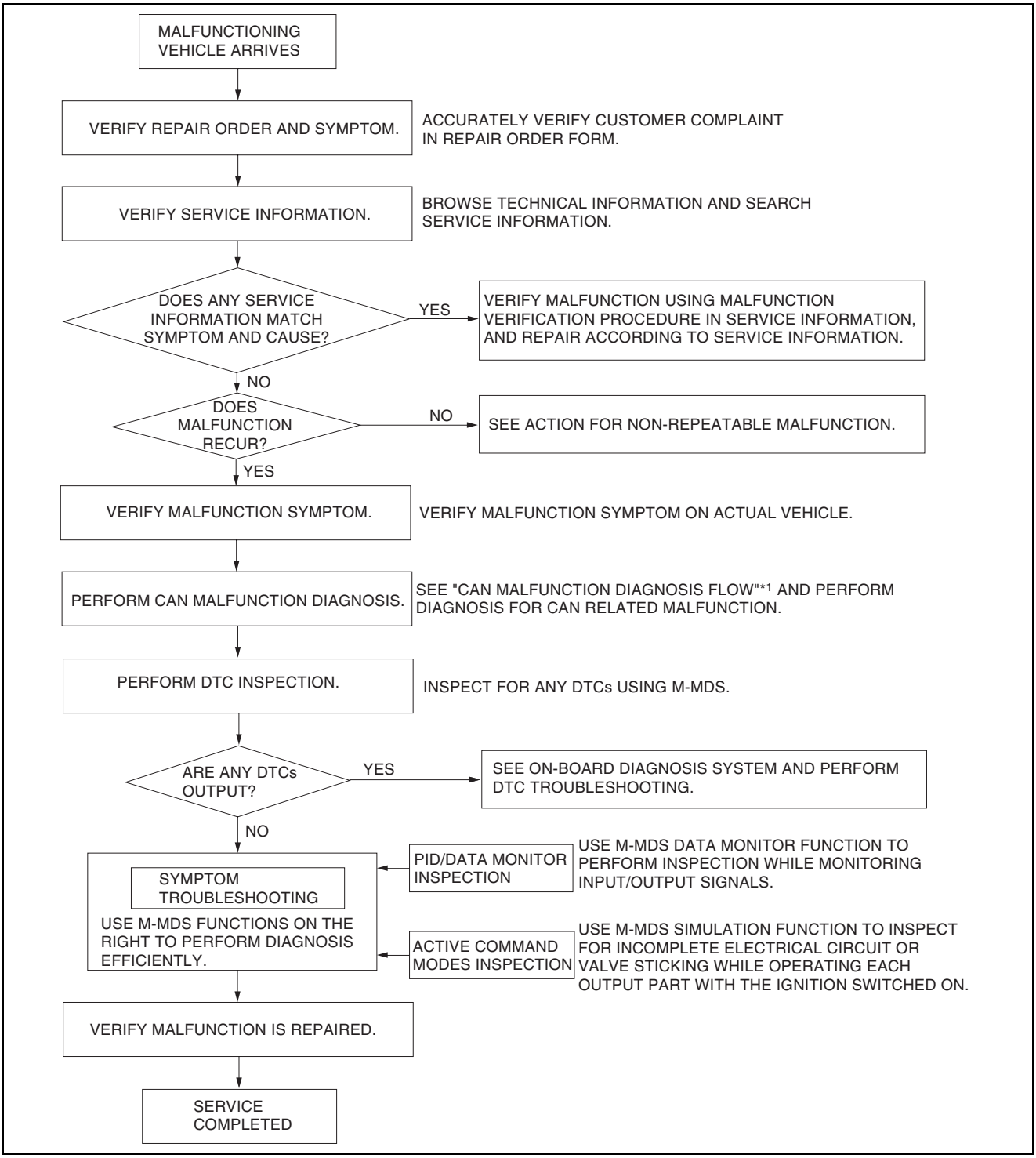

am3uuw0000731

*1 : 10-02A-3 CONTROLLER AREA NETWORK (CAN) MALFUNCTION DIAGNOSIS FLOW [SKYACTIV-G 2.0 (L.H.D.)] /10-02B-3 CONTROLLER AREA NETWORK (CAN) MALFUNCTION DIAGNOSIS FLOW [SKYACTIV-G 2.0 (R.H.D.)]/10-02C-3 CONTROLLER AREA NETWORK (CAN) MALFUNCTION DIAGNOSIS FLOW [SKYACTIV-D 2.2 (L.H.D.)] 10-02D-3 CONTROLLER AREA NETWORK (CAN) MALFUNCTION DIAGNOSIS FLOW [SKYACTIV-D 2.2 (R.H.D.)]

ON-BOARD DIAGNOSTIC [FRONT BODY CONTROL MODULE (FBCM)]

Action for non-repeatable malfunction

- If the malfunction does not recur, verify the malfunction cause by performing the following actions:
  - — Based on the repair order form, attempt to drive the vehicle or perform tests to replicate the malfunction, record the data at that time, and detect the malfunction cause.
  - — Shake the wiring harness or connector of the electrical component which is suspected to be the cause of the malfunction, and inspect for malfunction or occurrence of any DTCs.

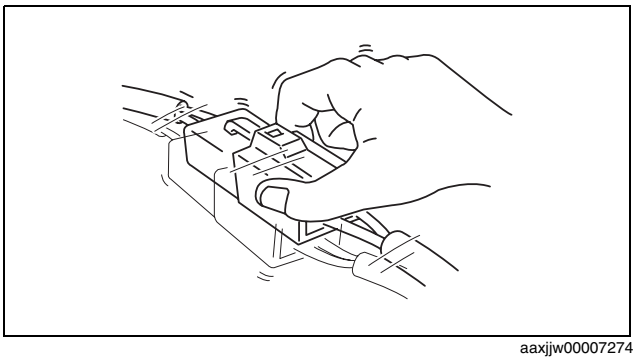

aaxjjw00007274

  - — Inspect the female terminals on the connector of the electric component which is suspected to be the cause of the malfunction for poor connection.

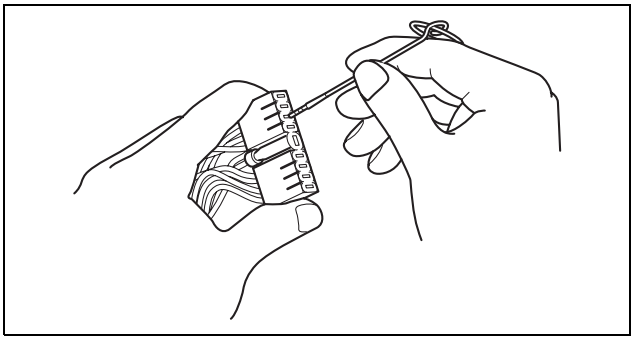

am3uuw0000750

ON-BOARD DIAGNOSTIC [FRONT BODY CONTROL MODULE (FBCM)]

DTC INSPECTION [FRONT BODY CONTROL MODULE (FBCM)]

id0902p2006100

CMDTC Self Test

1. Connect the M-MDS to the DLC-2.
2. Verify the following vehicle conditions:
   - All the switches are turned off (except the ignition switch).
   - All the doors, bonnet, and liftgate are closed.
   - All the doors, and liftgate re unlocked.
   - All the seat belts are unbuckled.
   - Parking brake lever is pulled.
3. After the vehicle is identified, select the following items from the initialization screen of the M-MDS.
   (1) Select “Self Test”.
   (2) Select “All CMDTCs”.
4. Verify the DTC according to the directions on the screen.
   - If any DTCs are displayed, perform troubleshooting according to the corresponding DTC inspection.
5. After completion of repairs, clear all DTCs stored in the front body control module (FBCM). (See 09-02K-12 CLEARING DTC [FRONT BODY CONTROL MODULE (FBCM)].)

ODDTC Self Test

1. Connect the M-MDS to the DLC-2.
2. Verify the following vehicle conditions:
   - All the switches are turned off (except the ignition switch).
   - All the doors, bonnet, and liftgate are closed.
   - All the doors, and liftgate re unlocked.
   - All the seat belts are unbuckled.
   - Parking brake lever is pulled.
3. After the vehicle is identified, select the following items from the initialization screen of the M-MDS.
   (1) Select “Self Test”.
   (2) Select “Modules”.
   (3) Select “F_BCM”.
4. Verify the DTC according to the directions on the screen.
   - If any DTCs are displayed, perform troubleshooting according to the corresponding DTC inspection.
5. After completion of repairs, clear all DTCs stored in the front body control module (FBCM). (See 09-02K-12 CLEARING DTC [FRONT BODY CONTROL MODULE (FBCM)].)

ON-BOARD DIAGNOSTIC [FRONT BODY CONTROL MODULE (FBCM)]

Snapshot data

- The data for all DTCs currently detected is stored.

Snapshot data table

Snapshot data item	Unit		Data contents	Corresponding data monitor items
AAT	°C	°F	Ambient temperature	-
APP_STATUS	Accelerator Pedal Off/Under20%/ Over20%/FAIL		Accelerator pedal position status	-
CFG_STATUS	Config Complete/Not Configured/Config Error		Configuration status	-
ECT_STATUS	Under 0 degrees C/ 0-Under 80 degrees C/ Over 80 degrees C/FAIL		Engine coolant temperature status	-
IC_VPWR	V		Instrument cluster power supply voltage	-
IG-ON_TIMER	hh:mm:ss		Elapsed time since ignition switched ON (engine off or on)	-
PWR_MODE_KEY	Key Out/Key Recently Out/ Key Approved (Position 0)/ Post Accessory (Position 0)/ Accessory (Position 1)/ Post Ignition (Position 1)/ ignition On (Position 2)/ Running (Position 2)/ Running - Starting In Progress (Position 2)/Crank (Position 3)		Push button start power position switching status	-
RPM_STATUS	Engine Stop/Under1500rpm/ Over1500rpm/FAIL		Engine speed status	-
SHIFT_STATUS	P/N/D/R/FAIL		Selector lever position status	-
TOTAL_DIST	Km	miles	Accumulated total traveled distance since vehicle completion	-
TOTAL_TIME	hh:mm:ss		Accumulated total elapsed time since vehicle completion **Note** • When the ROOM fuse is removed, or the ignition is switched off (LOCK), the time is not included in the elapsed time.	-
VPWR	V		Front body control module (FBCM) power supply malfunction	VPWR_IG
VSPD_STATUS	Stop/ 0-10km/h/ Over10km/h/ FAIL		Vehicle speed status	VSPD

ON-BOARD DIAGNOSTIC [FRONT BODY CONTROL MODULE (FBCM)]

CLEARING DTC [FRONT BODY CONTROL MODULE (FBCM)]

id0902p2006200

CMDTC Memory Clearing Procedure

1. Connect the M-MDS to the DLC-2.
2. After the vehicle is identified, select the following items from the initialization screen of the M-MDS.
   (1) Select “Self Test”.
   (2) Select “All CMDTCs”.
3. Verify the DTC according to the directions on the screen.
4. Press the clear button on the DTC screen to clear the DTC.
5. Switch the ignition to off.
6. Switch the ignition ON (engine off or on) and wait for **5 s or more**.
7. Perform DTC inspection. (See 09-02K-10 DTC INSPECTION [FRONT BODY CONTROL MODULE (FBCM)].)
8. Verify that no DTCs are displayed.

ODDTC Memory Clearing Procedure

1. Connect the M-MDS to the DLC-2.
2. After the vehicle is identified, select the following items from the initialization screen of the M-MDS.
   (1) Select “Self Test”.
   (2) Select “Modules”.
   (3) Select “F_BCM”.
3. Verify the DTC according to the directions on the screen.
4. Press the clear button on the DTC screen to clear the DTC.
5. Switch the ignition to off.
6. Switch the ignition ON (engine off or on) and wait for **5 s or more**.
7. Perform DTC inspection. (See 09-02K-10 DTC INSPECTION [FRONT BODY CONTROL MODULE (FBCM)].)
8. Verify that no DTCs are displayed.

ON-BOARD DIAGNOSTIC [FRONT BODY CONTROL MODULE (FBCM)]

DTC TABLE [FRONT BODY CONTROL MODULE (FBCM)]

id0902p2006300

×: Applicable
—: Not applicable

DTC No.	Warning/ indicator light	Description	Fail-safe function	Drive cycle	Self test type*1	Memory function	Page
B1008:02	—	Windshield wiper control signal mismatch	—	—	C, D	×	(See 09-02K-17 DTC B1008:02 [FRONT BODY CONTROL MODULE (FBCM)].)
B1008:62	—	Windshield wiper LO switch signal mismatch	—	—	C, D	×	(See 09-02K-18 DTC B1008:62 [FRONT BODY CONTROL MODULE (FBCM)].)
B1048:7B	—	Brake fluid level sensor circuit malfunction	—	—	C, D	×	(See 09-02K-21 DTC B1048:7B [FRONT BODY CONTROL MODULE (FBCM)].)
B1087:88	—	LIN communication error	—	—	C, D	×	(See 09-02K-24 DTC B1087:88 [FRONT BODY CONTROL MODULE (FBCM)].)
B1088:88	—	LIN communication error	—	—	C, D	×	(See 09-02K-25 DTC B1088:88 [FRONT BODY CONTROL MODULE (FBCM)].)
B1095:72	—	Autostop switch circuit malfunction	—	—	C, D	×	(See 09-02K-26 DTC B1095:72/B1095:73 [FRONT BODY CONTROL MODULE (FBCM)].)
B1095:73	—	Autostop switch circuit malfunction	—	—	C, D	×	
B109A:12	—	Headlight HI relay circuit malfunction	—	—	C, D	×	(See 09-02K-31 DTC B109A:12 [FRONT BODY CONTROL MODULE (FBCM)].)
B109A:14	—	Headlight HI relay circuit malfunction	—	—	C, D	×	(See 09-02K-34 DTC B109A:14 [FRONT BODY CONTROL MODULE (FBCM)].)
B10A6:64	—	Light switch error signal received	—	—	C, D	×	(See 09-02K-37 DTC B10A6:64 [FRONT BODY CONTROL MODULE (FBCM)].)
B10A8:12*2	—	Headlight LO relay circuit malfunction	—	—	C, D	×	(See 09-02K-38 DTC B10A8:12 [FRONT BODY CONTROL MODULE (FBCM)].)
B10AD:86*3	—	Error signal received from auto-light sensor/rain sensor	—	—	C, D	×	(See 09-02K-41 DTC B10AD:86 [FRONT BODY CONTROL MODULE (FBCM)].)
B10AF:12	—	Blower relay circuit malfunction	—	—	C, D	×	(See 09-02K-42 DTC B10AF:12 [FRONT BODY CONTROL MODULE (FBCM)].)
B1142:13	—	Front body control module (FBCM) power supply voltage (+IG1 power supply) input circuit malfunction	—	—	C, D	×	(See 09-02K-45 DTC B1142:13 [FRONT BODY CONTROL MODULE (FBCM)].)
B1143:13	—	IG2 power supply control circuit malfunction	—	—	C, D	×	(See 09-02K-48 DTC B1143:13 [FRONT BODY CONTROL MODULE (FBCM)].)

ON-BOARD DIAGNOSTIC [FRONT BODY CONTROL MODULE (FBCM)]

DTC No.	Warning/ indicator light	Description	Fail-safe function	Drive cycle	Self test type*1	Memory function	Page
B11DB:86	—	Error signal received from current sensor	—	—	C, D	×	(See 09-02K-51 DTC B11DB:86 [FRONT BODY CONTROL MODULE (FBCM)].)
B1314:11	—	Illumination output circuit malfunction	—	—	C, D	×	(See 09-02K-55 DTC B1314:11 [FRONT BODY CONTROL MODULE (FBCM)].)
B134D:02	—	Headlight control signal error	—	—	C, D	×	(See 09-02K-58 DTC B134D:02 [FRONT BODY CONTROL MODULE (FBCM)].)
B13AF:62	—	Headlight LO signal mismatch	—	—	C, D	×	(See 09-02K-59 DTC B13AF:62 [FRONT BODY CONTROL MODULE (FBCM)].)
B13CF:19	—	IG2 power supply output circuit malfunction	—	—	C, D	×	(See 09-02K-62 DTC B13CF:19 [FRONT BODY CONTROL MODULE (FBCM)].)
B13D0:11	—	TNS circuit malfunction	—	—	C, D	×	(See 09-02K-65 DTC B13D0:11 [FRONT BODY CONTROL MODULE (FBCM)].)
B13D2:12 *4	—	Front fog light relay circuit malfunction	—	—	C, D	×	(See 09-02K-68 DTC B13D2:12 [FRONT BODY CONTROL MODULE (FBCM)].)
B13FE:12 *5	—	Headlight LO relay (RH) circuit malfunction	—	—	C, D	×	(See 09-02K-71 DTC B13FE:12 [FRONT BODY CONTROL MODULE (FBCM)].)
B13FE:14 *5	—	Headlight LO relay (RH) circuit malfunction	—	—	C, D	×	(See 09-02K-74 DTC B13FE:14 [FRONT BODY CONTROL MODULE (FBCM)].)
B141E:12* 5	—	Headlight LO relay (LH) circuit malfunction	—	—	C, D	×	(See 09-02K-77 DTC B141E:12 [FRONT BODY CONTROL MODULE (FBCM)].)
B1C79:97	—	Washer motor switch circuit malfunction	—	—	C, D	×	(See 09-02K-80 DTC B1C79:97 [FRONT BODY CONTROL MODULE (FBCM)].)
B1C82:97 *6	—	Headlight cleaner motor switch circuit malfunction	—	—	C, D	×	(See 09-02K-81 DTC B1C82:97 [FRONT BODY CONTROL MODULE (FBCM)].)
B1C84:12	—	Rear window defroster circuit malfunction	—	—	C, D	×	(See 09-02K-82 DTC B1C84:12 [FRONT BODY CONTROL MODULE (FBCM)].)
B1C84:14	—	Rear window defroster circuit malfunction	—	—	C, D	×	(See 09-02K-85 DTC B1C84:14 [FRONT BODY CONTROL MODULE (FBCM)].)
B1D06:11	—	Turn light (LH) circuit malfunction	—	—	C, D	×	(See 09-02K-88 DTC B1D06:11 [FRONT BODY CONTROL MODULE (FBCM)].)
B1D06:13	—	Turn light (LH) circuit malfunction	—	—	C, D	×	(See 09-02K-92 DTC B1D06:13 [FRONT BODY CONTROL MODULE (FBCM)].)

ON-BOARD DIAGNOSTIC [FRONT BODY CONTROL MODULE (FBCM)]

DTC No.	Warning/ indicator light	Description	Fail-safe function	Drive cycle	Self test type*1	Memory function	Page
B1D07:11	—	Turn light (RH) circuit malfunction	—	—	C, D	×	(See 09-02K-97 DTC B1D07:11 [FRONT BODY CONTROL MODULE (FBCM)].)
B1D07:13	—	Turn light (RH) circuit malfunction	—	—	C, D	×	(See 09-02K-101 DTC B1D07:13 [FRONT BODY CONTROL MODULE (FBCM)].)
C1126:11	—	Parking light (LH/RH) circuit malfunction	—	—	C, D	×	(See 09-02K-106 DTC C1126:11 [FRONT BODY CONTROL MODULE (FBCM)].)
C1126:13	—	Parking light (LH/RH) circuit malfunction	—	—	C, D	×	(See 09-02K-110 DTC C1126:13 [FRONT BODY CONTROL MODULE (FBCM)].)
U0001:88	—	Module communication error (HS-CAN)	×	—	C, D	×	(See 09-02K-114 DTC U0001:88/U0100:00/ U0101:00/U0121:00/ U0155:00/U0214:00/ U023A:00/U0515:00 [FRONT BODY CONTROL MODULE (FBCM)].)
U0100:00	—	Communication error with PCM	×	—	C, D	×	
U0101:00* 7	—	Communication error with TCM	×	—	C, D	×	
U0121:00	—	Communication error with DSC HU/CM	×	—	C, D	×	
U0155:00	—	Communication error with instrument cluster	×	—	C, D	×	
U0164:68* 8	—	Communication error between climate control unit	—	—	C, D	×	(See 09-02K-115 DTC U0164:68 [FRONT BODY CONTROL MODULE (FBCM)].)
U0214:00	—	Communication error with start stop unit	×	—	C, D	×	(See 09-02K-114 DTC U0001:88/U0100:00/ U0101:00/U0121:00/ U0155:00/U0214:00/ U023A:00/U0515:00 [FRONT BODY CONTROL MODULE (FBCM)].)
U0231:68* 3	—	Communication error with auto-light sensor/rain sensor	—	—	C, D	×	(See 09-02K-119 DTC U0231:68 [FRONT BODY CONTROL MODULE (FBCM)].)
U023A:00 *9	—	Communication error with forward sensing camera (FSC)	×	—	C, D	×	(See 09-02K-114 DTC U0001:88/U0100:00/ U0101:00/U0121:00/ U0155:00/U0214:00/ U023A:00/U0515:00 [FRONT BODY CONTROL MODULE (FBCM)].)
U0298:68	—	Communication error with DC-DC converter	—	—	C, D	×	(See 09-02K-123 DTC U0298:68 [FRONT BODY CONTROL MODULE (FBCM)].)
U0338:09	—	Error light switch signal received from start stop unit	—	—	C, D	×	(See 09-02K-127 DTC U0338:09 [FRONT BODY CONTROL MODULE (FBCM)].)
U0401:68	—	Error signal received from PCM	—	—	C, D	×	(See 09-02K-128 DTC U0401:68 [FRONT BODY CONTROL MODULE (FBCM)].)

ON-BOARD DIAGNOSTIC [FRONT BODY CONTROL MODULE (FBCM)]

DTC No.	Warning/ indicator light	Description	Fail-safe function	Drive cycle	Self test type*1	Memory function	Page
U0415:68	—	Error signal received from DSC HU/CM	—	—	C, D	×	(See 09-02K-130 DTC U0415:68 [FRONT BODY CONTROL MODULE (FBCM)].)
U053B:68 *9	—	Error signal received from forward sensing camera (FSC)	—	—	C, D	×	(See 09-02K-132 DTC U053B:68 [FRONT BODY CONTROL MODULE (FBCM)].)
U0515:00	—	SAS control module communication error	×	—	C, D	×	(See 09-02K-114 DTC U0001:88/U0100:00/ U0101:00/U0121:00/ U0155:00/U0214:00/ U023A:00/U0515:00 [FRONT BODY CONTROL MODULE (FBCM)].)
U0599:68	—	Error signal received from DC-DC converter	—	—	C, D	×	(See 09-02K-134 DTC U0599:68 [FRONT BODY CONTROL MODULE (FBCM)].)
U1007:68	—	Communication error with current sensor	—	—	C, D	×	(See 09-02K-135 DTC U1007:68 [FRONT BODY CONTROL MODULE (FBCM)].)
U2005:68	—	Error vehicle speed signal received from PCM	—	—	C, D	×	(See 09-02K-139 DTC U2005:68 [FRONT BODY CONTROL MODULE (FBCM)].)
U2100:00	—	Front body control module (FBCM) configuration error	—	—	C, D	×	(See 09-02K-140 DTC U2100:00 [FRONT BODY CONTROL MODULE (FBCM)].)
U2101:00	—	Front body control module (FBCM) configuration error	—	—	C, D	×	(See 09-02K-141 DTC U2101:00 [FRONT BODY CONTROL MODULE (FBCM)].)
U3000:49	—	Front body control module (FBCM) internal malfunction	—	—	C, D	×	(See 09-02K-142 DTC U3000:49 [FRONT BODY CONTROL MODULE (FBCM)].)
U3000:56	—	Front body control module (FBCM) configuration error	—	—	C, D	×	(See 09-02K-143 DTC U3000:56 [FRONT BODY CONTROL MODULE (FBCM)].)
U3003:16	—	Front body control module (FBCM) power supply voltage (+B power supply) low input	—	—	C, D	×	(See 09-02K-144 DTC U3003:16 [FRONT BODY CONTROL MODULE (FBCM)].)
U3003:17	—	Front body control module (FBCM) power supply voltage (+B power supply) high input	—	—	C, D	×	(See 09-02K-148 DTC U3003:17 [FRONT BODY CONTROL MODULE (FBCM)].)
U3006:62	—	Front body control module (FBCM) power supply voltage mismatch	—	—	C, D	×	(See 09-02K-150 DTC U3006:62 [FRONT BODY CONTROL MODULE (FBCM)].)

*1 : C: CMDTC self test, D: ODDTC self test
*2 : With headlights (halogen type)
*3 : With auto-light sensor
*4 : With front fog lights
*5 : With headlights (discharge type)
*6 : With headlight cleaner
*7 : ATX

ON-BOARD DIAGNOSTIC [FRONT BODY CONTROL MODULE (FBCM)]

*8 : With manual A/C
*9 : With forward sensing camera (FSC)

DTC B1008:02 [FRONT BODY CONTROL MODULE (FBCM)]

id0902p2006400

System malfunction location	**Windshield wiper control signal mismatch**
Detection condition	• The front body control module (FBCM) receives error signals from the start stop unit with the ignition switched ON (engine off or on).
Fail-safe	—
Possible cause	• Start stop unit malfunction • Front body control module (FBCM) malfunction
System wiring diagram	—

Diagnostic Procedure

Step	Inspection		Action
1	**PERFORM DTC INSPECTION AND VERIFY IF MALFUNCTIONING PART IS START STOP UNIT** • Clear DTC for the front body control module (FBCM) using the M-MDS. (See 09-02K-12 CLEARING DTC [FRONT BODY CONTROL MODULE (FBCM)].) • Switch the ignition ON (engine off or on). • Perform the DTC inspection for the front body control module (FBCM) using the M-MDS. (See 09-02K-10 DTC INSPECTION [FRONT BODY CONTROL MODULE (FBCM)].) • Is DTC B1008:02 displayed?	Yes	Replace the start stop unit, then go to the next step. (See 09-14-53 START STOP UNIT REMOVAL/INSTALLATION.)
		No	Go to Step 3.
2	**VERIFY THAT REPAIRS HAVE BEEN COMPLETED** • Clear the front body control module (FBCM) DTCs using the M-MDS. (See 09-02K-12 CLEARING DTC [FRONT BODY CONTROL MODULE (FBCM)].) • Switch the ignition ON (engine off or on). • Perform the front body control module (FBCM) DTC inspection using the M-MDS. (See 09-02K-10 DTC INSPECTION [FRONT BODY CONTROL MODULE (FBCM)].) • Is DTC B1008:02 displayed?	Yes	replace the front body control module (FBCM), then go to the next step. (See 09-40-2 FRONT BODY CONTROL MODULE (FBCM) REMOVAL/INSTALLATION.)
		No	Go to the next step.
3	**VERIFY IF OTHER DTCs DISPLAYED** • Are any other DTCs displayed?	Yes	Repair the malfunctioning part according to the applicable DTC troubleshooting. (See 09-02K-13 DTC TABLE [FRONT BODY CONTROL MODULE (FBCM)].)
		No	DTC troubleshooting completed.

ON-BOARD DIAGNOSTIC [FRONT BODY CONTROL MODULE (FBCM)]

DTC B1008:62 [FRONT BODY CONTROL MODULE (FBCM)]

id0902p2006500

System malfunction location	**Windshield wiper LO switch signal mismatch**
Detection condition	• The front body control module (FBCM) and start stop unit signals are compared and it is detected that the signals do not match for **5 s or more** with the ignition switched ON (engine off or on).
Fail-safe	—
Possible cause	• Start stop unit malfunction • Wiper switch malfunction • Short circuit to ground in wiring harness between start stop unit and front body control module (FBCM) • Open circuit in wiring harness between start stop unit and front body control module (FBCM) • Short to power supply in wiring harness between start stop unit and front body control module (FBCM) • Front body control module (FBCM) malfunction

START STOP UNIT
WIRING HARNESS-SIDE CONNECTOR

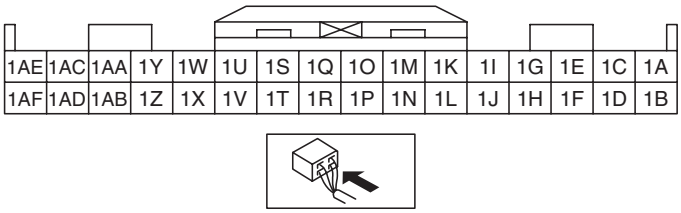

FBCM
WIRING HARNESS-SIDE CONNECTOR

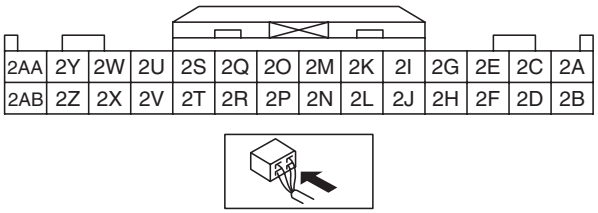

ON-BOARD DIAGNOSTIC [FRONT BODY CONTROL MODULE (FBCM)]

Diagnostic Procedure

Step	Inspection		Action
1	**INSPECT IF MALFUNCTION CAUSE IS START STOP UNIT OR FRONT BODY CONTROL MODULE (FBCM)** • Display start stop unit PID WIP_F_LOW using the M-MDS. (See 09-02C-151 PID/DATA MONITOR INSPECTION [START STOP UNIT].) • Verify the PID while operating the wiper switch. • Is the PID WIP_F_LOW displayed normally?	Yes	Go to Step 3.
		No	Go to the next step.
2	**INSPECT WIPER SWITCH** • Inspect the wiper switch. (See 09-19-47 WINDSHIELD WIPER AND WASHER SWITCH INSPECTION.) • Is the wiper switch normal?	Yes	Replace the start stop unit, then go to Step 7. (See 09-14-53 START STOP UNIT REMOVAL/INSTALLATION.)
		No	Replace the wiper and washer switch, then go to Step 7. (See 09-19-45 WIPER AND WASHER SWITCH REMOVAL/INSTALLATION.)
3	**INSPECT IF MALFUNCTION CAUSE IS FRONT BODY CONTROL MODULE (FBCM) OR WIRING HARNESS** • Display the front body control module (FBCM) PID WIP_F using the M-MDS. (See 09-02K-153 PID/DATA MONITOR INSPECTION [FRONT BODY CONTROL MODULE (FBCM)].) • Verify the PID while operating the wiper switch. • Is the PID WIP_F displayed normally?	Yes	Go to the next step.
		No	• Perform the CAN malfunction diagnosis flow and inspect the CAN for a malfunction. (See 10-02A-3 CONTROLLER AREA NETWORK (CAN) MALFUNCTION DIAGNOSIS FLOW [SKYACTIV-G 2.0 (L.H.D.)].) (See 10-02B-3 CONTROLLER AREA NETWORK (CAN) MALFUNCTION DIAGNOSIS FLOW [SKYACTIV-G 2.0 (R.H.D.)].) (See 10-02C-3 CONTROLLER AREA NETWORK (CAN) MALFUNCTION DIAGNOSIS FLOW [SKYACTIV-D 2.2 (L.H.D.)].) (See 10-02D-3 CONTROLLER AREA NETWORK (CAN) MALFUNCTION DIAGNOSIS FLOW [SKYACTIV-D 2.2 (R.H.D.)].) • If there is no malfunction in the CAN, replace the front body control module (FBCM), then go to Step 7. (See 09-40-2 FRONT BODY CONTROL MODULE (FBCM) REMOVAL/INSTALLATION.)
4	**INSPECT FOR SHORT TO GROUND BETWEEN WIPER SWITCH AND FRONT BODY CONTROL MODULE (FBCM)** • Switch the wiper switch off. • Inspect for continuity between front body control module (FBCM) terminal 2Y and body ground. • Is there continuity?	Yes	Repair or replace the wiring harness, then go to Step 7.
		No	Go to the next step.
5	**INSPECT WIRING HARNESS BETWEEN WIPER SWITCH AND FRONT BODY CONTROL MODULE (FBCM) FOR OPEN CIRCUIT** • Disconnect the front body control module (FBCM) connector. • Disconnect the start stop unit connector. • Inspect for continuity between front body control module (FBCM) terminal 2Y and start stop unit terminal 1V. • Is there continuity?	Yes	Repair or replace the wiring harness, then go to Step 7.
		No	Go to the next step.

ON-BOARD DIAGNOSTIC [FRONT BODY CONTROL MODULE (FBCM)]

Step	Inspection		Action
6	**INSPECT FOR SHORT TO POWER SUPPLY BETWEEN WIPER SWITCH AND FRONT BODY CONTROL MODULE (FBCM)** • Verify that the front body control module (FBCM) and start stop unit connectors are disconnected. • Connect the negative battery cable. (See 01-17A-11 NEGATIVE BATTERY CABLE DISCONNECTION/CONNECTION [SKYACTIV-G 2.0].) (See 01-17A-13 NEGATIVE BATTERY CABLE DISCONNECTION/CONNECTION [SKYACTIV-G 2.0 (WITHOUT i-stop)].) (See 01-17B-9 NEGATIVE BATTERY CABLE DISCONNECTION/CONNECTION [SKYACTIV-D 2.2].) • Switch the ignition ON (engine off or on). • Measure the voltage at front body control module (FBCM) terminal 2Y (vehicle wiring harness side). • Is the voltage **0 V**?	Yes	Go to the next step.
		No	Repair or replace the wiring harness and go to the next step.
7	**VERIFY THAT REPAIRS HAVE BEEN COMPLETED** • Clear the front body control module (FBCM) DTCs using the M-MDS. (See 09-02K-12 CLEARING DTC [FRONT BODY CONTROL MODULE (FBCM)].) • Switch the ignition ON (engine off or on) and wait for **5 s or more**. • Perform the front body control module (FBCM) DTC inspection using the M-MDS. (See 09-02K-10 DTC INSPECTION [FRONT BODY CONTROL MODULE (FBCM)].) • Is DTC B1008:62 displayed?	Yes	Replace the front body control module (FBCM), then go to the next step. (See 09-40-2 FRONT BODY CONTROL MODULE (FBCM) REMOVAL/INSTALLATION.)
		No	Go to the next step.
8	**VERIFY IF OTHER DTCs DISPLAYED** • Are any other DTCs displayed?	Yes	Repair the malfunctioning part according to the applicable DTC troubleshooting. (See 09-02K-13 DTC TABLE [FRONT BODY CONTROL MODULE (FBCM)].)
		No	DTC troubleshooting completed.

ON-BOARD DIAGNOSTIC [FRONT BODY CONTROL MODULE (FBCM)]

DTC B1048:7B [FRONT BODY CONTROL MODULE (FBCM)]

id0902p2006600

System malfunction location	**Brake fluid level sensor circuit malfunction**
Detection condition	• The front body control module (FBCM) detected that the brake fluid level is less than MIN with the ignition switched ON (engine off or on).
Fail-safe	—
Possible cause	• Insufficient brake fluid level • Brake fluid level sensor connector or terminal malfunction • Front body control module (FBCM) connector or terminal malfunction • Short to ground in wiring harness between brake fluid level sensor terminal B and front body control module (FBCM) terminal 2Q • Brake fluid level sensor malfunction • Front body control module (FBCM) malfunction

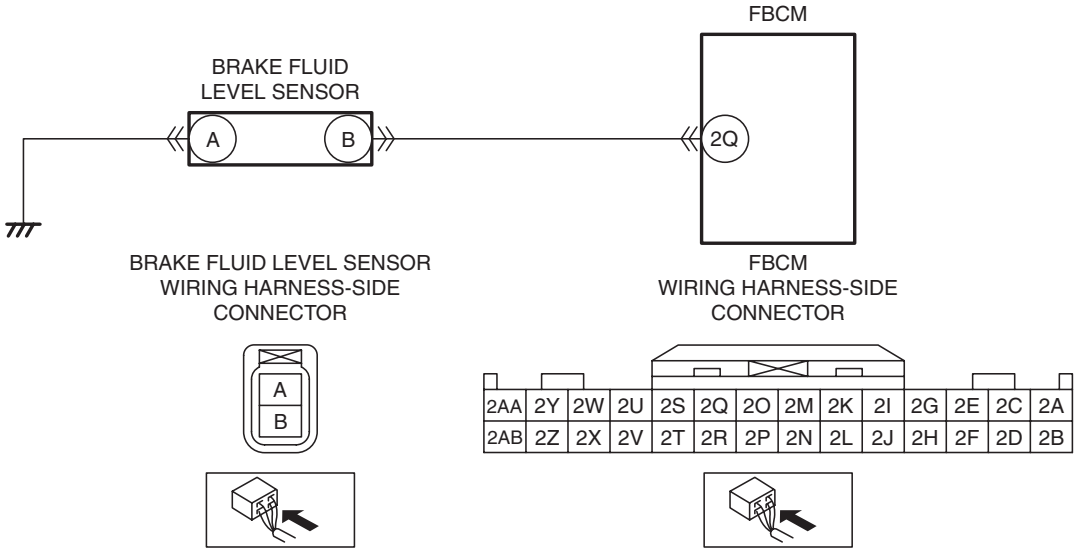

ON-BOARD DIAGNOSTIC [FRONT BODY CONTROL MODULE (FBCM)]

Diagnostic Procedure

Step	Inspection		Action
1	**VERIFY FRONT BODY CONTROL MODULE (FBCM) DTCs AGAIN** • Clear DTC for the front body control module (FBCM) using the M-MDS. (See 09-02K-12 CLEARING DTC [FRONT BODY CONTROL MODULE (FBCM)].) • Switch the ignition ON (engine off or on). • Perform the DTC inspection for the front body control module (FBCM) using the M-MDS. (See 09-02K-10 DTC INSPECTION [FRONT BODY CONTROL MODULE (FBCM)].) • Is DTC B1048:7B displayed?	Yes	Go to the next step.
		No	Go to Step 8.
2	**INSPECT BRAKE FLUID LEVEL** • Inspect the brake fluid level. (See 04-11-4 BRAKE FLUID INSPECTION.) • Is the brake fluid level normal?	Yes	Go to the next step.
		No	Add genuine brake fluid, then go to Step 7.
3	**INSPECT BRAKE FLUID LEVEL SENSOR CONNECTOR CONDITION** • Switch the ignition to off. • Disconnect the negative battery cable. (See 01-17A-11 NEGATIVE BATTERY CABLE DISCONNECTION/CONNECTION [SKYACTIV-G 2.0].) (See 01-17A-13 NEGATIVE BATTERY CABLE DISCONNECTION/CONNECTION [SKYACTIV-G 2.0 (WITHOUT i-stop)].) (See 01-17B-9 NEGATIVE BATTERY CABLE DISCONNECTION/CONNECTION [SKYACTIV-D 2.2].) • Disconnect the brake fluid level sensor connector. • Inspect the connector engagement and connection condition and inspect the terminals for damage, deformation, corrosion, or disconnection. • Is the connector normal?	Yes	Go to the next step.
		No	Repair or replace the connector, then go to Step 7.
4	**INSPECT FRONT BODY CONTROL MODULE (FBCM) CONNECTOR CONDITION** • Disconnect the front body control module (FBCM) connector. • Inspect the connector engagement and connection condition and inspect the terminals for damage, deformation, corrosion, or disconnection. • Is the connector normal?	Yes	Go to the next step.
		No	Repair or replace the connector, then go to Step 7.
5	**INSPECT BRAKE FLUID LEVEL SENSOR SIGNAL CIRCUIT FOR SHORT TO GROUND** • Verify that the brake fluid level sensor and front body control module (FBCM) connectors are disconnected. • Inspect for continuity between rear body control module (FBCM) terminal 2Q (vehicle wiring harness) and body ground. • Is there continuity?	Yes	Repair or replace the wiring harness, then go to Step 7.
		No	Go to the next step.
6	**INSPECT BRAKE FLUID LEVEL SENSOR** • Inspect the brake fluid level sensor. (See 04-11-14 BRAKE FLUID LEVEL SENSOR INSPECTION.) • Is the brake fluid level sensor normal?	Yes	Go to the next step.
		No	Replace the brake fluid level sensor, then go to the next step. (See 04-11-11 MASTER CYLINDER REMOVAL/INSTALLATION.)

ON-BOARD DIAGNOSTIC [FRONT BODY CONTROL MODULE (FBCM)]

Step	Inspection		Action
7	**VERIFY THAT REPAIRS HAVE BEEN COMPLETED** • Reconnect all the disconnected connectors. • Reconnect the disconnected negative battery cable. (See 01-17A-11 NEGATIVE BATTERY CABLE DISCONNECTION/CONNECTION [SKYACTIV-G 2.0].) (See 01-17A-13 NEGATIVE BATTERY CABLE DISCONNECTION/CONNECTION [SKYACTIV-G 2.0 (WITHOUT i-stop)].) (See 01-17B-9 NEGATIVE BATTERY CABLE DISCONNECTION/CONNECTION [SKYACTIV-D 2.2].) • Clear DTC for the front body control module (FBCM) using the M-MDS. (See 09-02K-12 CLEARING DTC [FRONT BODY CONTROL MODULE (FBCM)].) • Switch the ignition ON (engine off or on). • Perform the DTC inspection for the front body control module (FBCM) using the M-MDS. (See 09-02K-10 DTC INSPECTION [FRONT BODY CONTROL MODULE (FBCM)].) • Is DTC B1048:7B displayed?	Yes	Repeat the inspection from Step 1. • If the malfunction recurs, replace the front body control module (FBCM), then go to the next step. (See 09-40-2 FRONT BODY CONTROL MODULE (FBCM) REMOVAL/INSTALLATION.)
		No	Go to the next step.
8	**VERIFY IF OTHER DTCs DISPLAYED** • Are any other DTCs displayed?	Yes	Repair the malfunctioning part according to the applicable DTC troubleshooting. (See 09-02K-13 DTC TABLE [FRONT BODY CONTROL MODULE (FBCM)].)
		No	DTC troubleshooting completed.

ON-BOARD DIAGNOSTIC [FRONT BODY CONTROL MODULE (FBCM)]

DTC B1087:88 [FRONT BODY CONTROL MODULE (FBCM)]

id0902p2006700

System malfunction location	**LIN communication error**
Detection condition	• LIN bus communication line malfunction detected for **1 s or more**
Fail-safe	—
Possible cause	• Malfunction in LIN bus communication line • Front body control module (FBCM) malfunction
System wiring diagram	—

Diagnostic Procedure

Step	Inspection		Action
1	**VERIFY FRONT BODY CONTROL MODULE (FBCM) DTCs AGAIN** • Clear front body control module (FBCM) DTCs using the M-MDS. (See 09-02K-12 CLEARING DTC [FRONT BODY CONTROL MODULE (FBCM)].) • Switch the ignition ON (engine off or on) and wait for **1 s or more**. • Perform the front body control module (FBCM) DTC inspection using the M-MDS. (See 09-02K-10 DTC INSPECTION [FRONT BODY CONTROL MODULE (FBCM)].) • Is DTC B1087:88 displayed?	Yes	A malfunction in LIN bus communication line can be considered. • Repair or replace the wiring harness between the DC-DC converter and front body control module (FBCM), then go to the next step. • Repair or replace the wiring harness between the current sensor and front body control module (FBCM), then go to the next step.
		No	Go to Step 3.
2	**VERIFY THAT REPAIRS HAVE BEEN COMPLETED** • Clear front body control module (FBCM) DTCs using the M-MDS. (See 09-02K-12 CLEARING DTC [FRONT BODY CONTROL MODULE (FBCM)].) • Switch the ignition ON (engine off or on) and wait for **1 s or more**. • Perform the front body control module (FBCM) DTC inspection using the M-MDS. (See 09-02K-10 DTC INSPECTION [FRONT BODY CONTROL MODULE (FBCM)].) • Is DTC B1087:88 displayed?	Yes	Replace the front body control module (FBCM), then go to the next step. (See 09-40-2 FRONT BODY CONTROL MODULE (FBCM) REMOVAL/INSTALLATION.)
		No	Go to the next step.
3	**VERIFY IF OTHER DTCs DISPLAYED** • Are any other DTCs displayed?	Yes	Repair the malfunctioning part according to the applicable DTC troubleshooting. (See 09-02K-13 DTC TABLE [FRONT BODY CONTROL MODULE (FBCM)].)
		No	DTC troubleshooting completed.

ON-BOARD DIAGNOSTIC [FRONT BODY CONTROL MODULE (FBCM)]

DTC B1088:88 [FRONT BODY CONTROL MODULE (FBCM)]

id0902p2006800

System malfunction location	**LIN communication error**
Detection condition	• LIN bus communication line malfunction detected for **1 s or more**
Fail-safe	—
Possible cause	• Malfunction in LIN bus communication line • Front body control module (FBCM) malfunction
System wiring diagram	—

Diagnostic Procedure

Step	Inspection		Action
1	**VERIFY FRONT BODY CONTROL MODULE (FBCM) DTCs AGAIN** • Clear front body control module (FBCM) DTCs using the M-MDS. (See 09-02K-12 CLEARING DTC [FRONT BODY CONTROL MODULE (FBCM)].) • Switch the ignition ON (engine off or on) and wait for **1 s or more**. • Perform the front body control module (FBCM) DTC inspection using the M-MDS. (See 09-02K-10 DTC INSPECTION [FRONT BODY CONTROL MODULE (FBCM)].) • Is DTC B1088:88 displayed?	Yes	A malfunction in LIN bus communication line can be considered. • Repair or replace the wiring harness between the climate control unit and front body control module (FBCM), then go to the next step. (With manual A/C) • Repair or replace the wiring harness between the auto-light sensor/rain sensor and front body control module (FBCM), then go to the next step. (With Auto Light System)
		No	Go to Step 3.
2	**VERIFY THAT REPAIRS HAVE BEEN COMPLETED** • Clear front body control module (FBCM) DTCs using the M-MDS. (See 09-02K-12 CLEARING DTC [FRONT BODY CONTROL MODULE (FBCM)].) • Switch the ignition ON (engine off or on) and wait for **1 s or more**. • Perform the front body control module (FBCM) DTC inspection using the M-MDS. (See 09-02K-10 DTC INSPECTION [FRONT BODY CONTROL MODULE (FBCM)].) • Is DTC B1088:88 displayed?	Yes	Replace the front body control module (FBCM), then go to the next step. (See 09-40-2 FRONT BODY CONTROL MODULE (FBCM) REMOVAL/INSTALLATION.)
		No	Go to the next step.
3	**VERIFY IF OTHER DTCs DISPLAYED** • Are any other DTCs displayed?	Yes	Repair the malfunctioning part according to the applicable DTC troubleshooting. (See 09-02K-13 DTC TABLE [FRONT BODY CONTROL MODULE (FBCM)].)
		No	DTC troubleshooting completed.

ON-BOARD DIAGNOSTIC [FRONT BODY CONTROL MODULE (FBCM)]

DTC B1095:72/B1095:73 [FRONT BODY CONTROL MODULE (FBCM)]

id0902p2007000

System malfunction location	**Autostop switch circuit malfunction**
Detection condition	• The front body control module (FBCM) detects that the autostop switch is stuck closed with the ignition switched ON (engine off or on).
Fail-safe	—
Possible cause	• Windshield wiper motor connector or terminal malfunction • Front body control module (FBCM) connector or terminal malfunction • Short to ground in wiring harness between the following terminals: — L.H.D. • Windshield wiper motor terminal B and front body control module (FBCM) terminal 3C • Windshield wiper motor terminal B and front body control module (FBCM) terminal 3E • Windshield wiper motor terminal A and front body control module (FBCM) terminal 3G • Windshield wiper motor terminal A and front body control module (FBCM) terminal 3I • Windshield wiper motor terminal E and front body control module (FBCM) terminal 2AA — R.H.D. • Windshield wiper motor terminal E and front body control module (FBCM) terminal 3C • Windshield wiper motor terminal E and front body control module (FBCM) terminal 3E • Windshield wiper motor terminal D and front body control module (FBCM) terminal 3G • Windshield wiper motor terminal D and front body control module (FBCM) terminal 3I • Windshield wiper motor terminal A and front body control module (FBCM) terminal 2AA • Open circuit in wiring harness between the following terminals: — L.H.D. • Windshield wiper motor terminal B and front body control module (FBCM) terminal 3C • Windshield wiper motor terminal B and front body control module (FBCM) terminal 3E • Windshield wiper motor terminal A and front body control module (FBCM) terminal 3G • Windshield wiper motor terminal A and front body control module (FBCM) terminal 3I • Windshield wiper motor terminal E and front body control module (FBCM) terminal 2AA — R.H.D. • Windshield wiper motor terminal E and front body control module (FBCM) terminal 3C • Windshield wiper motor terminal E and front body control module (FBCM) terminal 3E • Windshield wiper motor terminal D and front body control module (FBCM) terminal 3G • Windshield wiper motor terminal D and front body control module (FBCM) terminal 3I • Windshield wiper motor terminal A and front body control module (FBCM) terminal 2AA • Windshield wiper motor malfunction • Front body control module (FBCM) malfunction

ON-BOARD DIAGNOSTIC [FRONT BODY CONTROL MODULE (FBCM)]

System malfunction location	Autostop switch circuit malfunction

(L.H.D.)

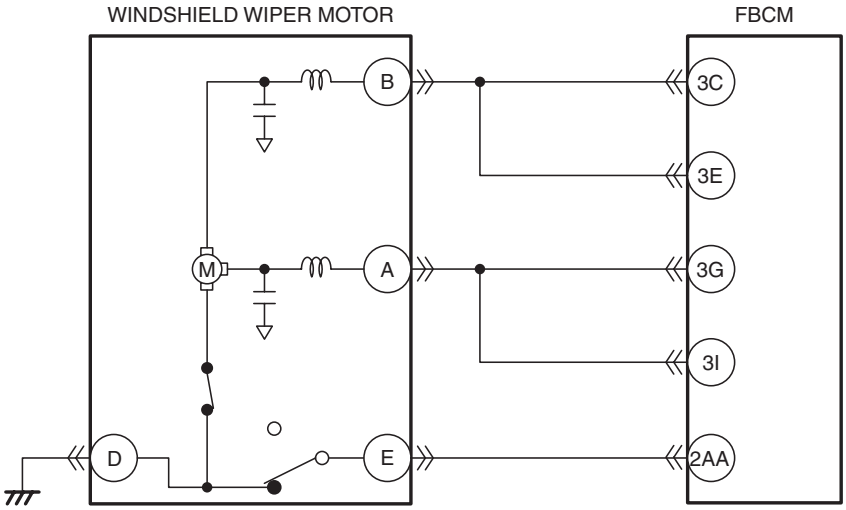

(R.H.D.)

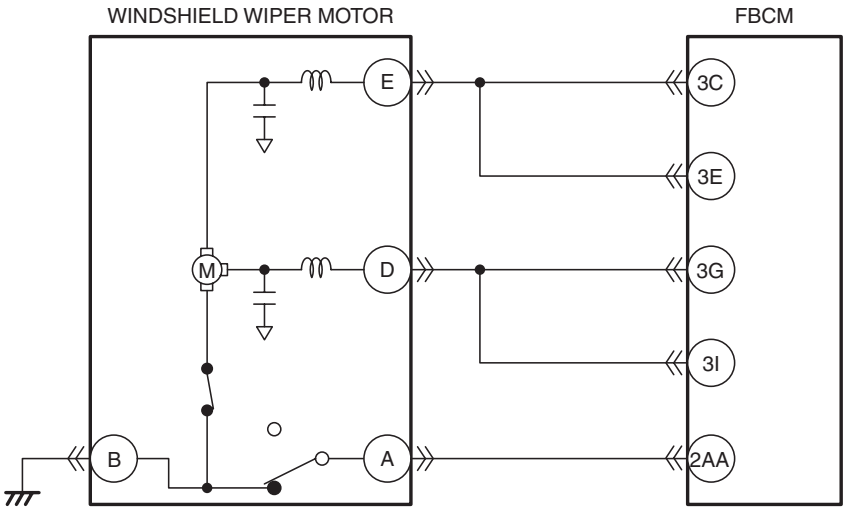

WINDSHIELD WIPER MOTOR WIRING HARNESS-SIDE CONNECTOR

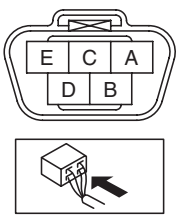

FBCM WIRING HARNESS-SIDE CONNECTOR

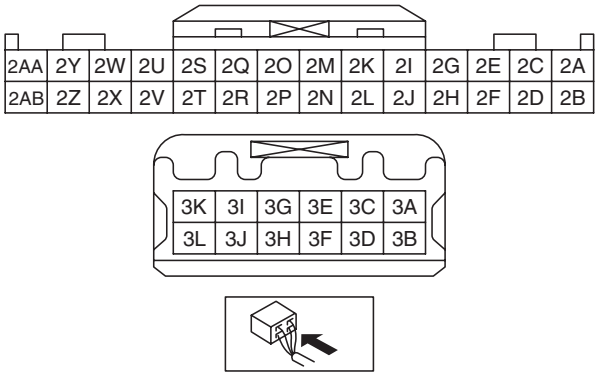

ON-BOARD DIAGNOSTIC [FRONT BODY CONTROL MODULE (FBCM)]

Diagnostic Procedure

Step	Inspection		Action
1	**VERIFY FRONT BODY CONTROL MODULE (FBCM) DTCs AGAIN** • Clear front body control module (FBCM) DTCs using the M-MDS. (See 09-02K-12 CLEARING DTC [FRONT BODY CONTROL MODULE (FBCM)].) • Switch the ignition ON (engine off or on). • Perform the front body control module (FBCM) DTC inspection using the M-MDS. (See 09-02K-10 DTC INSPECTION [FRONT BODY CONTROL MODULE (FBCM)].) • Is the DTC B1095:72, or B1095:73 also present?	Yes	Go to the next step.
		No	Go to Step 8.
2	**INSPECT WINDSHIELD WIPER MOTOR CONNECTOR CONDITION** • Switch the ignition to off. • Disconnect the negative battery cable. (See 01-17A-11 NEGATIVE BATTERY CABLE DISCONNECTION/CONNECTION [SKYACTIV-G 2.0].) (See 01-17A-13 NEGATIVE BATTERY CABLE DISCONNECTION/CONNECTION [SKYACTIV-G 2.0 (WITHOUT i-stop)].) (See 01-17B-9 NEGATIVE BATTERY CABLE DISCONNECTION/CONNECTION [SKYACTIV-D 2.2].) • Disconnect the windshield wiper motor connector. • Inspect the connector engagement and connection condition and inspect the terminals for damage, deformation, corrosion, or disconnection. • Is the connector normal?	Yes	Go to the next step.
		No	Repair or replace the connector, then go to Step 7.
3	**INSPECT FRONT BODY CONTROL MODULE (FBCM) CONNECTOR CONDITION** • Disconnect the front body control module (FBCM) connector. • Inspect the connector engagement and connection condition and inspect the terminals for damage, deformation, corrosion, or disconnection. • Is the connector normal?	Yes	Go to the next step.
		No	Repair or replace the connector, then go to Step 7.
4	**INSPECT WINDSHIELD WIPER MOTOR CONTROL CIRCUIT FOR SHORT TO GROUND** • Verify that the windshield wiper motor and front body control module (FBCM) connectors are disconnected. • Inspect for continuity between the following terminals (vehicle wiring harness side) and body ground. — Front body control module (FBCM) terminal 3C — Front body control module (FBCM) terminal 3E — Front body control module (FBCM) terminal 3G — Front body control module (FBCM) terminal 3I — Front body control module (FBCM) terminal 2AA • Is there continuity?	Yes	Repair or replace the wiring harness, then go to Step 7.
		No	Go to the next step.

ON-BOARD DIAGNOSTIC [FRONT BODY CONTROL MODULE (FBCM)]

Step	Inspection		Action
5	**INSPECT WINDSHIELD WIPER MOTOR CONTROL CIRCUIT FOR OPEN CIRCUIT** • Verify that the windshield wiper motor and front body control module (FBCM) connectors are disconnected. • Switch the ignition to off. • Inspect the wiring harness between the following terminals (vehicle wiring harness side) for continuity. — L.H.D. • Windshield wiper motor terminal B and front body control module (FBCM) terminal 3C • Windshield wiper motor terminal B and front body control module (FBCM) terminal 3E • Windshield wiper motor terminal A and front body control module (FBCM) terminal 3G • Windshield wiper motor terminal A and front body control module (FBCM) terminal 3I • Windshield wiper motor terminal E and front body control module (FBCM) terminal 2AA — R.H.D. • Windshield wiper motor terminal E and front body control module (FBCM) terminal 3C • Windshield wiper motor terminal E and front body control module (FBCM) terminal 3E • Windshield wiper motor terminal D and front body control module (FBCM) terminal 3G • Windshield wiper motor terminal D and front body control module (FBCM) terminal 3I • Windshield wiper motor terminal A and front body control module (FBCM) terminal 2AA • Is there continuity?	Yes	Go to the next step.
		No	Repair or replace the wiring harness, then go to Step 7.
6	**INSPECT WINDSHIELD WIPER MOTOR** • Inspect the windshield wiper motor. (See 09-19-14 WINDSHIELD WIPER MOTOR INSPECTION.) • Is the windshield wiper motor normal?	Yes	Go to the next step.
		No	Replace the windshield wiper motor, then go to the next step. (See 09-19-9 WINDSHIELD WIPER MOTOR AND LINK REMOVAL/INSTALLATION.)

ON-BOARD DIAGNOSTIC [FRONT BODY CONTROL MODULE (FBCM)]

Step	Inspection		Action
7	**VERIFY THAT REPAIRS HAVE BEEN COMPLETED** • Reconnect all the disconnected connectors. • Reconnect the disconnected negative battery cable. (See 01-17A-11 NEGATIVE BATTERY CABLE DISCONNECTION/CONNECTION [SKYACTIV-G 2.0].) (See 01-17A-13 NEGATIVE BATTERY CABLE DISCONNECTION/CONNECTION [SKYACTIV-G 2.0 (WITHOUT i-stop)].) (See 01-17B-9 NEGATIVE BATTERY CABLE DISCONNECTION/CONNECTION [SKYACTIV-D 2.2].) • Clear front body control module (FBCM) DTCs using the M-MDS. (See 09-02K-12 CLEARING DTC [FRONT BODY CONTROL MODULE (FBCM)].) • Switch the ignition ON (engine off or on). • Perform the DTC inspection for the front body control module (FBCM) using the M-MDS. (See 09-02K-10 DTC INSPECTION [FRONT BODY CONTROL MODULE (FBCM)].) • Is the DTC B1095:72, or B1095:73 also present?	Yes	Repeat the inspection from Step 1. • If the malfunction recurs, replace the front body control module (FBCM), then go to the next step. (See 09-40-2 FRONT BODY CONTROL MODULE (FBCM) REMOVAL/INSTALLATION.)
		No	Go to the next step.
8	**VERIFY IF OTHER DTCs DISPLAYED** • Are any other DTCs displayed?	Yes	Repair the malfunctioning part according to the applicable DTC troubleshooting. (See 09-02K-13 DTC TABLE [FRONT BODY CONTROL MODULE (FBCM)].)
		No	DTC troubleshooting completed.

ON-BOARD DIAGNOSTIC [FRONT BODY CONTROL MODULE (FBCM)]

DTC B109A:12 [FRONT BODY CONTROL MODULE (FBCM)]

id0902p2007200

System malfunction location	**Headlight HI relay circuit malfunction**
Detection condition	• The front body control module (FBCM) detects a short to power supply in the headlight HI relay circuit with the ignition switched ON (engine off or on).
Fail-safe	—
Possible cause	• Headlight HI relay malfunction • Front body control module (FBCM) connector or terminal malfunction • Short to power supply in the wiring harness between headlight HI relay terminal E and front body control module (FBCM) terminal 2X • Front body control module (FBCM) malfunction

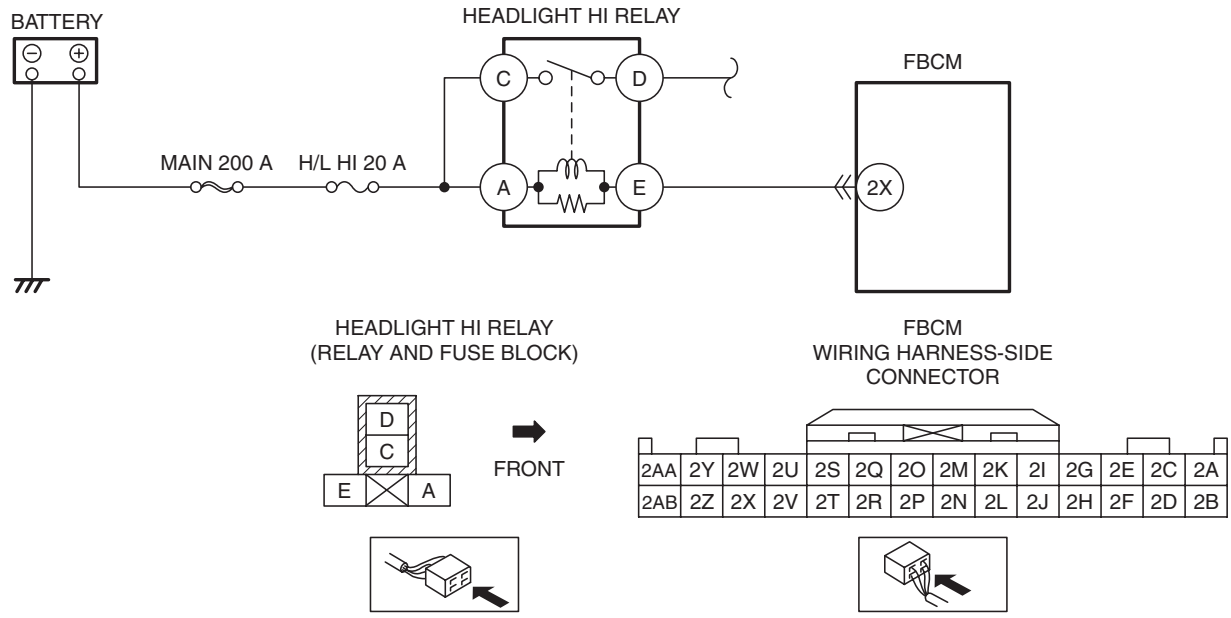

ON-BOARD DIAGNOSTIC [FRONT BODY CONTROL MODULE (FBCM)]

Diagnostic Procedure

Step	Inspection		Action
1	**VERIFY FRONT BODY CONTROL MODULE (FBCM) DTCs AGAIN** • Clear front body control module (FBCM) DTCs using the M-MDS. (See 09-02K-12 CLEARING DTC [FRONT BODY CONTROL MODULE (FBCM)].) • Switch the ignition ON (engine off or on). • Perform the front body control module (FBCM) DTC inspection using the M-MDS. (See 09-02K-10 DTC INSPECTION [FRONT BODY CONTROL MODULE (FBCM)].) • Is DTC B109A:12 displayed?	Yes	Go to the next step.
		No	Go to Step 6.
2	**INSPECT HEADLIGHT HI RELAY FOR MALFUNCTION** • Switch the ignition to off. • Disconnect the negative battery cable. (See 01-17A-11 NEGATIVE BATTERY CABLE DISCONNECTION/CONNECTION [SKYACTIV-G 2.0].) (See 01-17A-13 NEGATIVE BATTERY CABLE DISCONNECTION/CONNECTION [SKYACTIV-G 2.0 (WITHOUT i-stop)].) (See 01-17B-9 NEGATIVE BATTERY CABLE DISCONNECTION/CONNECTION [SKYACTIV-D 2.2].) • Remove the headlight HI relay. • Inspect the headlight HI relay. (See 09-21-29 RELAY INSPECTION.) • Is the headlight HI relay normal?	Yes	Go to the next step.
		No	Replace the headlight HI relay, then go to Step 5.
3	**INSPECT FRONT BODY CONTROL MODULE (FBCM) CONNECTOR CONDITION** • Disconnect the front body control module (FBCM) connector. • Inspect the connector engagement and connection condition and inspect the terminals for damage, deformation, corrosion, or disconnection. • Is the connector normal?	Yes	Go to the next step.
		No	Repair or replace the connector, then go to Step 5.
4	**INSPECT HEADLIGHT HI RELAY CONTROL CIRCUIT FOR SHORT TO POWER SUPPLY** • Verify that the headlight HI relay is removed. • Verify that the front body control module (FBCM) connector is disconnected. • Connect the negative battery cable. (See 01-17A-11 NEGATIVE BATTERY CABLE DISCONNECTION/CONNECTION [SKYACTIV-G 2.0].) (See 01-17A-13 NEGATIVE BATTERY CABLE DISCONNECTION/CONNECTION [SKYACTIV-G 2.0 (WITHOUT i-stop)].) (See 01-17B-9 NEGATIVE BATTERY CABLE DISCONNECTION/CONNECTION [SKYACTIV-D 2.2].) • Switch the ignition ON (engine off or on). • Measure the voltage at front body control module (FBCM) terminal 2X (vehicle wiring harness side). • Is the voltage **0 V**?	Yes	Go to the next step.
		No	Repair or replace the wiring harness and go to the next step.

ON-BOARD DIAGNOSTIC [FRONT BODY CONTROL MODULE (FBCM)]

Step	Inspection		Action
5	**VERIFY THAT REPAIRS HAVE BEEN COMPLETED** • Reconnect all the disconnected connectors. • Reconnect the disconnected negative battery cable. (See 01-17A-11 NEGATIVE BATTERY CABLE DISCONNECTION/CONNECTION [SKYACTIV-G 2.0].) (See 01-17A-13 NEGATIVE BATTERY CABLE DISCONNECTION/CONNECTION [SKYACTIV-G 2.0 (WITHOUT i-stop)].) (See 01-17B-9 NEGATIVE BATTERY CABLE DISCONNECTION/CONNECTION [SKYACTIV-D 2.2].) • Clear front body control module (FBCM) DTCs using the M-MDS. (See 09-02K-12 CLEARING DTC [FRONT BODY CONTROL MODULE (FBCM)].) • Switch the ignition ON (engine off or on). • Operate the light switch in HEAD position and the dimmer switch in HI position. • Perform the front body control module (FBCM) DTC inspection using the M-MDS. (See 09-02K-10 DTC INSPECTION [FRONT BODY CONTROL MODULE (FBCM)].) • Is DTC B109A:12 displayed?	Yes	Repeat the inspection from Step 1. • If the malfunction recurs, replace the front body control module (FBCM), then go to the next step. (See 09-40-2 FRONT BODY CONTROL MODULE (FBCM) REMOVAL/INSTALLATION.)
		No	Go to the next step.
6	**VERIFY IF OTHER DTCs DISPLAYED** • Are any other DTCs displayed?	Yes	Repair the malfunctioning part according to the applicable DTC troubleshooting. (See 09-02K-13 DTC TABLE [FRONT BODY CONTROL MODULE (FBCM)].)
		No	DTC troubleshooting completed.

ON-BOARD DIAGNOSTIC [FRONT BODY CONTROL MODULE (FBCM)]

DTC B109A:14 [FRONT BODY CONTROL MODULE (FBCM)]

id0902p2007300

System malfunction location	**Headlight HI relay circuit malfunction**
Detection condition	• The front body control module (FBCM) detects an open or short to ground in the headlight HI relay circuit with the ignition switched ON (engine off or on).
Fail-safe	—
Possible cause	• Headlight HI relay malfunction • Front body control module (FBCM) connector or terminal malfunction • Short to ground in wiring harness between headlight HI relay terminal E and front body control module (FBCM) terminal 2X • Open circuit in wiring harness between headlight HI relay terminal E and front body control module (FBCM) terminal 2X • Front body control module (FBCM) malfunction

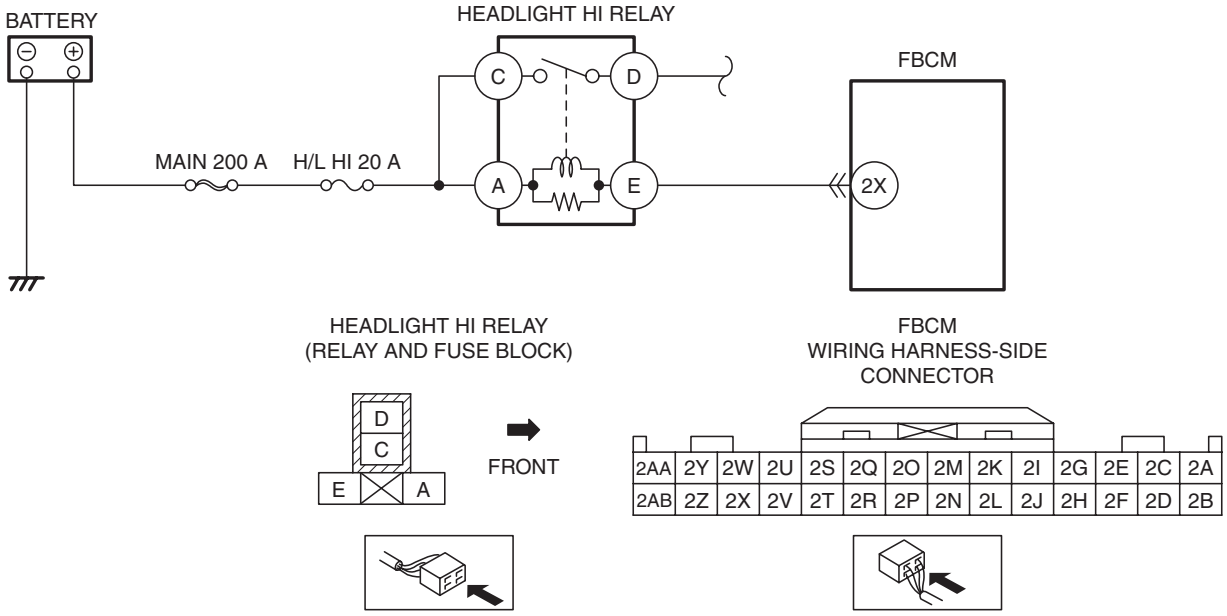

ON-BOARD DIAGNOSTIC [FRONT BODY CONTROL MODULE (FBCM)]

Diagnostic Procedure

Step	Inspection		Action
1	**VERIFY FRONT BODY CONTROL MODULE (FBCM) DTCs AGAIN** • Clear front body control module (FBCM) DTCs using the M-MDS. (See 09-02K-12 CLEARING DTC [FRONT BODY CONTROL MODULE (FBCM)].) • Switch the ignition ON (engine off or on). • Perform the front body control module (FBCM) DTC inspection using the M-MDS. (See 09-02K-10 DTC INSPECTION [FRONT BODY CONTROL MODULE (FBCM)].) • Is DTC B109A:14 displayed?	Yes	Go to the next step.
		No	Go to Step 7.
2	**INSPECT HEADLIGHT HI RELAY FOR MALFUNCTION** • Switch the ignition to off. • Disconnect the negative battery cable. (See 01-17A-11 NEGATIVE BATTERY CABLE DISCONNECTION/CONNECTION [SKYACTIV-G 2.0].) (See 01-17A-13 NEGATIVE BATTERY CABLE DISCONNECTION/CONNECTION [SKYACTIV-G 2.0 (WITHOUT i-stop)].) (See 01-17B-9 NEGATIVE BATTERY CABLE DISCONNECTION/CONNECTION [SKYACTIV-D 2.2].) • Remove the headlight HI relay. • Inspect the headlight HI relay. (See 09-21-29 RELAY INSPECTION.) • Is the headlight HI relay normal?	Yes	Go to the next step.
		No	Replace the headlight HI relay, then go to Step 6.
3	**INSPECT FRONT BODY CONTROL MODULE (FBCM) CONNECTOR CONDITION** • Disconnect the front body control module (FBCM) connector. • Inspect the connector engagement and connection condition and inspect the terminals for damage, deformation, corrosion, or disconnection. • Is the connector normal?	Yes	Go to the next step.
		No	Repair or replace the connector, then go to Step 6.
4	**INSPECT HEADLIGHT HI RELAY CONTROL CIRCUIT FOR SHORT TO GROUND** • Verify that the headlight HI relay is removed. • Verify that the front body control module (FBCM) connector is disconnected. • Inspect for continuity between front body control module (FBCM) terminal 2X (vehicle wiring harness side) and body ground. • Is there continuity?	Yes	Repair or replace the wiring harness, then go to Step 6.
		No	Go to the next step.
5	**INSPECT HEADLIGHT HI RELAY CONTROL CIRCUIT FOR OPEN CIRCUIT** • Verify that the headlight HI relay is removed. • Verify that the front body control module (FBCM) connector is disconnected. • Inspect the wiring harness for continuity between headlight HI relay terminal E (vehicle wiring harness side) and front body control module (FBCM) terminal 2X (vehicle wiring harness side). • Is there continuity?	Yes	Go to the next step.
		No	Repair or replace the wiring harness and go to the next step.

ON-BOARD DIAGNOSTIC [FRONT BODY CONTROL MODULE (FBCM)]

Step	Inspection		Action
6	**VERIFY THAT REPAIRS HAVE BEEN COMPLETED** • Reconnect all the disconnected connectors. • Reconnect the disconnected negative battery cable. (See 01-17A-11 NEGATIVE BATTERY CABLE DISCONNECTION/CONNECTION [SKYACTIV-G 2.0].) (See 01-17A-13 NEGATIVE BATTERY CABLE DISCONNECTION/CONNECTION [SKYACTIV-G 2.0 (WITHOUT i-stop)].) (See 01-17B-9 NEGATIVE BATTERY CABLE DISCONNECTION/CONNECTION [SKYACTIV-D 2.2].) • Clear front body control module (FBCM) DTCs using the M-MDS. (See 09-02K-12 CLEARING DTC [FRONT BODY CONTROL MODULE (FBCM)].) • Switch the ignition ON (engine off or on). • Operate the light switch in OFF position. • Perform the front body control module (FBCM) DTC inspection using the M-MDS. (See 09-02K-10 DTC INSPECTION [FRONT BODY CONTROL MODULE (FBCM)].) • Is DTC B109A:14 displayed?	Yes	Repeat the inspection from Step 1. • If the malfunction recurs, replace the front body control module (FBCM), then go to the next step. (See 09-40-2 FRONT BODY CONTROL MODULE (FBCM) REMOVAL/INSTALLATION.)
		No	Go to the next step.
7	**VERIFY IF OTHER DTCs DISPLAYED** • Are any other DTCs displayed?	Yes	Repair the malfunctioning part according to the applicable DTC troubleshooting. (See 09-02K-13 DTC TABLE [FRONT BODY CONTROL MODULE (FBCM)].)
		No	DTC troubleshooting completed.

ON-BOARD DIAGNOSTIC [FRONT BODY CONTROL MODULE (FBCM)]

DTC B10A6:64 [FRONT BODY CONTROL MODULE (FBCM)]

id0902p2008300

System malfunction location	**Light switch error signal received**
Detection condition	• The front body control module (FBCM) receives error signals from the start stop unit for **5 s or more** with the ignition switched ON (engine off or on).
Fail-safe	—
Possible cause	• Start stop unit malfunction • Light switch malfunction • Front body control module (FBCM) malfunction
System wiring diagram	—

Diagnostic Procedure

Step	Inspection		Action
1	**VERIFY FRONT BODY CONTROL MODULE (FBCM) DTCs AGAIN** • Clear front body control module (FBCM) DTCs using the M-MDS. (See 09-02K-12 CLEARING DTC [FRONT BODY CONTROL MODULE (FBCM)].) • Switch the ignition ON (engine off or on) and wait for **5 s or more**. • Perform the front body control module (FBCM) DTC inspection using the M-MDS. (See 09-02K-10 DTC INSPECTION [FRONT BODY CONTROL MODULE (FBCM)].) • Is DTC B10A6:64 displayed?	Yes	Go to the next step.
		No	Go to Step 4.
2	**INSPECT LIGHT SWITCH** • Inspect the light switch. (See 09-18-86 LIGHT SWITCH INSPECTION.) • Is the light switch normal?	Yes	Replace the start stop unit, then go to the next step. (See 09-14-53 START STOP UNIT REMOVAL/INSTALLATION.)
		No	Replace the light switch, then go to the next step. (See 09-18-84 LIGHT SWITCH REMOVAL/INSTALLATION.)
3	**VERIFY THAT REPAIRS HAVE BEEN COMPLETED** • Clear front body control module (FBCM) DTCs using the M-MDS. (See 09-02K-12 CLEARING DTC [FRONT BODY CONTROL MODULE (FBCM)].) • Switch the ignition ON (engine off or on) and wait for **5 s or more**. • Perform the front body control module (FBCM) DTC inspection using the M-MDS. (See 09-02K-10 DTC INSPECTION [FRONT BODY CONTROL MODULE (FBCM)].) • Is DTC B10A6:64 displayed?	Yes	Replace the front body control module (FBCM), then go to the next step. (See 09-40-2 FRONT BODY CONTROL MODULE (FBCM) REMOVAL/INSTALLATION.)
		No	Go to the next step.
4	**VERIFY IF OTHER DTCs DISPLAYED** • Are any other DTCs displayed?	Yes	Repair the malfunctioning part according to the applicable DTC troubleshooting. (See 09-02K-13 DTC TABLE [FRONT BODY CONTROL MODULE (FBCM)].)
		No	DTC troubleshooting completed.

ON-BOARD DIAGNOSTIC [FRONT BODY CONTROL MODULE (FBCM)]

DTC B10A8:12 [FRONT BODY CONTROL MODULE (FBCM)]

id0902p2007400

System malfunction location	**Headlight LO relay circuit malfunction**
Detection condition	• The front body control module (FBCM) detects a short to power supply in the headlight LO relay circuit with the ignition switched ON (engine off or on).
Fail-safe	—
Possible cause	• Headlight LO relay malfunction • Front body control module (FBCM) connector or terminal malfunction • Short to power supply in the wiring harness between headlight LO relay terminal A and front body control module (FBCM) terminal 1M • Front body control module (FBCM) malfunction

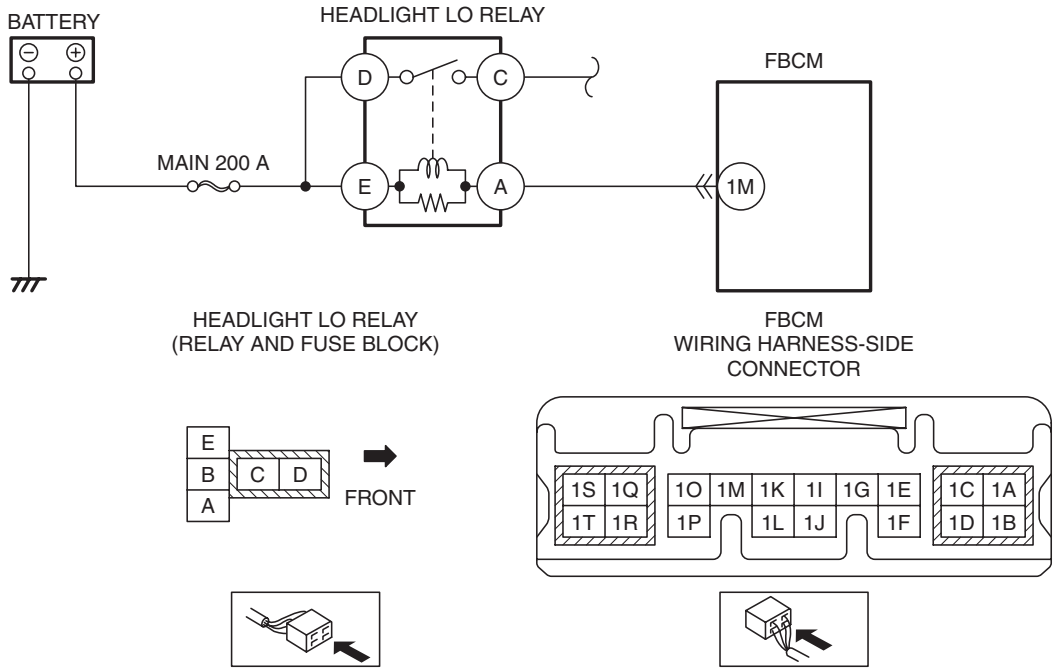

ON-BOARD DIAGNOSTIC [FRONT BODY CONTROL MODULE (FBCM)]

Diagnostic Procedure

Step	Inspection		Action
1	**VERIFY FRONT BODY CONTROL MODULE (FBCM) DTCs AGAIN** • Clear front body control module (FBCM) DTCs using the M-MDS. (See 09-02K-12 CLEARING DTC [FRONT BODY CONTROL MODULE (FBCM)].) • Switch the ignition ON (engine off or on). • Perform the front body control module (FBCM) DTC inspection using the M-MDS. (See 09-02K-10 DTC INSPECTION [FRONT BODY CONTROL MODULE (FBCM)].) • Is DTC B10A8:12 displayed?	Yes	Go to the next step.
		No	Go to Step 6.
2	**INSPECT HEADLIGHT LO RELAY FOR MALFUNCTION** • Switch the ignition to off. • Disconnect the negative battery cable. (See 01-17A-11 NEGATIVE BATTERY CABLE DISCONNECTION/CONNECTION [SKYACTIV-G 2.0].) (See 01-17A-13 NEGATIVE BATTERY CABLE DISCONNECTION/CONNECTION [SKYACTIV-G 2.0 (WITHOUT i-stop)].) (See 01-17B-9 NEGATIVE BATTERY CABLE DISCONNECTION/CONNECTION [SKYACTIV-D 2.2].) • Remove the headlight LO relay. • Inspect the headlight LO relay. (See 09-21-29 RELAY INSPECTION.) • Is the headlight LO relay normal?	Yes	Go to the next step.
		No	Replace the headlight LO relay, then go to Step 5.
3	**INSPECT FRONT BODY CONTROL MODULE (FBCM) CONNECTOR CONDITION** • Disconnect the front body control module (FBCM) connector. • Inspect the connector engagement and connection condition and inspect the terminals for damage, deformation, corrosion, or disconnection. • Is the connector normal?	Yes	Go to the next step.
		No	Repair or replace the connector, then go to Step 5.
4	**INSPECT HEADLIGHT LO RELAY CONTROL CIRCUIT FOR SHORT TO POWER SUPPLY** • Verify that the headlight LO relay is removed. • Verify that the front body control module (FBCM) connector is disconnected. • Connect the negative battery cable. (See 01-17A-11 NEGATIVE BATTERY CABLE DISCONNECTION/CONNECTION [SKYACTIV-G 2.0].) (See 01-17A-13 NEGATIVE BATTERY CABLE DISCONNECTION/CONNECTION [SKYACTIV-G 2.0 (WITHOUT i-stop)].) (See 01-17B-9 NEGATIVE BATTERY CABLE DISCONNECTION/CONNECTION [SKYACTIV-D 2.2].) • Switch the ignition ON (engine off or on). • Measure the voltage at front body control module (FBCM) terminal 1M (vehicle wiring harness side). • Is the voltage **0 V**?	Yes	Go to the next step.
		No	Repair or replace the wiring harness and go to the next step.

ON-BOARD DIAGNOSTIC [FRONT BODY CONTROL MODULE (FBCM)]

Step	Inspection		Action
5	**VERIFY THAT REPAIRS HAVE BEEN COMPLETED** • Reconnect all the disconnected connectors. • Reconnect the disconnected negative battery cable. (See 01-17A-11 NEGATIVE BATTERY CABLE DISCONNECTION/CONNECTION [SKYACTIV-G 2.0].) (See 01-17A-13 NEGATIVE BATTERY CABLE DISCONNECTION/CONNECTION [SKYACTIV-G 2.0 (WITHOUT i-stop)].) (See 01-17B-9 NEGATIVE BATTERY CABLE DISCONNECTION/CONNECTION [SKYACTIV-D 2.2].) • Clear front body control module (FBCM) DTCs using the M-MDS. (See 09-02K-12 CLEARING DTC [FRONT BODY CONTROL MODULE (FBCM)].) • Switch the ignition ON (engine off or on). • Perform the front body control module (FBCM) DTC inspection using the M-MDS. (See 09-02K-10 DTC INSPECTION [FRONT BODY CONTROL MODULE (FBCM)].) • Is DTC B10A8:12 displayed?	Yes	Repeat the inspection from Step 1. • If the malfunction recurs, replace the front body control module (FBCM), then go to the next step. (See 09-40-2 FRONT BODY CONTROL MODULE (FBCM) REMOVAL/INSTALLATION.)
		No	Go to the next step.
6	**VERIFY IF OTHER DTCs DISPLAYED** • Are any other DTCs displayed?	Yes	Repair the malfunctioning part according to the applicable DTC troubleshooting. (See 09-02K-13 DTC TABLE [FRONT BODY CONTROL MODULE (FBCM)].)
		No	DTC troubleshooting completed.

ON-BOARD DIAGNOSTIC [FRONT BODY CONTROL MODULE (FBCM)]

DTC B10AD:86 [FRONT BODY CONTROL MODULE (FBCM)]

id0902p2007500

System malfunction location	**Error signal received from auto-light sensor/rain sensor**
Detection condition	• The front body control module (FBCM) receives error signals from the auto-light sensor/rain sensor **10 times** continuously with the ignition switched ON (engine off or on).
Fail-safe	—
Possible cause	• Auto-light sensor/rain sensor malfunction • Front body control module (FBCM) malfunction
System wiring diagram	—

Diagnostic Procedure

Step	Inspection		Action
1	**PERFORM DTC INSPECTION AND VERIFY IF MALFUNCTIONING PART IS AUTO-LIGHT SENSOR/RAIN SENSOR** • Clear front body control module (FBCM) DTCs using the M-MDS. (See 09-02K-12 CLEARING DTC [FRONT BODY CONTROL MODULE (FBCM)].) • Switch the ignition ON (engine off or on). • Perform the front body control module (FBCM) DTC inspection using the M-MDS. (See 09-02K-10 DTC INSPECTION [FRONT BODY CONTROL MODULE (FBCM)].) • Is DTC B10AD:86 displayed?	Yes	Replace the auto-light sensor/rain sensor, then go to the next step. (See 09-19-58 RAIN SENSOR REMOVAL/INSTALLATION.)
		No	Go to Step 3.
2	**VERIFY THAT REPAIRS HAVE BEEN COMPLETED** • Clear front body control module (FBCM) DTCs using the M-MDS. (See 09-02K-12 CLEARING DTC [FRONT BODY CONTROL MODULE (FBCM)].) • Switch the ignition ON (engine off or on). • Perform the front body control module (FBCM) DTC inspection using the M-MDS. (See 09-02K-10 DTC INSPECTION [FRONT BODY CONTROL MODULE (FBCM)].) • Is DTC B10AD:86 displayed?	Yes	Replace the front body control module (FBCM), then go to the next step. (See 09-40-2 FRONT BODY CONTROL MODULE (FBCM) REMOVAL/INSTALLATION.)
		No	Go to the next step.
3	**VERIFY IF OTHER DTCs DISPLAYED** • Are any other DTCs displayed?	Yes	Repair the malfunctioning part according to the applicable DTC troubleshooting. (See 09-02K-13 DTC TABLE [FRONT BODY CONTROL MODULE (FBCM)].)
		No	DTC troubleshooting completed.

ON-BOARD DIAGNOSTIC [FRONT BODY CONTROL MODULE (FBCM)]

DTC B10AF:12 [FRONT BODY CONTROL MODULE (FBCM)]

id0902p2007600

System malfunction location	**Blower relay circuit malfunction**
Detection condition	• The front body control module (FBCM) detects a short to power supply in the blower relay circuit with the ignition switched ON (engine off or on).
Fail-safe	—
Possible cause	• Blower relay malfunction • Front body control module (FBCM) connector or terminal malfunction • Short to power supply in the wiring harness between blower relay terminal D and front body control module (FBCM) terminal 2Z • Front body control module (FBCM) malfunction

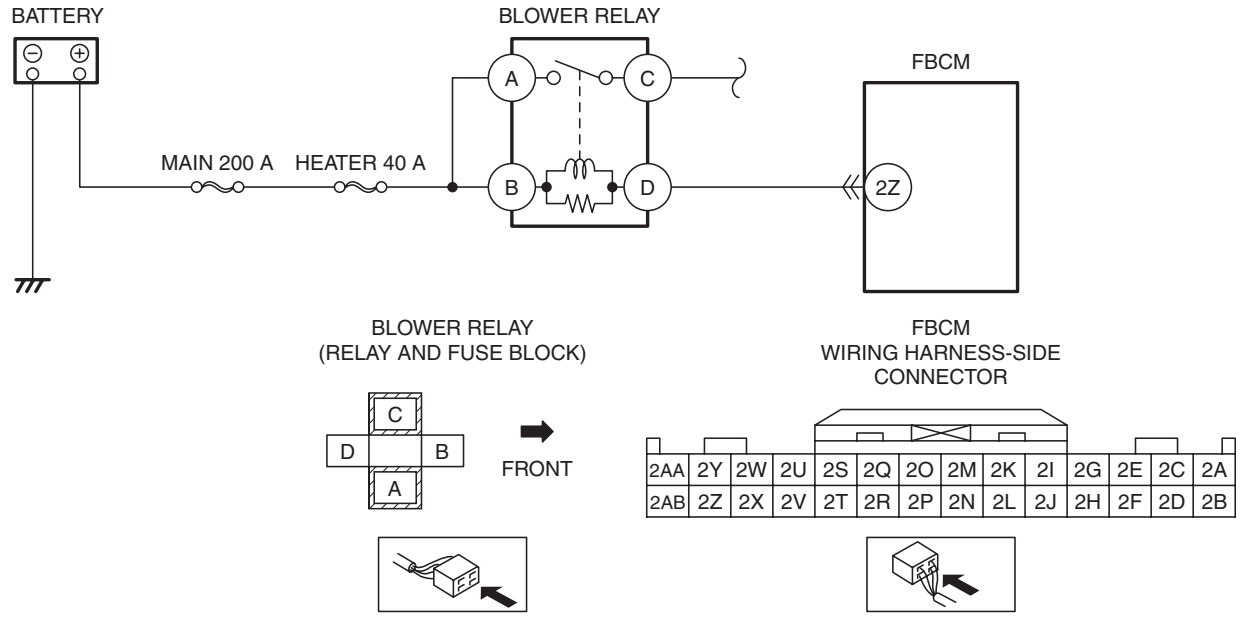

ON-BOARD DIAGNOSTIC [FRONT BODY CONTROL MODULE (FBCM)]

Diagnostic Procedure

Step	Inspection		Action
1	**VERIFY FRONT BODY CONTROL MODULE (FBCM) DTCs AGAIN** • Clear front body control module (FBCM) DTCs using the M-MDS. (See 09-02K-12 CLEARING DTC [FRONT BODY CONTROL MODULE (FBCM)].) • Switch the ignition ON (engine off or on). • Perform the front body control module (FBCM) DTC inspection using the M-MDS. (See 09-02K-10 DTC INSPECTION [FRONT BODY CONTROL MODULE (FBCM)].) • Is DTC B10AF:12 displayed?	Yes	Go to the next step.
		No	Go to Step 6.
2	**INSPECT BLOWER RELAY FOR MALFUNCTION** • Switch the ignition to off. • Disconnect the negative battery cable. (See 01-17A-11 NEGATIVE BATTERY CABLE DISCONNECTION/CONNECTION [SKYACTIV-G 2.0].) (See 01-17A-13 NEGATIVE BATTERY CABLE DISCONNECTION/CONNECTION [SKYACTIV-G 2.0 (WITHOUT i-stop)].) (See 01-17B-9 NEGATIVE BATTERY CABLE DISCONNECTION/CONNECTION [SKYACTIV-D 2.2].) • Remove the blower relay. • Inspect the blower relay. (See 09-21-29 RELAY INSPECTION.) • Is the blower relay normal?	Yes	Go to the next step.
		No	Replace the blower relay, then go to Step 5.
3	**INSPECT FRONT BODY CONTROL MODULE (FBCM) CONNECTOR CONDITION** • Disconnect the front body control module (FBCM) connector. • Inspect the connector engagement and connection condition and inspect the terminals for damage, deformation, corrosion, or disconnection. • Is the connector normal?	Yes	Go to the next step.
		No	Repair or replace the connector, then go to Step 5.
4	**INSPECT BLOWER RELAY CONTROL CIRCUIT FOR SHORT TO POWER SUPPLY** • Verify that the blower relay is removed. • Verify that the front body control module (FBCM) connector is disconnected. • Connect the negative battery cable. (See 01-17A-11 NEGATIVE BATTERY CABLE DISCONNECTION/CONNECTION [SKYACTIV-G 2.0].) (See 01-17A-13 NEGATIVE BATTERY CABLE DISCONNECTION/CONNECTION [SKYACTIV-G 2.0 (WITHOUT i-stop)].) (See 01-17B-9 NEGATIVE BATTERY CABLE DISCONNECTION/CONNECTION [SKYACTIV-D 2.2].) • Switch the ignition ON (engine off or on). • Measure the voltage at front body control module (FBCM) terminal 2Z (vehicle wiring harness side). • Is the voltage **0 V**?	Yes	Go to the next step.
		No	Repair or replace the wiring harness and go to the next step.

ON-BOARD DIAGNOSTIC [FRONT BODY CONTROL MODULE (FBCM)]

Step	Inspection		Action
5	**VERIFY THAT REPAIRS HAVE BEEN COMPLETED** • Reconnect all the disconnected connectors. • Reconnect the disconnected negative battery cable. (See 01-17A-11 NEGATIVE BATTERY CABLE DISCONNECTION/CONNECTION [SKYACTIV-G 2.0].) (See 01-17A-13 NEGATIVE BATTERY CABLE DISCONNECTION/CONNECTION [SKYACTIV-G 2.0 (WITHOUT i-stop)].) (See 01-17B-9 NEGATIVE BATTERY CABLE DISCONNECTION/CONNECTION [SKYACTIV-D 2.2].) • Clear front body control module (FBCM) DTCs using the M-MDS. (See 09-02K-12 CLEARING DTC [FRONT BODY CONTROL MODULE (FBCM)].) • Switch the ignition ON (engine off or on). • Perform the front body control module (FBCM) DTC inspection using the M-MDS. (See 09-02K-10 DTC INSPECTION [FRONT BODY CONTROL MODULE (FBCM)].) • Is DTC B10AF:12 displayed?	Yes	Repeat the inspection from Step 1. • If the malfunction recurs, replace the front body control module (FBCM), then go to the next step. (See 09-40-2 FRONT BODY CONTROL MODULE (FBCM) REMOVAL/INSTALLATION.)
		No	Go to the next step.
6	**VERIFY IF OTHER DTCs DISPLAYED** • Are any other DTCs displayed?	Yes	Repair the malfunctioning part according to the applicable DTC troubleshooting. (See 09-02K-13 DTC TABLE [FRONT BODY CONTROL MODULE (FBCM)].)
		No	DTC troubleshooting completed.

ON-BOARD DIAGNOSTIC [FRONT BODY CONTROL MODULE (FBCM)]

DTC B1142:13 [FRONT BODY CONTROL MODULE (FBCM)]

id0902p2007700

System malfunction location	**Front body control module (FBCM) power supply voltage (+IG1 power supply) input circuit malfunction**
Detection condition	• The front body control module (FBCM) detects an open circuit in the IG1 relay circuit for **2 s or more** with the ignition switched ON (engine off or on).
Fail-safe	—
Possible cause	• IG1 relay malfunction • Front body control module (FBCM) connector or terminal malfunction • C/U IG1 15 A fuse malfunction • Open circuit in the wiring harness between IG1 relay terminal C and front body control module (FBCM) terminal 2M • Front body control module (FBCM) malfunction

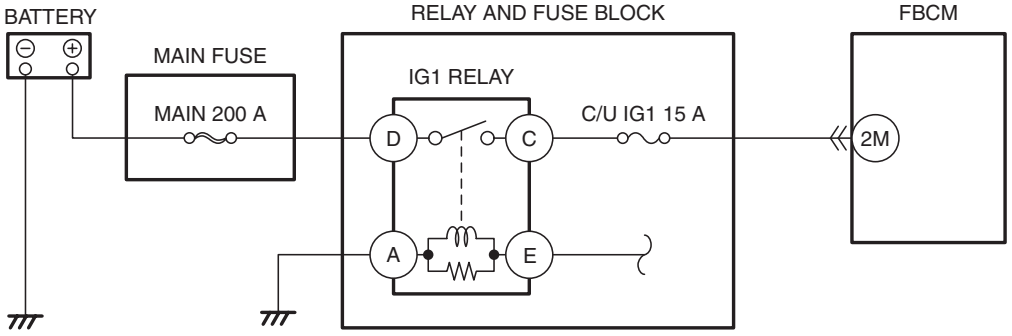

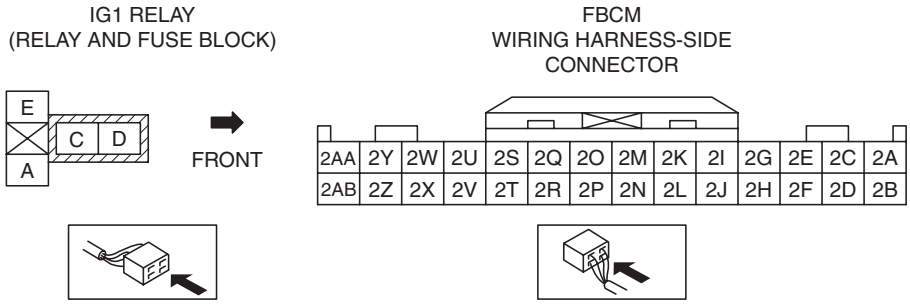

ON-BOARD DIAGNOSTIC [FRONT BODY CONTROL MODULE (FBCM)]

Diagnostic Procedure

Step	Inspection		Action
1	**VERIFY FRONT BODY CONTROL MODULE (FBCM) DTCs AGAIN** • Clear front body control module (FBCM) DTCs using the M-MDS. (See 09-02K-12 CLEARING DTC [FRONT BODY CONTROL MODULE (FBCM)].) • Switch the ignition ON (engine off or on) and wait for **2 s or more**. • Perform the front body control module (FBCM) DTC inspection using the M-MDS. (See 09-02K-10 DTC INSPECTION [FRONT BODY CONTROL MODULE (FBCM)].) • Is DTC B1142:13 displayed?	Yes	Go to the next step.
		No	Go to Step 7.
2	**INSPECT IG1 RELAY FOR MALFUNCTION** • Switch the ignition to off. • Disconnect the negative battery cable. (See 01-17A-11 NEGATIVE BATTERY CABLE DISCONNECTION/CONNECTION [SKYACTIV-G 2.0].) (See 01-17A-13 NEGATIVE BATTERY CABLE DISCONNECTION/CONNECTION [SKYACTIV-G 2.0 (WITHOUT i-stop)].) (See 01-17B-9 NEGATIVE BATTERY CABLE DISCONNECTION/CONNECTION [SKYACTIV-D 2.2].) • Remove the IG1 relay. • Inspect the IG1 relay. (See 09-21-29 RELAY INSPECTION.) • Is the IG1 relay normal?	Yes	Go to the next step.
		No	Replace the IG1 relay, then go to Step 6.
3	**INSPECT FRONT BODY CONTROL MODULE (FBCM) CONNECTOR CONDITION** • Disconnect the front body control module (FBCM) connector. • Inspect the connector engagement and connection condition and inspect the terminals for damage, deformation, corrosion, or disconnection. • Is the connector normal?	Yes	Go to the next step.
		No	Repair or replace the connector, then go to Step 6.
4	**INSPECT C/U IG1 15 A FUSE FOR MALFUNCTION** • Remove the C/U IG1 15 A fuse. • Inspect the C/U IG1 15 A fuse. • Is the C/U IG1 15 A fuse normal?	Yes	Install the C/U IG1 15 A fuse, then go to the next step.
		No	If a fuse is burnt out: • Repair or replace the wiring harness which is shorted to ground. • Replace the fuse. If a fuse is damaged: • Replace the fuse. Go to Step 6.
5	**INSPECT FRONT BODY CONTROL MODULE (FBCM) POWER SUPPLY VOLTAGE (+IG1 POWER SUPPLY) INPUT CIRCUIT FOR OPEN CIRCUIT** • Verify that the IG1 relay is removed. • Verify that the front body control module (FBCM) connector is disconnected. • Inspect the wiring harness for continuity between IG1 relay terminal C (vehicle wiring harness side) and front body control module (FBCM) terminal 2M (vehicle wiring harness side). • Is there continuity?	Yes	Go to the next step.
		No	Repair or replace the wiring harness and go to the next step.

ON-BOARD DIAGNOSTIC [FRONT BODY CONTROL MODULE (FBCM)]

Step	Inspection		Action
6	**VERIFY THAT REPAIRS HAVE BEEN COMPLETED** • Reconnect all the disconnected connectors. • Reconnect the disconnected negative battery cable. (See 01-17A-11 NEGATIVE BATTERY CABLE DISCONNECTION/CONNECTION [SKYACTIV-G 2.0].) (See 01-17A-13 NEGATIVE BATTERY CABLE DISCONNECTION/CONNECTION [SKYACTIV-G 2.0 (WITHOUT i-stop)].) (See 01-17B-9 NEGATIVE BATTERY CABLE DISCONNECTION/CONNECTION [SKYACTIV-D 2.2].) • Clear front body control module (FBCM) DTCs using the M-MDS. (See 09-02K-12 CLEARING DTC [FRONT BODY CONTROL MODULE (FBCM)].) • Switch the ignition ON (engine off or on) and wait for **2 s or more**. • Perform the front body control module (FBCM) DTC inspection using the M-MDS. (See 09-02K-10 DTC INSPECTION [FRONT BODY CONTROL MODULE (FBCM)].) • Is DTC B1142:13 displayed?	Yes	Repeat the inspection from Step 1. • If the malfunction recurs, replace the front body control module (FBCM), then go to the next step. (See 09-40-2 FRONT BODY CONTROL MODULE (FBCM) REMOVAL/INSTALLATION.)
		No	Go to the next step.
7	**VERIFY IF OTHER DTCs DISPLAYED** • Are any other DTCs displayed?	Yes	Repair the malfunctioning part according to the applicable DTC troubleshooting. (See 09-02K-13 DTC TABLE [FRONT BODY CONTROL MODULE (FBCM)].)
		No	DTC troubleshooting completed.

ON-BOARD DIAGNOSTIC [FRONT BODY CONTROL MODULE (FBCM)]

DTC B1143:13 [FRONT BODY CONTROL MODULE (FBCM)]

id0902p2007800

System malfunction location	**IG2 power supply control circuit malfunction**
Detection condition	• The front body control module (FBCM) detects an open circuit in the start stop unit circuit for **2 s or more** with the ignition switched ON (engine off or on).
Fail-safe	—
Possible cause	• Start stop unit connector or terminal malfunction • Start stop unit malfunction • Front body control module (FBCM) connector or terminal malfunction • Open circuit in the wiring harness between start stop unit terminal 2D and front body control module (FBCM) terminal 2U • Front body control module (FBCM) malfunction

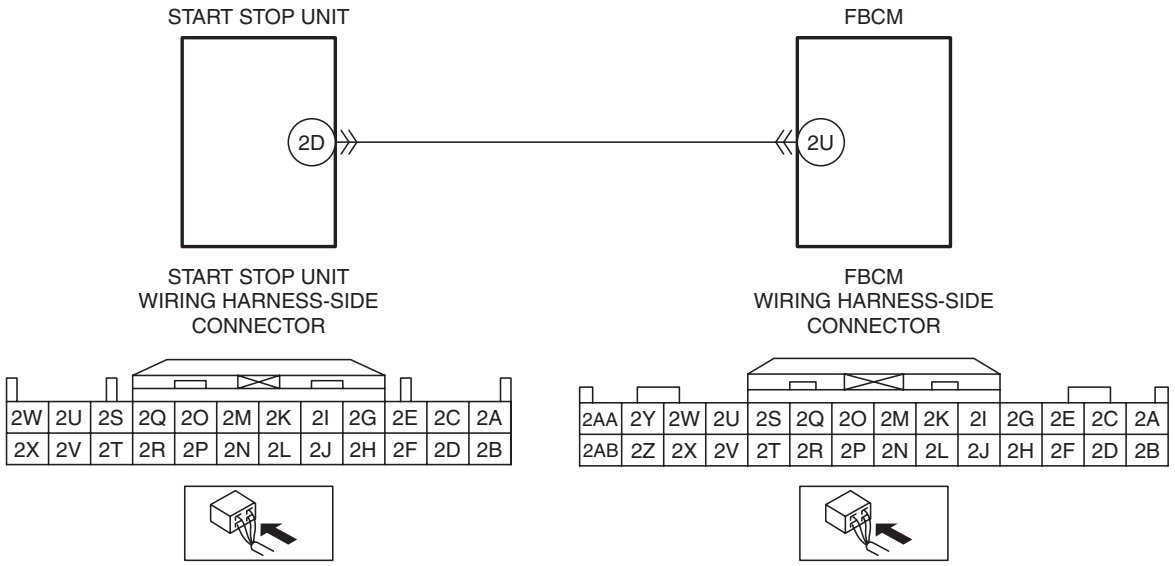

ON-BOARD DIAGNOSTIC [FRONT BODY CONTROL MODULE (FBCM)]

Diagnostic Procedure

Step	Inspection		Action
1	**VERIFY FRONT BODY CONTROL MODULE (FBCM) DTCs AGAIN** • Clear front body control module (FBCM) DTCs using the M-MDS. (See 09-02K-12 CLEARING DTC [FRONT BODY CONTROL MODULE (FBCM)].) • Switch the ignition ON (engine off or on) and wait for **2 s or more**. • Perform the front body control module (FBCM) DTC inspection using the M-MDS. (See 09-02K-10 DTC INSPECTION [FRONT BODY CONTROL MODULE (FBCM)].) • Is DTC B1143:13 displayed?	Yes	Go to the next step.
		No	Go to Step 7.
2	**INSPECT START STOP UNIT CONNECTOR CONDITION** • Switch the ignition to off. • Disconnect the negative battery cable. (See 01-17A-11 NEGATIVE BATTERY CABLE DISCONNECTION/CONNECTION [SKYACTIV-G 2.0].) (See 01-17A-13 NEGATIVE BATTERY CABLE DISCONNECTION/CONNECTION [SKYACTIV-G 2.0 (WITHOUT i-stop)].) (See 01-17B-9 NEGATIVE BATTERY CABLE DISCONNECTION/CONNECTION [SKYACTIV-D 2.2].) • Disconnect the start stop unit connector. • Inspect the connector engagement and connection condition and inspect the terminals for damage, deformation, corrosion, or disconnection. • Is the connector normal?	Yes	Go to the next step.
		No	Repair or replace the connector, then go to Step 6.
3	**INSPECT START STOP UNIT** • Inspect the start stop unit. (See 09-14-55 START STOP UNIT INSPECTION.) • Is the start stop unit normal?	Yes	Go to the next step.
		No	Replace the start stop unit, then go to Step 6. (See 09-14-53 START STOP UNIT REMOVAL/INSTALLATION.)
4	**INSPECT FRONT BODY CONTROL MODULE (FBCM) CONNECTOR CONDITION** • Disconnect the front body control module (FBCM) connector. • Inspect the connector engagement and connection condition and inspect the terminals for damage, deformation, corrosion, or disconnection. • Is the connector normal?	Yes	Go to the next step.
		No	Repair or replace the connector, then go to Step 6.
5	**INSPECT FRONT BODY CONTROL MODULE (FBCM) IG2 POWER SUPPLY CONTROL CIRCUIT FOR OPEN CIRCUIT** • Verify that the start stop unit and front body control module (FBCM) connectors are disconnected. • Inspect the wiring harness for continuity between start stop unit terminal 2D (vehicle wiring harness side) and front body control module (FBCM) terminal 2U (vehicle wiring harness side). • Is there continuity?	Yes	Go to the next step.
		No	Repair or replace the wiring harness and go to the next step.

ON-BOARD DIAGNOSTIC [FRONT BODY CONTROL MODULE (FBCM)]

Step	Inspection		Action
6	**VERIFY THAT REPAIRS HAVE BEEN COMPLETED** • Reconnect all the disconnected connectors. • Reconnect the disconnected negative battery cable. (See 01-17A-11 NEGATIVE BATTERY CABLE DISCONNECTION/CONNECTION [SKYACTIV-G 2.0].) (See 01-17A-13 NEGATIVE BATTERY CABLE DISCONNECTION/CONNECTION [SKYACTIV-G 2.0 (WITHOUT i-stop)].) (See 01-17B-9 NEGATIVE BATTERY CABLE DISCONNECTION/CONNECTION [SKYACTIV-D 2.2].) • Clear front body control module (FBCM) DTCs using the M-MDS. (See 09-02K-12 CLEARING DTC [FRONT BODY CONTROL MODULE (FBCM)].) • Switch the ignition ON (engine off or on) and wait for **2 s or more**. • Perform the front body control module (FBCM) DTC inspection using the M-MDS. (See 09-02K-10 DTC INSPECTION [FRONT BODY CONTROL MODULE (FBCM)].) • Is DTC B1143:13 displayed?	Yes	Repeat the inspection from Step 1. • If the malfunction recurs, replace the front body control module (FBCM), then go to the next step. (See 09-40-2 FRONT BODY CONTROL MODULE (FBCM) REMOVAL/INSTALLATION.)
		No	Go to the next step.
7	**VERIFY IF OTHER DTCs DISPLAYED** • Are any other DTCs displayed?	Yes	Repair the malfunctioning part according to the applicable DTC troubleshooting. (See 09-02K-13 DTC TABLE [FRONT BODY CONTROL MODULE (FBCM)].)
		No	DTC troubleshooting completed.

ON-BOARD DIAGNOSTIC [FRONT BODY CONTROL MODULE (FBCM)]

DTC B11DB:86 [FRONT BODY CONTROL MODULE (FBCM)]

id0902p2007900

System malfunction location	**Error signal received from current sensor**
Detection condition	• The front body control module (FBCM) receives error signals from the current sensor for **5 s or more** with the ignition switched ON (engine off or on).
Fail-safe	—
Possible cause	• Current sensor connector or terminal malfunction • Front body control module (FBCM) connector or terminal malfunction • Short to ground in wiring harness between current sensor terminal B and front body control module (FBCM) terminal 2E • Short to power supply in wiring harness between current sensor terminal B and front body control module (FBCM) terminal 2E • Open circuit in wiring harness between current sensor terminal B and front body control module (FBCM) terminal 2E • Current sensor malfunction • Front body control module (FBCM) malfunction

CURRENT SENSOR
WIRING HARNESS-SIDE CONNECTOR

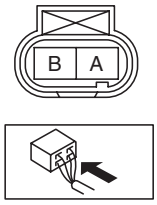

FBCM
WIRING HARNESS-SIDE CONNECTOR

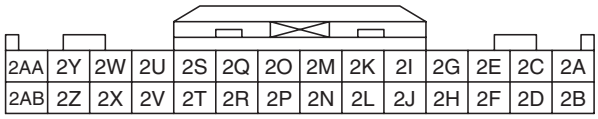

ON-BOARD DIAGNOSTIC [FRONT BODY CONTROL MODULE (FBCM)]

Diagnostic Procedure

Step	Inspection		Action
1	**VERIFY FRONT BODY CONTROL MODULE (FBCM) DTCs AGAIN** • Clear front body control module (FBCM) DTCs using the M-MDS. (See 09-02K-12 CLEARING DTC [FRONT BODY CONTROL MODULE (FBCM)].) • Switch the ignition ON (engine off or on) and wait for **5 s or more**. • Perform the front body control module (FBCM) DTC inspection using the M-MDS. (See 09-02K-10 DTC INSPECTION [FRONT BODY CONTROL MODULE (FBCM)].) • Is DTC B11DB:86 displayed?	Yes	Go to the next step.
		No	Go to Step 9.
2	**INSPECT CURRENT SENSOR CONNECTOR CONDITION** • Switch the ignition to off. • Disconnect the negative battery cable. (See 01-17A-11 NEGATIVE BATTERY CABLE DISCONNECTION/CONNECTION [SKYACTIV-G 2.0].) (See 01-17A-13 NEGATIVE BATTERY CABLE DISCONNECTION/CONNECTION [SKYACTIV-G 2.0 (WITHOUT i-stop)].) (See 01-17B-9 NEGATIVE BATTERY CABLE DISCONNECTION/CONNECTION [SKYACTIV-D 2.2].) • Disconnect the current sensor connector. • Inspect the connector engagement and connection condition and inspect the terminals for damage, deformation, corrosion, or disconnection. • Is the connector normal?	Yes	Go to the next step.
		No	Repair or replace the connector, then go to Step 8.
3	**INSPECT FRONT BODY CONTROL MODULE (FBCM) CONNECTOR CONDITION** • Disconnect the front body control module (FBCM) connector. • Inspect the connector engagement and connection condition and inspect the terminals for damage, deformation, corrosion, or disconnection. • Is the connector normal?	Yes	Go to the next step.
		No	Repair or replace the connector, then go to Step 8.
4	**INSPECT CURRENT SENSOR CIRCUIT FOR SHORT TO GROUND** • Verify that the current sensor and front body control module (FBCM) connectors are disconnected. • Inspect for continuity between front body control module (FBCM) terminal 2E (vehicle wiring harness side) and body ground. • Is there continuity?	Yes	Repair or replace the wiring harness which is shorted to ground, then go to Step 8.
		No	Go to the next step.

ON-BOARD DIAGNOSTIC [FRONT BODY CONTROL MODULE (FBCM)]

Step	Inspection		Action
5	**INSPECT CURRENT SENSOR CIRCUIT FOR SHORT TO POWER SUPPLY** • Verify that the current sensor and front body control module (FBCM) connectors are disconnected. • Connect the negative battery cable. (See 01-17A-11 NEGATIVE BATTERY CABLE DISCONNECTION/CONNECTION [SKYACTIV-G 2.0].) (See 01-17A-13 NEGATIVE BATTERY CABLE DISCONNECTION/CONNECTION [SKYACTIV-G 2.0 (WITHOUT i-stop)].) (See 01-17B-9 NEGATIVE BATTERY CABLE DISCONNECTION/CONNECTION [SKYACTIV-D 2.2].) • Switch the ignition ON (engine off or on). • Measure the voltage at front body control module (FBCM) terminal 2E (vehicle wiring harness side). • Is the voltage **0 V**?	Yes	Go to the next step.
		No	Repair or replace the wiring harness which is shorted to power supply, then go to Step 8.
6	**INSPECT CURRENT SENSOR CIRCUIT FOR OPEN CIRCUIT** • Verify that the current sensor and front body control module (FBCM) connectors are disconnected. • Switch the ignition to off. • Disconnect the negative battery cable. (See 01-17A-11 NEGATIVE BATTERY CABLE DISCONNECTION/CONNECTION [SKYACTIV-G 2.0].) (See 01-17A-13 NEGATIVE BATTERY CABLE DISCONNECTION/CONNECTION [SKYACTIV-G 2.0 (WITHOUT i-stop)].) (See 01-17B-9 NEGATIVE BATTERY CABLE DISCONNECTION/CONNECTION [SKYACTIV-D 2.2].) • Inspect the wiring harness for continuity between current sensor terminal B (vehicle wiring harness side) and front body control module (FBCM) terminal 2E (vehicle wiring harness side). • Is there continuity?	Yes	Go to the next step.
		No	Repair or replace the wiring harness which has an open circuit, then go to Step 8.
7	**PERFORM DTC INSPECTION AND VERIFY IF MALFUNCTIONING PART IS CURRENT SENSOR** • Reconnect all the disconnected connectors. • Reconnect the disconnected negative battery cable. (See 01-17A-11 NEGATIVE BATTERY CABLE DISCONNECTION/CONNECTION [SKYACTIV-G 2.0].) (See 01-17A-13 NEGATIVE BATTERY CABLE DISCONNECTION/CONNECTION [SKYACTIV-G 2.0 (WITHOUT i-stop)].) (See 01-17B-9 NEGATIVE BATTERY CABLE DISCONNECTION/CONNECTION [SKYACTIV-D 2.2].) • Clear front body control module (FBCM) DTCs using the M-MDS. (See 09-02K-12 CLEARING DTC [FRONT BODY CONTROL MODULE (FBCM)].) • Switch the ignition ON (engine off or on) and wait for **5 s or more**. • Perform the front body control module (FBCM) DTC inspection using the M-MDS. (See 09-02K-10 DTC INSPECTION [FRONT BODY CONTROL MODULE (FBCM)].) • Is DTC B11DB:86 displayed?	Yes	Replace the current sensor, then go to the next step. (See 01-40-65 CURRENT SENSOR REMOVAL/ INSTALLATION [SKYACTIV-G 2.0].)
		No	Go to Step 9.

ON-BOARD DIAGNOSTIC [FRONT BODY CONTROL MODULE (FBCM)]

Step	Inspection		Action
8	**VERIFY THAT REPAIRS HAVE BEEN COMPLETED** • Reconnect all the disconnected connectors. • Reconnect the disconnected negative battery cable. (See 01-17A-11 NEGATIVE BATTERY CABLE DISCONNECTION/CONNECTION [SKYACTIV-G 2.0].) (See 01-17A-13 NEGATIVE BATTERY CABLE DISCONNECTION/CONNECTION [SKYACTIV-G 2.0 (WITHOUT i-stop)].) (See 01-17B-9 NEGATIVE BATTERY CABLE DISCONNECTION/CONNECTION [SKYACTIV-D 2.2].) • Clear front body control module (FBCM) DTCs using the M-MDS. (See 09-02K-12 CLEARING DTC [FRONT BODY CONTROL MODULE (FBCM)].) • Switch the ignition ON (engine off or on) and wait for **5 s or more**. • Perform the front body control module (FBCM) DTC inspection using the M-MDS. (See 09-02K-10 DTC INSPECTION [FRONT BODY CONTROL MODULE (FBCM)].) • Is DTC B11DB:86 displayed?	Yes	Replace the front body control module (FBCM), then go to the next step. (See 09-40-2 FRONT BODY CONTROL MODULE (FBCM) REMOVAL/INSTALLATION.)
		No	Go to the next step.
9	**VERIFY IF OTHER DTCs DISPLAYED** • Are any other DTCs displayed?	Yes	Repair the malfunctioning part according to the applicable DTC troubleshooting. (See 09-02K-13 DTC TABLE [FRONT BODY CONTROL MODULE (FBCM)].)
		No	DTC troubleshooting completed.

ON-BOARD DIAGNOSTIC [FRONT BODY CONTROL MODULE (FBCM)]

DTC B1314:11 [FRONT BODY CONTROL MODULE (FBCM)]

id0902p2008000

System malfunction location	**Illumination output circuit malfunction**
Detection condition	• The front body control module (FBCM) detects a short to ground in the illumination output circuit with the ignition switched ON (engine off or on).
Fail-safe	—
Possible cause	• Front body control module (FBCM) connector or terminal malfunction • Illuminations malfunction • Short to ground in front body control module (FBCM) illumination output circuit • Front body control module (FBCM) malfunction
System wiring diagram	—

ON-BOARD DIAGNOSTIC [FRONT BODY CONTROL MODULE (FBCM)]

Diagnostic Procedure

Step	Inspection		Action
1	**VERIFY FRONT BODY CONTROL MODULE (FBCM) DTCs AGAIN** • Clear front body control module (FBCM) DTCs using the M-MDS. (See 09-02K-12 CLEARING DTC [FRONT BODY CONTROL MODULE (FBCM)].) • Switch the ignition ON (engine off or on). • Perform the front body control module (FBCM) DTC inspection using the M-MDS. (See 09-02K-10 DTC INSPECTION [FRONT BODY CONTROL MODULE (FBCM)].) • Is DTC B1314:11 displayed?	Yes	Go to the next step.
		No	Go to Step 6.
2	**VERIFY FRONT BODY CONTROL MODULE (FBCM) DTCs** • Perform the front body control module (FBCM) DTC inspection using the M-MDS. (See 09-02K-10 DTC INSPECTION [FRONT BODY CONTROL MODULE (FBCM)].) • Is the DTC displayed?	Yes	Repair the malfunctioning part according to the applicable DTC troubleshooting. (See 09-02K-13 DTC TABLE [FRONT BODY CONTROL MODULE (FBCM)].)
		No	Go to the next step.
3	**INSPECT FRONT BODY CONTROL MODULE (FBCM) CONNECTOR CONDITION** • Switch the ignition to off. • Disconnect the negative battery cable. (See 01-17A-11 NEGATIVE BATTERY CABLE DISCONNECTION/CONNECTION [SKYACTIV-G 2.0].) (See 01-17A-13 NEGATIVE BATTERY CABLE DISCONNECTION/CONNECTION [SKYACTIV-G 2.0 (WITHOUT i-stop)].) (See 01-17B-9 NEGATIVE BATTERY CABLE DISCONNECTION/CONNECTION [SKYACTIV-D 2.2].) • Disconnect the front body control module (FBCM) connector. • Inspect the connector engagement and connection condition and inspect the terminals for damage, deformation, corrosion, or disconnection. • Is the connector normal?	Yes	Go to the next step.
		No	Repair or replace the connector, then go to Step 5.
4	**INSPECT FRONT BODY CONTROL MODULE (FBCM) ILLUMINATION OUTPUT CIRCUIT FOR SHORT TO GROUND** • Verify that the front body control module (FBCM) connector is disconnected. • Turn the light switch to the TNS position. • Inspect for continuity between front body control module (FBCM) terminal 3J and body ground. • Is there continuity?	Yes	Inspect the illuminations. • If there is any malfunction: — Replace the malfunctioning illuminations, then go to the next step. • If there is no malfunction: — Repair or replace the wiring harness which has a short to ground, then go to the next step.
		No	Go to the next step.

ON-BOARD DIAGNOSTIC [FRONT BODY CONTROL MODULE (FBCM)]

Step	Inspection		Action
5	**VERIFY THAT REPAIRS HAVE BEEN COMPLETED** • Reconnect all the disconnected connectors. • Reconnect the disconnected negative battery cable. (See 01-17A-11 NEGATIVE BATTERY CABLE DISCONNECTION/CONNECTION [SKYACTIV-G 2.0].) (See 01-17A-13 NEGATIVE BATTERY CABLE DISCONNECTION/CONNECTION [SKYACTIV-G 2.0 (WITHOUT i-stop)].) (See 01-17B-9 NEGATIVE BATTERY CABLE DISCONNECTION/CONNECTION [SKYACTIV-D 2.2].) • Clear front body control module (FBCM) DTCs using the M-MDS. (See 09-02K-12 CLEARING DTC [FRONT BODY CONTROL MODULE (FBCM)].) • Switch the ignition ON (engine off or on). • Perform the front body control module (FBCM) DTC inspection using the M-MDS. (See 09-02K-10 DTC INSPECTION [FRONT BODY CONTROL MODULE (FBCM)].) • Is DTC B1314:11 displayed?	Yes	Repeat the inspection from Step 1. • If the malfunction recurs, replace the front body control module (FBCM), then go to the next step. (See 09-40-2 FRONT BODY CONTROL MODULE (FBCM) REMOVAL/INSTALLATION.)
		No	Go to the next step.
6	**VERIFY IF OTHER DTCs DISPLAYED** • Are any other DTCs displayed?	Yes	Repair the malfunctioning part according to the applicable DTC troubleshooting. (See 09-02K-13 DTC TABLE [FRONT BODY CONTROL MODULE (FBCM)].)
		No	DTC troubleshooting completed.

ON-BOARD DIAGNOSTIC [FRONT BODY CONTROL MODULE (FBCM)]

DTC B134D:02 [FRONT BODY CONTROL MODULE (FBCM)]

id0902p2008100

System malfunction location	**Headlight control signal error**
Detection condition	• Error start stop unit signal is detected for **5 s or more** with the ignition switched ON (engine off or on).
Fail-safe	—
Possible cause	• Start stop unit malfunction • Front body control module (FBCM) malfunction
System wiring diagram	—

Diagnostic Procedure

Step	Inspection		Action
1	**VERIFY FRONT BODY CONTROL MODULE (FBCM) DTCs AGAIN** • Clear front body control module (FBCM) DTCs using the M-MDS. (See 09-02K-12 CLEARING DTC [FRONT BODY CONTROL MODULE (FBCM)].) • Switch the ignition ON (engine off or on) and wait for **5 s or more**. • Perform the front body control module (FBCM) DTC inspection using the M-MDS. (See 09-02K-10 DTC INSPECTION [FRONT BODY CONTROL MODULE (FBCM)].) • Is DTC B134D:02 displayed?	Yes	Go to the next step.
		No	Go to Step 4.
2	**VERIFY START STOP UNIT DTCs** • Perform the start stop unit DTC inspection using the M-MDS. (See 09-02C-6 DTC INSPECTION [START STOP UNIT].) • Is the DTC displayed?	Yes	Repair the malfunctioning part according to the applicable DTC troubleshooting. (See 09-02C-8 DTC TABLE [START STOP UNIT].)
		No	Go to the next step.
3	**VERIFY THAT REPAIRS HAVE BEEN COMPLETED** • Clear front body control module (FBCM) DTCs using the M-MDS. (See 09-02K-12 CLEARING DTC [FRONT BODY CONTROL MODULE (FBCM)].) • Switch the ignition ON (engine off or on) and wait for **5 s or more**. • Perform the front body control module (FBCM) DTC inspection using the M-MDS. (See 09-02K-10 DTC INSPECTION [FRONT BODY CONTROL MODULE (FBCM)].) • Is DTC B134D:02 displayed?	Yes	Replace the front body control module (FBCM), then go to the next step. (See 09-40-2 FRONT BODY CONTROL MODULE (FBCM) REMOVAL/INSTALLATION.)
		No	Go to the next step.
4	**VERIFY IF OTHER DTCs DISPLAYED** • Are any other DTCs displayed?	Yes	Repair the malfunctioning part according to the applicable DTC troubleshooting. (See 09-02K-13 DTC TABLE [FRONT BODY CONTROL MODULE (FBCM)].)
		No	DTC troubleshooting completed.

ON-BOARD DIAGNOSTIC [FRONT BODY CONTROL MODULE (FBCM)]

DTC B13AF:62 [FRONT BODY CONTROL MODULE (FBCM)]

id0902p2008200

System malfunction location	**Headlight LO signal mismatch**
Detection condition	• The condition in which the CAN and module signals are compared and no match is detected between the signals for **5 s or more** with the ignition switched ON (engine off or on).
Fail-safe	—
Possible cause	• Start stop unit malfunction • Light switch malfunction • Front body control module (FBCM) malfunction • Short circuit to ground in wiring harness between start stop unit and front body control module (FBCM) • Open circuit in wiring harness between start stop unit and front body control module (FBCM) • Short circuit to power supply in wiring harness between start stop unit and front body control module (FBCM)

START STOP UNIT
WIRING HARNESS-SIDE CONNECTOR

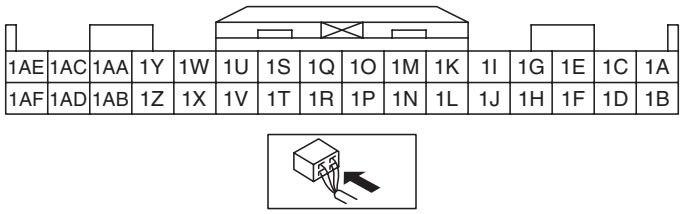

FBCM
WIRING HARNESS-SIDE CONNECTOR

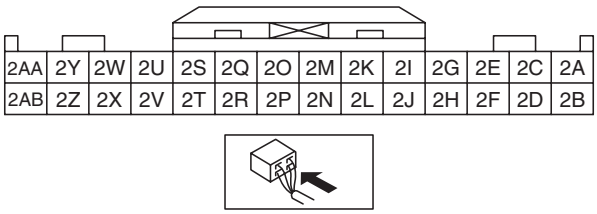

ON-BOARD DIAGNOSTIC [FRONT BODY CONTROL MODULE (FBCM)]

Diagnostic Procedure

Step	Inspection		Action
1	**INSPECT IF MALFUNCTION CAUSE IS START STOP UNIT OR FRONT BODY CONTROL MODULE (FBCM)** • Display start stop unit PID H/L_SW_LOW using the M-MDS. (See 09-02C-151 PID/DATA MONITOR INSPECTION [START STOP UNIT].) • Verify the PID while operating the light switch. • Is the display of PID H/L_SW_LOW normal?	Yes	Go to Step 3.
		No	Go to the next step.
2	**INSPECT LIGHT SWITCH** • Inspect the light switch. (See 09-18-86 LIGHT SWITCH INSPECTION.) • Is the light switch normal?	Yes	Replace the start stop unit, then go to Step 7. (See 09-14-53 START STOP UNIT REMOVAL/INSTALLATION.)
		No	Replace the light switch, then go to Step 7. (See 09-18-84 LIGHT SWITCH REMOVAL/INSTALLATION.)
3	**INSPECT IF MALFUNCTION CAUSE IS FRONT BODY CONTROL MODULE (FBCM) OR WIRING HARNESS** • Display front body control module (FBCM) PID H/L_SW_LOW1 using the M-MDS. (See 09-02K-153 PID/DATA MONITOR INSPECTION [FRONT BODY CONTROL MODULE (FBCM)].) • Verify the PID while operating the light switch. • Is the display of PID H/L_SW_LOW1 normal?	Yes	Go to the next step.
		No	• Perform the CAN malfunction diagnosis flow and inspect the CAN for a malfunction. (See 10-02A-3 CONTROLLER AREA NETWORK (CAN) MALFUNCTION DIAGNOSIS FLOW [SKYACTIV-G 2.0 (L.H.D.)].) (See 10-02B-3 CONTROLLER AREA NETWORK (CAN) MALFUNCTION DIAGNOSIS FLOW [SKYACTIV-G 2.0 (R.H.D.)].) (See 10-02C-3 CONTROLLER AREA NETWORK (CAN) MALFUNCTION DIAGNOSIS FLOW [SKYACTIV-D 2.2 (L.H.D.)].) (See 10-02D-3 CONTROLLER AREA NETWORK (CAN) MALFUNCTION DIAGNOSIS FLOW [SKYACTIV-D 2.2 (R.H.D.)].) • If there is no malfunction in CAN, replace the front body control module (FBCM), then go to Step 7. (See 09-40-2 FRONT BODY CONTROL MODULE (FBCM) REMOVAL/INSTALLATION.)
4	**INSPECT FOR SHORT TO GROUND BETWEEN LIGHT SWITCH AND FRONT BODY CONTROL MODULE (FBCM)** • Switch the light switch off. • Inspect for continuity between front body control module (FBCM) terminal 2W and body ground. • Is there continuity?	Yes	Repair or replace the wiring harness, then go to Step 7.
		No	Go to the next step.
5	**INSPECT WIRING HARNESS BETWEEN LIGHT SWITCH AND FRONT BODY CONTROL MODULE (FBCM) FOR OPEN CIRCUIT** • Disconnect the front body control module (FBCM) connector. • Disconnect the start stop unit connector. • Inspect for continuity between front body control module (FBCM) terminal 2W and start stop unit terminal 1X. • Is there continuity?	Yes	Go to the next step.
		No	Repair or replace the wiring harness, then go to Step 7.

ON-BOARD DIAGNOSTIC [FRONT BODY CONTROL MODULE (FBCM)]

Step	Inspection		Action
6	**INSPECT FOR SHORT TO POWER SUPPLY BETWEEN LIGHT SWITCH AND FRONT BODY CONTROL MODULE (FBCM)** • Verify that the start stop unit and front body control module (FBCM) connectors are disconnected. • Connect the negative battery cable. (See 01-17A-11 NEGATIVE BATTERY CABLE DISCONNECTION/CONNECTION [SKYACTIV-G 2.0].) (See 01-17A-13 NEGATIVE BATTERY CABLE DISCONNECTION/CONNECTION [SKYACTIV-G 2.0 (WITHOUT i-stop)].) (See 01-17B-9 NEGATIVE BATTERY CABLE DISCONNECTION/CONNECTION [SKYACTIV-D 2.2].) • Switch the ignition ON (engine off or on). • Measure the voltage at front body control module (FBCM) terminal 2W. • Is the voltage **0 V**?	Yes	Go to the next step.
		No	Repair or replace the wiring harness and go to the next step.
7	**VERIFY THAT REPAIRS HAVE BEEN COMPLETED** • Clear front body control module (FBCM) DTCs using the M-MDS. (See 09-02K-12 CLEARING DTC [FRONT BODY CONTROL MODULE (FBCM)].) • Switch the ignition ON (engine off or on) and wait for **5 s or more**. • Perform the front body control module (FBCM) DTC inspection using the M-MDS. (See 09-02K-10 DTC INSPECTION [FRONT BODY CONTROL MODULE (FBCM)].) • Is DTC B13AF:62 displayed?	Yes	Replace the front body control module (FBCM), then go to the next step. (See 09-40-2 FRONT BODY CONTROL MODULE (FBCM) REMOVAL/INSTALLATION.)
		No	Go to the next step.
8	**VERIFY IF OTHER DTCs DISPLAYED** • Are any other DTCs displayed?	Yes	Repair the malfunctioning part according to the applicable DTC troubleshooting. (See 09-02K-13 DTC TABLE [FRONT BODY CONTROL MODULE (FBCM)].)
		No	DTC troubleshooting completed.

ON-BOARD DIAGNOSTIC [FRONT BODY CONTROL MODULE (FBCM)]

DTC B13CF:19 [FRONT BODY CONTROL MODULE (FBCM)]

id0902p2008400

System malfunction location	**IG2 power supply output circuit malfunction**
Detection condition	• The front body control module (FBCM) detects over-current in IG2 power supply output circuit with the ignition switched ON (engine off or on).
Fail-safe	—
Possible cause	• Front body control module (FBCM) connector or terminal malfunction • Short to ground in front body control module (FBCM) IG2 power supply output circuit • Front body control module (FBCM) malfunction
System wiring diagram	—

ON-BOARD DIAGNOSTIC [FRONT BODY CONTROL MODULE (FBCM)]

Diagnostic Procedure

Step	Inspection		Action
1	**VERIFY FRONT BODY CONTROL MODULE (FBCM) DTCs AGAIN** • Clear front body control module (FBCM) DTCs using the M-MDS. (See 09-02K-12 CLEARING DTC [FRONT BODY CONTROL MODULE (FBCM)].) • Switch the ignition ON (engine off or on). • Perform the front body control module (FBCM) DTC inspection using the M-MDS. (See 09-02K-10 DTC INSPECTION [FRONT BODY CONTROL MODULE (FBCM)].) • Is DTC B13CF:19 displayed?	Yes	Go to the next step.
		No	Go to Step 5.
2	**INSPECT FRONT BODY CONTROL MODULE (FBCM) CONNECTOR CONDITION** • Switch the ignition to off. • Disconnect the negative battery cable. (See 01-17A-11 NEGATIVE BATTERY CABLE DISCONNECTION/CONNECTION [SKYACTIV-G 2.0].) (See 01-17A-13 NEGATIVE BATTERY CABLE DISCONNECTION/CONNECTION [SKYACTIV-G 2.0 (WITHOUT i-stop)].) (See 01-17B-9 NEGATIVE BATTERY CABLE DISCONNECTION/CONNECTION [SKYACTIV-D 2.2].) • Disconnect the front body control module (FBCM) connector. • Inspect the connector engagement and connection condition and inspect the terminals for damage, deformation, corrosion, or disconnection. • Is the connector normal?	Yes	Go to the next step.
		No	Repair or replace the connector, then go to Step 4.
3	**INSPECT FRONT BODY CONTROL MODULE (FBCM) IG2 POWER SUPPLY OUTPUT CIRCUIT FOR SHORT TO GROUND** • Verify that the front body control module (FBCM) connector is disconnected. • Inspect for continuity between front body control module (FBCM) terminal 1C and body ground. • Is there continuity?	Yes	Repair or replace the wiring harness which has a short to ground, then go to the next step.
		No	Go to the next step.
4	**VERIFY THAT REPAIRS HAVE BEEN COMPLETED** • Reconnect all the disconnected connectors. • Reconnect the disconnected negative battery cable. (See 01-17A-11 NEGATIVE BATTERY CABLE DISCONNECTION/CONNECTION [SKYACTIV-G 2.0].) (See 01-17A-13 NEGATIVE BATTERY CABLE DISCONNECTION/CONNECTION [SKYACTIV-G 2.0 (WITHOUT i-stop)].) (See 01-17B-9 NEGATIVE BATTERY CABLE DISCONNECTION/CONNECTION [SKYACTIV-D 2.2].) • Clear front body control module (FBCM) DTCs using the M-MDS. (See 09-02K-12 CLEARING DTC [FRONT BODY CONTROL MODULE (FBCM)].) • Switch the ignition ON (engine off or on). • Perform the front body control module (FBCM) DTC inspection using the M-MDS. (See 09-02K-10 DTC INSPECTION [FRONT BODY CONTROL MODULE (FBCM)].) • Is DTC B13CF:19 displayed?	Yes	Repeat the inspection from Step 1. • If the malfunction recurs, replace the front body control module (FBCM), then go to the next step. (See 09-40-2 FRONT BODY CONTROL MODULE (FBCM) REMOVAL/INSTALLATION.)
		No	Go to the next step.

ON-BOARD DIAGNOSTIC [FRONT BODY CONTROL MODULE (FBCM)]

Step	Inspection		Action
5	**VERIFY IF OTHER DTCs DISPLAYED** • Are any other DTCs displayed?	Yes	Repair the malfunctioning part according to the applicable DTC troubleshooting. (See 09-02K-13 DTC TABLE [FRONT BODY CONTROL MODULE (FBCM)].)
		No	DTC troubleshooting completed.

ON-BOARD DIAGNOSTIC [FRONT BODY CONTROL MODULE (FBCM)]

DTC B13D0:11 [FRONT BODY CONTROL MODULE (FBCM)]

id0902p2008500

System malfunction location	**TNS circuit malfunction**
Detection condition	• The front body control module (FBCM) detects a short to ground in the TNS relay circuit with the ignition switched ON (engine off or on).
Fail-safe	—
Possible cause	• TNS relay malfunction • Front body control module (FBCM) connector or terminal malfunction • Short to ground in wiring harness between TNS relay terminal E and front body control module (FBCM) terminal 1I • Front body control module (FBCM) malfunction

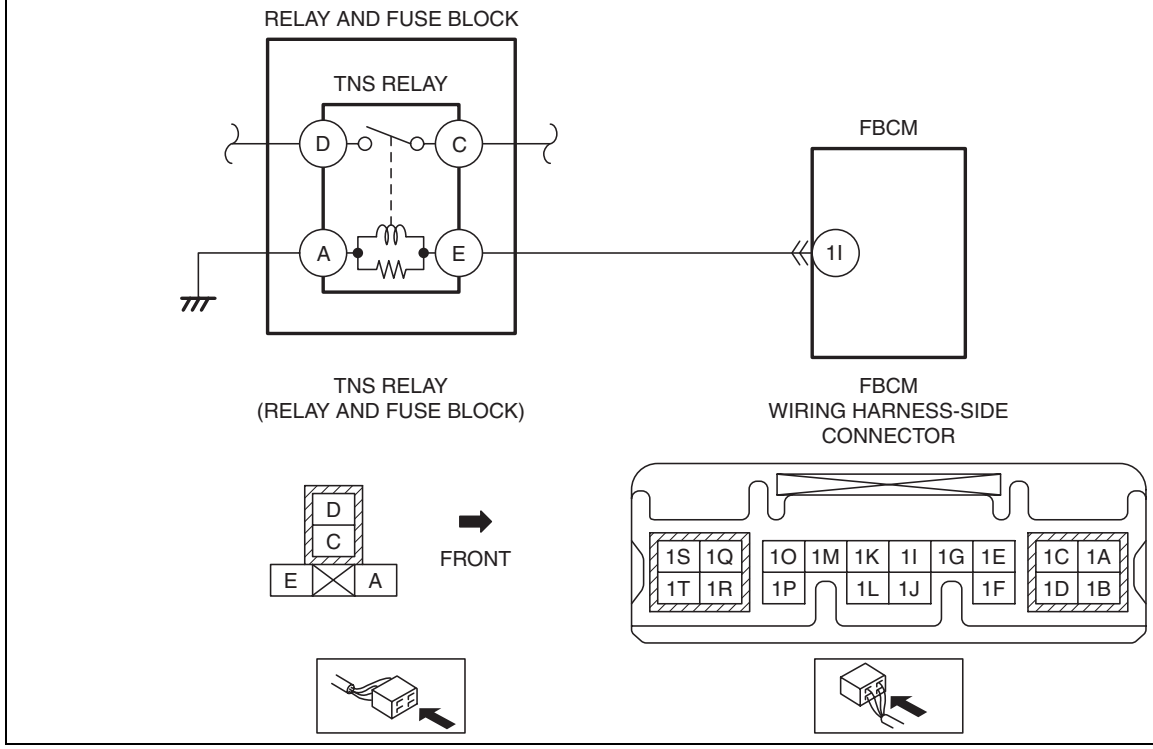

ON-BOARD DIAGNOSTIC [FRONT BODY CONTROL MODULE (FBCM)]

Diagnostic Procedure

Step	Inspection		Action
1	**VERIFY FRONT BODY CONTROL MODULE (FBCM) DTCs AGAIN** • Clear front body control module (FBCM) DTCs using the M-MDS. (See 09-02K-12 CLEARING DTC [FRONT BODY CONTROL MODULE (FBCM)].) • Switch the ignition ON (engine off or on). • Perform the front body control module (FBCM) DTC inspection using the M-MDS. (See 09-02K-10 DTC INSPECTION [FRONT BODY CONTROL MODULE (FBCM)].) • Is DTC B13D0:11 displayed?	Yes	Go to the next step.
		No	Go to Step 6.
2	**INSPECT TNS RELAY FOR MALFUNCTION** • Switch the ignition to off. • Disconnect the negative battery cable. (See 01-17A-11 NEGATIVE BATTERY CABLE DISCONNECTION/CONNECTION [SKYACTIV-G 2.0].) (See 01-17A-13 NEGATIVE BATTERY CABLE DISCONNECTION/CONNECTION [SKYACTIV-G 2.0 (WITHOUT i-stop)].) (See 01-17B-9 NEGATIVE BATTERY CABLE DISCONNECTION/CONNECTION [SKYACTIV-D 2.2].) • Remove the TNS relay. • Inspect the TNS relay. (See 09-21-29 RELAY INSPECTION.) • Is the TNS relay normal?	Yes	Go to the next step.
		No	Replace the TNS relay, then go to Step 5.
3	**INSPECT FRONT BODY CONTROL MODULE (FBCM) CONNECTOR CONDITION** • Disconnect the front body control module (FBCM) connector. • Inspect the connector engagement and connection condition and inspect the terminals for damage, deformation, corrosion, or disconnection. • Is the connector normal?	Yes	Go to the next step.
		No	Repair or replace the connector, then go to Step 5.
4	**INSPECT TNS RELAY CONTROL CIRCUIT FOR SHORT TO GROUND** • Verify that the TNS relay is removed. • Verify that the front body control module (FBCM) connector is disconnected. • Inspect for continuity between front body control module (FBCM) terminal 1I (vehicle wiring harness side) and body ground. • Is there continuity?	Yes	Repair or replace the wiring harness and go to the next step.
		No	Go to the next step.

ON-BOARD DIAGNOSTIC [FRONT BODY CONTROL MODULE (FBCM)]

Step	Inspection		Action
5	**VERIFY THAT REPAIRS HAVE BEEN COMPLETED** • Reconnect all the disconnected connectors. • Reconnect the disconnected negative battery cable. (See 01-17A-11 NEGATIVE BATTERY CABLE DISCONNECTION/CONNECTION [SKYACTIV-G 2.0].) (See 01-17A-13 NEGATIVE BATTERY CABLE DISCONNECTION/CONNECTION [SKYACTIV-G 2.0 (WITHOUT i-stop)].) (See 01-17B-9 NEGATIVE BATTERY CABLE DISCONNECTION/CONNECTION [SKYACTIV-D 2.2].) • Clear front body control module (FBCM) DTCs using the M-MDS. (See 09-02K-12 CLEARING DTC [FRONT BODY CONTROL MODULE (FBCM)].) • Switch the ignition ON (engine off or on). • Operate the light switch in TNS position. • Perform the front body control module (FBCM) DTC inspection using the M-MDS. (See 09-02K-10 DTC INSPECTION [FRONT BODY CONTROL MODULE (FBCM)].) • Is DTC B13D0:11 displayed?	Yes	Repeat the inspection from Step 1. • If the malfunction recurs, replace the front body control module (FBCM), then go to the next step. (See 09-40-2 FRONT BODY CONTROL MODULE (FBCM) REMOVAL/INSTALLATION.)
		No	Go to the next step.
6	**VERIFY IF OTHER DTCs DISPLAYED** • Are any other DTCs displayed?	Yes	Repair the malfunctioning part according to the applicable DTC troubleshooting. (See 09-02K-13 DTC TABLE [FRONT BODY CONTROL MODULE (FBCM)].)
		No	DTC troubleshooting completed.

ON-BOARD DIAGNOSTIC [FRONT BODY CONTROL MODULE (FBCM)]

DTC B13D2:12 [FRONT BODY CONTROL MODULE (FBCM)]

id0902p2008700

System malfunction location	**Front fog light relay circuit malfunction**
Detection condition	• The front body control module (FBCM) detects a short to power supply in the front fog light relay circuit with the ignition switched ON (engine off or on).
Fail-safe	—
Possible cause	• Front fog light relay malfunction • Front body control module (FBCM) connector or terminal malfunction • Short to power supply in wiring harness between front fog light relay terminal E and front body control module (FBCM) terminal 2AB • Front body control module (FBCM) malfunction

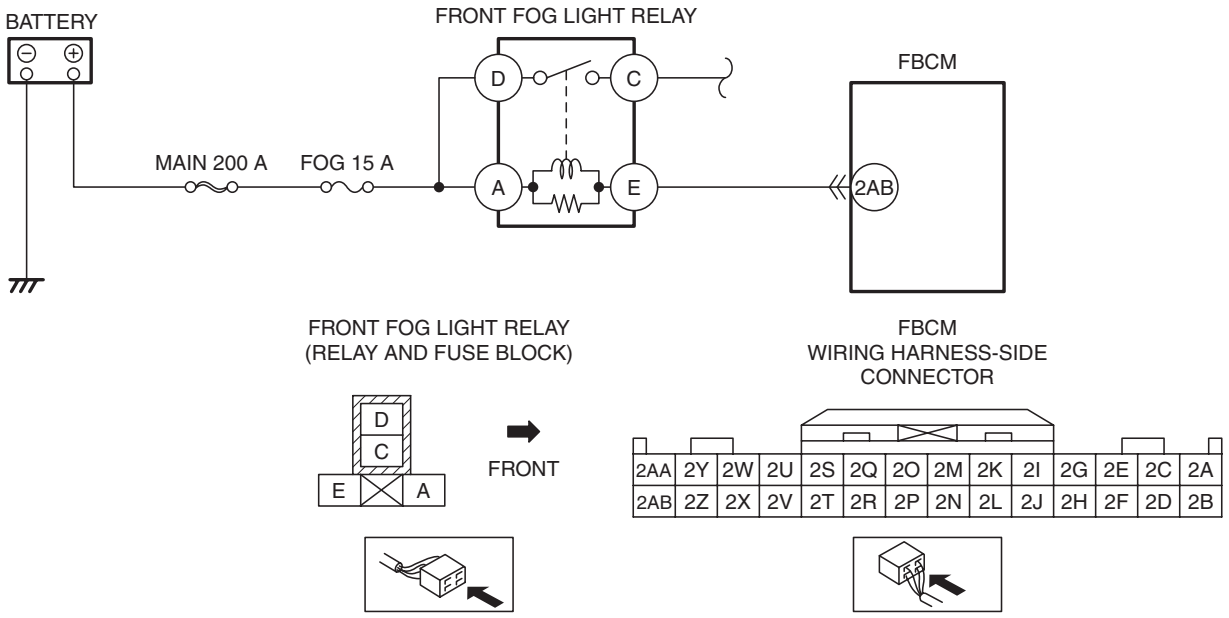

ON-BOARD DIAGNOSTIC [FRONT BODY CONTROL MODULE (FBCM)]

Diagnostic Procedure

Step	Inspection		Action
1	**VERIFY FRONT BODY CONTROL MODULE (FBCM) DTCs AGAIN** • Clear front body control module (FBCM) DTCs using the M-MDS. (See 09-02K-12 CLEARING DTC [FRONT BODY CONTROL MODULE (FBCM)].) • Switch the ignition ON (engine off or on). • Perform the front body control module (FBCM) DTC inspection using the M-MDS. (See 09-02K-10 DTC INSPECTION [FRONT BODY CONTROL MODULE (FBCM)].) • Is DTC B13D2:12 displayed?	Yes	Go to the next step.
		No	Go to Step 6.
2	**INSPECT FRONT FOG LIGHT RELAY FOR MALFUNCTION** • Switch the ignition to off. • Disconnect the negative battery cable. (See 01-17A-11 NEGATIVE BATTERY CABLE DISCONNECTION/CONNECTION [SKYACTIV-G 2.0].) (See 01-17A-13 NEGATIVE BATTERY CABLE DISCONNECTION/CONNECTION [SKYACTIV-G 2.0 (WITHOUT i-stop)].) (See 01-17B-9 NEGATIVE BATTERY CABLE DISCONNECTION/CONNECTION [SKYACTIV-D 2.2].) • Remove the front fog light relay. • Inspect the front fog light relay. (See 09-21-29 RELAY INSPECTION.) • Is the front fog light relay normal?	Yes	Go to the next step.
		No	Replace the front fog light relay, then go to Step 5.
3	**INSPECT FRONT BODY CONTROL MODULE (FBCM) CONNECTOR CONDITION** • Disconnect the front body control module (FBCM) connector. • Inspect the connector engagement and connection condition and inspect the terminals for damage, deformation, corrosion, or disconnection. • Is the connector normal?	Yes	Go to the next step.
		No	Repair or replace the connector, then go to Step 5.
4	**INSPECT FRONT FOG LIGHT RELAY CONTROL CIRCUIT FOR SHORT TO POWER SUPPLY** • Verify that the front fog light relay is removed. • Verify that the front body control module (FBCM) connector is disconnected. • Connect the negative battery cable. (See 01-17A-11 NEGATIVE BATTERY CABLE DISCONNECTION/CONNECTION [SKYACTIV-G 2.0].) (See 01-17A-13 NEGATIVE BATTERY CABLE DISCONNECTION/CONNECTION [SKYACTIV-G 2.0 (WITHOUT i-stop)].) (See 01-17B-9 NEGATIVE BATTERY CABLE DISCONNECTION/CONNECTION [SKYACTIV-D 2.2].) • Switch the ignition ON (engine off or on). • Measure the voltage at front body control module (FBCM) terminal 2AB (vehicle wiring harness side). • Is the voltage **0 V**?	Yes	Go to the next step.
		No	Repair or replace the wiring harness and go to the next step.

ON-BOARD DIAGNOSTIC [FRONT BODY CONTROL MODULE (FBCM)]

Step	Inspection		Action
5	**VERIFY THAT REPAIRS HAVE BEEN COMPLETED** • Reconnect all the disconnected connectors. • Reconnect the disconnected negative battery cable. (See 01-17A-11 NEGATIVE BATTERY CABLE DISCONNECTION/CONNECTION [SKYACTIV-G 2.0].) (See 01-17A-13 NEGATIVE BATTERY CABLE DISCONNECTION/CONNECTION [SKYACTIV-G 2.0 (WITHOUT i-stop)].) (See 01-17B-9 NEGATIVE BATTERY CABLE DISCONNECTION/CONNECTION [SKYACTIV-D 2.2].) • Clear front body control module (FBCM) DTCs using the M-MDS. (See 09-02K-12 CLEARING DTC [FRONT BODY CONTROL MODULE (FBCM)].) • Switch the ignition ON (engine off or on). • Operate the light switch in HEAD position and fog light switch in F.FOG position. • Perform the front body control module (FBCM) DTC inspection using the M-MDS. (See 09-02K-10 DTC INSPECTION [FRONT BODY CONTROL MODULE (FBCM)].) • Is DTC B13D2:12 displayed?	Yes	Repeat the inspection from Step 1. • If the malfunction recurs, replace the front body control module (FBCM), then go to the next step. (See 09-40-2 FRONT BODY CONTROL MODULE (FBCM) REMOVAL/INSTALLATION.)
		No	Go to the next step.
6	**VERIFY IF OTHER DTCs DISPLAYED** • Are any other DTCs displayed?	Yes	Repair the malfunctioning part according to the applicable DTC troubleshooting. (See 09-02K-13 DTC TABLE [FRONT BODY CONTROL MODULE (FBCM)].)
		No	DTC troubleshooting completed.

ON-BOARD DIAGNOSTIC [FRONT BODY CONTROL MODULE (FBCM)]

DTC B13FE:12 [FRONT BODY CONTROL MODULE (FBCM)]

id0902p2008800

System malfunction location	**Headlight LO relay (RH) circuit malfunction**
Detection condition	• The front body control module (FBCM) detects a short to power supply in the headlight LO relay (RH) circuit with the ignition switched ON (engine off or on).
Fail-safe	—
Possible cause	• Headlight LO relay (RH) malfunction • Front body control module (FBCM) connector or terminal malfunction • Short to power supply in the wiring harness between headlight LO relay (RH) terminal E and front body control module (FBCM) terminal 2V • Front body control module (FBCM) malfunction

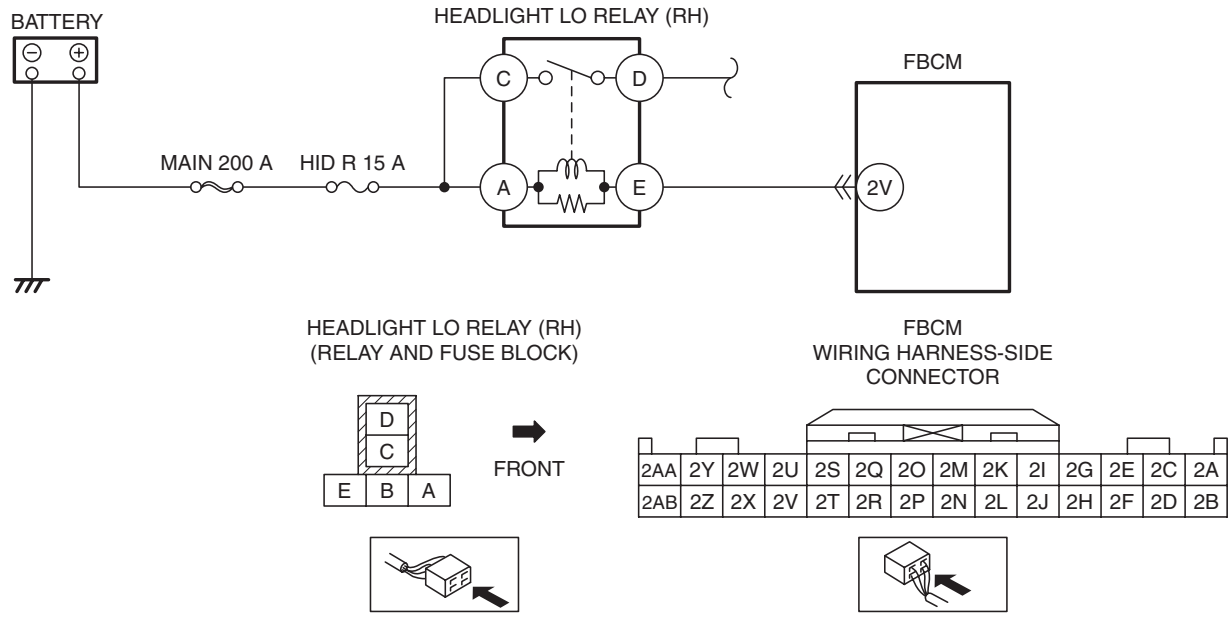

ON-BOARD DIAGNOSTIC [FRONT BODY CONTROL MODULE (FBCM)]

Diagnostic Procedure

Step	Inspection		Action
1	**VERIFY FRONT BODY CONTROL MODULE (FBCM) DTCs AGAIN** • Clear front body control module (FBCM) DTCs using the M-MDS. (See 09-02K-12 CLEARING DTC [FRONT BODY CONTROL MODULE (FBCM)].) • Switch the ignition ON (engine off or on). • Perform the front body control module (FBCM) DTC inspection using the M-MDS. (See 09-02K-10 DTC INSPECTION [FRONT BODY CONTROL MODULE (FBCM)].) • Is DTC B13FE:12 displayed?	Yes	Go to the next step.
		No	Go to Step 6.
2	**INSPECT HEADLIGHT LO RELAY (RH) FOR MALFUNCTION** • Switch the ignition to off. • Disconnect the negative battery cable. (See 01-17A-11 NEGATIVE BATTERY CABLE DISCONNECTION/CONNECTION [SKYACTIV-G 2.0].) (See 01-17A-13 NEGATIVE BATTERY CABLE DISCONNECTION/CONNECTION [SKYACTIV-G 2.0 (WITHOUT i-stop)].) (See 01-17B-9 NEGATIVE BATTERY CABLE DISCONNECTION/CONNECTION [SKYACTIV-D 2.2].) • Remove the headlight LO relay (RH). • Inspect the headlight LO relay (RH). (See 09-21-29 RELAY INSPECTION.) • Is the headlight LO relay (RH) normal?	Yes	Go to the next step.
		No	Replace the headlight LO relay (RH), then go to Step 5.
3	**INSPECT FRONT BODY CONTROL MODULE (FBCM) CONNECTOR CONDITION** • Disconnect the front body control module (FBCM) connector. • Inspect the connector engagement and connection condition and inspect the terminals for damage, deformation, corrosion, or disconnection. • Is the connector normal?	Yes	Go to the next step.
		No	Repair or replace the connector, then go to Step 5.
4	**INSPECT HEADLIGHT LO RELAY (RH) CONTROL CIRCUIT FOR SHORT TO POWER SUPPLY** • Verify that the headlight LO relay (RH) is removed. • Verify that the front body control module (FBCM) connector is disconnected. • Connect the negative battery cable. (See 01-17A-11 NEGATIVE BATTERY CABLE DISCONNECTION/CONNECTION [SKYACTIV-G 2.0].) (See 01-17A-13 NEGATIVE BATTERY CABLE DISCONNECTION/CONNECTION [SKYACTIV-G 2.0 (WITHOUT i-stop)].) (See 01-17B-9 NEGATIVE BATTERY CABLE DISCONNECTION/CONNECTION [SKYACTIV-D 2.2].) • Switch the ignition ON (engine off or on). • Operate the light switch in HEAD position. • Measure the voltage at FCBCM terminal 2V (vehicle wiring harness side). • Is the voltage **0 V**?	Yes	Go to the next step.
		No	Repair or replace the wiring harness and go to the next step.

ON-BOARD DIAGNOSTIC [FRONT BODY CONTROL MODULE (FBCM)]

Step	Inspection		Action
5	**VERIFY THAT REPAIRS HAVE BEEN COMPLETED** • Reconnect all the disconnected connectors. • Reconnect the disconnected negative battery cable. (See 01-17A-11 NEGATIVE BATTERY CABLE DISCONNECTION/CONNECTION [SKYACTIV-G 2.0].) (See 01-17A-13 NEGATIVE BATTERY CABLE DISCONNECTION/CONNECTION [SKYACTIV-G 2.0 (WITHOUT i-stop)].) (See 01-17B-9 NEGATIVE BATTERY CABLE DISCONNECTION/CONNECTION [SKYACTIV-D 2.2].) • Clear front body control module (FBCM) DTCs using the M-MDS. (See 09-02K-12 CLEARING DTC [FRONT BODY CONTROL MODULE (FBCM)].) • Switch the ignition ON (engine off or on). • Perform the front body control module (FBCM) DTC inspection using the M-MDS. (See 09-02K-10 DTC INSPECTION [FRONT BODY CONTROL MODULE (FBCM)].) • Is DTC B13FE:12 displayed?	Yes	Repeat the inspection from Step 1. • If the malfunction recurs, replace the front body control module (FBCM), then go to the next step. (See 09-40-2 FRONT BODY CONTROL MODULE (FBCM) REMOVAL/INSTALLATION.)
		No	Go to the next step.
6	**VERIFY IF OTHER DTCs DISPLAYED** • Are any other DTCs displayed?	Yes	Repair the malfunctioning part according to the applicable DTC troubleshooting. (See 09-02K-13 DTC TABLE [FRONT BODY CONTROL MODULE (FBCM)].)
		No	DTC troubleshooting completed.

ON-BOARD DIAGNOSTIC [FRONT BODY CONTROL MODULE (FBCM)]

DTC B13FE:14 [FRONT BODY CONTROL MODULE (FBCM)]

id0902p2009000

System malfunction location	**Headlight LO relay (RH) circuit malfunction**
Detection condition	• The front body control module (FBCM) detects an open or short circuit to ground in the headlight LO relay (RH) circuit with the ignition switched ON (engine off or on).
Fail-safe	—
Possible cause	• Headlight LO relay (RH) malfunction • Front body control module (FBCM) connector or terminal malfunction • Short to ground in the wiring harness between headlight LO relay (RH) terminal E and front body control module (FBCM) terminal 2V • Open circuit in the wiring harness between headlight LO relay (RH) terminal E and front body control module (FBCM) terminal 2V • Front body control module (FBCM) malfunction

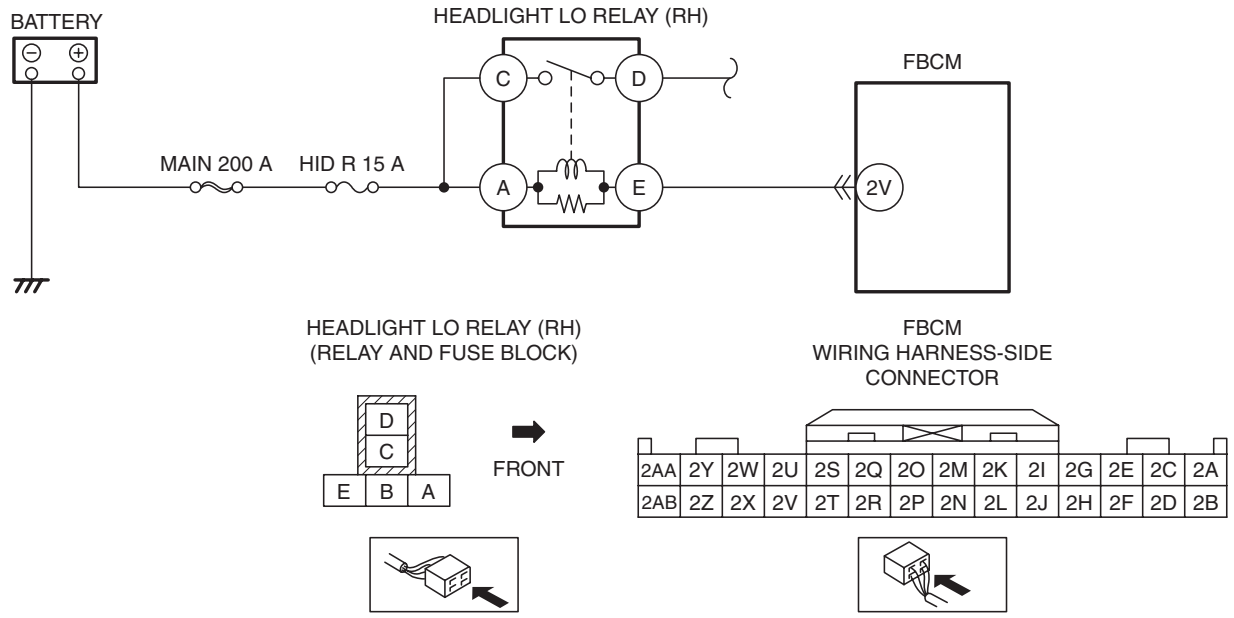

ON-BOARD DIAGNOSTIC [FRONT BODY CONTROL MODULE (FBCM)]

Diagnostic Procedure

Step	Inspection		Action
1	**VERIFY FRONT BODY CONTROL MODULE (FBCM) DTCs AGAIN** • Clear front body control module (FBCM) DTCs using the M-MDS. (See 09-02K-12 CLEARING DTC [FRONT BODY CONTROL MODULE (FBCM)].) • Switch the ignition ON (engine off or on). • Perform the front body control module (FBCM) DTC inspection using the M-MDS. (See 09-02K-10 DTC INSPECTION [FRONT BODY CONTROL MODULE (FBCM)].) • Is DTC B13FE:14 displayed?	Yes	Go to the next step.
		No	Go to Step 7.
2	**INSPECT HEADLIGHT LO RELAY (RH) FOR MALFUNCTION** • Switch the ignition to off. • Disconnect the negative battery cable. (See 01-17A-11 NEGATIVE BATTERY CABLE DISCONNECTION/CONNECTION [SKYACTIV-G 2.0].) (See 01-17A-13 NEGATIVE BATTERY CABLE DISCONNECTION/CONNECTION [SKYACTIV-G 2.0 (WITHOUT i-stop)].) (See 01-17B-9 NEGATIVE BATTERY CABLE DISCONNECTION/CONNECTION [SKYACTIV-D 2.2].) • Remove the headlight LO relay (RH). • Inspect the headlight LO relay (RH). (See 09-21-29 RELAY INSPECTION.) • Is the headlight LO relay (RH) normal?	Yes	Go to the next step.
		No	Replace the headlight LO relay (RH), then go to Step 6.
3	**INSPECT FRONT BODY CONTROL MODULE (FBCM) CONNECTOR CONDITION** • Disconnect the front body control module (FBCM) connector. • Inspect the connector engagement and connection condition and inspect the terminals for damage, deformation, corrosion, or disconnection. • Is the connector normal?	Yes	Go to the next step.
		No	Repair or replace the connector, then go to Step 6.
4	**INSPECT HEADLIGHT LO RELAY (RH) CONTROL CIRCUIT FOR SHORT TO GROUND** • Verify that the headlight LO relay (RH) is removed. • Verify that the front body control module (FBCM) connector is disconnected. • Inspect for continuity between front body control module (FBCM) terminal 2V (vehicle wiring harness side) and body ground. • Is there continuity?	Yes	Repair or replace the wiring harness, then go to Step 6.
		No	Go to the next step.
5	**INSPECT HEADLIGHT LO RELAY (RH) CONTROL CIRCUIT FOR OPEN CIRCUIT** • Verify that the headlight LO relay (RH) is removed. • Verify that the front body control module (FBCM) connector is disconnected. • Inspect the wiring harness for continuity between headlight LO relay (RH) terminal E (vehicle wiring harness side) and front body control module (FBCM) terminal 2V (vehicle wiring harness side). • Is there continuity?	Yes	Go to the next step.
		No	Repair or replace the wiring harness and go to the next step.

ON-BOARD DIAGNOSTIC [FRONT BODY CONTROL MODULE (FBCM)]

Step	Inspection		Action
6	**VERIFY THAT REPAIRS HAVE BEEN COMPLETED** • Reconnect all the disconnected connectors. • Reconnect the disconnected negative battery cable. (See 01-17A-11 NEGATIVE BATTERY CABLE DISCONNECTION/CONNECTION [SKYACTIV-G 2.0].) (See 01-17A-13 NEGATIVE BATTERY CABLE DISCONNECTION/CONNECTION [SKYACTIV-G 2.0 (WITHOUT i-stop)].) (See 01-17B-9 NEGATIVE BATTERY CABLE DISCONNECTION/CONNECTION [SKYACTIV-D 2.2].) • Clear front body control module (FBCM) DTCs using the M-MDS. (See 09-02K-12 CLEARING DTC [FRONT BODY CONTROL MODULE (FBCM)].) • Switch the ignition ON (engine off or on). • Perform the front body control module (FBCM) DTC inspection using the M-MDS. (See 09-02K-10 DTC INSPECTION [FRONT BODY CONTROL MODULE (FBCM)].) • Is DTC B13FE:14 displayed?	Yes	Repeat the inspection from Step 1. • If the malfunction recurs, replace the front body control module (FBCM), then go to the next step. (See 09-40-2 FRONT BODY CONTROL MODULE (FBCM) REMOVAL/INSTALLATION.)
		No	Go to the next step.
7	**VERIFY IF OTHER DTCs DISPLAYED** • Are any other DTCs displayed?	Yes	Repair the malfunctioning part according to the applicable DTC troubleshooting. (See 09-02K-13 DTC TABLE [FRONT BODY CONTROL MODULE (FBCM)].)
		No	DTC troubleshooting completed.

ON-BOARD DIAGNOSTIC [FRONT BODY CONTROL MODULE (FBCM)]

DTC B141E:12 [FRONT BODY CONTROL MODULE (FBCM)]

id0902p2008900

System malfunction location	**Headlight LO relay (LH) circuit malfunction**
Detection condition	• The front body control module (FBCM) detects a short to power supply in the headlight LO relay (LH) circuit with the ignition switched ON (engine off or on).
Fail-safe	—
Possible cause	• Headlight LO relay (LH) malfunction • Front body control module (FBCM) connector or terminal malfunction • Short to power supply in the wiring harness between headlight LO relay (LH) terminal A and front body control module (FBCM) terminal 1M • Front body control module (FBCM) malfunction

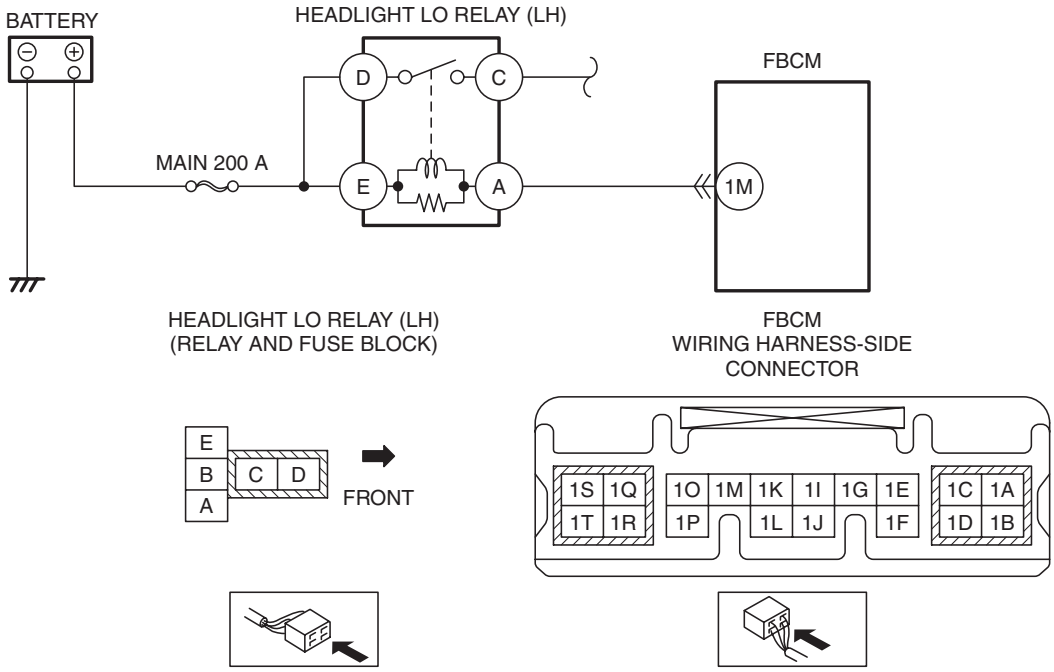

ON-BOARD DIAGNOSTIC [FRONT BODY CONTROL MODULE (FBCM)]

Diagnostic Procedure

Step	Inspection		Action
1	**VERIFY FRONT BODY CONTROL MODULE (FBCM) DTCs AGAIN** • Clear front body control module (FBCM) DTCs using the M-MDS. (See 09-02K-12 CLEARING DTC [FRONT BODY CONTROL MODULE (FBCM)].) • Switch the ignition ON (engine off or on). • Perform the front body control module (FBCM) DTC inspection using the M-MDS. (See 09-02K-10 DTC INSPECTION [FRONT BODY CONTROL MODULE (FBCM)].) • Is DTC B141E:12 displayed?	Yes	Go to the next step.
		No	Go to Step 6.
2	**INSPECT HEADLIGHT LO RELAY (LH) FOR MALFUNCTION** • Switch the ignition to off. • Disconnect the negative battery cable. (See 01-17A-11 NEGATIVE BATTERY CABLE DISCONNECTION/CONNECTION [SKYACTIV-G 2.0].) (See 01-17A-13 NEGATIVE BATTERY CABLE DISCONNECTION/CONNECTION [SKYACTIV-G 2.0 (WITHOUT i-stop)].) (See 01-17B-9 NEGATIVE BATTERY CABLE DISCONNECTION/CONNECTION [SKYACTIV-D 2.2].) • Remove the headlight LO relay (LH). • Inspect the headlight LO relay (LH). (See 09-21-29 RELAY INSPECTION.) • Is the headlight LO relay (LH) normal?	Yes	Go to the next step.
		No	Replace the headlight LO relay (LH), then go to Step 5.
3	**INSPECT FRONT BODY CONTROL MODULE (FBCM) CONNECTOR CONDITION** • Disconnect the front body control module (FBCM) connector. • Inspect the connector engagement and connection condition and inspect the terminals for damage, deformation, corrosion, or disconnection. • Is the connector normal?	Yes	Go to the next step.
		No	Repair or replace the connector, then go to Step 5.
4	**INSPECT HEADLIGHT LO RELAY (LH) CONTROL CIRCUIT FOR SHORT TO POWER SUPPLY** • Verify that the headlight LO relay (LH) is removed. • Verify that the front body control module (FBCM) connector is disconnected. • Connect the negative battery cable. (See 01-17A-11 NEGATIVE BATTERY CABLE DISCONNECTION/CONNECTION [SKYACTIV-G 2.0].) (See 01-17A-13 NEGATIVE BATTERY CABLE DISCONNECTION/CONNECTION [SKYACTIV-G 2.0 (WITHOUT i-stop)].) (See 01-17B-9 NEGATIVE BATTERY CABLE DISCONNECTION/CONNECTION [SKYACTIV-D 2.2].) • Switch the ignition ON (engine off or on). • Measure the voltage at front body control module (FBCM) terminal 1M (vehicle wiring harness side). • Is the voltage **0 V**?	Yes	Go to the next step.
		No	Repair or replace the wiring harness and go to the next step.

ON-BOARD DIAGNOSTIC [FRONT BODY CONTROL MODULE (FBCM)]

Step	Inspection		Action
5	**VERIFY THAT REPAIRS HAVE BEEN COMPLETED** • Reconnect all the disconnected connectors. • Reconnect the disconnected negative battery cable. (See 01-17A-11 NEGATIVE BATTERY CABLE DISCONNECTION/CONNECTION [SKYACTIV-G 2.0].) (See 01-17A-13 NEGATIVE BATTERY CABLE DISCONNECTION/CONNECTION [SKYACTIV-G 2.0 (WITHOUT i-stop)].) (See 01-17B-9 NEGATIVE BATTERY CABLE DISCONNECTION/CONNECTION [SKYACTIV-D 2.2].) • Clear front body control module (FBCM) DTCs using the M-MDS. (See 09-02K-12 CLEARING DTC [FRONT BODY CONTROL MODULE (FBCM)].) • Switch the ignition ON (engine off or on). • Operate the light switch in HEAD position. • Perform the front body control module (FBCM) DTC inspection using the M-MDS. (See 09-02K-10 DTC INSPECTION [FRONT BODY CONTROL MODULE (FBCM)].) • Is DTC B141E:12 displayed?	Yes	Repeat the inspection from Step 1. • If the malfunction recurs, replace the front body control module (FBCM), then go to the next step. (See 09-40-2 FRONT BODY CONTROL MODULE (FBCM) REMOVAL/INSTALLATION.)
		No	Go to the next step.
6	**VERIFY IF OTHER DTCs DISPLAYED** • Are any other DTCs displayed?	Yes	Repair the malfunctioning part according to the applicable DTC troubleshooting. (See 09-02K-13 DTC TABLE [FRONT BODY CONTROL MODULE (FBCM)].)
		No	DTC troubleshooting completed.

ON-BOARD DIAGNOSTIC [FRONT BODY CONTROL MODULE (FBCM)]

DTC B1C79:97 [FRONT BODY CONTROL MODULE (FBCM)]

id0902p2009100

System malfunction location	**Washer motor switch circuit malfunction**
Detection condition	• The front body control module (FBCM) detects a malfunction in the washer motor switch circuit for **2 min or more** with the ignition switched ON (engine off or on).
Fail-safe	—
Possible cause	• Start stop unit malfunction • Wiper switch malfunction • Front body control module (FBCM) malfunction
System wiring diagram	—

Diagnostic Procedure

Step	Inspection		Action
1	**VERIFY FRONT BODY CONTROL MODULE (FBCM) DTCs AGAIN** • Clear front body control module (FBCM) DTCs using the M-MDS. (See 09-02K-12 CLEARING DTC [FRONT BODY CONTROL MODULE (FBCM)].) • Switch the ignition ON (engine off or on) and wait for **2 min or more**. • Perform the front body control module (FBCM) DTC inspection using the M-MDS. (See 09-02K-10 DTC INSPECTION [FRONT BODY CONTROL MODULE (FBCM)].) • Is DTC B1C79:97 displayed?	Yes	Go to the next step.
		No	Go to Step 4.
2	**INSPECT WIPER SWITCH** • Inspect the wiper switch. (See 09-19-47 WINDSHIELD WIPER AND WASHER SWITCH INSPECTION.) • Is the wiper switch normal?	Yes	Replace the start stop unit, then go to the next step. (See 09-14-53 START STOP UNIT REMOVAL/INSTALLATION.)
		No	Replace the wiper and washer switch, then go to the next step. (See 09-19-45 WIPER AND WASHER SWITCH REMOVAL/INSTALLATION.)
3	**VERIFY THAT REPAIRS HAVE BEEN COMPLETED** • Clear front body control module (FBCM) DTCs using the M-MDS. (See 09-02K-12 CLEARING DTC [FRONT BODY CONTROL MODULE (FBCM)].) • Switch the ignition ON (engine off or on) and wait for **2 min or more**. • Perform the front body control module (FBCM) DTC inspection using the M-MDS. (See 09-02K-10 DTC INSPECTION [FRONT BODY CONTROL MODULE (FBCM)].) • Is DTC B1C79:97 displayed?	Yes	Repeat the inspection from Step 1. • If the malfunction recurs, replace the front body control module (FBCM), then go to the next step. (See 09-40-2 FRONT BODY CONTROL MODULE (FBCM) REMOVAL/INSTALLATION.)
		No	Go to the next step.
4	**VERIFY IF OTHER DTCs DISPLAYED** • Are any other DTCs displayed?	Yes	Repair the malfunctioning part according to the applicable DTC troubleshooting. (See 09-02K-13 DTC TABLE [FRONT BODY CONTROL MODULE (FBCM)].)
		No	DTC troubleshooting completed.

ON-BOARD DIAGNOSTIC [FRONT BODY CONTROL MODULE (FBCM)]

DTC B1C82:97 [FRONT BODY CONTROL MODULE (FBCM)]

id0902p2009200

System malfunction location	**Headlight cleaner motor switch circuit malfunction**
Detection condition	• The front body control module (FBCM) detects a malfunction in headlight cleaner motor switch circuit for **2 min or more** with the ignition switched ON (engine off or on).
Fail-safe	—
Possible cause	• Start stop unit malfunction • Wiper switch malfunction • Front body control module (FBCM) malfunction
System wiring diagram	—

Diagnostic Procedure

Step	Inspection		Action
1	**VERIFY FRONT BODY CONTROL MODULE (FBCM) DTCs AGAIN** • Clear front body control module (FBCM) DTCs using the M-MDS. (See 09-02K-12 CLEARING DTC [FRONT BODY CONTROL MODULE (FBCM)].) • Switch the ignition ON (engine off or on) and wait for **2 min or more**. • Perform the front body control module (FBCM) DTC inspection using the M-MDS. (See 09-02K-10 DTC INSPECTION [FRONT BODY CONTROL MODULE (FBCM)].) • Is DTC B1C82:97 displayed?	Yes	Go to the next step.
		No	Go to Step 4.
2	**INSPECT WIPER SWITCH** • Inspect the wiper switch. (See 09-19-47 WINDSHIELD WIPER AND WASHER SWITCH INSPECTION.) • Is the wiper switch normal?	Yes	Replace the start stop unit, then go to the next step. (See 09-14-53 START STOP UNIT REMOVAL/INSTALLATION.)
		No	Replace the wiper and washer switch, then go to the next step. (See 09-19-45 WIPER AND WASHER SWITCH REMOVAL/INSTALLATION.)
3	**VERIFY THAT REPAIRS HAVE BEEN COMPLETED** • Reconnect all the disconnected connectors. • Reconnect the disconnected negative battery cable. (See 01-17A-11 NEGATIVE BATTERY CABLE DISCONNECTION/CONNECTION [SKYACTIV-G 2.0].) (See 01-17A-13 NEGATIVE BATTERY CABLE DISCONNECTION/CONNECTION [SKYACTIV-G 2.0 (WITHOUT i-stop)].) (See 01-17B-9 NEGATIVE BATTERY CABLE DISCONNECTION/CONNECTION [SKYACTIV-D 2.2].) • Clear front body control module (FBCM) DTCs using the M-MDS. (See 09-02K-12 CLEARING DTC [FRONT BODY CONTROL MODULE (FBCM)].) • Switch the ignition ON (engine off or on) and wait for **2 min or more**. • Perform the front body control module (FBCM) DTC inspection using the M-MDS. (See 09-02K-10 DTC INSPECTION [FRONT BODY CONTROL MODULE (FBCM)].) • Is DTC B1C82:97 displayed?	Yes	Repeat the inspection from Step 1. • If the malfunction recurs, replace the front body control module (FBCM), then go to the next step. (See 09-40-2 FRONT BODY CONTROL MODULE (FBCM) REMOVAL/INSTALLATION.)
		No	Go to the next step.
4	**VERIFY IF OTHER DTCs DISPLAYED** • Are any other DTCs displayed?	Yes	Repair the malfunctioning part according to the applicable DTC troubleshooting. (See 09-02K-13 DTC TABLE [FRONT BODY CONTROL MODULE (FBCM)].)
		No	DTC troubleshooting completed.

ON-BOARD DIAGNOSTIC [FRONT BODY CONTROL MODULE (FBCM)]

DTC B1C84:12 [FRONT BODY CONTROL MODULE (FBCM)]

id0902p2009300

System malfunction location	**Rear window defroster circuit malfunction**
Detection condition	• The front body control module (FBCM) detects a short to power supply in the rear window defroster relay circuit with the ignition switched ON (engine off or on).
Fail-safe	—
Possible cause	• Rear window defroster relay malfunction • Front body control module (FBCM) connector or terminal malfunction • Short to power supply in wiring harness between rear window defroster relay terminal E and front body control module (FBCM) terminal 1P • Front body control module (FBCM) malfunction

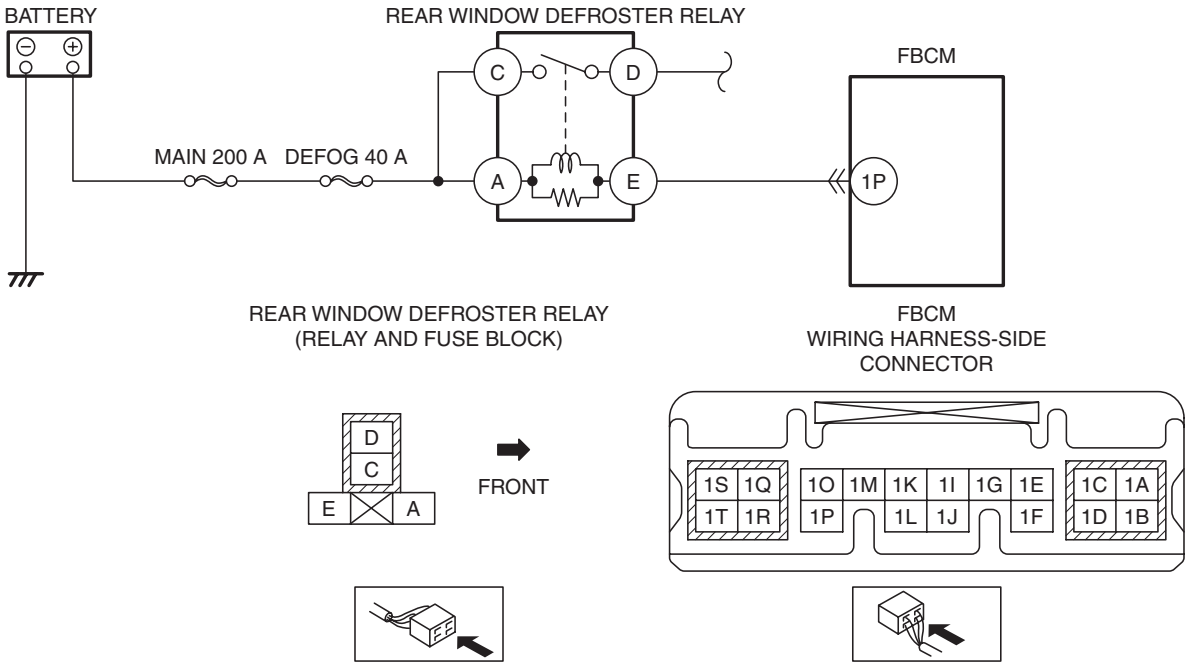

ON-BOARD DIAGNOSTIC [FRONT BODY CONTROL MODULE (FBCM)]

Diagnostic Procedure

Step	Inspection		Action
1	**VERIFY FRONT BODY CONTROL MODULE (FBCM) DTCs AGAIN** • Clear front body control module (FBCM) DTCs using the M-MDS. (See 09-02K-12 CLEARING DTC [FRONT BODY CONTROL MODULE (FBCM)].) • Switch the ignition ON (engine off or on). • Perform the front body control module (FBCM) DTC inspection using the M-MDS. (See 09-02K-10 DTC INSPECTION [FRONT BODY CONTROL MODULE (FBCM)].) • Is DTC B1C84:12 displayed?	Yes	Go to the next step.
		No	Go to Step 6.
2	**INSPECT REAR WINDOW DEFROSTER RELAY FOR MALFUNCTION** • Switch the ignition to off. • Disconnect the negative battery cable. (See 01-17A-11 NEGATIVE BATTERY CABLE DISCONNECTION/CONNECTION [SKYACTIV-G 2.0].) (See 01-17A-13 NEGATIVE BATTERY CABLE DISCONNECTION/CONNECTION [SKYACTIV-G 2.0 (WITHOUT i-stop)].) (See 01-17B-9 NEGATIVE BATTERY CABLE DISCONNECTION/CONNECTION [SKYACTIV-D 2.2].) • Remove the rear window defroster relay. • Inspect the rear window defroster relay. (See 09-21-29 RELAY INSPECTION.) • Is the rear window defroster relay normal?	Yes	Go to the next step.
		No	Replace the rear window defroster relay, then go to Step 5.
3	**INSPECT FRONT BODY CONTROL MODULE (FBCM) CONNECTOR CONDITION** • Disconnect the front body control module (FBCM) connector. • Inspect the connector engagement and connection condition and inspect the terminals for damage, deformation, corrosion, or disconnection. • Is the connector normal?	Yes	Go to the next step.
		No	Repair or replace the connector, then go to Step 5.
4	**INSPECT REAR WINDOW DEFROSTER RELAY CONTROL CIRCUIT FOR SHORT TO POWER SUPPLY** • Verify that the rear window defroster relay is removed. • Verify that the front body control module (FBCM) connector is disconnected. • Connect the negative battery cable. (See 01-17A-11 NEGATIVE BATTERY CABLE DISCONNECTION/CONNECTION [SKYACTIV-G 2.0].) (See 01-17A-13 NEGATIVE BATTERY CABLE DISCONNECTION/CONNECTION [SKYACTIV-G 2.0 (WITHOUT i-stop)].) (See 01-17B-9 NEGATIVE BATTERY CABLE DISCONNECTION/CONNECTION [SKYACTIV-D 2.2].) • Switch the ignition ON (engine off or on). • Measure the voltage at front body control module (FBCM) terminal 1P (vehicle wiring harness side). • Is the voltage **0 V**?	Yes	Go to the next step.
		No	Repair or replace the wiring harness and go to the next step.

ON-BOARD DIAGNOSTIC [FRONT BODY CONTROL MODULE (FBCM)]

Step	Inspection		Action
5	**VERIFY THAT REPAIRS HAVE BEEN COMPLETED** • Reconnect all the disconnected connectors. • Reconnect the disconnected negative battery cable. (See 01-17A-11 NEGATIVE BATTERY CABLE DISCONNECTION/CONNECTION [SKYACTIV-G 2.0].) (See 01-17A-13 NEGATIVE BATTERY CABLE DISCONNECTION/CONNECTION [SKYACTIV-G 2.0 (WITHOUT i-stop)].) (See 01-17B-9 NEGATIVE BATTERY CABLE DISCONNECTION/CONNECTION [SKYACTIV-D 2.2].) • Clear front body control module (FBCM) DTCs using the M-MDS. (See 09-02K-12 CLEARING DTC [FRONT BODY CONTROL MODULE (FBCM)].) • Switch the ignition ON (engine off or on). • Operate the rear window defroster by pushing rear window defroster switch. • Perform the front body control module (FBCM) DTC inspection using the M-MDS. (See 09-02K-10 DTC INSPECTION [FRONT BODY CONTROL MODULE (FBCM)].) • Is DTC B1C84:12 displayed?	Yes	Repeat the inspection from Step 1. • If the malfunction recurs, replace the front body control module (FBCM), then go to the next step. (See 09-40-2 FRONT BODY CONTROL MODULE (FBCM) REMOVAL/INSTALLATION.)
		No	Go to the next step.
6	**VERIFY IF OTHER DTCs DISPLAYED** • Are any other DTCs displayed?	Yes	Repair the malfunctioning part according to the applicable DTC troubleshooting. (See 09-02K-13 DTC TABLE [FRONT BODY CONTROL MODULE (FBCM)].)
		No	DTC troubleshooting completed.

ON-BOARD DIAGNOSTIC [FRONT BODY CONTROL MODULE (FBCM)]

DTC B1C84:14 [FRONT BODY CONTROL MODULE (FBCM)]

id0902p2009400

System malfunction location	**Rear window defroster circuit malfunction**
Detection condition	• The front body control module (FBCM) detects an open or short to ground in the rear window defroster relay circuit with the ignition switched ON (engine off or on).
Fail-safe	—
Possible cause	• Rear window defroster relay malfunction • Front body control module (FBCM) connector or terminal malfunction • Short to ground in wiring harness between rear window defroster relay terminal E and front body control module (FBCM) terminal 1P • Open circuit in wiring harness between rear window defroster relay terminal E and front body control module (FBCM) terminal 1P • Front body control module (FBCM) malfunction

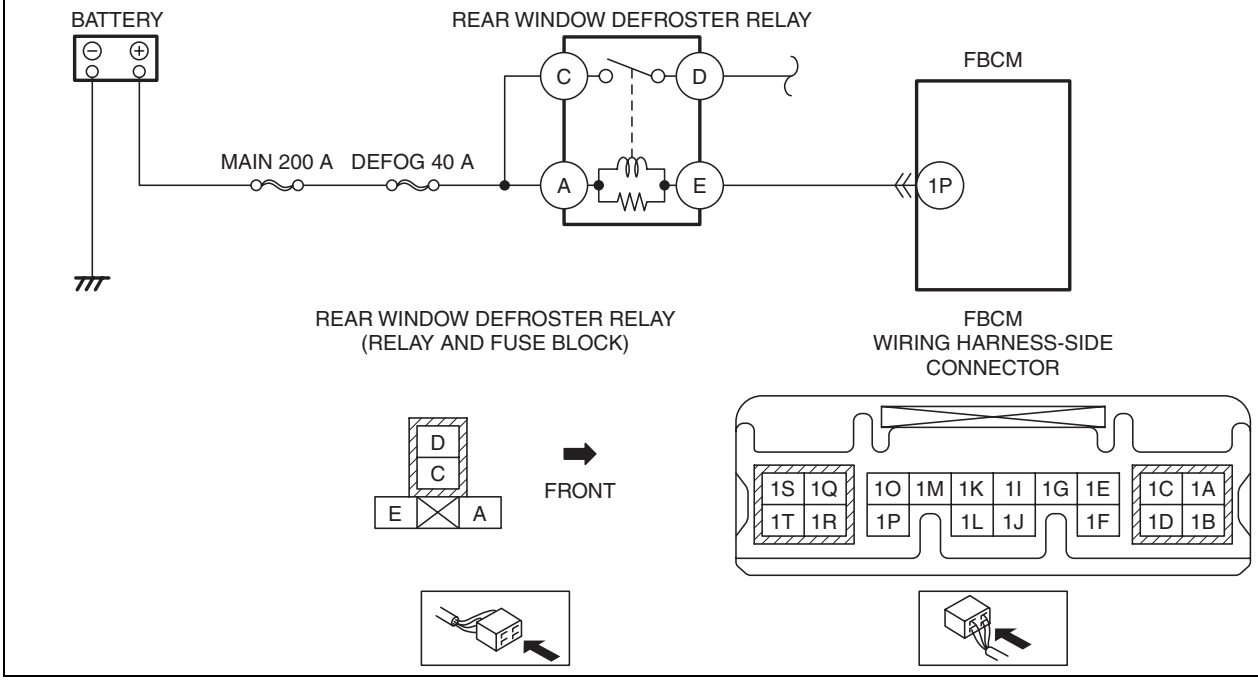

ON-BOARD DIAGNOSTIC [FRONT BODY CONTROL MODULE (FBCM)]

Diagnostic Procedure

Step	Inspection		Action
1	**VERIFY FRONT BODY CONTROL MODULE (FBCM) DTCs AGAIN** • Clear front body control module (FBCM) DTCs using the M-MDS. (See 09-02K-12 CLEARING DTC [FRONT BODY CONTROL MODULE (FBCM)].) • Switch the ignition ON (engine off or on). • Perform the front body control module (FBCM) DTC inspection using the M-MDS. (See 09-02K-10 DTC INSPECTION [FRONT BODY CONTROL MODULE (FBCM)].) • Is DTC B1C84:14 displayed?	Yes	Go to the next step.
		No	Go to Step 7.
2	**INSPECT REAR WINDOW DEFROSTER RELAY FOR MALFUNCTION** • Switch the ignition to off. • Disconnect the negative battery cable. (See 01-17A-11 NEGATIVE BATTERY CABLE DISCONNECTION/CONNECTION [SKYACTIV-G 2.0].) (See 01-17A-13 NEGATIVE BATTERY CABLE DISCONNECTION/CONNECTION [SKYACTIV-G 2.0 (WITHOUT i-stop)].) (See 01-17B-9 NEGATIVE BATTERY CABLE DISCONNECTION/CONNECTION [SKYACTIV-D 2.2].) • Remove the rear window defroster relay. • Inspect the rear window defroster relay. (See 09-21-29 RELAY INSPECTION.) • Is the rear window defroster relay normal?	Yes	Go to the next step.
		No	Replace the rear window defroster relay, then go to Step 6.
3	**INSPECT FRONT BODY CONTROL MODULE (FBCM) CONNECTOR CONDITION** • Disconnect the front body control module (FBCM) connector. • Inspect the connector engagement and connection condition and inspect the terminals for damage, deformation, corrosion, or disconnection. • Is the connector normal?	Yes	Go to the next step.
		No	Repair or replace the connector, then go to Step 6.
4	**INSPECT REAR WINDOW DEFROSTER RELAY CONTROL CIRCUIT FOR SHORT TO GROUND** • Verify that the rear window defroster relay is removed. • Verify that the front body control module (FBCM) connector is disconnected. • Inspect for continuity between front body control module (FBCM) terminal 1P (vehicle wiring harness side) and body ground. • Is there continuity?	Yes	Repair or replace the wiring harness, then go to Step 6.
		No	Go to the next step.
5	**INSPECT REAR WINDOW DEFROSTER RELAY CONTROL CIRCUIT FOR OPEN CIRCUIT** • Verify that the rear window defroster relay is removed. • Verify that the front body control module (FBCM) connector is disconnected. • Inspect the wiring harness for continuity between rear window defroster relay terminal E (vehicle wiring harness side) and front body control module (FBCM) terminal 1P (vehicle wiring harness side). • Is there continuity?	Yes	Go to the next step.
		No	Repair or replace the wiring harness and go to the next step.

ON-BOARD DIAGNOSTIC [FRONT BODY CONTROL MODULE (FBCM)]

Step	Inspection		Action
6	**VERIFY THAT REPAIRS HAVE BEEN COMPLETED** • Reconnect all the disconnected connectors. • Reconnect the disconnected negative battery cable. (See 01-17A-11 NEGATIVE BATTERY CABLE DISCONNECTION/CONNECTION [SKYACTIV-G 2.0].) (See 01-17A-13 NEGATIVE BATTERY CABLE DISCONNECTION/CONNECTION [SKYACTIV-G 2.0 (WITHOUT i-stop)].) (See 01-17B-9 NEGATIVE BATTERY CABLE DISCONNECTION/CONNECTION [SKYACTIV-D 2.2].) • Clear front body control module (FBCM) DTCs using the M-MDS. (See 09-02K-12 CLEARING DTC [FRONT BODY CONTROL MODULE (FBCM)].) • Switch the ignition ON (engine off or on). • Perform the front body control module (FBCM) DTC inspection using the M-MDS. (See 09-02K-10 DTC INSPECTION [FRONT BODY CONTROL MODULE (FBCM)].) • Is DTC B1C84:14 displayed?	Yes	Repeat the inspection from Step 1. • If the malfunction recurs, replace the front body control module (FBCM), then go to the next step. (See 09-40-2 FRONT BODY CONTROL MODULE (FBCM) REMOVAL/INSTALLATION.)
		No	Go to the next step.
7	**VERIFY IF OTHER DTCs DISPLAYED** • Are any other DTCs displayed?	Yes	Repair the malfunctioning part according to the applicable DTC troubleshooting. (See 09-02K-13 DTC TABLE [FRONT BODY CONTROL MODULE (FBCM)].)
		No	DTC troubleshooting completed.

ON-BOARD DIAGNOSTIC [FRONT BODY CONTROL MODULE (FBCM)]

DTC B1D06:11 [FRONT BODY CONTROL MODULE (FBCM)]

id0902p2009500

System malfunction location	**Turn light (LH) circuit malfunction**
Detection condition	• The front body control module (FBCM) detects a short to ground in the turn light (LH) circuit with the ignition switched ON (engine off or on).
Fail-safe	—
Possible cause	• Front combination light (LH) connector or terminal malfunction • Front turn light bulb (LH) malfunction • Rear turn light (LH) connector or terminal malfunction • Rear turn light bulb (LH) malfunction • Malfunction in power outer mirror (LH) connector or terminal • Side turn light (LH) malfunction • Front body control module (FBCM) connector or terminal malfunction • Short to ground in wiring harness between the following terminals: — Front combination light (LH) terminal D and front body control module (FBCM) terminal 2B (without headlight leveling system) — Front combination light (LH) terminal E and front body control module (FBCM) terminal 2B (with headlight leveling system) — Power outer mirror (LH) terminal E and front body control module (FBCM) terminal 2F — Rear turn light (LH) terminal A and front body control module (FBCM) terminal 2D • Front body control module (FBCM) malfunction

ON-BOARD DIAGNOSTIC [FRONT BODY CONTROL MODULE (FBCM)]

System malfunction location	Turn light (LH) circuit malfunction

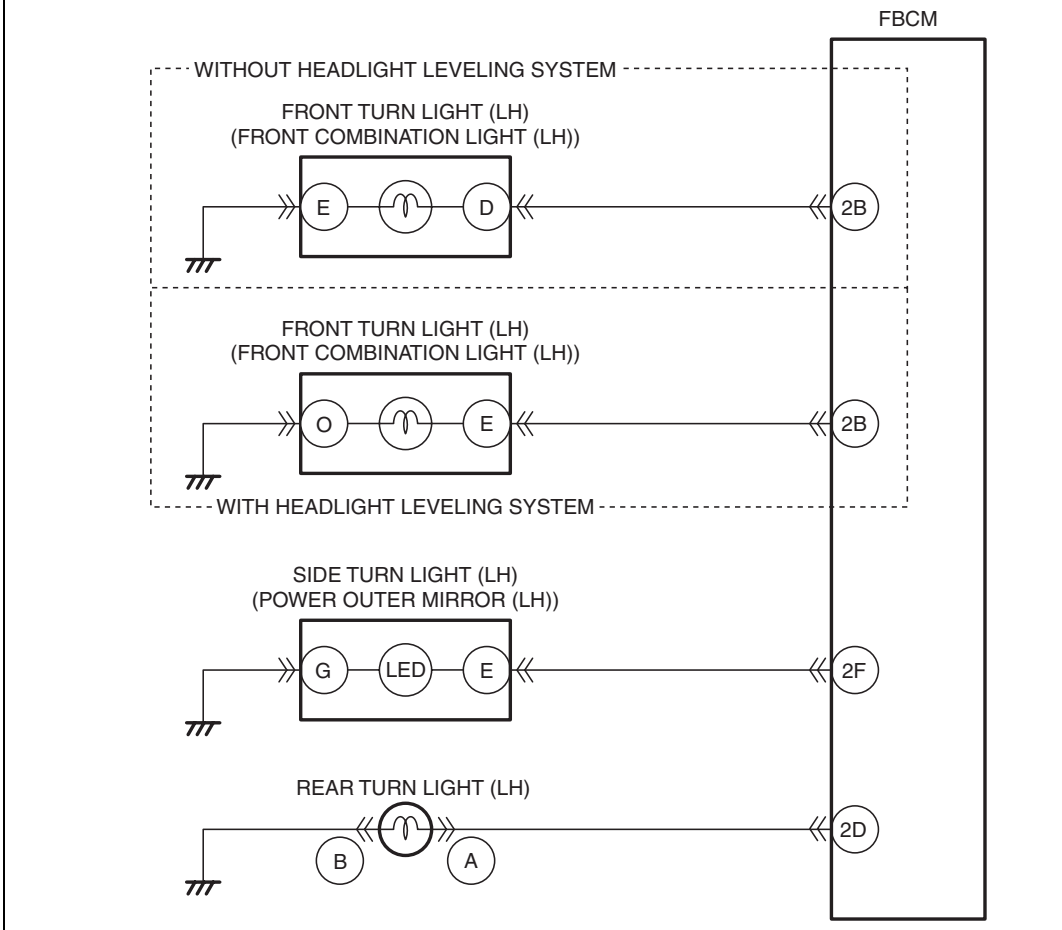

FRONT COMBINATION LIGHT (LH) WIRING HARNESS-SIDE CONNECTOR

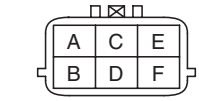

(WITHOUT HEADLIGHT LEVELING SYSTEM)

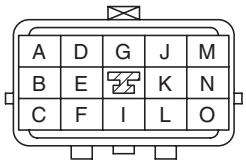

(WITH HEADLIGHT LEVELING SYSTEM)

POWER OUTER MIRROR (LH) WIRING HARNESS-SIDE CONNECTOR

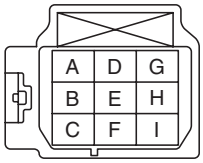

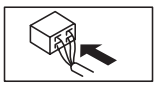

REAR TURN LIGHT (LH) WIRING HARNESS-SIDE CONNECTOR

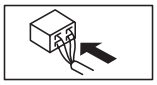

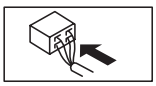

FBCM WIRING HARNESS-SIDE CONNECTOR

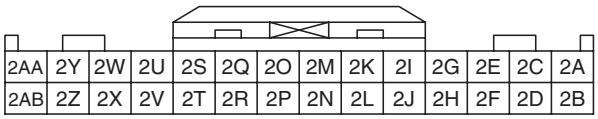

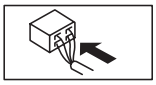

ON-BOARD DIAGNOSTIC [FRONT BODY CONTROL MODULE (FBCM)]

Diagnostic Procedure

Step	Inspection		Action
1	**VERIFY FRONT BODY CONTROL MODULE (FBCM) DTCs AGAIN** • Clear front body control module (FBCM) DTCs using the M-MDS. (See 09-02K-12 CLEARING DTC [FRONT BODY CONTROL MODULE (FBCM)].) • Switch the ignition ON (engine off or on). • Operate the turn switch in LH position. • Perform the front body control module (FBCM) DTC inspection using the M-MDS. (See 09-02K-10 DTC INSPECTION [FRONT BODY CONTROL MODULE (FBCM)].) • Is DTC B1D06:11 displayed?	Yes	Go to the next step.
		No	Go to Step 11.
2	**INSPECT FRONT COMBINATION LIGHT (LH) CONNECTOR CONDITION** • Switch the ignition to off. • Disconnect the negative battery cable. (See 01-17A-11 NEGATIVE BATTERY CABLE DISCONNECTION/CONNECTION [SKYACTIV-G 2.0].) (See 01-17A-13 NEGATIVE BATTERY CABLE DISCONNECTION/CONNECTION [SKYACTIV-G 2.0 (WITHOUT i-stop)].) (See 01-17B-9 NEGATIVE BATTERY CABLE DISCONNECTION/CONNECTION [SKYACTIV-D 2.2].) • Disconnect the front combination light (LH) connector. • Inspect the connector engagement and connection condition and inspect the terminals for damage, deformation, corrosion, or disconnection. • Is the connector normal?	Yes	Go to the next step.
		No	Repair or replace the connector, then go to Step 10.
3	**INSPECT FRONT TURN LIGHT BULB (LH)** • Inspect the front turn light bulb (LH). • Is the front turn light bulb (LH) normal?	Yes	Go to the next step.
		No	Replace the front turn light bulb (LH), then go to Step 10. (See 09-18-39 FRONT TURN LIGHT BULB REMOVAL/INSTALLATION.)
4	**INSPECT REAR TURN LIGHT (LH) CONNECTOR CONDITION** • Disconnect the rear turn light (LH) connector. • Inspect the connector engagement and connection condition and inspect the terminals for damage, deformation, corrosion, or disconnection. • Is the connector normal?	Yes	Go to the next step.
		No	Repair or replace the connector, then go to Step 10.
5	**INSPECT REAR TURN LIGHT BULB (LH)** • Inspect the rear turn light bulb (LH). • Is the rear turn light bulb (LH) normal?	Yes	Go to the next step.
		No	Replace the rear turn light bulb (LH), then go to Step 10. (See 09-18-57 REAR TURN LIGHT BULB REMOVAL/INSTALLATION.)
6	**INSPECT POWER OUTER MIRROR (LH) CONNECTOR CONDITION** • Disconnect the power outer mirror (LH) connector. • Inspect the connector engagement and connection condition and inspect the terminals for damage, deformation, corrosion, or disconnection. • Is the connector normal?	Yes	Go to the next step.
		No	Repair or replace the connector, then go to Step 10.
7	**INSPECT SIDE TURN LIGHT (LH)** • Inspect the side turn light (LH). (See 09-18-52 SIDE TURN LIGHT INSPECTION.) • Is the side turn light (LH) normal?	Yes	Go to the next step.
		No	Replace the side turn light (LH), then go to Step 10. (See 09-18-52 SIDE TURN LIGHT REMOVAL/INSTALLATION.)

ON-BOARD DIAGNOSTIC [FRONT BODY CONTROL MODULE (FBCM)]

Step	Inspection		Action
8	**INSPECT FRONT BODY CONTROL MODULE (FBCM) CONNECTOR CONDITION** • Disconnect the front body control module (FBCM) connector. • Inspect the connector engagement and connection condition and inspect the terminals for damage, deformation, corrosion, or disconnection. • Is the connector normal?	Yes	Go to the next step.
		No	Repair or replace the connector, then go to Step 10.
9	**INSPECT TURN LIGHT (LH) CONTROL CIRCUIT FOR SHORT TO GROUND** • Verify that the front combination light (LH), rear turn light (LH), power outer mirror (LH) and front body control module (FBCM) connectors are disconnected. • Inspect for continuity between the following terminals (vehicle wiring harness side) and body ground. — Front body control module (FBCM) terminal 2B — Front body control module (FBCM) terminal 2F — Front body control module (FBCM) terminal 2D • Is there continuity?	Yes	Repair or replace the wiring harness, then go to the next step.
		No	Go to the next step.
10	**VERIFY THAT REPAIRS HAVE BEEN COMPLETED** • Reconnect all the disconnected connectors. • Reconnect the disconnected negative battery cable. (See 01-17A-11 NEGATIVE BATTERY CABLE DISCONNECTION/CONNECTION [SKYACTIV-G 2.0].) (See 01-17A-13 NEGATIVE BATTERY CABLE DISCONNECTION/CONNECTION [SKYACTIV-G 2.0 (WITHOUT i-stop)].) (See 01-17B-9 NEGATIVE BATTERY CABLE DISCONNECTION/CONNECTION [SKYACTIV-D 2.2].) • Clear front body control module (FBCM) DTCs using the M-MDS. (See 09-02K-12 CLEARING DTC [FRONT BODY CONTROL MODULE (FBCM)].) • Switch the ignition ON (engine off or on). • Operate the turn switch in LH position. • Perform the front body control module (FBCM) DTC inspection using the M-MDS. (See 09-02K-10 DTC INSPECTION [FRONT BODY CONTROL MODULE (FBCM)].) • Is DTC B1D06:11 displayed?	Yes	Repeat the inspection from Step 1. • If the malfunction recurs, replace the front body control module (FBCM), then go to the next step. (See 09-40-2 FRONT BODY CONTROL MODULE (FBCM) REMOVAL/INSTALLATION.)
		No	Go to the next step.
11	**VERIFY IF OTHER DTCs DISPLAYED** • Are any other DTCs displayed?	Yes	Repair the malfunctioning part according to the applicable DTC troubleshooting. (See 09-02K-13 DTC TABLE [FRONT BODY CONTROL MODULE (FBCM)].)
		No	DTC troubleshooting completed.

ON-BOARD DIAGNOSTIC [FRONT BODY CONTROL MODULE (FBCM)]

DTC B1D06:13 [FRONT BODY CONTROL MODULE (FBCM)]

id0902p2009600

System malfunction location	Turn light (LH) circuit malfunction
Detection condition	• The front body control module (FBCM) detects an open or short to power supply in the turn light (LH) circuit with the ignition switched ON (engine off or on).
Fail-safe	—
Possible cause	• Front combination light (LH) connector or terminal malfunction • Front turn light bulb (LH) malfunction • Rear turn light (LH) connector or terminal malfunction • Rear turn light bulb (LH) malfunction • Malfunction in power outer mirror (LH) connector or terminal • Side turn light (LH) malfunction • Front body control module (FBCM) connector or terminal malfunction • Short to power supply in wiring harness between the following terminals: — Front combination light (LH) terminal D and front body control module (FBCM) terminal 2B (without headlight leveling system) — Front combination light (LH) terminal E and front body control module (FBCM) terminal 2B (with headlight leveling system) — Power outer mirror (LH) terminal E and front body control module (FBCM) terminal 2F — Rear turn light (LH) terminal A and front body control module (FBCM) terminal 2D • Open circuit in wiring harness between the following terminals: — Front combination light (LH) terminal D and front body control module (FBCM) terminal 2B (without headlight leveling system) — Front combination light (LH) terminal E and front body control module (FBCM) terminal 2B (with headlight leveling system) — Power outer mirror (LH) terminal E and front body control module (FBCM) terminal 2F — Rear turn light (LH) terminal A and front body control module (FBCM) terminal 2D • Front body control module (FBCM) malfunction

ON-BOARD DIAGNOSTIC [FRONT BODY CONTROL MODULE (FBCM)]

System malfunction location	Turn light (LH) circuit malfunction

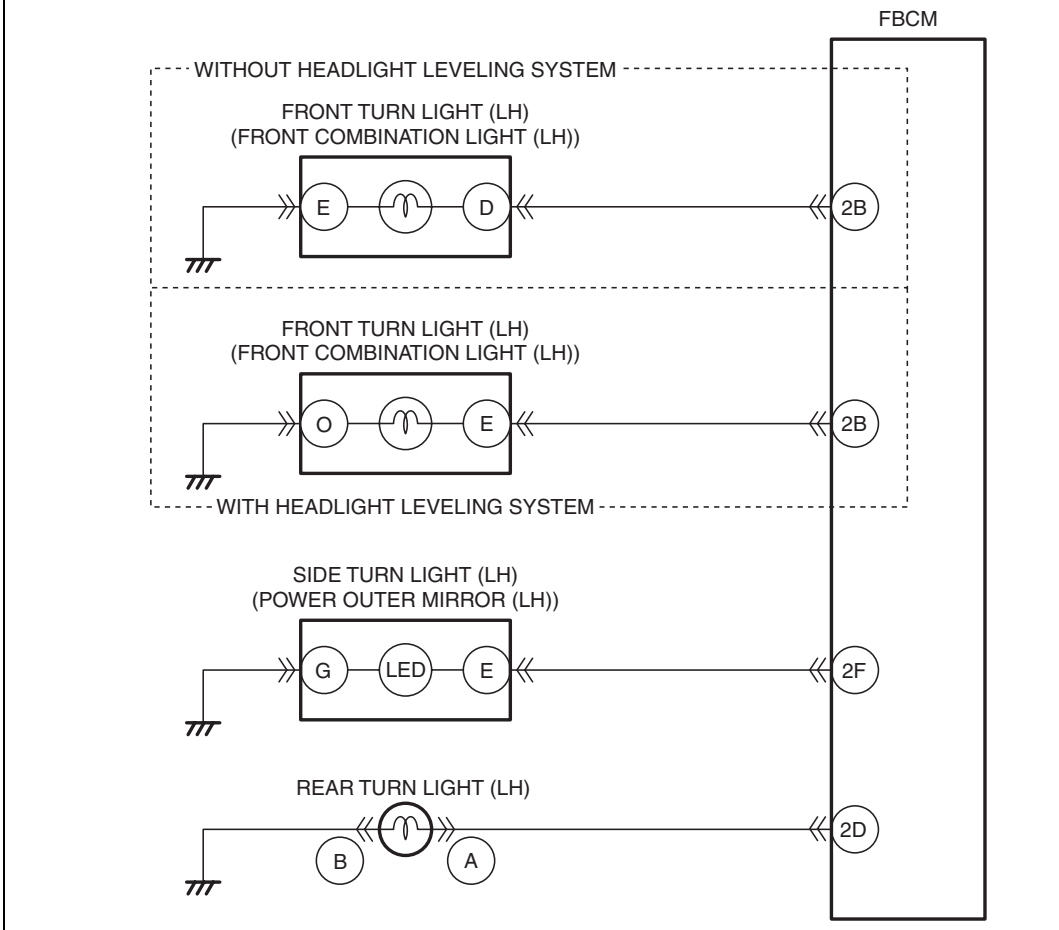

FRONT COMBINATION LIGHT (LH) WIRING HARNESS-SIDE CONNECTOR

(WITHOUT HEADLIGHT LEVELING SYSTEM)

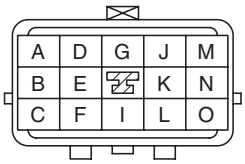

(WITH HEADLIGHT LEVELING SYSTEM)

POWER OUTER MIRROR (LH) WIRING HARNESS-SIDE CONNECTOR

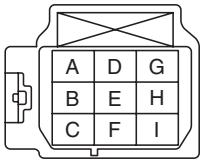

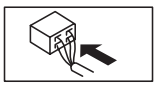

REAR TURN LIGHT (LH) WIRING HARNESS-SIDE CONNECTOR

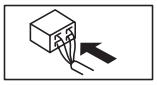

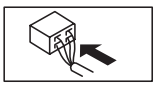

FBCM WIRING HARNESS-SIDE CONNECTOR

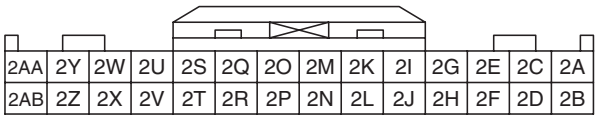

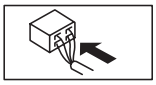

ON-BOARD DIAGNOSTIC [FRONT BODY CONTROL MODULE (FBCM)]

Diagnostic Procedure

Step	Inspection		Action
1	**VERIFY FRONT BODY CONTROL MODULE (FBCM) DTCs AGAIN** • Clear DTC for the front body control module (FBCM) using the M-MDS. (See 09-02K-12 CLEARING DTC [FRONT BODY CONTROL MODULE (FBCM)].) • Switch the ignition ON (engine off or on). • Perform the DTC inspection for the front body control module (FBCM) using the M-MDS. (See 09-02K-10 DTC INSPECTION [FRONT BODY CONTROL MODULE (FBCM)].) • Is DTC B1D06:13 displayed?	Yes	Go to the next step.
		No	Go to Step 12.
2	**INSPECT FRONT COMBINATION LIGHT (LH) CONNECTOR CONDITION** • Switch the ignition to off. • Disconnect the negative battery cable. (See 01-17A-11 NEGATIVE BATTERY CABLE DISCONNECTION/CONNECTION [SKYACTIV-G 2.0].) (See 01-17A-13 NEGATIVE BATTERY CABLE DISCONNECTION/CONNECTION [SKYACTIV-G 2.0 (WITHOUT i-stop)].) (See 01-17B-9 NEGATIVE BATTERY CABLE DISCONNECTION/CONNECTION [SKYACTIV-D 2.2].) • Disconnect the front combination light (LH) connector. • Inspect the connector engagement and connection condition and inspect the terminals for damage, deformation, corrosion, or disconnection. • Is the connector normal?	Yes	Go to the next step.
		No	Repair or replace the connector, then go to Step 11.
3	**INSPECT FRONT TURN LIGHT BULB (LH)** • Inspect the front turn light bulb (LH). • Is the front turn light bulb (LH) normal?	Yes	Go to the next step.
		No	Replace the front turn light bulb (LH), then go to Step 11. (See 09-18-39 FRONT TURN LIGHT BULB REMOVAL/INSTALLATION.)
4	**INSPECT REAR TURN LIGHT (LH) CONNECTOR CONDITION** • Disconnect the rear turn light (LH) connector. • Inspect the connector engagement and connection condition and inspect the terminals for damage, deformation, corrosion, or disconnection. • Is the connector normal?	Yes	Go to the next step.
		No	Repair or replace the connector, then go to Step 11.
5	**INSPECT REAR TURN LIGHT BULB (LH)** • Inspect the rear turn light bulb (LH). • Is the rear turn light bulb (LH) normal?	Yes	Go to the next step.
		No	Replace the rear turn light bulb (LH), then go to Step 11. (See 09-18-57 REAR TURN LIGHT BULB REMOVAL/INSTALLATION.)
6	**INSPECT POWER OUTER MIRROR (LH) CONNECTOR CONDITION** • Disconnect the power outer mirror (LH) connector. • Inspect the connector engagement and connection condition and inspect the terminals for damage, deformation, corrosion, or disconnection. • Is the connector normal?	Yes	Go to the next step.
		No	Repair or replace the connector, then go to Step 11.
7	**INSPECT SIDE TURN LIGHT (LH)** • Inspect the side turn light (LH). (See 09-18-52 SIDE TURN LIGHT INSPECTION.) • Is the side turn light (LH) normal?	Yes	Go to the next step.
		No	Replace the side turn light (LH), then go to Step 11. (See 09-18-52 SIDE TURN LIGHT REMOVAL/INSTALLATION.)

ON-BOARD DIAGNOSTIC [FRONT BODY CONTROL MODULE (FBCM)]

Step	Inspection		Action
8	**INSPECT FRONT BODY CONTROL MODULE (FBCM) CONNECTOR CONDITION** • Disconnect the front body control module (FBCM) connector. • Inspect the connector engagement and connection condition and inspect the terminals for damage, deformation, corrosion, or disconnection. • Is the connector normal?	Yes	Go to the next step.
		No	Repair or replace the connector, then go to Step 11.
9	**INSPECT TURN LIGHT (LH) CONTROL CIRCUIT FOR SHORT TO POWER SUPPLY** • Verify that the front combination light (LH), rear turn light (LH), power outer mirror (LH) and front body control module (FBCM) connectors are disconnected. • Connect the negative battery cable. (See 01-17A-11 NEGATIVE BATTERY CABLE DISCONNECTION/CONNECTION [SKYACTIV-G 2.0].) (See 01-17A-13 NEGATIVE BATTERY CABLE DISCONNECTION/CONNECTION [SKYACTIV-G 2.0 (WITHOUT i-stop)].) (See 01-17B-9 NEGATIVE BATTERY CABLE DISCONNECTION/CONNECTION [SKYACTIV-D 2.2].) • Switch the ignition ON (engine off or on). • Measure the voltage at the following terminals (vehicle wiring harness side). — Front body control module (FBCM) terminal 2B — Front body control module (FBCM) terminal 2F — Front body control module (FBCM) terminal 2D • Is the voltage **0 V**?	Yes	Go to the next step.
		No	Repair or replace the wiring harness, then go to Step 11.
10	**INSPECT TURN LIGHT (LH) CONTROL CIRCUIT FOR OPEN CIRCUIT** • Verify that the front combination light (LH), rear turn light (LH), power outer mirror (LH) and front body control module (FBCM) connectors are disconnected. • Switch the ignition to off. • Disconnect the negative battery cable. (See 01-17A-11 NEGATIVE BATTERY CABLE DISCONNECTION/CONNECTION [SKYACTIV-G 2.0].) (See 01-17A-13 NEGATIVE BATTERY CABLE DISCONNECTION/CONNECTION [SKYACTIV-G 2.0 (WITHOUT i-stop)].) (See 01-17B-9 NEGATIVE BATTERY CABLE DISCONNECTION/CONNECTION [SKYACTIV-D 2.2].) • Inspect the wiring harness between the following terminals (vehicle wiring harness side) for continuity. — Front combination light (LH) terminal D and front body control module (FBCM) terminal 2B (without headlight leveling system) — Front combination light (LH) terminal E and front body control module (FBCM) terminal 2B (with headlight leveling system) — Power outer mirror (LH) terminal E and front body control module (FBCM) terminal 2F — Rear turn light (LH) terminal A and front body control module (FBCM) terminal 2D • Is there continuity?	Yes	Go to the next step.
		No	Repair or replace the wiring harness, then go to the next step.

ON-BOARD DIAGNOSTIC [FRONT BODY CONTROL MODULE (FBCM)]

Step	Inspection		Action
11	**VERIFY THAT REPAIRS HAVE BEEN COMPLETED** • Reconnect all the disconnected connectors. • Reconnect the disconnected negative battery cable. (See 01-17A-11 NEGATIVE BATTERY CABLE DISCONNECTION/CONNECTION [SKYACTIV-G 2.0].) (See 01-17A-13 NEGATIVE BATTERY CABLE DISCONNECTION/CONNECTION [SKYACTIV-G 2.0 (WITHOUT i-stop)].) (See 01-17B-9 NEGATIVE BATTERY CABLE DISCONNECTION/CONNECTION [SKYACTIV-D 2.2].) • Clear front body control module (FBCM) DTCs using the M-MDS. (See 09-02K-12 CLEARING DTC [FRONT BODY CONTROL MODULE (FBCM)].) • Switch the ignition ON (engine off or on). • Perform the front body control module (FBCM) DTC inspection using the M-MDS. (See 09-02K-10 DTC INSPECTION [FRONT BODY CONTROL MODULE (FBCM)].) • Is DTC B1D06:13 displayed?	Yes	Repeat the inspection from Step 1. • If the malfunction recurs, replace the front body control module (FBCM), then go to the next step. (See 09-40-2 FRONT BODY CONTROL MODULE (FBCM) REMOVAL/INSTALLATION.)
		No	Go to the next step.
12	**VERIFY IF OTHER DTCs DISPLAYED** • Are any other DTCs displayed?	Yes	Repair the malfunctioning part according to the applicable DTC troubleshooting. (See 09-02K-13 DTC TABLE [FRONT BODY CONTROL MODULE (FBCM)].)
		No	DTC troubleshooting completed.

ON-BOARD DIAGNOSTIC [FRONT BODY CONTROL MODULE (FBCM)]

DTC B1D07:11 [FRONT BODY CONTROL MODULE (FBCM)]

id0902p2009700

System malfunction location	**Turn light (RH) circuit malfunction**
Detection condition	• The front body control module (FBCM) detects a short to ground in the turn light (RH) circuit with the ignition switched ON (engine off or on).
Fail-safe	—
Possible cause	• Front combination light (RH) connector or terminal malfunction • Front turn light bulb (RH) malfunction • Rear turn light (RH) connector or terminal malfunction • Rear turn light bulb (RH) malfunction • Malfunction in power outer mirror (RH) connector or terminal • Side turn light (RH) malfunction • Front body control module (FBCM) connector or terminal malfunction • Short to ground in wiring harness between the following terminals: — Front combination light (RH) terminal D and front body control module (FBCM) terminal 1G (without headlight leveling system) — Front combination light (RH) terminal E and front body control module (FBCM) terminal 1G (with headlight leveling system) — Power outer mirror (RH) terminal E and front body control module (FBCM) terminal 1F — Rear turn light (RH) terminal A and front body control module (FBCM) terminal 1E • Front body control module (FBCM) malfunction

ON-BOARD DIAGNOSTIC [FRONT BODY CONTROL MODULE (FBCM)]

System malfunction location	Turn light (RH) circuit malfunction

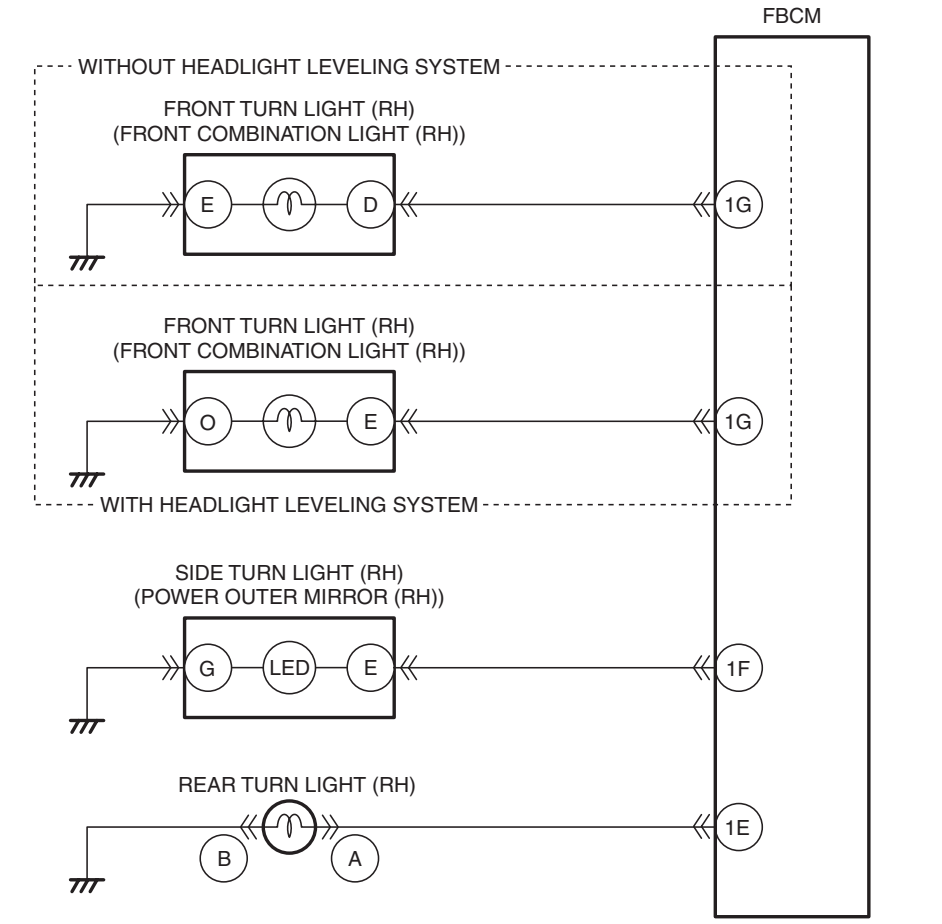

FRONT COMBINATION LIGHT (RH) WIRING HARNESS-SIDE CONNECTOR

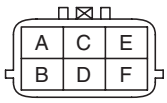

(WITHOUT HEADLIGHT LEVELING SYSTEM)

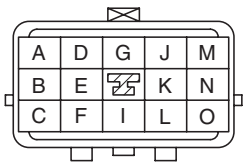

(WITH HEADLIGHT LEVELING SYSTEM)

POWER OUTER MIRROR (RH) WIRING HARNESS-SIDE CONNECTOR

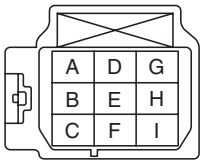

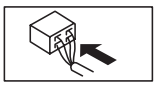

REAR TURN LIGHT (RH) WIRING HARNESS-SIDE CONNECTOR

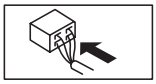

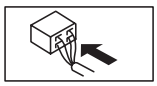

FBCM WIRING HARNESS-SIDE CONNECTOR

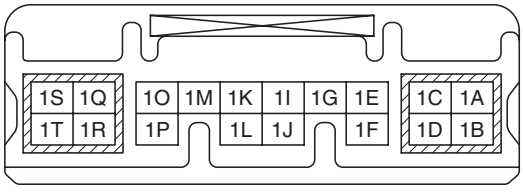

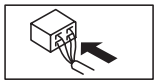

ON-BOARD DIAGNOSTIC [FRONT BODY CONTROL MODULE (FBCM)]

Diagnostic Procedure

Step	Inspection		Action
1	**VERIFY FRONT BODY CONTROL MODULE (FBCM) DTCs AGAIN** • Clear front body control module (FBCM) DTCs using the M-MDS. (See 09-02K-12 CLEARING DTC [FRONT BODY CONTROL MODULE (FBCM)].) • Switch the ignition ON (engine off or on). • Operate the turn switch in RH position. • Perform the front body control module (FBCM) DTC inspection using the M-MDS. (See 09-02K-10 DTC INSPECTION [FRONT BODY CONTROL MODULE (FBCM)].) • Is DTC B1D07:11 displayed?	Yes	Go to the next step.
		No	Go to Step 11.
2	**INSPECT FRONT COMBINATION LIGHT (RH) CONNECTOR CONDITION** • Switch the ignition to off. • Disconnect the negative battery cable. (See 01-17A-11 NEGATIVE BATTERY CABLE DISCONNECTION/CONNECTION [SKYACTIV-G 2.0].) (See 01-17A-13 NEGATIVE BATTERY CABLE DISCONNECTION/CONNECTION [SKYACTIV-G 2.0 (WITHOUT i-stop)].) (See 01-17B-9 NEGATIVE BATTERY CABLE DISCONNECTION/CONNECTION [SKYACTIV-D 2.2].) • Disconnect the front combination light (RH) connector. • Inspect the connector engagement and connection condition and inspect the terminals for damage, deformation, corrosion, or disconnection. • Is the connector normal?	Yes	Go to the next step.
		No	Repair or replace the connector, then go to Step 10.
3	**INSPECT FRONT TURN LIGHT BULB (RH)** • Inspect the front turn light bulb (RH). • Is the front turn light bulb (RH) normal?	Yes	Go to the next step.
		No	Replace the front turn light bulb (RH), then go to Step 10. (See 09-18-39 FRONT TURN LIGHT BULB REMOVAL/INSTALLATION.)
4	**INSPECT REAR TURN LIGHT (RH) CONNECTOR CONDITION** • Disconnect the rear turn light (RH) connector. • Inspect the connector engagement and connection condition and inspect the terminals for damage, deformation, corrosion, or disconnection. • Is the connector normal?	Yes	Go to the next step.
		No	Repair or replace the connector, then go to Step 10.
5	**INSPECT REAR TURN LIGHT BULB (RH)** • Inspect the rear turn light bulb (RH). • Is the rear turn light bulb (RH) normal?	Yes	Go to the next step.
		No	Replace the rear turn light bulb (RH), then go to Step 10. (See 09-18-57 REAR TURN LIGHT BULB REMOVAL/INSTALLATION.)
6	**INSPECT POWER OUTER MIRROR (RH) CONNECTOR CONDITION** • Disconnect the power outer mirror (RH) connector. • Inspect the connector engagement and connection condition and inspect the terminals for damage, deformation, corrosion, or disconnection. • Is the connector normal?	Yes	Go to the next step.
		No	Repair or replace the connector, then go to Step 10.
7	**INSPECT SIDE TURN LIGHT (RH)** • Inspect the side turn light (RH). (See 09-18-52 SIDE TURN LIGHT INSPECTION.) • Is the side turn light (RH) normal?	Yes	Go to the next step.
		No	Replace the side turn light (RH), then go to Step 10. (See 09-18-52 SIDE TURN LIGHT REMOVAL/INSTALLATION.)

ON-BOARD DIAGNOSTIC [FRONT BODY CONTROL MODULE (FBCM)]

Step	Inspection		Action
8	**INSPECT FRONT BODY CONTROL MODULE (FBCM) CONNECTOR CONDITION** • Disconnect the front body control module (FBCM) connector. • Inspect the connector engagement and connection condition and inspect the terminals for damage, deformation, corrosion, or disconnection. • Is the connector normal?	Yes	Go to the next step.
		No	Repair or replace the connector, then go to Step 10.
9	**INSPECT TURN LIGHT (RH) CONTROL CIRCUIT FOR SHORT TO GROUND** • Verify that the front combination light (RH), rear turn light (RH), power outer mirror (RH) and front body control module (FBCM) connectors are disconnected. • Inspect for continuity between the following terminals (vehicle wiring harness side) and body ground. — Front body control module (FBCM) terminal 1G — Front body control module (FBCM) terminal 1F — Front body control module (FBCM) terminal 1E • Is there continuity?	Yes	Repair or replace the wiring harness, then go to the next step.
		No	Go to the next step.
10	**VERIFY THAT REPAIRS HAVE BEEN COMPLETED** • Reconnect all the disconnected connectors. • Reconnect the disconnected negative battery cable. (See 01-17A-11 NEGATIVE BATTERY CABLE DISCONNECTION/CONNECTION [SKYACTIV-G 2.0].) (See 01-17A-13 NEGATIVE BATTERY CABLE DISCONNECTION/CONNECTION [SKYACTIV-G 2.0 (WITHOUT i-stop)].) (See 01-17B-9 NEGATIVE BATTERY CABLE DISCONNECTION/CONNECTION [SKYACTIV-D 2.2].) • Clear front body control module (FBCM) DTCs using the M-MDS. (See 09-02K-12 CLEARING DTC [FRONT BODY CONTROL MODULE (FBCM)].) • Switch the ignition ON (engine off or on). • Operate the turn switch in RH position. • Perform the front body control module (FBCM) DTC inspection using the M-MDS. (See 09-02K-10 DTC INSPECTION [FRONT BODY CONTROL MODULE (FBCM)].) • Is DTC B1D07:11 displayed?	Yes	Repeat the inspection from Step 1. • If the malfunction recurs, replace the front body control module (FBCM), then go to the next step. (See 09-40-2 FRONT BODY CONTROL MODULE (FBCM) REMOVAL/INSTALLATION.)
		No	Go to the next step.
11	**VERIFY IF OTHER DTCs DISPLAYED** • Are any other DTCs displayed?	Yes	Repair the malfunctioning part according to the applicable DTC troubleshooting. (See 09-02K-13 DTC TABLE [FRONT BODY CONTROL MODULE (FBCM)].)
		No	DTC troubleshooting completed.

ON-BOARD DIAGNOSTIC [FRONT BODY CONTROL MODULE (FBCM)]

DTC B1D07:13 [FRONT BODY CONTROL MODULE (FBCM)]

id0902p2009800

System malfunction location	**Turn light (RH) circuit malfunction**
Detection condition	• The front body control module (FBCM) detects an open or short to power supply in the turn light (RH) circuit with the ignition switched ON (engine off or on).
Fail-safe	—
Possible cause	• Front combination light (RH) connector or terminal malfunction • Front turn light bulb (RH) malfunction • Rear turn light (RH) connector or terminal malfunction • Rear turn light bulb (RH) malfunction • Malfunction in power outer mirror (RH) connector or terminal • Side turn light (RH) malfunction • Front body control module (FBCM) connector or terminal malfunction • Short to power supply in wiring harness between the following terminals: — Front combination light (RH) terminal D and front body control module (FBCM) terminal 1G (without headlight leveling system) — Front combination light (RH) terminal E and front body control module (FBCM) terminal 1G (with headlight leveling system) — Power outer mirror (RH) terminal E and front body control module (FBCM) terminal 1F — Rear turn light (RH) terminal A and front body control module (FBCM) terminal 1E • Open circuit in wiring harness between the following terminals: — Front combination light (RH) terminal D and front body control module (FBCM) terminal 1G (without headlight leveling system) — Front combination light (RH) terminal E and front body control module (FBCM) terminal 1G (with headlight leveling system) — Power outer mirror (RH) terminal E and front body control module (FBCM) terminal 1F — Rear turn light (RH) terminal A and front body control module (FBCM) terminal 1E • Front body control module (FBCM) malfunction

ON-BOARD DIAGNOSTIC [FRONT BODY CONTROL MODULE (FBCM)]

System malfunction location	Turn light (RH) circuit malfunction

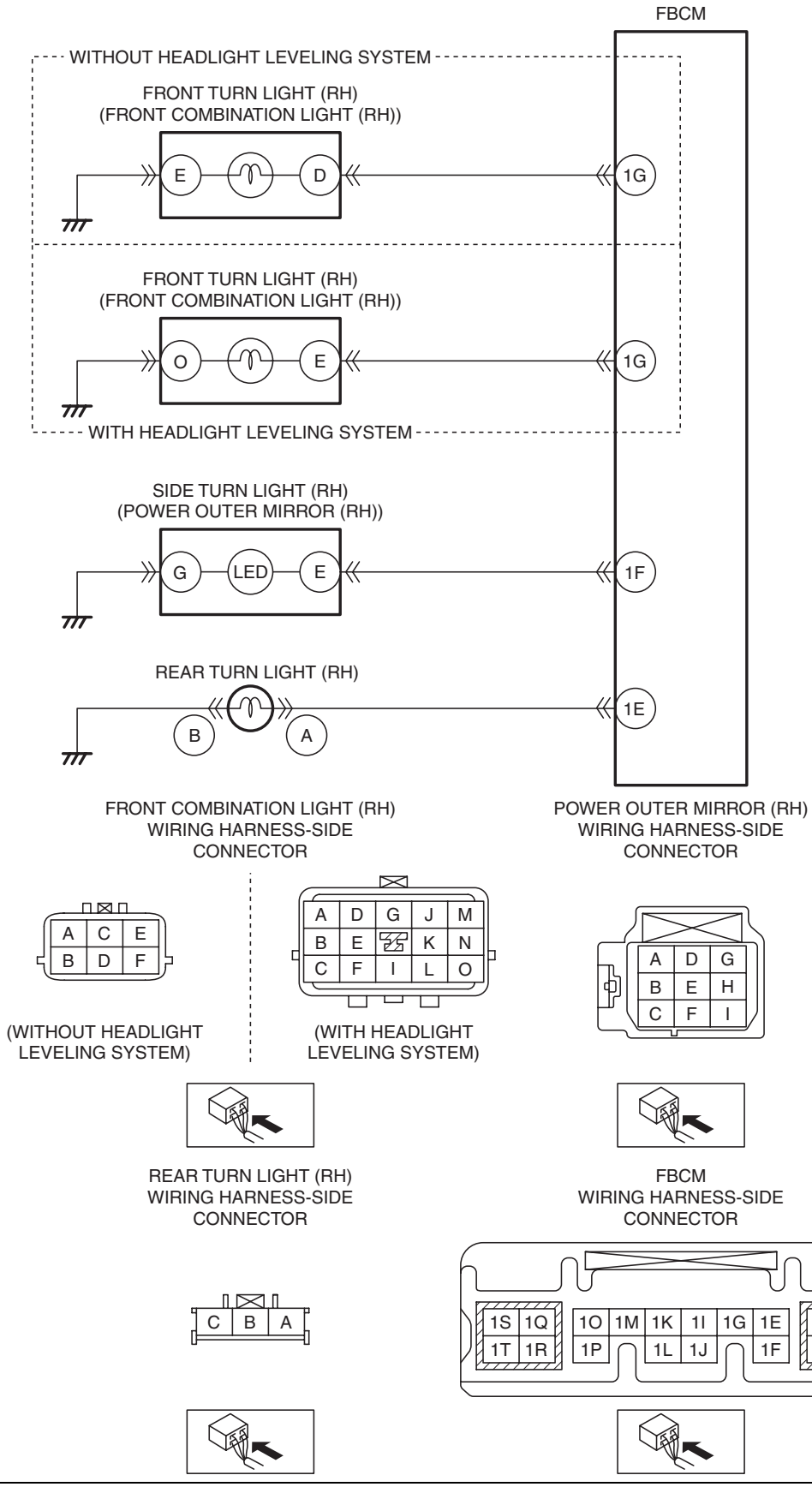

ON-BOARD DIAGNOSTIC [FRONT BODY CONTROL MODULE (FBCM)]

Diagnostic Procedure

Step	Inspection		Action
1	**VERIFY FRONT BODY CONTROL MODULE (FBCM) DTCs AGAIN** • Clear DTC for the front body control module (FBCM) using the M-MDS. (See 09-02K-12 CLEARING DTC [FRONT BODY CONTROL MODULE (FBCM)].) • Switch the ignition ON (engine off or on). • Perform the DTC inspection for the front body control module (FBCM) using the M-MDS. (See 09-02K-10 DTC INSPECTION [FRONT BODY CONTROL MODULE (FBCM)].) • Is DTC B1D07:13 displayed?	Yes	Go to the next step.
		No	Go to Step 12.
2	**INSPECT FRONT COMBINATION LIGHT (RH) CONNECTOR CONDITION** • Switch the ignition to off. • Disconnect the negative battery cable. (See 01-17A-11 NEGATIVE BATTERY CABLE DISCONNECTION/CONNECTION [SKYACTIV-G 2.0].) (See 01-17A-13 NEGATIVE BATTERY CABLE DISCONNECTION/CONNECTION [SKYACTIV-G 2.0 (WITHOUT i-stop)].) (See 01-17B-9 NEGATIVE BATTERY CABLE DISCONNECTION/CONNECTION [SKYACTIV-D 2.2].) • Disconnect the front combination light (RH) connector. • Inspect the connector engagement and connection condition and inspect the terminals for damage, deformation, corrosion, or disconnection. • Is the connector normal?	Yes	Go to the next step.
		No	Repair or replace the connector, then go to Step 11.
3	**INSPECT FRONT TURN LIGHT BULB (RH)** • Inspect the front turn light bulb (RH). • Is the front turn light bulb (RH) normal?	Yes	Go to the next step.
		No	Replace the front turn light bulb (RH), then go to Step 11. (See 09-18-39 FRONT TURN LIGHT BULB REMOVAL/INSTALLATION.)
4	**INSPECT REAR TURN LIGHT (RH) CONNECTOR CONDITION** • Disconnect the rear turn light (RH) connector. • Inspect the connector engagement and connection condition and inspect the terminals for damage, deformation, corrosion, or disconnection. • Is the connector normal?	Yes	Go to the next step.
		No	Repair or replace the connector, then go to Step 11.
5	**INSPECT REAR TURN LIGHT BULB (RH)** • Inspect the rear turn light bulb (RH). • Is the rear turn light bulb (RH) normal?	Yes	Go to the next step.
		No	Replace the rear turn light bulb (RH), then go to Step 11. (See 09-18-57 REAR TURN LIGHT BULB REMOVAL/INSTALLATION.)
6	**INSPECT POWER OUTER MIRROR (RH) CONNECTOR CONDITION** • Disconnect the power outer mirror (RH) connector. • Inspect the connector engagement and connection condition and inspect the terminals for damage, deformation, corrosion, or disconnection. • Is the connector normal?	Yes	Go to the next step.
		No	Repair or replace the connector, then go to Step 11.
7	**INSPECT SIDE TURN LIGHT (RH)** • Inspect the side turn light (RH). (See 09-18-52 SIDE TURN LIGHT INSPECTION.) • Is the side turn light (RH) normal?	Yes	Go to the next step.
		No	Replace the side turn light (RH), then go to Step 11. (See 09-18-52 SIDE TURN LIGHT REMOVAL/INSTALLATION.)

ON-BOARD DIAGNOSTIC [FRONT BODY CONTROL MODULE (FBCM)]

Step	Inspection		Action
8	**INSPECT FRONT BODY CONTROL MODULE (FBCM) CONNECTOR CONDITION** • Disconnect the front body control module (FBCM) connector. • Inspect the connector engagement and connection condition and inspect the terminals for damage, deformation, corrosion, or disconnection. • Is the connector normal?	Yes	Go to the next step.
		No	Repair or replace the connector, then go to Step 11.
9	**INSPECT TURN LIGHT (RH) CONTROL CIRCUIT FOR SHORT TO POWER SUPPLY** • Verify that the front combination light (RH), rear turn light (RH), power outer mirror (RH) and front body control module (FBCM) connectors are disconnected. • Connect the negative battery cable. (See 01-17A-11 NEGATIVE BATTERY CABLE DISCONNECTION/CONNECTION [SKYACTIV-G 2.0].) (See 01-17A-13 NEGATIVE BATTERY CABLE DISCONNECTION/CONNECTION [SKYACTIV-G 2.0 (WITHOUT i-stop)].) (See 01-17B-9 NEGATIVE BATTERY CABLE DISCONNECTION/CONNECTION [SKYACTIV-D 2.2].) • Switch the ignition ON (engine off or on). • Measure the voltage at the following terminals (vehicle wiring harness side). — Front body control module (FBCM) terminal 1G — Front body control module (FBCM) terminal 1F — Front body control module (FBCM) terminal 1E • Is the voltage **0 V**?	Yes	Go to the next step.
		No	Repair or replace the wiring harness, then go to Step 11.
10	**INSPECT TURN LIGHT (RH) CONTROL CIRCUIT FOR OPEN CIRCUIT** • Verify that the front combination light (RH), rear turn light (RH), power outer mirror (RH) and front body control module (FBCM) connectors are disconnected. • Switch the ignition to off. • Disconnect the negative battery cable. (See 01-17A-11 NEGATIVE BATTERY CABLE DISCONNECTION/CONNECTION [SKYACTIV-G 2.0].) (See 01-17A-13 NEGATIVE BATTERY CABLE DISCONNECTION/CONNECTION [SKYACTIV-G 2.0 (WITHOUT i-stop)].) (See 01-17B-9 NEGATIVE BATTERY CABLE DISCONNECTION/CONNECTION [SKYACTIV-D 2.2].) • Inspect the wiring harness between the following terminals (vehicle wiring harness side) for continuity. — Front combination light (RH) terminal D and front body control module (FBCM) terminal 1G (without headlight leveling system) — Front combination light (RH) terminal E and front body control module (FBCM) terminal 1G (with headlight leveling system) — Power outer mirror (RH) terminal E and front body control module (FBCM) terminal 1F — Rear turn light (RH) terminal A and front body control module (FBCM) terminal 1E • Is there continuity?	Yes	Go to the next step.
		No	Repair or replace the wiring harness, then go to the next step.

ON-BOARD DIAGNOSTIC [FRONT BODY CONTROL MODULE (FBCM)]

Step	Inspection		Action
11	**VERIFY THAT REPAIRS HAVE BEEN COMPLETED** • Reconnect all the disconnected connectors. • Reconnect the disconnected negative battery cable. (See 01-17A-11 NEGATIVE BATTERY CABLE DISCONNECTION/CONNECTION [SKYACTIV-G 2.0].) (See 01-17A-13 NEGATIVE BATTERY CABLE DISCONNECTION/CONNECTION [SKYACTIV-G 2.0 (WITHOUT i-stop)].) (See 01-17B-9 NEGATIVE BATTERY CABLE DISCONNECTION/CONNECTION [SKYACTIV-D 2.2].) • Clear front body control module (FBCM) DTCs using the M-MDS. (See 09-02K-12 CLEARING DTC [FRONT BODY CONTROL MODULE (FBCM)].) • Switch the ignition ON (engine off or on). • Perform the front body control module (FBCM) DTC inspection using the M-MDS. (See 09-02K-10 DTC INSPECTION [FRONT BODY CONTROL MODULE (FBCM)].) • Is DTC B1D07:13 displayed?	Yes	Repeat the inspection from Step 1. • If the malfunction recurs, replace the front body control module (FBCM), then go to the next step. (See 09-40-2 FRONT BODY CONTROL MODULE (FBCM) REMOVAL/INSTALLATION.)
		No	Go to the next step.
12	**VERIFY IF OTHER DTCs DISPLAYED** • Are any other DTCs displayed?	Yes	Repair the malfunctioning part according to the applicable DTC troubleshooting. (See 09-02K-13 DTC TABLE [FRONT BODY CONTROL MODULE (FBCM)].)
		No	DTC troubleshooting completed.

ON-BOARD DIAGNOSTIC [FRONT BODY CONTROL MODULE (FBCM)]

DTC C1126:11 [FRONT BODY CONTROL MODULE (FBCM)]

id0902p2009900

System malfunction location	**Parking light (LH/RH) circuit malfunction**
Detection condition	• The front body control module (FBCM) detects a short to ground in the parking light (LH/RH) circuit with the ignition switched ON (engine off or on).
Fail-safe	—
Possible cause	• Front combination light (LH/RH) connector or terminal malfunction • Parking light bulb (LH/RH) malfunction • Front body control module (FBCM) connector or terminal malfunction • Short to ground in wiring harness between the following terminals: — Front combination light (LH/RH) terminal C and front body control module (FBCM) terminal 1J (without headlight leveling system) — Front combination light (LH/RH) terminal D and front body control module (FBCM) terminal 1J (with headlight leveling system) • Front body control module (FBCM) malfunction

ON-BOARD DIAGNOSTIC [FRONT BODY CONTROL MODULE (FBCM)]

System malfunction location	Parking light (LH/RH) circuit malfunction

(WITHOUT HEADLIGHT LEVELING SYSTEM)

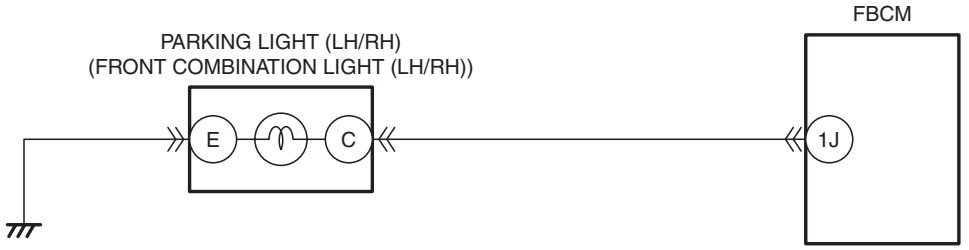

FRONT COMBINATION LIGHT (LH/RH) WIRING HARNESS-SIDE CONNECTOR

FBCM WIRING HARNESS-SIDE CONNECTOR

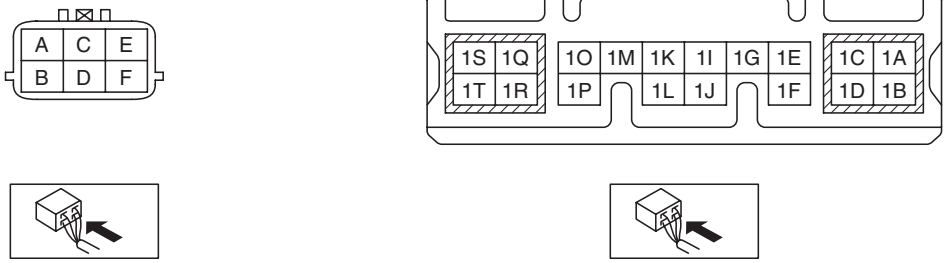

(WITH HEADLIGHT LEVELING SYSTEM)

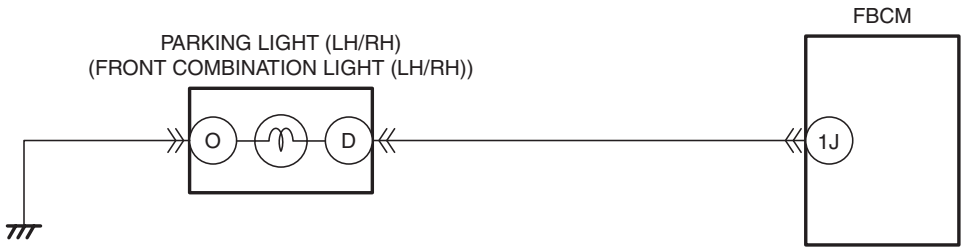

FRONT COMBINATION LIGHT (LH/RH) WIRING HARNESS-SIDE CONNECTOR

FBCM WIRING HARNESS-SIDE CONNECTOR

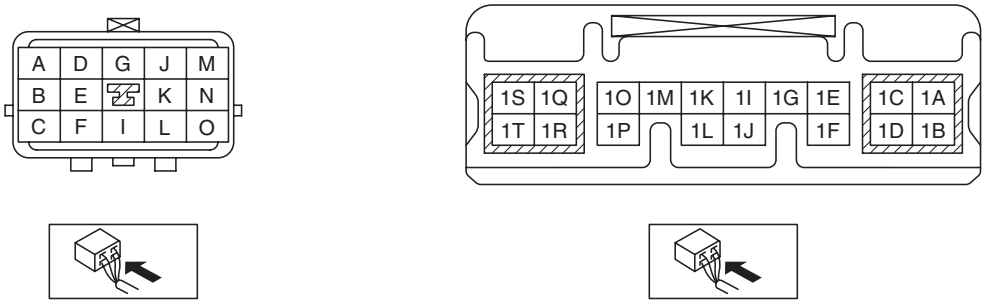

ON-BOARD DIAGNOSTIC [FRONT BODY CONTROL MODULE (FBCM)]

Diagnostic Procedure

Step	Inspection		Action
1	**VERIFY FRONT BODY CONTROL MODULE (FBCM) DTCs AGAIN** • Clear front body control module (FBCM) DTCs using the M-MDS. (See 09-02K-12 CLEARING DTC [FRONT BODY CONTROL MODULE (FBCM)].) • Switch the ignition ON (engine off or on). • Perform the front body control module (FBCM) DTC inspection using the M-MDS. (See 09-02K-10 DTC INSPECTION [FRONT BODY CONTROL MODULE (FBCM)].) • Is DTC C1126:11 displayed?	Yes	Go to the next step.
		No	Go to Step 7.
2	**INSPECT FRONT COMBINATION LIGHT (LH/RH) CONNECTOR CONDITION** • Switch the ignition to off. • Disconnect the negative battery cable. (See 01-17A-11 NEGATIVE BATTERY CABLE DISCONNECTION/CONNECTION [SKYACTIV-G 2.0].) (See 01-17A-13 NEGATIVE BATTERY CABLE DISCONNECTION/CONNECTION [SKYACTIV-G 2.0 (WITHOUT i-stop)].) (See 01-17B-9 NEGATIVE BATTERY CABLE DISCONNECTION/CONNECTION [SKYACTIV-D 2.2].) • Disconnect the front combination light (LH/RH) connector. • Inspect the connector engagement and connection condition and inspect the terminals for damage, deformation, corrosion, or disconnection. • Is the connector normal?	Yes	Go to the next step.
		No	Repair or replace the connector, then go to Step 6.
3	**INSPECT PARKING LIGHT BULB (LH/RH)** • Inspect the parking light bulb (LH/RH). • Is the parking light bulb (LH/RH) normal?	Yes	Go to the next step.
		No	Replace the parking light bulb (LH/RH), then go to Step 6. (See 09-18-36 PARKING LIGHT BULB REMOVAL/INSTALLATION.)
4	**INSPECT FRONT BODY CONTROL MODULE (FBCM) CONNECTOR CONDITION** • Disconnect the front body control module (FBCM) connector. • Inspect the connector engagement and connection condition and inspect the terminals for damage, deformation, corrosion, or disconnection. • Is the connector normal?	Yes	Go to the next step.
		No	Repair or replace the connector, then go to Step 6.
5	**INSPECT PARKING LIGHT (LH/RH) CONTROL CIRCUIT FOR SHORT TO GROUND** • Verify that the front combination light (LH/RH) and front body control module (FBCM) connectors are disconnected. • Inspect for continuity between front body control module (FBCM) terminal 1J (vehicle wiring harness side) and body ground. • Is there continuity?	Yes	Repair or replace the wiring harness, then go to the next step.
		No	Go to the next step.

ON-BOARD DIAGNOSTIC [FRONT BODY CONTROL MODULE (FBCM)]

Step	Inspection		Action
6	**VERIFY THAT REPAIRS HAVE BEEN COMPLETED** • Reconnect all the disconnected connectors. • Reconnect the disconnected negative battery cable. (See 01-17A-11 NEGATIVE BATTERY CABLE DISCONNECTION/CONNECTION [SKYACTIV-G 2.0].) (See 01-17A-13 NEGATIVE BATTERY CABLE DISCONNECTION/CONNECTION [SKYACTIV-G 2.0 (WITHOUT i-stop)].) (See 01-17B-9 NEGATIVE BATTERY CABLE DISCONNECTION/CONNECTION [SKYACTIV-D 2.2].) • Clear front body control module (FBCM) DTCs using the M-MDS. (See 09-02K-12 CLEARING DTC [FRONT BODY CONTROL MODULE (FBCM)].) • Switch the ignition ON (engine off or on). • Perform the front body control module (FBCM) DTC inspection using the M-MDS. (See 09-02K-10 DTC INSPECTION [FRONT BODY CONTROL MODULE (FBCM)].) • Is DTC C1126:11 displayed?	Yes	Repeat the inspection from Step 1. • If the malfunction recurs, replace the front body control module (FBCM), then go to the next step. (See 09-40-2 FRONT BODY CONTROL MODULE (FBCM) REMOVAL/INSTALLATION.)
		No	Go to the next step.
7	**VERIFY IF OTHER DTCs DISPLAYED** • Are any other DTCs displayed?	Yes	Repair the malfunctioning part according to the applicable DTC troubleshooting. (See 09-02K-13 DTC TABLE [FRONT BODY CONTROL MODULE (FBCM)].)
		No	DTC troubleshooting completed.

ON-BOARD DIAGNOSTIC [FRONT BODY CONTROL MODULE (FBCM)]

DTC C1126:13 [FRONT BODY CONTROL MODULE (FBCM)]

id0902p2010000

System malfunction location	**Parking light (LH/RH) circuit malfunction**
Detection condition	• The front body control module (FBCM) detects an open or short to power supply in the parking light (LH/RH) circuit with the ignition switched ON (engine off or on).
Fail-safe	—
Possible cause	• Front combination light (LH/RH) connector or terminal malfunction • Parking light bulb (LH/RH) malfunction • Front body control module (FBCM) connector or terminal malfunction • Short to power supply in wiring harness between the following terminals: — Front combination light (LH/RH) terminal C and front body control module (FBCM) terminal 1J (without headlight leveling system) — Front combination light (LH/RH) terminal D and front body control module (FBCM) terminal 1J (with headlight leveling system) • Open circuit in wiring harness between the following terminals: — Front combination light (LH/RH) terminal C and front body control module (FBCM) terminal 1J (without headlight leveling system) — Front combination light (LH/RH) terminal D and front body control module (FBCM) terminal 1J (with headlight leveling system) • Front body control module (FBCM) malfunction

ON-BOARD DIAGNOSTIC [FRONT BODY CONTROL MODULE (FBCM)]

System malfunction location	Parking light (LH/RH) circuit malfunction

(WITHOUT HEADLIGHT LEVELING SYSTEM)

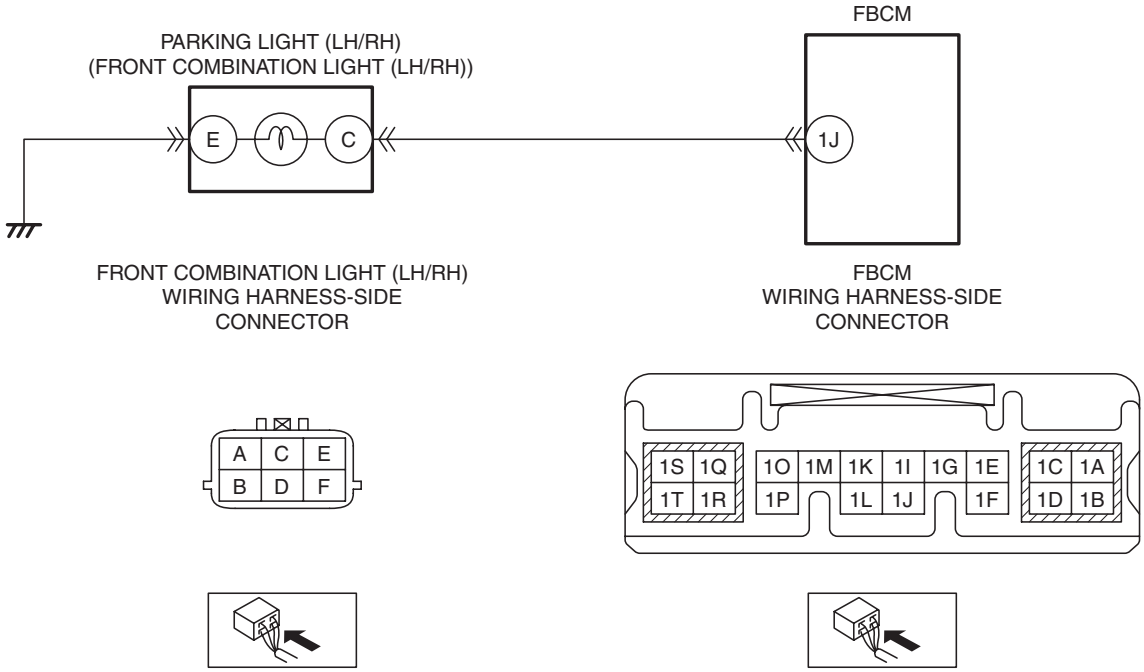

(WITH HEADLIGHT LEVELING SYSTEM)

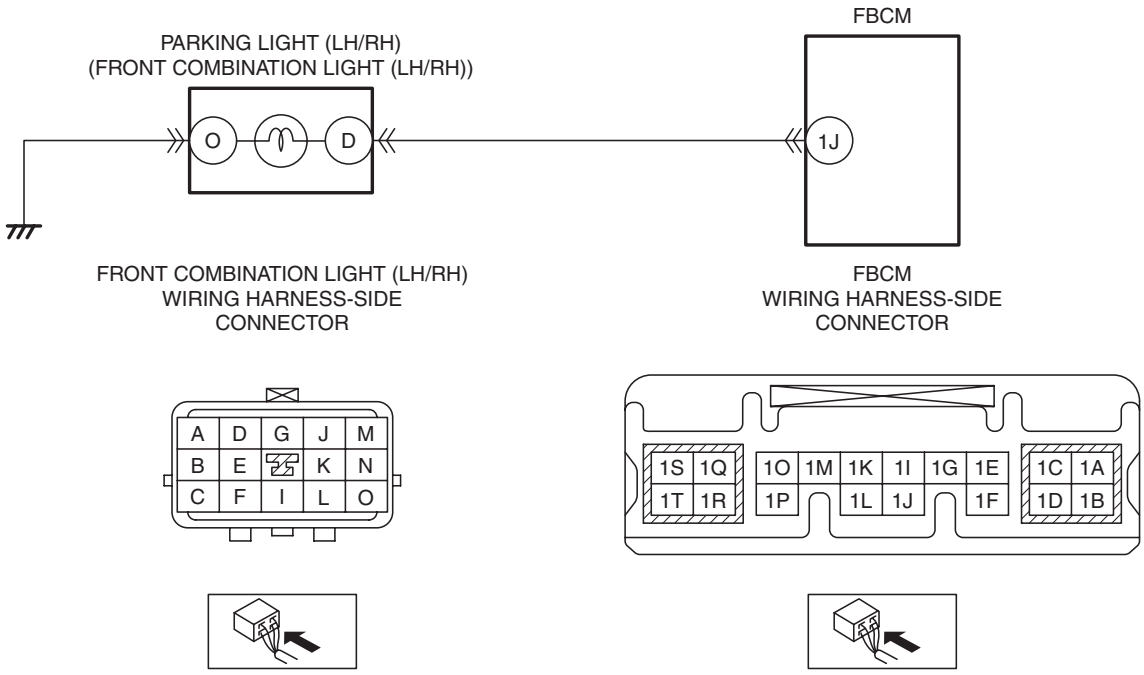

ON-BOARD DIAGNOSTIC [FRONT BODY CONTROL MODULE (FBCM)]

Diagnostic Procedure

Step	Inspection		Action
1	**VERIFY FRONT BODY CONTROL MODULE (FBCM) DTCs AGAIN** • Clear front body control module (FBCM) DTCs using the M-MDS. (See 09-02K-12 CLEARING DTC [FRONT BODY CONTROL MODULE (FBCM)].) • Switch the ignition ON (engine off or on). • Operate the light switch in TNS position. • Perform the front body control module (FBCM) DTC inspection using the M-MDS. (See 09-02K-10 DTC INSPECTION [FRONT BODY CONTROL MODULE (FBCM)].) • Is DTC C1126:13 displayed?	Yes	Go to the next step.
		No	Go to Step 8.
2	**INSPECT FRONT COMBINATION LIGHT (LH/RH) CONNECTOR CONDITION** • Switch the ignition to off. • Disconnect the negative battery cable. (See 01-17A-11 NEGATIVE BATTERY CABLE DISCONNECTION/CONNECTION [SKYACTIV-G 2.0].) (See 01-17A-13 NEGATIVE BATTERY CABLE DISCONNECTION/CONNECTION [SKYACTIV-G 2.0 (WITHOUT i-stop)].) (See 01-17B-9 NEGATIVE BATTERY CABLE DISCONNECTION/CONNECTION [SKYACTIV-D 2.2].) • Disconnect the front combination light (LH/RH) connector. • Inspect the connector engagement and connection condition and inspect the terminals for damage, deformation, corrosion, or disconnection. • Is the connector normal?	Yes	Go to the next step.
		No	Repair or replace the connector, then go to Step 7.
3	**INSPECT PARKING LIGHT BULB (LH/RH)** • Inspect the parking light bulb (LH/RH). • Is the parking light bulb (LH/RH) normal?	Yes	Go to the next step.
		No	Replace the parking light bulb (LH/RH), then go to Step 7. (See 09-18-36 PARKING LIGHT BULB REMOVAL/INSTALLATION.)
4	**INSPECT FRONT BODY CONTROL MODULE (FBCM) CONNECTOR CONDITION** • Disconnect the front body control module (FBCM) connector. • Inspect the connector engagement and connection condition and inspect the terminals for damage, deformation, corrosion, or disconnection. • Is the connector normal?	Yes	Go to the next step.
		No	Repair or replace the connector, then go to Step 7.
5	**INSPECT PARKING LIGHT (LH/RH) CONTROL CIRCUIT FOR SHORT TO POWER SUPPLY** • Verify that the front combination light (LH/RH) and front body control module (FBCM) connectors are disconnected. • Connect the negative battery cable. (See 01-17A-11 NEGATIVE BATTERY CABLE DISCONNECTION/CONNECTION [SKYACTIV-G 2.0].) (See 01-17A-13 NEGATIVE BATTERY CABLE DISCONNECTION/CONNECTION [SKYACTIV-G 2.0 (WITHOUT i-stop)].) (See 01-17B-9 NEGATIVE BATTERY CABLE DISCONNECTION/CONNECTION [SKYACTIV-D 2.2].) • Switch the ignition ON (engine off or on). • Measure the voltage at front body control module (FBCM) 1J terminal (vehicle wiring harness side). • Is the voltage **0 V**?	Yes	Go to the next step.
		No	Repair or replace the wiring harness, then go to Step 7.

ON-BOARD DIAGNOSTIC [FRONT BODY CONTROL MODULE (FBCM)]

Step	Inspection		Action
6	**INSPECT PARKING LIGHT (LH/RH) CONTROL CIRCUIT FOR OPEN CIRCUIT** • Verify that the front combination light (LH/RH) and front body control module (FBCM) connectors are disconnected. • Switch the ignition to off. • Disconnect the negative battery cable. (See 01-17A-11 NEGATIVE BATTERY CABLE DISCONNECTION/CONNECTION [SKYACTIV-G 2.0].) (See 01-17A-13 NEGATIVE BATTERY CABLE DISCONNECTION/CONNECTION [SKYACTIV-G 2.0 (WITHOUT i-stop)].) (See 01-17B-9 NEGATIVE BATTERY CABLE DISCONNECTION/CONNECTION [SKYACTIV-D 2.2].) • Inspect the wiring harness between the following terminals (vehicle wiring harness side) for continuity. — Front combination light (LH/RH) terminal C and front body control module (FBCM) terminal 1J (without headlight leveling system) — Front combination light (LH/RH) terminal D and front body control module (FBCM) terminal 1J (with headlight leveling system) • Is there continuity?	Yes	Go to the next step.
		No	Repair or replace the wiring harness, then go to the next step.
7	**VERIFY THAT REPAIRS HAVE BEEN COMPLETED** • Reconnect all the disconnected connectors. • Reconnect the disconnected negative battery cable. (See 01-17A-11 NEGATIVE BATTERY CABLE DISCONNECTION/CONNECTION [SKYACTIV-G 2.0].) (See 01-17A-13 NEGATIVE BATTERY CABLE DISCONNECTION/CONNECTION [SKYACTIV-G 2.0 (WITHOUT i-stop)].) (See 01-17B-9 NEGATIVE BATTERY CABLE DISCONNECTION/CONNECTION [SKYACTIV-D 2.2].) • Clear front body control module (FBCM) DTCs using the M-MDS. (See 09-02K-12 CLEARING DTC [FRONT BODY CONTROL MODULE (FBCM)].) • Switch the ignition ON (engine off or on). • Operate the light switch in TNS position. • Perform the front body control module (FBCM) DTC inspection using the M-MDS. (See 09-02K-10 DTC INSPECTION [FRONT BODY CONTROL MODULE (FBCM)].) • Is DTC C1126:13 displayed?	Yes	Repeat the inspection from Step 1. • If the malfunction recurs, replace the front body control module (FBCM), then go to the next step. (See 09-40-2 FRONT BODY CONTROL MODULE (FBCM) REMOVAL/INSTALLATION.)
		No	Go to the next step.
8	**VERIFY IF OTHER DTCs DISPLAYED** • Are any other DTCs displayed?	Yes	Repair the malfunctioning part according to the applicable DTC troubleshooting. (See 09-02K-13 DTC TABLE [FRONT BODY CONTROL MODULE (FBCM)].)
		No	DTC troubleshooting completed.

ON-BOARD DIAGNOSTIC [FRONT BODY CONTROL MODULE (FBCM)]

DTC U0001:88/U0100:00/U0101:00/U0121:00/U0155:00/U0214:00/U023A:00/U0515:00 [FRONT BODY CONTROL MODULE (FBCM)]

id0902p2010100

System malfunction location	**U0001:88** • **Module communication error (HS-CAN)** **U0100:00** • **Communication error with PCM** **U0101:00** • **Communication error with TCM** **U0121:00** • **Communication error with DSC HU/CM** **U0155:00** • **Communication error with instrument cluster** **U0214:00** • **Communication error with start stop unit** **U023A:00** • **Communication error with forward sensing camera (FSC)** **U0515:00** • **SAS control module communication error**
Detection condition	• U0001:88 — The front body control module (FBCM) detects CAN bus communication line (HS-CAN) malfunction **10 times** continuously. • U0100:00 — The front body control module (FBCM) could not receive CAN signal from the PCM for **5 s or more**. • U0101:00 — The front body control module (FBCM) could not receive CAN signal from the TCM for **5 s or more**. • U0121:00 — The front body control module (FBCM) could not receive CAN signal from the DSC HU/CM for **5 s or more**. • U0155:00 — The front body control module (FBCM) could not receive CAN signal from the instrument cluster for **5 s or more**. • U0214:00 — The front body control module (FBCM) could not receive CAN signal from the start stop unit for **5 s or more**. • U023A:00 — The front body control module (FBCM) could not receive CAN signal from the forward sensing camera (FSC) for **5 s or more**. • U0515:00 — The front body control module (FBCM) could not receive CAN signal from the SAS control module for **5 s or more**.
Fail-safe	• U0001:88 — Control at the default signal value after holding the previous value for 5 s. • U0100:00 — Control at the default signal value after holding the previous value for 5 s. • U0101:00 — Control at the default signal value after holding the previous value for 5 s. • U0121:00 — Control at the default signal value after holding the previous value for 5 s. • U0155:00 — Control at the default signal value after holding the previous value for 5 s. • U0214:00 — Control at the default signal value after holding the previous value for 5 s. • U023A:00 — Control at the default signal value after holding the previous value for 5 s. • U0515:00 — Control at the default signal value after holding the previous value for 5 s.
Possible cause	• Malfunction in CAN bus communication line • Malfunction in CAN line between the PCM and front body control module (FBCM) • Malfunction in CAN line between the TCM and front body control module (FBCM) • Malfunction in CAN line between the DSC HU/CM and front body control module (FBCM) • Malfunction in CAN line between the instrument cluster and front body control module (FBCM) • Malfunction in CAN line between the start stop unit and front body control module (FBCM) • Malfunction in CAN line between the forward sensing camera (FSC) and front body control module (FBCM) • Malfunction in CAN line between the SAS control module and front body control module (FBCM)
System wiring diagram	—

ON-BOARD DIAGNOSTIC [FRONT BODY CONTROL MODULE (FBCM)]

Diagnostic Procedure

- Perform the malfunction diagnosis according to the troubleshooting procedure for the multiplex communication system. (See 10-02A-1 FOREWORD [SKYACTIV-G 2.0 (L.H.D.)].) (See 10-02B-1 FOREWORD [SKYACTIV-G 2.0 (R.H.D.)].) (See 10-02C-1 FOREWORD [SKYACTIV-D 2.2 (L.H.D.)].) (See 10-02D-1 FOREWORD [SKYACTIV-D 2.2 (R.H.D.)].)

DTC U0164:68 [FRONT BODY CONTROL MODULE (FBCM)]

id0902p2010200

System malfunction location	Communication error between climate control unit
Detection condition	• The front body control module (FBCM) could not receive signals from the climate control unit for **5 s or more** with the ignition switched ON (engine off or on).
Fail-safe	—
Possible cause	• Climate control unit connector or terminal malfunction • Front body control module (FBCM) connector or terminal malfunction • Short to ground in wiring harness between climate control unit terminal K and front body control module (FBCM) terminal 2J • Short to power supply in wiring harness between climate control unit terminal K and front body control module (FBCM) terminal 2J • Open circuit in wiring harness between climate control unit terminal K and front body control module (FBCM) terminal 2J • Climate control unit malfunction • Front body control module (FBCM) malfunction

CLIMATE CONTROL UNIT
WIRING HARNESS-SIDE CONNECTOR

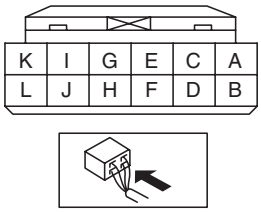

FBCM
WIRING HARNESS-SIDE CONNECTOR

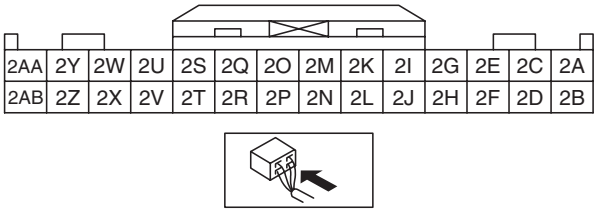

ON-BOARD DIAGNOSTIC [FRONT BODY CONTROL MODULE (FBCM)]

Diagnostic Procedure

Step	Inspection		Action
1	**VERIFY FRONT BODY CONTROL MODULE (FBCM) DTCs AGAIN** • Clear front body control module (FBCM) DTCs using the M-MDS. (See 09-02K-12 CLEARING DTC [FRONT BODY CONTROL MODULE (FBCM)].) • Switch the ignition ON (engine off or on) and wait for **5 s or more**. • Perform the front body control module (FBCM) DTC inspection using the M-MDS. (See 09-02K-10 DTC INSPECTION [FRONT BODY CONTROL MODULE (FBCM)].) • Is the DTC U0164:68 displayed?	Yes	Go to the next step.
		No	Go to Step 9.
2	**INSPECT CLIMATE CONTROL UNIT CONNECTOR CONDITION** • Switch the ignition to off. • Disconnect the negative battery cable. (See 01-17A-11 NEGATIVE BATTERY CABLE DISCONNECTION/CONNECTION [SKYACTIV-G 2.0].) (See 01-17A-13 NEGATIVE BATTERY CABLE DISCONNECTION/CONNECTION [SKYACTIV-G 2.0 (WITHOUT i-stop)].) (See 01-17B-9 NEGATIVE BATTERY CABLE DISCONNECTION/CONNECTION [SKYACTIV-D 2.2].) • Disconnect the climate control unit connector. • Inspect the connector engagement and connection condition and inspect the terminals for damage, deformation, corrosion, or disconnection. • Is the connector normal?	Yes	Go to the next step.
		No	Repair or replace the connector, then go to Step 8.
3	**INSPECT FRONT BODY CONTROL MODULE (FBCM) CONNECTOR CONDITION** • Disconnect the front body control module (FBCM) connector. • Inspect the connector engagement and connection condition and inspect the terminals for damage, deformation, corrosion, or disconnection. • Is the connector normal?	Yes	Go to the next step.
		No	Repair or replace the connector, then go to Step 8.
4	**INSPECT CLIMATE CONTROL UNIT CIRCUIT FOR SHORT TO GROUND** • Verify that the climate control unit and front body control module (FBCM) connectors are disconnected. • Inspect for continuity between front body control module (FBCM) terminal 2J (vehicle wiring harness side) and body ground. • Is there continuity?	Yes	Repair or replace the wiring harness which is shorted to ground, then go to Step 8.
		No	Go to the next step.

ON-BOARD DIAGNOSTIC [FRONT BODY CONTROL MODULE (FBCM)]

Step	Inspection		Action
5	**INSPECT CLIMATE CONTROL UNIT CIRCUIT FOR SHORT TO POWER SUPPLY** • Verify that the climate control unit and front body control module (FBCM) connectors are disconnected. • Connect the negative battery cable. (See 01-17A-11 NEGATIVE BATTERY CABLE DISCONNECTION/CONNECTION [SKYACTIV-G 2.0].) (See 01-17A-13 NEGATIVE BATTERY CABLE DISCONNECTION/CONNECTION [SKYACTIV-G 2.0 (WITHOUT i-stop)].) (See 01-17B-9 NEGATIVE BATTERY CABLE DISCONNECTION/CONNECTION [SKYACTIV-D 2.2].) • Switch the ignition ON (engine off or on). • Measure the voltage at front body control module (FBCM) terminal 2J (vehicle wiring harness side). • Is the voltage **0 V**?	Yes	Go to the next step.
		No	Repair or replace the wiring harness which is shorted to power supply, then go to Step 8.
6	**INSPECT CLIMATE CONTROL UNIT CIRCUIT FOR OPEN CIRCUIT** • Verify that the climate control unit and front body control module (FBCM) connectors are disconnected. • Switch the ignition to off. • Disconnect the negative battery cable. (See 01-17A-11 NEGATIVE BATTERY CABLE DISCONNECTION/CONNECTION [SKYACTIV-G 2.0].) (See 01-17A-13 NEGATIVE BATTERY CABLE DISCONNECTION/CONNECTION [SKYACTIV-G 2.0 (WITHOUT i-stop)].) (See 01-17B-9 NEGATIVE BATTERY CABLE DISCONNECTION/CONNECTION [SKYACTIV-D 2.2].) • Inspect the wiring harness for continuity between climate control unit terminal K (vehicle wiring harness side) and front body control module (FBCM) terminal 2J (vehicle wiring harness side). • Is there continuity?	Yes	Go to the next step.
		No	Repair or replace the wiring harness which has an open circuit, then go to Step 8.
7	**PERFORM DTC INSPECTION AND VERIFY IF MALFUNCTIONING PART IS CLIMATE CONTROL UNIT** • Reconnect all the disconnected connectors. • Reconnect the disconnected negative battery cable. (See 01-17A-11 NEGATIVE BATTERY CABLE DISCONNECTION/CONNECTION [SKYACTIV-G 2.0].) (See 01-17A-13 NEGATIVE BATTERY CABLE DISCONNECTION/CONNECTION [SKYACTIV-G 2.0 (WITHOUT i-stop)].) (See 01-17B-9 NEGATIVE BATTERY CABLE DISCONNECTION/CONNECTION [SKYACTIV-D 2.2].) • Clear front body control module (FBCM) DTCs using the M-MDS. (See 09-02K-12 CLEARING DTC [FRONT BODY CONTROL MODULE (FBCM)].) • Switch the ignition ON (engine off or on) and wait for **5 s or more**. • Perform the front body control module (FBCM) DTC inspection using the M-MDS. (See 09-02K-10 DTC INSPECTION [FRONT BODY CONTROL MODULE (FBCM)].) • Is the DTC U0164:68 displayed?	Yes	Replace the climate control unit, then go to the next step. (See 07-40B-16 CLIMATE CONTROL UNIT REMOVAL/INSTALLATION [MANUAL AIR CONDITIONER].)
		No	Go to Step 9.

ON-BOARD DIAGNOSTIC [FRONT BODY CONTROL MODULE (FBCM)]

Step	Inspection		Action
8	**VERIFY THAT REPAIRS HAVE BEEN COMPLETED** • Reconnect all the disconnected connectors. • Reconnect the disconnected negative battery cable. (See 01-17A-11 NEGATIVE BATTERY CABLE DISCONNECTION/CONNECTION [SKYACTIV-G 2.0].) (See 01-17A-13 NEGATIVE BATTERY CABLE DISCONNECTION/CONNECTION [SKYACTIV-G 2.0 (WITHOUT i-stop)].) (See 01-17B-9 NEGATIVE BATTERY CABLE DISCONNECTION/CONNECTION [SKYACTIV-D 2.2].) • Clear front body control module (FBCM) DTCs using the M-MDS. (See 09-02K-12 CLEARING DTC [FRONT BODY CONTROL MODULE (FBCM)].) • Switch the ignition ON (engine off or on) and wait for **5 s or more**. • Perform the front body control module (FBCM) DTC inspection using the M-MDS. (See 09-02K-10 DTC INSPECTION [FRONT BODY CONTROL MODULE (FBCM)].) • Is the DTC U0164:68 displayed?	Yes	Replace the front body control module (FBCM), then go to the next step. (See 09-40-2 FRONT BODY CONTROL MODULE (FBCM) REMOVAL/INSTALLATION.)
		No	Go to the next step.
9	**VERIFY IF OTHER DTCs DISPLAYED** • Are any other DTCs displayed?	Yes	Repair the malfunctioning part according to the applicable DTC troubleshooting. (See 09-02K-13 DTC TABLE [FRONT BODY CONTROL MODULE (FBCM)].)
		No	DTC troubleshooting completed.

ON-BOARD DIAGNOSTIC [FRONT BODY CONTROL MODULE (FBCM)]

DTC U0231:68 [FRONT BODY CONTROL MODULE (FBCM)]

id0902p2010300

System malfunction location	**Communication error with auto-light sensor/rain sensor**
Detection condition	• The front body control module (FBCM) receives error signals from the auto-light sensor/rain sensor for **5 s or more** with the ignition switched ON (engine off or on).
Fail-safe	—
Possible cause	• Auto-light sensor/rain sensor connector or terminal malfunction • Front body control module (FBCM) connector or terminal malfunction • Short to ground in wiring harness between auto-light sensor/rain sensor terminal A and front body control module (FBCM) terminal 2G • Short to power supply in wiring harness between auto-light sensor/rain sensor terminal A and front body control module (FBCM) terminal 2G • Open circuit in wiring harness between auto-light sensor/rain sensor terminal A and front body control module (FBCM) terminal 2G • Auto-light sensor/rain sensor malfunction • Front body control module (FBCM) malfunction

AUTO LIGHT SENSOR /
RAIN SENSOR
WIRING HARNESS-SIDE CONNECTOR

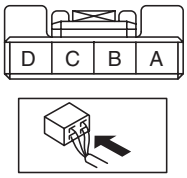

FBCM
WIRING HARNESS-SIDE CONNECTOR

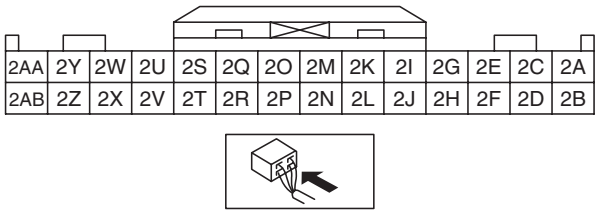

ON-BOARD DIAGNOSTIC [FRONT BODY CONTROL MODULE (FBCM)]

Diagnostic Procedure

Step	Inspection		Action
1	**VERIFY FRONT BODY CONTROL MODULE (FBCM) DTCs AGAIN** • Clear front body control module (FBCM) DTCs using the M-MDS. (See 09-02K-12 CLEARING DTC [FRONT BODY CONTROL MODULE (FBCM)].) • Switch the ignition ON (engine off or on) and wait for **5 s or more**. • Perform the front body control module (FBCM) DTC inspection using the M-MDS. (See 09-02K-10 DTC INSPECTION [FRONT BODY CONTROL MODULE (FBCM)].) • Is the DTC U0231:68 displayed?	Yes	Go to the next step.
		No	Go to Step 9.
2	**INSPECT AUTO-LIGHT SENSOR/RAIN SENSOR CONNECTOR CONDITION** • Switch the ignition to off. • Disconnect the negative battery cable. (See 01-17A-11 NEGATIVE BATTERY CABLE DISCONNECTION/CONNECTION [SKYACTIV-G 2.0].) (See 01-17A-13 NEGATIVE BATTERY CABLE DISCONNECTION/CONNECTION [SKYACTIV-G 2.0 (WITHOUT i-stop)].) (See 01-17B-9 NEGATIVE BATTERY CABLE DISCONNECTION/CONNECTION [SKYACTIV-D 2.2].) • Disconnect the auto-light sensor/rain sensor connector. • Inspect the connector engagement and connection condition and inspect the terminals for damage, deformation, corrosion, or disconnection. • Is the connector normal?	Yes	Go to the next step.
		No	Repair or replace the connector, then go to Step 8.
3	**INSPECT FRONT BODY CONTROL MODULE (FBCM) CONNECTOR CONDITION** • Disconnect the front body control module (FBCM) connector. • Inspect the connector engagement and connection condition and inspect the terminals for damage, deformation, corrosion, or disconnection. • Is the connector normal?	Yes	Go to the next step.
		No	Repair or replace the connector, then go to Step 8.
4	**INSPECT AUTO-LIGHT SENSOR/RAIN SENSOR CIRCUIT FOR SHORT TO GROUND** • Verify that the auto-light sensor/rain sensor and front body control module (FBCM) connectors are disconnected. • Inspect for continuity between front body control module (FBCM) terminal 2G (vehicle wiring harness side) and body ground. • Is there continuity?	Yes	Repair or replace the wiring harness which is shorted to ground, then go to Step 8.
		No	Go to the next step.

ON-BOARD DIAGNOSTIC [FRONT BODY CONTROL MODULE (FBCM)]

Step	Inspection		Action
5	**INSPECT AUTO-LIGHT SENSOR/RAIN SENSOR CIRCUIT FOR SHORT TO POWER SUPPLY** • Verify that the auto-light sensor/rain sensor and front body control module (FBCM) connectors are disconnected. • Connect the negative battery cable. (See 01-17A-11 NEGATIVE BATTERY CABLE DISCONNECTION/CONNECTION [SKYACTIV-G 2.0].) (See 01-17A-13 NEGATIVE BATTERY CABLE DISCONNECTION/CONNECTION [SKYACTIV-G 2.0 (WITHOUT i-stop)].) (See 01-17B-9 NEGATIVE BATTERY CABLE DISCONNECTION/CONNECTION [SKYACTIV-D 2.2].) • Switch the ignition ON (engine off or on). • Measure the voltage at front body control module (FBCM) terminal 2G (vehicle wiring harness side). • Is the voltage **0 V**?	Yes	Go to the next step.
		No	Repair or replace the wiring harness which is shorted to power supply, then go to Step 8.
6	**INSPECT AUTO-LIGHT SENSOR/RAIN SENSOR CIRCUIT FOR OPEN CIRCUIT** • Verify that the auto-light sensor/rain sensor and front body control module (FBCM) connectors are disconnected. • Switch the ignition to off. • Disconnect the negative battery cable. (See 01-17A-11 NEGATIVE BATTERY CABLE DISCONNECTION/CONNECTION [SKYACTIV-G 2.0].) (See 01-17A-13 NEGATIVE BATTERY CABLE DISCONNECTION/CONNECTION [SKYACTIV-G 2.0 (WITHOUT i-stop)].) (See 01-17B-9 NEGATIVE BATTERY CABLE DISCONNECTION/CONNECTION [SKYACTIV-D 2.2].) • Inspect the wiring harness for continuity between auto-light sensor/rain sensor terminal A (vehicle wiring harness side) and front body control module (FBCM) terminal 2G (vehicle wiring harness side). • Is there continuity?	Yes	Go to the next step.
		No	Repair or replace the wiring harness which has an open circuit, then go to Step 8.
7	**PERFORM DTC INSPECTION AND VERIFY IF MALFUNCTIONING PART IS AUTO-LIGHT SENSOR/RAIN SENSOR** • Reconnect all the disconnected connectors. • Reconnect the disconnected negative battery cable. (See 01-17A-11 NEGATIVE BATTERY CABLE DISCONNECTION/CONNECTION [SKYACTIV-G 2.0].) (See 01-17A-13 NEGATIVE BATTERY CABLE DISCONNECTION/CONNECTION [SKYACTIV-G 2.0 (WITHOUT i-stop)].) (See 01-17B-9 NEGATIVE BATTERY CABLE DISCONNECTION/CONNECTION [SKYACTIV-D 2.2].) • Clear front body control module (FBCM) DTCs using the M-MDS. (See 09-02K-12 CLEARING DTC [FRONT BODY CONTROL MODULE (FBCM)].) • Switch the ignition ON (engine off or on) and wait for **5 s or more**. • Perform the front body control module (FBCM) DTC inspection using the M-MDS. (See 09-02K-10 DTC INSPECTION [FRONT BODY CONTROL MODULE (FBCM)].) • Is the DTC U0231:68 displayed?	Yes	Replace the auto-light sensor/rain sensor, then go to the next step. (See 09-19-58 RAIN SENSOR REMOVAL/ INSTALLATION.)
		No	Go to Step 9.

ON-BOARD DIAGNOSTIC [FRONT BODY CONTROL MODULE (FBCM)]

Step	Inspection		Action
8	**VERIFY THAT REPAIRS HAVE BEEN COMPLETED** • Reconnect all the disconnected connectors. • Reconnect the disconnected negative battery cable. (See 01-17A-11 NEGATIVE BATTERY CABLE DISCONNECTION/CONNECTION [SKYACTIV-G 2.0].) (See 01-17A-13 NEGATIVE BATTERY CABLE DISCONNECTION/CONNECTION [SKYACTIV-G 2.0 (WITHOUT i-stop)].) (See 01-17B-9 NEGATIVE BATTERY CABLE DISCONNECTION/CONNECTION [SKYACTIV-D 2.2].) • Clear front body control module (FBCM) DTCs using the M-MDS. (See 09-02K-12 CLEARING DTC [FRONT BODY CONTROL MODULE (FBCM)].) • Switch the ignition ON (engine off or on) and wait for **5 s or more**. • Perform the front body control module (FBCM) DTC inspection using the M-MDS. (See 09-02K-10 DTC INSPECTION [FRONT BODY CONTROL MODULE (FBCM)].) • Is the DTC U0231:68 displayed?	Yes	replace the front body control module (FBCM), then go to the next step. (See 09-40-2 FRONT BODY CONTROL MODULE (FBCM) REMOVAL/INSTALLATION.)
		No	Go to the next step.
9	**VERIFY IF OTHER DTCs DISPLAYED** • Are any other DTCs displayed?	Yes	Repair the malfunctioning part according to the applicable DTC troubleshooting. (See 09-02K-13 DTC TABLE [FRONT BODY CONTROL MODULE (FBCM)].)
		No	DTC troubleshooting completed.

ON-BOARD DIAGNOSTIC [FRONT BODY CONTROL MODULE (FBCM)]

DTC U0298:68 [FRONT BODY CONTROL MODULE (FBCM)]

id0902p2010400

System malfunction location	**Communication error with DC-DC converter**
Detection condition	• The front body control module (FBCM) detects a communication error with the DC-DC converter.
Fail-safe	—
Possible cause	• Malfunction in communication line between front body control module (FBCM) and DC-DC converter • DC-DC converter connector terminal malfunction • Open or short to ground in DC-DC converter power supply circuit — Short to ground in wiring harness between battery positive terminal and DC-DC converter terminal L — DCDC 50 A fuse malfunction (SKYACTIV-G 2.0) — DCDC DE 40 A fuse malfunction (SKYACTIV-D 2.2) — GLOW 80 A fuse malfunction (SKYACTIV-D 2.2) — Open circuit in wiring harness between battery positive terminal and DC-DC converter terminal L • Open or short to ground in DC-DC converter power supply circuit — Short to ground in wiring harness between IG1 relay terminal C and DC-DC converter terminal H — C/U IG1 15 A fuse malfunction — Open circuit in wiring harness between IG1 relay terminal C and DC-DC converter terminal H • Front body control module (FBCM) connector or terminal malfunction • Short to ground in wiring harness between DC-DC converter terminal C and front body control module (FBCM) terminal 2H • Open circuit in wiring harness between DC-DC converter terminal C and front body control module (FBCM) terminal 2H • DC-DC converter malfunction • Front body control module (FBCM) malfunction

SKYACTIV-G 2.0

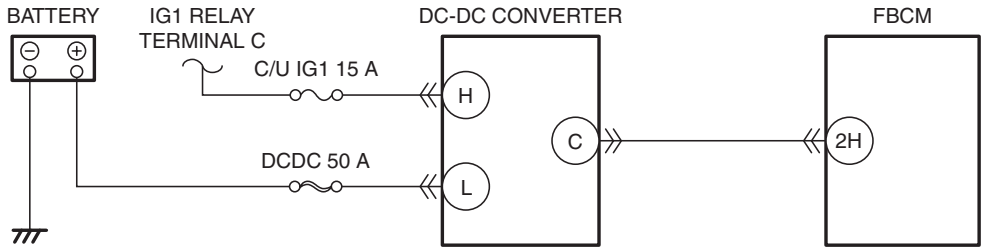

SKYACTIV-D 2.2

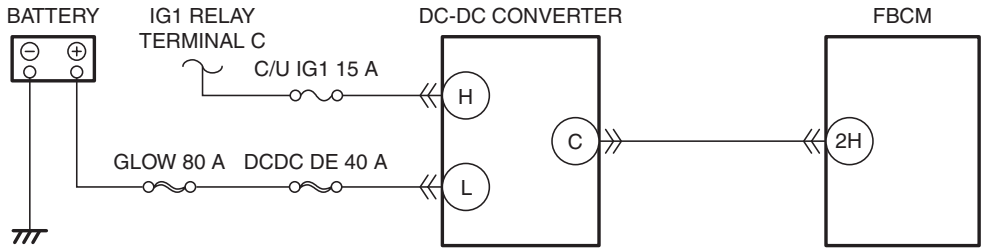

DC-DC CONVERTER
WIRING HARNESS-SIDE CONNECTOR

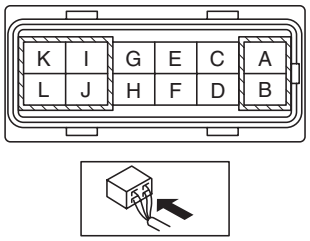

FBCM
WIRING HARNESS-SIDE CONNECTOR

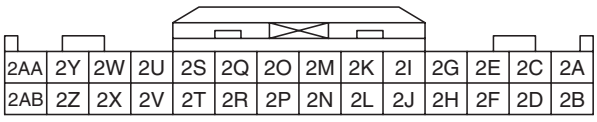

ON-BOARD DIAGNOSTIC [FRONT BODY CONTROL MODULE (FBCM)]

Diagnostic Procedure

Step	Inspection		Action
1	**VERIFY FRONT BODY CONTROL MODULE (FBCM) DTCs AGAIN** • Clear front body control module (FBCM) DTCs using the M-MDS. (See 09-02K-12 CLEARING DTC [FRONT BODY CONTROL MODULE (FBCM)].) • Switch the ignition ON (engine off or on) and wait for **5 s or more**. • Perform the front body control module (FBCM) DTC inspection using the M-MDS. (See 09-02K-10 DTC INSPECTION [FRONT BODY CONTROL MODULE (FBCM)].) • Is the DTC U0298:68 displayed?	Yes	Go to the next step.
		No	Go to Step 10.
2	**INSPECT DC-DC CONVERTER CONNECTOR CONDITION** • Switch the ignition to off. • Disconnect the negative battery cable. (See 01-17A-11 NEGATIVE BATTERY CABLE DISCONNECTION/CONNECTION [SKYACTIV-G 2.0].) (See 01-17A-13 NEGATIVE BATTERY CABLE DISCONNECTION/CONNECTION [SKYACTIV-G 2.0 (WITHOUT i-stop)].) (See 01-17B-9 NEGATIVE BATTERY CABLE DISCONNECTION/CONNECTION [SKYACTIV-D 2.2].) • Disconnect the DC-DC converter connector. • Inspect the connector engagement and connection condition and inspect the terminals for damage, deformation, corrosion, or disconnection. • Is the connector normal?	Yes	Go to the next step.
		No	Repair or replace the connector, then go to Step 9.
3	**INSPECT DC-DC CONVERTER POWER SUPPLY CIRCUIT FOR OPEN CIRCUIT OR SHORT TO GROUND** • Verify that the DC-DC connector is disconnected. • Connect the negative battery cable. (See 01-17A-11 NEGATIVE BATTERY CABLE DISCONNECTION/CONNECTION [SKYACTIV-G 2.0].) (See 01-17A-13 NEGATIVE BATTERY CABLE DISCONNECTION/CONNECTION [SKYACTIV-G 2.0 (WITHOUT i-stop)].) (See 01-17B-9 NEGATIVE BATTERY CABLE DISCONNECTION/CONNECTION [SKYACTIV-D 2.2].) • Measure the voltage at DC-DC converter terminal L (vehicle wiring harness side). • Is the voltage B+?	Yes	Go to the next step.
		No	Inspect the following fuses: • DCDC 50 A fuse (SKYACTIV-G 2.0) • DCDC DE 40 A fuse (SKYACTIV-D 2.2) • GLOW 80 A fuse (SKYACTIV-D 2.2) — If a fuse is burnt out: • Repair or replace the wiring harness which is shorted to ground. • Replace the fuse. — If a fuse is damaged: • Replace the fuse. — If the fuse is normal: • Repair or replace the wiring harness which has an open circuit. Go to Step 9.
4	**INSPECT DC-DC CONVERTER POWER SUPPLY CIRCUIT FOR OPEN CIRCUIT OR SHORT TO GROUND** • Verify that the DC-DC connector is disconnected. • Switch the ignition ON (engine off or on). • Measure the voltage at DC-DC converter terminal H (vehicle wiring harness side). • Is the voltage B+?	Yes	Go to the next step.
		No	Inspect the C/U IG1 15 A fuse. • If a fuse is burnt out: — Repair or replace the wiring harness which is shorted to ground. — Replace the fuse. • If a fuse is damaged: — Replace the fuse. • If the fuse is normal: — Repair or replace the wiring harness which has an open circuit. Go to Step 9.

ON-BOARD DIAGNOSTIC [FRONT BODY CONTROL MODULE (FBCM)]

Step	Inspection		Action
5	**INSPECT FRONT BODY CONTROL MODULE (FBCM) CONNECTOR CONDITION** • Switch the ignition to off. • Disconnect the negative battery cable. (See 01-17A-11 NEGATIVE BATTERY CABLE DISCONNECTION/CONNECTION [SKYACTIV-G 2.0].) (See 01-17A-13 NEGATIVE BATTERY CABLE DISCONNECTION/CONNECTION [SKYACTIV-G 2.0 (WITHOUT i-stop)].) (See 01-17B-9 NEGATIVE BATTERY CABLE DISCONNECTION/CONNECTION [SKYACTIV-D 2.2].) • Disconnect the front body control module (FBCM) connector. • Inspect the connector engagement and connection condition and inspect the terminals for damage, deformation, corrosion, or disconnection. • Is the connector normal?	Yes	Go to the next step.
		No	Repair or replace the connector, then go to Step 9.
6	**INSPECT DC-DC CONVERTER LIN COMMUNICATION CIRCUIT FOR SHORT TO GROUND** • Verify that the DC-DC converter and front body control module (FBCM) connectors are disconnected. • Inspect for continuity between DC-DC converter terminal C (vehicle wiring harness) and body ground. • Is there continuity?	Yes	Repair or replace the wiring harness, then go to Step 9.
		No	Go to the next step.
7	**INSPECT DC-DC CONVERTER LIN COMMUNICATION CIRCUIT FOR OPEN CIRCUIT** • Verify that the DC-DC converter and front body control module (FBCM) connectors are disconnected. • Inspect the wiring harness for continuity between DC-DC converter terminal C (vehicle wiring harness side) and front body control module (FBCM) terminal 2H (vehicle wiring harness side). • Is there continuity?	Yes	Go to the next step.
		No	Repair or replace the wiring harness, then go to Step 9.
8	**INSPECT DC-DC CONVERTER** • Inspect the DC-DC converter. (See 01-17A-27 DC-DC CONVERTER INSPECTION [SKYACTIV-G 2.0].) • Is the DC-DC converter normal?	Yes	Go to the next step.
		No	Replace the DC-DC converter, then go to the next step. (See 01-17A-26 DC-DC CONVERTER REMOVAL/INSTALLATION [SKYACTIV-G 2.0].) (See 01-17B-22 DC-DC CONVERTER REMOVAL/INSTALLATION [SKYACTIV-D 2.2].)

ON-BOARD DIAGNOSTIC [FRONT BODY CONTROL MODULE (FBCM)]

Step	Inspection		Action
9	**VERIFY THAT REPAIRS HAVE BEEN COMPLETED** • Reconnect all the disconnected connectors. • Reconnect the disconnected negative battery cable. (See 01-17A-11 NEGATIVE BATTERY CABLE DISCONNECTION/CONNECTION [SKYACTIV-G 2.0].) (See 01-17A-13 NEGATIVE BATTERY CABLE DISCONNECTION/CONNECTION [SKYACTIV-G 2.0 (WITHOUT i-stop)].) (See 01-17B-9 NEGATIVE BATTERY CABLE DISCONNECTION/CONNECTION [SKYACTIV-D 2.2].) • Clear front body control module (FBCM) DTCs using the M-MDS. (See 09-02K-12 CLEARING DTC [FRONT BODY CONTROL MODULE (FBCM)].) • Switch the ignition ON (engine off or on) and wait for **5 s or more**. • Perform the front body control module (FBCM) DTC inspection using the M-MDS. (See 09-02K-10 DTC INSPECTION [FRONT BODY CONTROL MODULE (FBCM)].) • Is the DTC U0298:68 displayed?	Yes	Repeat the inspection from Step 1. • If the malfunction recurs, replace the front body control module (FBCM), then go to the next step. (See 09-40-2 FRONT BODY CONTROL MODULE (FBCM) REMOVAL/INSTALLATION.)
		No	Go to the next step.
10	**VERIFY IF OTHER DTCs DISPLAYED** • Are any other DTCs displayed?	Yes	Repair the malfunctioning part according to the applicable DTC troubleshooting. (See 09-02K-13 DTC TABLE [FRONT BODY CONTROL MODULE (FBCM)].)
		No	DTC troubleshooting completed.

ON-BOARD DIAGNOSTIC [FRONT BODY CONTROL MODULE (FBCM)]

DTC U0338:09 [FRONT BODY CONTROL MODULE (FBCM)]

id0902p2010500

System malfunction location	**Error light switch signal received from start stop unit**
Detection condition	• The front body control module (FBCM) receives CAN error signals from the start stop unit **3 times** with the ignition switched ON (engine off or on).
Fail-safe	—
Possible cause	• Light switch malfunction • Start stop unit malfunction • Front body control module (FBCM) malfunction
System wiring diagram	—

Diagnostic Procedure

Step	Inspection		Action
1	**VERIFY FRONT BODY CONTROL MODULE (FBCM) DTCs AGAIN** • Clear front body control module (FBCM) DTCs using the M-MDS. (See 09-02K-12 CLEARING DTC [FRONT BODY CONTROL MODULE (FBCM)].) • Switch the ignition ON (engine off or on). • Perform the front body control module (FBCM) DTC inspection using the M-MDS. (See 09-02K-10 DTC INSPECTION [FRONT BODY CONTROL MODULE (FBCM)].) • Is the DTC U0338:09 displayed?	Yes	Go to the next step.
		No	Go to Step 5.
2	**INSPECT LIGHT SWITCH** • Inspect the light switch. (See 09-18-86 LIGHT SWITCH INSPECTION.) • Is the light switch normal?	Yes	Go to the next step.
		No	Replace the light switch, then go to Step 4. (See 09-18-84 LIGHT SWITCH REMOVAL/INSTALLATION.)
3	**PERFORM DTC INSPECTION AND VERIFY IF MALFUNCTIONING PART IS START STOP UNIT** • Clear front body control module (FBCM) DTCs using the M-MDS. (See 09-02K-12 CLEARING DTC [FRONT BODY CONTROL MODULE (FBCM)].) • Switch the ignition ON (engine off or on). • Perform the front body control module (FBCM) DTC inspection using the M-MDS. (See 09-02K-10 DTC INSPECTION [FRONT BODY CONTROL MODULE (FBCM)].) • Is the DTC U0338:09 displayed?	Yes	Replace the start stop unit, then go to the next step. (See 09-14-53 START STOP UNIT REMOVAL/INSTALLATION.)
		No	Go to Step 5.
4	**VERIFY THAT REPAIRS HAVE BEEN COMPLETED** • Clear front body control module (FBCM) DTCs using the M-MDS. (See 09-02K-12 CLEARING DTC [FRONT BODY CONTROL MODULE (FBCM)].) • Switch the ignition ON (engine off or on). • Perform the front body control module (FBCM) DTC inspection using the M-MDS. (See 09-02K-10 DTC INSPECTION [FRONT BODY CONTROL MODULE (FBCM)].) • Is the DTC U0338:09 displayed?	Yes	replace the front body control module (FBCM), then go to the next step. (See 09-40-2 FRONT BODY CONTROL MODULE (FBCM) REMOVAL/INSTALLATION.)
		No	Go to the next step.
5	**VERIFY IF OTHER DTCs DISPLAYED** • Are any other DTCs displayed?	Yes	Repair the malfunctioning part according to the applicable DTC troubleshooting. (See 09-02K-13 DTC TABLE [FRONT BODY CONTROL MODULE (FBCM)].)
		No	DTC troubleshooting completed.

ON-BOARD DIAGNOSTIC [FRONT BODY CONTROL MODULE (FBCM)]

DTC U0401:68 [FRONT BODY CONTROL MODULE (FBCM)]

id0902p2010600

System malfunction location	**Error signal received from PCM**
Detection condition	• The front body control module (FBCM) receives error ECT sensor or ambient temperature sensor signals from the PCM for **5 s or more** with the ignition switched ON (engine off or on).
Fail-safe	—
Possible cause	• ECT sensor malfunction • Ambient temperature sensor malfunction • PCM malfunction • Front body control module (FBCM) malfunction
System wiring diagram	—

ON-BOARD DIAGNOSTIC [FRONT BODY CONTROL MODULE (FBCM)]

Diagnostic Procedure

Step	Inspection		Action
1	**VERIFY FRONT BODY CONTROL MODULE (FBCM) DTCs AGAIN** • Clear front body control module (FBCM) DTCs using the M-MDS. (See 09-02K-12 CLEARING DTC [FRONT BODY CONTROL MODULE (FBCM)].) • Switch the ignition ON (engine off or on) and wait for **5 s or more**. • Perform the front body control module (FBCM) DTC inspection using the M-MDS. (See 09-02K-10 DTC INSPECTION [FRONT BODY CONTROL MODULE (FBCM)].) • Is DTC U0401:68 displayed?	Yes	Go to the next step.
		No	Go to Step 6.
2	**INSPECT ECT SENSOR** • Inspect the ECT sensor. (See 01-40-43 ENGINE COOLANT TEMPERATURE (ECT) SENSOR INSPECTION [SKYACTIV-G 2.0].) • Is the ECT sensor normal?	Yes	Go to the next step.
		No	Replace the ECT sensor, then go to Step 5. (See 01-40-41 ENGINE COOLANT TEMPERATURE (ECT) SENSOR REMOVAL/INSTALLATION [SKYACTIV-G 2.0].)
3	**INSPECT AMBIENT TEMPERATURE SENSOR** • Inspect the ambient temperature sensor. (See 07-40B-11 AMBIENT TEMPERATURE SENSOR INSPECTION [MANUAL AIR CONDITIONER].) (See 07-40A-23 AMBIENT TEMPERATURE SENSOR INSPECTION [FULL-AUTO AIR CONDITIONER].) • Is the ambient temperature sensor normal?	Yes	Go to the next step.
		No	Replace the ambient temperature sensor, then go to Step 5. (See 07-40B-11 AMBIENT TEMPERATURE SENSOR REMOVAL/INSTALLATION [MANUAL AIR CONDITIONER].) (See 07-40A-22 AMBIENT TEMPERATURE SENSOR REMOVAL/INSTALLATION [FULL-AUTO AIR CONDITIONER].)
4	**PERFORM DTC INSPECTION AND VERIFY IF MALFUNCTIONING PART IS PCM** • Clear front body control module (FBCM) DTCs using the M-MDS. (See 09-02K-12 CLEARING DTC [FRONT BODY CONTROL MODULE (FBCM)].) • Switch the ignition ON (engine off or on) and wait for **5 s or more**. • Perform the front body control module (FBCM) DTC inspection using the M-MDS. (See 09-02K-10 DTC INSPECTION [FRONT BODY CONTROL MODULE (FBCM)].) • Is DTC U0401:68 displayed?	Yes	Replace the PCM, then go to the next step. (See 01-40-10 PCM REMOVAL/INSTALLATION [SKYACTIV-G 2.0].)
		No	Go to Step 6.
5	**VERIFY THAT REPAIRS HAVE BEEN COMPLETED** • Clear front body control module (FBCM) DTCs using the M-MDS. (See 09-02K-12 CLEARING DTC [FRONT BODY CONTROL MODULE (FBCM)].) • Switch the ignition ON (engine off or on) and wait for **5 s or more**. • Perform the front body control module (FBCM) DTC inspection using the M-MDS. (See 09-02K-10 DTC INSPECTION [FRONT BODY CONTROL MODULE (FBCM)].) • Is DTC U0401:68 displayed?	Yes	replace the front body control module (FBCM), then go to the next step. (See 09-40-2 FRONT BODY CONTROL MODULE (FBCM) REMOVAL/INSTALLATION.)
		No	Go to the next step.
6	**VERIFY IF OTHER DTCs DISPLAYED** • Are any other DTCs displayed?	Yes	Repair the malfunctioning part according to the applicable DTC troubleshooting. (See 09-02K-13 DTC TABLE [FRONT BODY CONTROL MODULE (FBCM)].)
		No	DTC troubleshooting completed.

ON-BOARD DIAGNOSTIC [FRONT BODY CONTROL MODULE (FBCM)]

DTC U0415:68 [FRONT BODY CONTROL MODULE (FBCM)]

id0902p2010700

System malfunction location	**Error signal received from DSC HU/CM**
Detection condition	• The front body control module (FBCM) receives error Low-G (XY) sensor (built-into SAS control module) signals from the DSC HU/CM for **5 s or more** with the ignition switched ON (engine off or on).
Fail-safe	—
Possible cause	• Low-G (XY) sensor (built-into SAS control module) malfunction • DSC HU/CM malfunction • Front body control module (FBCM) malfunction
System wiring diagram	—

ON-BOARD DIAGNOSTIC [FRONT BODY CONTROL MODULE (FBCM)]

Diagnostic Procedure

Step	Inspection		Action
1	**VERIFY FRONT BODY CONTROL MODULE (FBCM) DTCs AGAIN** • Clear front body control module (FBCM) DTCs using the M-MDS. (See 09-02K-12 CLEARING DTC [FRONT BODY CONTROL MODULE (FBCM)].) • Switch the ignition ON (engine off or on) and wait for **5 s or more**. • Perform the front body control module (FBCM) DTC inspection using the M-MDS. (See 09-02K-10 DTC INSPECTION [FRONT BODY CONTROL MODULE (FBCM)].) • Is DTC U0415:68 displayed?	Yes	Go to the next step.
		No	Go to Step 6.
2	**VERIFY DSC HU/CM DTCs** • Perform the DTC inspection for the DSC HU/CM using the M-MDS. (See 04-02A-7 ON-BOARD DIAGNOSIS [DYNAMIC STABILITY CONTROL (DSC)].) • Is the DTC displayed?	Yes	Repair the malfunctioning part according to the applicable DTC troubleshooting. (See 04-02A-7 ON-BOARD DIAGNOSIS [DYNAMIC STABILITY CONTROL (DSC)].)
		No	Go to the next step.
3	**VERIFY SAS CONTROL MODULE DTCs** • Perform the DTC inspection for the SAS control module using the M-MDS. (See 08-02-7 DTC INSPECTION.) • Is the DTC displayed?	Yes	Repair the malfunctioning part according to the applicable DTC troubleshooting. (See 08-02-11 DTC TABLE.)
		No	Go to the next step.
4	**PERFORM DTC INSPECTION AND VERIFY IF MALFUNCTIONING PART IS DSC HU/CM** • Clear front body control module (FBCM) DTCs using the M-MDS. (See 09-02K-12 CLEARING DTC [FRONT BODY CONTROL MODULE (FBCM)].) • Switch the ignition ON (engine off or on) and wait for **5 s or more**. • Perform the front body control module (FBCM) DTC inspection using the M-MDS. (See 09-02K-10 DTC INSPECTION [FRONT BODY CONTROL MODULE (FBCM)].) • Is DTC U0415:68 displayed?	Yes	Replace the DSC HU/CM, then go to the next step. (See 04-15-4 DSC HU/CM REMOVAL/INSTALLATION.)
		No	Go to Step 6.
5	**VERIFY THAT REPAIRS HAVE BEEN COMPLETED** • Clear front body control module (FBCM) DTCs using the M-MDS. (See 09-02K-12 CLEARING DTC [FRONT BODY CONTROL MODULE (FBCM)].) • Switch the ignition ON (engine off or on) and wait for **5 s or more**. • Perform the front body control module (FBCM) DTC inspection using the M-MDS. (See 09-02K-10 DTC INSPECTION [FRONT BODY CONTROL MODULE (FBCM)].) • Is DTC U0415:68 displayed?	Yes	replace the front body control module (FBCM), then go to the next step. (See 09-40-2 FRONT BODY CONTROL MODULE (FBCM) REMOVAL/INSTALLATION.)
		No	Go to the next step.
6	**VERIFY IF OTHER DTCs DISPLAYED** • Are any other DTCs displayed?	Yes	Repair the malfunctioning part according to the applicable DTC troubleshooting. (See 09-02K-13 DTC TABLE [FRONT BODY CONTROL MODULE (FBCM)].)
		No	DTC troubleshooting completed.

ON-BOARD DIAGNOSTIC [FRONT BODY CONTROL MODULE (FBCM)]

DTC U053B:68 [FRONT BODY CONTROL MODULE (FBCM)]

id0902p2010800

System malfunction location	**Error signal received from forward sensing camera (FSC)**
Detection condition	• The front body control module (FBCM) receives error signals from the forward sensing camera (FSC) for **5 s or more** with the ignition switched ON (engine off or on).
Fail-safe	—
Possible cause	• Forward sensing camera (FSC) malfunction • Front body control module (FBCM) malfunction
System wiring diagram	—

ON-BOARD DIAGNOSTIC [FRONT BODY CONTROL MODULE (FBCM)]

Diagnostic Procedure

Step	Inspection		Action
1	**VERIFY FRONT BODY CONTROL MODULE (FBCM) DTCs AGAIN** • Clear front body control module (FBCM) DTCs using the M-MDS. (See 09-02K-12 CLEARING DTC [FRONT BODY CONTROL MODULE (FBCM)].) • Switch the ignition ON (engine off or on) and wait for **5 s or more**. • Perform the front body control module (FBCM) DTC inspection using the M-MDS. (See 09-02K-10 DTC INSPECTION [FRONT BODY CONTROL MODULE (FBCM)].) • Is the DTC U053B:68 displayed?	Yes	Go to the next step.
		No	Go to Step 5.
2	**VERIFY FORWARD SENSING CAMERA (FSC) DTCs** • Perform the DTC inspection for the forward sensing camera (FSC) using the M-MDS. (See 09-02J-4 DTC INSPECTION [FORWARD SENSING CAMERA (FSC)].) • Is the DTC displayed?	Yes	Repair the malfunctioning part according to the applicable DTC troubleshooting. (See 09-02J-5 DTC TABLE [FORWARD SENSING CAMERA (FSC)].)
		No	Go to the next step.
3	**PERFORM DTC INSPECTION AND VERIFY IF MALFUNCTIONING PART IS FORWARD SENSING CAMERA (FSC)** • Clear front body control module (FBCM) DTCs using the M-MDS. (See 09-02K-12 CLEARING DTC [FRONT BODY CONTROL MODULE (FBCM)].) • Switch the ignition ON (engine off or on) and wait for **5 s or more**. • Perform the front body control module (FBCM) DTC inspection using the M-MDS. (See 09-02K-10 DTC INSPECTION [FRONT BODY CONTROL MODULE (FBCM)].) • Is the DTC U053B:68 displayed?	Yes	Replace the forward sensing camera (FSC), then go to the next step. (See 09-22-98 FORWARD SENSING CAMERA (FSC) REMOVAL/INSTALLATION.)
		No	Go to Step 5.
4	**VERIFY THAT REPAIRS HAVE BEEN COMPLETED** • Clear front body control module (FBCM) DTCs using the M-MDS. (See 09-02K-12 CLEARING DTC [FRONT BODY CONTROL MODULE (FBCM)].) • Switch the ignition ON (engine off or on) and wait for **5 s or more**. • Perform the front body control module (FBCM) DTC inspection using the M-MDS. (See 09-02K-10 DTC INSPECTION [FRONT BODY CONTROL MODULE (FBCM)].) • Is the DTC U053B:68 displayed?	Yes	replace the front body control module (FBCM), then go to the next step. (See 09-40-2 FRONT BODY CONTROL MODULE (FBCM) REMOVAL/INSTALLATION.)
		No	Go to the next step.
5	**VERIFY IF OTHER DTCs DISPLAYED** • Are any other DTCs displayed?	Yes	Repair the malfunctioning part according to the applicable DTC troubleshooting. (See 09-02K-13 DTC TABLE [FRONT BODY CONTROL MODULE (FBCM)].)
		No	DTC troubleshooting completed.

ON-BOARD DIAGNOSTIC [FRONT BODY CONTROL MODULE (FBCM)]

DTC U0599:68 [FRONT BODY CONTROL MODULE (FBCM)]

id0902p2010900

System malfunction location	**Error signal received from DC-DC converter**
Detection condition	• The front body control module (FBCM) receives error signals from the DC-DC converter for **5 s or more** with the ignition switched ON (engine off or on).
Fail-safe	—
Possible cause	• DC-DC converter malfunction • Front body control module (FBCM) malfunction
System wiring diagram	—

Diagnostic Procedure

Step	Inspection		Action
1	**PERFORM DTC INSPECTION AND VERIFY IF MALFUNCTIONING PART IS DC-DC CONVERTER** • Clear front body control module (FBCM) DTCs using the M-MDS. (See 09-02K-12 CLEARING DTC [FRONT BODY CONTROL MODULE (FBCM)].) • Switch the ignition ON (engine off or on) and wait for **5 s or more**. • Perform the front body control module (FBCM) DTC inspection using the M-MDS. (See 09-02K-10 DTC INSPECTION [FRONT BODY CONTROL MODULE (FBCM)].) • Is the DTC U0599:68 displayed?	Yes	Replace the DC-DC converter, then go to the next step. (See 01-17A-26 DC-DC CONVERTER REMOVAL/INSTALLATION [SKYACTIV-G 2.0].) (See 01-17B-22 DC-DC CONVERTER REMOVAL/INSTALLATION [SKYACTIV-D 2.2].)
		No	Go to Step 3.
2	**VERIFY THAT REPAIRS HAVE BEEN COMPLETED** • Clear front body control module (FBCM) DTCs using the M-MDS. (See 09-02K-12 CLEARING DTC [FRONT BODY CONTROL MODULE (FBCM)].) • Switch the ignition ON (engine off or on) and wait for **5 s or more**. • Perform the front body control module (FBCM) DTC inspection using the M-MDS. (See 09-02K-10 DTC INSPECTION [FRONT BODY CONTROL MODULE (FBCM)].) • Is the DTC U0599:68 displayed?	Yes	replace the front body control module (FBCM), then go to the next step. (See 09-40-2 FRONT BODY CONTROL MODULE (FBCM) REMOVAL/INSTALLATION.)
		No	Go to the next step.
3	**VERIFY IF OTHER DTCs DISPLAYED** • Are any other DTCs displayed?	Yes	Repair the malfunctioning part according to the applicable DTC troubleshooting. (See 09-02K-13 DTC TABLE [FRONT BODY CONTROL MODULE (FBCM)].)
		No	DTC troubleshooting completed.

ON-BOARD DIAGNOSTIC [FRONT BODY CONTROL MODULE (FBCM)]

DTC U1007:68 [FRONT BODY CONTROL MODULE (FBCM)]

id0902p2011000

System malfunction location	**Communication error with current sensor**
Detection condition	• The front body control module (FBCM) detects communication error with the current sensor for **5 s**.
Fail-safe	—
Possible cause	• Malfunction in communication line between front body control module (FBCM) and current sensor • Current sensor connector or terminal malfunction • Short to ground or open circuit in current sensor power supply circuit — Short to ground in wiring harness between battery positive terminal and current sensor terminal A — MAIN 200 A fuse malfunction — ENG.+B 7.5 A fuse malfunction — Open circuit in wiring harness between battery positive terminal and current sensor terminal A • Front body control module (FBCM) connector or terminal malfunction • Short to ground in wiring harness between current sensor terminal B and front body control module (FBCM) terminal 2E • Open circuit in wiring harness between current sensor terminal B and front body control module (FBCM) terminal 2E • Current sensor malfunction • Front body control module (FBCM) malfunction

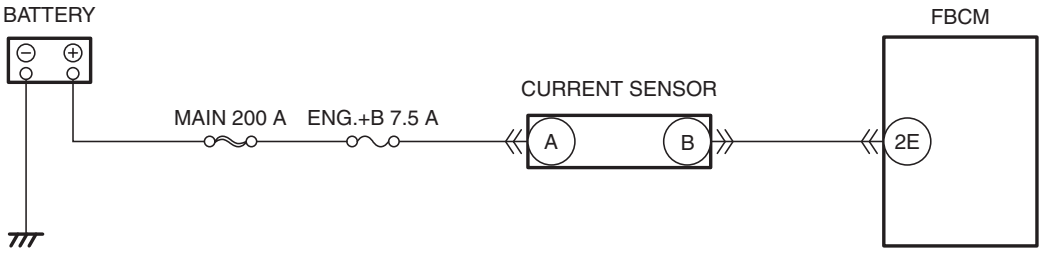

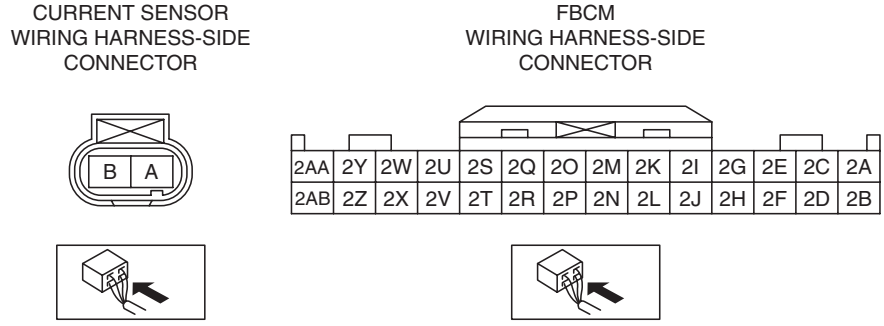

ON-BOARD DIAGNOSTIC [FRONT BODY CONTROL MODULE (FBCM)]

Diagnostic Procedure

Step	Inspection		Action
1	**VERIFY FRONT BODY CONTROL MODULE (FBCM) DTCs AGAIN** • Clear front body control module (FBCM) DTCs using the M-MDS. (See 09-02K-12 CLEARING DTC [FRONT BODY CONTROL MODULE (FBCM)].) • Switch the ignition ON (engine off or on) and wait for **5 s or more**. • Perform the front body control module (FBCM) DTC inspection using the M-MDS. (See 09-02K-10 DTC INSPECTION [FRONT BODY CONTROL MODULE (FBCM)].) • Is DTC U1007:68 displayed?	Yes	Go to the next step.
		No	Go to Step 9.
2	**INSPECT CURRENT SENSOR CONNECTOR** • Switch the ignition to off. • Disconnect the current sensor connector. • Disconnect the negative battery cable. (See 01-17A-11 NEGATIVE BATTERY CABLE DISCONNECTION/CONNECTION [SKYACTIV-G 2.0].) (See 01-17A-13 NEGATIVE BATTERY CABLE DISCONNECTION/CONNECTION [SKYACTIV-G 2.0 (WITHOUT i-stop)].) (See 01-17B-9 NEGATIVE BATTERY CABLE DISCONNECTION/CONNECTION [SKYACTIV-D 2.2].) • Inspect the connector engagement and connection condition and inspect the terminals for damage, deformation, corrosion, or disconnection. • Is the connector normal?	Yes	Go to the next step.
		No	Repair or replace the connector, then go to Step 8.
3	**INSPECT CURRENT SENSOR POWER SUPPLY CIRCUIT FOR OPEN CIRCUIT OR SHORT TO GROUND** • Verify that the current sensor connector is disconnected. • Connect the negative battery cable. (See 01-17A-11 NEGATIVE BATTERY CABLE DISCONNECTION/CONNECTION [SKYACTIV-G 2.0].) (See 01-17A-13 NEGATIVE BATTERY CABLE DISCONNECTION/CONNECTION [SKYACTIV-G 2.0 (WITHOUT i-stop)].) (See 01-17B-9 NEGATIVE BATTERY CABLE DISCONNECTION/CONNECTION [SKYACTIV-D 2.2].) • Measure the voltage at current sensor terminal A (vehicle wiring harness side). • Is the voltage B+?	Yes	Go to the next step.
		No	INSPECT MAIN 200 A FUSE AND ENG.+B 7.5 A FUSE • If a fuse is burnt out: — Repair or replace the wiring harness which is shorted to ground. — Replace the burnt out fuse. • If a fuse is damaged: — Replace the damaged fuse. • All fuses are normal: — Repair or replace the wiring harness which has an open circuit. Go to Step 8.

ON-BOARD DIAGNOSTIC [FRONT BODY CONTROL MODULE (FBCM)]

Step	Inspection		Action
4	**INSPECT FRONT BODY CONTROL MODULE (FBCM) CONNECTOR CONDITION** • Disconnect the negative battery cable. (See 01-17A-11 NEGATIVE BATTERY CABLE DISCONNECTION/CONNECTION [SKYACTIV-G 2.0].) (See 01-17A-13 NEGATIVE BATTERY CABLE DISCONNECTION/CONNECTION [SKYACTIV-G 2.0 (WITHOUT i-stop)].) (See 01-17B-9 NEGATIVE BATTERY CABLE DISCONNECTION/CONNECTION [SKYACTIV-D 2.2].) • Disconnect the front body control module (FBCM) connector. • Inspect the connector engagement and connection condition and inspect the terminals for damage, deformation, corrosion, or disconnection. • Is the connector normal?	Yes	Go to the next step.
		No	Repair or replace the connector, then go to Step 8.
5	**INSPECT CURRENT SENSOR LIN COMMUNICATION CIRCUIT FOR SHORT TO GROUND** • Verify that the current sensor and front body control module (FBCM) connectors are disconnected. • Inspect for continuity between current sensor terminal B (vehicle wiring harness) and body ground. • Is there continuity?	Yes	Repair or replace the wiring harness, then go to Step 8.
		No	Go to the next step.
6	**INSPECT CURRENT SENSOR LIN COMMUNICATION CIRCUIT FOR OPEN CIRCUIT** • Verify that the current sensor and front body control module (FBCM) connectors are disconnected. • Inspect the wiring harness for continuity between current sensor terminal B (vehicle wiring harness side) and front body control module (FBCM) terminal 2E (vehicle wiring harness side). • Is there continuity?	Yes	Go to the next step.
		No	Repair or replace the wiring harness, then go to Step 8.
7	**INSPECT CURRENT SENSOR** • Inspect the current sensor. (See 01-40-66 CURRENT SENSOR INSPECTION [SKYACTIV-G 2.0].) • Is the current sensor normal?	Yes	Go to the next step.
		No	Replace the current sensor, then go to the next step. (See 01-40-65 CURRENT SENSOR REMOVAL/INSTALLATION [SKYACTIV-G 2.0].)

ON-BOARD DIAGNOSTIC [FRONT BODY CONTROL MODULE (FBCM)]

Step	Inspection		Action
8	**VERIFY THAT REPAIRS HAVE BEEN COMPLETED** • Reconnect all the disconnected connectors. • Reconnect the disconnected negative battery cable. (See 01-17A-11 NEGATIVE BATTERY CABLE DISCONNECTION/CONNECTION [SKYACTIV-G 2.0].) (See 01-17A-13 NEGATIVE BATTERY CABLE DISCONNECTION/CONNECTION [SKYACTIV-G 2.0 (WITHOUT i-stop)].) (See 01-17B-9 NEGATIVE BATTERY CABLE DISCONNECTION/CONNECTION [SKYACTIV-D 2.2].) • Clear front body control module (FBCM) DTCs using the M-MDS. (See 09-02K-12 CLEARING DTC [FRONT BODY CONTROL MODULE (FBCM)].) • Switch the ignition ON (engine off or on) and wait for **5 s or more**. • Perform the front body control module (FBCM) DTC inspection using the M-MDS. (See 09-02K-10 DTC INSPECTION [FRONT BODY CONTROL MODULE (FBCM)].) • Is DTC U1007:68 displayed?	Yes	Repeat the inspection from Step 1. • If the malfunction recurs, replace the front body control module (FBCM), then go to the next step. (See 09-40-2 FRONT BODY CONTROL MODULE (FBCM) REMOVAL/INSTALLATION.)
		No	Go to the next step.
9	**VERIFY IF OTHER DTCs DISPLAYED** • Are any other DTCs displayed?	Yes	Repair the malfunctioning part according to the applicable DTC troubleshooting. (See 09-02K-13 DTC TABLE [FRONT BODY CONTROL MODULE (FBCM)].)
		No	DTC troubleshooting completed.

ON-BOARD DIAGNOSTIC [FRONT BODY CONTROL MODULE (FBCM)]

DTC U2005:68 [FRONT BODY CONTROL MODULE (FBCM)]

id0902p2011100

System malfunction location	**Error vehicle speed signal received from PCM**
Detection condition	• The front body control module (FBCM) receives vehicle speed signal error from the PCM for **5 s or more** with the ignition switched ON (engine off or on).
Fail-safe	—
Possible cause	• PCM malfunction • Front body control module (FBCM) malfunction
System wiring diagram	—

Diagnostic Procedure

Step	Inspection		Action
1	**VERIFY FRONT BODY CONTROL MODULE (FBCM) DTCs AGAIN** • Clear front body control module (FBCM) DTCs using the M-MDS. (See 09-02K-12 CLEARING DTC [FRONT BODY CONTROL MODULE (FBCM)].) • Switch the ignition ON (engine off or on) and wait for **5 s or more**. • Perform the front body control module (FBCM) DTC inspection using the M-MDS. (See 09-02K-10 DTC INSPECTION [FRONT BODY CONTROL MODULE (FBCM)].) • Is the DTC U2005:68 displayed?	Yes	Go to the next step.
		No	Go to Step 5.
2	**VERIFY PCM DTCs** • Perform the DTC inspection for the PCM using the M-MDS. (See 01-02-8 ON-BOARD DIAGNOSTIC TEST [SKYACTIV-G 2.0].) • Is the DTC displayed?	Yes	Repair the malfunctioning part according to the applicable DTC troubleshooting. (See 01-02-14 DTC TABLE [SKYACTIV-G 2.0].)
		No	Go to the next step.
3	**PERFORM DTC INSPECTION AND VERIFY IF MALFUNCTIONING PART IS PCM** • Clear front body control module (FBCM) DTCs using the M-MDS. (See 09-02K-12 CLEARING DTC [FRONT BODY CONTROL MODULE (FBCM)].) • Switch the ignition ON (engine off or on) and wait for **5 s or more**. • Perform the front body control module (FBCM) DTC inspection using the M-MDS. (See 09-02K-10 DTC INSPECTION [FRONT BODY CONTROL MODULE (FBCM)].) • Is the DTC U2005:68 displayed?	Yes	Replace the PCM, then go to the next step. (See 01-40-10 PCM REMOVAL/INSTALLATION [SKYACTIV-G 2.0].)
		No	Go to Step 5.
4	**VERIFY THAT REPAIRS HAVE BEEN COMPLETED** • Clear front body control module (FBCM) DTCs using the M-MDS. (See 09-02K-12 CLEARING DTC [FRONT BODY CONTROL MODULE (FBCM)].) • Switch the ignition ON (engine off or on) and wait for **5 s or more**. • Perform the front body control module (FBCM) DTC inspection using the M-MDS. (See 09-02K-10 DTC INSPECTION [FRONT BODY CONTROL MODULE (FBCM)].) • Is the DTC U2005:68 displayed?	Yes	replace the front body control module (FBCM), then go to the next step. (See 09-40-2 FRONT BODY CONTROL MODULE (FBCM) REMOVAL/INSTALLATION.)
		No	Go to the next step.
5	**VERIFY IF OTHER DTCs DISPLAYED** • Are any other DTCs displayed?	Yes	Repair the malfunctioning part according to the applicable DTC troubleshooting. (See 09-02K-13 DTC TABLE [FRONT BODY CONTROL MODULE (FBCM)].)
		No	DTC troubleshooting completed.

ON-BOARD DIAGNOSTIC [FRONT BODY CONTROL MODULE (FBCM)]

DTC U2100:00 [FRONT BODY CONTROL MODULE (FBCM)]

id0902p2011200

System malfunction location	**Front body control module (FBCM) configuration error**
Detection condition	• Front body control module (FBCM) configuration error detected.
Fail-safe	—
Possible cause	• Front body control module (FBCM) configuration error • Front body control module (FBCM) malfunction
System wiring diagram	—

Diagnostic Procedure

Step	Inspection		Action
1	**VERIFY FRONT BODY CONTROL MODULE (FBCM) DTCs AGAIN** • Clear front body control module (FBCM) DTCs using the M-MDS. (See 09-02K-12 CLEARING DTC [FRONT BODY CONTROL MODULE (FBCM)].) • Perform the front body control module (FBCM) DTC inspection using the M-MDS. (See 09-02K-10 DTC INSPECTION [FRONT BODY CONTROL MODULE (FBCM)].) • Is DTC U2100:00 displayed?	Yes	Go to the next step.
		No	Go to Step 4.
2	**PERFORM FRONT BODY CONTROL MODULE (FBCM) CONFIGURATION (AS-BUILT DATA USE)** • Perform the front body control module (FBCM) configuration using the M-MDS. (See 09-40-9 FRONT BODY CONTROL MODULE (FBCM) CONFIGURATION (USING AS-BUILT DATA).) • Clear front body control module (FBCM) DTCs using the M-MDS. (See 09-02K-12 CLEARING DTC [FRONT BODY CONTROL MODULE (FBCM)].) • Perform the DTC inspection for the front body control module (FBCM) using the M-MDS. (See 09-02K-10 DTC INSPECTION [FRONT BODY CONTROL MODULE (FBCM)].) • Is DTC U2100:00 displayed?	Yes	Using the M-MDS, re-perform the front body control module (FBCM) configuration using the As-Built data, then go to the next step. (See 09-40-9 FRONT BODY CONTROL MODULE (FBCM) CONFIGURATION (USING AS-BUILT DATA).)
		No	Go to Step 4.
3	**VERIFY THAT REPAIRS HAVE BEEN COMPLETED** • Clear front body control module (FBCM) DTCs using the M-MDS. (See 09-02K-12 CLEARING DTC [FRONT BODY CONTROL MODULE (FBCM)].) • Perform the front body control module (FBCM) DTC inspection using the M-MDS. (See 09-02K-10 DTC INSPECTION [FRONT BODY CONTROL MODULE (FBCM)].) • Is DTC U2100:00 displayed?	Yes	replace the front body control module (FBCM), then go to the next step. (See 09-40-2 FRONT BODY CONTROL MODULE (FBCM) REMOVAL/INSTALLATION.)
		No	Go to the next step.
4	**VERIFY IF OTHER DTCs DISPLAYED** • Are any other DTCs displayed?	Yes	Repair the malfunctioning part according to the applicable DTC troubleshooting. (See 09-02K-13 DTC TABLE [FRONT BODY CONTROL MODULE (FBCM)].)
		No	DTC troubleshooting completed.

ON-BOARD DIAGNOSTIC [FRONT BODY CONTROL MODULE (FBCM)]

DTC U2101:00 [FRONT BODY CONTROL MODULE (FBCM)]

id0902p2011300

System malfunction location	**Front body control module (FBCM) configuration error**
Detection condition	• Front body control module (FBCM) configuration error detected.
Fail-safe	—
Possible cause	• Front body control module (FBCM) configuration error • Front body control module (FBCM) malfunction
System wiring diagram	—

Diagnostic Procedure

Step	Inspection		Action
1	**VERIFY FRONT BODY CONTROL MODULE (FBCM) DTCs AGAIN** • Clear front body control module (FBCM) DTCs using the M-MDS. (See 09-02K-12 CLEARING DTC [FRONT BODY CONTROL MODULE (FBCM)].) • Perform the front body control module (FBCM) DTC inspection using the M-MDS. (See 09-02K-10 DTC INSPECTION [FRONT BODY CONTROL MODULE (FBCM)].) • Is DTC U2101:00 displayed?	Yes	Go to the next step.
		No	Go to Step 4.
2	**PERFORM FRONT BODY CONTROL MODULE (FBCM) CONFIGURATION** • Perform the front body control module (FBCM) configuration using the M-MDS. (See 09-40-9 FRONT BODY CONTROL MODULE (FBCM) CONFIGURATION (USING AS-BUILT DATA).) • Clear front body control module (FBCM) DTCs using the M-MDS. (See 09-02K-12 CLEARING DTC [FRONT BODY CONTROL MODULE (FBCM)].) • Perform the front body control module (FBCM) DTC inspection using the M-MDS. (See 09-02K-10 DTC INSPECTION [FRONT BODY CONTROL MODULE (FBCM)].) • Is DTC U2101:00 displayed?	Yes	Using the M-MDS, re-perform the front body control module (FBCM) configuration, then go to the next step. (See 09-40-9 FRONT BODY CONTROL MODULE (FBCM) CONFIGURATION (USING AS-BUILT DATA).)
		No	Go to Step 4.
3	**VERIFY THAT REPAIRS HAVE BEEN COMPLETED** • Clear DTC for the front body control module (FBCM) using the M-MDS. (See 09-02K-12 CLEARING DTC [FRONT BODY CONTROL MODULE (FBCM)].) • Perform the front body control module (FBCM) DTC inspection using the M-MDS. (See 09-02K-10 DTC INSPECTION [FRONT BODY CONTROL MODULE (FBCM)].) • Is DTC U2101:00 displayed?	Yes	replace the front body control module (FBCM), then go to the next step. (See 09-40-2 FRONT BODY CONTROL MODULE (FBCM) REMOVAL/INSTALLATION.)
		No	Go to the next step.
4	**VERIFY IF OTHER DTCs DISPLAYED** • Are any other DTCs displayed?	Yes	Repair the malfunctioning part according to the applicable DTC troubleshooting. (See 09-02K-13 DTC TABLE [FRONT BODY CONTROL MODULE (FBCM)].)
		No	DTC troubleshooting completed.

ON-BOARD DIAGNOSTIC [FRONT BODY CONTROL MODULE (FBCM)]

DTC U3000:49 [FRONT BODY CONTROL MODULE (FBCM)]

id0902p2011400

System malfunction location	**Front body control module (FBCM) internal malfunction**
Detection condition	• Malfunction inside front body control module (FBCM) detected.
Fail-safe	—
Possible cause	• Front body control module (FBCM) malfunction
System wiring diagram	—

Diagnostic Procedure

Step	Inspection		Action
1	**PERFORM DTC INSPECTION AND VERIFY IF MALFUNCTIONING PART IS FRONT BODY CONTROL MODULE (FBCM)** • Clear front body control module (FBCM) DTCs using the M-MDS. (See 09-02K-12 CLEARING DTC [FRONT BODY CONTROL MODULE (FBCM)].) • Perform the front body control module (FBCM) DTC inspection using the M-MDS. (See 09-02K-10 DTC INSPECTION [FRONT BODY CONTROL MODULE (FBCM)].) • Is DTC U3000:49 displayed?	Yes	replace the front body control module (FBCM), then go to the next step. (See 09-40-2 FRONT BODY CONTROL MODULE (FBCM) REMOVAL/INSTALLATION.)
		No	Go to the next step.
2	**VERIFY IF OTHER DTCs DISPLAYED** • Are any other DTCs displayed?	Yes	Repair the malfunctioning part according to the applicable DTC troubleshooting. (See 09-02K-13 DTC TABLE [FRONT BODY CONTROL MODULE (FBCM)].)
		No	DTC troubleshooting completed.

ON-BOARD DIAGNOSTIC [FRONT BODY CONTROL MODULE (FBCM)]

DTC U3000:56 [FRONT BODY CONTROL MODULE (FBCM)]

id0902p2011500

System malfunction location	**Front body control module (FBCM) configuration error**
Detection condition	• Front body control module (FBCM) configuration error detected.
Fail-safe	—
Possible cause	• Front body control module (FBCM) configuration error • Front body control module (FBCM) malfunction
System wiring diagram	—

Diagnostic Procedure

Step	Inspection		Action
1	**VERIFY FRONT BODY CONTROL MODULE (FBCM) DTCs AGAIN** • Clear front body control module (FBCM) DTCs using the M-MDS. (See 09-02K-12 CLEARING DTC [FRONT BODY CONTROL MODULE (FBCM)].) • Perform the front body control module (FBCM) DTC inspection using the M-MDS. (See 09-02K-10 DTC INSPECTION [FRONT BODY CONTROL MODULE (FBCM)].) • Is DTC U3000:56 displayed?	Yes	Go to the next step.
		No	Go to Step 4.
2	**PERFORM FRONT BODY CONTROL MODULE (FBCM) CONFIGURATION** • Perform the front body control module (FBCM) configuration using the M-MDS. (See 09-40-9 FRONT BODY CONTROL MODULE (FBCM) CONFIGURATION (USING AS-BUILT DATA).) • Clear front body control module (FBCM) DTCs using the M-MDS. (See 09-02K-12 CLEARING DTC [FRONT BODY CONTROL MODULE (FBCM)].) • Perform the front body control module (FBCM) DTC inspection using the M-MDS. (See 09-02K-10 DTC INSPECTION [FRONT BODY CONTROL MODULE (FBCM)].) • Is DTC U3000:56 displayed?	Yes	Using the M-MDS, re-perform the front body control module (FBCM) configuration, then go to the next step. (See 09-40-9 FRONT BODY CONTROL MODULE (FBCM) CONFIGURATION (USING AS-BUILT DATA).)
		No	Go to Step 4.
3	**VERIFY THAT REPAIRS HAVE BEEN COMPLETED** • Clear front body control module (FBCM) DTCs using the M-MDS. (See 09-02K-12 CLEARING DTC [FRONT BODY CONTROL MODULE (FBCM)].) • Perform the front body control module (FBCM) DTC inspection using the M-MDS. (See 09-02K-10 DTC INSPECTION [FRONT BODY CONTROL MODULE (FBCM)].) • Is DTC U3000:56 displayed?	Yes	replace the front body control module (FBCM), then go to the next step. (See 09-40-2 FRONT BODY CONTROL MODULE (FBCM) REMOVAL/INSTALLATION.)
		No	Go to the next step.
4	**VERIFY IF OTHER DTCs DISPLAYED** • Are any other DTCs displayed?	Yes	Repair the malfunctioning part according to the applicable DTC troubleshooting. (See 09-02K-13 DTC TABLE [FRONT BODY CONTROL MODULE (FBCM)].)
		No	DTC troubleshooting completed.

ON-BOARD DIAGNOSTIC [FRONT BODY CONTROL MODULE (FBCM)]

DTC U3003:16 [FRONT BODY CONTROL MODULE (FBCM)]

id0902p2011600

System malfunction location	**Front body control module (FBCM) power supply voltage (+B power supply) low input**
Detection condition	• Front body control module (FBCM) power supply circuit voltage of **8.8 V or less** is detected for **10 s or more** with the ignition switched ON (engine off or on).
Fail-safe	—
Possible cause	• DTCs are stored in the PCM. • Battery malfunction • Generator malfunction • Front body control module (FBCM) connector or terminal malfunction • Front body control module (FBCM) power supply circuit malfunction — Short to ground in the wiring harness between ROOM 15 A fuse and front body control module (FBCM) terminal 2A — Short to ground in the wiring harness between HAZARD 25 A fuse and front body control module (FBCM) terminal 1A — Short to ground in the wiring harness between HAZARD 25 A fuse and front body control module (FBCM) terminal 1B — Short to ground in the wiring harness between HAZARD 25 A fuse and front body control module (FBCM) terminal 3K — Short to ground in the wiring harness between HAZARD 25 A fuse and front body control module (FBCM) terminal 3L — ROOM 15 A fuse malfunction — HAZARD 25 A fuse malfunction — Open circuit in wiring harness between battery positive terminal and front body control module (FBCM) terminal 2A — Open circuit in wiring harness between battery positive terminal and front body control module (FBCM) terminal 1A — Open circuit in wiring harness between battery positive terminal and front body control module (FBCM) terminal 1B — Open circuit in wiring harness between battery positive terminal and front body control module (FBCM) terminal 3K — Open circuit in wiring harness between battery positive terminal and front body control module (FBCM) terminal 3L • Front body control module (FBCM) malfunction

ON-BOARD DIAGNOSTIC [FRONT BODY CONTROL MODULE (FBCM)]

System malfunction location	Front body control module (FBCM) power supply voltage (+B power supply) low input

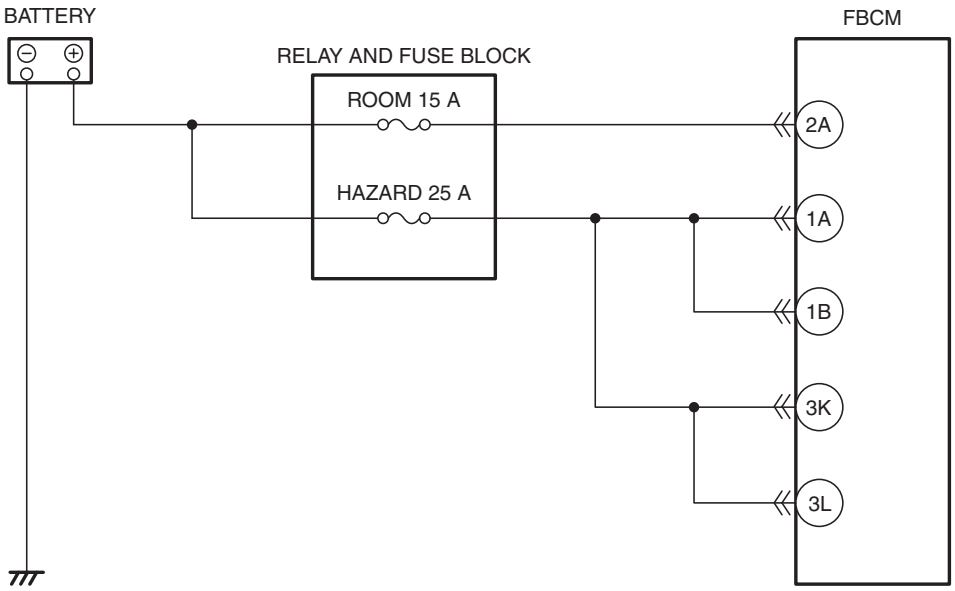

FBCM WIRING HARNESS-SIDE CONNECTOR

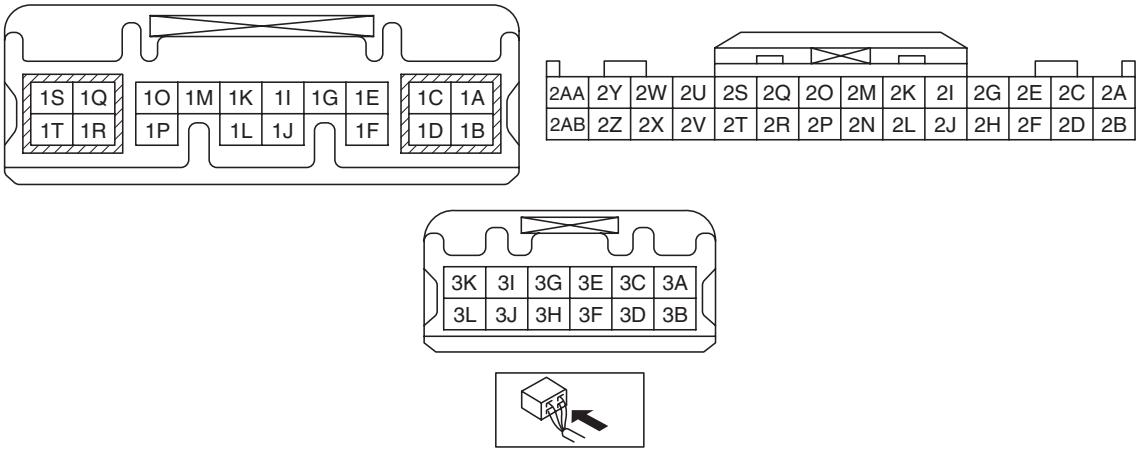

ON-BOARD DIAGNOSTIC [FRONT BODY CONTROL MODULE (FBCM)]

Diagnostic Procedure

Step	Inspection		Action
1	**VERIFY FRONT BODY CONTROL MODULE (FBCM) DTCs AGAIN** • Clear front body control module (FBCM) DTCs using the M-MDS. (See 09-02K-12 CLEARING DTC [FRONT BODY CONTROL MODULE (FBCM)].) • Switch the ignition ON (engine off or on) and wait for **10 s or more**. • Perform the front body control module (FBCM) DTC inspection using the M-MDS. (See 09-02K-10 DTC INSPECTION [FRONT BODY CONTROL MODULE (FBCM)].) • Is DTC U3003:16 displayed?	Yes	Go to the next step.
		No	Go to Step 8.
2	**VERIFY PCM DTCs** • Perform the DTC inspection for the PCM using the M-MDS. (See 01-02-8 ON-BOARD DIAGNOSTIC TEST [SKYACTIV-G 2.0].) • Is the DTC displayed?	Yes	Repair the malfunctioning part according to the applicable DTC troubleshooting. (See 01-02-14 DTC TABLE [SKYACTIV-G 2.0].)
		No	Go to the next step.
3	**INSPECT BATTERY** • Inspect the battery. (See 01-17A-7 BATTERY INSPECTION [SKYACTIV-G 2.0].) (See 01-17B-6 BATTERY INSPECTION [SKYACTIV-D 2.2].) • Is the battery normal?	Yes	Go to the next step.
		No	Recharge or replace the battery, then go to Step 7. (See 01-17A-9 BATTERY RECHARGING [SKYACTIV-G 2.0].) (See 01-17B-8 BATTERY RECHARGING [SKYACTIV-D 2.2].) (See 01-17A-3 BATTERY REMOVAL/INSTALLATION [SKYACTIV-G 2.0].) (See 01-17B-3 BATTERY REMOVAL/INSTALLATION [SKYACTIV-D 2.2].)
4	**INSPECT GENERATOR** • Inspect the generator. (See 01-17A-19 GENERATOR INSPECTION [SKYACTIV-G 2.0].) (See 01-17B-16 GENERATOR INSPECTION [SKYACTIV-D 2.2].) • Is the generator normal?	Yes	Go to the next step.
		No	Replace the generator, then go to Step 7. (See 01-17A-17 GENERATOR REMOVAL/INSTALLATION [SKYACTIV-G 2.0].) (See 01-17B-14 GENERATOR REMOVAL/INSTALLATION [SKYACTIV-D 2.2].)
5	**INSPECT FRONT BODY CONTROL MODULE (FBCM) CONNECTOR CONDITION** • Switch the ignition to off. • Disconnect the negative battery cable. (See 01-17A-11 NEGATIVE BATTERY CABLE DISCONNECTION/CONNECTION [SKYACTIV-G 2.0].) (See 01-17A-13 NEGATIVE BATTERY CABLE DISCONNECTION/CONNECTION [SKYACTIV-G 2.0 (WITHOUT i-stop)].) (See 01-17B-9 NEGATIVE BATTERY CABLE DISCONNECTION/CONNECTION [SKYACTIV-D 2.2].) • Disconnect the front body control module (FBCM) connector. • Inspect the connector engagement and connection condition and inspect the terminals for damage, deformation, corrosion, or disconnection. • Is the connector normal?	Yes	Go to the next step.
		No	Repair or replace the connector, then go to Step 7.

ON-BOARD DIAGNOSTIC [FRONT BODY CONTROL MODULE (FBCM)]

Step	Inspection		Action
6	**VERIFY FRONT BODY CONTROL MODULE (FBCM) POWER SUPPLY VOLTAGE** • Reconnect all the disconnected connectors. • Connect the negative battery cable. (See 01-17A-11 NEGATIVE BATTERY CABLE DISCONNECTION/CONNECTION [SKYACTIV-G 2.0].) (See 01-17A-13 NEGATIVE BATTERY CABLE DISCONNECTION/CONNECTION [SKYACTIV-G 2.0 (WITHOUT i-stop)].) (See 01-17B-9 NEGATIVE BATTERY CABLE DISCONNECTION/CONNECTION [SKYACTIV-D 2.2].) • Display PID VPWR_B using the M-MDS. (See 09-02K-153 PID/DATA MONITOR INSPECTION [FRONT BODY CONTROL MODULE (FBCM)].) • Is the voltage B+?	Yes	Go to the next step.
		No	Inspect the ROOM 15 A, and HAZARD 25 A fuses. • If a fuse is burnt out: — Repair or replace the wiring harness which is shorted to ground. — Replace the burnt out fuse. • If a fuse is damaged: — Replace the damaged fuse. • All fuses are normal: — Repair or replace the wiring harness which has an open circuit. Go to the next step.
7	**VERIFY THAT REPAIRS HAVE BEEN COMPLETED** • Reconnect all the disconnected connectors. • Reconnect the disconnected negative battery cable. (See 01-17A-11 NEGATIVE BATTERY CABLE DISCONNECTION/CONNECTION [SKYACTIV-G 2.0].) (See 01-17A-13 NEGATIVE BATTERY CABLE DISCONNECTION/CONNECTION [SKYACTIV-G 2.0 (WITHOUT i-stop)].) (See 01-17B-9 NEGATIVE BATTERY CABLE DISCONNECTION/CONNECTION [SKYACTIV-D 2.2].) • Clear front body control module (FBCM) DTCs using the M-MDS. (See 09-02K-12 CLEARING DTC [FRONT BODY CONTROL MODULE (FBCM)].) • Switch the ignition ON (engine off or on) and wait for **10 s or more**. • Perform the front body control module (FBCM) DTC inspection using the M-MDS. (See 09-02K-10 DTC INSPECTION [FRONT BODY CONTROL MODULE (FBCM)].) • Is DTC U3003:16 displayed?	Yes	Repeat the inspection from Step 1. • If the malfunction recurs, replace the front body control module (FBCM), then go to the next step. (See 09-40-2 FRONT BODY CONTROL MODULE (FBCM) REMOVAL/INSTALLATION.)
		No	Go to the next step.
8	**VERIFY IF OTHER DTCs DISPLAYED** • Are any other DTCs displayed?	Yes	Repair the malfunctioning part according to the applicable DTC troubleshooting. (See 09-02K-13 DTC TABLE [FRONT BODY CONTROL MODULE (FBCM)].)
		No	DTC troubleshooting completed.

ON-BOARD DIAGNOSTIC [FRONT BODY CONTROL MODULE (FBCM)]

DTC U3003:17 [FRONT BODY CONTROL MODULE (FBCM)]

id0902p2011700

System malfunction location	**Front body control module (FBCM) power supply voltage (+B power supply) high input**
Detection condition	• Front body control module (FBCM) power supply circuit voltage of **14.2 V or more** is detected for **10 s or more** with the ignition switched ON (engine off or on).
Fail-safe	—
Possible cause	• DTCs are stored in the PCM. • Battery malfunction • Generator malfunction • Front body control module (FBCM) malfunction
System wiring diagram	—

ON-BOARD DIAGNOSTIC [FRONT BODY CONTROL MODULE (FBCM)]

Diagnostic Procedure

Step	Inspection		Action
1	**VERIFY FRONT BODY CONTROL MODULE (FBCM) DTCs AGAIN** • Clear front body control module (FBCM) DTCs using the M-MDS. (See 09-02K-12 CLEARING DTC [FRONT BODY CONTROL MODULE (FBCM)].) • Switch the ignition ON (engine off or on) and wait for **10 s or more**. • Perform the front body control module (FBCM) DTC inspection using the M-MDS. (See 09-02K-10 DTC INSPECTION [FRONT BODY CONTROL MODULE (FBCM)].) • Is DTC U3003:17 displayed?	Yes	Go to the next step.
		No	Go to Step 6.
2	**VERIFY PCM DTCs** • Perform the DTC inspection for the PCM using the M-MDS. (See 01-02-8 ON-BOARD DIAGNOSTIC TEST [SKYACTIV-G 2.0].) • Is the DTC displayed?	Yes	Repair the malfunctioning part according to the applicable DTC troubleshooting. (See 01-02-14 DTC TABLE [SKYACTIV-G 2.0].)
		No	Go to the next step.
3	**INSPECT BATTERY** • Inspect the battery. (See 01-17A-7 BATTERY INSPECTION [SKYACTIV-G 2.0].) (See 01-17B-6 BATTERY INSPECTION [SKYACTIV-D 2.2].) • Is the battery normal?	Yes	Go to the next step.
		No	Replace the battery, then go to Step 5. (See 01-17A-3 BATTERY REMOVAL/INSTALLATION [SKYACTIV-G 2.0].) (See 01-17B-3 BATTERY REMOVAL/INSTALLATION [SKYACTIV-D 2.2].)
4	**INSPECT GENERATOR** • Inspect the generator. (See 01-17A-19 GENERATOR INSPECTION [SKYACTIV-G 2.0].) (See 01-17B-16 GENERATOR INSPECTION [SKYACTIV-D 2.2].) • Is the generator normal?	Yes	Go to the next step.
		No	Replace the generator, then go to the next step. (See 01-17A-17 GENERATOR REMOVAL/INSTALLATION [SKYACTIV-G 2.0].) (See 01-17B-14 GENERATOR REMOVAL/INSTALLATION [SKYACTIV-D 2.2].)
5	**VERIFY THAT REPAIRS HAVE BEEN COMPLETED** • Clear front body control module (FBCM) DTCs using the M-MDS. (See 09-02K-12 CLEARING DTC [FRONT BODY CONTROL MODULE (FBCM)].) • Switch the ignition ON (engine off or on) and wait for **10 s or more**. • Perform the front body control module (FBCM) DTC inspection using the M-MDS. (See 09-02K-10 DTC INSPECTION [FRONT BODY CONTROL MODULE (FBCM)].) • Is DTC U3003:17 displayed?	Yes	Repeat the inspection from Step 1. • If the malfunction recurs, replace the front body control module (FBCM), then go to the next step. (See 09-40-2 FRONT BODY CONTROL MODULE (FBCM) REMOVAL/INSTALLATION.)
		No	Go to the next step.
6	**VERIFY IF OTHER DTCs DISPLAYED** • Are any other DTCs displayed?	Yes	Repair the malfunctioning part according to the applicable DTC troubleshooting. (See 09-02K-13 DTC TABLE [FRONT BODY CONTROL MODULE (FBCM)].)
		No	DTC troubleshooting completed.

ON-BOARD DIAGNOSTIC [FRONT BODY CONTROL MODULE (FBCM)]

DTC U3006:62 [FRONT BODY CONTROL MODULE (FBCM)]

id0902p2011800

System malfunction location	**Front body control module (FBCM) power supply voltage mismatch**
Detection condition	• Front body control module (FBCM) terminal 1A, 1B, 3K, and 3L voltages of **2 V or more** lower than the voltage of terminal 2A are detected for **5 s or more** with the ignition switched ON (engine off or on).
Fail-safe	—
Possible cause	• Front body control module (FBCM) connector or terminal malfunction • Front body control module (FBCM) power supply circuit malfunction — Short to ground in the wiring harness between ROOM 15 A fuse and front body control module (FBCM) terminal 2A — Short to ground in the wiring harness between HAZARD 25 A fuse and front body control module (FBCM) terminal 1A — Short to ground in the wiring harness between HAZARD 25 A fuse and front body control module (FBCM) terminal 1B — Short to ground in the wiring harness between HAZARD 25 A fuse and front body control module (FBCM) terminal 3K — Short to ground in the wiring harness between HAZARD 25 A fuse and front body control module (FBCM) terminal 3L — ROOM 15 A fuse malfunction — HAZARD 25 A fuse malfunction — Open circuit in wiring harness between battery positive terminal and front body control module (FBCM) terminal 2A — Open circuit in wiring harness between battery positive terminal and front body control module (FBCM) terminal 1A — Open circuit in wiring harness between battery positive terminal and front body control module (FBCM) terminal 1B — Open circuit in wiring harness between battery positive terminal and front body control module (FBCM) terminal 3K — Open circuit in wiring harness between battery positive terminal and front body control module (FBCM) terminal 3L • Front body control module (FBCM) malfunction

ON-BOARD DIAGNOSTIC [FRONT BODY CONTROL MODULE (FBCM)]

System malfunction location	Front body control module (FBCM) power supply voltage mismatch

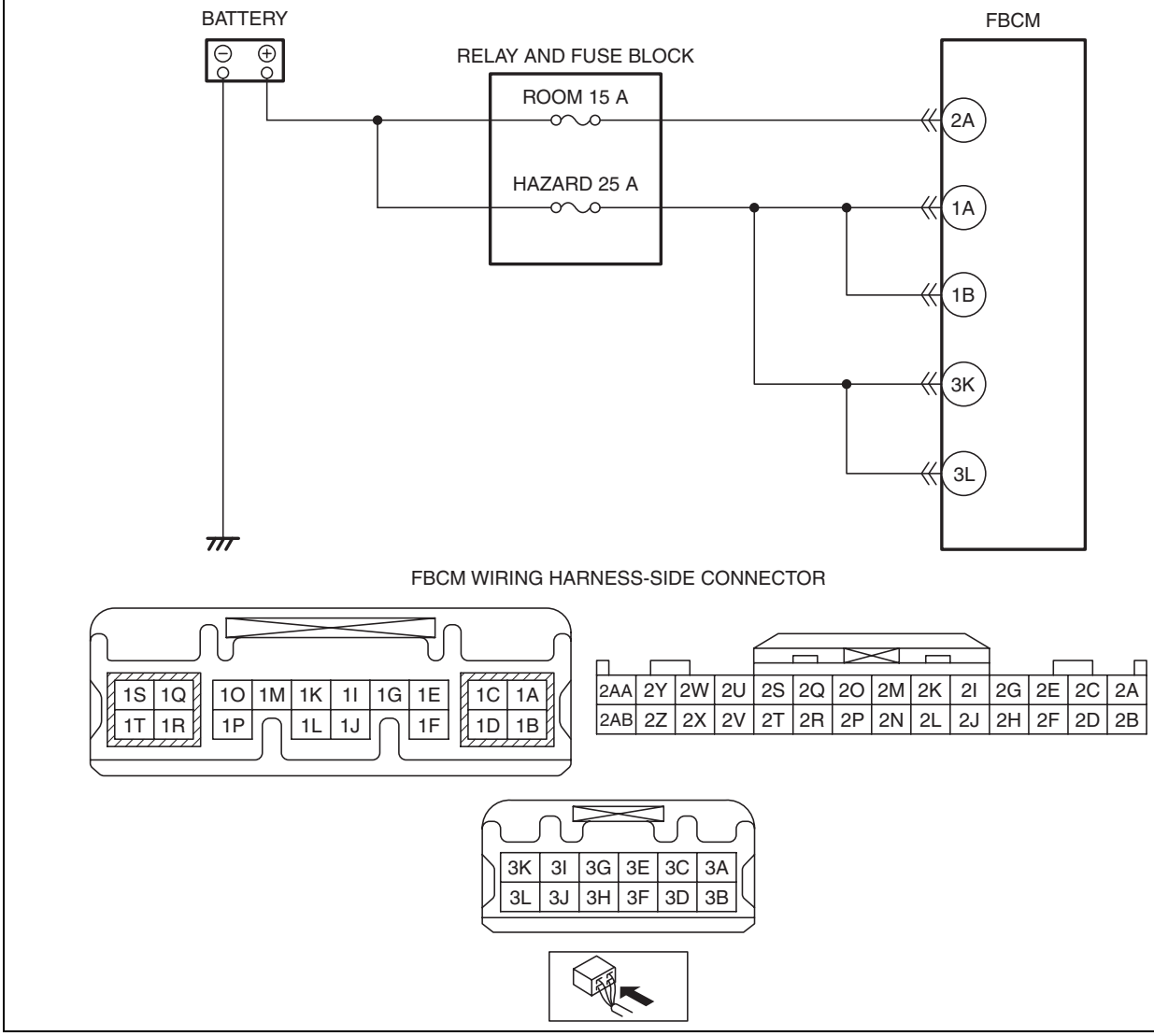

ON-BOARD DIAGNOSTIC [FRONT BODY CONTROL MODULE (FBCM)]

Diagnostic Procedure

Step	Inspection		Action
1	**VERIFY FRONT BODY CONTROL MODULE (FBCM) DTCs AGAIN** • Clear front body control module (FBCM) DTCs using the M-MDS. (See 09-02K-12 CLEARING DTC [FRONT BODY CONTROL MODULE (FBCM)].) • Switch the ignition ON (engine off or on) and wait for **5 s or more**. • Perform the front body control module (FBCM) DTC inspection using the M-MDS. (See 09-02K-10 DTC INSPECTION [FRONT BODY CONTROL MODULE (FBCM)].) • Is DTC U3006:62 displayed?	Yes	Go to the next step.
		No	Go to Step 6.
2	**VERIFY FRONT BODY CONTROL MODULE (FBCM) DTCs** • Perform the front body control module (FBCM) DTC inspection using the M-MDS. (See 09-02K-10 DTC INSPECTION [FRONT BODY CONTROL MODULE (FBCM)].) • Is the DTC displayed?	Yes	Repair the malfunctioning part according to the applicable DTC troubleshooting. (See 09-02K-13 DTC TABLE [FRONT BODY CONTROL MODULE (FBCM)].)
		No	Go to the next step.
3	**INSPECT FRONT BODY CONTROL MODULE (FBCM) CONNECTOR CONDITION** • Switch the ignition to off. • Disconnect the negative battery cable. (See 01-17A-11 NEGATIVE BATTERY CABLE DISCONNECTION/CONNECTION [SKYACTIV-G 2.0].) (See 01-17A-13 NEGATIVE BATTERY CABLE DISCONNECTION/CONNECTION [SKYACTIV-G 2.0 (WITHOUT i-stop)].) (See 01-17B-9 NEGATIVE BATTERY CABLE DISCONNECTION/CONNECTION [SKYACTIV-D 2.2].) • Disconnect the front body control module (FBCM) connector. • Inspect the connector engagement and connection condition and inspect the terminals for damage, deformation, corrosion, or disconnection. • Is the connector normal?	Yes	Go to the next step.
		No	Repair or replace the connector, then go to Step 5.
4	**VERIFY FRONT BODY CONTROL MODULE (FBCM) POWER SUPPLY VOLTAGE** • Reconnect all the disconnected connectors. • Connect the negative battery cable. (See 01-17A-11 NEGATIVE BATTERY CABLE DISCONNECTION/CONNECTION [SKYACTIV-G 2.0].) (See 01-17A-13 NEGATIVE BATTERY CABLE DISCONNECTION/CONNECTION [SKYACTIV-G 2.0 (WITHOUT i-stop)].) (See 01-17B-9 NEGATIVE BATTERY CABLE DISCONNECTION/CONNECTION [SKYACTIV-D 2.2].) • Display PID VPWR_B using the M-MDS. (See 09-02K-153 PID/DATA MONITOR INSPECTION [FRONT BODY CONTROL MODULE (FBCM)].) • Is the voltage B+?	Yes	Go to the next step.
		No	Inspect the ROOM 15 A and HAZARD 25 A fuses. • If a fuse is burnt out: — Repair or replace the wiring harness which is shorted to ground. — Replace the burnt out fuse. • If a fuse is damaged: — Replace the damaged fuse. • All fuses are normal: — Repair or replace the wiring harness which has an open circuit. Go to the next step.

ON-BOARD DIAGNOSTIC [FRONT BODY CONTROL MODULE (FBCM)]

Step	Inspection		Action
5	**VERIFY THAT REPAIRS HAVE BEEN COMPLETED** • Reconnect all the disconnected connectors. • Reconnect the disconnected negative battery cable. (See 01-17A-11 NEGATIVE BATTERY CABLE DISCONNECTION/CONNECTION [SKYACTIV-G 2.0].) (See 01-17A-13 NEGATIVE BATTERY CABLE DISCONNECTION/CONNECTION [SKYACTIV-G 2.0 (WITHOUT i-stop)].) (See 01-17B-9 NEGATIVE BATTERY CABLE DISCONNECTION/CONNECTION [SKYACTIV-D 2.2].) • Clear front body control module (FBCM) DTCs using the M-MDS. (See 09-02K-12 CLEARING DTC [FRONT BODY CONTROL MODULE (FBCM)].) • Switch the ignition ON (engine off or on) and wait for **5 s or more**. • Perform the front body control module (FBCM) DTC inspection using the M-MDS. (See 09-02K-10 DTC INSPECTION [FRONT BODY CONTROL MODULE (FBCM)].) • Is DTC U3006:62 displayed?	Yes	Repeat the inspection from Step 1. • If the malfunction recurs, replace the front body control module (FBCM), then go to the next step. (See 09-40-2 FRONT BODY CONTROL MODULE (FBCM) REMOVAL/INSTALLATION.)
		No	Go to the next step.
6	**VERIFY IF OTHER DTCs DISPLAYED** • Are any other DTCs displayed?	Yes	Repair the malfunctioning part according to the applicable DTC troubleshooting. (See 09-02K-13 DTC TABLE [FRONT BODY CONTROL MODULE (FBCM)].)
		No	DTC troubleshooting completed.

PID/DATA MONITOR INSPECTION [FRONT BODY CONTROL MODULE (FBCM)]

id0902p2011900

1. Connect the M-MDS to the DLC-2.
2. After the vehicle is identified, select the following items from the initialization screen of the M-MDS.
   (1) Select “DataLogger”.
   (2) Select “Modules”.
   (3) Select “F_BCM”.
3. Select the applicable PID from the PID table.
4. Verify the PID data according to the directions on the screen.

Note

- The PID data screen function is used for monitoring the calculated value of input/output signals in the module. Therefore, if the monitored value of the output parts is not within the specification, it is necessary to inspect the monitored value of input parts corresponding to the applicable output part control. In addition, because the system does not display an output part malfunction as an abnormality in the monitored value, it is necessary to inspect the output parts individually.
- When detecting DTCs, PIDs related to a malfunctioning system may not display even if the module is normal. Therefore, if a PID is not displayed, it is necessary to verify the DTC, perform malfunction diagnosis of the DTC that was detected, and do repairs.

ON-BOARD DIAGNOSTIC [FRONT BODY CONTROL MODULE (FBCM)]

PID/DATA MONITOR TABLE [FRONT BODY CONTROL MODULE (FBCM)]

id0902p2012000

PID	Unit/ Operation	Data contents	Inspection item(s)
ABK_CS_BG	Off/On	• Off: Theft-deterrent system answer-back signal is not received. • On: Theft-deterrent system answer-back signal is received.	• Front body control module (FBCM) • Rear body control module (RBCM) • Start stop unit
ABK_CS_KEY*1	Off/On	• Off: Advanced keyless entry system answer-back signal is not received. • On: Advanced keyless entry system answer-back signal is received.	• Front body control module (FBCM) • Rear body control module (RBCM) • Start stop unit
ABK_HN_KEY*1	Off/On	• Off: Keyless entry system horn answer-back signal is not received. • On: Keyless entry system horn answer-back signal is received.	• Front body control module (FBCM) • Rear body control module (RBCM) • Start stop unit
BAT_SOC	%	Battery charge condition is displayed.	Battery
BAT_TMP	°C, °F	Battery temperature is displayed.	Battery
BG_ALARM_CS*2	Off/On	• Off: Theft-deterrent system alarm signal is not received. • On: Theft-deterrent system alarm signal is received.	• Front body control module (FBCM) • Rear body control module (RBCM)
BLWR_MT_RY	Off/On	• Off: Blower relay is off. • On: Blower relay is on.	Blower relay
BRAKE_SW	Off/On	• Off: Brake switch (No. 2) is off. (Brake pedal is depressed.) • On: Brake switch (No. 2) is on. (Brake pedal is not depressed.)	• Brake switch • PCM • TCM
BRK_F_L_SW	Normal/Low/ Reserved/ Unknown	• Normal: Brake fluid level is between MAX and MIN. • Low: Brake fluid level is lower than MIN. • Reserved: - • Unknown: Brake fluid level is not determined.	Brake fluid level sensor
C_IG_OFF	A	Back-up current when ignition is switched off previously is displayed.	• Front body control module (FBCM) • CURRENT SENSOR
C_T_IG_OFF	—	Cumulative back-up current (unit: Ah) when ignition is switched off previously is displayed.	• Front body control module (FBCM) • CURRENT SENSOR
C_T_IG_ON	—	Cumulative charging/discharging current (unit: Ah) when ignition is switched ON (engine off or on) is displayed.	• Front body control module (FBCM) • CURRENT SENSOR
DCDC_CVT_ST	Wake_Up/ Bypass/ Boost_1/ Boost_2/ Boost_3/ Error/Default	DC-DC converter status	DC-DC converter
DCDC_VLT_I	V	DC-DC converter input voltage is displayed.	DC-DC converter
DCDC_VLT_O	V	DC-DC converter output voltage is displayed.	DC-DC converter
DEFOG_R_CS	Off/On	• Off: Rear window defroster control signal is not received. • On: Rear window defroster control signal is received.	• Front body control module (FBCM) • Climate control unit
ENG_C_TMP	°C, °F	Engine coolant temperature is displayed.	• ECT sensor • PCM
ESS_ST	Off/On	• Off: ESS is not operated. • On: ESS is operated.	• Front body control module (FBCM) • DSC HU/CM
F_FOG_LMP*3	Off/On	• Off: Front fog light is turned off. • On: Front fog light is turned on.	Front fog light

ON-BOARD DIAGNOSTIC [FRONT BODY CONTROL MODULE (FBCM)]

PID	Unit/ Operation	Data contents	Inspection item(s)
F_FOG_SW *3	Off/On	• Off: Front fog light switch ON signal is received. • On: Front fog light switch OFF signal is received.	• Front fog light switch • Start stop unit
H/L	OFF/ DRL*11/ TNS/H/ L_LOW/H/ L_HI	• OFF: Headlight is turned off. • DRL: Running light is turned on. • TNS: TNS is turned on. • H/L_LOW: Headlight (LO) is turned on. • H/L_HI: Headlight (HI) is turned on.	• Headlight relay (HI/LO) • Parking light • Taillight • License plate light • Running light
H/ L_CLN_RY* 4	Off/On	• Off: Headlight cleaner relay is off. • On: Headlight cleaner relay is on.	• Front body control module (FBCM) • Headlight cleaner relay
H/ L_CS_RLS	Off/ TNS_On/ TNS+H/ L_On	• Off: TNS and headlight on request signal is not received from auto-light sensor. • TNS_On: TNS on signal is received from auto-light sensor. • TNS+H/L_On: TNS and headlight LO on signal is received from auto-light sensor.	Auto-light sensor
H/L_HI	Off/On	• Off: Headlight HI is turned off. • On: Headlight HI is turned on.	Headlight HI
H/L_SW_HI	Off/On	• Off: Light switch does not receives ON signal of HI. • On: Light switch receives ON signal of HI.	• Light switch • Start stop unit
H/ L_SW_LOW 1	Off/On	• Off: Light switch does not receives ON signal of LO. • On: Light switch receives ON signal of LO.	• Light switch • Start stop unit
H/ L_SW_LOW 2	Off/On	• Off: Light switch is not in LO position. • On: Light switch is in LO position.	• Light switch • Start stop unit
H/ L_SW_OFF	Off/On	• Off: Light switch OFF signal is dose not received. • On: Light switch OFF signal is received.	• Light switch • Start stop unit
H/ L_SW_PAS S	Off/On	• Off: Light switch passing signal is dose not received. • On: Light switch passing signal is received.	• Light switch • Start stop unit
H/ L_SW_TNS	Off/On	• Off: Light switch does not receives ON signal of TNS. • On: Light switch receives ON signal of TNS.	• Light switch • Start stop unit
H/L_TNS	Off/On	• Off: TNS is turned off. • On: TNS is turned on.	• Parking light • Taillight • License plate lights
HAZARD_L MP	Off/On	• Off: Hazard light is turned off. • On: Hazard light is flashing.	• Front turn light • Side turn lights • Rear turn light
HAZARD_S W	Off/On/ Unknown	• Off: Hazard warning switch is not pressed. • Off: Hazard warning switch is pressed. • Unknown: Hazard warning switch on/off is not determined.	• Hazard warning switch • Start stop unit
HBC_CS*6	Off/On/ Invalid	• Off: High beam control (HBC) system signal is not received. • On: High beam control (HBC) system signal is received. • Invalid: High beam control (HBC) system signal has error.	Forward sensing camera (FSC)
HBC_ST*6	Off/On	• Off: High beam control (HBC) system is not operated. • On: High beam control (HBC) system is operated.	Forward sensing camera (FSC)
IG_ST	Off/On	• Off: IG1 is off. • On: IG1 is on.	• IG1 relay • PCM • Start stop unit
L_OFF_AUT O*12	Off/On	• Off: TNS or headlight off control by auto-light off system is not operated. • On: TNS or headlight off control by auto-light off system is operated.	• Front body control module (FBCM) • Auto light sensor
L_OFF_BS	Off/On	**Note** • Displays in the M-MDS but it does not operate.	Front body control module (FBCM)
OIL_P_SW	Off(Normal)/ On(Low)	**Note** • Displays in the M-MDS but it does not operate.	Oil pressure switch
OUT_CAR_ TMP	°C, °F	Ambient temperature is displayed.	• Ambient temperature sensor • PCM

ON-BOARD DIAGNOSTIC [FRONT BODY CONTROL MODULE (FBCM)]

PID	Unit/ Operation	Data contents	Inspection item(s)
P_BRAKE_ SW	Off/On	• Off: Parking brake switch is off. (Parking brake lever is not pulled.) • On: Parking brake switch is on. (Parking brake lever is pulled.)	• Parking brake switch • Instrument cluster
PNC_CS	Off/On	• Off: Panic control signal is not received. • On: Panic control signal is received.	• Front body control module (FBCM) • Rear body control module (RBCM)
R_FOG_LM P*7	Off/On	• Off: Rear fog light is turned off. • On: Rear fog light is turned on.	• Rear fog light • Instrument cluster • Front body control module (FBCM) • Rear body control module (RBCM)
R_FOG_SW *7	Off/On	• Off: Rear fog light switch does not receives ON signal of R.FOG. • On: Rear fog light switch receives ON signal of R.FOG.	• Rear fog light switch • Start stop unit
RLS_FLT*5	O.K./FAULT	• OK: Rain sensor is normal. • FAULT: Rain sensor has a malfunction.	Rain sensor
S_HT_CUT* 8	No_Request /Cut	• No_Request: Except below • Cut: Seat warmer is turned off or lowered.	Front body control module (FBCM)
SHIFT_L_P OS*9	Between/P/ R/N/D/S(2)// L(1)	• Between: Selector lever receives signal between two positions. • P: Selector lever receives P position signal. • R: Selector lever receives R position signal. • N: Selector lever receives N position signal. • D: Selector lever receives D position signal. • S (2): Selector lever receives D position 2nd gear signal. • L (1): Selector lever receives D position 1st gear signal.	TCM
TURN_L_L	Off/On	• Off: Turn light (LH) is turned off. • On: Turn light (LH) is turned on.	• Front turn light • Side turn lights • Rear turn light
TURN_L_R	Off/On	• Off: Turn light (RH) is turned off. • On: Turn light (RH) is turned on.	• Front turn light • Side turn lights • Rear turn light
TURN_SW	Off/ Turn_R_On/ Turn_L_On/ Unknown	• Off: Turn switch receives OFF signal. • Turn_R_On: Turn switch receives RH signal. • Turn_L_On: Turn switch receives LH signal. • Unknown: Turn switch receives signal not determined.	• Turn Switch • Start stop unit
VPWR_B	V	Front body control module (FBCM) power supply voltage is displayed.	Front body control module (FBCM)
VSPD	KPH, MPH	Vehicle speed is displayed.	PCM
WAS_FLUI D_L*10	Normal/Low/ Reserved/ Unknown	• Normal: Washer fluid level is normal. • Low: Washer fluid level is low. • Reserved: — • Unknown: Washer fluid level is not determined.	Washer fluid-level sensor
WAS_MT_R Y_F	Off/On	• Off: Front washer motor relay is off. • On: Front washer motor relay is on.	Front body control module (FBCM)
WAS_MT_R Y_R	Off/On	• Off: Rear washer motor relay is off. • On: Rear washer motor relay is on.	Front body control module (FBCM)
WASHER_F	Off/On	• Off: Front washer receives OFF signal. • On: Front washer receives ON signal.	• Windshield washer switch • Start stop unit
WASHER_R	Off/On	• Off: Rear wiper and washer switch receives OFF signal of rear washe. • On: Rear wiper and washer switch receives ON signal of rear washer.	• Rear wiper and washer switch • Start stop unit

ON-BOARD DIAGNOSTIC [FRONT BODY CONTROL MODULE (FBCM)]

PID	Unit/ Operation	Data contents	Inspection item(s)
WIP_CS_RLS*5	Off/ Single_Wipe / F_Wiper_LOW/ F_Wiper_HI/ Failure	• Off: Wiper operation signal is not received from rain sensor. • Single_Wipe: Signal to operate wiper once is received from rain sensor. • F_Wiper_LOW: Signal to operate wiper at low speed is received from rain sensor. • F_Wiper_HI: Signal to operate wiper at high speed is received from rain sensor. • Failure: Communication with rain sensor is failed.	Rain sensor
WIP_F	OFF/LOW/ HI/INT / AUTO	• OFF: Windshield wiper switch receives OFF signal. • LOW: Windshield wiper switch ireceives LO signal. • HI: Windshield wiper switch receives HI signal. • INT / AUTO: Windshield wiper switch receives INT or AUTO signal.	• Windshield wiper switch • Start stop unit
WIP_F_INT_L	%	Received value that windshield wiper INT level signal.	• Windshield wiper switch • Start stop unit
WIP_F_LOW	Off/On	• Off: Windshield wiper switch is not in LO position. • On: Windshield wiper switch is in LO position.	• Windshield wiper switch • Start stop unit
WIP_F_MST	Stop/Move	• Stop: Autostop switch is on. • Move: Autostop switch is off.	Windshield wiper motor
WIP_F_RY_HI	Off/On	• Off: Windshield wiper high relay is off. • On: Windshield wiper high relay is on.	Front body control module (FBCM)
WIP_F_RY_LO	Off/On	• Off: Windshield wiper low relay is off. • On: Windshield wiper low relay is on.	Front body control module (FBCM)
WIP_R	OFF/LOW/ INT	• OFF: Rear wiper switch receives OFF signal. • LOW: Rear wiper switch receives ON signal. • INT: Rear wiper switch receive INT signal.	• Rear wiper switch • Start stop unit
WIP_R_RY	Off/On	• Off: Rear wiper motor is not operated. • On: Rear wiper motor is operated.	• Rear wiper motor • Instrument cluster • Rear body control module (RBCM)

*1 : Vehicles with advanced keyless entry system
*2 : With theft-deterrent system
*3 : With front fog lights
*4 : With headlight cleaner
*5 : With auto-light sensor
*6 : With high beam control (HBC) system
*7 : Vehicles with rear fog light
*8 : With seat warmer
*9 : ATX
*10 : With washer fluid-level sensor
*11 : With running light
*12 : With auto light system

ON-BOARD DIAGNOSTIC [FRONT BODY CONTROL MODULE (FBCM)]

ACTIVE COMMAND MODES INSPECTION [FRONT BODY CONTROL MODULE (FBCM)]

id0902p2012100

1. Connect the M-MDS to the DLC-2.
2. After the vehicle is identified, select the following items from the initialization screen of the M-MDS.
   (1) Select “DataLogger”.
   (2) Select “Modules”.
   (3) Select “F_BCM”.
3. Select the active command modes from the PID table.
4. Perform the active command modes function, inspect the operations for each parts.
   - If the operation of output parts cannot be verified after the active command mode inspection is performed, this could indicate the possibility of an open or short circuit, sticking, or operation malfunction in the output parts.

ACTIVE COMMAND MODES TABLE [FRONT BODY CONTROL MODULE (FBCM)]

id0902p2012200

Simulation item	Unit/ Operation	Data contents	Output part name
DEFOG_R_ST	Off/On	• Off: Stops rear window defroster. • On: Operates rear window defroster.	Filament
ESS_ST	Off/On	• Off: Stops ESS. • On: Operates ESS.	Front body control module (FBCM)
F_FOG_LMP*1	Off/On	• Off: Turns off front fog light. • On: Illuminates front fog light.	Front fog light
H/L	OFF/DRL/ TNS/H/ L_LOW/H/ L_HI	• Off: Turns off headlights. • DRL: Illuminates running light.*3 • TNS: Illuminates TNS. • H/L_LOW: Illuminates headlights LO. • H/L_HI: Illuminates headlights HI.	• Headlight LO/HI • Parking light • Taillight • License plate light • Running light
H/L_CLN_RY*2	Off/On	• Off: Turns headlight cleaner relay off. • On: Turns headlight cleaner relay on.	Front body control module (FBCM)
HAZARD_LMP	Off/On	• Off: Turns off hazard warning light. • On: Flashes hazard warning light.	• Front turn light • Side turn lights • Rear turn light
WAS_MT_RY_F	Off/On	• Off: Turns front washer motor relay off. • On: Turns front washer motor relay on.	Front body control module (FBCM)
WAS_MT_RY_R	Off/On	• Off: Turns rear washer motor relay off. • On: Turns rear washer motor relay on.	Front body control module (FBCM)

*1 : With front fog lights
*2 : With headlight cleaner
*3 : With running light

09-02L ON-BOARD DIAGNOSTIC [REAR BODY CONTROL MODULE (RBCM)]

ON-BOARD DIAGNOSTIC
WIRING DIAGRAM [REAR BODY CONTROL MODULE (RBCM)] 09-02L–2
FOREWORD [REAR BODY CONTROL MODULE (RBCM)] 09-02L–7
Troubleshooting Procedure 09-02L–7
Action for non-repeatable malfunction. 09-02L–8
DTC INSPECTION [REAR BODY CONTROL MODULE (RBCM)] 09-02L–9
CMDTC Self Test 09-02L–9
ODDTC Self Test 09-02L–9
CLEARING DTC [REAR BODY CONTROL MODULE (RBCM)] 09-02L–11
CMDTC Memory Clearing Procedure 09-02L–11
ODDTC Memory Clearing Procedure 09-02L–11
DTC TABLE [REAR BODY CONTROL MODULE (RBCM)] 09-02L–12
DTC B1079:13 [REAR BODY CONTROL MODULE (RBCM)] 09-02L–14
DTC B108F:16 [REAR BODY CONTROL MODULE (RBCM)] 09-02L–17
DTC B109E:87 [REAR BODY CONTROL MODULE (RBCM)] 09-02L–20
DTC B109F:49 [REAR BODY CONTROL MODULE (RBCM)] 09-02L–23
DTC B109F:86 [REAR BODY CONTROL MODULE (RBCM)] 09-02L–24
DTC B109F:87 [REAR BODY CONTROL MODULE (RBCM)] 09-02L–25
DTC B10A5:49 [REAR BODY CONTROL MODULE (RBCM)] 09-02L–28
DTC B10A5:86 [REAR BODY CONTROL MODULE (RBCM)] 09-02L–29
DTC B10A5:87 [REAR BODY CONTROL MODULE (RBCM)] 09-02L–30
DTC B113E:11 [REAR BODY CONTROL MODULE (RBCM)] 09-02L–33
DTC B1172:11 [REAR BODY CONTROL MODULE (RBCM)] 09-02L–36
DTC B1172:13 [REAR BODY CONTROL MODULE (RBCM)] 09-02L–39
DTC B1174:11 [REAR BODY CONTROL MODULE (RBCM)] 09-02L–42
DTC B1174:13 [REAR BODY CONTROL MODULE (RBCM)]. 09-02L–46
DTC B1175:11 [REAR BODY CONTROL MODULE (RBCM)]. 09-02L–51
DTC B1176:11 [REAR BODY CONTROL MODULE (RBCM)]. 09-02L–54
DTC B1178:11 [REAR BODY CONTROL MODULE (RBCM)]. 09-02L–57
DTC B11DA:16 [REAR BODY CONTROL MODULE (RBCM)]. 09-02L–60
DTC B11E9:11 [REAR BODY CONTROL MODULE (RBCM)]. 09-02L–63
DTC B11EA:11 [REAR BODY CONTROL MODULE (RBCM)]. 09-02L–66
DTC B126A:11 [REAR BODY CONTROL MODULE (RBCM)]. 09-02L–69
DTC B126A:13 [REAR BODY CONTROL MODULE (RBCM)]. 09-02L–73
DTC B1A79:13 [REAR BODY CONTROL MODULE (RBCM)]. 09-02L–76
DTC C0023:14 [REAR BODY CONTROL MODULE (RBCM)]. 09-02L–79
DTC U0010:88/U0155:00 [REAR BODY CONTROL MODULE (RBCM)] 09-02L–86
Diagnostic Procedure 09-02L–86
DTC U0447:86 [REAR BODY CONTROL MODULE (RBCM)]. 09-02L–87
DTC U2100:00 [REAR BODY CONTROL MODULE (RBCM)]. 09-02L–88
DTC U3000:49 [REAR BODY CONTROL MODULE (RBCM)]. 09-02L–89
DTC U3003:16 [REAR BODY CONTROL MODULE (RBCM)]. 09-02L–90
PID/DATA MONITOR INSPECTION [REAR BODY CONTROL MODULE (RBCM)]. 09-02L–93
PID/DATA MONITOR TABLE [REAR BODY CONTROL MODULE (RBCM)]. 09-02L–94
ACTIVE COMMAND MODES INSPECTION [REAR BODY CONTROL MODULE (RBCM)]. 09-02L–96
ACTIVE COMMAND MODES TABLE [REAR BODY CONTROL MODULE (RBCM)]. 09-02L–96

ON-BOARD DIAGNOSTIC [REAR BODY CONTROL MODULE (RBCM)]

ON-BOARD DIAGNOSTIC WIRING DIAGRAM [REAR BODY CONTROL MODULE (RBCM)]

id0902p4012300

Power window system, Auto dimming mirror

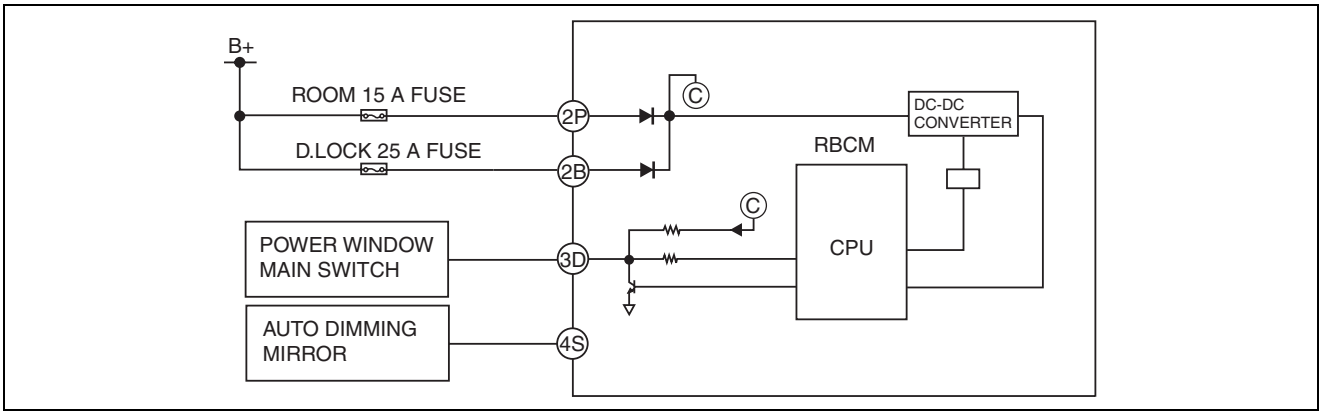

ac5wzn00001492

ON-BOARD DIAGNOSTIC [REAR BODY CONTROL MODULE (RBCM)]

Power door lock system, theft-deterrent system

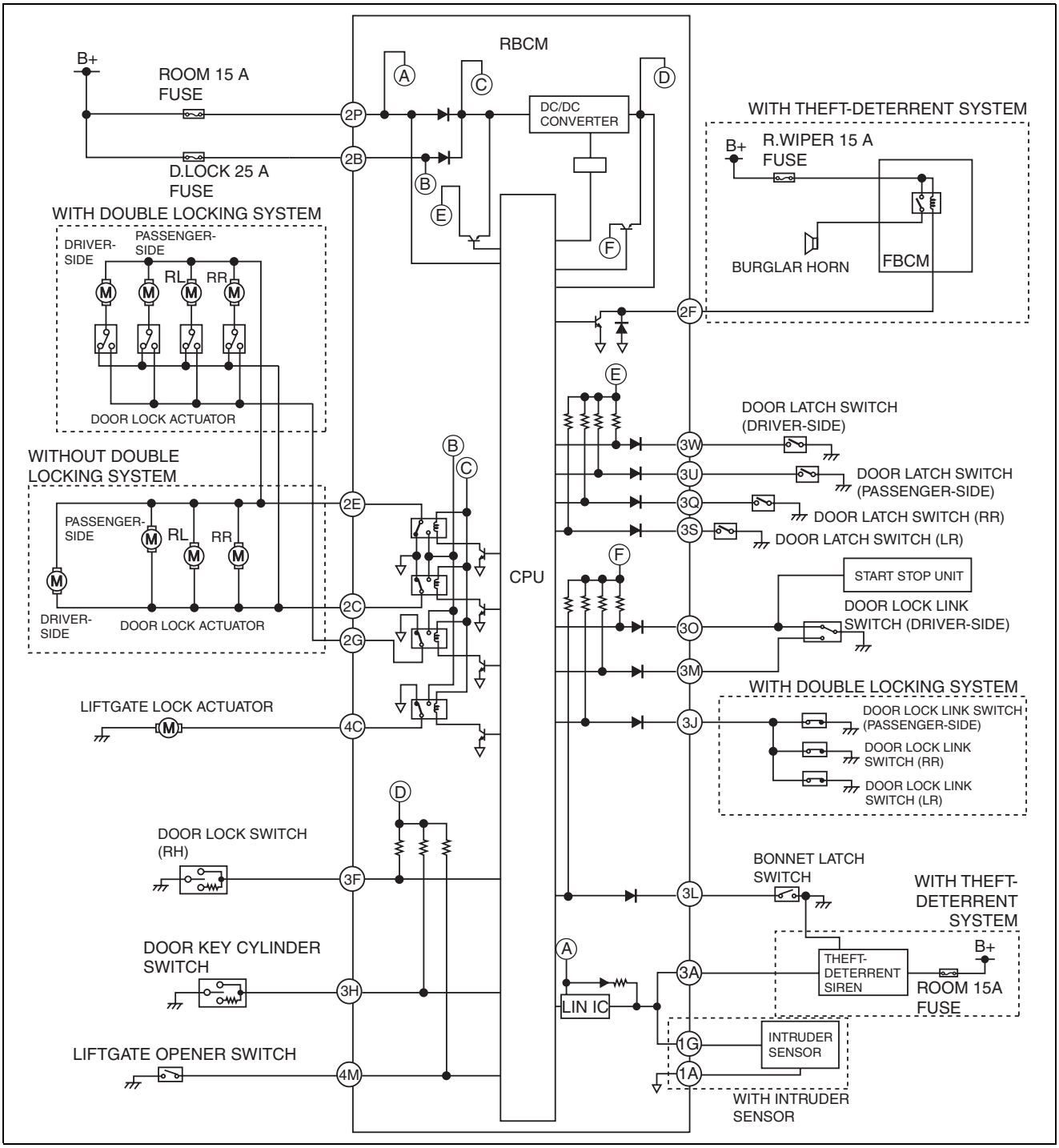

ac5uun00000175

ON-BOARD DIAGNOSTIC [REAR BODY CONTROL MODULE (RBCM)]

Room lights, brake light, rear fog light system

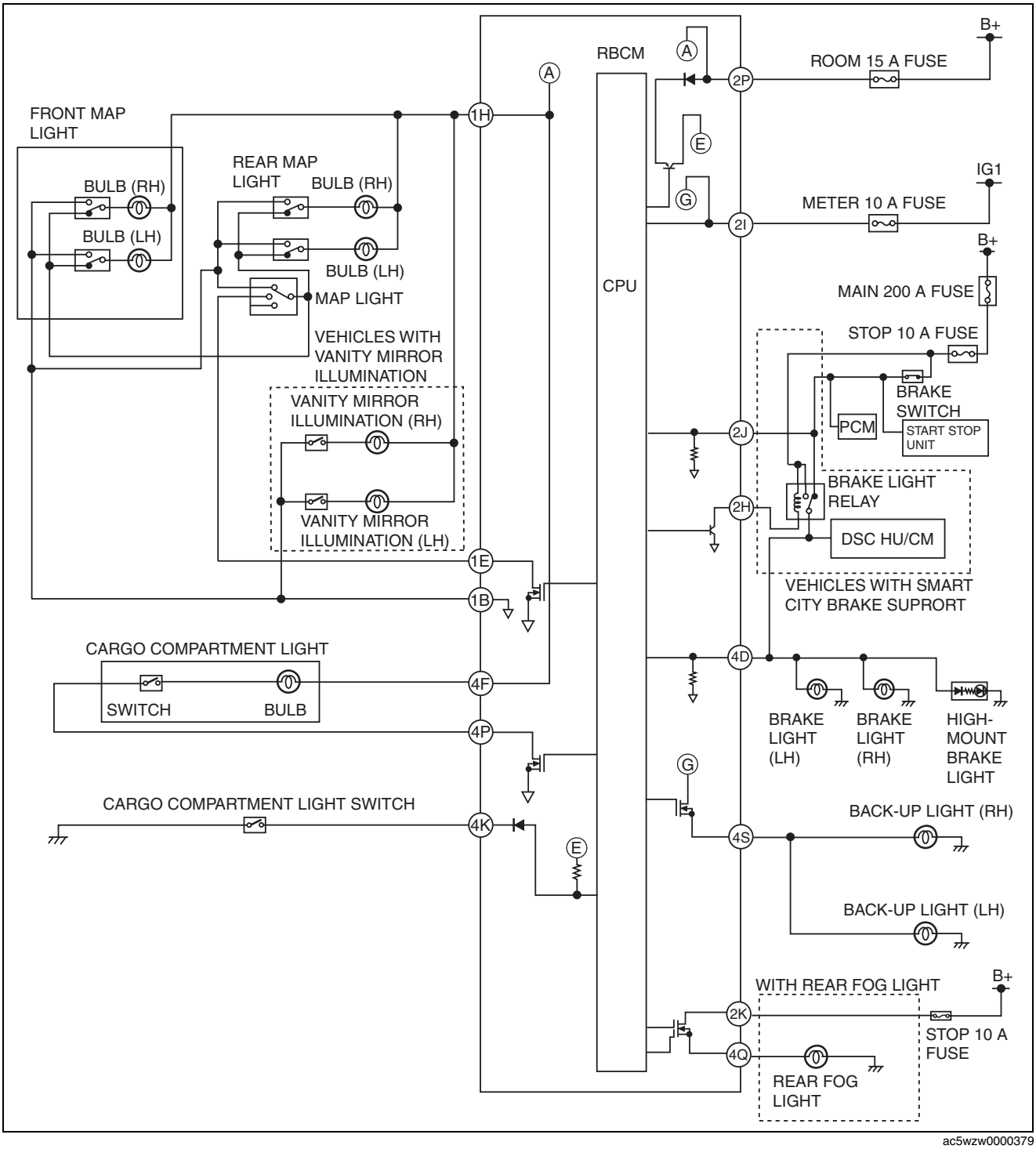

ac5wzw0000379

ON-BOARD DIAGNOSTIC [REAR BODY CONTROL MODULE (RBCM)]

Rear wiper system

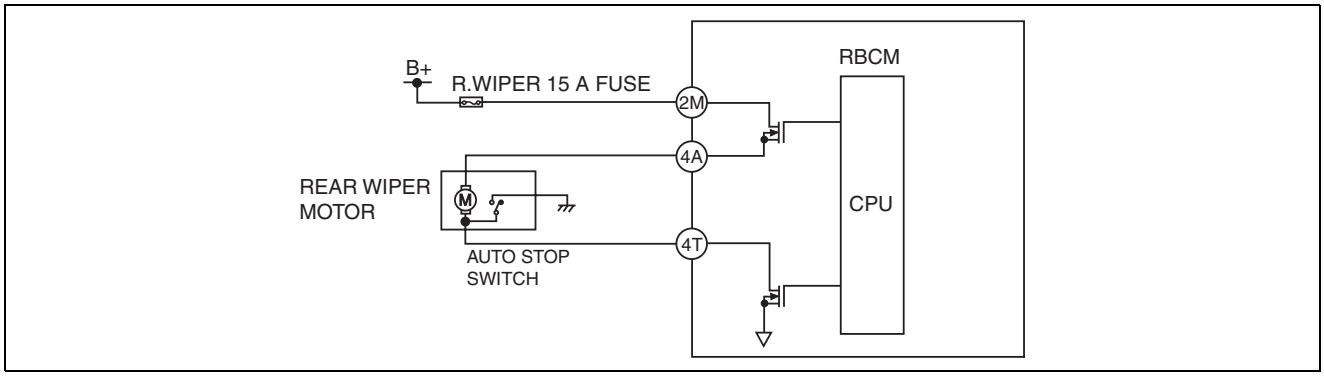

ac5uun00000314

Fuel-level sensor, rear seat belt reminder system

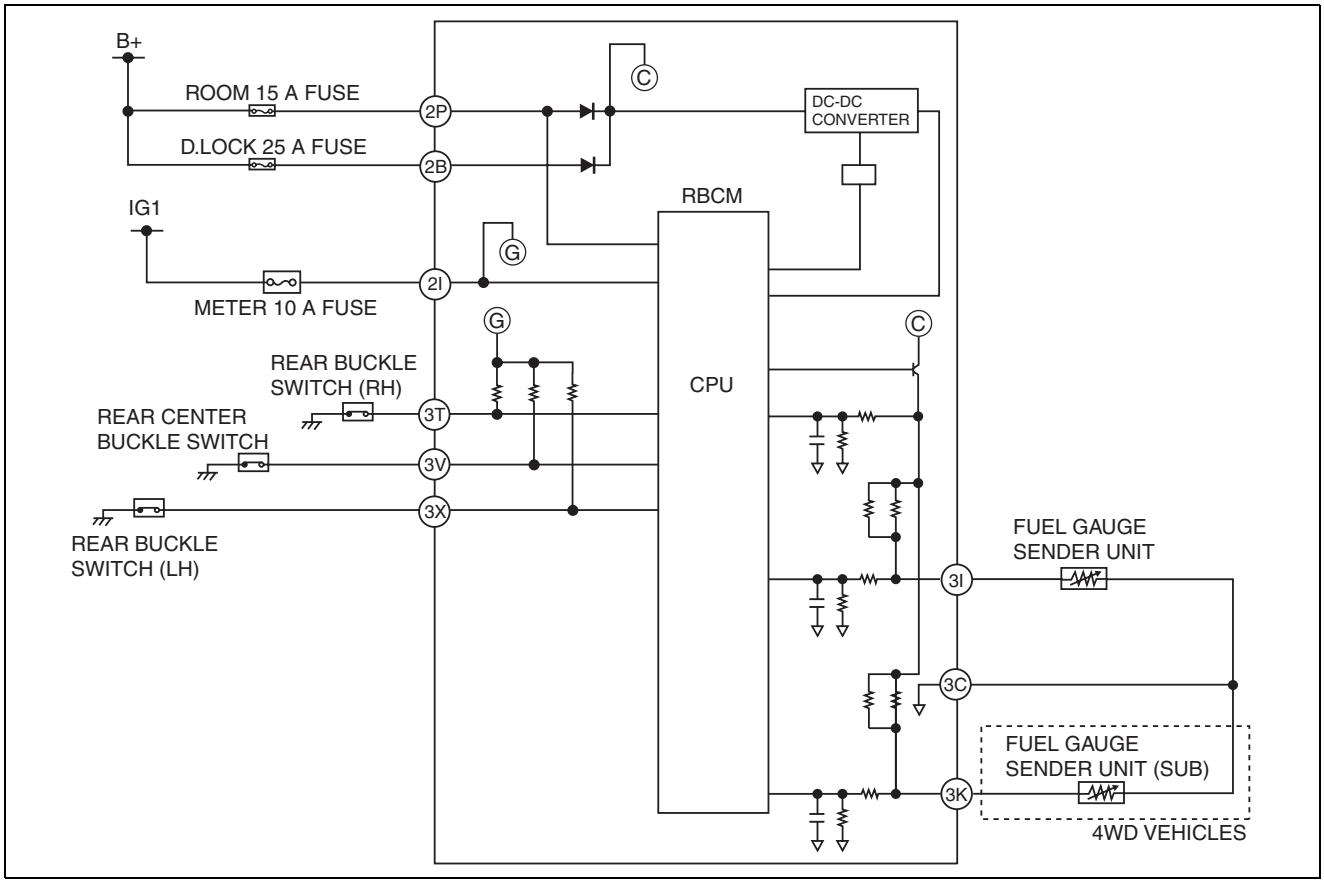

ac5wzn00000974

ON-BOARD DIAGNOSTIC [REAR BODY CONTROL MODULE (RBCM)]

CAN system

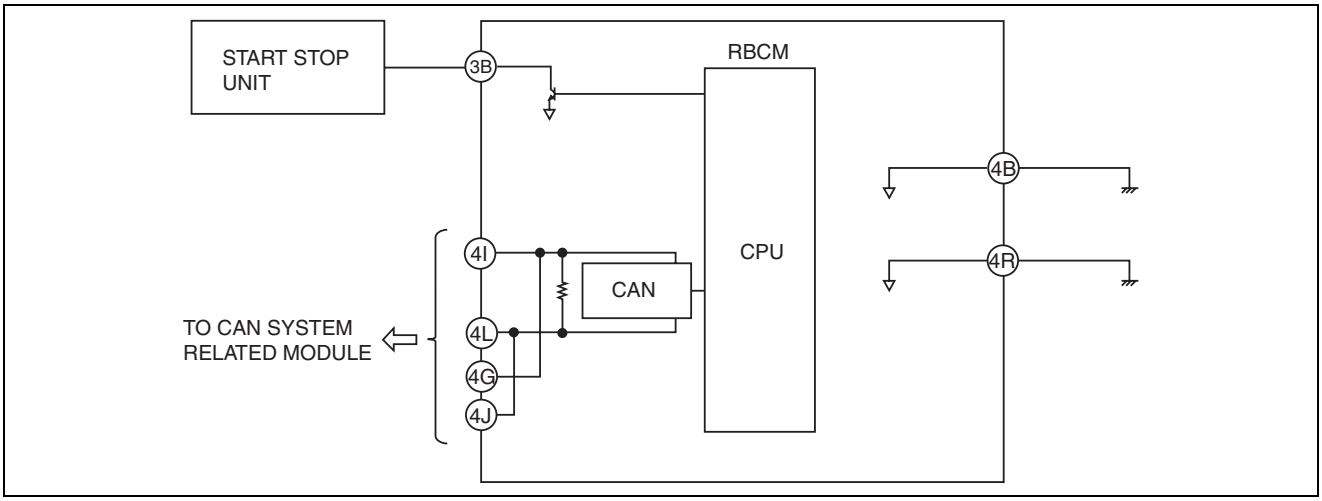

ac5wzn00001065

ON-BOARD DIAGNOSTIC [REAR BODY CONTROL MODULE (RBCM)]

FOREWORD [REAR BODY CONTROL MODULE (RBCM)]

id0902p4012400

- If there is any vehicle malfunction complaint lodged by a customer, perform malfunction diagnosis according to the troubleshooting procedure.

Troubleshooting Procedure

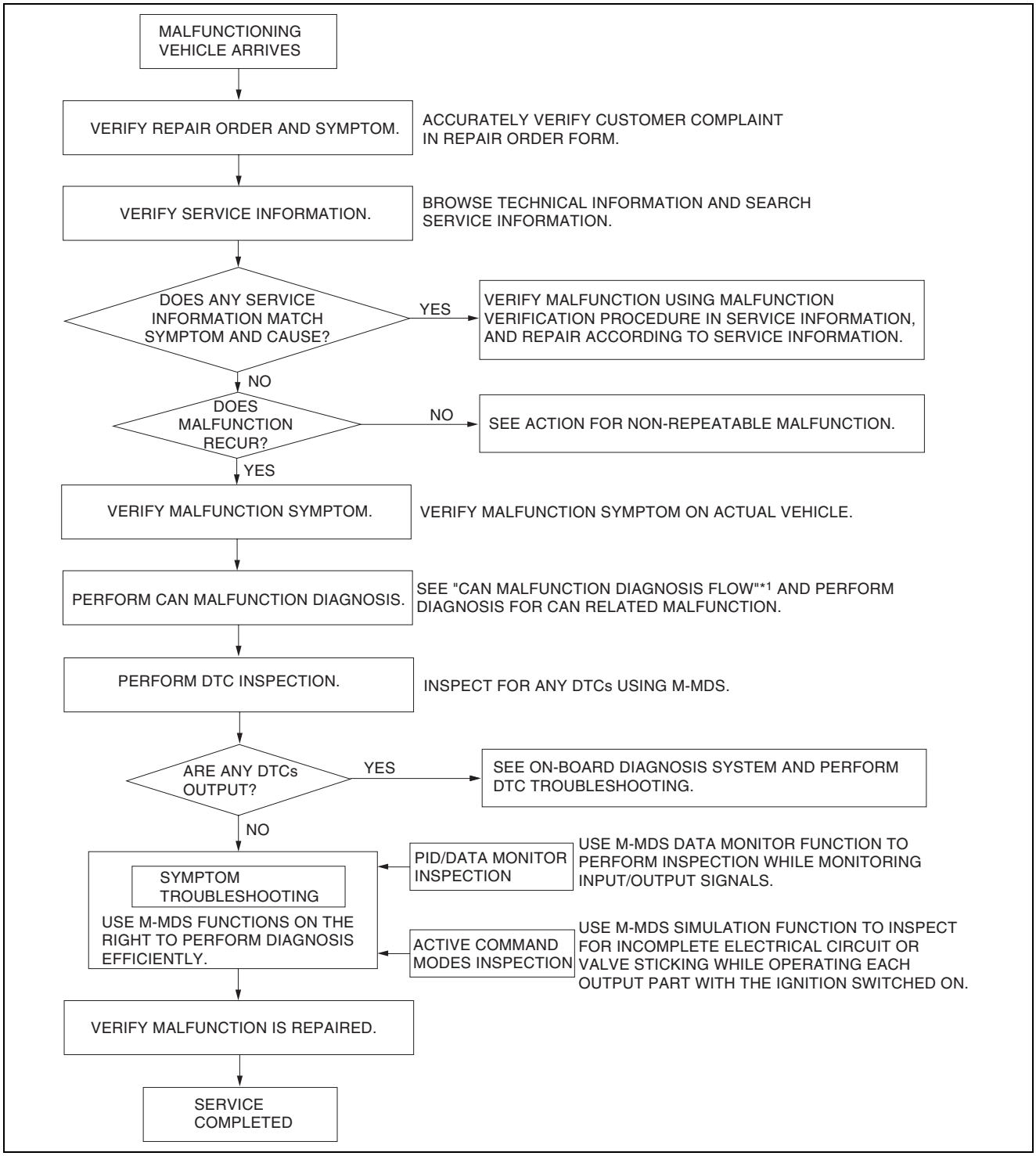

am3uuw0000731

*1 : 10-02A-3 CONTROLLER AREA NETWORK (CAN) MALFUNCTION DIAGNOSIS FLOW [SKYACTIV-G 2.0 (L.H.D.)] /10-02B-3 CONTROLLER AREA NETWORK (CAN) MALFUNCTION DIAGNOSIS FLOW [SKYACTIV-G 2.0 (R.H.D.)]/10-02C-3 CONTROLLER AREA NETWORK (CAN) MALFUNCTION DIAGNOSIS FLOW [SKYACTIV-D 2.2 (L.H.D.)]/10-02D-3 CONTROLLER AREA NETWORK (CAN) MALFUNCTION DIAGNOSIS FLOW [SKYACTIV-D 2.2 (R.H.D.)]

ON-BOARD DIAGNOSTIC [REAR BODY CONTROL MODULE (RBCM)]

Action for non-repeatable malfunction

- If the malfunction does not recur, verify the malfunction cause by performing the following actions:
  - — Based on the repair order form, attempt to drive the vehicle or perform tests to replicate the malfunction, record the data at that time, and detect the malfunction cause.
  - — Shake the wiring harness or connector of the electrical component which is suspected to be the cause of the malfunction, and inspect for malfunction or occurrence of any DTCs.

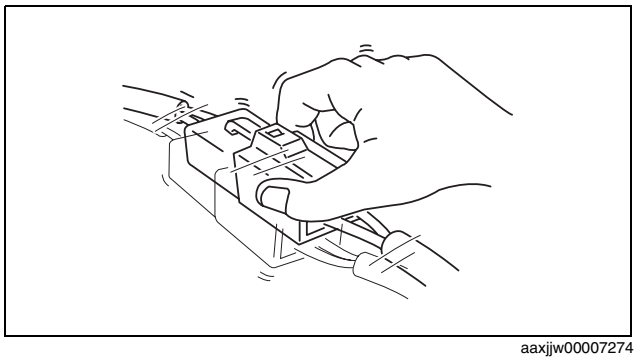

aaxjjw00007274

  - — Inspect the female terminals on the connector of the electric component which is suspected to be the cause of the malfunction for poor connection.

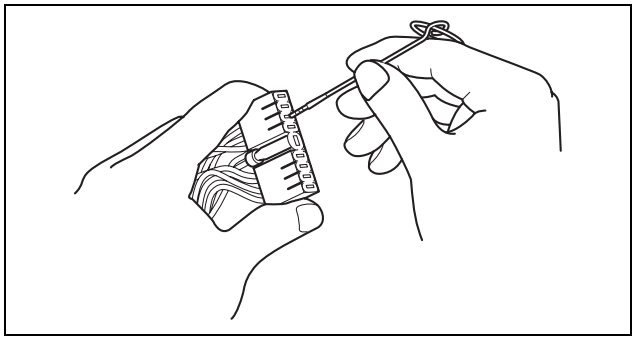

am3uuw0000750

ON-BOARD DIAGNOSTIC [REAR BODY CONTROL MODULE (RBCM)]

DTC INSPECTION [REAR BODY CONTROL MODULE (RBCM)]

id0902p4012500

CMDTC Self Test

1. Connect the M-MDS to the DLC-2.
2. Verify the following vehicle conditions:
   - All the switches are turned off (except the ignition switch).
   - All the doors, bonnet, and liftgate are closed.
   - All the doors, and liftgate re unlocked.
   - All the seat belts are unbuckled.
   - Parking brake lever is pulled.
3. After the vehicle is identified, select the following items from the initialization screen of the M-MDS.
   (1) Select “Self Test”.
   (2) Select “All CMDTCs”.
4. Verify the DTC according to the directions on the screen.
   - If any DTCs are displayed, perform troubleshooting according to the corresponding DTC inspection.
5. After completion of repairs, clear all DTCs stored in the rear body control module (RBCM). (See 09-02L-11 CLEARING DTC [REAR BODY CONTROL MODULE (RBCM)].)

ODDTC Self Test

1. Connect the M-MDS to the DLC-2.
2. Verify the following vehicle conditions:
   - All the switches are turned off (except the ignition switch).
   - All the doors, bonnet, and liftgate are closed.
   - All the doors, and liftgate are unlocked.
   - All the seat belts are unbuckled.
   - Parking brake lever is pulled.
3. After the vehicle is identified, select the following items from the initialization screen of the M-MDS.
   (1) Select “Self Test”.
   (2) Select “Modules”.
   (3) Select “R_BCM”.
4. Verify the DTC according to the directions on the screen.
   - If any DTCs are displayed, perform troubleshooting according to the corresponding DTC inspection.
5. After completion of repairs, clear all DTCs stored in the rear body control module (RBCM). (See 09-02L-11 CLEARING DTC [REAR BODY CONTROL MODULE (RBCM)].)

ON-BOARD DIAGNOSTIC [REAR BODY CONTROL MODULE (RBCM)]

Snapshot data

- The data for all DTCs currently detected is stored.

Snapshot data table

Snapshot data item	Unit		Data contents	Corresponding data monitor items
AAT	°C	°F	Ambient temperature	-
APP_STATUS	Accelerator Pedal Off/Under20%/ Over20%/FAIL		Accelerator pedal position status	-
CFG_STATUS	Config Complete/Not Configured/Config Error		Configuration status	-
ECT_STATUS	Under 0 degrees C/ 0-Under 80 degrees C/ Over 80 degrees C/FAIL		Engine coolant temperature status	-
IC_VPWR	V		Instrument cluster power supply voltage	-
IG-ON_TIMER	hh:mm:ss		Elapsed time since ignition switched ON (engine off or on)	-
PWR_MODE_KEY	Key Out/Key Recently Out/ Key Approved (Position 0)/ Post Accessory (Position 0)/ Accessory (Position 1)/ Post Ignition (Position 1)/ ignition On (Position 2)/ Running (Position 2)/ Running - Starting In Progress (Position 2)/Crank (Position 3)		Push button start power position switching status	-
RPM_STATUS	Engine Stop/Under1500rpm/ Over1500rpm/FAIL		Engine speed status	-
SHIFT_STATUS	P/N/D/R/FAIL		Selector lever position status	-
TOTAL_DIST	Km	miles	Accumulated total traveled distance since vehicle completion	-
TOTAL_TIME	hh:mm:ss		Accumulated total elapsed time since vehicle completion **Note** • When the ROOM fuse is removed, or the ignition is switched off (LOCK), the time is not included in the elapsed time.	-
VPWR	V		Rear body control module (RBCM) power supply malfunction	VPWR_IG
VSPD_STATUS	Stop/ 0-10km/h/ Over10km/h/ FAIL		Vehicle speed status	VSPD

ON-BOARD DIAGNOSTIC [REAR BODY CONTROL MODULE (RBCM)]

CLEARING DTC [REAR BODY CONTROL MODULE (RBCM)]

id0902p4012700

CMDTC Memory Clearing Procedure

1. Connect the M-MDS to the DLC-2.
2. After the vehicle is identified, select the following items from the initialization screen of the M-MDS.
   (1) Select “Self Test”.
   (2) Select “All CMDTCs”.
3. Verify the DTC according to the directions on the screen.
4. Press the clear button on the DTC screen to clear the DTC.
5. Switch the ignition to off.
6. Switch the ignition ON (engine off or on) and wait for **5 s or more**.
7. Perform DTC inspection. (See 09-02L-9 DTC INSPECTION [REAR BODY CONTROL MODULE (RBCM)].)
8. Verify that no DTCs are displayed.

ODDTC Memory Clearing Procedure

1. Connect the M-MDS to the DLC-2.
2. After the vehicle is identified, select the following items from the initialization screen of the M-MDS.
   (1) Select “Self Test”.
   (2) Select “Modules”.
   (3) Select “R_BCM”.
3. Verify the DTC according to the directions on the screen.
4. Press the clear button on the DTC screen to clear the DTC.
5. Switch the ignition to off.
6. Switch the ignition ON (engine off or on) and wait for **5 s or more**.
7. Perform DTC inspection. (See 09-02L-9 DTC INSPECTION [REAR BODY CONTROL MODULE (RBCM)].)
8. Verify that no DTCs are displayed.

ON-BOARD DIAGNOSTIC [REAR BODY CONTROL MODULE (RBCM)]

DTC TABLE [REAR BODY CONTROL MODULE (RBCM)]

id0902p4012800

×: Applicable
—: Not applicable

DTC No.	Warning/ indicator light	Description	Fail-safe function	Drive cycle	Self test type*1	Memory function	Page
B1079:13	—	Bonnet latch switch circuit malfunction	—	—	D	—	(See 09-02L-14 DTC B1079:13 [REAR BODY CONTROL MODULE (RBCM)].)
B108F:16* 2	—	Door lock switch (LH) circuit malfunction	—	—	D	—	(See 09-02L-17 DTC B108F:16 [REAR BODY CONTROL MODULE (RBCM)].)
B109E:87	—	Communication error with start stop unit	—	—	C, D	×	(See 09-02L-20 DTC B109E:87 [REAR BODY CONTROL MODULE (RBCM)].)
B109F:49* 3	—	Intruder sensor internal malfunction	—	—	C, D	×	(See 09-02L-23 DTC B109F:49 [REAR BODY CONTROL MODULE (RBCM)].)
B109F:86* 3	—	Intruder sensor signal error	—	—	C, D	×	(See 09-02L-24 DTC B109F:86 [REAR BODY CONTROL MODULE (RBCM)].)
B109F:87* 3	—	Communication error with intruder sensor	—	—	C, D	×	(See 09-02L-25 DTC B109F:87 [REAR BODY CONTROL MODULE (RBCM)].)
B10A5:49* 3	—	Theft-deterrent siren internal malfunction	—	—	C, D	×	(See 09-02L-28 DTC B10A5:49 [REAR BODY CONTROL MODULE (RBCM)].)
B10A5:86* 3	—	Theft-deterrent siren signal error	—	—	C, D	×	(See 09-02L-29 DTC B10A5:86 [REAR BODY CONTROL MODULE (RBCM)].)
B10A5:87* 3	—	Communication error with theft-deterrent siren	—	—	C, D	×	(See 09-02L-30 DTC B10A5:87 [REAR BODY CONTROL MODULE (RBCM)].)
B113E:11	—	Liftgate opener switch circuit malfunction	—	—	D	—	(See 09-02L-33 DTC B113E:11 [REAR BODY CONTROL MODULE (RBCM)].)
B1172:11	—	Front door lock-link switch (driver's side) unlock circuit malfunction	—	—	D	—	(See 09-02L-36 DTC B1172:11 [REAR BODY CONTROL MODULE (RBCM)].)
B1172:13	—	Front door lock-link switch (driver's side) unlock circuit malfunction	—	—	D	—	(See 09-02L-39 DTC B1172:13 [REAR BODY CONTROL MODULE (RBCM)].)
B1174:11* 3	—	Front door lock-link switch (passenger's side)/rear door lock-link switch (LH)/(RH) unlock circuit malfunction	—	—	D	—	(See 09-02L-42 DTC B1174:11 [REAR BODY CONTROL MODULE (RBCM)].)
B1174:13* 3	—	Front door lock-link switch (passenger's side)/rear door lock-link switch (LH)/(RH) unlock circuit malfunction	—	—	D	—	(See 09-02L-46 DTC B1174:13 [REAR BODY CONTROL MODULE (RBCM)].)

ON-BOARD DIAGNOSTIC [REAR BODY CONTROL MODULE (RBCM)]

DTC No.	Warning/ indicator light	Description	Fail-safe function	Drive cycle	Self test type*1	Memory function	Page
B1175:11	—	Front door latch switch (driver's side) circuit malfunction	—	—	D	—	(See 09-02L-51 DTC B1175:11 [REAR BODY CONTROL MODULE (RBCM)].)
B1176:11	—	Front door latch switch (passenger's side) circuit malfunction	—	—	D	—	(See 09-02L-54 DTC B1176:11 [REAR BODY CONTROL MODULE (RBCM)].)
B1178:11	—	Liftgate latch switch circuit malfunction	—	—	D	—	(See 09-02L-57 DTC B1178:11 [REAR BODY CONTROL MODULE (RBCM)].)
B11DA:16	—	Front door key cylinder switch (driver's side) circuit malfunction	—	—	D	—	(See 09-02L-60 DTC B11DA:16 [REAR BODY CONTROL MODULE (RBCM)].)
B11E9:11	—	Rear door latch switch (LH) circuit malfunction	—	—	D	—	(See 09-02L-63 DTC B11E9:11 [REAR BODY CONTROL MODULE (RBCM)].)
B11EA:11	—	Rear door latch switch (RH) circuit malfunction	—	—	D	—	(See 09-02L-66 DTC B11EA:11 [REAR BODY CONTROL MODULE (RBCM)].)
B126A:11	—	Front door lock-link switch (driver's side) lock circuit malfunction	—	—	D	—	(See 09-02L-69 DTC B126A:11 [REAR BODY CONTROL MODULE (RBCM)].)
B126A:13	—	Front door lock-link switch (driver's side) lock circuit malfunction	—	—	D	—	(See 09-02L-73 DTC B126A:13 [REAR BODY CONTROL MODULE (RBCM)].)
B1A79:13* 4	—	Rear fog light circuit malfunction	—	—	C, D	×	(See 09-02L-76 DTC B1A79:13 [REAR BODY CONTROL MODULE (RBCM)].)
C0023:14* 5	—	Rear body control module (RBCM) internal malfunction (brake light drive circuit)	—	—	C, D	×	(See 09-02L-79 DTC C0023:14 [REAR BODY CONTROL MODULE (RBCM)].)
U0010:88	—	Unit communication error (MS-CAN)	—	—	C, D	×	(See 09-02L-86 DTC U0010:88/U0155:00 [REAR BODY CONTROL MODULE (RBCM)].)
U0155:00	—	Communication error with instrument cluster	—	—	C, D	×	
U0447:86* 4	—	Communication error between front body control module (FBCM) and instrument cluster	—	—	C, D	×	(See 09-02L-87 DTC U0447:86 [REAR BODY CONTROL MODULE (RBCM)].)
U2100:00	—	Rear body control module (RBCM) configuration error	—	—	C, D	×	(See 09-02L-88 DTC U2100:00 [REAR BODY CONTROL MODULE (RBCM)].)
U3000:49	—	Rear body control module (RBCM) internal malfunction	—	—	C, D	×	(See 09-02L-89 DTC U3000:49 [REAR BODY CONTROL MODULE (RBCM)].)
U3003:16	—	Rear body control module (RBCM) power supply voltage (+B power supply) low input	—	—	C, D	×	(See 09-02L-90 DTC U3003:16 [REAR BODY CONTROL MODULE (RBCM)].)

*1 : C: CMDTC self test, D: ODDTC self test
*2 : With 2-step unlocking

ON-BOARD DIAGNOSTIC [REAR BODY CONTROL MODULE (RBCM)]

*3 : With theft-deterrent system
*4 : Vehicles with rear fog light
*5 : Vehicles with smart city brake support

DTC B1079:13 [REAR BODY CONTROL MODULE (RBCM)]

id0902p4012600

System malfunction location	**Bonnet latch switch circuit malfunction**
Detection condition	• Rear body control module (RBCM) detects open circuit in bonnet latch switch circuit.
Fail-safe	—
Possible cause	• Bonnet latch switch connector or terminal malfunction • Open circuit in wiring harness between bonnet latch switch terminal B and body ground • Bonnet latch switch malfunction • Rear body control module (RBCM) connector or terminal malfunction • Open circuit in wiring harness between rear body control module (RBCM) terminal 3L and bonnet latch switch terminal A • Rear body control module (RBCM) malfunction

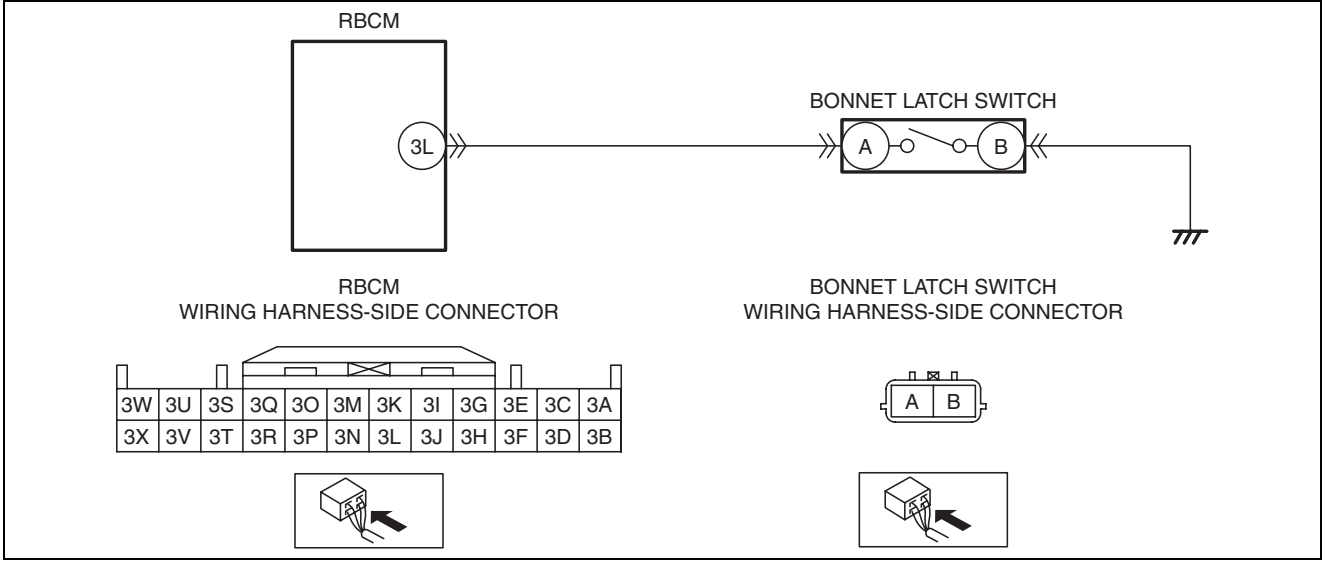

ON-BOARD DIAGNOSTIC [REAR BODY CONTROL MODULE (RBCM)]

Diagnostic Procedure

Step	Inspection		Action
1	**VERIFY REAR BODY CONTROL MODULE (RBCM) DTCs AGAIN** • Clear rear body control module (RBCM) DTCs using the M-MDS. (See 09-02L-11 CLEARING DTC [REAR BODY CONTROL MODULE (RBCM)].) • Perform the DTC inspection for the rear body control module (RBCM) using the M-MDS. (See 09-02L-9 DTC INSPECTION [REAR BODY CONTROL MODULE (RBCM)].) • Is DTC B1079:13 displayed?	Yes	Go to the next step.
		No	Go to Step 8.
2	**INSPECT BONNET LATCH SWITCH CONNECTOR** • Switch the ignition to off. • Disconnect the negative battery cable. (See 01-17A-11 NEGATIVE BATTERY CABLE DISCONNECTION/CONNECTION [SKYACTIV-G 2.0].) (See 01-17A-13 NEGATIVE BATTERY CABLE DISCONNECTION/CONNECTION [SKYACTIV-G 2.0 (WITHOUT i-stop)].) (See 01-17B-9 NEGATIVE BATTERY CABLE DISCONNECTION/CONNECTION [SKYACTIV-D 2.2].) • Disconnect the bonnet latch switch connector. • Inspect the connector engagement and connection condition and inspect the terminals for damage, deformation, corrosion, or disconnection. • Is the connector normal?	Yes	Go to the next step.
		No	Repair or replace the connector, then go to Step 7.
3	**INSPECT BONNET LATCH SWITCH GROUND CIRCUIT FOR OPEN CIRCUIT** • Verify that the bonnet latch switch connector is disconnected. • Inspect for continuity between bonnet latch switch terminal B (vehicle wiring harness side) and body ground. • Is there continuity?	Yes	Go to the next step.
		No	Repair or replace the wiring harness which has an open circuit, then go to Step 7.
4	**INSPECT BONNET LATCH SWITCH** • Inspect the bonnet latch switch. (See 09-14-21 BONNET LATCH SWITCH INSPECTION.) • Is the bonnet latch switch normal?	Yes	Go to the next step.
		No	Replace the bonnet latch switch, then go to Step 7. (See 09-14-17 BONNET LATCH AND RELEASE LEVER REMOVAL/INSTALLATION.)
5	**INSPECT REAR BODY CONTROL MODULE (RBCM) CONNECTOR CONDITION** • Disconnect the rear body control module (RBCM) connector. • Inspect the connector engagement and connection condition and inspect the terminals for damage, deformation, corrosion, or disconnection. • Is the connector normal?	Yes	Go to the next step.
		No	Repair or replace the connector, then go to Step 7.
6	**INSPECT BONNET LATCH SWITCH CIRCUIT FOR OPEN CIRCUIT** • Verify that the bonnet latch switch and rear body control module (RBCM) connectors are disconnected. • Inspect the wiring harness for an open circuit between rear body control module (RBCM) terminal 3L (vehicle wiring harness side) and bonnet latch switch terminal A (vehicle wiring harness side). • Is there continuity?	Yes	Go to the next step.
		No	Repair or replace the wiring harness which has an open circuit, then go to the next step.

ON-BOARD DIAGNOSTIC [REAR BODY CONTROL MODULE (RBCM)]

Step	Inspection		Action
7	**VERIFY THAT REPAIRS HAVE BEEN COMPLETED** • Reconnect all the disconnected connectors. • Reconnect the disconnected negative battery cable. (See 01-17A-11 NEGATIVE BATTERY CABLE DISCONNECTION/CONNECTION [SKYACTIV-G 2.0].) (See 01-17A-13 NEGATIVE BATTERY CABLE DISCONNECTION/CONNECTION [SKYACTIV-G 2.0 (WITHOUT i-stop)].) (See 01-17B-9 NEGATIVE BATTERY CABLE DISCONNECTION/CONNECTION [SKYACTIV-D 2.2].) • Clear rear body control module (RBCM) DTCs using the M-MDS. (See 09-02L-11 CLEARING DTC [REAR BODY CONTROL MODULE (RBCM)].) • Perform the DTC inspection for the rear body control module (RBCM) using the M-MDS. (See 09-02L-9 DTC INSPECTION [REAR BODY CONTROL MODULE (RBCM)].) • Is DTC B1079:13 displayed?	Yes	Repeat the inspection from Step 1. • If the malfunction recurs, replace the rear body control module (RBCM), then go to the next step. (See 09-40-9 REAR BODY CONTROL MODULE (RBCM) REMOVAL/INSTALLATION.)
		No	Go to the next step.
8	**VERIFY IF OTHER DTCs DISPLAYED** • Are any other DTCs displayed?	Yes	Repair the malfunctioning part according to the applicable DTC troubleshooting. (See 09-02L-12 DTC TABLE [REAR BODY CONTROL MODULE (RBCM)].)
		No	DTC troubleshooting completed.

ON-BOARD DIAGNOSTIC [REAR BODY CONTROL MODULE (RBCM)]

DTC B108F:16 [REAR BODY CONTROL MODULE (RBCM)]

id0902p4012900

System malfunction location	**Door lock switch (LH) circuit malfunction**
Detection condition	• With the door lock switch off, the rear body control module (RBCM) detects door lock switch circuit voltage of **4 V or less**.
Fail-safe	—
Possible cause	• Power window main switch connector or terminal malfunction • Door lock switch (LH) malfunction • Rear body control module (RBCM) connector or terminal malfunction • Short to ground in wiring harness between rear body control module (RBCM) terminal 3F and power window main switch terminal 1E • Rear body control module (RBCM) malfunction

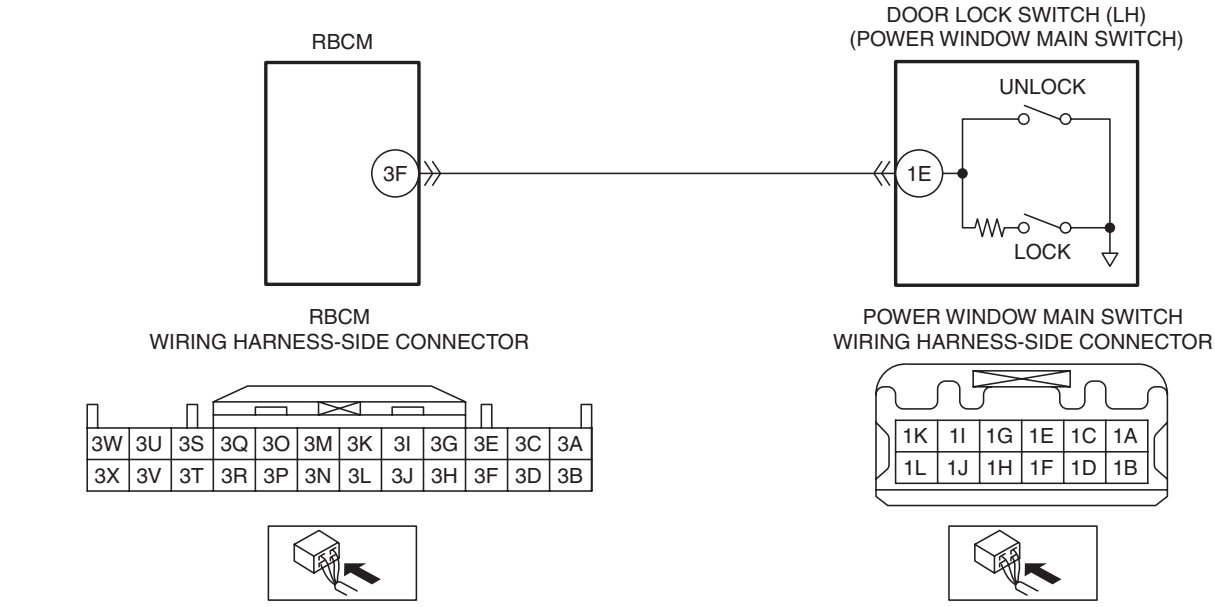

ON-BOARD DIAGNOSTIC [REAR BODY CONTROL MODULE (RBCM)]

Diagnostic Procedure

Step	Inspection		Action
1	**VERIFY REAR BODY CONTROL MODULE (RBCM) DTCs AGAIN** • Clear rear body control module (RBCM) DTCs using the M-MDS. (See 09-02L-11 CLEARING DTC [REAR BODY CONTROL MODULE (RBCM)].) • Perform the DTC inspection for the rear body control module (RBCM) using the M-MDS. (See 09-02L-9 DTC INSPECTION [REAR BODY CONTROL MODULE (RBCM)].) • Is DTC B108F:16 displayed?	Yes	Go to the next step.
		No	Go to Step 7.
2	**POWER WINDOW MAIN SWITCH CONNECTOR INSPECTION** • Switch the ignition to off. • Disconnect the negative battery cable. (See 01-17A-11 NEGATIVE BATTERY CABLE DISCONNECTION/CONNECTION [SKYACTIV-G 2.0].) (See 01-17A-13 NEGATIVE BATTERY CABLE DISCONNECTION/CONNECTION [SKYACTIV-G 2.0 (WITHOUT i-stop)].) (See 01-17B-9 NEGATIVE BATTERY CABLE DISCONNECTION/CONNECTION [SKYACTIV-D 2.2].) • Disconnect the power window main switch connector. • Inspect the connector engagement and connection condition and inspect the terminals for damage, deformation, corrosion, or disconnection. • Is the connector normal?	Yes	Go to the next step.
		No	Repair or replace the connector, then go to Step 6.
3	**INSPECT DOOR LOCK SWITCH (LH)** • Inspect the door lock switch (LH). (See 09-12-54 POWER WINDOW MAIN SWITCH INSPECTION.) • Is the door lock switch (LH) normal?	Yes	Go to the next step.
		No	Replace the power window main switch, then go to Step 6. (See 09-12-52 POWER WINDOW MAIN SWITCH REMOVAL/INSTALLATION.)
4	**INSPECT REAR BODY CONTROL MODULE (RBCM) CONNECTOR CONDITION** • Disconnect the rear body control module (RBCM) connector. • Inspect the connector engagement and connection condition and inspect the terminals for damage, deformation, corrosion, or disconnection. • Is the connector normal?	Yes	Go to the next step.
		No	Repair or replace the connector, then go to Step 6.
5	**INSPECT DOOR LOCK SWITCH CIRCUIT FOR SHORT TO GROUND** • Verify the rear body control module (RBCM) connector and power window main switch connector are disconnected. • Inspect for continuity between rear body control module (RBCM) terminal 3F (vehicle wiring harness side) and body ground. • Is there continuity?	Yes	Repair or replace the wiring harness which has a short to ground, then go to the next step.
		No	Go to the next step.

ON-BOARD DIAGNOSTIC [REAR BODY CONTROL MODULE (RBCM)]

Step	Inspection		Action
6	**VERIFY THAT REPAIRS HAVE BEEN COMPLETED** • Reconnect all the disconnected connectors. • Reconnect the disconnected negative battery cable. (See 01-17A-11 NEGATIVE BATTERY CABLE DISCONNECTION/CONNECTION [SKYACTIV-G 2.0].) (See 01-17A-13 NEGATIVE BATTERY CABLE DISCONNECTION/CONNECTION [SKYACTIV-G 2.0 (WITHOUT i-stop)].) (See 01-17B-9 NEGATIVE BATTERY CABLE DISCONNECTION/CONNECTION [SKYACTIV-D 2.2].) • Clear rear body control module (RBCM) DTCs using the M-MDS. (See 09-02L-11 CLEARING DTC [REAR BODY CONTROL MODULE (RBCM)].) • Perform the DTC inspection for the rear body control module (RBCM) using the M-MDS. (See 09-02L-9 DTC INSPECTION [REAR BODY CONTROL MODULE (RBCM)].) • Is DTC B108F:16 displayed?	Yes	Repeat the inspection from Step 1. • If the malfunction recurs, replace the rear body control module (RBCM), then go to the next step. (See 09-40-9 REAR BODY CONTROL MODULE (RBCM) REMOVAL/INSTALLATION.)
		No	Go to the next step.
7	**VERIFY IF OTHER DTCs DISPLAYED** • Are any other DTCs displayed?	Yes	Repair the malfunctioning part according to the applicable DTC troubleshooting. (See 09-02L-12 DTC TABLE [REAR BODY CONTROL MODULE (RBCM)].)
		No	DTC troubleshooting completed.

ON-BOARD DIAGNOSTIC [REAR BODY CONTROL MODULE (RBCM)]

DTC B109E:87 [REAR BODY CONTROL MODULE (RBCM)]

id0902p4013000

System malfunction location	**Communication error with start stop unit**
Detection condition	• Rear body control module (RBCM) detects communication error with start stop unit for **10 times continuously**.
Fail-safe	—
Possible cause	• Start stop unit connector or terminal malfunction • Rear body control module (RBCM) connector or terminal malfunction • Short to ground in wiring harness between rear body control module (RBCM) terminal 3B and start stop unit terminal 1Q • Open circuit in wiring harness between rear body control module (RBCM) terminal 3B and start stop unit terminal 1Q • Start stop unit malfunction • Rear body control module (RBCM) malfunction

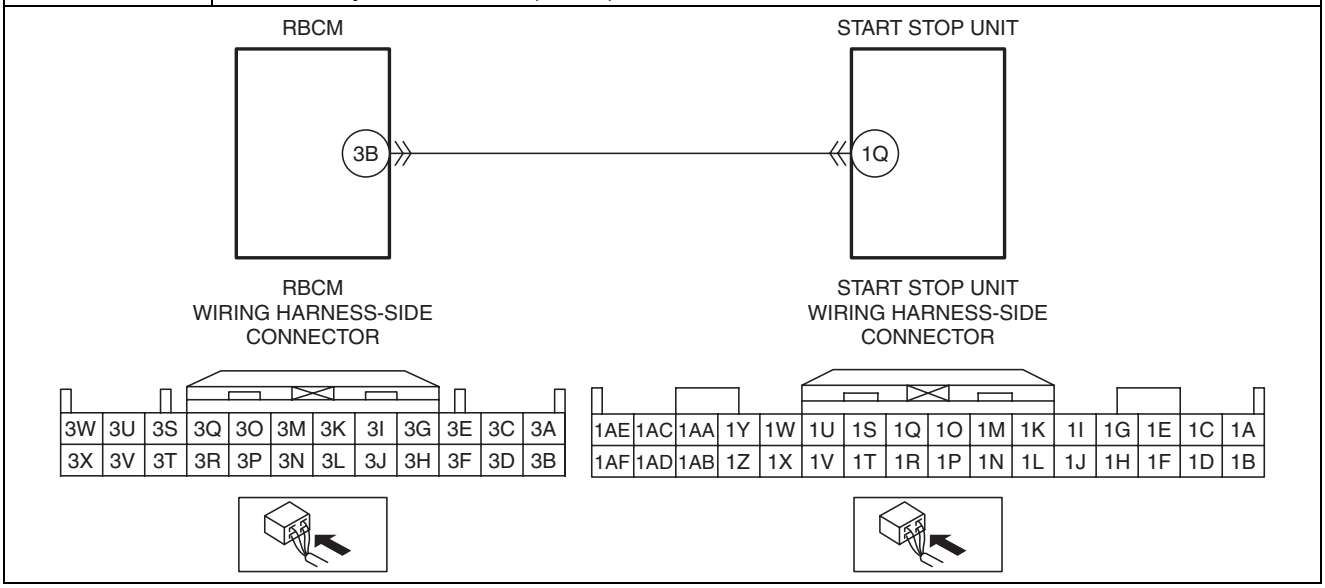

ON-BOARD DIAGNOSTIC [REAR BODY CONTROL MODULE (RBCM)]

Diagnostic Procedure

Step	Inspection		Action
1	**VERIFY REAR BODY CONTROL MODULE (RBCM) DTCs AGAIN** • Clear rear body control module (RBCM) DTCs using the M-MDS. (See 09-02L-11 CLEARING DTC [REAR BODY CONTROL MODULE (RBCM)].) • Perform the DTC inspection for the rear body control module (RBCM) using the M-MDS. (See 09-02L-9 DTC INSPECTION [REAR BODY CONTROL MODULE (RBCM)].) • Is DTC B109E:87 displayed?	Yes	Go to the next step.
		No	Go to Step 8.
2	**INSPECT START STOP UNIT CONNECTOR CONDITION** • Switch the ignition to off. • Disconnect the negative battery cable. (See 01-17A-11 NEGATIVE BATTERY CABLE DISCONNECTION/CONNECTION [SKYACTIV-G 2.0].) (See 01-17A-13 NEGATIVE BATTERY CABLE DISCONNECTION/CONNECTION [SKYACTIV-G 2.0 (WITHOUT i-stop)].) (See 01-17B-9 NEGATIVE BATTERY CABLE DISCONNECTION/CONNECTION [SKYACTIV-D 2.2].) • Disconnect the start stop unit connector. • Inspect the connector engagement and connection condition and inspect the terminals for damage, deformation, corrosion, or disconnection. • Is the connector normal?	Yes	Go to the next step.
		No	Repair or replace the connector, then go to Step 7.
3	**INSPECT REAR BODY CONTROL MODULE (RBCM) CONNECTOR CONDITION** • Disconnect the rear body control module (RBCM) connector. • Inspect the connector engagement and connection condition and inspect the terminals for damage, deformation, corrosion, or disconnection. • Is the connector normal?	Yes	Go to the next step.
		No	Repair or replace the connector, then go to Step 7.
4	**INSPECT START STOP UNIT CIRCUIT FOR SHORT TO GROUND** • Verify that the rear body control module (RBCM) connector and start stop unit connector are disconnected. • Inspect for continuity between start stop unit terminal 1Q (vehicle wiring harness side) and body ground. • Is there continuity?	Yes	Repair or replace the wiring harness which is shorted to ground, then go to Step 7.
		No	Go to the next step.
5	**INSPECT START STOP UNIT CIRCUIT FOR OPEN CIRCUIT** • Verify that the rear body control module (RBCM) connector and start stop unit connector are disconnected. • Inspect the wiring harness for an open circuit between rear body control module (RBCM) terminal 3B (vehicle wiring harness side) and start stop unit terminal 1Q (vehicle wiring harness side). • Is there continuity?	Yes	Go to the next step.
		No	Repair or replace the wiring harness which has an open circuit, then go to Step 7.
6	**INSPECT START STOP UNIT** • Inspect the start stop unit. (See 09-14-56 START STOP UNIT INSPECTION.) • Is the start stop unit normal?	Yes	Go to the next step.
		No	Replace the start stop unit, then go to the next step. (See 09-14-54 START STOP UNIT REMOVAL/INSTALLATION.)

ON-BOARD DIAGNOSTIC [REAR BODY CONTROL MODULE (RBCM)]

Step	Inspection		Action
7	**VERIFY THAT REPAIRS HAVE BEEN COMPLETED** • Reconnect all the disconnected connectors. • Reconnect the disconnected negative battery cable. (See 01-17A-11 NEGATIVE BATTERY CABLE DISCONNECTION/CONNECTION [SKYACTIV-G 2.0].) (See 01-17A-13 NEGATIVE BATTERY CABLE DISCONNECTION/CONNECTION [SKYACTIV-G 2.0 (WITHOUT i-stop)].) (See 01-17B-9 NEGATIVE BATTERY CABLE DISCONNECTION/CONNECTION [SKYACTIV-D 2.2].) • Clear rear body control module (RBCM) DTCs using the M-MDS. (See 09-02L-11 CLEARING DTC [REAR BODY CONTROL MODULE (RBCM)].) • Perform the DTC inspection for the rear body control module (RBCM) using the M-MDS. (See 09-02L-9 DTC INSPECTION [REAR BODY CONTROL MODULE (RBCM)].) • Is DTC B109E:87 displayed?	Yes	Repeat the inspection from Step 1. • If the malfunction recurs, replace the rear body control module (RBCM), then go to the next step. (See 09-40-9 REAR BODY CONTROL MODULE (RBCM) REMOVAL/INSTALLATION.)
		No	Go to the next step.
8	**VERIFY IF OTHER DTCs DISPLAYED** • Are any other DTCs displayed?	Yes	Repair the malfunctioning part according to the applicable DTC troubleshooting. (See 09-02L-12 DTC TABLE [REAR BODY CONTROL MODULE (RBCM)].)
		No	DTC troubleshooting completed.

ON-BOARD DIAGNOSTIC [REAR BODY CONTROL MODULE (RBCM)]

DTC B109F:49 [REAR BODY CONTROL MODULE (RBCM)]

id0902p4013100

System malfunction location	**Intruder sensor internal malfunction**
Detection condition	• Rear body control module (RBCM) detects intruder sensor internal malfunction for **1.5 s or more**.
Fail-safe	—
Possible cause	• Intruder sensor malfunction • Rear body control module (RBCM) malfunction
System wiring diagram	—

Diagnostic Procedure

Step	Inspection		Action
1	**VERIFY REAR BODY CONTROL MODULE (RBCM) DTCs AGAIN** • Clear rear body control module (RBCM) DTCs using the M-MDS. (See 09-02L-11 CLEARING DTC [REAR BODY CONTROL MODULE (RBCM)].) • Lock the door to go on theft-deterrent system standby. • Unlock the door to cancel theft-deterrent standby. • Perform the DTC inspection for the rear body control module (RBCM) using the M-MDS. (See 09-02L-9 DTC INSPECTION [REAR BODY CONTROL MODULE (RBCM)].) • Is DTC B109F:49 displayed?	Yes	Go to the next step.
		No	Go to Step 4.
2	**INSPECT INTRUDER SENSOR** • Inspect the intruder sensor. (See 09-14-92 INTRUDER SENSOR INSPECTION.) • Is the intruder sensor normal?	Yes	Go to the next step.
		No	Replace the intruder sensor, then go to the next step. (See 09-14-91 INTRUDER SENSOR REMOVAL/INSTALLATION.)
3	**VERIFY THAT REPAIRS HAVE BEEN COMPLETED** • Clear rear body control module (RBCM) DTCs using the M-MDS. (See 09-02L-11 CLEARING DTC [REAR BODY CONTROL MODULE (RBCM)].) • Lock the door to go on theft-deterrent system standby. • Unlock the door to cancel theft-deterrent standby. • Perform the DTC inspection for the rear body control module (RBCM) using the M-MDS. (See 09-02L-9 DTC INSPECTION [REAR BODY CONTROL MODULE (RBCM)].) • Is DTC B109F:49 displayed?	Yes	Replace the rear body control module (RBCM), then go to the next step. (See 09-40-9 REAR BODY CONTROL MODULE (RBCM) REMOVAL/INSTALLATION.)
		No	Go to the next step.
4	**VERIFY IF OTHER DTCs DISPLAYED** • Are any other DTCs displayed?	Yes	Repair the malfunctioning part according to the applicable DTC troubleshooting. (See 09-02L-12 DTC TABLE [REAR BODY CONTROL MODULE (RBCM)].)
		No	DTC troubleshooting completed.

ON-BOARD DIAGNOSTIC [REAR BODY CONTROL MODULE (RBCM)]

DTC B109F:86 [REAR BODY CONTROL MODULE (RBCM)]

id0902p4013200

System malfunction location	**Intruder sensor signal error**
Detection condition	• Rear body control module (RBCM) receives error signal from intruder sensor for **1.5 s or more**.
Fail-safe	—
Possible cause	• Intruder sensor malfunction • Rear body control module (RBCM) malfunction
System wiring diagram	—

Diagnostic Procedure

Step	Inspection		Action
1	**VERIFY REAR BODY CONTROL MODULE (RBCM) DTCs AGAIN** • Clear rear body control module (RBCM) DTCs using the M-MDS. (See 09-02L-11 CLEARING DTC [REAR BODY CONTROL MODULE (RBCM)].) • Switch the ignition ON (engine on) and wait for **3 s or more**. • Perform the DTC inspection for the rear body control module (RBCM) using the M-MDS. (See 09-02L-9 DTC INSPECTION [REAR BODY CONTROL MODULE (RBCM)].) • Is DTC B109F:86 displayed?	Yes	A malfunction in LIN bus communication line can be considered. • Repair or replace the wiring harness between the rear body control module (RBCM) and the intruder sensor, then go to the next step.
		No	Go to Step 4.
2	**PERFORM DTC INSPECTION AND VERIFY IF MALFUNCTIONING PART IS INTRUDER SENSOR** • Clear rear body control module (RBCM) DTCs using the M-MDS. (See 09-02L-11 CLEARING DTC [REAR BODY CONTROL MODULE (RBCM)].) • Switch the ignition ON (engine on) and wait for **3 s or more**. • Perform the DTC inspection for the rear body control module (RBCM) using the M-MDS. (See 09-02L-9 DTC INSPECTION [REAR BODY CONTROL MODULE (RBCM)].) • Is DTC B10A5:86 displayed?	Yes	Replace the intruder sensor, then go to the next step. (See 09-14-91 INTRUDER SENSOR REMOVAL/INSTALLATION.)
		No	Go to Step 4.
3	**VERIFY THAT REPAIRS HAVE BEEN COMPLETED** • Clear rear body control module (RBCM) DTCs using the M-MDS. (See 09-02L-11 CLEARING DTC [REAR BODY CONTROL MODULE (RBCM)].) • Switch the ignition ON (engine on) and wait for **3 s or more**. • Perform the DTC inspection for the rear body control module (RBCM) using the M-MDS. (See 09-02L-9 DTC INSPECTION [REAR BODY CONTROL MODULE (RBCM)].) • Is DTC B109F:86 displayed?	Yes	Replace the rear body control module (RBCM), then go to the next step. (See 09-40-9 REAR BODY CONTROL MODULE (RBCM) REMOVAL/INSTALLATION.)
		No	Go to the next step.
4	**VERIFY IF OTHER DTCs DISPLAYED** • Are any other DTCs displayed?	Yes	Repair the malfunctioning part according to the applicable DTC troubleshooting. (See 09-02L-12 DTC TABLE [REAR BODY CONTROL MODULE (RBCM)].)
		No	DTC troubleshooting completed.

ON-BOARD DIAGNOSTIC [REAR BODY CONTROL MODULE (RBCM)]

DTC B109F:87 [REAR BODY CONTROL MODULE (RBCM)]

id0902p4013300

System malfunction location	**Communication error with intruder sensor**
Detection condition	• Rear body control module (RBCM) cannot receive signal from intruder sensor for **1.5 s or more**.
Fail-safe	—
Possible cause	• Short cord connector or terminal malfunction • Rear body control module (RBCM) connector or terminal malfunction • Short to ground in wiring harness between rear body control module (RBCM) terminal 1G and short cord terminal C • Open circuit in wiring harness between rear body control module (RBCM) terminal 1G and short cord terminal C • Intruder sensor malfunction • Rear body control module (RBCM) malfunction

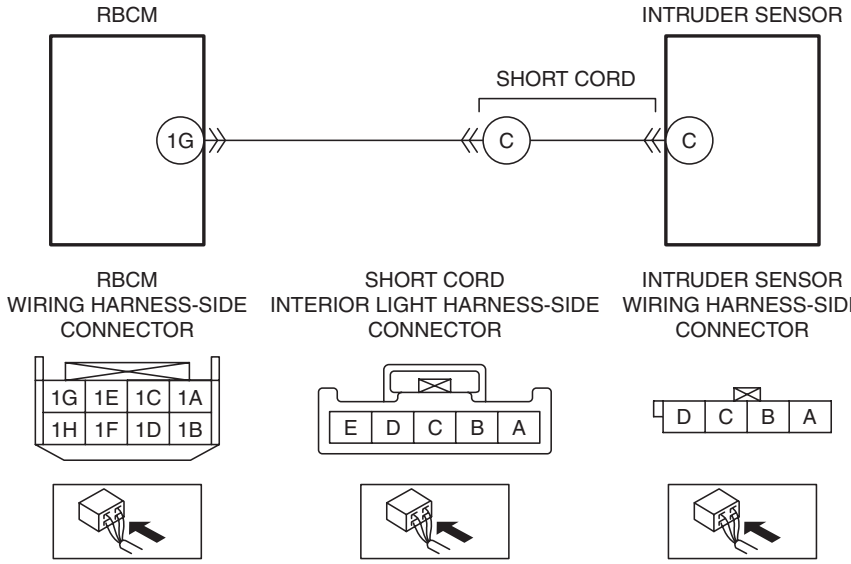

ON-BOARD DIAGNOSTIC [REAR BODY CONTROL MODULE (RBCM)]

Diagnostic Procedure

Step	Inspection		Action
1	**VERIFY REAR BODY CONTROL MODULE (RBCM) DTCs AGAIN** • Clear rear body control module (RBCM) DTCs using the M-MDS. (See 09-02L-11 CLEARING DTC [REAR BODY CONTROL MODULE (RBCM)].) • Switch the ignition ON (engine off or on) and wait for **3 s or more**. • Perform the DTC inspection for the rear body control module (RBCM) using the M-MDS. (See 09-02L-9 DTC INSPECTION [REAR BODY CONTROL MODULE (RBCM)].) • Is DTC B109F:87 displayed?	Yes	Go to the next step.
		No	Go to Step 8.
2	**SHORT CORD CONNECTOR INSPECTION** • Switch the ignition to off. • Disconnect the negative battery cable. (See 01-17A-11 NEGATIVE BATTERY CABLE DISCONNECTION/CONNECTION [SKYACTIV-G 2.0].) (See 01-17A-13 NEGATIVE BATTERY CABLE DISCONNECTION/CONNECTION [SKYACTIV-G 2.0 (WITHOUT i-stop)].) (See 01-17B-9 NEGATIVE BATTERY CABLE DISCONNECTION/CONNECTION [SKYACTIV-D 2.2].) • Disconnect the short cord connector. • Inspect the connector engagement and connection condition and inspect the terminals for damage, deformation, corrosion, or disconnection. • Is the connector normal?	Yes	Go to the next step.
		No	Repair or replace the connector, then go to Step 7.
3	**INSPECT REAR BODY CONTROL MODULE (RBCM) CONNECTOR CONDITION** • Disconnect the rear body control module (RBCM) connector. • Inspect the connector engagement and connection condition and inspect the terminals for damage, deformation, corrosion, or disconnection. • Is the connector normal?	Yes	Go to the next step.
		No	Repair or replace the connector, then go to Step 7.
4	**INSPECT INTRUDER SENSOR CIRCUIT FOR SHORT TO GROUND** • Verify that the short cord and rear body control module (RBCM) connectors are disconnected. • Inspect for continuity between short cord terminal C (vehicle wiring harness side) and body ground. • Is there continuity?	Yes	Repair or replace the wiring harness which is shorted to ground, then go to Step 7.
		No	Go to the next step.
5	**INSPECT INTRUDER SENSOR CIRCUIT FOR OPEN CIRCUIT** • Verify that the short cord and rear body control module (RBCM) connectors are disconnected. • Inspect the wiring harness for an open circuit between rear body control module (RBCM) terminal 1G (vehicle wiring harness side) and short cord terminal C (vehicle wiring harness side). • Is there continuity?	Yes	Go to the next step.
		No	Repair or replace the wiring harness which has an open circuit, then go to Step 7.
6	**INSPECT INTRUDER SENSOR** • Inspect the intruder sensor. (See 09-14-92 INTRUDER SENSOR INSPECTION.) • Is the intruder sensor normal?	Yes	Go to the next step.
		No	Replace the intruder sensor, then go to the next step. (See 09-14-91 INTRUDER SENSOR REMOVAL/INSTALLATION.)

ON-BOARD DIAGNOSTIC [REAR BODY CONTROL MODULE (RBCM)]

Step	Inspection		Action
7	**VERIFY THAT REPAIRS HAVE BEEN COMPLETED** • Reconnect all the disconnected connectors. • Reconnect the disconnected negative battery cable. (See 01-17A-11 NEGATIVE BATTERY CABLE DISCONNECTION/CONNECTION [SKYACTIV-G 2.0].) (See 01-17A-13 NEGATIVE BATTERY CABLE DISCONNECTION/CONNECTION [SKYACTIV-G 2.0 (WITHOUT i-stop)].) (See 01-17B-9 NEGATIVE BATTERY CABLE DISCONNECTION/CONNECTION [SKYACTIV-D 2.2].) • Clear rear body control module (RBCM) DTCs using the M-MDS. (See 09-02L-11 CLEARING DTC [REAR BODY CONTROL MODULE (RBCM)].) • Switch the ignition ON (engine off or on) and wait for **3 s or more**. • Perform the DTC inspection for the rear body control module (RBCM) using the M-MDS. (See 09-02L-9 DTC INSPECTION [REAR BODY CONTROL MODULE (RBCM)].) • Is DTC B109F:87 displayed?	Yes	Repeat the inspection from Step 1. • If the malfunction recurs, replace the rear body control module (RBCM), then go to the next step. (See 09-40-9 REAR BODY CONTROL MODULE (RBCM) REMOVAL/INSTALLATION.)
		No	Go to the next step.
8	**VERIFY IF OTHER DTCs DISPLAYED** • Are any other DTCs displayed?	Yes	Repair the malfunctioning part according to the applicable DTC troubleshooting. (See 09-02L-12 DTC TABLE [REAR BODY CONTROL MODULE (RBCM)].)
		No	DTC troubleshooting completed.

ON-BOARD DIAGNOSTIC [REAR BODY CONTROL MODULE (RBCM)]

DTC B10A5:49 [REAR BODY CONTROL MODULE (RBCM)]

id0902p4013400

System malfunction location	**Theft-deterrent siren internal malfunction**
Detection condition	• Rear body control module (RBCM) detects theft-deterrent siren internal malfunction for **1.5 s or more**.
Fail-safe	—
Possible cause	• Theft-deterrent siren malfunction • Rear body control module (RBCM) malfunction
System wiring diagram	—

Diagnostic Procedure

Step	Inspection		Action
1	**VERIFY REAR BODY CONTROL MODULE (RBCM) DTCs AGAIN** • Clear rear body control module (RBCM) DTCs using the M-MDS. (See 09-02L-11 CLEARING DTC [REAR BODY CONTROL MODULE (RBCM)].) • Switch the ignition ON (engine on) and wait for **3 s or more**. • Perform the DTC inspection for the rear body control module (RBCM) using the M-MDS. (See 09-02L-9 DTC INSPECTION [REAR BODY CONTROL MODULE (RBCM)].) • Is DTC B10A5:49 displayed?	Yes	Go to the next step.
		No	Go to Step 4.
2	**INSPECT THEFT-DETERRENT SIREN** • Inspect the theft-deterrent siren. (See 09-14-89 THEFT-DETERRENT SIREN INSPECTION.) • Is the theft-deterrent siren normal?	Yes	Go to the next step.
		No	Replace the theft-deterrent siren, then go to the next step. (See 09-14-87 THEFT-DETERRENT SIREN REMOVAL/INSTALLATION.)
3	**VERIFY THAT REPAIRS HAVE BEEN COMPLETED** • Clear rear body control module (RBCM) DTCs using the M-MDS. (See 09-02L-11 CLEARING DTC [REAR BODY CONTROL MODULE (RBCM)].) • Switch the ignition ON (engine on) and wait for **3 s or more**. • Perform the DTC inspection for the rear body control module (RBCM) using the M-MDS. (See 09-02L-9 DTC INSPECTION [REAR BODY CONTROL MODULE (RBCM)].) • Is DTC B10A5:49 displayed?	Yes	Replace the rear body control module (RBCM), then go to the next step. (See 09-40-9 REAR BODY CONTROL MODULE (RBCM) REMOVAL/INSTALLATION.)
		No	Go to the next step.
4	**VERIFY IF OTHER DTCs DISPLAYED** • Are any other DTCs displayed?	Yes	Repair the malfunctioning part according to the applicable DTC troubleshooting. (See 09-02L-12 DTC TABLE [REAR BODY CONTROL MODULE (RBCM)].)
		No	DTC troubleshooting completed.

ON-BOARD DIAGNOSTIC [REAR BODY CONTROL MODULE (RBCM)]

DTC B10A5:86 [REAR BODY CONTROL MODULE (RBCM)]

id0902p4013500

System malfunction location	**Theft-deterrent siren signal error**
Detection condition	• Rear body control module (RBCM) receives error signal from theft-deterrent siren for **1.5 s or more**.
Fail-safe	—
Possible cause	• Theft-deterrent siren malfunction • Rear body control module (RBCM) malfunction
System wiring diagram	—

Diagnostic Procedure

Step	Inspection		Action
1	**VERIFY REAR BODY CONTROL MODULE (RBCM) DTCs AGAIN** • Clear rear body control module (RBCM) DTCs using the M-MDS. (See 09-02L-11 CLEARING DTC [REAR BODY CONTROL MODULE (RBCM)].) • Switch the ignition ON (engine on) and wait for **3 s or more**. • Perform the DTC inspection for the rear body control module (RBCM) using the M-MDS. (See 09-02L-9 DTC INSPECTION [REAR BODY CONTROL MODULE (RBCM)].) • Is DTC B10A5:86 displayed?	Yes	A malfunction in LIN bus communication line can be considered. • Repair or replace the wiring harness between the rear body control module (RBCM) and theft-deterrent siren, then go to the next step.
		No	Go to Step 4.
2	**PERFORM DTC INSPECTION AND VERIFY IF THEFT-DETERRENT SIREN IS MALFUNCTIONING PART** • Clear rear body control module (RBCM) DTCs using the M-MDS. (See 09-02L-11 CLEARING DTC [REAR BODY CONTROL MODULE (RBCM)].) • Switch the ignition ON (engine on) and wait for **3 s or more**. • Perform the DTC inspection for the rear body control module (RBCM) using the M-MDS. (See 09-02L-9 DTC INSPECTION [REAR BODY CONTROL MODULE (RBCM)].) • Is DTC B10A5:86 displayed?	Yes	Replace the theft-deterrent siren, then go to the next step. (See 09-14-87 THEFT-DETERRENT SIREN REMOVAL/INSTALLATION.)
		No	Go to Step 4.
3	**VERIFY THAT REPAIRS HAVE BEEN COMPLETED** • Clear rear body control module (RBCM) DTCs using the M-MDS. (See 09-02L-11 CLEARING DTC [REAR BODY CONTROL MODULE (RBCM)].) • Switch the ignition ON (engine on) and wait for **3 s or more**. • Perform the DTC inspection for the rear body control module (RBCM) using the M-MDS. (See 09-02L-9 DTC INSPECTION [REAR BODY CONTROL MODULE (RBCM)].) • Is DTC B10A5:86 displayed?	Yes	Replace the rear body control module (RBCM), then go to the next step. (See 09-40-9 REAR BODY CONTROL MODULE (RBCM) REMOVAL/INSTALLATION.)
		No	Go to the next step.
4	**VERIFY IF OTHER DTCs DISPLAYED** • Are any other DTCs displayed?	Yes	Repair the malfunctioning part according to the applicable DTC troubleshooting. (See 09-02L-12 DTC TABLE [REAR BODY CONTROL MODULE (RBCM)].)
		No	DTC troubleshooting completed.

ON-BOARD DIAGNOSTIC [REAR BODY CONTROL MODULE (RBCM)]

DTC B10A5:87 [REAR BODY CONTROL MODULE (RBCM)]

id0902p4013600

System malfunction location	**Communication error with theft-deterrent siren**
Detection condition	• Rear body control module (RBCM) cannot receive signal from theft-deterrent siren for **1.5 s or more**.
Fail-safe	—
Possible cause	• Short cord connector or terminal malfunction • Rear body control module (RBCM) connector or terminal malfunction • Short to ground in wiring harness between rear body control module (RBCM) terminal 3A and short cord terminal B • Open circuit in wiring harness between rear body control module (RBCM) terminal 3A and short cord terminal B • Theft-deterrent siren malfunction • Rear body control module (RBCM) malfunction

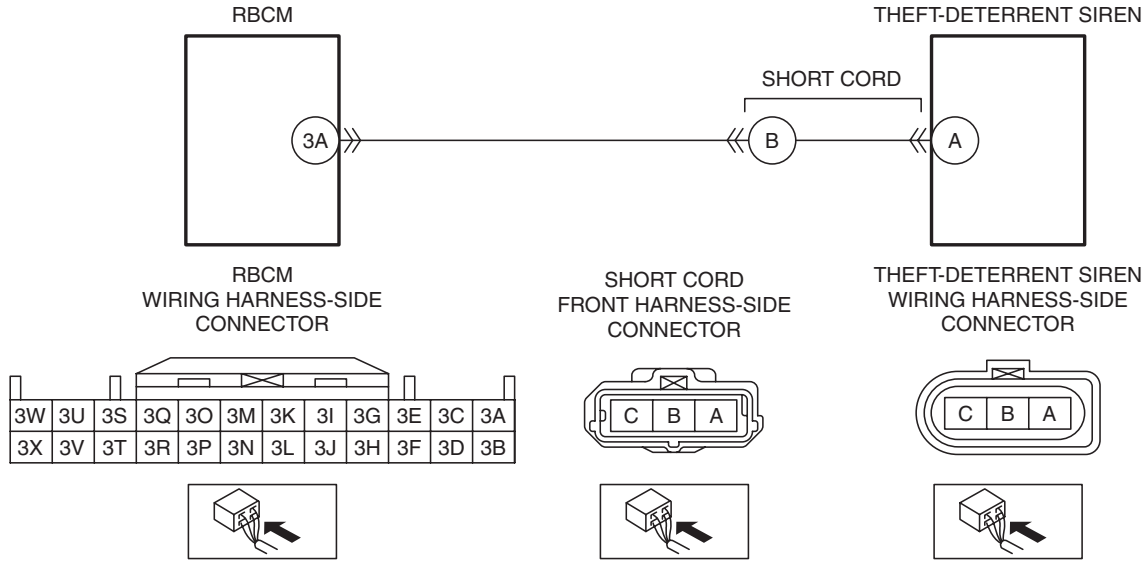

ON-BOARD DIAGNOSTIC [REAR BODY CONTROL MODULE (RBCM)]

Diagnostic Procedure

Step	Inspection		Action
1	**VERIFY REAR BODY CONTROL MODULE (RBCM) DTCs AGAIN** • Clear rear body control module (RBCM) DTCs using the M-MDS. (See 09-02L-11 CLEARING DTC [REAR BODY CONTROL MODULE (RBCM)].) • Switch the ignition ON (engine on) and wait for **3 s or more**. • Perform the DTC inspection for the rear body control module (RBCM) using the M-MDS. (See 09-02L-9 DTC INSPECTION [REAR BODY CONTROL MODULE (RBCM)].) • Is DTC B10A5:87 displayed?	Yes	Go to the next step.
		No	Go to Step 8.
2	**INSPECT SHORT CORD CONNECTOR** • Unlock the door to cancel theft-deterrent standby. • Switch the ignition to off. • Disconnect the negative battery cable. (See 01-17A-11 NEGATIVE BATTERY CABLE DISCONNECTION/CONNECTION [SKYACTIV-G 2.0].) (See 01-17A-13 NEGATIVE BATTERY CABLE DISCONNECTION/CONNECTION [SKYACTIV-G 2.0 (WITHOUT i-stop)].) (See 01-17B-9 NEGATIVE BATTERY CABLE DISCONNECTION/CONNECTION [SKYACTIV-D 2.2].) • Disconnect the short cord connector. • Inspect the connector engagement and connection condition and inspect the terminals for damage, deformation, corrosion, or disconnection. • Is the connector normal?	Yes	Go to the next step.
		No	Repair or replace the connector, then go to Step 7.
3	**INSPECT REAR BODY CONTROL MODULE (RBCM) CONNECTOR CONDITION** • Disconnect the rear body control module (RBCM) connector. • Inspect the connector engagement and connection condition and inspect the terminals for damage, deformation, corrosion, or disconnection. • Is the connector normal?	Yes	Go to the next step.
		No	Repair or replace the connector, then go to Step 7.
4	**INSPECT THEFT-DETERRENT SIREN CIRCUIT FOR SHORT TO GROUND** • Verify that the short cord and rear body control module (RBCM) connectors are disconnected. • Inspect for continuity between short cord terminal B (vehicle wiring harness side) and body ground. • Is there continuity?	Yes	Repair or replace the wiring harness which is shorted to ground, then go to Step 7.
		No	Go to the next step.
5	**INSPECT THEFT-DETERRENT SIREN CIRCUIT FOR OPEN CIRCUIT** • Verify that the short cord and rear body control module (RBCM) connectors are disconnected. • Inspect the wiring harness for an open circuit between rear body control module (RBCM) terminal 3A (vehicle wiring harness side) and short cord terminal B (vehicle wiring harness side). • Is there continuity?	Yes	Go to the next step.
		No	Repair or replace the wiring harness which has an open circuit, then go to Step 7.
6	**INSPECT THEFT-DETERRENT SIREN** • Inspect the theft-deterrent siren. (See 09-14-89 THEFT-DETERRENT SIREN INSPECTION.) • Is the theft-deterrent siren normal?	Yes	Go to the next step.
		No	Replace the theft-deterrent siren, then go to the next step. (See 09-14-87 THEFT-DETERRENT SIREN REMOVAL/INSTALLATION.)

ON-BOARD DIAGNOSTIC [REAR BODY CONTROL MODULE (RBCM)]

Step	Inspection		Action
7	**VERIFY THAT REPAIRS HAVE BEEN COMPLETED** • Reconnect all the disconnected connectors. • Reconnect the disconnected negative battery cable. (See 01-17A-11 NEGATIVE BATTERY CABLE DISCONNECTION/CONNECTION [SKYACTIV-G 2.0].) (See 01-17A-13 NEGATIVE BATTERY CABLE DISCONNECTION/CONNECTION [SKYACTIV-G 2.0 (WITHOUT i-stop)].) (See 01-17B-9 NEGATIVE BATTERY CABLE DISCONNECTION/CONNECTION [SKYACTIV-D 2.2].) • Clear rear body control module (RBCM) DTCs using the M-MDS. (See 09-02L-11 CLEARING DTC [REAR BODY CONTROL MODULE (RBCM)].) • Switch the ignition ON (engine on) and wait for **3 s or more**. • Perform the DTC inspection for the rear body control module (RBCM) using the M-MDS. (See 09-02L-9 DTC INSPECTION [REAR BODY CONTROL MODULE (RBCM)].) • Is DTC B10A5:87 displayed?	Yes	Repeat the inspection from Step 1. • If the malfunction recurs, replace the rear body control module (RBCM), then go to the next step. (See 09-40-9 REAR BODY CONTROL MODULE (RBCM) REMOVAL/INSTALLATION.)
		No	Go to the next step.
8	**VERIFY IF OTHER DTCs DISPLAYED** • Are any other DTCs displayed?	Yes	Repair the malfunctioning part according to the applicable DTC troubleshooting. (See 09-02L-12 DTC TABLE [REAR BODY CONTROL MODULE (RBCM)].)
		No	DTC troubleshooting completed.

ON-BOARD DIAGNOSTIC [REAR BODY CONTROL MODULE (RBCM)]

DTC B113E:11 [REAR BODY CONTROL MODULE (RBCM)]

id0902p4013700

System malfunction location	**Liftgate opener switch circuit malfunction**
Detection condition	• Rear body control module (RBCM) detects short to ground in liftgate opener switch circuit
Fail-safe	—
Possible cause	• Liftgate opener switch connector or terminal malfunction • Request opener switch malfunction • Rear body control module (RBCM) connector or terminal malfunction • Short to ground in wiring harness between rear body control module (RBCM) terminal 4M and liftgate opener switch terminal C • Rear body control module (RBCM) malfunction

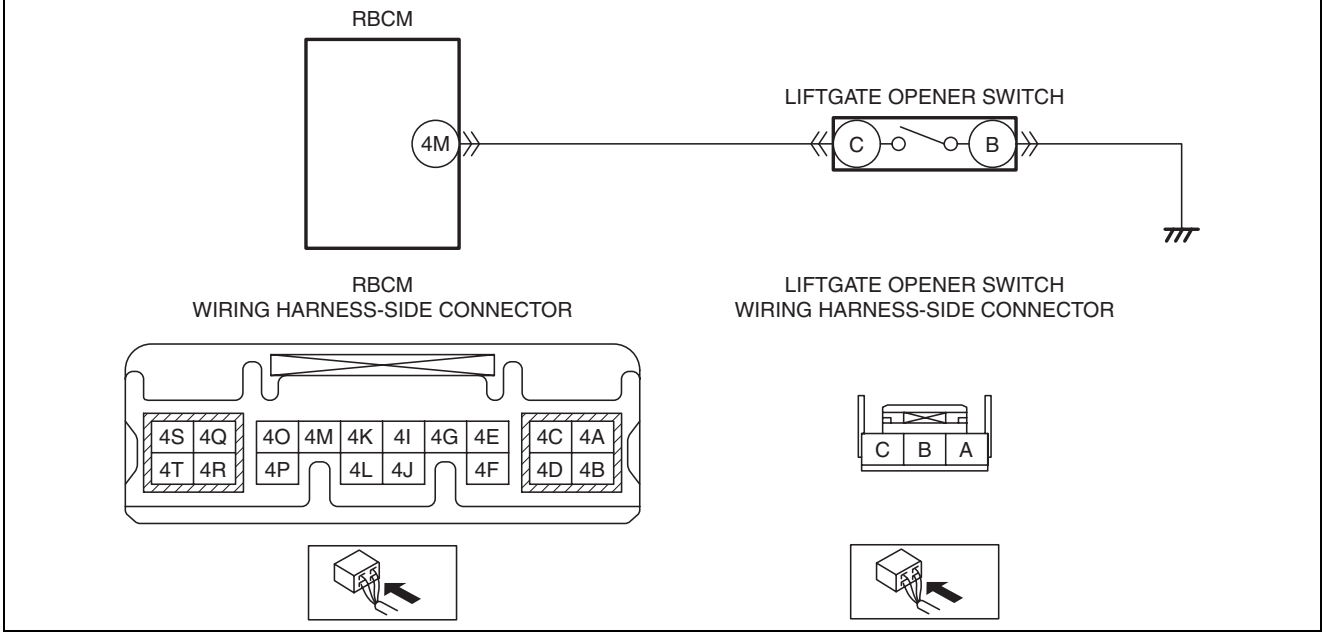

ON-BOARD DIAGNOSTIC [REAR BODY CONTROL MODULE (RBCM)]

Diagnostic Procedure

Step	Inspection		Action
1	**VERIFY REAR BODY CONTROL MODULE (RBCM) DTCs AGAIN** • Clear rear body control module (RBCM) DTCs using the M-MDS. (See 09-02L-11 CLEARING DTC [REAR BODY CONTROL MODULE (RBCM)].) • Perform the DTC inspection for the rear body control module (RBCM) using the M-MDS. (See 09-02L-9 DTC INSPECTION [REAR BODY CONTROL MODULE (RBCM)].) • Is DTC B113E:11 displayed?	Yes	Go to the next step.
		No	Go to Step 7.
2	**INSPECT LIFTGATE OPENER SWITCH CONNECTOR** • Switch the ignition to off. • Disconnect the negative battery cable. (See 01-17A-11 NEGATIVE BATTERY CABLE DISCONNECTION/CONNECTION [SKYACTIV-G 2.0].) (See 01-17A-13 NEGATIVE BATTERY CABLE DISCONNECTION/CONNECTION [SKYACTIV-G 2.0 (WITHOUT i-stop)].) (See 01-17B-9 NEGATIVE BATTERY CABLE DISCONNECTION/CONNECTION [SKYACTIV-D 2.2].) • Disconnect the liftgate opener switch connector. • Inspect the connector engagement and connection condition and inspect the terminals for damage, deformation, corrosion, or disconnection. • Is the connector normal?	Yes	Go to the next step.
		No	Repair or replace the connector, then go to Step 6.
3	**INSPECT LIFTGATE OPENER SWITCH** • Inspect the liftgate opener switch. (See 09-14-53 LIFTGATE OPENER SWITCH INSPECTION.) • Is the liftgate opener switch normal?	Yes	Go to the next step.
		No	Replace the liftgate opener switch, then go to Step 6. (See 09-14-53 LIFTGATE OPENER SWITCH REMOVAL/INSTALLATION.)
4	**INSPECT REAR BODY CONTROL MODULE (RBCM) CONNECTOR CONDITION** • Disconnect the rear body control module (RBCM) connector. • Inspect the connector engagement and connection condition and inspect the terminals for damage, deformation, corrosion, or disconnection. • Is the connector normal?	Yes	Go to the next step.
		No	Repair or replace the connector, then go to Step 6.
5	**INSPECT LIFTGATE OPENER SWITCH CIRCUIT FOR SHORT TO GROUND** • Verify that the liftgate opener switch and rear body control module (RBCM) connectors are disconnected. • Inspect for continuity between liftgate opener switch terminal C (vehicle wiring harness) and body ground. • Is there continuity?	Yes	Repair or replace the wiring harness which has a short to ground, then go to the next step.
		No	Go to the next step.

ON-BOARD DIAGNOSTIC [REAR BODY CONTROL MODULE (RBCM)]

Step	Inspection		Action
6	**VERIFY THAT REPAIRS HAVE BEEN COMPLETED** • Reconnect all the disconnected connectors. • Reconnect the disconnected negative battery cable. (See 01-17A-11 NEGATIVE BATTERY CABLE DISCONNECTION/CONNECTION [SKYACTIV-G 2.0].) (See 01-17A-13 NEGATIVE BATTERY CABLE DISCONNECTION/CONNECTION [SKYACTIV-G 2.0 (WITHOUT i-stop)].) (See 01-17B-9 NEGATIVE BATTERY CABLE DISCONNECTION/CONNECTION [SKYACTIV-D 2.2].) • Clear rear body control module (RBCM) DTCs using the M-MDS. (See 09-02L-11 CLEARING DTC [REAR BODY CONTROL MODULE (RBCM)].) • Perform the DTC inspection for the rear body control module (RBCM) using the M-MDS. (See 09-02L-9 DTC INSPECTION [REAR BODY CONTROL MODULE (RBCM)].) • Is DTC B113E:11 displayed?	Yes	Repeat the inspection from Step 1. • If the malfunction recurs, replace the rear body control module (RBCM), then go to the next step. (See 09-40-9 REAR BODY CONTROL MODULE (RBCM) REMOVAL/INSTALLATION.)
		No	Go to the next step.
7	**VERIFY IF OTHER DTCs DISPLAYED** • Are any other DTCs displayed?	Yes	Repair the malfunctioning part according to the applicable DTC troubleshooting. (See 09-02L-12 DTC TABLE [REAR BODY CONTROL MODULE (RBCM)].)
		No	DTC troubleshooting completed.

ON-BOARD DIAGNOSTIC [REAR BODY CONTROL MODULE (RBCM)]

DTC B1172:11 [REAR BODY CONTROL MODULE (RBCM)]

id0902p4013800

System malfunction location	**Front door lock-link switch (driver's side) unlock circuit malfunction**
Detection condition	• With the front door lock-link switch (driver's side) locked, the rear body control module (RBCM) detects a short to ground in the front door lock-link switch (driver's side) unlock circuit.
Fail-safe	—
Possible cause	• Front door latch and lock actuator (driver's side) connector or terminal malfunction • Front door lock-link switch (driver's side) malfunction • rear body control module (RBCM) connector or terminal malfunction • Short to ground in wiring harness between the following terminals: — L.H.D.: • Rear body control module (RBCM) terminal 3M and front door latch and lock actuator (LH) terminal B — R.H.D.: • Rear body control module (RBCM) terminal 3M and front door latch and lock actuator (RH) terminal L • Rear body control module (RBCM) malfunction

L.H.D.

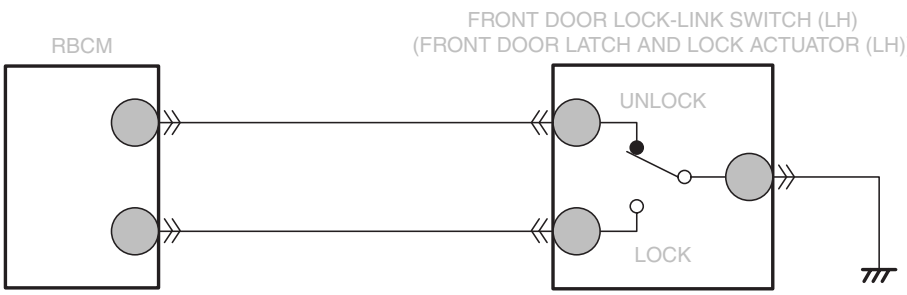

R.H.D.

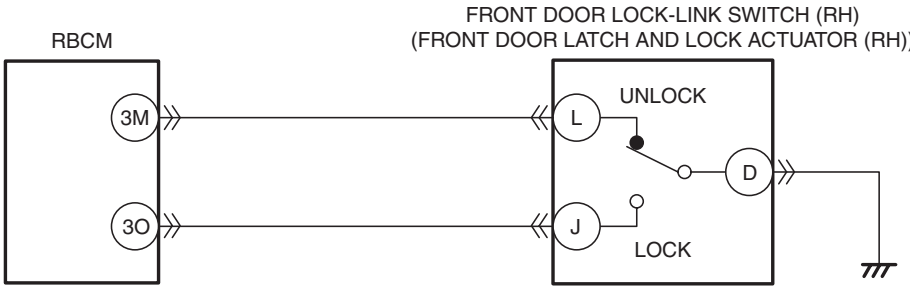

RBCM
WIRING HARNESS-SIDE CONNECTOR

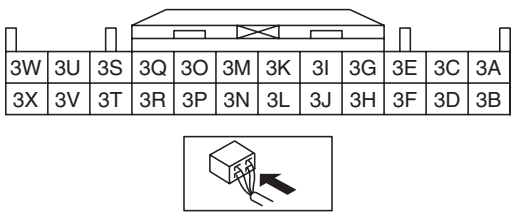

FRONT DOOR LATCH AND LOCK ACTUATOR (LH)/(RH)
WIRING HARNESS-SIDE CONNECTOR

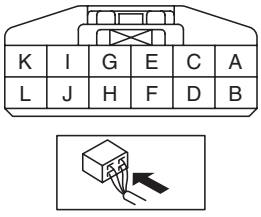

ON-BOARD DIAGNOSTIC [REAR BODY CONTROL MODULE (RBCM)]

Diagnostic Procedure

Step	Inspection		Action
1	**VERIFY REAR BODY CONTROL MODULE (RBCM) DTCs AGAIN** • Clear rear body control module (RBCM) DTCs using the M-MDS. (See 09-02L-11 CLEARING DTC [REAR BODY CONTROL MODULE (RBCM)].) • Perform the DTC inspection for the rear body control module (RBCM) using the M-MDS. (See 09-02L-9 DTC INSPECTION [REAR BODY CONTROL MODULE (RBCM)].) • Lock the front door lock-link switch (driver's side). • Is DTC B1172:11 displayed?	Yes	Go to the next step.
		No	Go to Step 7.
2	**INSPECT FRONT DOOR LATCH AND LOCK ACTUATOR (DRIVER'S DOOR) CONNECTOR** • Switch the ignition to off. • Disconnect the negative battery cable. (See 01-17A-11 NEGATIVE BATTERY CABLE DISCONNECTION/CONNECTION [SKYACTIV-G 2.0].) (See 01-17A-13 NEGATIVE BATTERY CABLE DISCONNECTION/CONNECTION [SKYACTIV-G 2.0 (WITHOUT i-stop)].) (See 01-17B-9 NEGATIVE BATTERY CABLE DISCONNECTION/CONNECTION [SKYACTIV-D 2.2].) • Disconnect the front door latch and lock actuator (driver's side) connector. • Inspect the connector engagement and connection condition and inspect the terminals for damage, deformation, corrosion, or disconnection. • Is the connector normal?	Yes	Go to the next step.
		No	Repair or replace the connector, then go to Step 6.
3	**INSPECT FRONT DOOR LOCK-LINK SWITCH (DRIVER'S DOOR)** • Inspect the front door lock-link switch (driver's door). (See 09-14-41 DOOR LOCK-LINK SWITCH INSPECTION.) • Is the front door lock-link switch (driver's door) normal?	Yes	Go to the next step.
		No	Replace the front door latch and lock actuator (driver's side), then go to Step 6. (See 09-14-36 FRONT DOOR LATCH AND LOCK ACTUATOR REMOVAL/INSTALLATION.)
4	**INSPECT REAR BODY CONTROL MODULE (RBCM) CONNECTOR CONDITION** • Disconnect the rear body control module (RBCM) connector. • Inspect the connector engagement and connection condition and inspect the terminals for damage, deformation, corrosion, or disconnection. • Is the connector normal?	Yes	Go to the next step.
		No	Repair or replace the connector, then go to Step 6.
5	**INSPECT FRONT DOOR LOCK-LINK SWITCH (DRIVER'S SIDE) CIRCUIT FOR SHORT TO GROUND** • Verify that the rear body control module (RBCM) connector and front door latch and lock actuator (driver's side) connector are disconnected. • Inspect for continuity between the following terminals (vehicle wiring harness side) and body ground. — L.H.D.: • Front door latch and lock actuator (LH) terminal B — R.H.D.: • Front door latch and lock actuator (RH) terminal L • Is there continuity?	Yes	Repair or replace the wiring harness which has a short to ground, then go to the next step.
		No	Go to the next step.

ON-BOARD DIAGNOSTIC [REAR BODY CONTROL MODULE (RBCM)]

Step	Inspection		Action
6	**VERIFY THAT REPAIRS HAVE BEEN COMPLETED** • Reconnect all the disconnected connectors. • Reconnect the disconnected negative battery cable. (See 01-17A-11 NEGATIVE BATTERY CABLE DISCONNECTION/CONNECTION [SKYACTIV-G 2.0].) (See 01-17A-13 NEGATIVE BATTERY CABLE DISCONNECTION/CONNECTION [SKYACTIV-G 2.0 (WITHOUT i-stop)].) (See 01-17B-9 NEGATIVE BATTERY CABLE DISCONNECTION/CONNECTION [SKYACTIV-D 2.2].) • Clear rear body control module (RBCM) DTCs using the M-MDS. (See 09-02L-11 CLEARING DTC [REAR BODY CONTROL MODULE (RBCM)].) • Lock the front door lock-link switch (driver's side). • Perform the DTC inspection for the rear body control module (RBCM) using the M-MDS. (See 09-02L-9 DTC INSPECTION [REAR BODY CONTROL MODULE (RBCM)].) • Is DTC B1172:11 displayed?	Yes	Repeat the inspection from Step 1. • If the malfunction recurs, replace the rear body control module (RBCM), then go to the next step. (See 09-40-9 REAR BODY CONTROL MODULE (RBCM) REMOVAL/INSTALLATION.)
		No	Go to the next step.
7	**VERIFY IF OTHER DTCs DISPLAYED** • Are any other DTCs displayed?	Yes	Repair the malfunctioning part according to the applicable DTC troubleshooting. (See 09-02L-12 DTC TABLE [REAR BODY CONTROL MODULE (RBCM)].)
		No	DTC troubleshooting completed.

ON-BOARD DIAGNOSTIC [REAR BODY CONTROL MODULE (RBCM)]

DTC B1172:13 [REAR BODY CONTROL MODULE (RBCM)]

id0902p4013900

System malfunction location	**Front door lock-link switch (driver's side) unlock circuit malfunction**
Detection condition	• Rear body control module (RBCM) detects open circuit in front door lock-link switch (driver's side) unlock side circuit with front door lock-link switch (driver's side) unlocked.
Fail-safe	—
Possible cause	• Front door latch and lock actuator (driver's side) connector or terminal malfunction • Open circuit in wiring harness between the following terminals: — L.H.D.: • Front door latch and lock actuator (LH) terminal J and body ground — R.H.D.: • Front door latch and lock actuator (RH) terminal D and body ground • Front door lock-link switch (driver's side) malfunction • Rear body control module (RBCM) connector or terminal malfunction • Open circuit in wiring harness between the following terminals: — L.H.D.: • Rear body control module (RBCM) terminal 3M and front door latch and lock actuator (LH) terminal B — R.H.D.: • Rear body control module (RBCM) terminal 3M and front door latch and lock actuator (RH) terminal L • Rear body control module (RBCM) malfunction

L.H.D.

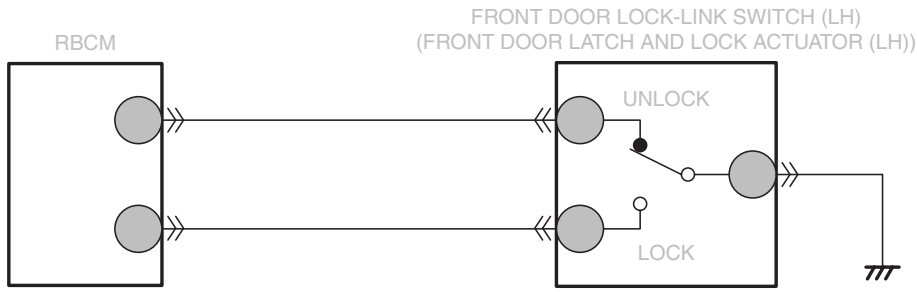

R.H.D.

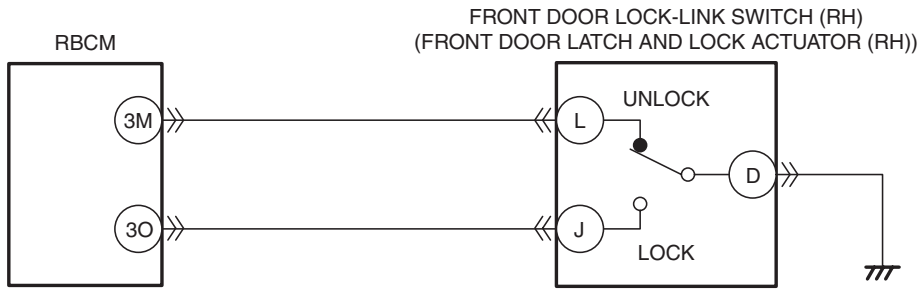

RBCM
WIRING HARNESS-SIDE CONNECTOR

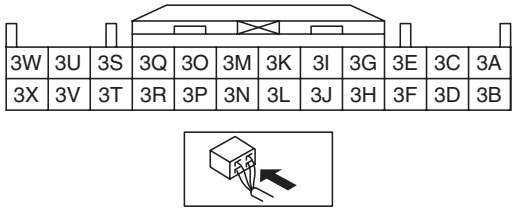

FRONT DOOR LATCH AND LOCK ACTUATOR (LH)/(RH)
WIRING HARNESS-SIDE CONNECTOR

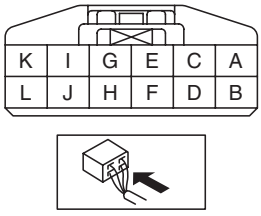

ON-BOARD DIAGNOSTIC [REAR BODY CONTROL MODULE (RBCM)]

Diagnostic Procedure

Step	Inspection		Action
1	**VERIFY REAR BODY CONTROL MODULE (RBCM) DTCs AGAIN** • Clear rear body control module (RBCM) DTCs using the M-MDS. (See 09-02L-11 CLEARING DTC [REAR BODY CONTROL MODULE (RBCM)].) • Perform the DTC inspection for the rear body control module (RBCM) using the M-MDS. (See 09-02L-9 DTC INSPECTION [REAR BODY CONTROL MODULE (RBCM)].) • Is DTC B1172:13 displayed?	Yes	Go to the next step.
		No	Go to Step 8.
2	**INSPECT FRONT DOOR LATCH AND LOCK ACTUATOR (DRIVER'S DOOR) CONNECTOR** • Switch the ignition to off. • Disconnect the negative battery cable. (See 01-17A-11 NEGATIVE BATTERY CABLE DISCONNECTION/CONNECTION [SKYACTIV-G 2.0].) (See 01-17A-13 NEGATIVE BATTERY CABLE DISCONNECTION/CONNECTION [SKYACTIV-G 2.0 (WITHOUT i-stop)].) (See 01-17B-9 NEGATIVE BATTERY CABLE DISCONNECTION/CONNECTION [SKYACTIV-D 2.2].) • Disconnect the front door latch and lock actuator (driver's side) connector. • Inspect the connector engagement and connection condition and inspect the terminals for damage, deformation, corrosion, or disconnection. • Is the connector normal?	Yes	Go to the next step.
		No	Repair or replace the connector, then go to Step 7.
3	**INSPECT FOR OPEN CIRCUIT IN FRONT DOOR LOCK-LINK SWITCH (DRIVER'S SIDE) GROUND CIRCUIT** • Verify that the front door latch and lock actuator (driver's side) connector is disconnected. • Inspect the wiring harness between the following terminals (vehicle wiring harness side) for continuity. — L.H.D.: • Front door latch and lock actuator (LH) terminal J and body ground — R.H.D.: • Front door latch and lock actuator (RH) terminal D and body ground • Is there continuity?	Yes	Go to the next step.
		No	Repair or replace the wiring harness which has an open circuit, then go to Step 7.
4	**INSPECT FRONT DOOR LOCK-LINK SWITCH (DRIVER'S DOOR)** • Inspect the front door lock-link switch (driver's door). (See 09-14-41 DOOR LOCK-LINK SWITCH INSPECTION.) • Is the front door lock-link switch (driver's door) normal?	Yes	Go to the next step.
		No	Replace the front door latch and lock actuator (driver's side), then go to Step 7. (See 09-14-36 FRONT DOOR LATCH AND LOCK ACTUATOR REMOVAL/INSTALLATION.)
5	**INSPECT REAR BODY CONTROL MODULE (RBCM) CONNECTOR CONDITION** • Disconnect the rear body control module (RBCM) connector. • Inspect the connector engagement and connection condition and inspect the terminals for damage, deformation, corrosion, or disconnection. • Is the connector normal?	Yes	Go to the next step.
		No	Repair or replace the connector, then go to Step 7.

ON-BOARD DIAGNOSTIC [REAR BODY CONTROL MODULE (RBCM)]

Step	Inspection		Action
6	**INSPECT FOR OPEN CIRCUIT IN FRONT DOOR LOCK-LINK SWITCH (DRIVER'S SIDE) CIRCUIT** • Verify that the rear body control module (RBCM) connector and front door latch and lock actuator (driver's side) connector are disconnected. • Inspect the wiring harness between the following terminals (vehicle wiring harness side) for continuity. — L.H.D.: • Rear body control module (RBCM) terminal 3M and front door latch and lock actuator (LH) terminal B — R.H.D.: • Rear body control module (RBCM) terminal 3M and front door latch and lock actuator (RH) terminal L • Is there continuity?	Yes	Go to the next step.
		No	Repair or replace the wiring harness which has an open circuit, then go to the next step.
7	**VERIFY THAT REPAIRS HAVE BEEN COMPLETED** • Reconnect all the disconnected connectors. • Reconnect the disconnected negative battery cable. (See 01-17A-11 NEGATIVE BATTERY CABLE DISCONNECTION/CONNECTION [SKYACTIV-G 2.0].) (See 01-17A-13 NEGATIVE BATTERY CABLE DISCONNECTION/CONNECTION [SKYACTIV-G 2.0 (WITHOUT i-stop)].) (See 01-17B-9 NEGATIVE BATTERY CABLE DISCONNECTION/CONNECTION [SKYACTIV-D 2.2].) • Clear rear body control module (RBCM) DTCs using the M-MDS. (See 09-02L-11 CLEARING DTC [REAR BODY CONTROL MODULE (RBCM)].) • Perform the DTC inspection for the rear body control module (RBCM) using the M-MDS. (See 09-02L-9 DTC INSPECTION [REAR BODY CONTROL MODULE (RBCM)].) • Is DTC B1172:13 displayed?	Yes	Repeat the inspection from Step 1. • If the malfunction recurs, replace the rear body control module (RBCM), then go to the next step. (See 09-40-9 REAR BODY CONTROL MODULE (RBCM) REMOVAL/INSTALLATION.)
		No	Go to the next step.
8	**VERIFY IF OTHER DTCs DISPLAYED** • Are any other DTCs displayed?	Yes	Repair the malfunctioning part according to the applicable DTC troubleshooting. (See 09-02L-12 DTC TABLE [REAR BODY CONTROL MODULE (RBCM)].)
		No	DTC troubleshooting completed.

ON-BOARD DIAGNOSTIC [REAR BODY CONTROL MODULE (RBCM)]

DTC B1174:11 [REAR BODY CONTROL MODULE (RBCM)]

id0902p4014000

System malfunction location	**Front door lock-link switch (passenger's side)/rear door lock-link switch (LH)/(RH) unlock circuit malfunction**
Detection condition	• With the front door lock-link switch (passenger's side)/rear door lock-link switch (LH)/(RH) locked, the rear body control module (RBCM) detects a short to ground in the door lock-link switch unlock circuit.
Fail-safe	—
Possible cause	• Front door latch and lock actuator (passenger's side) connector or terminal malfunction • Front door lock-link switch (passenger's side) malfunction • Rear door latch and lock actuator (LH) connector or terminal malfunction • Rear door lock-link switch (LH) malfunction • Rear door latch and lock actuator (RH) connector or terminal malfunction • Rear door lock-link switch (RH) malfunction • Rear body control module (RBCM) connector or terminal malfunction • Short to ground in wiring harness between the following terminals: — L.H.D.: • Rear body control module (RBCM) terminal 3J and front door latch and lock actuator (RH) terminal L/rear door latch and lock actuator (LH) terminal B/rear door latch and lock actuator (RH) terminal L — R.H.D.: • Rear body control module (RBCM) terminal 3J and front door latch and lock actuator (LH) terminal B/rear door latch and lock actuator (LH) terminal B/rear door latch and lock actuator (RH) terminal L • Rear body control module (RBCM) malfunction

ON-BOARD DIAGNOSTIC [REAR BODY CONTROL MODULE (RBCM)]

System malfunction location	Front door lock-link switch (passenger's side)/rear door lock-link switch (LH)/(RH) unlock circuit malfunction

L.H.D.

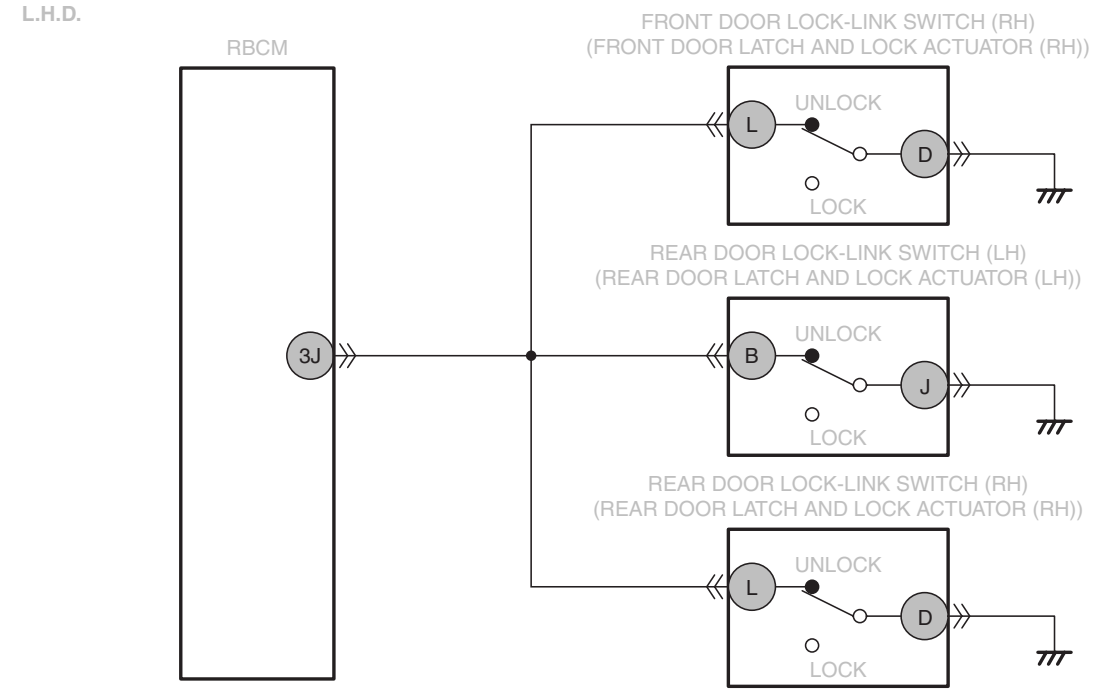

R.H.D.

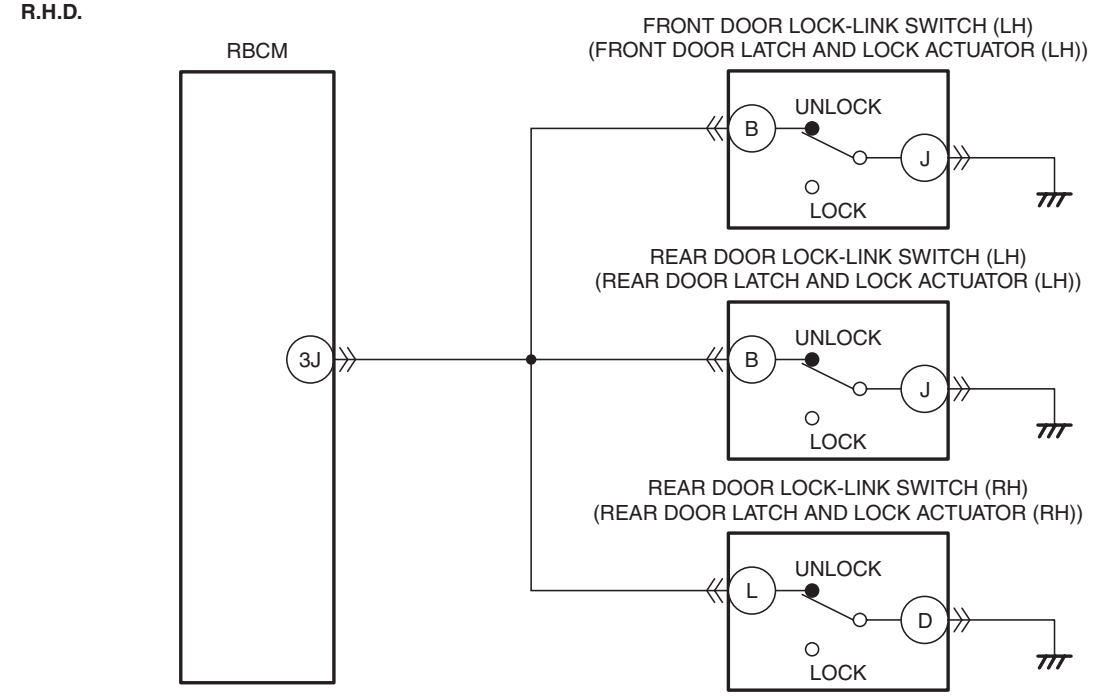

RBCM
WIRING HARNESS-SIDE CONNECTOR

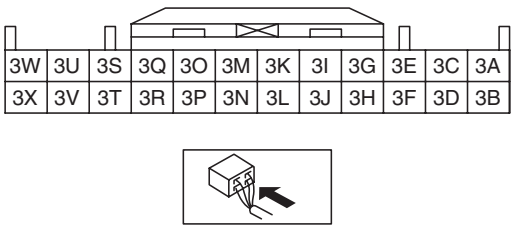

3W	3U	3S	3Q	3O	3M	3K	3I	3G	3E	3C	3A
3X	3V	3T	3R	3P	3N	3L	3J	3H	3F	3D	3B

FRONT DOOR LATCH AND LOCK ACTUATOR (LH)/(RH)/
REAR DOOR LATCH AND LOCK ACTUATOR (LH)/(RH)
WIRING HARNESS-SIDE CONNECTOR

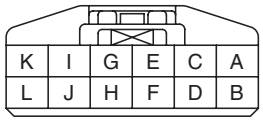

K	I	G	E	C	A
L	J	H	F	D	B

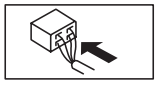

ON-BOARD DIAGNOSTIC [REAR BODY CONTROL MODULE (RBCM)]

Diagnostic Procedure

Step	Inspection		Action
1	**VERIFY REAR BODY CONTROL MODULE (RBCM) DTCs AGAIN** • Clear rear body control module (RBCM) DTCs using the M-MDS. (See 09-02L-11 CLEARING DTC [REAR BODY CONTROL MODULE (RBCM)].) • Perform the DTC inspection for the rear body control module (RBCM) using the M-MDS. (See 09-02L-9 DTC INSPECTION [REAR BODY CONTROL MODULE (RBCM)].) • Is DTC B1174:11 displayed?	Yes	Go to the next step.
		No	Go to Step 11.
2	**INSPECT FRONT DOOR LATCH AND LOCK ACTUATOR (PASSENGER'S DOOR) CONNECTOR** • Switch the ignition to off. • Disconnect the negative battery cable. (See 01-17A-11 NEGATIVE BATTERY CABLE DISCONNECTION/CONNECTION [SKYACTIV-G 2.0].) (See 01-17A-13 NEGATIVE BATTERY CABLE DISCONNECTION/CONNECTION [SKYACTIV-G 2.0 (WITHOUT i-stop)].) (See 01-17B-9 NEGATIVE BATTERY CABLE DISCONNECTION/CONNECTION [SKYACTIV-D 2.2].) • Disconnect the front door latch and lock actuator (passenger's side) connector. • Inspect the connector engagement and connection condition and inspect the terminals for damage, deformation, corrosion, or disconnection. • Is the connector normal?	Yes	Go to the next step.
		No	Repair or replace the connector, then go to Step 10.
3	**INSPECT FRONT DOOR LOCK-LINK SWITCH (PASSENGER'S DOOR)** • Inspect the front door lock-link switch (passenger's door). (See 09-14-41 DOOR LOCK-LINK SWITCH INSPECTION.) • Is the front door lock-link switch (passenger's door) normal?	Yes	Go to the next step.
		No	Replace the front door latch and lock actuator (passenger's side), then go to Step 10. (See 09-14-36 FRONT DOOR LATCH AND LOCK ACTUATOR REMOVAL/INSTALLATION.)
4	**INSPECT REAR DOOR LATCH ACTUATOR (LH) CONNECTOR** • Disconnect the rear door latch and lock actuator (LH) connector. • Inspect the connector engagement and connection condition and inspect the terminals for damage, deformation, corrosion, or disconnection. • Is the connector normal?	Yes	Go to the next step.
		No	Repair or replace the connector, then go to Step 10.
5	**INSPECT REAR DOOR LOCK-LINK SWITCH (LH)** • Inspect the rear door lock-link switch (LH). (See 09-14-41 DOOR LOCK-LINK SWITCH INSPECTION.) • Is the rear door lock-link switch (LH) normal?	Yes	Go to the next step.
		No	Replace the rear door latch and lock actuator (LH), then go to Step 10. (See 09-14-43 REAR DOOR LATCH AND LOCK ACTUATOR REMOVAL/INSTALLATION.)
6	**INSPECT REAR DOOR LATCH ACTUATOR (RH) CONNECTOR** • Disconnect the rear door latch and lock actuator (RH) connector. • Inspect the connector engagement and connection condition and inspect the terminals for damage, deformation, corrosion, or disconnection. • Is the connector normal?	Yes	Go to the next step.
		No	Repair or replace the connector, then go to Step 10.

ON-BOARD DIAGNOSTIC [REAR BODY CONTROL MODULE (RBCM)]

Step	Inspection		Action
7	**INSPECT REAR DOOR LOCK-LINK SWITCH (RH)** • Inspect the rear door lock-link switch (RH). (See 09-14-41 DOOR LOCK-LINK SWITCH INSPECTION.) • Is the rear door lock-link switch (RH) normal?	Yes	Go to the next step.
		No	Replace the rear door latch and lock actuator (RH), then go to Step 10. (See 09-14-43 REAR DOOR LATCH AND LOCK ACTUATOR REMOVAL/INSTALLATION.)
8	**INSPECT REAR BODY CONTROL MODULE (RBCM) CONNECTOR CONDITION** • Disconnect the rear body control module (RBCM) connector. • Inspect the connector engagement and connection condition and inspect the terminals for damage, deformation, corrosion, or disconnection. • Is the connector normal?	Yes	Go to the next step.
		No	Repair or replace the connector, then go to Step 10.
9	**INSPECT FRONT DOOR LOCK-LINK SWITCH (PASSENGER'S SIDE)/REAR DOOR LOCK-LINK SWITCH (LH)/(RH) CIRCUIT FOR SHORT TO GROUND** • Verify that the rear body control module (RBCM) connector, front door latch and lock actuator (passenger's side) connector, rear door latch and lock actuator (LH) connector, and rear door latch and lock actuator (RH) connector are disconnected. • Inspect for continuity between the following terminals (vehicle wiring harness side) and body ground. — L.H.D.: • Front door latch and lock actuator (RH) terminal L — R.H.D.: • Front door latch and lock actuator (LH) terminal B • Is there continuity?	Yes	Repair or replace the wiring harness which has a short to ground, then go to the next step.
		No	Go to the next step.
10	**VERIFY THAT REPAIRS HAVE BEEN COMPLETED** • Reconnect all the disconnected connectors. • Reconnect the disconnected negative battery cable. (See 01-17A-11 NEGATIVE BATTERY CABLE DISCONNECTION/CONNECTION [SKYACTIV-G 2.0].) (See 01-17A-13 NEGATIVE BATTERY CABLE DISCONNECTION/CONNECTION [SKYACTIV-G 2.0 (WITHOUT i-stop)].) (See 01-17B-9 NEGATIVE BATTERY CABLE DISCONNECTION/CONNECTION [SKYACTIV-D 2.2].) • Clear rear body control module (RBCM) DTCs using the M-MDS. (See 09-02L-11 CLEARING DTC [REAR BODY CONTROL MODULE (RBCM)].) • Perform the DTC inspection for the rear body control module (RBCM) using the M-MDS. (See 09-02L-9 DTC INSPECTION [REAR BODY CONTROL MODULE (RBCM)].) • Is DTC B1174:11 displayed?	Yes	Repeat the inspection from Step 1. • If the malfunction recurs, replace the rear body control module (RBCM), then go to the next step. (See 09-40-9 REAR BODY CONTROL MODULE (RBCM) REMOVAL/INSTALLATION.)
		No	Go to the next step.
11	**VERIFY IF OTHER DTCs DISPLAYED** • Are any other DTCs displayed?	Yes	Repair the malfunctioning part according to the applicable DTC troubleshooting. (See 09-02L-12 DTC TABLE [REAR BODY CONTROL MODULE (RBCM)].)
		No	DTC troubleshooting completed.

ON-BOARD DIAGNOSTIC [REAR BODY CONTROL MODULE (RBCM)]

DTC B1174:13 [REAR BODY CONTROL MODULE (RBCM)]

id0902p4014100

System malfunction location	**Front door lock-link switch (passenger's side)/rear door lock-link switch (LH)/(RH) unlock circuit malfunction**
Detection condition	• With the front door lock-link switch (passenger's side)/rear door lock-link switch (LH)/(RH) unlocked, the rear body control module (RBCM) detects an open circuit in the door lock-link switch unlock circuit.
Fail-safe	—
Possible cause	• Front door latch and lock actuator (passenger's side) connector or terminal malfunction • Open circuit in wiring harness between the following terminals: — L.H.D.: • Front door latch and lock actuator (RH) terminal D and body ground — R.H.D.: • Front door latch and lock actuator (LH) terminal J and body ground • Front door lock-link switch (passenger's side) malfunction • Rear door latch and lock actuator (LH) connector or terminal malfunction • Open circuit in wiring harness between rear door latch and lock actuator (LH) terminal J and body ground • Rear door lock-link switch (LH) malfunction • Rear door latch and lock actuator (RH) connector or terminal malfunction • Open circuit in wiring harness between rear door latch and lock actuator (RH) terminal D and body ground • Rear door lock-link switch (RH) malfunction • Rear body control module (RBCM) connector or terminal malfunction • Open circuit in wiring harness between the following terminals: — L.H.D.: • Rear body control module (RBCM) terminal 3J and front door latch and lock actuator (RH) terminal L/rear door latch and lock actuator (LH) terminal B/rear door latch and lock actuator (RH) terminal L — R.H.D.: • Rear body control module (RBCM) terminal 3J and front door latch and lock actuator (LH) terminal B/rear door latch and lock actuator (LH) terminal B/rear door latch and lock actuator (RH) terminal L • Rear body control module (RBCM) malfunction

ON-BOARD DIAGNOSTIC [REAR BODY CONTROL MODULE (RBCM)]

System malfunction location	Front door lock-link switch (passenger's side)/rear door lock-link switch (LH)/(RH) unlock circuit malfunction

L.H.D.

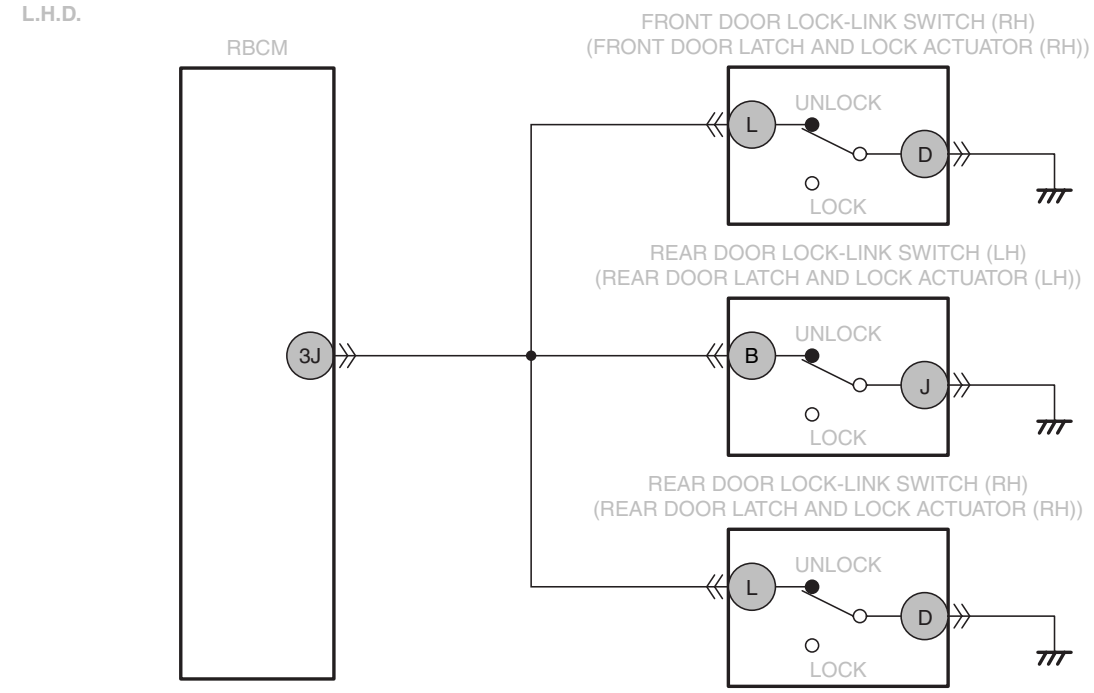

R.H.D.

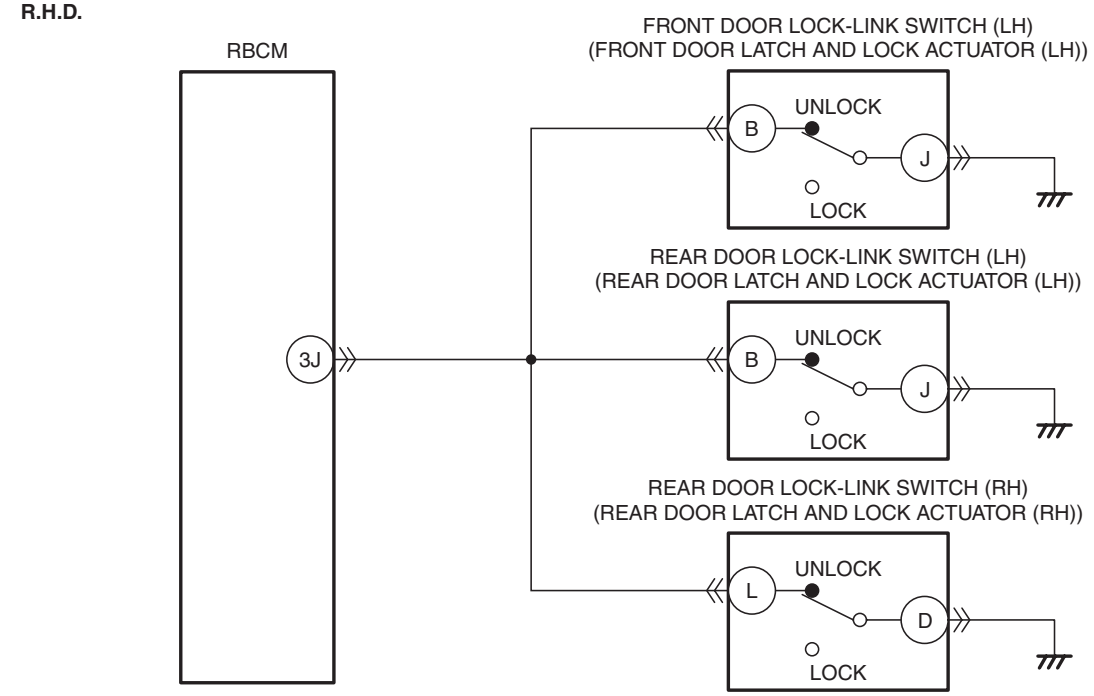

RBCM
WIRING HARNESS-SIDE CONNECTOR

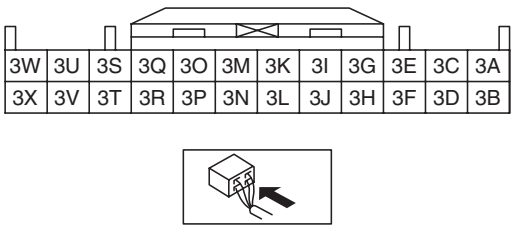

FRONT DOOR LATCH AND LOCK ACTUATOR (LH)/(RH)/
REAR DOOR LATCH AND LOCK ACTUATOR (LH)/(RH)
WIRING HARNESS-SIDE CONNECTOR

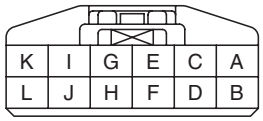

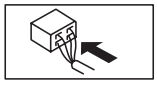

ON-BOARD DIAGNOSTIC [REAR BODY CONTROL MODULE (RBCM)]

Diagnostic Procedure

Step	Inspection		Action
1	**VERIFY REAR BODY CONTROL MODULE (RBCM) DTCs AGAIN** • Clear rear body control module (RBCM) DTCs using the M-MDS. (See 09-02L-11 CLEARING DTC [REAR BODY CONTROL MODULE (RBCM)].) • Perform the DTC inspection for the rear body control module (RBCM) using the M-MDS. (See 09-02L-9 DTC INSPECTION [REAR BODY CONTROL MODULE (RBCM)].) • Is DTC B1174:13 displayed?	Yes	Go to the next step.
		No	Go to Step 14.
2	**INSPECT FRONT DOOR LATCH AND LOCK ACTUATOR (PASSENGER'S DOOR) CONNECTOR** • Switch the ignition to off. • Disconnect the negative battery cable. (See 01-17A-11 NEGATIVE BATTERY CABLE DISCONNECTION/CONNECTION [SKYACTIV-G 2.0].) (See 01-17A-13 NEGATIVE BATTERY CABLE DISCONNECTION/CONNECTION [SKYACTIV-G 2.0 (WITHOUT i-stop)].) (See 01-17B-9 NEGATIVE BATTERY CABLE DISCONNECTION/CONNECTION [SKYACTIV-D 2.2].) • Disconnect the front door latch and lock actuator (passenger's side) connector. • Inspect the connector engagement and connection condition and inspect the terminals for damage, deformation, corrosion, or disconnection. • Is the connector normal?	Yes	Go to the next step.
		No	Repair or replace the connector, then go to Step 13.
3	**INSPECT FOR OPEN CIRCUIT IN FRONT DOOR LOCK-LINK SWITCH (PASSENGER'S SIDE) GROUND CIRCUIT** • Verify that the front door latch and lock actuator (passenger's side) connector is disconnected. • Inspect the wiring harness between the following terminals (vehicle wiring harness side) for continuity. — L.H.D.: • Front door latch and lock actuator (RH) terminal D and body ground — R.H.D.: • Front door latch and lock actuator (LH) terminal J and body ground • Is there continuity?	Yes	Go to the next step.
		No	Repair or replace the wiring harness which has an open circuit, then go to Step 13.
4	**INSPECT FRONT DOOR LOCK-LINK SWITCH (PASSENGER'S DOOR)** • Inspect the front door lock-link switch (passenger's door). (See 09-14-41 DOOR LOCK-LINK SWITCH INSPECTION.) • Is the front door lock-link switch (passenger's door) normal?	Yes	Go to the next step.
		No	Replace the front door latch and lock actuator (passenger's side), then go to Step 13. (See 09-14-36 FRONT DOOR LATCH AND LOCK ACTUATOR REMOVAL/INSTALLATION.)
5	**INSPECT REAR DOOR LATCH AND LOCK ACTUATOR (LH) CONNECTOR** • Disconnect the rear door latch and lock actuator (LH) connector. • Inspect the connector engagement and connection condition and inspect the terminals for damage, deformation, corrosion, or disconnection. • Is the connector normal?	Yes	Go to the next step.
		No	Repair or replace the connector, then go to Step 13.

ON-BOARD DIAGNOSTIC [REAR BODY CONTROL MODULE (RBCM)]

Step	Inspection		Action
6	**INSPECT FOR OPEN CIRCUIT IN REAR DOOR LOCK-LINK SWITCH (LH) GROUND CIRCUIT** • Verify that the rear door latch and lock actuator (LH) connector is disconnected. • Inspect the wiring harness for continuity between rear door latch and lock actuator (LH) terminal J (vehicle wiring harness side) and body ground. • Is there continuity?	Yes	Go to the next step.
		No	Repair or replace the wiring harness which has an open circuit, then go to Step 13.
7	**INSPECT REAR DOOR LOCK-LINK SWITCH (LH)** • Inspect the rear door lock-link switch (LH). (See 09-14-41 DOOR LOCK-LINK SWITCH INSPECTION.) • Is the rear door lock-link switch (LH) normal?	Yes	Go to the next step.
		No	Replace the rear door latch and lock actuator (LH), then go to Step 13. (See 09-14-43 REAR DOOR LATCH AND LOCK ACTUATOR REMOVAL/INSTALLATION.)
8	**INSPECT REAR DOOR LATCH AND LOCK ACTUATOR (RH) CONNECTOR** • Disconnect the rear door latch and lock actuator (RH) connector. • Inspect the connector engagement and connection condition and inspect the terminals for damage, deformation, corrosion, or disconnection. • Is the connector normal?	Yes	Go to the next step.
		No	Repair or replace the connector, then go to Step 13.
9	**INSPECT FOR OPEN CIRCUIT IN REAR DOOR LOCK-LINK SWITCH (RH) GROUND CIRCUIT** • Verify that the rear door latch and lock actuator (RH) connector is disconnected. • Inspect the wiring harness for continuity between rear door latch and lock actuator (RH) terminal D (vehicle wiring harness side) and body ground. • Is there continuity?	Yes	Go to the next step.
		No	Repair or replace the wiring harness which has an open circuit, then go to Step 13.
10	**INSPECT REAR DOOR LOCK-LINK SWITCH (RH)** • Inspect the rear door lock-link switch (RH). (See 09-14-41 DOOR LOCK-LINK SWITCH INSPECTION.) • Is the rear door lock-link switch (RH) normal?	Yes	Go to the next step.
		No	Replace the rear door latch and lock actuator (RH), then go to Step 13. (See 09-14-43 REAR DOOR LATCH AND LOCK ACTUATOR REMOVAL/INSTALLATION.)
11	**INSPECT REAR BODY CONTROL MODULE (RBCM) CONNECTOR CONDITION** • Disconnect the rear body control module (RBCM) connector. • Inspect the connector engagement and connection condition and inspect the terminals for damage, deformation, corrosion, or disconnection. • Is the connector normal?	Yes	Go to the next step.
		No	Repair or replace the connector, then go to Step 13.

ON-BOARD DIAGNOSTIC [REAR BODY CONTROL MODULE (RBCM)]

Step	Inspection		Action
12	**INSPECT FRONT DOOR LOCK-LINK SWITCH (PASSENGER'S SIDE)/REAR DOOR LINK SWITCH (LH)/(RH) CIRCUIT FOR OPEN CIRCUIT** • Verify that the rear body control module (RBCM) connector, front door latch and lock actuator (passenger's side) connector, rear door latch and lock actuator (LH) connector, and rear door latch and lock actuator (RH) connector are disconnected. • Inspect the wiring harness between the following terminals (vehicle wiring harness side) for continuity. — L.H.D.: • Rear body control module (RBCM) terminal 3J and front door latch and lock actuator (RH) terminal L • Rear body control module (RBCM) terminal 3J and rear door latch and lock actuator (LH) terminal B • Rear body control module (RBCM) terminal 3J and rear door latch and lock actuator (RH) terminal L — R.H.D.: • Rear body control module (RBCM) terminal 3J and front door latch and lock actuator (LH) terminal B • Rear body control module (RBCM) terminal 3J and rear door latch and lock actuator (LH) terminal B • Rear body control module (RBCM) terminal 3J and rear door latch and lock actuator (RH) terminal L • Is there continuity?	Yes	Go to the next step.
		No	Repair or replace the wiring harness which has an open circuit, then go to the next step.
13	**VERIFY THAT REPAIRS HAVE BEEN COMPLETED** • Reconnect all the disconnected connectors. • Reconnect the disconnected negative battery cable. (See 01-17A-11 NEGATIVE BATTERY CABLE DISCONNECTION/CONNECTION [SKYACTIV-G 2.0].) (See 01-17A-13 NEGATIVE BATTERY CABLE DISCONNECTION/CONNECTION [SKYACTIV-G 2.0 (WITHOUT i-stop)].) (See 01-17B-9 NEGATIVE BATTERY CABLE DISCONNECTION/CONNECTION [SKYACTIV-D 2.2].) • Clear rear body control module (RBCM) DTCs using the M-MDS. (See 09-02L-11 CLEARING DTC [REAR BODY CONTROL MODULE (RBCM)].) • Perform the DTC inspection for the rear body control module (RBCM) using the M-MDS. (See 09-02L-9 DTC INSPECTION [REAR BODY CONTROL MODULE (RBCM)].) • Is DTC B1174:13 displayed?	Yes	Repeat the inspection from Step 1. • If the malfunction recurs, replace the rear body control module (RBCM), then go to the next step. (See 09-40-9 REAR BODY CONTROL MODULE (RBCM) REMOVAL/INSTALLATION.)
		No	Go to the next step.
14	**VERIFY IF OTHER DTCs DISPLAYED** • Are any other DTCs displayed?	Yes	Repair the malfunctioning part according to the applicable DTC troubleshooting. (See 09-02L-12 DTC TABLE [REAR BODY CONTROL MODULE (RBCM)].)
		No	DTC troubleshooting completed.

ON-BOARD DIAGNOSTIC [REAR BODY CONTROL MODULE (RBCM)]

DTC B1175:11 [REAR BODY CONTROL MODULE (RBCM)]

id0902p4014200

System malfunction location	**Front door latch switch (driver's side) circuit malfunction**
Detection condition	• With the front door (driver's side) closed (front door latch switch (driver's side) off, the rear body control module (RBCM) detects a short to ground in the front door latch switch (driver's side) circuit.
Fail-safe	—
Possible cause	• Front door latch and lock actuator (driver's side) connector or terminal malfunction • Front door latch switch (driver's side) malfunction • Rear body control module (RBCM) connector or terminal malfunction • Short to ground in wiring harness between the following terminals: — L.H.D.: • Rear body control module (RBCM) terminal 3W and front door latch and lock actuator (LH) terminal L — R.H.D.: • Rear body control module (RBCM) terminal 3W and front door latch and lock actuator (RH) terminal B • Rear body control module (RBCM) malfunction

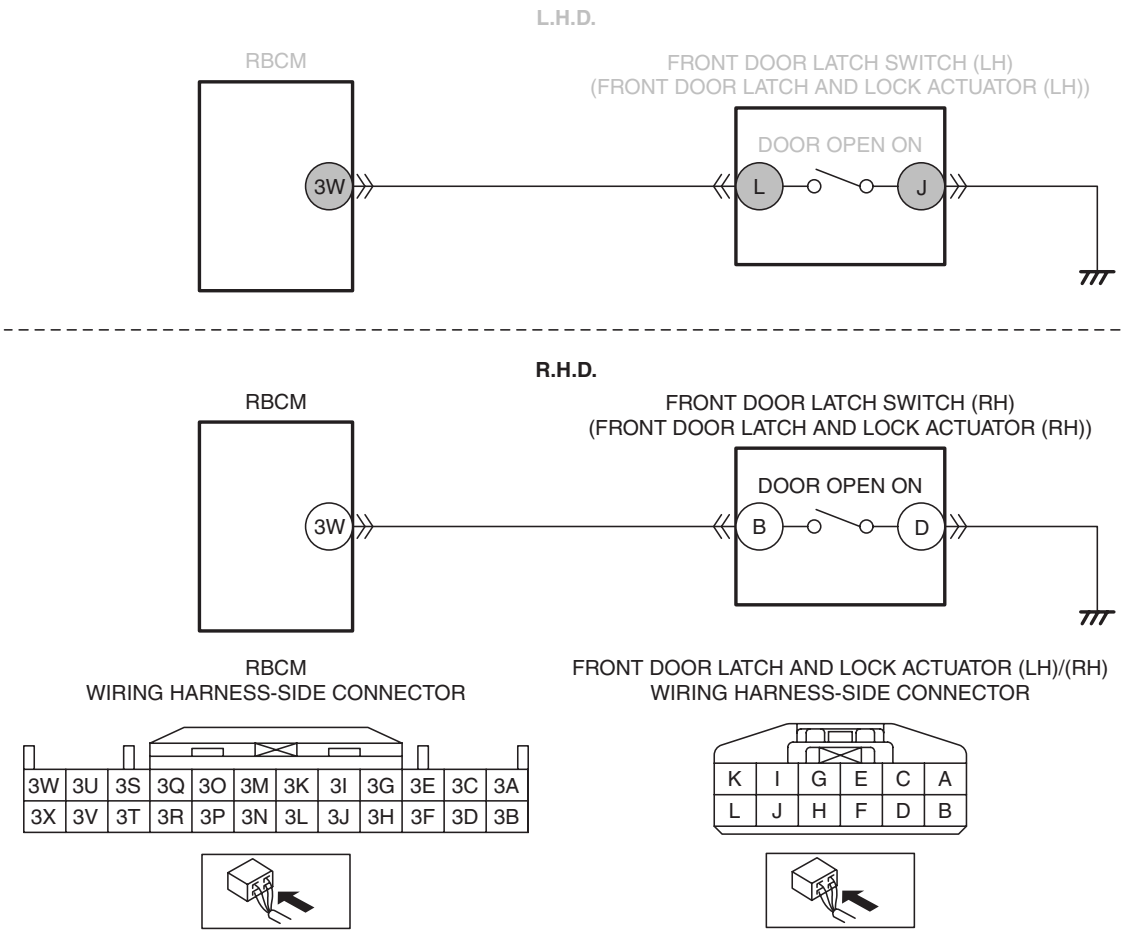

ON-BOARD DIAGNOSTIC [REAR BODY CONTROL MODULE (RBCM)]

Diagnostic Procedure

Step	Inspection		Action
1	**VERIFY REAR BODY CONTROL MODULE (RBCM) DTCs AGAIN** • Clear rear body control module (RBCM) DTCs using the M-MDS. (See 09-02L-11 CLEARING DTC [REAR BODY CONTROL MODULE (RBCM)].) • Perform the DTC inspection for the rear body control module (RBCM) using the M-MDS. (See 09-02L-9 DTC INSPECTION [REAR BODY CONTROL MODULE (RBCM)].) • Is DTC B1175:11 displayed?	Yes	Go to the next step.
		No	Go to Step 7.
2	**INSPECT FRONT DOOR LATCH AND LOCK ACTUATOR (DRIVER'S DOOR) CONNECTOR** • Switch the ignition to off. • Disconnect the negative battery cable. (See 01-17A-11 NEGATIVE BATTERY CABLE DISCONNECTION/CONNECTION [SKYACTIV-G 2.0].) (See 01-17A-13 NEGATIVE BATTERY CABLE DISCONNECTION/CONNECTION [SKYACTIV-G 2.0 (WITHOUT i-stop)].) (See 01-17B-9 NEGATIVE BATTERY CABLE DISCONNECTION/CONNECTION [SKYACTIV-D 2.2].) • Disconnect the front door latch and lock actuator (driver's side) connector. • Inspect the connector engagement and connection condition and inspect the terminals for damage, deformation, corrosion, or disconnection. • Is the connector normal?	Yes	Go to the next step.
		No	Repair or replace the connector, then go to Step 6.
3	**INSPECT FRONT DOOR LATCH SWITCH (DRIVER'S DOOR)** • Inspect the front door latch switch (driver's door). (See 09-14-41 FRONT DOOR LATCH SWITCH INSPECTION.) • Is the front door latch switch (driver's door) normal?	Yes	Go to the next step.
		No	Replace the front door latch and lock actuator (driver's side), then go to Step 6. (See 09-14-36 FRONT DOOR LATCH AND LOCK ACTUATOR REMOVAL/INSTALLATION.)
4	**INSPECT REAR BODY CONTROL MODULE (RBCM) CONNECTOR CONDITION** • Disconnect the rear body control module (RBCM) connector. • Inspect the connector engagement and connection condition and inspect the terminals for damage, deformation, corrosion, or disconnection. • Is the connector normal?	Yes	Go to the next step.
		No	Repair or replace the connector, then go to Step 6.
5	**INSPECT FRONT DOOR LATCH SWITCH (DRIVER'S SIDE) CIRCUIT FOR SHORT TO GROUND** • Verify that the rear body control module (RBCM) connector and front door latch and lock actuator (driver's side) connector are disconnected. • Inspect for continuity between the following terminals (vehicle wiring harness side) and body ground. — L.H.D.: • Front door latch and lock actuator (LH) terminal L — R.H.D.: • Front door latch and lock actuator (RH) terminal B • Is there continuity?	Yes	Repair or replace the wiring harness which has a short to ground, then go to the next step.
		No	Go to the next step.

ON-BOARD DIAGNOSTIC [REAR BODY CONTROL MODULE (RBCM)]

Step	Inspection		Action
6	**VERIFY THAT REPAIRS HAVE BEEN COMPLETED** • Reconnect all the disconnected connectors. • Reconnect the disconnected negative battery cable. (See 01-17A-11 NEGATIVE BATTERY CABLE DISCONNECTION/CONNECTION [SKYACTIV-G 2.0].) (See 01-17A-13 NEGATIVE BATTERY CABLE DISCONNECTION/CONNECTION [SKYACTIV-G 2.0 (WITHOUT i-stop)].) (See 01-17B-9 NEGATIVE BATTERY CABLE DISCONNECTION/CONNECTION [SKYACTIV-D 2.2].) • Clear rear body control module (RBCM) DTCs using the M-MDS. (See 09-02L-11 CLEARING DTC [REAR BODY CONTROL MODULE (RBCM)].) • Perform the DTC inspection for the rear body control module (RBCM) using the M-MDS. (See 09-02L-9 DTC INSPECTION [REAR BODY CONTROL MODULE (RBCM)].) • Is DTC B1175:11 displayed?	Yes	Repeat the inspection from Step 1. • If the malfunction recurs, replace the rear body control module (RBCM), then go to the next step. (See 09-40-9 REAR BODY CONTROL MODULE (RBCM) REMOVAL/INSTALLATION.)
		No	Go to the next step.
7	**VERIFY IF OTHER DTCs DISPLAYED** • Are any other DTCs displayed?	Yes	Repair the malfunctioning part according to the applicable DTC troubleshooting. (See 09-02L-12 DTC TABLE [REAR BODY CONTROL MODULE (RBCM)].)
		No	DTC troubleshooting completed.

ON-BOARD DIAGNOSTIC [REAR BODY CONTROL MODULE (RBCM)]

DTC B1176:11 [REAR BODY CONTROL MODULE (RBCM)]

id0902p4014300

System malfunction location	**Front door latch switch (passenger's side) circuit malfunction**
Detection condition	• With the front door (passenger's side) closed (front door latch switch (passenger's side) off, the rear body control module (RBCM) detects a short to ground in the front door latch switch (passenger's side) circuit.
Fail-safe	—
Possible cause	• Front door latch and lock actuator (passenger's side) connector or terminal malfunction • Front door latch switch (passenger's side) malfunction • Rear body control module (RBCM) connector or terminal malfunction • Short to ground in wiring harness between the following terminals: — L.H.D.: • Rear body control module (RBCM) terminal 3U and front door latch and lock actuator (RH) terminal B — R.H.D.: • Rear body control module (RBCM) terminal 3U and front door latch and lock actuator (LH) terminal L • Rear body control module (RBCM) malfunction

L.H.D.

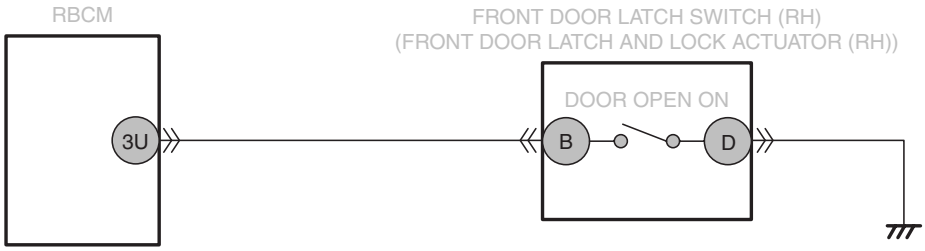

R.H.D.

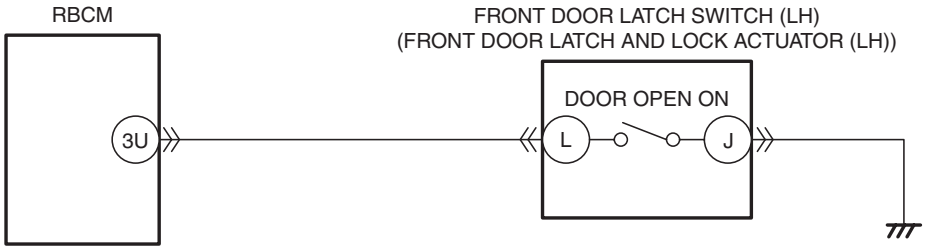

RBCM
WIRING HARNESS-SIDE CONNECTOR

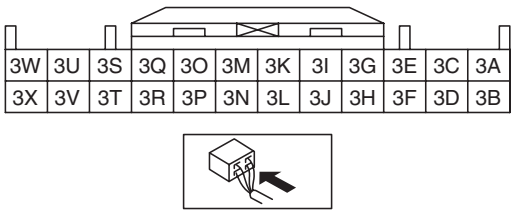

FRONT DOOR LATCH AND LOCK ACTUATOR (LH)/(RH)
WIRING HARNESS-SIDE CONNECTOR

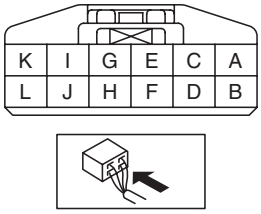

ON-BOARD DIAGNOSTIC [REAR BODY CONTROL MODULE (RBCM)]

Diagnostic Procedure

Step	Inspection		Action
1	**VERIFY REAR BODY CONTROL MODULE (RBCM) DTCs AGAIN** • Clear rear body control module (RBCM) DTCs using the M-MDS. (See 09-02L-11 CLEARING DTC [REAR BODY CONTROL MODULE (RBCM)].) • Perform the DTC inspection for the rear body control module (RBCM) using the M-MDS. (See 09-02L-9 DTC INSPECTION [REAR BODY CONTROL MODULE (RBCM)].) • Is DTC B1176:11 displayed?	Yes	Go to the next step.
		No	Go to Step 7.
2	**INSPECT FRONT DOOR LATCH AND LOCK ACTUATOR (PASSENGER'S DOOR) CONNECTOR** • Switch the ignition to off. • Disconnect the negative battery cable. (See 01-17A-11 NEGATIVE BATTERY CABLE DISCONNECTION/CONNECTION [SKYACTIV-G 2.0].) (See 01-17A-13 NEGATIVE BATTERY CABLE DISCONNECTION/CONNECTION [SKYACTIV-G 2.0 (WITHOUT i-stop)].) (See 01-17B-9 NEGATIVE BATTERY CABLE DISCONNECTION/CONNECTION [SKYACTIV-D 2.2].) • Disconnect the front door latch and lock actuator (passenger's side) connector. • Inspect the connector engagement and connection condition and inspect the terminals for damage, deformation, corrosion, or disconnection. • Is the connector normal?	Yes	Go to the next step.
		No	Repair or replace the connector, then go to Step 6.
3	**INSPECT FRONT DOOR LATCH SWITCH (PASSENGER'S DOOR)** • Inspect the front door latch switch (passenger's door). (See 09-14-41 FRONT DOOR LATCH SWITCH INSPECTION.) • Is the front door latch switch (passenger's door) normal?	Yes	Go to the next step.
		No	Replace the front door latch and lock actuator (passenger's side), then go to Step 6. (See 09-14-36 FRONT DOOR LATCH AND LOCK ACTUATOR REMOVAL/INSTALLATION.)
4	**INSPECT REAR BODY CONTROL MODULE (RBCM) CONNECTOR CONDITION** • Disconnect the rear body control module (RBCM) connector. • Inspect the connector engagement and connection condition and inspect the terminals for damage, deformation, corrosion, or disconnection. • Is the connector normal?	Yes	Go to the next step.
		No	Repair or replace the connector, then go to Step 6.
5	**INSPECT FRONT DOOR LATCH SWITCH (PASSENGER'S SIDE) CIRCUIT FOR SHORT TO GROUND** • Verify that the rear body control module (RBCM) connector and front door latch and lock actuator (passenger's side) connector are disconnected. • Inspect for continuity between the following terminals (vehicle wiring harness side) and body ground. — L.H.D.: • Front door latch and lock actuator (RH) terminal B — R.H.D.: • Front door latch and lock actuator (LH) terminal L • Is there continuity?	Yes	Repair or replace the wiring harness which has a short to ground, then go to the next step.
		No	Go to the next step.

ON-BOARD DIAGNOSTIC [REAR BODY CONTROL MODULE (RBCM)]

Step	Inspection		Action
6	**VERIFY THAT REPAIRS HAVE BEEN COMPLETED** • Reconnect all the disconnected connectors. • Reconnect the disconnected negative battery cable. (See 01-17A-11 NEGATIVE BATTERY CABLE DISCONNECTION/CONNECTION [SKYACTIV-G 2.0].) (See 01-17A-13 NEGATIVE BATTERY CABLE DISCONNECTION/CONNECTION [SKYACTIV-G 2.0 (WITHOUT i-stop)].) (See 01-17B-9 NEGATIVE BATTERY CABLE DISCONNECTION/CONNECTION [SKYACTIV-D 2.2].) • Clear rear body control module (RBCM) DTCs using the M-MDS. (See 09-02L-11 CLEARING DTC [REAR BODY CONTROL MODULE (RBCM)].) • Perform the DTC inspection for the rear body control module (RBCM) using the M-MDS. (See 09-02L-9 DTC INSPECTION [REAR BODY CONTROL MODULE (RBCM)].) • Is DTC B1176:11 displayed?	Yes	Repeat the inspection from Step 1. • If the malfunction recurs, replace the rear body control module (RBCM), then go to the next step. (See 09-40-9 REAR BODY CONTROL MODULE (RBCM) REMOVAL/INSTALLATION.)
		No	Go to the next step.
7	**VERIFY IF OTHER DTCs DISPLAYED** • Are any other DTCs displayed?	Yes	Repair the malfunctioning part according to the applicable DTC troubleshooting. (See 09-02L-12 DTC TABLE [REAR BODY CONTROL MODULE (RBCM)].)
		No	DTC troubleshooting completed.

ON-BOARD DIAGNOSTIC [REAR BODY CONTROL MODULE (RBCM)]

DTC B1178:11 [REAR BODY CONTROL MODULE (RBCM)]

id0902p4014400

System malfunction location	**Liftgate latch switch circuit malfunction**
Detection condition	• With the liftgate closed (liftgate latch switch off), rear body control module (RBCM) detects short to ground in liftgate latch switch circuit.
Fail-safe	—
Possible cause	• Liftgate latch and lock actuator connector or terminal malfunction • Liftgate latch switch malfunction • Rear body control module (RBCM) connector or terminal malfunction • Short to ground in wiring harness between rear body control module (RBCM) terminal 4K and liftgate latch and lock actuator terminal C • Rear body control module (RBCM) malfunction

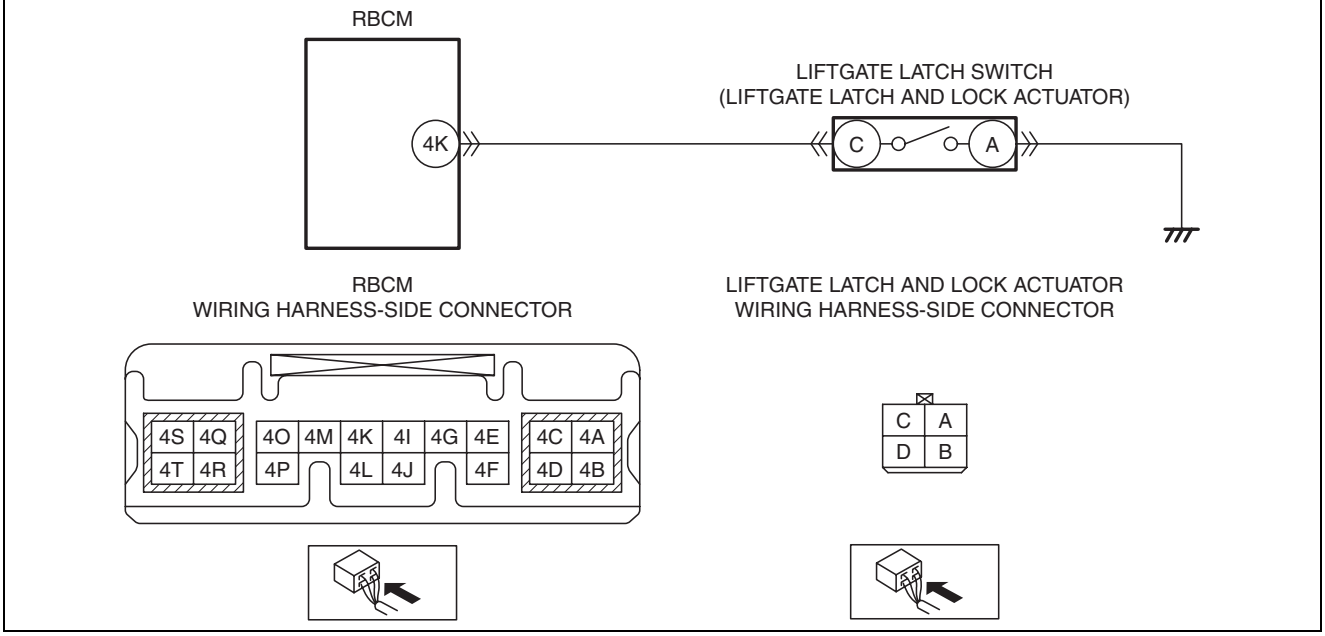

ON-BOARD DIAGNOSTIC [REAR BODY CONTROL MODULE (RBCM)]

Diagnostic Procedure

Step	Inspection		Action
1	**VERIFY REAR BODY CONTROL MODULE (RBCM) DTCs AGAIN** • Clear rear body control module (RBCM) DTCs using the M-MDS. (See 09-02L-11 CLEARING DTC [REAR BODY CONTROL MODULE (RBCM)].) • Perform the DTC inspection for the rear body control module (RBCM) using the M-MDS. (See 09-02L-9 DTC INSPECTION [REAR BODY CONTROL MODULE (RBCM)].) • Is DTC B1178:11 displayed?	Yes	Go to the next step.
		No	Go to Step 7.
2	**INSPECT LIFTGATE LATCH AND LOCK ACTUATOR CONNECTOR** • Switch the ignition to off. • Disconnect the negative battery cable. (See 01-17A-11 NEGATIVE BATTERY CABLE DISCONNECTION/CONNECTION [SKYACTIV-G 2.0].) (See 01-17A-13 NEGATIVE BATTERY CABLE DISCONNECTION/CONNECTION [SKYACTIV-G 2.0 (WITHOUT i-stop)].) (See 01-17B-9 NEGATIVE BATTERY CABLE DISCONNECTION/CONNECTION [SKYACTIV-D 2.2].) • Disconnect the liftgate latch and lock actuator connector. • Inspect the connector engagement and connection condition and inspect the terminals for damage, deformation, corrosion, or disconnection. • Is the connector normal?	Yes	Go to the next step.
		No	Repair or replace the connector, then go to Step 6.
3	**INSPECT LIFTGATE LATCH SWITCH** • Inspect the liftgate latch switch. (See 09-14-51 LIFTGATE LATCH SWITCH INSPECTION.) • Is the liftgate latch switch normal?	Yes	Go to the next step.
		No	Replace the liftgate latch and lock actuator, then go to Step 6. (See 09-14-49 LIFTGATE LATCH AND LOCK ACTUATOR REMOVAL/INSTALLATION.)
4	**INSPECT REAR BODY CONTROL MODULE (RBCM) CONNECTOR CONDITION** • Disconnect the rear body control module (RBCM) connector. • Inspect the connector engagement and connection condition and inspect the terminals for damage, deformation, corrosion, or disconnection. • Is the connector normal?	Yes	Go to the next step.
		No	Repair or replace the connector, then go to Step 6.
5	**INSPECT LIFTGATE LATCH SWITCH CIRCUIT FOR SHORT TO GROUND** • Verify that the rear body control module (RBCM) connector and liftgate latch and lock actuator connector are disconnected. • Inspect for continuity between liftgate latch and lock actuator terminal C (vehicle wiring harness) and body ground. • Is there continuity?	Yes	Repair or replace the wiring harness which has a short to ground, then go to the next step.
		No	Go to the next step.

ON-BOARD DIAGNOSTIC [REAR BODY CONTROL MODULE (RBCM)]

Step	Inspection		Action
6	**VERIFY THAT REPAIRS HAVE BEEN COMPLETED** • Reconnect all the disconnected connectors. • Reconnect the disconnected negative battery cable. (See 01-17A-11 NEGATIVE BATTERY CABLE DISCONNECTION/CONNECTION [SKYACTIV-G 2.0].) (See 01-17A-13 NEGATIVE BATTERY CABLE DISCONNECTION/CONNECTION [SKYACTIV-G 2.0 (WITHOUT i-stop)].) (See 01-17B-9 NEGATIVE BATTERY CABLE DISCONNECTION/CONNECTION [SKYACTIV-D 2.2].) • Clear rear body control module (RBCM) DTCs using the M-MDS. (See 09-02L-11 CLEARING DTC [REAR BODY CONTROL MODULE (RBCM)].) • Perform the DTC inspection for the rear body control module (RBCM) using the M-MDS. (See 09-02L-9 DTC INSPECTION [REAR BODY CONTROL MODULE (RBCM)].) • Is DTC B1178:11 displayed?	Yes	Repeat the inspection from Step 1. • If the malfunction recurs, replace the rear body control module (RBCM), then go to the next step. (See 09-40-9 REAR BODY CONTROL MODULE (RBCM) REMOVAL/INSTALLATION.)
		No	Go to the next step.
7	**VERIFY IF OTHER DTCs DISPLAYED** • Are any other DTCs displayed?	Yes	Repair the malfunctioning part according to the applicable DTC troubleshooting. (See 09-02L-12 DTC TABLE [REAR BODY CONTROL MODULE (RBCM)].)
		No	DTC troubleshooting completed.

ON-BOARD DIAGNOSTIC [REAR BODY CONTROL MODULE (RBCM)]

DTC B11DA:16 [REAR BODY CONTROL MODULE (RBCM)]

id0902p4014500

System malfunction location	**Front door key cylinder switch (driver's side) circuit malfunction**
Detection condition	• With the front door key cylinder switch (driver's side) off, the rear body control module (RBCM) detects front door key cylinder switch (driver's side) voltage of **4 V or less**.
Fail-safe	—
Possible cause	• Front door latch and lock actuator (driver's side) connector or terminal malfunction • Front door key cylinder switch (driver's side) malfunction • Rear body control module (RBCM) connector or terminal malfunction • Short to ground in wiring harness between the following terminals: — L.H.D.: • Rear body control module (RBCM) terminal 3H and front door latch and lock actuator (LH) terminal H — R.H.D.: • Rear body control module (RBCM) terminal 3H and front door latch and lock actuator (RH) terminal F • Rear body control module (RBCM) malfunction

L.H.D.

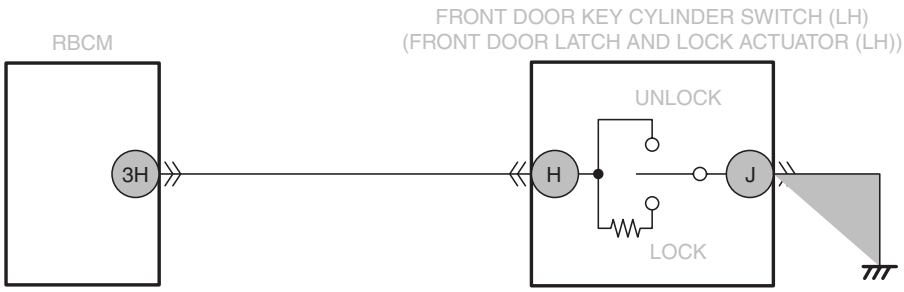

R.H.D.

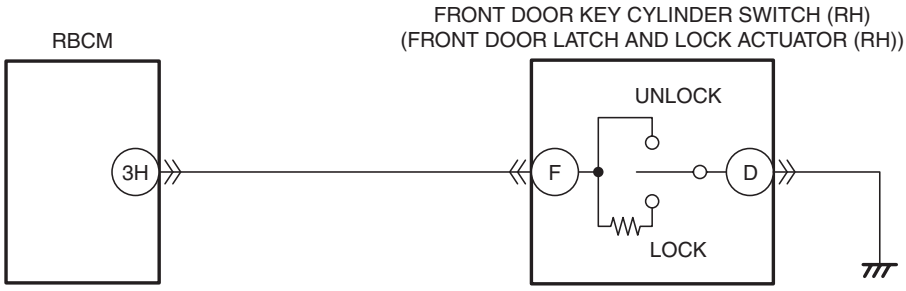

RBCM
WIRING HARNESS-SIDE CONNECTOR

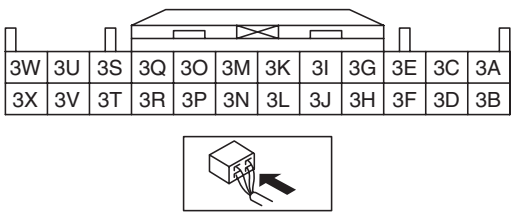

FRONT DOOR LATCH AND LOCK ACTUATOR (LH)/(RH)
WIRING HARNESS-SIDE CONNECTOR

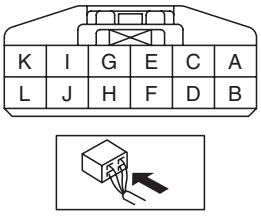

ON-BOARD DIAGNOSTIC [REAR BODY CONTROL MODULE (RBCM)]

Diagnostic Procedure

Step	Inspection		Action
1	**VERIFY REAR BODY CONTROL MODULE (RBCM) DTCs AGAIN** • Clear rear body control module (RBCM) DTCs using the M-MDS. (See 09-02L-11 CLEARING DTC [REAR BODY CONTROL MODULE (RBCM)].) • Perform the DTC inspection for the rear body control module (RBCM) using the M-MDS. (See 09-02L-9 DTC INSPECTION [REAR BODY CONTROL MODULE (RBCM)].) • Is DTC B11DA:16 displayed?	Yes	Go to the next step.
		No	Go to Step 7.
2	**INSPECT FRONT DOOR LATCH AND LOCK ACTUATOR (DRIVER'S DOOR) CONNECTOR** • Switch the ignition to off. • Disconnect the negative battery cable. (See 01-17A-11 NEGATIVE BATTERY CABLE DISCONNECTION/CONNECTION [SKYACTIV-G 2.0].) (See 01-17A-13 NEGATIVE BATTERY CABLE DISCONNECTION/CONNECTION [SKYACTIV-G 2.0 (WITHOUT i-stop)].) (See 01-17B-9 NEGATIVE BATTERY CABLE DISCONNECTION/CONNECTION [SKYACTIV-D 2.2].) • Disconnect the front door latch and lock actuator (driver's side) connector. • Inspect the connector engagement and connection condition and inspect the terminals for damage, deformation, corrosion, or disconnection. • Is the connector normal?	Yes	Go to the next step.
		No	Repair or replace the connector, then go to Step 6.
3	**INSPECT FRONT DOOR KEY CYLINDER SWITCH (DRIVER'S DOOR)** • Inspect the front door key cylinder switch (driver's door). (See 09-14-33 FRONT DOOR KEY CYLINDER SWITCH INSPECTION.) • Is the front door key cylinder switch (driver's side) normal?	Yes	Go to the next step.
		No	Replace the front door latch and lock actuator (driver's side), then go to Step 6. (See 09-14-36 FRONT DOOR LATCH AND LOCK ACTUATOR REMOVAL/INSTALLATION.)
4	**INSPECT REAR BODY CONTROL MODULE (RBCM) CONNECTOR CONDITION** • Disconnect the rear body control module (RBCM) connector. • Inspect the connector engagement and connection condition and inspect the terminals for damage, deformation, corrosion, or disconnection. • Is the connector normal?	Yes	Go to the next step.
		No	Repair or replace the connector, then go to Step 6.
5	**INSPECT FRONT DOOR KEY CYLINDER SWITCH (DRIVER'S SIDE) CIRCUIT FOR SHORT TO GROUND** • Verify that the rear body control module (RBCM) connector and front door latch and lock actuator (driver's side) connector are disconnected. • Inspect for continuity between the following terminals (vehicle wiring harness side) and body ground. — L.H.D.: • Front door latch and lock actuator (LH) terminal H — R.H.D.: • Front door latch and lock actuator (RH) terminal F • Is there continuity?	Yes	Repair or replace the wiring harness which has a short to ground, then go to the next step.
		No	Go to the next step.

ON-BOARD DIAGNOSTIC [REAR BODY CONTROL MODULE (RBCM)]

Step	Inspection		Action
6	**VERIFY THAT REPAIRS HAVE BEEN COMPLETED** • Reconnect all the disconnected connectors. • Reconnect the disconnected negative battery cable. (See 01-17A-11 NEGATIVE BATTERY CABLE DISCONNECTION/CONNECTION [SKYACTIV-G 2.0].) (See 01-17A-13 NEGATIVE BATTERY CABLE DISCONNECTION/CONNECTION [SKYACTIV-G 2.0 (WITHOUT i-stop)].) (See 01-17B-9 NEGATIVE BATTERY CABLE DISCONNECTION/CONNECTION [SKYACTIV-D 2.2].) • Clear rear body control module (RBCM) DTCs using the M-MDS. (See 09-02L-11 CLEARING DTC [REAR BODY CONTROL MODULE (RBCM)].) • Perform the DTC inspection for the rear body control module (RBCM) using the M-MDS. (See 09-02L-9 DTC INSPECTION [REAR BODY CONTROL MODULE (RBCM)].) • Is DTC B11DA:16 displayed?	Yes	Repeat the inspection from Step 1. • If the malfunction recurs, replace the rear body control module (RBCM), then go to the next step. (See 09-40-9 REAR BODY CONTROL MODULE (RBCM) REMOVAL/INSTALLATION.)
		No	Go to the next step.
7	**VERIFY IF OTHER DTCs DISPLAYED** • Are any other DTCs displayed?	Yes	Repair the malfunctioning part according to the applicable DTC troubleshooting. (See 09-02L-12 DTC TABLE [REAR BODY CONTROL MODULE (RBCM)].)
		No	DTC troubleshooting completed.

ON-BOARD DIAGNOSTIC [REAR BODY CONTROL MODULE (RBCM)]

DTC B11E9:11 [REAR BODY CONTROL MODULE (RBCM)]

id0902p4014600

System malfunction location	**Rear door latch switch (LH) circuit malfunction**
Detection condition	• With the rear door (LH) closed (rear door latch switch (LH) off), the rear body control module (RBCM) detects a short to ground in the rear door latch switch (LH) cylinder.
Fail-safe	—
Possible cause	• Rear door latch and lock actuator (LH) connector or terminal malfunction • Rear door latch switch (LH) malfunction • Rear body control module (RBCM) connector or terminal malfunction • Short to ground in wiring harness between rear body control module (RBCM) terminal 3S and rear door latch and lock actuator (LH) terminal L • Rear body control module (RBCM) malfunction

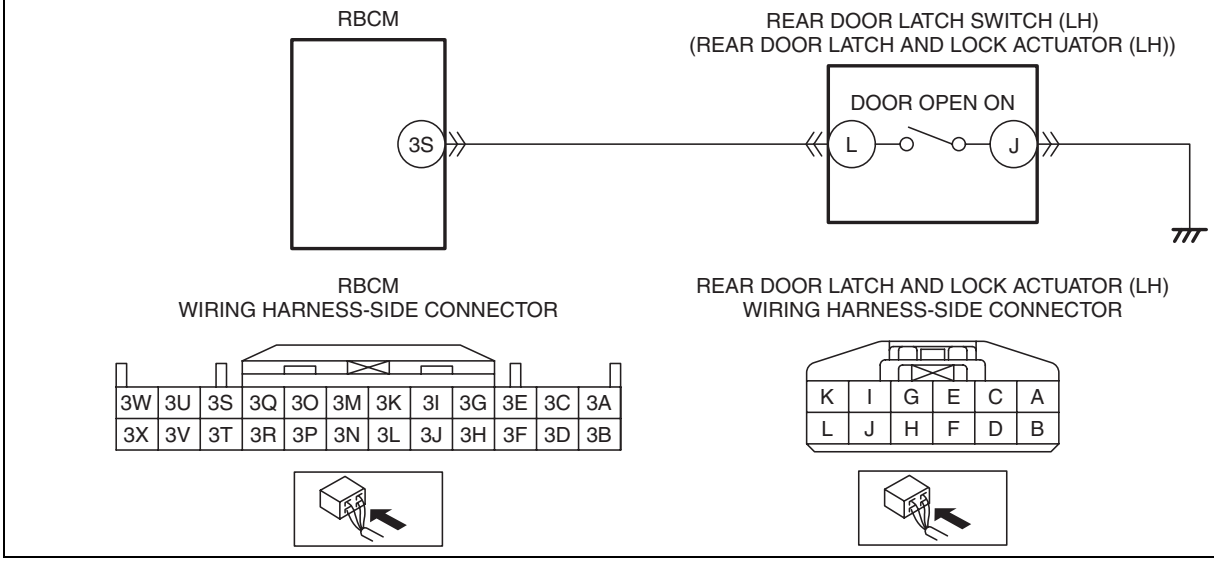

ON-BOARD DIAGNOSTIC [REAR BODY CONTROL MODULE (RBCM)]

Diagnostic Procedure

Step	Inspection		Action
1	**VERIFY REAR BODY CONTROL MODULE (RBCM) DTCs AGAIN** • Clear rear body control module (RBCM) DTCs using the M-MDS. (See 09-02L-11 CLEARING DTC [REAR BODY CONTROL MODULE (RBCM)].) • Perform the DTC inspection for the rear body control module (RBCM) using the M-MDS. (See 09-02L-9 DTC INSPECTION [REAR BODY CONTROL MODULE (RBCM)].) • Is DTC B11E9:11 displayed?	Yes	Go to the next step.
		No	Go to Step 7.
2	**INSPECT REAR DOOR LATCH AND LOCK ACTUATOR (LH) CONNECTOR** • Switch the ignition to off. • Disconnect the negative battery cable. (See 01-17A-11 NEGATIVE BATTERY CABLE DISCONNECTION/CONNECTION [SKYACTIV-G 2.0].) (See 01-17A-13 NEGATIVE BATTERY CABLE DISCONNECTION/CONNECTION [SKYACTIV-G 2.0 (WITHOUT i-stop)].) (See 01-17B-9 NEGATIVE BATTERY CABLE DISCONNECTION/CONNECTION [SKYACTIV-D 2.2].) • Disconnect the rear door latch and lock actuator (LH) connector. • Inspect the connector engagement and connection condition and inspect the terminals for damage, deformation, corrosion, or disconnection. • Is the connector normal?	Yes	Go to the next step.
		No	Repair or replace the connector, then go to Step 6.
3	**INSPECT REAR DOOR LATCH SWITCH (LH)** • Inspect the rear door latch switch (LH). (See 09-14-47 REAR DOOR LATCH SWITCH INSPECTION.) • Is the rear door latch switch (LH) normal?	Yes	Go to the next step.
		No	Replace the rear door latch and lock actuator (LH), then go to Step 6. (See 09-14-43 REAR DOOR LATCH AND LOCK ACTUATOR REMOVAL/INSTALLATION.)
4	**INSPECT REAR BODY CONTROL MODULE (RBCM) CONNECTOR CONDITION** • Disconnect the rear body control module (RBCM) connector. • Inspect the connector engagement and connection condition and inspect the terminals for damage, deformation, corrosion, or disconnection. • Is the connector normal?	Yes	Go to the next step.
		No	Repair or replace the connector, then go to Step 6.
5	**INSPECT REAR DOOR LATCH SWITCH (LH) CIRCUIT FOR SHORT TO GROUND** • Verify that the rear body control module (RBCM) connector and rear door latch and lock actuator (LH) connector are disconnected. • Inspect for continuity between rear door latch and lock actuator (LH) terminal L (vehicle wiring harness) and body ground. • Is there continuity?	Yes	Repair or replace the wiring harness which has a short to ground, then go to the next step.
		No	Go to the next step.

ON-BOARD DIAGNOSTIC [REAR BODY CONTROL MODULE (RBCM)]

Step	Inspection		Action
6	**VERIFY THAT REPAIRS HAVE BEEN COMPLETED** • Reconnect all the disconnected connectors. • Reconnect the disconnected negative battery cable. (See 01-17A-11 NEGATIVE BATTERY CABLE DISCONNECTION/CONNECTION [SKYACTIV-G 2.0].) (See 01-17A-13 NEGATIVE BATTERY CABLE DISCONNECTION/CONNECTION [SKYACTIV-G 2.0 (WITHOUT i-stop)].) (See 01-17B-9 NEGATIVE BATTERY CABLE DISCONNECTION/CONNECTION [SKYACTIV-D 2.2].) • Clear rear body control module (RBCM) DTCs using the M-MDS. (See 09-02L-11 CLEARING DTC [REAR BODY CONTROL MODULE (RBCM)].) • Perform the DTC inspection for the rear body control module (RBCM) using the M-MDS. (See 09-02L-9 DTC INSPECTION [REAR BODY CONTROL MODULE (RBCM)].) • Is DTC B11E9:11 displayed?	Yes	Repeat the inspection from Step 1. • If the malfunction recurs, replace the rear body control module (RBCM), then go to the next step. (See 09-40-9 REAR BODY CONTROL MODULE (RBCM) REMOVAL/INSTALLATION.)
		No	Go to the next step.
7	**VERIFY IF OTHER DTCs DISPLAYED** • Are any other DTCs displayed?	Yes	Repair the malfunctioning part according to the applicable DTC troubleshooting. (See 09-02L-12 DTC TABLE [REAR BODY CONTROL MODULE (RBCM)].)
		No	DTC troubleshooting completed.

ON-BOARD DIAGNOSTIC [REAR BODY CONTROL MODULE (RBCM)]

DTC B11EA:11 [REAR BODY CONTROL MODULE (RBCM)]

id0902p4014700

System malfunction location	**Rear door latch switch (RH) circuit malfunction**
Detection condition	• With the rear door (RH) closed (rear door latch switch (RH) off), the rear body control module (RBCM) detects a short to ground in the rear door latch switch (RH) cylinder.
Fail-safe	—
Possible cause	• Rear door latch and lock actuator (RH) connector or terminal malfunction • Rear door latch switch (RH) malfunction • Rear body control module (RBCM) connector or terminal malfunction • Short to ground in wiring harness between rear body control module (RBCM) terminal 3Q and rear door latch and lock actuator (RH) terminal B • Rear body control module (RBCM) malfunction

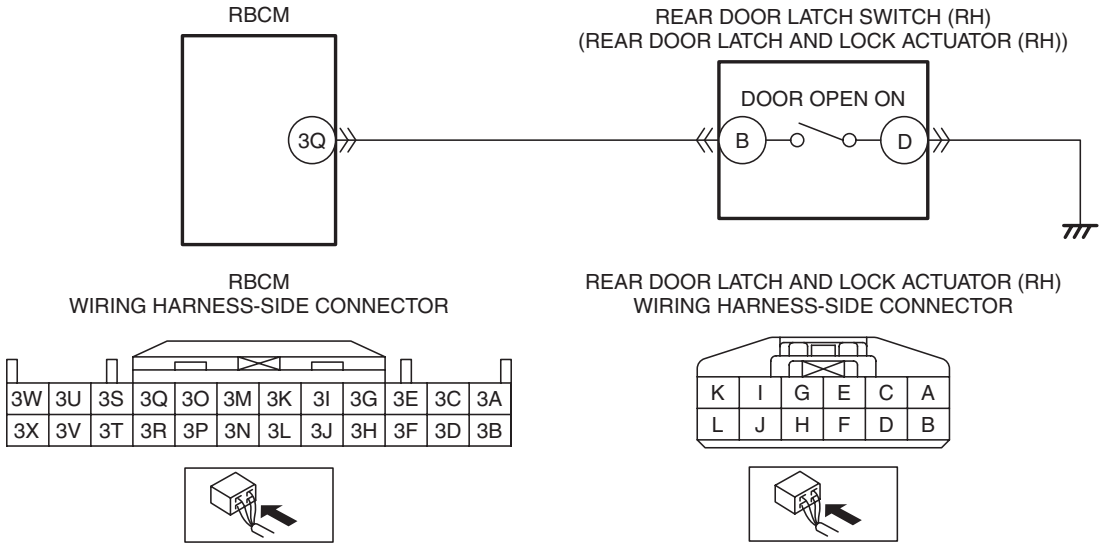

ON-BOARD DIAGNOSTIC [REAR BODY CONTROL MODULE (RBCM)]

Diagnostic Procedure

Step	Inspection		Action
1	**VERIFY REAR BODY CONTROL MODULE (RBCM) DTCs AGAIN** • Clear rear body control module (RBCM) DTCs using the M-MDS. (See 09-02L-11 CLEARING DTC [REAR BODY CONTROL MODULE (RBCM)].) • Perform the DTC inspection for the rear body control module (RBCM) using the M-MDS. (See 09-02L-9 DTC INSPECTION [REAR BODY CONTROL MODULE (RBCM)].) • Is DTC B11EA:11 displayed?	Yes	Go to the next step.
		No	Go to Step 7.
2	**INSPECT REAR DOOR LATCH AND LOCK ACTUATOR (RH) CONNECTOR** • Switch the ignition to off. • Disconnect the negative battery cable. (See 01-17A-11 NEGATIVE BATTERY CABLE DISCONNECTION/CONNECTION [SKYACTIV-G 2.0].) (See 01-17A-13 NEGATIVE BATTERY CABLE DISCONNECTION/CONNECTION [SKYACTIV-G 2.0 (WITHOUT i-stop)].) (See 01-17B-9 NEGATIVE BATTERY CABLE DISCONNECTION/CONNECTION [SKYACTIV-D 2.2].) • Disconnect the rear door latch and lock actuator (RH) connector. • Inspect the connector engagement and connection condition and inspect the terminals for damage, deformation, corrosion, or disconnection. • Is the connector normal?	Yes	Go to the next step.
		No	Repair or replace the connector, then go to Step 6.
3	**INSPECT REAR DOOR LATCH SWITCH (RH)** • Inspect the rear door latch switch (RH). (See 09-14-47 REAR DOOR LATCH SWITCH INSPECTION.) • Is the rear door latch switch (RH) normal?	Yes	Go to the next step.
		No	Replace the rear door latch and lock actuator (RH), then go to Step 6. (See 09-14-43 REAR DOOR LATCH AND LOCK ACTUATOR REMOVAL/INSTALLATION.)
4	**INSPECT REAR BODY CONTROL MODULE (RBCM) CONNECTOR CONDITION** • Disconnect the rear body control module (RBCM) connector. • Inspect the connector engagement and connection condition and inspect the terminals for damage, deformation, corrosion, or disconnection. • Is the connector normal?	Yes	Go to the next step.
		No	Repair or replace the connector, then go to Step 6.
5	**INSPECT REAR DOOR LATCH SWITCH (RH) CIRCUIT FOR SHORT TO GROUND** • Verify that the rear body control module (RBCM) connector and rear door latch and lock actuator (RH) connector are disconnected. • Inspect for continuity between rear door latch and lock actuator (RH) terminal B (vehicle wiring harness) and body ground. • Is there continuity?	Yes	Repair or replace the wiring harness which has a short to ground, then go to the next step.
		No	Go to the next step.

ON-BOARD DIAGNOSTIC [REAR BODY CONTROL MODULE (RBCM)]

Step	Inspection		Action
6	**VERIFY THAT REPAIRS HAVE BEEN COMPLETED** • Reconnect all the disconnected connectors. • Reconnect the disconnected negative battery cable. (See 01-17A-11 NEGATIVE BATTERY CABLE DISCONNECTION/CONNECTION [SKYACTIV-G 2.0].) (See 01-17A-13 NEGATIVE BATTERY CABLE DISCONNECTION/CONNECTION [SKYACTIV-G 2.0 (WITHOUT i-stop)].) (See 01-17B-9 NEGATIVE BATTERY CABLE DISCONNECTION/CONNECTION [SKYACTIV-D 2.2].) • Clear rear body control module (RBCM) DTCs using the M-MDS. (See 09-02L-11 CLEARING DTC [REAR BODY CONTROL MODULE (RBCM)].) • Perform the DTC inspection for the rear body control module (RBCM) using the M-MDS. (See 09-02L-9 DTC INSPECTION [REAR BODY CONTROL MODULE (RBCM)].) • Is DTC B11EA:11 displayed?	Yes	Repeat the inspection from Step 1. • If the malfunction recurs, replace the rear body control module (RBCM), then go to the next step. (See 09-40-9 REAR BODY CONTROL MODULE (RBCM) REMOVAL/INSTALLATION.)
		No	Go to the next step.
7	**VERIFY IF OTHER DTCs DISPLAYED** • Are any other DTCs displayed?	Yes	Repair the malfunctioning part according to the applicable DTC troubleshooting. (See 09-02L-12 DTC TABLE [REAR BODY CONTROL MODULE (RBCM)].)
		No	DTC troubleshooting completed.

ON-BOARD DIAGNOSTIC [REAR BODY CONTROL MODULE (RBCM)]

DTC B126A:11 [REAR BODY CONTROL MODULE (RBCM)]

id0902p4014800

System malfunction location	**Front door lock-link switch (driver's side) lock circuit malfunction**
Detection condition	• With the front door lock-link switch (driver's side) unlocked, the rear body control module (RBCM) detects a short to ground in the front door lock-link switch (driver's side) lock circuit.
Fail-safe	—
Possible cause	• Front door latch and lock actuator (driver's side) connector or terminal malfunction • Front door lock-link switch (driver's side) malfunction • Start stop unit connector or terminal malfunction • Rear body control module (RBCM) connector or terminal malfunction • Short to ground in wiring harness between the following terminals: — L.H.D.: • Start stop unit terminal 1P and front door latch and lock actuator (LH) terminal D • Rear body control module (RBCM) terminal 3O and front door latch and lock actuator (LH) terminal D — R.H.D.: • Start stop unit terminal 1P and front door latch and lock actuator (RH) terminal J • Rear body control module (RBCM) terminal 3O and front door latch and lock actuator (RH) terminal J • Start stop unit malfunction • Rear body control module (RBCM) malfunction

ON-BOARD DIAGNOSTIC [REAR BODY CONTROL MODULE (RBCM)]

System malfunction location	Front door lock-link switch (driver's side) lock circuit malfunction

L.H.D.

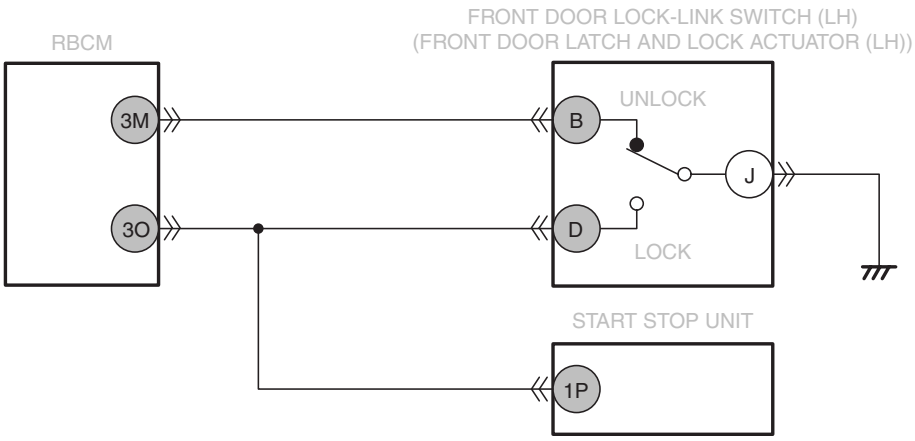

R.H.D.

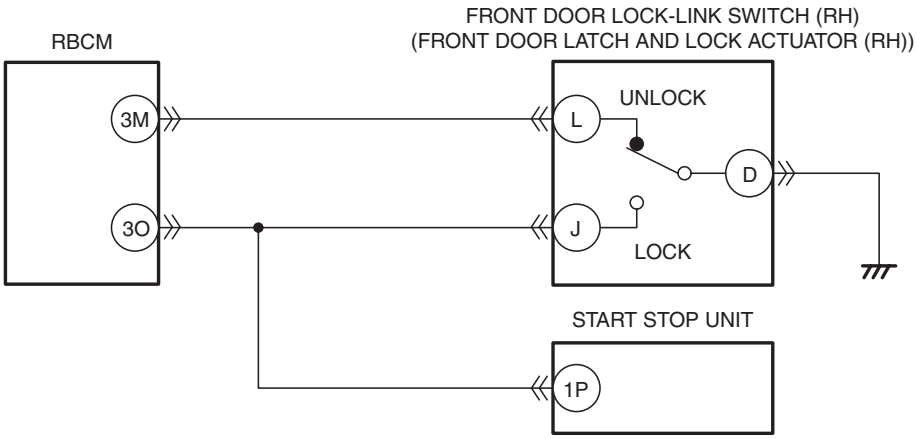

RBCM
WIRING HARNESS-SIDE CONNECTOR

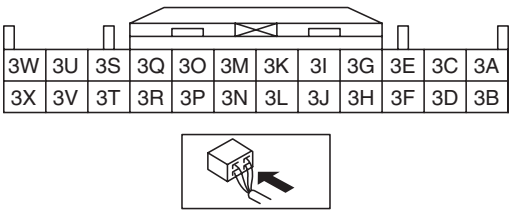

FRONT DOOR LATCH AND LOCK ACTUATOR (LH)/(RH)
WIRING HARNESS-SIDE CONNECTOR

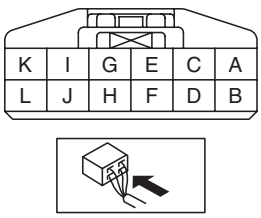

START STOP UNIT
WIRING HARNESS-SIDE CONNECTOR

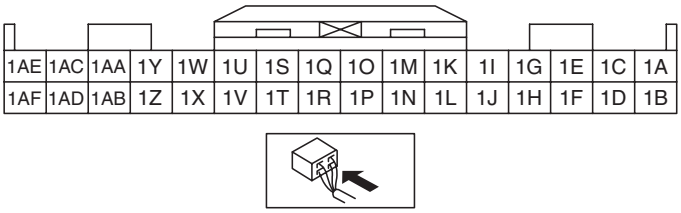

ON-BOARD DIAGNOSTIC [REAR BODY CONTROL MODULE (RBCM)]

Diagnostic Procedure

Step	Inspection		Action
1	**VERIFY REAR BODY CONTROL MODULE (RBCM) DTCs AGAIN** • Clear rear body control module (RBCM) DTCs using the M-MDS. (See 09-02L-11 CLEARING DTC [REAR BODY CONTROL MODULE (RBCM)].) • Perform the DTC inspection for the rear body control module (RBCM) using the M-MDS. (See 09-02L-9 DTC INSPECTION [REAR BODY CONTROL MODULE (RBCM)].) • Is DTC B126A:11 displayed?	Yes	Go to the next step.
		No	Go to Step 9.
2	**INSPECT FRONT DOOR LATCH AND LOCK ACTUATOR (DRIVER'S DOOR) CONNECTOR** • Switch the ignition to off. • Disconnect the negative battery cable. (See 01-17A-11 NEGATIVE BATTERY CABLE DISCONNECTION/CONNECTION [SKYACTIV-G 2.0].) (See 01-17A-13 NEGATIVE BATTERY CABLE DISCONNECTION/CONNECTION [SKYACTIV-G 2.0 (WITHOUT i-stop)].) (See 01-17B-9 NEGATIVE BATTERY CABLE DISCONNECTION/CONNECTION [SKYACTIV-D 2.2].) • Disconnect the front door latch and lock actuator (driver's side) connector. • Inspect the connector engagement and connection condition and inspect the terminals for damage, deformation, corrosion, or disconnection. • Is the connector normal?	Yes	Go to the next step.
		No	Repair or replace the connector, then go to Step 8.
3	**INSPECT FRONT DOOR LOCK-LINK SWITCH (DRIVER'S DOOR)** • Inspect the front door lock-link switch (driver's door). (See 09-14-41 DOOR LOCK-LINK SWITCH INSPECTION.) • Is the front door lock-link switch (driver's door) normal?	Yes	Go to the next step.
		No	Replace the front door latch and lock actuator (driver's side), then go to Step 8. (See 09-14-36 FRONT DOOR LATCH AND LOCK ACTUATOR REMOVAL/INSTALLATION.)
4	**INSPECT START STOP UNIT CONNECTOR CONDITION** • Disconnect the start stop unit connector. • Inspect the connector engagement and connection condition and inspect the terminals for damage, deformation, corrosion, or disconnection. • Is the connector normal?	Yes	Go to the next step.
		No	Repair or replace the connector, then go to Step 8.
5	**INSPECT REAR BODY CONTROL MODULE (RBCM) CONNECTOR CONDITION** • Disconnect the rear body control module (RBCM) connector. • Inspect the connector engagement and connection condition and inspect the terminals for damage, deformation, corrosion, or disconnection. • Is the connector normal?	Yes	Go to the next step.
		No	Repair or replace the connector, then go to Step 8.

ON-BOARD DIAGNOSTIC [REAR BODY CONTROL MODULE (RBCM)]

Step	Inspection		Action
6	**INSPECT FRONT DOOR LOCK-LINK SWITCH (DRIVER'S SIDE) CIRCUIT FOR SHORT TO GROUND** • Verify that the rear body control module (RBCM) connector, start stop unit connector, and front door latch and lock actuator (driver's side) connector are disconnected. • Inspect for continuity between the following terminals (vehicle wiring harness side) and body ground. — L.H.D.: • Front door latch and lock actuator (LH) terminal D — R.H.D.: • Front door latch and lock actuator (RH) terminal J • Is there continuity?	Yes	Repair or replace the wiring harness which is shorted to ground, then go to Step 8.
		No	Go to the next step.
7	**INSPECT START STOP UNIT** • Inspect the start stop unit. (See 09-14-56 START STOP UNIT INSPECTION.) • Is the start stop unit normal?	Yes	Go to the next step.
		No	Replace the start stop unit, then go to the next step. (See 09-14-54 START STOP UNIT REMOVAL/INSTALLATION.)
8	**VERIFY THAT REPAIRS HAVE BEEN COMPLETED** • Reconnect all the disconnected connectors. • Reconnect the disconnected negative battery cable. (See 01-17A-11 NEGATIVE BATTERY CABLE DISCONNECTION/CONNECTION [SKYACTIV-G 2.0].) (See 01-17A-13 NEGATIVE BATTERY CABLE DISCONNECTION/CONNECTION [SKYACTIV-G 2.0 (WITHOUT i-stop)].) (See 01-17B-9 NEGATIVE BATTERY CABLE DISCONNECTION/CONNECTION [SKYACTIV-D 2.2].) • Clear rear body control module (RBCM) DTCs using the M-MDS. (See 09-02L-11 CLEARING DTC [REAR BODY CONTROL MODULE (RBCM)].) • Perform the DTC inspection for the rear body control module (RBCM) using the M-MDS. (See 09-02L-9 DTC INSPECTION [REAR BODY CONTROL MODULE (RBCM)].) • Is DTC B126A:11 displayed?	Yes	Repeat the inspection from Step 1. • If the malfunction recurs, replace the rear body control module (RBCM), then go to the next step. (See 09-40-9 REAR BODY CONTROL MODULE (RBCM) REMOVAL/INSTALLATION.)
		No	Go to the next step.
9	**VERIFY IF OTHER DTCs DISPLAYED** • Are any other DTCs displayed?	Yes	Repair the malfunctioning part according to the applicable DTC troubleshooting. (See 09-02L-12 DTC TABLE [REAR BODY CONTROL MODULE (RBCM)].)
		No	DTC troubleshooting completed.

ON-BOARD DIAGNOSTIC [REAR BODY CONTROL MODULE (RBCM)]

DTC B126A:13 [REAR BODY CONTROL MODULE (RBCM)]

id0902p4014900

System malfunction location	**Front door lock-link switch (driver's side) lock circuit malfunction**
Detection condition	• Rear body control module (RBCM) detects open circuit in front door lock-link switch (driver's side) lock side circuit with front door lock-link switch (driver's side) locked.
Fail-safe	—
Possible cause	• Front door latch and lock actuator (driver's side) connector or terminal malfunction • Open circuit in wiring harness between the following terminals: — L.H.D.: • Front door latch and lock actuator (LH) terminal J and body ground — R.H.D.: • Front door latch and lock actuator (RH) terminal D and body ground • Front door lock-link switch (driver's side) malfunction • Rear body control module (RBCM) connector or terminal malfunction • Open circuit in wiring harness between the following terminals: — L.H.D.: • Rear body control module (RBCM) terminal 3O and front door latch and lock actuator (LH) terminal D — R.H.D.: • Rear body control module (RBCM) terminal 3O and front door latch and lock actuator (RH) terminal J • Rear body control module (RBCM) malfunction

L.H.D.

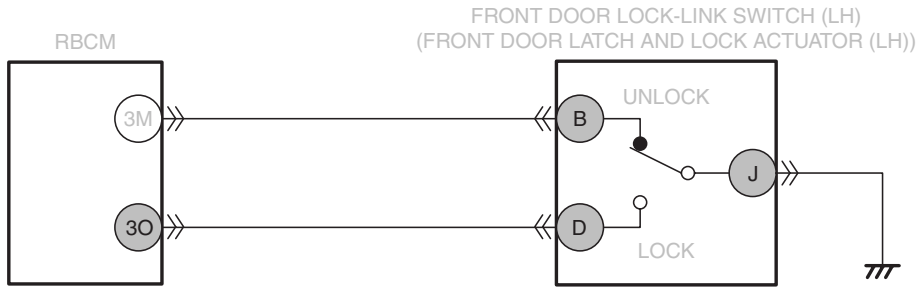

R.H.D.

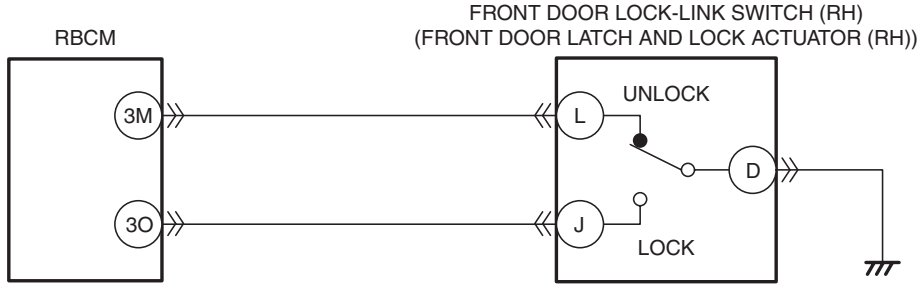

RBCM
WIRING HARNESS-SIDE CONNECTOR

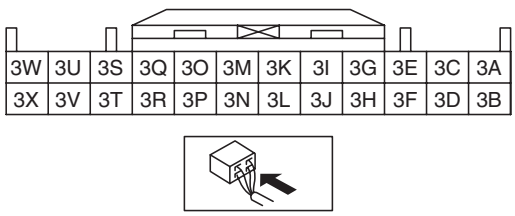

FRONT DOOR LATCH AND LOCK ACTUATOR (LH)/(RH)
WIRING HARNESS-SIDE CONNECTOR

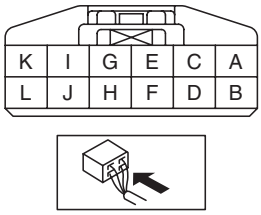

ON-BOARD DIAGNOSTIC [REAR BODY CONTROL MODULE (RBCM)]

Diagnostic Procedure

Step	Inspection		Action
1	**VERIFY REAR BODY CONTROL MODULE (RBCM) DTCs AGAIN** • Clear rear body control module (RBCM) DTCs using the M-MDS. (See 09-02L-11 CLEARING DTC [REAR BODY CONTROL MODULE (RBCM)].) • Perform the DTC inspection for the rear body control module (RBCM) using the M-MDS. (See 09-02L-9 DTC INSPECTION [REAR BODY CONTROL MODULE (RBCM)].) • Lock the front door lock-link switch (driver's side). • Is DTC B126A:13 displayed?	Yes	Go to the next step.
		No	Go to Step 8.
2	**INSPECT FRONT DOOR LATCH AND LOCK ACTUATOR (DRIVER'S DOOR) CONNECTOR** • Switch the ignition to off. • Disconnect the negative battery cable. (See 01-17A-11 NEGATIVE BATTERY CABLE DISCONNECTION/CONNECTION [SKYACTIV-G 2.0].) (See 01-17A-13 NEGATIVE BATTERY CABLE DISCONNECTION/CONNECTION [SKYACTIV-G 2.0 (WITHOUT i-stop)].) (See 01-17B-9 NEGATIVE BATTERY CABLE DISCONNECTION/CONNECTION [SKYACTIV-D 2.2].) • Disconnect the front door latch and lock actuator (driver's side) connector. • Inspect the connector engagement and connection condition and inspect the terminals for damage, deformation, corrosion, or disconnection. • Is the connector normal?	Yes	Go to the next step.
		No	Repair or replace the connector, then go to Step 7.
3	**INSPECT FOR OPEN CIRCUIT IN FRONT DOOR LOCK-LINK SWITCH (DRIVER'S SIDE) GROUND CIRCUIT** • Verify that the front door latch and lock actuator (driver's side) connector is disconnected. • Inspect the wiring harness between the following terminals (vehicle wiring harness side) for continuity. — L.H.D.: • Front door latch and lock actuator (LH) terminal J and body ground — R.H.D.: • Front door latch and lock actuator (RH) terminal D and body ground • Is there continuity?	Yes	Go to the next step.
		No	Repair or replace the wiring harness which has an open circuit, then go to Step 7.
4	**INSPECT FRONT DOOR LOCK-LINK SWITCH (DRIVER'S DOOR)** • Inspect the front door lock-link switch (driver's door). (See 09-14-41 DOOR LOCK-LINK SWITCH INSPECTION.) • Is the front door lock-link switch (driver's door) normal?	Yes	Go to the next step.
		No	Replace the front door latch and lock actuator (driver's side), then go to Step 7. (See 09-14-36 FRONT DOOR LATCH AND LOCK ACTUATOR REMOVAL/INSTALLATION.)
5	**INSPECT REAR BODY CONTROL MODULE (RBCM) CONNECTOR CONDITION** • Disconnect the rear body control module (RBCM) connector. • Inspect the connector engagement and connection condition and inspect the terminals for damage, deformation, corrosion, or disconnection. • Is the connector normal?	Yes	Go to the next step.
		No	Repair or replace the connector, then go to Step 7.

ON-BOARD DIAGNOSTIC [REAR BODY CONTROL MODULE (RBCM)]

Step	Inspection		Action
6	**INSPECT FOR OPEN CIRCUIT IN FRONT DOOR LOCK-LINK SWITCH (DRIVER'S SIDE) CIRCUIT** • Verify that the rear body control module (RBCM) connector and front door latch and lock actuator (driver's side) connector are disconnected. • Inspect the wiring harness between the following terminals (vehicle wiring harness side) for continuity. — L.H.D.: • Rear body control module (RBCM) terminal 3O and front door latch and lock actuator (LH) terminal D — R.H.D.: • Rear body control module (RBCM) terminal 3O and front door latch and lock actuator (RH) terminal J • Is there continuity?	Yes	Go to the next step.
		No	Repair or replace the wiring harness which has an open circuit, then go to the next step.
7	**VERIFY THAT REPAIRS HAVE BEEN COMPLETED** • Reconnect all the disconnected connectors. • Reconnect the disconnected negative battery cable. (See 01-17A-11 NEGATIVE BATTERY CABLE DISCONNECTION/CONNECTION [SKYACTIV-G 2.0].) (See 01-17A-13 NEGATIVE BATTERY CABLE DISCONNECTION/CONNECTION [SKYACTIV-G 2.0 (WITHOUT i-stop)].) (See 01-17B-9 NEGATIVE BATTERY CABLE DISCONNECTION/CONNECTION [SKYACTIV-D 2.2].) • Clear rear body control module (RBCM) DTCs using the M-MDS. (See 09-02L-11 CLEARING DTC [REAR BODY CONTROL MODULE (RBCM)].) • Lock the front door lock-link switch (driver's side). • Perform the DTC inspection for the rear body control module (RBCM) using the M-MDS. (See 09-02L-9 DTC INSPECTION [REAR BODY CONTROL MODULE (RBCM)].) • Is DTC B126A:13 displayed?	Yes	Repeat the inspection from Step 1. • If the malfunction recurs, replace the rear body control module (RBCM), then go to the next step. (See 09-40-9 REAR BODY CONTROL MODULE (RBCM) REMOVAL/INSTALLATION.)
		No	Go to the next step.
8	**VERIFY IF OTHER DTCs DISPLAYED** • Are any other DTCs displayed?	Yes	Repair the malfunctioning part according to the applicable DTC troubleshooting. (See 09-02L-12 DTC TABLE [REAR BODY CONTROL MODULE (RBCM)].)
		No	DTC troubleshooting completed.

ON-BOARD DIAGNOSTIC [REAR BODY CONTROL MODULE (RBCM)]

DTC B1A79:13 [REAR BODY CONTROL MODULE (RBCM)]

id0902p4015000

System malfunction location	**Rear fog light circuit malfunction**
Detection condition	• Rear body control module (RBCM) detects open circuit in rear fog light circuit.
Fail-safe	—
Possible cause	• Rear fog light connector or terminal malfunction • Rear fog light bulb malfunction • Open circuit in wiring harness between rear fog light terminal B and body ground • Rear body control module (RBCM) connector or terminal malfunction • Open circuit in wiring harness between rear body control module (RBCM) terminal 4Q and rear fog light terminal A • Rear body control module (RBCM) malfunction

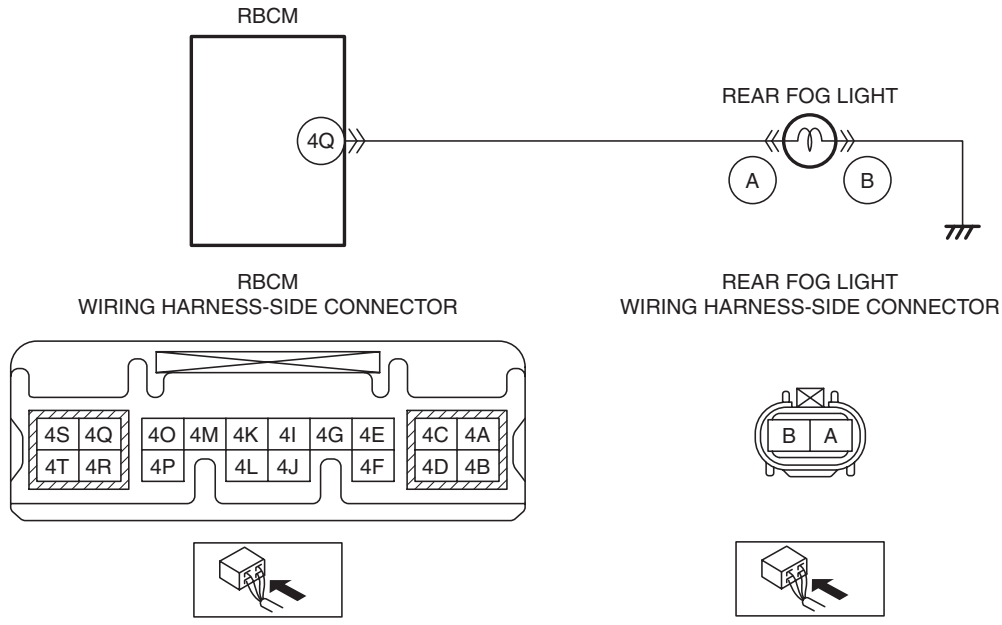

ON-BOARD DIAGNOSTIC [REAR BODY CONTROL MODULE (RBCM)]

Diagnostic Procedure

Step	Inspection		Action
1	**VERIFY REAR BODY CONTROL MODULE (RBCM) DTCs AGAIN** • Clear rear body control module (RBCM) DTCs using the M-MDS. (See 09-02L-11 CLEARING DTC [REAR BODY CONTROL MODULE (RBCM)].) • Perform the DTC inspection for the rear body control module (RBCM) using the M-MDS. (See 09-02L-9 DTC INSPECTION [REAR BODY CONTROL MODULE (RBCM)].) • Is DTC B1A79:13 displayed?	Yes	Go to the next step.
		No	Go to Step 8.
2	**INSPECT REAR FOG LIGHT CONNECTOR** • Switch the ignition to off. • Disconnect the negative battery cable. (See 01-17A-11 NEGATIVE BATTERY CABLE DISCONNECTION/CONNECTION [SKYACTIV-G 2.0].) (See 01-17A-13 NEGATIVE BATTERY CABLE DISCONNECTION/CONNECTION [SKYACTIV-G 2.0 (WITHOUT i-stop)].) (See 01-17B-9 NEGATIVE BATTERY CABLE DISCONNECTION/CONNECTION [SKYACTIV-D 2.2].) • Disconnect the rear fog light connector. • Inspect the connector engagement and connection condition and inspect the terminals for damage, deformation, corrosion, or disconnection. • Is the connector normal?	Yes	Go to the next step.
		No	Repair or replace the connector, then go to Step 7.
3	**REAR FOG LIGHT BULB INSPECTION** • Inspect the rear fog light bulb. • Is the rear fog light bulb normal?	Yes	Go to the next step.
		No	Replace the rear fog light bulb, then go to Step 7. (See 09-18-74 REAR FOG LIGHT BULB REMOVAL/INSTALLATION.)
4	**INSPECT REAR FOG LIGHT GROUND CIRCUIT FOR OPEN CIRCUIT** • Verify that the rear fog light connector is disconnected. • Inspect for continuity between rear fog light terminal B (vehicle wiring harness side) and body ground. • Is there continuity?	Yes	Go to the next step.
		No	Repair or replace the wiring harness which has an open circuit, then go to Step 7.
5	**INSPECT REAR BODY CONTROL MODULE (RBCM) CONNECTOR CONDITION** • Disconnect the rear body control module (RBCM) connector. • Inspect the connector engagement and connection condition and inspect the terminals for damage, deformation, corrosion, or disconnection. • Is the connector normal?	Yes	Go to the next step.
		No	Repair or replace the connector, then go to Step 7.
6	**INSPECT REAR FOG LIGHT CIRCUIT FOR OPEN CIRCUIT** • Verify that the rear body control module (RBCM) connector and rear fog light connector are disconnected. • Inspect the wiring harness for an open circuit between rear body control module (RBCM) terminal 4Q (vehicle wiring harness side) and rear fog light terminal A (vehicle wiring harness side). • Is there continuity?	Yes	Go to the next step.
		No	Repair or replace the wiring harness which has an open circuit, then go to the next step.

ON-BOARD DIAGNOSTIC [REAR BODY CONTROL MODULE (RBCM)]

Step	Inspection		Action
7	**VERIFY THAT REPAIRS HAVE BEEN COMPLETED** • Reconnect all the disconnected connectors. • Reconnect the disconnected negative battery cable. (See 01-17A-11 NEGATIVE BATTERY CABLE DISCONNECTION/CONNECTION [SKYACTIV-G 2.0].) (See 01-17A-13 NEGATIVE BATTERY CABLE DISCONNECTION/CONNECTION [SKYACTIV-G 2.0 (WITHOUT i-stop)].) (See 01-17B-9 NEGATIVE BATTERY CABLE DISCONNECTION/CONNECTION [SKYACTIV-D 2.2].) • Clear rear body control module (RBCM) DTCs using the M-MDS. (See 09-02L-11 CLEARING DTC [REAR BODY CONTROL MODULE (RBCM)].) • Perform the DTC inspection for the rear body control module (RBCM) using the M-MDS. (See 09-02L-9 DTC INSPECTION [REAR BODY CONTROL MODULE (RBCM)].) • Is DTC B1A79:13 displayed?	Yes	Repeat the inspection from Step 1. • If the malfunction recurs, replace the rear body control module (RBCM), then go to the next step. (See 09-40-9 REAR BODY CONTROL MODULE (RBCM) REMOVAL/INSTALLATION.)
		No	Go to the next step.
8	**VERIFY IF OTHER DTCs DISPLAYED** • Are any other DTCs displayed?	Yes	Repair the malfunctioning part according to the applicable DTC troubleshooting. (See 09-02L-12 DTC TABLE [REAR BODY CONTROL MODULE (RBCM)].)
		No	DTC troubleshooting completed.

ON-BOARD DIAGNOSTIC [REAR BODY CONTROL MODULE (RBCM)]

DTC C0023:14 [REAR BODY CONTROL MODULE (RBCM)]

id0902p4015100

System malfunction location	**Rear body control module (RBCM) internal malfunction (brake light drive circuit)**
Detection condition	• Rear body control module (RBCM) detects open circuit in brake light circuit.
Fail-safe	—
Possible cause	• DTCs are stored in the PCM. • Laser sensor stores DTCs. • Brake light relay malfunction • Short to ground or open circuit in brake light relay power supply circuit — Short to ground in wiring harness between battery positive terminal and brake light relay terminal E — Short to ground in wiring harness between battery positive terminal and brake light relay terminal C — MAIN 200 A fuse malfunction — STOP 10 A fuse malfunction — Open circuit in wiring harness between battery positive terminal and brake light relay terminal E — Open circuit in wiring harness between battery positive terminal and brake light relay terminal C • Brake light (LH) connector or terminal malfunction • Brake light bulb (LH) malfunction • Open circuit in wiring harness between brake light (LH) terminal C and body ground • Brake light (RH) connector or terminal malfunction • Brake light bulb (RH) malfunction • Open circuit in wiring harness between brake light (RH) terminal C and body ground • High-mount brake light connector or terminal malfunction • Open circuit in wiring harness between high-mount brake light terminal B and body ground • Rear body control module (RBCM) connector or terminal malfunction • Short to ground in wiring harness between the following terminals: — Brake light relay terminal A and rear body control module (RBCM) terminal 2H — Rear body control module (RBCM) terminal 4D and brake light (LH) terminal B — Rear body control module (RBCM) terminal 4D and brake light (RH) terminal B — Rear body control module (RBCM) terminal 4D and high-mount brake light terminal A • Short to power supply in wiring harness between the following terminals: — Brake light relay terminal A and rear body control module (RBCM) terminal 2H — Rear body control module (RBCM) terminal 4D and brake light (LH) terminal B — Rear body control module (RBCM) terminal 4D and brake light (RH) terminal B — Rear body control module (RBCM) terminal 4D and high-mount brake light terminal A • Open circuit in wiring harness between the following terminals: — Brake light relay terminal A and rear body control module (RBCM) terminal 2H — Brake light relay terminal D and rear body control module (RBCM) terminal 4D — Rear body control module (RBCM) terminal 4D and brake light (LH) terminal B — Rear body control module (RBCM) terminal 4D and brake light (RH) terminal B — Rear body control module (RBCM) terminal 4D and high-mount brake light terminal A • High-mount brake light malfunction • Rear body control module (RBCM) malfunction

ON-BOARD DIAGNOSTIC [REAR BODY CONTROL MODULE (RBCM)]

System malfunction location	Rear body control module (RBCM) internal malfunction (brake light drive circuit)

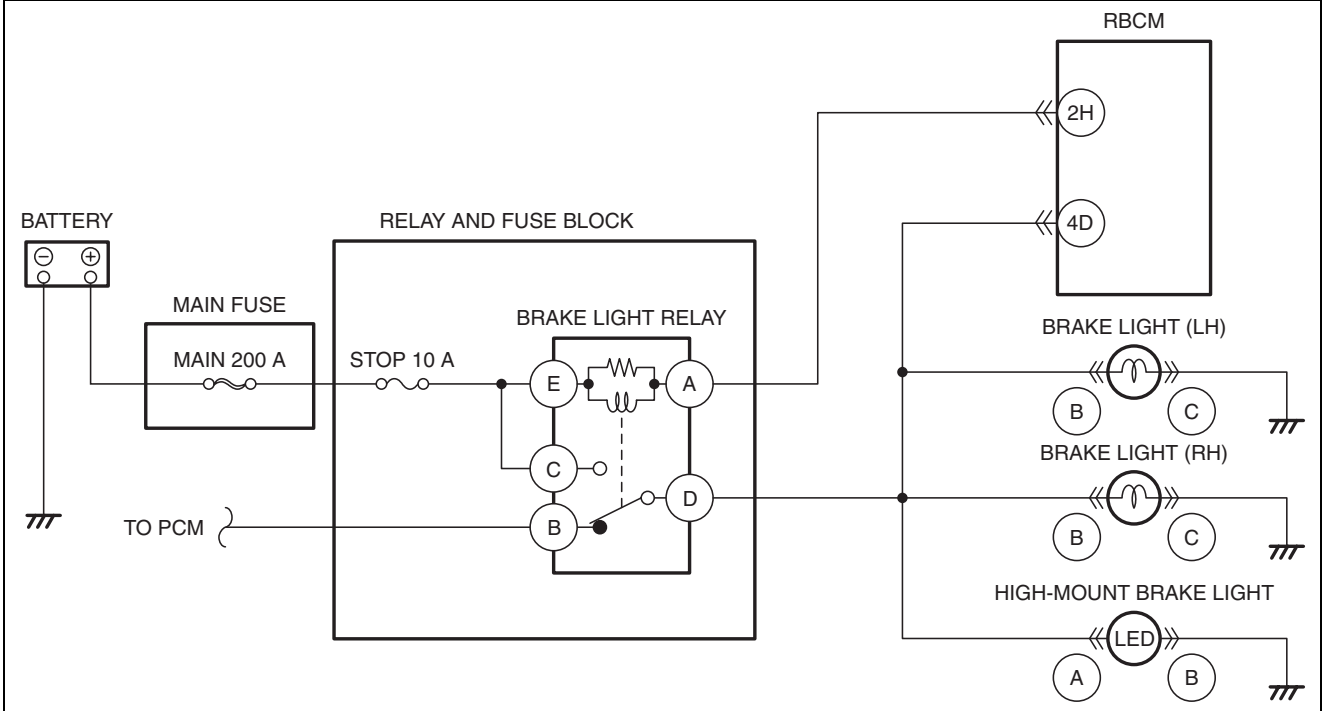

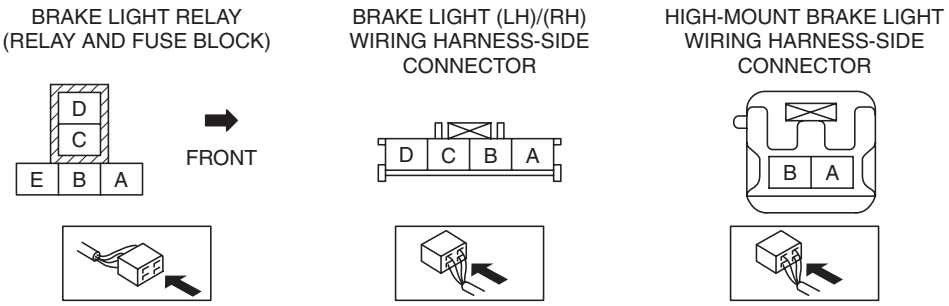

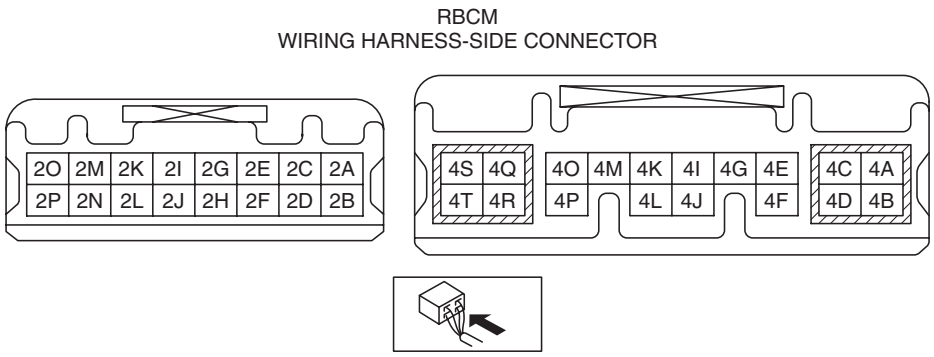

ON-BOARD DIAGNOSTIC [REAR BODY CONTROL MODULE (RBCM)]

Diagnostic Procedure

Step	Inspection		Action
1	**VERIFY REAR BODY CONTROL MODULE (RBCM) DTCs AGAIN** • Clear rear body control module (RBCM) DTCs using the M-MDS. (See 09-02L-11 CLEARING DTC [REAR BODY CONTROL MODULE (RBCM)].) • Perform the DTC inspection for the rear body control module (RBCM) using the M-MDS. (See 09-02L-9 DTC INSPECTION [REAR BODY CONTROL MODULE (RBCM)].) • Is DTC C0023:14 displayed?	Yes	Go to the next step.
		No	Go to Step 20.
2	**VERIFY PCM DTCs** • Perform the DTC inspection for the PCM using the M-MDS. (See 01-02-8 ON-BOARD DIAGNOSTIC TEST [SKYACTIV-G 2.0].) • Is the DTC displayed?	Yes	Repair the malfunctioning part according to the applicable DTC troubleshooting. (See 01-02-14 DTC TABLE [SKYACTIV-G 2.0].)
		No	Go to the next step.
3	**VERIFY LASER SENSOR DTCs** • Perform the DTC inspection for the laser sensor using the M-MDS. (See 04-02B-6 ON-BOARD DIAGNOSIS [LASER SENSOR].) • Is the DTC displayed?	Yes	Repair the malfunctioning part according to the applicable DTC troubleshooting. (See 04-02B-6 ON-BOARD DIAGNOSIS [LASER SENSOR].)
		No	Go to the next step.
4	**INSPECT BRAKE LIGHT RELAY FOR MALFUNCTION** • Switch the ignition to off. • Disconnect the negative battery cable. (See 01-17A-11 NEGATIVE BATTERY CABLE DISCONNECTION/CONNECTION [SKYACTIV-G 2.0].) (See 01-17A-13 NEGATIVE BATTERY CABLE DISCONNECTION/CONNECTION [SKYACTIV-G 2.0 (WITHOUT i-stop)].) (See 01-17B-9 NEGATIVE BATTERY CABLE DISCONNECTION/CONNECTION [SKYACTIV-D 2.2].) • Remove the brake light relay. (See 09-21-28 RELAY LOCATION.) • Inspect the brake light relay. (See 09-21-29 RELAY INSPECTION.) • Is the brake light relay normal?	Yes	Go to the next step.
		No	Replace the brake light relay, then go to Step 19. (See 09-21-28 RELAY LOCATION.)
5	**INSPECT BRAKE LIGHT RELAY POWER SUPPLY CIRCUIT FOR OPEN CIRCUIT OR SHORT TO GROUND** • Verify that the brake light relay is removed. • Connect the negative battery cable. (See 01-17A-11 NEGATIVE BATTERY CABLE DISCONNECTION/CONNECTION [SKYACTIV-G 2.0].) (See 01-17A-13 NEGATIVE BATTERY CABLE DISCONNECTION/CONNECTION [SKYACTIV-G 2.0 (WITHOUT i-stop)].) (See 01-17B-9 NEGATIVE BATTERY CABLE DISCONNECTION/CONNECTION [SKYACTIV-D 2.2].) • Switch the ignition ON (engine off or on). • Measure the voltage at the following terminals (vehicle wiring harness side). — Brake light relay terminal E — Brake light relay terminal C • Is the voltage **B+**?	Yes	Install the brake light relay, then go to the next step.
		No	Inspect the MAIN 200 A fuse and STOP 10 A fuse. • If a fuse is burnt out: — Repair or replace the wiring harness which is shorted to ground. — Replace the burnt out fuse. • If a fuse is damaged: — Replace the damaged fuse. • All fuses are normal: — Repair or replace the wiring harness which has an open circuit. Go to Step 19.

ON-BOARD DIAGNOSTIC [REAR BODY CONTROL MODULE (RBCM)]

Step	Inspection		Action
6	**INSPECT BRAKE LIGHT (LH) CONNECTOR** • Switch the ignition to off. • Disconnect the negative battery cable. (See 01-17A-11 NEGATIVE BATTERY CABLE DISCONNECTION/CONNECTION [SKYACTIV-G 2.0].) (See 01-17A-13 NEGATIVE BATTERY CABLE DISCONNECTION/CONNECTION [SKYACTIV-G 2.0 (WITHOUT i-stop)].) (See 01-17B-9 NEGATIVE BATTERY CABLE DISCONNECTION/CONNECTION [SKYACTIV-D 2.2].) • Disconnect the brake light (LH) connector. • Inspect the connector engagement and connection condition and inspect the terminals for damage, deformation, corrosion, or disconnection. • Is the connector normal?	Yes	Go to the next step.
		No	Repair or replace the connector, then go to Step 19.
7	**INSPECT BRAKE LIGHT BULB (LH)** • Inspect the brake light bulb (LH). • Is the brake light bulb (LH) normal?	Yes	Go to the next step.
		No	Replace the brake/taillight bulb (LH), then go to Step 19. (See 09-18-59 BRAKE/TAILLIGHT BULB REMOVAL/INSTALLATION.)
8	**INSPECT BRAKE LIGHT (LH) GROUND CIRCUIT FOR OPEN CIRCUIT** • Verify that the brake light (LH) connector is disconnected. • Inspect for continuity between brake light (LH) terminal C (vehicle wiring harness side) and body ground. • Is there continuity?	Yes	Go to the next step.
		No	Repair or replace the wiring harness and go to Step 19.
9	**INSPECT BRAKE LIGHT (RH) CONNECTOR** • Disconnect the brake light (RH) connector. • Inspect the connector engagement and connection condition and inspect the terminals for damage, deformation, corrosion, or disconnection. • Is the connector normal?	Yes	Go to the next step.
		No	Repair or replace the connector, then go to Step 19.
10	**INSPECT BRAKE LIGHT BULB (RH)** • Inspect the brake light bulb (RH). • Is the brake light bulb (RH) normal?	Yes	Go to the next step.
		No	Replace the brake/taillight bulb (RH), then go to Step 19. (See 09-18-59 BRAKE/TAILLIGHT BULB REMOVAL/INSTALLATION.)
11	**INSPECT BRAKE LIGHT (RH) GROUND CIRCUIT FOR OPEN CIRCUIT** • Verify that the brake light (RH) connector is disconnected. • Inspect for continuity between brake light (RH) terminal C (vehicle wiring harness side) and body ground. • Is there continuity?	Yes	Go to the next step.
		No	Repair or replace the wiring harness and go to Step 19.
12	**INSPECT HIGH-MOUNT BRAKE LIGHT CONNECTOR** • Disconnect the high-mount brake light connector. • Inspect the connector engagement and connection condition and inspect the terminals for damage, deformation, corrosion, or disconnection. • Is the connector normal?	Yes	Go to the next step.
		No	Repair or replace the connector, then go to Step 19.
13	**INSPECT HIGH-MOUNT BRAKE LIGHT GROUND CIRCUIT FOR OPEN CIRCUIT** • Verify that the high-mount brake light connector is disconnected. • Inspect for continuity between high-mount brake light terminal B (vehicle wiring harness side) and body ground. • Is there continuity?	Yes	Go to the next step.
		No	Repair or replace the wiring harness and go to Step 19.

ON-BOARD DIAGNOSTIC [REAR BODY CONTROL MODULE (RBCM)]

Step	Inspection		Action
14	**INSPECT REAR BODY CONTROL MODULE (RBCM) CONNECTOR CONDITION** • Disconnect the rear body control module (RBCM) connector. • Inspect the connector engagement and connection condition and inspect the terminals for damage, deformation, corrosion, or disconnection. • Is the connector normal?	Yes	Go to the next step.
		No	Repair or replace the connector, then go to Step 19.
15	**INSPECT BRAKE LIGHT DRIVE CIRCUIT FOR SHORT TO GROUND** • Verify that the brake light (LH)/(RH) connector, high-mount brake light connector, and rear body control module (RBCM) connector are disconnected. • Inspect for continuity between the following terminals (vehicle wiring harness side) and body ground. — Rear body control module (RBCM) terminal 2H — Brake light (LH) terminal B — Brake light (RH) terminal B — High-mount brake light terminal A • Is there continuity?	Yes	Repair or replace the wiring harness which is shorted to ground, then go to Step 19.
		No	Go to the next step.
16	**INSPECT BRAKE LIGHT DRIVE CIRCUIT FOR SHORT TO POWER SUPPLY** • Verify that the brake light (LH)/(RH) connector, high-mount brake light connector, and rear body control module (RBCM) connector are disconnected. • Connect the negative battery cable. (See 01-17A-11 NEGATIVE BATTERY CABLE DISCONNECTION/CONNECTION [SKYACTIV-G 2.0].) (See 01-17A-13 NEGATIVE BATTERY CABLE DISCONNECTION/CONNECTION [SKYACTIV-G 2.0 (WITHOUT i-stop)].) (See 01-17B-9 NEGATIVE BATTERY CABLE DISCONNECTION/CONNECTION [SKYACTIV-D 2.2].) • Switch the ignition ON (engine off or on). • Measure the voltage at the following terminals (vehicle wiring harness side). — Rear body control module (RBCM) terminal 2H — Brake light (LH) terminal B — Brake light (RH) terminal B — High-mount brake light terminal A • Is the voltage **0 V**?	Yes	Go to the next step.
		No	Repair or replace the wiring harness which is shorted to power supply, then go to Step 19.

ON-BOARD DIAGNOSTIC [REAR BODY CONTROL MODULE (RBCM)]

Step	Inspection		Action
17	**INSPECT BRAKE LIGHT DRIVE CIRCUIT FOR OPEN CIRCUIT** • Verify that the brake light (LH)/(RH) connector, high-mount brake light connector, and rear body control module (RBCM) connector are disconnected. • Switch the ignition to off. • Disconnect the negative battery cable. (See 01-17A-11 NEGATIVE BATTERY CABLE DISCONNECTION/CONNECTION [SKYACTIV-G 2.0].) (See 01-17A-13 NEGATIVE BATTERY CABLE DISCONNECTION/CONNECTION [SKYACTIV-G 2.0 (WITHOUT i-stop)].) (See 01-17B-9 NEGATIVE BATTERY CABLE DISCONNECTION/CONNECTION [SKYACTIV-D 2.2].) • Inspect the wiring harness between the following terminals (vehicle wiring harness side) for continuity. — Brake light relay terminal A and rear body control module (RBCM) terminal 2H — Brake light relay terminal D and rear body control module (RBCM) terminal 4D — Rear body control module (RBCM) terminal 4D and brake light (LH) terminal B — Rear body control module (RBCM) terminal 4D and brake light (RH) terminal B — Rear body control module (RBCM) terminal 4D and high-mount brake light terminal A • Is there continuity?	Yes	Go to the next step.
		No	Repair or replace the wiring harness which has an open circuit, then go to Step 19.
18	**PERFORM DTC INSPECTION AND VERIFY IF MALFUNCTIONING PART IS HIGH-MOUNT BRAKE LIGHT** • Reconnect all the disconnected connectors. • Reconnect the disconnected negative battery cable. (See 01-17A-11 NEGATIVE BATTERY CABLE DISCONNECTION/CONNECTION [SKYACTIV-G 2.0].) (See 01-17A-13 NEGATIVE BATTERY CABLE DISCONNECTION/CONNECTION [SKYACTIV-G 2.0 (WITHOUT i-stop)].) (See 01-17B-9 NEGATIVE BATTERY CABLE DISCONNECTION/CONNECTION [SKYACTIV-D 2.2].) • Clear rear body control module (RBCM) DTCs using the M-MDS. (See 09-02L-11 CLEARING DTC [REAR BODY CONTROL MODULE (RBCM)].) • Perform the DTC inspection for the rear body control module (RBCM) using the M-MDS. (See 09-02L-9 DTC INSPECTION [REAR BODY CONTROL MODULE (RBCM)].) • Is DTC C0023:14 displayed?	Yes	Replace the high-mount brake light, then go to the next step. (See 09-18-75 HIGH-MOUNT BRAKE LIGHT REMOVAL/INSTALLATION.)
		No	Go to Step 20.

ON-BOARD DIAGNOSTIC [REAR BODY CONTROL MODULE (RBCM)]

Step	Inspection		Action
19	**VERIFY THAT REPAIRS HAVE BEEN COMPLETED** • Reconnect all the disconnected connectors. • Reconnect the disconnected negative battery cable. (See 01-17A-11 NEGATIVE BATTERY CABLE DISCONNECTION/CONNECTION [SKYACTIV-G 2.0].) (See 01-17A-13 NEGATIVE BATTERY CABLE DISCONNECTION/CONNECTION [SKYACTIV-G 2.0 (WITHOUT i-stop)].) (See 01-17B-9 NEGATIVE BATTERY CABLE DISCONNECTION/CONNECTION [SKYACTIV-D 2.2].) • Clear rear body control module (RBCM) DTCs using the M-MDS. (See 09-02L-11 CLEARING DTC [REAR BODY CONTROL MODULE (RBCM)].) • Perform the DTC inspection for the rear body control module (RBCM) using the M-MDS. (See 09-02L-9 DTC INSPECTION [REAR BODY CONTROL MODULE (RBCM)].) • Is DTC C0023:14 displayed?	Yes	Repeat the inspection from Step 1. • If the malfunction recurs, replace the rear body control module (RBCM), then go to the next step. (See 09-40-9 REAR BODY CONTROL MODULE (RBCM) REMOVAL/INSTALLATION.)
		No	Go to the next step.
20	**VERIFY IF OTHER DTCs DISPLAYED** • Are any other DTCs displayed?	Yes	Repair the malfunctioning part according to the applicable DTC troubleshooting. (See 09-02L-12 DTC TABLE [REAR BODY CONTROL MODULE (RBCM)].)
		No	DTC troubleshooting completed.

ON-BOARD DIAGNOSTIC [REAR BODY CONTROL MODULE (RBCM)]

DTC U0010:88/U0155:00 [REAR BODY CONTROL MODULE (RBCM)]

id0902p4015200

System malfunction location	**U0010:88** • **Unit communication error (MS-CAN)** **U0155:00** • **Communication error with instrument cluster**
Detection condition	• U0010:88 — With the ignition switched ON (engine off or on), the rear body control module (RBCM) detects a CAN communication line (MS-CAN) error. • U0155:00 — The rear body control module (RBCM) cannot receive CAN signals from the instrument cluster for **5 s or more** with the ignition switched ON (engine off or on).
Fail-safe	—
Possible cause	• Malfunction in CAN bus communication line • Malfunction in CAN line between the instrument cluster and rear body control module (RBCM)
System wiring diagram	—

Diagnostic Procedure

- Perform the malfunction diagnosis according to the troubleshooting procedure for the multiplex communication system. (See 10-02A-1 FOREWORD [SKYACTIV-G 2.0 (L.H.D.)].) (See 10-02B-1 FOREWORD [SKYACTIV-G 2.0 (R.H.D.)].) (See 10-02C-1 FOREWORD [SKYACTIV-D 2.2 (L.H.D.)].) (See 10-02D-1 FOREWORD [SKYACTIV-D 2.2 (R.H.D.)].)

ON-BOARD DIAGNOSTIC [REAR BODY CONTROL MODULE (RBCM)]

DTC U0447:86 [REAR BODY CONTROL MODULE (RBCM)]

id0902p4015300

System malfunction location	**Communication error between front body control module (FBCM) and instrument cluster**
Detection condition	• The rear body control module (RBCM) receives error signals from the instrument cluster for **10 s or more continuously** with the ignition switched ON (engine off or on).
Fail-safe	—
Possible cause	• DTCs are stored in the instrument cluster. • Rear body control module (RBCM) malfunction
System wiring diagram	—

Diagnostic Procedure

Step	Inspection		Action
1	**VERIFY REAR BODY CONTROL MODULE (RBCM) DTCs AGAIN** • Clear rear body control module (RBCM) DTCs using the M-MDS. (See 09-02L-11 CLEARING DTC [REAR BODY CONTROL MODULE (RBCM)].) • Perform the DTC inspection for the rear body control module (RBCM) using the M-MDS. (See 09-02L-9 DTC INSPECTION [REAR BODY CONTROL MODULE (RBCM)].) • Is the DTC U0447:86 displayed?	Yes	Go to the next step.
		No	Go to Step 4.
2	**VERIFY INSTRUMENT CLUSTER DTCs** • Perform the DTC inspection for the instrument cluster using the M-MDS. (See 09-02G-7 DTC INSPECTION [INSTRUMENT CLUSTER].) • Is the DTC displayed?	Yes	Repair the malfunctioning part according to the applicable DTC troubleshooting. (See 09-02G-10 DTC TABLE [INSTRUMENT CLUSTER].)
		No	Go to the next step.
3	**VERIFY THAT REPAIRS HAVE BEEN COMPLETED** • Clear rear body control module (RBCM) DTCs using the M-MDS. (See 09-02L-11 CLEARING DTC [REAR BODY CONTROL MODULE (RBCM)].) • Perform the DTC inspection for the rear body control module (RBCM) using the M-MDS. (See 09-02L-9 DTC INSPECTION [REAR BODY CONTROL MODULE (RBCM)].) • Is the DTC U0447:86 displayed?	Yes	Repeat the inspection from Step 1. • If the malfunction recurs, replace the rear body control module (RBCM), then go to the next step. (See 09-40-9 REAR BODY CONTROL MODULE (RBCM) REMOVAL/INSTALLATION.)
		No	Go to the next step.
4	**VERIFY IF OTHER DTCs DISPLAYED** • Are any other DTCs displayed?	Yes	Repair the malfunctioning part according to the applicable DTC troubleshooting. (See 09-02L-12 DTC TABLE [REAR BODY CONTROL MODULE (RBCM)].)
		No	DTC troubleshooting completed.

ON-BOARD DIAGNOSTIC [REAR BODY CONTROL MODULE (RBCM)]

DTC U2100:00 [REAR BODY CONTROL MODULE (RBCM)]

id0902p4015400

System malfunction location	**Rear body control module (RBCM) configuration error**
Detection condition	• Rear body control module (RBCM) configuration error detected.
Fail-safe	—
Possible cause	• Rear body control module (RBCM) configuration error • Rear body control module (RBCM) malfunction
System wiring diagram	—

Diagnostic Procedure

Step	Inspection		Action
1	**VERIFY REAR BODY CONTROL MODULE (RBCM) DTCs AGAIN** • Clear rear body control module (RBCM) DTCs using the M-MDS. (See 09-02L-11 CLEARING DTC [REAR BODY CONTROL MODULE (RBCM)].) • Perform the DTC inspection for the rear body control module (RBCM) using the M-MDS. (See 09-02L-9 DTC INSPECTION [REAR BODY CONTROL MODULE (RBCM)].) • Is DTC U2100:00 displayed?	Yes	Go to the next step.
		No	Go to Step 4.
2	**PERFORM REAR BODY CONTROL MODULE (RBCM) CONFIGURATION (USING AS-BUILT DATA)** • Using the M-MDS, perform the rear body control module (RBCM) configuration with the As-Built data. (See 09-40-16 REAR BODY CONTROL MODULE (RBCM) CONFIGURATION (USING AS-BUILT DATA).) • Clear rear body control module (RBCM) DTCs using the M-MDS. (See 09-02L-11 CLEARING DTC [REAR BODY CONTROL MODULE (RBCM)].) • Perform the DTC inspection for the rear body control module (RBCM) using the M-MDS. (See 09-02L-9 DTC INSPECTION [REAR BODY CONTROL MODULE (RBCM)].) • Is DTC U2100:00 displayed?	Yes	Using the M-MDS, re-perform the rear body control module (RBCM) configuration using the As-Built data, then go to the next step. (See 09-40-16 REAR BODY CONTROL MODULE (RBCM) CONFIGURATION (USING AS-BUILT DATA).)
		No	Go to Step 4.
3	**VERIFY THAT REPAIRS HAVE BEEN COMPLETED** • Clear rear body control module (RBCM) DTCs using the M-MDS. (See 09-02L-11 CLEARING DTC [REAR BODY CONTROL MODULE (RBCM)].) • Perform the DTC inspection for the rear body control module (RBCM) using the M-MDS. (See 09-02L-9 DTC INSPECTION [REAR BODY CONTROL MODULE (RBCM)].) • Is DTC U2100:00 displayed?	Yes	Replace the rear body control module (RBCM), then go to the next step. (See 09-40-9 REAR BODY CONTROL MODULE (RBCM) REMOVAL/INSTALLATION.)
		No	Go to the next step.
4	**VERIFY IF OTHER DTCs DISPLAYED** • Are any other DTCs displayed?	Yes	Repair the malfunctioning part according to the applicable DTC troubleshooting. (See 09-02L-12 DTC TABLE [REAR BODY CONTROL MODULE (RBCM)].)
		No	DTC troubleshooting completed.

ON-BOARD DIAGNOSTIC [REAR BODY CONTROL MODULE (RBCM)]

DTC U3000:49 [REAR BODY CONTROL MODULE (RBCM)]

id0902p4015500

System malfunction location	**Rear body control module (RBCM) internal malfunction**
Detection condition	• Malfunction inside rear body control module (RBCM) detected.
Fail-safe	—
Possible cause	• Rear body control module (RBCM) malfunction
System wiring diagram	—

Diagnostic Procedure

Step	Inspection		Action
1	**PERFORM DTC INSPECTION AND VERIFY IF MALFUNCTIONING PART IS REAR BODY CONTROL MODULE (RBCM)** • Clear rear body control module (RBCM) DTCs using the M-MDS. (See 09-02L-11 CLEARING DTC [REAR BODY CONTROL MODULE (RBCM)].) • Perform the DTC inspection for the rear body control module (RBCM) using the M-MDS. (See 09-02L-9 DTC INSPECTION [REAR BODY CONTROL MODULE (RBCM)].) • Is DTC U3000:49 displayed?	Yes	Replace the rear body control module (RBCM), then go to the next step. (See 09-40-9 REAR BODY CONTROL MODULE (RBCM) REMOVAL/INSTALLATION.)
		No	Go to the next step.
2	**VERIFY IF OTHER DTCs DISPLAYED** • Are any other DTCs displayed?	Yes	Repair the malfunctioning part according to the applicable DTC troubleshooting. (See 09-02L-12 DTC TABLE [REAR BODY CONTROL MODULE (RBCM)].)
		No	DTC troubleshooting completed.

ON-BOARD DIAGNOSTIC [REAR BODY CONTROL MODULE (RBCM)]

DTC U3003:16 [REAR BODY CONTROL MODULE (RBCM)]

id0902p4015600

System malfunction location	**Rear body control module (RBCM) power supply voltage (+B power supply) low input**
Detection condition	• Rear body control module (RBCM) power supply circuit voltage of **5 V or more, less than 9 V** is detected for **10 s or more**.
Fail-safe	—
Possible cause	• Battery malfunction • Generator malfunction • Rear body control module (RBCM) connector or terminal malfunction • Malfunction between battery (+) terminal and rear body control module (RBCM) terminal 2P • Rear body control module (RBCM) malfunction

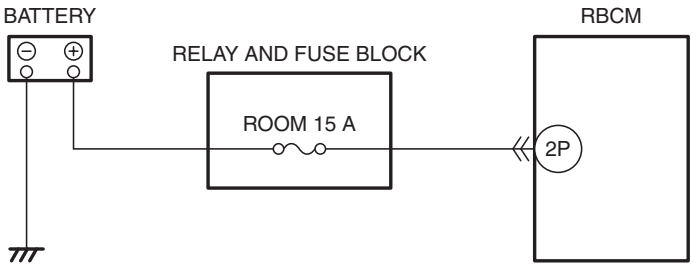

RBCM
WIRING HARNESS-SIDE CONNECTOR

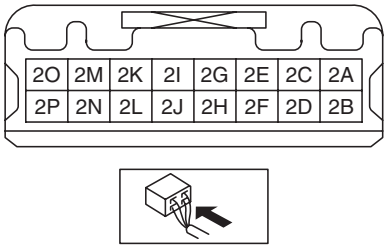

ON-BOARD DIAGNOSTIC [REAR BODY CONTROL MODULE (RBCM)]

Diagnostic Procedure

Step	Inspection		Action
1	**VERIFY REAR BODY CONTROL MODULE (RBCM) DTCs AGAIN** • Clear rear body control module (RBCM) DTCs using the M-MDS. (See 09-02L-11 CLEARING DTC [REAR BODY CONTROL MODULE (RBCM)].) • Switch the ignition ON (engine off or on) and wait for **10 s or more**. • Perform the DTC inspection for the rear body control module (RBCM) using the M-MDS. (See 09-02L-9 DTC INSPECTION [REAR BODY CONTROL MODULE (RBCM)].) • Is DTC U3003:16 displayed?	Yes	Go to the next step.
		No	Go to Step 7.
2	**INSPECT BATTERY** • Inspect the battery. (See 01-17A-7 BATTERY INSPECTION [SKYACTIV-G 2.0].) (See 01-17B-6 BATTERY INSPECTION [SKYACTIV-D 2.2].) • Is the battery normal?	Yes	Go to the next step.
		No	Recharge or replace the battery, then go to Step 6. (See 01-17A-9 BATTERY RECHARGING [SKYACTIV-G 2.0].) (See 01-17B-8 BATTERY RECHARGING [SKYACTIV-D 2.2].) (See 01-17A-3 BATTERY REMOVAL/INSTALLATION [SKYACTIV-G 2.0].) (See 01-17B-3 BATTERY REMOVAL/INSTALLATION [SKYACTIV-D 2.2].)
3	**INSPECT GENERATOR** • Inspect the generator. (See 01-17A-19 GENERATOR INSPECTION [SKYACTIV-G 2.0].) (See 01-17B-16 GENERATOR INSPECTION [SKYACTIV-D 2.2].) • Is the generator normal?	Yes	Go to the next step.
		No	Replace the generator, then go to Step 6. (See 01-17A-17 GENERATOR REMOVAL/INSTALLATION [SKYACTIV-G 2.0].) (See 01-17B-14 GENERATOR REMOVAL/INSTALLATION [SKYACTIV-D 2.2].)
4	**INSPECT REAR BODY CONTROL MODULE (RBCM) CONNECTOR CONDITION** • Switch the ignition to off. • Disconnect the negative battery cable. (See 01-17A-11 NEGATIVE BATTERY CABLE DISCONNECTION/CONNECTION [SKYACTIV-G 2.0].) (See 01-17A-13 NEGATIVE BATTERY CABLE DISCONNECTION/CONNECTION [SKYACTIV-G 2.0 (WITHOUT i-stop)].) (See 01-17B-9 NEGATIVE BATTERY CABLE DISCONNECTION/CONNECTION [SKYACTIV-D 2.2].) • Disconnect the rear body control module (RBCM) connector. • Inspect the connector engagement and connection condition and inspect the terminals for damage, deformation, corrosion, or disconnection. • Is the connector normal?	Yes	Go to the next step.
		No	Repair or replace the connector, then go to Step 6.

ON-BOARD DIAGNOSTIC [REAR BODY CONTROL MODULE (RBCM)]

Step	Inspection		Action
5	**VERIFY REAR BODY CONTROL MODULE (RBCM) POWER SUPPLY VOLTAGE** • Reconnect all the disconnected connectors. • Connect the negative battery cable. (See 01-17A-11 NEGATIVE BATTERY CABLE DISCONNECTION/CONNECTION [SKYACTIV-G 2.0].) (See 01-17A-13 NEGATIVE BATTERY CABLE DISCONNECTION/CONNECTION [SKYACTIV-G 2.0 (WITHOUT i-stop)].) (See 01-17B-9 NEGATIVE BATTERY CABLE DISCONNECTION/CONNECTION [SKYACTIV-D 2.2].) • Display PID VPWR_B_R using the M-MDS. (See 09-02L-93 PID/DATA MONITOR INSPECTION [REAR BODY CONTROL MODULE (RBCM)].) • Is the voltage **5 V or more, 9 V or less**?	Yes	Go to the next step.
		No	Inspect wiring harness between battery (+) and rear body control module (RBCM) terminal 2P (vehicle wiring harness side). • If there is any malfunction: — If there is a malfunction, repair or replace the wiring harness, then go to the next step. • If there is no malfunction: — Go to the next step.
6	**VERIFY THAT REPAIRS HAVE BEEN COMPLETED** • Reconnect all the disconnected connectors. • Reconnect the disconnected negative battery cable. (See 01-17A-11 NEGATIVE BATTERY CABLE DISCONNECTION/CONNECTION [SKYACTIV-G 2.0].) (See 01-17A-13 NEGATIVE BATTERY CABLE DISCONNECTION/CONNECTION [SKYACTIV-G 2.0 (WITHOUT i-stop)].) (See 01-17B-9 NEGATIVE BATTERY CABLE DISCONNECTION/CONNECTION [SKYACTIV-D 2.2].) • Clear rear body control module (RBCM) DTCs using the M-MDS. (See 09-02L-11 CLEARING DTC [REAR BODY CONTROL MODULE (RBCM)].) • Switch the ignition ON (engine off or on) and wait for **10 s or more**. • Perform the DTC inspection for the rear body control module (RBCM) using the M-MDS. (See 09-02L-9 DTC INSPECTION [REAR BODY CONTROL MODULE (RBCM)].) • Is DTC U3003:16 displayed?	Yes	Repeat the inspection from Step 1. • If the malfunction recurs, replace the rear body control module (RBCM), then go to the next step. (See 09-40-9 REAR BODY CONTROL MODULE (RBCM) REMOVAL/INSTALLATION.)
		No	Go to the next step.
7	**VERIFY IF OTHER DTCs DISPLAYED** • Are any other DTCs displayed?	Yes	Repair the malfunctioning part according to the applicable DTC troubleshooting. (See 09-02L-12 DTC TABLE [REAR BODY CONTROL MODULE (RBCM)].)
		No	DTC troubleshooting completed.

ON-BOARD DIAGNOSTIC [REAR BODY CONTROL MODULE (RBCM)]

PID/DATA MONITOR INSPECTION [REAR BODY CONTROL MODULE (RBCM)]

id0902p4015700

1. Connect the M-MDS to the DLC-2.
2. After the vehicle is identified, select the following items from the initialization screen of the M-MDS.
   (1) Select “DataLogger”.
   (2) Select “Modules”.
   (3) Select “R_BCM”.
3. Select the applicable PID from the PID table.
4. Verify the PID data according to the directions on the screen.

Note

- The PID data screen function is used for monitoring the calculated value of input/output signals in the module. Therefore, if the monitored value of the output parts is not within the specification, it is necessary to inspect the monitored value of input parts corresponding to the applicable output part control. In addition, because the system does not display an output part malfunction as an abnormality in the monitored value, it is necessary to inspect the output parts individually.
- When detecting DTCs, PIDs related to a malfunctioning system may not display even if the module is normal. Therefore, if a PID is not displayed, it is necessary to verify the DTC, perform malfunction diagnosis of the DTC that was detected, and do repairs.

ON-BOARD DIAGNOSTIC [REAR BODY CONTROL MODULE (RBCM)]

PID/DATA MONITOR TABLE [REAR BODY CONTROL MODULE (RBCM)]

id0902p4015800

—: Not applicable

PID	Unit/ Operation	Data contents	Inspection item(s)
AT_DL_IG	Off/On	• Off: Door lock actuator does not operate to unlock in conjunction with ignition off. • On: Door lock actuator operates to unlock in conjunction with ignition off.	Door lock actuator
AT_DL_SHIFT	Off/On	• Off: Door lock actuator does not operate to lock or unlock in conjunction with shifting. • On: Door lock actuator does not operate to lock or unlock in conjunction with shifting.	Door lock actuator
AT_DL_VSPD	Off/On	• Off: Door lock actuator does not operate to lock in conjunction with vehicle speed. • On: Door lock actuator operates to lock in conjunction with vehicle speed.	Door lock actuator
BG_HORN_RLY*1	Off/On	• Off: Theft-deterrent horn relay is off. • On: Theft-deterrent horn relay is on.	• Theft-deterrent horn relay • Rear body control module (RBCM)
BRAKE_SW*2	Off/On	• Off: Brake switch (No. 1 signal) is off (brake pedal is not depressed). • On: Brake switch (No. 1 signal) is on (brake pedal is depressed).	Brake switch
C_DL_SW_LK*3	Off/On	• Off: Door lock switch is not in lock. • On: Door lock switch is in lock.	Door lock switch
C_DL_SW_UNL*3	Off/On	• Off: Door lock switch is not in unlock. • On: Door lock switch is in unlock.	Door lock switch
CNT_S_COMM	—	Count number of serial communication signal received from start stop unit is displayed. **Note** • Display returns to 0 if the number of times exceeds 15.	Start stop unit
DL_MT_A_LK	Off/On	• Off: All door lock actuators are not operated to lock. • On: All door lock actuators are operated to lock.	Door lock actuator
DL_MT_A_UNL	Off/On	• Off: All door lock actuators are not operated to unlock. • On: All door lock actuators are operated to unlock.	Door lock actuator
DL_MT_D_UNL*4	Off/On	• Off: Front door lock actuator (driver's side) is not operated to unlock. • On: Front door lock actuator (driver's side) is operated to unlock.	Front door lock actuator (driver's side)
DL_MT_S-LK*5	Off/On	• Off: Double locking system is not operated. • On: Double locking system is operated.	Door lock actuator
DOOR_ALL	Close/ OPEN	• Close: All doors are closed. • OPEN: Any door is open.	Door latch switch
DOOR_D	Close/ OPEN	• Close: Driver's door is closed. • OPEN: Driver's door is open.	Front door latch switch (driver's door)
ELAT_MT_RLY	Off/On	• Off: Liftgate latch is not operated to unlock. • Off: Liftgate latch is operated to unlock.	Liftgate latch and lock actuator
ELAT_UNL	Off/On	• Off: Liftgate latch is not operated to unlock. • Off: Liftgate latch is operated to unlock.	Liftgate latch and lock actuator
FUEL_SEN_M	V	Fuel gauge sender unit input voltage is displayed.	Fuel gauge sender unit
FUEL_SEN_S*6	V	Fuel gauge sender unit (SUB) input voltage is displayed.	Fuel gauge sender unit (SUB)
FUEL_SEN_SV	V	Fuel gauge sender unit power supply voltage is displayed.	• Fuel gauge sender unit • Fuel gauge sender unit (SUB)
HOOD*7	Close/ OPEN	• Close: Bonnet is closed. • OPEN: Bonnet is open.	Bonnet latch switch
IG1_SW	Off/On	• Off: IG1 relay is off. • On: IG1 relay is on.	IG1 relay
KC_SW_D_LK	Off/On	• Off: Front door key cylinder switch is not in lock. • On: Front door key cylinder switch is in lock.	Front door key cylinder switch

ON-BOARD DIAGNOSTIC [REAR BODY CONTROL MODULE (RBCM)]

PID	Unit/ Operation	Data contents	Inspection item(s)
KC_SW_D_UNL	Off/On	• Off: Front door key cylinder switch is not in unlock. • On: Front door key cylinder switch is in unlock.	Front door key cylinder switch
LL_P/R*7	Unlock/ Other	• Unlock: Front door lock-link switch (passenger's side), rear door lock-link switch (LH), rear door lock-link switch (RH) are in unlock. • Other: Front door lock-link switch (passenger's side), rear door lock-link switch (LH), rear door lock-link switch (RH) are in lock.	• Front door lock-link switch (passenger's door) • Rear door lock-link switch (LH) • Rear door lock-link switch (RH)
LL_SW_D_LK	Off/On	• Off: Front door lock-link switch (driver's side) is in unlock. • On: Front door lock-link switch (driver's side) is in lock.	Front door lock-link switch (driver's door)
LL_SW_D_UNL	Off/On	• Off: Front door lock-link switch (driver's side) is in lock. • On: Front door lock-link switch (driver's side) is in unlock.	Front door lock-link switch (driver's door)
R_FOG_L_CS*8	Off/On	• Off: Rear fog light on signal is not received. • On: Rear fog light on signal is received.	Front body control module (FBCM)
R_FOG_LMP*8	Off/On	• Off: Rear fog light is turned off. • On: Rear fog light is turned on.	Rear fog light
R_LMP	Off/On	• Off: Back-up light is turned off. • On: Back-up light is turned on.	Back-up light
R_LMP_CS	Off/On/ Unknown/ Fault	• Off: Back-up light off signal is received. • On: Back-up light on signal is received. • Unknown: Back-up light off signal not determined • Fault: Communication with instrument cluster is failed.	• Instrument cluster • Back-up light
R_WIP_MT_LO	Off/On	• Off: Rear wiper motor is not operated. • On: Rear wiper motor is operated.	Rear wiper motor
ROOM_LMP	Off/On	• Off: Map light is turned off. • On: Map light is turned on.	• Front map light • Rear map light
SEAT_B_2C*9	Unbuckled/ Buckled	• Unbuckled: Second-row center seat belt is not fastened. • Buckled: Second-row center seat belt is fastened.	Rear center buckle switch
SEAT_B_2L*9	Unbuckled/ Buckled	• Unbuckled: Second-row left-side seat belt is not fastened. • Buckled: Second-row left-side seat belt is fastened.	Rear buckle switch (LH)
SEAT_B_2R*9	Unbuckled/ Buckled	• Unbuckled: Second-row right-side seat belt is not fastened. • Buckled: Second-row right-side seat belt is fastened.	Rear buckle switch (RH)
STOP_LMP*2	Off/On	• Off: Brake light is turned off. • On: Brake light is turned on.	Brake light
STOP_LMP_CS*2	Off/On	• Off: Brake light off signal is received. • On: Brake light on signal is received.	• Instrument cluster • Brake light
T_ROOM_LMP	Off/On	• Off: Cargo compartment light is turned off. • On: Cargo compartment light is turned on.	Cargo compartment light
T_UNL_SW	Off/On	• Off: Liftgate opener switch is not pressed. • On: Liftgate opener switch is pressed.	Liftgate opener switch
TRUNK	Close/ OPEN	• Close: Liftgate is closed. • OPEN: Liftgate is open.	Liftgate latch switch
VPWR_B_R	V	Voltage at rear body control module (RBCM) terminal 2P (+B power supply) is displayed.	Battery
VPWR_IG1	V	Voltage at rear body control module (RBCM) terminal 2I (IG1 power supply) is displayed.	• IG1 relay • Battery

*1 : With theft-deterrent horn
*2 : With smart city brake support
*3 : With door lock switch
*4 : With 2-step unlocking
*5 : With double locking system
*6 : 4WD
*7 : With theft-deterrent system
*8 : With rear fog light
*9 : With rear seat belt reminder system

ON-BOARD DIAGNOSTIC [REAR BODY CONTROL MODULE (RBCM)]

ACTIVE COMMAND MODES INSPECTION [REAR BODY CONTROL MODULE (RBCM)]

id0902p4015900

1. Connect the M-MDS to the DLC-2.
2. After the vehicle is identified, select the following items from the initialization screen of the M-MDS.
   (1) Select “DataLogger”.
   (2) Select “Modules”.
   (3) Select “R_BCM”.
3. Select the simulation items from the PID table.
4. Perform the active command modes function, inspect the operations for each parts.
   - If the operation of output parts cannot be verified after the active command mode inspection is performed, this could indicate the possibility of an open or short circuit, sticking, or operation malfunction in the output parts.

ACTIVE COMMAND MODES TABLE [REAR BODY CONTROL MODULE (RBCM)]

id0902p4016000

Simulation item	Unit/ Operation	Data contents	Output part name
BG_HORN_RLY*1	Off/On	• Off: Stops theft-deterrent horn. • On: Sounds the theft-deterrent horn.	Rear body control module (RBCM)
DL_MT_A	Lock/Unlock	• Lock: Locks all of the doors. • Unlock: Unlocks all of the doors.	Door lock actuater
ELAT_MT_RLY	Off/On	• Off: Stops the liftgate latch release operation. • On: Releases the liftgate latch.	Liftgate latch and lock actuator
ELAT_UNL	Off/On	• Off: Stops the liftgate latch release operation. • On: Releases the liftgate latch.	Liftgate latch and lock actuator
R_FOG_LMP*2	Off/On	• Off: Turns off rear fog light. • On: Illuminates rear fog light.	Rear fog light
R_LMP	Off/On	• Off: Turns off back-up light. • On: Illuminates back-up light.	Back-up light
R_WIP_MT_LO	Off/On	• Off: Stops rear wiper motor. • On: Operates rear wiper motor.	Rear wiper motor
STOP_LMP_CS*3	Off/On	• Off: Turns off brake light. • On: Illuminates brake light.	Brake light

*1 : With theft-deterrent horn
*2 : With rear fog light
*3 : With smart city brake support

09-03A SYMPTOM TROUBLESHOOTING [POWER WINDOW SYSTEMS (AUTO-OPEN/CLOSE FUNCTION)]

POWER WINDOW SYSTEM WIRING DIAGRAM [POWER WINDOW SYSTEMS (WITH AUTO-OPEN/CLOSE FUNCTION FOR DRIVER-SIDE)] **09-03A–3**
POWER WINDOW SYSTEM WIRING DIAGRAM [POWER WINDOW SYSTEMS (WITH AUTO-OPEN/CLOSE FUNCTION FOR ALL WINDOWS)]. . . . **09-03A–4**
FOREWORD [POWER WINDOW SYSTEMS (WITH AUTO-OPEN/CLOSE FUNCTION FOR DRIVER-SIDE)] **09-03A–6**
Troubleshooting Procedure **09-03A–6**
Action for non-repeatable malfunction. **09-03A–7**
Power Window System Initial Setting **09-03A–7**
FOREWORD [POWER WINDOW SYSTEMS (WITH AUTO-OPEN/CLOSE FUNCTION FOR ALL WINDOWS)]. . . . **09-03A–8**
Troubleshooting Procedure **09-03A–8**
Action for non-repeatable malfunction. **09-03A–9**
Power Window System Initial Setting **09-03A–9**
SYMPTOM TROUBLESHOOTING CHART [POWER WINDOW SYSTEMS (WITH AUTO-OPEN/CLOSE FUNCTION FOR DRIVER-SIDE)] **09-03A–10**
SYMPTOM TROUBLESHOOTING CHART [POWER WINDOW SYSTEMS (WITH AUTO-OPEN/CLOSE FUNCTION FOR ALL WINDOWS)]. . . . **09-03A–11**
POWER WINDOW SYSTEM TROUBLESHOOTING QUESTIONNAIRE [POWER WINDOW SYSTEMS (WITH AUTO-OPEN/CLOSE FUNCTION FOR DRIVER-SIDE)] **09-03A–12**
POWER WINDOW SYSTEM TROUBLESHOOTING QUESTIONNAIRE [POWER WINDOW SYSTEMS (WITH AUTO-OPEN/CLOSE FUNCTION FOR ALL WINDOWS)]. . . . **09-03A–13**
BASIC POWER WINDOW SYSTEM INSPECTION [POWER WINDOW SYSTEMS (WITH AUTO-OPEN/CLOSE FUNCTION FOR DRIVER-SIDE)] **09-03A–14**
Manual Open/close Function Inspection **09-03A–14**
Auto Open/close Function (Driver-side) Inspection **09-03A–14**
IG-OFF Timer Function Inspection **09-03A–15**
Auto Reverse Pinch Protection Function Inspection. **09-03A–15**
BASIC POWER WINDOW SYSTEM INSPECTION [POWER WINDOW SYSTEMS (WITH AUTO-OPEN/CLOSE FUNCTION FOR ALL WINDOWS)] **09-03A–17**
Manual Mode Function Inspection. **09-03A–17**
Automatic Mode Function Inspection. **09-03A–18**
Automatic Door Glass Return Function Inspection. **09-03A–18**
IG OFF Timer Function Inspection **09-03A–19**
DOOR GLASS DOES NOT MOVE UP AND DOWN IN AUTOMATIC MODE [POWER WINDOW SYSTEMS (WITH AUTO-OPEN/CLOSE FUNCTION FOR ALL WINDOWS)] [POWER WINDOW SYSTEMS (AUTO-OPEN/CLOSE FUNCTION)] . . . **09-03A–20**
DOOR GLASS DOES NOT REVERSE, EVEN WHEN ENCOUNTERING A FOREIGN OBJECT IN IT IS PATH [POWER WINDOW SYSTEMS (WITH AUTO-OPEN/CLOSE FUNCTION FOR ALL WINDOWS)] [POWER WINDOW SYSTEMS (AUTO-OPEN/CLOSE FUNCTION)] . . . **09-03A–24**
DOOR GLASS REVERSES EVEN THOUGH THE GLASS DOES NOT ENCOUNTER A FOREIGN OBJECT WHILE IT IS MOVING UP IN AUTOMATIC MODE [POWER WINDOW SYSTEMS (WITH AUTO-OPEN/CLOSE FUNCTION FOR ALL WINDOWS)] [POWER WINDOW SYSTEMS (AUTO-OPEN/CLOSE FUNCTION)] . . . **09-03A–25**
ABNORMAL NOISE WHILE THE DOOR GLASS IS OPENING OR CLOSING [POWER WINDOW SYSTEMS (WITH AUTO-OPEN/CLOSE FUNCTION FOR ALL WINDOWS)] [POWER WINDOW SYSTEMS (AUTO-OPEN/CLOSE FUNCTION)] . . . **09-03A–26**
THE AUTO OPEN/CLOSE FUNCTION ON THE DRIVER-SIDE POWER WINDOW IS INOPERATIVE [POWER WINDOW SYSTEMS (WITH AUTO-OPEN/CLOSE FUNCTION FOR DRIVER-SIDE)] [POWER WINDOW SYSTEMS (AUTO-OPEN/CLOSE FUNCTION)] . . . **09-03A–28**

SYMPTOM TROUBLESHOOTING [POWER WINDOW SYSTEMS (AUTO-OPEN/ CLOSE FUNCTION)]

THE DRIVER-SIDE POWER WINDOW IS INOPERATIVE [POWER WINDOW SYSTEMS (WITH AUTO-OPEN/CLOSE FUNCTION FOR DRIVER-SIDE)] [POWER WINDOW SYSTEMS (AUTO-OPEN/CLOSE FUNCTION)] . . . 09-03A–29
ALL POWER WINDOWS OTHER THAN DRIVER-SIDE DO NOT OPERATE USING THE POWER WINDOW SUBSWITCH [POWER WINDOW SYSTEMS (WITH AUTO-OPEN/CLOSE FUNCTION FOR DRIVER-SIDE)] [POWER WINDOW SYSTEMS (AUTO-OPEN/CLOSE FUNCTION)] . . . 09-03A–30
ALL POWER WINDOWS OTHER THAN DRIVER-SIDE DO NOT OPERATE USING THE POWER WINDOW MAIN SWITCH [POWER WINDOW SYSTEMS (WITH AUTO-OPEN/CLOSE FUNCTION FOR DRIVER-SIDE)] [POWER WINDOW SYSTEMS (AUTO-OPEN/CLOSE FUNCTION)] . . . 09-03A–30
ALL POWER WINDOWS ARE INOPERATIVE [POWER WINDOW SYSTEMS (WITH AUTO-OPEN/CLOSE FUNCTION FOR DRIVER-SIDE)] [POWER WINDOW SYSTEMS (AUTO-OPEN/CLOSE FUNCTION)]. . . . 09-03A–31
DOOR GLASS REVERSES EVEN THOUGH THE GLASS DOES NOT ENCOUNTER A FOREIGN OBJECT WHILE IT IS MOVING UP IN AUTOMATIC MODE [POWER WINDOW SYSTEMS (WITH AUTO-OPEN/CLOSE FUNCTION FOR DRIVER-SIDE)] [POWER WINDOW SYSTEMS (AUTO-OPEN/CLOSE FUNCTION)]. . . . 09-03A–33
ABNORMAL NOISE WHILE THE DOOR GLASS IS OPENING OR CLOSING [POWER WINDOW SYSTEMS (WITH AUTO-OPEN/CLOSE FUNCTION FOR DRIVER-SIDE)] [POWER WINDOW SYSTEMS (AUTO-OPEN/CLOSE FUNCTION)]. . . . 09-03A–34

SYMPTOM TROUBLESHOOTING [POWER WINDOW SYSTEMS (AUTO-OPEN/CLOSE FUNCTION)]

POWER WINDOW SYSTEM WIRING DIAGRAM [POWER WINDOW SYSTEMS (WITH AUTO-OPEN/CLOSE FUNCTION FOR DRIVER-SIDE)]

id0903608052j5

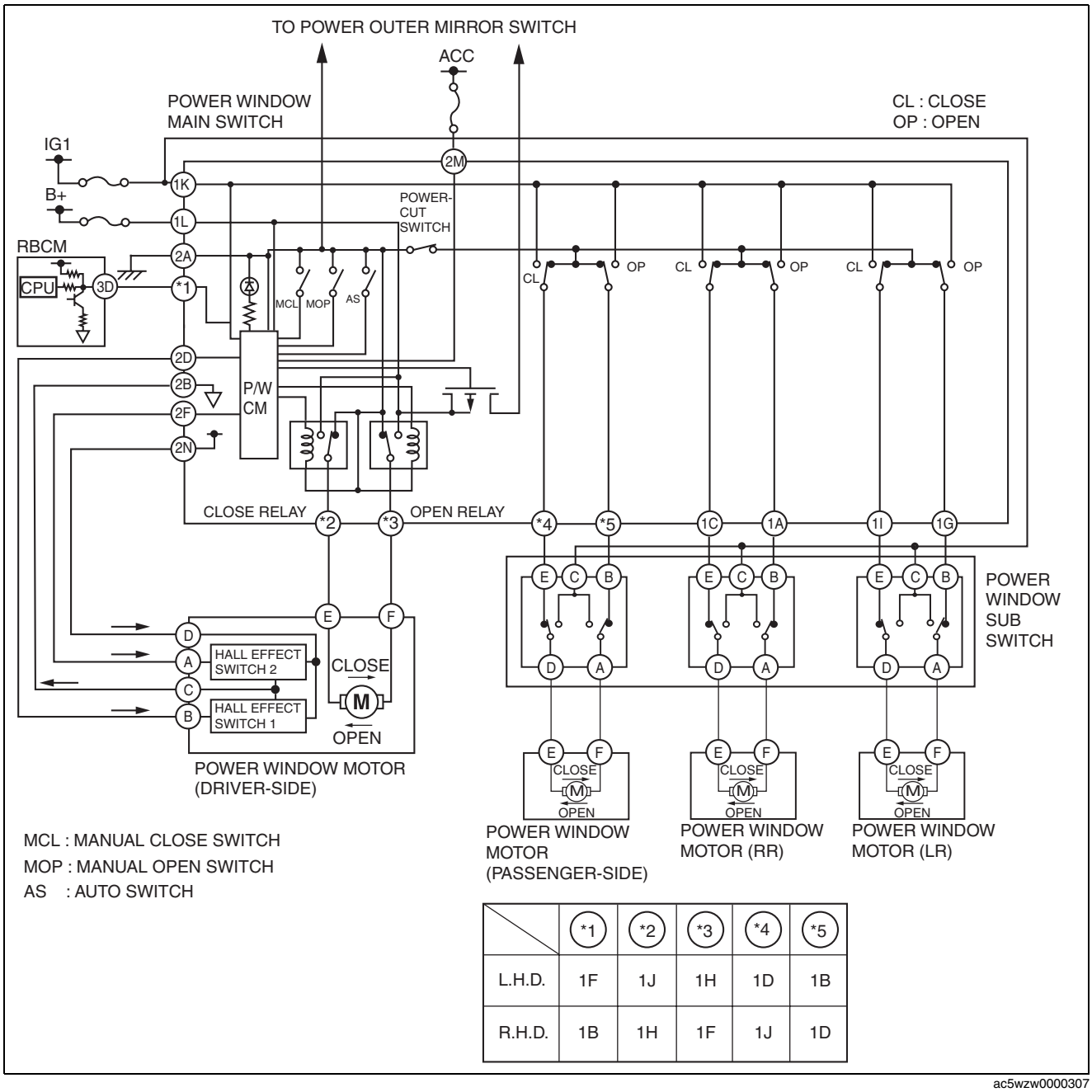

	*1	*2	*3	*4	*5
L.H.D.	1F	1J	1H	1D	1B
R.H.D.	1B	1H	1F	1J	1D

ac5wzw0000307

SYMPTOM TROUBLESHOOTING [POWER WINDOW SYSTEMS (AUTO-OPEN/CLOSE FUNCTION)]

POWER WINDOW SYSTEM WIRING DIAGRAM [POWER WINDOW SYSTEMS (WITH AUTO-OPEN/CLOSE FUNCTION FOR ALL WINDOWS)]

id0903608225j6

Power window main switch

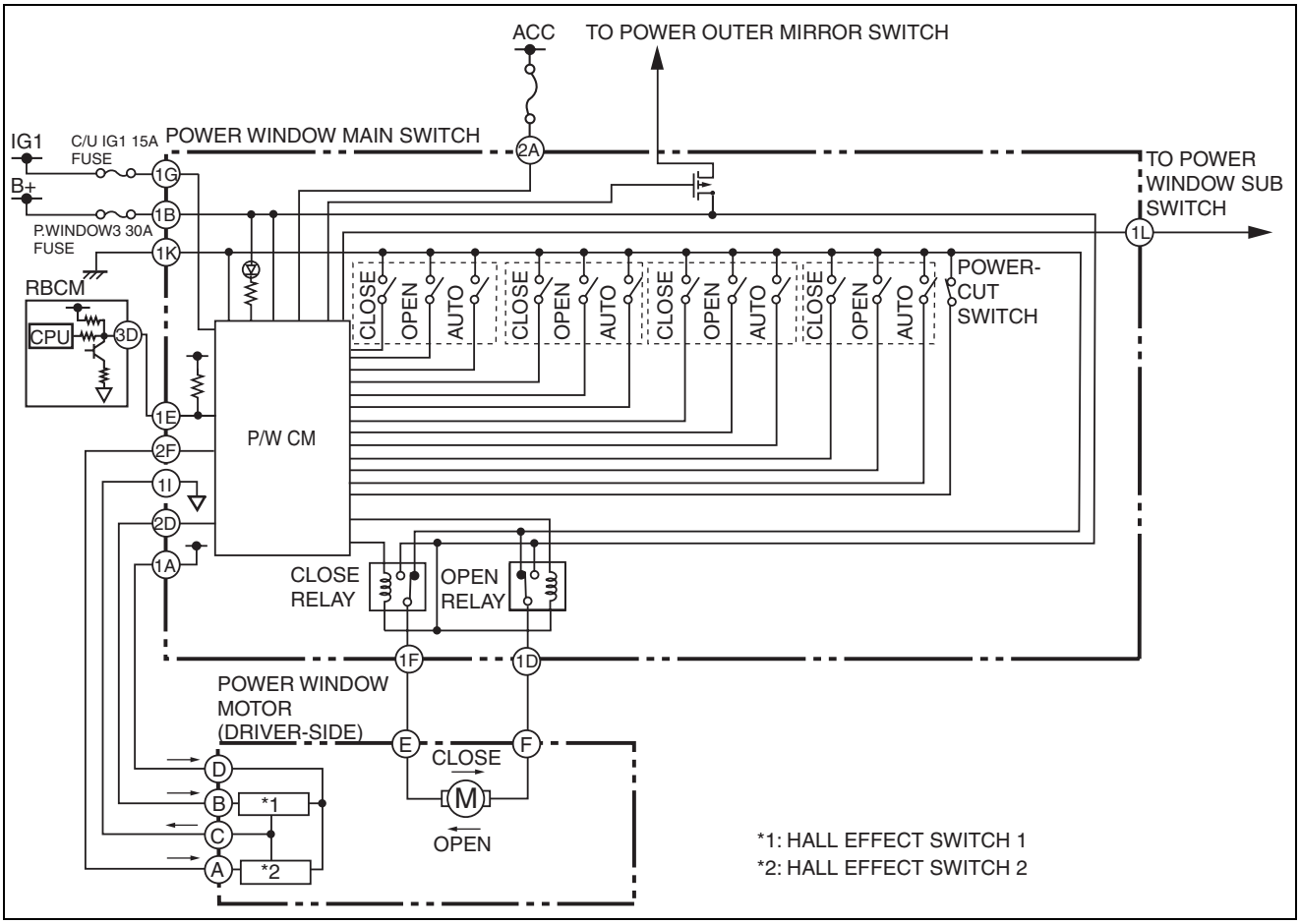

ac5wzw0000307

SYMPTOM TROUBLESHOOTING [POWER WINDOW SYSTEMS (AUTO-OPEN/ CLOSE FUNCTION)]

Power window subswitch

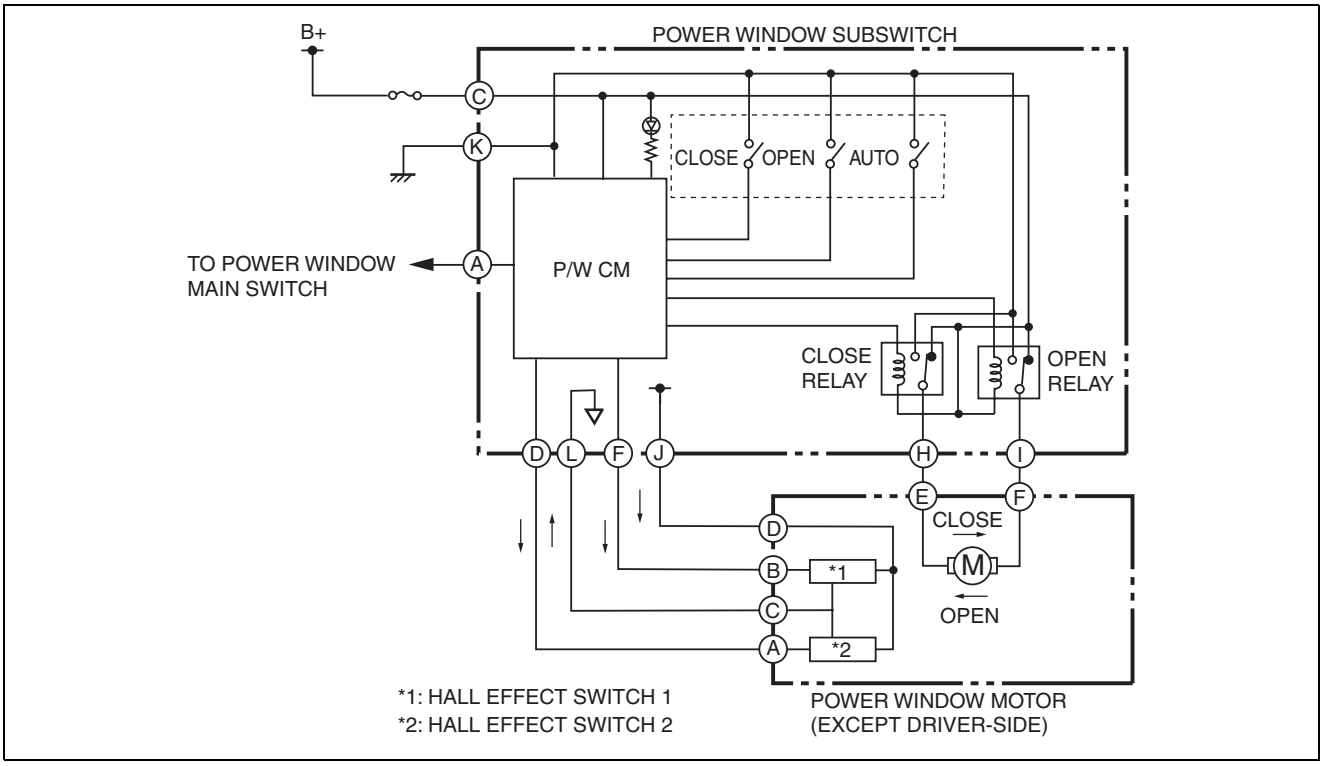

ac5wzw0000307

SYMPTOM TROUBLESHOOTING [POWER WINDOW SYSTEMS (AUTO-OPEN/CLOSE FUNCTION)]

FOREWORD [POWER WINDOW SYSTEMS (WITH AUTO-OPEN/CLOSE FUNCTION FOR DRIVER-SIDE)]

id0903608054j5

- Always perform basic power window system inspection before troubleshooting.

Troubleshooting Procedure

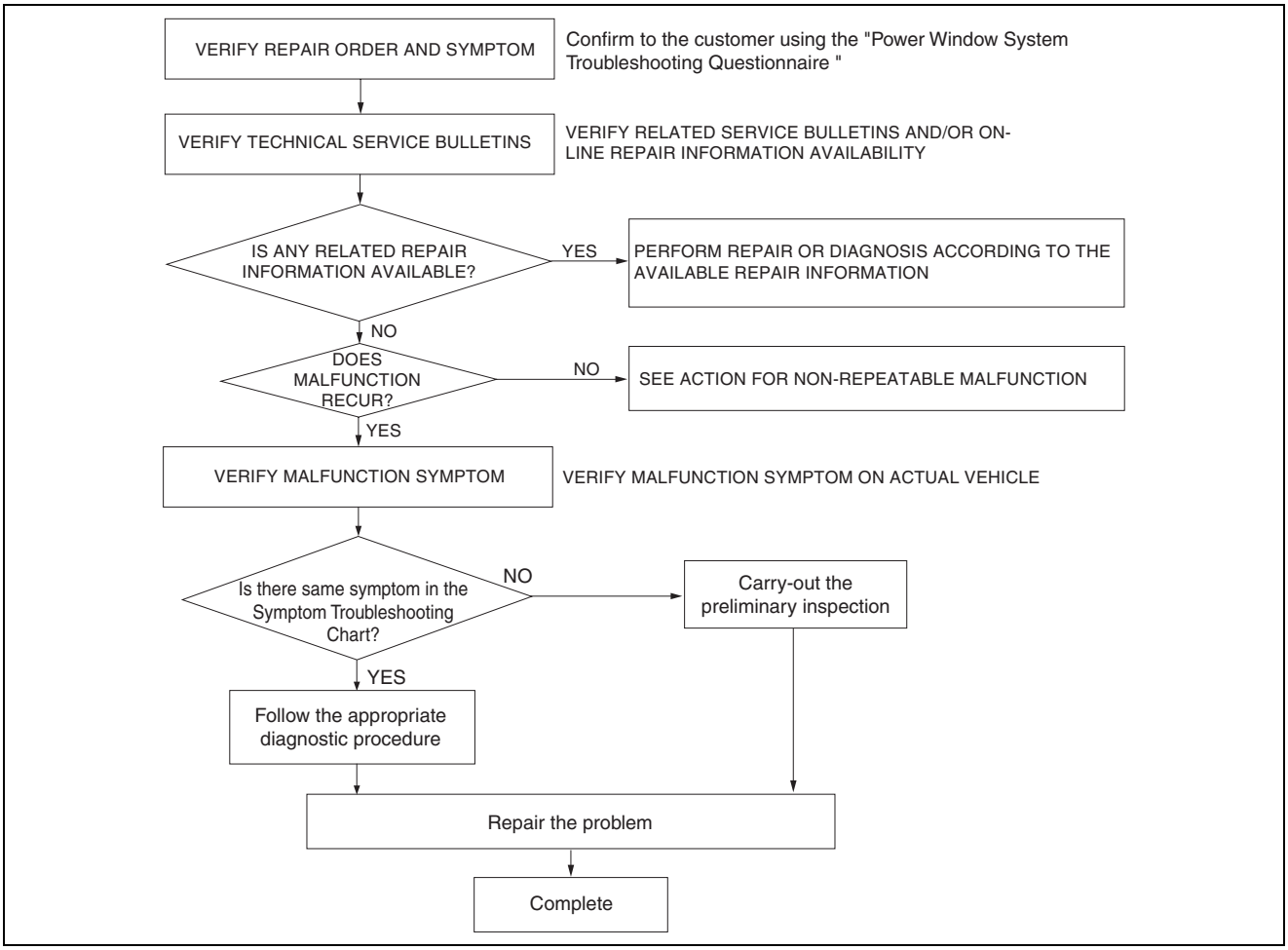

ac5uuw00002300

- Slightly shake the wiring harness and connectors while performing the inspection to discover whether poor contact points are the cause of any intermittent malfunctions.

Caution

- **If any of the following conditions continues indefinitely, the power window motor will heat up causing the protection circuit (integrated in power window motor) to operate. If this occurs, the operation of the power window motor protection circuit temporarily disables the power windows.**
  - **— Continuous up and down operation of the power window.**
  - **— Continuously pulling up the power window switch while the window glass is fully closed.**
  - **— Continuously pressing the power window switch while the window glass fully opened.**
- **If the power window motor has a temporary malfunction and the power window main switch is operated, the power window system transfers to malfunction mode by the power window control module.**
- **While the power window system is in malfunction mode, the power windows cannot be operated using the auto open/close function.**
- **The power window system reverts to normal operation after performing the Power Window Initialization Procedure.**

Note

- If the following operations have been performed, initial setting is reset, and auto up/down operation is disabled. Therefore, performing the initial setting is necessary.
  - — Negative battery cable disconnected
  - — Power window main switch connector disconnected
  - — Power window system power supply fuse removed

SYMPTOM TROUBLESHOOTING [POWER WINDOW SYSTEMS (AUTO-OPEN/ CLOSE FUNCTION)]

Action for non-repeatable malfunction

- If the malfunction does not recur, verify the malfunction cause by performing the following actions:
  - — Based on the repair order form, attempt to drive the vehicle or perform tests to replicate the malfunction, record the data (such as power window main switch and power window motor circuit voltage) at that time, and detect the malfunction cause.
  - — Shake the wiring harness or connector of the electrical component which is suspected to be the cause of the malfunction, and inspect for malfunction.

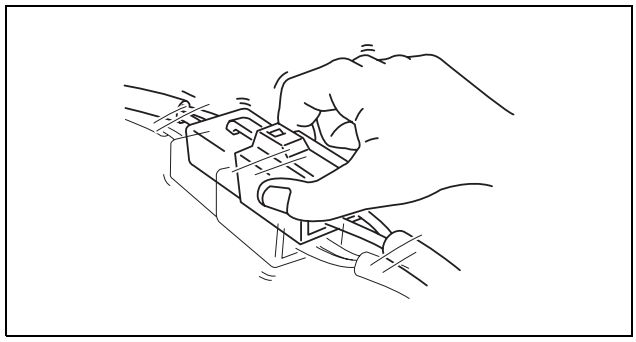

ac5uuw00002301

  - — Inspect the female terminals on the connector of the electric component which is suspected to be the cause of the malfunction for poor connection.

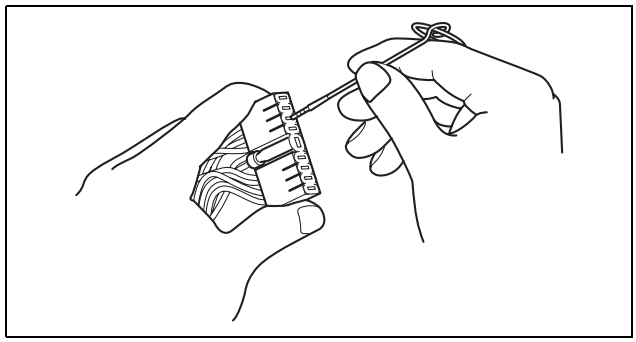

ac5uuw00002302

Power Window System Initial Setting

1. Switch the ignition ON (engine off or on).
2. Press the driver-side power window main switch and fully open the driver-side front door glass.
3. Pull up the driver-side power window main switch to the manual-up position to fully close the driver-side front door glass, and keep holding the switch up at the position for **approx. 2 s**.

SYMPTOM TROUBLESHOOTING [POWER WINDOW SYSTEMS (AUTO-OPEN/ CLOSE FUNCTION)]

FOREWORD [POWER WINDOW SYSTEMS (WITH AUTO-OPEN/CLOSE FUNCTION FOR ALL WINDOWS)]

id0903608054j6

- Always perform basic power window system inspection before troubleshooting.

Troubleshooting Procedure

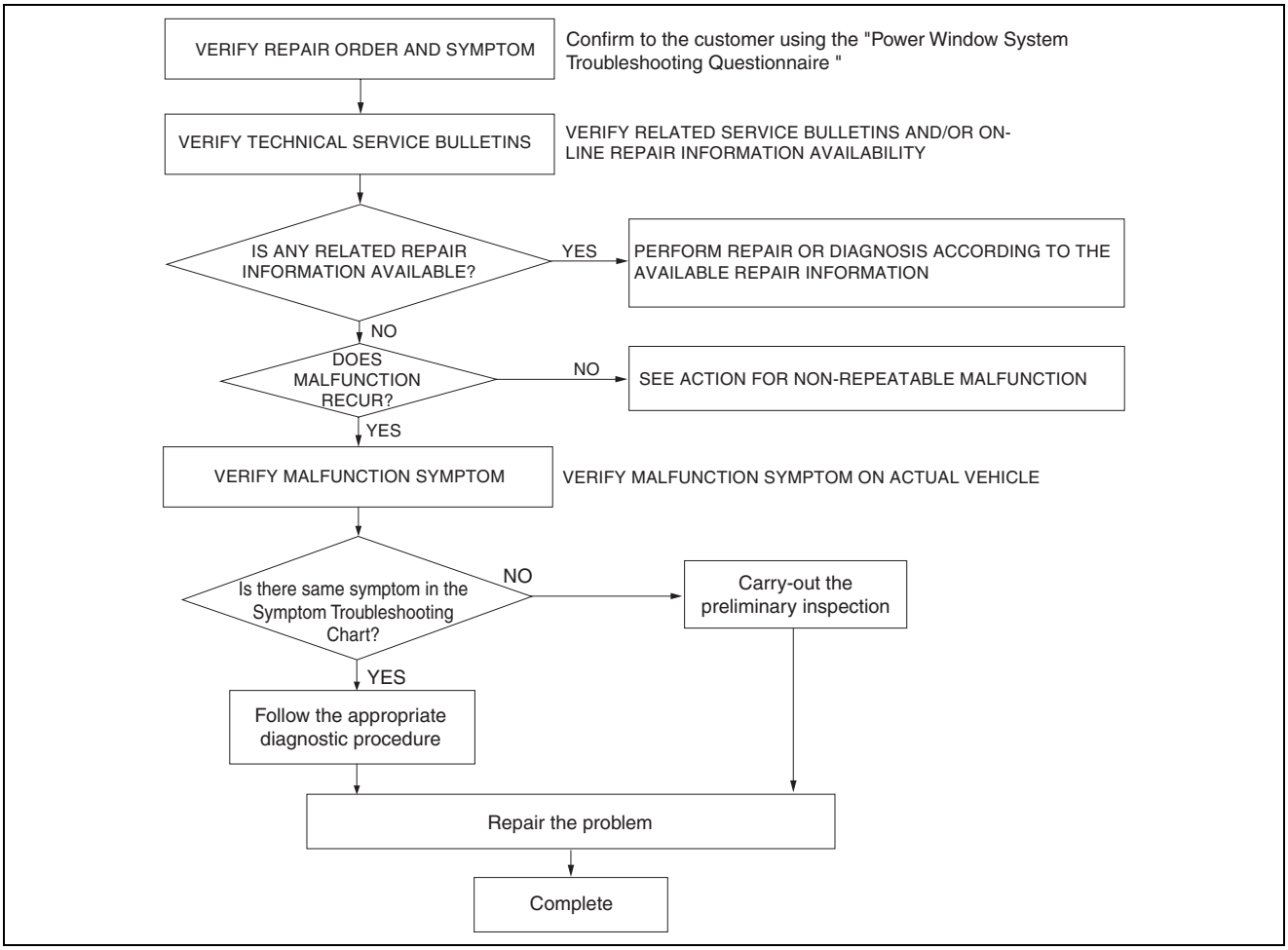

ac5uuw00002300

- Slightly shake the wiring harness and connectors while performing the inspection to discover whether poor contact points are the cause of any intermittent malfunctions.

Caution

- **If any of the following conditions continues indefinitely, the power window motor will heat up causing the protection circuit (integrated in power window motor) to operate. If this occurs, the operation of the power window motor protection circuit temporarily disables the power windows.**
  - **— Continuous up and down operation of the power window.**
  - **— Continuously pulling up the power window switch while the window glass is fully closed.**
  - **— Continuously pressing the power window switch while the window glass fully opened.**
- **If the power window motor has a temporary malfunction and the power window main switch is operated, the power window system transfers to malfunction mode by the power window control module.**
- **While the power window system is in malfunction mode, the power windows cannot be operated using the auto open/close function.**
- **The power window system reverts to normal operation after performing the Power Window Initialization Procedure.**

Note

- If the following operations have been performed, initial setting is reset, and auto up/down operation is disabled. Therefore, performing the initial setting is necessary.
  - — Negative battery cable disconnected
  - — Power window main switch connector disconnected
  - — Power window system power supply fuse removed

SYMPTOM TROUBLESHOOTING [POWER WINDOW SYSTEMS (AUTO-OPEN/ CLOSE FUNCTION)]

Action for non-repeatable malfunction

- If the malfunction does not recur, verify the malfunction cause by performing the following actions:
  - — Based on the repair order form, attempt to drive the vehicle or perform tests to replicate the malfunction, record the data (such as power window main switch and power window motor circuit voltage) at that time, and detect the malfunction cause.
  - — Shake the wiring harness or connector of the electrical component which is suspected to be the cause of the malfunction, and inspect for malfunction.

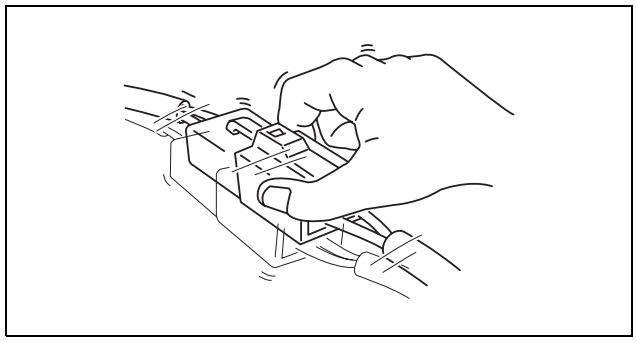

ac5uuw00002301

  - — Inspect the female terminals on the connector of the electric component which is suspected to be the cause of the malfunction for poor connection.

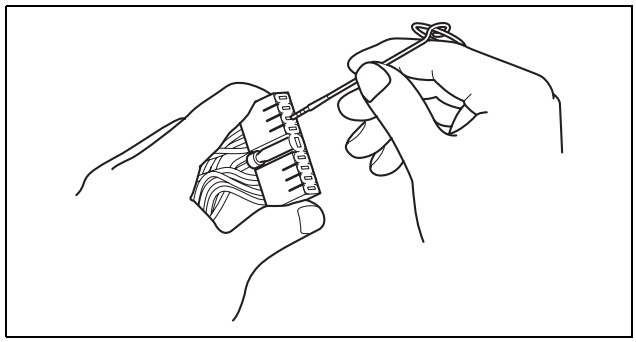

ac5uuw00002302

Power Window System Initial Setting

1. Switch the ignition ON (engine off or on).
2. Press the driver-side power window main switch and fully open the driver-side front door glass.
3. Pull up the driver-side power window main switch to the manual-up position to fully close the driver-side front door glass, and keep holding the switch up at the position for **approx. 2 s**.

SYMPTOM TROUBLESHOOTING [POWER WINDOW SYSTEMS (AUTO-OPEN/ CLOSE FUNCTION)]

SYMPTOM TROUBLESHOOTING CHART [POWER WINDOW SYSTEMS (WITH AUTO-OPEN/CLOSE FUNCTION FOR DRIVER-SIDE)]

id0903608056j5

No.	Troubleshooting item	page
1	The auto open/close function on the driver-side power window is inoperative	09-03A-28 THE AUTO OPEN/CLOSE FUNCTION ON THE DRIVER-SIDE POWER WINDOW IS INOPERATIVE [POWER WINDOW SYSTEMS (WITH AUTO-OPEN/ CLOSE FUNCTION FOR DRIVER-SIDE)] [POWER WINDOW SYSTEMS (AUTO-OPEN/CLOSE FUNCTION)]
2	The driver-side power window is inoperative	09-03A-29 THE DRIVER-SIDE POWER WINDOW IS INOPERATIVE [POWER WINDOW SYSTEMS (WITH AUTO-OPEN/CLOSE FUNCTION FOR DRIVER-SIDE)] [POWER WINDOW SYSTEMS (AUTO-OPEN/CLOSE FUNCTION)]
3	All power windows other than driver-side do not operate using the power window subswitch	09-03A-30 ALL POWER WINDOWS OTHER THAN DRIVER-SIDE DO NOT OPERATE USING THE POWER WINDOW SUBSWITCH [POWER WINDOW SYSTEMS (WITH AUTO-OPEN/CLOSE FUNCTION FOR DRIVER-SIDE)] [POWER WINDOW SYSTEMS (AUTO-OPEN/ CLOSE FUNCTION)]
4	All power windows other than driver-side do not operate using the power window main switch	09-03A-30 ALL POWER WINDOWS OTHER THAN DRIVER-SIDE DO NOT OPERATE USING THE POWER WINDOW MAIN SWITCH [POWER WINDOW SYSTEMS (WITH AUTO-OPEN/CLOSE FUNCTION FOR DRIVER-SIDE)] [POWER WINDOW SYSTEMS (AUTO-OPEN/ CLOSE FUNCTION)]
5	All power windows are inoperative	09-03A-31 ALL POWER WINDOWS ARE INOPERATIVE [POWER WINDOW SYSTEMS (WITH AUTO-OPEN/ CLOSE FUNCTION FOR DRIVER-SIDE)] [POWER WINDOW SYSTEMS (AUTO-OPEN/CLOSE FUNCTION)]
6	Door glass reverses even though the glass does not encounter a foreign object while it is moving up in automatic mode	09-03A-33 DOOR GLASS REVERSES EVEN THOUGH THE GLASS DOES NOT ENCOUNTER A FOREIGN OBJECT WHILE IT IS MOVING UP IN AUTOMATIC MODE [POWER WINDOW SYSTEMS (WITH AUTO-OPEN/CLOSE FUNCTION FOR DRIVER-SIDE)] [POWER WINDOW SYSTEMS (AUTO-OPEN/CLOSE FUNCTION)]
7	Abnormal noise while the door glass is opening or closing	09-03A-34 ABNORMAL NOISE WHILE THE DOOR GLASS IS OPENING OR CLOSING [POWER WINDOW SYSTEMS (WITH AUTO-OPEN/CLOSE FUNCTION FOR DRIVER-SIDE)] [POWER WINDOW SYSTEMS (AUTO-OPEN/CLOSE FUNCTION)]

SYMPTOM TROUBLESHOOTING [POWER WINDOW SYSTEMS (AUTO-OPEN/ CLOSE FUNCTION)]

SYMPTOM TROUBLESHOOTING CHART [POWER WINDOW SYSTEMS (WITH AUTO-OPEN/CLOSE FUNCTION FOR ALL WINDOWS)]

id0903608056j6

No.	Troubleshooting item	page
1	Door glass does not move up and down in automatic mode	(See 09-03A-20 DOOR GLASS DOES NOT MOVE UP AND DOWN IN AUTOMATIC MODE [POWER WINDOW SYSTEMS (WITH AUTO-OPEN/CLOSE FUNCTION FOR ALL WINDOWS)] [POWER WINDOW SYSTEMS (AUTO-OPEN/CLOSE FUNCTION)].)
2	Door glass does not reverse, even when encountering a foreign object in it is path	(See 09-03A-24 DOOR GLASS DOES NOT REVERSE, EVEN WHEN ENCOUNTERING A FOREIGN OBJECT IN IT IS PATH [POWER WINDOW SYSTEMS (WITH AUTO-OPEN/CLOSE FUNCTION FOR ALL WINDOWS)] [POWER WINDOW SYSTEMS (AUTO-OPEN/CLOSE FUNCTION)].)
3	Door glass reverses even though the glass does not encounter a foreign object while it is moving up in automatic mode	(See 09-03A-25 DOOR GLASS REVERSES EVEN THOUGH THE GLASS DOES NOT ENCOUNTER A FOREIGN OBJECT WHILE IT IS MOVING UP IN AUTOMATIC MODE [POWER WINDOW SYSTEMS (WITH AUTO-OPEN/CLOSE FUNCTION FOR ALL WINDOWS)] [POWER WINDOW SYSTEMS (AUTO-OPEN/CLOSE FUNCTION)].)
4	Abnormal noise during the power window operation	(See 09-03A-26 ABNORMAL NOISE WHILE THE DOOR GLASS IS OPENING OR CLOSING [POWER WINDOW SYSTEMS (WITH AUTO-OPEN/CLOSE FUNCTION FOR ALL WINDOWS)] [POWER WINDOW SYSTEMS (AUTO-OPEN/CLOSE FUNCTION)].)

SYMPTOM TROUBLESHOOTING [POWER WINDOW SYSTEMS (AUTO-OPEN/ CLOSE FUNCTION)]

POWER WINDOW SYSTEM TROUBLESHOOTING QUESTIONNAIRE [POWER WINDOW SYSTEMS (WITH AUTO-OPEN/CLOSE FUNCTION FOR DRIVER-SIDE)]

id0903608355j5

Date :

When did the malfunction first occur ?			
Weather conditions	☐Fair weather ☐Cloudy ☐Rain ☐Snow ☐Other ( )	Outside temperature	Approx. F°
Driving conditions	☐ Driving ☐Stopped (Engine is : ☐Running ☐ Stopped)		
Duplicate symptom?	☐YES ☐ NO	Frequency	☐ Always ☐ Sometimes (times/month)
Road conditions	☐ City ☐Outer city ☐ Freeway ☐Other ( ) / ☐Paved ☐ Dirt road		

*Follow the appropriate diagnostic procedures shown below or perform the basic troubleshooting flow.

☐ (No.1) The auto open/close function on the driver-side power window inoperative.

☐ (No.2) The driver-side power window is inoperative.

☐ (No.3) All power windows other than driver-side do not operate using the power window subswitch.

☐ (No.4) All power windows other than driver-side do not operate using the power window main switch.

☐ (No.5) All power windows are inoperative.

☐ (No.6) Door glass reverses even though the glass does not encounter a foreign object while it is moving up in automatic mode.

Please clarify the position where the driver side front door glass opens automatically. ☐ Completely closed position
☐ Approx. ( )mm lower than completely closed position ☐ Approx. ( )mm upper than the completely open position.

☐ (No.7) Abnormal noise while the door glass is opening or closing.

☐Other (Describe the symptom below if the symptom does not appear in the above list.)

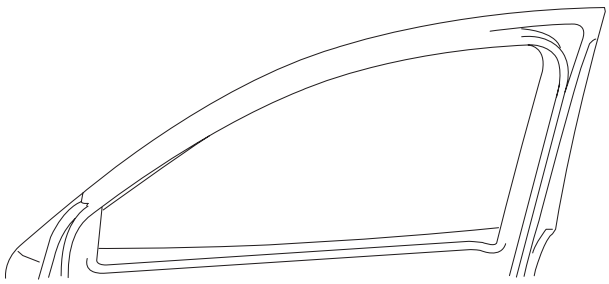

Please describe the conditions when the malfunction occurs.
(Example) : When the outer mirrors are operated

Please describe the conditions under which the system returns to normal operation after malfunctioning.
(Example) : The ignition switch is turned to the ON position after inserting the ignition key into the key cylinder

ac5wzw0000379

SYMPTOM TROUBLESHOOTING [POWER WINDOW SYSTEMS (AUTO-OPEN/ CLOSE FUNCTION)]

POWER WINDOW SYSTEM TROUBLESHOOTING QUESTIONNAIRE [POWER WINDOW SYSTEMS (WITH AUTO-OPEN/CLOSE FUNCTION FOR ALL WINDOWS)]

id0903608355j6

Date :

When did the malfunction first occur ?			
Weather conditions	☐Fair weather ☐Cloudy ☐Rain ☐Snow ☐Other ( )	Outside temperature	Approx. °F
Driving conditions	☐Driving ☐Stopped (Engine is : ☐Running ☐Stopped)		
Duplicate symptom?	☐YES ☐NO	Frequency	☐Always ☐Sometimes (times/month)
Road conditions	☐City ☐Outer city ☐Freeway ☐Other ( ) / ☐Paved ☐Dirt road		

*Follow the appropriate diagnostic procedures shown below or perform the basic troubleshooting flow.

☐(No.1) Door glass does not move up and down in automatic mode.

☐(No.2) Door glass does no reverse, when encountering a foreign object in its path.

☐(No.3) Door glass reverses, even through the glass does not encounter a foreign object while it is moving up in automatic mode.

☐(No.4) Abnormal noise during the power window operation.

☐Other (Describe the symptom below if the symptom does not appear in the above list.)

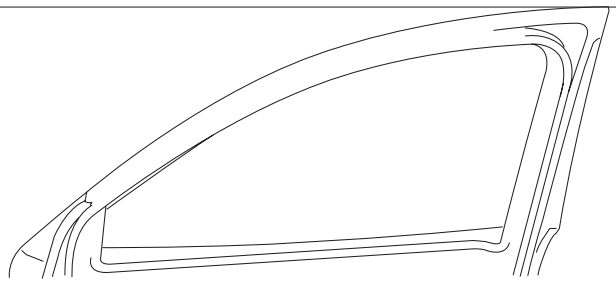

Please describe the conditions when the malfunction occurs.
(Example) : When the outer mirrors are operated

Please describe the conditions under which the system returns to normal operation after malfunctioning.
(Example) : The ignition switch is turned to the ON position after inserting the ignition key into the key cylinder

ac5wzw0000311

SYMPTOM TROUBLESHOOTING [POWER WINDOW SYSTEMS (AUTO-OPEN/CLOSE FUNCTION)]

BASIC POWER WINDOW SYSTEM INSPECTION [POWER WINDOW SYSTEMS (WITH AUTO-OPEN/CLOSE FUNCTION FOR DRIVER-SIDE)]

id0903608055j5

Manual Open/close Function Inspection

STEP	INSPECTION		ACTION
1	• Switch the ignition ON (engine off or on). • Operate the power window using the manual open/close function on the power window main switch. • Does the power window operate properly?	Yes	Go to the next step.
		No	• Inspect the power window main switch and the wiring harness. • Repair or replace malfunctioning parts.
2	• Set the power cut switch to the UNLOCK position. • Operate the power window using the power window subswitch. • Does the power window operate properly?	Yes	Go to the next step.
		No	• Inspect the power window subswitch and the wiring harness. • Repair or replace malfunctioning parts.
3	• Set the power cut switch to the LOCK position. • Operate all power windows other than the driver-side. • Does the power window operate properly?	Yes	• Inspect the power cut switch and the wiring harness. • Replace the power window main switch.
		No	• Manual open/close function is normal. • Perform the auto open/close function inspection.

Auto Open/close Function (Driver-side) Inspection

STEP	INSPECTION		ACTION
1	• Switch the ignition ON (engine off or on). • Operate the power window using the auto open / close function on the power window main switch. • Does the power window operate properly?	Yes	Go to the next step.
		No	**If the power window automatically opens during the closing operation:** • Go to 09-03A-33 DOOR GLASS REVERSES EVEN THOUGH THE GLASS DOES NOT ENCOUNTER A FOREIGN OBJECT WHILE IT IS MOVING UP IN AUTOMATIC MODE [POWER WINDOW SYSTEMS (WITH AUTO-OPEN/CLOSE FUNCTION FOR DRIVER-SIDE)] [POWER WINDOW SYSTEMS (AUTO-OPEN/CLOSE FUNCTION)]. **Others:** • Go to 09-03A-28 THE AUTO OPEN/CLOSE FUNCTION ON THE DRIVER-SIDE POWER WINDOW IS INOPERATIVE [POWER WINDOW SYSTEMS (WITH AUTO-OPEN/CLOSE FUNCTION FOR DRIVER-SIDE)] [POWER WINDOW SYSTEMS (AUTO-OPEN/CLOSE FUNCTION)].
2	• Operate the power window main switch to the close position while the power window is opening. • Does the power window operation stop?	Yes	Go to the next step.
		No	Replace the power window main switch (power window control unit is malfunctioning.)
3	• Operate the power window main switch to the open position while the power window is closing. • Does the power window operation stop?	Yes	• Auto open/close function is normal. • Perform the IG-OFF timer function inspection.
		No	Replace the power window main switch (power window control unit is malfunctioning.)

SYMPTOM TROUBLESHOOTING [POWER WINDOW SYSTEMS (AUTO-OPEN/ CLOSE FUNCTION)]

IG-OFF Timer Function Inspection

STEP	INSPECTION		ACTION
1	• Close all doors. • Switch the ignition from ON (engine off or on) to off (LOCK). • Operate the power window main switch **within 40 s** after switching the ignition to off (LOCK). • Does the power window operate?	Yes	Go to the next step.
		No	• Inspect the door switches and related wiring harness. • If above parts are okay, replace the power window main switch, then go to the next step. • If above parts are incorrect repair or replace malfunction part (s), then go to the next step.
2	• Open any door. • Switch the ignition from ON (engine off or on) to off (LOCK). • Operate the power window main switch **within 40 s** after switching the ignition to off (LOCK). • Does the power window operate?	Yes	• Inspect the door switches and related wiring harness. • If above parts are okay, replace the power window main switch, then go to the next step. • If above parts are incorrect repair or replace malfunction part (s), then go to the next step.
		No	Go to the next step.
3	• Close all doors. • Switch the ignition from ON (engine off or on) to off (LOCK). • Operate the power window main switch **within 60 s** after switching the ignition to off (LOCK). • Does the power window operate?	Yes	Replace the power window main switch (power window control unit is malfunctioning.)
		No	• IG-OFF timer function operation is normal. • Perform the auto reverse pinch protection function inspection.

Auto Reverse Pinch Protection Function Inspection

STEP	INSPECTION		ACTION
1	• Switch the ignition ON (engine off or on). • Fully open the driver-side power window. • Set the hammer (thickness: **10 mm {0.39 in} or more**) as shown below. Then, close the power window. • Verify that the power window opens approx. **200 mm {2.87 in}** after contacting the hammer and the operation stops. • Does auto reverse pinch protection function operate properly?	Yes	Auto reverse pinch protection function is normal.
		No	Go to the next step.
2	• Does power window open before contacting the hammer?	Yes	Go to 09-03A-33 DOOR GLASS REVERSES EVEN THOUGH THE GLASS DOES NOT ENCOUNTER A FOREIGN OBJECT WHILE IT IS MOVING UP IN AUTOMATIC MODE [POWER WINDOW SYSTEMS (WITH AUTO-OPEN/CLOSE FUNCTION FOR DRIVER-SIDE)] [POWER WINDOW SYSTEMS (AUTO-OPEN/CLOSE FUNCTION)].
		No	Initialize the power window main switch. **Note** • Before initializing the power window main switch, cut off the power supply to the power window main switch for approx. **60 s**. Then, reconnect it again after **approx. 60 s**: — Disconnect the negative battery cable. — Disconnect the power window main switch connector. — Remove the fuse for the power window system.

SYMPTOM TROUBLESHOOTING [POWER WINDOW SYSTEMS (AUTO-OPEN/ CLOSE FUNCTION)]

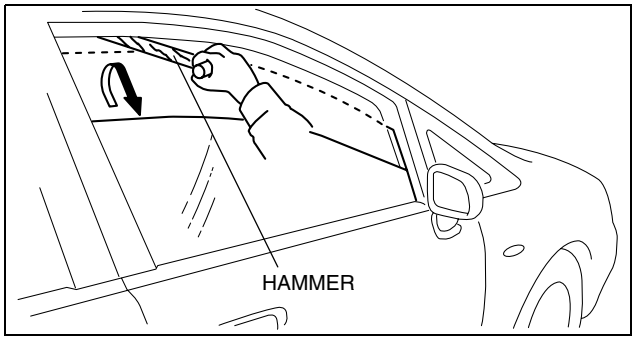

am2zzw0000022

SYMPTOM TROUBLESHOOTING [POWER WINDOW SYSTEMS (AUTO-OPEN/CLOSE FUNCTION)]

BASIC POWER WINDOW SYSTEM INSPECTION [POWER WINDOW SYSTEMS (WITH AUTO-OPEN/CLOSE FUNCTION FOR ALL WINDOWS)]

id0903608211j6

Manual Mode Function Inspection

STEP	INSPECTION		ACTION
1	• Switch the ignition ON (engine off or on). • Turn the power-cut switch to UNLOCK. • Does each door glass move up and down in manual mode using the power window subswitch?	Yes	Go to the next step.
		No	• Inspect the following items: — Power window main switch (power-cut switch system malfunction) — Power window subswitch power supply fuses — Power window subswitch ground wiring harness — Power window subswitch power supply wiring harnesses — Wiring harness between power window subswitch and power window motor — Power window subswitch — Power window motor • Repair or replace the malfunctioning part, then go to the next step.
2	• Does the driver-side door glass move up and down in manual mode using the power window main switch?	Yes	Go to the next step.
		No	• Inspect the following items: — Power window main switch power supply fuses — Power window main switch ground wiring harness — Power window main switch power supply wiring harnesses — Wiring harness between power window main switch and power window motor — Power window main switch • Repair or replace the malfunctioning part, then go to the next step.
3	• Does each other door glass other than the driver-side door glass move up and down in manual mode using the power window main switch?	Yes	Go to the next step.
		No	• Perform the power window initialization procedure for any door glass that does not move up and down, and reinspect. (See 09-12-66 POWER WINDOW SYSTEM INITIALIZATION PROCEDURE.) • If it does not move up and down upon reinspection, inspect the following: — Wiring harness between power window main switch and subswitch • Repair or replace the malfunctioning part, then go to the next step.
4	• Turn the power-cut switch to LOCK. • Push/pull the power window main switch (switches for all windows in manual mode). • Does only driver-side front door glass move up and down?	Yes	• Manual mode function is normal. • Go to the automatic mode function inspection.
		No	Replace the power window main switch, then go to the automatic mode function inspection. (power-cut switch system malfunction)

SYMPTOM TROUBLESHOOTING [POWER WINDOW SYSTEMS (AUTO-OPEN/ CLOSE FUNCTION)]

Automatic Mode Function Inspection

Note
- Perform the following inspection for the power window main switch and the power window subswitches for each window.

STEP	INSPECTION		ACTION
1	• Switch the ignition ON (engine off or on). • Operate the each power window switch in automatic mode. • Does the each door glass move up and down in automatic mode?	Yes	Go to the next step.
		No	• Door glass does not move up and down in automatic mode: — Go to Step 1 of 09-03A-20 DOOR GLASS DOES NOT MOVE UP AND DOWN IN AUTOMATIC MODE [POWER WINDOW SYSTEMS (WITH AUTO-OPEN/ CLOSE FUNCTION FOR ALL WINDOWS)] [POWER WINDOW SYSTEMS (AUTO-OPEN/CLOSE FUNCTION)]. • Door glass moves up and down in automatic mode, but door glass reverses: — Go to Step 1 of 09-03A-25 DOOR GLASS REVERSES EVEN THOUGH THE GLASS DOES NOT ENCOUNTER A FOREIGN OBJECT WHILE IT IS MOVING UP IN AUTOMATIC MODE [POWER WINDOW SYSTEMS (WITH AUTO-OPEN/CLOSE FUNCTION FOR ALL WINDOWS)] [POWER WINDOW SYSTEMS (AUTO-OPEN/CLOSE FUNCTION)].
2	• Gently pull the each power window switch while the door glass is moving down in automatic mode. • Does the glass stop?	Yes	Go to the next step.
		No	Replace the suspected power window switch, then go to the automatic door glass return function inspection.
3	• Gently press the each power window switch while the door glass is moving up in automatic mode. • Does the glass stop?	Yes	• Automatic mode function is normal. • Go to the automatic door glass return function inspection.
		No	Replace the suspected power window switch, then go to the automatic door glass return function inspection.

Automatic Door Glass Return Function Inspection

Note
- Perform the following inspection for the power window main switch and the power window subswitches for each window.
- With the switch held at auto-up, the door glass does not automatically reverse even when a foreign object is encountered.

STEP	INSPECTION		ACTION
1	• Switch the ignition ON (engine off or on). • Lower the door glass completely. • Use the power window switch to close the door glass in automatic mode. • Does the door glass automatically reverse even though the glass does not encounter a foreign object while it is moving up in automatic mode?	Yes	Go to Step 1 of 09-03A-25 DOOR GLASS REVERSES EVEN THOUGH THE GLASS DOES NOT ENCOUNTER A FOREIGN OBJECT WHILE IT IS MOVING UP IN AUTOMATIC MODE [POWER WINDOW SYSTEMS (WITH AUTO-OPEN/CLOSE FUNCTION FOR ALL WINDOWS)] [POWER WINDOW SYSTEMS (AUTO-OPEN/CLOSE FUNCTION)].
		No	Go to the next step.
2	• Lower the door glass completely. • Take a hammer and hold it against the inside of the top of the window frame so that the door glass will hit its handle when it is closed. • Raise the door glass using automatic mode. • When the door glass hits the hammer handle, does it immediately reverse and move down to **approx.200 mm {7.87 in}** from the completely closed position?	Yes	• Automatic door glass return function inspection is normal. • Go to the IG OFF timer function inspection.
		No	Go to Step 1 of 09-03A-24 DOOR GLASS DOES NOT REVERSE, EVEN WHEN ENCOUNTERING A FOREIGN OBJECT IN IT IS PATH [POWER WINDOW SYSTEMS (WITH AUTO-OPEN/CLOSE FUNCTION FOR ALL WINDOWS)] [POWER WINDOW SYSTEMS (AUTO-OPEN/ CLOSE FUNCTION)].

SYMPTOM TROUBLESHOOTING [POWER WINDOW SYSTEMS (AUTO-OPEN/ CLOSE FUNCTION)]

IG OFF Timer Function Inspection

STEP	INSPECTION		ACTION
1	• Close all doors. • Switch the ignition ON (engine off or on). • In automatic mode, push down the power window main switch for the driver-side front door glass. The door glass should move down **within approx. 40 s** after ignition switch off (LOCK). • In manual mode (finger continuously depressing the power window main switch), the door glass should move down **within approx. 40 s** after ignition switch off (LOCK). • Does the driver-side front door glass move down?	Yes	Go to the next step.
		No	• Perform the driver-side power window initialization procedure, and reinspect. (See 09-12-66 POWER WINDOW SYSTEM INITIALIZATION PROCEDURE.) • If it does not move up and down upon reinspection, inspect the following: — Wiring harness for the door open/close signal system — Latch switch • Repair or replace the malfunctioning part, and reinspect. — If operation is not normal, replace the power window main switch, and then go to the next step.
2	• Switch the ignition ON (engine off or on). • In automatic mode, pull up the power window main switch and subswitch for the all doors glass. The door glass does not move up **within approx. 40 s** after ignition switch off (LOCK). • Verify that driver-side all doors glass does not operate. • Does the driver-side all doors glass move up?	Yes	• Perform the suspect power window initialization procedure, and reinspect. (See 09-12-66 POWER WINDOW SYSTEM INITIALIZATION PROCEDURE.) — If operation is not normal, replace the suspect power window switch, then go to the next step.
		No	Go to the next step.
3	• Switch the ignition ON (engine off or on). • Perform the following for all doors. — Lower the driver-side front door glass completely. — Take a hammer and hold it against the inside of the top of the door glass frame so that the door glass will hit its handle when it is closing. — Raise the door glass using manual mode. • When the door glass hits the hammer handle, does it immediately reverse and move down to **approx. 200 mm {7.87 in}** from the completely closed position?	Yes	Go to the next step.
		No	• Perform the suspect power window initialization procedure, and reinspect. (See 09-12-66 POWER WINDOW SYSTEM INITIALIZATION PROCEDURE.) — If operation is not normal, replace the suspect power window switch, then go to the next step.
4	• Open any door. • Switch the ignition ON (engine off or on). • Push/pull the power window main switch or subswitch for all door glass **within approx. 40 s** after ignition switch off (LOCK). • Verify that the door glass does not move up or down. • Does the door glass move up or down?	Yes	• Inspect the suspect door switch and related wiring harness. • If above parts are normal, replace the suspect power window switch, then go to the next step. • If the above parts have any malfunction, repair or replace the malfunction part, then go to the next step.
		No	Go to the next step.
5	• Close all doors. • Switch the ignition ON (engine off or on). • Push/pull the power window main switch or subswitch for all door glass after **approx. 60 s** after ignition switch off (LOCK). • Verify that the door glass does not move up or down. • Does the door glass move up or down?	Yes	• Perform the suspect power window initialization procedure, and reinspect. (See 09-12-66 POWER WINDOW SYSTEM INITIALIZATION PROCEDURE.) — If operation is not normal, replace the suspect power window switch.
		No	The IG OFF timer function is normal.

SYMPTOM TROUBLESHOOTING [POWER WINDOW SYSTEMS (AUTO-OPEN/ CLOSE FUNCTION)]

DOOR GLASS DOES NOT MOVE UP AND DOWN IN AUTOMATIC MODE [POWER WINDOW SYSTEMS (WITH AUTO-OPEN/CLOSE FUNCTION FOR ALL WINDOWS)] [POWER WINDOW SYSTEMS (AUTO-OPEN/CLOSE FUNCTION)]

id090360905700

Note
- Perform the following inspection for the power window system component parts of windows where the door glass cannot be operated automatically.

1	Door glass does not move up and down in automatic mode
POSSIBLE CAUSE	• Open circuit or short to power supply in sensor 1 signal, ground signal from wiring harness (between power window switch and power window motor), inner power window switch, or inner motor: Steps 4–7 • Open circuit or short to power supply/ground in sensor 2 signal from wiring harness (between power window switch and power window motor), inner power window switch, or inner motor: Steps 8–12 **Note** • The automatic function and the IG OFF timer function do not operate while the power window switch is in fail-safe mode. The fail-safe operates when sensor 1, and/or sensor 2, and/or the sensor power supply malfunctions. • Sensor 1 and/or 2 malfunction — When the door glass is moving up and down, the power window switch cannot sense a pulse signal from sensor 1 during the time it senses 5 pulses (2.5 cycles) from sensor 2. — When the door glass is moving up and down, the switch cannot sense a pulse signal from sensor 2 during the time it senses 5 pulses (2.5 cycles) from sensor 1. — There are three abnormal pulses in a pulse signal while the door glass is moving up or down. — There are 20 cycle pulses from a closed position while the door glass is moving up. — There is no pulse signal for 1 s after the door glass is moved down.

SYMPTOM TROUBLESHOOTING [POWER WINDOW SYSTEMS (AUTO-OPEN/ CLOSE FUNCTION)]

Diagnostic procedure

STEP	INSPECTION		ACTION
1	**INSPECT WHETHER POWER WINDOW SWITCH ENTERS FAIL-SAFE MODE OR NOT** • Switch the ignition to off (LOCK) for 3 minutes. • Switch the ignition ON (engine off or on). • Initialize the power window system. • Operate the auto open/close function. • Does the power window operate properly?	Yes	System is normal. The power window system auto open/close function does not operate temporarily for any of the following reasons: • The power window switch is operated while the power window motor protection circuit (integrated in power window motor) is operating. • The power window main switch power supply is cut off by disconnection of the negative battery cable or removing the fuse.
		No	Go to the next step.
2	**VERIFY WHETHER MALFUNCTION IS IN WIRING HARNESS (BETWEEN POWER WINDOW SWITCH AND POWER WINDOW MOTOR) OR ELSEWHERE** • Switch the ignition ON (engine off or on). • Inspect the voltage at the following power window switch terminals (sensor 1 signal): — Driver-side (at power window main switch): 2D — Except driver-side (at suspected door's power window subswitch): F • Is the voltage **approx.12 V** when the door glass is moving up and down?	Yes	Go to step 7.
		No	Go to the next step.
3	**VERIFY SENSOR 1 OUTPUT SIGNAL** • Switch the ignition ON (engine off or on). • Inspect the voltage at the following power window motor terminals B (sensor 1 signal): • Is the voltage **approx.12 V** when the door glass is moving up and down in manual mode?	Yes	Go to the next step.
		No	Replace the power window motor, then go to Step 12.
4	**INSPECT WIRING HARNESS BETWEEN POWER WINDOW SWITCH AND POWER WINDOW MOTOR FOR CONTINUITY** • Switch the ignition to off (LOCK). • Disconnect the power window switch connector. • Is there continuity between the following power window switch terminals (for driver's door at power window main switch, for except driver's door at suspected door's power window subswitch) and power window motor terminals? — Driver-side: • 2D–B (sensor 1 signal) • 1A–D (sensor power supply) • 1I–C (ground signal) — Except driver-side: • F–B (sensor 1 signal) • J–D (sensor power supply) • L–C (ground signal)	Yes	Go to the next step.
		No	Repair the wiring harness between the power window switch and power window motor, then go to Step 12.

SYMPTOM TROUBLESHOOTING [POWER WINDOW SYSTEMS (AUTO-OPEN/ CLOSE FUNCTION)]

STEP	INSPECTION		ACTION
5	**VERIFY WHETHER MALFUNCTION IS IN WIRING HARNESS (BETWEEN POWER WINDOW SWITCH AND POWER WINDOW MOTOR) OR POWER WINDOW SWITCH** • Switch the ignition ON (engine off or on). • Inspect the voltage at the following power window switch terminals (for driver's door at power window main switch, for except driver's door at suspected door's power window subswitch): — Driver-side • 2D (sensor 1 signal) • 1I (ground signal) — Except driver-side • F (sensor 1 signal) • L (ground signal) • Is the voltage **approx.12 V**?	Yes	Repair the wiring harness between the power window switch and power window motor, then go to Step 11.
		No	Replace the power window switch (open circuit or short to power supply in power window switch).
6	**VERIFY WHETHER MALFUNCTION IS IN WIRING HARNESS (BETWEEN POWER WINDOW SWITCH AND POWER WINDOW MOTOR) OR ELSEWHERE** • Is there continuity between the following power window switch terminals (wiring harness-side) (for driver's door at power window main switch, for except driver's door at suspected door's power window subswitch) and ground? — Driver-side • 2D (sensor 1 signal) • 1I (sensor power supply) — Except driver-side • F (sensor 1 signal) • L (sensor power supply)	Yes	Replace the wiring harness between the power window switch and power window motor, then go to Step 12.
		No	Go to the next step.
7	**VERIFY WHETHER MALFUNCTION IS IN POWER WINDOW SWITCH OR ELSEWHERE** • Switch the ignition ON (engine off or on). • Inspect the voltage at the following power window switch terminals (sensor 2 signal) (for driver's door at power window main switch, for except driver's door at suspected door's power window subswitch): — Driver-side: 2F — Except driver-side: D • Is the voltage **approx.6 V** when the door glass is moving up and down?	Yes	Replace the power window switch (malfunction in power window switch automatic mode control), then go to Step 11.
		No	Go to the next step.
8	**VERIFY SENSOR 2 OUTPUT SIGNAL** • Switch the ignition ON (engine off or on). • Inspect the voltage at power window motor terminal A (sensor 2 signal). • Is the voltage **approx.12 V** when door glass is moving up and down?	Yes	Go to the next step.
		No	Replace the power window motor, then go to Step 12.

SYMPTOM TROUBLESHOOTING [POWER WINDOW SYSTEMS (AUTO-OPEN/ CLOSE FUNCTION)]

STEP	INSPECTION		ACTION
9	**VERIFY WHETHER MALFUNCTION IS IN WIRING HARNESS (BETWEEN POWER WINDOW SWITCH AND POWER WINDOW MOTOR) OR ELSEWHERE** • Switch the ignition to off (LOCK). • Disconnect the power window switch connector and power window motor connector. • Is there continuity between the following power window switch terminals (for driver's door at power window main switch, for except driver's door at suspected door's power window subswitch) and power window motor terminals? — Driver-side: 2F and A (sensor 2 signal) — Except driver-side: D and A (sensor 2 signal)	Yes	Go to the next step.
		No	Repair the wiring harness between the power window switch and power window motor, then go to Step 12.
10	**VERIFY WHETHER MALFUNCTION IS IN WIRING HARNESS (BETWEEN POWER WINDOW SWITCH AND POWER WINDOW MOTOR) OR ELSEWHERE** • Is there continuity between the following power window switch terminals (sensor 2 signal) (for driver's door at power window main switch, for except driver's door at suspected door's power window subswitch) and ground? — Driver-side: 2F — Except driver-side: D	Yes	Repair the wiring harness between the power window switch and power window motor, then go to Step 12.
		No	Go to the next step.
11	**VERIFY WHETHER MALFUNCTION IS IN WIRING HARNESS (BETWEEN POWER WINDOW SWITCH AND POWER WINDOW MOTOR) OR POWER WINDOW SWITCH** • Switch the ignition ON (engine off or on). • Measure the voltage at the following power window switch terminals (sensor 2 signal) (for driver's door at power window main switch, for except driver's door at suspected door's power window subswitch): — Driver-side: 2F — Except driver-side: D • Is the voltage **approx. 12 V**?	Yes	Repair the wiring harness between the power window switch and front driver-side power window motor, then go to the next step.
		No	Replace the power window switch (open circuit or short to power supply/ground in power window switch), then go to the next step.
12	**REINSPECT MALFUNCTION SYMPTOM AFTER REPAIR** • Is malfunction no longer present?	Yes	• Troubleshooting completed. • Explain repairs to the customer.
		No	Reinspect malfunction symptoms, then repeat from Step 1 if malfunction recurs.

SYMPTOM TROUBLESHOOTING [POWER WINDOW SYSTEMS (AUTO-OPEN/CLOSE FUNCTION)]

DOOR GLASS DOES NOT REVERSE, EVEN WHEN ENCOUNTERING A FOREIGN OBJECT IN IT IS PATH [POWER WINDOW SYSTEMS (WITH AUTO-OPEN/CLOSE FUNCTION FOR ALL WINDOWS)] [POWER WINDOW SYSTEMS (AUTO-OPEN/CLOSE FUNCTION)]

id090360909800

Note
- Perform the following inspection for the power window system component parts of the windows where the door glass does not reverse, even when encountering a foreign object in its path.

2	**Door glass does not reverse, even when encountering a foreign object in its path.**
POSSIBLE CAUSE	Automatic window return range did not reset after battery disconnection: Step 2

Diagnostic procedure

STEP	INSPECTION		ACTION
1	**VERIFY CUSTOMER COMPLAINT** • Did the customer complain that the door glass did not reverse when near complete closed position?	Yes	• The system is normal. • Explain to the customer that automatic window return power window system does not operate when near complete closed position.
		No	Go to the next step.
2	**RESET REVERSE AREA STORED IN DOOR GLASS MOTOR** • Perform the power window system initial setting procedure. • Did malfunction disappear?	Yes	• Troubleshooting completed. • Explain to the customer that misadjustment of automatic window return range was the problem.
		No	Replace the power window switch. • Verify auto-up/down operation and if the automatic function does not operate, go to Step 1 of 09-03A-20 DOOR GLASS DOES NOT MOVE UP AND DOWN IN AUTOMATIC MODE [POWER WINDOW SYSTEMS (WITH AUTO-OPEN/CLOSE FUNCTION FOR ALL WINDOWS)] [POWER WINDOW SYSTEMS (AUTO-OPEN/CLOSE FUNCTION)]. • If the automatic function operates, replace the power window switch.

SYMPTOM TROUBLESHOOTING [POWER WINDOW SYSTEMS (AUTO-OPEN/ CLOSE FUNCTION)]

DOOR GLASS REVERSES EVEN THOUGH THE GLASS DOES NOT ENCOUNTER A FOREIGN OBJECT WHILE IT IS MOVING UP IN AUTOMATIC MODE [POWER WINDOW SYSTEMS (WITH AUTO-OPEN/CLOSE FUNCTION FOR ALL WINDOWS)] [POWER WINDOW SYSTEMS (AUTO-OPEN/CLOSE FUNCTION)]

id090360921800

Note

- Perform the following inspection for the power window system component parts of windows where the door glass reverses even though the glass does not encounter a foreign object while it is moving up in automatic mode.

3	**Door glass reverses even though the glass does not encounter a foreign object while it is moving up in automatic mode.**
POSSIBLE CAUSE	• Extreme change in the sliding resistance of the glass while the door glass is closing. — Improper installation of the acrylic door visor. — Power window motor malfunction. — Object caught between the glass run channel and the door glass. — Insufficient tightening of the door glass to the carrier plate. — Glass run channel malfunction. — Glass guide related malfunction. **Note** • The auto-reverse pinch protection function is a mechanism that automatically reverses (opens) the door glass while it is closing when the power window main switch detects the signal from the power window motor indicating that an object is obstructing the door glass movement. • The auto-reverse pinch protection function may operate if the sliding resistance of the door glass increases causing the closing speed to decrease. • If the door glass closing speed has changed, concentrate the inspection on the following locations: (Slip occurrence) — If the door glass is slipping forward, inspect the front side of the glass guide or glass run channel. — If the door glass is slipping rearward, inspect the rear side of the glass guide or glass run channel.

SYMPTOM TROUBLESHOOTING [POWER WINDOW SYSTEMS (AUTO-OPEN/ CLOSE FUNCTION)]

Diagnostic procedure

STEP	INSPECTION		ACTION
1	**INSPECT MALFUNCTION SYMPTOM** • Does the malfunction symptom occur only under the following special conditions?: — Driving over railroad tracks. — Driving on bumpy roads. — Opening/closing the door.	Yes	The system is normal. (Explain to the customer that this does not indicate a malfunction because the system is designed to reverse the door glass while it is closing if it receives vibration when the vehicle is crossing railroad tracks, driving on a bumpy road, or when the door is opened/closed.)
		No	Go to the next step.
2	**INSPECT ACRYLIC DOOR VISOR INSTALLATION CONDITION** • Is the acrylic door visor normal?	Yes	Go to the next step.
		No	Install the side visor properly, then go to the next step.
3	**INSPECT DOOR GLASS CLOSING SPEED** • Affix tape to the rear edge of the door glass as shown in the figure for placing marks (to facilitate seeing the door glass movement). • Start the engine and idle it (to ensure a stabilized operational voltage). • Does the door glass hesitate only once while its closing?	Yes	Mark the point where the door glass closing speed changed, then go to Step 5.
		No	Go to the next step.
4	**REINSPECT DOOR GLASS CLOSING SPEED** • Does the door glass hesitate periodically (5—6 times) while it is closing?	Yes	Replace the power window motor, then go to Step 8. (See 09-12-45 POWER WINDOW MOTOR REMOVAL/ INSTALLATION.)
		No	Go to Step 8.
5	**INSPECT GLASS RUN CHANNEL AND DOOR GLASS SLIDING SURFACE** • Is there an object caught between the glass run channel and the door glass, or is there roughness on the sliding surface (rubber surface)?	Yes	**Object is caught between glass run channel and door glass:** • Remove the object. **Roughness on the sliding surface (rubber surface):** • Replace the glass run channel. After performing one of the above actions, reinspect. If the malfunction is not corrected, go to Step 3.
		No	Go to the next step.
6	**INSPECT TIGHTENING OF DOOR GLASS TO CARRIER PLATE** • Is it normal?	Yes	Go to the next step.
		No	After tightening correctly, reinspect. If the malfunction is not corrected, go to Step 3.
7	**INSPECT CONDITION OF GLASS RUN CHANNEL AND DOOR GLASS** • Is it normal?	Yes	Go to the next step.
		No	Assemble the glass run channel and door glass securely, and reinspect. If the malfunction is not corrected, go to Step 3.
8	**INSPECT DOOR GLASS CLOSING SPEED** • Does the door glass hesitate at any location?	Yes	Repeat the inspection from Step 3.
		No	Troubleshooting completed.

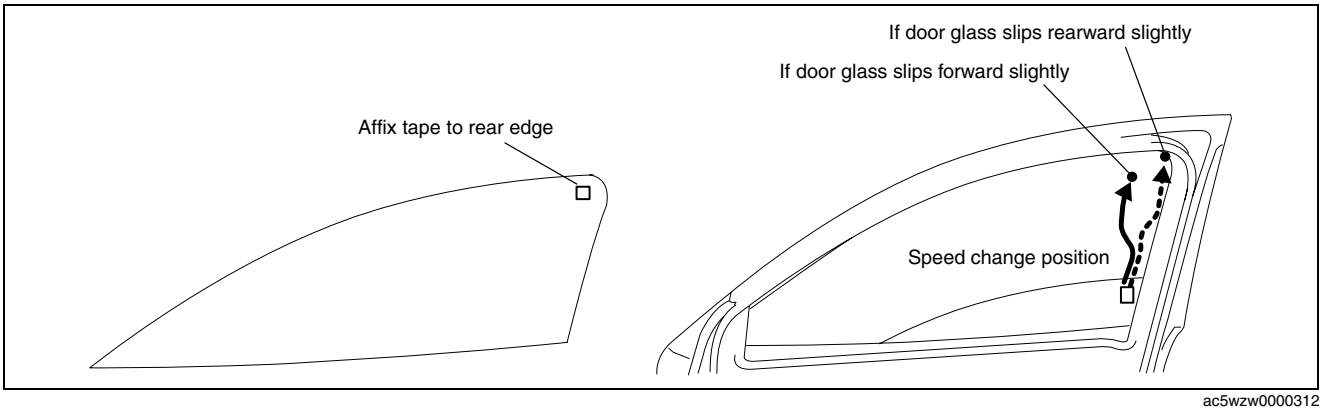

ac5wzw0000312

SYMPTOM TROUBLESHOOTING [POWER WINDOW SYSTEMS (AUTO-OPEN/ CLOSE FUNCTION)]

CLOSE FUNCTION)]

id090360933400

4	Abnormal noise while the door glass is opening or closing
POSSIBLE CAUSE	• Installation screw is loose between the door glass and carrier plate. • Deformity in the power window regulator plastic part due to use. — Scratching, wear marks to the power window regulator resin part due to twisting of the cable. — Gear deformity in the power window motor. **Note** • Identify the location of the noise using a stethoscope or similar device.

Diagnostic procedure

Noise type	Time of occurrence	Possible cause	Location of noise	Action
Clanking noise	Door glass begins to move	Insufficiently tightened installation screw between the door glass and carrier plate.	Between door glass lower edge and carrier plate.	Securely tighten the installation screw.
Groaning noise (Sound increases due to use)	While door glass is operating	Vibration caused by wear on the resin part from cable twisting due to use of the power window regulator. **Note** • Noise does not occur if a roller is equipped to power window regulator resin part.	Power window regulator	Replace the power window regulator (See 09-12-39 FRONT POWER WINDOW REGULATOR REMOVAL/ INSTALLATION.) (See 09-12-42 REAR POWER WINDOW REGULATOR REMOVAL/ INSTALLATION.)
Whining noise		Gear inside power window motor is deformed due to use.	Gear in power window motor	Replace the power window motor (See 09-12-45 POWER WINDOW MOTOR REMOVAL/ INSTALLATION.)
Clicking noise (Periodic noise)				

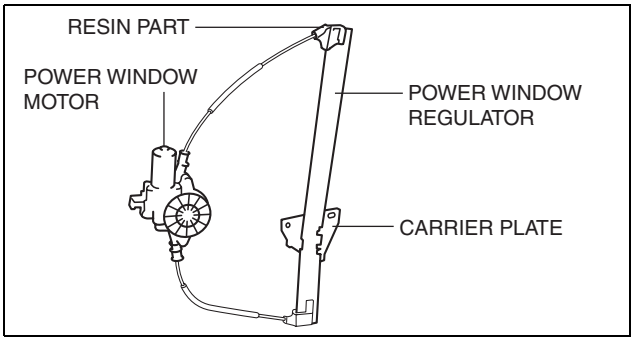

ac5wzw0000312

SYMPTOM TROUBLESHOOTING [POWER WINDOW SYSTEMS (AUTO-OPEN/CLOSE FUNCTION)]

THE AUTO OPEN/CLOSE FUNCTION ON THE DRIVER-SIDE POWER WINDOW IS INOPERATIVE [POWER WINDOW SYSTEMS (WITH AUTO-OPEN/CLOSE FUNCTION FOR DRIVER-SIDE)] [POWER WINDOW SYSTEMS (AUTO-OPEN/CLOSE FUNCTION)]

id090360931000

1	The auto open/close function on the driver's power window is inoperative
POSSIBLE CAUSE	• Power window system in fail-safe function (Power window motor heat protection circuit is operating) • No power supply to power window main switch • Power window main switch malfunction (power window control unit malfunction, auto switch malfunction) • Power window motor malfunction (Sensor inside motor malfunction) • Malfunction in wiring harness between power window motor (sensor) and power window main switch

Diagnostic procedure

STEP	INSPECTION		ACTION
1	• Switch the ignition to off (LOCK) for 3 min. • Switch the ignition ON (engine off or on). • Initialize the power window system. • Operate the auto open/close function. • Dose the power window operate properly?	Yes	System is normal. The power window system auto open/close function dose not operate temporarily for any of the following reasons: • The power window switch is operated while the power window motor protection circuit (integrated in power window motor) is operating. • The power window main switch power supply is cut off by disconnection of the negative battery cable or removing the fuse.
		No	Go to the next step.
2	• Does the sensor built into the power window motor send pulse signals while the power window motor is operating? • Inspect the voltage at the following power window motor terminals: — B (sensor 1 signal) — A (sensor 2 signal) • Is the voltage **approx. 6 V**?	Yes	Go to the next step.
		No	Replace the power window motor. (See 09-12-45 POWER WINDOW MOTOR REMOVAL/INSTALLATION.)
3	• Does the sensor built into the power window motor send pulse signals while the power window motor is operating? • Inspect the voltage at the following power window main switch (14-pin connector) terminals: — 2D (sensor 1 signal) — 2F (sensor 2 signal) • Is the voltage **approx. 6 V**?	Yes	Replace the power main switch. (See 09-12-52 POWER WINDOW MAIN SWITCH REMOVAL/INSTALLATION.)
		No	Inspect for an open or short circuit in wiring between the power window motor (sensor) and the power window main switch. Inspect the connection of the power window motor and power window main switch connectors. (damaged/pulled-out pins, corrosion) Repair of replace necessary.

SYMPTOM TROUBLESHOOTING [POWER WINDOW SYSTEMS (AUTO-OPEN/ CLOSE FUNCTION)]

THE DRIVER-SIDE POWER WINDOW IS INOPERATIVE [POWER WINDOW SYSTEMS (WITH AUTO-OPEN/ CLOSE FUNCTION FOR DRIVER-SIDE)] [POWER WINDOW SYSTEMS (AUTO-OPEN/CLOSE FUNCTION)]

id090360907000

2	The driver's power window is inoperative
POSSIBLE CAUSE	• Power supply circuit or ground circuit malfunction — Burnt fuse (B+) — Open or short circuit in wiring harness between fuse (B+) and power window main switch — Open or short circuit in wiring harness between power window main switch and power window motor — Open or short circuit in wiring harness between power window main switch and ground • Power window main switch malfunction • Power window motor malfunction • Power window regulator malfunction

Diagnostic procedure

STEP	INSPECTION		ACTION
1	• Switch the ignition ON (engine off or on). • Does the LED on the power window main switch illuminate?	Yes	Go to Step 6.
		No	Go to the next step.
2	• Operate all power windows other than the driver's window using the power window main switch. • Does the power window operate properly?	Yes	Go to the next step.
		No	Inspect for an open or short circuit in the following wiring harnesses. Inspect the connector connections (damage/ pulled-out pins, corrosion): • P.WINDOW1 30 A fuse—Power window main switch terminal 1K • Power window main switch terminal 2A—ground. Repair or replace if necessary.
3	• Is the P.WINDOW2 25 A fuse normal?	Yes	Go to Step 5.
		No	Inspect the following: • Short circuit in B+ power supply wiring harness • Short circuit in power window motor Repair or replace if necessary. Replace with the appropriate standard fuse. Then, go to the next step.
4	• Initialize the power window system. • Operate the power window system. • Do the power windows operate properly?	Yes	Troubleshooting is completed.
		No	Re-confirm the symptom and go to Step 1.
5	• Measure the voltage at the power window main switch terminal 1L. • Is the voltage B+?	Yes	Replace the power window main switch. (See 09-12-52 POWER WINDOW MAIN SWITCH REMOVAL/INSTALLATION.)
		No	Inspect for an open or short circuit in the power window main switch wiring harness (battery power supply). Inspect the power window main switch connector connection. (damage/pulled-out pins, corrosion) Repair or replace if necessary.
6	• Measure the voltage at the power window main switch. (power window motor output terminal) while operating the power window using the power window main switch. • Is the voltage B+? (Open: terminal 1H (L.H.D.), 1F (R.H.D.)/ close: terminal 1J (L.H.D.), 1H (R.H.D.))	Yes	Go to the next step.
		No	Replace the power window main switch. (See 09-12-52 POWER WINDOW MAIN SWITCH REMOVAL/INSTALLATION.)
7	• Measure the voltage at the power window motor. (battery power supply terminal) while operating the power window using the power window motor. • Is the voltage B+? (Open: terminal F/ close: terminal E)	Yes	Go to the next step.
		No	Inspect for an open or short circuit in the wiring harness between the power window main switch and the power window motor. Inspect the power window main switch and power window motor connector connections. (damage/pulled-out pins, corrosion) Repair or replace if necessary.

SYMPTOM TROUBLESHOOTING [POWER WINDOW SYSTEMS (AUTO-OPEN/ CLOSE FUNCTION)]

STEP	INSPECTION		ACTION
8	• Operate the driver's power window using the power window main switch. • Does the power window motor operate (rotate)? **Caution** • **If the power window motor temperature is high, the motor may not rotate due to the motor internal bimetal function. Leave it untouched for about 3 min. to cool it down, then reinspect.**	Yes	Go to the next step.
		No	Replace the power window motor. (See 09-12-45 POWER WINDOW MOTOR REMOVAL/ INSTALLATION.)
9	• Remove the door glass from the carrier plate. • Make sure that the door glass moves smoothly using your hand. • Does the door glass move smoothly?	Yes	Replace the power window regulator. (See 09-12-39 FRONT POWER WINDOW REGULATOR REMOVAL/INSTALLATION.) (See 09-12-42 REAR POWER WINDOW REGULATOR REMOVAL/INSTALLATION.)
		No	Inspect for a bent regulator guide or other possible malfunction. If normal, replace the door glass run-channel.

ALL POWER WINDOWS OTHER THAN DRIVER-SIDE DO NOT OPERATE USING THE POWER WINDOW SUBSWITCH [POWER WINDOW SYSTEMS (WITH AUTO-OPEN/CLOSE FUNCTION FOR DRIVER-SIDE)] [POWER WINDOW SYSTEMS (AUTO-OPEN/CLOSE FUNCTION)]

id090360931200

3	**All power windows other than driver-side do not operate using the power window subswitch**
POSSIBLE CAUSE	• Open or short circuit in power window subswitch wiring harness (battery power supply circuit). • Power window subswitch malfunction

Diagnostic procedure

STEP	INSPECTION		ACTION
1	• Switch the ignition ON (engine off or on). • Set the power cut-switch to the UNLOCK position. • Measure the voltage at the power window subswitch terminal C. • Is the voltage B+?	Yes	Replace the power window subswitch. (See 09-12-61 POWER WINDOW SUBSWITCH REMOVAL/INSTALLATION.)
		No	Inspect for an open or short circuit in the wiring harness at power window subswitch (battery power supply). Inspect the power window subswitch connector connection. (damage/pulled-out pins, corrosion) Repair or replace if necessary.

ALL POWER WINDOWS OTHER THAN DRIVER-SIDE DO NOT OPERATE USING THE POWER WINDOW MAIN SWITCH [POWER WINDOW SYSTEMS (WITH AUTO-OPEN/CLOSE FUNCTION FOR DRIVER-SIDE)] [POWER WINDOW SYSTEMS (AUTO-OPEN/CLOSE FUNCTION)]

id090360931300

4	**All power windows other than driver's side do not operate using the power window main switch**
POSSIBLE CAUSE	• Open or short circuit in wiring harness between ignition switch (IG1) and power window main switch (IG1). • Power window main switch malfunction

Diagnostic procedure

STEP	INSPECTION		ACTION
1	• Switch the ignition ON (engine off or on). • Set the power cut-switch to the UNLOCK position. • Operate all power windows other than the driver's side using the power window main switch. • Do any power windows operate?	Yes	Replace the power window main switch. (See 09-12-52 POWER WINDOW MAIN SWITCH REMOVAL/INSTALLATION.)
		No	Inspect for an open or short circuit in the power window main switch wiring harness (battery power supply). Inspect the power window main switch connector connection. (damage/pulled-out pins, corrosion) Repair or replace if necessary.

SYMPTOM TROUBLESHOOTING [POWER WINDOW SYSTEMS (AUTO-OPEN/

ALL POWER WINDOWS ARE INOPERATIVE [POWER WINDOW SYSTEMS (WITH AUTO-OPEN/CLOSE FUNCTION FOR DRIVER-SIDE)] [POWER WINDOW SYSTEMS (AUTO-OPEN/CLOSE FUNCTION)]

id090360931400

5	All power windows are inoperative
POSSIBLE CAUSE	• Power supply circuit or ground circuit malfunction — Burnt fuse (IG1) — Open or short circuit in wiring harness between ignition switch (IG1) and power window main switch — Open or short circuit in wiring harness between power window main switch and power window subswitch — Open or short circuit in wiring harness between power window main switch and power window motor — Open or short circuit in wiring harness between power window main switch and ground • Power window main switch malfunction (power cut-off switch malfunction, switch malfunction) • Power window subswitch malfunction • Power window motor malfunction • Power window regulator malfunction

Diagnostic procedure

STEP	INSPECTION		ACTION
1	• Switch the ignition ON (engine off or on). • Set the power cut-off switch to the UNLOCK position. • Inspect the power window system operation again. • Does the system operate properly?	Yes	System is now normal. (power cut-off switch is not set properly.)
		No	Go to the next step.
2	• Operate all power windows other than driver's window using the power window main switch. • Does any power window operate?	Yes	Go to Step 6.
		No	Go to the next step.
3	• Operate the driver's power window using the power window main switch. • Does the power window operate?	Yes	Go to the next step.
		No	Inspect for an open circuit in the wiring harness between the power window main switch and the body ground. Inspect the power window main switch connector connection. (damage/pulled-out pins, corrosion) Repair or replace if necessary.
4	• Is the P.WINDOW1 30 A fuse normal?	Yes	Replace with the appropriate standard fuse. If the fuse is melted, inspect the wiring harness for a short to ground. Repair or replace the wiring harness, then replace the fuse.
		No	Go to the next step.
5	• Measure the voltage at the power window main switch terminal 1L. • Is the voltage B+?	Yes	Replace the power window main switch. (See 09-12-52 POWER WINDOW MAIN SWITCH REMOVAL/INSTALLATION.)
		No	Inspect for an open or short circuit in the power window main switch wiring harness (battery power supply). Inspect the power window main switch connector connection. (damage/pulled-out pins, corrosion) Repair or replace if necessary.
6	• Identify the inoperative power window. • Measure the voltage at the suspect power window motor (battery power supply) while operating the power window motor using the suspect power window subswitch. • Is the voltage B+? (Open: terminal F/ close: terminal E)	Yes	Go to the next step.
		No	Go to Step 9.
7	• Operate the power window using the power window subswitch. • Does the power window motor operate (rotate)? **Caution** • **If the power window motor temperature is high, the motor may not rotate due to the motor internal bimetal function. Leave it untouched for about 3 min. to cool it down, then reinspect.**	Yes	Go to the next step.
		No	Replace the power window motor. (See 09-12-45 POWER WINDOW MOTOR REMOVAL/INSTALLATION.)

SYMPTOM TROUBLESHOOTING [POWER WINDOW SYSTEMS (AUTO-OPEN/ CLOSE FUNCTION)]

STEP	INSPECTION		ACTION
8	• Remove the door glass from the carrier plate. • Make sure that the door glass moves smoothly using your hand. • Does the door glass move smoothly?	Yes	Replace the power window regulator guide.
		No	Inspect for a bent regulator guide or other possible malfunction. If normal, replace the glass run channel.
9	• Measure the voltage at the power window subswitch (power window motor output) while operating the power window subswitch. • Is the voltage B+? (Open: terminal A/ close: terminal D)	Yes	Inspect for an open or short circuit in the wiring harness between the power window subswitch and power window motor. Inspect the power window subswitch and power window motor connector connections. (damage/pulled-out pins, corrosion) Repair or replace if necessary.
		No	Go to the next step.
10	**Note** • Do not operate the power window subswitch during the following inspection. • Inspect the continuity between power window subswitch terminal B (vehicle harness-side) and ground. • Is there continuity?	Yes	Go to the next step.
		No	Inspect for an open or short circuit in the power window subswitch wiring harness. Inspect the power window subswitch connector connection. (damage/pulled-out pins, corrosion) Repair or replace if necessary. Then go to Step 12.
11	**Note** • Do not operate the power window subswitch during the following inspection. • Inspect the continuity between power window subswitch terminal E and ground. • Is there continuity?	Yes	Replace the power window subswitch. (See 09-12-61 POWER WINDOW SUBSWITCH REMOVAL/INSTALLATION.)
		No	Inspect for an open or short circuit in the power window subswitch wiring harness. Inspect the power window subswitch connector connection. (damage/pulled-out pins, corrosion) Repair or replace if necessary. Then go to Step 12.
12	**Note** • Do not operate the power window main switch during the following inspection. • Inspect the continuity between power window main switch terminal (close; 1B (L.H.D.), 1D (R.H.D.), 1A, 1G) and ground. • Is there continuity?	Yes	Go to the next step.
		No	Replace the power window main switch. (See 09-12-52 POWER WINDOW MAIN SWITCH REMOVAL/INSTALLATION.)
13	**Note** • Do not operate the power window main switch during the following inspection. • Inspect the continuity between power window main switch terminal (open; 1D(L.H.D.), 1J (R.H.D.), 1C, 1I) and ground. • Is there continuity?	Yes	Inspect for an open or short circuit in the wiring harness between the power window main switch and power window subswitch. Inspect the power window main switch and subswitch connector connections. (damage/pulled-out pins, corrosion) Repair or replace if necessary.
		No	Replace the power window main switch. (See 09-12-52 POWER WINDOW MAIN SWITCH REMOVAL/INSTALLATION.)

SYMPTOM TROUBLESHOOTING [POWER WINDOW SYSTEMS (AUTO-OPEN/

DOOR GLASS REVERSES EVEN THOUGH THE GLASS DOES NOT ENCOUNTER A FOREIGN OBJECT WHILE IT IS MOVING UP IN AUTOMATIC MODE [POWER WINDOW SYSTEMS (WITH AUTO-OPEN/CLOSE FUNCTION FOR DRIVER-SIDE)] [POWER WINDOW SYSTEMS (AUTO-OPEN/CLOSE FUNCTION)]

id090360931500

Note

- Perform the following inspection for the power window system component parts of windows where the door glass reverses even though the glass does not encounter a foreign object while it is moving up in automatic mode.

6	**Door glass reverses even though the glass does not encounter a foreign object while it is moving up in automatic mode**
POSSIBLE CAUSE	• Extreme change in the sliding resistance of the glass while the door glass is closing. — Improper installation of the acrylic door visor. — Power window motor malfunction. — Object caught between the glass run channel and the door glass. — Insufficient tightening of the door glass to the carrier plate. — Glass run channel malfunction. — Glass guide related malfunction. **Note** • The auto-reverse pinch protection function is a mechanism that automatically reverses (opens) the door glass while it is closing when the power window main switch detects the signal from the power window motor indicating that an object is obstructing the door glass movement. • The auto-reverse pinch protection function may operate if the sliding resistance of the door glass increases causing the closing speed to decrease. • If the door glass closing speed has changed, concentrate the inspection on the following locations: (Slip occurrence) — If the door glass is slipping forward, inspect the front side of the glass guide or glass run channel. — If the door glass is slipping rearward, inspect the rear side of the glass guide or glass run channel.

Diagnostic procedure

STEP	INSPECTION		ACTION
1	• Inspect malfunction symptom. • Does the malfunction symptom occur only under the following special conditions?: — Driving over railroad tracks. — Driving on bumpy roads. — Opening/closing the door.	Yes	The system is normal. (Explain to the customer that this does not indicate a malfunction because the system is designed to reverse the door glass while it is closing if it receives vibration when the vehicle is crossing railroad tracks, driving on a bumpy road, or when the door is opened/closed.)
		No	Go to the next step.
2	• Inspect acrylic door visor installation condition. • Is the acrylic door visor normal?	Yes	Go to the next step.
		No	Install the side visor properly, then go to the next step.
3	• Inspect door glass closing speed. • Affix tape to the rear edge of the door glass as shown in the figure for placing marks. (to facilitate seeing the door glass movement) • Start the engine and idle it (to ensure a stabilized operational voltage). • Does the door glass hesitate only once while its closing?	Yes	Mark the point where the door glass closing speed changed, then go to Step 5.
		No	Go to the next step.
4	• Reinspect door glass closing speed. • Does the door glass hesitate periodically while it is closing?	Yes	Replace the power window motor, then go to Step 8. (See 09-12-45 POWER WINDOW MOTOR REMOVAL/ INSTALLATION.)
		No	Go to Step 8.
5	• Inspect glass run channel and door glass sliding surface. • Is there an object caught between the glass run channel and the door glass, or is there roughness on the sliding surface (rubber surface)?	Yes	**Object is caught between glass run channel and door glass:** • Remove the object. **Roughness on the sliding surface (rubber surface):** • Replace the glass run channel. After performing one of the above actions, reinspect. If the malfunction is not corrected, go to Step 3.
		No	Go to the next step.

SYMPTOM TROUBLESHOOTING [POWER WINDOW SYSTEMS (AUTO-OPEN/ CLOSE FUNCTION)]

STEP	INSPECTION		ACTION
6	• Inspect tightening of door glass to carrier plate. • Is it normal?	Yes	Go to the next step.
		No	After tightening correctly, reinspect. If the malfunction is not corrected, go to Step 3.
7	• Inspect condition of glass run channel and door glass. • Is it normal?	Yes	Go to the next step.
		No	Assemble the glass run channel and door glass securely, and reinspect. If the malfunction is not corrected, go to Step 3.
8	• Inspect door glass closing speed. • Does the door glass hesitate at any location?	Yes	Repeat the inspection from Step 3.
		No	Troubleshooting completed.

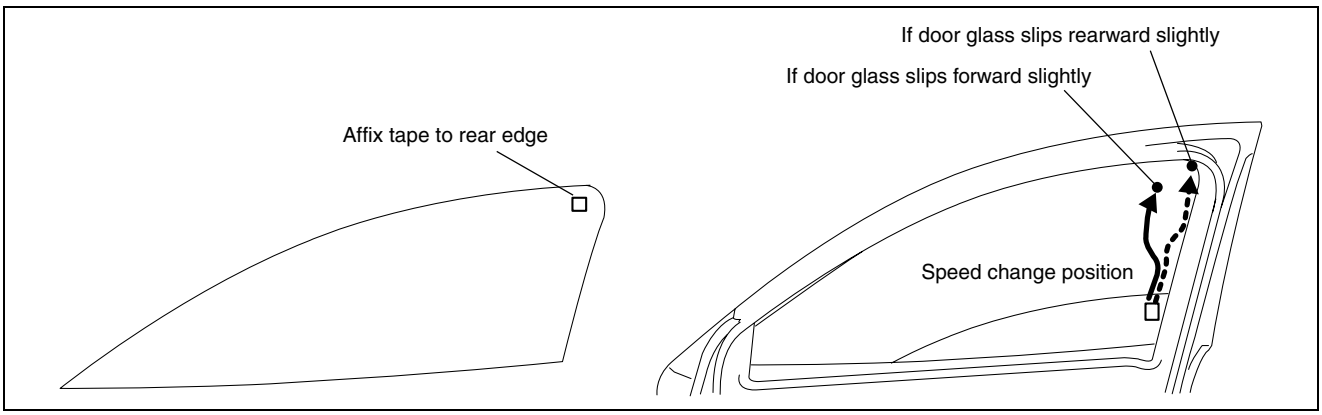

ac5wzw0000312

ABNORMAL NOISE WHILE THE DOOR GLASS IS OPENING OR CLOSING [POWER WINDOW SYSTEMS (WITH AUTO-OPEN/CLOSE FUNCTION FOR DRIVER-SIDE)] [POWER WINDOW SYSTEMS (AUTO-OPEN/ CLOSE FUNCTION)]

id090360931600

7	**Abnormal noise while the door glass is opening or closing**
POSSIBLE CAUSE	• Installation screw is loose between the door glass and carrier plate. • Deformity in the power window regulator plastic part due to use. — Scratching, wear marks to the power window regulator resin part due to twisting of the cable. — Gear deformity in the power window motor. **Note** • Identify the location of the noise using a stethoscope or similar device.

Diagnostic procedure

Noise type	Time of occurrence	Possible cause	Location of noise	Action
Clanking noise	Door glass begins to move	Insufficiently tightened installation screw between the door glass and carrier plate.	Between door glass lower edge and carrier plate.	Securely tighten the installation screw.
Groaning noise (Sound increases due to use)	While door glass is operating	Vibration caused by wear on the resin part from cable twisting due to use of the power window regulator. **Note** • Noise does not occur if a roller is equipped to power window regulator resin part.	Power window regulator	Replace the power window regulator (See 09-12-39 FRONT POWER WINDOW REGULATOR REMOVAL/ INSTALLATION.) (See 09-12-42 REAR POWER WINDOW REGULATOR REMOVAL/ INSTALLATION.)
Whining noise		Gear inside power window motor is deformed due to use.	Gear in power window motor	Replace the power window motor (See 09-12-45 POWER WINDOW MOTOR REMOVAL/ INSTALLATION.)
Clicking noise (Periodic noise)				

SYMPTOM TROUBLESHOOTING [POWER WINDOW SYSTEMS (AUTO-OPEN/ CLOSE FUNCTION)]

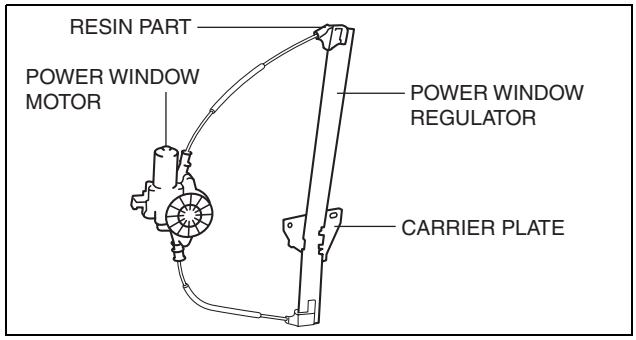

ac5wzw0000312

09-03B SYMPTOM TROUBLESHOOTING [SECURITY AND LOCKS]

FOREWORD
[SECURITY AND LOCKS] 09-03B–2
Troubleshooting Procedure **09-03B–2**
Action for non-repeatable malfunction. **09-03B–3**
SYSTEM WIRING DIAGRAM
[SECURITY AND LOCKS] 09-03B–4
SYMPTOM TROUBLESHOOTING ITEM TABLE [SECURITY AND LOCKS] 09-03B–6
QUICK DIAGNOSIS CHART
[SECURITY AND LOCKS] 09-03B–7
DOOR LOCK DOES NOT OPERATE
[SECURITY AND LOCKS] 09-03B–8
Description. **09-03B–8**
Possible cause. **09-03B–8**
Diagnostic Procedure. **09-03B–8**
ADVANCED KEYLESS ENTRY SYSTEM DOES NOT OPERATE
[SECURITY AND LOCKS] 09-03B–10
Description. **09-03B–10**
Possible cause. **09-03B–10**
Diagnostic Procedure. **09-03B–10**
LOCK/UNLOCK OPERATION NOT POSSIBLE USING REMOTE TRANSMITTER
[SECURITY AND LOCKS] 09-03B–13
Description **09-03B–13**
Possible cause **09-03B–13**
Diagnostic Procedure **09-03B–13**
ANSWER-BACK BUZZER DOES NOT SOUND
[SECURITY AND LOCKS] 09-03B–15
Description **09-03B–15**
Possible cause **09-03B–15**
Diagnostic Procedure **09-03B–15**
PUSH BUTTON START SYSTEM DOES NOT OPERATE
[SECURITY AND LOCKS] 09-03B–17
Description **09-03B–17**
Possible cause **09-03B–17**
Diagnostic Procedure **09-03B–17**
STEERING LOCK FUNCTION DOES NOT OPERATE
[SECURITY AND LOCKS] 09-03B–18
Description **09-03B–18**
Possible cause **09-03B–18**
Diagnostic Procedure **09-03B–18**

SYMPTOM TROUBLESHOOTING [SECURITY AND LOCKS]

FOREWORD [SECURITY AND LOCKS]

id0903k7378400

- If there is any vehicle malfunction complaint lodged by a customer, perform malfunction diagnosis according to the troubleshooting procedure.

Troubleshooting Procedure

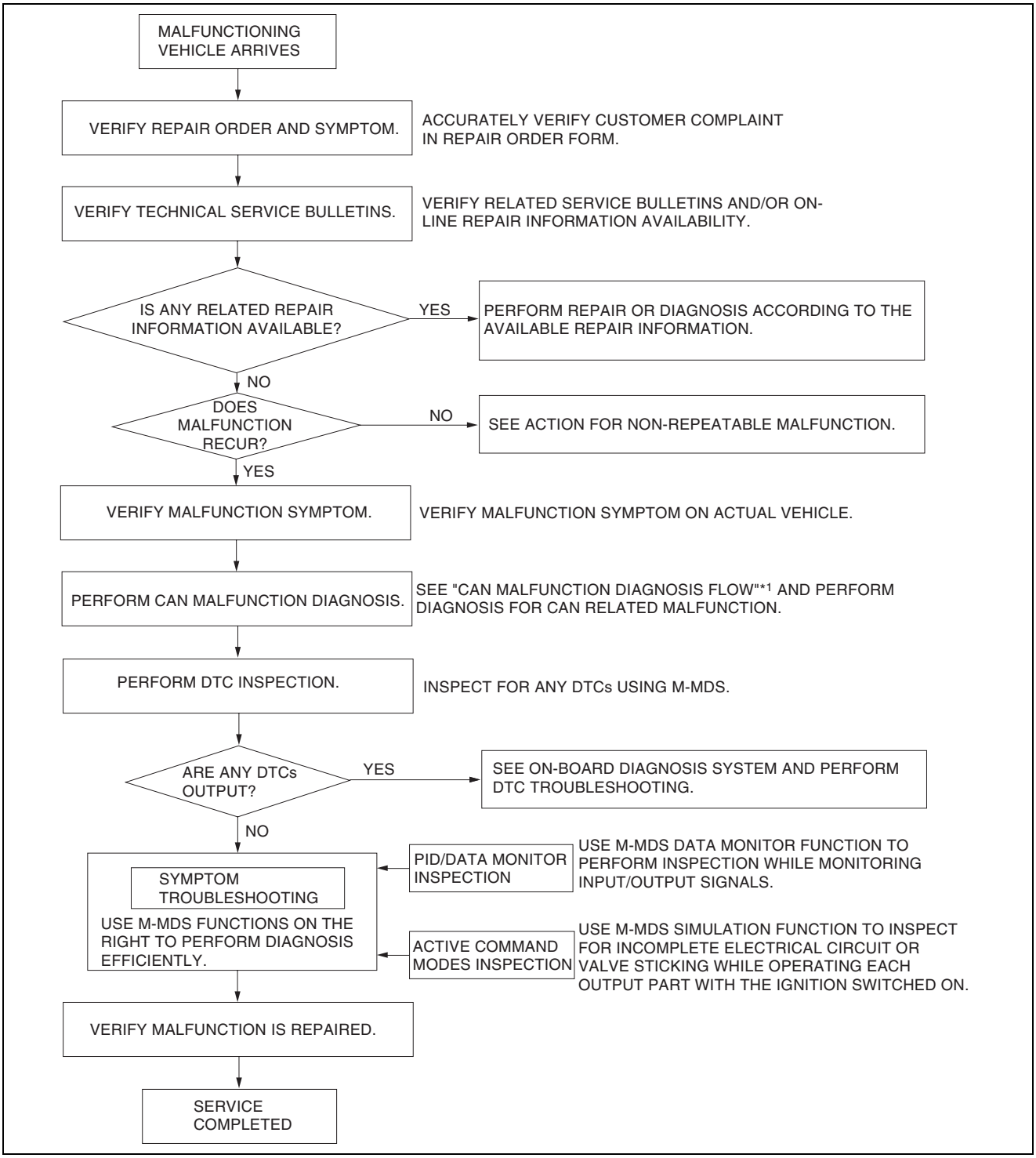

ac5wzw0000282

*1 : 10-02A-3 CONTROLLER AREA NETWORK (CAN) MALFUNCTION DIAGNOSIS FLOW [SKYACTIV-G 2.0 (L.H.D.)] /10-02B-3 CONTROLLER AREA NETWORK (CAN) MALFUNCTION DIAGNOSIS FLOW [SKYACTIV-G 2.0 (R.H.D.)]/10-02C-3 CONTROLLER AREA NETWORK (CAN) MALFUNCTION DIAGNOSIS FLOW [SKYACTIV-D 2.2 (L.H.D.)]/10-02D-3 CONTROLLER AREA NETWORK (CAN) MALFUNCTION DIAGNOSIS FLOW [SKYACTIV-D 2.2 (R.H.D.)]

SYMPTOM TROUBLESHOOTING [SECURITY AND LOCKS]

Action for non-repeatable malfunction

- If the malfunction does not recur, verify the malfunction cause by performing the following actions:
  - — Based on the repair order form, attempt to drive the vehicle or perform tests to replicate the malfunction, record the data (such as rear body control module (RBCM) and start stop unit circuit voltage) at that time, and detect the malfunction cause.
  - — Shake the wiring harness or connector of the electrical component which is suspected to be the cause of the malfunction, and inspect for malfunction or occurrence of any DTCs.

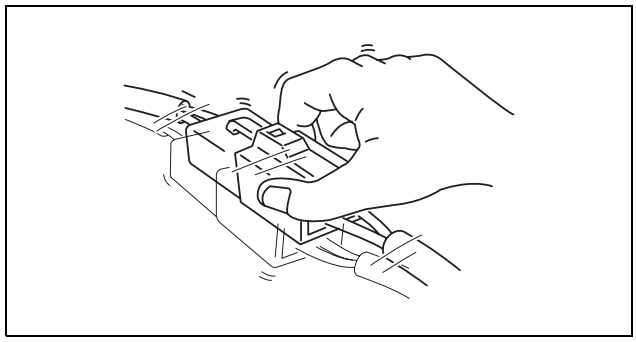

ac5wzw0000282

  - — Inspect the female terminals on the connector of the electric component which is suspected to be the cause of the malfunction for poor connection.

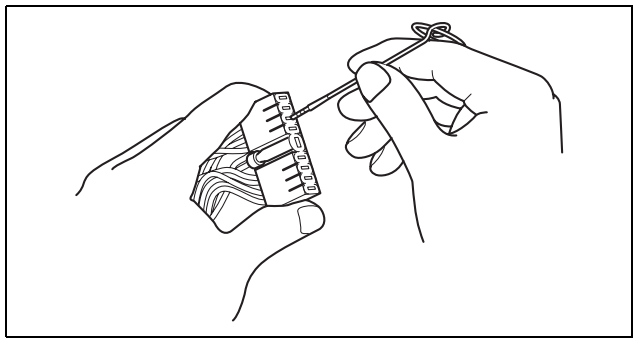

ac5wzw0000282

SYMPTOM TROUBLESHOOTING [SECURITY AND LOCKS]

SYSTEM WIRING DIAGRAM [SECURITY AND LOCKS]

id0903k7377600

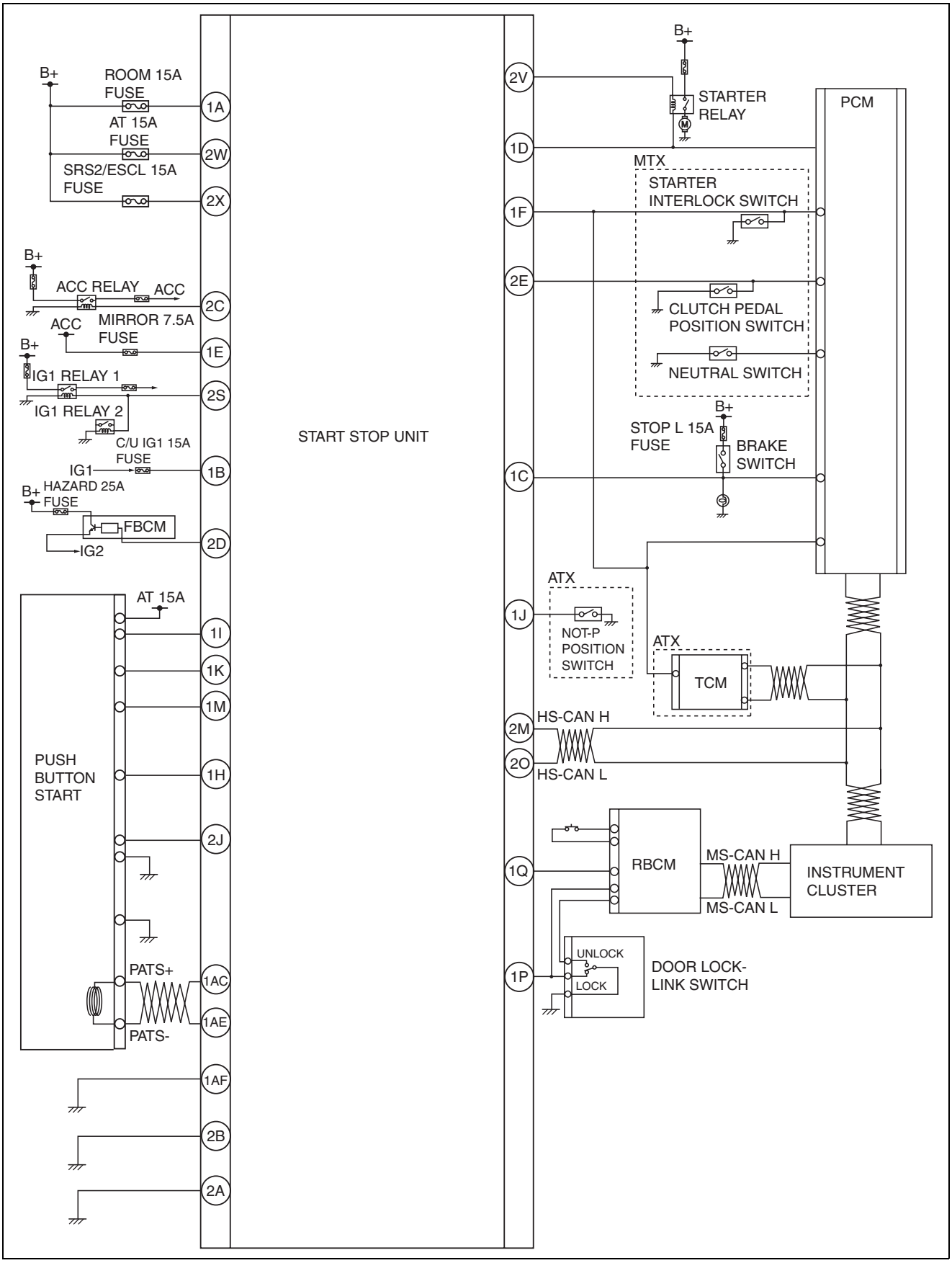

ac5wzw0000290

SYMPTOM TROUBLESHOOTING [SECURITY AND LOCKS]

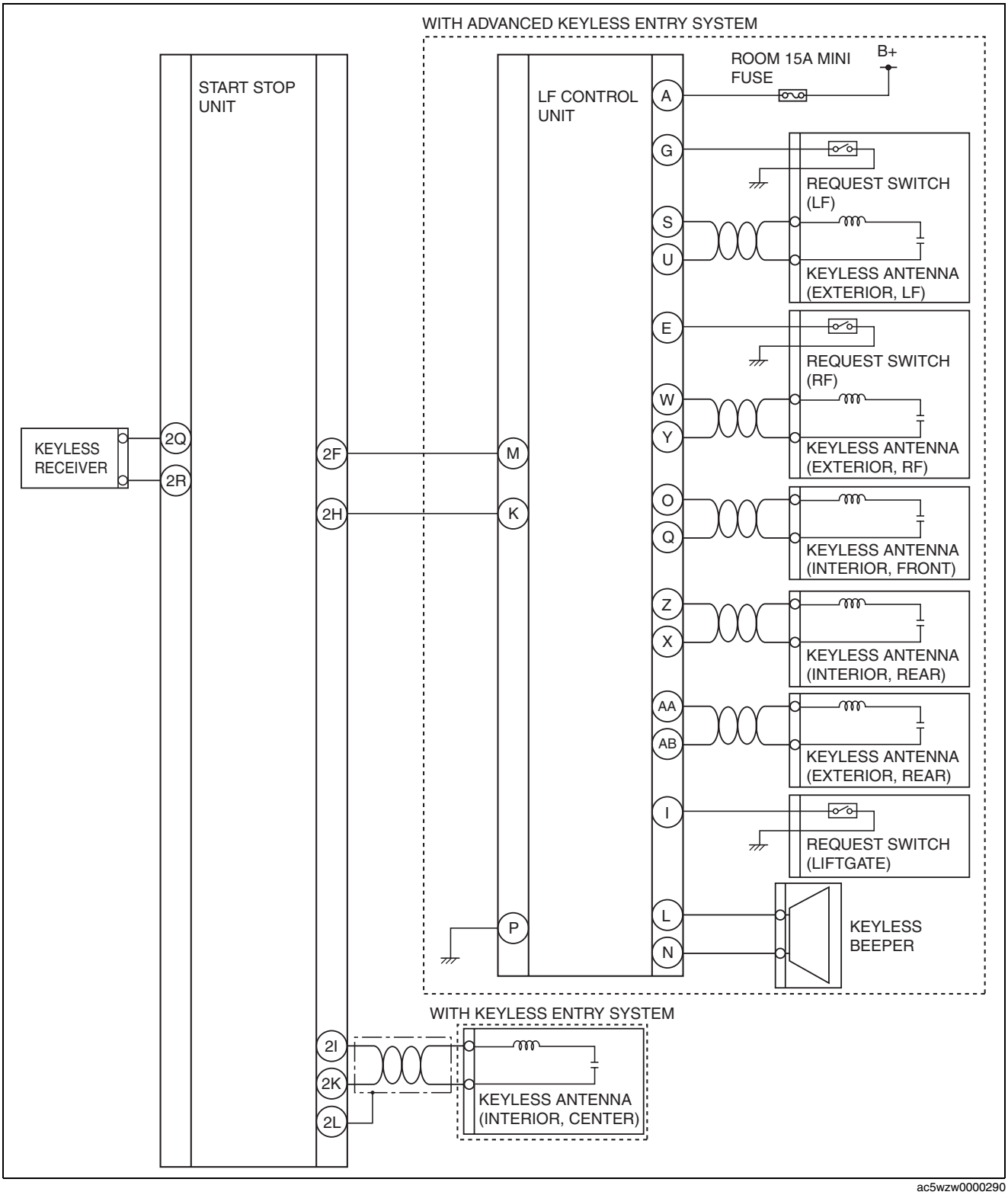

ac5wzw0000290

SYMPTOM TROUBLESHOOTING [SECURITY AND LOCKS]

SYMPTOM TROUBLESHOOTING ITEM TABLE [SECURITY AND LOCKS]

id0903k7113500

- Verify the malfunctioning symptom and perform malfunction diagnosis according to the applicable item.

Malfunction symptom	Malfunction diagnosis
Door cannot be locked/unlocked using key cylinder	• 09-03B-8 DOOR LOCK DOES NOT OPERATE [SECURITY AND LOCKS]
Door cannot be locked/unlocked using lock knob	• 09-03B-8 DOOR LOCK DOES NOT OPERATE [SECURITY AND LOCKS]
Liftgate does not open even if liftgate opener switch is pressed	• 09-03B-10 ADVANCED KEYLESS ENTRY SYSTEM DOES NOT OPERATE [SECURITY AND LOCKS]
Door can be locked/unlocked using request switch	• 09-03B-8 DOOR LOCK DOES NOT OPERATE [SECURITY AND LOCKS] • 09-03B-10 ADVANCED KEYLESS ENTRY SYSTEM DOES NOT OPERATE [SECURITY AND LOCKS]
Door cannot be locked/unlocked using remote transmitter	• 09-03B-8 DOOR LOCK DOES NOT OPERATE [SECURITY AND LOCKS] • 09-03B-13 LOCK/UNLOCK OPERATION NOT POSSIBLE USING REMOTE TRANSMITTER [SECURITY AND LOCKS]
Door cannot be locked/unlocked using door lock switch	• 09-03B-8 DOOR LOCK DOES NOT OPERATE [SECURITY AND LOCKS]
Keyless beeper does not sound	• 09-03B-15 ANSWER-BACK BUZZER DOES NOT SOUND [SECURITY AND LOCKS]
Ignition cannot be switched to ACC or ON (engine off)	• 09-03B-17 PUSH BUTTON START SYSTEM DOES NOT OPERATE [SECURITY AND LOCKS]
Steering lock does not operate normally	• 09-03B-18 STEERING LOCK FUNCTION DOES NOT OPERATE [SECURITY AND LOCKS]

SYMPTOM TROUBLESHOOTING [SECURITY AND LOCKS]

QUICK DIAGNOSIS CHART [SECURITY AND LOCKS]

X: Applicable

Malfunction symptom / Possible cause	Door cannot be locked/unlocked using key cylinder	Door cannot be locked/unlocked using lock knob	Liftgate does not open even if liftgate opener switch is pressed	Door can be locked/unlocked using request switch	Door cannot be locked/unlocked using remote transmitter	Door cannot be locked/unlocked using door lock switch	Keyless beeper does not sound	Ignition cannot be switched to ACC or ON (engine off)	Steering lock does not operate normally
Open circuit in wiring harness between start stop unit terminal 2A and ground								X	X
Open circuit in wiring harness between start stop unit terminal 2B and ground			X	X	X		X	X	
Open circuit in wiring harness between start stop unit terminal 1AF and ground			X	X	X		X	X	
Open circuit in wiring harness between start stop unit terminal 2J and push button start terminal I								X	
Open circuit in wiring harness between start stop unit terminal 1H and push button start terminal C								X	
Personalization feature not set							X		
Open circuit in wiring harness between keyless beeper terminal B and LF control unit terminal N							X		
Open circuit in wiring harness between keyless beeper terminal A and LF control unit terminal L							X		
Short to ground in wiring harness between keyless beeper terminal B and LF control unit terminal N							X		
Short to ground in wiring harness between keyless beeper terminal A and LF control unit terminal L							X		
Short to power supply in wiring harness between keyless beeper terminal B and LF control unit terminal N							X		
Short to power supply in wiring harness between keyless beeper terminal A and LF control unit terminal L							X		
Keyless beeper malfunction							X		
Effect of non-standard equipment (any control unit with built-in micro computer such as radio set, mobile telephone, and TV)					X				
Customer's mis-operation or misunderstanding					X				
Open circuit in wiring harness between keyless receiver terminal B and start stop unit terminal 2R				X	X			X	
Open circuit in wiring harness between keyless receiver terminal A and start stop unit terminal 2Q				X	X			X	
Remote transmitter malfunction				X	X			X	
Keyless receiver malfunction				X	X			X	
Open circuit in wiring harness between LF control unit terminal A and request switch (liftgate) terminal I				X					
Open circuit in wiring harness between LF control unit terminal E and request switch (RF) terminal D				X					
Open circuit in wiring harness between LF control unit terminal G and request switch (LF) terminal D				X					
Open circuit in wiring harness between rear body control module (RBCM) terminal 4M and liftgate opener switch terminal C			X						
Short to ground in wiring harness between start stop unit terminal 1P and door lock link switch (driver's side) terminal D (L.H.D.) / J (R.H.D.)		X		X					X
Open circuit in wiring harness between start stop unit terminal 1P and door lock link switch (driver's side) terminal D (L.H.D.) / J (R.H.D.)		X		X					X
Liftgate opener switch malfunction			X						
Power window main switch terminal 1E and rear body control module (RBCM) terminal 3F						X			
Front door latch and lock actuator terminal H (L.H.D.) / F (R.H.D.) and rear body control module (RBCM) terminal 3H	X	X		X	X	X			
Front door key cylinder switch malfunction	X					X			
Door lock actuator malfunction	X	X		X	X	X			
Door latch switch malfunction	X	X		X	X	X			

ac5wzw0000281

id0903k7012300

SYMPTOM TROUBLESHOOTING [SECURITY AND LOCKS]

DOOR LOCK DOES NOT OPERATE [SECURITY AND LOCKS]

id0903k7012400

Description

- Door cannot be locked/unlocked using the front door key cylinder.
- All doors cannot be locked/unlocked using the driver's door lock knob. (without door lock switch)
- All doors cannot be locked/unlocked using the door lock switch. (with door lock switch)

Possible cause

- Door latch switch malfunction
- Door lock actuator malfunction
- Front door key cylinder switch malfunction
- Open circuit in wiring harness between the following terminals:
  - — Front door latch and lock actuator terminal H (L.H.D.) / F (R.H.D.) and rear body control module (RBCM) terminal 3H
  - — Power window main switch terminal 1E and rear body control module (RBCM) terminal 3F

Diagnostic Procedure

Step	Inspection		Action
1	**INSPECT DOOR LATCH SWITCH STUCK OFF OR OPEN CIRCUIT** • Open each door and verify that the door ajar warning light in the instrument cluster illuminates. • Does the door ajar warning light illuminate?	Yes	Go to the next step.
		No	• Inspect the door latch switch on the door in which the ajar warning light did not illuminate and for an open circuit in the wiring harness between the rear body control module (RBCM) and ground. (See 09-14-41 FRONT DOOR LATCH SWITCH INSPECTION.) (See 09-14-47 REAR DOOR LATCH SWITCH INSPECTION.) • After inspection, go to Step 7.
2	**DETERMINE IF MALFUNCTION CAUSE IS DOOR LOCK ACTUATOR** • Perform the lock/unlock operation using lock knob for each door. • Is door locked/unlocked?	Yes	Go to the next step.
		No	• Inspect the door lock actuator for the door which could not lock/unlock. (See 09-14-39 FRONT DOOR LOCK ACTUATOR INSPECTION.) (See 09-14-46 REAR DOOR LOCK ACTUATOR INSPECTION.) • After inspection, go to Step 7.
3	**DETERMINE IF MALFUNCTION CAUSE IS DOOR KEY CYLINDER** • Insert the auxiliary key into the door key cylinder and perform the lock/unlock operation using the auxiliary key. • Does the lock knob switch between lock and unlock?	Yes	Go to the next step.
		No	• Inspect the front door key cylinder switch. (See 09-14-33 FRONT DOOR KEY CYLINDER SWITCH INSPECTION.) • After inspection, go to Step 7.

SYMPTOM TROUBLESHOOTING [SECURITY AND LOCKS]

Step	Inspection		Action
4	**INSPECT IF MALFUNCTION CAUSE IS OPEN CIRCUIT IN WIRING HARNESS BETWEEN FRONT DOOR KEY CYLINDER SWITCH AND REAR BODY CONTROL MODULE (RBCM)** • Disconnect the negative battery cable. (See 01-17A-11 NEGATIVE BATTERY CABLE DISCONNECTION/CONNECTION [SKYACTIV-G 2.0].) (See 01-17A-13 NEGATIVE BATTERY CABLE DISCONNECTION/CONNECTION [SKYACTIV-G 2.0 (WITHOUT i-stop)].) (See 01-17B-9 NEGATIVE BATTERY CABLE DISCONNECTION/CONNECTION [SKYACTIV-D 2.2].) • Disconnect the front door latch and lock actuator connector. • Disconnect the rear body control module (RBCM) connector. • Inspect for continuity between the following terminals (vehicle wiring harness). — Front door latch and lock actuator terminal H (L.H.D.) / F (R.H.D.) and rear body control module (RBCM) terminal 3H • Is there continuity?	Yes	• Go to Step 7. (without door lock switch) • Go to the next step. (with door lock switch)
		No	• Repair or replace the wiring harness for an open circuit. • After repair procedure, go to Step 7.
5	**INSPECT IF MALFUNCTION CAUSE IS OPEN CIRCUIT IN WIRING HARNESS BETWEEN DOOR LOCK SWITCH AND REAR BODY CONTROL MODULE (RBCM)** • Disconnect the door lock switch connector. • Inspect for continuity between the following terminals (vehicle wiring harness). — Power window main switch terminal 1E and rear body control module (RBCM) terminal 3F • Is there continuity?	Yes	Go to the next step.
		No	• Repair or replace the wiring harness for an open circuit. • After repair procedure, go to Step 7.
6	**DETERMINE IF MALFUNCTION CAUSE IS DOOR LOCK SWITCH** • Perform the lock/unlock operation using the door lock switch. • Does the lock knob switch between lock and unlock?	Yes	Go to the next step.
		No	• Inspect the door lock switch. (See 09-14-17 DOOR LOCK SWITCH INSPECTION.) • After inspection, go to the next step.
7	**VERIFY IF MALFUNCTION CAUSE WAS CORRECTED** • Has the malfunction symptom been eliminated?	Yes	Troubleshooting completed. (Explain the contents of the servicing to the customer.)
		No	Verify the malfunction symptom in the symptom troubleshooting chart and perform the applicable other malfunction diagnosis. (See 09-03B-6 SYMPTOM TROUBLESHOOTING ITEM TABLE [SECURITY AND LOCKS].)

SYMPTOM TROUBLESHOOTING [SECURITY AND LOCKS]

ADVANCED KEYLESS ENTRY SYSTEM DOES NOT OPERATE [SECURITY AND LOCKS]

id0903k7012100

Description

- The door locking operation using the door request switch is not possible.
- The liftgate cannot be open using the liftgate opener switch.

Possible cause

- Liftgate opener switch malfunction
- Open circuit in wiring harness between the following terminals:
  - — Rear body control module (RBCM) terminal 4M and liftgate opener switch terminal C
  - — LF control unit terminal G and request switch (LF) terminal D
  - — LF control unit terminal E and request switch (RF) terminal D
  - — LF control unit terminal A and request switch (liftgate) terminal I
  - — Start stop unit terminal 1P and door lock link switch (driver's side) terminal D (L.H.D.) / J (R.H.D.)
  - — Start stop unit terminal 1AF and ground
  - — Start stop unit terminal 2B and ground
- Short to ground in wiring harness between start stop unit terminal 1P and door lock link switch (driver's side) terminal D (L.H.D.) / J (R.H.D.)
- Connector poor contact or terminal damage
- Customer's mis-operation or misunderstanding

Diagnostic Procedure

Step	Inspection		Action
1	**DETERMINE IF MALFUNCTION CAUSE IS DOOR LOCK** • Refer to "door lock does not operate" symptom troubleshooting and perform the inspection. (See 09-03B-8 DOOR LOCK DOES NOT OPERATE [SECURITY AND LOCKS].) • Is the advanced keyless entry system operating normally?	Yes	Troubleshooting completed. (Explain the contents of the servicing to the customer.)
		No	Go to the next step.
2	**VERIFY IF MALFUNCTION CAUSE IS OPERATION OTHER THAN OPERATION PERMISSION CONDITION** • Verify the advanced keyless operation by operating each request switch and the liftgate opener switch with all the following conditions met. — All doors and liftgate closed — Ignition switched off (LOCK) — Remote transmitter is within reception area (80 cm radius from driver's door, front passenger's door, and liftgate) • Is the advanced keyless entry system operating normally?	Yes	System is normal. (Explain to customer about operation range of advanced keyless entry system)
		No	Go to the next step.
3	**VERIFY MALFUNCTION SYMPTOM** • Does the liftgate open using the liftgate opener switch operation?	Yes	Go to Step 6.
		No	Go to the next step.
4	**DETERMINE IF MALFUNCTION CAUSE IS LIFTGATE OPENER SWITCH** • Measure the voltage at rear body control module (RBCM) terminal 4M. • Is the voltage normal? **Specification** Liftgate opener switch pressed: 1.0 or less Except above: 4.5 V	Yes	Go to Step 11.
		No	Go to the next step.

SYMPTOM TROUBLESHOOTING [SECURITY AND LOCKS]

Step	Inspection		Action
5	**INSPECT IF MALFUNCTION CAUSE IS OPEN CIRCUIT IN WIRING HARNESS BETWEEN REAR BODY CONTROL MODULE (RBCM) AND LIFTGATE OPENER SWITCH** • Disconnect the negative battery cable. (See 01-17A-11 NEGATIVE BATTERY CABLE DISCONNECTION/CONNECTION [SKYACTIV-G 2.0].) (See 01-17A-13 NEGATIVE BATTERY CABLE DISCONNECTION/CONNECTION [SKYACTIV-G 2.0 (WITHOUT i-stop)].) (See 01-17B-9 NEGATIVE BATTERY CABLE DISCONNECTION/CONNECTION [SKYACTIV-D 2.2].) • Disconnect the rear body control module (RBCM) and liftgate opener switch connector. • Inspect for continuity between the following terminals (vehicle wiring harness). — Liftgate opener switch terminal C and rear body control module (RBCM) terminal 4M • Is there continuity?	Yes	• Inspect the liftgate opener switch. If there is any malfunction, replace it. (See 09-14-53 LIFTGATE OPENER SWITCH INSPECTION.) • If the liftgate opener switch inspection is normal, inspect or repair the following: — Liftgate latch and actuator (See 09-14-50 LIFTGATE LATCH AND LOCK ACTUATOR INSPECTION.) • After repair procedure, go to Step 11.
		No	• Repair or replace the wiring harness for an open circuit. • After repair procedure, go to Step 11.
6	**VERIFY MALFUNCTION SYMPTOM** • Connect the negative battery cable. (See 01-17A-11 NEGATIVE BATTERY CABLE DISCONNECTION/CONNECTION [SKYACTIV-G 2.0].) (See 01-17A-13 NEGATIVE BATTERY CABLE DISCONNECTION/CONNECTION [SKYACTIV-G 2.0 (WITHOUT i-stop)].) (See 01-17B-9 NEGATIVE BATTERY CABLE DISCONNECTION/CONNECTION [SKYACTIV-D 2.2].) • Verify the lock/unlock operation for all doors and liftgate using the request switch operation. • Is door locked/unlocked?	Yes	Go to Step 11.
		No	Go to the next step.
7	**INSPECT IF MALFUNCTION CAUSE IS OPEN CIRCUIT IN WIRING HARNESS BETWEEN START STOP UNIT AND DOOR LOCK LINK SWITCH (DRIVER-SIDE)** • Disconnect the negative battery cable. (See 01-17A-11 NEGATIVE BATTERY CABLE DISCONNECTION/CONNECTION [SKYACTIV-G 2.0].) (See 01-17A-13 NEGATIVE BATTERY CABLE DISCONNECTION/CONNECTION [SKYACTIV-G 2.0 (WITHOUT i-stop)].) (See 01-17B-9 NEGATIVE BATTERY CABLE DISCONNECTION/CONNECTION [SKYACTIV-D 2.2].) • Disconnect the start stop unit and the front door latch and lock actuator (driver's side) connector. • Inspect for continuity between the following terminals (vehicle wiring harness). — Start stop unit terminal 1P and front door lock link switch terminal D (L.H.D.) / J (R.H.D.) • Is there continuity?	Yes	Go to the next step.
		No	• Repair or replace the wiring harness for an open circuit. • After repair procedure, go to Step 11.

SYMPTOM TROUBLESHOOTING [SECURITY AND LOCKS]

Step	Inspection		Action
8	**INSPECT IF MALFUNCTION CAUSE IS SHORT TO GROUND IN WIRING HARNESS BETWEEN START STOP UNIT AND DOOR LOCK LINK SWITCH (DRIVER-SIDE)** • Verify that the start stop unit connector is disconnected. • Inspect for continuity between the following wiring harness terminals (vehicle wiring harness side) and body ground. — Start stop unit terminal 1P and ground • Is there continuity?	Yes	Go to the next step.
		No	• Repair or replace the wiring harness for an open circuit. • After repair procedure, go to Step 11.
9	**INSPECT IF MALFUNCTION CAUSE IS OPEN CIRCUIT IN WIRING HARNESS BETWEEN START STOP UNIT AND GROUND** • Verify that the start stop unit connector is disconnected. • Inspect for continuity between the following terminals (vehicle wiring harness). — Start stop unit terminal 1AF and ground — Start stop unit terminal 2B and ground • Is there continuity?	Yes	Go to the next step.
		No	• Repair or replace the wiring harness for an open circuit. • After repair, go to Step 11.
10	**INSPECT IF MALFUNCTION CAUSE IS OPEN CIRCUIT IN WIRING HARNESS BETWEEN REQUEST SWITCH AND LF CONTROL UNIT** • Disconnect the LF control unit and request switch connector. • Inspect for continuity between the following terminals (vehicle wiring harness). — Request switch (LF) terminal G and LF control unit terminal D — Request switch (RF) terminal E and LF control unit terminal D — Request switch (liftgate) terminal A and LF control unit terminal I • Is there continuity?	Yes	Go to the next step.
		No	• Repair or replace the wiring harness for an open circuit. • After repair, go to the next step.
11	**VERIFY IF MALFUNCTION CAUSE WAS CORRECTED** • Does the advanced keyless entry system operate normally?	Yes	Troubleshooting completed. (Explain the contents of the servicing to the customer.)
		No	If the malfunction has not been resolved, repeat the inspection from Step 1.

SYMPTOM TROUBLESHOOTING [SECURITY AND LOCKS]

LOCK/UNLOCK OPERATION NOT POSSIBLE USING REMOTE TRANSMITTER [SECURITY AND LOCKS]

id0903k7012200

Description

- The door lock/unlock operation using the remote transmitter button is not possible.

Possible cause

- Keyless receiver malfunction
- Remote transmitter malfunction
- Open circuit in wiring harness between the following terminals:
  - — Keyless receiver terminal A and start stop unit terminal 2Q
  - — Keyless receiver terminal B and start stop unit terminal 2R
  - — Start stop unit terminal 1AF and ground
  - — Start stop unit terminal 2B and ground
- Connector poor contact or terminal damage
- Customer's mis-operation or misunderstanding
- Effect of non-standard equipment (any control unit with built-in micro computer such as radio set, mobile telephone, and TV)

Diagnostic Procedure

Step	Inspection		Action
1	**DETERMINE IF MALFUNCTION CAUSE IS DOOR LOCK** • Refer to "door lock does not operate" malfunction diagnosis and perform the inspection. (See 09-03B-8 DOOR LOCK DOES NOT OPERATE [SECURITY AND LOCKS].) • Is the lock/unlock operation performed using the remote transmitter?	Yes	Troubleshooting completed. (Explain the contents of the servicing to the customer.)
		No	Go to the next step.
2	**VERIFY IF MALFUNCTION CAUSE IS EXTRINSIC NOISE** • Ask the customer malfunction condition. • Does the malfunction occur at the specified place where extrinsic noise is received such as a TV tower, electric power station, or a broadcast station?	Yes	System is normal. (Explain the customer that operation cannot be performed caused by extrinsic noise.)
		No	Go to the next step.
3	**VERIFY IF MALFUNCTION CAUSE IS OPERATION OTHER THAN OPERATION PERMISSION CONDITION** • Did the customer operate the remote transmitter with all the following conditions met? — All doors and liftgate are closed. — Ignition switched off (LOCK)	Yes	Go to the next step.
		No	System is normal. (Explain the customer operation condition.)
4	**DETERMINE IF MALFUNCTION CAUSE IS NON-STANDARD EQUIPMENT** • Did the malfunction occur after installing the following non-standard equipment? — Mobile telephone or radio set — Part with built-in micro computer — Remote engine starter — TV	Yes	Go to the next step.
		No	Go to Step 6.
5	**DETERMINE IF MALFUNCTION CAUSE IS NON-STANDARD EQUIPMENT** • Disconnect the connector for non-standard equipment. • Perform the lock/unlock operation using the remote transmitter. • Does it operate normally?	Yes	System is normal. (Explain to the customer that noise from the non-standard equipment affected the operation.)
		No	Go to the next step.

SYMPTOM TROUBLESHOOTING [SECURITY AND LOCKS]

Step	Inspection		Action
6	**VERIFY REMOTE TRANSMITTER BATTERY CONDITION** • Visually inspect the remote transmitter battery for the following: — Method of battery insertion (polarity) — Battery type (CR2025) — Corrosion, soiling, deformation of battery terminals (plus/minus terminals). — Contact malfunction between the battery terminal and battery when battery is inserted • Is there any malfunction?	Yes	**Battery insertion direction, battery type is incorrect:** • Properly install the battery or replace the battery with a specified one (CR2025), then go to the next step. **Battery terminal malfunction:** • Clean corrosion and soiling, or repair or replace the terminal, then go to the next step.
		No	Go to Step 8.
7	**VERIFY REMOTE TRANSMITTER OPERATION** • Perform the lock/unlock operation using the remote transmitter. • Is the lock/unlock operation performed normally?	Yes	Troubleshooting completed.
		No	Go to the next step.
8	**DETERMINE IF MALFUNCTION CAUSE IS REMOTE TRANSMITTER** **Note** • For a monitor battery, use a new battery or one which operates normally on another vehicle. • Replace the battery in all the remote transmitters with a monitor-use battery. (See 09-14-76 REMOTE TRANSMITTER DISASSEMBLY/ASSEMBLY.) • For each remote transmitter, verify that the remote transmitter operation indicator light (LED) illuminates when a button is operated. • Does operation indicator light (LED) for each remote transmitter operate?	Yes	Go to the next step.
		No	If the operation indicator light (LED) does not illuminate, replace the remote transmitter, then go to the Step 12.
9	**DETERMINE IF MALFUNCTION CAUSE IS BATTERY** **Note** • Inspect for all remote transmitters. • Inspect while the batteries for all of the remote transmitters are replaced with monitor-use batteries. • Perform the lock/unlock operation using all the remote transmitters. • Is the lock/unlock operation performed normally?	Yes	Replace the battery, then go to Step 12. (See 09-14-76 REMOTE TRANSMITTER DISASSEMBLY/ASSEMBLY.)
		No	Go to the next step.
10	**INSPECT IF MALFUNCTION CAUSE IS OPEN CIRCUIT IN WIRING HARNESS BETWEEN START STOP UNIT AND GROUND** • Verify that the start stop unit connector is disconnected. • Inspect for continuity between the following terminals (vehicle wiring harness). — Start stop unit terminal 1AF and ground — Start stop unit terminal 2B and ground • Is there continuity?	Yes	Go to the next step.
		No	• Repair or replace the wiring harness for an open circuit. • After repair, go to Step 12.

SYMPTOM TROUBLESHOOTING [SECURITY AND LOCKS]

Step	Inspection		Action
11	**INSPECT IF MALFUNCTION CAUSE IS OPEN CIRCUIT IN WIRING HARNESS BETWEEN KEYLESS RECEIVER AND START STOP UNIT OR KEYLESS RECEIVER** • Disconnect the negative battery cable. (See 01-17A-11 NEGATIVE BATTERY CABLE DISCONNECTION/CONNECTION [SKYACTIV-G 2.0].) (See 01-17A-13 NEGATIVE BATTERY CABLE DISCONNECTION/CONNECTION [SKYACTIV-G 2.0 (WITHOUT i-stop)].) (See 01-17B-9 NEGATIVE BATTERY CABLE DISCONNECTION/CONNECTION [SKYACTIV-D 2.2].) • Disconnect the keyless receiver and start stop unit connector. • Inspect for continuity between the following terminals (vehicle wiring harness). — Keyless receiver terminal A and start stop unit terminal 2Q — Keyless receiver terminal B and start stop unit terminal 2R • Is there continuity?	Yes	• Inspect the keyless receiver. If there is any malfunction, replace it. (See 09-14-75 KEYLESS RECEIVER INSPECTION.) • After repair, go to the next step.
		No	• Repair or replace the wiring harness for an open circuit. • After repair, go to the next step.
12	**VERIFY IF MALFUNCTION CAUSE WAS CORRECTED** • Perform the lock/unlock operation using all the remote transmitters. • Is the lock/unlock operation performed normally?	Yes	Troubleshooting completed. (Explain the contents of the servicing to the customer.)
		No	If the malfunction has not been resolved, repeat the inspection from Step 1.

ANSWER-BACK BUZZER DOES NOT SOUND [SECURITY AND LOCKS]

id0903k7012500

Description

- The keyless beeper does not sound when door lock/unlock operation is performed using the remote transmitter button.

Possible cause

- Keyless beeper malfunction
- Short to power supply in wiring harness between the following terminals:
  — Keyless beeper terminal A and LF control unit terminal L
  — Keyless beeper terminal B and LF control unit terminal N
- Short to ground in wiring harness between the following terminals:
  — Keyless beeper terminal A and LF control unit terminal L
  — Keyless beeper terminal B and LF control unit terminal N
- Open circuit in wiring harness between the following terminals:
  — Keyless beeper terminal A and LF control unit terminal L
  — Keyless beeper terminal B and LF control unit terminal N
  — Start stop unit terminal 1AF and ground
  — Start stop unit terminal 2B and ground
- Personalization feature not set

Diagnostic Procedure

Step	Inspection		Action
1	**VERIFY PERSONALIZATION FEATURES SETTING** • Verify the volume of the keyless beeper for the personalization features. (See 09-14-63 SECURITY AND LOCKS PERSONALIZATION FEATURES SETTING PROCEDURE.) • Has the volume of the keyless beeper been set to off?	Yes	Set the volume so that the keyless beeper sounds and verify the operation. **Operation is verified:** • Troubleshooting completed. (Explain the servicing contents to the customer.) **Operation is not verified:** • Go to the next step.
		No	Go to the next step.

SYMPTOM TROUBLESHOOTING [SECURITY AND LOCKS]

Step	Inspection		Action
2	**INSPECT IF MALFUNCTION CAUSE IS SHORT TO GROUND IN WIRING HARNESS BETWEEN KEYLESS BEEPER AND LF CONTROL UNIT** • Disconnect the negative battery cable. (See 01-17A-11 NEGATIVE BATTERY CABLE DISCONNECTION/CONNECTION [SKYACTIV-G 2.0].) (See 01-17A-13 NEGATIVE BATTERY CABLE DISCONNECTION/CONNECTION [SKYACTIV-G 2.0 (WITHOUT i-stop)].) (See 01-17B-9 NEGATIVE BATTERY CABLE DISCONNECTION/CONNECTION [SKYACTIV-D 2.2].) • Disconnect the LF control unit connector. • Inspect for continuity between the following wiring harness terminals (vehicle wiring harness side) and body ground. — LF control unit terminal L and ground — LF control unit terminal N and ground • Is there continuity?	Yes	• Repair or replace the wiring harness which is shorted to ground. • After repair procedure, go to Step 6.
		No	Go to the next step.
3	**INSPECT IF MALFUNCTION CAUSE IS SHORT TO POWER SUPPLY IN WIRING HARNESS BETWEEN KEYLESS BEEPER AND LF CONTROL UNIT** • Verify that the LF control unit connector is disconnected. • Connect the negative battery cable. (See 01-17A-11 NEGATIVE BATTERY CABLE DISCONNECTION/CONNECTION [SKYACTIV-G 2.0].) (See 01-17A-13 NEGATIVE BATTERY CABLE DISCONNECTION/CONNECTION [SKYACTIV-G 2.0 (WITHOUT i-stop)].) (See 01-17B-9 NEGATIVE BATTERY CABLE DISCONNECTION/CONNECTION [SKYACTIV-D 2.2].) • Measure the voltage at the following terminals (vehicle wiring harness). — LF control unit terminal L — LF control unit terminal N • Is there any voltage?	Yes	• Repair or replace the wiring harness which is shorted to power supply. • After repair procedure, go to Step 6.
		No	Go to the next step.
4	**INSPECT IF MALFUNCTION CAUSE IS OPEN CIRCUIT IN WIRING HARNESS BETWEEN START STOP UNIT AND GROUND** • Disconnect the negative battery cable. (See 01-17A-11 NEGATIVE BATTERY CABLE DISCONNECTION/CONNECTION [SKYACTIV-G 2.0].) (See 01-17A-13 NEGATIVE BATTERY CABLE DISCONNECTION/CONNECTION [SKYACTIV-G 2.0 (WITHOUT i-stop)].) (See 01-17B-9 NEGATIVE BATTERY CABLE DISCONNECTION/CONNECTION [SKYACTIV-D 2.2].) • Verify that the start stop unit connector is disconnected. • Inspect for continuity between the following terminals (vehicle wiring harness). — Start stop unit terminal 1AF and ground — Start stop unit terminal 2B and ground • Is there continuity?	Yes	Go to the next step.
		No	• Repair or replace the wiring harness for an open circuit. • After repair, go to Step 6.

SYMPTOM TROUBLESHOOTING [SECURITY AND LOCKS]

Step	Inspection		Action
5	**INSPECT IF MALFUNCTION CAUSE IS OPEN CIRCUIT IN WIRING HARNESS BETWEEN KEYLESS BEEPER AND LF CONTROL UNIT OR KEYLESS BEEPER** • Disconnect the keyless beeper connector • Inspect for continuity between the following terminals (vehicle wiring harness). — Keyless beeper terminal A and LF control unit terminal L — Keyless beeper terminal B and LF control unit terminal N • Is there continuity?	Yes	• Replace the keyless beeper. (See 09-14-73 KEYLESS BEEPER REMOVAL/INSTALLATION.) • After replacement, go to the next step.
		No	• Repair or replace the wiring harness for an open circuit. • After repair, go to the next step.
6	**VERIFY IF MALFUNCTION CAUSE WAS CORRECTED** • Does the keyless beeper sound?	Yes	Troubleshooting completed. (Explain the contents of the servicing to the customer.)
		No	If the malfunction has not been resolved, repeat the inspection from Step 1.

PUSH BUTTON START SYSTEM DOES NOT OPERATE [SECURITY AND LOCKS]

id0903k7012600

Description

- When the push button start is pressed, the ignition cannot be switched to ACC or ON (engine off).

Possible cause

- Open circuit in wiring harness between the following terminals:
  - — Start stop unit terminal 1H and push button start terminal C
  - — Start stop unit terminal 2J and push button start terminal I
  - — Start stop unit terminal 1AF and ground
  - — Start stop unit terminal 2B and ground
  - — Start stop unit terminal 2A and ground

Diagnostic Procedure

Step	Inspection		Action
1	**INSPECT IF MALFUNCTION CAUSE IS OPEN CIRCUIT IN WIRING HARNESS BETWEEN START STOP UNIT AND PUSH BUTTON START** • Disconnect the negative battery cable. (See 01-17A-11 NEGATIVE BATTERY CABLE DISCONNECTION/CONNECTION [SKYACTIV-G 2.0].) (See 01-17A-13 NEGATIVE BATTERY CABLE DISCONNECTION/CONNECTION [SKYACTIV-G 2.0 (WITHOUT i-stop)].) (See 01-17B-9 NEGATIVE BATTERY CABLE DISCONNECTION/CONNECTION [SKYACTIV-D 2.2].) • Disconnect the Start stop unit and push button start connector. • Inspect for continuity between the following terminals (vehicle wiring harness). — Start stop unit terminal 1H and push button start terminal C — Start stop unit terminal 2J and push button start terminal I • Is there continuity?	Yes	Go to the next step.
		No	• Repair or replace the wiring harness for an open circuit. • After repair procedure, go to Step 3.

SYMPTOM TROUBLESHOOTING [SECURITY AND LOCKS]

Step	Inspection		Action
2	**INSPECT IF MALFUNCTION CAUSE IS OPEN CIRCUIT IN WIRING HARNESS BETWEEN START STOP UNIT AND GROUND** • Verify that the start stop unit connector is disconnected. • Inspect for continuity between the following terminals (vehicle wiring harness). — Start stop unit terminal 1AF and ground — Start stop unit terminal 2B and ground — Start stop unit terminal 2A and ground • Is there continuity?	Yes	Go to the next step.
		No	• Repair or replace the wiring harness for an open circuit. • After repair, go to the next step.
3	**VERIFY IF MALFUNCTION CAUSE WAS CORRECTED** • Does the push button start button operate correctly?	Yes	Troubleshooting completed. (Explain the contents of the servicing to the customer.)
		No	If the malfunction has not been resolved, repeat the inspection from Step 1.

STEERING LOCK FUNCTION DOES NOT OPERATE [SECURITY AND LOCKS]

id0903k7012700

Description

- Switch the ignition from ON (engine off or on) to OFF and do not lock the steering when opening/closing the door.

Possible cause

- Open circuit in wiring harness between the following terminals:
  — Start stop unit terminal 1P and front door lock link switch (driver's side) terminal D (L.H.D.) / J (R.H.D.)
  — Start stop unit terminal 2A and ground
- Short to ground in wiring harness between start stop unit terminal 1P and front door lock link switch (driver's side) terminal D (L.H.D.) / J (R.H.D.)

Diagnostic Procedure

Step	Inspection		Action
1	**INSPECT IF MALFUNCTION CAUSE IS OPEN CIRCUIT IN WIRING HARNESS BETWEEN START STOP UNIT AND DOOR LOCK LINK SWITCH (DRIVER-SIDE)** • Disconnect the negative battery cable. (See 01-17A-11 NEGATIVE BATTERY CABLE DISCONNECTION/CONNECTION [SKYACTIV-G 2.0].) (See 01-17A-13 NEGATIVE BATTERY CABLE DISCONNECTION/CONNECTION [SKYACTIV-G 2.0 (WITHOUT i-stop)].) (See 01-17B-9 NEGATIVE BATTERY CABLE DISCONNECTION/CONNECTION [SKYACTIV-D 2.2].) • Disconnect the start stop unit and front door latch and lock actuator connector. • Inspect for continuity between the following terminals (vehicle wiring harness). — Start stop unit terminal 1P and front door lock link switch terminal J (L.H.D.) / D (R.H.D.) • Is there continuity?	Yes	Go to the next step.
		No	• Repair or replace the wiring harness for an open circuit. • After repair procedure, go to Step 4.

SYMPTOM TROUBLESHOOTING [SECURITY AND LOCKS]

Step	Inspection		Action
2	**INSPECT IF MALFUNCTION CAUSE IS SHORT TO GROUND IN WIRING HARNESS BETWEEN START STOP UNIT AND DOOR LOCK LINK SWITCH (DRIVER-SIDE)** • Verify that the start stop unit connector is disconnected. • Inspect for continuity between the following wiring harness terminals (vehicle wiring harness side) and body ground. — Start stop unit terminal 1P and ground • Is there continuity?	Yes	Go to the next step.
		No	• Repair or replace the wiring harness for an open circuit. • After repair procedure, go to Step 4.
3	**INSPECT IF MALFUNCTION CAUSE IS OPEN CIRCUIT IN WIRING HARNESS BETWEEN START STOP UNIT AND GROUND** • Verify that the start stop unit connector is disconnected. • Inspect for continuity between the following terminals (vehicle wiring harness). — Start stop unit terminal 2A and ground • Is there continuity?	Yes	Go to the next step.
		No	• Repair or replace the wiring harness for an open circuit. • After repair, go to the next step.
4	**VERIFY IF MALFUNCTION CAUSE WAS CORRECTED** • Is the steering lock operation normal?	Yes	Troubleshooting completed. (Explain the contents of the servicing to the customer.)
		No	If the malfunction has not been resolved, repeat the inspection from Step 1.

09-03C SYMPTOM TROUBLESHOOTING [THEFT-DETERRENT SYSTEM]

FOREWORD
[THEFT-DETERRENT SYSTEM]. 09-03C–2
Troubleshooting Procedure 09-03C–2
Action for non-repeatable malfunction. 09-03C–3

THEFT-DETERRENT SYSTEM
[THEFT-DETERRENT SYSTEM] 09-03C–3
Description 09-03C–3
Possible cause 09-03C–3
Diagnostic Procedure 09-03C–3

SYMPTOM TROUBLESHOOTING [THEFT-DETERRENT SYSTEM]

FOREWORD [THEFT-DETERRENT SYSTEM]

id0903I1378400

- If there is any vehicle malfunction complaint lodged by a customer, perform malfunction diagnosis according to the troubleshooting procedure.

Troubleshooting Procedure

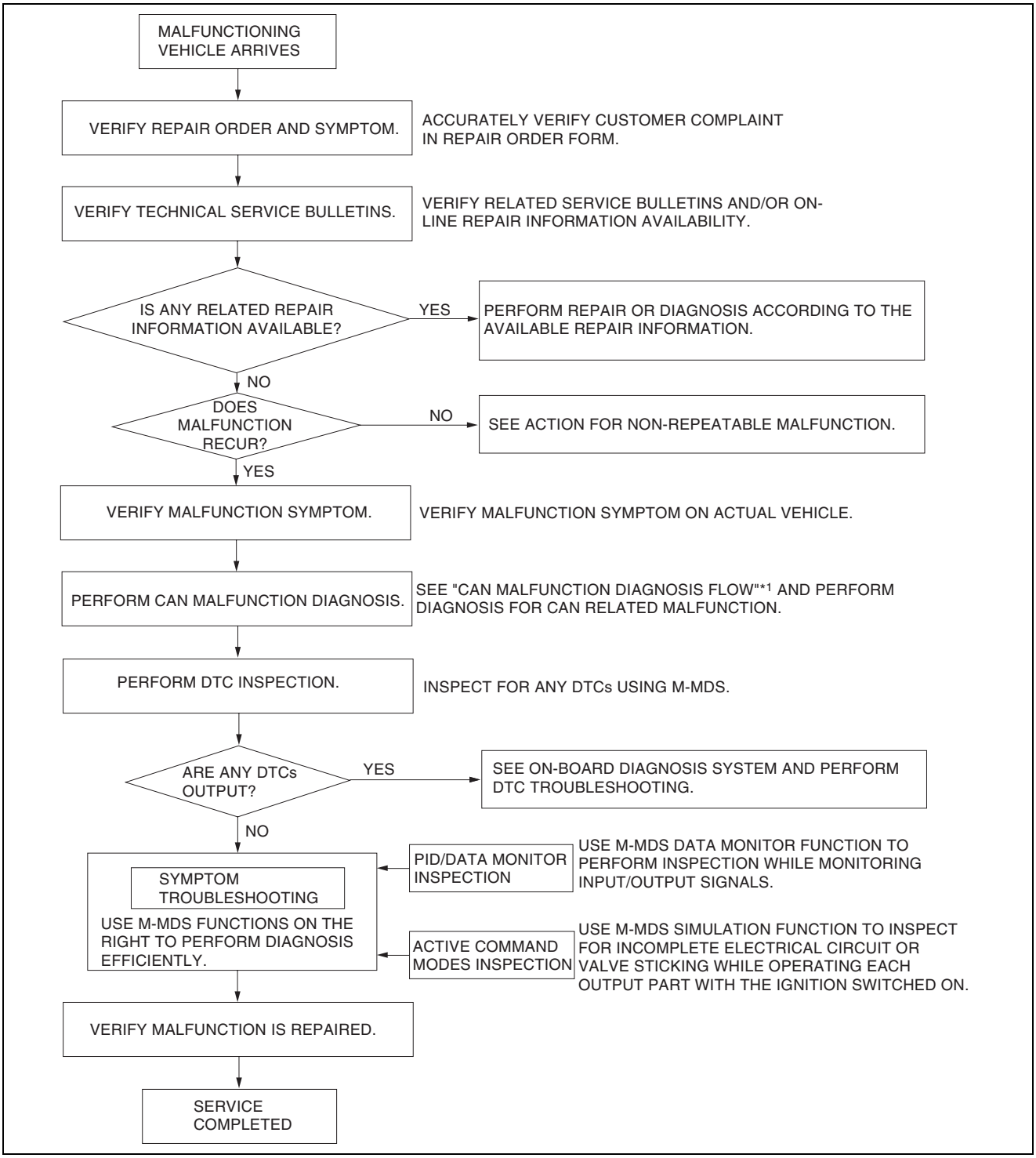

ac5wzw0000282

*1 : 10-02A-3 CONTROLLER AREA NETWORK (CAN) MALFUNCTION DIAGNOSIS FLOW [SKYACTIV-G 2.0 (L.H.D.)] /10-02B-3 CONTROLLER AREA NETWORK (CAN) MALFUNCTION DIAGNOSIS FLOW [SKYACTIV-G 2.0 (R.H.D.)]/10-02C-3 CONTROLLER AREA NETWORK (CAN) MALFUNCTION DIAGNOSIS FLOW [SKYACTIV-D 2.2 (L.H.D.)]/10-02D-3 CONTROLLER AREA NETWORK (CAN) MALFUNCTION DIAGNOSIS FLOW [SKYACTIV-D 2.2 (R.H.D.)]

SYMPTOM TROUBLESHOOTING [THEFT-DETERRENT SYSTEM]

Action for non-repeatable malfunction

- If the malfunction does not recur, verify the malfunction cause by performing the following actions:
  - — Based on the repair order form, attempt to drive the vehicle or perform tests to replicate the malfunction, record the data (such as rear body control module (RBCM) circuit voltage) at that time, and detect the malfunction cause.
  - — Shake the wiring harness or connector of the electrical component which is suspected to be the cause of the malfunction, and inspect for malfunction or occurrence of any DTCs.

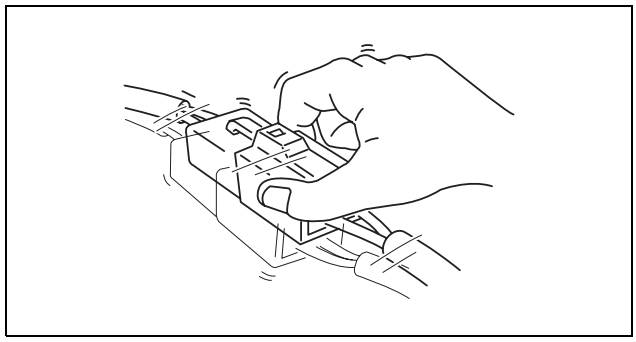

ac5wzw0000282

  - — Inspect the female terminals on the connector of the electric component which is suspected to be the cause of the malfunction for poor connection.

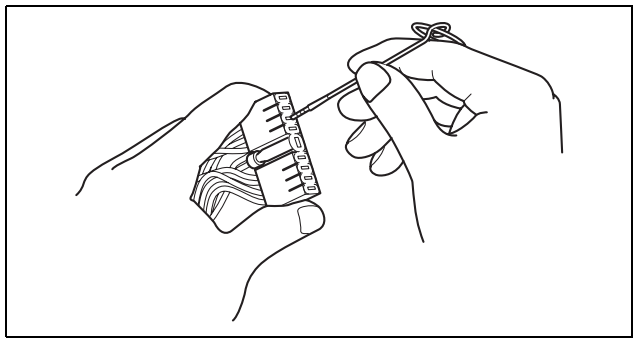

ac5wzw0000282

THEFT-DETERRENT SYSTEM [THEFT-DETERRENT SYSTEM]

id0903l1112700

Description

- Theft-deterrent siren or theft-deterrent horn sounded.

Possible cause

- Wiring harness malfunction
- Malfunction in switch which triggers system
- Rear body control module (RBCM) malfunction
- Customer's mis-operation or misunderstanding

Diagnostic Procedure

Step	Inspection		Action
1	**VERIFY DTCs** • Perform the DTC inspection for the rear body control module (RBCM) using the M-MDS. (See 09-02L-12 DTC TABLE [REAR BODY CONTROL MODULE (RBCM)].) • Are any DTCs displayed?	Yes	Go to the applicable DTC inspection. (See 09-02L-12 DTC TABLE [REAR BODY CONTROL MODULE (RBCM)].)
		No	Go to the next step.
2	**VERIFY OPERATION RECORD** • Has the operation record been stored? (See 09-14-94 THEFT-DETERRENT SYSTEM OPERATION RECORD.)	Yes	Go to the next step.
		No	Diagnosis completed (theft-deterrent system does not operate).
3	**VERIFY CONDITION DURING THEFT-DETERRENT SYSTEM OPERATION** • Is the condition during theft-deterrent operation "Alarm" or "Arming" ?	Yes	Go to the next step.
		No	Inspect the rear body control module (RBCM). If there is any malfunction, replace it. (See 09-40-11 REAR BODY CONTROL MODULE (RBCM) INSPECTION.)
4	**DETERMINE IF MALFUNCTION CAUSE IS SYSTEM** • Verify what triggered the theft-deterrent system according to the trigger record, and inspect the switch which triggered the system and the related wiring harness. • Is the switch or related wiring harness normal?	Yes	System is normal (explain to the customer that the cause is customer's mis-operation).
		No	Replace the malfunctioning part.

09-03D SYMPTOM TROUBLESHOOTING [ADAPTIVE FRONT LIGHTING SYSTEM (AFS)]

FOREWORD [ADAPTIVE FRONT LIGHTING SYSTEM (AFS)] 09-03D–2
Troubleshooting Procedure 09-03D–2
Action for non-repeatable malfunction. 09-03D–3
SYMPTOM TROUBLESHOOTING [ADAPTIVE FRONT LIGHTING SYSTEM (AFS)] 09-03D–3
AFS OFF INDICATOR LIGHT ILLUMINATES CONTINUOUSLY [ADAPTIVE FRONT LIGHTING SYSTEM (AFS)] 09-03D–4
Possible malfunction 09-03D–4
Diagnostic Procedure. 09-03D–4
ADAPTIVE FRONT LIGHTING SYSTEM (AFS) OPERATES EVEN THOUGH THE AFS OFF SWITCH IS TURNED ON [ADAPTIVE FRONT LIGHTING SYSTEM (AFS)] 09-03D–5
Possible malfunction 09-03D–5
Diagnostic Procedure 09-03D–5
THE HEADLIGHT AUTO LEVELING SYSTEM DOES NOT OPERATE IN RESPONSE TO VEHICLE POSTURE [ADAPTIVE FRONT LIGHTING SYSTEM (AFS)] 09-03D–6
Description 09-03D–6
Possible malfunction 09-03D–6
Diagnostic Procedure 09-03D–6

SYMPTOM TROUBLESHOOTING [ADAPTIVE FRONT LIGHTING SYSTEM (AFS)]

FOREWORD [ADAPTIVE FRONT LIGHTING SYSTEM (AFS)]

id0903k9378400

- If there is any vehicle malfunction complaint lodged by a customer, perform malfunction diagnosis according to the troubleshooting procedure.

Troubleshooting Procedure

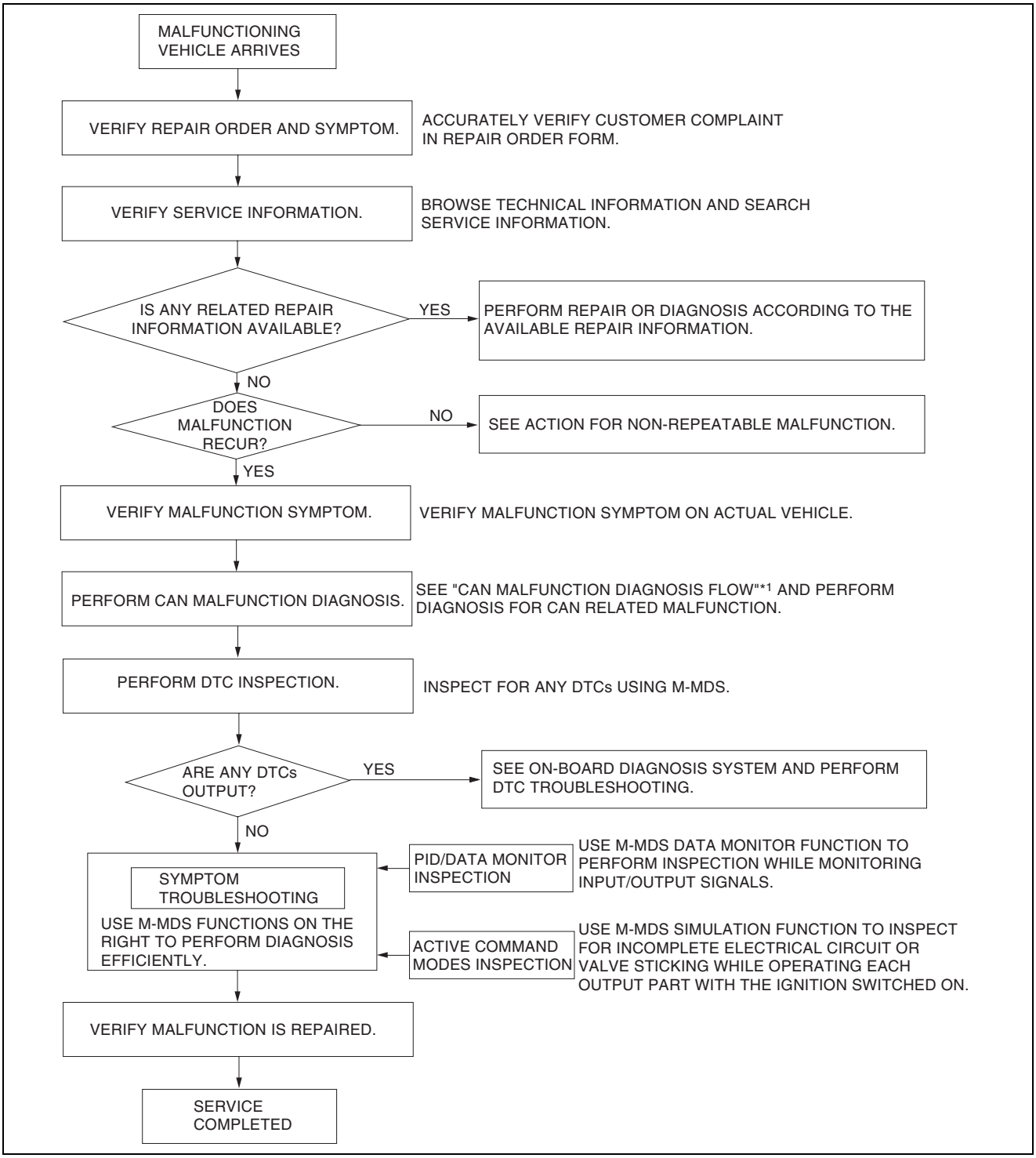

ac5wzw0000288

*1 : 10-02A-3 CONTROLLER AREA NETWORK (CAN) MALFUNCTION DIAGNOSIS FLOW [SKYACTIV-G 2.0 (L.H.D.)]/10-02B-3 CONTROLLER AREA NETWORK (CAN) MALFUNCTION DIAGNOSIS FLOW [SKYACTIV-G 2.0 (R.H.D.)]/10-02C-3 CONTROLLER AREA NETWORK (CAN) MALFUNCTION DIAGNOSIS FLOW [SKYACTIV-D 2.2 (L.H.D.)]/10-02D-3 CONTROLLER AREA NETWORK (CAN) MALFUNCTION DIAGNOSIS FLOW [SKYACTIV-D 2.2 (R.H.D.)]

SYMPTOM TROUBLESHOOTING [ADAPTIVE FRONT LIGHTING SYSTEM (AFS)]

Action for non-repeatable malfunction

- If the malfunction does not recur, verify the malfunction cause by performing the following actions:
  - — Verify that a DTC has been recorded in the memory. (See 09-02D-5 DTC INSPECTION [ADAPTIVE FRONT LIGHTING SYSTEM (AFS)].)
  - — Based on the repair order form, attempt to drive the vehicle or perform tests to replicate the malfunction, record the data at that time, and detect the malfunction cause.
  - — Refer to [Determining Open Circuit Location] based on the recorded DTC, shake the wiring harness or connector of the electrical component which is suspected to be the cause of the malfunction, and inspect for any changes in CAN system voltage or occurrence of any DTCs.

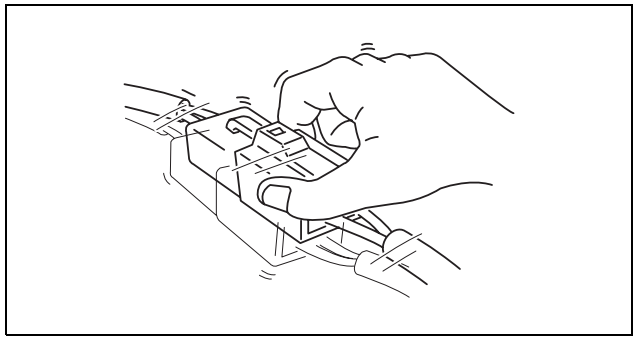

aaxjjw00007274

  - — Inspect the female terminals on the connector of the electric component which is suspected to be the cause of the malfunction for poor connection.

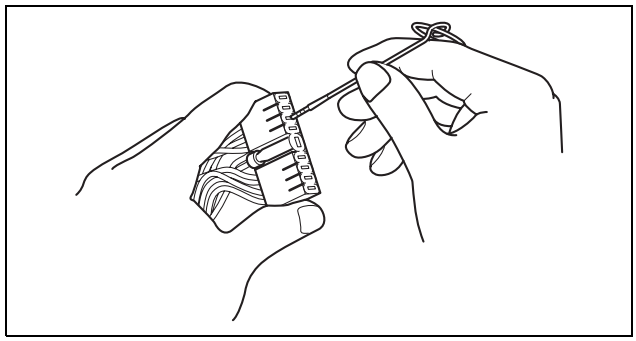

am3uuw0000750

SYMPTOM TROUBLESHOOTING [ADAPTIVE FRONT LIGHTING SYSTEM (AFS)]

id0903k9378800

No.	Troubleshooting item	Description
1	09-03D-4 AFS OFF INDICATOR LIGHT ILLUMINATES CONTINUOUSLY [ADAPTIVE FRONT LIGHTING SYSTEM (AFS)]	• Inspect the AFS OFF indicator light with the ignition switched ON and the AFS OFF indicator light illumination off (AFS operating).
2	09-03D-5 ADAPTIVE FRONT LIGHTING SYSTEM (AFS) OPERATES EVEN THOUGH THE AFS OFF SWITCH IS TURNED ON [ADAPTIVE FRONT LIGHTING SYSTEM (AFS)]	• AFS operates with the AFS OFF switch on (system stopped condition).
3	09-03D-6 THE HEADLIGHT AUTO LEVELING SYSTEM DOES NOT OPERATE IN RESPONSE TO VEHICLE POSTURE [ADAPTIVE FRONT LIGHTING SYSTEM (AFS)]	• The headlight auto leveling system does operate in response to the number of occupants, cargo load in trunk, and the fuel level. • One side of the headlight leveling actuator does not operate.

SYMPTOM TROUBLESHOOTING [ADAPTIVE FRONT LIGHTING SYSTEM (AFS)]

AFS OFF INDICATOR LIGHT ILLUMINATES CONTINUOUSLY [ADAPTIVE FRONT LIGHTING SYSTEM (AFS)]

id0903k9013400

Note

- If there is any vehicle malfunction complaint lodged by a customer, perform 09-03D-2 FOREWORD [ADAPTIVE FRONT LIGHTING SYSTEM (AFS)] malfunction diagnosis according to the troubleshooting procedure.

Possible malfunction

- AFS OFF switch malfunction (stuck on)
- AFS OFF control module malfunction
- Instrument cluster malfunction

Diagnostic Procedure

Step	Inspection		Action
1	**DETERMINE IF MALFUNCTION LOCATION IS AFS OFF SWITCH** • Display the following AFS control module AFS_ST PIDs using the M-MDS. (See 09-02D-40 PID/DATA MONITOR INSPECTION [ADAPTIVE FRONT LIGHTING SYSTEM (AFS)].) • Inspect the PID display when the AFS OFF switch is turned on/off. • Does the PID display switch normally in conjunction with the AFS OFF switch being turned on/off?	Yes	Go to Step 3.
		No	Go to the next step.
2	**PERFORM AFS OFF SWITCH INSPECTION** • Disconnect the negative battery cable. (See 01-17A-11 NEGATIVE BATTERY CABLE DISCONNECTION/CONNECTION [SKYACTIV-G 2.0].) (See 01-17A-13 NEGATIVE BATTERY CABLE DISCONNECTION/CONNECTION [SKYACTIV-G 2.0 (WITHOUT i-stop)].) (See 01-17B-9 NEGATIVE BATTERY CABLE DISCONNECTION/CONNECTION [SKYACTIV-D 2.2].) • Remove the AFS OFF switch. (See 09-18-32 ADAPTIVE FRONT LIGHTING SYSTEM (AFS) OFF SWITCH REMOVAL/INSTALLATION.) • Inspect the AFS OFF switch. (See 09-18-32 ADAPTIVE FRONT LIGHTING SYSTEM (AFS) OFF SWITCH INSPECTION.) • Is the AFS OFF switch normal?	Yes	Replace the AFS control module. (See 09-18-30 ADAPTIVE FRONT LIGHTING SYSTEM (AFS) CONTROL MODULE REMOVAL/INSTALLATION.)
		No	Replace the AFS OFF switch. (See 09-18-32 ADAPTIVE FRONT LIGHTING SYSTEM (AFS) OFF SWITCH REMOVAL/INSTALLATION.)
3	**VERIFY AFS DISPLAY ILLUMINATION** • Connect the negative battery cable. (See 01-17A-11 NEGATIVE BATTERY CABLE DISCONNECTION/CONNECTION [SKYACTIV-G 2.0].) (See 01-17A-13 NEGATIVE BATTERY CABLE DISCONNECTION/CONNECTION [SKYACTIV-G 2.0 (WITHOUT i-stop)].) (See 01-17B-9 NEGATIVE BATTERY CABLE DISCONNECTION/CONNECTION [SKYACTIV-D 2.2].) • Display the following instrument cluster WL+IL simulation items using the M-MDS. (See 09-02G-38 ACTIVE COMMAND MODES INSPECTION [INSTRUMENT CLUSTER].) • Does the AFS OFF indicator light illumination turn off when the warning light, indicator light illumination is operated to off?	Yes	The system is operating normally.
		No	Replace the instrument cluster. (See 09-22-6 INSTRUMENT CLUSTER REMOVAL/INSTALLATION.)

SYMPTOM TROUBLESHOOTING [ADAPTIVE FRONT LIGHTING SYSTEM (AFS)]

ADAPTIVE FRONT LIGHTING SYSTEM (AFS) OPERATES EVEN THOUGH THE AFS OFF SWITCH IS TURNED ON [ADAPTIVE FRONT LIGHTING SYSTEM (AFS)]

id0903k9013700

Note

- If there is any vehicle malfunction complaint lodged by a customer, perform 09-03D-2 FOREWORD [ADAPTIVE FRONT LIGHTING SYSTEM (AFS)] malfunction diagnosis according to the troubleshooting procedure.

Possible malfunction

- AFS OFF switch malfunction (stuck off)
- AFS OFF control module malfunction

Diagnostic Procedure

Step	Inspection		Action
1	**VERIFY AFS OFF INDICATOR LIGHT ILLUMINATION** • Display the following instrument cluster WL+IL simulation items using the M-MDS. (See 09-02G-38 ACTIVE COMMAND MODES INSPECTION [INSTRUMENT CLUSTER].) • Does the AFS OFF indicator light illumination turn off when the warning light, indicator light illumination is operated to off?	Yes	Go to the next step.
		No	Perform inspection referring to the AFS OFF INDICATOR LIGHT ILLUMINATES CONTINUOUSLY On item. (See 09-03D-4 AFS OFF INDICATOR LIGHT ILLUMINATES CONTINUOUSLY [ADAPTIVE FRONT LIGHTING SYSTEM (AFS)].)
2	**DETERMINE IF MALFUNCTION LOCATION IS AFS OFF SWITCH** • Display the following AFS control module AFS_ST PIDs using the M-MDS. (See 09-02D-40 PID/DATA MONITOR INSPECTION [ADAPTIVE FRONT LIGHTING SYSTEM (AFS)].) • Inspect the PID display when the AFS OFF switch is turned on/off. • Does the PID display switch normally in conjunction with the AFS OFF switch being turned on/off?	Yes	Replace the AFS control module. (See 09-18-30 ADAPTIVE FRONT LIGHTING SYSTEM (AFS) CONTROL MODULE REMOVAL/INSTALLATION.)
		No	Go to the next step.
3	**PERFORM AFS OFF SWITCH INSPECTION** • Disconnect the negative battery cable. (See 01-17A-11 NEGATIVE BATTERY CABLE DISCONNECTION/CONNECTION [SKYACTIV-G 2.0].) (See 01-17A-13 NEGATIVE BATTERY CABLE DISCONNECTION/CONNECTION [SKYACTIV-G 2.0 (WITHOUT i-stop)].) (See 01-17B-9 NEGATIVE BATTERY CABLE DISCONNECTION/CONNECTION [SKYACTIV-D 2.2].) • Remove the AFS OFF switch. (See 09-18-32 ADAPTIVE FRONT LIGHTING SYSTEM (AFS) OFF SWITCH REMOVAL/INSTALLATION.) • Inspect the AFS OFF switch. (See 09-18-32 ADAPTIVE FRONT LIGHTING SYSTEM (AFS) OFF SWITCH INSPECTION.) • Is the AFS OFF switch normal?	Yes	The system is operating normally.
		No	Replace the AFS OFF switch. (See 09-18-32 ADAPTIVE FRONT LIGHTING SYSTEM (AFS) OFF SWITCH REMOVAL/INSTALLATION.)

SYMPTOM TROUBLESHOOTING [ADAPTIVE FRONT LIGHTING SYSTEM (AFS)]

THE HEADLIGHT AUTO LEVELING SYSTEM DOES NOT OPERATE IN RESPONSE TO VEHICLE POSTURE [ADAPTIVE FRONT LIGHTING SYSTEM (AFS)]

id0903k9013800

Note
- If there is any vehicle malfunction complaint lodged by a customer, perform 09-03D-2 FOREWORD [ADAPTIVE FRONT LIGHTING SYSTEM (AFS)] malfunction diagnosis according to the troubleshooting procedure.

Description
- The headlight auto-leveling system does operate in response to the number of occupants, cargo load in trunk, and the fuel level.
- One side of the headlight leveling actuator does not operate.

Possible malfunction
- Short or open circuit in the wiring harness between headlight leveling actuator and AFS control module
- Headlight leveling actuator malfunction
- AFS control module malfunction
- Poor installation of the auto leveling sensor
- Auto leveling sensor malfunction

Diagnostic Procedure

Step	Inspection		Action
1	**DETERMINE IF MALFUNCTIONING LOCATION IS AUTO-LEVELING SENSOR** • Verify the malfunction symptom. • Do both sides of the headlight auto leveling system not operate?	Yes	Go to Step 4.
		No	Go to the next step.
2	**LEVELING OPERATION SIGNAL INSPECTION** • Verify the headlight leveling actuator operation using the M-MDS. (See 09-02D-41 HEADLIGHT LEVELING ACTUATOR OPERATION CHECK MODE [ADAPTIVE FRONT LIGHTING SYSTEM (AFS)].) • Is the headlight leveling actuator normal?	Yes	Go to Step 6.
		No	Go to the next step.
3	**LEVELING OPERATION SIGNAL CIRCUIT INSPECTION** • Inspect wiring harness between AFS control module on the side of the auto leveling system which does operate and the headlight leveling actuator. **RH** — AFS control module terminal O and headlight leveling actuator terminal F **LH** — AFS control module terminal O and headlight leveling actuator terminal F • Is there any open or short circuit in the wiring harness?	Yes	Repair or replace for an open or short circuit to the wiring harness.
		No	Go to the next step.
4	**HEADLIGHT LEVELING INSPECTION** • Replace the front combination light on the side of the auto-leveling system that is not operating. (See 09-18-7 FRONT COMBINATION LIGHT REMOVAL/INSTALLATION.) • Does the auto-leveling system operate correctly?	Yes	Troubleshooting completed.
		No	Replace the AFS control module. (See 09-18-30 ADAPTIVE FRONT LIGHTING SYSTEM (AFS) CONTROL MODULE REMOVAL/INSTALLATION.)

SYMPTOM TROUBLESHOOTING [ADAPTIVE FRONT LIGHTING SYSTEM (AFS)]

Step	Inspection		Action
5	**INSPECT WIRING HARNESS BETWEEN HEADLIGHT LEVELING ACTUATOR AND AFS CONTROL MODULE** • Inspect the wiring harness between the following terminals. — AFS control module terminal P and headlight leveling actuator (LH/RH) terminal I — AFS control module terminal O and headlight leveling actuator (LH/RH) terminal F — AFS control module terminal M and headlight leveling actuator (LH/RH) terminal L • Is there any open or short circuit in the wiring harness?	Yes	Repair or replace for an open or short circuit to the wiring harness.
		No	Go to the next step.
6	**VERIFY AUTO-LEVELING SENSOR INSTALLATION** • Verify the auto-leveling sensor installation condition? • Is a bracket bent, is there damage, or is a link disconnected?	Yes	Repair or replace the malfunctioning location.
		No	Go to the next step.
7	**AUTO LEVELING SENSOR INSPECTION** • Inspect the auto leveling sensor. (See 09-18-80 AUTO LEVELING SENSOR INSPECTION.) • Is the auto leveling sensor normal?	Yes	Replace the AFS control module. (See 09-18-30 ADAPTIVE FRONT LIGHTING SYSTEM (AFS) CONTROL MODULE REMOVAL/INSTALLATION.)
		No	Replace the auto leveling sensor. (See 09-18-79 AUTO LEVELING SENSOR REMOVAL/INSTALLATION.)

09-03E SYMPTOM TROUBLESHOOTING [EMERGENCY STOP SIGNAL SYSTEM (ESS)]

FOREWORD
[EMERGENCY STOP SIGNAL SYSTEM (ESS)] **09-03E–1**
Troubleshooting Procedure **09-03E–2**
Action for Non-repeatable Malfunction. **09-03E–3**
TROUBLESHOOTING INDEX [EMERGENCY STOP SIGNAL SYSTEM (ESS)] **09-03E–3**
ESS (EMERGENCY STOP SIGNAL SYSTEM) DOES NOT OPERATE [EMERGENCY STOP SIGNAL SYSTEM (ESS)] **09-03E–3**
Description **09-03E–3**
Possible cause **09-03E–4**
Diagnostic Procedure **09-03E–4**
ESS (EMERGENCY STOP SIGNAL SYSTEM) OPERATES WHILE NOT UNDER OPERATION CONDITIONS [EMERGENCY STOP SIGNAL SYSTEM (ESS)] **09-03E–4**
Description **09-03E–4**
Possible cause **09-03E–4**
Diagnostic Procedure **09-03E–4**

SYMPTOM TROUBLESHOOTING [EMERGENCY STOP SIGNAL SYSTEM (ESS)]

FOREWORD [EMERGENCY STOP SIGNAL SYSTEM (ESS)]

id0903j7004300

Warning

- **Do not attempt to reproduce an emergency stop signal system malfunction. Doing so will result in a remarkable loss of vehicle stability which could cause an unexpected rear-end or other type of collision and a serious accident.**
- **To prevent an accident, verify the M-MDS data monitor using two people while the vehicle is being driven (One person drives vehicle and other operates the M-MDS).**

- If there is any vehicle malfunction complaint lodged by a customer, perform malfunction diagnosis according to the troubleshooting procedure.

SYMPTOM TROUBLESHOOTING [EMERGENCY STOP SIGNAL SYSTEM (ESS)]

Troubleshooting Procedure

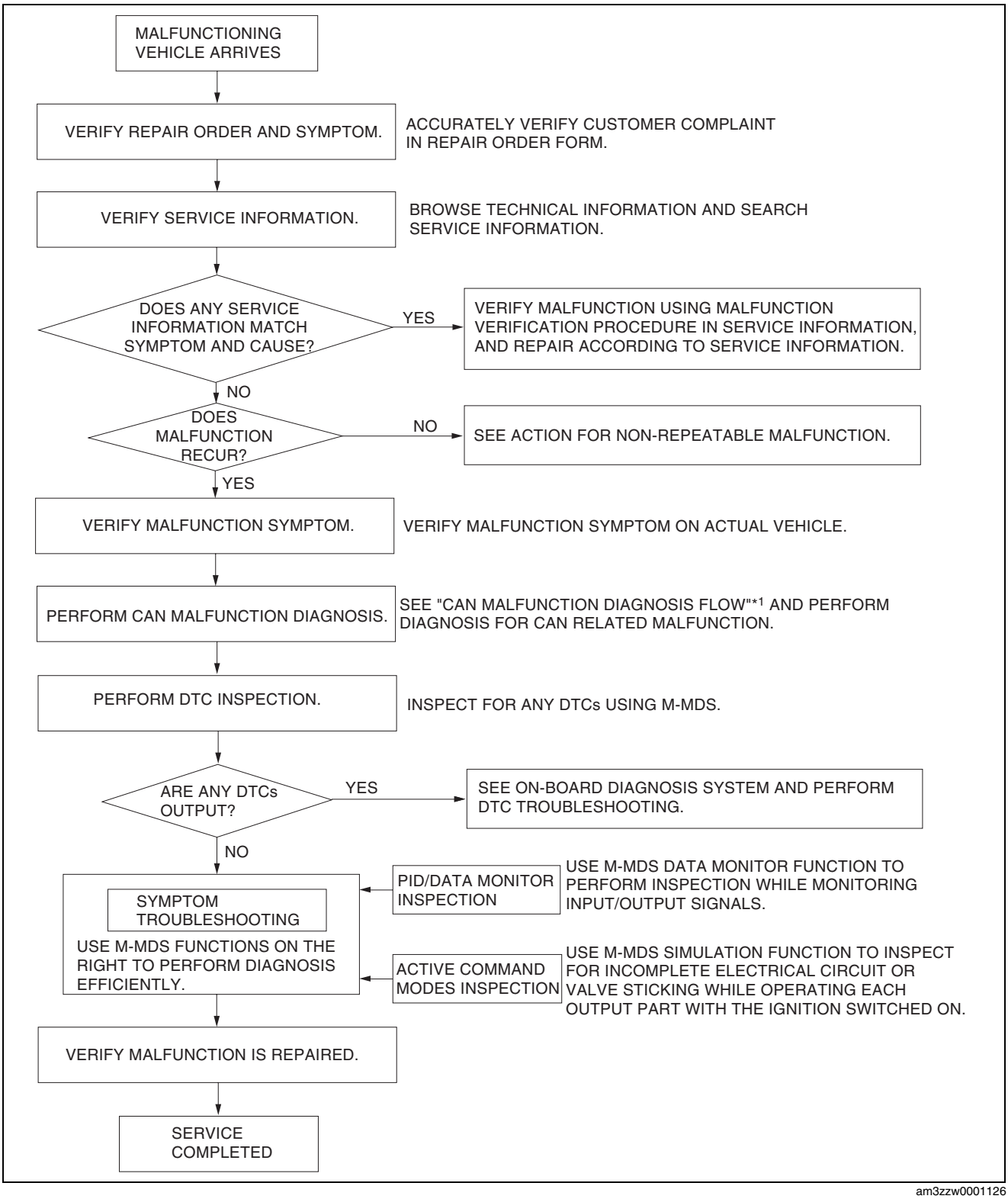

am3zzw0001126

*1 : 10-02A-3 CONTROLLER AREA NETWORK (CAN) MALFUNCTION DIAGNOSIS FLOW [SKYACTIV-G 2.0 (L.H.D.)] / 10-02B-3 CONTROLLER AREA NETWORK (CAN) MALFUNCTION DIAGNOSIS FLOW [SKYACTIV-G 2.0 (R.H.D.)]

SYMPTOM TROUBLESHOOTING [EMERGENCY STOP SIGNAL SYSTEM (ESS)]

Action for Non-repeatable Malfunction

- If the malfunction does not recur, verify the malfunction cause by performing the following actions:
  - — Based on the repair order form, attempt to drive the vehicle or perform tests to replicate the malfunction, record the data at that time, and detect the malfunction cause.
  - — Shake the wiring harness or connector of the electrical component which is suspected to be the cause of the malfunction, and inspect for malfunction or occurrence of any DTCs.

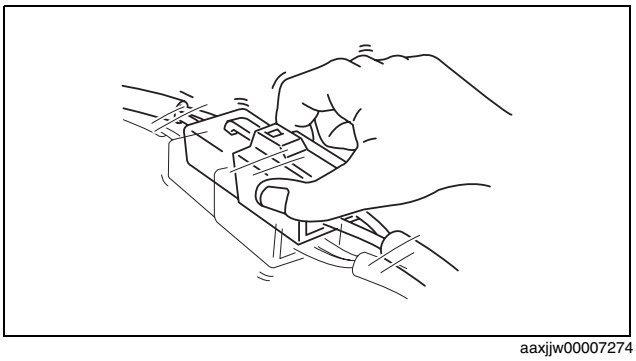

aaxjjw00007274

  - — Inspect the female terminals on the connector of the electric component which is suspected to be the cause of the malfunction for poor connection.

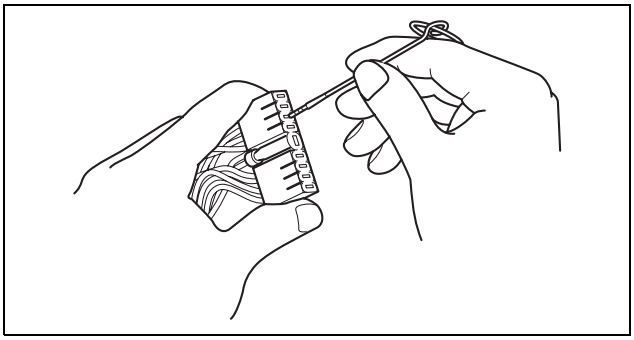

am3uuw0000750

TROUBLESHOOTING INDEX [EMERGENCY STOP SIGNAL SYSTEM (ESS)]

id0903j7010500

No.	Troubleshooting item	Description
1	09-03E-3 ESS (EMERGENCY STOP SIGNAL SYSTEM) DOES NOT OPERATE [EMERGENCY STOP SIGNAL SYSTEM (ESS)]	• Hazard warning lights do not flash even though the vehicle decelerates suddenly *1. • Hazard warning lights end flashing before vehicle stops (vehicle speed at **approx. 10 km/h {6.2 mph}**) while the system operates.
2	09-03E-4 ESS (EMERGENCY STOP SIGNAL SYSTEM) OPERATES WHILE NOT UNDER OPERATION CONDITIONS [EMERGENCY STOP SIGNAL SYSTEM (ESS)]	• Hazard warning lights flash while driving. • Hazard warning lights flash even though deceleration is done without decelerating*1 rapidly.

*1 : Deceleration of vehicle speed at **30 km/h {19 mph} or more** for **1 s** while vehicle speed is **60—70 km/h {38—43 mph} or more**.

ESS (EMERGENCY STOP SIGNAL SYSTEM) DOES NOT OPERATE [EMERGENCY STOP SIGNAL SYSTEM (ESS)]

id0903j7014800

Note

- If there is any vehicle malfunction complaint lodged by a customer, perform 09-03E-1 FOREWORD [EMERGENCY STOP SIGNAL SYSTEM (ESS)] malfunction diagnosis according to the troubleshooting procedure.

Description

- Hazard warning lights do not flash even though vehicle decelerates suddenly.
- Hazard warning lights end flashing before vehicle stops (emergency stop hazard warning mode, vehicle speed of **approx. 10 km/h {6.2 mph}**) while system operates.

SYMPTOM TROUBLESHOOTING [EMERGENCY STOP SIGNAL SYSTEM (ESS)]

Possible cause
- Front body control module (FBCM) malfunction

Driving road surface effect (emergency signal system (ESS) normal)
- Grip level of tires is low
  - — Driving on a low-traction surface
  - — Tire wear (hydroplaning)

Diagnostic Procedure

Step	Inspection		Action
1	**INSPECT FLASHING HAZARD WARNING LIGHT CIRCUIT FOR MALFUNCTION** • Display the front body control module (FBCM) simulation HAZARD_LMP item using the M-MDS. (See 09-02K-159 ACTIVE COMMAND MODES INSPECTION [FRONT BODY CONTROL MODULE (FBCM)].) • Do the hazard warning lights flash?	Yes	Go to the next step.
		No	Replace the front body control module (FBCM). (See 09-40-2 FRONT BODY CONTROL MODULE (FBCM) REMOVAL/INSTALLATION.)
2	**DETERMINE IF MALFUNCTION CAUSED BY ABS OPERATION MALFUNCTION** • Inspect the ABS operation at **10—20 km/h {6.3—12.0 mph}**. • Is the ABS operation normal?	Yes	Phenomenon occurring due to effect of road surface can be considered.(Emergency Signal System (ESS) normal) If the malfunction recurs, replace the front body control module (FBCM). (See 09-40-2 FRONT BODY CONTROL MODULE (FBCM) REMOVAL/INSTALLATION.)
		No	• Inspect the tires for the following: — Tire air pressure (are all four tires at recommended pressure?) — Tire wear condition (is tire wear uniform on all four tires, or is it different?) — Tire size Adjust the malfunctioning tire or replace the tire.

ESS (EMERGENCY STOP SIGNAL SYSTEM) OPERATES WHILE NOT UNDER OPERATION CONDITIONS [EMERGENCY STOP SIGNAL SYSTEM (ESS)]

id0903j7014900

Note
- If there is any vehicle malfunction complaint lodged by a customer, perform 09-03E-1 FOREWORD [EMERGENCY STOP SIGNAL SYSTEM (ESS)] malfunction diagnosis according to the troubleshooting procedure.

Description
- Hazard warning lights flash while driving
- Hazard warning lights flash even though deceleration is done without decelerating rapidly.

Possible cause
- Start stop unit malfunction
- Front body control module (FBCM) malfunction

Hazard warning light flash malfunction
- Hazard warning switch malfunction (temporary short circuit caused by shock from road surface)
  - — Hazard warning switch malfunction
  - — Short to ground in wiring harness between hazard warning switch terminal C and start stop unit terminal 1G

Sudden deceleration wheel speed is detected
- Grip level of tires is low
  - — Driving on a low-traction surface
  - — Tire wear (hydroplaning)

Diagnostic Procedure
- *When performing an asterisked(*) troubleshooting inspection, first verify the damage and connection status of the connectors and terminals, then perform the inspection while shaking the wiring harness to discover whether poor contact points are the cause of an intermittent malfunction. If there is a malfunction in the connectors or terminals, securely connect, repair, or perform replacement.

SYMPTOM TROUBLESHOOTING [EMERGENCY STOP SIGNAL SYSTEM (ESS)]

Step	Inspection		Action
1*	**DETERMINE IF MALFUNCTION CAUSED BY HAZARD WARNING SWITCH SIGNAL ERROR** • Display the start stop unit PID HAZARD_SW item using the M-MDS. (See 09-02C-151 PID/DATA MONITOR INSPECTION [START STOP UNIT].) • Verify the PID/data monitor display while operating the hazard warning switch. • Does the PID/data monitor display switch?	Yes	Go to Step 4.
		No	Go to the next step.
2	**INSPECT HAZARD WARNING SWITCH FOR MALFUNCTION** • Remove the hazard warning switch. (See 09-18-90 HAZARD WARNING SWITCH REMOVAL/INSTALLATION.) • Inspect the hazard warning switch. (See 09-18-91 HAZARD WARNING SWITCH INSPECTION.) • Is the hazard warning switch normal?	Yes	Go to the next step.
		No	Replace the hazard warning switch. (See 09-18-90 HAZARD WARNING SWITCH REMOVAL/INSTALLATION.)
3*	**INSPECT FOR SHORT TO GROUND IN WIRING HARNESS BETWEEN HAZARD WARNING SWITCH AND START STOP UNIT** • Inspect for continuity between hazard warning switch connector terminal C and body ground. • Is there continuity?	Yes	Repair or replace the wiring harness between hazard warning switch terminal C and start stop unit terminal 1G.
		No	Replace the start stop unit. (See 09-14-54 START STOP UNIT REMOVAL/INSTALLATION.)
4*	**DETERMINE IF MALFUNCTION CAUSE IS FRONT BODY CONTROL MODULE (FBCM)** • Display the front body control module (FBCM) PID HAZARD_SW item using the M-MDS. (See 09-02K-154 PID/DATA MONITOR INSPECTION [FRONT BODY CONTROL MODULE (FBCM)].) • Verify the PID/data monitor while operating the hazard warning switch. • Does the PID/data monitor display switch?	Yes	Go to the next step.
		No	Replace the front body control module (FBCM). (See 09-40-2 FRONT BODY CONTROL MODULE (FBCM) REMOVAL/INSTALLATION.)
5	**INSPECT TIRES FOR MALFUNCTION** • Inspect the tires for the following: — Tire air pressure (are all four tires at recommended pressure?) — Tire wear condition (is tire wear uniform on all four tires, or is it different?) — Tire size • Are the tires normal?	Yes	Phenomenon occurring due to effect of road surface can be considered. (Emergency Signal System (ESS) normal) If the malfunction recurs, replace the front body control module (FBCM). (See 09-40-2 FRONT BODY CONTROL MODULE (FBCM) REMOVAL/INSTALLATION.)
		No	Adjust the malfunctioning tire or replace the tire.

09-03F SYMPTOM TROUBLESHOOTING [ENTIRE AUDIO SYSTEM]

FOREWORD
[ENTIRE AUDIO SYSTEM] 09-03F–2
Troubleshooting Procedure 09-03F–2
Action for Non-repeatable Malfunction. 09-03F–3
TROUBLESHOOTING INDEX
[ENTIRE AUDIO SYSTEM] 09-03F–4
Quick Diagnostic Chart 09-03F–5
CONFIRMATION STEP 1: AUDIO PANEL SWITCH CONFIRMATION
[ENTIRE AUDIO SYSTEM] 09-03F–7
How to activate audio panel switch inspection mode. 09-03F–7
CONFIRMATION STEP 2: STEERING SWITCH CONFIRMATION
[ENTIRE AUDIO SYSTEM] 09-03F–8
AF NOISE OR POP NOISE AT ALL SOURCES (RADIO, CD)
[ENTIRE AUDIO SYSTEM] 09-03F–9
AUDIO POWER IS NOT AVAILABLE OR SWITCHED ON OR OFF AUTOMATICALLY
[ENTIRE AUDIO SYSTEM] 09-03F–12
NO SOUND FROM ALL SPEAKERS
[ENTIRE AUDIO SYSTEM] 09-03F–13
Without Bose® 09-03F–13
With Bose® 09-03F–14
NO SOUND FROM SOME SPEAKERS
[ENTIRE AUDIO SYSTEM] 09-03F–19
Without Bose® 09-03F–19
With Bose® 09-03F–20
SOUND BREAK-UP OR POOR SOUND QUALITY
[ENTIRE AUDIO SYSTEM] 09-03F–23
VOLUME INCREASES/DECREASES WHILE DRIVING THE VEHICLE
[ENTIRE AUDIO SYSTEM] 09-03F–25
ALC FUNCTION IS INOPERATIVE
[ENTIRE AUDIO SYSTEM] 09-03F–26
AudioPilot®2 FUNCTION IS INOPERATIVE
[ENTIRE AUDIO SYSTEM] 09-03F–27
NO AUDIO SYSTEM ILLUMINATION
[ENTIRE AUDIO SYSTEM] 09-03F–28
SOUND JUMPS
[ENTIRE AUDIO SYSTEM] 09-03F–28
DISPLAY DOES NOT CHANGE TO THE REAR MOUNT CAMERA IMAGE.
[ENTIRE AUDIO SYSTEM] 09-03F–32

SYMPTOM TROUBLESHOOTING [ENTIRE AUDIO SYSTEM]

FOREWORD [ENTIRE AUDIO SYSTEM]

id0903e2802700

- If there is any vehicle malfunction complaint lodged by a customer, perform malfunction diagnosis according to the troubleshooting procedure.

Troubleshooting Procedure

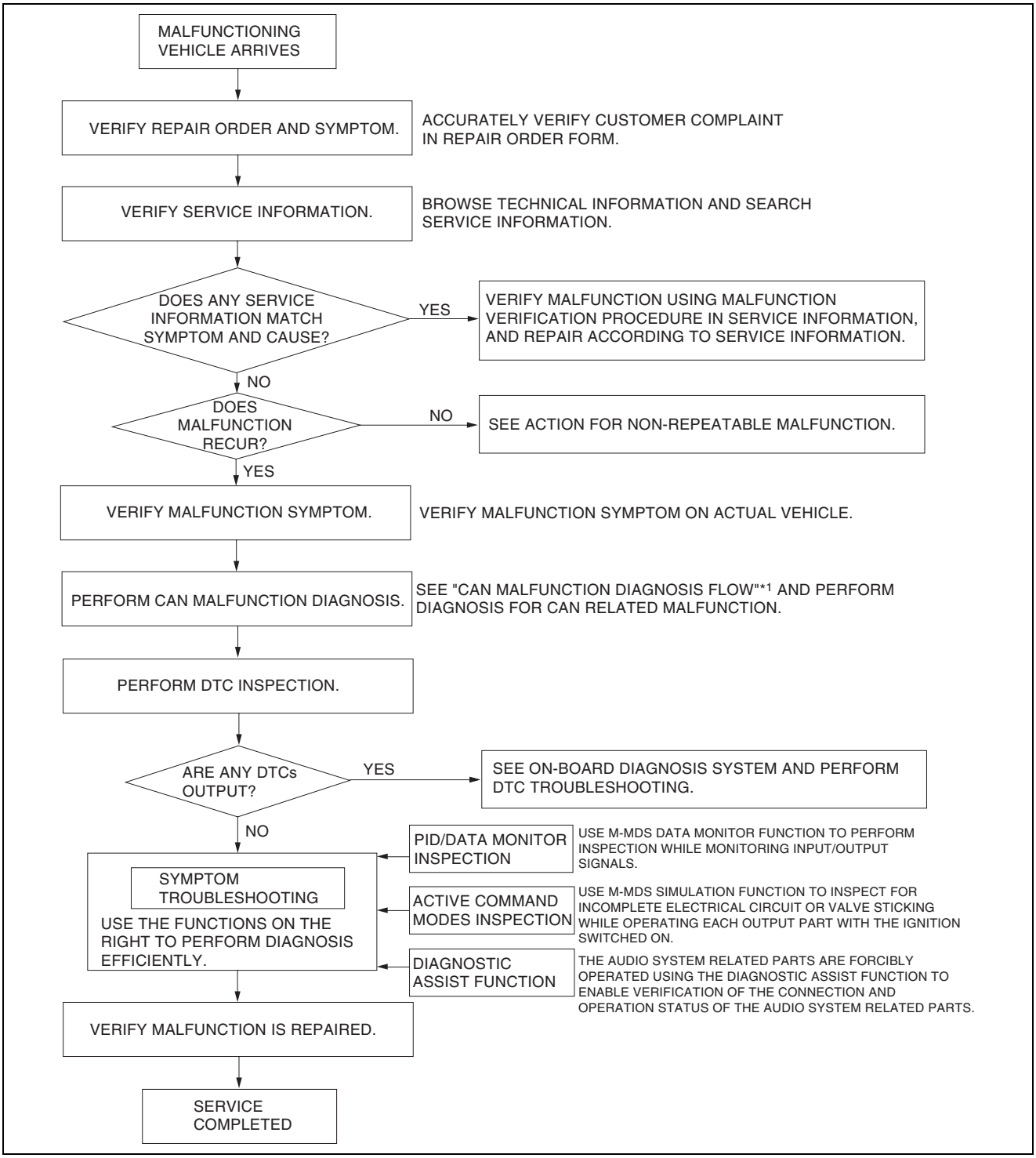

ac5wzw0000275

*1 : 10-02A-3 CONTROLLER AREA NETWORK (CAN) MALFUNCTION DIAGNOSIS FLOW [SKYACTIV-G 2.0 (L.H.D.)] / 10-02B-3 CONTROLLER AREA NETWORK (CAN) MALFUNCTION DIAGNOSIS FLOW [SKYACTIV-G 2.0 (R.H.D.)] / 10-02C-3 CONTROLLER AREA NETWORK (CAN) MALFUNCTION DIAGNOSIS FLOW [SKYACTIV-D 2.2 (L.H.D.)] / 10-02D-3 CONTROLLER AREA NETWORK (CAN) MALFUNCTION DIAGNOSIS FLOW [SKYACTIV-D 2.2 (R.H.D.)]

SYMPTOM TROUBLESHOOTING [ENTIRE AUDIO SYSTEM]

Action for Non-repeatable Malfunction

- If the malfunction does not recur, verify the malfunction cause by performing the following actions:
  - — Based on the repair order form, attempt to drive the vehicle or perform tests to replicate the malfunction, record the data at that time, and detect the malfunction cause.
  - — Shake the wiring harness or connector of the electrical component which is suspected to be the cause of the malfunction, and inspect for malfunction or occurrence of any DTCs.

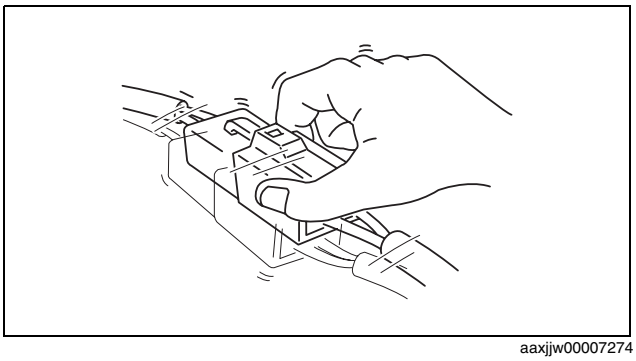

aaxjjw00007274

  - — Inspect the female terminals on the connector of the electric component which is suspected to be the cause of the malfunction for poor connection.

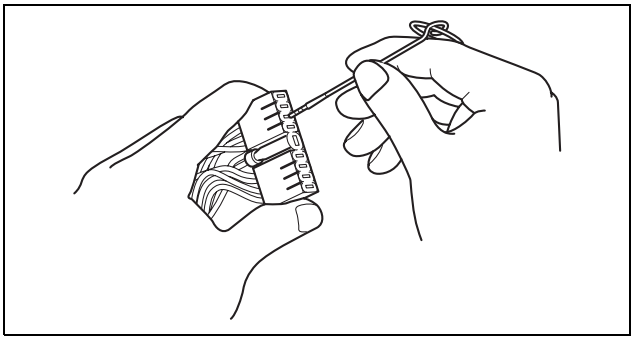

am3uuw0000750

SYMPTOM TROUBLESHOOTING [ENTIRE AUDIO SYSTEM]

TROUBLESHOOTING INDEX [ENTIRE AUDIO SYSTEM]

id0903e2801000

Symptom	Possible DTC	
	Using the M-MDS	Without using M-MDS (On-board diagnostic test mode)
09-03F-9 AF NOISE OR POP NOISE AT ALL SOURCES (RADIO, CD) [ENTIRE AUDIO SYSTEM]	U3003:16, U3000:09	09:Er20, 09:Er21
09-03F-12 AUDIO POWER IS NOT AVAILABLE OR SWITCHED ON OR OFF AUTOMATICALLY [ENTIRE AUDIO SYSTEM]	U3003:16	09:Er20
09-03F-13 NO SOUND FROM ALL SPEAKERS [ENTIRE AUDIO SYSTEM]	U3003:16, U3000:09	09:Er20, 09:Er21
09-03F-19 NO SOUND FROM SOME SPEAKERS [ENTIRE AUDIO SYSTEM]	—	—
09-03F-23 SOUND BREAK-UP OR POOR SOUND QUALITY [ENTIRE AUDIO SYSTEM]	U3000:09	09:Er21
09-03F-25 VOLUME INCREASES/DECREASES WHILE DRIVING THE VEHICLE [ENTIRE AUDIO SYSTEM]	—	—
09-03F-26 ALC FUNCTION IS INOPERATIVE [ENTIRE AUDIO SYSTEM]	U0155:00, U0010:88	16:Er12
09-03F-27 AudioPilot®2 FUNCTION IS INOPERATIVE [ENTIRE AUDIO SYSTEM]	U0155:00, U0010:88	16:Er12,
09-03F-28 NO AUDIO SYSTEM ILLUMINATION [ENTIRE AUDIO SYSTEM]	U3003:16	09:Er20
09-03F-28 SOUND JUMPS [ENTIRE AUDIO SYSTEM]	B1188:64	10:Er07
09-03F-32 DISPLAY DOES NOT CHANGE TO THE REAR MOUNT CAMERA IMAGE. [ENTIRE AUDIO SYSTEM]	—	—

SYMPTOM TROUBLESHOOTING [ENTIRE AUDIO SYSTEM]

Quick Diagnostic Chart

X: Applicable

Possible factor / Troubleshooting item	AF noise or POP noise at all sources (Radio, CD)	Audio power is not available or switched on or off automatically	No sound from all speakers	No sound from some speakers	Sound break-up or poor sound quality	Volume increases/decreases while driving the vehicle	ALC function is inoperative	AudioPilot® 2 function is inoperative	No audio system illumination	Sound jumps	Display does not change to the rear mount camera image
Electronic jamming from outside, or inferior condition of broadcasting station radio wave	X		X		X	X				X	
Defective CD (e.g., cracked, badly bent, rough edges, scratch, dirty CD, condensation)	X									X	
Vibration while vehicle is driven	X										
Low vehicle battery voltage	X										
Jammed radio signals from after market equipment	X										
Speaker malfunction (e. g., any foreign material, broken)	X		X	X	X						X
Improper speaker installation	X				X						
Poor connection of audio unit connector, terminal damage	X	X	X	X						X	X
Antenna malfunction (e.g., poor ground)	X										
Audio unit malfunction	X	X	X	X	X	X	X		X		
Audio amplifier malfunction (with Bose®)	X		X	X	X	X		X			
Speaker muted by Bluetooth system (hands-free telephone (HF/TEL) system) operation		X	X							X	
Mis-operation of steering switches		X				X				X	
Burnt fuse (B+)		X									
Burnt fuse (ACC)		X									
Open or short circuit in power supply (B+) wiring harness		X									
Open or short circuit in power supply (ACC) wiring harness		X									
Glass antenna malfunction			X								
Antenna feeder malfunction			X								
Center roof antenna malfunction			X								
Poor connection of music device			X		X						
Volume adjustment of music device is at minimum			X		X						

ac5wzw0000275

SYMPTOM TROUBLESHOOTING [ENTIRE AUDIO SYSTEM]

X: Applicable

Possible factor / Troubleshooting item	AF noise or POP noise at all sources (Radio, CD)	Audio power is not available or switched on or off automatically	No sound from all speakers	No sound from some speakers	Sound break-up or poor sound quality	Volume increases/decreases while driving the vehicle	ALC function is inoperative	AudioPilot® 2 function is inoperative	No audio system illumination	Sound jumps	Display does not change to the rear mount camera image
Short circuit in wiring harness between audio unit and speaker (without Bose®)			X	X							
Open circuit in wiring harness between audio unit and speaker (without Bose®)			X	X							
Open or short circuit in wiring harness between audio amplifier and ground (with Bose®)											
Speaker muted by audio unit sound adjustment				X							
Open or short circuit in wiring harness between audio amplifier and speaker (with Bose®)			X	X							
Open or short circuit in wiring harness between audio amplifier and audio unit (with Bose®)			X	X						X	
Poor connection of audio amplifier connector, terminal damage (with Bose®)			X	X							
Short circuit inside speaker			X	X						X	
Tuning error with radio station					X						
Vibration of door trim and/or package trim					X					X	
CAN signal wiring harness malfunction			X				X				
Sound level difference between audio modes						X					
Open or short circuit in vehicle speed signal wiring harness (e.g., instrument cluster)							X	X			
Open or short circuit in AudioPilot® 2 microphone signal wiring harness (with Bose®)								X			
Open or short circuit in AudioPilot® 2 signal wiring harness (with Bose®)								X			
Illumination turned off by panel light control switch operation									X		
Open or short circuit in TNS signal wiring harness									X		
Rear mount camera malfunction											X
Poor connection of the rear mount camera connector, terminal damage											X
Open or short circuit in wiring harness between audio unit and rear mount camera											X
Open or short circuit in reverse signal wiring harness											X

ac5wzw0000275

SYMPTOM TROUBLESHOOTING [ENTIRE AUDIO SYSTEM]

CONFIRMATION STEP 1: AUDIO PANEL SWITCH CONFIRMATION [ENTIRE AUDIO SYSTEM]

id0903e2802800

- Verify the customer complaint and identify either the audio panel malfunction or audio unit malfunction.

How to activate audio panel switch inspection mode

1. Launch the switch inspection mode. (See 09-02E-39 DIAGNOSTIC ASSIST FUNCTION [AUDIO].)
2. The audio panel switch inspection mode is now activated.

STEP	INSPECTION		ACTION
1	• Press each switch on the audio panel. • Does buzzer sound when pressing each switch?	Yes	Verify the customer complaint and then go to the appropriate symptom troubleshooting procedure.
		No	Go to the next step.
2	• Disassemble and reassemble the audio panel and audio unit. • Activate the audio panel switch confirmation mode. • Does buzzer sound when pressing each switch?	Yes	Go to the next step.
		No	Replace the audio unit. (See 09-20-4 AUDIO UNIT REMOVAL/INSTALLATION.)
3	Does the audio system operate properly?	Yes	The system is normal.
		No	Verify the customer complaint and then go to the appropriate symptom troubleshooting procedure.

SYMPTOM TROUBLESHOOTING [ENTIRE AUDIO SYSTEM]

CONFIRMATION STEP 2: STEERING SWITCH CONFIRMATION [ENTIRE AUDIO SYSTEM]

id0903e2833000

- Verify the customer complaint and identify either the steering switch malfunction or audio unit malfunction.

STEP	INSPECTION		ACTION
1	Is the symptom related to either the steering switch or audio panel operation?	Yes	Verify the customer complaint and then go to the appropriate symptom troubleshooting procedure.
		No	**The symptom is related to the audio panel operation:** • Follow the “Confirmation Step 1”. (See 09-03F-7 CONFIRMATION STEP 1: AUDIO PANEL SWITCH CONFIRMATION [ENTIRE AUDIO SYSTEM].) **The symptom is related to the steering switch operation:** • Go to the next step.
2	• Disconnect the audio unit connector (24-pin). • Inspect both the audio unit and wiring harness-side connectors for poor connection (such as damaged/pulled-out pins, corrosion). — Terminal 1N (ST SW1) — Terminal 1P (ST SW2) • Are all the pins normal?	Yes	Go to the next step.
		No	**If the audio unit side connector is wrong:** • Replace the audio unit. (See 09-20-4 AUDIO UNIT REMOVAL/INSTALLATION.) **If the wiring harness-side connector is wrong:** • Repair or replace the pins and/or the connector.
3	• Inspect the continuity between the audio unit wiring harness-side connector terminal 1N and 1P while operating the steering switch. • Does the resistance change?	Yes	Verify the customer complaint and then go to the appropriate symptom troubleshooting procedure.
		No	Go to the next step.
4	• Switch the ignition to off. • Remove the steering switch. (See 09-20-54 STEERING SWITCH REMOVAL/INSTALLATION.) • Inspect the continuity between the audio unit wiring harness-side connector (24-pin) terminal and the steering switch wiring harness-side connector (16-pin) terminal. — Terminal 1N (24-pin) — Terminal H (14-pin) — Terminal 1P (24-pin) — Terminal J (14-pin) • Is there the continuity?	Yes	Replace the steering switch. (See 09-20-54 STEERING SWITCH REMOVAL/INSTALLATION.)
		No	Repair or replace the suspect wiring harness.

SYMPTOM TROUBLESHOOTING [ENTIRE AUDIO SYSTEM]

AF NOISE OR POP NOISE AT ALL SOURCES (RADIO, CD) [ENTIRE AUDIO SYSTEM]

id0903e2100500

<table>
<tr><td rowspan="3">Possible DTC</td><td colspan="2">AF noise or POP noise on all sources (Radio, CD)</td></tr>
<tr><td>Using the M-MDS</td><td>U3000:09</td></tr>
<tr><td>Without using M-MDS (On-board diagnostic test mode)</td><td>09:Er21</td></tr>
<tr><td>Possible cause</td><td colspan="2">• Electronic jamming from outside, or inferior condition of broadcasting station radio wave
• Defective CD (e.g., cracked, badly bent, rough edges, scratch, dirty CD, condensation)
• Vibration while vehicle is driven
• Low vehicle battery voltage.
• Jammed radio signals from after market equipment.
• Speaker malfunction (e.g., any foreign material, broken)
• Improper speaker installation
• Poor connection of audio unit connector, terminal damage
• Antenna malfunction (e.g., poor ground)
• Audio unit malfunction
• Poor connection of audio amplifier connector, terminal damage (with Bose®)
• Audio amplifier malfunction (with Bose®)

Note
• AF noise is a snapping noise that generally occurs during ON/OFF switching operations of electrical equipment other than the audio unit, or a continual rasping noise that occurs when electrical equipment is operated. This is caused by noise interference in the power supply wiring, signal wiring, speaker cable or head of cassette deck. Therefore noise can be heard regardless of radio wave conditions or the audio volume position. The noise will start after one click from the minimum position of the volume button but normally does not change even when volume is turned to a higher position.
• POP noise is snapping or popping noise that occurs during ON/OFF switching operation of the audio unit, or when switching from radio to CD. Even a normal audio unit sometimes emits a little noise depending on the conditions.</td></tr>
</table>

SYMPTOM TROUBLESHOOTING [ENTIRE AUDIO SYSTEM]

Diagnostic procedure

STEP	INSPECTION		ACTION
1	• Does the noise occur only while in radio mode?	Yes	Go to the next step.
		No	Go to Step 3.
2	• Can the location where the noise occurs be specified?	Yes	The system is normal. Explain to the customer that the noise is caused by radio wave disturbances or broadcast wave conditions from the outside.
		No	Go to Step 6.
3	• Does the noise occur only while in CD mode?	Yes	Go to the next step.
		No	Go to Step 6.
4	• Can the disc in which the noise occurs be specified?	Yes	The system is normal. Explain to the customer that the cause is a disc that is damaged or dirty on the playback side, or warped.
		No	Go to the next step.
5	• Drive the vehicle and verify the malfunction symptom. • Does noise occur while driving on an unlevel road or under other driving conditions (sudden curve, quick operation)?	Yes	The system is normal. Explain to the customer that the cause is vibration while the vehicle is driven.
		No	Go to the next step.
6	• Inspect the vehicle battery voltage. • Is the vehicle battery voltage normal? **Specification:** Switch the ignition to ON.: **11.5 V or more** Idle: **12.5 V or more**	Yes	Go to the next step.
		No	Charge the battery, then go to the next step.
7	• Is any of the following after-market equipment installed? (Inspect especially near the antenna.) — Radar — Remote engine starter — Anti-theft device — Other	Yes	Go to the next step.
		No	Go to Step 9.
8	• Remove the after-market equipment. • Turn the audio system to ON. • Is there any noise?	Yes	Go to the next step.
		No	The system is normal. The after-market electrical devices might make a noise.
9	• Is there the noise from all speakers?	Yes	Go to Step 11.
		No	Go to the next step.
10	• Inspect the suspect speaker. • Is the speaker normal?	Yes	Go to the next step.
		No	**If there is any foreign material on the speaker:** • Remove the foreign material from the speaker. **If the speaker is malfunctioning:** • Replace the speaker. **If the speaker is not installed properly:** • Install the speaker properly.
11	• Attempt to duplicate the symptom on the other vehicle. • Is the noise better than the customer's vehicle?	Yes	Go to the next step.
		No	The system is normal. Explain the noise generation mechanism to the customer. **Note** • The noise may be heard depends on the operating speed of audio power and/or mode switch.
12	• Switch the ignition to off. • Remove the audio unit. • Inspect the connection of the audio unit connector (24-pin) (for sound signal line). • Is the connector connected securely?	Yes	Go to the next step.
		No	**If poor connection of audio unit connector:** • Securely connect the audio unit connector. **If the audio unit side connector is wrong:** • Replace the audio unit. (See 09-20-4 AUDIO UNIT REMOVAL/INSTALLATION.) **If the wiring harness-side connector is wrong:** • Repair or replace the pins and/or the connector. After treating either the above-mentioned, then go to the next step.
13	• Inspect the ground condition of the antenna. • Is the ground condition normal?	Yes	Go to the next step.
		No	Repair or replace the ground. Go to the next step.

SYMPTOM TROUBLESHOOTING [ENTIRE AUDIO SYSTEM]

STEP	INSPECTION		ACTION
14	• Is there any noise?	Yes	• If noise occurs from the speaker of a specific channel, or the volume is minimized and the noise occurs: — Replace the audio amplifier. (See 09-20-12 AUDIO AMPLIFIER REMOVAL/ INSTALLATION.) • If noise occurs from the speaker of two or more channels or the volume is minimized and the noise dose not occurs. — Replace the audio unit. (See 09-20-4 AUDIO UNIT REMOVAL/ INSTALLATION.)
		No	The system is normal.

SYMPTOM TROUBLESHOOTING [ENTIRE AUDIO SYSTEM]

AUDIO POWER IS NOT AVAILABLE OR SWITCHED ON OR OFF AUTOMATICALLY [ENTIRE AUDIO SYSTEM]

id0903e2100600

Possible DTC	**Audio power is not available or switched on or off automatically**	
	Using the M-MDS	**U3003:16**
	Without using M-MDS (On-board diagnostic test mode)	**09:Er20**
Possible cause	• Speaker muted by Bluetooth system (hands-free telephone (HF/TEL) system) operation • Mis-operation of steering switches • Burnt fuse (B+) • Burnt fuse (ACC) • Open or short circuit in power supply (B+) wiring harness • Open or short circuit in power supply (ACC) wiring harness • Poor connection of audio unit connector, terminal damage • Audio unit malfunction	

Diagnostic procedure

STEP	INSPECTION		ACTION
1	• Does the malfunction occur while the Bluetooth system is operating?	Yes	The system is normal. Explain to the customer that the speaker is muted while the Bluetooth system is operating.
		No	Go to the next step.
2	• Do the steering switches operate?	Yes	The system is normal. Explain to the customer that the cause is mis-operation of the steering switches.
		No	Go to the next step.
3	• Switch the ignition to off. • Inspect the following fuses: — AUDIO1 15 A — AUDIO2 7.5 A • Are the fuse normal?	Yes	Go to the next step.
		No	Replace with the appropriate standard fuse. • If the fuse is melted, inspect the wiring harness for short to ground. Repair or replace the wiring harness, then replace the fuse.
4	• Remove the audio unit. • Inspect the connection of the audio unit (24-pin). • Are the connectors securely connected?	Yes	• Replace the audio unit. (See 09-20-4 AUDIO UNIT REMOVAL/INSTALLATION.)
		No	Securely connect the audio unit and car navigation unit connectors, then go to the next step.
5	• Verify the malfunction symptom. • Is the malfunction improved?	Yes	Troubleshooting completed.
		No	Go to the next step.
6	• Remove the audio unit (with audio system). • Inspect the connection of the audio unit connector (24-pin). • Disconnect the audio unit connector and inspect both the audio unit and wiring harness-side connectors for poor connection (such as damaged/pulled-out pins, corrosion). — Terminal 1B (B+) — Terminal 1R (ACC) — Terminal 1W (GND) • Are all the pins normal?	Yes	Go to the next step.
		No	**If poor connection of audio unit connector:** • Securely connect the audio unit connector. **If the audio unit side connector is wrong:** • Replace the audio unit. (See 09-20-4 AUDIO UNIT REMOVAL/INSTALLATION.) **If the wiring harness-side connector is wrong:** • Repair or replace the pins and/or the connector.
7	• Connect the audio unit connector. • Inspect the voltage for the power supply line (B+, ACC). **Specification:** Switch the ignition to ON: **11.5 V or more** Idle: **12.5 V or more** • Is the voltage normal?	Yes	Go to the next step.
		No	Inspect and repair or replace the suspect wiring harness. Charge the battery, if necessary.
8	• Switch the ignition to off. • Remove the audio unit connector (24-pin). • Inspect the continuity between the audio unit wiring harness-side connector terminal 1W (GND) and the ground. • Is there the continuity?	Yes	• Replace the audio unit. (See 09-20-4 AUDIO UNIT REMOVAL/INSTALLATION.)
		No	Repair or replace the wiring harness.

SYMPTOM TROUBLESHOOTING [ENTIRE AUDIO SYSTEM]

NO SOUND FROM ALL SPEAKERS [ENTIRE AUDIO SYSTEM]

id0903e2100700

Without Bose®

Possible DTC	**No sound from all speakers**	
	Using the M-MDS	**U3003:16, U3000:09**
	Without using M-MDS (On-board diagnostic test mode)	**09:Er20, 09:Er21**
Possible cause	• Electronic jamming from outside, or inferior condition of broadcasting station radio wave • Glass antenna malfunction • Antenna feeder malfunction • Center roof antenna malfunction • Speaker muted by Bluetooth system (hands-free telephone (HF/TEL) system) operation • Poor connection of music device • Volume adjustment of music device is at minimum • Poor connection at audio unit connector, terminal damage • Audio unit malfunction • Short circuit in wiring harness between audio unit and speaker • Open circuit in wiring harness between audio unit and speaker • Short circuit inside speaker • Speaker malfunction	

SYMPTOM TROUBLESHOOTING [ENTIRE AUDIO SYSTEM]

Diagnostic procedure

STEP	INSPECTION		ACTION
1	• It sound not output from the speaker only while in radio mode?	Yes	Go to the next step.
		No	Go to Step 6.
2	• Does noise occur?	Yes	Go to the next step.
		No	Go to Step 8.
3	• Can the location where the noise occurs be specified?	Yes	The system is normal. Explain to the customer that the noise is caused by radio wave disturbances or broadcast wave conditions from the outside.
		No	Go to the next step.
4	• Compare the radio broadcast reception condition on another vehicle of the same model (model/unit) in the location where the noise occurs. • Compared to another vehicle of the same model, is the reception worse?	Yes	Go to the next step.
		No	Go to Step 6.
5	• Inspect the glass antenna and antenna feeder. • Are the glass antenna and antenna feeder normal?	Yes	Go to the next step.
		No	Repair or replace the glass antenna and/or the antenna feeder.
6	• Does the Bluetooth system (hands-free telephone (HF/TEL) system) operate?	Yes	The system is normal. Explain to the customer that the Bluetooth system (hands-free telephone (HF/TEL) system) operates and the speaker is muted.
		No	Go to the next step.
7	• Does the AUX mode operate?	Yes	Verify the volume of the music device which has been connected. If sound is output, go to the next step.
		No	Go to the next step.
8	• Connect the audio unit connector. • Inspect the voltage for the power supply line (B+, ACC). **Specification:** Switch the ignition to ON: **11.5 V or more** Idle: **12.5 V or more** • Is the voltage normal?	Yes	Go to the next step.
		No	Charge the battery, then go to the next step.
9	• Play the CD or Radio. • Adjust the volume between”10” to “15”. • Is there sound?	Yes	The system is normal.
		No	Go to the next step.
10	• Switch the ignition to off. • Remove the audio unit. • Disconnect the audio unit connector (24-pin). • Inspect the continuity between the audio unit wiring harness-side connector terminal and ground: **For front door speaker** — Terminal 1A (LH+)—GND — Terminal 1C (LH-)—GND — Terminal 1D (RH+)—GND — Terminal 1F (RH-)—GND **For rear door speaker** — Terminal 1S (LH+)—GND — Terminal 1U (LH-)—GND — Terminal 1V (RH+)—GND — Terminal 1X (RH-)—GND • Disconnect the front door speaker connector (4-pin) • Inspect the continuity between the front door speaker wiring harness-side connector terminal and ground: **For tweeter** — Terminal 1A (LH+)—GND — Terminal 1C (LH-)—GND — Terminal 1D (RH+)—GND — Terminal 1F (RH-)—GND • Is there continuity?	Yes	Repair or replace the suspect wiring harness or speaker unit. **Note** • If there is a short circuit between the speaker harness or speaker lead wire and ground, the protector circuit inside the audio unit operates to cut the sound.
		No	• Replace the audio unit. (See 09-20-4 AUDIO UNIT REMOVAL/INSTALLATION.)

With Bose®

SYMPTOM TROUBLESHOOTING [ENTIRE AUDIO SYSTEM]

Possible DTC	**No sound from all speakers**	
	Using the M-MDS	**U3003:16, U3000:09**
	Without using M-MDS (On-board diagnostic test mode)	**09:Er20, 09:Er21**
Possible cause	• Electronic jamming from outside, or inferior condition of broadcasting station radio wave • Glass antenna malfunction • Antenna feeder malfunction • Center roof antenna malfunction • Speaker muted by Bluetooth system (hands-free telephone (HF/TEL) system) operation • Poor connection of music device • Volume adjustment of music device is at minimum • Speaker malfunction • Audio amplifier malfunction • Audio unit malfunction • Open or short circuit in wiring harness between audio amplifier and audio unit • Poor connection of audio unit or audio amplifier connector, terminal damage • CAN signal wiring harness malfunction • Short circuit inside speaker • Open or short circuit in wiring harness between audio amplifier and speaker	

SYMPTOM TROUBLESHOOTING [ENTIRE AUDIO SYSTEM]

Diagnostic procedure

STEP	INSPECTION		ACTION
1	• It sound not output from the speaker only while in radio mode?	Yes	Go to the next step.
		No	Go to Step 6.
2	• Does noise occur?	Yes	Go to the next step.
		No	Go to Step 8.
3	• Can the location where the noise occurs be specified?	Yes	The system is normal. Explain to the customer that the noise is caused by radio wave disturbances or broadcast wave conditions from the outside.
		No	Go to the next step.
4	• Compare the radio broadcast reception condition on another vehicle of the same model (model/unit) in the location where the noise occurs. • Compared to another vehicle of the same model, is the reception worse?	Yes	Go to the next step.
		No	Go to Step 6.
5	• Inspect the glass antenna and antenna feeder. • Are the glass antenna and antenna feeder normal?	Yes	Go to the next step.
		No	Repair or replace the glass antenna and/or the antenna feeder.
6	• Does the Bluetooth system (hands-free telephone (HF/TEL) system) operate?	Yes	The system is normal. Explain to the customer that the Bluetooth system (hands-free telephone (HF/TEL) system) operates and the speaker is muted.
		No	Go to the next step.
7	• Does the AUX mode operate?	Yes	Verify the volume of the music device which has been connected. If sound is output, go to the next step.
		No	Go to the next step.
8	• Connect the audio unit connector. • Inspect the voltage for the power supply line (B+, ACC). **Specification:** Switch the ignition to ON: **11.5 V or more** Idle: **12.5 V or more** • Is the voltage normal?	Yes	Go to the next step.
		No	Charge the battery, then go to the next step.
9	• Play CD or radio. • Adjust the volume between “10” and “15”. • Is there sound?	Yes	The system is normal.
		No	Go to the next step.
10	• Measure the voltage at the audio amplifier terminal 3A. (8-pin, vehicle harness-side) • Is the voltage B+?	Yes	Go to the next step.
		No	Repair or replace wiring harness between the audio amplifier and fuse. (See 09-20-12 AUDIO AMPLIFIER REMOVAL/ INSTALLATION.) Go to the next step.
11	• Inspect the connection of audio unit connector (24-pin) and audio amplifier connectors for poor connection (such as damaged/pulled-out pins, corrosion). • Are all pins normal?	Yes	Go to the next step.
		No	Repair or replace the pins and/or the connector.

SYMPTOM TROUBLESHOOTING [ENTIRE AUDIO SYSTEM]

STEP	INSPECTION		ACTION
12	• Switch the ignition to off. • Disconnect the audio amplifier connector. • Inspect continuity between the following terminals of the audio amplifier connector and speaker connector. **For front door speaker (LH)** — Terminal 3F (L.H.D.)/3C (R.H.D.)—Terminal C — Terminal 3E (L.H.D.)/3D (R.H.D.)—Terminal B **For front door speaker (RH)** — Terminal 3C (L.H.D.)/3F (R.H.D.)—Terminal C — Terminal 3D (L.H.D.)/3E (R.H.D.)—Terminal B **For tweeter (LH)** — Terminal 2G (L.H.D.)/2C (R.H.D.)—Terminal B — Terminal 2I (L.H.D.)/2E (R.H.D.)—Terminal A **For tweeter (RH)** — Terminal 2C (L.H.D.)/2G (R.H.D.)—Terminal B — Terminal 2E (L.H.D.)/2I (R.H.D.)—Terminal A **For rear door speaker (LH)** — Terminal 2O (L.H.D.)/2M (R.H.D.)—Terminal C — Terminal 2P (L.H.D.)/2K (R.H.D.)—Terminal B **For rear door speaker (RH)** — Terminal 2M (L.H.D.)/2O (R.H.D.)—Terminal C — Terminal 2K (L.H.D.)/2P (R.H.D.)—Terminal B **For front center speaker** — Terminal 3G—Terminal B — Terminal 3H—Terminal A **For D-pillar speaker** — Terminal 2A—Terminal B — Terminal 2B—Terminal A • Is there continuity?	Yes	Go to the next step.
		No	Repair or replace the repair related wiring harnesses.

SYMPTOM TROUBLESHOOTING [ENTIRE AUDIO SYSTEM]

STEP	INSPECTION		ACTION
13	• Switch the ignition to off. • Disconnect the audio amplifier connector. • Inspect the continuity between the audio amplifier connector and ground: **For front door speaker (LH)** — Terminal 3F (L.H.D.)/3C (R.H.D.)—GND — Terminal 3E (L.H.D.)/3D (R.H.D.)—GND **For front door speaker (RH)** — Terminal 3C (L.H.D.)/3F (R.H.D.)—GND — Terminal 3D (L.H.D.)/3E (R.H.D.)—GND **For tweeter (LH)** — Terminal 2G (L.H.D.)/2C (R.H.D.)—GND — Terminal 2I (L.H.D.)/2E (R.H.D.)—GND **For tweeter (RH)** — Terminal 2C (L.H.D.)/2G (R.H.D.)—GND — Terminal 2E (L.H.D.)/2I (R.H.D.)—GND **For rear door speaker (LH)** — Terminal 2O (L.H.D.)/2M (R.H.D.)—GND — Terminal 2P (L.H.D.)/2K (R.H.D.)—GND **For rear door speaker (RH)** — Terminal 2M (L.H.D.)/2O (R.H.D.)—GND — Terminal 2K (L.H.D.)/2P (R.H.D.)—GND **For front center speaker** — Terminal 3G—GND — Terminal 3H—GND **For D-pillar speaker** — Terminal 2A—GND — Terminal 2B—GND • Is there continuity?	Yes	Repair or replace the related wiring harness or speaker. (See 09-20-15 FRONT DOOR SPEAKER REMOVAL/INSTALLATION.) (See 09-20-23 TWEETER REMOVAL/INSTALLATION.) (See 09-20-19 REAR DOOR SPEAKER REMOVAL/INSTALLATION.) (See 09-20-22 FRONT CENTER SPEAKER REMOVAL/INSTALLATION.) (See 09-20-25 D-PILLAR SPEAKER REMOVAL/INSTALLATION.) **Note** • If there is a short circuit between the speaker harness or speaker lead wire and ground, the protector circuit inside the audio unit operates to cut the sound.
		No	Go to the next step.
14	• Switch the ignition to off. • Disconnect the audio amplifier connector and audio unit connector (24-pin). • Inspect the continuity between the audio amplifier terminal 2F (16-pin, vehicle harness-side) and audio unit terminal 1J (24-pin, vehicle harness- side). • Is there continuity?	Yes	Replace the audio amplifier. (See 09-20-12 AUDIO AMPLIFIER REMOVAL/INSTALLATION.)
		No	Repair or replace the wiring harness between the audio amplifier and audio unit. Then go to the next step.
15	• Is there any sound?	Yes	The system is normal.
		No	Replace the audio amplifier. (See 09-20-12 AUDIO AMPLIFIER REMOVAL/INSTALLATION.)

SYMPTOM TROUBLESHOOTING [ENTIRE AUDIO SYSTEM]

NO SOUND FROM SOME SPEAKERS [ENTIRE AUDIO SYSTEM]

id0903e2100800

Without Bose®

Possible DTC	No sound from some speakers
	—
Possible cause	• Speaker muted by audio unit sound adjustment • Short or short circuit in wiring harness between audio unit and speaker • Open or short circuit in wiring harness between audio unit and speaker • Speaker malfunction (e.g., any foreign material, broken) • Short circuit inside speaker • Audio unit malfunction

SYMPTOM TROUBLESHOOTING [ENTIRE AUDIO SYSTEM]

Diagnostic procedure

STEP	INSPECTION		ACTION
1	• Verify the audio unit sound adjustment. • Does the fader/balance operate?	Yes	The system is normal. Explain to the customer that the speaker is muted by the audio unit sound setting.
		No	Go to the next step.
2	• Switch the ignition to off. • Inspect the connection of the audio unit connector (24-pin). (for sound signal line) • Is the connector connected securely?	Yes	Go to the next step.
		No	Connect the audio unit connector (24-pin) securely.
3	• Switch the ignition to off. • Remove the audio unit. • Disconnect the audio unit connector (24-pin). • Inspect the continuity between the audio unit wiring harness-side connector terminal and ground: **For front door speaker** — Terminal 1A (LH+)—GND — Terminal 1C (LH-)—GND — Terminal 1D (RH+)—GND — Terminal 1F (RH-)—GND **For rear door speaker** — Terminal 1S (LH+)—GND — Terminal 1U (LH-)—GND — Terminal 1V (RH+)—GND — Terminal 1X (RH-)—GND • Disconnect the front door speaker connector (4-pin) • Inspect the continuity between the front door speaker wiring harness-side connector terminal and ground: **For tweeter** — Terminal 1A (LH+)—GND — Terminal 1C (LH-)—GND — Terminal 1D (RH+)—GND — Terminal 1F (RH-)—GND • Is there continuity?	Yes	Repair or replace the suspect wiring harness or speaker unit.
		No	Go to the next step. **Note** • If there is a short circuit between the speaker harness or speaker lead wire and ground, the protector circuit inside the audio unit operates to cut the sound.
4	• Disconnect the speaker connector (4-pin), tweeter connector (2-pin) and inspect the resistance of speaker. • Inspect the continuity between the audio unit wiring harness-side connector terminal and speaker wiring harness-side connector: **Audio unit—front door speaker** — Terminal 1A (LH+)—terminal C — Terminal 1C (LH-)—terminal B — Terminal 1D (RH+)—terminal C — Terminal 1F (RH-)—terminal B **Audio unit—rear door speaker** — Terminal 1S (LH+)—terminal C — Terminal 1U (LH-)— terminal B — Terminal 1V (RH+)—terminal C — Terminal 1X (RH-)—terminal B **Audio unit—tweeter** — Terminal 1A (LH+)—terminal B — Terminal 1C (LH-)—terminal A — Terminal 1D (RH+)—terminal B — Terminal 1F (RH-)—terminal A • Is there continuity?	Yes	Go to the next step.
		No	Repair or replace the suspect wiring harness or speaker unit.
5	• Inspect the suspect speaker. • Is the speaker normal? **Note** • If the speaker lead wire contacts to either ground or vehicle frame, replace the speaker.	Yes	Replace the audio unit. (See 09-20-4 AUDIO UNIT REMOVAL/INSTALLATION.)
		No	Replace the speaker. (See 09-20-15 FRONT DOOR SPEAKER REMOVAL/INSTALLATION.) (See 09-20-19 REAR DOOR SPEAKER REMOVAL/INSTALLATION.) (See 09-20-23 TWEETER REMOVAL/INSTALLATION.)

SYMPTOM TROUBLESHOOTING [ENTIRE AUDIO SYSTEM]

Possible DTC	**No sound from some speakers**
	—
Possible cause	• Speaker muted by audio unit sound adjustment • Poor connection of audio unit connector, terminal damage • Poor connection of audio amplifier connector • Open or short circuit in wiring harness between audio amplifier and audio unit • Open or short circuit in wiring harness between audio amplifier and speaker • Audio unit malfunction • Short circuit inside speaker • Speaker malfunction (e.g., foreign material, broken)

Diagnostic procedure

STEP	INSPECTION		ACTION
1	• Verify the audio unit sound adjustment. • Does the fader/balance operate?	Yes	The system is normal. Explain to the customer that the speaker is muted by the audio unit sound setting.
		No	Go to the next step.
2	• Does the same speaker have no sound if changing the sound source? (Radio, CD)	Yes	Go to the next step.
		No	Replace the audio unit. (See 09-20-4 AUDIO UNIT REMOVAL/INSTALLATION.) **Note** • If the different speaker has no sound now, the audio unit is malfunctioning.
3	• Switch the ignition to off. • Inspect the connection of the audio unit connector (24-pin). (for sound signal line) • Is the connector connected securely?	Yes	Go to the next step.
		No	Connect the audio unit connector (24-pin) securely.
4	• Switch the ignition to off. • Remove the audio unit. • Disconnect the audio unit connector (24-pin). • Inspect the continuity between the audio unit wiring harness-side connector and ground. — Terminal 1A (LH+)—GND — Terminal 1C (LH-)—GND — Terminal 1D (RH+)—GND — Terminal 1F (RH-)—GND — Terminal 1S (LH+)—GND — Terminal 1U (LH-)—GND — Terminal 1V (RH+)—GND — Terminal 1X (RH-)—GND • Is there continuity?	Yes	Repair or replace the related wiring harness **Note** • If there is a short to ground in wiring harness between the audio unit and audio amplifier, the protector circuit inside the audio unit operates to cut the sound.
		No	Go to the next step.
5	• Inspect the continuity between the following terminals of the audio amplifier wiring harness-side connector (16-pin) and the audio unit wiring harness-side connector (24-pin). — Terminal 1A (LH+)—Terminal 1F (L.H.D.)/ 1G (R.H.D.) — Terminal 1C (LH-)—Terminal 1E (L.H.D.)/ 1H (R.H.D.) — Terminal 1D (RH+)—Terminal 1G (L.H.D.)/1F (R.H.D.) — Terminal 1F (RH-)—Terminal 1H (L.H.D.)/ 1E (R.H.D.) — Terminal 1S (LH+)— Terminal 1J (L.H.D.)/ 1K (R.H.D.) — Terminal 1U (LH-)— Terminal 1I (L.H.D.)/ 1L(R.H.D.) — Terminal 1V (RH+)— Terminal 1K (L.H.D.)/1J (R.H.D.) — Terminal 1X (RH-)— Terminal 1L (L.H.D.)/ 1I (R.H.D.) • Is there continuity?	Yes	Go to the next step.
		No	Repair or replace the related wiring harness between the audio amplifier and the audio unit. Then go to the next step. **Note** • If there is a open in wiring harness between the audio unit and audio amplifier, the protector circuit inside the audio unit operates to cut the sound.
6	• Inspect the connection of the audio amplifier connector. • Is the connector connected securely?	Yes	Go to the next step.
		No	Connect the audio amplifier securely.

SYMPTOM TROUBLESHOOTING [ENTIRE AUDIO SYSTEM]

STEP	INSPECTION		ACTION
7	• Switch the ignition to off. • Disconnect the audio amplifier connector. • Inspect continuity between the following terminals of the audio amplifier connector and speaker connector. **For front door speaker (LH)** — Terminal 3F (L.H.D.)/3C (R.H.D.)— Terminal C — Terminal 3E (L.H.D.)/3D (R.H.D.)— Terminal B **For front door speaker (RH)** — Terminal 3C (L.H.D.)/3F (R.H.D.)— Terminal C — Terminal 3D (L.H.D.)/3E (R.H.D.)— Terminal B **For tweeter (LH)** — Terminal 2G (L.H.D.)/2C (R.H.D.)— Terminal B — Terminal 2I (L.H.D.)/2E (R.H.D.)— Terminal A **For tweeter (RH)** — Terminal 2C (L.H.D.)/2G (R.H.D.)— Terminal B — Terminal 2E (L.H.D.)/2I (R.H.D.)— Terminal A **For rear door speaker (LH)** — Terminal 2O (L.H.D.)/2M (R.H.D.)— Terminal C — Terminal 2P (L.H.D.)/2K (R.H.D.)— Terminal B **For rear door speaker (RH)** — Terminal 2M (L.H.D.)/2O (R.H.D.)— Terminal C — Terminal 2K (L.H.D.)/2P (R.H.D.)— Terminal B **For front center speaker** — Terminal 3G—Terminal B — Terminal 3H—Terminal A **For D-pillar speaker** — Terminal 2A—Terminal B — Terminal 2B—Terminal A • Is there continuity?	Yes	Go to the next step.
		No	Repair or replace the repair related wiring harnesses.

SYMPTOM TROUBLESHOOTING [ENTIRE AUDIO SYSTEM]

STEP	INSPECTION		ACTION
8	• Switch the ignition to off. • Disconnect the audio amplifier connector. • Inspect the continuity between the audio amplifier connector and ground: **For front door speaker (LH)** — Terminal 3F (L.H.D.)/3C (R.H.D.)—GND — Terminal 3E (L.H.D.)/3D (R.H.D.)—GND **For front door speaker (RH)** — Terminal 3C (L.H.D.)/3F (R.H.D.)—GND — Terminal 3D (L.H.D.)/3E (R.H.D.)—GND **For tweeter (LH)** — Terminal 2G (L.H.D.)/2C (R.H.D.)—GND — Terminal 2I (L.H.D.)/2E (R.H.D.)—GND **For tweeter (RH)** — Terminal 2C (L.H.D.)/2G (R.H.D.)—GND — Terminal 2E (L.H.D.)/2I (R.H.D.)—GND **For rear door speaker (LH)** — Terminal 2O (L.H.D.)/2M (R.H.D.)—GND — Terminal 2P (L.H.D.)/2K (R.H.D.)—GND **For rear door speaker (RH)** — Terminal 2M (L.H.D.)/2O (R.H.D.)—GND — Terminal 2K (L.H.D.)/2P (R.H.D.)—GND **For front center speaker** — Terminal 3G—GND — Terminal 3H—GND **For D-pillar speaker** — Terminal 2A—GND — Terminal 2B—GND • Is there continuity?	Yes	Repair or replace the related wiring harness or speaker. (See 09-20-15 FRONT DOOR SPEAKER REMOVAL/INSTALLATION.) (See 09-20-23 TWEETER REMOVAL/INSTALLATION.) (See 09-20-19 REAR DOOR SPEAKER REMOVAL/INSTALLATION.) (See 09-20-22 FRONT CENTER SPEAKER REMOVAL/INSTALLATION.) (See 09-20-25 D-PILLAR SPEAKER REMOVAL/INSTALLATION.) **Note** • If there is a short circuit between the speaker harness or speaker lead wire and ground, the protector circuit inside the audio unit operates to cut the sound.
		No	Go to the next step.
9	• Inspect the suspect speaker. • Is the speaker normal? **Note** • If the speaker lead wire contacts to either ground or vehicle frame, replace the speaker.	Yes	Replace the audio unit. (See 09-20-4 AUDIO UNIT REMOVAL/INSTALLATION.)
		No	Replace the speaker. (See 09-20-15 FRONT DOOR SPEAKER REMOVAL/INSTALLATION.) (See 09-20-23 TWEETER REMOVAL/INSTALLATION.) (See 09-20-19 REAR DOOR SPEAKER REMOVAL/INSTALLATION.) (See 09-20-22 FRONT CENTER SPEAKER REMOVAL/INSTALLATION.) (See 09-20-25 D-PILLAR SPEAKER REMOVAL/INSTALLATION.)

SOUND BREAK-UP OR POOR SOUND QUALITY [ENTIRE AUDIO SYSTEM]

id0903e2100900

Possible DTC	**Sound break-up or poor sound quality**	
	Using the M-MDS	**U3000:09**
	Without using M-MDS (On-board diagnostic test mode)	**09:Er21**
Possible cause	• Electronic jamming from outside, or inferior condition of broadcasting station radio wave • Tuning error with radio station • Poor connection of music device • Volume adjustment of music device is at minimum • Improper speaker installation • Vibration of door trim and/or package trim • Speaker malfunction (e.g., any foreign material, broken) • Audio unit malfunction • Audio unit malfunction (with Bose®)	

SYMPTOM TROUBLESHOOTING [ENTIRE AUDIO SYSTEM]

Diagnostic procedure

STEP	INSPECTION		ACTION
1	• Verify the malfunction symptom. • Is there sound distortion?	Yes	Go to the next step.
		No	Go to Step 6.
2	• Does the sound distortion occur only while in radio mode?	Yes	Go to the next step.
		No	Go to Step 5.
3	• Can the location where the sound distortion occurs be specified?	Yes	The system is normal. Explain to the customer that the noise is caused by radio wave disturbances or broadcast wave conditions from the outside.
		No	Go to the next step.
4	• Does the sound distortion occur after selecting a radio station?	Yes	The system is normal. Explain to the customer that the sound distortion is caused by a tuning error with the radio station.
		No	Go to the next step.
5	• Does the AUX mode operate?	Yes	Verify the connection condition and volume of the music device. If the connection condition is normal and sound is output, go to the next step.
		No	Go to the next step.
6	• Inspect the sound while adjusting the sound volume. • Is there broken sound or poor sound quality between “30” and “40”?	Yes	Go to the next step.
		No	The system is normal.
7	• Inspect the BASS/TREB. • Is there poor sound quality at “-3 — +3” of “BASS/TREB”? **Note** • The speaker from which the sound is not emitted is specified using by that the speaker voice changes.	Yes	Go to the next step.
		No	If there is broken sound at “-6 — +6” of BASS/TREB with the maximum volume, the system is normal.
8	• Identify the speaker with broken sound by adjusting BAL/FADE. • Is the speaker installed properly?	Yes	Go to the next step.
		No	Install the speaker properly.
9	• Remove the speaker. • Is there any foreign material or damage on the speaker?	Yes	Repair or replace the suspect speaker.
		No	Go to the next step.
10	• Inspect the sound again. • Is there broken sound?	Yes	Go to the next step.
		No	Inspect the vibration from the door trim and/or package trim. Repair or replace the suspect trim as necessary.

SYMPTOM TROUBLESHOOTING [ENTIRE AUDIO SYSTEM]

STEP	INSPECTION		ACTION
11	• Replace with the speaker known to be good. (e.g., swap right and left speakers) • Does the broken sound appear at the same location?	Yes	**Without Bose®** • Replace the audio unit. (See 09-20-12 AUDIO AMPLIFIER REMOVAL/ INSTALLATION.) **With Bose®** • If noise occurs from the speaker of a specific channel, or the volume is minimized and the noise occurs: — Replace the audio amplifier. (See 09-20-12 AUDIO AMPLIFIER REMOVAL/ INSTALLATION.) • If noise occurs from the speaker of two or more channels or the volume is minimized and the noise dose not occurs: — Replace the audio unit. (See 09-20-4 AUDIO UNIT REMOVAL/ INSTALLATION.)
		No	**Without Bose®** • Replace the speaker. (See 09-20-15 FRONT DOOR SPEAKER REMOVAL/ INSTALLATION.) (See 09-20-23 TWEETER REMOVAL/INSTALLATION.) (Six-speaker type) (See 09-20-19 REAR DOOR SPEAKER REMOVAL/ INSTALLATION.) **With Bose®** • Replace the speaker. (See 09-20-15 FRONT DOOR SPEAKER REMOVAL/ INSTALLATION.) (See 09-20-23 TWEETER REMOVAL/INSTALLATION.) (See 09-20-19 REAR DOOR SPEAKER REMOVAL/ INSTALLATION.) (See 09-20-22 FRONT CENTER SPEAKER REMOVAL/ INSTALLATION.) (See 09-20-25 D-PILLAR SPEAKER REMOVAL/ INSTALLATION.)

VOLUME INCREASES/DECREASES WHILE DRIVING THE VEHICLE [ENTIRE AUDIO SYSTEM]

id0903e2101000

Possible DTC	Volume increases/decreases while driving the vehicle
	—
Possible cause	• Electronic jamming from outside, or inferior condition of broadcasting station radio wave • Sound level difference between audio modes • Mis-operation of steering switches • Audio unit malfunction (without Bose®) • Audio amplifier malfunction (with Bose®) **Note** • Inspect the ALC function (without Bose®)/AudioPilot®2 function (with Bose®) while driving the vehicle with playing the CD, etc.

SYMPTOM TROUBLESHOOTING [ENTIRE AUDIO SYSTEM]

Diagnostic procedure

STEP	INSPECTION		ACTION
1	• Does the audio volume change only while in radio mode?	Yes	Go to the next step.
		No	Go to Step 3.
2	• Can the location where the audio volume change be specified?	Yes	The system is normal. Explain to the customer that the noise is caused by radio wave disturbances or broadcast wave conditions from the outside.
		No	Go to Step 5.
3	• Does the audio volume change when changing the mode?	Yes	The system is normal. Explain to the customer that the volume change is caused by sound level differences between audio modes.
		No	Go to the next step.
4	• Do the steering switches operate?	Yes	The system is normal. Explain to the customer that the volume change is caused by a mis-operation of the steering switches.
		No	Go to the next step.
5	• Does the ALC (Without Bose®)/AudioPilot®2 function (With Bose®) turn on?	Yes	Go to the next step.
		No	**Without Bose®:** • Replace the audio unit. (See 09-20-4 AUDIO UNIT REMOVAL/INSTALLATION.) **With Bose®:** • Replace the audio amplifier. (See 09-20-12 AUDIO AMPLIFIER REMOVAL/INSTALLATION.)
6	• Turn off the ALC (Without Bose®)/AudioPilot®2 function (With Bose®). • Does the sound change while driving the vehicle?	Yes	Replace the audio unit. (See 09-20-4 AUDIO UNIT REMOVAL/INSTALLATION.)
		No	The system is normal. Explains the ALC (Without Bose®)/AudioPilot®2 function (with Bose®) to the customer.

ALC FUNCTION IS INOPERATIVE [ENTIRE AUDIO SYSTEM]

id0903e2101100

Possible DTC	**ALC function is inoperative**	
	Using the M-MDS	**U0155:00, U0010:88**
	Without using M-MDS (On-board diagnostic test mode)	**16:Er12, 17:Er11**
Possible cause	• Open or short circuit in vehicle speed signal wiring harness (e. g., instrument cluster) • CAN signal wiring harness malfunction • Audio unit malfunction **Note** • Inspect the ALC function while driving the vehicle with playing the CD.	

Diagnostic procedure

STEP	INSPECTION		ACTION
1	• Turn the ALC function to ON. • Inspect the ALC function operation when driving the vehicle at ALC level 3. • Does the ALC system operate properly?	Yes	The system is normal. Explains the ALC function to the customer.
		No	Go to the next step.
2	• Retrieve the DTCs from all vehicle modules using the M-MDS. • Is there the following DTC displayed? — Vehicle speed signal wiring harness — CAN signal wiring harness	Yes	Go to the appropriate DTC inspection.
		No	Replace the audio unit. (See 09-20-4 AUDIO UNIT REMOVAL/INSTALLATION.)

SYMPTOM TROUBLESHOOTING [ENTIRE AUDIO SYSTEM]

AudioPilot®2 FUNCTION IS INOPERATIVE [ENTIRE AUDIO SYSTEM]

id0903e2101200

Possible DTC	**AudioPilot®2 function is inoperative**	
	Using the M-MDS	**U0155:00, U0010:88**
	Without using M-MDS (On-board diagnostic test mode)	**16:Er12**
Possible cause	• Audio amplifier malfunction • Open or short circuit in AudioPilot®2 signal wiring harness • Open or short circuit in AudioPilot®2 microphone signal wiring harness • Open or short circuit in vehicle speed signal wiring harness (e. g., instrument cluster) **Note** • Inspect the AudioPilot®2 function while driving the vehicle and playing a CD.	

Diagnostic procedure

STEP	INSPECTION		ACTION
1	• Turn the AudioPilot®2 function on. • Inspect the AudioPilot®2 function operation while driving the vehicle. • Does the AudioPilot®2 system operation properly?	Yes	The system is normal. Explain the AudioPilot®2 function to the customer.
		No	Go to the next step.
2	• Inspect the connection of the audio amplifier connector (AudioPilot®2 microphone signal). • Inspect both the audio amplifier wiring harness-side connector terminal 1O, 1P and 2H for a poor connection (such as damaged/ pulled-out pins, corrosion). • Are all the pins normal?	Yes	Repair or replace the pins and/or the connector.
		No	Go to the next step.
3	• Inspect the connection of the AudioPilot®2 microphone connector (2-pin). • Inspect the AudioPilot®2 microphone wiring harness-side connector terminal A and B (2-pin) for poor connection (such as damaged/ pulled-out pins, corrosion). • Are all pins normal?	Yes	Repair or replace the pins and/or the connector.
		No	Go to the next step.
4	• Inspect continuity between the following terminals of the audio amplifier connector and body ground. — Terminal 1O (AudioPilot®2 microphone+) — Terminal 1P (AudioPilot®2 microphone-) — Terminal 2H (vehicle speed signal) • Is there continuity?	Yes	Repair or replace the wiring harness for a possible short to ground.
		No	Go to the next step.
5	• Inspect continuity between the following terminals of the audio amplifier connector and AudioPilot®2 microphone/instrument cluster connector. — Terminal 1O—AudioPilot®2 microphone terminal B (+) — Terminal 1P—AudioPilot®2 microphone terminal A (-) — Terminal 2H—Instrument cluster terminal O (vehicle speed signal) • Is there continuity?	Yes	Go to the next step.
		No	Repair or replace for open circuit.
6	• Retrieve the DTCs from all vehicle modules using the M-MDS. • Is there the following DTC displayed? — Vehicle speed signal — CAN communication	Yes	Go to the appropriate DTC inspection.
		No	Replace the audio amplifier. (See 09-20-12 AUDIO AMPLIFIER REMOVAL/ INSTALLATION.)

SYMPTOM TROUBLESHOOTING [ENTIRE AUDIO SYSTEM]

NO AUDIO SYSTEM ILLUMINATION [ENTIRE AUDIO SYSTEM]

id0903e2101400

Possible DTC	**No audio system illumination**	
	Using the M-MDS	**U3003:16**
	Without using M-MDS (On-board diagnostic test mode)	**09:Er20**
Possible cause	• Illumination turned off by panel light control switch operation • Open or short circuit in TNS signal wiring harness • Poor connection of audio unit connector, terminal damage • Audio unit malfunction	

Diagnostic procedure

STEP	INSPECTION		ACTION
1	• Has the panel light control switch been operated?	Yes	Go to the next step.
		No	The system is normal. Explain to the customer that the illumination is turned off by the panel light control switch operation.
2	• Disconnect the audio unit connector (24-pin) and inspect the continuity between the audio unit wiring harness-side connector terminal 1E (TNS) and the ground. • Is there continuity?	Yes	Repair or replace the short circuit in the suspect wiring harness. After repair the harness, replace with the appropriate standard fuse.
		No	Go to the next step.
3	• Inspect the connection of the audio unit connector (24-pin). • Inspect both the audio unit and wiring harness-side connector terminal 1E for poor connection (such as damaged/pulled-out pins, corrosion). • Are all the pins normal?	Yes	Go to the next step.
		No	**If poor connection of audio unit connector:** • Securely connect the audio unit connector. **If the audio unit side connector is wrong:** • Replace the audio unit. (See 09-20-4 AUDIO UNIT REMOVAL/INSTALLATION.) **If the wiring harness-side connector is wrong:** • Repair or replace the pins and/or the connector.
4	• Connect the audio unit connector (24-pin). • Switch the ignition to ACC. • Inspect the voltage at the audio unit connector terminal 1E (TNS). • Is the voltage B+ when the light switch is turned to the TNS position?	Yes	Replace the audio unit. (See 09-20-4 AUDIO UNIT REMOVAL/INSTALLATION.)
		No	Repair or replace the suspect wiring harness (TNS signal).

SOUND JUMPS [ENTIRE AUDIO SYSTEM]

id0903e2101500

Possible DTC	**Sound jumps**	
	Using the M-MDS	**B1188:64**
	Without using M-MDS (On-board diagnostic test mode)	**10:Er07**
Possible cause	• Electronic jamming from outside, or inferior condition of broadcasting station radio wave • Defective CD (e.g., cracked, badly bent, rough edges, scratch, dirty CD, condensation) • Vibration while vehicle is driven • Speaker muted by Bluetooth system (hands-free telephone (HF/TEL) system) operation (with Bluetooth system) • Open or short circuit in wiring harness between audio amplifier and audio unit • Short circuit inside speaker • Speaker malfunction • Mis-operation of steering switches • Audio unit malfunction **Note** • The CD may be malfunctioning if the sound jumps on the certain CD only. Inspect the CD player/changer operation using the CD known to be good.	

SYMPTOM TROUBLESHOOTING [ENTIRE AUDIO SYSTEM]

Diagnostic procedure

STEP	INSPECTION		ACTION
1	• Does the sound jump only while in the radio mode?	Yes	Go to Step 2.
		No	Go to Step 5.
2	• Does noise occur?	Yes	Go to the next step.
		No	Replace the audio unit. (See 09-20-4 AUDIO UNIT REMOVAL/INSTALLATION.)
3	• Can the location where the sound jumps be specified?	Yes	The system is normal. Explain to the customer that the noise is caused by radio wave disturbances or broadcast wave conditions from the outside.
		No	Go to the next step.
4	• Can the broadcast where the sound jumps be specified?	Yes	Explain to the customer that the cause is poor broadcast reception conditions.
		No	Replace the audio unit. (See 09-20-4 AUDIO UNIT REMOVAL/INSTALLATION.)
5	• Does the sound jump only while in the CD mode?	Yes	Go to the next step.
		No	Go to Step 8.
6	• Can the disc in which the sound jump occurs be specified?	Yes	The system is normal. Explain to the customer that the cause is a disc that is damaged or dirty on the playback side, or warped.
		No	Go to the next step.
7	• Drive the vehicle and verify the malfunction symptom. • Does noise occur while driving on an unlevel road or under other driving conditions (sudden curve, quick operation)?	Yes	The system is normal. Explain to the customer that the cause is vibration while the vehicle is driven.
		No	Replace the audio unit. (See 09-20-4 AUDIO UNIT REMOVAL/INSTALLATION.)
8	• Does the sound jump using the specified speaker?	Yes	**Without Bose®** • Go to the next step. **With Bose®** • Go to Step 10
		No	**With Bluetooth system** • Go to Step 13. **Without Bluetooth system** • Go to Step 14.
9	• Disconnect the speaker connector and inspect the resistance of speaker. • Inspect the continuity between the audio unit wiring harness-side connector terminal and speaker wiring harness-side connector: **Audio unit—front door speaker** — Terminal 1A (LH+)—terminal B — Terminal 1C (LH-)—terminal A — Terminal 1D (RH+)—terminal B — Terminal 1F (RH-)—terminal A **Audio unit—rear door speaker** — Terminal 1S (LH+)—terminal B — Terminal 1U (LH-)—terminal A — Terminal 1V (RH+)—terminal B — Terminal 1X (RH-)—terminal A	Yes	Go to Step 12.
		No	Repair or replace the suspect wiring harness or speaker.

SYMPTOM TROUBLESHOOTING [ENTIRE AUDIO SYSTEM]

STEP	INSPECTION		ACTION
10	• Disconnect the audio amplifier connector. • Inspect continuity between the following terminals of the audio amplifier connector and speaker connector. **For front door speaker (LH)** — Terminal 3F (L.H.D.)/3C (R.H.D.)— Terminal C — Terminal 3E (L.H.D.)/3D (R.H.D.)— Terminal B **For front door speaker (RH)** — Terminal 3C (L.H.D.)/3F (R.H.D.)— Terminal C — Terminal 3D (L.H.D.)/3E (R.H.D.)— Terminal B **For tweeter (LH)** — Terminal 2G (L.H.D.)/2C (R.H.D.)— Terminal B — Terminal 2I (L.H.D.)/2E (R.H.D.)— Terminal A **For tweeter (RH)** — Terminal 2C (L.H.D.)/2G (R.H.D.)— Terminal B — Terminal 2E (L.H.D.)/2I (R.H.D.)— Terminal A **For rear door speaker (LH)** — Terminal 2O (L.H.D.)/2M (R.H.D.)— Terminal C — Terminal 2P (L.H.D.)/2K (R.H.D.)— Terminal B **For rear door speaker (RH)** — Terminal 2M (L.H.D.)/2O (R.H.D.)— Terminal C — Terminal 2K (L.H.D.)/2P (R.H.D.)— Terminal B **For front center speaker** — Terminal 3G—Terminal B — Terminal 3H—Terminal A **For D-pillar speaker** — Terminal 2A—Terminal B — Terminal 2B—Terminal A • Is there continuity?	Yes	Go to Step 11.
		No	Repair or replace the repair related wiring harnesses.

SYMPTOM TROUBLESHOOTING [ENTIRE AUDIO SYSTEM]

STEP	INSPECTION		ACTION
11	• Disconnect the audio amplifier connector. • Inspect the continuity between the audio amplifier connector and ground: **For front door speaker (LH)** — Terminal 3F (L.H.D.)/3C (R.H.D.)—GND — Terminal 3E (L.H.D.)/3D (R.H.D.)—GND **For front door speaker (RH)** — Terminal 3C (L.H.D.)/3F (R.H.D.)—GND — Terminal 3D (L.H.D.)/3E (R.H.D.)—GND **For tweeter (LH)** — Terminal 2G (L.H.D.)/2C (R.H.D.)—GND — Terminal 2I (L.H.D.)/2E (R.H.D.)—GND **For tweeter (RH)** — Terminal 2C (L.H.D.)/2G (R.H.D.)—GND — Terminal 2E (L.H.D.)/2I (R.H.D.)—GND **For rear door speaker (LH)** — Terminal 2O (L.H.D.)/2M (R.H.D.)—GND — Terminal 2P (L.H.D.)/2K (R.H.D.)—GND **For rear door speaker (RH)** — Terminal 2M (L.H.D.)/2O (R.H.D.)—GND — Terminal 2K (L.H.D.)/2P (R.H.D.)—GND **For front center speaker** — Terminal 3G—GND — Terminal 3H—GND **For D-pillar speaker** — Terminal 2A—GND — Terminal 2B—GND • Is there continuity?	Yes	Repair or replace the related wiring harness or speaker. (See 09-20-15 FRONT DOOR SPEAKER REMOVAL/INSTALLATION.) (See 09-20-23 TWEETER REMOVAL/INSTALLATION.) (See 09-20-19 REAR DOOR SPEAKER REMOVAL/INSTALLATION.) (See 09-20-22 FRONT CENTER SPEAKER REMOVAL/INSTALLATION.) (See 09-20-25 D-PILLAR SPEAKER REMOVAL/INSTALLATION.) **Note** • If there is a short circuit between the speaker harness or speaker lead wire and ground, the protector circuit inside the audio unit operates to cut the sound.
		No	Go to the next step.
12	• Inspect the suspect speaker. • Is the speaker normal? **Note** • If the speaker lead wire contacts to either ground or vehicle frame, replace the speaker.	Yes	**With Bluetooth system** • Go to the next step. **Without Bluetooth system** • Go to Step 14.
		No	**Without Bose®** • Replace the speaker. (See 09-20-15 FRONT DOOR SPEAKER REMOVAL/INSTALLATION.) (See 09-20-19 REAR DOOR SPEAKER REMOVAL/INSTALLATION.) (See 09-20-23 TWEETER REMOVAL/INSTALLATION.) (Six-speaker type) **With Bose®** • Replace the speaker. (See 09-20-15 FRONT DOOR SPEAKER REMOVAL/INSTALLATION.) (See 09-20-23 TWEETER REMOVAL/INSTALLATION.) (See 09-20-19 REAR DOOR SPEAKER REMOVAL/INSTALLATION.) (See 09-20-22 FRONT CENTER SPEAKER REMOVAL/INSTALLATION.) (See 09-20-25 D-PILLAR SPEAKER REMOVAL/INSTALLATION.)
13	• Does the malfunction occur while the Bluetooth system is operating?	Yes	The system is normal. Explain to the customer that the speaker is muted while the Bluetooth system is operating.
		No	Go to the next step.
14	• Do the steering switches operate?	Yes	The system is normal. Explain to the customer that the cause is mis-operation of the steering switches.
		No	Replace the audio unit. (See 09-20-4 AUDIO UNIT REMOVAL/INSTALLATION.)

SYMPTOM TROUBLESHOOTING [ENTIRE AUDIO SYSTEM]

DISPLAY DOES NOT CHANGE TO THE REAR MOUNT CAMERA IMAGE. [ENTIRE AUDIO SYSTEM]

id0903e2113000

Possible DTC	Display does not change to the rear mount camera image
POSSIBLE CAUSE	• Rear mount camera malfunction • Poor connection of the rear mount camera connector, terminal damage • Poor connection of the audio unit connector, terminal damage • Open or short circuit in wiring harness between audio unit and rear mount camera • Open or short circuit in reverse signal wiring harness • Audio unit malfunction

Diagnostic procedure

STEP	INSPECTION		ACTION
1	• Is the lens of the rear mount camera dirty or view is obstructed?	Yes	Clean the lens of the rear mount camera or remove the obstruction.
		No	Go to the next step.
2	• Does the lens of the rear mount camera have a crack and damage?	Yes	Replace the rear mount camera. (See 09-20-68 REAR MOUNT CAMERA REMOVAL/ INSTALLATION.)
		No	Go to the next step.
3	• Switch the ignition switch off (LOCK). • Remove the rear mount camera. • Inspect the connection of the rear mount camera connector (4-pin). • Disconnect the rear mount camera connector (4-pin). • Inspect both the rear mount camera and wiring harness-side connector for poor connection (such as damaged/pulled-out pins, corrosion). • Are all the pins normal?	Yes	Go to the next step.
		No	**If poor connection of rear mount camera connector:** • Securely connect the rear mount camera connector. **If the rear mount camera connector is wrong:** • Replace the rear mount camera. (See 09-20-68 REAR MOUNT CAMERA REMOVAL/ INSTALLATION.) **If the wiring harness-side connector is wrong:** • Repair or replace the pins and/or the connector.
4	• Switch the ignition switch off (LOCK). • Remove the audio unit. • Inspect the connection of the Audio unit connector (4-pin). • Disconnect the Audio unit connector (4-pin). • Inspect both the audio unit connector terminal for poor connection (such as damaged/pulled-out pins, corrosion). • Are all the pins normal?	Yes	**European (L.H.D. U.K.) specs.** • Go to the next step. **Except european (L.H.D. U.K.) specs.** • Go to Step 6.
		No	**If poor connection of audio unit connector:** • Securely connect the audio unit connector. **If the audio unit connector is wrong:** • Replace the audio unit. **If the wiring harness-side connector is wrong:** • Repair or replace the pins and/or the connector.
5	• Inspect the following wiring harnesses between the audio unit and rear mount camera and between a DC-DC converter and rear mount camera. — Terminal K (12-pin, POWER)—terminal A (8-pin, POWER) — Terminal 6C (4-pin, V-GND)—terminal E (8-pin, V-GND) — Terminal 6D (4-pin, COMPOSITE)—terminal C (8-pin, COMPOSITE) • Is there open or short circuit?	Yes	Go to Step 7.
		No	Inspect the suspect wiring harness. Repair or replace if necessary.
6	• Inspect the following wiring harnesses between the audio unit and rear mount camera. — Terminal 6A (4-pin, POWER)—terminal A (5-pin, POWER) — Terminal 6B (4-pin, GND)—terminal E (5-pin, GND) — Terminal 6C (4-pin, V-GND)—terminal D (5-pin, V-GND) — Terminal 6D (4-pin, COMPOSITE)—terminal C (5-pin, COMPOSITE) • Is there open or short circuit?	Yes	Go to the next step.
		No	Inspect the suspect wiring harness. Repair or replace if necessary.

SYMPTOM TROUBLESHOOTING [ENTIRE AUDIO SYSTEM]

STEP	INSPECTION		ACTION
7	• Switch the ignition switch off (LOCK). • Remove the audio unit. (See 09-20-11 CAR-NAVIGATION UNIT REMOVAL/INSTALLATION.) • Disconnect the audio unit connector (24-pin). • Turn the ignition switch to ON. • Shift the selector lever in R range. • Inspect the voltage between the audio unit terminals 1M (24-pin, REV) and 1W (24-pin, GND). • Is the voltage **B+**?	Yes	Replace the rear mount camera, then inspect generating of malfunction symptom. (See 09-20-68 REAR MOUNT CAMERA REMOVAL/INSTALLATION.) **Even if it exchanges rear mount camera, when a fault phenomenon occurs:** • Replace the audio unit. (See 09-20-4 AUDIO UNIT REMOVAL/INSTALLATION.) • Reinspect the malfunction symptom, then repeat from Step 1 if malfunction recurs.
		No	Inspect the suspect wiring harness (reverse signal). Repair or replace if necessary.

09-03G SYMPTOM TROUBLESHOOTING [RADIO]

FOREWORD [RADIO] **09-03G–1**
Troubleshooting Procedure **09-03G–2**
Action for Non-repeatable Malfunction. **09-03G–3**
TROUBLESHOOTING INDEX [RADIO] **09-03G–3**
Quick Diagnostic Chart **09-03G–4**
CONFIRMATION STEP 1: RECEPTION CONDITION SYMPTOM (EXAMPLE) [RADIO] **09-03G–4**
CONFIRMATION STEP 2: ANTENNA SYSTEM SYMPTOM (EXAMPLE) [RADIO] **09-03G–5**
CONFIRMATION STEP 3: ANTENNA SYSTEM SIMPLE INSPECTION [RADIO] **09-03G–5**
NO RADIO RECEPTION (AM/FM)/NO OR LOW VOLUME [RADIO] **09-03G–6**
NOISE FROM RADIO (AM ONLY) [RADIO] **09-03G–7**
NOISE FROM RADIO (FM ONLY) [RADIO] **09-03G–9**
CANNOT TUNE (SEEK DOES NOT STOP) [RADIO] **09-03G–10**
CANNOT PRESET (PRESET FUNCTION DOES NOT OPERATE) [RADIO] **09-03G–11**
RECEPTION FREQUENCY OF RADIO SLIPS [RADIO] **09-03G–12**
REFERENCE [RADIO] **09-03G–12**
1. Multipath Noise **09-03G–12**
2. Flutter/Skip Noise **09-03G–12**
3. Stereo and Monaural Receptions **09-03G–13**
Measures in Audio System **09-03G–13**
Effect Setting of Separation Control and High Tone Control **09-03G–13**

SYMPTOM TROUBLESHOOTING [RADIO]

FOREWORD [RADIO]

id0903e3802700

Note

- If the place, time, or radio station in which the malfunction occurred can be specified by asking the customer, it is highly possible that the malfunction cause is the radio wave reception environment. If the malfunction symptom is verified, verify under the same conditions (such as place, time, radio station) as the situation described by the customer. If the malfunction symptom cannot be verified under the same conditions as the situation described by the customer, verify the malfunction symptom at a substitute location (such as where radio wave reception is strong/weak).

- If there is any vehicle malfunction complaint lodged by a customer, perform malfunction diagnosis according to the troubleshooting procedure.

SYMPTOM TROUBLESHOOTING [RADIO]

Troubleshooting Procedure

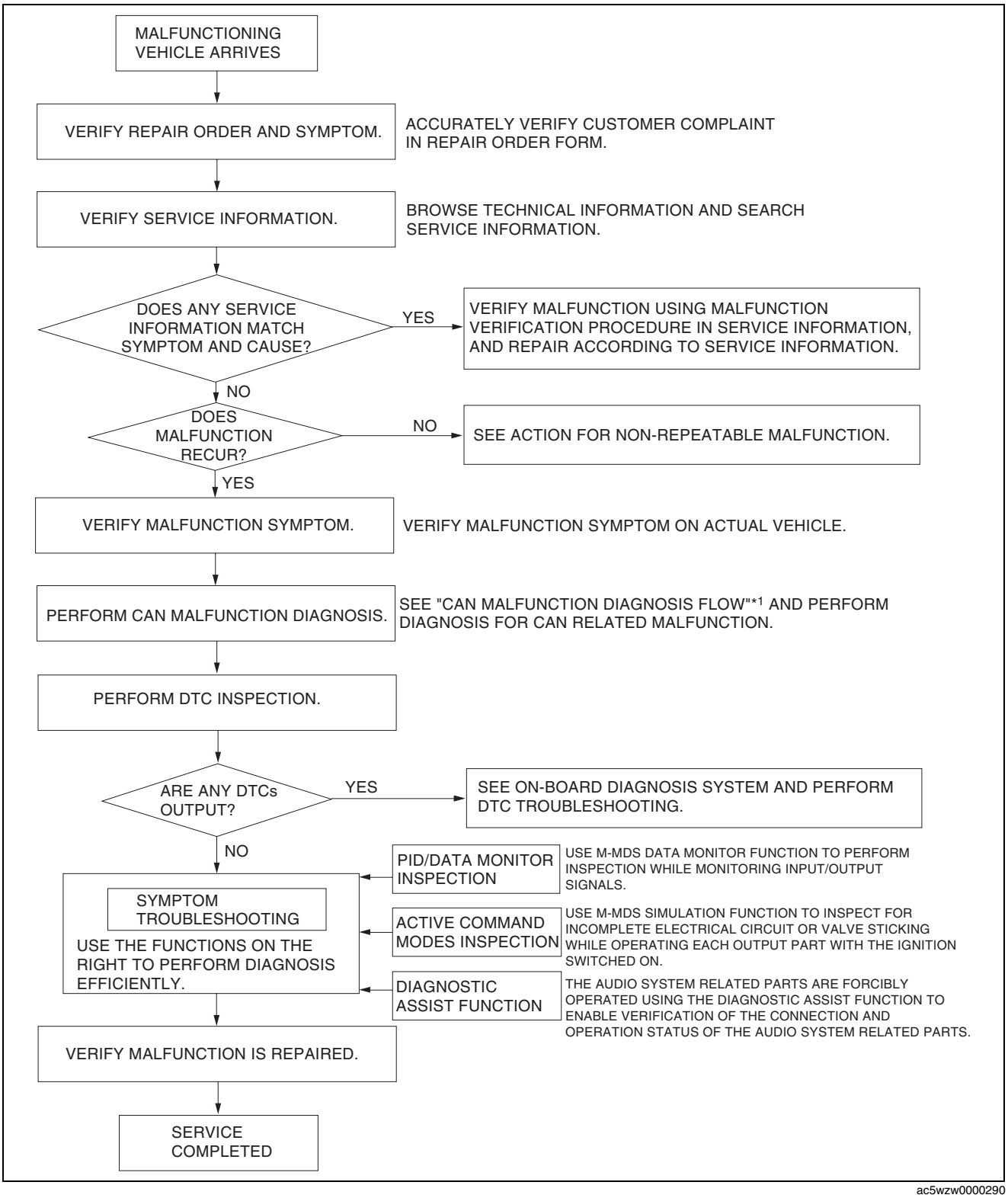

ac5wzw0000290

*1 : 10-02A-3 CONTROLLER AREA NETWORK (CAN) MALFUNCTION DIAGNOSIS FLOW [SKYACTIV-G 2.0 (L.H.D.)] / 10-02B-3 CONTROLLER AREA NETWORK (CAN) MALFUNCTION DIAGNOSIS FLOW [SKYACTIV-G 2.0 (R.H.D.)] / 10-02C-3 CONTROLLER AREA NETWORK (CAN) MALFUNCTION DIAGNOSIS FLOW [SKYACTIV-D 2.2 (L.H.D.)] / 10-02D-3 CONTROLLER AREA NETWORK (CAN) MALFUNCTION DIAGNOSIS FLOW [SKYACTIV-D 2.2 (R.H.D.)]

SYMPTOM TROUBLESHOOTING [RADIO]

Action for Non-repeatable Malfunction

- If the malfunction does not recur, verify the malfunction cause by performing the following actions:
  - — Based on the repair order form, attempt to drive the vehicle or perform tests to replicate the malfunction, record the data at that time, and detect the malfunction cause.
  - — Shake the wiring harness or connector of the electrical component which is suspected to be the cause of the malfunction, and inspect for malfunction or occurrence of any DTCs.

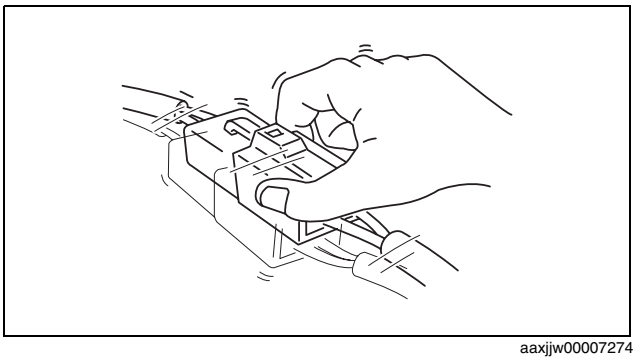

aaxjjw00007274

  - — Inspect the female terminals on the connector of the electric component which is suspected to be the cause of the malfunction for poor connection.

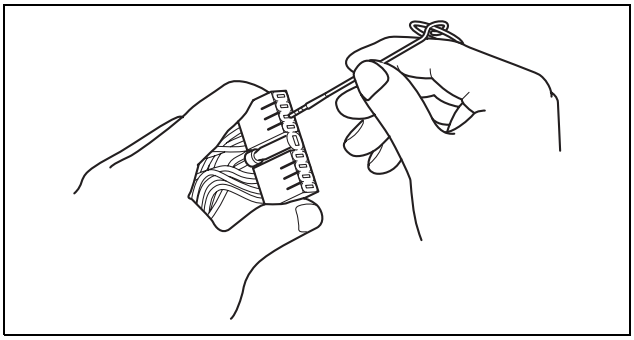

am3uuw0000750

TROUBLESHOOTING INDEX [RADIO]

id0903e3801000

Symptom	Possible DTC	
	Using the M-MDS	Without using M-MDS (On-board diagnostic test mode)
09-03G-6 NO RADIO RECEPTION (AM/FM)/NO OR LOW VOLUME [RADIO]	U3003:16, U3000:04	09:Er20, 09:Er22
09-03G-7 NOISE FROM RADIO (AM ONLY) [RADIO]	U3000:04	09:Er22
09-03G-9 NOISE FROM RADIO (FM ONLY) [RADIO]	U3000:04	09:Er22
09-03G-10 CANNOT TUNE (SEEK DOES NOT STOP) [RADIO]	U3003:16, U3000:04	09:Er20, 09:Er22
09-03G-11 CANNOT PRESET (PRESET FUNCTION DOES NOT OPERATE) [RADIO]	—	—
09-03G-12 RECEPTION FREQUENCY OF RADIO SLIPS [RADIO]	U3000:04	09:Er22

SYMPTOM TROUBLESHOOTING [RADIO]

Quick Diagnostic Chart

X: Applicable

Possible factor / Troubleshooting item	No radio reception (AM/FM)/No or low volume	Noise from radio (AM only)	Noise from radio (FM only)	Cannot tune (SEEK does not stop)	Cannot preset (preset function does not operate)	Reception frequency of radio slips
Low vehicle battery voltage	X					
Electronic jamming from outside, or inferior condition of broadcasting station radio wave	X	X	X	X		X
Jamming from aftermarket electronic equipment (two-way radio, navigation system, mobile phone, etc.)	X	X	X			
Antenna plug poor connection	X	X	X	X		
Antenna feeder malfunction	X	X	X	X		
Audio unit malfunction	X	X	X	X	X	X
Battery malfunction		X	X			
Noise from electrical system on vehicle (e.g. fuel pump)		X	X			
Charging system malfunction		X	X			
Antenna installation loosened		X	X			
Audio panel malfunction				X	X	

ac5wzw0000251

CONFIRMATION STEP 1: RECEPTION CONDITION SYMPTOM (EXAMPLE) [RADIO]

id0903e3804000

Symptom	Antenna signal condition	Source
Only a buzzing sound from the speakers	• There is no broadcasting wave. • Signals from antenna to audio unit/car-navigation unit are not transmitted.	• Electric noise caused by the operation of internal circuit from audio unit it self • Atmosphere noise
A buzzing or crunching sound and normal sound produced at the same time from the speakers	• Though signals are transmitted from antenna to audio unit, electric noise from other sources is larger.	• Electrical noise caused by operation of electrical component on vehicle • Electrical noise from high tension wire, transformer substation (factory), electrical feeder line (street car), or motorcycle.
A thumping sound and normal sound produced at the same time from the speakers (FM only)	• Noise occurs due to radio wave environment at specific places (e.g. in valleys between buildings). Noise varies when own vehicle or surrounding vehicles moves. (FM only)	• Interference between direct and reflected waves of FM signals causes noise (Multipass noise).

SYMPTOM TROUBLESHOOTING [RADIO]

CONFIRMATION STEP 2: ANTENNA SYSTEM SYMPTOM (EXAMPLE) [RADIO]

id0903e3804100

Possible cause	AM reception condition	FM reception condition
• Antenna feeder axis, open circuit • Antenna feeder plug not attached	NG: No reception	YES: Reception possible. (Sensitivity decreases, but reception is possible under strong electric field.)
• Antenna feeder axis (+) to ground (-), open circuit	NG: No reception	NG: No reception
• Antenna feeder and antenna, poor ground	YES: Reception possible (Noise may occur)	YES: Reception possible (Sensitivity decreases, but reception is possible under strong electric field.)
• Antenna feeder, jack and plug poor connection	NG: No reception (Depending on connection conditions)	YES: Reception possible (Depending on connection conditions)

CONFIRMATION STEP 3: ANTENNA SYSTEM SIMPLE INSPECTION [RADIO]

id0903e3804200

- Because the antenna system is equipped with a capacitor, the continuity cannot be checked. Therefore proceed the following simple inspection.
  1. Turn the AM radio on.
  2. Tune to the frequency that there is no broadcast and you will hear a buzzing sound.
  3. Turn a work light on and shake it around the antenna rod (around 10—20 mm {0.40—0.78 in})

Note
- Use a fluorescent light type for the inspection. Accurate diagnostic cannot be done with a different type of light.

4. If a whirring sound from the speaker synchronized to the work light movement is confirmed, the antenna system is normal.

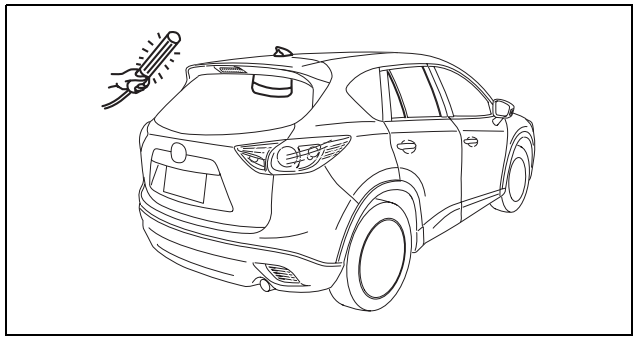

ac5wzw0000251

SYMPTOM TROUBLESHOOTING [RADIO]

NO RADIO RECEPTION (AM/FM)/NO OR LOW VOLUME [RADIO]

id0903e3015900

Possible DTC	**No radio reception (AM/FM)/no or low volume**	
	Using the M-MDS	**U3000:16, U3000:04**
	Without using M-MDS (On-board diagnostic test mode)	**09:Er20, 09:Er22**
Possible cause	• Low vehicle battery voltage • Electronic jamming from outside, or inferior condition of broadcasting station radio wave • Jamming from aftermarket electronic equipment (two-way radio, navigation system, mobile phone, etc.) • Antenna plug poor connection • Antenna feeder malfunction • Audio unit malfunction	

Diagnostic procedure

STEP	INSPECTION		ACTION
1	• Can the location where the malfunction occur be specified?	Yes	The system is normal. Explain to the customer that the noise is caused by radio wave disturbances or broadcast wave conditions from the outside.
		No	Go to the next step.
2	• Measure voltage at B+ and ACC terminals. • Is voltage okay? **Specification** **With ignition switch ON: 11.5 V or more** **At idling: 12.5 V or more**	Yes	Go to the next step.
		No	Follow diagnostic procedure for symptom AUDIO POWER IS NOT AVAILABLE OR SWITCHED ON OR OFF AUTOMATICALLY [ENTIRE AUDIO SYSTEM].
3	• Set volume to 10 to 15. • Is buzzing sound or voice confirmed?	Yes	Go to the next step.
		No	Follow diagnostic procedure for symptom NO SOUND FROM ALL SPEAKERS [ENTIRE AUDIO SYSTEM] or NO SOUND FROM SOME SPEAKERS [ENTIRE AUDIO SYSTEM].
4	• Tune to local broadcasting station and check reception condition. • Is reception okay?	Yes	Go to the next step.
		No	Go to Step 6.
5	• Push PRESET switches and check preset conditions. • Has preset been stored?	Yes	The system is normal.
		No	Preset broadcasting stations.
6	• Is aftermarket electronic equipment (two-way radio, navigation system, mobile phone, etc.) installed? **Note** • TV antenna located closely to audio antenna can be cause of noise. Relocate TV antenna.	Yes	Go to the next step.
		No	Go to Step 8.
7	• Remove aftermarket electronic equipment. • Turn audio unit ON and check reception condition. • Is reception improved?	Yes	The system is normal. (Explain to customers that aftermarket electronic equipment is cause of noise)
		No	Go to the next step.
8	• Refer to confirmation step 3, and inspect antenna system. • Is a whirring sound present?	Yes	Replace audio unit. (See 09-20-4 AUDIO UNIT REMOVAL/INSTALLATION.)
		No	Go to the next step.
9	• Inspect antenna plug connection condition. • Is connection okay?	Yes	Go to the next step.
		No	Insert antenna plug securely.
10	• Switch the ignition off (LOCK). • Measure continuity between antenna feeder axis and ground. • Is there any continuity?	Yes	Replace antenna feeder.
		No	Go to the next step.

SYMPTOM TROUBLESHOOTING [RADIO]

STEP	INSPECTION		ACTION
11	• Compare reception with other audio unit on same model (model/unit) under same problem conditions. • Is reception equivalent between customer's unit and compared unit? **Note** • Due to following differences, you may feel difference in reception efficiency. **(Vehicle side factor)** — Antenna installation location, height, feeder wiring routing, optional electrical equipment **(Audio unit factor)** — Volume concern type: It decreases change of volume when signals become weak. (Noise is easily noticed) — Noise decrease type: It decreases volume when signals become weak, so that noise is not noticeable.	Yes	The system is normal. (It is caused by electronic jamming from outside, or inferior broadcasting station signal condition.)
		No	Replace audio unit. (See 09-20-4 AUDIO UNIT REMOVAL/INSTALLATION.)

NOISE FROM RADIO (AM ONLY) [RADIO]

id0903e3016000

Possible DTC	**Noise from radio (AM only)**	
	Using the M-MDS	**U3000:04**
	Without using M-MDS (On-board diagnostic test mode)	**09:Er22**
Possible cause	• Jamming from aftermarket electronic equipment (two-way radio, navigation system, mobile phone, etc.) • Battery malfunction • Noise from electrical system on vehicle (e.g. fuel pump) • Charging system malfunction • Electronic jamming from outside, or inferior condition of broadcasting station radio wave • Antenna plug poor connection • Antenna feeder malfunction • Antenna installation loosened • Audio unit malfunction	

Diagnostic procedure

STEP	INSPECTION		ACTION
1	• Can the location where the noise occurs be specified?	Yes	The system is normal. (Explain to the customer that the noise is caused by radio wave disturbances or broadcast wave conditions from the outside.)
		No	Go to the next step.
2	• Tune to local broadcasting station and check reception condition. • Is reception okay?	Yes	Tune to correct frequency of broadcasting station. If not preset, preset it.
		No	Go to the next step.
3	• Is aftermarket electronic equipment (two-way radio, navigation system, mobile phone, etc.) installed? **Note** • TV antenna located closely to audio antenna can be cause of noise. Relocate TV antenna.	Yes	Go to the next step.
		No	Go to Step 5.
4	• Remove aftermarket electronic equipment. • Turn audio unit ON and check reception condition. • Is reception improved?	Yes	The system is normal. (Explain to customers that aftermarket electronic equipment is cause of noise)
		No	Go to the next step.

SYMPTOM TROUBLESHOOTING [RADIO]

STEP	INSPECTION		ACTION
5	• Measure battery voltage. • Is battery voltage okay? **Specification:** **With ignition switch ON: 11.5 V or more** **At idling: 12.5 V or more** **Note** • Inspect that battery cables are connected to terminals securely.	Yes	Go to the next step.
		No	Charge battery. Inspect charging system, and repair or replace if necessary.
6	• Is noise occurring only when vehicle electrical system (e.g. fuel pump) operates? **Note** • Identify subject electrical component by disconnecting fuse, turning switch ON & OFF, or disconnecting & connecting connector. • It will be easy when simulation function on M-MDS is used.	Yes	Go to the next step.
		No	Go to Step 8.
7	• Inspect power supply, ground condition, and noise prevention capacitor for electrical component. • Is noise present after inspection? **Note** • Inspect following: — Power supply to electrical component for voltage drop (compare with battery voltage) — Resistance between ground of electrical component and body. (Should be close to 0 ohm) — Installation condition of noise prevention capacitor for fuel pump etc.	Yes	Go to the next step.
		No	Troubleshooting completed. **Note** • The audio unit supplies 12 V battery power to the antenna amplifier for the AM radio reception in the radio mode. The audio unit cannot receive the AM signals without the 12 V battery power to the antenna amplifier. If the AM signals become strong, the audio/unit car-navigation unit may receive the signal with noises.
8	• Inspect antenna plug connection condition. • Is connection okay?	Yes	Go to the next step.
		No	Insert antenna plug securely.
9	• Switch the ignition off (LOCK). • Measure continuity between antenna feeder axis and ground. • Is there any continuity?	Yes	Replace antenna feeder.
		No	Go to the next step.
10	• Compare reception with other audio unit on same model (model/unit) under same problem conditions. • Is reception equivalent between customer's unit and compared unit? **Note** • Due to following differences, you may feel difference in reception efficiency. **(Vehicle side factor)** — Antenna installation location, height, feeder wiring routing, optional electrical equipment **(Audio unit factor)** — Volume concern type: It decreases change of volume when signals become weak. (Noise is easily noticed) — Noise decrease type: It decreases volume when signals become weak, so that noise is not noticeable.	Yes	The system is normal (It is caused by electronic jamming from outside, or inferior broadcasting station signal condition).
		No	Replace audio unit. (See 09-20-4 AUDIO UNIT REMOVAL/INSTALLATION.)

SYMPTOM TROUBLESHOOTING [RADIO]

NOISE FROM RADIO (FM ONLY) [RADIO]

id0903e3016100

Possible DTC	**Noise from radio (FM only)**	
	Using the M-MDS	**U3000:04**
	Without using M-MDS (On-board diagnostic test mode)	**09:Er22**
Possible cause	• Jamming from aftermarket electronic equipment (two-way radio, navigation system, mobile phone, etc.) • Battery malfunction • Noise from electrical system on vehicle (e.g. fuel pump) • Charging system malfunction • Electronic jamming from outside, or inferior condition of broadcasting station radio wave • Antenna plug poor connection • Antenna feeder malfunction • Antenna installation loosened • Audio unit malfunction **Note** • FM broadcast has feature “sound quality is good” and “resistant to noise”, but FM broadcast has particular noises. Though audio unit is designed to reduce noise, there are times noise occurs due to conditions.	

Diagnostic procedure

STEP	INSPECTION		ACTION
1	• Can the location where the noise occurs be specified?	Yes	The system is normal. (Explain to the customer that the noise is caused by radio wave disturbances or broadcast wave conditions from the outside.)
		No	Go to the next step.
2	• Tune to local broadcasting station and check reception condition. • Is reception okay?	Yes	Tune to correct frequency of broadcasting station. If not preset, preset it.
		No	Go to the next step.
3	• Is aftermarket electronic equipment (two-way radio, navigation system, mobile phone, etc.) installed?	Yes	Go to the next step.
		No	Go to Step 5.
4	• Remove aftermarket electronic equipment. • Turn audio unit ON and check reception condition. • Is reception improved?	Yes	The system is normal. (Explain to customers that aftermarket electronic equipment is cause of noise)
		No	Go to the next step.
5	• Measure battery voltage. • Is battery voltage okay? **Specification:** **With ignition switch ON: 11.5 V or more** **At idling: 12.5 V or more** **Note** • Inspect that battery cables are connected to terminals securely.	Yes	Go to the next step.
		No	Charge battery. Inspect charging system, and repair or replace if necessary.
6	• Is noise occurring only when vehicle electrical system (e.g. fuel pump) operates? **Note** • Identify subject electrical component by disconnecting fuse, turning switch ON & OFF, or disconnecting & connecting connector. • It will be easy when simulation function on M-MDS is used.	Yes	Go to the next step.
		No	Go to Step 8.

SYMPTOM TROUBLESHOOTING [RADIO]

STEP	INSPECTION		ACTION
7	• Inspect power supply, ground condition, and noise prevention capacitor for electrical component. • Is noise present after inspection? **Note** • Inspect following: — Power supply to electrical component for voltage drop (compare with battery voltage) — Resistance between ground of electrical component and body. (Should be close to 0 ohm) — Installation condition of noise prevention capacitor for fuel pump etc.	Yes	Go to the next step.
		No	Troubleshooting completed.
8	• Inspect antenna plug connection condition. • Is connection okay?	Yes	Go to the next step.
		No	Insert antenna plug securely.
9	• Switch the ignition off (LOCK). • Measure continuity between antenna feeder axis and ground. • Is there any continuity?	Yes	Replace antenna feeder.
		No	Go to the next step.
10	• Compare reception with other audio unit on same model (model/unit) under same problem conditions. • Is reception equivalent between customer's unit and compared unit?	Yes	The system is normal (It is caused by electronic jamming from outside, or inferior broadcasting station signal condition).
		No	Replace audio unit. (See 09-20-4 AUDIO UNIT REMOVAL/INSTALLATION.)

CANNOT TUNE (SEEK DOES NOT STOP) [RADIO]

id0903e3016200

Possible DTC	**Cannot tune (seek does not stop)**	
	Using the M-MDS	**U3000:16, U3000:04**
	Without using M-MDS (On-board diagnostic test mode)	**09:Er20, 09:Er22**
Possible cause	• Audio panel malfunction • Electronic jamming from outside, or inferior condition of broadcasting station radio wave • Antenna plug poor connection • Antenna feeder malfunction • Audio unit malfunction	

Diagnostic procedure

STEP	INSPECTION		ACTION
1	• Inspect if feel of SEEK switch is normal when switch is pushed and released. • Is it okay?	Yes	Go to the next step.
		No	Perform confirmation step 1: audio panel switch confirmation. Replace audio panel if necessary.
2	• Inspect indication of LCD. • Is frequency indication increased or decreased when SEEK switch is pushed?	Yes	Go to the next step.
		No	Perform confirmation step 1: audio panel switch confirmation. Replace audio panel if necessary.
3	• Manually tune to local broadcasting station and check reception condition. • Is reception okay?	Yes	Go to Step 6.
		No	Go to the next step.
4	• Inspect antenna plug connection condition. • Is connection okay?	Yes	Go to the next step.
		No	Insert antenna plug securely.
5	• Switch the ignition off (LOCK). • Measure continuity between antenna feeder axis and ground. • Is there any continuity?	Yes	Replace antenna feeder.
		No	Go to the next step.

SYMPTOM TROUBLESHOOTING [RADIO]

STEP	INSPECTION		ACTION
6	• Check if number of broadcasting stations changes depending on time and place. • Does it change?	Yes	The system is normal. (Explain to customer that SEEK sometimes does not stop depending on signal reception condition.) **Note** • Signals tend to reach longer distances in the night. It is noticeable in AM signals, several audio functions may stop due to foreign broadcasting station or noise. Though the audio system restrains sensitivity of SEEK and SCAN functions in the night, the audio system may select other than desired broadcasting station when signals are considerably strong. This function is linked to the parking light. When the parking light or headlight is turned on, SEEK and SCAN may not function for weak signals.
		No	Replace audio unit. (See 09-20-4 AUDIO UNIT REMOVAL/INSTALLATION.)

CANNOT PRESET (PRESET FUNCTION DOES NOT OPERATE) [RADIO]

id0903e3016300

Possible DTC	Cannot preset (preset function does not operate)
	—
Possible cause	• Audio unit malfunction • Audio panel malfunction

Diagnostic procedure

STEP	INSPECTION		ACTION
1	• Tune to desired station and push channel preset button 1 for about 2 seconds to store it. • Repeat above for other stations using PRESET switch 2 to 5. • Push channel preset switch 1 to 6 one by one. • Are stored stations present?	Yes	Go to the next step.
		No	Go to Step 3.
2	• Switch the ignition to off (LOCK) and then to ACC. • Check if preset stations are stored by pushing preset switches. • Are stations stored?	Yes	The system is normal. (Explain preset procedure to customer using Owner's Manual)
		No	Replace audio unit. (See 09-20-4 AUDIO UNIT REMOVAL/INSTALLATION.)
3	• Press the POWER/VOLUME switch to turn the audio on. • Press the POWER/VOLUME switch and SEEK switch (up) simultaneously to launch the diagnostic assist function. • Input the diagnostic assist code "02" using the diagnostic input screen. • Select "ENTER". • Push all switches and check if buzzer sounds. • Is all switches okay?	Yes	The system is normal. (Explain preset procedure to customer using Owner's Manual)
		No	Replace audio unit. (See 09-20-4 AUDIO UNIT REMOVAL/INSTALLATION.)

SYMPTOM TROUBLESHOOTING [RADIO]

RECEPTION FREQUENCY OF RADIO SLIPS [RADIO]

id0903e3016400

Possible DTC	**Reception frequency of radio slip**	
	Using the M-MDS	**U3000:04**
	Without using M-MDS (On-board diagnostic test mode)	**09:Er22**
Possible cause	• Electronic jamming from outside, or inferior condition of broadcasting station radio wave • Audio unit malfunction	

Diagnostic procedure

STEP	INSPECTION		ACTION
1	• Push SEEK switch and check if desired broadcasting station is tuned. • Is it okay?	Yes	Go to Step 3.
		No	Go to the next step.
2	• Check if other broadcasting station is received at certain place when indication of reception frequency stays. • Is other station received? **Note** • When you receive weak signal from one broadcasting station and come close to broadcasting antenna which emits strong signal, broadcasting with strong signal is sometimes received.	Yes	Go to the next step.
		No	Replace audio unit. (See 09-20-4 AUDIO UNIT REMOVAL/INSTALLATION.)
3	• Compare reception with other audio unit on same model (model/unit) under same problem conditions. • Is reception equivalent between customer's unit and compared unit?	Yes	Troubleshooting completed.
		No	Replace audio unit. (See 09-20-4 AUDIO UNIT REMOVAL/INSTALLATION.)

REFERENCE [RADIO]

id0903e3830000

1. Multipath Noise

- Signals from an FM transmitter are a high frequency and similar to beams of light because they do not bend around corners, but they do reflect. Since FM signals can be reflected by obstructions, it is possible to receive both the direct signal and the reflected signal at the same time. This causes a slight delay in reception and may be heard as a broken sound or a distortion.

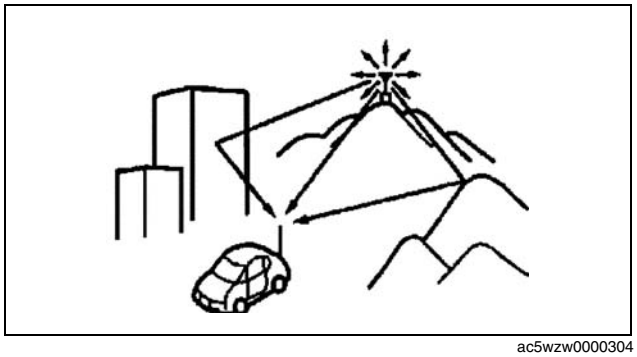

ac5wzw0000304

2. Flutter/Skip Noise

- Signals become weak in valleys between mountains, tall building, and other obstacles. When the vehicle passes through such an area, the reception conditions may change suddenly, resulting in annoying noise.

SYMPTOM TROUBLESHOOTING [RADIO]

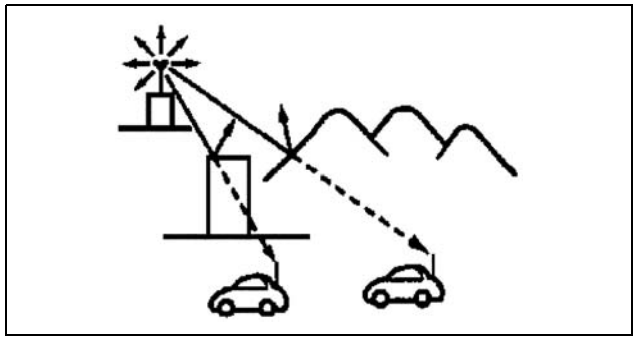

ac5wzw0000304

3. Stereo and Monaural Receptions

- As signals become weak, noise may appear more in stereo reception. Comparing to stereo reception, noise in monaural receptions is relatively less striking.

Measures in Audio System

Separation control

- Utilizing the characteristic of monaural reception that noise is relatively less striking than stereo reception, the audio system automatically changes the reception from stereo to monaural and lessens annoying noise when signals become weak or a multipath phenomenon occurs.

High tone control

- When signals become weak or a multipath phenomenon occurs, the audio system restrains volume level in high frequency band and lessens annoying noise.

Effect Setting of Separation Control and High Tone Control

- The separation and high tone controls influence sound quality, Therefore they are specifically tuned for individual model. (Comparison of characteristic must be done on the same models)

High tone setting	⇨	Less effective range	⇨	Noise is conspicuous
Noise restraint setting	⇨	Wider effective range	⇨	Noise is less conspicuous

acxuuw00001936

Remarks

- Signals tend to reach longer distances at night. It is conspicuous in AM signals, several audio functions may stop due to foreign broadcasting station or noise. Though the audio system restrains sensitivity of SEEK and SCAN functions at night, the audio system may select other than desired broadcasting station when signals are considerably strong. This function is linked to the parking light. When the parking light or headlight is turned on, SEEK and SCAN may not function for weak signals.

SYMPTOM TROUBLESHOOTING [RADIO]

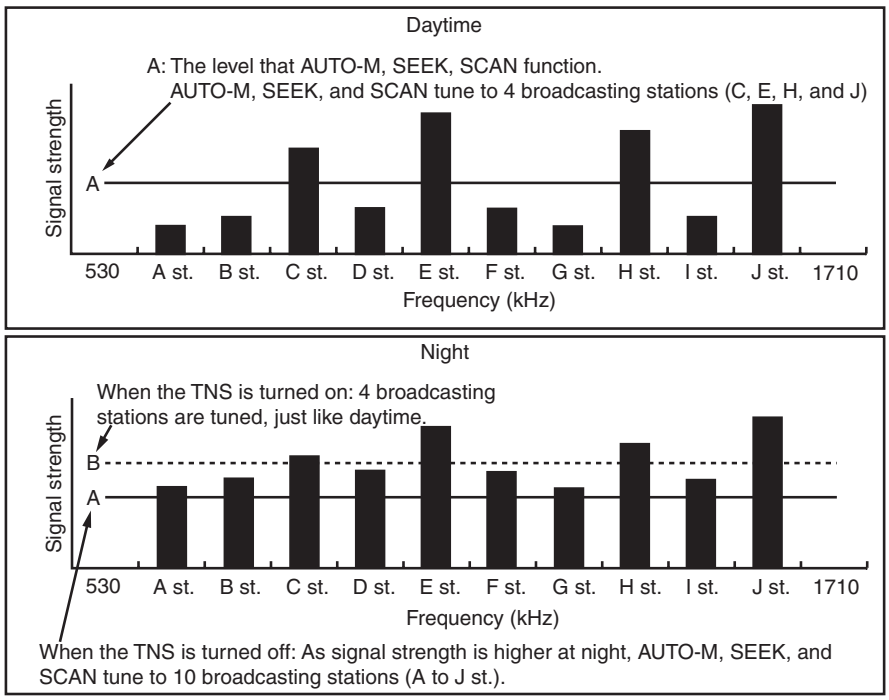

acxuuw00001937

09-03H SYMPTOM TROUBLESHOOTING [CAR-NAVIGATION SYSTEM]

FOREWORD
[CAR-NAVIGATION SYSTEM] 09-03H–2
Troubleshooting Procedure **09-03H–2**
Action for non-repeatable malfunction. **09-03H–3**
SYMPTOM TROUBLESHOOTING [CAR-NAVIGATION SYSTEM] 09-03H–3
CAR-NAVIGATION SYSTEM DOSE NOT START OPERATION [CAR-NAVIGATION SYSTEM] 09-03H–5
Diagnostic Procedure. **09-03H–5**
CAR-NAVIGATION SYSTEM DOES NOT OPERATION [CAR-NAVIGATION SYSTEM] 09-03H–6
Diagnostic Procedure **09-03H–6**
VEHICLE POSITION DEVIATES FROM THE ROUTE MAP [CAR-NAVIGATION SYSTEM] 09-03H–6
Diagnostic Procedure **09-03H–7**
NO VOICE NAVIGATION [CAR-NAVIGATION SYSTEM] 09-03H–8
Diagnostic Procedure **09-03H–8**
DISPLAY SCREEN DOES NOT CHANGE TO THE NIGHT MODE [CAR-NAVIGATION SYSTEM] 09-03H–9
Diagnostic Procedure **09-03H–9**

SYMPTOM TROUBLESHOOTING [CAR-NAVIGATION SYSTEM]

FOREWORD [CAR-NAVIGATION SYSTEM]

id0903e8378400

- If there is any vehicle malfunction complaint lodged by a customer, perform malfunction diagnosis according to the troubleshooting procedure.

Troubleshooting Procedure

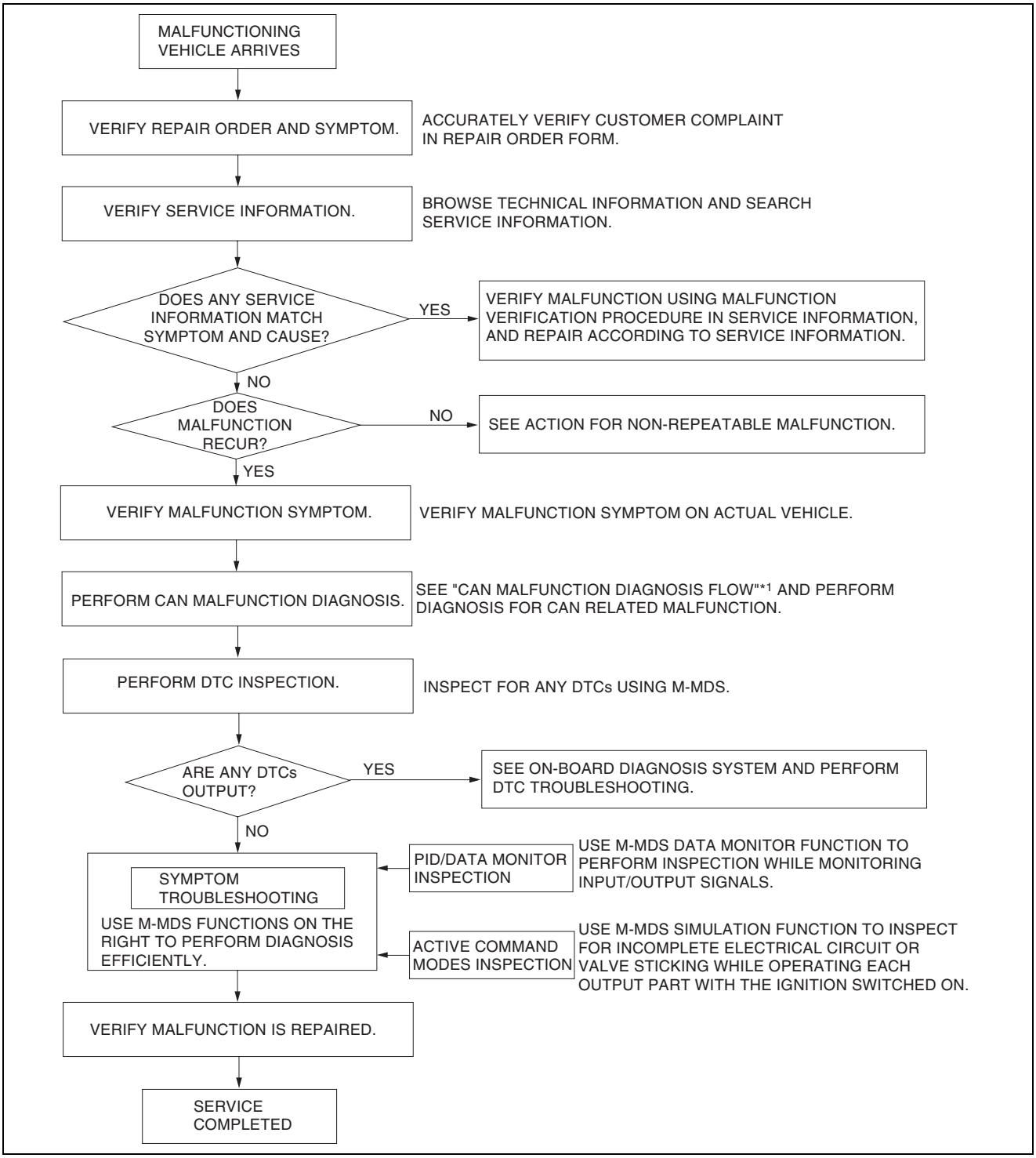

am3zzw0001127

*1 : 10-02A-3 CONTROLLER AREA NETWORK (CAN) MALFUNCTION DIAGNOSIS FLOW [SKYACTIV-G 2.0 (L.H.D.)] / 10-02B-3 CONTROLLER AREA NETWORK (CAN) MALFUNCTION DIAGNOSIS FLOW [SKYACTIV-G 2.0 (R.H.D.)] / 10-02C-3 CONTROLLER AREA NETWORK (CAN) MALFUNCTION DIAGNOSIS FLOW [SKYACTIV-D 2.2 (L.H.D.)] / 10-02D-3 CONTROLLER AREA NETWORK (CAN) MALFUNCTION DIAGNOSIS FLOW [SKYACTIV-D 2.2 (R.H.D.)]

SYMPTOM TROUBLESHOOTING [CAR-NAVIGATION SYSTEM]

Action for non-repeatable malfunction

- If the malfunction does not recur, verify the malfunction cause by performing the following actions:
  - — Based on the repair order form, attempt to drive the vehicle or perform tests to replicate the malfunction, record the data (such as CAN circuit voltage) at that time, and detect the malfunction cause.
  - — Refer to [Determining Open Circuit Location] based on the recorded DTC, shake the wiring harness or connector of the electrical component which is suspected to be the cause of the malfunction, and inspect for any changes in CAN system voltage or occurrence of any DTCs.

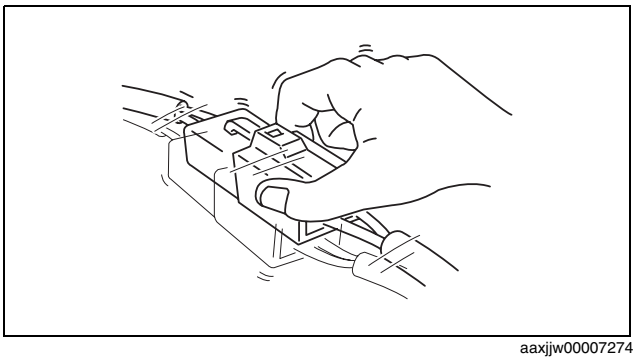

aaxjjw00007274

  - — Inspect the female terminals on the connector of the electric component which is suspected to be the cause of the malfunction for poor connection.

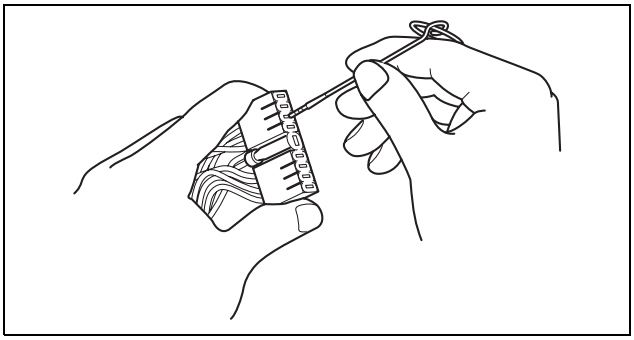

am3uuw0000750

SYMPTOM TROUBLESHOOTING [CAR-NAVIGATION SYSTEM]

id0903e8378800

Symptom	Description
09-03H-5 CAR-NAVIGATION SYSTEM DOSE NOT START OPERATION [CAR-NAVIGATION SYSTEM]	• Even if the NAVI mode is selected, the car navigation system screen does not display
09-03H-6 CAR-NAVIGATION SYSTEM DOES NOT OPERATION [CAR-NAVIGATION SYSTEM]	• Even if the map screen is touched, the car navigation system cannot be operated
09-03H-6 VEHICLE POSITION DEVIATES FROM THE ROUTE MAP [CAR-NAVIGATION SYSTEM]	• The vehicle position on the map screen deviates from the actual vehicle position.
09-03H-8 NO VOICE NAVIGATION [CAR-NAVIGATION SYSTEM]	• Even if the route guidance mode is initiated, there is no voice guidance
09-03H-9 DISPLAY SCREEN DOES NOT CHANGE TO THE NIGHT MODE [CAR-NAVIGATION SYSTEM]	• Does not switch to the night screen even though the light switch is in the TNS position.

SYMPTOM TROUBLESHOOTING [CAR-NAVIGATION SYSTEM]

Quick Diagnostic Chart

X: Applicable

Possible factor / Troubleshooting item	Car-navigation system does not start operation	Car-navigation system does not start	Vehicle position deviates from the route map	No voice navigation	Display screen does not change to the night mode
NAVI switch malfunction	X				
Power supply fuse (+B, ACC) burnt out	X				
Open or short circuit in power supply (+B, ACC, GND)	X				
Open or short circuit in power supply (+B, ACC, GND) wiring harness	X				
Open or short circuit in wiring harness between audio unit and car navigation unit communication system	X				
Car-navigation unit malfunction	X	X	X	X	X
Audio unit malfunction	X		X		
Audio unit malfunction (bad LCD panel)		X			
GPS antenna malfunction			X		
Poor GPS antenna connection			X		
Poor reception due to object			X		
Poor connection of vehicle wiring harness (vehicle signal) connector, bad pins.			X		
Open or short circuit in vehicle wiring harness (vehicle signal)			X		
Route guidance mode setting mistake				X	
Poor volume adjustment of audio system				X	
TNS signal malfunction					X

ac5wzw0000282

SYMPTOM TROUBLESHOOTING [CAR-NAVIGATION SYSTEM]

CAR-NAVIGATION SYSTEM DOSE NOT START OPERATION [CAR-NAVIGATION SYSTEM]

id0903e8100000

Possible DTC	Even if the NAVI mode is selected, the car-navigation system screen does not display.
POSSIBLE CAUSE	• NAVI switch malfunction • Power supply fuse (+B, ACC) burnt out • Open or short circuit in power supply (+B, ACC, GND) wiring harness • Open or short circuit in power supply (+B, ACC, GND) wiring harness • Open or short circuit in wiring harness between audio unit and car-navigation unit communication system • Car-navigation unit malfunction • Audio unit malfunction

Diagnostic Procedure

Step	Inspection		Action
1	**VERIFY MALFUNCTION SYMPTOM** • Switch the ignition ON (engine off or on). • Turn the audio unit power supply on and select the NAVI mode. • Does the car-navigation system launch and the map screen display?	Yes	Go to Step 6.
		No	Go to the next step.
2	**DETERMINE IF MALFUNCTION CAUSE IS SWITCH** • Operate switches other than the NAVI switch. • Do the modes other than the NAVI mode switch normally?	Yes	Go to the next step.
		No	Inspect the switch referring to the switch inspection procedure of the diagnostic assist function. (See 09-02E-39 DIAGNOSTIC ASSIST FUNCTION [AUDIO].)
3	**INSPECT CAR-NAVIGATION UNIT POWER SUPPLY** • Switch the ignition to ACC. • Measure the voltage at the following terminals: — Terminal 1H (+B) — Terminal 1G (ACC) • Is the voltage value the battery voltage?	Yes	Go to the next step.
		No	• Inspect the AUDIO1 15 A or AUDIO2 7.5 A fuse. **If the fuse is burned out:** • Inspect for a short to ground in the wiring harness between the AUDIO1 15A fuse and car- navigation unit terminal 1H, or the AUDIO2 7.5 A fuse and car-navigation unit terminal 1G, and perform repairs. **If the fuse is not damaged or burned out:** • Inspect for an open circuit in the wiring harness between the battery and car-navigation unit terminal 1H or 1G.
4	**INSPECT CAR-NAVIGATION UNIT GROUND** • Switch the ignition off (LOCK). • Disconnect the audio unit connector. • Verify the continuity between ground and the following terminal connectors 1A, 1B, 1C, and 1D on the wiring harness side. • Is there continuity?	Yes	Go to the next step.
		No	Inspect and repair the ground point for looseness, disengagement, or lifting. Inspect and repair the wiring harness for an open circuit.
5	**INSPECT CAR-NAVIGATION UNIT COMMUNICATION** • Switch the ignition off (LOCK). • Disconnect the audio unit connector. • Inspect for malfunction between the following wiring harnesses. — Audio unit terminal 5A and car-navigation unit terminal 2A — Audio unit terminal 5B and car-navigation unit terminal 2B — Audio unit terminal 5C and car-navigation unit terminal 2C — Audio unit terminal 5D and car-navigation unit terminal 2D • Is any malfunction verified?	Yes	Inspect and repair the wiring harness.
		No	Go to the next step.

SYMPTOM TROUBLESHOOTING [CAR-NAVIGATION SYSTEM]

Step	Inspection		Action
6	**DETERMINE IF MALFUNCTION CAUSE IS car-navigation UNIT** • Switch the ignition ON (engine off or on). • Launch the audio unit diagnostic assist function. (See 09-02E-39 DIAGNOSTIC ASSIST FUNCTION [AUDIO].) • Select diagnostic assist code 16 external device connection information clearing. • Switch the ignition off (LOCK). • Switch the ignition ON (engine off or on). • Launch the audio unit diagnostic assist function. (See 09-02E-39 DIAGNOSTIC ASSIST FUNCTION [AUDIO].) • Select diagnostic assist code 15 vehicle NAVI signal verification. • Is NAVI (USB) NG displayed?	Yes	Replace the car-navigation unit. (See 09-20-11 CAR-NAVIGATION UNIT REMOVAL/INSTALLATION.)
		No	Replace the audio unit. (See 09-20-4 AUDIO UNIT REMOVAL/ INSTALLATION.)

CAR-NAVIGATION SYSTEM DOES NOT OPERATION [CAR-NAVIGATION SYSTEM]

id0903e8100100

Possible DTC	Even if the map screen is touched, the car-navigation system cannot be operated
POSSIBLE CAUSE	• Audio unit malfunction (bad LCD panel) • Car-navigation unit malfunction

Diagnostic Procedure

Step	Inspection		Action
1	**DETERMINE IF MALFUNCTION CAUSE IS AUDIO UNIT LCD PANEL** • Switch the ignition ON and launch the audio unit diagnostic assist function. (See 09-02E-39 DIAGNOSTIC ASSIST FUNCTION [AUDIO].) • Select diagnostic assist code 01 display inspection. • Is the display normal?	Yes	Go to the next step.
		No	Replace the audio unit. (See 09-20-4 AUDIO UNIT REMOVAL/ INSTALLATION.)
2	**DETERMINE IF MALFUNCTION CAUSE IS CAR-NAVIGATION UNIT** • Select diagnostic assist code 16 external device connection information clearing. • Switch the ignition off (LOCK). • Switch the ignition ON (engine off or on). • Launch the audio unit diagnostic assist function. (See 09-02E-39 DIAGNOSTIC ASSIST FUNCTION [AUDIO].) • Select diagnostic assist code 15 vehicle NAVI signal verification. • Is NAVI (USB) NG displayed?	Yes	Replace the car-navigation unit. (See 09-20-11 CAR-NAVIGATION UNIT REMOVAL/INSTALLATION.)
		No	Replace the audio unit. (See 09-20-4 AUDIO UNIT REMOVAL/ INSTALLATION.)

VEHICLE POSITION DEVIATES FROM THE ROUTE MAP [CAR-NAVIGATION SYSTEM]

id0903e8100200

Possible DTC	The vehicle position on the map screen deviates from the actual vehicle position.
POSSIBLE CAUSE	• GPS antenna malfunction • Car-navigation unit malfunction • Audio unit malfunction • Poor GPS antenna connection • Poor reception due to object obstructing GPS antenna • Poor connection of vehicle wiring harness (vehicle signal) connector, bad pins. • Open or short circuit in vehicle wiring harness (vehicle signal)

SYMPTOM TROUBLESHOOTING [CAR-NAVIGATION SYSTEM]

Diagnostic Procedure

Step	Inspection		Action
1	**VERIFY GPS ANTENNA RECEPTION CONDITION** • Stop the vehicle and leave it idling for 5 min in an area with clear visibility (no buildings or trees surrounding). • Does the GPS mark display at the top left area of the map screen?	Yes	Go to Step 3.
		No	Go to the next step.
2	**VERIFY IF GPS ANTENNA RECEPTION IS OBSTRUCTED** • Is there an object on the dashboard which is interfering with GPS reception (such as devices installed by customer after installation)?	Yes	After explaining to the customer that device installed by the customer on the dashboard after the installation is interfering with GPS reception, remove the device. After servicing, go to the next step.
		No	Go to the next step.
3	**VERIFY THE GPS ANTENNA RECEPTION SIGNAL** • Launch the audio unit diagnostic assist function. (See 09-02E-39 DIAGNOSTIC ASSIST FUNCTION [AUDIO].) • Select diagnostic assist code 15 vehicle NAVI signal verification. • Is NAVI GPS ANT NG displayed?	Yes	Go to the next step.
		No	Go to Step 5.
4	**VERIFY VEHICLE SPEED SIGNAL** • Verify SPEED on the vehicle NAVI signal verification screen. • Is the vehicle speed displayed when the vehicle is driven?	Yes	Replace the car-navigation unit. (See 09-20-11 CAR-NAVIGATION UNIT REMOVAL/INSTALLATION.)
		No	Go to Step 10.
5	**VERIFY GPS ANTENNA CONNECTOR CONDITION** • Switch the ignition off. • Disconnect the negative battery cable. (See 01-17A-11 NEGATIVE BATTERY CABLE DISCONNECTION/CONNECTION [SKYACTIV-G 2.0].) (See 01-17A-13 NEGATIVE BATTERY CABLE DISCONNECTION/CONNECTION [SKYACTIV-G 2.0 (WITHOUT i-stop)].) (See 01-17B-9 NEGATIVE BATTERY CABLE DISCONNECTION/CONNECTION [SKYACTIV-D 2.2].) • Disconnect the GPS antenna connector. • Inspect the connector and terminals (connection condition, corrosion, damage, pin disconnection). • Are the connectors and terminals normal?	Yes	Go to the next step.
		No	Repair or replace the pins, connectors.
6	**VERIFY CAR-NAVIGATION UNIT CONNECTOR CONDITION** • Disconnect the car-navigation unit connector. • Inspect the connector and terminals (connection condition, corrosion, damage, pin disconnection). • Are the connectors and terminals normal?	Yes	Go to the next step.
		No	Repair or replace the pins, connectors.
7	**INSPECT FOR SHORT TO GROUND IN WIRING HARNESS BETWEEN GPS ANTENNA AND CAR-NAVIGATION UNIT** • Inspect for continuity between the following terminals (vehicle wiring harness side) and body ground. — GPS antenna terminal A • Is there continuity?	Yes	Repair or replace the wiring harness, then go to Step 10.
		No	Go to the next step.

SYMPTOM TROUBLESHOOTING [CAR-NAVIGATION SYSTEM]

Step	Inspection		Action
8	**INSPECT FOR OPEN CIRCUIT IN WIRING HARNESS BETWEEN GPS ANTENNA AND CAR-NAVIGATION UNIT** • Inspect the wiring harness between the following terminals (vehicle wiring harness side) for continuity. — GPS antenna terminal A and car-navigation unit terminal B (2-pin) • Is there continuity?	Yes	Go to the next step.
		No	Repair or replace the wiring harness, then go to Step 10.
9	**INSPECT FOR SHORT TO POWER SUPPLY IN WIRING HARNESS BETWEEN GPS ANTENNA AND CAR-NAVIGATION UNIT** • Connect the negative battery cable. (See 01-17A-11 NEGATIVE BATTERY CABLE DISCONNECTION/CONNECTION [SKYACTIV-G 2.0].) (See 01-17A-13 NEGATIVE BATTERY CABLE DISCONNECTION/CONNECTION [SKYACTIV-G 2.0 (WITHOUT i-stop)].) (See 01-17B-9 NEGATIVE BATTERY CABLE DISCONNECTION/CONNECTION [SKYACTIV-D 2.2].) • Switch the ignition ON (engine off or on). • Measure the voltage at the following terminals (vehicle wiring harness side). — GPS antenna terminal A • Is the voltage 0 V?	Yes	Replace the GPS antenna. (See 09-20-54 GLOBAL POSITIONING SYSTEM (GPS) ANTENNA REMOVAL/INSTALLATION.)
		No	Repair or replace the wiring harness, then go to the next step.
10	**INSPECT VEHICLE SPEED SIGNAL** • Jack up the vehicle and drive at low speed. • Measure the voltage at the following audio unit (24-pin) terminal. — Vehicle speed signal (terminal 1I) • Is the terminal voltage **approx. 2.5 V** (average)? **Note** • The vehicle speed signal repeatedly pulses between **approx. 0 V** and **approx. 5 V**.	Yes	Replace the audio unit. (See 09-20-4 AUDIO UNIT REMOVAL/INSTALLATION.)
		No	Replace the vehicle speed signal wiring harness.

NO VOICE NAVIGATION [CAR-NAVIGATION SYSTEM]

id0903e8100300

Possible DTC	Even if the route guidance mode is initiated, there is no voice guidance
POSSIBLE CAUSE	• Route guidance mode setting mistake • Poor volume adjustment of audio system • Car-navigation unit malfunction

Diagnostic Procedure

Step	Inspection		Action
1	**VERIFY MALFUNCTION SYMPTOM** • Switch the ignition ON (engine off or on). • Turn the audio unit power on and select NAVI mode. • Operate the route guidance mode. • Is voice output?	Yes	System is normal. (Explain to the customer that voice guidance only begins if the route guidance mode is activated.)
		No	Go to the next step.
2	**DETERMINE IF MALFUNCTION CAUSE IS POOR AUDIO VOLUME ADJUSTMENT** • Turn the audio unit power on and select radio mode. • Operate the POWER/VOLUME switch and change the audio unit volume. • Is audio output?	Yes	Go to the next step.
		No	Perform inspection referring to NO SOUND FROM ALL SPEAKERS [ENTIRE AUDIO SYSTEM] (See 09-03F-13 NO SOUND FROM ALL SPEAKERS [ENTIRE AUDIO SYSTEM].)

SYMPTOM TROUBLESHOOTING [CAR-NAVIGATION SYSTEM]

Step	Inspection		Action
3	**DETERMINE IF MALFUNCTION CAUSE IS CAR-NAVIGATION UNIT** • Switch the ignition ON and launch the audio unit diagnostic assist function. (See 09-02E-39 DIAGNOSTIC ASSIST FUNCTION [AUDIO].) • Select diagnostic assist code 16 external device connection information clearing. • Switch the ignition off (LOCK). • Switch the ignition ON (engine off or on). • Turn the audio unit power on and select NAVI mode. • Operate the route guidance mode. • Is audio output?	Yes	Troubleshooting completed.
		No	Replace the car-navigation unit. (See 09-20-11 CAR-NAVIGATION UNIT REMOVAL/INSTALLATION.)

DISPLAY SCREEN DOES NOT CHANGE TO THE NIGHT MODE [CAR-NAVIGATION SYSTEM]

id0903e8100400

Possible DTC	Does not switch to the night screen even though the light switch is in the TNS position.
POSSIBLE CAUSE	• Car-navigation unit malfunction • TNS signal malfunction — Open, short circuit in car-navigation unit terminal 1E

Diagnostic Procedure

Step	Inspection		Action
1	**VERIFY TNS SIGNAL** • Launch the audio unit diagnostic assist function. (See 09-02E-39 DIAGNOSTIC ASSIST FUNCTION [AUDIO].) • Select diagnostic assist code 15 vehicle NAVI signal verification. • Does the TNS display OFF?	Yes	Go to the next step.
		No	Go to Step 3.
2	**INSPECT TNS SIGNAL** • Measure the terminal voltage at audio unit connector (24-pin) terminal 1E. • Is the voltage normal? **Specification** **TNS ON: Approx. 12. V** **TNS OFF: Approx. 0 V**	Yes	Go to the next step.
		No	Inspect the applicable (TNS signal system) vehicle panel and repair or replace.
3	**VERIFY IF SYSTEM SWITCHES TO NIGHT SCREEN** • Turn the light switch to the TNS position. • Does the audio unit screen switch to the night screen?	Yes	System is normal.
		No	Replace the audio unit. (See 09-20-4 AUDIO UNIT REMOVAL/INSTALLATION.)

09-03I SYMPTOM TROUBLESHOOTING [Bluetooth SYSTEM (HANDS-FREE TELEPHONE (HF/TEL) SYSTEM)]

FOREWORD
[Bluetooth SYSTEM (HANDS-FREE TELEPHONE (HF/TEL) SYSTEM)] **09-03I–2**
Troubleshooting Procedure **09-03I–2**
Action for Non-repeatable Malfunction. **09-03I–3**
TROUBLESHOOTING INDEX
[Bluetooth SYSTEM (HANDS-FREE TELEPHONE (HF/TEL) SYSTEM)] **09-03I–3**
Quick Diagnostic Chart **09-03I–4**
HANDS-FREE TELEPHONE SYSTEM DOES NOT RECEIVE/TRANSMIT CALLS, DOES NOT CONNECT [Bluetooth SYSTEM (HANDS-FREE TELEPHONE (HF/TEL) SYSTEM)] **09-03I–5**
Diagnostic procedure **09-03I–6**
CALLER'S VOICE VOLUME TOO LOW, OR NOISE INTERRUPTS CALL [Bluetooth SYSTEM (HANDS-FREE TELEPHONE (HF/TEL) SYSTEM)] **09-03I–7**
Diagnostic procedure **09-03I–7**
ADDRESSEE'S VOICE VOLUME TOO LOW, OR NOISE INTERRUPTS CALL [Bluetooth SYSTEM (HANDS-FREE TELEPHONE (HF/TEL) SYSTEM)] **09-03I–9**
Diagnostic procedure **09-03I–9**

SYMPTOM TROUBLESHOOTING [Bluetooth SYSTEM (HANDS-FREE TELEPHONE (HF/TEL) SYSTEM)]

FOREWORD [Bluetooth SYSTEM (HANDS-FREE TELEPHONE (HF/TEL) SYSTEM)]

id0903h5844600

- If there is any vehicle malfunction complaint lodged by a customer, perform malfunction diagnosis according to the troubleshooting procedure.

Troubleshooting Procedure

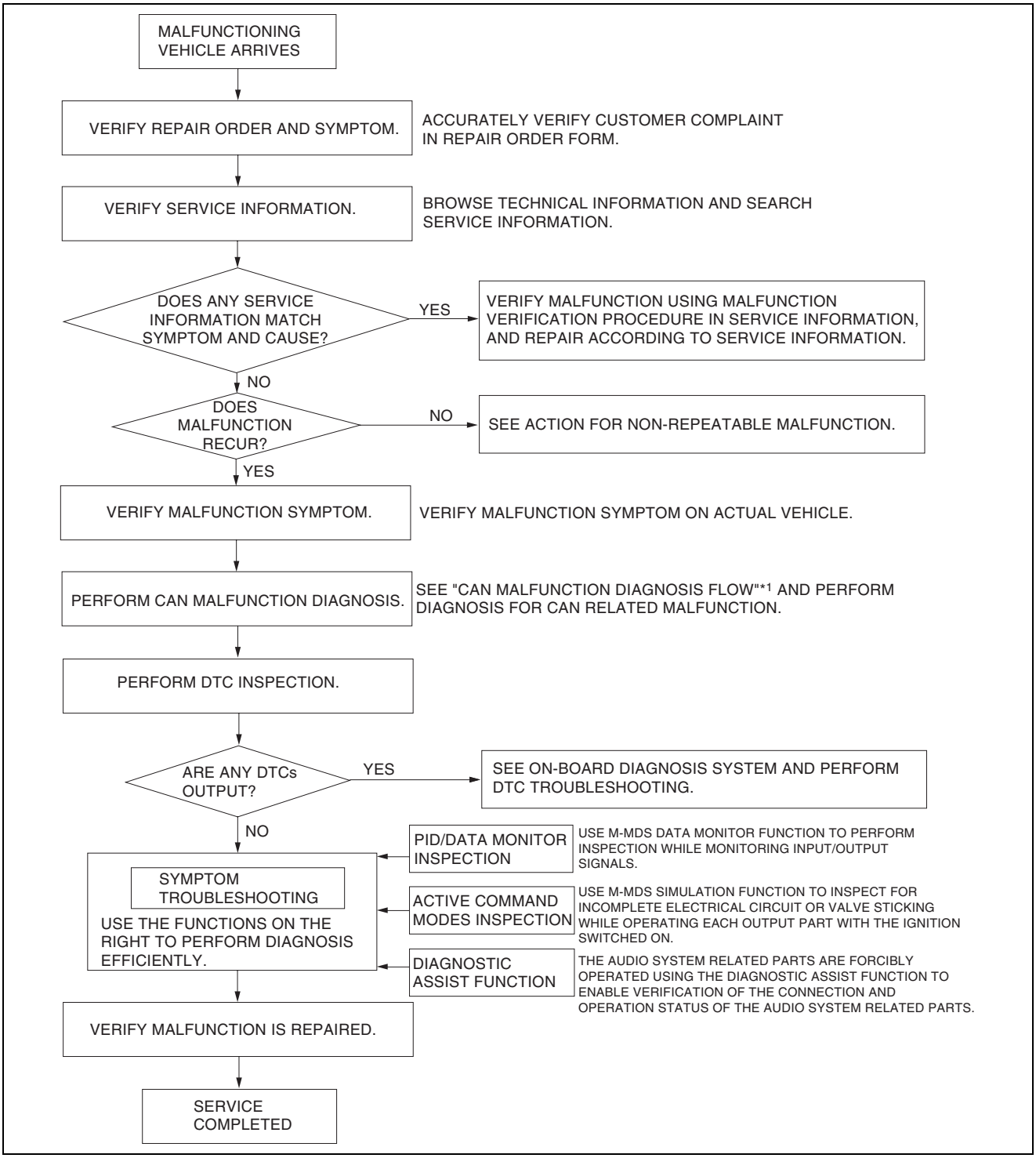

ac5wzw0000291

*1 : 10-02A-3 CONTROLLER AREA NETWORK (CAN) MALFUNCTION DIAGNOSIS FLOW [SKYACTIV-G 2.0 (L.H.D.)] / 10-02B-3 CONTROLLER AREA NETWORK (CAN) MALFUNCTION DIAGNOSIS FLOW [SKYACTIV-G 2.0 (R.H.D.)] / 10-02C-3 CONTROLLER AREA NETWORK (CAN) MALFUNCTION DIAGNOSIS FLOW [SKYACTIV-D 2.2 (L.H.D.)] / 10-02D-3 CONTROLLER AREA NETWORK (CAN) MALFUNCTION DIAGNOSIS FLOW [SKYACTIV-D 2.2 (R.H.D.)]

SYMPTOM TROUBLESHOOTING [Bluetooth SYSTEM (HANDS-FREE TELEPHONE (HF/TEL) SYSTEM)]

Action for Non-repeatable Malfunction

- If the malfunction does not recur, verify the malfunction cause by performing the following actions:
  - — Based on the repair order form, attempt to drive the vehicle or perform tests to replicate the malfunction, record the data at that time, and detect the malfunction cause.
  - — Shake the wiring harness or connector of the electrical component which is suspected to be the cause of the malfunction, and inspect for malfunction or occurrence of any DTCs.

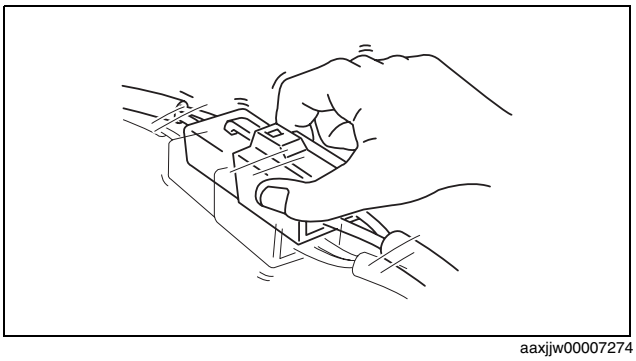

aaxjjw00007274

  - — Inspect the female terminals on the connector of the electric component which is suspected to be the cause of the malfunction for poor connection.

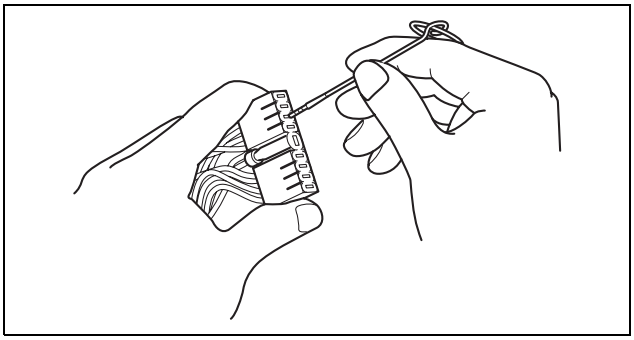

am3uuw0000750

TROUBLESHOOTING INDEX [Bluetooth SYSTEM (HANDS-FREE TELEPHONE (HF/TEL) SYSTEM)]

id0903h5845000

Symptom	Possible DTC	
	Using the M-MDS	Without using M-MDS (On-board diagnostic test mode)
09-03I-5 HANDS-FREE TELEPHONE SYSTEM DOES NOT RECEIVE/TRANSMIT CALLS, DOES NOT CONNECT [Bluetooth SYSTEM (HANDS-FREE TELEPHONE (HF/TEL) SYSTEM)]	B116A:12, B116A:13, B116A:44	26:Er81, 26:Er82, 26:Er86
09-03I-5 HANDS-FREE TELEPHONE SYSTEM DOES NOT RECEIVE/TRANSMIT CALLS, DOES NOT CONNECT [Bluetooth SYSTEM (HANDS-FREE TELEPHONE (HF/TEL) SYSTEM)]	—	26:Er81
09-03I-5 HANDS-FREE TELEPHONE SYSTEM DOES NOT RECEIVE/TRANSMIT CALLS, DOES NOT CONNECT [Bluetooth SYSTEM (HANDS-FREE TELEPHONE (HF/TEL) SYSTEM)]	—	26:Er81

SYMPTOM TROUBLESHOOTING [Bluetooth SYSTEM (HANDS-FREE TELEPHONE (HF/TEL) SYSTEM)]

Quick Diagnostic Chart

X: Applicable

Possible factor / Troubleshooting item	Hands-free telephone system does not receive/transmit calls, does not connect	Caller's voice volume too low, or noise interrupts call	Addressee's voice volume too low, or noise interrupts call
A cellular phone other than a hands-free telephone system-enabled models is used	X	X	X
Cellular phone is outside of the signal transmission area	X		
Cellular phone does not operate (low battery voltage, power off)	X		
Cellular phone does not set up to Bluetooth system	X		
Bluetooth does not operate	X	X	X
Poor connection in the connector	X	X	X
Open or short circuit in the wiring harness between the microphone and Bluetooth unit	X	X	
Microphone malfunction	X	X	
Open or short circuit in the wiring harness between the Hang-up/Pick-up/Talk switch and Bluetooth unit	X	X	
Hang-up/Pick-up/Talk switch malfunction	X	X	
CAN communication error between the audio unit and Bluetooth unit	X	X	X
Open or short circuit in the wiring harness between the Bluetooth unit and the speaker through the audio unit (without Bose®)	X		X
Open or short circuit in the wiring harness between the Bluetooth unit and the speaker through the audio amplifier (with Bose®)	X		X
Open or short circuit in the wiring harness between the Bluetooth unit and the audio unit (without Bose®)	X		
Open or short circuit in the wiring harness between the Bluetooth unit and the audio amplifier (with Bose®)	X		
Open or short circuit in the wiring harness of the Bluetooth unit power supply or ground circuit	X		
Bluetooth unit malfunction	X	X	X
Vehicle is in a place where signal transmission is weak		X	X
Noise while driving is loud (engine, tire noise, blower fan noise)		X	
Windows and/or sunroof are open		X	
Bluetooth unit does not receive the vehicle speed signal		X	X
Steering switch (+) and/or related circuit malfunction		X	X
The volume of the Hands-free telephone system is set at a low level or zero			X

ac5wzw0000295

SYMPTOM TROUBLESHOOTING [Bluetooth SYSTEM (HANDS-FREE TELEPHONE (HF/TEL) SYSTEM)]

HANDS-FREE TELEPHONE SYSTEM DOES NOT RECEIVE/TRANSMIT CALLS, DOES NOT CONNECT [Bluetooth SYSTEM (HANDS-FREE TELEPHONE (HF/TEL) SYSTEM)]

id0903h5017500

Possible DTC	**Hands-free telephone system does not receive/transmit calls, does not connect**	
	Using the M-MDS	**B116A:12, B116A:13, B116A:44**
	Without using M-MDS (On-board diagnostic test mode)	**26:Er81, 26:Er82, 26:Er86**
Possible cause	• Problem in cellular phone — A cellular phone other than a hands-free telephone system-enabled models is used — Cellular phone is outside of the signal transmission area — Cellular phone does not operate (low battery voltage, power off) — Cellular phone does not set up to Bluetooth system — Bluetooth does not operate • Malfunction in microphone related parts — Poor connection in the connector — Open or short circuit in the wiring harness between the microphone and Bluetooth unit — Microphone malfunction • Malfunction in steering switch related parts — Poor connection in the connector — Open or short circuit in the wiring harness between the Hang-up/Pick-up/Talk switch and Bluetooth unit — Hang-up/Pick-up/Talk switch malfunction • Malfunction in audio system — Poor connection in the connector — CAN communication error between the audio unit and Bluetooth unit — Open or short circuit in the wiring harness between the Bluetooth unit and the speaker through the audio unit (without Bose®) — Open or short circuit in the wiring harness between the Bluetooth unit and the speaker through the audio amplifier (with Bose®) • Bluetooth unit does not respond — Poor connection in the connector — Open or short circuit in the wiring harness between the Bluetooth unit and the audio unit (without Bose®) — Open or short circuit in the wiring harness between the Bluetooth unit and the audio amplifier (with Bose®) — Open or short circuit in the wiring harness of the Bluetooth unit power supply or ground circuit — Bluetooth unit malfunction • Bluetooth unit electric field disturbance due to metallic device around Bluetooth unit	

SYMPTOM TROUBLESHOOTING [Bluetooth SYSTEM (HANDS-FREE TELEPHONE (HF/TEL) SYSTEM)]

Diagnostic procedure

- When performing an asterisked (*) troubleshooting inspection, slightly shake the wiring harness and connectors while performing the inspection to discover whether poor contact points are the cause of any intermittent malfunction. If there is a problem, verify that the connectors, terminals and wiring harness are connected correctly and undamaged.

STEP	INSPECTION		ACTION
1	• Verify if the customer's cellular phone is a Hands-free telephone system-enabled model by referring to http://www.mazdausa.com/MusaWeb/displayPage.action?pageParameter=bluetoothHandsFreeSystem . • Is the customer's cellular phone a Hands-free telephone system-enabled model?	Yes	Go to the next step.
		No	Explain to the customer that the customer's cellular phone is not a Hands-free telephone system-enabled model.
2	• Verify that the cellular phone is communicating with the Bluetooth unit. • Does the cellular phone connect to the Bluetooth unit via Bluetooth when the Hands-free telephone system is activated?	Yes	Enter a cellular phone signal transmission area and reinspect the Bluetooth system operation.
		No	Go to the next step.
3	• Inspect the cellular phone condition while the hands free phone does not operate. • Can the following conditions be verified? — Low battery voltage — Power is off — Out of signal transmission area	Yes	Enter a cellular phone signal transmission area and reinspect the Bluetooth system operation.
		No	Go to the next step.
4	• Does the cellular phone set up to the Bluetooth unit?	Yes	Go to the next step.
		No	Set up the cellular phone to the Bluetooth unit.
5	• Is the audio system sound output normal?	Yes	Go to the next step.
		No	Perform the audio system troubleshooting procedure.
6	• Perform the Bluetooth system (hands-free telephone (HF/TEL) system) DTC inspection. • Are the following DTC displayed? — B116A:12/26:Er81 — B116A:13/26:Er82 — B116A:44/26:Er86	Yes	Go to the next step.
		No	Go to Step 8.
7*	• Inspect for open or short circuits in the following wiring harnesses and connectors, and inspect the connector connections. — Between microphone terminal A and audio unit terminal 2L — Between microphone terminal B and audio unit terminal 2N — Between microphone terminal C and audio unit terminal 2R — Between microphone terminal D and audio unit terminal 2P — Between microphone terminal E and audio unit terminal 2T • Are the harnesses and connector connections normal?	Yes	Replace the microphone. (See 09-20-65 MICROPHONE REMOVAL/INSTALLATION.)
		No	Repair or replace malfunctioning parts.
8	• Perform the Bluetooth system (hands-free telephone (HF/TEL) system) DTC inspection. • Is 26:Er81 displayed?	Yes	Inspect and repair the audio system CAN communication.
		No	Go to the next step.
9	• Inspect the Hang-up/Pick-up/Talk switch. (See 09-20-54 STEERING SWITCH REMOVAL/INSTALLATION.) • Is the Hang-up/Pick-up/Talk switch normal?	Yes	Go to the next step.
		No	Replace the steering switch. (See 09-20-54 STEERING SWITCH REMOVAL/INSTALLATION.)
10*	• Inspect for open or short circuits in the following wiring harnesses and connectors, and inspect the connector connections. — Between clock spring terminal B and audio unit terminal 1H — Between clock spring terminal E and audio unit terminal 1P • Are the harnesses and connector connections normal?	Yes	Go to the next step.
		No	Repair or replace malfunctioning parts.

SYMPTOM TROUBLESHOOTING [Bluetooth SYSTEM (HANDS-FREE TELEPHONE (HF/TEL) SYSTEM)]

STEP	INSPECTION		ACTION
11	• Call the hands-free cell phone using another cellular phone. • Do the same symptoms appear?	Yes	Go to the next step.
		No	The cellular phone Bluetooth system is malfunctioning.
12	• Is there any metallic device around the Bluetooth unit?	Yes	Remove the metallic device around the Bluetooth unit, then go to the next step.
		No	Go to the next step.
13	• Verify the malfunction symptom. • Is the malfunction improved?	Yes	Troubleshooting completed.
		No	Go to the next step.
14	• Replace the Bluetooth unit and verify the malfunction symptom. (See 09-20-67 Bluetooth UNIT REMOVAL/INSTALLATION.) • Is the malfunction improved?	Yes	Troubleshooting completed.
		No	Replace the audio unit. (See 09-20-4 AUDIO UNIT REMOVAL/INSTALLATION.)

CALLER'S VOICE VOLUME TOO LOW, OR NOISE INTERRUPTS CALL [Bluetooth SYSTEM (HANDS-FREE TELEPHONE (HF/TEL) SYSTEM)]

id0903h5017600

Possible DTC	**Caller's voice volume too low, or noise interrupts call**	
	Using the M-MDS	**—**
	Without using M-MDS (On-board diagnostic test mode)	**26:Er81**
Possible cause	• Problem in the cellular phone — A cellular phone other than a Hands-free telephone system-enabled models is used — Vehicle is in a place where signal transmission is weak — Bluetooth does not operate • Influence due to vehicle driving conditions — Noise while driving is loud (engine, tire noise, blower fan noise) — Windows and/or sunroof are open • Bluetooth unit does not receive the vehicle speed signal — CAN communication error • Malfunction in the microphone related parts — Poor connection in the connector — Open or short circuit in the wiring harness between the microphone and the Bluetooth unit — Microphone malfunction • Malfunction in the Hang-up/Pick-up/Talk switch — Poor connection in the connector — Open or short circuit in the wiring harness between the Hang-up/Pick-up/Talk switch and the Bluetooth unit — Hang-up/Pick-up/Talk switch malfunction • Malfunction in the audio system — Steering switch (+) and/or related circuit malfunction • Bluetooth unit malfunction	

Diagnostic procedure

- When performing an asterisked (*) troubleshooting inspection, slightly shake the wiring harness and connectors while performing the inspection to discover whether poor contact points are the cause of any intermittent malfunction. If there is a problem, verify that the connectors, terminals and wiring harness are connected correctly and undamaged.

STEP	INSPECTION		ACTION
1	• Verify if the customer's cellular phone is a Hands-free telephone system-enabled model by referring to http://www.mazdausa.com/MusaWeb/displayPage.action?pageParameter=bluetoothHandsFreeSystem. • Is the customer's cellular phone a Hands-free telephone system-enabled model?	Yes	Go to the next step.
		No	Explain to the customer that the customer's cellular phone is not a Hands-free telephone system-enabled model.
2*	• Can the audio volume be controlled using steering switch?	Yes	Go to the next step.
		No	Inspect and repair the steering switch and related wiring harness.

SYMPTOM TROUBLESHOOTING [Bluetooth SYSTEM (HANDS-FREE TELEPHONE (HF/TEL) SYSTEM)]

STEP	INSPECTION		ACTION
3	• Does the symptom appear under following conditions? — Windows and/or sunroof are open — Noise while driving is loud (engine, tire noise, blower fan noise)	Yes	The system is normal. (Influence due to vehicle driving conditions)
		No	Go to the next step.
4	• Perform the Bluetooth system (hands-free telephone (HF/TEL) system) DTC inspection. • Is 26:Er81 displayed?	Yes	Inspect and repair the audio system CAN communication.
		No	Go to the next step.
5*	• Inspect for open or short circuits in the following wiring harnesses and connectors, and inspect the connector connections. — Between microphone terminal A and audio unit terminal 2L — Between microphone terminal B and audio unit terminal 2N — Between microphone terminal C and audio unit terminal 2R — Between microphone terminal D and audio unit terminal 2P — Between microphone terminal E and audio unit terminal 2T • Are the harnesses and connector connections normal?	Yes	Go to the next step.
		No	Repair or replace malfunctioning parts.
6	• Inspect the following switches. (See 09-20-57 STEERING SWITCH INSPECTION.) — Hung-up switch — Pic-up switch — Talk switch • Are the switches normal?	Yes	Go to the next step.
		No	Replace the steering switch. (See 09-20-54 STEERING SWITCH REMOVAL/INSTALLATION.)
7*	• Inspect for open or short circuits in the following wiring harnesses and connectors, and inspect the connector connections. — Between clock spring terminal B and audio unit terminal 1H — Between clock spring terminal E and audio unit terminal 1P • Are the harnesses and connector connections normal?	Yes	Go to the next step.
		No	Repair or replace malfunctioning parts.
8	• Make a call with the cellular phone without using Bluetooth system. • Does the same symptom appear?	Yes	Cellular phone related problem.
		No	Go to the next step.
9	• Call the hands-free cell phone using another cellular phone. • Does the same symptom appear?	Yes	Go to the next step.
		No	The cellular phone Bluetooth system is malfunctioning.
10	• Replace the microphone. (See 09-20-65 MICROPHONE REMOVAL/INSTALLATION.) • Does the same symptom appear?	Yes	Replace the Bluetooth unit. (See 09-20-67 Bluetooth UNIT REMOVAL/INSTALLATION.)
		No	Troubleshooting is completed. (The microphone is malfunctioning.)

SYMPTOM TROUBLESHOOTING [Bluetooth SYSTEM (HANDS-FREE TELEPHONE (HF/TEL) SYSTEM)]

ADDRESSEE'S VOICE VOLUME TOO LOW, OR NOISE INTERRUPTS CALL [Bluetooth SYSTEM (HANDS-FREE TELEPHONE (HF/TEL) SYSTEM)]

id0903h5017700

Possible DTC	**Addressee's voice volume too low, or noise interrupts call**	
	Using the M-MDS	**—**
	Without using M-MDS (On-board diagnostic test mode)	**26:Er81**
Possible cause	• Problem in the cellular phone — A cellular phone other than a Hands-free telephone system-enabled models is used — Vehicle is in a place where signal transmission is weak — Bluetooth does not operate • The volume of the Hands-free telephone system is set at a low level or zero • Bluetooth unit does not receive the vehicle speed signal — CAN communication error • Malfunction in the audio system — Poor connection in the connector — Open or short circuit in the wiring harness between the Bluetooth unit and the speaker through the audio amplifier (with Bose® system) — Open or short circuit in the wiring harness between the Bluetooth unit and the speaker through the audio unit (without Bose®) — Steering switch (+) and/or related circuit malfunction • Bluetooth unit malfunction	

Diagnostic procedure

- When performing an asterisked (*) troubleshooting inspection, slightly shake the wiring harness and connectors while performing the inspection to discover whether poor contact points are the cause of any intermittent malfunction. If there is a problem, verify that the connectors, terminals and wiring harness are connected correctly and undamaged.

STEP	INSPECTION		ACTION
1	• Verify if the customer's cellular phone is a Hands-free telephone system-enabled model by referring to http://www.mazdausa.com/MusaWeb/displayPage.action?pageParameter=bluetoothHandsFreeSystem . • Is the customer's cellular phone a Hands-free telephone system-enabled model?	Yes	Go to the next step.
		No	Explain to the customer that the customer's cellular phone is not a Hands-free telephone system-enabled model.
2	• Verify the volume setting of the Hands-free telephone system. • Is the volume set at a low level or zero?	Yes	• Verify if the malfunction symptom is eliminated after the volume is set to a higher level. • If the malfunction is not resolved, go to the next step. • If the malfunction is resolved, explain to the customer that the malfunction occurred due to an inappropriate volume setting.
		No	Go to the next step.
3	• Is the audio system sound output normal?	Yes	Go to the next step.
		No	Perform the audio system troubleshooting procedure.
4	• Can the audio volume be controlled using steering switch?	Yes	Go to the next step.
		No	Inspect and repair the steering switch and related wiring harness.
5	• Perform the Bluetooth system (hands-free telephone (HF/TEL) system) DTC inspection. • Is 26:Er81 displayed?	Yes	Inspect and repair the audio system CAN communication.
		No	Go to the next step.
6*	• Inspect for open or short circuits in the following wiring harnesses and connectors, and inspect the connector connections. — Between Bluetooth unit (28-pin) terminal J and audio unit (24-pin) terminal 2D — Between Bluetooth unit (28-pin) terminal I and audio unit (24-pin) terminal 2C — Between Bluetooth unit (28-pin) terminal N and audio unit (24-pin) terminal 2B — Between Bluetooth unit (28-pin) terminal M and audio unit (24-pin) terminal 2A • Are the harnesses and connector connections normal?	Yes	Go to the next step.
		No	Repair or replace malfunctioning parts.

SYMPTOM TROUBLESHOOTING [Bluetooth SYSTEM (HANDS-FREE TELEPHONE (HF/TEL) SYSTEM)]

STEP	INSPECTION		ACTION
7	• Make a call with the cellular phone without using Bluetooth system. • Does the same symptom appear?	Yes	Cellular phone related problem.
		No	Go to the next step.
8	• Call the hands-free cell phone using another cellular phone. • Does the same symptom appear?	Yes	Replace the Bluetooth unit. (See 09-20-67 Bluetooth UNIT REMOVAL/INSTALLATION.)
		No	The cellular phone Bluetooth system is malfunctioning.

09-03J SYMPTOM TROUBLESHOOTING [CD PLAYER]

FOREWORD [CD PLAYER] 09-03J–2
Troubleshooting Procedure 09-03J–2
Action for Non-repeatable Malfunction. 09-03J–3
TROUBLESHOOTING INDEX [CD PLAYER] 09-03J–3
Troubleshooting Index 09-03J–3
CD PLAYER DOES NOT LOAD THE CD OR EJECTS THE CD IMMEDIATELY [CD PLAYER] 09-03J–5
CD PLAYER DOES NOT EJECT THE CD [CD PLAYER] 09-03J–5
CD PLAYER DOES NOT PLAY THE CD/NO SOUND [CD PLAYER] . . . 09-03J–6
SOUND JUMPS [CD PLAYER]. 09-03J–7
CD PLAYER SCRATCHES ON THE CD [CD PLAYER] 09-03J–7
CD PLAYER DOES NOT PLAY THE MP3/WMA-FORMATTED FILE [CD PLAYER] 09-03J–8
MP3/WMA-FORMATTED FILE FOLDER SELECTION IS INOPERATIVE/TRACK SEARCH IS INOPERATIVE [CD PLAYER] 09-03J–9
CD PLAYER DOES NOT INDICATE THE MP3/WMA TITLE TEXT [CD PLAYER] 09-03J–10
CD PLAYER DOES NOT PLAY THE AUDIO DATA (CDDA) [CD PLAYER] 09-03J–10
TRACK CHANGE IS INOPERATIVE [CD PLAYER] 09-03J–11
REFERENCE [CD PLAYER] 09-03J–11
MP3/WMA-Formatted File. 09-03J–12

SYMPTOM TROUBLESHOOTING [CD PLAYER]

FOREWORD [CD PLAYER]

id0903k3802700

- If there is any vehicle malfunction complaint lodged by a customer, perform malfunction diagnosis according to the troubleshooting procedure.

Troubleshooting Procedure

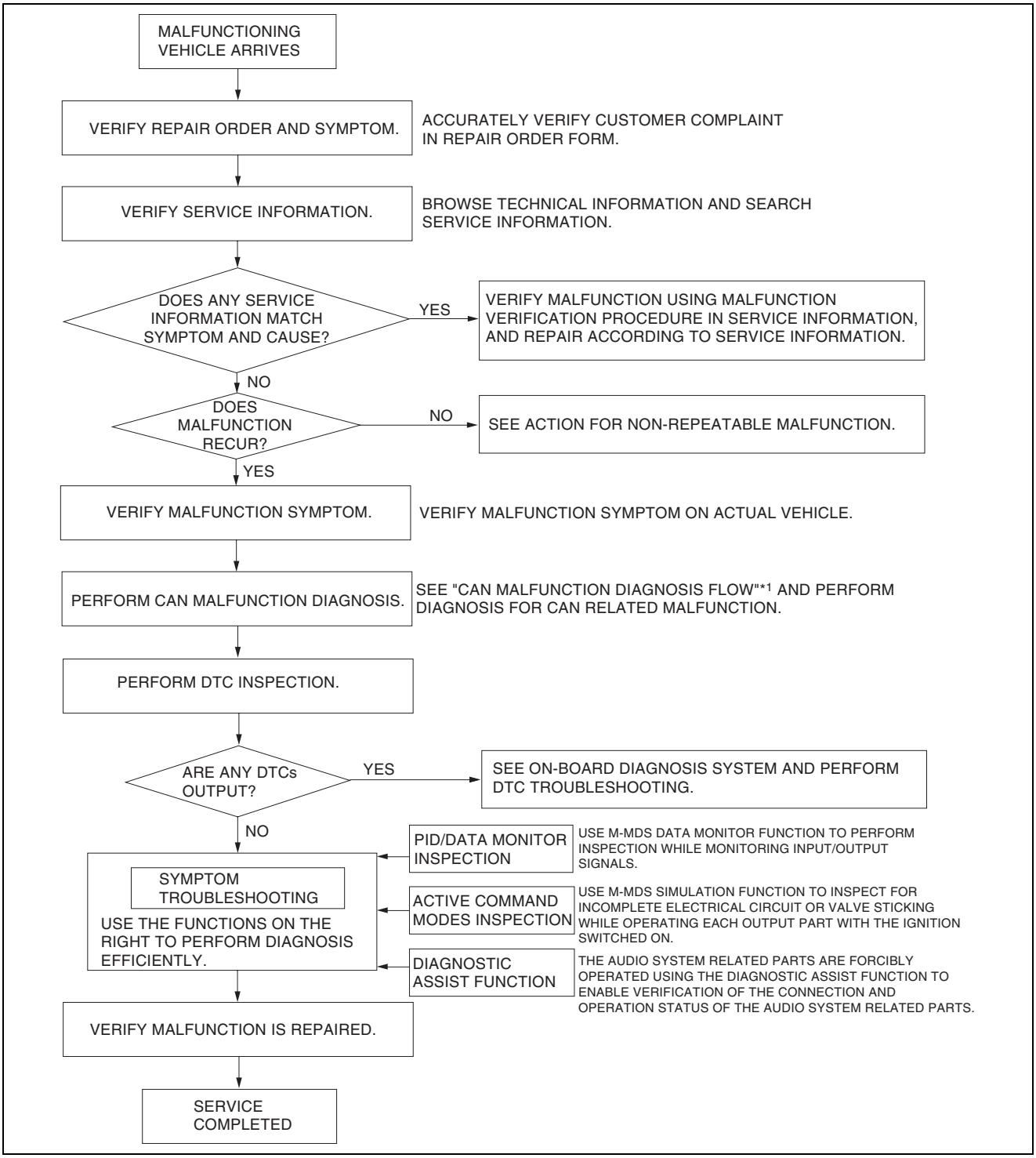

ac5wzw0000295

*1 : 10-02A-3 CONTROLLER AREA NETWORK (CAN) MALFUNCTION DIAGNOSIS FLOW [SKYACTIV-G 2.0 (L.H.D.)] / 10-02B-3 CONTROLLER AREA NETWORK (CAN) MALFUNCTION DIAGNOSIS FLOW [SKYACTIV-G 2.0 (R.H.D.)] / 10-02C-3 CONTROLLER AREA NETWORK (CAN) MALFUNCTION DIAGNOSIS FLOW [SKYACTIV-D 2.2 (L.H.D.)] / 10-02D-3 CONTROLLER AREA NETWORK (CAN) MALFUNCTION DIAGNOSIS FLOW [SKYACTIV-D 2.2 (R.H.D.)]

SYMPTOM TROUBLESHOOTING [CD PLAYER]

Action for Non-repeatable Malfunction

- If the malfunction does not recur, verify the malfunction cause by performing the following actions:
  - — Based on the repair order form, attempt to drive the vehicle or perform tests to replicate the malfunction, record the data at that time, and detect the malfunction cause.
  - — Shake the wiring harness or connector of the electrical component which is suspected to be the cause of the malfunction, and inspect for malfunction or occurrence of any DTCs.

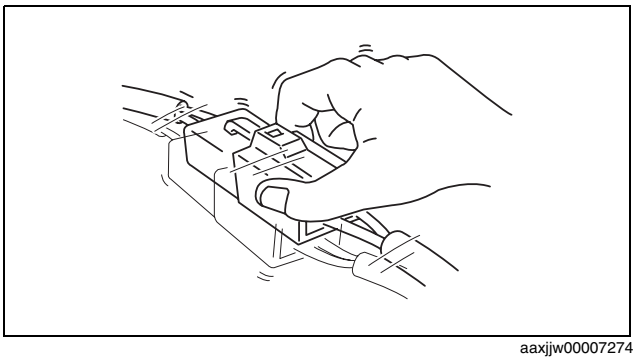

aaxjjw00007274

  - — Inspect the female terminals on the connector of the electric component which is suspected to be the cause of the malfunction for poor connection.

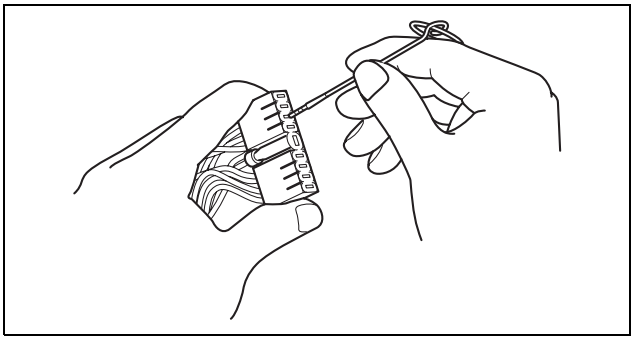

am3uuw0000750

TROUBLESHOOTING INDEX [CD PLAYER]

id0903k3801000

Troubleshooting Index

Items	Symptom	Possible DTC	
		Using the M-MDS	Without using M-MDS (On-board diagnostic test mode)
CD player	09-03J-5 CD PLAYER DOES NOT LOAD THE CD OR EJECTS THE CD IMMEDIATELY [CD PLAYER]	B1D19:79	10:Er01
	09-03J-5 CD PLAYER DOES NOT EJECT THE CD [CD PLAYER]	B1D19:79	10:Er01
	09-03J-6 CD PLAYER DOES NOT PLAY THE CD/NO SOUND [CD PLAYER]	B1188:64	10:Er07
	09-03J-7 SOUND JUMPS [CD PLAYER]	B1188:64	10:Er07
	09-03J-7 CD PLAYER SCRATCHES ON THE CD [CD PLAYER]	B1188:64	10:Er07
CD player (MP3/WMA formatted file payback function)	09-03J-8 CD PLAYER DOES NOT PLAY THE MP3/WMA-FORMATTED FILE [CD PLAYER]	B1188:64	10:Er07
	09-03J-9 MP3/WMA-FORMATTED FILE FOLDER SELECTION IS INOPERATIVE/ TRACK SEARCH IS INOPERATIVE [CD PLAYER]	B1D19:71	10:Er02
	09-03J-10 CD PLAYER DOES NOT INDICATE THE MP3/WMA TITLE TEXT [CD PLAYER]	B1D19:71, B1188:64	10:Er02, 10:Er07
	09-03J-10 CD PLAYER DOES NOT PLAY THE AUDIO DATA (CDDA) [CD PLAYER]	B1D19:71, B1188:64	10:Er02, 10:Er07
CD player	09-03J-11 TRACK CHANGE IS INOPERATIVE [CD PLAYER]	B1D19:71	10:Er02

SYMPTOM TROUBLESHOOTING [CD PLAYER]

Quick Diagnostic Chart

X: Applicable

Troubleshooting Item / Possible factor	CD player					MP3/WMA (Windows media audio) applicable CD player				CD player
	CD player dose not load the CD or ejects the CD immediately	CD player dose not eject the CD	CD player dose not play the CD/No sound	Sound jumps	CD player scratches on the CD	CD player does not play the MP3/WMA-formatted file	MP3/WMA-formatted file folder selection is inoperative /track search is inoperative	CD player does not indicate the MP3/WMA title text	CD player dose not play the audio data (CODA)	Track change is inoperative
Insertion angle of disc incorrect	X									
CD is inserted upside down	X									
Defective CD (egg., cracked, badly bent, rough edges, scratch, dirty CD, condensation)	X	X	X	X						X
Non-conventional discs (e.g., 8 cm (3 in) disc adapter, heart-shaped disc, octagonal disc)	X	X	X							X
Deformed disc is used (e.g., out of specification (thickness), bent disc)	X	X			X					
Poor connection of audio unit connector or terminal (e.g., damaged, bent, pull-out pin, corrosion)	X	X								
Audio unit malfunction	X	X	X	X	X	X	X	X	X	X
Multiple CDs are inserted into the CD player at the same time		X			X					
CD is inserted upside down			X							
Improper audio unit installation (e.g., rattle, loose)				X						
Inadequate tire pressure				X						
Improper panel switch installation										
Audio panel switch malfunction										X
CD-R/RW written format is out of specification						X			X	
MP3/WMA and other format data are in the CD-R/RW						X				
File extension for MP3/WMA-formatted file is incorrect (Correct: ".mp3"/".wma", Incorrect: e.g., RIFF)						X				
Defective CD-R/RW (e.g., dirty, scratch)						X	X	X	X	
Conflict of ID tag version for CD-R/RW							X	X		
Improper folder and/or music title in CD-R/RW							X			
The number of characters of folder/music file name in CD-R/RW exceeds the maximum number of characters							X	X		
Improper encode in CD-R/RW							X	X		
No title input in CD-R/RW								X		
Input title text by 2-bytes characters								X		
Data other than the audio data is in CD-R/RW									X	

ac5wzw0000251

SYMPTOM TROUBLESHOOTING [CD PLAYER]

CD PLAYER DOES NOT LOAD THE CD OR EJECTS THE CD IMMEDIATELY [CD PLAYER]

id0903k3016500

Possible DTC	**CD player does not load the CD or ejects the CD immediately**	
	Using the M-MDS	**B1D19:79**
	Without using M-MDS (On-board diagnostic test mode)	**10:Er01**
Possible cause	• Insertion angle of disc incorrect • CD is inserted upside down • Defective CD (e.g., cracked, badly bent, rough edges, scratch, dirty CD, condensation) • Non-conventional discs (e.g., 8 cm (3 in) disc adapter, heart-shaped disc, octagonal disc) • Deformed disc is used (e.g., out of specification (thickness), bent disc) • Poor connection of audio unit connector or terminal (e.g., damaged, bent, pulled-out pin, corrosion) • Audio unit malfunction	

Diagnostic procedure

STEP	INSPECTION		ACTION
1	• Verify the insertion angle of the disc. • Does a malfunction occur only when the insertion angle is tilted?	Yes	The system is normal. (Explain to the customer that the cause is the insertion angle.)
		No	Go to the next step.
2	• Can the disc in which a malfunction occurs be specified?	Yes	The system is normal. (Explain to the customer that the cause is a disc that is damaged or dirty on the playback side, or warped.)
		No	Go to the next step.
3	• Is CD inserted properly, label-side up?	Yes	Go to the next step.
		No	Explain to the customer that CD should be inserted into the slot, label-side up.
4	• Switch the ignition off (LOCK). • Inspect the connection of the audio unit connector (24-pin). • Inspect both audio unit connector and wiring harness-side connector for poor connection. (such as damaged/bent/pulled-out pins, corrosion) • All the pins and connector normal?	Yes	Replace the audio unit. (See 09-20-4 AUDIO UNIT REMOVAL/INSTALLATION.)
		No	**If the audio unit connector/pin is wrong:** • Replace the audio unit. (See 09-20-4 AUDIO UNIT REMOVAL/INSTALLATION.) **If the wiring harness-side connector/pin is wrong:** • Repair or replace the pins and/or the connector.

CD PLAYER DOES NOT EJECT THE CD [CD PLAYER]

id0903k3016600

Possible DTC	**CD player does not eject the CD**	
	Using the M-MDS	**B1D19:79**
	Without using M-MDS (On-board diagnostic test mode)	**10:Er01**
Possible cause	• Defective CD. (e.g., cracked, badly bent, rough edges, scratch, dirty CD, condensation) • Non-conventional discs (e.g., 8 cm (3 in) disc adapter, heart-shaped disc, octagonal disc) • Poor connection of audio unit connector or terminal (e.g., damaged, bent, pulled-out pin, corrosion) • Deformed disc is used (e.g., out of specification (thickness), bent disc). • Multiple CDs are inserted into the CD player at the same time • Audio unit malfunction **Note** • The CD may be malfunctioning if the CD player does not eject the certain CD only. Inspect the CD player operation using the CD known to be good.	

Diagnostic procedure

STEP	INSPECTION		ACTION
1	• Can the disc in which the malfunction occurs be specified?	Yes	The system is normal. (Explain to the customer that the cause is a disc that is damaged or dirty on the playback side, or warped.)
		No	Go to the next step.

SYMPTOM TROUBLESHOOTING [CD PLAYER]

STEP	INSPECTION		ACTION
2	• Switch the ignition off (LOCK). • Inspect the connection of the audio unit connector (24-pin). • Inspect both audio unit connector and wiring harness-side connector for poor connection. (such as damaged/bent/pulled-out pins, corrosion) • All the pins and connector normal?	Yes	Go to the next step.
		No	**If the audio unit connector/pin is wrong:** • Replace the audio unit. (See 09-20-4 AUDIO UNIT REMOVAL/INSTALLATION.) **If the wiring harness-side connector/pin is wrong:** • Repair or replace the pins and/or the connector.
3	• Insert the CD into the CD player. • Does the CD insert into the CD player smoothly?	Yes	Replace the audio unit. (See 09-20-4 AUDIO UNIT REMOVAL/INSTALLATION.)
		No	Install the audio panel and/or CD cover properly, then go to the next step.
4	• Is the CD ejected from the CD player?	Yes	Troubleshooting completed. Explain repairs to the customers.
		No	Replace the audio unit. (See 09-20-4 AUDIO UNIT REMOVAL/INSTALLATION.)

CD PLAYER DOES NOT PLAY THE CD/NO SOUND [CD PLAYER]

id0903k3016700

Possible DTC	**CD player does not play the CD/No sound**	
	Using the M-MDS	**B1188:64**
	Without using M-MDS (On-board diagnostic test mode)	**10:Er07**
Possible cause	• CD is inserted upside down • Defective CD (e.g., cracked, badly bent, rough edges, scratch, dirty CD, condensation) • Non-conventional discs (e.g., 8 cm (3 in) disc adapter, heart-shaped disc, octagonal disc) • Audio unit malfunction	

Diagnostic procedure

STEP	INSPECTION		ACTION
1	• Can the disc in which the malfunction occurs be specified?	Yes	The system is normal. (Explain to the customer that the cause is a disc that is damaged or dirty on the playback side, or warped.)
		No	Go to the next step.
2	• Turn the radio ON and inspect that there is sound. • Is there sound? **Note** • Check for the volume dial position.	Yes	Go to the next step.
		No	Go to the symptom troubleshooting NO SOUND FROM ALL SPEAKERS [ENTIRE AUDIO SYSTEM].
3	• Was CD inserted properly, label-side up?	Yes	Go to the next step.
		No	Explain to the customer that CD should be inserted into the slot, label-side up.
4	• Visually inspect the CD. — Is there any dirt, scratch or deformation on the CD? — Is the CD a non-conventional disc? — Is there a CD in MP3/WMA recording?	Yes	Explain to the customer that the defective CD or non-conventional disc cannot be use.
		No	Replace the audio unit. (See 09-20-4 AUDIO UNIT REMOVAL/INSTALLATION.)

SYMPTOM TROUBLESHOOTING [CD PLAYER]

SOUND JUMPS [CD PLAYER]

id0903k3016800

Possible DTC	**Sound jumps**	
	Using the M-MDS	**B1188:64**
	Without using M-MDS (On-board diagnostic test mode)	**10:Er07**
Possible cause	• Defective CD (e.g., cracked, badly bent, rough edges, scratch, dirty CD, condensation) • Improper audio unit installation (e.g., rattle, loose) • Inadequate tire pressure • Audio unit malfunction **Note** • The CD may be malfunctioning if the sound jumps on the certain CD only. Inspect the CD player/changer operation using the CD known to be good.	

Diagnostic procedure

STEP	INSPECTION		ACTION
1	• Does the sound skip when pressing the SCAN button?	Yes	The system is normal. (Explain to the customer that the sound skips during SCAN.)
		No	Go to the next step.
2	• Can the disc in which the malfunction occurs be specified?	Yes	The system is normal. (Explain to the customer that the cause is a disc that is damaged or dirty on the playback side, or warped.)
		No	Go to the next step.
3	• Does the sound jump when the vehicle is stopped?	Yes	Go to Step 8.
		No	Go to the next step.
4	• Drive the vehicle. • Does the sound jump when driving over uneven surfaces?	Yes	Go to the next step.
		No	Go to Step 8.
5	• Is the audio unit installed securely?	Yes	Go to the next step.
		No	Install the audio unit securely.
6	• Inspect the tire pressure. • Is the tire pressure normal?	Yes	Replace the audio unit. (See 09-20-4 AUDIO UNIT REMOVAL/INSTALLATION.)
		No	Go to the next step.
7	• Adjust the tire pressure within specification. • Does the sound jump when driving the vehicle?	Yes	Replace the audio unit. (See 09-20-4 AUDIO UNIT REMOVAL/INSTALLATION.)
		No	Audio system is normal. Explain repairs to the customers.
8	• Replace the CD known to be good. • Does the sound jump when driving the vehicle?	Yes	Replace the audio unit. (See 09-20-4 AUDIO UNIT REMOVAL/INSTALLATION.)
		No	Audio system is normal. Explain to the customer that the CD is malfunctioning.

CD PLAYER SCRATCHES ON THE CD [CD PLAYER]

id0903k3016900

Possible DTC	**CD player scratches on the CD**	
	Using the M-MDS	**B1188:64**
	Without using M-MDS (On-board diagnostic test mode)	**10:Er07**
Possible cause	• Deformed disc is used (e.g., out of specification (thickness), bent disc) • Multiple CDs are inserted into the CD player at the same time • Audio unit malfunction	

Diagnostic procedure

STEP	INSPECTION		ACTION
1	• Were the multiple CDs inserted into the CD player at the same time?	Yes	Explain to the customer to insert a CD one by one.
		No	Go to the next step.
2	• Visually inspect the CD. • Is the CD a deformed disc (e.g., out of specification (thickness), bent disc)?	Yes	Audio system is normal. Explain to the customer that the CD is malfunctioning.
		No	Replace the audio unit. (See 09-20-4 AUDIO UNIT REMOVAL/INSTALLATION.)

SYMPTOM TROUBLESHOOTING [CD PLAYER]

CD PLAYER DOES NOT PLAY THE MP3/WMA-FORMATTED FILE [CD PLAYER]

id0903k3017000

Possible DTC	**CD player does not play the MP3/WMA-formatted file**	
	Using the M-MDS	**B1188:64**
	Without using M-MDS (On-board diagnostic test mode)	**10:Er07**
Possible cause	• CD-R/RW written format is out of specification • MP3/WMA and other format data are in the CD-R/RW • File extension for MP3/WMA-formatted file is incorrect (Correct. ".mp3"/".wma", incorrect: e.g., RIFF) • Defective CD-R/RW (e.g. dirty CD, scratch) • Audio unit malfunction **Note** • The free-software for the MP3/WMA-formatted file in the field may cause the deterioration of sound quality, noise, or defective play, so that the CD player won't play the customer made MP3/WMA-formatted file. • The CD player may not play the CD-R/RW properly due to the disc condition. • If there are MP3/WMA-formatted file and other file in the same disc, the CD player may not play the disc. • If there are MP3/WMA-formatted file and audio data in the same disc, the CD player loads and plays the first session of the data only.	

Diagnostic procedure

STEP	INSPECTION		ACTION
1	• Inspect the written format of the recorded data on the CD-R/RW. • Is the written format correct?	Yes	Go to the next step.
		No	Write the CD-R/RW with the correct specification.
2	• Inspect the recorded data in the CD-R/RW. • Is there MP3/WMA and other format data in the CD-R/RW.	Yes	Replace with the CD-R/RW known to be good (MP3/WMA-formatted file data only), then inspect the CD player operation. **If the CD player plays the MP3/WMA-formatted file:** • Audio system is normal. Explain to the customer that the CD player does not operate properly if the MP3/WMA and other format data are in the CD-R/RW. **If the CD player does not play the MP3/WMA-formatted file:** • Replace the audio unit. (See 09-20-4 AUDIO UNIT REMOVAL/INSTALLATION.)
		No	Go to the next step.
3	• Inspect the CD-R/RW written format. • Is the written format within the specification (".mp3" /".wma" is the correct file extension)?	Yes	Replace with the CD-R/RW using the ".mp3" /".wma" file extension, then inspect the CD player operation. **If the CD player plays the MP3/WMA-formatted file:** • Audio system is normal. Explain to the customer that the CD player does not operate properly if the correct file extension is not used. **If the CD player does not play the MP3/WMA-formatted file:** • Replace the audio unit. (See 09-20-4 AUDIO UNIT REMOVAL/INSTALLATION.)
		No	Go to the next step.
4	• Visually inspect the CD-R/RW. • Is there any dirt or scratch on the CD-R/RW?	Yes	Clean the disc or replace with the CD-R/RW known to be good.
		No	Replace the audio unit. (See 09-20-4 AUDIO UNIT REMOVAL/INSTALLATION.)

SYMPTOM TROUBLESHOOTING [CD PLAYER]

MP3/WMA-FORMATTED FILE FOLDER SELECTION IS INOPERATIVE/TRACK SEARCH IS INOPERATIVE [CD PLAYER]

id0903k3017100

Possible DTC	**MP3/WMA-formatted file folder selection is inoperative/Track search is inoperative**	
	Using the M-MDS	**B1D19:71**
	Without using M-MDS (On-board diagnostic test mode)	**10:Er02**
Possible cause	• Defective CD-R/RW (e.g. dirty CD, scratch) • Conflict of ID tag version for CD-R/RW (MP3) • Improper folder and/or music title in CD-R/RW • The number of characters of folder/audio file name in CD-R/RW exceeds the maximum number of characters • Improper encode in CD-R/RW • Audio unit malfunction	

Note

- ID3 is a tagging format for MP3-formatted file. ID3 allows metadata (e.g., title, artist, track number, etc.) to be added to the MP3-formatted file.
- There are two versions in the ID tag.
  - — ID3v1: This is the most widespread standard tag formats and most software is compatible with this version. There is a limitation on the maximum number of characters for the text data.
  - — ID3v2: There are a variety of version in V2, but there is no interchangeability among the versions.

Limitation on the maximum number of characters for the text data (ID3v1)

Item	Maximum number of characters	Description
Title	30	Music title
Artist	30	Artist name
Album	30	Album title
Year	4	Album produced year/CD wholesale year
Genre	—	Music category selection
Comment	30	Free comment
Track	3	Track number

- In a WMA file, the track name, artist name and album name are recorded with data called “WMA-Tag”, and the information can be displayed.
- WMA files which do not comply with the specific standard may not be played correctly or its file and folder name may not be displayed correctly.
- The file extension may not be provided depending on the computer operating system, version, software, or setting. In this case, add the file extension “.wma” to the end of the file name, and then write the disc.

Diagnostic procedure

STEP	INSPECTION		ACTION
1	• Visually inspect the CD-R/RW. • Is there any dirt or scratch on the CD-R/RW?	Yes	Clean the disc or replace with the CD-R/RW known to be good.
		No	Go to the next step. (MP3)/Go to the step 3.(WMA)
2	• Inspect the ID tag version. • Is ID tag correct?	Yes	Go to the next step.
		No	Write the CD-R/RW with the correct ID tag version.
3	• Inspect folder and audio file name. • Are all file name input correctly?	Yes	Go to the next step.
		No	Use the CD-R/RW that a folder and audio file name is input correctly.
4	• Inspect the encode for the folder and audio file name in the CD-R/RW. • Is the encode correct? **Note** • Unreadable characters may be displayed if incorrect encode is used.	Yes	Go to the next step.
		No	Use the correct encode.
5	• Inspect the number of characters for the folder and audio file name. • Is the number of characters within the maximum number of characters?	Yes	Replace the audio unit. (See 09-20-4 AUDIO UNIT REMOVAL/INSTALLATION.)
		No	Input the folder and audio file name within the maximum number of characters.

SYMPTOM TROUBLESHOOTING [CD PLAYER]

CD PLAYER DOES NOT INDICATE THE MP3/WMA TITLE TEXT [CD PLAYER]

id0903k3017200

Possible DTC	**CD player does not indicate the MP3/WMA title text**	
	Using the M-MDS	**B1D19:71, B1188:64**
	Without using M-MDS (On-board diagnostic test mode)	**10:Er02, 10:Er07**
Possible cause	• Defective CD-R/RW (e.g. dirty CD, scratch) • Conflict of ID tag version for CD-R/RW (MP3) • The number of characters of folder/audio file name in CD-R/RW exceeds the maximum number of characters • Improper encode in CD-R/RW • No title input in CD-R/RW • Input title text by 2-bytes characters • Audio unit malfunction	

Diagnostic procedure

STEP	INSPECTION		ACTION
1	• Visually inspect the CD-R/RW. • Is there any dirt or scratch on the CD-R/RW?	Yes	Clean the disc or replace with the CD-R/RW known to be good.
		No	Go to the next step.
2	• Inspect the display the LCD. • Is the CD (other than MP3/WMA compatible) displayed on the LCD?	Yes	Go to the next step. (MP3)/Go to the step 4. (WMA)
		No	Replace the audio panel. (See 09-20-4 AUDIO UNIT REMOVAL/INSTALLATION.)
3	• Inspect the ID tag version. • Is the ID tag correct?	Yes	Go to the next step.
		No	Write the CD-R/RW with the correct ID tag version.
4	• Is the title text input into the CD-R/RW?	Yes	Go to the next step.
		No	Input the title text. **Note** • Do not input the title text by two-bytes character.
5	• Inspect the encode for the folder and audio file name in the CD-R/RW. • Is the encode correct?	Yes	Go to the next step.
		No	Use the correct encode.
6	• Inspect the number of characters for the folder and audio file name. • Is the number of characters within the maximum number of characters?	Yes	Replace the audio unit. (See 09-20-4 AUDIO UNIT REMOVAL/INSTALLATION.)
		No	Input the folder and audio file name within the maximum number of characters.

CD PLAYER DOES NOT PLAY THE AUDIO DATA (CDDA) [CD PLAYER]

id0903k3017300

Possible DTC	**CD player does not play the audio data (CDDA)**	
	Using the M-MDS	**B1D19:71, B1188:64**
	Without using M-MDS (On-board diagnostic test mode)	**10:Er02, 10:Er07**
Possible cause	• CD-R/RW written format is out of specification • Defective CD-R/RW (e.g., dirty CD, scratch) • Data other than the audio data is in CD-R/RW • Audio unit malfunction **Note** • The CD player may not play the CD-R/RW properly due to the disc condition. • If there are MP3/WMA-formatted file and audio data in the same disc, the CD player loads and plays the first session of the data only.	

SYMPTOM TROUBLESHOOTING [CD PLAYER]

Diagnostic procedure

STEP	INSPECTION		ACTION
1	• Replace with the audio-CD known to be good. • Does the CD player play the audio-CD properly?	Yes	Go to the next step.
		No	Replace the audio unit. (See 09-20-4 AUDIO UNIT REMOVAL/INSTALLATION.)
2	• Inspect the written format of the recorded data on the CD-R/RW. • Is the written format correct?	Yes	Go to the next step.
		No	Write the CD-R/RW with the correct specification.
3	• Inspect the recorded data in the CD-R/RW. • Is any data other than the audio data recorded in the CD-R/RW?	Yes	Replace with the CD-R/RW known to be good (record audio data only), then inspect the CD player operation. **If the CD-R/RW plays:** • Audio system is normal. Explain to the customer that the CD player does not operate properly if the audio data and other data are recorded in the CD-R/RW. **If the CD-R/RW does not play:** • Replace the audio unit. (See 09-20-4 AUDIO UNIT REMOVAL/INSTALLATION.)
		No	Go to the next step.
4	• Visually inspect the CD-R/RW. • Is there any dirt or scratch on the CD-R/RW?	Yes	Clean the disc or replace with the CD-R/RW known to be good.
		No	Replace the audio unit. (See 09-20-4 AUDIO UNIT REMOVAL/INSTALLATION.)

TRACK CHANGE IS INOPERATIVE [CD PLAYER]

id0903k3017400

Possible DTC	**Track change is inoperative**	
	Using the M-MDS	**B1D19:71**
	Without using M-MDS (On-board diagnostic test mode)	**10:Er02**
Possible cause	• Defective CD (e.g., cracked, badly bent, rough edges, scratch, dirty CD, condensation) • Non-conventional discs (e.g., 8 cm (3 in) disc adapter, heart-shaped disc, octagonal disc) • Audio panel switch malfunction • Audio unit malfunction	

Diagnostic procedure

STEP	INSPECTION		ACTION
1	• Replace the CD known to be good. • Does the CD player change the track?	Yes	Explain to the customer that the defective CD or non-conventional disc cannot be used.
		No	Go to the next step.
2	• Inspect the panel switch installation. • Does the CD player change the track number on the display when pressing the track up or down switch?	Yes	Replace the audio unit. (See 09-20-4 AUDIO UNIT REMOVAL/INSTALLATION.)
		No	Go to the “No.1 Audio panel switch inspection” in this section. Replace the audio panel as necessary.

REFERENCE [CD PLAYER]

id0903k3830000

- The CD player/changer has been designed to play CDs bearing the identification logo, COMPACT DISC DIGITAL AUDIO, as shown. No other discs can be played on the CD player/changer other than MP3/WMA applicable one.
- The CD player/changer may not play the following CD:
  - — Defective CD (e.g., cracked, badly bent, rough edges, scratch, dirty CD condensation)
  - — CDs accessories (e.g., 8 cm (3 in) disc adapter (with CD player), sticker, label, disc ring and protective sealant)
  - — Nonstandard CD (e.g., Diameter/thickness is out of specification)
    Specification: 119.7—120.3 mm (4.668—4.692 in) of diameter, 1.2+0.3 or -0.1 mm (0.047+0.012 or 0.004 in) of thickness

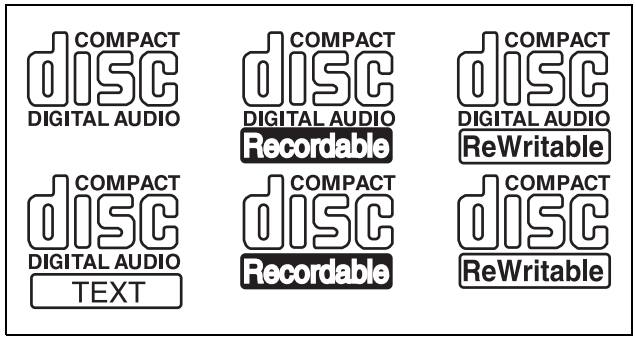

am6zzw0000663

SYMPTOM TROUBLESHOOTING [CD PLAYER]

- Do not use non-conventional discs. The CD player/changer could be damaged.

Examples:

- Although the same physical size as the compact disc, SACD uses a different kind of digital audio signal, Direct Stream Digital.
- The CD player/changer may not play the CD-R/RW properly due to the disc condition (excluding the MP3/WMA).

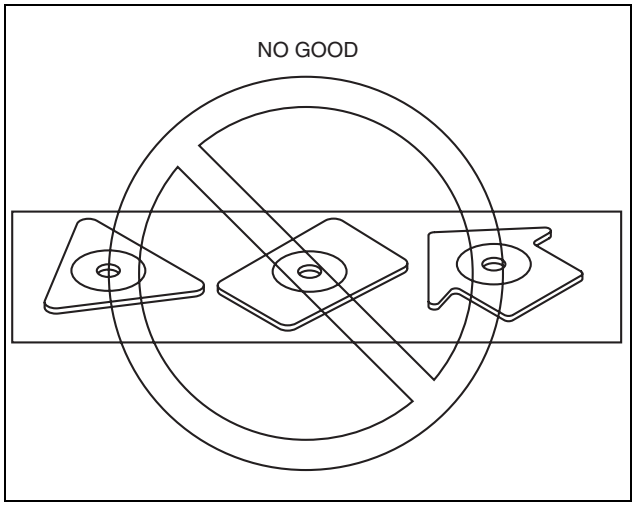

am6zzw0000664

MP3/WMA-Formatted File
Outline of CD-R and CD-RW

- Definition
  - — CD-R: The CD-R is a non-rewritable version. Once a section of a CD-R is written, it cannot be erased or rewritten.
  - — CD-RW: The CD-RW is a re-writable version of CD-ROM and can be written the data an unlimited number of times.
  - — Since a reflected laser beam amount of the CD-R/RW is less than the reflected laser beam amount of the conventional CD media, the CD player/changer may not play the CD-R/RW or have the sound jumped.
  - — Since the recording quality of the CD-R/RW vary widely, some CD-R/RW may not be played.

Recording method

- There are two methods for recording.
- Classification by recorder
  - — Record the audio data in the audio-CD by audio recorder
    - The price of the audio recorder and original audio-CD includes the copyright fee.
  - — Recorded the audio data in the conventional data-CD by the personal computer
    - The data-CD is cheaper than the audio-CD. But, there is a CD with the low quality.
- Classification by audio data uncompression/compression
  - — Uncompressed audio data
    - The CD-R/RW player can play the uncompressed audio data.
  - — Compressed audio data
    - It is possible to record the large quantity of music in a disc. The sound quality varies depends on the audio data compression format. The compressed audio data can be played on the applicable player only.
  - — Type of compression format:
    - MP3: MPEG Audio Layer 3 — Mazda genie MP3 applicable CD player is available.
    - WMA: Windows Media Audio — Mazda genie WMA applicable CD player is available.
    - ATRAG: Adaptive TRansform Acoustic Coding

MP3

- The following condition should be met in order to record the MP3-formatted data on the MP3 applicable CD player:

Media	Applicable to the CD-R/RW
Logical format	ISO 9660 level 1&2 / Joliet / Romeo
Number of directly	8 directly
Number of files	Maximum 255 as a total number of file and folder Maximum 155 for folder
ID3 TAG	Applicable to Ver1.1, 2.3 and 2.4
File extension	MP3
Packet writing	Not applicable
Bit rate	8 kbps—320 kbps/VBR
Sampling rate	11.025 kHz—48 kHz

SYMPTOM TROUBLESHOOTING [CD PLAYER]

WMA (Windows media audio)

- CD-R and CD-RW including WMA files can be played with this unit. Discs which conform to the following formats can be played.
  Playable WMA files are as follows:

Item		Content
Specification		Windows Media Audio Version 7.0, 8.0, 9.0
Sampling frequency	Bit rate	32kHz — 32, 40, 48 kbps
		44.1kHz — 32, 48, 64, 80, 96, 128, 160, 192, 256, 320 kbps
		48kHz — 64, 96, 128, 160, 192 kbps
VBR (Variable Bit Rate)		Supported
Channel mode		Stereo/Monaural
WMA tag		Title, artist name, album name

09-03K SYMPTOM TROUBLESHOOTING [INSTRUMENT CLUSTER]

FOREWORD
[INSTRUMENT CLUSTER] 09-03K–2
Troubleshooting Procedure **09-03K–2**
Action for non-repeatable malfunction. **09-03K–3**
SYMPTOM TROUBLESHOOTING [INSTRUMENT CLUSTER] 09-03K–3
FUEL GAUGE READING IS NOT CORRECT [INSTRUMENT CLUSTER] 09-03K–3
Possible cause **09-03K–3**
Diagnostic Procedure **09-03K–4**
LOW ENGINE COOLANT TEMPERATURE INDICATOR LIGHT/HIGH ENGINE COOLANT TEMPERATURE WARNING LIGHT ILLUMINATES OR FLASHES CONTINUOUSLY [INSTRUMENT CLUSTER] 09-03K–4
Possible cause **09-03K–4**
Diagnostic Procedure **09-03K–5**

SYMPTOM TROUBLESHOOTING [INSTRUMENT CLUSTER]

FOREWORD [INSTRUMENT CLUSTER]

id0903d5715000

- If there is any vehicle malfunction complaint lodged by a customer, perform malfunction diagnosis according to the troubleshooting procedure.

Troubleshooting Procedure

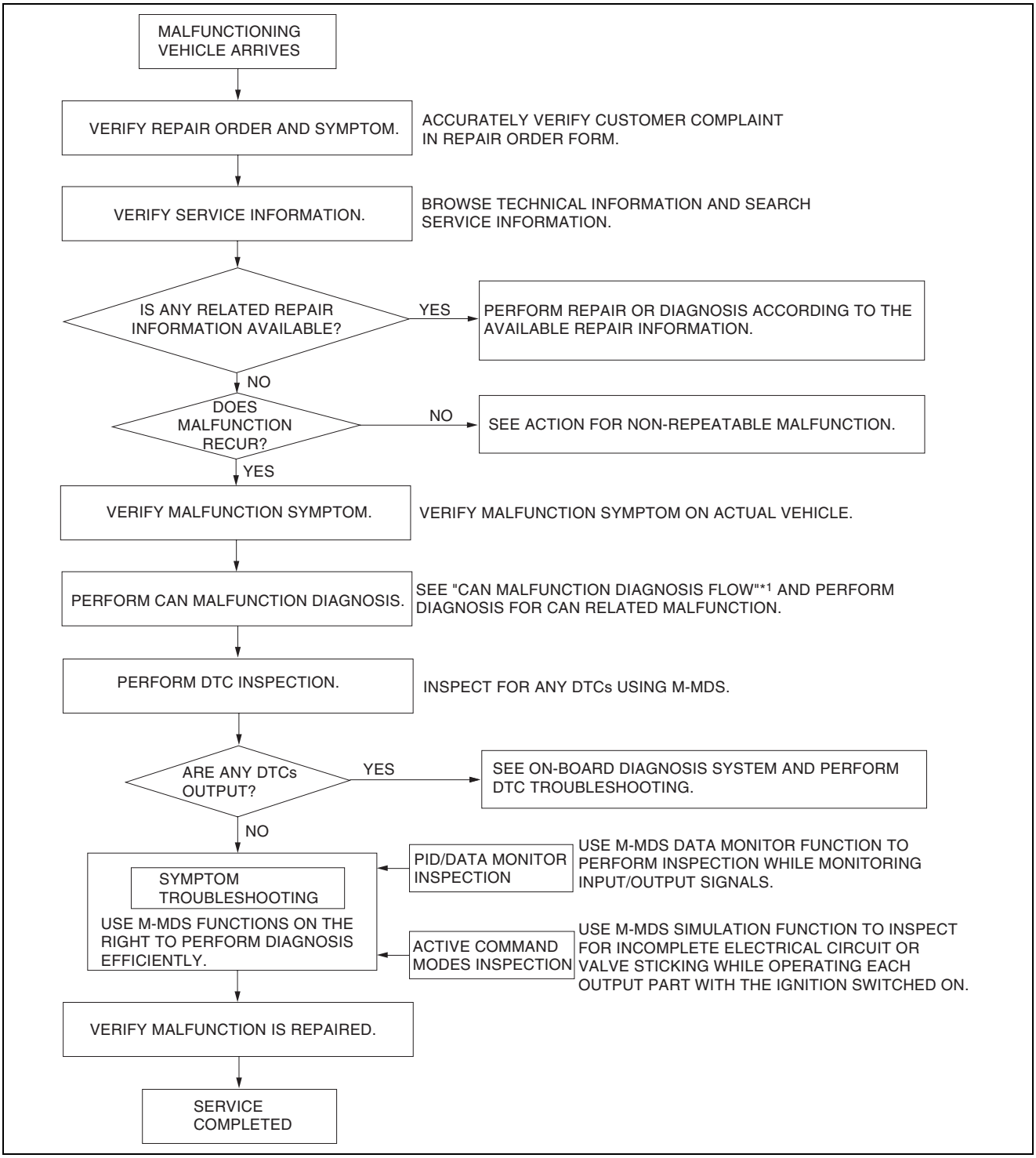

ac5wzw0000290

*1 : 10-02A-3 CONTROLLER AREA NETWORK (CAN) MALFUNCTION DIAGNOSIS FLOW [SKYACTIV-G 2.0 (L.H.D.)]/10-02B-3 CONTROLLER AREA NETWORK (CAN) MALFUNCTION DIAGNOSIS FLOW [SKYACTIV-G 2.0 (R.H.D.)]/10-02C-3 CONTROLLER AREA NETWORK (CAN) MALFUNCTION DIAGNOSIS FLOW [SKYACTIV-D 2.2 (L.H.D.)]/10-02D-3 CONTROLLER AREA NETWORK (CAN) MALFUNCTION DIAGNOSIS FLOW [SKYACTIV-D 2.2 (R.H.D.)]

SYMPTOM TROUBLESHOOTING [INSTRUMENT CLUSTER]

Action for non-repeatable malfunction

- If the malfunction does not recur, verify the malfunction cause by performing the following actions:
  - — Verify that a DTC has been recorded in the memory. (See 09-02G-7 DTC INSPECTION [INSTRUMENT CLUSTER].)
  - — Based on the repair order form, attempt to drive the vehicle or perform tests to replicate the malfunction, record the data at that time, and detect the malfunction cause.
  - — Refer to [Determining Open Circuit Location] based on the recorded DTC, shake the wiring harness or connector of the electrical component which is suspected to be the cause of the malfunction, and inspect for any changes in CAN system voltage or occurrence of any DTCs.

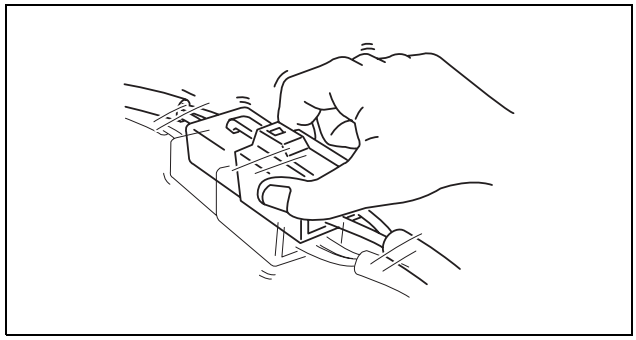

aaxjjw00007274

  - — Inspect the female terminals on the connector of the electric component which is suspected to be the cause of the malfunction for poor connection.

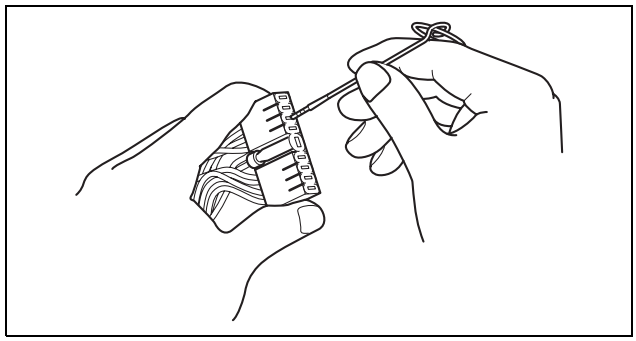

am3uuw0000750

SYMPTOM TROUBLESHOOTING [INSTRUMENT CLUSTER]

id0903d5715100

Troubleshooting item
09-03K-3 FUEL GAUGE READING IS NOT CORRECT [INSTRUMENT CLUSTER]
09-03K-4 LOW ENGINE COOLANT TEMPERATURE INDICATOR LIGHT/HIGH ENGINE COOLANT TEMPERATURE WARNING LIGHT ILLUMINATES OR FLASHES CONTINUOUSLY [INSTRUMENT CLUSTER]

FUEL GAUGE READING IS NOT CORRECT [INSTRUMENT CLUSTER]

id0903d5012800

Possible cause

2WD

- Instrument cluster malfunction
- Rear body control module (RBCM) malfunction
- Fuel gauge sender unit malfunction
- Open or short circuit in wiring harness between fuel gauge sensor unit and rear body control module (RBCM)

4WD

- Instrument cluster malfunction
- Rear body control module (RBCM) malfunction
- Fuel gauge sender unit (main/sub) malfunction
- Open or short circuit in wiring harness between fuel gauge sender unit (main/sub) and rear body control module (RBCM)

SYMPTOM TROUBLESHOOTING [INSTRUMENT CLUSTER]

Diagnostic Procedure

Step	Inspection	Action	
1	**PERFORM CAN MALFUNCTION DIAGNOSIS AND DTC INSPECTION** • Perform the CAN malfunction diagnosis according to the recommendation of 09-03K-2 FOREWORD [INSTRUMENT CLUSTER] malfunction diagnosis, and if there is no CAN malfunction, perform inspection for DTCs. (See 09-02G-7 DTC INSPECTION [INSTRUMENT CLUSTER].) • Is the DTC displayed?	Yes	Go to the applicable DTC inspection. (See 09-02G-10 DTC TABLE [INSTRUMENT CLUSTER].)
		No	Go to the next step.
2	**Inspection of instrument cluster** • Perform inspection of the fuel gauge/LCD display referring to the instrument cluster inspection. (See 09-22-11 INSTRUMENT CLUSTER INSPECTION.) • Is the display normal?	Yes	Go to the next step.
		No	Replace the instrument cluster. (See 09-22-6 INSTRUMENT CLUSTER REMOVAL/INSTALLATION.)
3	**DETERMINE IF MALFUNCTION CAUSE IS FUEL GAUGE SENDER** • Display the following rear body control module (RBCM) PIDs using the M-MDS. — FUEL_SEN_M — FUEL_SEN_S (4WD) • Verify the voltage in the display monitor while shaking the vehicle. • Does the voltage change?	Yes	Go to the next step.
		No	Go to Step 5.
4	**DETERMINE IF MALFUNCTION CAUSE IS REAR BODY CONTROL MODULE (RBCM)** • Display the following instrument cluster PIDs using the M-MDS. — FUEL_SEN_M — FUEL_SEN_S (4WD) • Verify the resistance in the display monitor while shaking the vehicle. • Does the resistance change?	Yes	Replace the instrument cluster. (See 09-22-6 INSTRUMENT CLUSTER REMOVAL/INSTALLATION.)
		No	Replace the rear body control module (RBCM). (See 09-40-9 REAR BODY CONTROL MODULE (RBCM) REMOVAL/INSTALLATION.)
5	**INSPECT FUEL GAUGE SENDER UNIT** • Switch the ignition off (LOCK). • Inspect the fuel gauge sender unit (2WD) or the fuel gauge sender unit (main/sub) (4WD). (See 09-22-34 FUEL GAUGE SENDER UNIT INSPECTION [2WD].) (See 09-22-36 FUEL GAUGE SENDER UNIT INSPECTION [4WD].) • Is the fuel gauge sender unit (2WD) or the fuel gauge sender unit (main/sub) (4WD) normal?	Yes	Inspect the wiring harness between the fuel gauge sender unit (2WD) or the fuel gauge sender unit (main/sub) (4WD) and the rear body control module (RBCM), and repair or replace the malfunctioning part.
		No	Replace the fuel gauge sender unit (2WD) or the fuel gauge sender unit (main/sub) (4WD). (See 09-22-23 FUEL GAUGE SENDER UNIT REMOVAL/INSTALLATION [2WD].) (See 09-22-27 FUEL GAUGE SENDER UNIT REMOVAL/INSTALLATION [4WD].)

LOW ENGINE COOLANT TEMPERATURE INDICATOR LIGHT/HIGH ENGINE COOLANT TEMPERATURE WARNING LIGHT ILLUMINATES OR FLASHES CONTINUOUSLY [INSTRUMENT CLUSTER]

id0903d5013300

Possible cause

- ECT sensor malfunction
- Instrument cluster malfunction

SYMPTOM TROUBLESHOOTING [INSTRUMENT CLUSTER]

Diagnostic Procedure

Step	Inspection	Action	
1	**PERFORM CAN MALFUNCTION DIAGNOSIS AND DTC INSPECTION** • Perform the CAN malfunction diagnosis according to the recommendation of 09-03K-2 FOREWORD [INSTRUMENT CLUSTER] malfunction diagnosis, and if there is no CAN malfunction, perform inspection for DTCs. (See 09-02G-7 DTC INSPECTION [INSTRUMENT CLUSTER].) • Is the DTC displayed?	Yes	Go to the applicable DTC inspection. (See 09-02G-10 DTC TABLE [INSTRUMENT CLUSTER].)
		No	Go to the next step.
2	**VERIFY THE MALFUNCTION SYMPTOM** • Cool down the engine. • When the ignition is switched ON, does the engine coolant temperature warning light illuminate or flash?	Yes	Go to Step 4.
		No	Go to the next step.
3	**VERIFY ILLUMINATION OF LOW ENGINE COOLANT TEMPERATURE INDICATOR LIGHT** • Start the engine. • Monitor the PID ECT using the M-MDS. • Verify that the low engine coolant temperature indicator light illuminates when the ECT monitor value is **55 °C {131 °F} or more**. • Does the low engine coolant temperature indicator light illuminate?	Yes	Go to the next step.
		No	The system is operating normally.
4	**INSPECT ECT SENSOR** • Inspect the ECT sensor. (See 01-40-43 ENGINE COOLANT TEMPERATURE (ECT) SENSOR INSPECTION [SKYACTIV-G 2.0].) • Is the ECT sensor normal?	Yes	Replace the instrument cluster. (See 09-22-6 INSTRUMENT CLUSTER REMOVAL/INSTALLATION.)
		No	Replace the ECT sensor. (See 01-40-41 ENGINE COOLANT TEMPERATURE (ECT) SENSOR REMOVAL/INSTALLATION [SKYACTIV-G 2.0].)

09-03L SYMPTOM TROUBLESHOOTING [PARKING SENSOR]

FOREWORD [PARKING SENSOR] 09-03L–2
Troubleshooting Procedure **09-03L–2**
Action for non-repeatable malfunction. **09-03L–3**
TROUBLESHOOTING INDEX [PARKING SENSOR] 09-03L–4
PARKING SENSOR SYSTEM WIRING DIAGRAM [PARKING SENSOR] 09-03L–5
SYSTEM DOES NOT OPERATE [PARKING SENSOR] 09-03L–6
Description. **09-03L–6**
Possible malfunction **09-03L–6**
Diagnostic Procedure. **09-03L–6**
MALFUNCTION DETECTION SOUND ACTIVATED PARKING SENSOR]. 09-03L–8
Description **09-03L–8**
Possible malfunction **09-03L–8**
Diagnostic Procedure **09-03L–9**
NO DETECTION SOUND/LOW VOLUME [PARKING SENSOR] 09-03L–11
Description **09-03L–11**
Possible malfunction **09-03L–11**
Diagnostic Procedure **09-03L–11**
INDICATOR LIGHT DOES NOT ILLUMINATE [PARKING SENSOR] 09-03L–12
Description **09-03L–12**
Possible malfunction **09-03L–12**
Diagnostic Procedure **09-03L–13**

SYMPTOM TROUBLESHOOTING [PARKING SENSOR]

FOREWORD [PARKING SENSOR]

id0903z4011300

- If there is any vehicle malfunction complaint lodged by a customer, perform malfunction diagnosis according to the troubleshooting procedure.

Troubleshooting Procedure

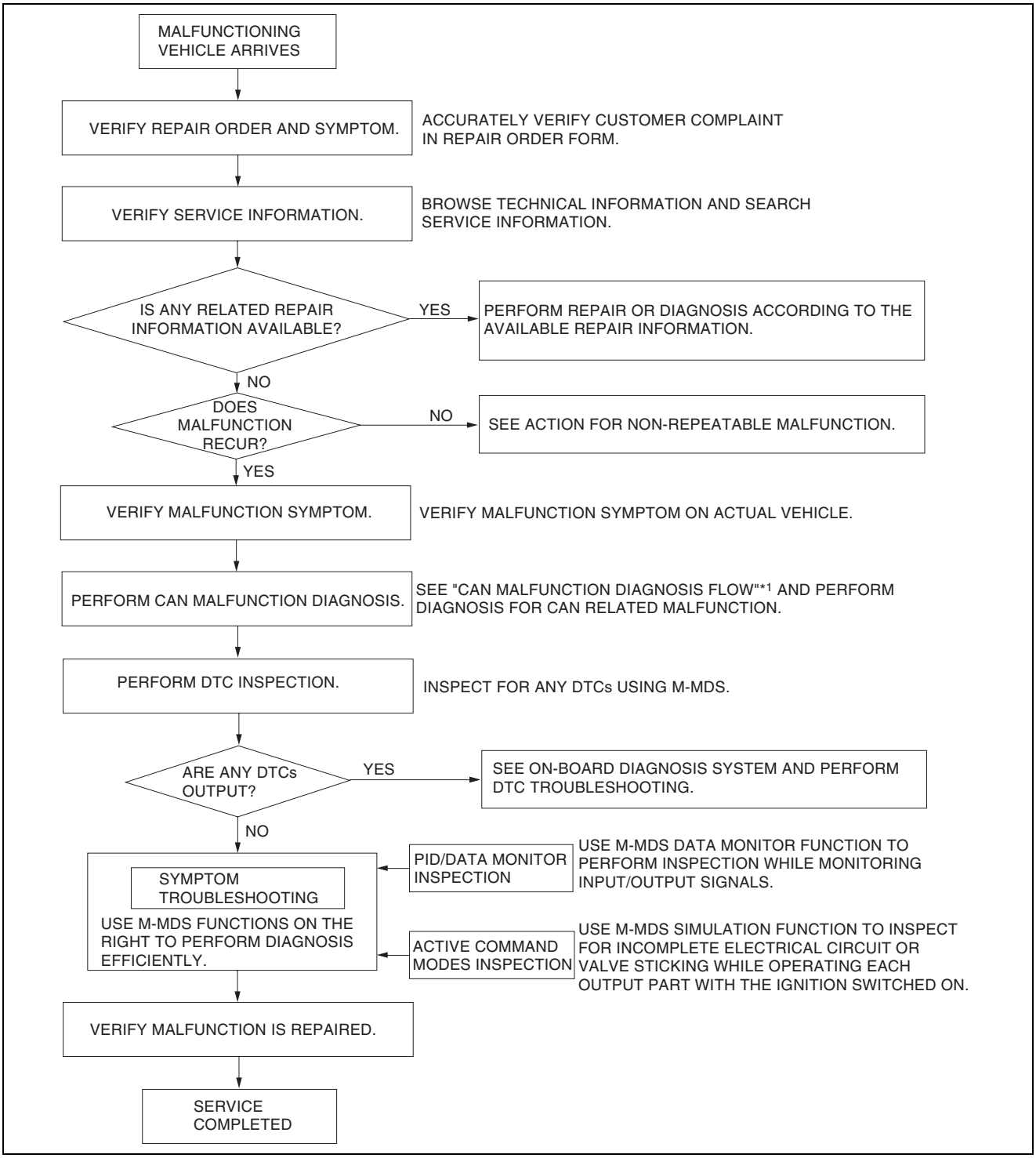

ac5wzw0000289

*1 : 10-02A-3 CONTROLLER AREA NETWORK (CAN) MALFUNCTION DIAGNOSIS FLOW [SKYACTIV-G 2.0 (L.H.D.)]/10-02B-3 CONTROLLER AREA NETWORK (CAN) MALFUNCTION DIAGNOSIS FLOW [SKYACTIV-G 2.0 (R.H.D.)]/10-02C-3 CONTROLLER AREA NETWORK (CAN) MALFUNCTION DIAGNOSIS FLOW [SKYACTIV-D 2.2 (L.H.D.)]/10-02D-3 CONTROLLER AREA NETWORK (CAN) MALFUNCTION DIAGNOSIS FLOW [SKYACTIV-D 2.2 (R.H.D.)]

SYMPTOM TROUBLESHOOTING [PARKING SENSOR]

Action for non-repeatable malfunction

- If the malfunction does not recur, verify the malfunction cause by performing the following actions:
  - — Based on the repair order form, attempt to drive the vehicle or perform tests to replicate the malfunction, record the data at that time, and detect the malfunction cause.
  - — Refer to [Determining Open Circuit Location] based on the recorded DTC, shake the wiring harness or connector of the electrical component which is suspected to be the cause of the malfunction, and inspect for any changes in CAN system voltage or occurrence of any DTCs.

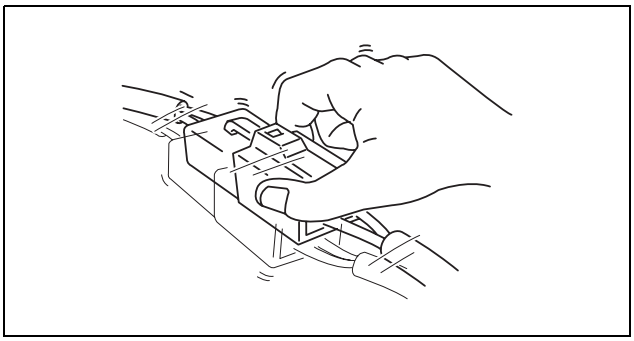

aaxjjw00007274

  - — Inspect the female terminals on the connector of the electric component which is suspected to be the cause of the malfunction for poor connection.

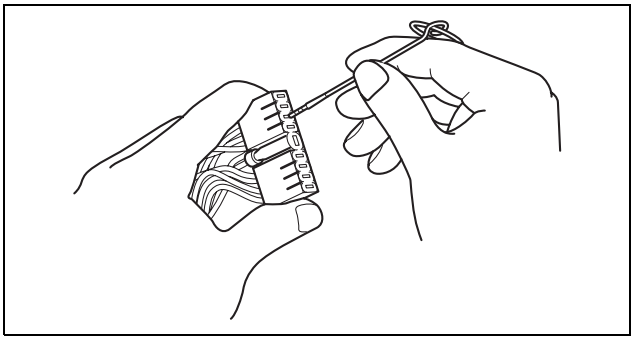

am3uuw0000750

SYMPTOM TROUBLESHOOTING [PARKING SENSOR]

TROUBLESHOOTING INDEX [PARKING SENSOR]

id0903z4668500

No	Troubleshooting item	Description
1	09-03L-6 SYSTEM DOES NOT OPERATE [PARKING SENSOR]	• Buzzer does not sound and the parking sensor indicator does not illuminate even if the parking sensor switch is turned on.
2	09-03L-8 MALFUNCTION DETECTION SOUND ACTIVATED [PARKING SENSOR]	• Buzzer sounds after turning the parking sensor switch/ indicator on.
3	09-03L-11 NO DETECTION SOUND/LOW VOLUME [PARKING SENSOR]	• Buzzer does not sound (parking sensor indicator illumination is normal) after turning the parking sensor switch/indicator on. • The volume of the detection sound from the buzzer decreases.
4	09-03L-12 INDICATOR LIGHT DOES NOT ILLUMINATE [PARKING SENSOR]	• The parking sensor indicator does not illuminate (buzzer is normal) when the parking sensor switch/indicator is turned on. • The parking sensor indicator does not illuminate (buzzer is normal) even though the detection condition is met.

SYMPTOM TROUBLESHOOTING [PARKING SENSOR]

PARKING SENSOR SYSTEM WIRING DIAGRAM [PARKING SENSOR]

id0903z4668400

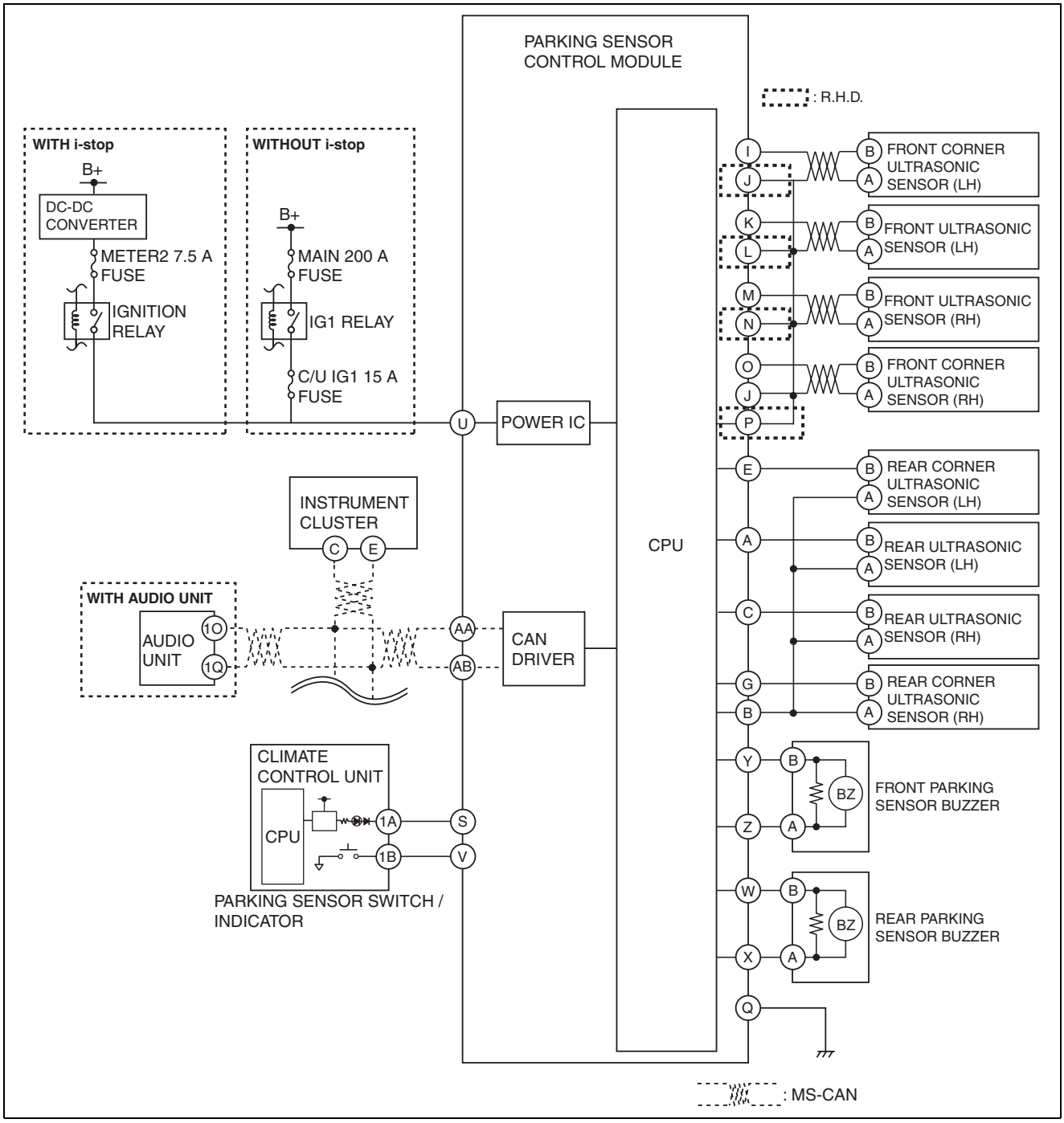

ac5wzw0000304

SYMPTOM TROUBLESHOOTING [PARKING SENSOR]

SYSTEM DOES NOT OPERATE [PARKING SENSOR]

id0903z4829300

Note
- If there is any vehicle malfunction complaint lodged by a customer, perform 09-03L-2 FOREWORD [PARKING SENSOR] malfunction diagnosis according to the troubleshooting procedure.

Description
- Buzzer does not sound and the parking sensor indicator does not illuminate even if the parking sensor switch is turned on.

Possible malfunction
- Parking sensor control module power supply malfunction
  With i-stop system
  — Open circuit in wiring harness between IGNITION relay and parking sensor control module terminal U
  — Short to ground in wiring harness between IGNITION relay and parking sensor control module terminal U
  Without i-stop system
  — Open circuit in wiring harness between IG1 relay and parking sensor control module terminal U
  — Short to ground in wiring harness between IG1 relay and parking sensor control module terminal U
  — C/U IG1 15 A fuse damage, burnt out
- Parking sensor switch/indicator malfunction
  — Open circuit or short to ground in wiring harness between climate control unit terminal 1B and parking sensor control module terminal V
  — Open circuit or short to ground in wiring harness between control unit terminal 1A and parking sensor control module terminal S
  — Parking sensor switch/indicator malfunction (parking sensor switch/indicator stuck open)
- Malfunction in parking sensor control module ground
  — Open circuit in wiring harness between parking sensor control module terminal Q and body ground
  — Ground point lifting or loosening
- Parking sensor control module malfunction

Diagnostic Procedure

Step	Inspection		Action
1	**VERIFY MALFUNCTION SYMPTOM** • Switch the ignition ON (engine off or on). • Turn the parking sensor switch/indicator ON. • Does the parking sensor indicator illuminate and does the buzzer sound?	Yes	**Did the buzzer sound after the parking sensor indicator illuminated?** • System is normal. **Buzzer does not sound** • Perform troubleshooting according to the 09-03L-8 MALFUNCTION DETECTION SOUND ACTIVATED [PARKING SENSOR]. **Indicator does not illuminate** • Perform troubleshooting according to the 09-03L-12 INDICATOR LIGHT DOES NOT ILLUMINATE [PARKING SENSOR].
		No	Go to the next step.
2	**INSPECT PARKING SENSOR CONTROL MODULE POWER SUPPLY** • Switch the ignition ON (engine off or on). • Measure the voltage at parking sensor control module terminal U. • Is the voltage B+?	Yes	Go to the next step.
		No	**With i-stop** • Inspect and repair the following wiring harness for an open circuit or short to ground. — IGNITION relay terminal C and parking sensor control module terminal U **Without i-stop** • Inspect the C/U IG1 15 A fuse. **If the fuse is burned out:** • Inspect and repair the wiring harness between the C/U IG1 15 A fuse and parking sensor control module terminal U for a short circuit to the ground system. **If the fuse is not damaged or burned out:** • Inspect and repair the following wiring harness for an open circuit: — Between IG relay terminal 1B and parking sensor control module terminal U

SYMPTOM TROUBLESHOOTING [PARKING SENSOR]

Step	Inspection		Action
3	**INSPECT PARKING SENSOR CONTROL MODULE GROUND CIRCUIT** • Switch the ignition off (LOCK). • Disconnect the negative battery cable. (See 01-17A-11 NEGATIVE BATTERY CABLE DISCONNECTION/CONNECTION [SKYACTIV-G 2.0].) (See 01-17A-13 NEGATIVE BATTERY CABLE DISCONNECTION/CONNECTION [SKYACTIV-G 2.0 (WITHOUT i-stop)].) (See 01-17B-9 NEGATIVE BATTERY CABLE DISCONNECTION/CONNECTION [SKYACTIV-D 2.2].) • Disconnect the parking sensor control module connector. • Verify the continuity between connector terminal Q on parking sensor control module vehicle side and body ground. • Is there continuity?	Yes	Inspect and repair the ground point for looseness, disengagement, or lifting. Repair or replace the wiring harness.
		No	Go to the next step.
4	**INSPECT IF MALFUNCTION CAUSE IS OPEN CIRCUIT IN PARKING SENSOR SWITCH/ INDICATOR SIGNAL WIRING HARNESS** • Disconnect the seat warmer control unit connector. • Inspect for continuity between the following wiring harnesses: — Climate control unit terminal 1B and parking sensor control module terminal V — Climate control unit terminal 1A and parking sensor control module terminal S • Is there continuity?	Yes	Go to the next step.
		No	Repair for an open circuit in the wiring harness.
5	**INSPECT IF MALFUNCTION CAUSE IS SHORT TO GROUND IN PARKING SENSOR SWITCH/INDICATOR SIGNAL WIRING HARNESS** • Inspect for continuity between the following wiring harnesses: — Parking sensor control module terminal V and ground — Parking sensor control module terminal S and ground • Is there continuity?	Yes	Repair or replace the wiring harness.
		No	Go to the next step.
6	**INSPECT PARKING SENSOR SWITCH/ INDICATOR** • Reconnect all the disconnected connectors. • Connect the negative battery cable. (See 01-17A-11 NEGATIVE BATTERY CABLE DISCONNECTION/CONNECTION [SKYACTIV-G 2.0].) (See 01-17A-13 NEGATIVE BATTERY CABLE DISCONNECTION/CONNECTION [SKYACTIV-G 2.0 (WITHOUT i-stop)].) (See 01-17B-9 NEGATIVE BATTERY CABLE DISCONNECTION/CONNECTION [SKYACTIV-D 2.2].) • Switch the ignition ON (engine off or on). • Measure the voltages at parking sensor control module terminals S and V when the parking sensor switch is turned off (indicator turns off). • Is terminal S battery voltage and is terminal V approx. 5 V?	Yes	Replace the climate control unit removal/installation. (See 07-40A-32 CLIMATE CONTROL UNIT REMOVAL/ INSTALLATION [FULL-AUTO AIR CONDITIONER].) **Note** • The parking sensor switch/indicator is integrated with the climate control unit.
		No	Replace the parking sensor control module. (See 09-22-59 PARKING SENSOR CONTROL MODULE INSPECTION.)

SYMPTOM TROUBLESHOOTING [PARKING SENSOR]

MALFUNCTION DETECTION SOUND ACTIVATED [PARKING SENSOR]

id0903z4829400

Note
- If there is any vehicle malfunction complaint lodged by a customer, perform 09-03L-2 FOREWORD [PARKING SENSOR] malfunction diagnosis according to the troubleshooting procedure.

Description
- Buzzer sounds after turning the parking sensor switch/indicator on.

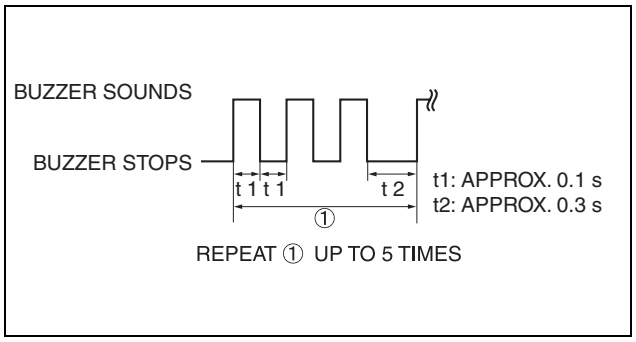

ac5wzw0000281

Possible malfunction
- Front ultrasonic sensor, front corner ultrasonic sensor, rear ultrasonic sensor, and rear corner ultrasonic sensor malfunction
  - — Dirt, damage (scratch, deformation), or freezing of sensor
  - — Connector connection malfunction
  - — Sensor malfunction
- Wiring harness malfunction
  - Front ultrasonic sensor and front corner ultrasonic sensor signal malfunction
    - — Open circuit or short to ground in wiring harness between parking sensor control module terminal I and front corner ultrasonic sensor (LH) terminal B
    - — Open circuit or short to ground in wiring harness between parking sensor control module terminal O and front corner ultrasonic sensor (RH) terminal B
    - — Open circuit or short to ground in wiring harness between parking sensor control module terminal K and front ultrasonic sensor (LH) terminal B
    - — Open circuit or short to ground in wiring harness between parking sensor control module terminal M and front ultrasonic sensor (RH) terminal B
  - Front ultrasonic sensor and front corner ultrasonic sensor ground system malfunction

    L.H.D.
    - — Open circuit in wiring harness between parking sensor control module terminal J and terminal A for each sensor

    R.H.D.
    - — Open circuit or short to ground in wiring harness between parking sensor control module terminal J and front corner ultrasonic sensor (LH) terminal A
    - — Open circuit or short to ground in wiring harness between parking sensor control module terminal P and front corner ultrasonic sensor (RH) terminal A
    - — Open circuit or short to ground in wiring harness between parking sensor control module terminal L and front ultrasonic sensor (LH) terminal A
    - — Open circuit or short to ground in wiring harness between parking sensor control module terminal N and front ultrasonic sensor (RH) terminal A
  - Rear ultrasonic sensor and rear corner ultrasonic sensor signal malfunction
    - — Open circuit or short to ground in wiring harness between parking sensor control module terminal E and rear corner ultrasonic sensor (LH) terminal B
    - — Open circuit or short to ground in wiring harness between parking sensor control module terminal G and rear corner ultrasonic sensor (RH) terminal B
    - — Open circuit or short to ground in wiring harness between parking sensor control module terminal A and rear ultrasonic sensor (LH) terminal B
    - — Open circuit or short to ground in wiring harness between parking sensor control module terminal C and rear ultrasonic sensor (RH) terminal B
  - Rear ultrasonic sensor and rear corner ultrasonic sensor ground system malfunction
    - — Open circuit in wiring harness between parking sensor control module terminal B and terminal A for each sensor
- Parking sensor control module malfunction

SYMPTOM TROUBLESHOOTING [PARKING SENSOR]

Diagnostic Procedure

Step	Inspection		Action
1	**IDENTIFY MALFUNCTION LOCATION** • Verify that the buzzer sounds from the parking sensor buzzer on either the front or rear. • Does the buzzer sound from the front parking sensor buzzer?	Yes	Go to the next step.
		No	Go to Step 7.
2	**VERIFY FRONT ULTRASONIC SENSOR CONDITION** • Visually inspect the front ultrasonic sensor condition. • Is there any dirt, damage (scratch, deformation), and freezing on the sensor?	Yes	Remove dirt, and then go to the next step.
		No	Go to the next step.
3	**INSPECT CONNECTOR CONNECTION CONDITION** • Verify the connector connection conditions of the parking sensor control module, front ultrasonic sensor short-cord, and front ultrasonic sensor. • Are the connection conditions normal?	Yes	Go to the next step.
		No	Repair or replace the malfunctioning part.
4	**INSPECT WIRING HARNESS BETWEEN PARKING SENSOR CONTROL MODULE AND FRONT ULTRASONIC SENSOR FOR OPEN CIRCUIT** • Switch the ignition off (LOCK). • Disconnect the negative battery cable. (See 01-17A-11 NEGATIVE BATTERY CABLE DISCONNECTION/CONNECTION [SKYACTIV-G 2.0].) (See 01-17A-13 NEGATIVE BATTERY CABLE DISCONNECTION/CONNECTION [SKYACTIV-G 2.0 (WITHOUT i-stop)].) (See 01-17B-9 NEGATIVE BATTERY CABLE DISCONNECTION/CONNECTION [SKYACTIV-D 2.2].) • Disconnect the connectors of the front ultrasonic sensor and parking sensor control module. • Inspect for continuity between the following wiring harnesses: **L.H.D.** — Parking sensor control module terminal I and front corner ultrasonic sensor (LH) terminal B — Parking sensor control module terminal O and front corner ultrasonic sensor (RH) terminal B — Parking sensor control module terminal K and front ultrasonic sensor (LH) terminal B — Parking sensor control module terminal M and front ultrasonic sensor (RH) terminal B — Parking sensor control module terminal J and terminal A for each sensor **R.H.D.** — Parking sensor control module terminal I and front corner ultrasonic sensor (LH) terminal B — Parking sensor control module terminal O and front corner ultrasonic sensor (RH) terminal B — Parking sensor control module terminal K and front ultrasonic sensor (LH) terminal B — Parking sensor control module terminal M and front ultrasonic sensor (RH) terminal B — Parking sensor control module terminal J and front corner ultrasonic sensor (LH) terminal A — Parking sensor control module terminal P and front corner ultrasonic sensor (RH) terminal A — Parking sensor control module terminal L and front ultrasonic sensor (LH) terminal A — Parking sensor control module terminal N and front ultrasonic sensor (RH) terminal A • Is there continuity?	Yes	Go to the next step.
		No	Repair for an open circuit in the wiring harness.
5	**INSPECT WIRING HARNESS BETWEEN PARKING SENSOR CONTROL MODULE AND FRONT ULTRASONIC SENSOR FOR SHORT TO GROUND** • Inspect for continuity between the following wiring harnesses: — Parking sensor control module terminal I and ground — Parking sensor control module terminal O and ground — Parking sensor control module terminal K and ground — Parking sensor control module terminal M and ground • Is there continuity?	Yes	Repair or replace the wiring harness.
		No	Go to Step 10.

SYMPTOM TROUBLESHOOTING [PARKING SENSOR]

Step	Inspection		Action
6	**VERIFY REAR ULTRASONIC SENSOR CONDITION** • Visually inspect the rear ultrasonic sensor condition. • Is there any dirt, damage (scratch, deformation), and freezing on the sensor?	Yes	Remove dirt, then go to the next step.
		No	Go to the next step.
7	**INSPECT CONNECTOR CONNECTION CONDITION** • Verify the connector connection conditions of the parking sensor control module, rear ultrasonic sensor short-cord, and rear ultrasonic sensor. • Are the connection conditions normal?	Yes	Go to the next step.
		No	Repair or replace the malfunctioning part.
8	**INSPECT WIRING HARNESS BETWEEN PARKING SENSOR CONTROL MODULE AND REAR ULTRASONIC SENSOR FOR OPEN CIRCUIT** • Switch the ignition off (LOCK). • Disconnect the connectors of the rear ultrasonic sensor and parking sensor control module. • Inspect for continuity between the following wiring harnesses: — Parking sensor control module terminal E and rear corner ultrasonic sensor (LH) terminal B — Parking sensor control module terminal G and rear corner ultrasonic sensor (RH) terminal B — Parking sensor control module terminal A and rear ultrasonic sensor (LH) terminal B — Parking sensor control module terminal C and rear ultrasonic sensor (RH) terminal B — Parking sensor control module terminal B and terminal A for each sensor • Is there continuity?	Yes	Go to the next step.
		No	Repair for an open circuit in the wiring harness.
9	**INSPECT WIRING HARNESS BETWEEN PARKING SENSOR CONTROL MODULE AND REAR ULTRASONIC SENSOR FOR SHORT TO GROUND** • Inspect for continuity between the following wiring harnesses: — Parking sensor control module terminal E and ground — Parking sensor control module terminal G and ground — Parking sensor control module terminal A and ground — Parking sensor control module terminal C and ground • Is there continuity?	Yes	Repair or replace the wiring harness.
		No	Go to the next step.
10	**DETERMINE IF MALFUNCTION CAUSE IS ULTRASONIC SENSOR OR PARKING SENSOR CONTROL MODULE** • Reconnect all the disconnected connectors. • Connect the negative battery cable. (See 01-17A-11 NEGATIVE BATTERY CABLE DISCONNECTION/CONNECTION [SKYACTIV-G 2.0].) (See 01-17A-13 NEGATIVE BATTERY CABLE DISCONNECTION/CONNECTION [SKYACTIV-G 2.0 (WITHOUT i-stop)].) (See 01-17B-9 NEGATIVE BATTERY CABLE DISCONNECTION/CONNECTION [SKYACTIV-D 2.2].) • Switch the ignition ON (engine off or on). • Turn the parking sensor switch/indicator on. • Refer to the parking sensor control module inspection and verify the generated pulse for each sensor. (See 09-22-59 PARKING SENSOR CONTROL MODULE INSPECTION.) • Can the generated pulse be verified?	Yes	Replace the parking sensor control module. (See 09-22-57 PARKING SENSOR CONTROL MODULE REMOVAL/INSTALLATION.)
		No	Replace the ultrasonic sensor. (See 09-22-42 FRONT ULTRASONIC SENSOR REMOVAL/INSTALLATION.) (See 09-22-46 REAR ULTRASONIC SENSOR REMOVAL/INSTALLATION.)

SYMPTOM TROUBLESHOOTING [PARKING SENSOR]

NO DETECTION SOUND/LOW VOLUME [PARKING SENSOR]

id0903z4829500

Note
- If there is any vehicle malfunction complaint lodged by a customer, perform 09-03L-2 FOREWORD [PARKING SENSOR] malfunction diagnosis according to the troubleshooting procedure.

Description
- Buzzer does not sound (parking sensor indicator illumination is normal) after turning the parking sensor switch/ indicator on.
- The volume of the detection sound from the buzzer decreases.

Possible malfunction
- Volume adjustment of buzzer is at minimum
- Buzzer circuit malfunction

  Front
  - — Open or short circuit in wiring harness between parking sensor control module terminal Y and front parking sensor buzzer terminal B
  - — Open circuit in wiring harness between parking sensor control module terminal Z and front parking sensor buzzer terminal A

  Rear
  - — Open or short circuit in wiring harness between parking sensor control module terminal W and rear parking sensor buzzer terminal B
  - — Open circuit in wiring harness between parking sensor control module terminal X and rear parking sensor buzzer terminal A
- Parking sensor buzzer malfunction
- Parking sensor control module malfunction

Diagnostic Procedure

Step	Inspection		Action
1	**ADJUST BUZZER VOLUME** • Adjust the buzzer volume. (See 09-22-65 BEEP SOUND ADJUSTMENT.) • Was the malfunction corrected?	Yes	Inspection completed (buzzer volume adjustment malfunction).
		No	Go to the next step.
2	**INSPECT WIRING HARNESS BETWEEN PARKING SENSOR CONTROL MODULE AND PARKING SENSOR BUZZER FOR OPEN CIRCUIT** • Switch the ignition off (LOCK). • Disconnect the negative battery cable. (See 01-17A-11 NEGATIVE BATTERY CABLE DISCONNECTION/CONNECTION [SKYACTIV-G 2.0].) (See 01-17A-13 NEGATIVE BATTERY CABLE DISCONNECTION/CONNECTION [SKYACTIV-G 2.0 (WITHOUT i-stop)].) (See 01-17B-9 NEGATIVE BATTERY CABLE DISCONNECTION/CONNECTION [SKYACTIV-D 2.2].) • Disconnect the connectors of the parking sensor buzzer and parking sensor control module. • Inspect for continuity between the following wiring harnesses: **Front** — Parking sensor control module terminal Y and front parking sensor buzzer terminal B — Parking sensor control module terminal Z and front parking sensor buzzer terminal A **Rear** — Parking sensor control module terminal W and rear parking sensor buzzer terminal B — Parking sensor control module terminal X and rear parking sensor buzzer terminal A • Is there continuity?	Yes	Go to the next step.
		No	Repair for an open circuit in the wiring harness.

SYMPTOM TROUBLESHOOTING [PARKING SENSOR]

Step	Inspection		Action
3	**INSPECT WIRING HARNESS BETWEEN PARKING SENSOR CONTROL MODULE AND PARKING SENSOR BUZZER FOR SHORT TO GROUND** • Inspect for continuity between the following wiring harnesses: **Front** — Parking sensor control module terminal Y and front parking sensor buzzer terminal B **Rear** — Parking sensor control module terminal W and rear parking sensor buzzer terminal B • Is there continuity?	Yes	Repair or replace the wiring harness.
		No	Go to the next step.
4	**DETERMINE IF MALFUNCTION CAUSE IS PARKING SENSOR BUZZER OR PARKING SENSOR CONTROL MODULE** • Inspect the parking sensor buzzer. (See 09-22-63 FRONT PARKING SENSOR BUZZER INSPECTION.) (See 09-22-64 REAR PARKING SENSOR BUZZER INSPECTION.) • Is the parking sensor buzzer normal?	Yes	Replace the parking sensor control module. (See 09-22-57 PARKING SENSOR CONTROL MODULE REMOVAL/INSTALLATION.)
		No	Replace the parking sensor buzzer. (See 09-22-62 FRONT PARKING SENSOR BUZZER REMOVAL/INSTALLATION.) (See 09-22-64 REAR PARKING SENSOR BUZZER REMOVAL/INSTALLATION.)

INDICATOR LIGHT DOES NOT ILLUMINATE [PARKING SENSOR]

id0903z4829600

Note
- If there is any vehicle malfunction complaint lodged by a customer, perform 09-03L-2 FOREWORD [PARKING SENSOR] malfunction diagnosis according to the troubleshooting procedure.

Description
- The parking sensor indicator does not illuminate (buzzer is normal) when the parking sensor switch/indicator is turned on.
- The parking sensor indicator does not illuminate (buzzer is normal) even though the detection condition is met.

Possible malfunction
- Parking sensor switch/indicator malfunction
  - — Open circuit or short to ground in wiring harness between climate control unit terminal 1B and parking sensor control module terminal V
  - — Open circuit or short to ground in wiring harness between climate control unit terminal 1A and parking sensor control module terminal S
  - — Parking sensor switch/indicator malfunction (parking sensor switch/indicator stuck open)
- Parking sensor switch/indicator malfunction
- Parking sensor control module malfunction

SYMPTOM TROUBLESHOOTING [PARKING SENSOR]

Diagnostic Procedure

Step	Inspection		Action
1	**INSPECT IF MALFUNCTION CAUSE IS OPEN CIRCUIT IN PARKING SENSOR SWITCH/INDICATOR SIGNAL WIRING HARNESS** • Switch the ignition off (LOCK). • Disconnect the negative battery cable. (See 01-17A-11 NEGATIVE BATTERY CABLE DISCONNECTION/CONNECTION [SKYACTIV-G 2.0].) (See 01-17A-13 NEGATIVE BATTERY CABLE DISCONNECTION/CONNECTION [SKYACTIV-G 2.0 (WITHOUT i-stop)].) (See 01-17B-9 NEGATIVE BATTERY CABLE DISCONNECTION/CONNECTION [SKYACTIV-D 2.2].) • Disconnect the connectors of the seat warmer control unit and parking sensor control module. • Inspect for continuity between the following wiring harnesses: — Climate control unit terminal 1B and parking sensor control module terminal V — Climate control unit terminal 1A and parking sensor control module terminal S • Is there continuity?	Yes	Go to the next step.
		No	Repair for an open circuit in the wiring harness.
2	**INSPECT IF MALFUNCTION CAUSE IS SHORT TO GROUND IN PARKING SENSOR SWITCH/INDICATOR SIGNAL WIRING HARNESS** • Inspect for continuity between the following wiring harnesses: — Parking sensor control module terminal V and ground — Parking sensor control module terminal S and ground • Is there continuity?	Yes	Repair or replace the wiring harness.
		No	Go to the next step.
3	**INSPECT PARKING SENSOR SWITCH/INDICATOR** • Reconnect all the disconnected connectors. • Connect the negative battery cable. (See 01-17A-11 NEGATIVE BATTERY CABLE DISCONNECTION/CONNECTION [SKYACTIV-G 2.0].) (See 01-17A-13 NEGATIVE BATTERY CABLE DISCONNECTION/CONNECTION [SKYACTIV-G 2.0 (WITHOUT i-stop)].) (See 01-17B-9 NEGATIVE BATTERY CABLE DISCONNECTION/CONNECTION [SKYACTIV-D 2.2].) • Switch the ignition ON (engine off or on). • Measure the voltages at parking sensor control module terminals S and V when the parking sensor switch is turned off (indicator turns off). • Is terminal S battery voltage and is terminal V approx. 5 V?	Yes	Replace the climate control unit. (See 07-40A-32 CLIMATE CONTROL UNIT REMOVAL/INSTALLATION [FULL-AUTO AIR CONDITIONER].) **Note** • The parking sensor switch/indicator is integrated with the climate control unit.
		No	Replace the parking sensor control module. (See 09-22-57 PARKING SENSOR CONTROL MODULE REMOVAL/INSTALLATION.)

09-03M SYMPTOM TROUBLESHOOTING [BLIND SPOT MONITORING (BSM)]

FOREWORD [BLIND SPOT MONITORING (BSM)] 09-03M–2
Troubleshooting Procedure 09-03M–2
Action for non-repeatable malfunction. 09-03M–3
TROUBLESHOOTING INDEX [BLIND SPOT MONITORING (BSM)] 09-03M–4
BLIND SPOT MONITORING (BSM) WIRING DIAGRAM [BLIND SPOT MONITORING (BSM)] 09-03M–5
BSM OFF INDICATOR LIGHT DOES NOT ILLUMINATE WHEN THE IGNITION IS SWITCHED TO ON [BLIND SPOT MONITORING (BSM)] 09-03M–6
BSM OFF INDICATOR LIGHT DOES NOT ILLUMINATE WHILE BSM SYSTEM IS OFF [BLIND SPOT MONITORING (BSM)] 09-03M–7
BSM OFF INDICATOR LIGHT ILLUMINATES CONTINUOUSLY [BLIND SPOT MONITORING (BSM)] 09-03M–7
BSM INDICATOR LIGHT ILLUMINATES WHILE NOT UNDER LIGHT-ILLUMINATION CONDITIONS [BLIND SPOT MONITORING (BSM)] 09-03M–8
BSM INDICATOR LIGHT DOES NOT ILLUMINATE WHILE UNDER BSM INDICATOR LIGHT-ILLUMINATION CONDITIONS [BLIND SPOT MONITORING (BSM)] 09-03M–9
BSM INDICATOR LIGHT FLASHES WHILE NOT UNDER BSM INDICATOR LIGHT-FLASHING CONDITIONS (NO COMBINATION SWITCH OPERATION (TURN SIGNAL SWITCH)) [BLIND SPOT MONITORING (BSM)]. . . 09-03M–11
BSM INDICATOR LIGHT DOES NOT FLASH WHILE UNDER BSM INDICATOR LIGHT-FLASHING CONDITIONS (WITH COMBINATION SWITCH OPERATION (TURN SIGNAL SWITCH)) [BLIND SPOT MONITORING (BSM)]. . . 09-03M–12
THE BSM INDICATOR LIGHT DOES NOT FLASH OR ILLUMINATE CONTINUOUSLY, BUT A TURN SIGNAL IS ON [BLIND SPOT MONITORING (BSM)]. . . 09-03M–13
BSM WARNING ALARM DOES NOT SOUND WHILE BSM INDICATOR LIGHT FLASHES [BLIND SPOT MONITORING (BSM)]. . . 09-03M–14

SYMPTOM TROUBLESHOOTING [BLIND SPOT MONITORING (BSM)]

FOREWORD [BLIND SPOT MONITORING (BSM)]

id0903d9990100

- If there is any vehicle malfunction complaint lodged by a customer, perform malfunction diagnosis according to the troubleshooting procedure.

Troubleshooting Procedure

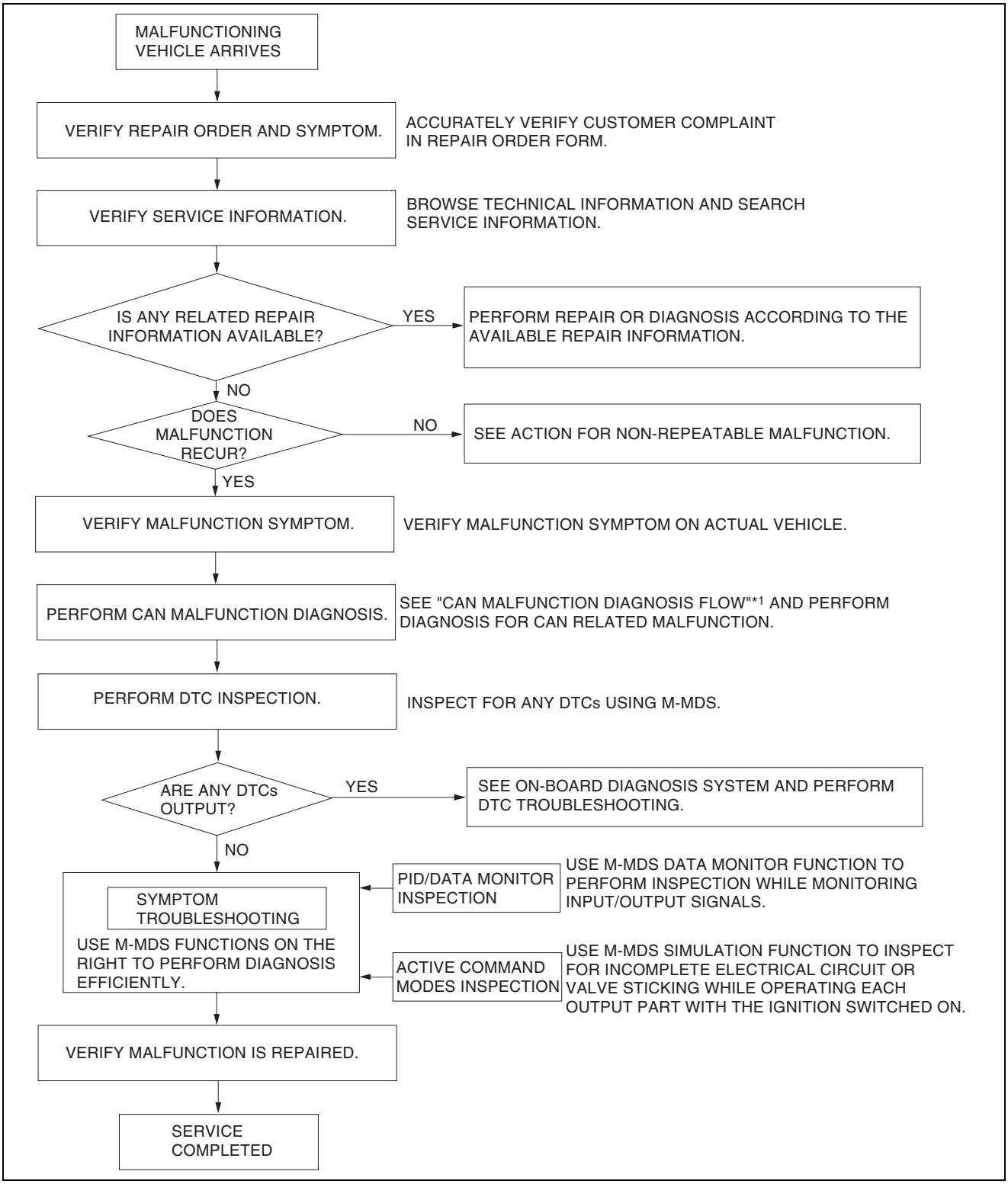

ac5wzw0000287

*1 : 10-02B-3 CONTROLLER AREA NETWORK (CAN) MALFUNCTION DIAGNOSIS FLOW [SKYACTIV-G 2.0 (R.H.D.)]/10-02D-3 CONTROLLER AREA NETWORK (CAN) MALFUNCTION DIAGNOSIS FLOW [SKYACTIV-D 2.2 (R.H.D.)]

SYMPTOM TROUBLESHOOTING [BLIND SPOT MONITORING (BSM)]

Action for non-repeatable malfunction

- If the malfunction does not recur, verify the malfunction cause by performing the following actions:
  - — When the BSM OFF indicator light is flashing (BSM malfunction is detected by its on-board diagnostic function), perform the On-board Diagnostic Inspection. To inspect the DTC, follow the DTC Inspection steps. (See 09-02H-5 DTC INSPECTION [BLIND SPOT MONITORING (BSM)].)
  - — Before performing the steps in Symptom Troubleshooting, perform the On-board Diagnostic Inspection. To inspect the DTC, follow the DTC Inspection steps. (See 09-02H-5 DTC INSPECTION [BLIND SPOT MONITORING (BSM)].)
  - — When performing an asterisked (*) troubleshooting inspection, shake the wiring harness and connectors while performing the inspection to discover whether poor contact points are the cause of any intermittent malfunction. If there is a problem, inspect to make sure connectors, terminals and wiring harnesses are connected correctly and undamaged.
  - — The Blind Spot Monitoring (BSM) System is a warning device which monitors the vehicle's rear on both sides for approaching vehicles using radar emitted from the BSM control module the radar reflects off a vehicle that enters a warning zone and is then transmitted back to the BSM control module.

Warning

- **The BSM is not a substitute for the driver in confirming safety. The driver is responsible for assuring the safety of lane changes and other maneuvers. Do not rely completely on the BSM and always confirm the safety around the vehicle visually before changing lanes.**
- **Dirt, ice or snow adhering to the areas near the BSM control module could obstruct the radar and prevent the system from adequately or completely detecting a target vehicle. Always pay attention to the direction in which the vehicle is traveling and the vehicle’s surroundings.**
- **Do not block the area around the BSM control module on the rear bumper with foreign material (such as bumper stickers) so as not to affect the BSM’s functions.**
- **Always have the BSM control module inspected at an Authorized Mazda Dealer if any shock or impact has occurred in the rear bumper area, even that from a minor accident. Otherwise, the BSM may not operate correctly.**
- **The BSM may not operate normally under the following conditions:**
  - **— Dirt, ice or snow is adhering to the rear bumper surface.**
  - **— The vehicle is driven in heavy rain or snowfall, or under conditions where water on the road is sprayed by the vehicle.**
  - **— The vehicle accelerates from a standing-start with a target vehicle alongside.**
  - **— A target vehicle moves laterally from a lane two lanes over to the adjacent lane.**
  - **— The difference in vehicle speed between the vehicle and a target vehicle is higher with the target vehicle passing through the alert area in a very short period.**
  - **— On a steep incline, or if there is a difference in height between lanes.**
- **Although the system may detect objects on the road side such as parked vehicles or guardrails and operate the warning light/beep, it does not indicate a malfunction.**
- **The BSM control module may not detect all types of vehicles. In particular, detection of the following types of vehicles may not occur:**
  - **— A vehicle driving at a low speed**
  - **— Small vehicles such as motorcycles**
  - **— Vehicles with body shapes that may not reflect radar such as unloaded trailers**
  - **— Vehicles with lower body height**
- **On a road with a narrower lane width, the system could detect vehicles on a lane next to the adjacent lane and cause the warning light/beep to operate. On a road with a wider lane width, the system may not detect vehicles on the adjacent lane and may not operate the warning light/beep.**

SYMPTOM TROUBLESHOOTING [BLIND SPOT MONITORING (BSM)]

TROUBLESHOOTING INDEX [BLIND SPOT MONITORING (BSM)]

id0903d9990200

No.	Troubleshooting item	Description
1	09-03M-6 BSM OFF INDICATOR LIGHT DOES NOT ILLUMINATE WHEN THE IGNITION IS SWITCHED TO ON [BLIND SPOT MONITORING (BSM)]	• The BSM OFF indicator light does not illuminate when the ignition is switched to ON. • The BSM control module does not communicate with the M-MDS.
2	09-03M-7 BSM OFF INDICATOR LIGHT DOES NOT ILLUMINATE WHILE BSM SYSTEM IS OFF [BLIND SPOT MONITORING (BSM)]	• The BSM indicator light does not illuminate after the BSM OFF switch turns off the system when the ignition is switched to ON.
3	09-03M-7 BSM OFF INDICATOR LIGHT ILLUMINATES CONTINUOUSLY [BLIND SPOT MONITORING (BSM)]	• The BSM OFF indicator light illuminates for 4 s or more without the BSM OFF switch turning off the system when the ignition is switched to ON.
4	09-03M-8 BSM INDICATOR LIGHT ILLUMINATES WHILE NOT UNDER LIGHT-ILLUMINATION CONDITIONS [BLIND SPOT MONITORING (BSM)]	• The BSM indicator light illuminates, but the conditions to illuminate the BSM indicator light are not satisfied (vehicle speed above 32 km/h {20 mph} or more, turn signals off, and vehicle in warning zone).
5	09-03M-9 BSM INDICATOR LIGHT DOES NOT ILLUMINATE WHILE UNDER BSM INDICATOR LIGHT-ILLUMINATION CONDITIONS [BLIND SPOT MONITORING (BSM)]	• The BSM indicator light does not illuminate despite satisfying the conditions to illuminate the BSM indicator light (vehicle speed above 32 km/h {20 mph} or more, turn signals off, and vehicle in warning zone).
6	09-03M-11 BSM INDICATOR LIGHT FLASHES WHILE NOT UNDER BSM INDICATOR LIGHT-FLASHING CONDITIONS (NO COMBINATION SWITCH OPERATION (TURN SIGNAL SWITCH)) [BLIND SPOT MONITORING (BSM)]	• The BSM indicator light flashes despite not satisfying the BSM indicator light flashing conditions (vehicle speed above 32 km/h {20 mph} or more, turn signal on, and vehicle in warning zone). • The BSM indicator light flashes, but the turn signals are off.
7	09-03M-12 BSM INDICATOR LIGHT DOES NOT FLASH WHILE UNDER BSM INDICATOR LIGHT-FLASHING CONDITIONS (WITH COMBINATION SWITCH OPERATION (TURN SIGNAL SWITCH)) [BLIND SPOT MONITORING (BSM)]	• The BSM indicator light does not flash or illuminate continuously, but the conditions to flash the BSM indicator light are satisfied (vehicle speed above 32 km/h {20 mph} or more, turn signal on, and vehicle in warning zone).
8	09-03M-13 THE BSM INDICATOR LIGHT DOES NOT FLASH OR ILLUMINATE CONTINUOUSLY, BUT A TURN SIGNAL IS ON [BLIND SPOT MONITORING (BSM)]	• BSM warning alarm sounds but BSM indicator light does not flash. • The BSM warning alarm is triggered on the side opposite to the direction in which the turn signal is operated. • The M-MDS is communicating with only the left or right BSM control module.
9	09-03M-14 BSM WARNING ALARM DOES NOT SOUND WHILE BSM INDICATOR LIGHT FLASHES [BLIND SPOT MONITORING (BSM)]	• The BSM control module recognizes that a vehicle is in the warning zone on the side in which the turn signal is operated, but the BSM warning alarm does not sound despite the BSM indicator light flashing.

SYMPTOM TROUBLESHOOTING [BLIND SPOT MONITORING (BSM)]

BLIND SPOT MONITORING (BSM) WIRING DIAGRAM [BLIND SPOT MONITORING (BSM)]

id0903d9990000

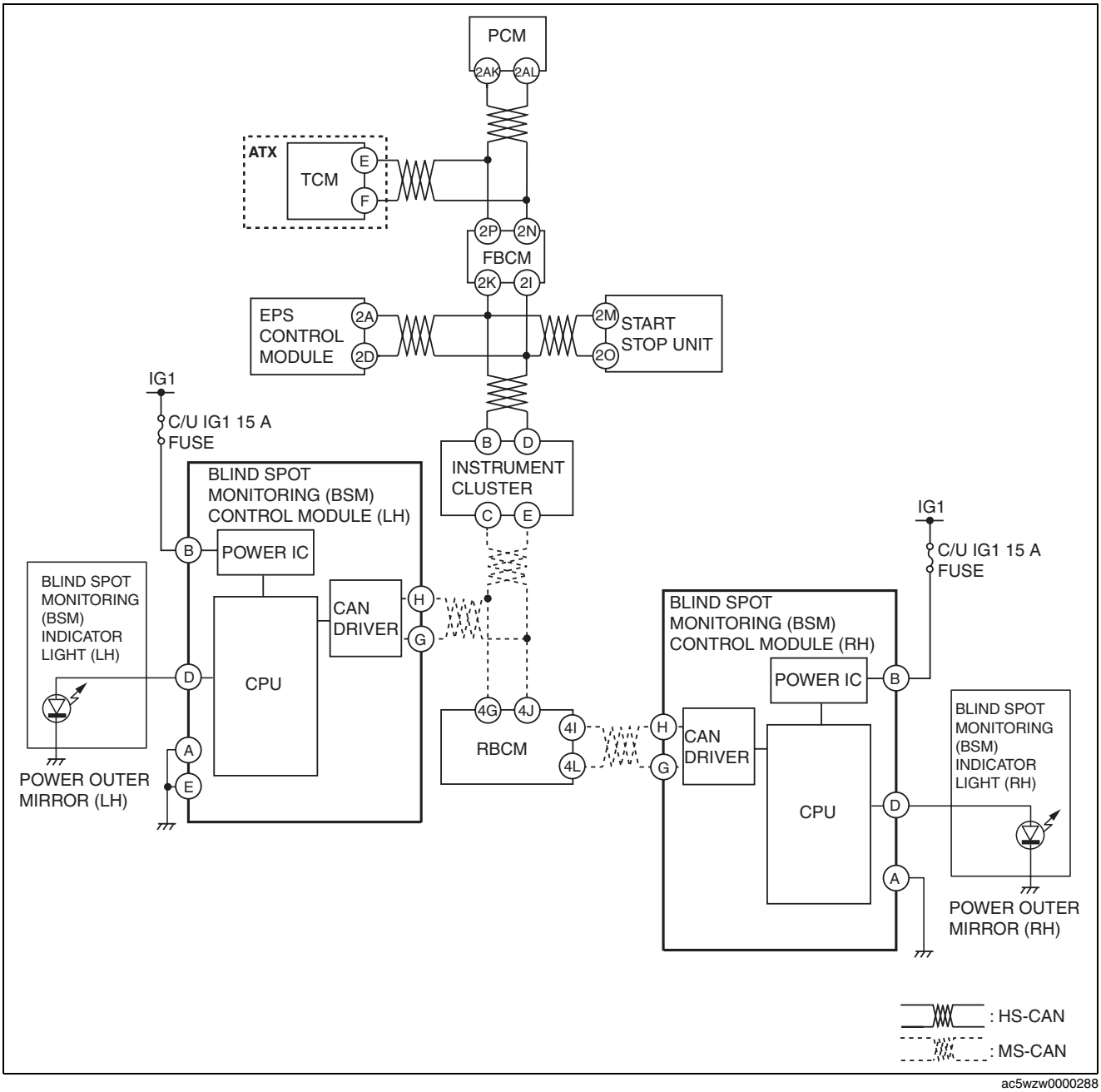

ac5wzw0000288

SYMPTOM TROUBLESHOOTING [BLIND SPOT MONITORING (BSM)]

BSM OFF INDICATOR LIGHT DOES NOT ILLUMINATE WHEN THE IGNITION IS SWITCHED TO ON [BLIND SPOT MONITORING (BSM)]

id0903d9015000

Description	**BSM OFF indicator light does not illuminate when the ignition is switched to ON** • BSM OFF indicator light does not illuminate when the ignition is switched to ON. • The BSM control module does not communicate with the M-MDS.
Possible Causes	• BSM control module (RH) does not initiate — Open or short circuit in BSM control module (RH) power supply circuit (open or short to ground circuit in wiring harness between push button start and BSM control module (RH) terminal B) — Open circuit in BSM control module (RH) ground circuit (open circuit in wiring harness between BSM control module (RH) and ground, poor contact at ground point) — BSM control module (RH) malfunction • Instrument cluster does not illuminate BSM OFF indicator light — Instrument cluster malfunction

Diagnostic Procedure

Step	Inspection	Result	Action
1*	**INSPECT BSM CONTROL MODULE (RH) POWER SUPPLY VOLTAGE** • Switch the ignition ON (engine off or on). • Measure the voltage at BSM control module (RH) terminal B. • Is the voltage B+?	Yes	Go to the next step.
		No	Inspect and repair for the following: • Inspect the condition of fuses between the push button start and the BSM control module (RH), and perform repairs at the location where the fuse is blown. • Inspect for an open circuit in the wiring harness between the or push button start and the BSM control module (RH).
2*	**INSPECT BSM CONTROL MODULE (RH) GROUND CIRCUIT** • Switch the ignition to off (LOCK). • Verify that there is continuity between the BSM control module (RH) terminal E and ground. • Is there continuity?	Yes	Go to the next step.
		No	Inspect and repair the ground point. Repair or replace for an open circuit between the BSM control module (RH) and ground.
3	**INSPECT IF MALFUNCTION IS IN INSTRUMENT CLUSTER OR BSM CONTROL MODULE (RH)** • Turn off the BSM OFF indicator light using the M-MDS instrument cluster active command modes WL+IL. (See 09-02G-38 ACTIVE COMMAND MODES TABLE [INSTRUMENT CLUSTER].) • Does the BSM OFF indicator light turn on according to the active command modes?	Yes	Replace the BSM control module (RH). (See 09-22-67 BLIND SPOT MONITORING (BSM) CONTROL MODULE REMOVAL/INSTALLATION.)
		No	Replace the instrument cluster. (See 09-22-6 INSTRUMENT CLUSTER REMOVAL/INSTALLATION.)

SYMPTOM TROUBLESHOOTING [BLIND SPOT MONITORING (BSM)]

BSM OFF INDICATOR LIGHT DOES NOT ILLUMINATE WHILE BSM SYSTEM IS OFF [BLIND SPOT MONITORING (BSM)]

id0903d9015100

Description	**BSM OFF indicator light does not illuminate while BSM system is off** • BSM indicator light does not illuminate even though BSM OFF switch turns off the system after ignition switch is turned to ON position.
Possible Causes	• Malfunction in BSM OFF switch related parts — BSM OFF switch malfunction (stuck at off) • Instrument cluster does not illuminate BSM OFF indicator light — BSM control module (RH) malfunction — Instrument cluster malfunction

Diagnostic Procedure

Step	Inspection	Result	Action
1	**INSPECT IF MALFUNCTION IS IN BSM OFF SWITCH OR INSTRUMENT CLUSTER** • Monitor the BSM control module (RH) PID BSM_OFF_IL using the M-MDS. (See 09-02H-33 PID/DATA MONITOR INSPECTION [BLIND SPOT MONITORING (BSM)].) • Turn the BSM OFF switch on and off. • Does the PID BSM_OFF_IL monitoring value turn on and off according to the BSM OFF switch operation?	Yes	Go to Step 3.
		No	Go to the next step.
2	**INSPECT BSM OFF SWITCH** • Inspect the BSM OFF switch. (See 09-22-76 BLIND SPOT MONITORING (BSM) OFF SWITCH INSPECTION.) • Is the BSM OFF switch normal?	Yes	Go to the next step.
		No	Replace the BSM OFF switch. (See 09-22-76 BLIND SPOT MONITORING (BSM) OFF SWITCH REMOVAL/INSTALLATION.)
3	**INSPECT IF MALFUNCTION IS IN INSTRUMENT CLUSTER OR BSM CONTROL MODULE (RH)** • Turn on the BSM OFF indicator light using the M-MDS instrument cluster active command modes WL+IL. (See 09-02G-38 ACTIVE COMMAND MODES INSPECTION [INSTRUMENT CLUSTER].) • Does the BSM OFF indicator light illuminate according to the active command modes?	Yes	Replace the BSM control module (RH). (See 09-22-67 BLIND SPOT MONITORING (BSM) CONTROL MODULE REMOVAL/INSTALLATION.)
		No	Replace the instrument cluster. (See 09-22-6 INSTRUMENT CLUSTER REMOVAL/INSTALLATION.)

BSM OFF INDICATOR LIGHT ILLUMINATES CONTINUOUSLY [BLIND SPOT MONITORING (BSM)]

id0903d9015200

Description	**BSM OFF indicator light illuminates continuously** • The BSM OFF indicator light illuminates for 4 s or more without the BSM OFF switch turning off after the ignition switch is turned to the ON position.
Possible Causes	• Malfunction in BSM OFF switch related parts — BSM OFF switch malfunction (stuck at on) • Instrument cluster does not turn off BSM indicator light — BSM control module (RH) malfunction — Instrument cluster malfunction

Diagnostic Procedure

Step	Inspection	Result	Action
1	**INSPECT IF MALFUNCTION IS IN BSM OFF SWITCH OR INSTRUMENT CLUSTER** • Monitor the BSM control module (RH) PID BSM_OFF_IL using the M-MDS. (See 09-02H-33 PID/DATA MONITOR INSPECTION [BLIND SPOT MONITORING (BSM)].) • Turn the BSM OFF switch on and off. • Does the PID BSM_OFF_IL monitoring value turn on and off according to the BSM OFF switch operation?	Yes	Go to Step 3.
		No	Go to the next step.

SYMPTOM TROUBLESHOOTING [BLIND SPOT MONITORING (BSM)]

Step	Inspection	Result	Action
2	**INSPECT BSM OFF SWITCH** • Inspect the BSM OFF switch. (See 09-22-76 BLIND SPOT MONITORING (BSM) OFF SWITCH INSPECTION.) • Is the BSM OFF switch normal?	Yes	Go to the next step.
		No	Replace the BSM OFF switch. (See 09-22-76 BLIND SPOT MONITORING (BSM) OFF SWITCH REMOVAL/INSTALLATION.)
3	**INSPECT IF MALFUNCTION IS IN INSTRUMENT CLUSTER OR BSM CONTROL MODULE (RH)** • Turn off the BSM OFF indicator light using the M-MDS instrument cluster active command modes WL+IL. (See 09-02G-38 ACTIVE COMMAND MODES INSPECTION [INSTRUMENT CLUSTER].) • Does the BSM OFF indicator light turn off according to the active command modes?	Yes	Replace the BSM control module (RH). (See 09-22-67 BLIND SPOT MONITORING (BSM) CONTROL MODULE REMOVAL/INSTALLATION.)
		No	Replace the instrument cluster. (See 09-22-6 INSTRUMENT CLUSTER REMOVAL/INSTALLATION.)

BSM INDICATOR LIGHT ILLUMINATES WHILE NOT UNDER LIGHT-ILLUMINATION CONDITIONS [BLIND SPOT MONITORING (BSM)]

id0903d9015300

Description	**BSM indicator light illuminates while not under light-illumination conditions** • The BSM indicator light illuminates, but the conditions to illuminate the BSM indicator light are not satisfied (vehicle speed above 32 km/h {20 mph} or more, turn signals off, and vehicle in warning zone).
Possible Causes	• The BSM control module recognizes a vehicle as being inside the warning zone when it is actually outside of it. — Radar (BSM control module integrated) is emitted outside of warning zone (deviates from warning zone) • Damage, deformity or looseness to installation bracket or vehicle frame (including moderate impacts) • Malfunction in steering angle signal (instrument cluster or EPS control module malfunction) • Problem with rear bumper such as soiling to radar emitting/receiving area, application of stickers (including transparent types), repairs using putty application. — After-market electrical parts interfere with BSM system • Malfunction in BSM indicator light related parts — Short to power supply circuit in wiring harness between BSM control module and BSM indicator light

Diagnostic Procedure

Step	Inspection	Result	Action
1	**INSPECT IF MALFUNCTION IS IN INPUT SIGNAL OR BSM CONTROL MODULE** • Monitor the following PIDs on the suspected side of the BSM control module using the M-MDS. (See 09-02H-33 PID/DATA MONITOR INSPECTION [BLIND SPOT MONITORING (BSM)].) — SWA_POS • Are the monitoring values normal?	Yes	Go to Step 3.
		No	Go to the next step.
2	**INSPECT STEERING ANGLE SIGNAL** • Monitor the PID STR_ANG for the EPS control module using the M-MDS. (See 06-02-5 ELECTRIC POWER STEERING (EPS) ON-BOARD DIAGNOSIS.) • Is the monitoring value normal?	Yes	Replace the instrument cluster. (See 09-22-6 INSTRUMENT CLUSTER REMOVAL/INSTALLATION.)
		No	Replace the EPS control module. (See 06-13-4 STEERING WHEEL AND COLUMN REMOVAL/INSTALLATION.)
3	**INSPECT REAR BUMPER** • Inspect the rear bumper at the BSM installation area for the following: — Installation condition — Sticker adhesion — Excessive soiling — Repairs using putty • Is the rear bumper condition normal?	Yes	Go to the next step.
		No	Repair or replace malfunctioning parts, or replace the rear bumper. (See 09-10-24 REAR BUMPER REMOVAL/INSTALLATION.)

SYMPTOM TROUBLESHOOTING [BLIND SPOT MONITORING (BSM)]

Step	Inspection	Result	Action
4	**VERIFY THE CONDITION OF THE BSM CONTROL MODULE** • Remove the rear bumper. (See 09-10-24 REAR BUMPER REMOVAL/ INSTALLATION.) • Inspect the BSM control module for the following: — Looseness — Damage or deformity to the bracket — Distortion at vehicle installation surface • Is the BSM control module installation condition normal?	Yes	Go to the next step.
		No	Repair or replace the malfunctioning part.
5	**VERIFY IF CAUSE OF TROUBLE IS IN AFTER-MARKET ELECTRICAL PRODUCT OR ELSEWHERE** • Remove the after-market electrical product. • Verify that the malfunction symptom recurs as stated by the customer. • Does the malfunction symptom recur?	Yes	Go to the next step.
		No	The after-market electrical product is causing the malfunction.
6	**INSPECT BSM CONTROL MODULE (RADAR)** • Perform the BSM radar test. (See 09-22-71 BLIND SPOT MONITORING (BSM) RADAR TEST.) • Is “TEST PASSED” displayed?	Yes	Temporary malfunction with the radar echo-back. If the same symptom recurs repeatedly, replace the BSM control module. (See 09-22-67 BLIND SPOT MONITORING (BSM) CONTROL MODULE REMOVAL/ INSTALLATION.)
		No	Repair or replace malfunctioning part according to inspection result. (See 09-22-71 BLIND SPOT MONITORING (BSM) RADAR TEST.)

BSM INDICATOR LIGHT DOES NOT ILLUMINATE WHILE UNDER BSM INDICATOR LIGHT-ILLUMINATION CONDITIONS [BLIND SPOT MONITORING (BSM)]

id0903d9015400

Description	**BSM indicator light does not illuminate while under BSM indicator light-illumination conditions** • The BSM indicator light does not illuminate despite satisfying the conditions to illuminate the BSM indicator light (vehicle speed above 32 km/h {20 mph} or more, turn signals off, and vehicle in warning zone).
Possible Causes	• The BSM control module mistakenly recognizes a vehicle as being outside of the warning zone when it actually inside of it. — Radar (BSM control module integrated) is not emitted inside of warning zone (unable to emit radar inside warning zone) • Damage, deformity or looseness to installation bracket or vehicle frame (including moderate impacts) • Malfunction in steering angle sensor ((instrument cluster or EPS control module malfunction) • Problem with rear bumper such as soiling to radar emitting/receiving area, application of stickers (including transparent types), repairs using putty application. — BSM control module does not receive echo-back correctly • BSM control module (radar) malfunction • Problem with rear bumper such as soiling to radar emitting/receiving area, application of stickers (including transparent types), repairs using putty application. **Note** • Rear bumper problem such defective installation of rear bumper, excessive soiling on the radar emitting/receiving area, sticker adhesion (including transparent types), repairs to rear bumper using putty • Non-genuine bumper, paint, or installation of after-market parts negatively affecting radar echo-back ability — After-market electrical parts interfere with BSM system • Malfunction in BSM indicator light related parts — Open circuit in wiring harness between BSM indicator light and BSM control module — Open circuit in wiring harness or poor ground between BSM control module and ground — BSM indicator light malfunction

SYMPTOM TROUBLESHOOTING [BLIND SPOT MONITORING (BSM)]

Diagnostic Procedure

Step	Inspection	Result	Action
1	**INSPECT IF MALFUNCTION IS IN INPUT SIGNAL OR BSM CONTROL MODULE** • Monitor the following PIDs on the suspected side of the BSM control module using the M-MDS. (See 09-02H-33 PID/DATA MONITOR INSPECTION [BLIND SPOT MONITORING (BSM)].) — SWA_POS • Are the monitoring values normal?	Yes	Go to Step 3.
		No	Go to the next step.
2	**INSPECT STEERING ANGLE SIGNAL** • Monitor the PID STR_ANG for the EPS control module using the M-MDS. (See 06-02-5 ELECTRIC POWER STEERING (EPS) ON-BOARD DIAGNOSIS.) • Is the monitoring value normal?	Yes	Replace the instrument cluster. (See 09-22-6 INSTRUMENT CLUSTER REMOVAL/INSTALLATION.)
		No	Replace the EPS control module. (See 06-13-4 STEERING WHEEL AND COLUMN REMOVAL/INSTALLATION.)
3	**INSPECT REAR BUMPER** • Inspect the rear bumper at the BSM installation area for the following: — Installation condition — Sticker adhesion — Excessive soiling — Repairs using putty • Is the rear bumper condition normal?	Yes	Go to the next step.
		No	Repair or replace malfunctioning parts, or replace the rear bumper. (See 09-10-24 REAR BUMPER REMOVAL/INSTALLATION.)
4	**VERIFY THE CONDITION OF THE BSM CONTROL MODULE** • Remove the rear bumper. (See 09-10-24 REAR BUMPER REMOVAL/INSTALLATION.) • Inspect the BSM control module for the following: — Looseness — Damage or deformity to the bracket — Distortion at vehicle installation surface • Is the BSM control module installation condition normal?	Yes	Go to the next step.
		No	Repair or replace the malfunctioning part.
5	**VERIFY IF CAUSE OF MALFUNCTION IS IN AFTER-MARKET ELECTRICAL PRODUCT OR ELSEWHERE** • Remove the after-market electrical product. • Verify that the malfunction symptom recurs as stated by the customer. • Does the malfunction symptom recur?	Yes	Go to the next step.
		No	The after-market electrical product is causing the malfunction.
6	**INSPECT BSM CONTROL MODULE (RADAR)** • Perform the BSM radar test. (See 09-22-71 BLIND SPOT MONITORING (BSM) RADAR TEST.) • Is “TEST PASSED” displayed?	Yes	Temporary malfunction with the radar echo-back. If the same symptom recurs repeatedly, replace the BSM control module. (See 09-22-67 BLIND SPOT MONITORING (BSM) CONTROL MODULE REMOVAL/INSTALLATION.)
		No	Repair or replace malfunctioning part according to inspection result. (See 09-22-71 BLIND SPOT MONITORING (BSM) RADAR TEST.)

SYMPTOM TROUBLESHOOTING [BLIND SPOT MONITORING (BSM)]

BSM INDICATOR LIGHT FLASHES WHILE NOT UNDER BSM INDICATOR LIGHT-FLASHING CONDITIONS (NO COMBINATION SWITCH OPERATION (TURN SIGNAL SWITCH)) [BLIND SPOT MONITORING (BSM)]

id0903d9015500

Description	**BSM indicator light flashes while not under BSM indicator light-flashing conditions (no combination switch operation (turn signal switch)** • The BSM indicator light flashes despite not satisfying the BSM indicator light flashing conditions (vehicle speed above 32 km/h {20 mph} or more, turn signal on, and vehicle in warning zone)). • The BSM indicator light flashes, but the turn signals are off.
Possible Causes	**Note** • This malfunction symptom is basically the same as symptom “BSM indicator light while not under BSM indicator light-illumination conditions”. • BSM control module recognizes a vehicle as being inside the warning zone when it is actually outside of it. — Radar (BSM control module integrated) is emitted outside of warning zone (deviates from warning zone) • Damage, deformity or looseness to installation bracket or vehicle frame (including moderate impacts). • Malfunction in steering angle signal (communication error between rear body control module (RBCM) and BSM control module, or EPS control module malfunction). • Problem with rear bumper such as soiling to radar emitting/receiving area, application of stickers (including transparent types), repairs using putty application. — After-market electrical parts interfere with BSM system • BSM does not recognize vehicle speed correctly (BSM control module mistakenly recognizes vehicle speed as being above 32 km/h {20 mph} or more — PCM communication error with BSM control module — Malfunction in ABS wheel speed sensor related parts • BSM control module mistakenly recognizes that turn signals have been operated — Short to ground circuit in wiring harness between combination switch (turn signal switch) and rear body control module (RBCM) — Communication error between rear body control module (RBCM) and BSM control module — BSM control module malfunction

Diagnostic Procedure

Step	Inspection	Result	Action
1	**VERIFY MALFUNCTION SYMPTOM** • BSM indicator light illuminates while under light-off conditions.	Yes	Go to the symptom troubleshooting procedure, “ BSM indicator light illuminates while not under BSM indicator light-off conditions”. (See 09-03M-8 BSM INDICATOR LIGHT ILLUMINATES WHILE NOT UNDER LIGHT-ILLUMINATION CONDITIONS [BLIND SPOT MONITORING (BSM)].)
		No	Go to the next step.
2	**INSPECT IF MALFUNCTION IS IN REAR BODY CONTROL MODULE (RBCM) INPUT SIGNAL OR BSM** • Monitor the following PIDs on the suspected side of the BSM control module using the M-MDS. (See 09-02H-33 PID/DATA MONITOR TABLE [BLIND SPOT MONITORING (BSM)].) — TURN_SW_L — TURN_SW_R • Are the monitoring values normal?	Yes	Replace the BSM control module. (See 09-22-67 BLIND SPOT MONITORING (BSM) CONTROL MODULE REMOVAL/INSTALLATION.)
		No	Retrieve DTCs from the start stop unit, instrument cluster, and BSM control module using the M-MDS. (See 09-02C-6 DTC INSPECTION [START STOP UNIT].) (See 09-02G-7 DTC INSPECTION [INSTRUMENT CLUSTER].) (See 09-02H-5 DTC INSPECTION [BLIND SPOT MONITORING (BSM)].)

SYMPTOM TROUBLESHOOTING [BLIND SPOT MONITORING (BSM)]

BSM INDICATOR LIGHT DOES NOT FLASH WHILE UNDER BSM INDICATOR LIGHT-FLASHING CONDITIONS (WITH COMBINATION SWITCH OPERATION (TURN SIGNAL SWITCH)) [BLIND SPOT MONITORING (BSM)]

id0903d9015600

Description	**BSM indicator light does not flash while under BSM indicator light-flashing conditions (with combination switch operation (turn signal switch))** • The BSM indicator light does not flash or illuminate continuously, but the conditions to flash the BSM indicator light are satisfied (vehicle speed above 32 km/h {20 mph} or more, turn signal on, and vehicle in warning zone). • BSM indicator light does not flash or illuminate continuously, but turn signals are off.
Possible Causes	**Note** • This malfunction symptom is basically the same as symptom “BSM indicator light does not illuminate while under BSM indicator light-illumination conditions”. • The BSM control module mistakenly recognizes a vehicle as being outside of the warning zone when it is actually inside of it. — Radar (BSM control module integrated) is not emitted inside of warning zone (unable to emit radar inside warning zone) • Damage, deformity or looseness to installation bracket or vehicle frame (including moderate impacts). • Malfunction in steering angle signal (communication error between rear body control module (RBCM) and BSM control module, or EPS control module malfunction). • Problem with rear bumper such as soiling to radar emitting/receiving area, application of stickers (including transparent types), repairs using putty application. — BSM control module does not receive echo-back correctly • BSM control module (radar) malfunction • Problem with rear bumper such as soiling to radar emitting/receiving area, application of stickers (including transparent types), repairs using putty application. **Note** • Rear bumper problems such defective installation of rear bumper, excessive soiling on radar emitting/receiving area, sticker adhesion (including transparent types), repairs to rear bumper using putty • Non-genuine bumper or paint, or installation of after-market parts negatively affecting radar echo-back ability — After-market electrical parts interfere with BSM system • BSM does not recognize vehicle speed correctly (BSM control module mistakenly recognizes vehicle speed as being within 32 km/h {20 mph} or more — PCM communication error with BSM control module — Malfunction in ABS wheel speed sensor related parts • Malfunction in BSM indicator light related parts — Open circuit in wiring harness between BSM indicator light and BSM control module — Open circuit in wiring harness or poor ground between BSM control module and ground — BSM indicator light malfunction • Signal is not input for turn signal — Combination switch (turn signal switch) malfunction — Open circuit in wiring harness between combination switch (turn signal switch) and rear body control module (RBCM) — Communication error between rear body control module (RBCM) and BSM control module — BSM control module malfunction

SYMPTOM TROUBLESHOOTING [BLIND SPOT MONITORING (BSM)]

Diagnostic Procedure

Step	Inspection	Result	Action
1	**VERIFY MALFUNCTION SYMPTOM** • BSM indicator light illuminates while under light-off conditions.	Yes	Go to the next step.
		No	Go to the symptom troubleshooting procedure, ”BSM indicator light does not illuminate while under BSM indicator light-illumination conditions”. (See 09-03M-9 BSM INDICATOR LIGHT DOES NOT ILLUMINATE WHILE UNDER BSM INDICATOR LIGHT-ILLUMINATION CONDITIONS [BLIND SPOT MONITORING (BSM)].)
2	**INSPECT IF MALFUNCTION IS IN REAR BODY CONTROL MODULE (RBCM) INPUT SIGNAL OR BSM** • Monitor the following PIDs on the suspected side of the BSM control module using the M-MDS. (See 09-02H-33 PID/DATA MONITOR TABLE [BLIND SPOT MONITORING (BSM)].) — TURN_SW_L — TURN_SW_R • Are the monitoring values normal?	Yes	Replace the BSM control module. (See 09-22-67 BLIND SPOT MONITORING (BSM) CONTROL MODULE REMOVAL/INSTALLATION.)
		No	Retrieve DTCs from the start stop unit, instrument cluster, and BSM control module using the M-MDS. (See 09-02C-6 DTC INSPECTION [START STOP UNIT].) (See 09-02G-7 DTC INSPECTION [INSTRUMENT CLUSTER].) (See 09-02H-5 DTC INSPECTION [BLIND SPOT MONITORING (BSM)].)

THE BSM INDICATOR LIGHT DOES NOT FLASH OR ILLUMINATE CONTINUOUSLY, BUT A TURN SIGNAL IS ON [BLIND SPOT MONITORING (BSM)]

id0903d9015700

Description	**The BSM indicator light does not flash or illuminate continuously, but a turn signal is ON** • BSM warning alarm sounds but BSM indicator light does not flash • BSM warning alarm is triggered on side opposite to the direction in which turn signal is operated
Possible Causes	• Instrument cluster receives incorrect BSM warning alarm request signal — Communication error between BSM control module and instrument cluster — Instrument cluster malfunction

Diagnostic Procedure

Step	Inspection	Result	Action
1	**INSPECT BSM WARNING ALARM** • Turn off the BSM using the M-MDS instrument cluster active command modes ALARM. (See 09-02G-38 ACTIVE COMMAND MODES TABLE [INSTRUMENT CLUSTER].) • Does the BSM turn off according to the active command models?	Yes	Go to the next step.
		No	Replace the instrument cluster. (See 09-22-6 INSTRUMENT CLUSTER REMOVAL/INSTALLATION.)
2	**VERIFY DTCs** • Retrieve DTCs from the BSM control module and instrument cluster using the M-MDS. (See 09-02G-7 DTC INSPECTION [INSTRUMENT CLUSTER].) (See 09-02H-5 DTC INSPECTION [BLIND SPOT MONITORING (BSM)].) • Are any DTCs displayed?	Yes	Go to the applicable DTC inspection. (See 09-02G-10 DTC TABLE [INSTRUMENT CLUSTER].) (See 09-02H-6 DTC TABLE [BLIND SPOT MONITORING (BSM)].)
		No	Go to the next step.
3	**VERIFY BSM INDICATOR LIGHT CONDITION** • Verify the BSM indicator light illumination condition while under the BSM indicator light-illumination conditions (vehicle speed above 32 km/h {20 mph} or more, turn signals off, and vehicle in warning zone). • Does the BSM indicator light illuminate normally?	Yes	Replace the BSM control module. (See 09-22-67 BLIND SPOT MONITORING (BSM) CONTROL MODULE REMOVAL/INSTALLATION.)
		No	Go to the symptom troubleshooting procedure, ”BSM indicator light does not illuminate while under BSM indicator light-illumination conditions”. (See 09-03M-9 BSM INDICATOR LIGHT DOES NOT ILLUMINATE WHILE UNDER BSM INDICATOR LIGHT-ILLUMINATION CONDITIONS [BLIND SPOT MONITORING (BSM)].)

SYMPTOM TROUBLESHOOTING [BLIND SPOT MONITORING (BSM)]

BSM WARNING ALARM DOES NOT SOUND WHILE BSM INDICATOR LIGHT FLASHES [BLIND SPOT MONITORING (BSM)]

id0903d9015800

Description	**BSM warning alarm does not sound while BSM indicator light flashes** • The BSM control module recognizes that vehicle is in warning zone on side in which turn signal is operated, but BSM warning alarm does not sound despite BSM indicator light flashing.
Possible Causes	• Instrument cluster receives incorrect BSM warning alarm request signal — Instrument cluster malfunction — BSM control module malfunction

Diagnostic Procedure

Step	Inspection	Result	Action
1	**VERIFY MALFUNCTION SYMPTOM** • Verify the malfunction symptoms for each side. • Is there a malfunction symptom on each side (BSM warning alarm sounds)?	Yes	Go to Step 3.
		No	Go to the next step.
2	**INSPECT BSM WARNING ALARM REQUEST SIGNAL** • Monitor the PID BUZZER on the suspected side of the BSM control module using the M-MDS while the BSM indicator light is flashing. (See 09-02H-33 PID/DATA MONITOR INSPECTION [BLIND SPOT MONITORING (BSM)].) • Is the PID BUZZER on when the BSM indicator light is flashing?	Yes	Replace the applicable BSM control module. (See 09-22-67 BLIND SPOT MONITORING (BSM) CONTROL MODULE REMOVAL/INSTALLATION.)
		No	Go to the next step.
3	**INSPECT BSM WARNING ALARM** • Turn off the BSM using the M-MDS instrument cluster active command modes ALARM. (See 09-02G-38 ACTIVE COMMAND MODES TABLE [INSTRUMENT CLUSTER].) • Does the BSM turn off according to the active command models?	Yes	Replace the applicable BSM control module. (See 09-22-67 BLIND SPOT MONITORING (BSM) CONTROL MODULE REMOVAL/INSTALLATION.)
		No	Replace the instrument cluster. (See 09-22-6 INSTRUMENT CLUSTER REMOVAL/INSTALLATION.)

09-03N SYMPTOM TROUBLESHOOTING [REAR VEHICLE MONITORING SYSTEM]

FOREWORD [REAR VEHICLE MONITORING SYSTEM] 09-03N–2
Troubleshooting Procedure 09-03N–3
SYSTEM WIRING DIAGRAM [REAR VEHICLE MONITORING SYSTEM] 09-03N–4
SYMPTOM TROUBLESHOOTING [REAR VEHICLE MONITORING SYSTEM] 09-03N–5
RVM INDICATOR LIGHT (GREEN)/RVM WARNING INDICATOR LIGHT DOES NOT ILLUMINATE WHEN IGNITION IS SWITCHED ON [REAR VEHICLE MONITORING SYSTEM] 09-03N–6
Description 09-03N–6
Possible malfunction 09-03N–6
Diagnostic Procedure 09-03N–6
RVM INDICATOR LIGHT (GREEN) DOES NOT TURN OFF WHEN REAR VEHICLE MONITORING SYSTEM IS OFF [REAR VEHICLE MONITORING SYSTEM] 09-03N–8
Description 09-03N–8
Possible malfunction 09-03N–8
Diagnostic Procedure 09-03N–8
RVM INDICATOR LIGHT (GREEN) DOES NOT ILLUMINATE [REAR VEHICLE MONITORING SYSTEM] 09-03N–9
Description 09-03N–9
Possible malfunction 09-03N–9
Diagnostic Procedure 09-03N–9
RVM WARNING INDICATOR LIGHT ILLUMINATES WHILE NOT UNDER ILLUMINATION CONDITIONS [REAR VEHICLE MONITORING SYSTEM] 09-03N–10
Description 09-03N–10
Possible malfunction 09-03N–10
Diagnostic Procedure 09-03N–11
RVM WARNING INDICATOR LIGHT DOES NOT ILLUMINATE UNDER ILLUMINATION CONDITIONS [REAR VEHICLE MONITORING SYSTEM] 09-03N–12
Description 09-03N–12
Possible malfunction 09-03N–12
Diagnostic Procedure 09-03N–13
RVM WARNING INDICATOR LIGHT FLASHES WHILE NOT UNDER FLASHING CONDITIONS (TURN SIGNALS OFF, OR NO VEHICLE IN ALERT AREA) [REAR VEHICLE MONITORING SYSTEM] 09-03N–14
Description 09-03N–14
Possible malfunction 09-03N–14
Diagnostic Procedure 09-03N–15
RVM WARNING INDICATOR LIGHT DOES NOT FLASH WHILE UNDER FLASHING CONDITIONS (TURN SIGNAL IS BEING OPERATED) [REAR VEHICLE MONITORING SYSTEM] 09-03N–15
Description 09-03N–15
Possible malfunction 09-03N–15
Diagnostic Procedure 09-03N–16
REAR VEHICLE MONITORING WARNING ALARM DOES NOT SOUND WHILE RVM WARNING INDICATOR LIGHT IS FLASHING [REAR VEHICLE MONITORING SYSTEM] 09-03N–16
Description 09-03N–16
Possible malfunction 09-03N–16
Diagnostic Procedure 09-03N–17
BRIGHTNESS LEVEL OF RVM WARNING INDICATOR LIGHTS IS TOO HIGH OR LOW [REAR VEHICLE MONITORING SYSTEM] 09-03N–17
Description 09-03N–17
Possible malfunction 09-03N–17
Diagnostic Procedure 09-03N–18

SYMPTOM TROUBLESHOOTING [REAR VEHICLE MONITORING SYSTEM]

FOREWORD [REAR VEHICLE MONITORING SYSTEM]

id0903z7378400

- When performing an asterisked (*) troubleshooting inspection, first verify the damage and connection status of the connectors and terminals, then perform the inspection while shaking the wiring harness to discover whether poor contact points are the cause of an intermittent malfunction. If there is a malfunction in the connectors or terminals, securely connect, repair, or perform replacement.
- When the system component parts are replaced/removed/installed, the rear vehicle monitoring configuration and rear vehicle monitoring radar aiming for the radar sensor must be performed. Perform the relevant initial setting servicing referring to the corresponding removal/installation procedure.
- The rear vehicle monitoring system is a control device which monitors the vehicle's rear for approaching vehicles using radio waves emitted from the radar sensor which reflect off the detected vehicle and return to the radio sensor part of the control module. The rear vehicle monitoring system may not operate normally under the following conditions:
  Effects of weather conditions
  — Vehicle is driven in rain, snow, or fog.
  Effects of driving conditions
  — Vehicle does not approach even though the vehicle enters the detection area from the rear of the detecting vehicle
  — Vehicles which are traveling at nearly the same speed as the detecting vehicle for long periods
  — Vehicles in an adjacent lane on a road with a wider lane width (detection area for radar sensor is set for highway width)
  Effects of vehicle equipment conditions
  — Rear bumper around radar sensor is deformed.
  — Ice, snow or dirt is adhering to the rear bumper radar sensors.
  Effects of vehicle approaching from the rear
  — Small motorcycle
  — Vehicles with body shapes that may not reflect radar (unloaded trailers with low vehicle height, sports cars)
  Effects of road conditions

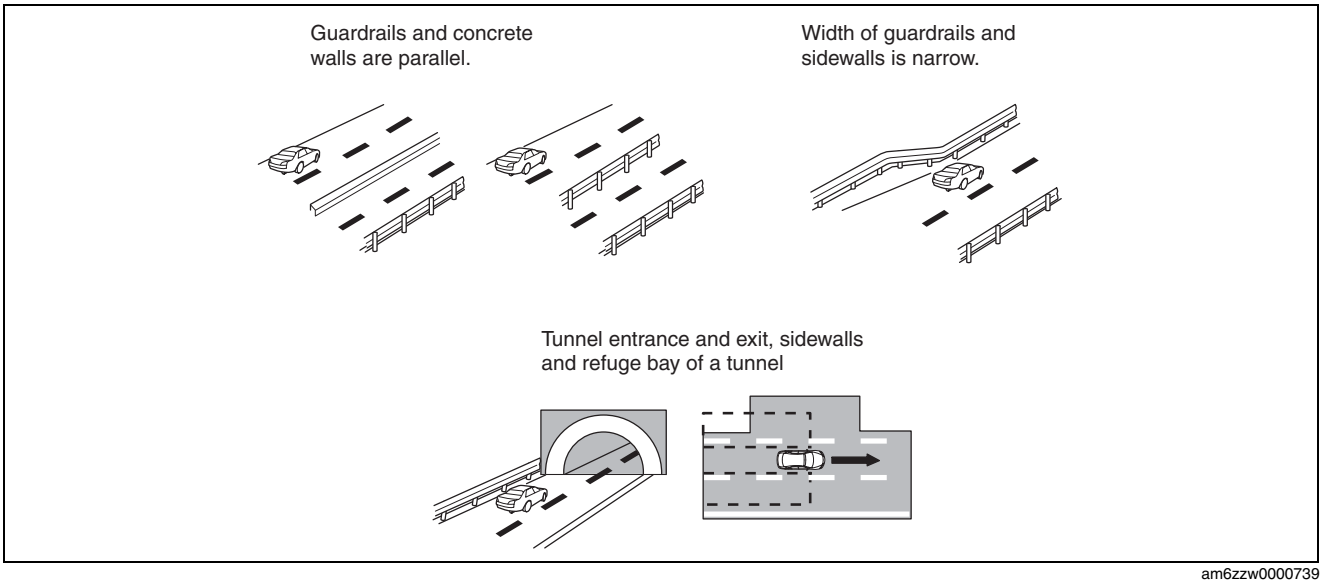

am6zzw0000739

SYMPTOM TROUBLESHOOTING [REAR VEHICLE MONITORING SYSTEM]

Troubleshooting Procedure

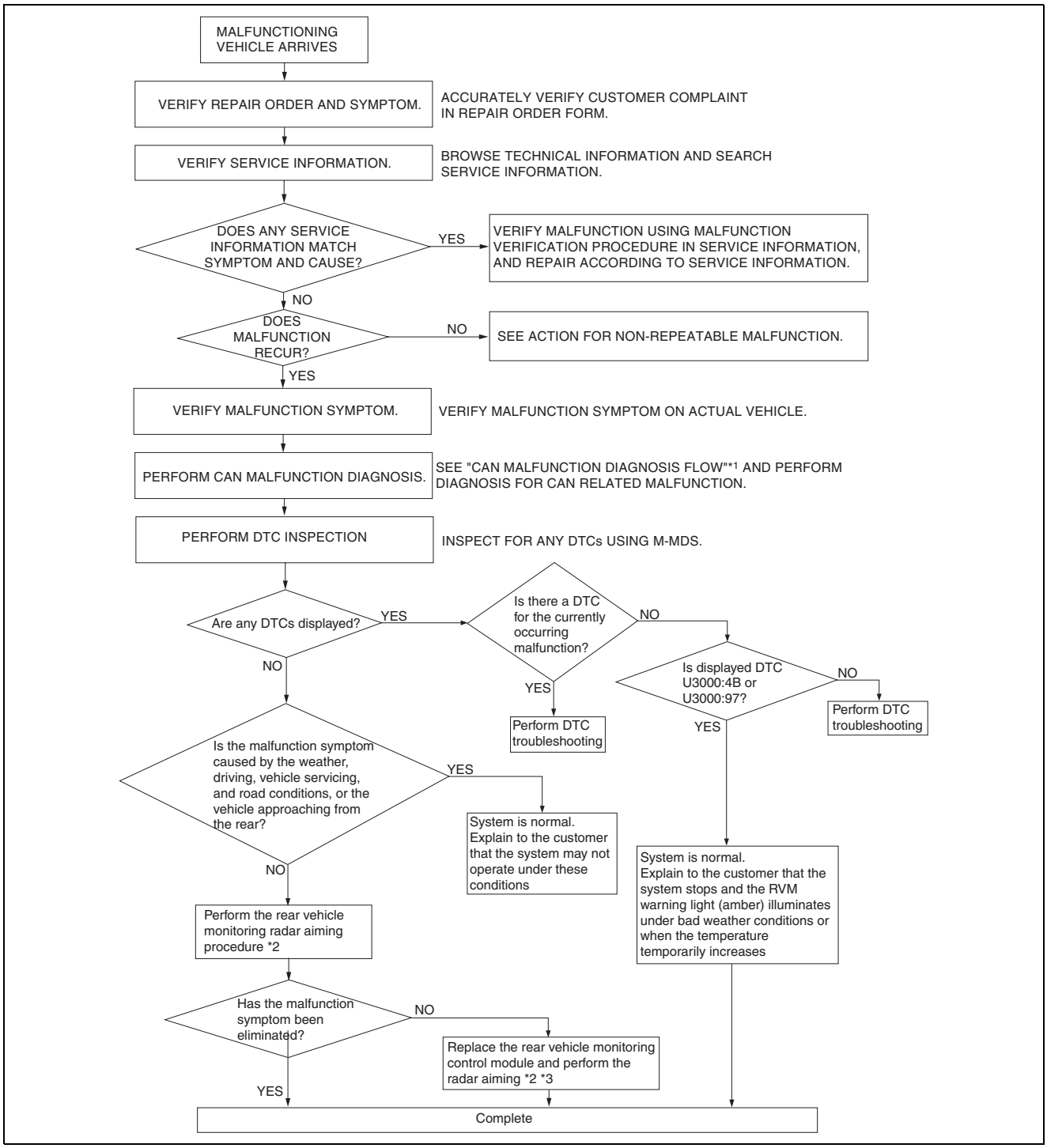

ac5wzw0000279

*1 : 10-02A-3 CONTROLLER AREA NETWORK (CAN) MALFUNCTION DIAGNOSIS FLOW [SKYACTIV-G 2.0 (L.H.D.)] / 10-02B-3 CONTROLLER AREA NETWORK (CAN) MALFUNCTION DIAGNOSIS FLOW [SKYACTIV-G 2.0 (R.H.D.)]/10-02C-3 CONTROLLER AREA NETWORK (CAN) MALFUNCTION DIAGNOSIS FLOW [SKYACTIV-D 2.2 (L.H.D.)]/10-02D-3 CONTROLLER AREA NETWORK (CAN) MALFUNCTION DIAGNOSIS FLOW [SKYACTIV-D 2.2 (R.H.D.)]
*2 : 09-22-83 REAR VEHICLE MONITORING RADAR AIMING
*3 : 09-22-77 REAR VEHICLE MONITORING CONTROL MODULE REMOVAL/INSTALLATION

SYMPTOM TROUBLESHOOTING [REAR VEHICLE MONITORING SYSTEM]

SYSTEM WIRING DIAGRAM [REAR VEHICLE MONITORING SYSTEM]

id0903z7377600

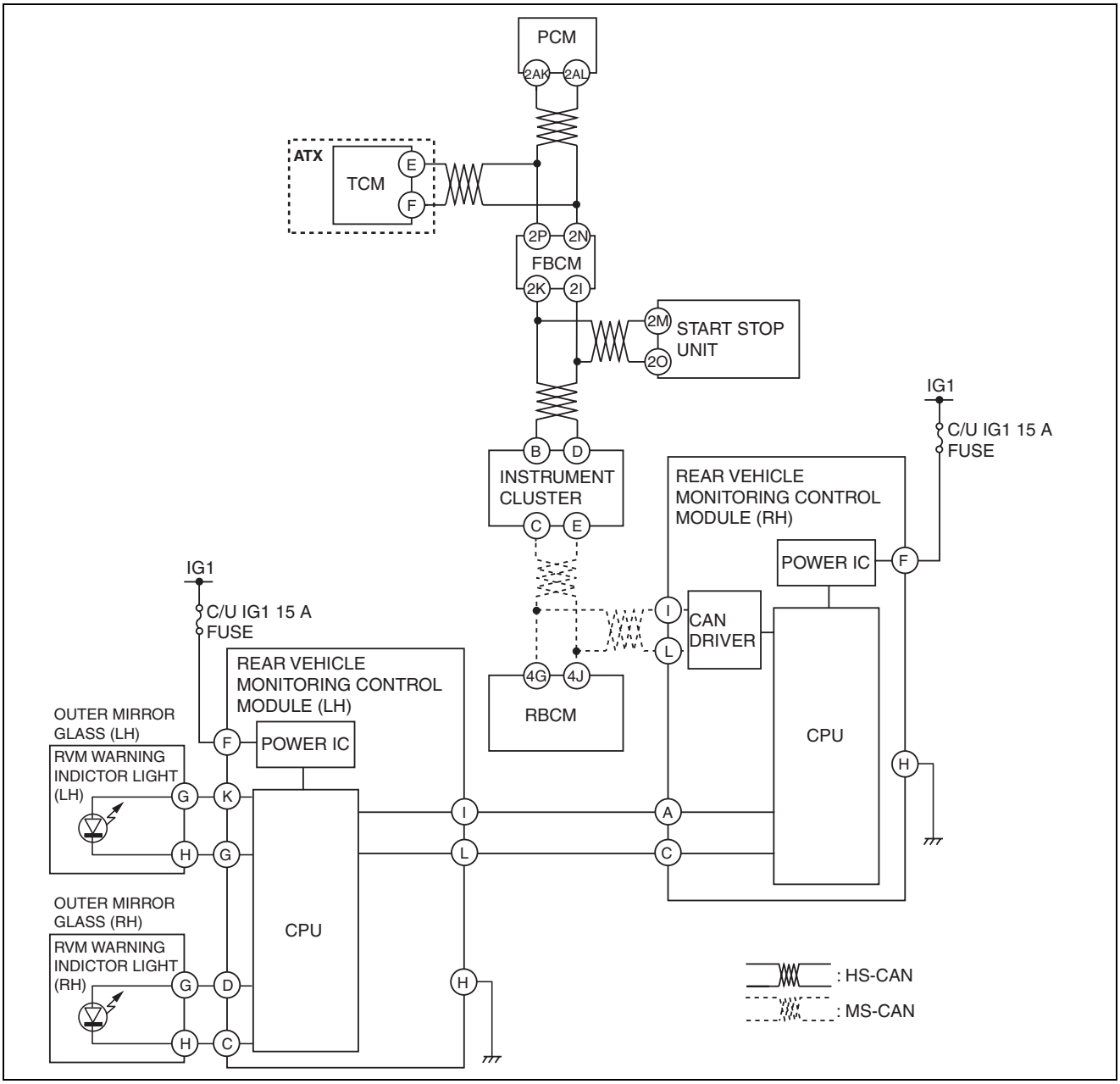

ac5wzw0000278

SYMPTOM TROUBLESHOOTING [REAR VEHICLE MONITORING SYSTEM]

SYMPTOM TROUBLESHOOTING [REAR VEHICLE MONITORING SYSTEM]

id0903z7378800

No.	Troubleshooting item	Description
1	09-03N-6 RVM INDICATOR LIGHT (GREEN)/RVM WARNING INDICATOR LIGHT DOES NOT ILLUMINATE WHEN IGNITION IS SWITCHED ON [REAR VEHICLE MONITORING SYSTEM]	• The RVM indicator light (green) does not illuminate when the ignition is switched ON. • The RVM warning indicator light does not illuminate when the ignition is switched ON. • No communication with M-MDS.
2	09-03N-8 RVM INDICATOR LIGHT (GREEN) DOES NOT TURN OFF WHEN REAR VEHICLE MONITORING SYSTEM IS OFF [REAR VEHICLE MONITORING SYSTEM]	• The RVM indicator light (green) does not turn off even though the RVM switch turns off after the ignition is switched ON.
3	09-03N-9 RVM INDICATOR LIGHT (GREEN) DOES NOT ILLUMINATE [REAR VEHICLE MONITORING SYSTEM]	• The RVM indicator light (green) does not illuminate even though the RVM switch turns on after the ignition is switched ON.
4	09-03N-10 RVM WARNING INDICATOR LIGHT ILLUMINATES WHILE NOT UNDER ILLUMINATION CONDITIONS [REAR VEHICLE MONITORING SYSTEM]	• The RVM warning indicator light illuminates without satisfying its illumination conditions (**vehicle speed is 30 km/h {19 mph} or more**, turn switch is off, and a vehicle is in the detection area).
5	09-03N-12 RVM WARNING INDICATOR LIGHT DOES NOT ILLUMINATE UNDER ILLUMINATION CONDITIONS [REAR VEHICLE MONITORING SYSTEM]	• The RVM warning indicator light flashes/does not illuminate while under the illumination conditions (**Vehicle speed above 30 km/h {19 mph}**, turn switch is off, and vehicle in detection area).
6	09-03N-14 RVM WARNING INDICATOR LIGHT FLASHES WHILE NOT UNDER FLASHING CONDITIONS (TURN SIGNALS OFF, OR NO VEHICLE IN ALERT AREA) [REAR VEHICLE MONITORING SYSTEM]	• The RVM warning indicator light flashes while not under the flash conditions (**Vehicle speed above 30 km/h {19 mph}**, turn switch is on, and vehicle in detection area). • RVM warning indicator light flashes even though turn switch is off.
7	09-03N-15 RVM WARNING INDICATOR LIGHT DOES NOT FLASH WHILE UNDER FLASHING CONDITIONS (TURN SIGNAL IS BEING OPERATED) [REAR VEHICLE MONITORING SYSTEM]	• The RVM warning indicator light does not flash/ remains illuminated while under the flash conditions (**vehicle speed 30 km/h {19 mph} or more**, turn switch is on, and vehicle in detection area). • RVM warning indicator light does not flash/ illuminates as is even though turn switch is on.
8	09-03N-16 REAR VEHICLE MONITORING WARNING ALARM DOES NOT SOUND WHILE RVM WARNING INDICATOR LIGHT IS FLASHING [REAR VEHICLE MONITORING SYSTEM]	• The rear vehicle monitoring warning chime does not sound when the vehicle is in the detection area on the side in which the turn switch is on, and the RVM warning indicator light is flashing.
9	09-03N-17 BRIGHTNESS LEVEL OF RVM WARNING INDICATOR LIGHTS IS TOO HIGH OR LOW [REAR VEHICLE MONITORING SYSTEM]	• RVM warning indicator light illumination brightness is weak during the afternoon (headlights off). (Appropriate brightness during nighttime) • RVM warning indicator light illumination brightness is strong during the night (headlights on). (Appropriate brightness at night)

SYMPTOM TROUBLESHOOTING [REAR VEHICLE MONITORING SYSTEM]

RVM INDICATOR LIGHT (GREEN)/RVM WARNING INDICATOR LIGHT DOES NOT ILLUMINATE WHEN IGNITION IS SWITCHED ON [REAR VEHICLE MONITORING SYSTEM]

id0903z7013900

Note
- If there is any vehicle malfunction complaint lodged by a customer, perform 09-03N-2 FOREWORD [REAR VEHICLE MONITORING SYSTEM] malfunction diagnosis according to the troubleshooting procedure.

Description
- The RVM indicator light (green) does not illuminate when the ignition is switched ON.
- RVM warning indicator light does not illuminate when ignition is switched ON.

Possible malfunction
- Rear vehicle monitoring control module (RH) does not initiate.
  - — Open circuit in wiring harness between IG1 relay and rear vehicle monitoring control module (RH) terminal F
  - — C/U IG1 15 A fuse damage, burnt out
  - — Open circuit in wiring harness between rear vehicle monitoring control module (RH) terminal H and ground
  - — Poor ground (looseness, disengagement)
  - — Rear vehicle monitoring control module malfunction (internal malfunction)
- Rear vehicle monitoring control module (LH) does not initiate.
  - — Open circuit in wiring harness between IG1 relay and rear vehicle monitoring control module (LH) terminal F
  - — C/U IG1 15 A fuse damage, burnt out
  - — Open circuit in wiring harness between rear vehicle monitoring control module (LH) terminal H and ground
  - — Poor ground (looseness, disengagement)
  - — Rear vehicle monitoring control module malfunction (internal malfunction)
- RVM warning indicator light illumination circuit disabled.
  - — RVM warning indicator light malfunction
  - — Open or short circuit in wiring harness between rear vehicle monitoring control module (LH) and RVM warning indicator light
  - — Rear vehicle monitoring control module (LH) internal malfunction (RVM warning indicator light illumination circuit disabled)
- Instrument cluster does not illuminate RVM indicator light (green).
  - — Instrument cluster internal malfunction (RVM indicator light (green) illumination circuit disabled)

Diagnostic Procedure

Step	Inspection		Action
1	**DETERMINE IF MALFUNCTION CAUSE IS RVM INDICATOR LIGHT (GREEN) OR RVM WARNING INDICATOR LIGHT ILLUMINATION CIRCUIT** • Switch the ignition ON (engine off or on). • Verify RVM indicator light (green) condition. • Does the RVM indicator light (green) illuminate?	Yes	Go to Step 3.
		No	Go to the next step.
2	**DETERMINE IF MALFUNCTION CAUSE IS REAR VEHICLE MONITORING CONTROL MODULE OR INSTRUMENT CLUSTER RELATED** • Illuminate all the indicator lights and warning lights in the instrument cluster using the simulation function WL+IL in the M-MDS instrument cluster. (See 09-02G-38 ACTIVE COMMAND MODES INSPECTION [INSTRUMENT CLUSTER].) • Does the RVM indicator light (green) illuminate?	Yes	Replace the rear vehicle monitoring control module (RH). (See 09-22-77 REAR VEHICLE MONITORING CONTROL MODULE REMOVAL/INSTALLATION.)
		No	Replace the instrument cluster. (See 09-22-6 INSTRUMENT CLUSTER REMOVAL/INSTALLATION.)

SYMPTOM TROUBLESHOOTING [REAR VEHICLE MONITORING SYSTEM]

Step	Inspection		Action
3*	**DETERMINE IF MALFUNCTION CAUSE IS REAR VEHICLE MONITORING CONTROL MODULES OR RVM WARNING INDICATOR LIGHTS** • Inspect the following: **RVM warning indicator light (RH) related:** — RVM warning indicator light (RH) — Wiring harness between RVM warning indicator light (RH) terminal G and rear vehicle monitoring control module (LH) terminal D — Wiring harness between RVM warning indicator light (RH) terminal H and rear vehicle monitoring control module (LH) terminal C **RVM warning indicator light (LH) related:** — RVM warning indicator light (LH) — Wiring harness between RVM warning indicator light (LH) terminal G and rear vehicle monitoring control module (LH) terminal K — Wiring harness between RVM warning indicator light (LH) terminal H and rear vehicle monitoring control module (LH) terminal G • Is any malfunction verified?	Yes	Repair or replace the malfunctioning location.
		No	Replace the rear vehicle monitoring control module (LH). (See 09-22-77 REAR VEHICLE MONITORING CONTROL MODULE REMOVAL/INSTALLATION.)
4*	**INSPECT REAR VEHICLE MONITORING CONTROL MODULE (RH) POWER SUPPLY SYSTEM** • Switch the ignition ON (engine off or on). • Measure the voltage at rear vehicle monitoring control module (RH) terminal F. • Is the voltage B+?	Yes	Go to the next step.
		No	Inspect the C/U IG1 15 A fuse. **If the fuse is burned out:** • Inspect and repair the wiring harness between the C/U IG1 15 A fuse and rear vehicle monitoring control modules (RH/LH) terminal F for a short circuit to the ground system. **If the fuse is not damaged or burned out:** • Inspect and repair the following wiring harness for an open circuit: — Between IG relay terminal 1B (IG1 relay) and rear vehicle monitoring control modules (RH/LH) terminal F
5*	**INSPECT REAR VEHICLE MONITORING CONTROL MODULE (RH) GROUND SYSTEM** • Switch the ignition off (LOCK). • Disconnect the rear vehicle monitoring control module (RH) connector. • Verify continuity between rear vehicle monitoring control module (RH) vehicle wiring harness-side connector terminal H and ground. • Is there continuity?	Yes	Replace the rear vehicle monitoring control module (RH). (See 09-22-77 REAR VEHICLE MONITORING CONTROL MODULE REMOVAL/INSTALLATION.)
		No	Inspect and repair the ground point for looseness, disengagement, or lifting. Inspect and repair the wiring harness for an open circuit.

SYMPTOM TROUBLESHOOTING [REAR VEHICLE MONITORING SYSTEM]

RVM INDICATOR LIGHT (GREEN) DOES NOT TURN OFF WHEN REAR VEHICLE MONITORING SYSTEM IS OFF [REAR VEHICLE MONITORING SYSTEM]

id0903z7014000

Note
- If there is any vehicle malfunction complaint lodged by a customer, perform 09-03N-2 FOREWORD [REAR VEHICLE MONITORING SYSTEM] malfunction diagnosis according to the troubleshooting procedure.

Description
- The RVM indicator light (green) does not turn off even though the RVM switch turns off after the ignition is switched ON.

Possible malfunction
- Rear vehicle monitoring control module (RH) does not recognize the RVM switch on/off status.
  - — RVM switch malfunction (stuck switch, internal malfunction)
  - — Rear vehicle monitoring control module (RH) malfunction
- Instrument cluster does not turn off RVM indicator light (green).
  - — Instrument cluster internal malfunction (RVM indicator light (green) illumination circuit disabled)

Diagnostic Procedure

Step	Inspection		Action
1*	**DETERMINE IF MALFUNCTION CAUSE IS RVM SWITCH OR RVM INDICATOR LIGHT (GREEN) RELATED** • Monitor the rear vehicle monitoring system PID MAIN_SW using the M-MDS. (See 09-02I-47 PID/DATA MONITOR INSPECTION [REAR VEHICLE MONITORING SYSTEM].) • Turn the RVM switch on and off. • Does the PID MAIN_SW monitoring value turn on and off according to the RVM switch operation?	Yes	Go to Step 3.
		No	Go to the next step.
2	**INSPECT RVM SWITCH** • Inspect the RVM switch. (See 09-22-91 RVM SWITCH INSPECTION.) • Is the RVM switch normal?	Yes	Go to the next step.
		No	Replace the RVM switch. (See 09-22-91 RVM SWITCH REMOVAL/INSTALLATION.)
3	**DETERMINE IF MALFUNCTION CAUSE IS INSTRUMENT CLUSTER OR REAR VEHICLE MONITORING CONTROL MODULE (RH)** • Turn off all the indicator lights and warning lights in the instrument cluster using the simulation function WL+IL of the M-MDS instrument cluster. (See 09-02G-38 ACTIVE COMMAND MODES INSPECTION [INSTRUMENT CLUSTER].) • Does the RVM indicator light (green) turn off?	Yes	Replace the rear vehicle monitoring control module (RH). (See 09-22-77 REAR VEHICLE MONITORING CONTROL MODULE REMOVAL/INSTALLATION.)
		No	Replace the instrument cluster. (See 09-22-6 INSTRUMENT CLUSTER REMOVAL/INSTALLATION.)

SYMPTOM TROUBLESHOOTING [REAR VEHICLE MONITORING SYSTEM]

RVM INDICATOR LIGHT (GREEN) DOES NOT ILLUMINATE [REAR VEHICLE MONITORING SYSTEM]

id0903z7014100

Note

- If there is any vehicle malfunction complaint lodged by a customer, perform 09-03N-2 FOREWORD [REAR VEHICLE MONITORING SYSTEM] malfunction diagnosis according to the troubleshooting procedure.

Description

- The RVM indicator light (green) does not illuminate even though the RVM switch turns on after the ignition is switched ON.

Possible malfunction

- Rear vehicle monitoring control module (RH) does not recognize the RVM switch on/off status.
  - — RVM switch malfunction (stuck switch, internal malfunction)
  - — Rear vehicle monitoring control module (RH) malfunction
- Instrument cluster does not illuminate RVM indicator light (green).
  - — Instrument cluster internal malfunction (RVM indicator light (green) illumination circuit disabled)

Diagnostic Procedure

Step	Inspection		Action
1	**DETERMINE IF MALFUNCTION CAUSE IS RVM SWITCH OR RVM INDICATOR LIGHT (GREEN) RELATED** • Display the rear vehicle monitoring system PID MAIN_SW item using the M-MDS. (See 09-02I-47 PID/DATA MONITOR INSPECTION [REAR VEHICLE MONITORING SYSTEM].) • Turn the RVM switch on and off. • Does the PID MAIN_SW monitoring value turn on and off according to the RVM switch operation?	Yes	Go to Step 3.
		No	Go to the next step.
2	**INSPECT RVM SWITCH** • Inspect the RVM switch. (See 09-22-91 RVM SWITCH INSPECTION.) • Is the RVM switch normal?	Yes	Go to the next step.
		No	Replace the RVM switch. (See 09-22-91 RVM SWITCH REMOVAL/INSTALLATION.)
3	**DETERMINE IF MALFUNCTION CAUSE IS INSTRUMENT CLUSTER OR REAR VEHICLE MONITORING CONTROL MODULE (RH)** • Illuminate all the indicator lights and warning lights in the instrument cluster using the simulation function WL+IL in the M-MDS instrument cluster. (See 09-02G-38 ACTIVE COMMAND MODES INSPECTION [INSTRUMENT CLUSTER].) • Does the RVM indicator light (green) illuminate?	Yes	Replace the rear vehicle monitoring control module (RH). (See 09-22-77 REAR VEHICLE MONITORING CONTROL MODULE REMOVAL/INSTALLATION.)
		No	Replace the instrument cluster. (See 09-22-6 INSTRUMENT CLUSTER REMOVAL/INSTALLATION.)

SYMPTOM TROUBLESHOOTING [REAR VEHICLE MONITORING SYSTEM]

RVM WARNING INDICATOR LIGHT ILLUMINATES WHILE NOT UNDER ILLUMINATION CONDITIONS [REAR VEHICLE MONITORING SYSTEM]

id0903z7014200

Note
- If there is any vehicle malfunction complaint lodged by a customer, perform 09-03N-2 FOREWORD [REAR VEHICLE MONITORING SYSTEM] malfunction diagnosis according to the troubleshooting procedure.

Description
- The RVM warning indicator light illuminates without satisfying its illumination conditions (**vehicle speed is 30 km/h {19 mph} or more**, turn-signals are off, and a vehicle is in the detection area).

Possible malfunction
- Rear vehicle monitoring control modules false-detect that a vehicle is inside detection area when it is actually outside of it, or cannot determine that a vehicle is entering blind-spot area.
  - — Rear vehicle monitoring control module radar is not emitted inside detection area (deviates from blind-spot area or adjacent lanes)
    - Damage, deformity or looseness to rear vehicle monitoring bracket or vehicle frame (including moderate impacts)
    - Incorrect installation of rear bumper, soiling to radar emitting/receiving area, application of stickers (including transparent types), repairs using putty application
  - — Effect of non-genuine, after-market electronic device installation

Note
- The radar sensor cannot receive echo-back correctly if there is a thick moisture film (such as condensation) or excessive soiling covering the rear bumper radar emitting/receiving areas.
- Non-genuine rear bumper or paint, or installation of after-market parts may negatively affect radar echo-back ability.

- RVM warning indicator light illumination circuit disabled
  - — Rear vehicle monitoring control module (LH) internal malfunction (RVM warning indicator light illumination circuit disabled)
  - — Rear vehicle monitoring control module (RH) malfunction (outputs incorrect illumination request)

SYMPTOM TROUBLESHOOTING [REAR VEHICLE MONITORING SYSTEM]

Diagnostic Procedure

Warning

- **When performing a road test, always verify the safety of the surrounding area before performing the test.**
- **Do not perform a road test at a speed which exceeds the legal speed limit.**
- **To assure safety, perform a road test using two people when the vehicle is being driven. (One drives the vehicle and the other operates the M-MDS.)**

Step	Inspection		Action
1	**VERIFY REAR BUMPER CONDITION** • Inspect the rear bumper at the rear vehicle monitoring control modules installation areas for the following: — Installation condition — Application of stickers (including transparent types) — Excessive soiling — Repairs using putty • Is the rear bumper condition normal?	Yes	Go to the next step.
		No	Repair or replace the malfunctioning part, or replace the rear bumper. (See 09-10-24 REAR BUMPER REMOVAL/ INSTALLATION.)
2	**VERIFY INSTALLATION CONDITION OF REAR VEHICLE MONITORING CONTROL MODULES** • Remove the rear bumper. (See 09-10-24 REAR BUMPER REMOVAL/ INSTALLATION.) • Inspect the installation condition of the rear vehicle monitoring control modules for the following: — Looseness — Damage or deformity to the bracket — Distortion at vehicle installation surface • Is the rear vehicle monitoring control modules installation condition normal?	Yes	Go to the next step.
		No	Repair or replace the malfunctioning location.
3	**VERIFY IF MALFUNCTION CAUSE IS AFTER-MARKET ELECTRONIC DEVICE INSTALLATION** • Disconnect the non-genuine, after-market electronic device connectors. • Verify if malfunction symptom recurs as stated by customer. • Does the malfunction recur?	Yes	Go to the next step.
		No	Explain to the customer that the malfunction occurred due to the after-market electronic device installation.
4	**VERIFY IF MALFUNCTION CAUSE IS RVM PROXIMITY INDICATOR LIGHT ILLUMINATION CIRCUIT RELATED** • Turn the following rear vehicle monitoring system simulation function items on and off using the M-MDS simulation function. (See 09-02I-48 ACTIVE COMMAND MODES INSPECTION [REAR VEHICLE MONITORING SYSTEM].) — WRN_IND_R — WRN_IND_L • Does the RVM warning indicator light illuminate/ turn off?	Yes	Go to Step 6.
		No	Go to the next step.

SYMPTOM TROUBLESHOOTING [REAR VEHICLE MONITORING SYSTEM]

Step	Inspection		Action
5	**DETERMINE IF MALFUNCTION CAUSE IS REAR VEHICLE MONITORING CONTROL MODULES OR RVM WARNING INDICATOR LIGHTS** • Inspect the following: **RVM warning indicator light (RH) related:** — RVM warning indicator light (RH) — Wiring harness between RVM warning indicator light (RH) terminal G and rear vehicle monitoring control module (LH) terminal D — Wiring harness between RVM warning indicator light (RH) terminal H and rear vehicle monitoring control module (LH) terminal C **RVM warning indicator light (LH) related:** — RVM warning indicator light (LH) — Wiring harness between RVM warning indicator light (LH) terminal G and rear vehicle monitoring control module (LH) terminal K — Wiring harness between RVM warning indicator light (LH) terminal H and rear vehicle monitoring control module (LH) terminal G • Is any malfunction verified?	Yes	Repair or replace the malfunctioning location.
		No	Replace the rear vehicle monitoring control module (LH). (See 09-22-77 REAR VEHICLE MONITORING CONTROL MODULE REMOVAL/INSTALLATION.)
6	**INSPECT REAR VEHICLE MONITORING CONTROL MODULES** • Inspect the malfunctioning rear vehicle monitoring control module. (See 09-22-79 REAR VEHICLE MONITORING CONTROL MODULE INSPECTION.) • Is the rear vehicle monitoring control module normal?	Yes	Temporary malfunction with the radar echo-back. If the same symptom recurs repeatedly, replace the rear vehicle monitoring control module. (See 09-22-77 REAR VEHICLE MONITORING CONTROL MODULE REMOVAL/INSTALLATION.)
		No	Replace the applicable rear vehicle monitoring control module. (See 09-22-77 REAR VEHICLE MONITORING CONTROL MODULE REMOVAL/INSTALLATION.)

RVM WARNING INDICATOR LIGHT DOES NOT ILLUMINATE UNDER ILLUMINATION CONDITIONS [REAR VEHICLE MONITORING SYSTEM]

id0903z7014300

Note
- If there is any vehicle malfunction complaint lodged by a customer, perform 09-03N-2 FOREWORD [REAR VEHICLE MONITORING SYSTEM] malfunction diagnosis according to the troubleshooting procedure.

Description
- The RVM warning indicator light flashes/does not illuminate while under the illumination conditions (**Vehicle speed above 30 km/h {19 mph}**, turn-signals off, and vehicle in detection area).

Possible malfunction
- Rear vehicle monitoring control modules false-detect that a vehicle is outside detection area when it is actually inside of it, or cannot determine that no vehicle is entering blind-spot area.
  - — Rear vehicle monitoring control module radar is not emitted inside detection area (deviates from blind-spot area or adjacent lanes)
    - Damage, deformity or looseness to installation bracket or vehicle frame (including moderate impacts)
    - Incorrect installation of rear bumper, soiling to radar emitting/receiving area, application of stickers (including transparent types), repairs using putty application
  - — Rear vehicle monitoring control module radar does not receive echo-back correctly
    - Rear vehicle monitoring control module malfunction
    - Incorrect installation of rear bumper, soiling to radar emitting/receiving area, application of stickers (including transparent types), repairs using putty application
  - — Effect of non-genuine, after-market electronic device installation

SYMPTOM TROUBLESHOOTING [REAR VEHICLE MONITORING SYSTEM]

Note
- The radar sensor cannot receive echo-back correctly if there is a thick moisture film (such as condensation) or excessive soiling covering the rear bumper radar emitting/receiving areas.
- Non-genuine rear bumper or paint, or installation of after-market parts may negatively affect radar echo-back ability.

- RVM warning indicator light illumination disabled
  - — RVM warning indicator light malfunction
  - — Rear vehicle monitoring control module (LH) malfunction (RVM warning indicator light illumination circuit malfunction)

Diagnostic Procedure

Warning
- **When performing a road test, always verify the safety of the surrounding area before performing the test.**
- **Do not perform a road test at a speed which exceeds the legal speed limit.**
- **To assure safety, perform a road test using two people when the vehicle is being driven. (One drives the vehicle and the other operates the M-MDS.)**

Step	Inspection		Action
1	**DETERMINE IF MALFUNCTION CAUSE IS RVM WARNING LIGHT (ORANGE) OR RVM WARNING INDICATOR LIGHT ILLUMINATION CIRCUIT** • Turn the following rear vehicle monitoring system simulation items on and off using the M-MDS. (See 09-02I-48 ACTIVE COMMAND MODES INSPECTION [REAR VEHICLE MONITORING SYSTEM].) — WRN_IND_R — WRN_IND_L • Does the RVM warning indicator light illuminate/turn off?	Yes	Go to Step 3.
		No	Go to the next step.
2	**DETERMINE IF MALFUNCTION CAUSE IS REAR VEHICLE MONITORING CONTROL MODULES OR RVM WARNING INDICATOR LIGHTS** • Inspect the following: **RVM warning indicator light (RH) related:** — RVM warning indicator light (RH) — Wiring harness between RVM warning indicator light (RH) terminal G and rear vehicle monitoring control module (LH) terminal D — Wiring harness between RVM warning indicator light (RH) terminal H and rear vehicle monitoring control module (LH) terminal C **RVM warning indicator light (LH) related:** — RVM warning indicator light (LH) — Wiring harness between RVM warning indicator light (LH) terminal G and rear vehicle monitoring control module (LH) terminal K — Wiring harness between RVM warning indicator light (LH) terminal H and rear vehicle monitoring control module (LH) terminal G • Is any malfunction verified?	Yes	Repair or replace the malfunctioning location.
		No	Replace the rear vehicle monitoring control module (LH). (See 09-22-77 REAR VEHICLE MONITORING CONTROL MODULE REMOVAL/INSTALLATION.)

SYMPTOM TROUBLESHOOTING [REAR VEHICLE MONITORING SYSTEM]

Step	Inspection		Action
3	**VERIFY REAR BUMPER CONDITION** • Inspect the rear bumper at the rear vehicle monitoring control modules installation areas for the following: — Installation condition — Application of stickers (including transparent types) — Excessive soiling — Repairs using putty • Is the rear bumper condition normal?	Yes	Go to the next step.
		No	Repair or replace the malfunctioning part, or replace the rear bumper. (See 09-10-24 REAR BUMPER REMOVAL/ INSTALLATION.)
4	**VERIFY INSTALLATION CONDITION OF REAR VEHICLE MONITORING CONTROL MODULES** • Remove the rear bumper. (See 09-10-24 REAR BUMPER REMOVAL/ INSTALLATION.) • Inspect the installation condition of the rear vehicle monitoring control modules for the following: — Looseness — Damage or deformity to the bracket — Distortion at vehicle installation surface • Is the rear vehicle monitoring control modules installation condition normal?	Yes	Go to the next step.
		No	Repair or replace the malfunctioning location.
5	**VERIFY IF MALFUNCTION CAUSE IS AFTER-MARKET ELECTRONIC DEVICE INSTALLATION** • Verify if malfunction symptom recurs as stated by customer. • Does the malfunction recur?	Yes	Go to the next step.
		No	Explain to the customer that the malfunction occurred due to the after-market electronic device installation.
6	**INSPECT REAR VEHICLE MONITORING CONTROL MODULES** • Inspect the malfunctioning rear vehicle monitoring control module. • Is the rear vehicle monitoring control module normal?	Yes	Temporary malfunction with the radar echo-back. If the same symptom recurs repeatedly, replace the rear vehicle monitoring control module. (See 09-22-77 REAR VEHICLE MONITORING CONTROL MODULE REMOVAL/INSTALLATION.)
		No	Replace the applicable rear vehicle monitoring control module. (See 09-22-77 REAR VEHICLE MONITORING CONTROL MODULE REMOVAL/INSTALLATION.)

RVM WARNING INDICATOR LIGHT FLASHES WHILE NOT UNDER FLASHING CONDITIONS (TURN SIGNALS OFF, OR NO VEHICLE IN ALERT AREA) [REAR VEHICLE MONITORING SYSTEM]

id0903z7014400

Note
- If there is any vehicle malfunction complaint lodged by a customer, perform 09-03N-2 FOREWORD [REAR VEHICLE MONITORING SYSTEM] malfunction diagnosis according to the troubleshooting procedure.

Description
- RVM warning indicator light flashes although the RVM warning indicator light illumination conditions (**vehicle speed 30 km/h {19 mph} or more**, turn signals on, and vehicle in detection area) are not satisfied.
- The RVM warning indicator light flashes while the turn signals are off.

Note
- This malfunction symptom is basically the same as the symptom, "RVM warning indicator light illuminates while not under the illumination conditions".

Possible malfunction
- Rear vehicle monitoring control modules false-detect a vehicle as being inside detection area when it is actually outside of it, or cannot determine that a vehicle is entering blind-spot area.
  - — Rear vehicle monitoring control module radar is not emitted inside detection area (deviates from blind-spot area or adjacent lanes)
    - Damage, deformity or looseness to rear vehicle monitoring bracket or vehicle frame (including moderate impacts)

SYMPTOM TROUBLESHOOTING [REAR VEHICLE MONITORING SYSTEM]

- Incorrect installation of rear bumper, soiling to radar emitting/receiving area, application of stickers (including transparent types), repairs using putty application

— Effect of non-genuine, after-market electronic device installation

Note
- The radar sensor cannot receive echo-back correctly if there is a thick moisture film (such as condensation) or excessive soiling covering the rear bumper radar emitting/receiving areas.
- Non-genuine rear bumper or paint, or installation of after-market parts may negatively affect radar echo-back ability.

- Rear vehicle monitoring control modules false-detect that turn signals are on.
  — Rear vehicle monitoring control module (RH) malfunction

Diagnostic Procedure

Step	Inspection		Action
1	**VERIFY MALFUNCTION SYMPTOM** • Do the RVM warning indicator light and RVM warning light (orange) illuminate with the illumination conditions not satisfied?	Yes	Go the symptom troubleshooting procedure, "RVM warning indicator light illuminates while not under the illumination conditions". (See 09-03N-10 RVM WARNING INDICATOR LIGHT ILLUMINATES WHILE NOT UNDER ILLUMINATION CONDITIONS [REAR VEHICLE MONITORING SYSTEM].)
		No	Go to the next step.
2	**DETERMINE IF MALFUNCTION CAUSE IS INPUT SIGNAL OR REAR VEHICLE MONITORING CONTROL MODULE RELATED** • Monitor the following rear vehicle monitoring system PIDs using the M-MDS: (See 09-02I-47 PID/DATA MONITOR INSPECTION [REAR VEHICLE MONITORING SYSTEM].) — TURN_SW_R — TURN_SW_L • Does the monitoring value turn on and off according to the turn signal switch operation?	Yes	Replace the rear vehicle monitoring control module (RH). (See 09-22-77 REAR VEHICLE MONITORING CONTROL MODULE REMOVAL/INSTALLATION.)
		No	Perform the start stop unit, instrument cluster and rear vehicle monitoring control module DTC inspection again.

RVM WARNING INDICATOR LIGHT DOES NOT FLASH WHILE UNDER FLASHING CONDITIONS (TURN SIGNAL IS BEING OPERATED) [REAR VEHICLE MONITORING SYSTEM]

id0903z7014500

Note
- If there is any vehicle malfunction complaint lodged by a customer, perform 09-03N-2 FOREWORD [REAR VEHICLE MONITORING SYSTEM] malfunction diagnosis according to the troubleshooting procedure.

Description
- The RVM warning indicator light does not flash/remains illuminated while under the flash conditions (**vehicle speed 30 km/h {19 mph} or more**, turn-signals on, and vehicle in detection area).
- The RVM warning indicator light does not flash/remains illuminated while the turn signals are on.

Note
- This malfunction symptom is basically the same as the symptom, "RVM warning indicator light does not illuminates while under the illumination conditions".

Possible malfunction
- Rear vehicle monitoring control modules false-detect a vehicle as being outside blind-spot area when it is actually inside of it, or cannot determine that no vehicle is entering blind-spot area.
  — Rear vehicle monitoring control module radar is not emitted inside detection area (deviates from blind-spot area or adjacent lanes)
    - Damage, deformity or looseness to rear vehicle monitoring bracket or vehicle frame (including moderate impacts)
    - Incorrect installation of rear bumper, soiling to radar emitting/receiving area, application of stickers (including transparent types), repairs using putty application
  — Rear vehicle monitoring control module radar does not receive echo-back correctly.

SYMPTOM TROUBLESHOOTING [REAR VEHICLE MONITORING SYSTEM]

  - Rear vehicle monitoring control module malfunction
  - Incorrect installation of rear bumper, soiling to radar emitting/receiving area, application of stickers (including transparent types), repairs using putty application
- — Effect of non-genuine, after-market electronic device installation

Note
- The radar sensor cannot receive echo-back correctly if there is a thick moisture film (such as condensation) or excessive soiling covering the rear bumper radar emitting/receiving areas.
- Non-genuine rear bumper or paint, or installation of after-market parts may negatively affect radar echo-back ability.

- RVM warning indicator light illumination related malfunction
  - — RVM warning indicator light malfunction
  - — Open or short circuit in wiring harness between RVM warning indicator light and rear vehicle monitoring control module (LH)
  - — Rear vehicle monitoring control module (LH) malfunction (RVM warning indicator light illumination circuit malfunction)
- Rear vehicle monitoring control modules do not detect turn signal operation.
  - — Rear vehicle monitoring control module malfunction

Diagnostic Procedure

Step	Inspection		Action
1	**VERIFY MALFUNCTION SYMPTOM** • Does the RVM warning indicator light illuminate when the illumination conditions are satisfied?	Yes	Go to the next step.
		No	Go the symptom troubleshooting procedure, "RVM warning indicator light does not illuminates while under the illumination conditions". (See 09-03N-12 RVM WARNING INDICATOR LIGHT DOES NOT ILLUMINATE UNDER ILLUMINATION CONDITIONS [REAR VEHICLE MONITORING SYSTEM].)
2	**DETERMINE IF MALFUNCTION CAUSE IS INPUT SIGNAL OR REAR VEHICLE MONITORING CONTROL MODULE RELATED** • Monitor the following rear vehicle monitoring system PIDs using the M-MDS: (See 09-02I-47 PID/DATA MONITOR INSPECTION [REAR VEHICLE MONITORING SYSTEM].) — TURN_SW_R — TURN_SW_L • Does the monitoring value turn on and off according to the turn signal switch operation?	Yes	Replace the rear vehicle monitoring control module (RH). (See 09-22-77 REAR VEHICLE MONITORING CONTROL MODULE REMOVAL/INSTALLATION.)
		No	Perform the start stop unit, instrument cluster and rear vehicle monitoring control module DTC inspection again.

REAR VEHICLE MONITORING WARNING ALARM DOES NOT SOUND WHILE RVM WARNING INDICATOR LIGHT IS FLASHING [REAR VEHICLE MONITORING SYSTEM]

id0903z7014600

Note
- If there is any vehicle malfunction complaint lodged by a customer, perform 09-03N-2 FOREWORD [REAR VEHICLE MONITORING SYSTEM] malfunction diagnosis according to the troubleshooting procedure.

Description
- Rear vehicle monitoring warning chime does not sound even though rear vehicle monitoring system recognizes a vehicle in detection area on side in which turn signal is operated or one entering blind-spot area from rear, and RVM warning indicator light is flashing.

Possible malfunction
- Instrument cluster receives incorrect beeper sound request signal
  - — Instrument cluster malfunction
  - — Rear vehicle monitoring control module (RH) malfunction

SYMPTOM TROUBLESHOOTING [REAR VEHICLE MONITORING SYSTEM]

Diagnostic Procedure

Step	Inspection		Action
1	**INSPECT ALARM** • Implement the instrument cluster simulation ALARM using the M-MDS, and sound all the warning alarms in the instrument cluster. (See 09-02G-38 ACTIVE COMMAND MODES INSPECTION [INSTRUMENT CLUSTER].) • Does the rear vehicle monitoring warning beeper sound?	Yes	Go to the next step.
		No	Replace the instrument cluster. (See 09-22-6 INSTRUMENT CLUSTER REMOVAL/INSTALLATION.)
2	**DETERMINE IF MALFUNCTION CAUSE IS BUZZER SOUND RELATED CIRCUIT** • Implement the rear vehicle monitoring system simulation buzzer item using the M-MDS. (See 09-02I-48 ACTIVE COMMAND MODES INSPECTION [REAR VEHICLE MONITORING SYSTEM].) • Does the buzzer sound?	Yes	Go to the next step.
		No	Replace the rear vehicle monitoring control module (RH). (See 09-22-77 REAR VEHICLE MONITORING CONTROL MODULE REMOVAL/INSTALLATION.)
3	**VERIFY RVM WARNING INDICATOR LIGHT ILLUMINATION CONDITION** • Verify the illumination of the RVM warning indicator lights when the illumination conditions (**vehicle speed of 30 km/h {19 mph} or more**, turn signals off, and vehicle detected in blind-spot area or entering blind-spot area from rear) are satisfied. • Is the RVM warning indicator lights illumination normal?	Yes	Replace the rear vehicle monitoring control module (RH). (See 09-22-77 REAR VEHICLE MONITORING CONTROL MODULE REMOVAL/INSTALLATION.)
		No	Go the symptom troubleshooting procedure, "RVM warning indicator light does not illuminates while under the illumination conditions". (See 09-03N-12 RVM WARNING INDICATOR LIGHT DOES NOT ILLUMINATE UNDER ILLUMINATION CONDITIONS [REAR VEHICLE MONITORING SYSTEM].)

BRIGHTNESS LEVEL OF RVM WARNING INDICATOR LIGHTS IS TOO HIGH OR LOW [REAR VEHICLE MONITORING SYSTEM]

id0903z7014700

Note
- If there is any vehicle malfunction complaint lodged by a customer, perform 09-03N-2 FOREWORD [REAR VEHICLE MONITORING SYSTEM] malfunction diagnosis according to the troubleshooting procedure.

Description
- The brightness level of the RVM warning indicator light is low in the daytime (headlights off) (correct level at night).
- The brightness level of the RVM warning indicator light is high at night (headlights on) (correct level in the daytime).

Possible malfunction
- The rear view monitoring control module (RH) cannot receive the TNS switch signal.
  - — TNS switch (light switch) malfunction (stuck)
  - — Instrument cluster malfunction
  - — Rear vehicle monitoring control module malfunction

SYMPTOM TROUBLESHOOTING [REAR VEHICLE MONITORING SYSTEM]

Diagnostic Procedure

Step	Inspection		Action
1	**DETERMINE IF MALFUNCTION CAUSE IS RVM WARNING INDICATOR LIGHT ILLUMINATION CIRCUIT** • Monitor the following rear vehicle monitoring system PIDs using the M-MDS: (See 09-02I-47 PID/DATA MONITOR INSPECTION [REAR VEHICLE MONITORING SYSTEM].) — OP_BRT_R — OP_BRT_L • Turn the headlight switch (TNS switch) on/off. **Note** • While the headlights turned on, the PID monitoring value increases (brighter). • Does the PID display value change according to the operation of the headlight switch?	Yes	Replace the rear vehicle monitoring control module (LH). (See 09-22-77 REAR VEHICLE MONITORING CONTROL MODULE REMOVAL/INSTALLATION.)
		No	Go to the next step.
2	**INSPECT LIGHT SWITCH** • Inspect the light switch. (See 09-18-86 LIGHT SWITCH INSPECTION.) • Is the light switch normal?	Yes	Go to the next step.
		No	Replace the light switch. (See 09-18-84 LIGHT SWITCH REMOVAL/INSTALLATION.)
3	**DETERMINE IF MALFUNCTION CAUSE IS INSTRUMENT CLUSTER OR REAR VEHICLE MONITORING CONTROL MODULE (RH)** • Display the instrument cluster PID I_ILLUMI_M item using the M-MDS. (See 09-02G-37 PID/DATA MONITOR INSPECTION [INSTRUMENT CLUSTER].) • Turn the headlight switch (TNS switch) on/off. • Does the PID/data monitor display switch normally?	Yes	Replace the rear vehicle monitoring control module (LH). (See 09-22-77 REAR VEHICLE MONITORING CONTROL MODULE REMOVAL/INSTALLATION.)
		No	Replace the instrument cluster. (See 09-22-6 INSTRUMENT CLUSTER REMOVAL/INSTALLATION.)

09-10 BODY PANELS

BODY PANELS LOCATION INDEX 09-10–2
BONNET
REMOVAL/INSTALLATION..... 09-10–3
BONNET
DISASSEMBLY/ASSEMBLY..... 09-10–5
BONNET ADJUSTMENT 09-10–6
Height Difference Adjustment 09-10–6
Gap Adjustment..... 09-10–7
FUEL-FILLER LID
REMOVAL/INSTALLATION..... 09-10–8
FUEL-FILLER LID ADJUSTMENT 09-10–9
FRONT BUMPER
REMOVAL/INSTALLATION..... 09-10–10
FRONT BUMPER
DISASSEMBLY/ASSEMBLY..... 09-10–14
FRONT BUMPER
REINFORCEMENT
REMOVAL/INSTALLATION..... 09-10–15
BUMPER SLIDER
REMOVAL/INSTALLATION..... 09-10–17
Front Bumper Slider..... 09-10–17
Rear Bumper Slider..... 09-10–18
ENERGY-ABSORBING FORM
REMOVAL/INSTALLATION..... 09-10–19
BUMPER STIFFENER LOWER
REMOVAL/INSTALLATION..... 09-10–20
SEAL PLATE
REMOVAL/INSTALLATION 09-10–22
SET PLATE
REMOVAL/INSTALLATION 09-10–23
REAR BUMPER
REMOVAL/INSTALLATION 09-10–24
REAR BUMPER
DISASSEMBLY/ASSEMBLY 09-10–28
REAR BUMPER
REINFORCEMENT
REMOVAL/INSTALLATION 09-10–29
FRONT FENDER PANEL
REMOVAL/INSTALLATION 09-10–30
FRONT OVER FENDER
REMOVAL/INSTALLATION 09-10–31
REAR OVER FENDER
REMOVAL/INSTALLATION 09-10–33
SEAL BOARD UPPER
REMOVAL/INSTALLATION 09-10–34
SHROUD PANEL
REMOVAL/INSTALLATION 09-10–35
SHROUD UPPER MEMBER
REMOVAL/INSTALLATION 09-10–40
COWL PANEL
REMOVAL/INSTALLATION 09-10–41

BODY PANELS

BODY PANELS LOCATION INDEX

id091000802600

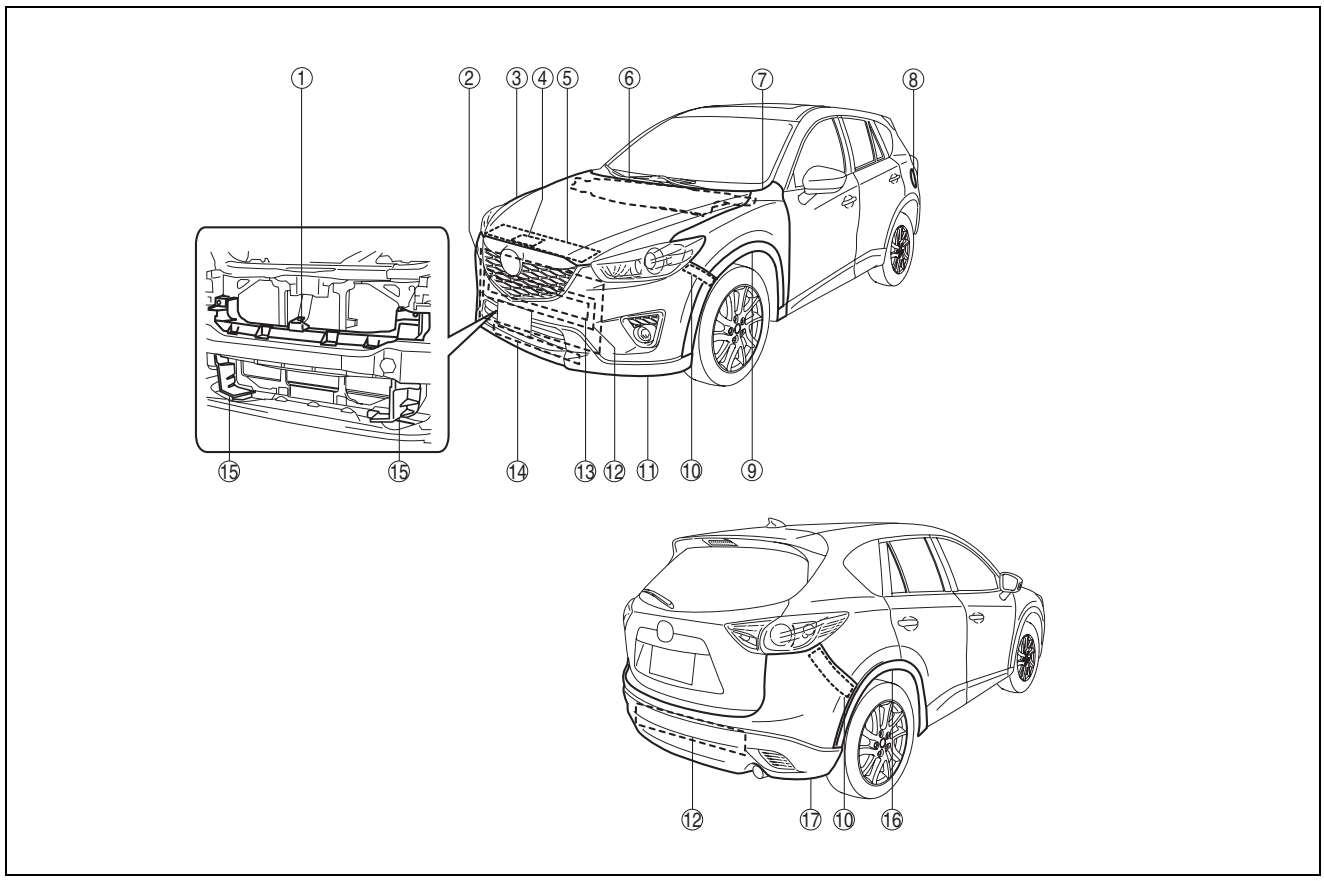

ac5uuw00002031

1	Set plate (See 09-10-23 SET PLATE REMOVAL/INSTALLATION.)
2	Shroud panel (See 09-10-35 SHROUD PANEL REMOVAL/INSTALLATION.)
3	Bonnet (See 09-10-3 BONNET REMOVAL/INSTALLATION.) (See 09-10-5 BONNET DISASSEMBLY/ASSEMBLY.) (See 09-10-6 BONNET ADJUSTMENT.)
4	Seal board upper (See 09-10-34 SEAL BOARD UPPER REMOVAL/INSTALLATION.)
5	Shroud upper member (See 09-10-40 SHROUD UPPER MEMBER REMOVAL/INSTALLATION.)
6	Cowl panel (See 09-10-41 COWL PANEL REMOVAL/INSTALLATION.)
7	Front fender panel (See 09-10-30 FRONT FENDER PANEL REMOVAL/INSTALLATION.)
8	Fuel-filler lid (See 09-10-8 FUEL-FILLER LID REMOVAL/INSTALLATION.) (See 09-10-9 FUEL-FILLER LID ADJUSTMENT.)
9	Front over fender (See 09-10-31 FRONT OVER FENDER REMOVAL/INSTALLATION.)

10	Bumper slider (See 09-10-17 BUMPER SLIDER REMOVAL/INSTALLATION.)
11	Front bumper (See 09-10-10 FRONT BUMPER REMOVAL/INSTALLATION.) (See 09-10-14 FRONT BUMPER DISASSEMBLY/ASSEMBLY.)
12	Bumper reinforcement (See 09-10-15 FRONT BUMPER REINFORCEMENT REMOVAL/INSTALLATION.) (See 09-10-29 REAR BUMPER REINFORCEMENT REMOVAL/INSTALLATION.)
13	Energy-absorbing form (See 09-10-19 ENERGY-ABSORBING FORM REMOVAL/INSTALLATION.)
14	Bumper stiffener lower (See 09-10-20 BUMPER STIFFENER LOWER REMOVAL/INSTALLATION.)
15	Seal plate (See 09-10-22 SEAL PLATE REMOVAL/INSTALLATION.)
16	Rear over fender (See 09-10-33 REAR OVER FENDER REMOVAL/INSTALLATION.)
17	Rear bumper (See 09-10-24 REAR BUMPER REMOVAL/INSTALLATION.) (See 09-10-28 REAR BUMPER DISASSEMBLY/ASSEMBLY.)

BODY PANELS

BONNET REMOVAL/INSTALLATION

id091000407200

Warning

- **Removing the bonnet without supporting it could cause the bonnet to fall and cause serious injury. Always perform the procedure with at least another person to prevent the bonnet from falling.**

1. Disconnect the negative battery cable. (See 01-17A-11 NEGATIVE BATTERY CABLE DISCONNECTION/CONNECTION [SKYACTIV-G 2.0].) (See 01-17A-13 NEGATIVE BATTERY CABLE DISCONNECTION/CONNECTION [SKYACTIV-G 2.0 (WITHOUT i-stop)].) (See 01-17B-9 NEGATIVE BATTERY CABLE DISCONNECTION/CONNECTION [SKYACTIV-D 2.2].)
2. Remove the following parts:
   (1) Front over fender (See 09-10-31 FRONT OVER FENDER REMOVAL/INSTALLATION.)
   (2) Front bumper (See 09-10-10 FRONT BUMPER REMOVAL/INSTALLATION.)
   (3) Front combination light (See 09-18-7 FRONT COMBINATION LIGHT REMOVAL/INSTALLATION.)
   (4) Front fender panel (See 09-10-30 FRONT FENDER PANEL REMOVAL/INSTALLATION.)
3. Loosen bolts A.
4. Remove bolts B.

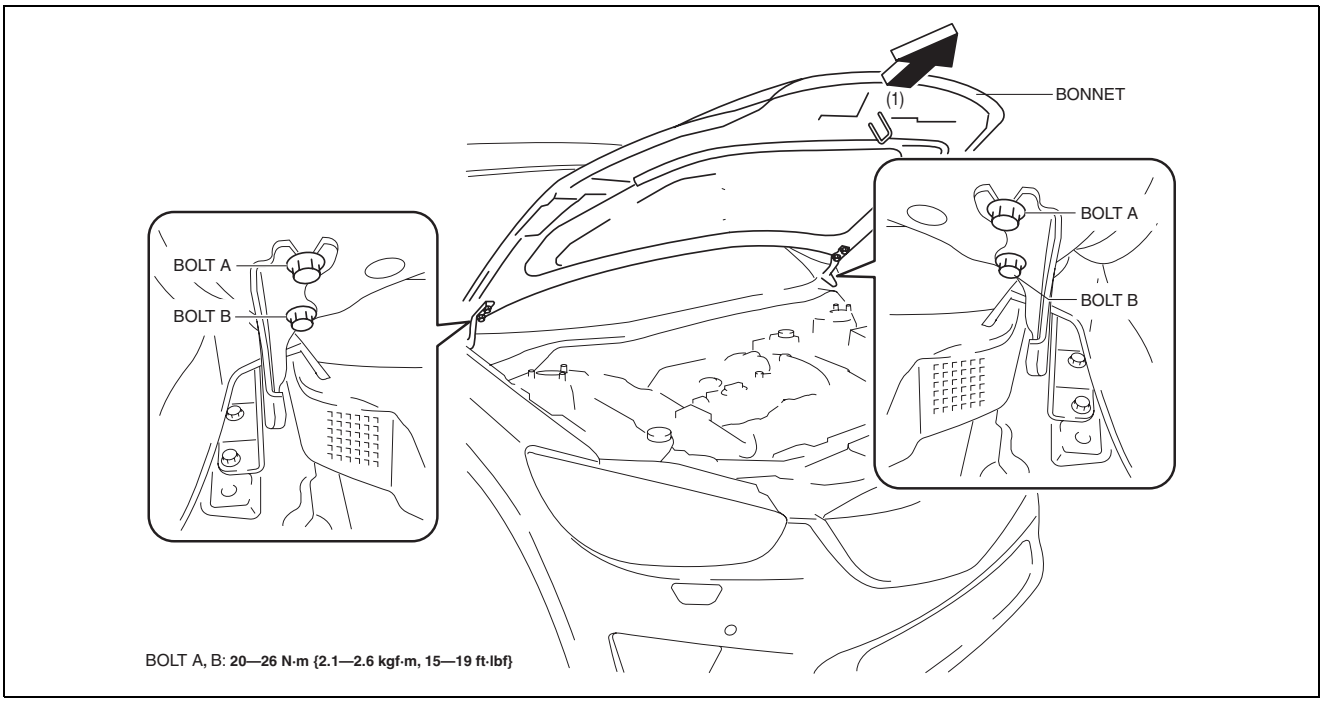

ac5wzw0000247

5. Remove the bonnet in the direction of the arrow(1) shown in the figure.

BODY PANELS

6. Remove bolts C.
7. Move the bonnet hinge in the direction of the arrow (2), (3) shown in the figure, while remove it.
8. Install in the reverse order of removal.
9. Adjust the headlight aiming. (See 09-18-18 HEADLIGHT AIMING.)
10. Adjust the front fog light aiming. (with front fog lights) (See 09-18-48 FRONT FOG LIGHT AIMING.)
11. Perform the bonnet adjustment. (See 09-10-6 BONNET ADJUSTMENT.)

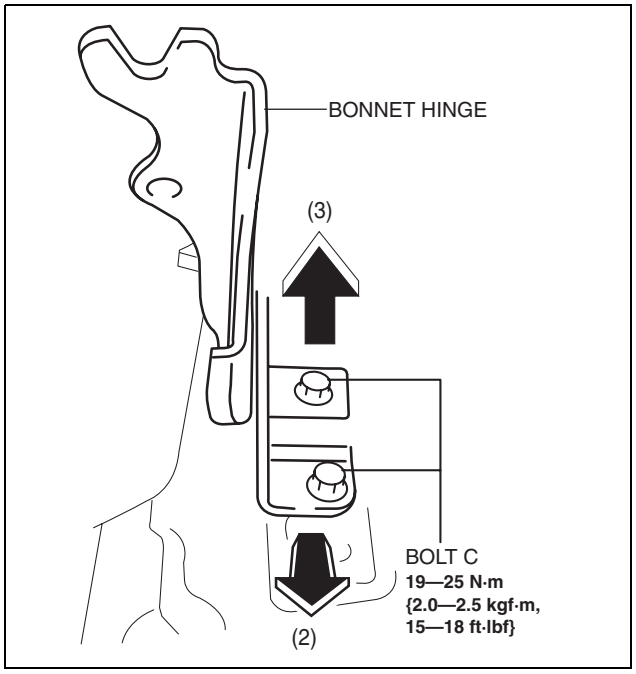

ac5wzw0000247

BODY PANELS

BONNET DISASSEMBLY/ASSEMBLY

id091000899800

1. Disassemble in the order indicated in the table.

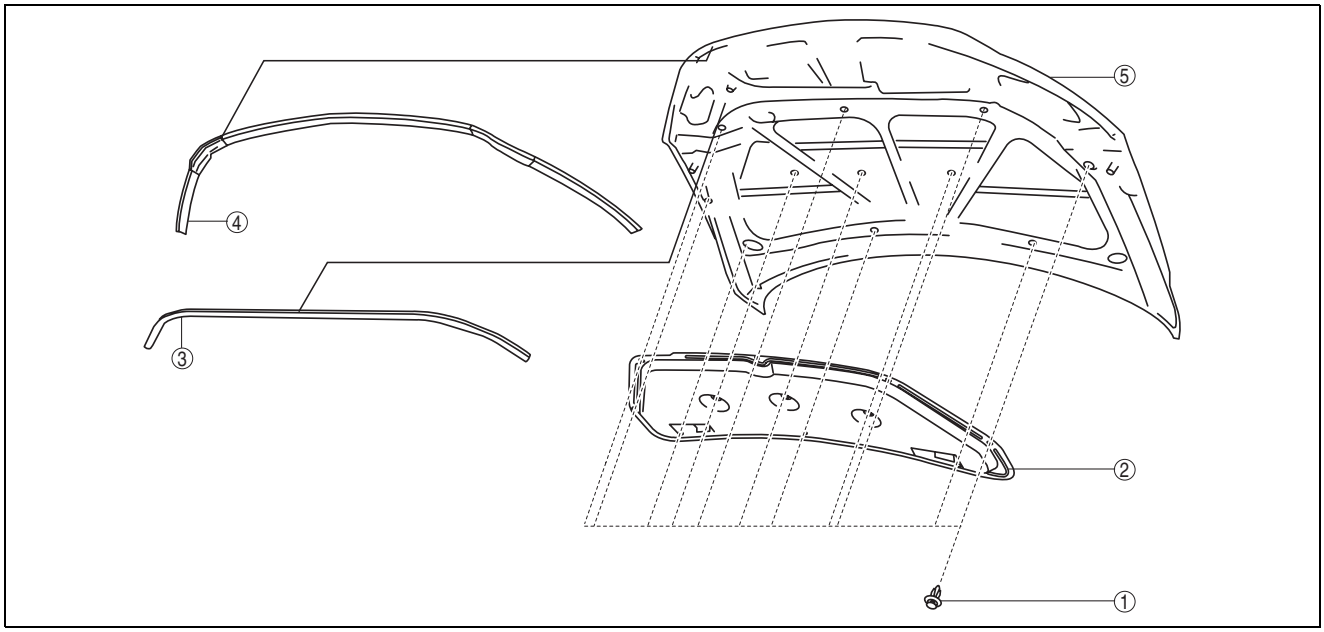

ac5wzw0000289

1	Fastener
2	Bonnet insulator
3	Shroud seaming welt
4	Weather strip parting seal
5	Bonnet component

2. Assemble in the reverse order of disassembly.

BODY PANELS

BONNET ADJUSTMENT

id091000407300

Height Difference Adjustment

1. Verify that the height difference between the bonnet and the body is within the specification.

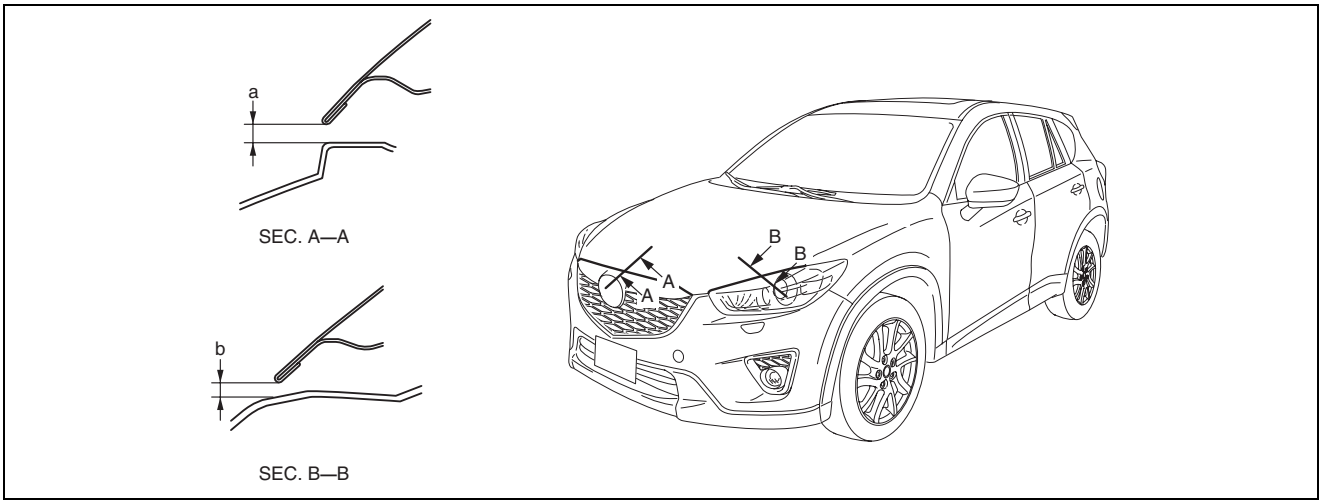

ac5wzw0000247

Standard clearance
a: 2.7—6.9 mm {0.11—0.27 in}
b: 4.1—8.0 mm {0.17—0.31 in}

2. Disconnect the negative battery cable.
3. Remove the following parts:
   (1) Front over fender (See 09-10-31 FRONT OVER FENDER REMOVAL/INSTALLATION.)
   (2) Front bumper (See 09-10-10 FRONT BUMPER REMOVAL/INSTALLATION.)
   (3) Front combination light (See 09-18-7 FRONT COMBINATION LIGHT REMOVAL/INSTALLATION.)
   (4) Front bumper slider (See 09-10-17 BUMPER SLIDER REMOVAL/INSTALLATION.)
   (5) Front fender panel (See 09-10-30 FRONT FENDER PANEL REMOVAL/INSTALLATION.)
4. Loosen bolts and adjust the bonnet.
5. Tighten bolts. (See 09-10-3 BONNET REMOVAL/INSTALLATION.)
6. Install the following parts:
   (1) Front fender panel (See 09-10-30 FRONT FENDER PANEL REMOVAL/INSTALLATION.)
   (2) Front bumper slider (See 09-10-17 BUMPER SLIDER REMOVAL/INSTALLATION.)
   (3) Front combination light (See 09-18-7 FRONT COMBINATION LIGHT REMOVAL/INSTALLATION.)
   (4) Front bumper (See 09-10-10 FRONT BUMPER REMOVAL/INSTALLATION.)
   (5) Front over fender (See 09-10-31 FRONT OVER FENDER REMOVAL/INSTALLATION.)
7. Connect the negative battery cable (See 01-17A-11 NEGATIVE BATTERY CABLE DISCONNECTION/CONNECTION [SKYACTIV-G 2.0].) (See 01-17A-13 NEGATIVE BATTERY CABLE DISCONNECTION/CONNECTION [SKYACTIV-G 2.0 (WITHOUT i-stop)].) (See 01-17B-9 NEGATIVE BATTERY CABLE DISCONNECTION/CONNECTION [SKYACTIV-D 2.2].)
8. Adjust the headlight aiming. (See 09-18-18 HEADLIGHT AIMING.)
9. Adjust the front fog light aiming. (with front fog lights) (See 09-18-48 FRONT FOG LIGHT AIMING.)

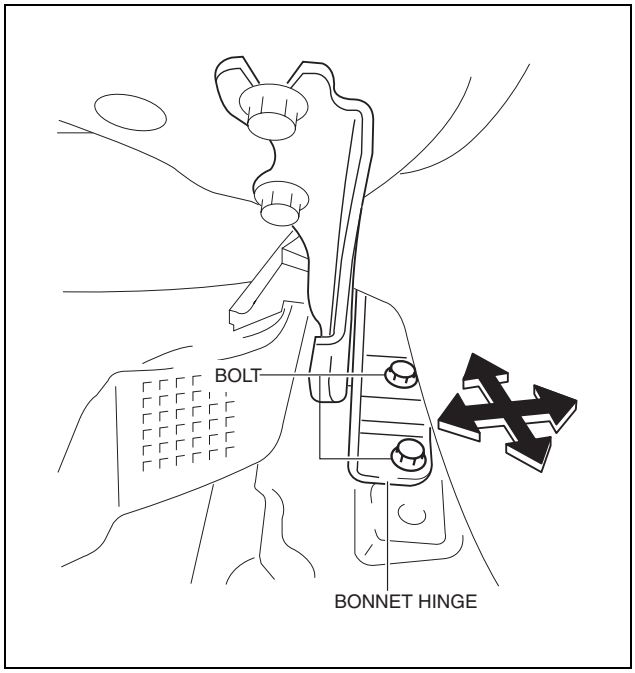

ac5wzw0000247

BODY PANELS

Gap Adjustment

1. Verify that the gap between the bonnet and the body is within the specification.

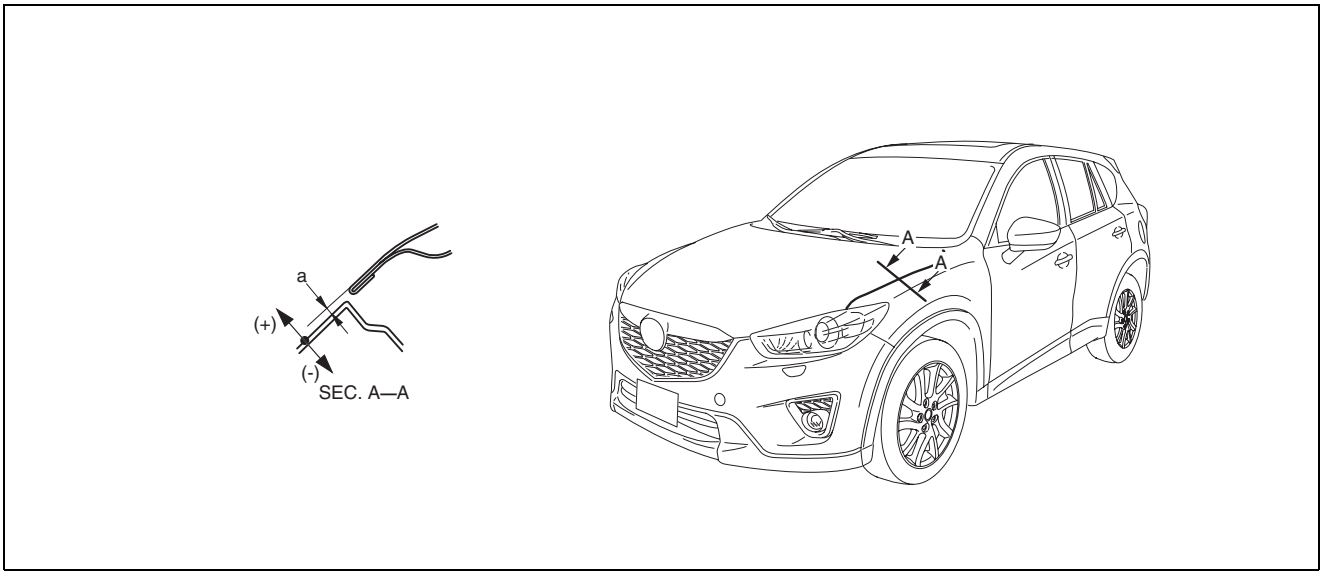

ac5wzw0000462

Standard clearance
a: -1.2—1.2 mm {-0.047—0.047 in}

2. Turn the stopper rubber to adjust the height of the bonnet.

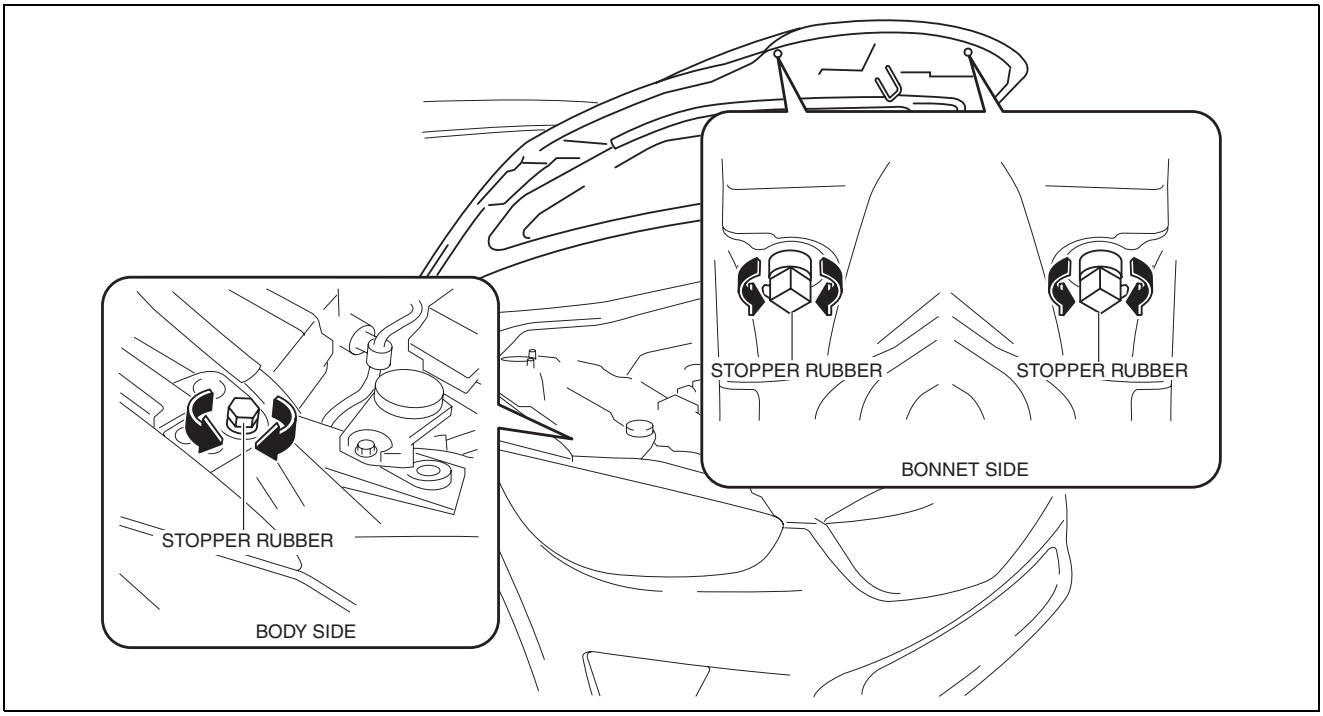

ac5wzw0000247

BODY PANELS

FUEL-FILLER LID REMOVAL/INSTALLATION

1. Remove bolts.
2. Remove the fuel-filler lid.
3. Install in the reverse order of removal.
4. Adjust the fuel-filler lid. (See 09-10-9 FUEL-FILLER LID ADJUSTMENT.)

id091000800100

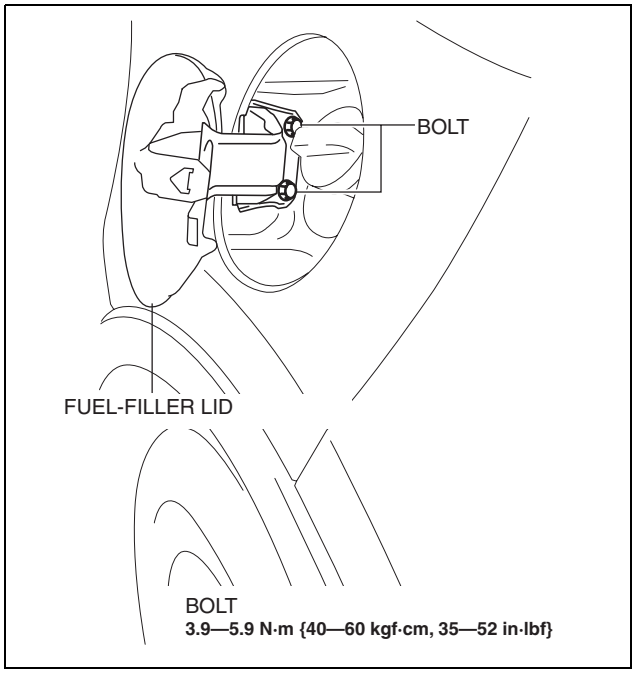

ac5wzw0000114

BODY PANELS

FUEL-FILLER LID ADJUSTMENT

id091000800200

1. Verify that the gap and height difference between the fuel-filler lid and body.
2. Loosen the bolts and adjust the fuel-filler lid.

   Standard clearance
   a: 1.7—3.7 mm {0.07—0.14 in}
   b: –0.5—1.5 mm {–0.01—0.05 in}

3. Tighten the bolts. (See 09-10-8 FUEL-FILLER LID REMOVAL/INSTALLATION.)

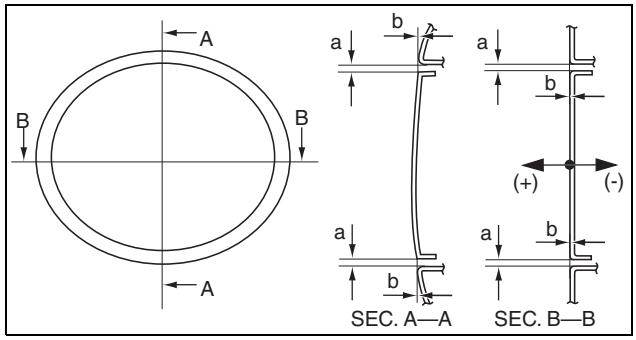

ac5wzw0000462

BODY PANELS

FRONT BUMPER REMOVAL/INSTALLATION

id091000800300

Caution
- **Affix the protective tape to the position (vehicle body side) shown in the figure to prevent scratches and damage.**

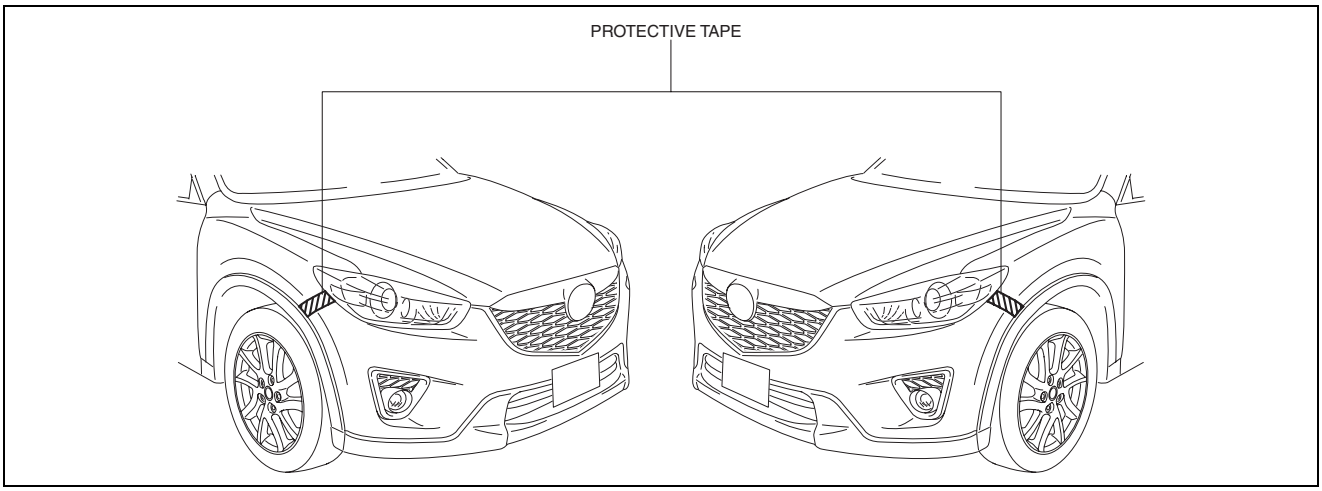

ac5wzw0000288

1. Disconnect the negative battery cable. (See 01-17A-11 NEGATIVE BATTERY CABLE DISCONNECTION/CONNECTION [SKYACTIV-G 2.0].) (See 01-17A-13 NEGATIVE BATTERY CABLE DISCONNECTION/CONNECTION [SKYACTIV-G 2.0 (WITHOUT i-stop)].) (See 01-17B-9 NEGATIVE BATTERY CABLE DISCONNECTION/CONNECTION [SKYACTIV-D 2.2].)
2. Remove fasteners A.

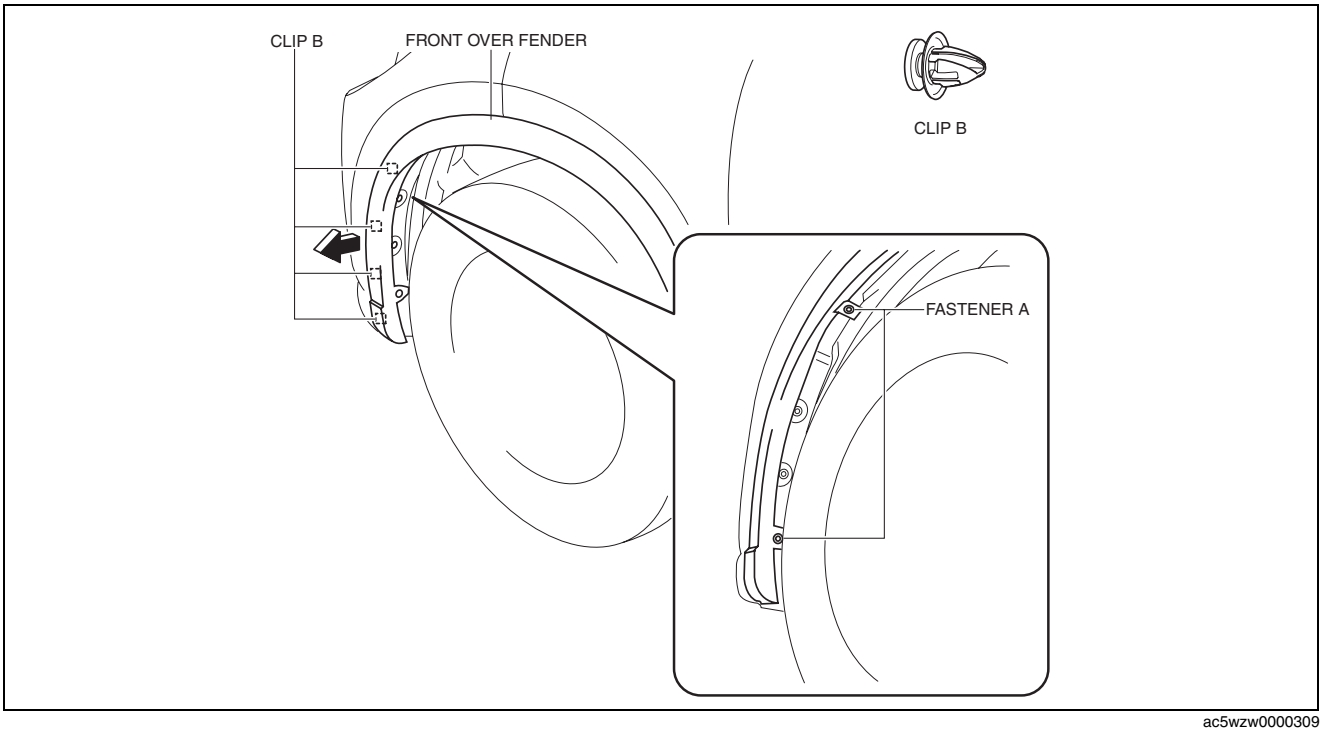

ac5wzw0000309

3. Pull the front over fender in the direction of the arrow shown in the figure, set the front over fender out of the way while detaching clips B.

Caution
- **After removing clips B, insert a rag between the front fender panel and the front over fender to prevent the front fender panel and clips B from being damaged.**

BODY PANELS

4. Remove screws C.

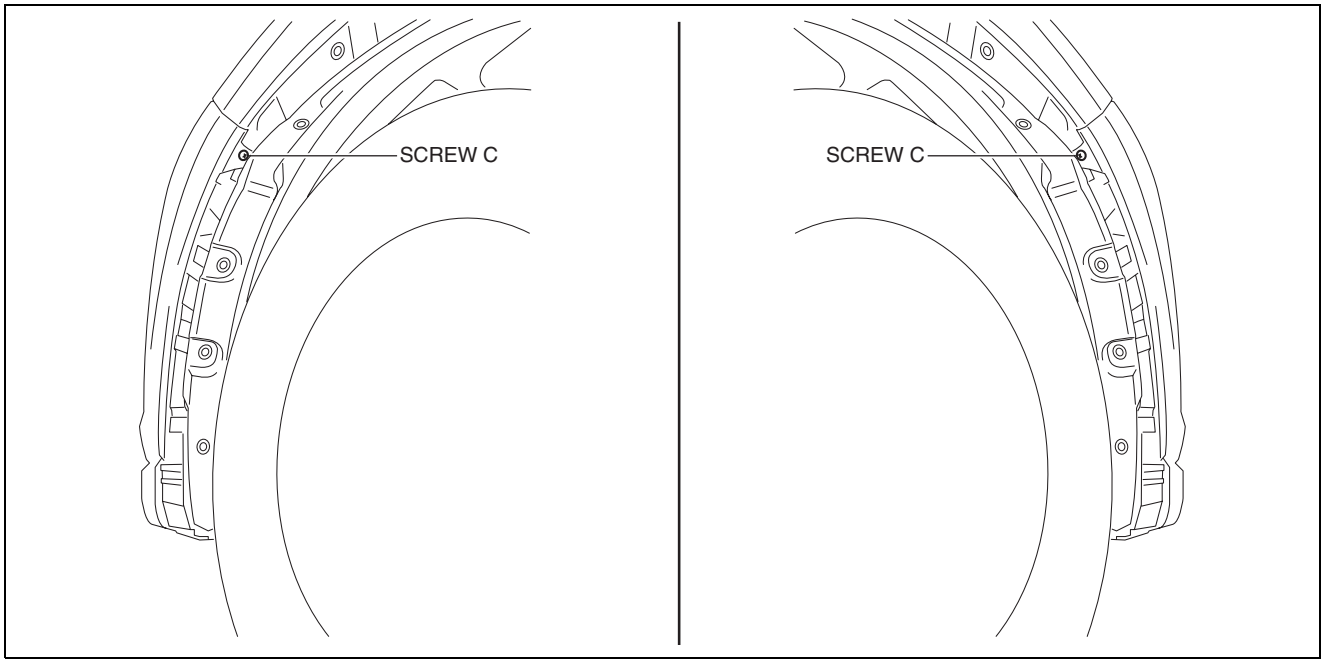

ac5wzw0000114

5. Remove screws D.

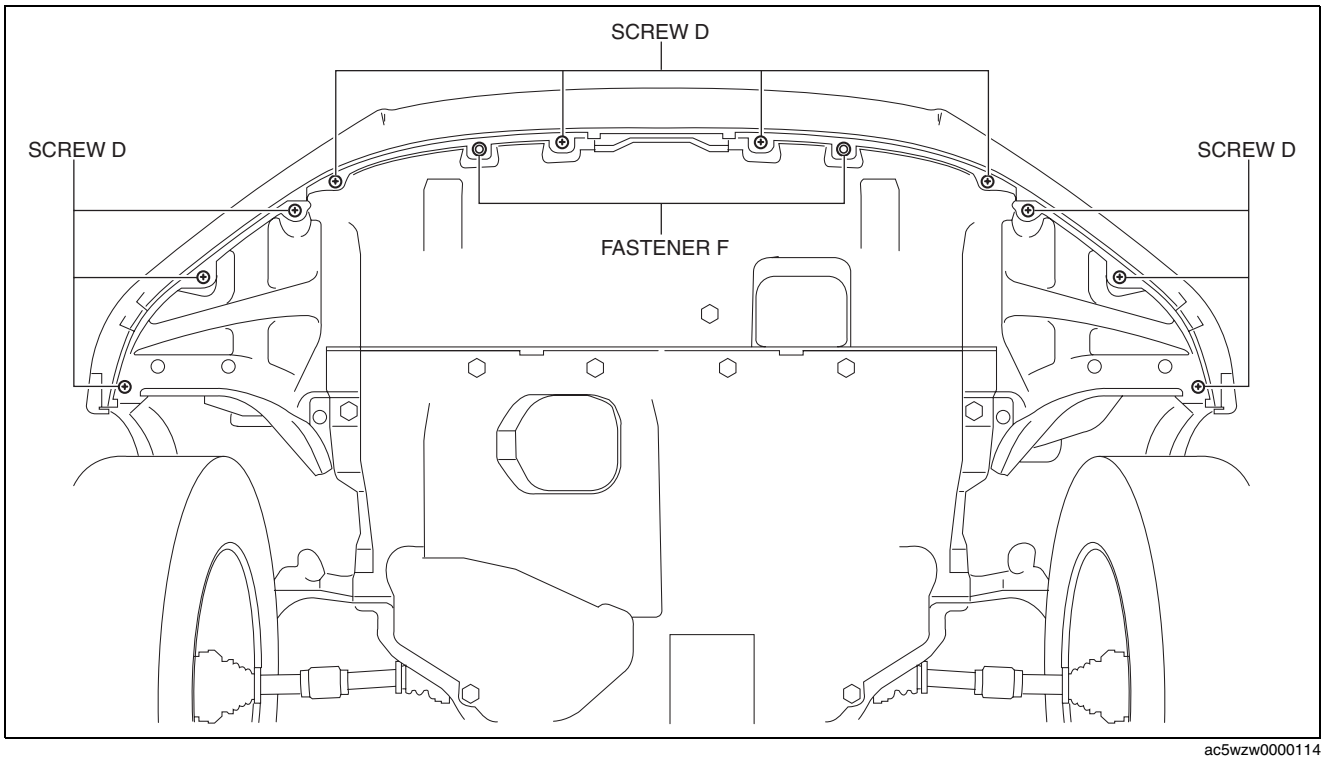

ac5wzw0000114

6. Remove fasteners F.
7. Remove the seal board upper. (See 09-10-34 SEAL BOARD UPPER REMOVAL/INSTALLATION.)

BODY PANELS

8. Remove fasteners G.

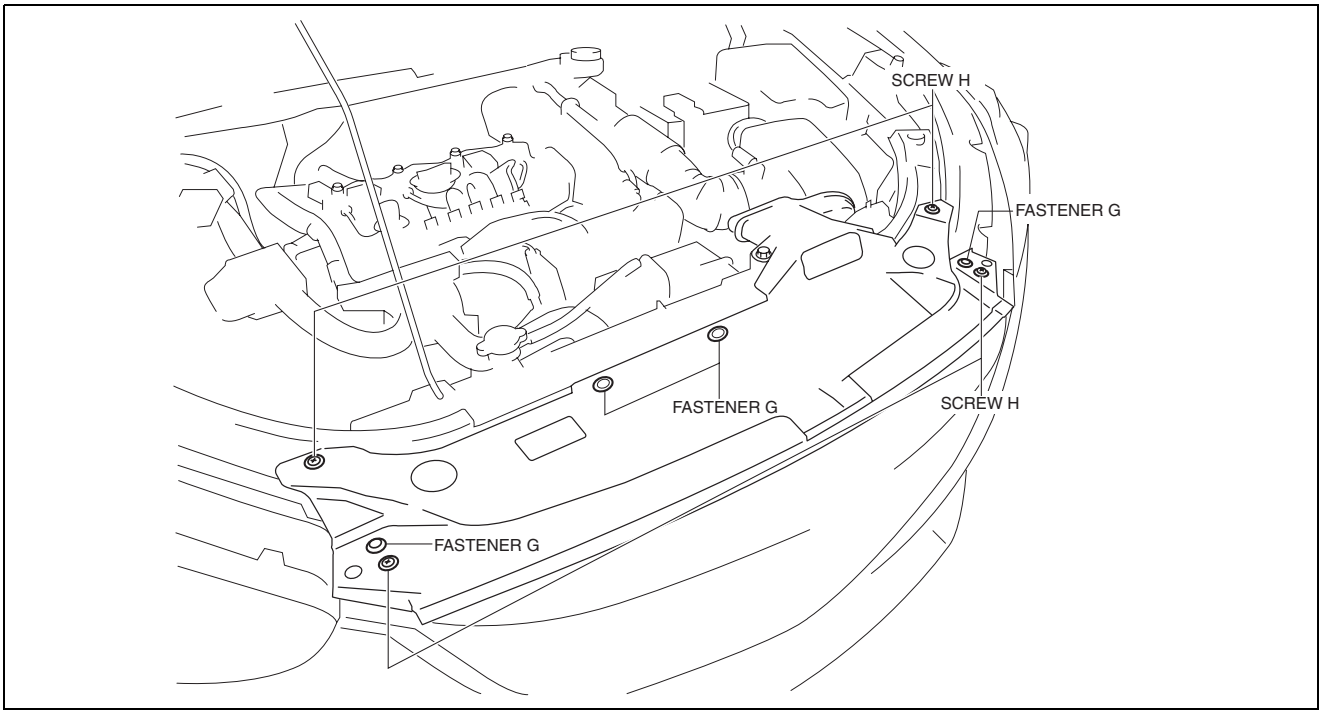

ac5wzw0000309

9. Remove screws H.
10. Pull the front bumper in the direction of the arrow (1) shown in the figure, then remove tabs I.

Caution

- **The front bumper and front bumper slider are engaged firmly. If they are disengaged forcibly the bumper could fall and be damaged. Perform the servicing carefully when disengaging the front bumper from the front bumper slider.**
- **When disengaging the front bumper from the front bumper slider, the front bumper could fall and be damaged. Support the front bumper so that it does not fall.**

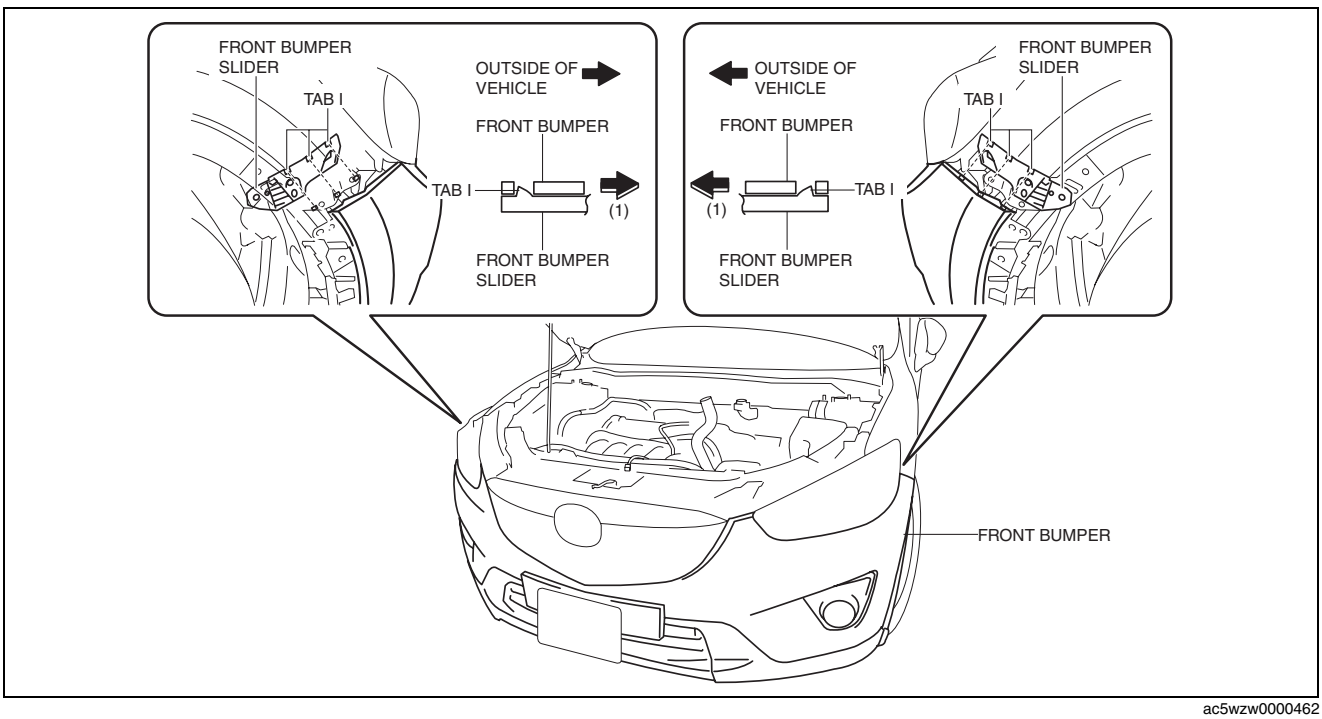

ac5wzw0000462

11. Remove the front bumper from the front bumper slider.

BODY PANELS

12. Pull the front bumper in the direction of the arrow (2) shown in the figure and remove it while detaching guides G.

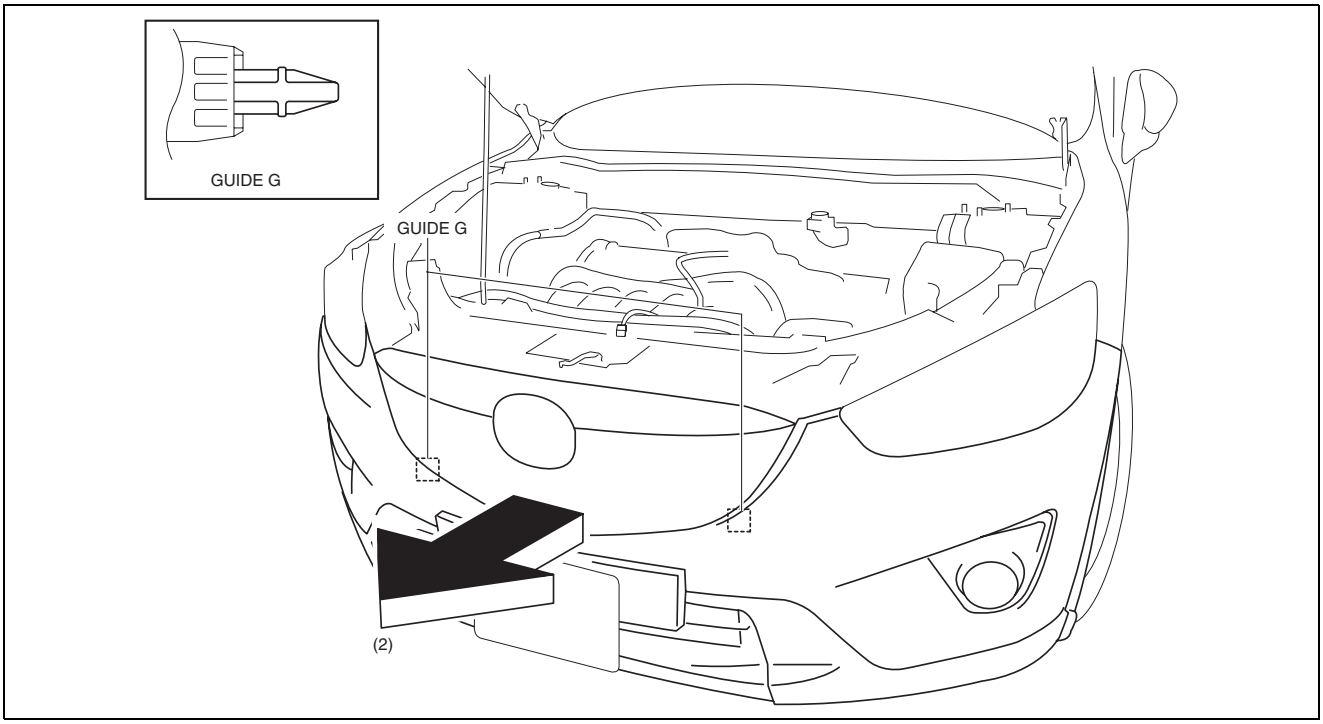

ac5wzw0000462

13. Disconnect the front fog light connector. (with front fog lights)
14. Disconnect the front ultrasonic sensor connector. (with parking sensor system)
15. Disconnect the front headlight cleaner hose (with headlight cleaner)

Caution

- **After removing front bumper, it may hit the front over fender and cause a damage and/or injury. Perform the following procedure to prevent the front over fender from being damaged.**
  - **— Fix the front over fender and front fender panel with protective tape.**

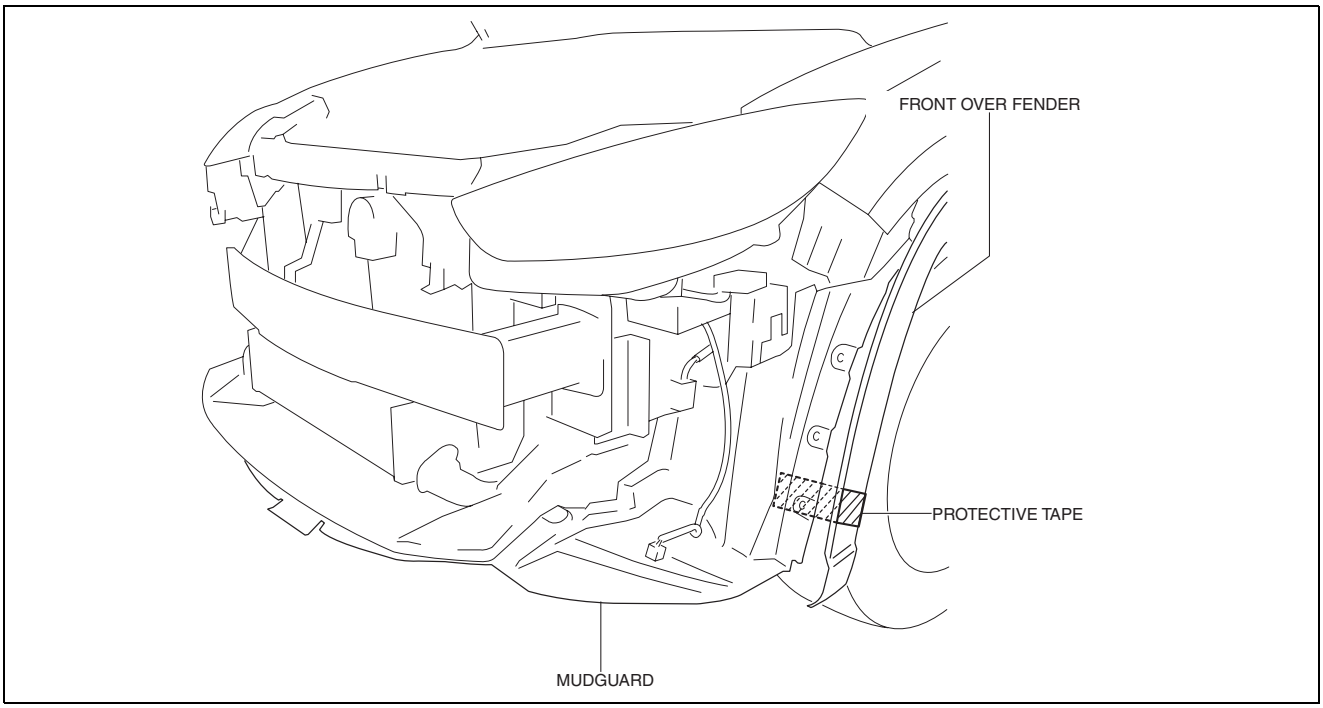

ac5uuw00002028

16. Install in the reverse order of removal.
17. Adjust the front fog light aiming. (with front fog lights) (See 09-18-48 FRONT FOG LIGHT AIMING.)

BODY PANELS

FRONT BUMPER DISASSEMBLY/ASSEMBLY

id091000800400

1. Disassemble in the order indicated in the table.

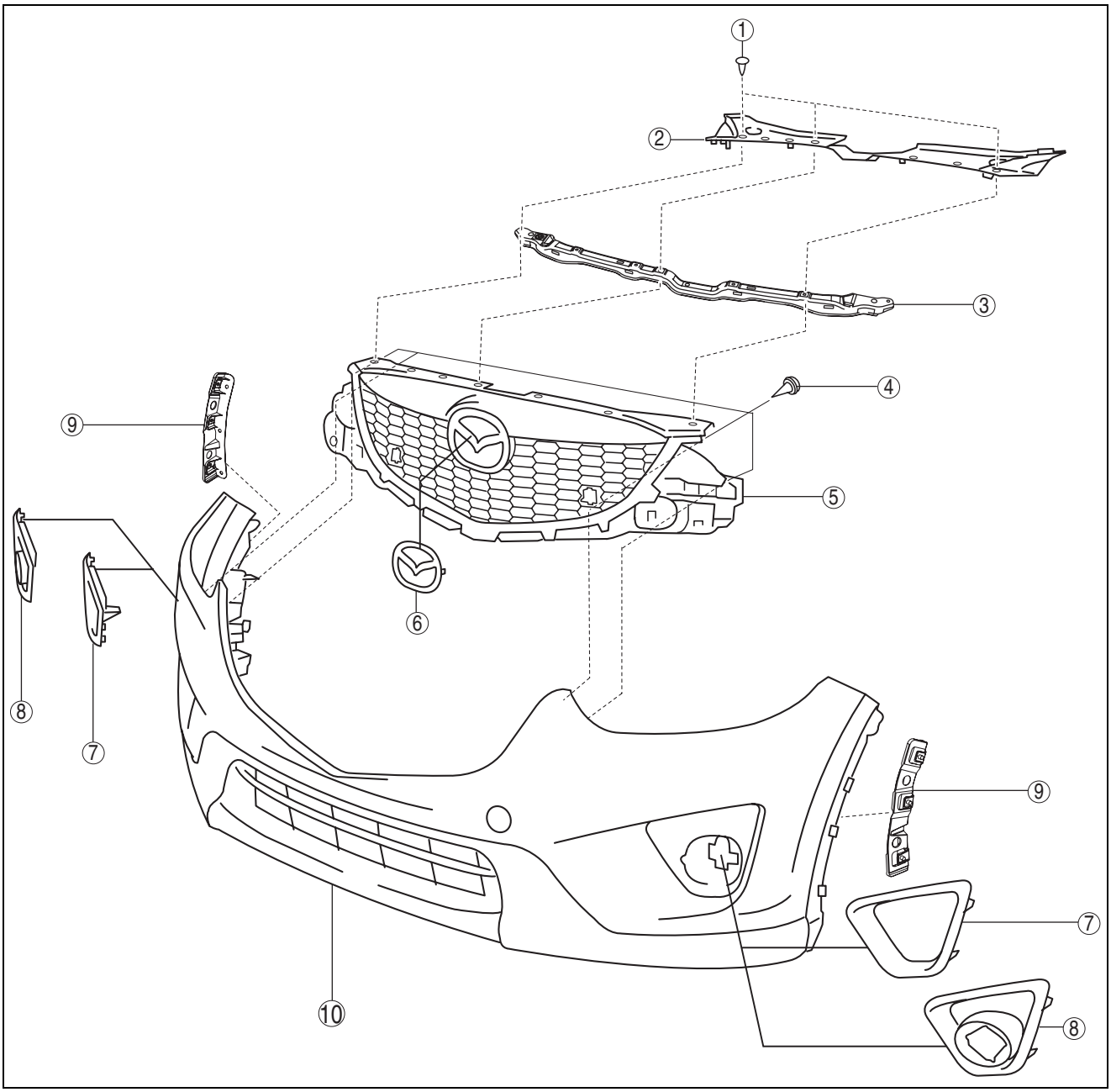

ac5wzw0000307

1	Rivet
2	Grille bracket
3	Front bumper retainer
4	Screw
5	Radiator grille

6	Ornament
7	Front fog light hole cover (without front fog lights)
8	Front fog light hole cover (with front fog lights)
9	Bracket
10	Front bumper

2. Assemble in the reverse order of disassembly.

BODY PANELS

FRONT BUMPER REINFORCEMENT REMOVAL/INSTALLATION

id091000800600

1. Disconnect the negative battery cable. (See 01-17A-11 NEGATIVE BATTERY CABLE DISCONNECTION/CONNECTION [SKYACTIV-G 2.0].) (See 01-17A-13 NEGATIVE BATTERY CABLE DISCONNECTION/CONNECTION [SKYACTIV-G 2.0 (WITHOUT i-stop)].) (See 01-17B-9 NEGATIVE BATTERY CABLE DISCONNECTION/CONNECTION [SKYACTIV-D 2.2].)
2. Remove the following parts:
   (1) Seal board upper (See 09-10-34 SEAL BOARD UPPER REMOVAL/INSTALLATION.)
   (2) Front bumper (See 09-10-10 FRONT BUMPER REMOVAL/INSTALLATION.)
   (3) Front combination light (See 09-18-7 FRONT COMBINATION LIGHT REMOVAL/INSTALLATION.)
   (4) Set plate (See 09-10-23 SET PLATE REMOVAL/INSTALLATION.)
   (5) Energy-absorbing form (See 09-10-19 ENERGY-ABSORBING FORM REMOVAL/INSTALLATION.)
   (6) Front under cover No.1 (See 09-16-40 FRONT UNDER COVER No.1 REMOVAL/INSTALLATION.)
   (7) Bumper stiffener lower (See 09-10-20 BUMPER STIFFENER LOWER REMOVAL/INSTALLATION.)
3. Support the shroud panel using a jack.

Caution

- **Because the shroud panel is installed to the bumper reinforcement, support the shroud panel using a jack before removing the bumper reinforcement so as not to apply excessive force to the shroud panel.**

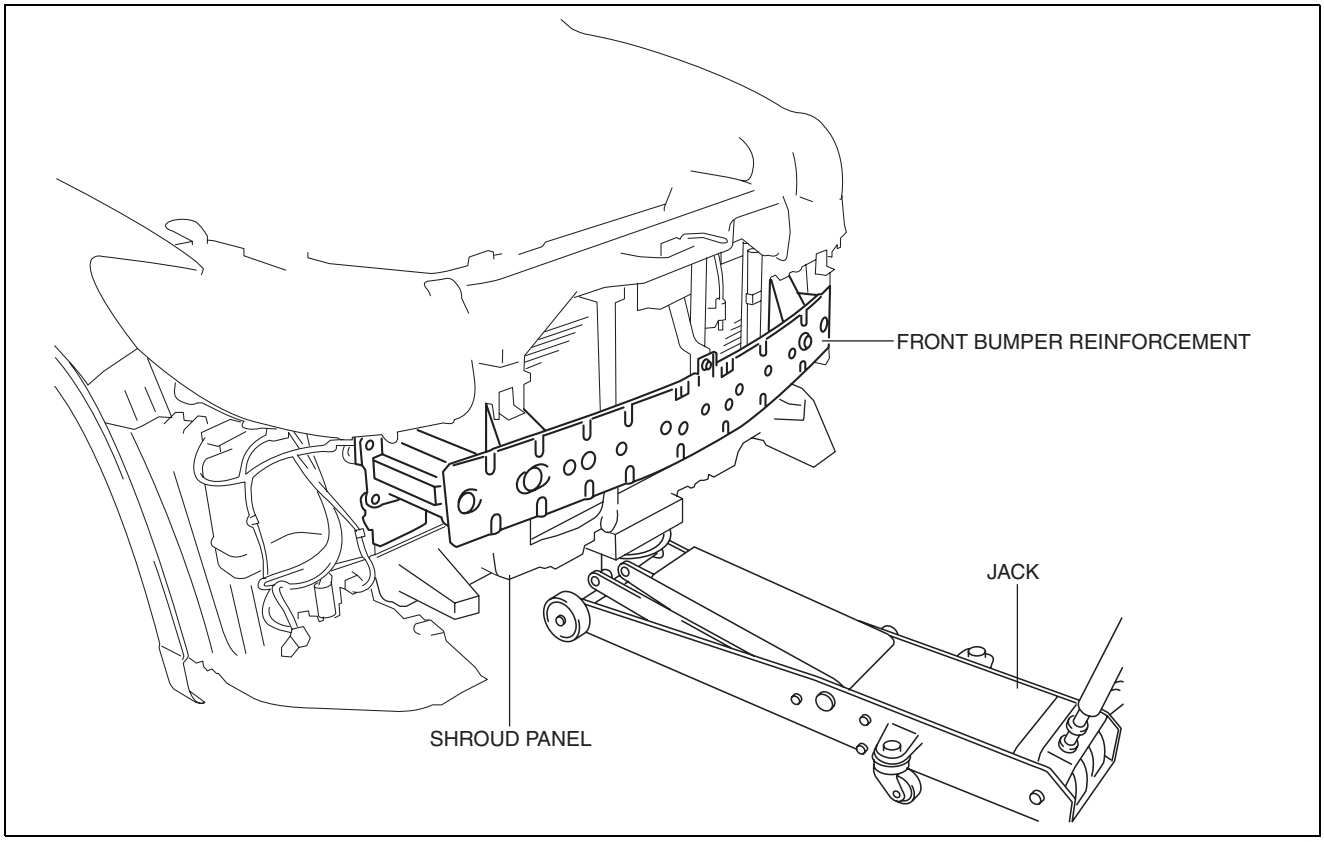

ac5wzw0000313

BODY PANELS

4. Remove bolts A.

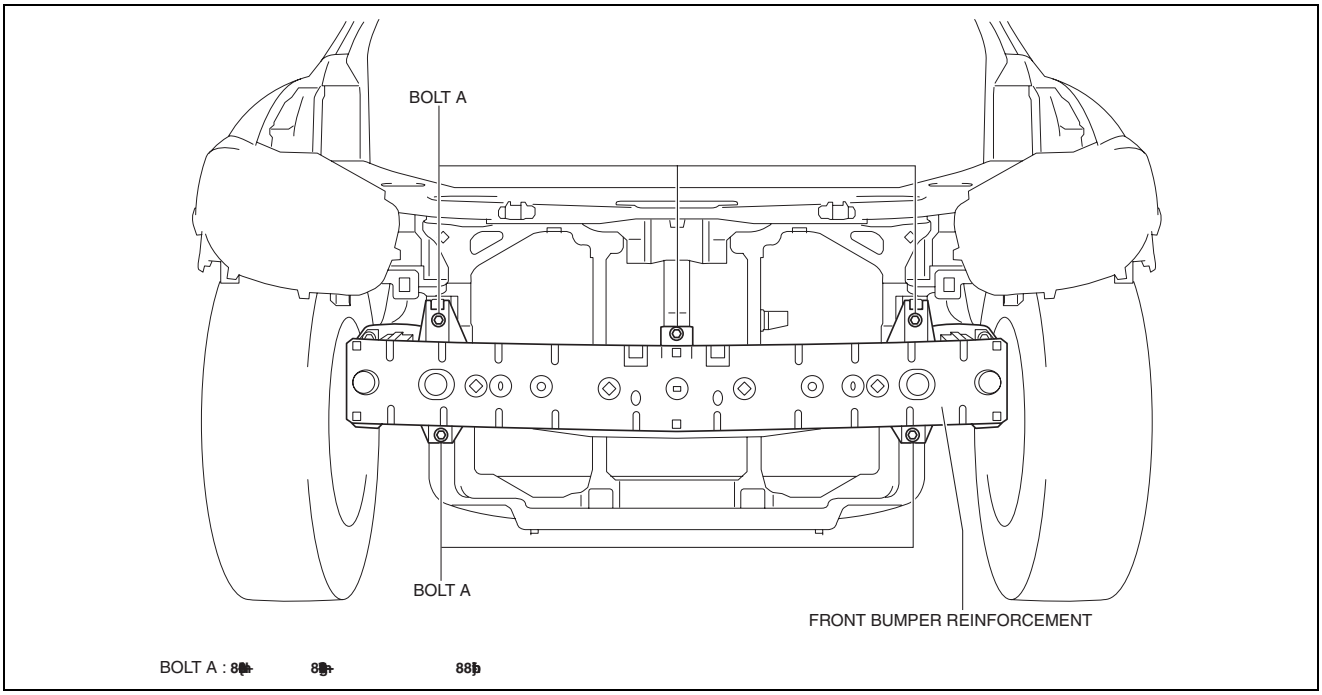

ac5wzw0000313

5. Remove bolts B.

Caution

- **Removing the front bumper reinforcement without supporting it could cause the front bumper reinforcement to fall and cause serious injury. Always perform the procedure with at least another person to prevent the front bumper reinforcement from falling.**

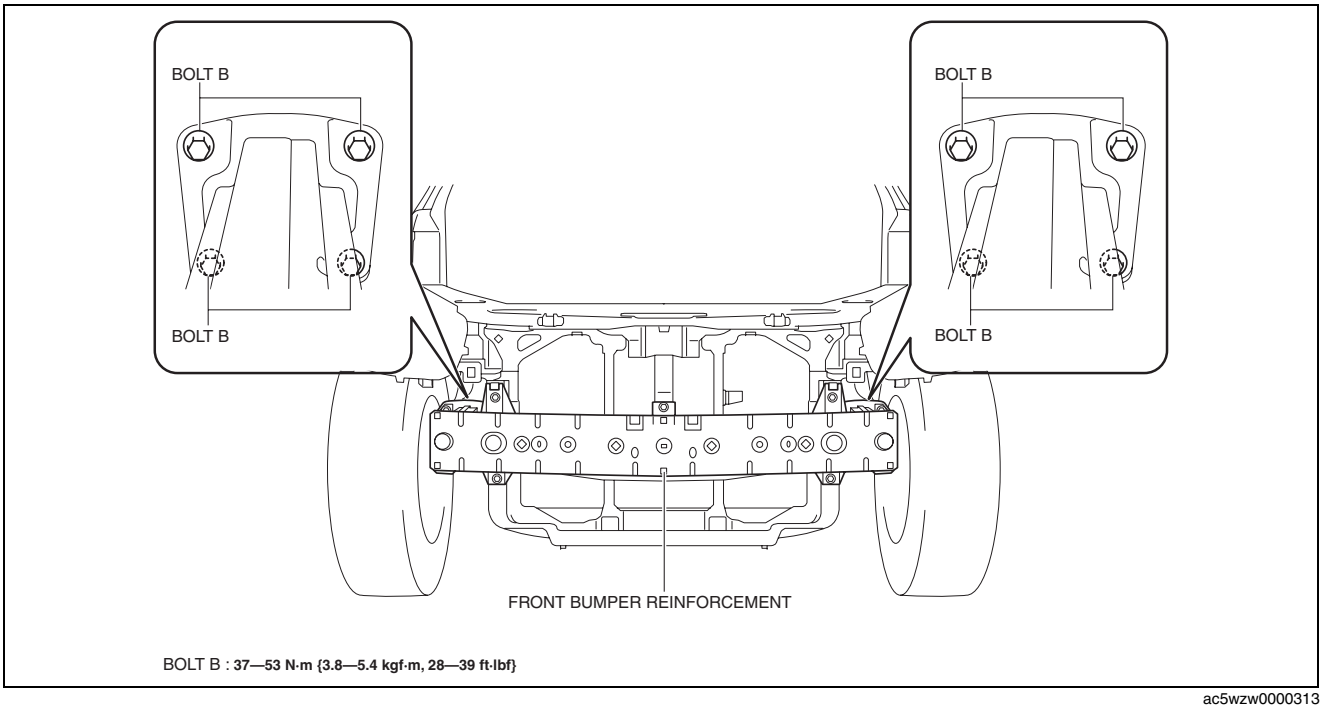

ac5wzw0000313

6. Remove the front bumper reinforcement.
7. Install in the reverse order of removal.
8. Adjust the headlight aiming. (See 09-18-18 HEADLIGHT AIMING.)
9. Adjust the front fog light aiming. (with front fog lights) (See 09-18-48 FRONT FOG LIGHT AIMING.)

BODY PANELS

BUMPER SLIDER REMOVAL/INSTALLATION

id091000822500

Front Bumper Slider

1. Disconnect the negative battery cable. (See 01-17A-11 NEGATIVE BATTERY CABLE DISCONNECTION/CONNECTION [SKYACTIV-G 2.0].) (See 01-17A-13 NEGATIVE BATTERY CABLE DISCONNECTION/CONNECTION [SKYACTIV-G 2.0 (WITHOUT i-stop)].) (See 01-17B-9 NEGATIVE BATTERY CABLE DISCONNECTION/CONNECTION [SKYACTIV-D 2.2].)
2. Remove the seal board upper. (See 09-10-34 SEAL BOARD UPPER REMOVAL/INSTALLATION.)
3. Remove the front bumper. (See 09-10-10 FRONT BUMPER REMOVAL/INSTALLATION.)
4. Remove bolts A.

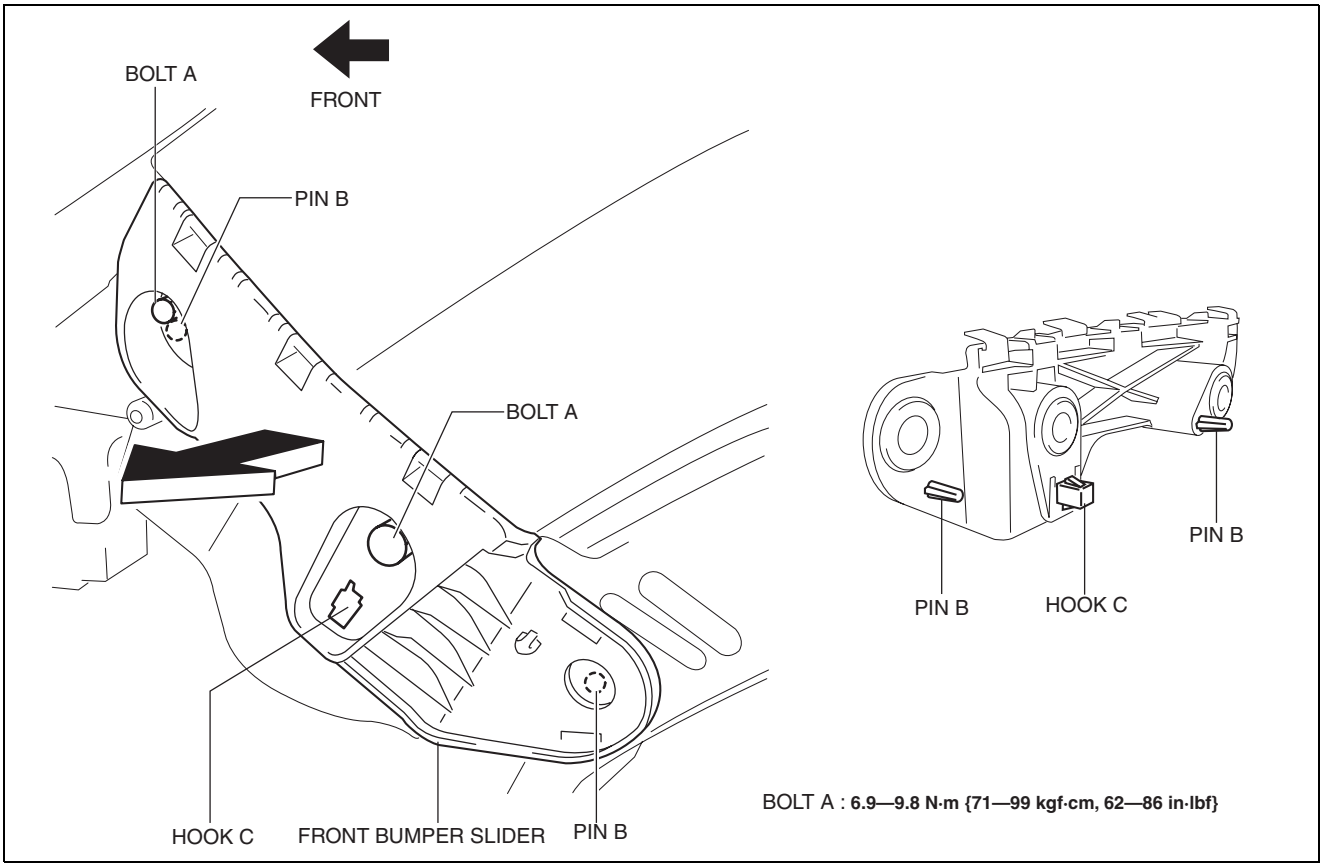

ac5wzw0000309

5. Pull the front bumper slider in the direction of the arrow while detaching pins B and hook C.
6. Install in the reverse order of removal.
7. Adjust the headlight aiming. (See 09-18-18 HEADLIGHT AIMING.)
8. Adjust the front fog light aiming. (with front fog lights) (See 09-18-48 FRONT FOG LIGHT AIMING.)

BODY PANELS

Rear Bumper Slider

1. Disconnect the negative battery cable. (See 01-17A-11 NEGATIVE BATTERY CABLE DISCONNECTION/CONNECTION [SKYACTIV-G 2.0].) (See 01-17A-13 NEGATIVE BATTERY CABLE DISCONNECTION/CONNECTION [SKYACTIV-G 2.0 (WITHOUT i-stop)].) (See 01-17B-9 NEGATIVE BATTERY CABLE DISCONNECTION/CONNECTION [SKYACTIV-D 2.2].)
2. Remove the rear combination light. (See 09-18-54 REAR COMBINATION LIGHT REMOVAL/INSTALLATION.)
3. Remove the rear splash shield. (See 09-16-49 SPLASH SHIELD REMOVAL/INSTALLATION.)
4. Remove the rear bumper. (See 09-10-24 REAR BUMPER REMOVAL/INSTALLATION.)
5. Remove screw A.

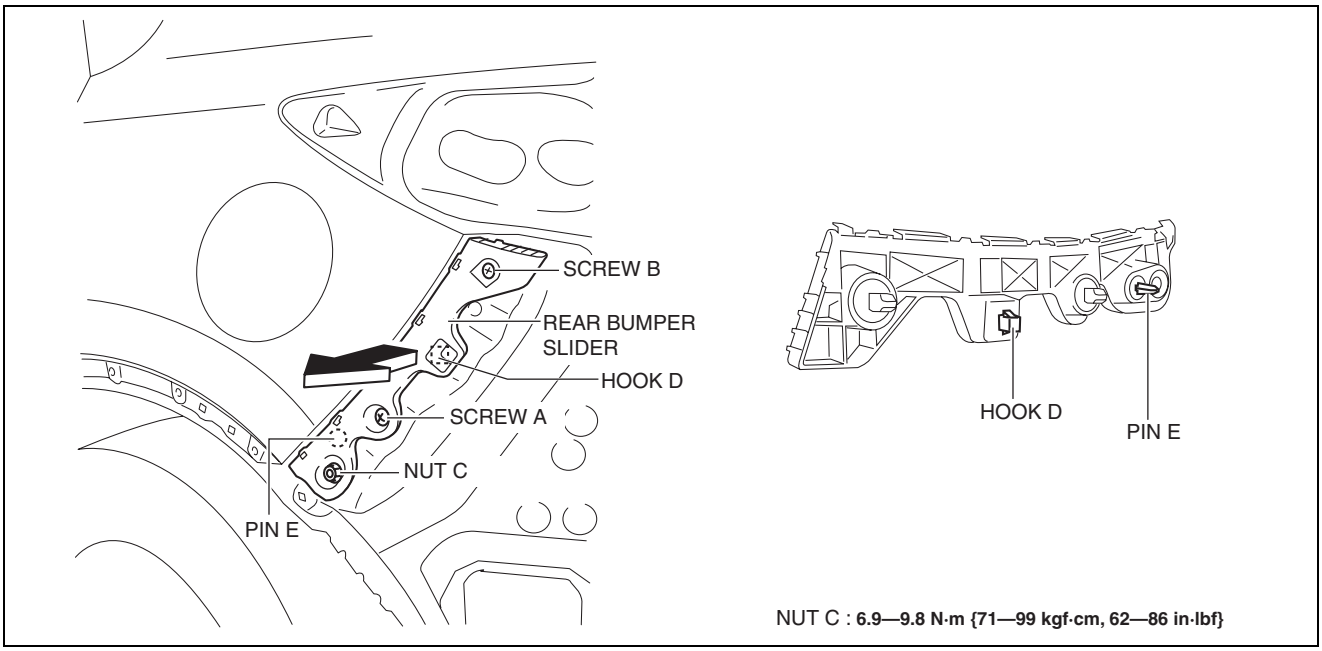

ac5wzw0000309

6. Remove screw B.
7. Remove nut C.
8. Pull the rear bumper slider in the direction of the arrow while detaching hook D and pin E.
9. Install in the reverse order of removal.

BODY PANELS

ENERGY-ABSORBING FORM REMOVAL/INSTALLATION

id091000888800

1. Disconnect the negative battery cable. (See 01-17A-11 NEGATIVE BATTERY CABLE DISCONNECTION/CONNECTION [SKYACTIV-G 2.0].) (See 01-17A-13 NEGATIVE BATTERY CABLE DISCONNECTION/CONNECTION [SKYACTIV-G 2.0 (WITHOUT i-stop)].) (See 01-17B-9 NEGATIVE BATTERY CABLE DISCONNECTION/CONNECTION [SKYACTIV-D 2.2].)
2. Remove the seal board upper. (See 09-10-34 SEAL BOARD UPPER REMOVAL/INSTALLATION.)
3. Remove the front bumper. (See 09-10-10 FRONT BUMPER REMOVAL/INSTALLATION.)
4. Insert the flathead screwdriver shown in the figure, push fasteners A for back side of front bumper reinforcement.

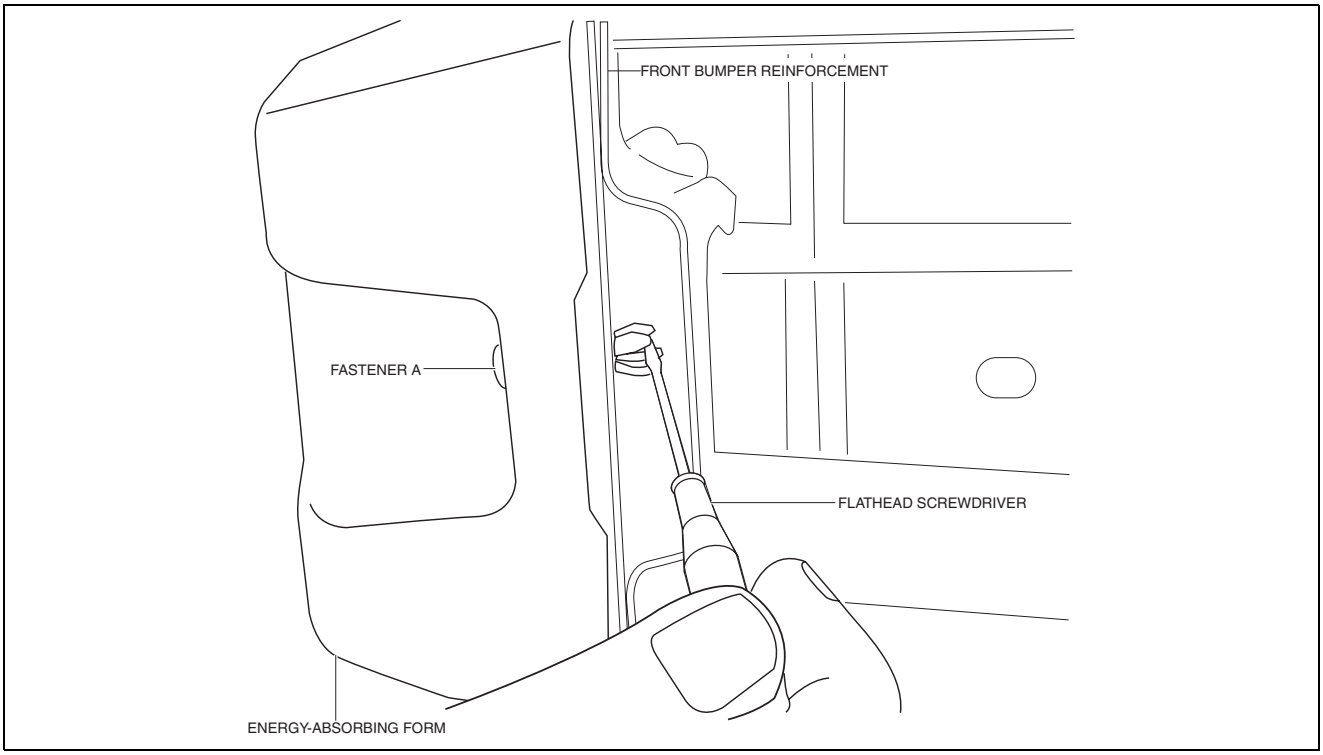

ac5wzw0000223

5. Pull the energy-absorbing form in the direction of the arrow shown in the figure while detaching guides B

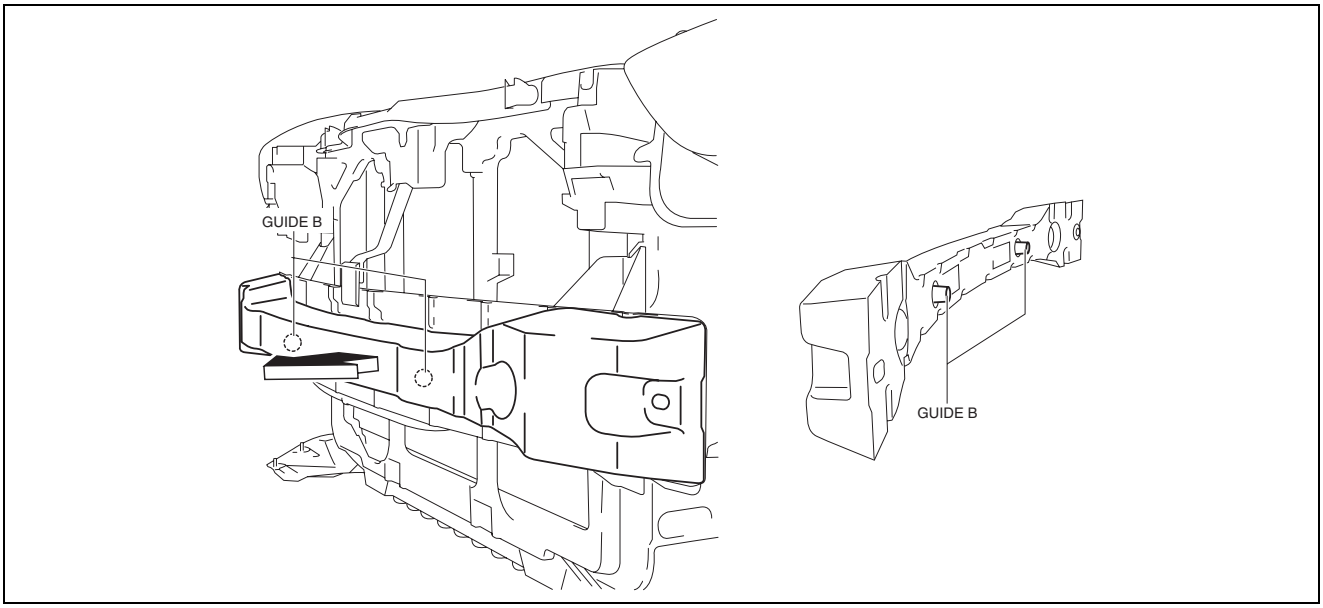

ac5wzw0000132

6. Install in the reverse order of removal.
7. Adjust the headlight aiming. (See 09-18-18 HEADLIGHT AIMING.)
8. Adjust the front fog light aiming. (with front fog lights) (See 09-18-48 FRONT FOG LIGHT AIMING.)

BODY PANELS

BUMPER STIFFENER LOWER REMOVAL/INSTALLATION

id091000888900

1. Disconnect the negative battery cable. (See 01-17A-11 NEGATIVE BATTERY CABLE DISCONNECTION/CONNECTION [SKYACTIV-G 2.0].) (See 01-17A-13 NEGATIVE BATTERY CABLE DISCONNECTION/CONNECTION [SKYACTIV-G 2.0 (WITHOUT i-stop)].) (See 01-17B-9 NEGATIVE BATTERY CABLE DISCONNECTION/CONNECTION [SKYACTIV-D 2.2].)
2. Remove the following parts:
   (1) Seal board upper (See 09-10-34 SEAL BOARD UPPER REMOVAL/INSTALLATION.)
   (2) Front bumper (See 09-10-10 FRONT BUMPER REMOVAL/INSTALLATION.)
   (3) Seal plate (See 09-10-22 SEAL PLATE REMOVAL/INSTALLATION.)
   (4) Front under cover No.1 (See 09-16-40 FRONT UNDER COVER No.1 REMOVAL/INSTALLATION.)
3. Remove bolts A.

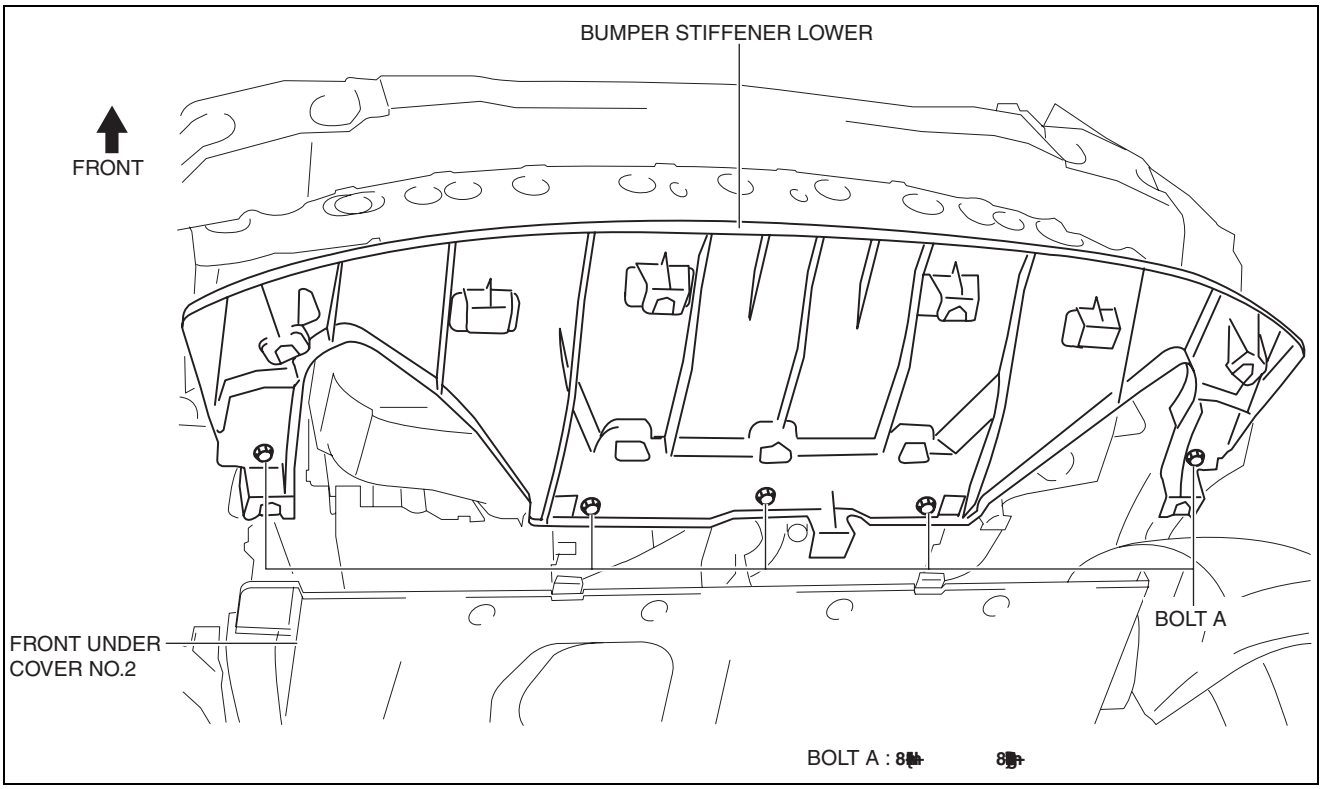

ac5uuw00002032

BODY PANELS

4. Pull the bumper stiffener lower in the direction of the arrow (1), (2) shown in the figure, detach hooks B.

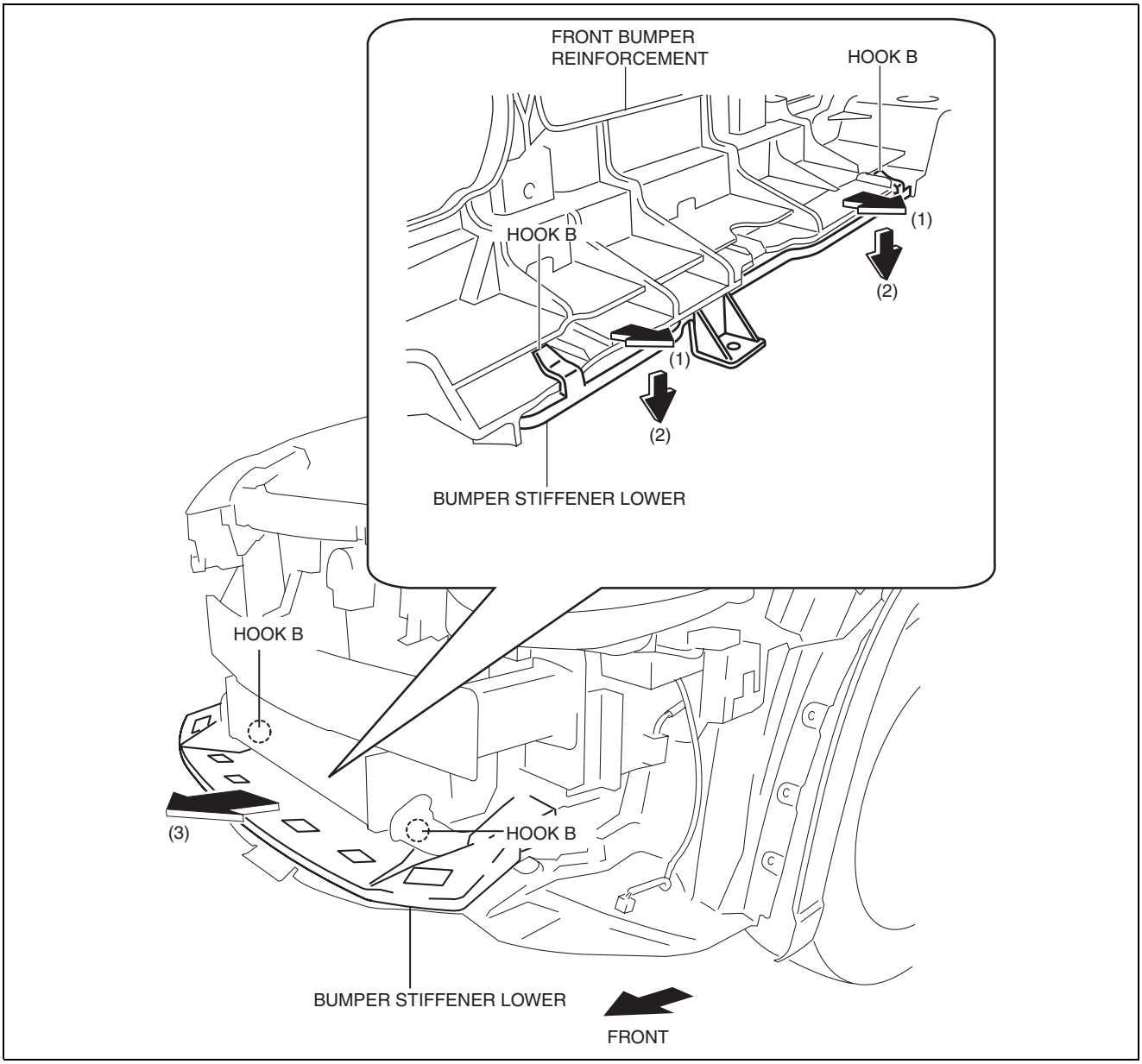

ac5uuw00001821

5. Remove the bumper stiffener lower in the direction of the arrow (3) shown in the figure.
6. Install in the reverse order of removal.
7. Adjust the headlight aiming. (See 09-18-18 HEADLIGHT AIMING.)
8. Adjust the front fog light aiming. (with front fog lights) (See 09-18-48 FRONT FOG LIGHT AIMING.)

BODY PANELS

SEAL PLATE REMOVAL/INSTALLATION

id091000889000

1. Disconnect the negative battery cable. (See 01-17A-11 NEGATIVE BATTERY CABLE DISCONNECTION/CONNECTION [SKYACTIV-G 2.0].) (See 01-17A-13 NEGATIVE BATTERY CABLE DISCONNECTION/CONNECTION [SKYACTIV-G 2.0 (WITHOUT i-stop)].) (See 01-17B-9 NEGATIVE BATTERY CABLE DISCONNECTION/CONNECTION [SKYACTIV-D 2.2].)
2. Remove the seal board upper. (See 09-10-34 SEAL BOARD UPPER REMOVAL/INSTALLATION.)
3. Remove the front bumper. (See 09-10-10 FRONT BUMPER REMOVAL/INSTALLATION.)
4. Remove bolts A.

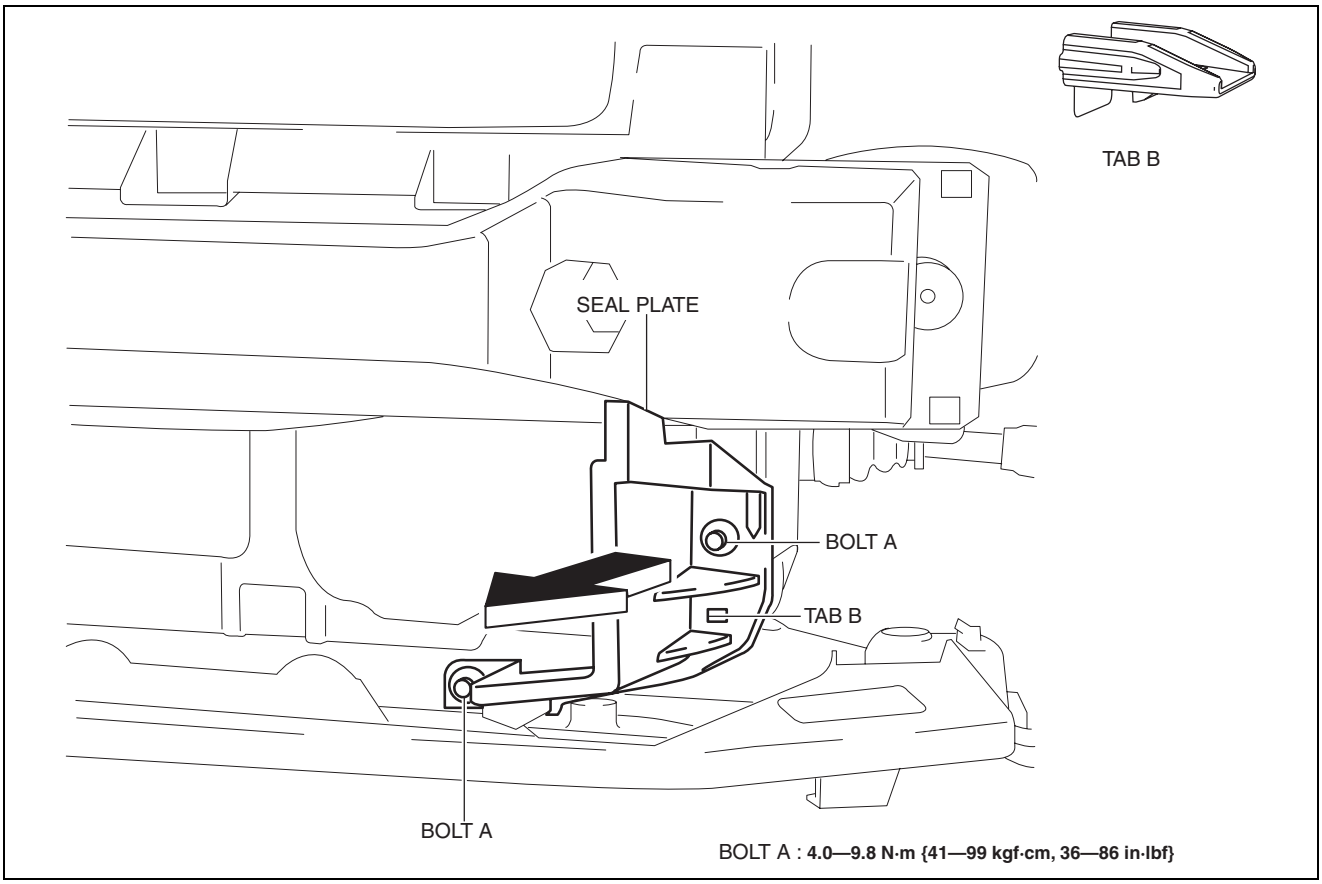

ac5wzw0000310

5. Remove the seal plate in the direction of the arrow shown in the figure while detaching tab B.
6. Install in the reverse order of removal.
7. Adjust the headlight aiming. (See 09-18-18 HEADLIGHT AIMING.)
8. Adjust the front fog light aiming. (with front fog lights) (See 09-18-48 FRONT FOG LIGHT AIMING.)

BODY PANELS

SET PLATE REMOVAL/INSTALLATION

id091000878900

1. Disconnect the negative battery cable. (See 01-17A-11 NEGATIVE BATTERY CABLE DISCONNECTION/CONNECTION [SKYACTIV-G 2.0].) (See 01-17A-13 NEGATIVE BATTERY CABLE DISCONNECTION/CONNECTION [SKYACTIV-G 2.0 (WITHOUT i-stop)].) (See 01-17B-9 NEGATIVE BATTERY CABLE DISCONNECTION/CONNECTION [SKYACTIV-D 2.2].)
2. Remove the seal board upper. (See 09-10-34 SEAL BOARD UPPER REMOVAL/INSTALLATION.)
3. Remove the front bumper. (See 09-10-10 FRONT BUMPER REMOVAL/INSTALLATION.)
4. Remove fasteners A.

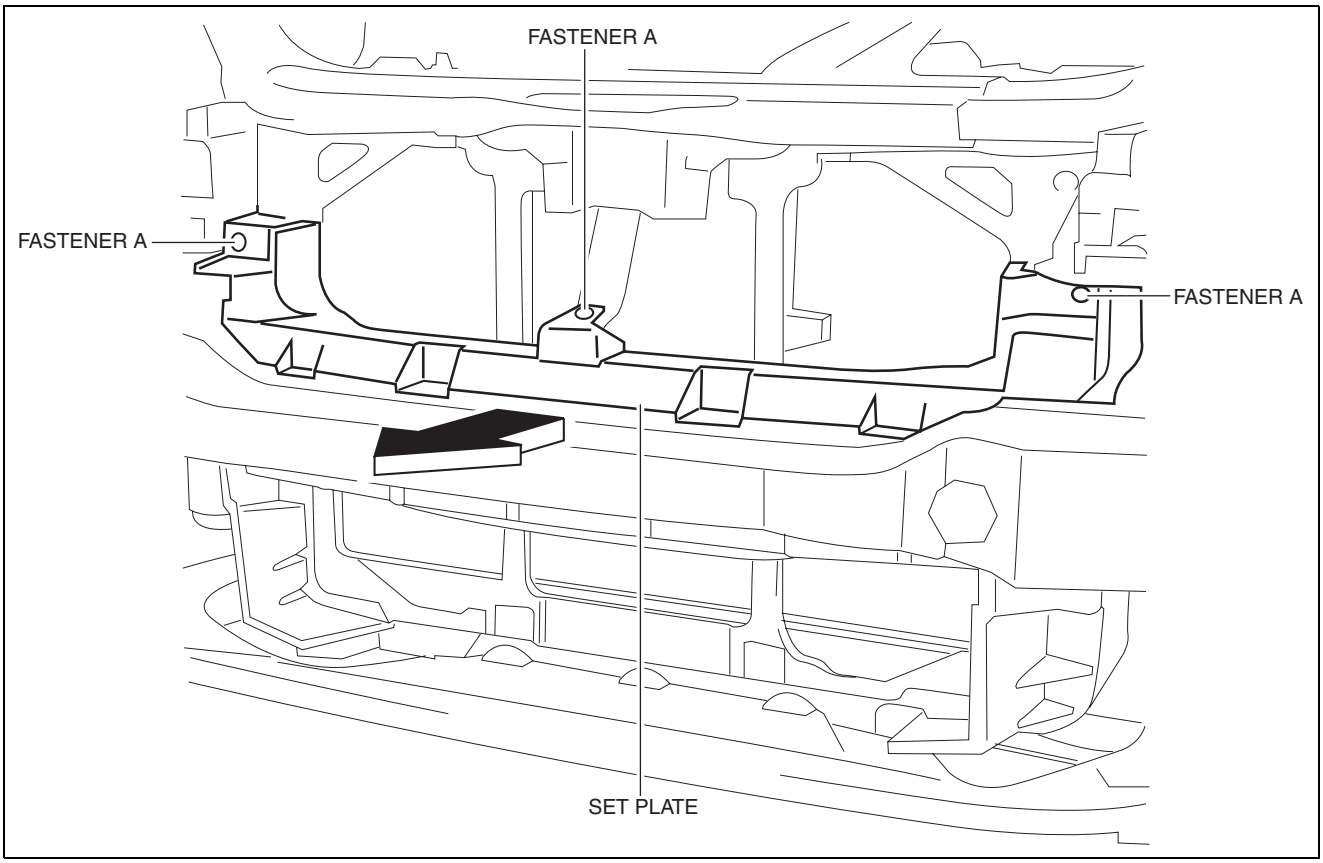

ac5wzw0000131

5. Remove the set plate in the direction of the arrow shown in the figure.
6. Install in the reverse order of removal.
7. Adjust the headlight aiming. (See 09-18-18 HEADLIGHT AIMING.)
8. Adjust the front fog light aiming. (with front fog lights) (See 09-18-48 FRONT FOG LIGHT AIMING.)

BODY PANELS

REAR BUMPER REMOVAL/INSTALLATION

id091000800700

Caution
- **Affix the protective tape to the position (body side) shown in the figure.**

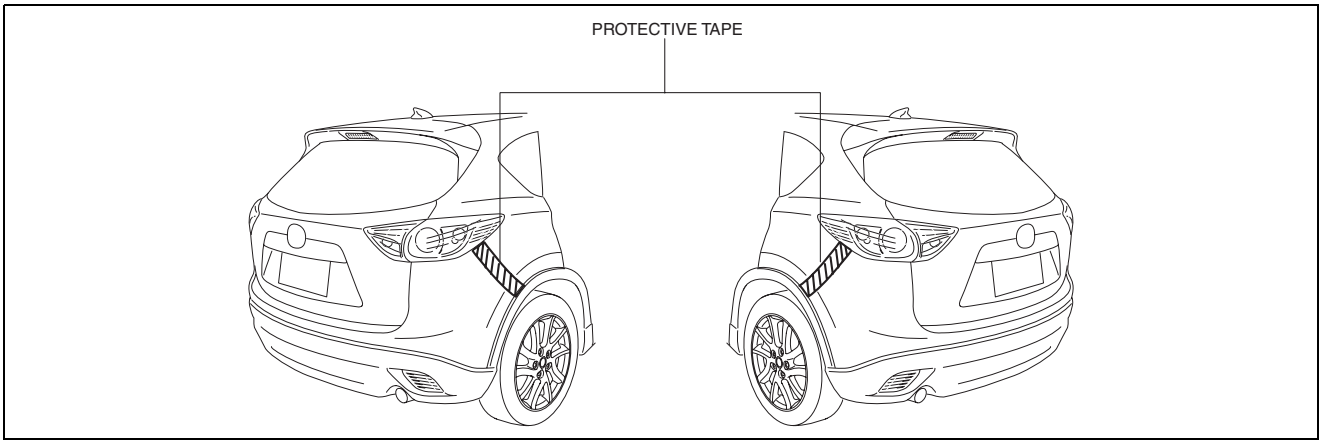

ac5uuw00001960

1. Disconnect the negative battery cable. (See 01-17A-11 NEGATIVE BATTERY CABLE DISCONNECTION/CONNECTION [SKYACTIV-G 2.0].) (See 01-17A-13 NEGATIVE BATTERY CABLE DISCONNECTION/CONNECTION [SKYACTIV-G 2.0 (WITHOUT i-stop)].) (See 01-17B-9 NEGATIVE BATTERY CABLE DISCONNECTION/CONNECTION [SKYACTIV-D 2.2].)
2. Remove the rear combination light. (See 09-18-54 REAR COMBINATION LIGHT REMOVAL/INSTALLATION.)
3. Remove fasteners A.

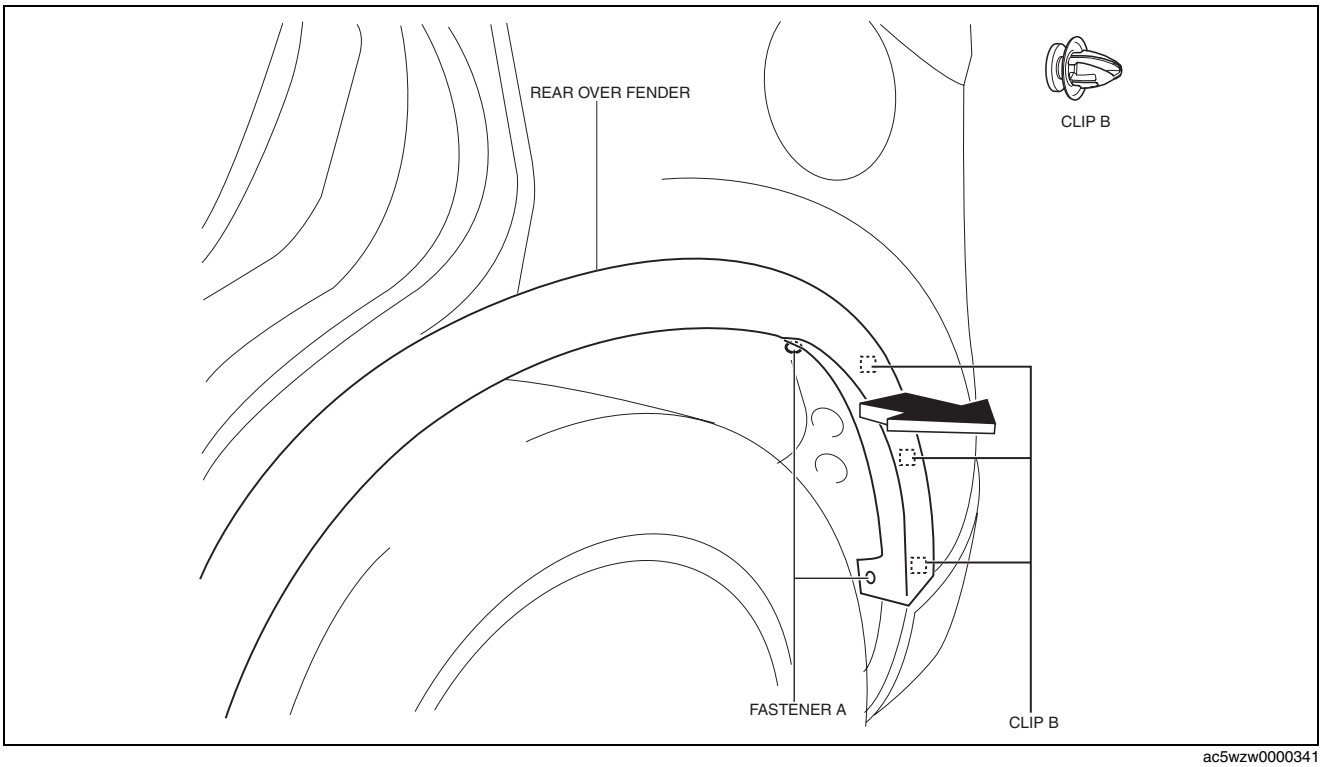

ac5wzw0000341

4. Pull the rear over fender in the direction of the arrow shown in the figure above, then peel it back while removing clips B.

Caution
- **After removing clips B, insert a rag between the rear fender panel and the rear over fender to prevent the rear fender panel and clips B from being damaged.**

5. Remove the rear splash shield. (See 09-16-49 SPLASH SHIELD REMOVAL/INSTALLATION.)

BODY PANELS

6. Remove screw B.

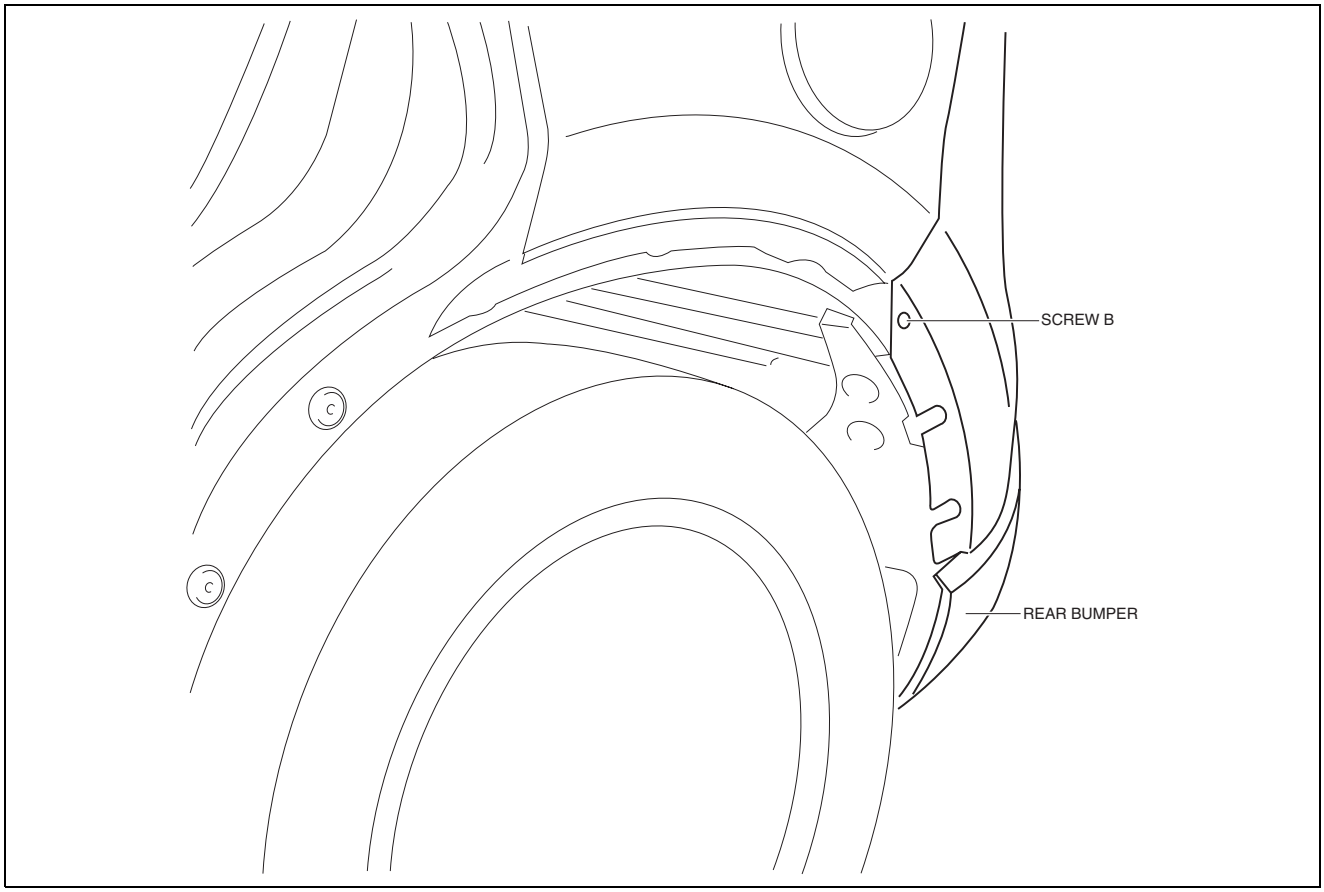

ac5wzw0000115

7. Remove screws C.

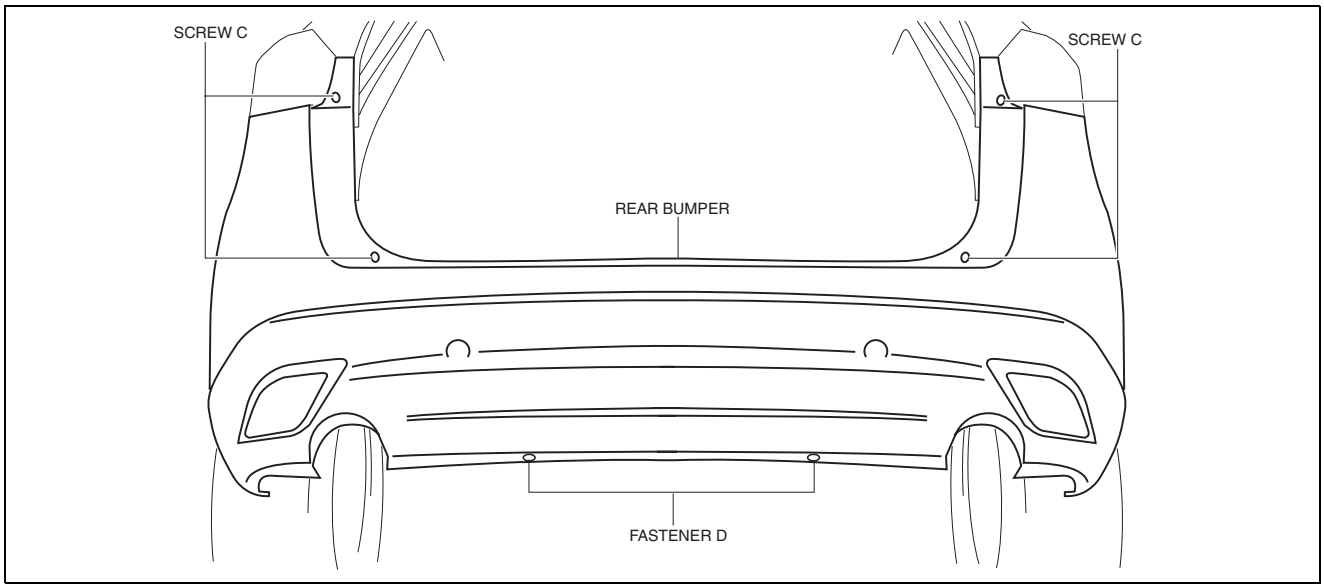

ac5wzw0000115

8. Remove fasteners D.
9. Pull the end of the rear bumper (A) in the direction of the arrow (1) shown in the figure, while removing tabs.

Caution

- **The rear bumper and rear bumper slider are engaged firmly. If they are disengaged forcibly the bumper could fall and be damaged. Perform the servicing carefully when disengaging the rear bumper from the rear bumper slider.**
- **When disengaging the rear bumper from the rear bumper slider, the rear bumper could fall and be damaged. Support the front bumper so that it does not fall.**

BODY PANELS

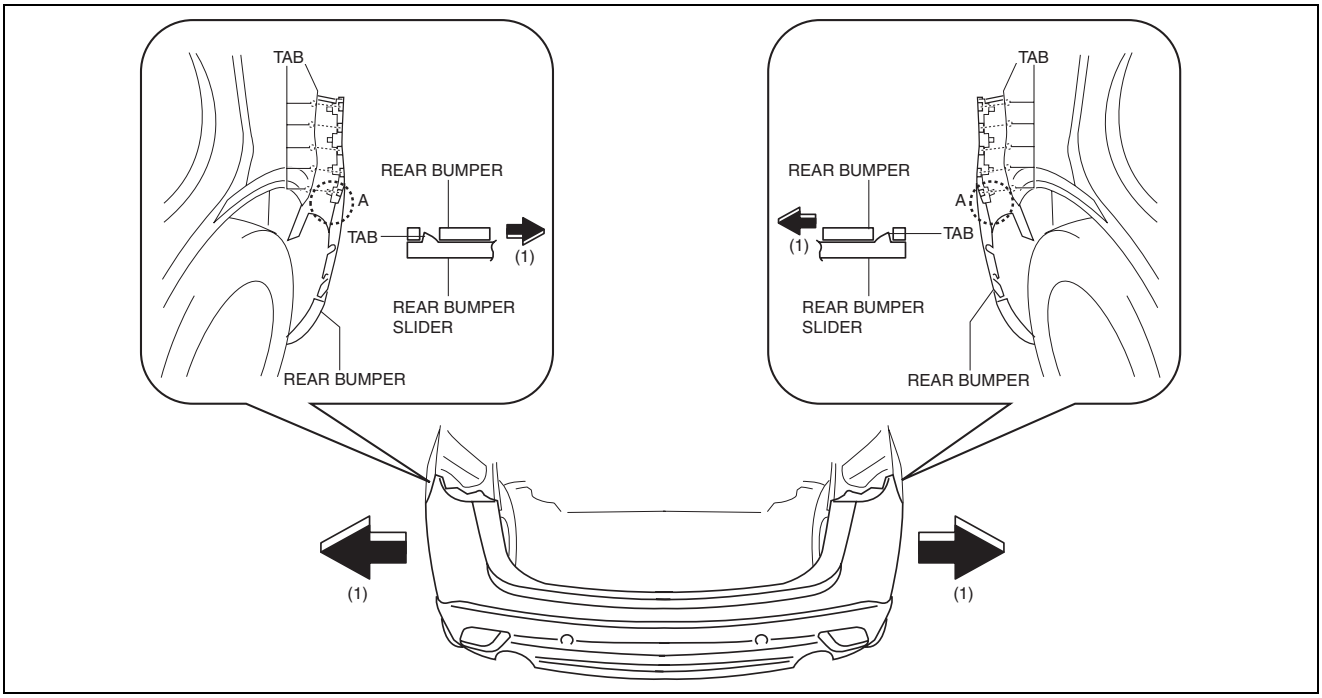

ac5uuw00001815

10. Remove the rear bumper from rear bumper slider.
11. Remove the rear bumper in the direction of the arrow (2) shown in the figure.

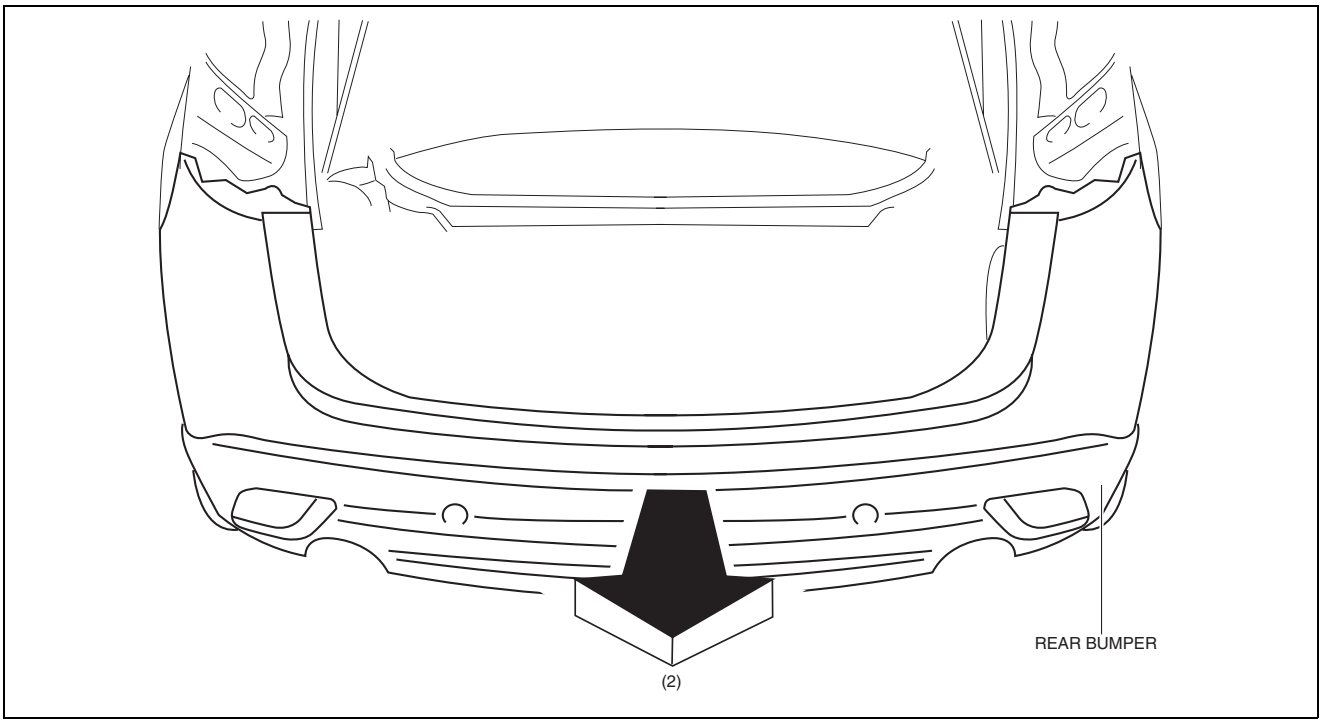

ac5uuw00001816

12. Disconnect the rear fog light connector. (with rear fog light)
13. Disconnect the rear ultrasonic sensor connector. (with parking sensor system)

BODY PANELS

Caution

- **After removing rear bumper, it may hit the rear over fender and cause a damage and/or injury. Perform the following procedure to prevent the rear over fender from being damaged.**
  - **— Fix the rear over fender and rear fender panel with protective tape.**

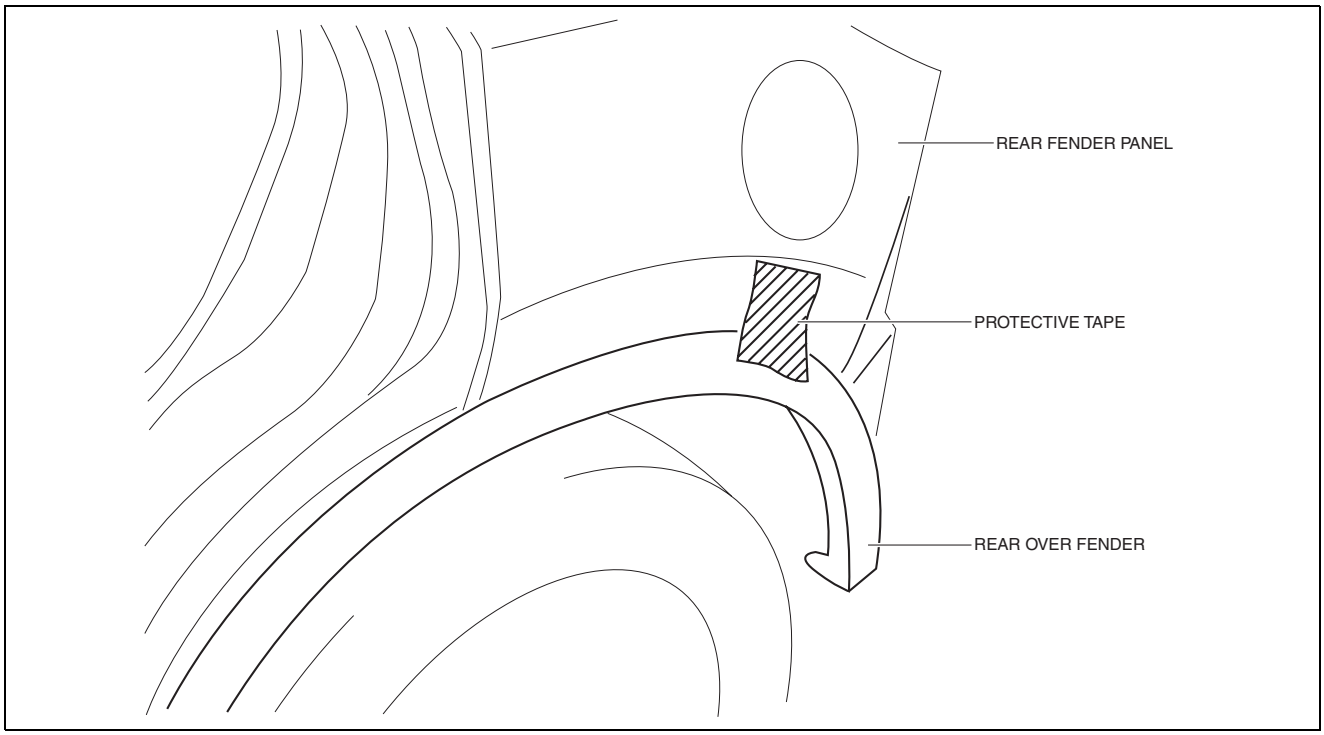

ac5uuw00001961

14. Install in the reverse order of removal.

BODY PANELS

REAR BUMPER DISASSEMBLY/ASSEMBLY

id091000800800

1. Disassemble in the order indicated in the table.

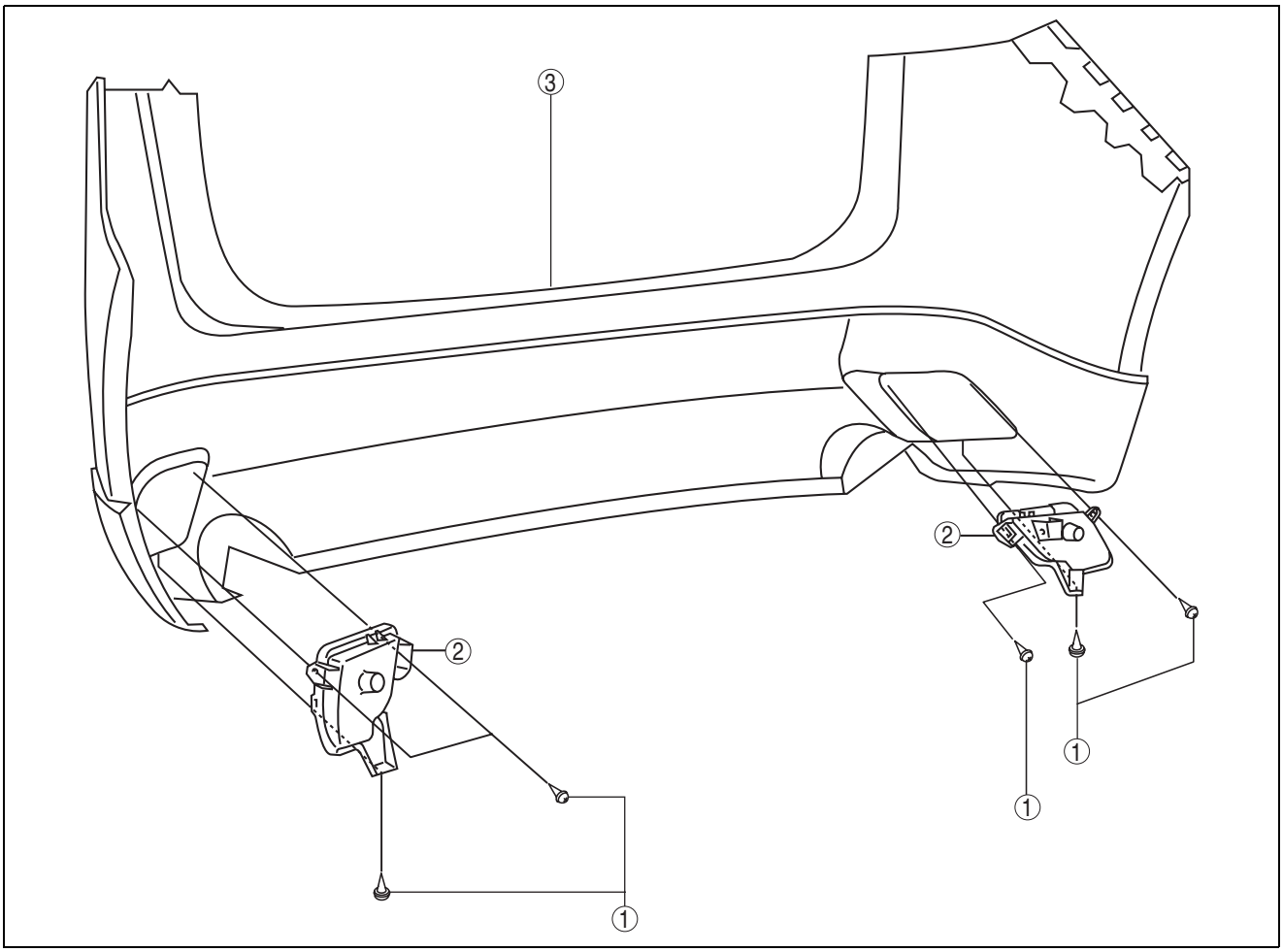

ac5wzw0000309

1	Screw
2	Reflector (without rear fog light)

3	Rear bumper face

2. Assemble in the reverse order of disassembly.

BODY PANELS

REAR BUMPER REINFORCEMENT REMOVAL/INSTALLATION

id091000800900

1. Disconnect the negative battery cable. (See 01-17A-11 NEGATIVE BATTERY CABLE DISCONNECTION/CONNECTION [SKYACTIV-G 2.0].) (See 01-17A-13 NEGATIVE BATTERY CABLE DISCONNECTION/CONNECTION [SKYACTIV-G 2.0 (WITHOUT i-stop)].) (See 01-17B-9 NEGATIVE BATTERY CABLE DISCONNECTION/CONNECTION [SKYACTIV-D 2.2].)
2. Remove the following parts:
   (1) Rear splash shield (See 09-16-49 SPLASH SHIELD REMOVAL/INSTALLATION.)
   (2) Rear combination light (See 09-18-54 REAR COMBINATION LIGHT REMOVAL/INSTALLATION.)
   (3) Rear bumper (See 09-10-24 REAR BUMPER REMOVAL/INSTALLATION.)
3. Remove the hanger rubber in the direction of the arrow (1) shown in the figure.
4. Remove nuts.

Caution

- **Removing the rear bumper reinforcement without supporting it could cause the rear bumper reinforcement to fall and cause serious injury. Always perform the procedure with at least another person to prevent the rear bumper reinforcement from falling.**

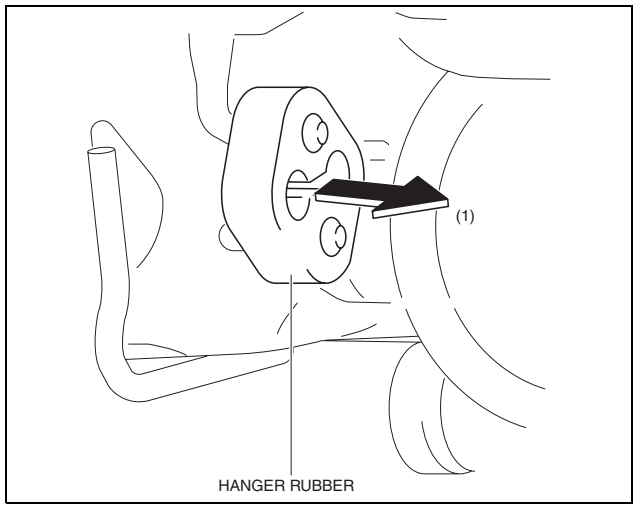

ac5wzw0000314

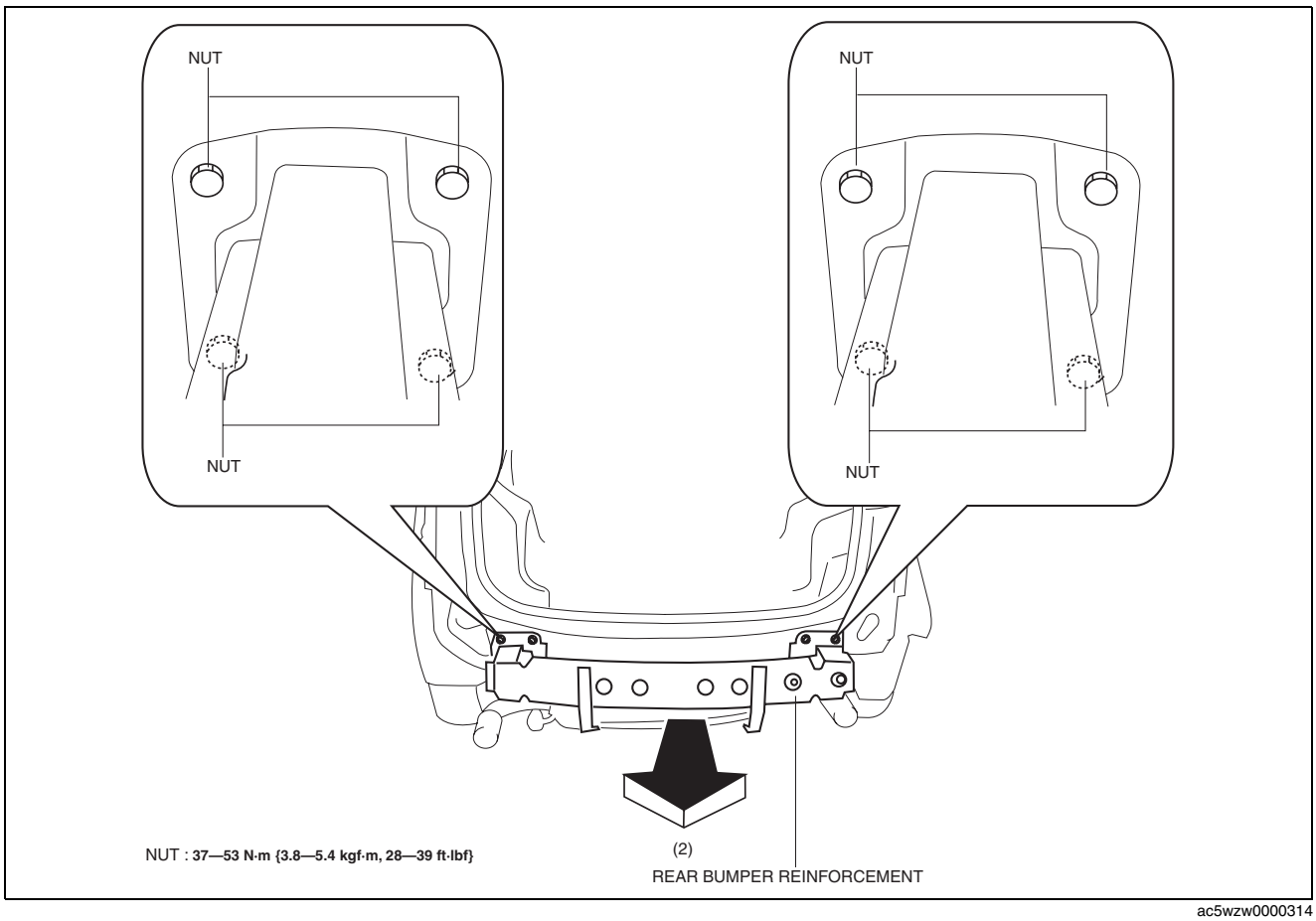

ac5wzw0000314

5. Remove the rear bumper reinforcement in the direction of the arrow (2) shown in the figure.
6. Install in the reverse order of removal.

BODY PANELS

FRONT FENDER PANEL REMOVAL/INSTALLATION

id091000801000

1. Disconnect the negative battery cable. (See 01-17A-11 NEGATIVE BATTERY CABLE DISCONNECTION/CONNECTION [SKYACTIV-G 2.0].) (See 01-17A-13 NEGATIVE BATTERY CABLE DISCONNECTION/CONNECTION [SKYACTIV-G 2.0 (WITHOUT i-stop)].) (See 01-17B-9 NEGATIVE BATTERY CABLE DISCONNECTION/CONNECTION [SKYACTIV-D 2.2].)
2. Remove the following parts:
   (1) Front bumper (See 09-10-10 FRONT BUMPER REMOVAL/INSTALLATION.)
   (2) Front combination light (See 09-18-7 FRONT COMBINATION LIGHT REMOVAL/INSTALLATION.)
   (3) Front bumper slider (See 09-10-17 BUMPER SLIDER REMOVAL/INSTALLATION.)
   (4) Front over fender (See 09-10-31 FRONT OVER FENDER REMOVAL/INSTALLATION.)
3. Remove bolts A and fasteners B.

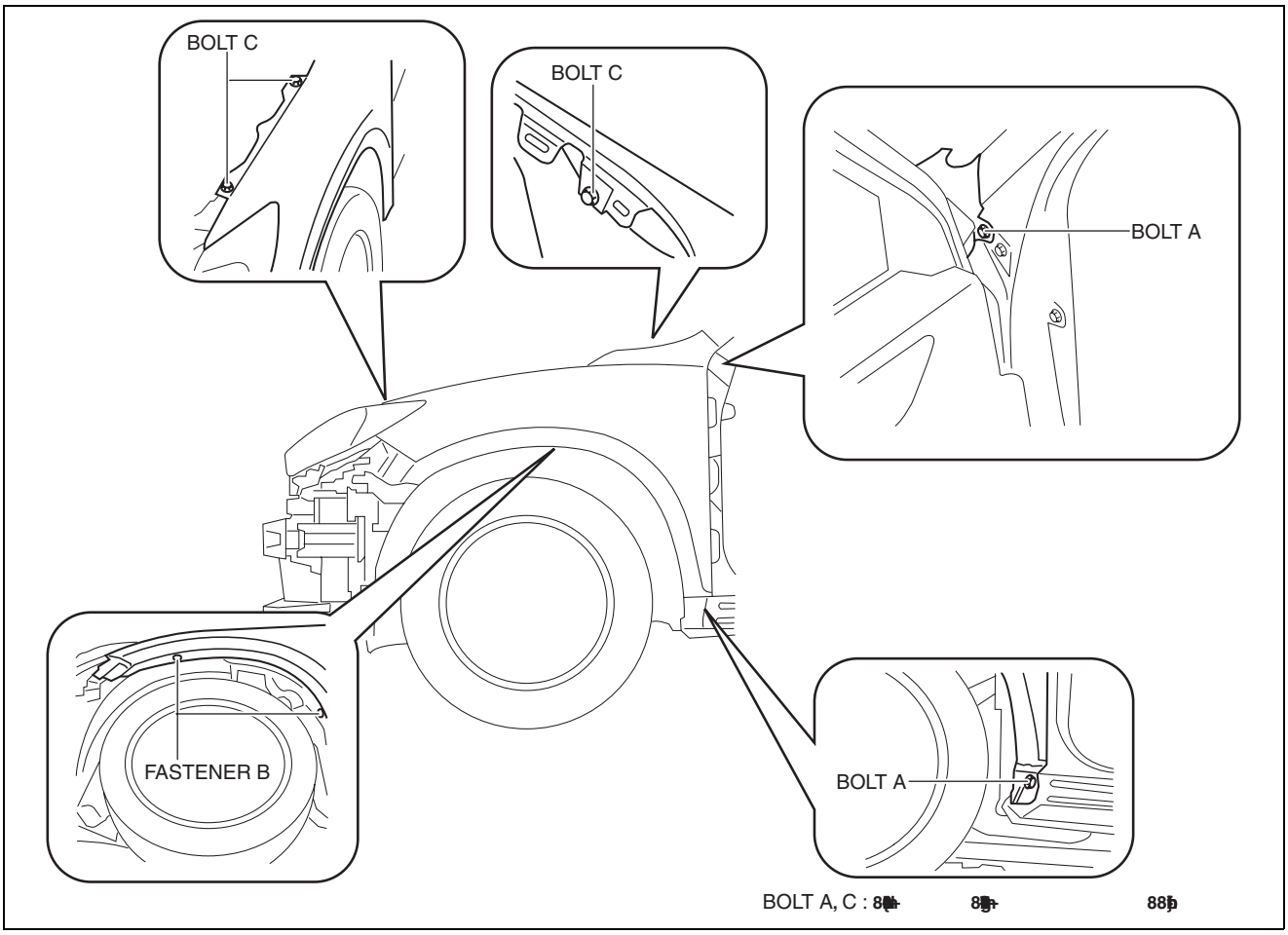

ac5wzw0000116

4. Remove bolts C.
5. Remove the front fender panel.
6. Install in the reverse order of removal.
7. Adjust the headlight aiming. (See 09-18-18 HEADLIGHT AIMING.)
8. Adjust the front fog light aiming. (with front fog lights) (See 09-18-48 FRONT FOG LIGHT AIMING.)

BODY PANELS

FRONT OVER FENDER REMOVAL/INSTALLATION

id091000878700

1. Remove fastener A.

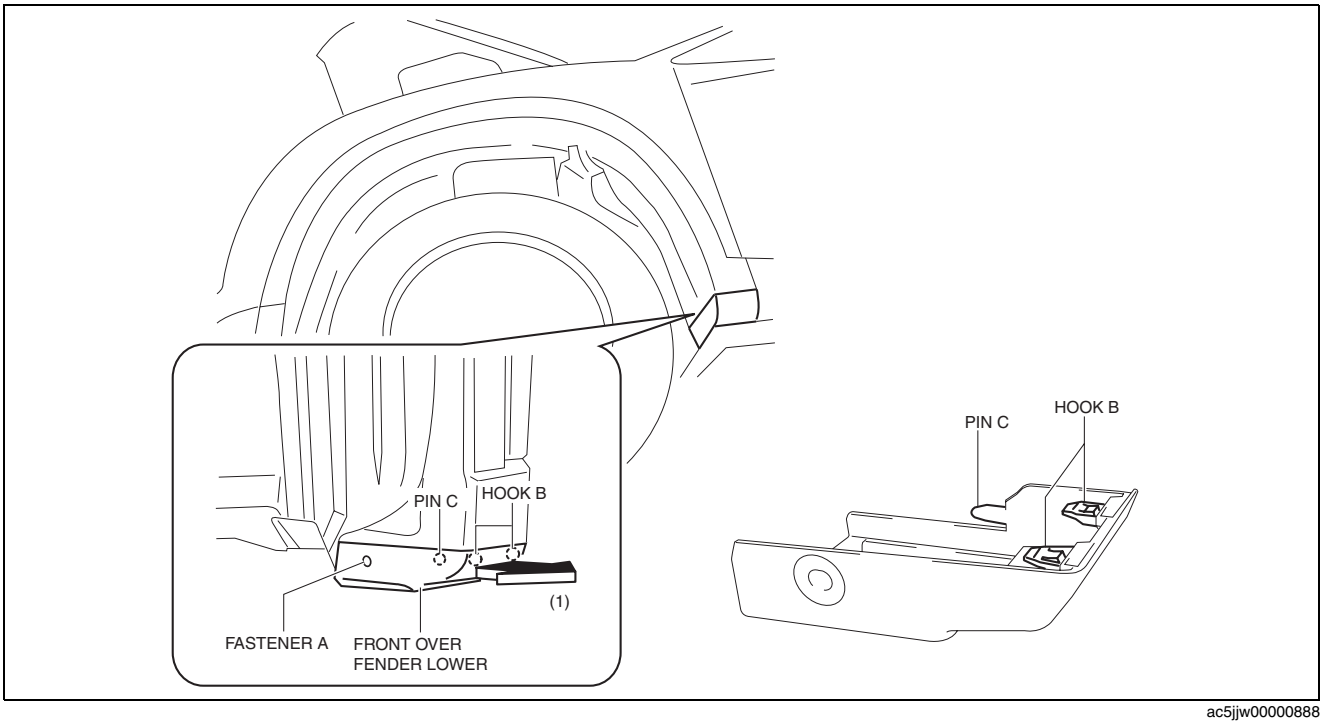

ac5jjw00000888

2. Pull the front over fender lower in the direction of the arrow (1) while removing hook B and pin C.
3. Remove fasteners D.

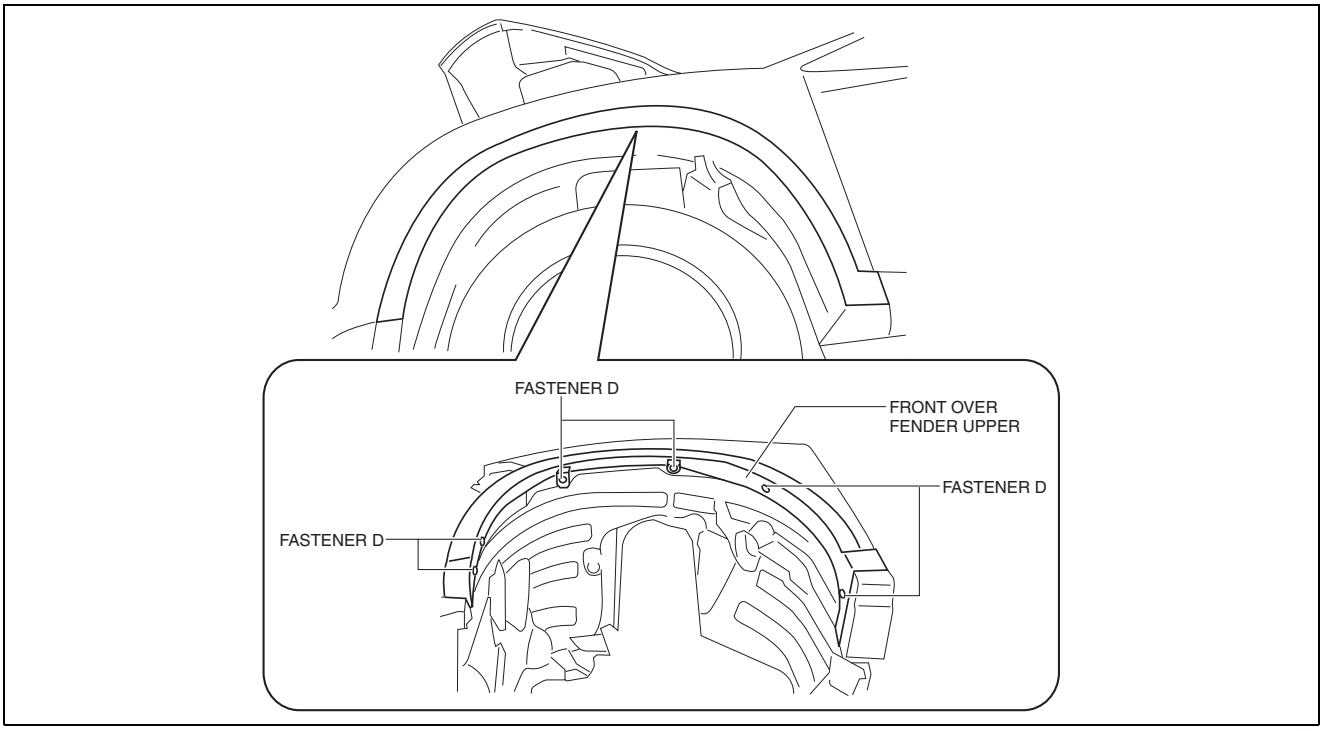

ac5wzw0000117

BODY PANELS

4. Pull the front over fender upper in the direction of the arrow (2) while removing clips E, F and G.

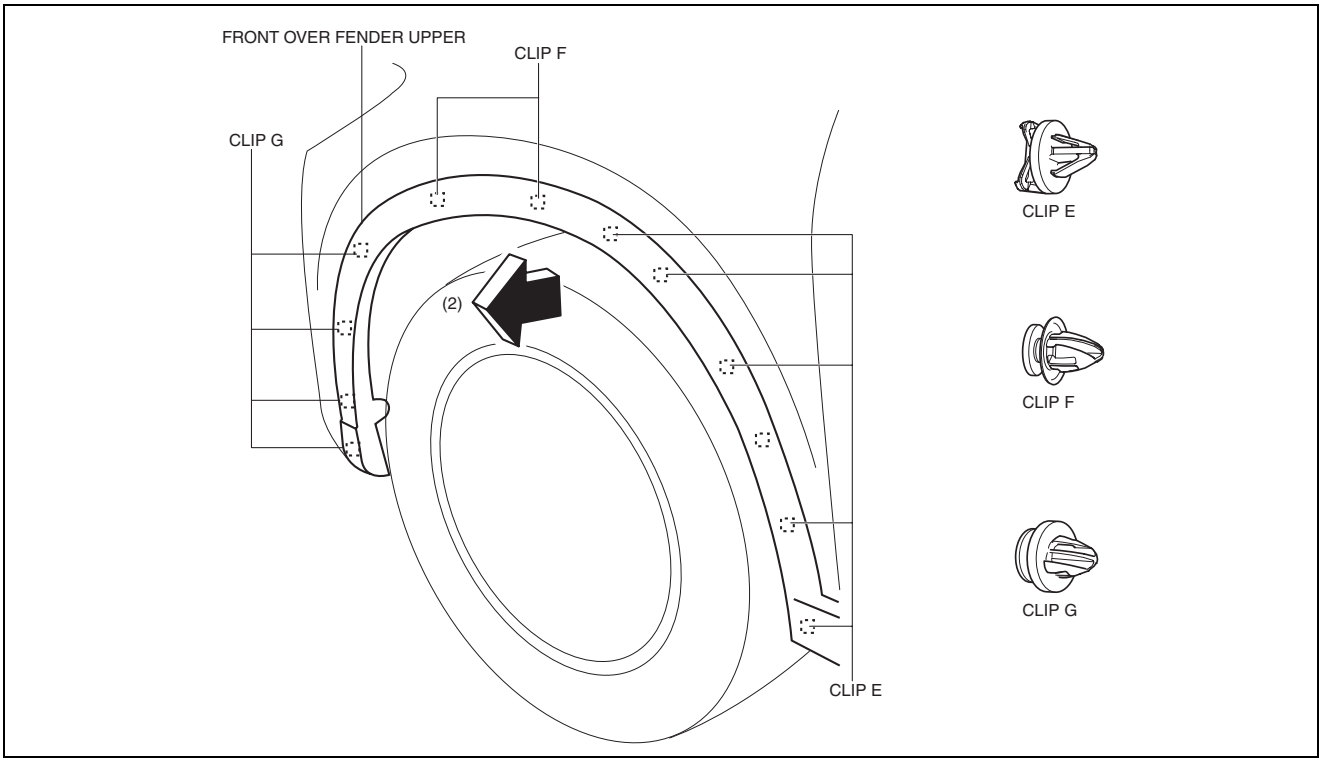

ac5uuw00001820

5. Install in the reverse order of removal.

BODY PANELS

REAR OVER FENDER REMOVAL/INSTALLATION

id091000878800

1. Remove fasteners A.

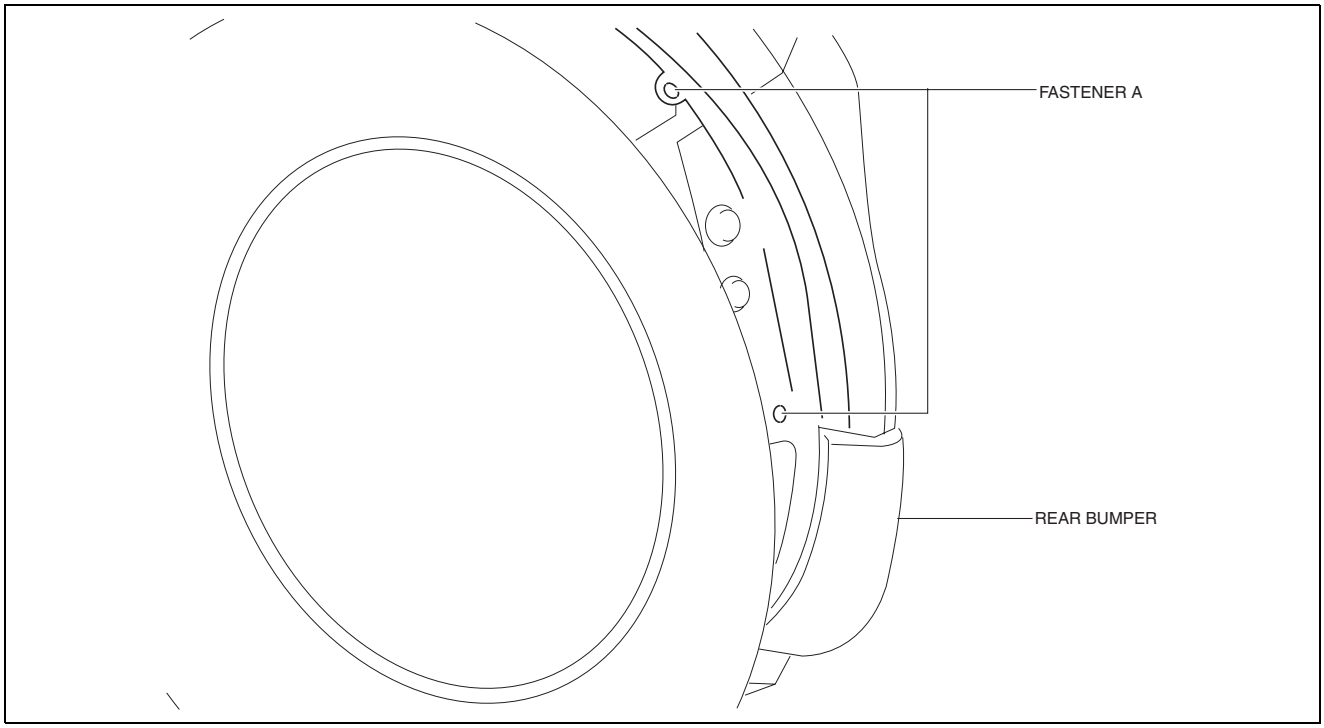

ac5wzw0000117

2. Pull the rear over fender in the direction of the arrow (2) while removing clips B, C and D.

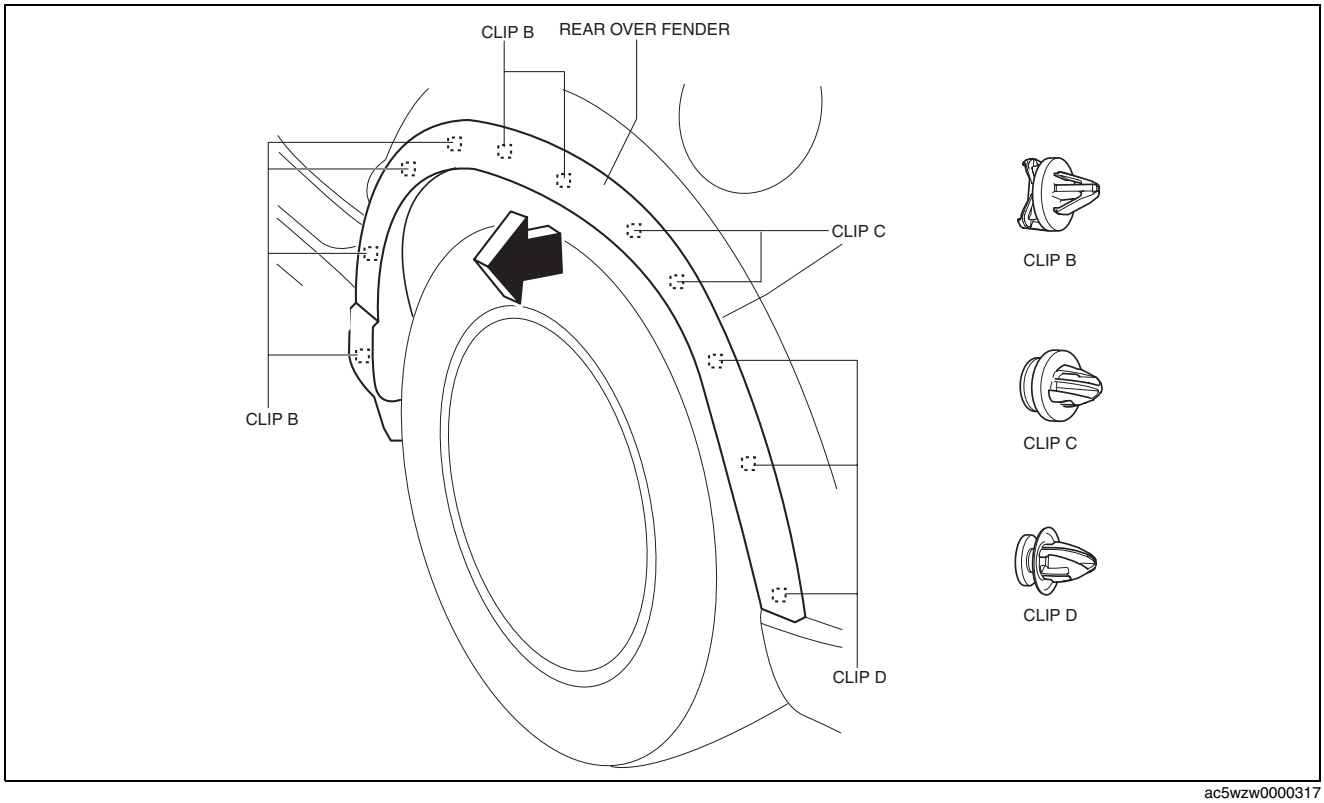

ac5wzw0000317

3. Install in the reverse order of removal.

BODY PANELS

SEAL BOARD UPPER REMOVAL/INSTALLATION

id091000466600

1. Remove fasteners A.

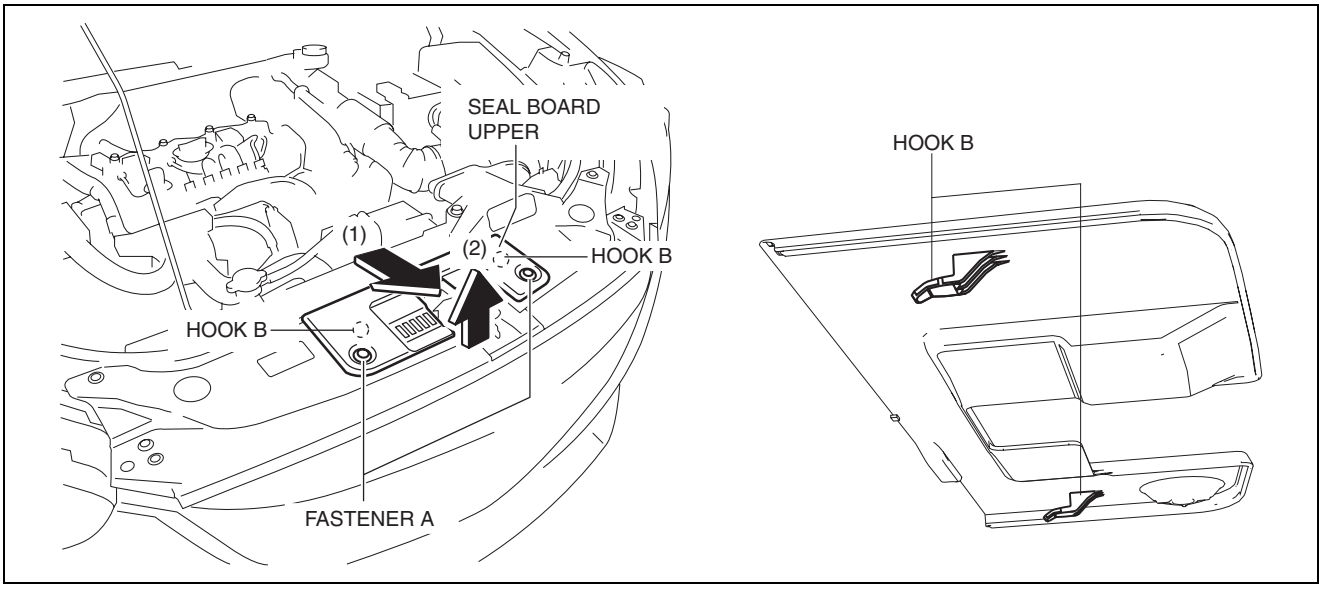

ac5wzw0000309

2. Pull the seal board upper in the direction of the arrow in the order of (1), (2) and remove it while detaching hooks B.
3. Install in the reverse order of removal.

BODY PANELS

SHROUD PANEL REMOVAL/INSTALLATION

id091000801900

Caution
- **Since the servicing is performed with the bonnet open, secure the bonnet using a piece of wood to prevent it from falling.**

1. Disconnect the negative battery cable. (See 01-17A-11 NEGATIVE BATTERY CABLE DISCONNECTION/CONNECTION [SKYACTIV-G 2.0].) (See 01-17A-13 NEGATIVE BATTERY CABLE DISCONNECTION/CONNECTION [SKYACTIV-G 2.0 (WITHOUT i-stop)].) (See 01-17B-9 NEGATIVE BATTERY CABLE DISCONNECTION/CONNECTION [SKYACTIV-D 2.2].)
2. Remove the following parts:
   (1) Seal board upper (See 09-10-34 SEAL BOARD UPPER REMOVAL/INSTALLATION.)
   (2) Front bumper (See 09-10-10 FRONT BUMPER REMOVAL/INSTALLATION.)
   (3) Front combination light (See 09-18-7 FRONT COMBINATION LIGHT REMOVAL/INSTALLATION.)
   (4) Shroud upper member (See 09-10-40 SHROUD UPPER MEMBER REMOVAL/INSTALLATION.)
   (5) Set plate (See 09-10-23 SET PLATE REMOVAL/INSTALLATION.)
   (6) Energy-absorbing form (See 09-10-19 ENERGY-ABSORBING FORM REMOVAL/INSTALLATION.)
   (7) Front under cover No.1 (See 09-16-40 FRONT UNDER COVER No.1 REMOVAL/INSTALLATION.)
   (8) Bumper stiffener lower (See 09-10-20 BUMPER STIFFENER LOWER REMOVAL/INSTALLATION.)
3. Support the shroud panel using a jack.

Caution
- **Because the shroud panel is installed to the bumper reinforcement, support the shroud panel using a jack before removing the bumper reinforcement so as not to apply excessive force to the shroud panel.**

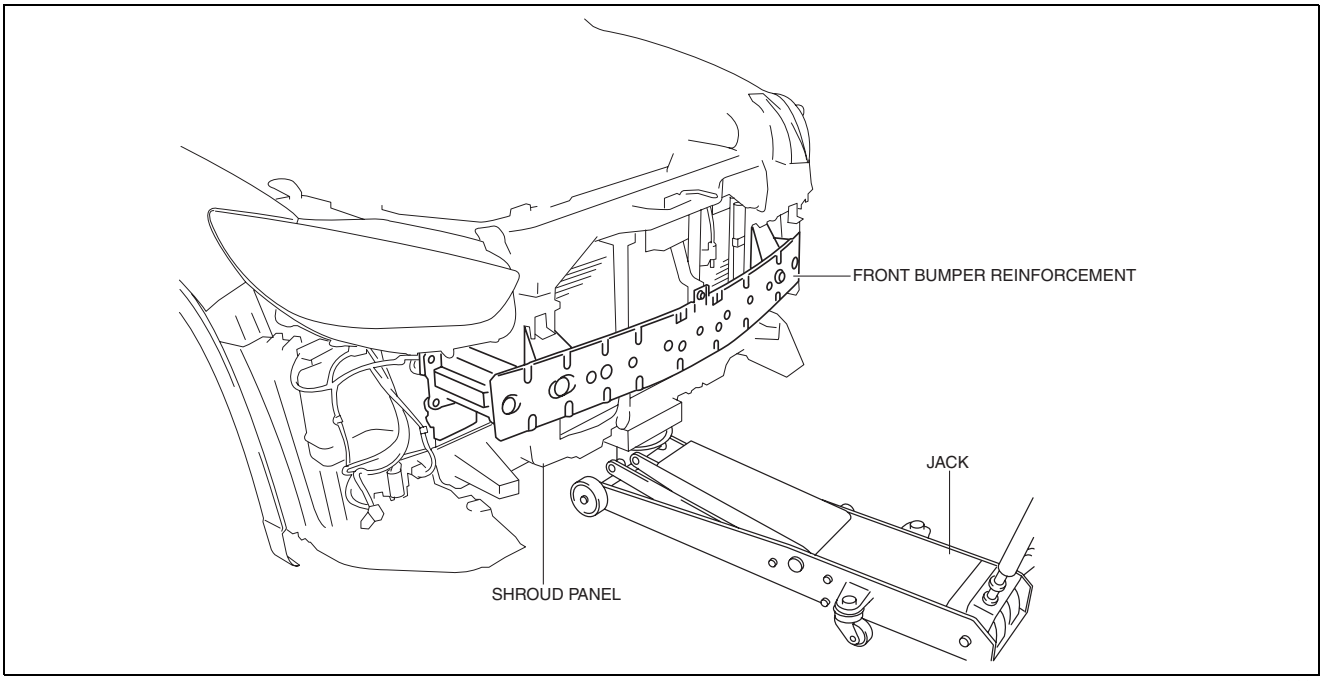

ac5wzw0000116

4. Remove the following parts:
   (1) Front bumper reinforcement (See 09-10-15 FRONT BUMPER REINFORCEMENT REMOVAL/INSTALLATION.)
   (2) Seal plate (See 09-10-22 SEAL PLATE REMOVAL/INSTALLATION.)
   (3) Bonnet latch (See 09-14-17 BONNET LATCH AND RELEASE LEVER REMOVAL/INSTALLATION.)
   (4) Crash zone sensor (See 08-10-19 CRASH ZONE SENSOR REMOVAL/INSTALLATION.)
   (5) Ambient temperature sensor (See 07-40A-22 AMBIENT TEMPERATURE SENSOR REMOVAL/INSTALLATION [FULL-AUTO AIR CONDITIONER].) (See 07-40B-11 AMBIENT TEMPERATURE SENSOR REMOVAL/INSTALLATION [MANUAL AIR CONDITIONER].)
   (6) Horn (See 09-22-41 HORN REMOVAL/INSTALLATION.)
   (7) Air cleaner cover (See 01-13A-6 INTAKE-AIR SYSTEM REMOVAL/INSTALLATION [SKYACTIV-G 2.0].)

BODY PANELS

5. Remove clips A.

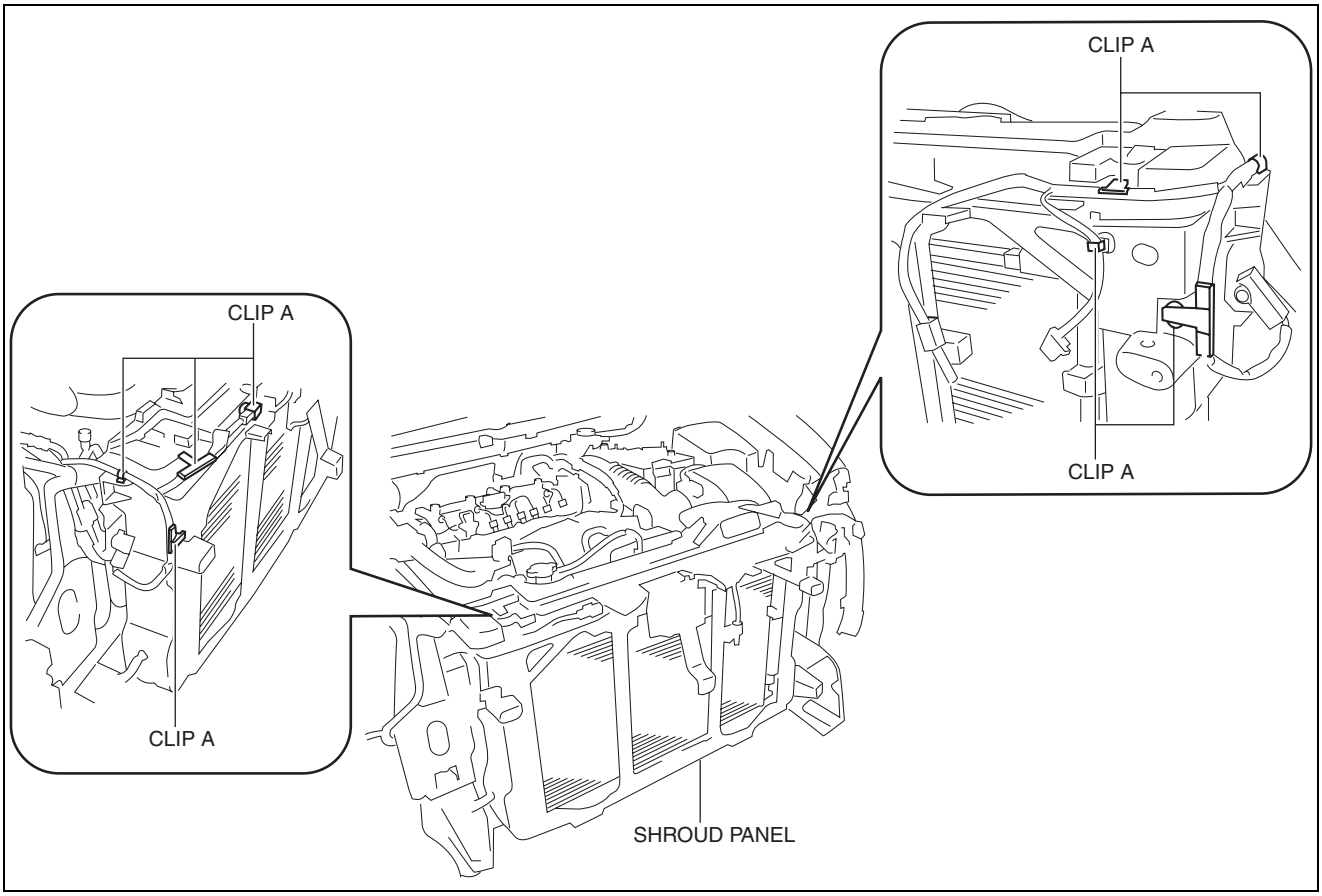

ac5wzw0000116

BODY PANELS

6. Remove the hood stay from the shroud panel, wrap the hood stay with protective tape, and install it as shown in the figure to support the hood.

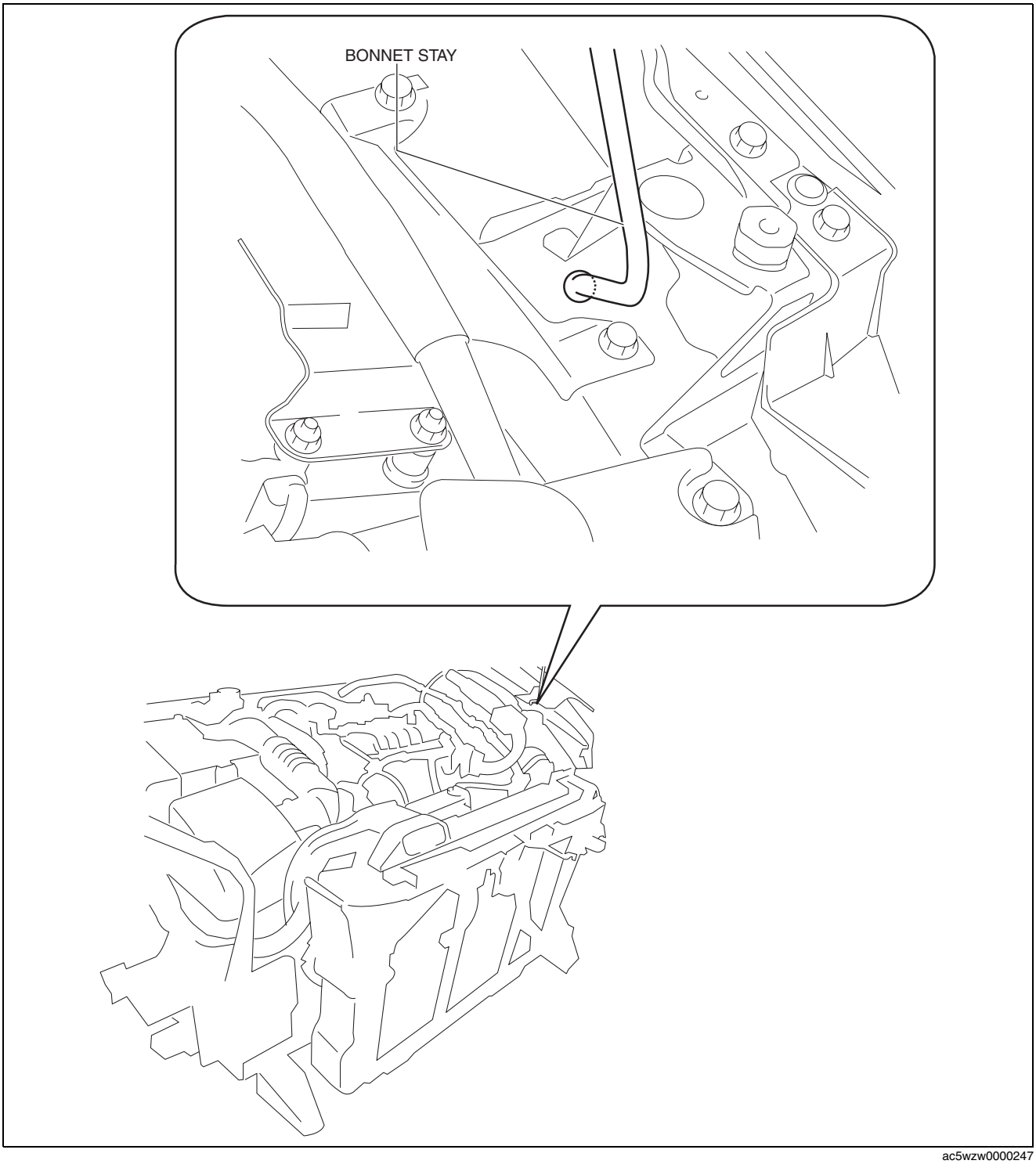

ac5wzw0000247

7. Pull up the radiator in the direction of the arrow (1) shown in the figure.

Caution

- **Removing the shroud panel without supporting it could cause the shroud panel to fall and cause serious injury. Always perform the procedure with at least another person to prevent the shroud panel from falling.**

BODY PANELS

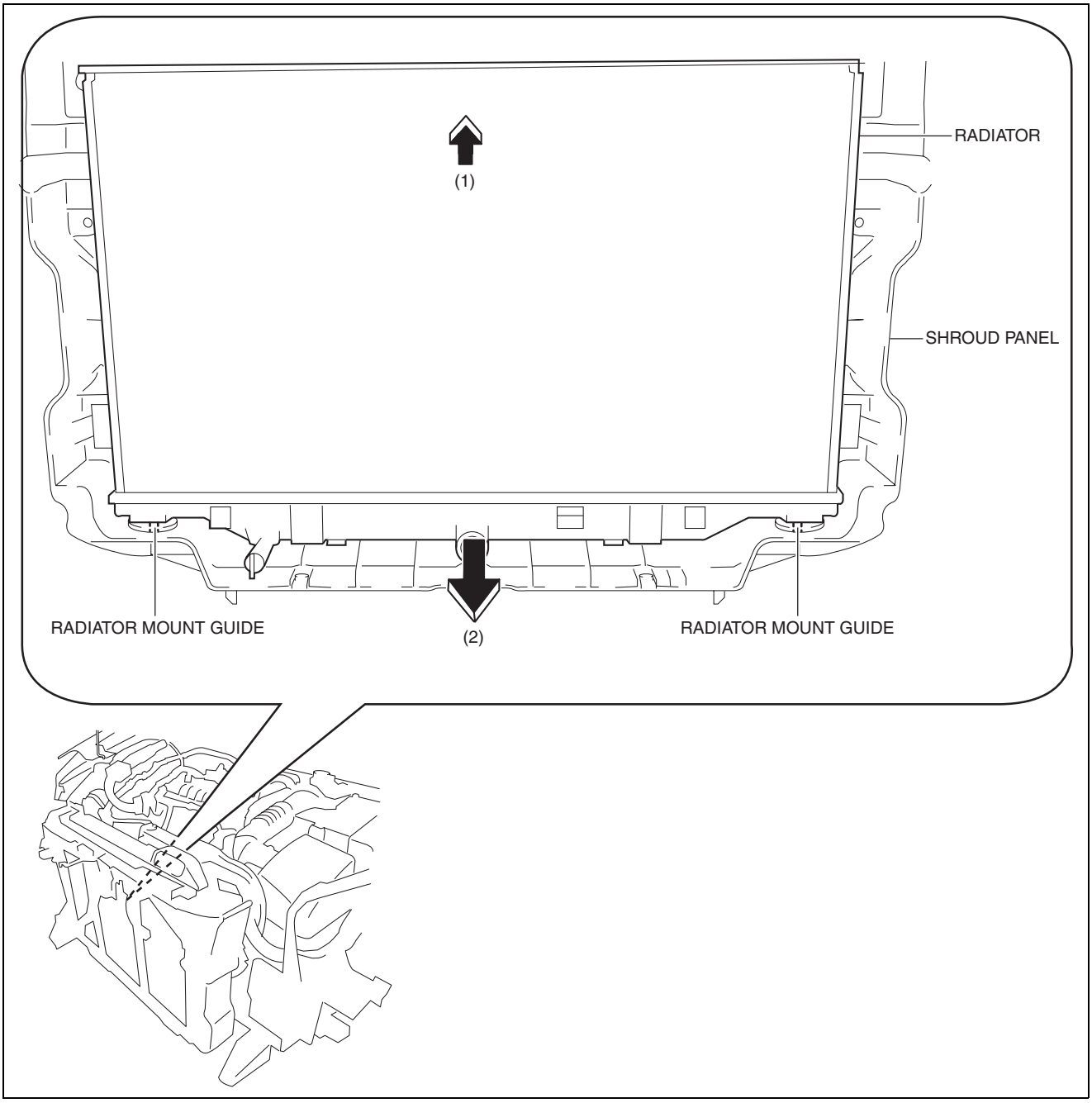

ac5uuw00001818

8. Pull down the shroud panel in the direction of the arrow (2) shown in the figure, then remove it from the radiator mount guide.
9. Remove the shroud panel in the direction of the arrow (3) shown in the figure.

BODY PANELS

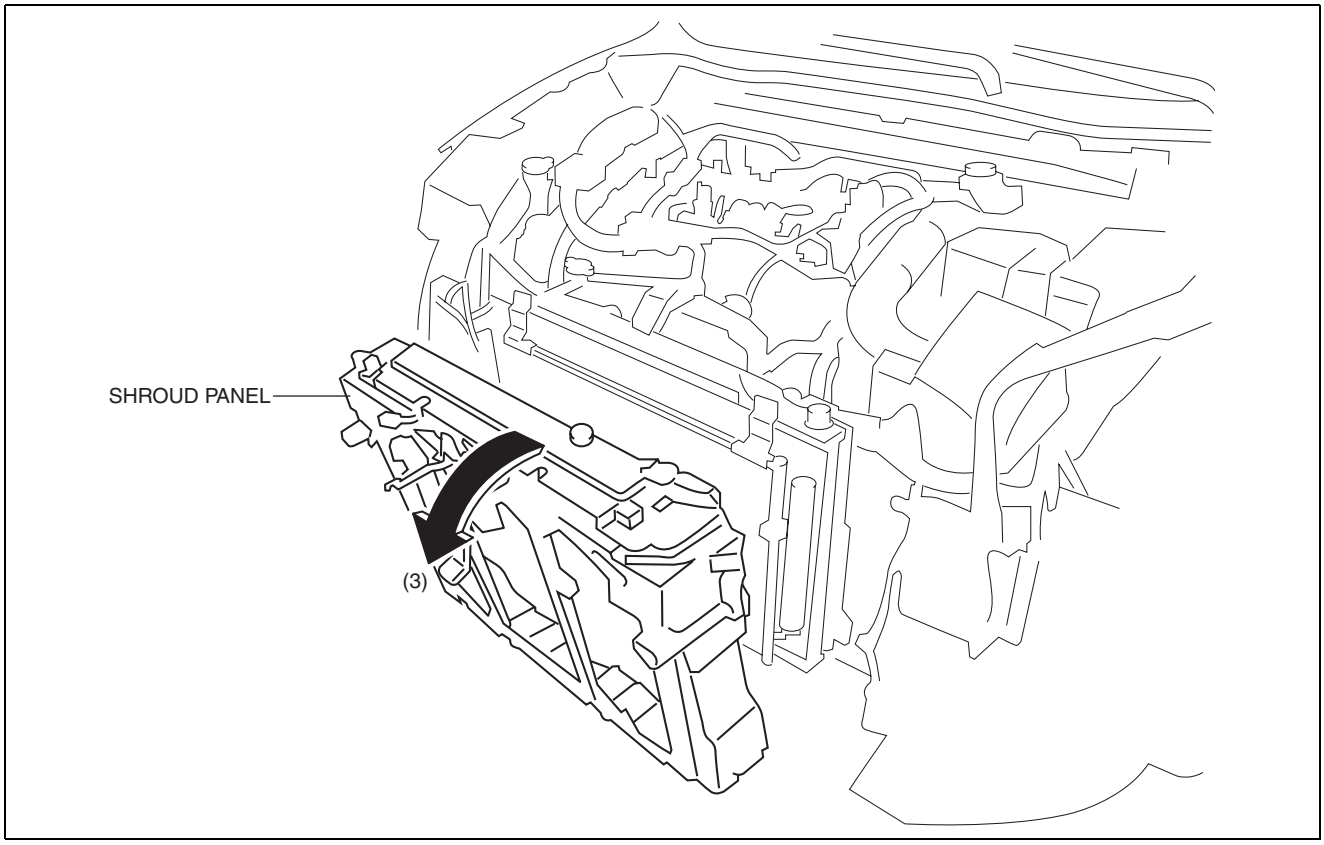

ac5wzw0000116

BODY PANELS

Caution
- **Support the lower surface of the radiator with a jack to prevent the radiator from falling off after the shroud panel is removed.**

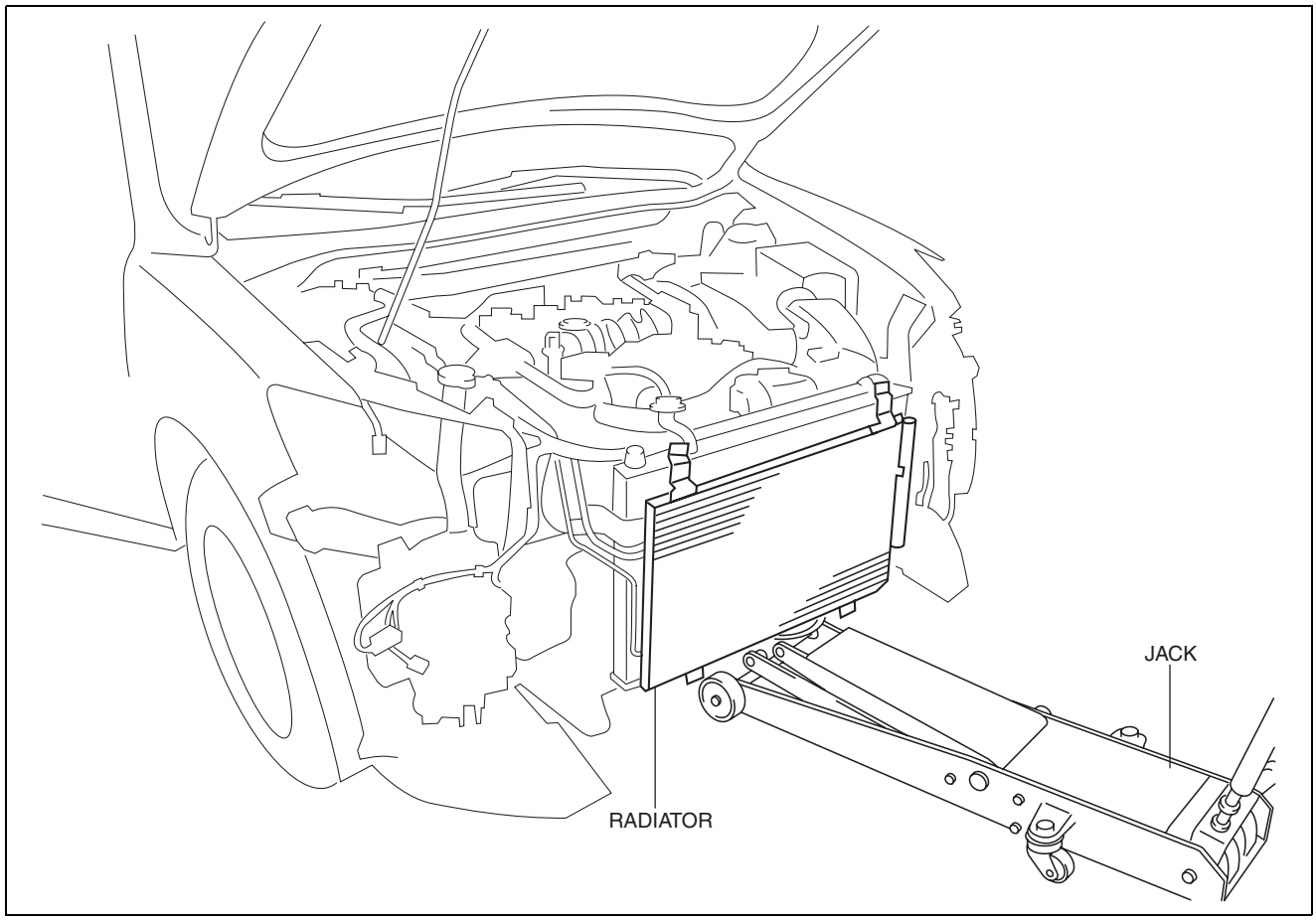

ac5wzw0000116

10. Install in the reverse order of removal.
11. Adjust the headlight aiming. (See 09-18-18 HEADLIGHT AIMING.)
12. Adjust the front fog light aiming. (with front fog lights) (See 09-18-48 FRONT FOG LIGHT AIMING.)

SHROUD UPPER MEMBER REMOVAL/INSTALLATION

id091000889800

1. Disconnect the negative battery cable. (See 01-17A-11 NEGATIVE BATTERY CABLE DISCONNECTION/CONNECTION [SKYACTIV-G 2.0].) (See 01-17A-13 NEGATIVE BATTERY CABLE DISCONNECTION/CONNECTION [SKYACTIV-G 2.0 (WITHOUT i-stop)].) (See 01-17B-9 NEGATIVE BATTERY CABLE DISCONNECTION/CONNECTION [SKYACTIV-D 2.2].)
2. Remove the seal board upper. (See 09-10-34 SEAL BOARD UPPER REMOVAL/INSTALLATION.)
3. Remove the front bumper. (See 09-10-10 FRONT BUMPER REMOVAL/INSTALLATION.)
4. Remove the front combination light (See 09-18-7 FRONT COMBINATION LIGHT REMOVAL/INSTALLATION.)

BODY PANELS

5. Remove bolts.

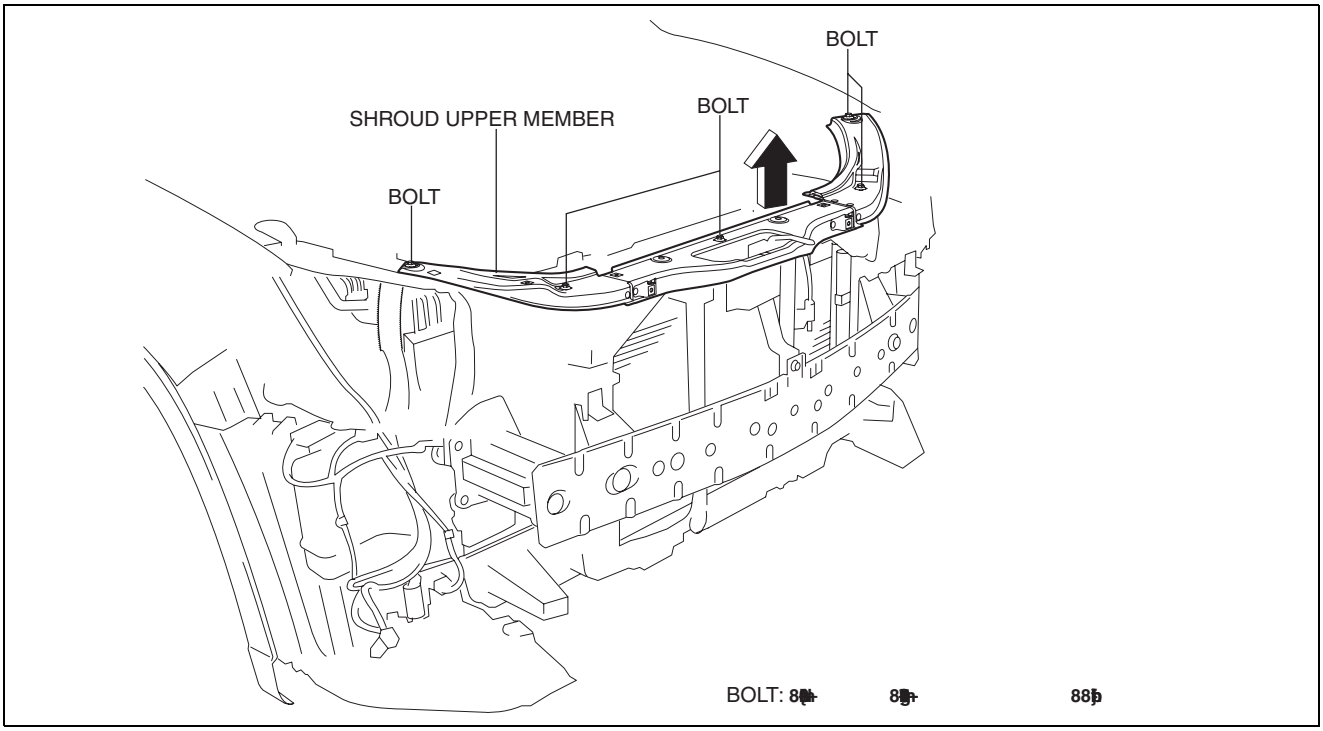

ac5uuw00001822

6. Remove the shroud upper member in the direction of the arrow shown in the figure.
7. Install in the reverse order of removal.
8. Adjust the headlight aiming. (See 09-18-18 HEADLIGHT AIMING.)
9. Adjust the front fog light aiming. (with front fog lights) (See 09-18-48 FRONT FOG LIGHT AIMING.)

COWL PANEL REMOVAL/INSTALLATION

id091000802000

1. Disconnect the negative battery cable. (See 01-17A-11 NEGATIVE BATTERY CABLE DISCONNECTION/CONNECTION [SKYACTIV-G 2.0].) (See 01-17A-13 NEGATIVE BATTERY CABLE DISCONNECTION/CONNECTION [SKYACTIV-G 2.0 (WITHOUT i-stop)].) (See 01-17B-9 NEGATIVE BATTERY CABLE DISCONNECTION/CONNECTION [SKYACTIV-D 2.2].)
2. Remove the following parts:
   (1) Windshield wiper arm and blade (See 09-19-3 WINDSHIELD WIPER ARM AND BLADE REMOVAL/INSTALLATION.)
   (2) Cowl grille (See 09-16-3 COWL GRILLE REMOVAL/INSTALLATION.)
   (3) Windshield wiper motor (See 09-19-9 WINDSHIELD WIPER MOTOR AND LINK REMOVAL/INSTALLATION.)
   (4) Keyless beeper (See 09-14-73 KEYLESS BEEPER REMOVAL/INSTALLATION.)

BODY PANELS

3. Remove clips A.

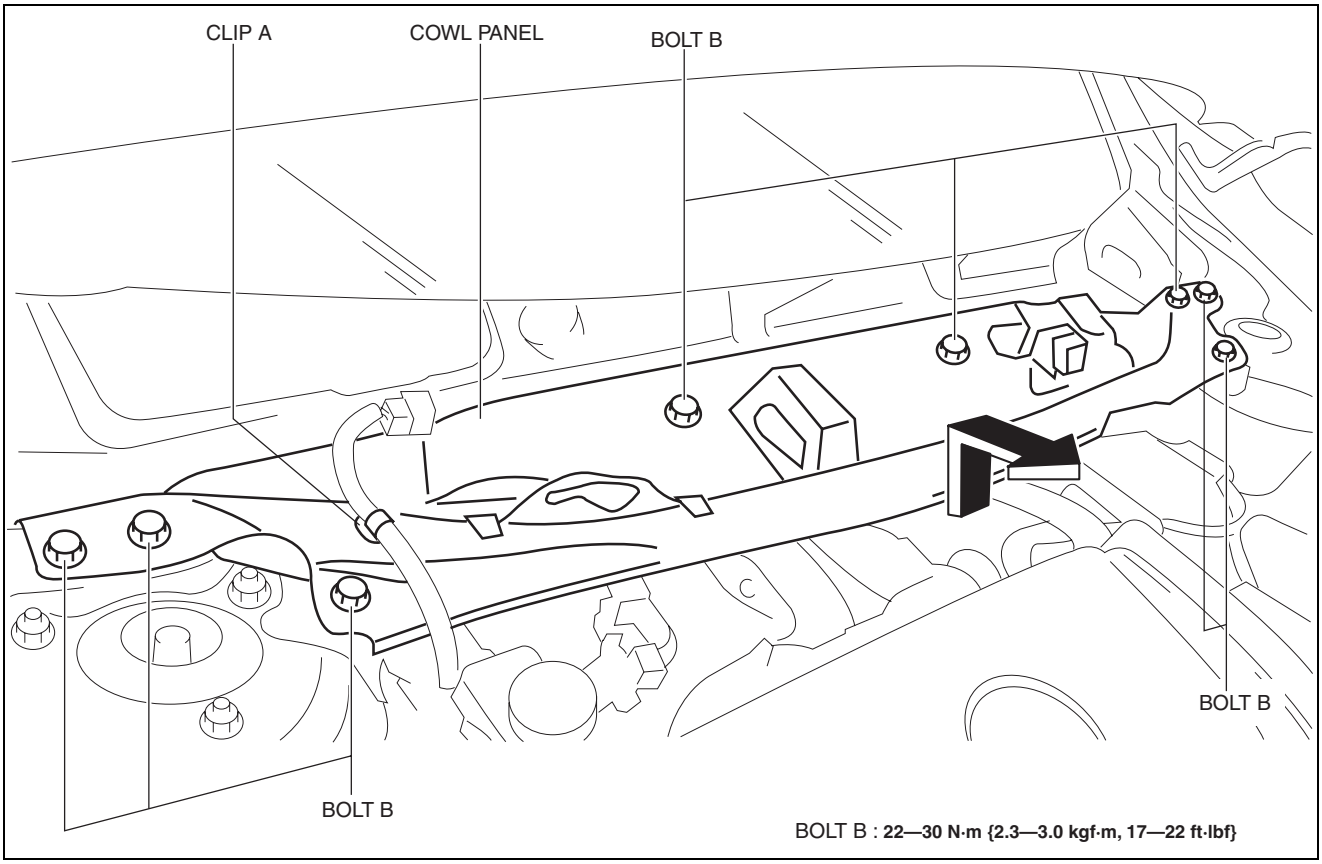

ac5wzw0000301

4. Remove bolts B.
5. Remove the cowl panel in the direction of the arrow shown in the figure.
6. Install in the reverse order of removal.

09-11 DOORS AND LIFTGATE

DOOR AND LIFTGATE
LOCATION INDEX. 09-11–2
FRONT DOOR
REMOVAL/INSTALLATION. 09-11–3
Connector Removal Note. 09-11–4
FRONT DOOR MODULE PANEL
REMOVAL/INSTALLATION. 09-11–6
FRONT DOOR CHECKER
REMOVAL/INSTALLATION. 09-11–9
FRONT DOOR HINGE
REMOVAL/INSTALLATION. 09-11–10
REAR DOOR
REMOVAL/INSTALLATION. 09-11–11
Connector Removal Note. 09-11–11
REAR DOOR MODULE PANEL
REMOVAL/INSTALLATION 09-11–12
REAR DOOR CHECKER
REMOVAL/INSTALLATION 09-11–15
REAR DOOR HINGE
REMOVAL/INSTALLATION 09-11–16
DOOR ADJUSTMENT 09-11–17
LIFTGATE
REMOVAL/INSTALLATION 09-11–18
LIFTGATE HINGE
REMOVAL/INSTALLATION 09-11–21
STAY DAMPER DISPOSAL 09-11–22
LIFTGATE ADJUSTMENT 09-11–23

DOORS AND LIFTGATE

DOOR AND LIFTGATE LOCATION INDEX

id091100520000

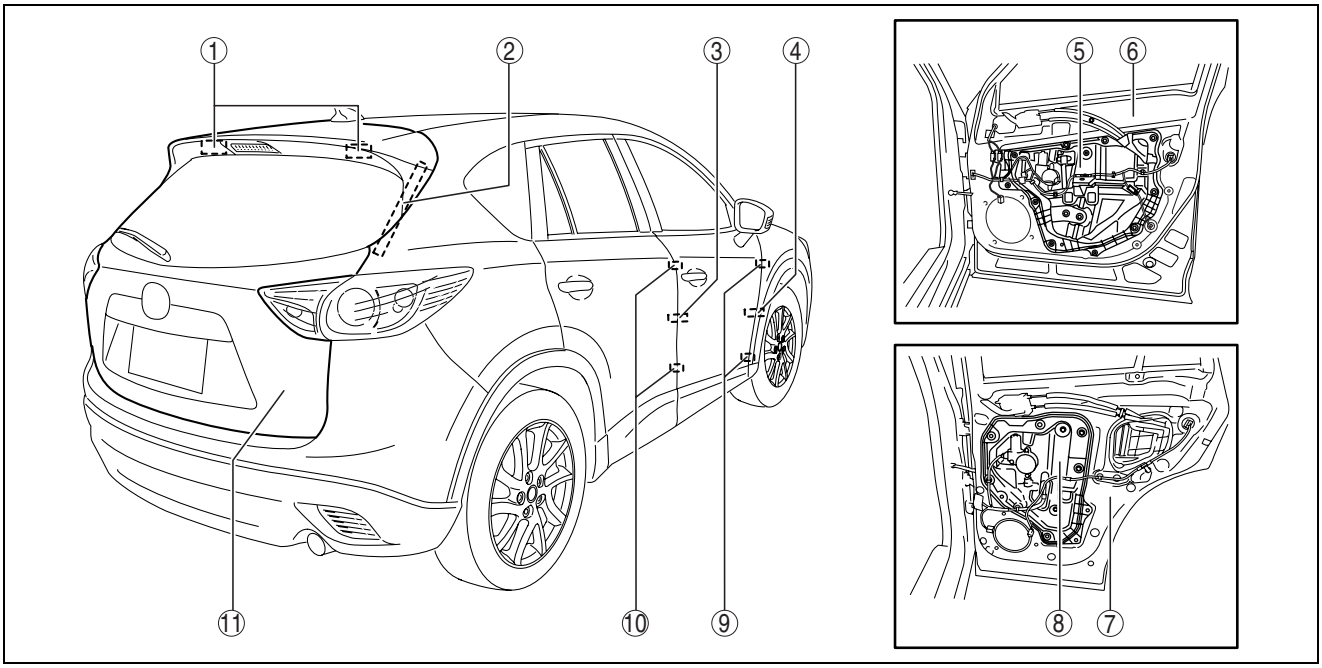

ac5uuw00000835

1	Liftgate hinge (See 09-11-21 LIFTGATE HINGE REMOVAL/ INSTALLATION.)
2	Stay damper (See 09-11-22 STAY DAMPER DISPOSAL.)
3	Rear door checker (See 09-11-15 REAR DOOR CHECKER REMOVAL/ INSTALLATION.)
4	Front door checker (See 09-11-9 FRONT DOOR CHECKER REMOVAL/ INSTALLATION.)
5	Front door module panel (See 09-11-6 FRONT DOOR MODULE PANEL REMOVAL/INSTALLATION.)
6	Front door (See 09-11-3 FRONT DOOR REMOVAL/ INSTALLATION.) (See 09-11-17 DOOR ADJUSTMENT.)

7	Rear door (See 09-11-11 REAR DOOR REMOVAL/ INSTALLATION.) (See 09-11-17 DOOR ADJUSTMENT.)
8	Rear door module panel (See 09-11-12 REAR DOOR MODULE PANEL REMOVAL/INSTALLATION.)
9	Front door hinge (See 09-11-10 FRONT DOOR HINGE REMOVAL/ INSTALLATION.)
10	Rear door hinge (See 09-11-16 REAR DOOR HINGE REMOVAL/ INSTALLATION.)
11	Liftgate (See 09-11-18 LIFTGATE REMOVAL/ INSTALLATION.) (See 09-11-23 LIFTGATE ADJUSTMENT.)

DOORS AND LIFTGATE

FRONT DOOR REMOVAL/INSTALLATION

id091100520100

Warning

- **Removing the front door without supporting it could cause the front door to fall and cause serious injury. Always perform the procedure with at least one other person to prevent the front door from falling.**

Caution

- **When the front door checker securing bolts are removed, the front door may open until it contacts the front fender panel causing the front door and the front fender panel to be damaged. Before removing the front door, overlap and adhere the protective tape to the position shown in the figure and be careful no to damage the front door and the front fender panel.**

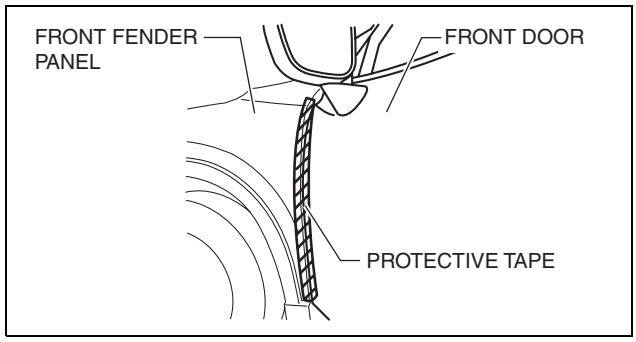

ac5uuw00000836

1. Disconnect the negative battery cable. (See 01-17A-11 NEGATIVE BATTERY CABLE DISCONNECTION/CONNECTION [SKYACTIV-G 2.0].) (See 01-17A-13 NEGATIVE BATTERY CABLE DISCONNECTION/CONNECTION [SKYACTIV-G 2.0 (WITHOUT i-stop)].) (See 01-17B-9 NEGATIVE BATTERY CABLE DISCONNECTION/CONNECTION [SKYACTIV-D 2.2].)
2. Remove in the order shown in the figure.

1	Bolt A
2	Connector (See 09-11-4 Connector Removal Note.)
3	Bolt B
4	Front door

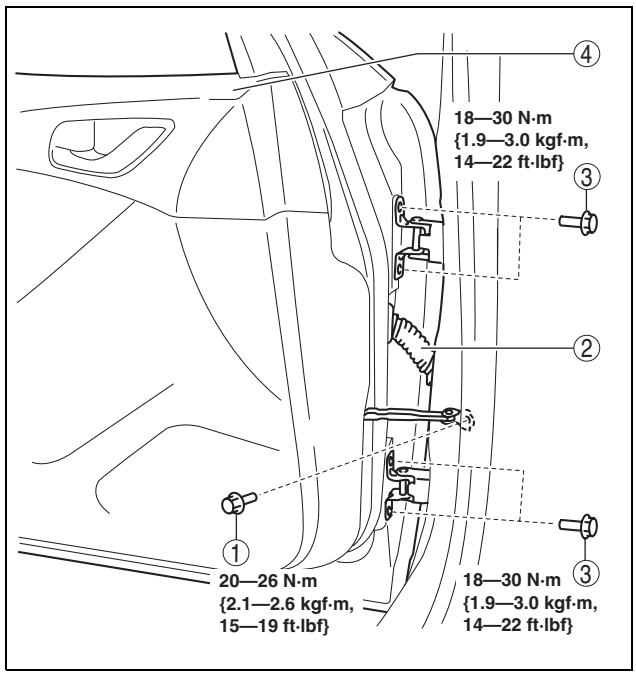

ac5uuw00000837

3. Install in the reverse order of removal.
4. Adjust the front door. (See 09-11-17 DOOR ADJUSTMENT.)

DOORS AND LIFTGATE

Connector Removal Note

1. Partially peel back the rubber boot in the direction of arrow (1) shown in the figure and remove it from the connector.
2. Using a tape-wrapped flathead screwdriver, press tabs A in the directions of arrows (2) and (3) shown in the figure and remove the upper part of the connector from the body in the direction of arrow (4).

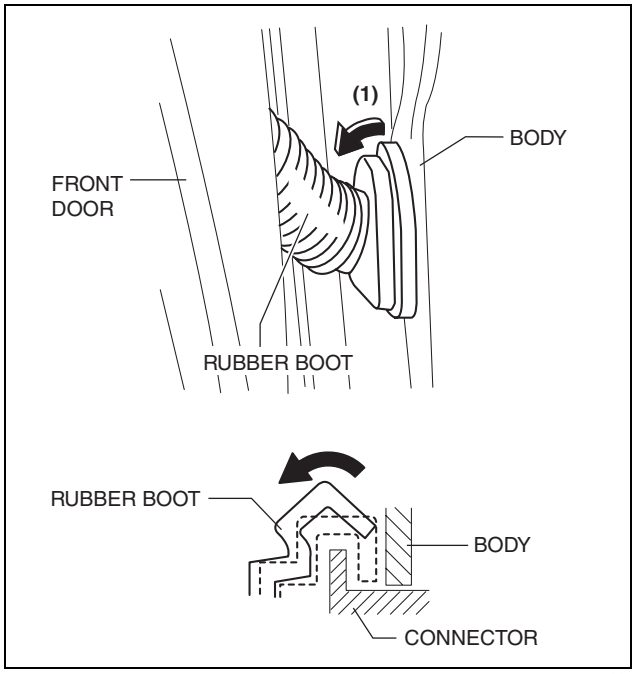

ac5wzw0000118

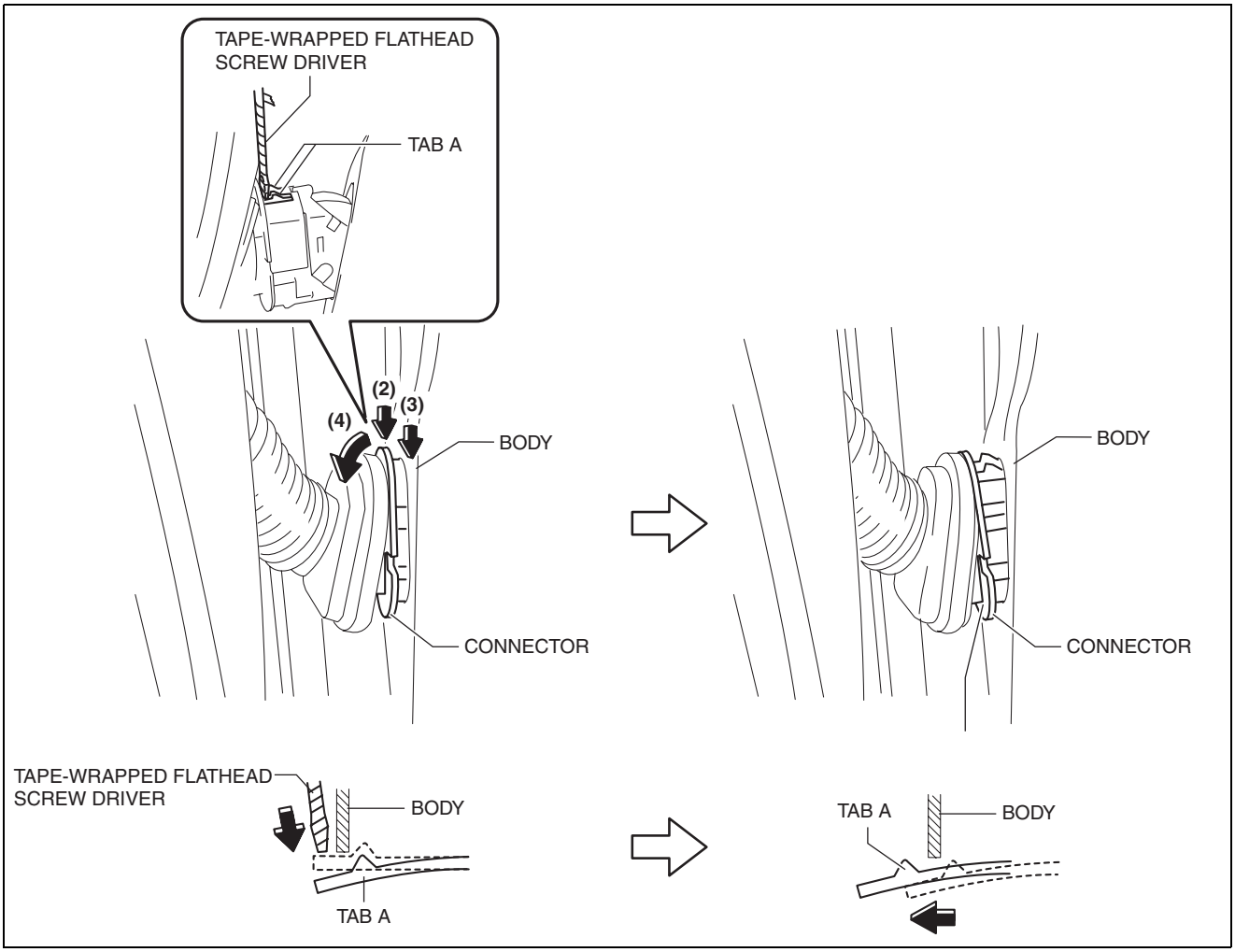

ac5wzw0000309

DOORS AND LIFTGATE

3. Using a tape-wrapped flathead screwdriver, press tabs B in the directions of arrows (5) and (6) shown in the figure and remove the connector from the body in the direction of arrow (7).

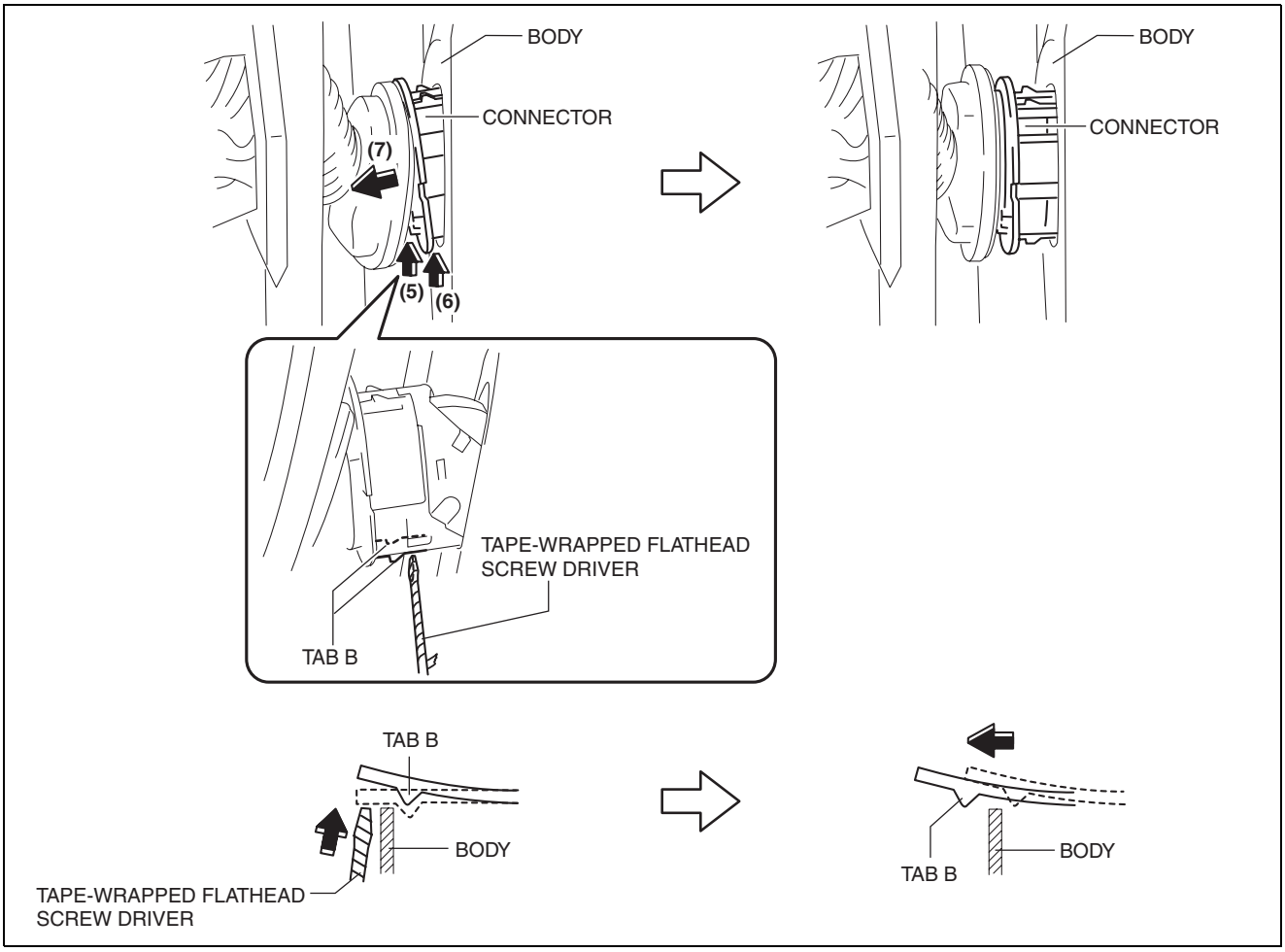

ac5wzw0000309

4. Lower the lever in the direction of arrow (8), and disconnect the connector in the direction of arrow (9).

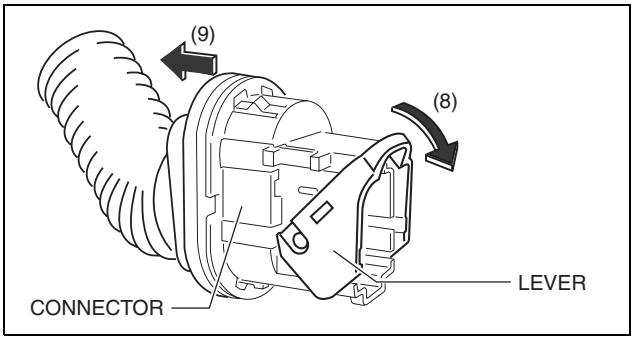

ac5uuw00000841

DOORS AND LIFTGATE

FRONT DOOR MODULE PANEL REMOVAL/INSTALLATION

id091100520200

1. Perform the front door glass preparation. (See 09-12-4 FRONT DOOR GLASS REMOVAL/INSTALLATION.)
2. Disconnect the negative battery cable. (See 01-17A-11 NEGATIVE BATTERY CABLE DISCONNECTION/CONNECTION [SKYACTIV-G 2.0].) (See 01-17A-13 NEGATIVE BATTERY CABLE DISCONNECTION/CONNECTION [SKYACTIV-G 2.0 (WITHOUT i-stop)].) (See 01-17B-9 NEGATIVE BATTERY CABLE DISCONNECTION/CONNECTION [SKYACTIV-D 2.2].)
3. Remove the following parts:
   (1) Inner garnish (See 09-17-65 INNER GARNISH REMOVAL/INSTALLATION.)
   (2) Front door trim (See 09-17-65 FRONT DOOR TRIM REMOVAL/INSTALLATION.)
   (3) Front door speaker (See 09-20-15 FRONT DOOR SPEAKER REMOVAL/INSTALLATION.)
   (4) Front door glass (See 09-12-4 FRONT DOOR GLASS REMOVAL/INSTALLATION.)

Note
- After removing the front door trim, secure the inner handle using screws so that the procedure is performed smoothly.

4. Remove bolt A.

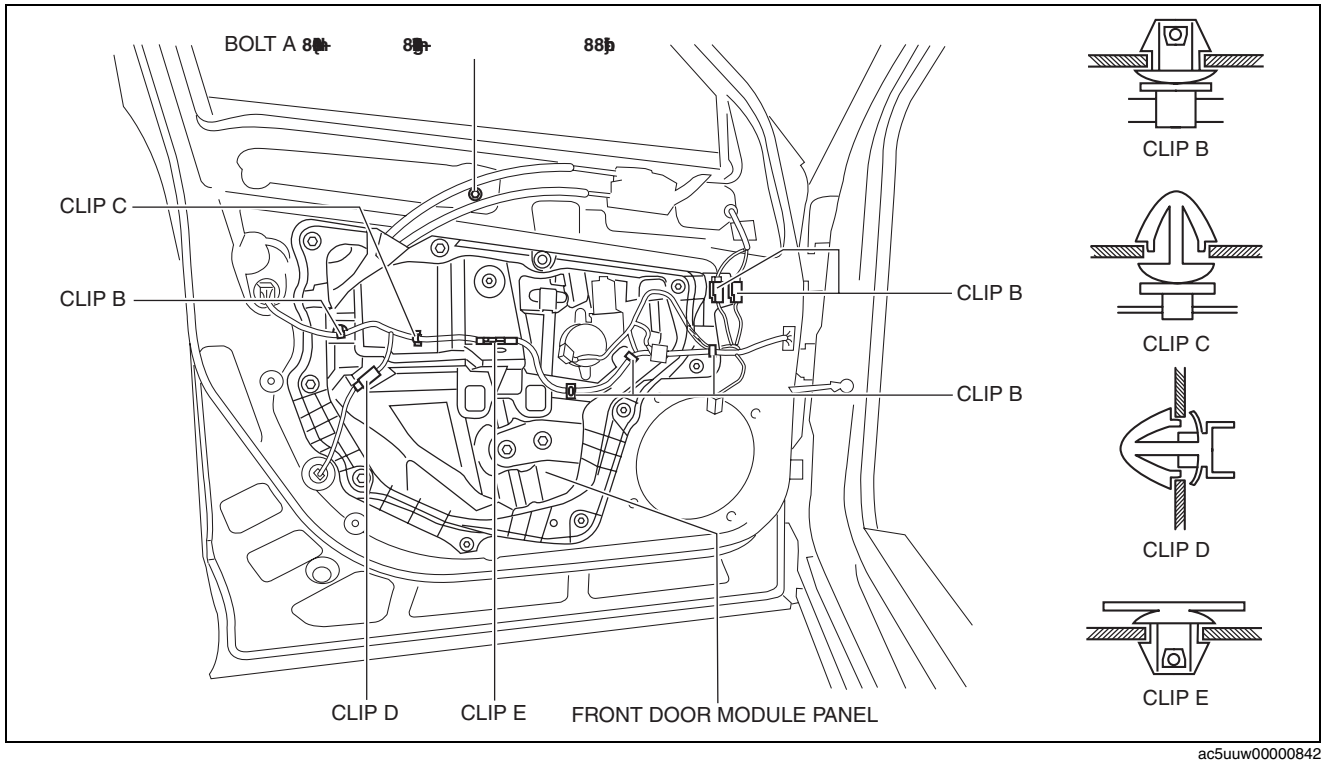

ac5uuw00000842

5. Detach front door wiring harness securing clips B, C, D and E.

DOORS AND LIFTGATE

6. Disconnect the connectors shown in the figure.

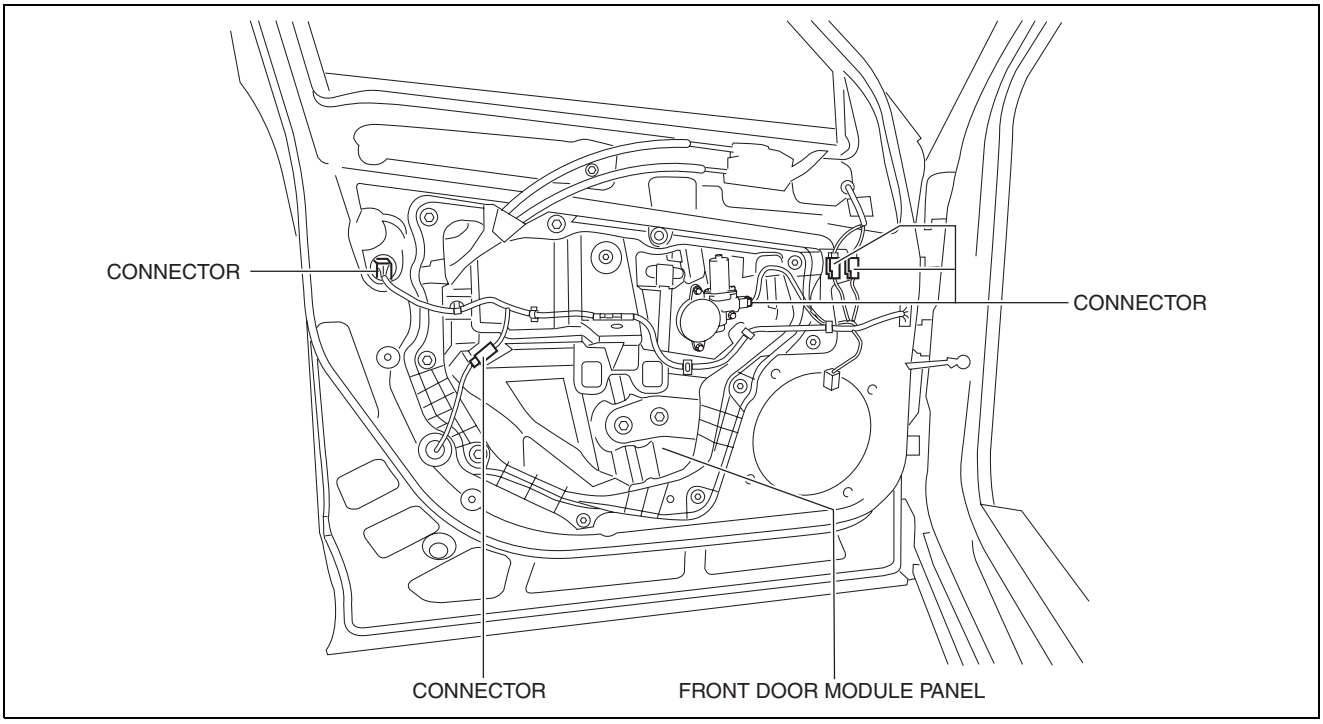

ac5uuw00000843

7. Remove screws F.

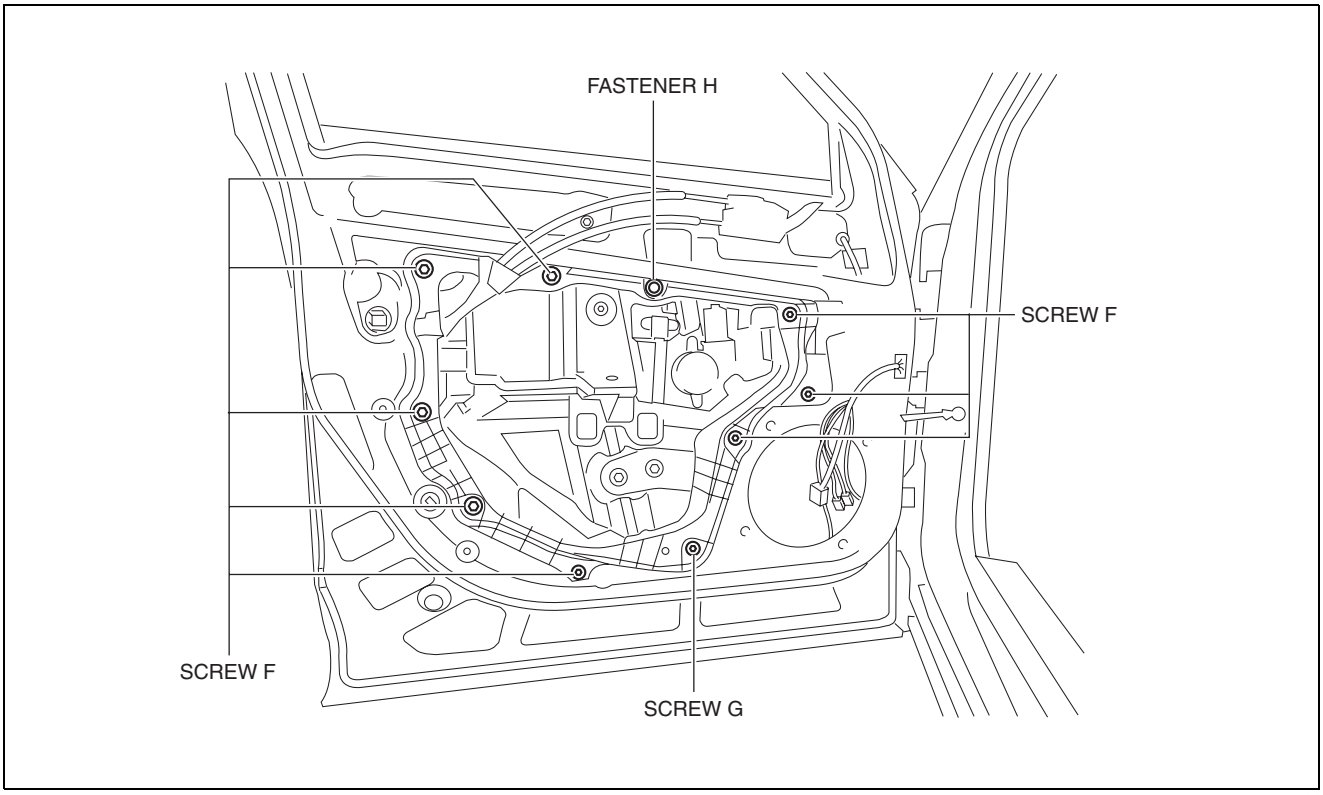

ac5uuw00000844

8. Remove screw G.
9. Remove fastener H.
10. Pull the front door module panel in the direction of arrow (1) shown in the figure and remove the protector and pin from the front door inner panel.

Caution

- **If the protector does not come out easily from the front door inner panel, pulling the front door module panel forcibly may cause the front door module panel to deform. If the protector does not**

DOORS AND LIFTGATE

come out easily, remove the front door module panel while gradually removing the protector.

- **If the front power window regulator contacts the front door inner panel during the front door module panel removal, the coating film on the front door inner panel may get scratched, and the front door module panel and front power window regulator could be damaged. Remove the front door module panel while verifying that the front power window regulator and the front door inner panel do not contact each other.**

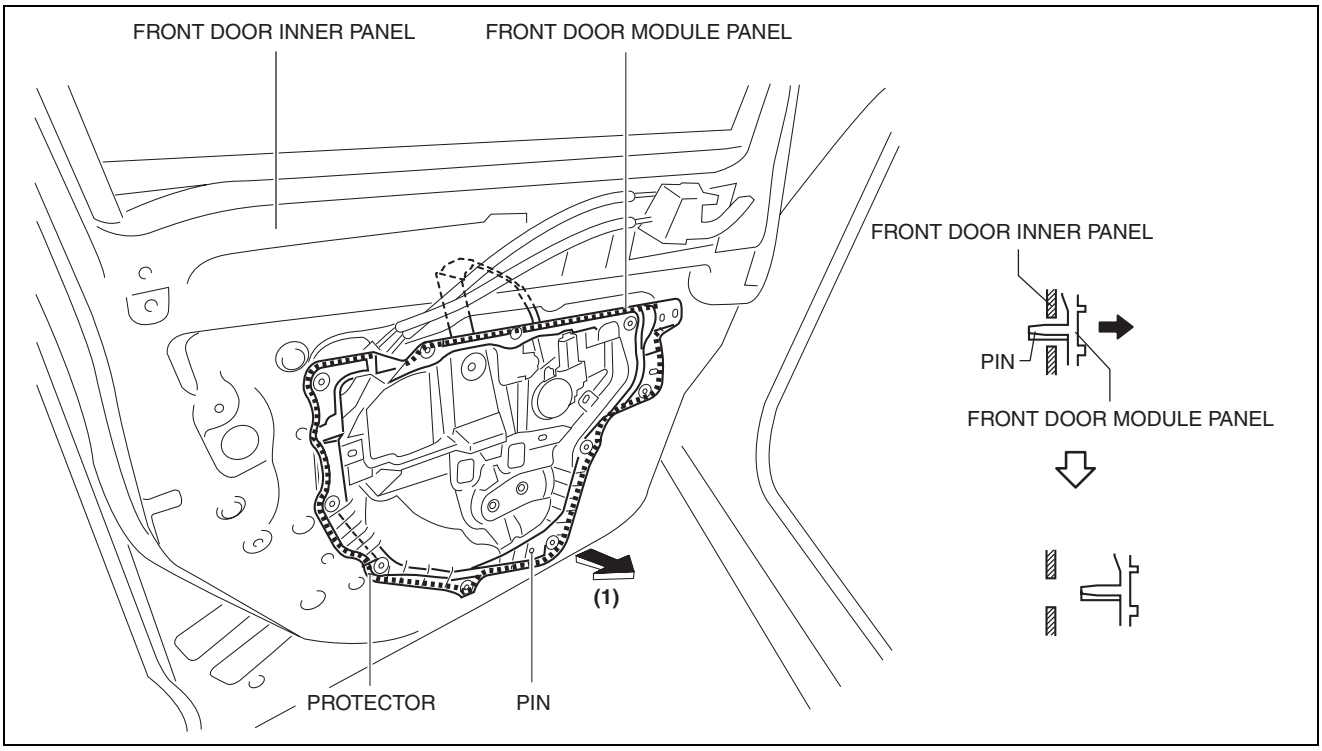

ac5wzw0000309

11. Move the front door module panel in the direction of arrow (2) shown in the figure so that the upper part of the front power window regulator does not contact the front door inner panel, and remove the front door module panel and the front power window regulator as a single unit.
12. Remove the front power window motor. (See 09-12-45 POWER WINDOW MOTOR REMOVAL/INSTALLATION.)
13. Remove the front power window regulator. (See 09-12-39 FRONT POWER WINDOW REGULATOR REMOVAL/INSTALLATION.)
14. Install in the reverse order of removal.

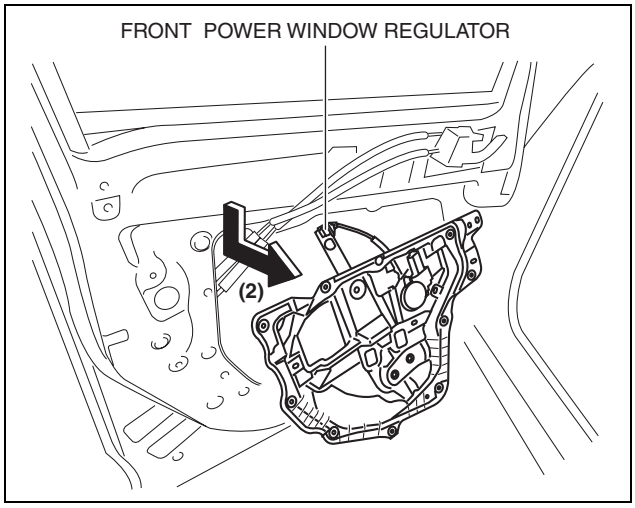

ac5uuw00000846

DOORS AND LIFTGATE

FRONT DOOR CHECKER REMOVAL/INSTALLATION

id091100520400

Caution

- **When the front door checker securing bolts are removed, the front door may open until it contacts the front fender panel causing the front door and the front fender panel to be damaged. Before removing the front door, overlap and adhere the protective tape to the position shown in the figure and be careful no to damage the front door and the front fender panel.**

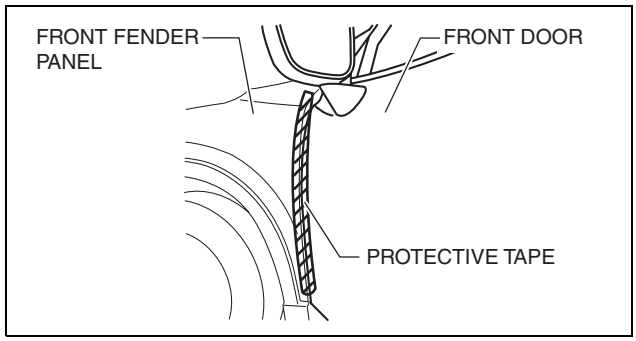

ac5uuw00000847

1. Fully close the front door glass.
2. Disconnect the negative battery cable. (See 01-17A-11 NEGATIVE BATTERY CABLE DISCONNECTION/CONNECTION [SKYACTIV-G 2.0].) (See 01-17A-13 NEGATIVE BATTERY CABLE DISCONNECTION/CONNECTION [SKYACTIV-G 2.0 (WITHOUT i-stop)].) (See 01-17B-9 NEGATIVE BATTERY CABLE DISCONNECTION/CONNECTION [SKYACTIV-D 2.2].)
3. Remove the inner garnish. (See 09-17-65 INNER GARNISH REMOVAL/INSTALLATION.)
4. Remove the front door trim. (See 09-17-65 FRONT DOOR TRIM REMOVAL/INSTALLATION.)
5. Remove the front door speaker. (See 09-20-15 FRONT DOOR SPEAKER REMOVAL/INSTALLATION.)
6. Remove bolt.

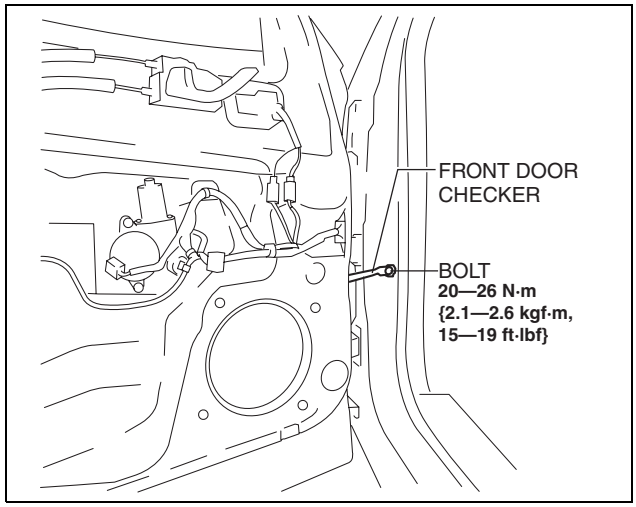

ac5wzw0000281

7. Remove nuts.
8. Pull out the front door checker from the front speaker installation hole.
9. Install in the reverse order of removal.

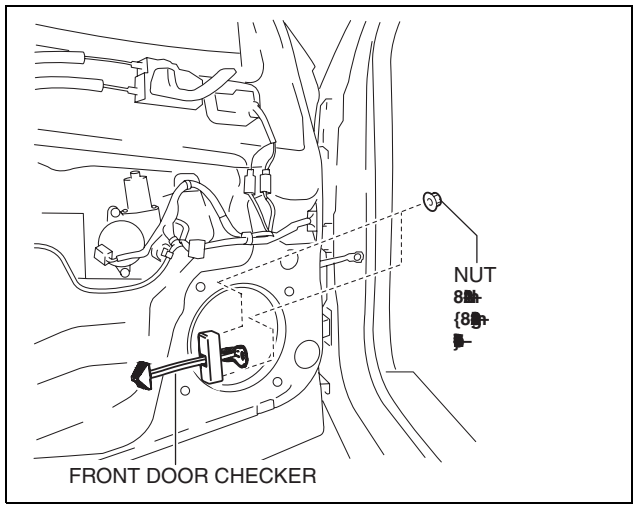

ac5wzw0000281

FRONT DOOR HINGE REMOVAL/INSTALLATION

id091100520500

1. Disconnect the negative battery cable. (See 01-17A-11 NEGATIVE BATTERY CABLE DISCONNECTION/CONNECTION [SKYACTIV-G 2.0].) (See 01-17A-13 NEGATIVE BATTERY CABLE DISCONNECTION/CONNECTION [SKYACTIV-G 2.0 (WITHOUT i-stop)].) (See 01-17B-9 NEGATIVE BATTERY CABLE

DOORS AND LIFTGATE

DISCONNECTION/CONNECTION [SKYACTIV-D 2.2].)

2. Remove the following parts:
   (1) Front bumper (See 09-10-10 FRONT BUMPER REMOVAL/INSTALLATION.)
   (2) Front combination light (See 09-18-7 FRONT COMBINATION LIGHT REMOVAL/INSTALLATION.)
   (3) Front bumper slider (See 09-10-17 BUMPER SLIDER REMOVAL/INSTALLATION.)
   (4) Front over fender (See 09-10-31 FRONT OVER FENDER REMOVAL/INSTALLATION.)
   (5) Front fender panel (See 09-10-30 FRONT FENDER PANEL REMOVAL/INSTALLATION.)
   (6) Front door (See 09-11-3 FRONT DOOR REMOVAL/INSTALLATION.)
3. Remove in the order shown in the figure.

1	Bolt
2	Front door hinge

4. Install in the reverse order of removal.

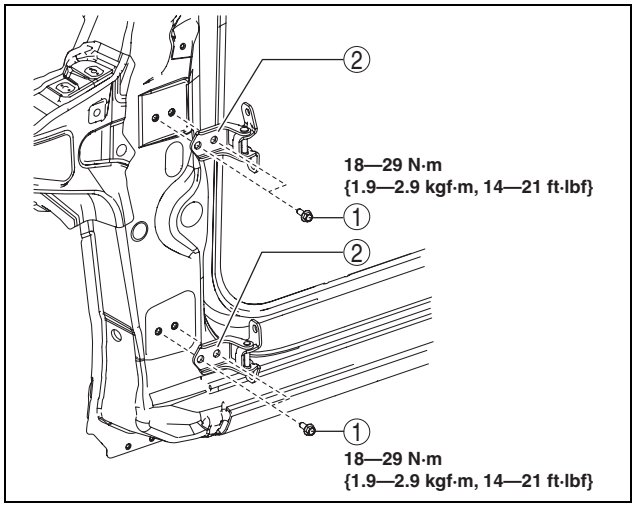

ac5uuw00000850

DOORS AND LIFTGATE

REAR DOOR REMOVAL/INSTALLATION

id091100520600

Warning

- **Removing the rear door without supporting it could cause the rear door to fall and cause serious injury. Always perform the procedure with at least one other person to prevent the rear door from falling.**

1. Disconnect the negative battery cable. (See 01-17A-11 NEGATIVE BATTERY CABLE DISCONNECTION/CONNECTION [SKYACTIV-G 2.0].) (See 01-17A-13 NEGATIVE BATTERY CABLE DISCONNECTION/CONNECTION [SKYACTIV-G 2.0 (WITHOUT i-stop)].) (See 01-17B-9 NEGATIVE BATTERY CABLE DISCONNECTION/CONNECTION [SKYACTIV-D 2.2].)
2. Remove in the order shown in the figure.

1	Bolt A
2	Connector (See 09-11-11 Connector Removal Note.)
3	Bolt B
4	Rear door

3. Install in the reverse order of removal.
4. Adjust the rear door. (See 09-11-17 DOOR ADJUSTMENT.)

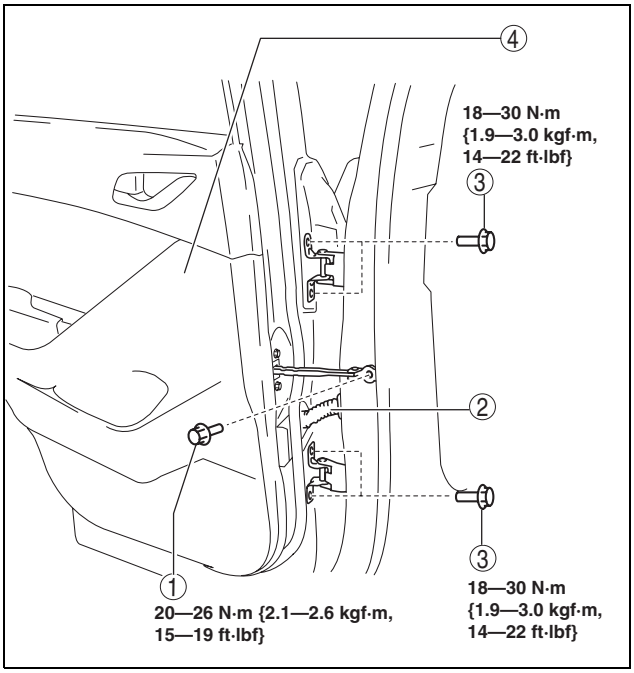

ac5uuw00000851

Connector Removal Note

1. While pressing tab A in the direction of arrow (1), disconnect the connector in the direction of arrow (2).

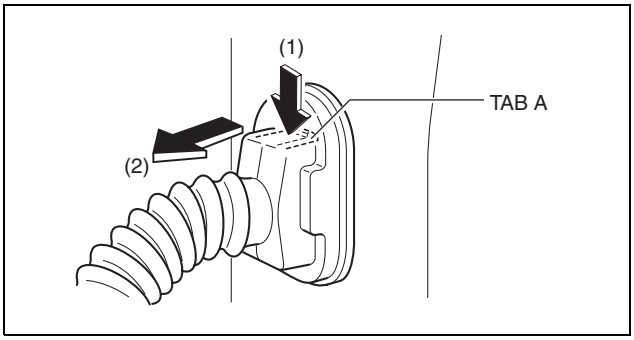

ac5uuw00000852

DOORS AND LIFTGATE

REAR DOOR MODULE PANEL REMOVAL/INSTALLATION

id091100520900

1. Fully lower the rear door glass.
2. Disconnect the negative battery cable. (See 01-17A-11 NEGATIVE BATTERY CABLE DISCONNECTION/CONNECTION [SKYACTIV-G 2.0].) (See 01-17A-13 NEGATIVE BATTERY CABLE DISCONNECTION/CONNECTION [SKYACTIV-G 2.0 (WITHOUT i-stop)].) (See 01-17B-9 NEGATIVE BATTERY CABLE DISCONNECTION/CONNECTION [SKYACTIV-D 2.2].)
3. Remove the following parts:
   (1) Rear door trim (See 09-17-74 REAR DOOR TRIM REMOVAL/INSTALLATION.)
   (2) Rear door speaker (See 09-20-19 REAR DOOR SPEAKER REMOVAL/INSTALLATION.)
   (3) Rear door quarter glass (See 09-12-9 REAR DOOR QUARTER GLASS REMOVAL/INSTALLATION.)
   (4) Remove the rear power window motor (See 09-12-45 POWER WINDOW MOTOR REMOVAL/INSTALLATION.)
   (5) Rear door glass (See 09-12-7 REAR DOOR GLASS REMOVAL/INSTALLATION.)

Note
- After removing the rear door trim, secure the inner handle using screws so that the procedure is performed smoothly.

4. Detach rear door wiring harness securing clips A, B and C.

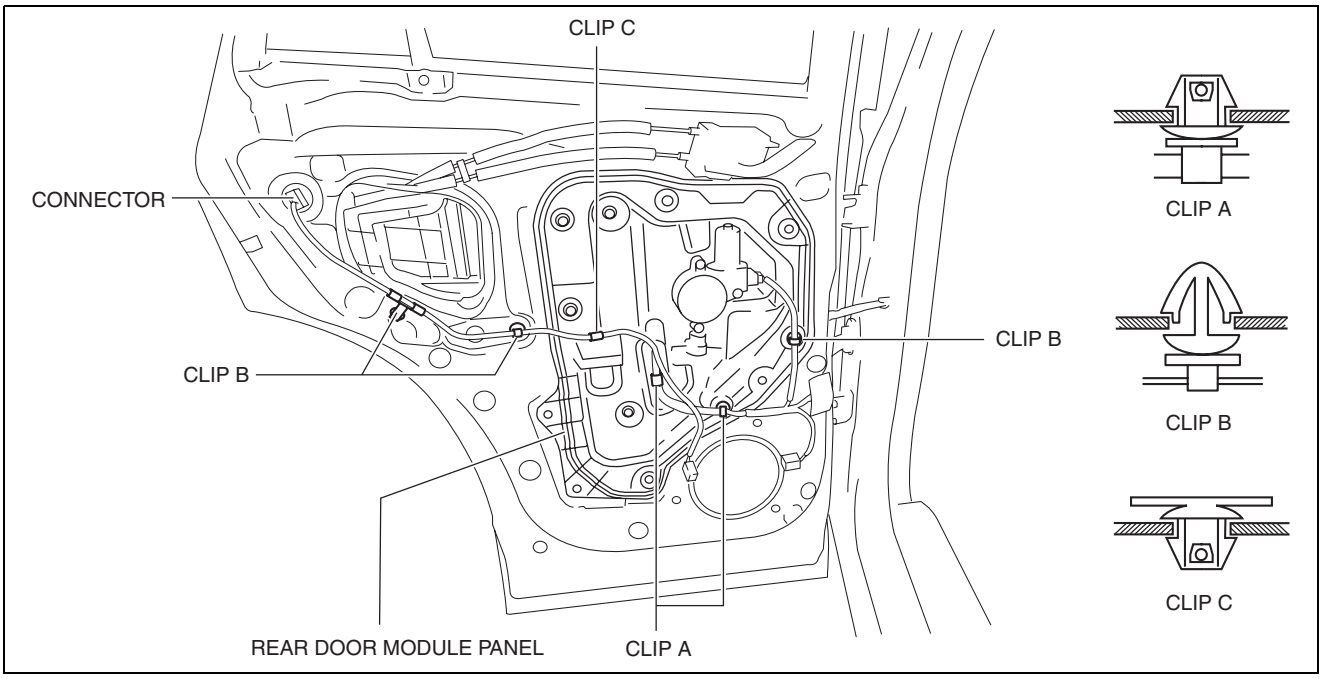

ac5uuw00000853

5. Disconnect the connector.

DOORS AND LIFTGATE

6. Remove screws D.

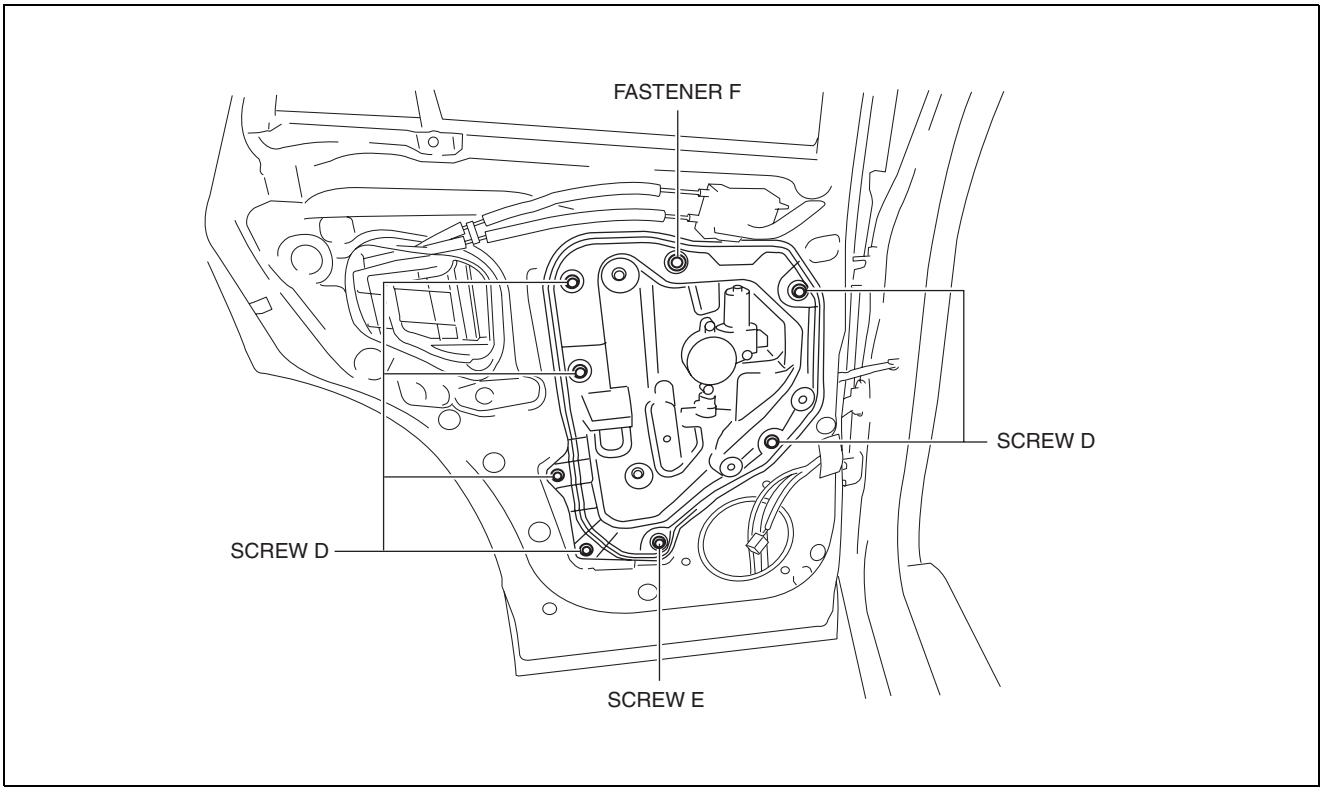

ac5uuw00000854

7. Remove screw E.
8. Remove screw F.
9. Pull the rear door module panel in the direction of arrow (1) shown in the figure and remove the protector and pin from the rear door inner panel.

Caution

- **If the protector does not come out easily from the rear door inner panel, pulling the rear door module panel forcibly may cause the rear door module panel to deform. If the protector does not come out easily, remove the rear door module panel while gradually removing the protector.**
- **If the rear power window regulator contacts the rear door inner panel during the rear door module panel removal, the coating film on the rear door inner panel may get scratched, and the rear door module panel and rear power window regulator could be damaged. Remove the rear door module panel while verifying that the rear power window regulator and the rear door inner panel do not contact each other.**

DOORS AND LIFTGATE

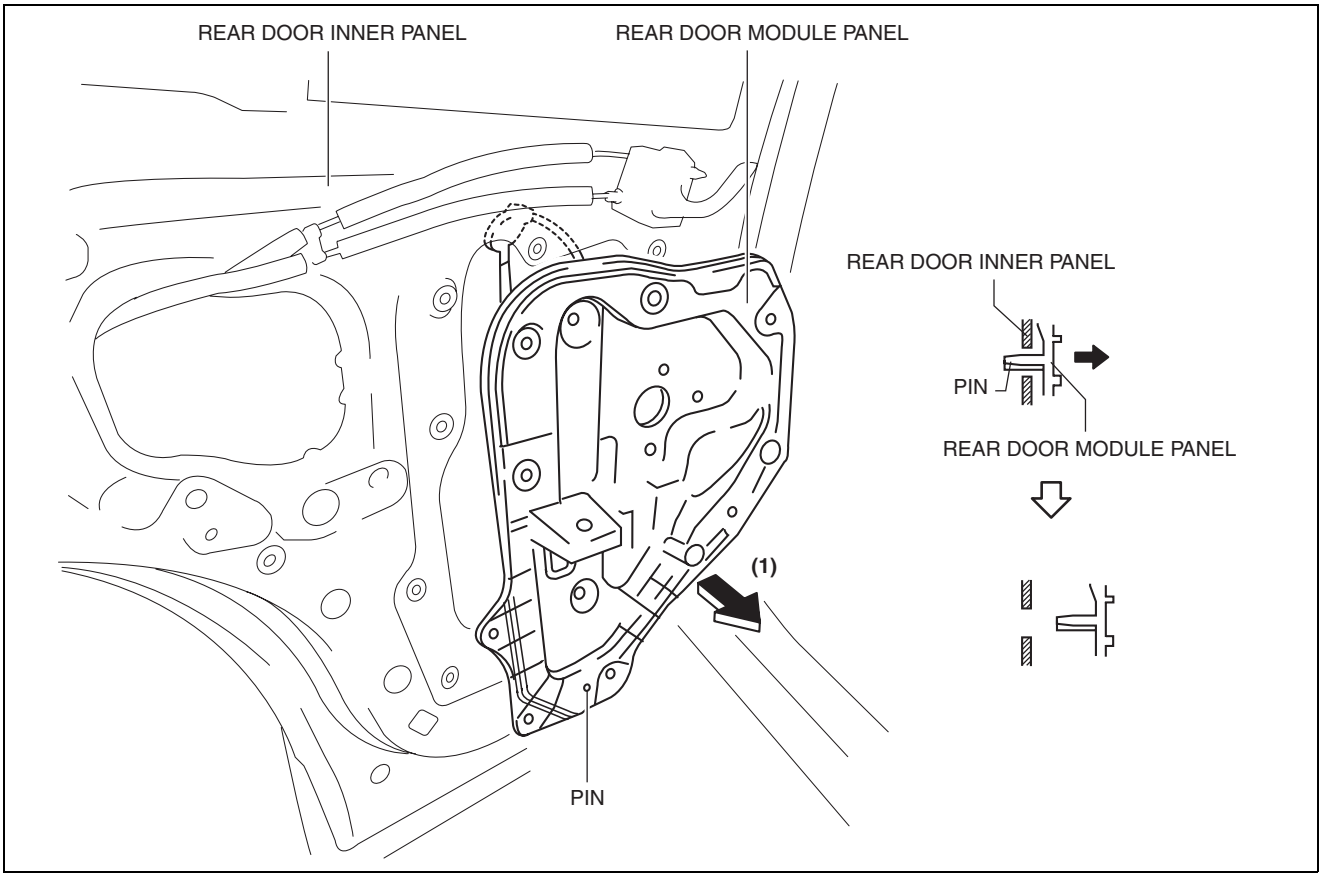

ac5wzw0000308

10. Move the rear door module panel in the direction of arrow (2) shown in the figure so that the upper part of the rear power window regulator does not contact the rear door inner panel, and remove the rear door module panel and the rear power window regulator as a single unit.
11. Remove the rear power window regulator. (See 09-12-42 REAR POWER WINDOW REGULATOR REMOVAL/INSTALLATION.)
12. Install in the reverse order of removal.

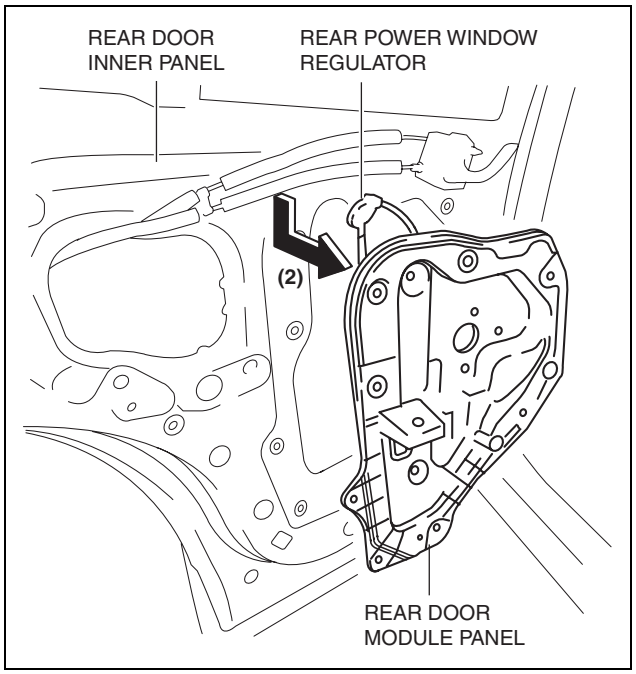

ac5uuw00000856

DOORS AND LIFTGATE

REAR DOOR CHECKER REMOVAL/INSTALLATION

id091100520700

1. Fully close the rear door glass.
2. Disconnect the negative battery cable. (See 01-17A-11 NEGATIVE BATTERY CABLE DISCONNECTION/CONNECTION [SKYACTIV-G 2.0].) (See 01-17A-13 NEGATIVE BATTERY CABLE DISCONNECTION/CONNECTION [SKYACTIV-G 2.0 (WITHOUT i-stop)].) (See 01-17B-9 NEGATIVE BATTERY CABLE DISCONNECTION/CONNECTION [SKYACTIV-D 2.2].)
3. Remove the rear door trim. (See 09-17-74 REAR DOOR TRIM REMOVAL/INSTALLATION.)
4. Remove the rear door speaker. (See 09-20-19 REAR DOOR SPEAKER REMOVAL/INSTALLATION.)
5. Remove bolt.

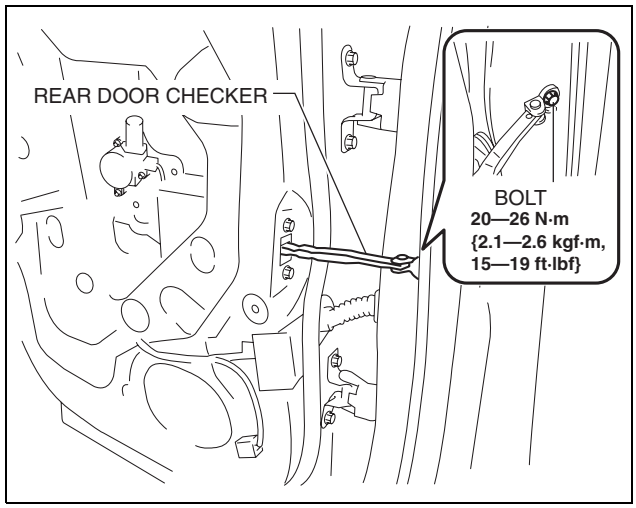

ac5wzw0000308

6. Remove nuts.
7. Pull out the rear door checker from the rear speaker installation hole.
8. Install in the reverse order of removal.

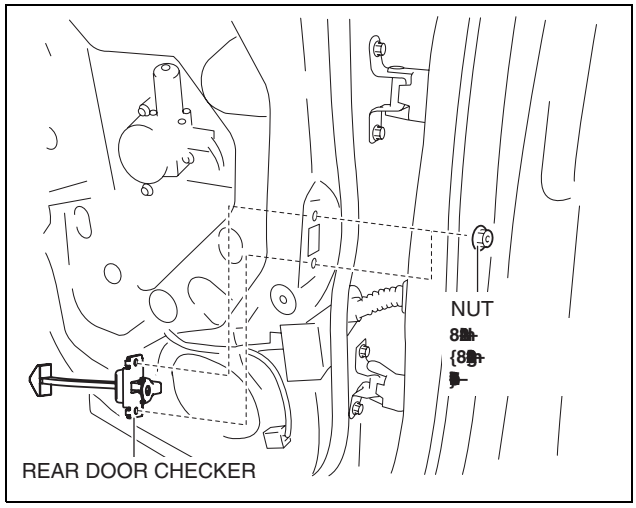

ac5wzw0000308

DOORS AND LIFTGATE

REAR DOOR HINGE REMOVAL/INSTALLATION

id091100520800

1. Disconnect the negative battery cable. (See 01-17A-11 NEGATIVE BATTERY CABLE DISCONNECTION/CONNECTION [SKYACTIV-G 2.0].) (See 01-17A-13 NEGATIVE BATTERY CABLE DISCONNECTION/CONNECTION [SKYACTIV-G 2.0 (WITHOUT i-stop)].) (See 01-17B-9 NEGATIVE BATTERY CABLE DISCONNECTION/CONNECTION [SKYACTIV-D 2.2].)
2. Remove the following parts:
   (1) Rear door (See 09-11-11 REAR DOOR REMOVAL/INSTALLATION.)
   (2) Front scuff plate (See 09-17-61 FRONT SCUFF PLATE REMOVAL/INSTALLATION.)
   (3) Rear scuff plate (See 09-17-63 REAR SCUFF PLATE REMOVAL/INSTALLATION.)
   (4) B-pillar lower trim (See 09-17-57 B-PILLAR LOWER TRIM REMOVAL/INSTALLATION.)
3. Remove in the order shown in the figure.

1	Bolt A
2	Nut B
3	Rear door hinge

4. Install in the reverse order of removal.

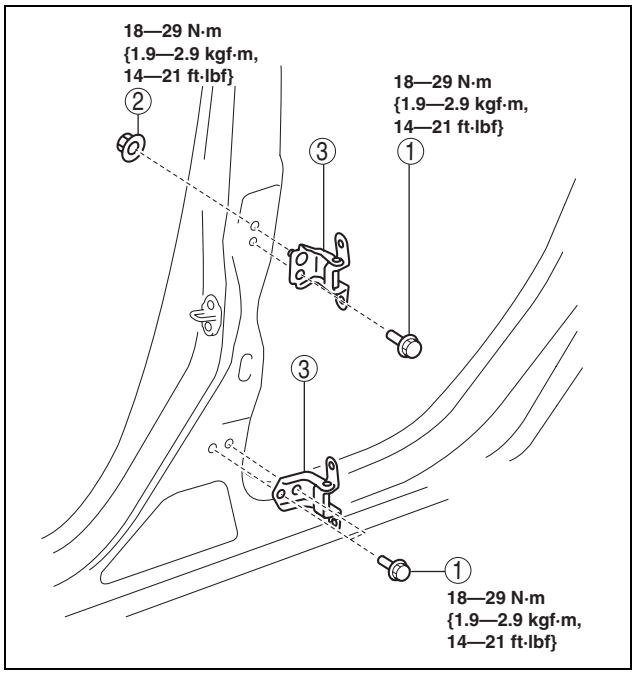

ac5uuw00000859

DOORS AND LIFTGATE

DOOR ADJUSTMENT

id091100521100

1. Measure the gap and height difference between the door and the body.
2. Loosen the door hinge installation bolts and adjust the door.

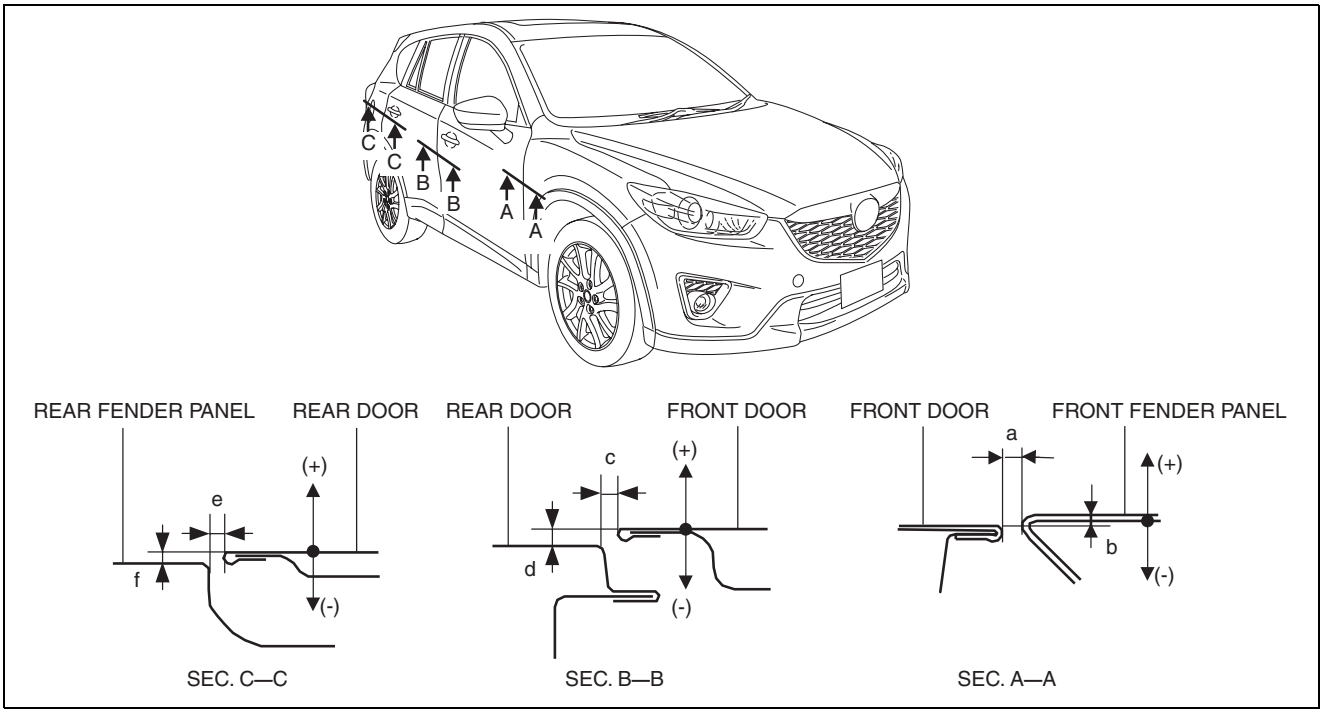

ac5uuw00000881

Standard clearance
a: 2.8—3.8 mm {0.12—0.14 in}
b: -1.0—1.0 mm {-0.039—0.039 in}
c: 2.5—4.5 mm {0.10—0.17 in}
d: -1.0—1.0 mm {-0.039—0.039 in}
e: 2.5—4.5 mm {0.10—0.17 in}
f: -1.0—1.0 mm {-0.039—0.039 in}

3. Tighten the door hinge installation bolts. (See 09-11-3 FRONT DOOR REMOVAL/INSTALLATION.) (See 09-11-11 REAR DOOR REMOVAL/INSTALLATION.)
4. If the door does not open/close smoothly, adjust it by loosening the door lock striker installation screw. (See 09-14-43 DOOR LOCK STRIKER REMOVAL/INSTALLATION.)
5. Spray or pour water on the door and surrounding area using a hose or high pressure water pressure car wash and verify that there is no water leakage.

DOORS AND LIFTGATE

LIFTGATE REMOVAL/INSTALLATION

id091100521200

Warning

- **Removing the stay damper, liftgate hinge securing bolt, or liftgate without supporting the liftgate may cause the liftgate to fall off and injure you. When removing the stay damper, liftgate hinge, or liftgate, always use two persons to perform the work.**

1. Disconnect the negative battery cable. (See 01-17A-11 NEGATIVE BATTERY CABLE DISCONNECTION/CONNECTION [SKYACTIV-G 2.0].) (See 01-17A-13 NEGATIVE BATTERY CABLE DISCONNECTION/CONNECTION [SKYACTIV-G 2.0 (WITHOUT i-stop)].) (See 01-17B-9 NEGATIVE BATTERY CABLE DISCONNECTION/CONNECTION [SKYACTIV-D 2.2].)
2. Remove the liftgate upper trim. (See 09-17-87 LIFTGATE UPPER TRIM REMOVAL/INSTALLATION.)
3. Disconnect the connectors shown in the figure.

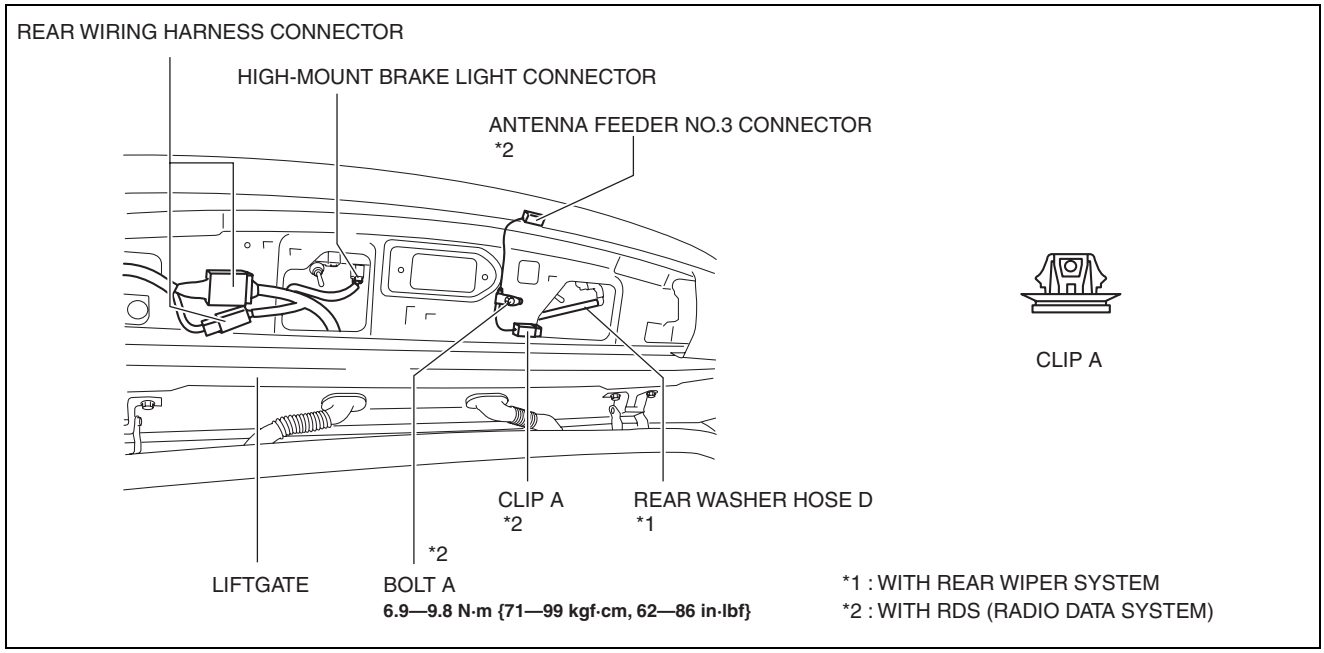

ac5wzw0000306

4. Disconnect rear washer hose D. (with rear wiper system)
5. Remove bolt A. (with RDS (radio data system))
6. Remove clip A. (with RDS (radio data system))

DOORS AND LIFTGATE

7. Partially peel the liftgate grommet in the direction of arrow (1) shown in the figure, and remove the liftgate grommet from the liftgate grommet inner.

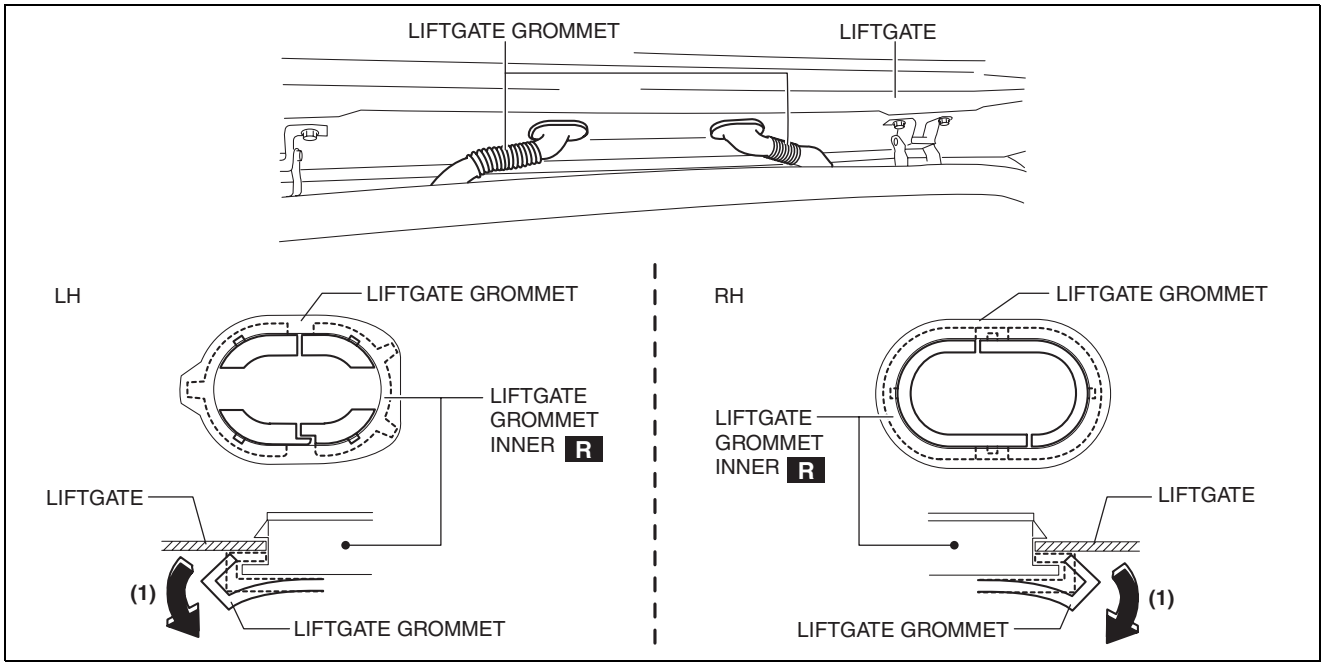

ac5wzw0000486

8. Using a tape-wrapped flathead screwdriver, press the liftgate grommet inner tabs B in the directions of arrows (2) and (3) shown in the figure and remove the liftgate grommet inner from the liftgate in the direction of arrow (4).

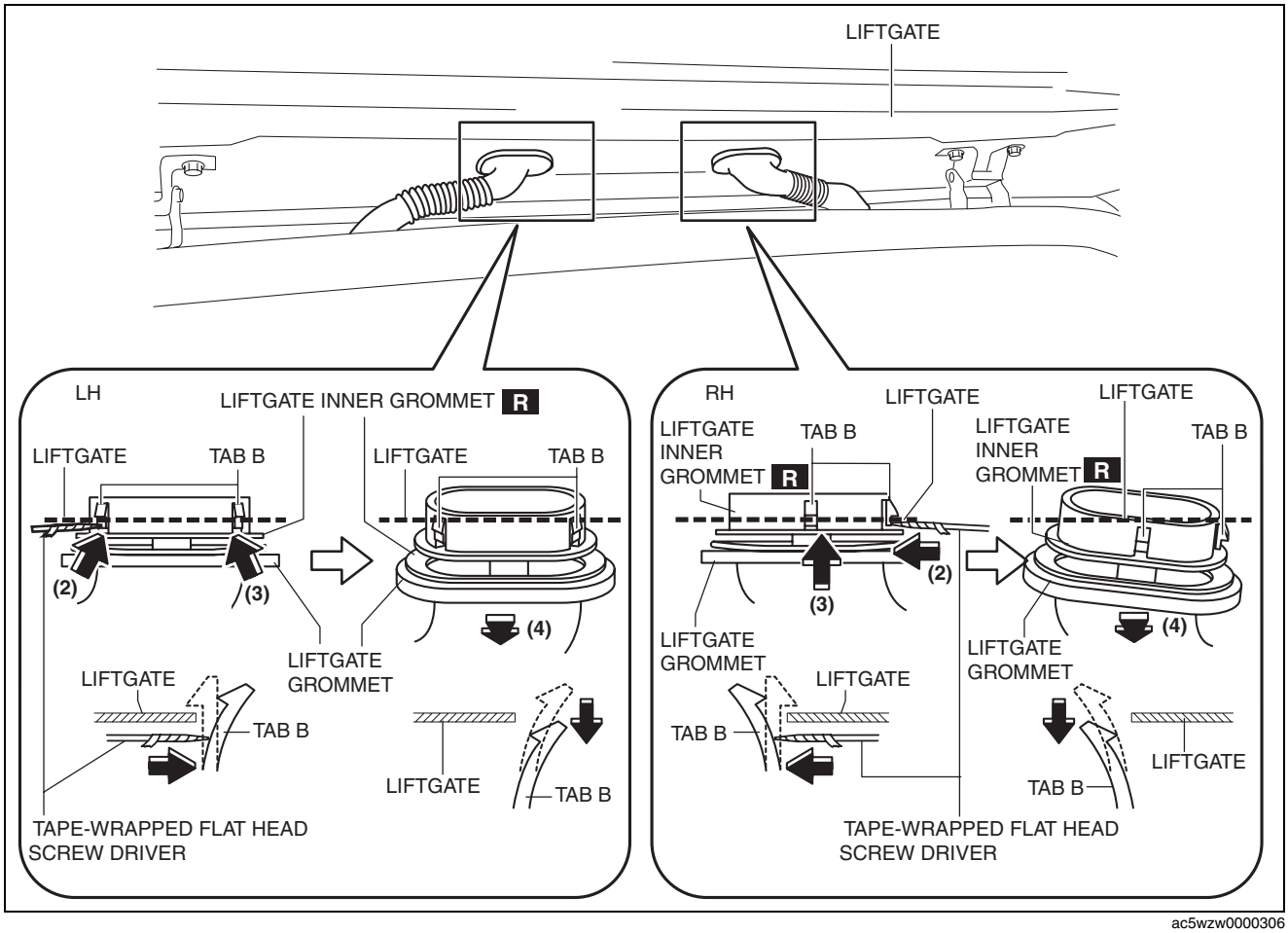

ac5wzw0000306

9. Remove rear washer hose D from the liftgate and set them aside. (with rear wiper system)
10. Remove the wiring harness from the liftgate and set them aside.

DOORS AND LIFTGATE

11. Using a tape-wrapped flathead screwdriver, remove the stay damper securing band in the direction of arrows (5) shown in the figure.

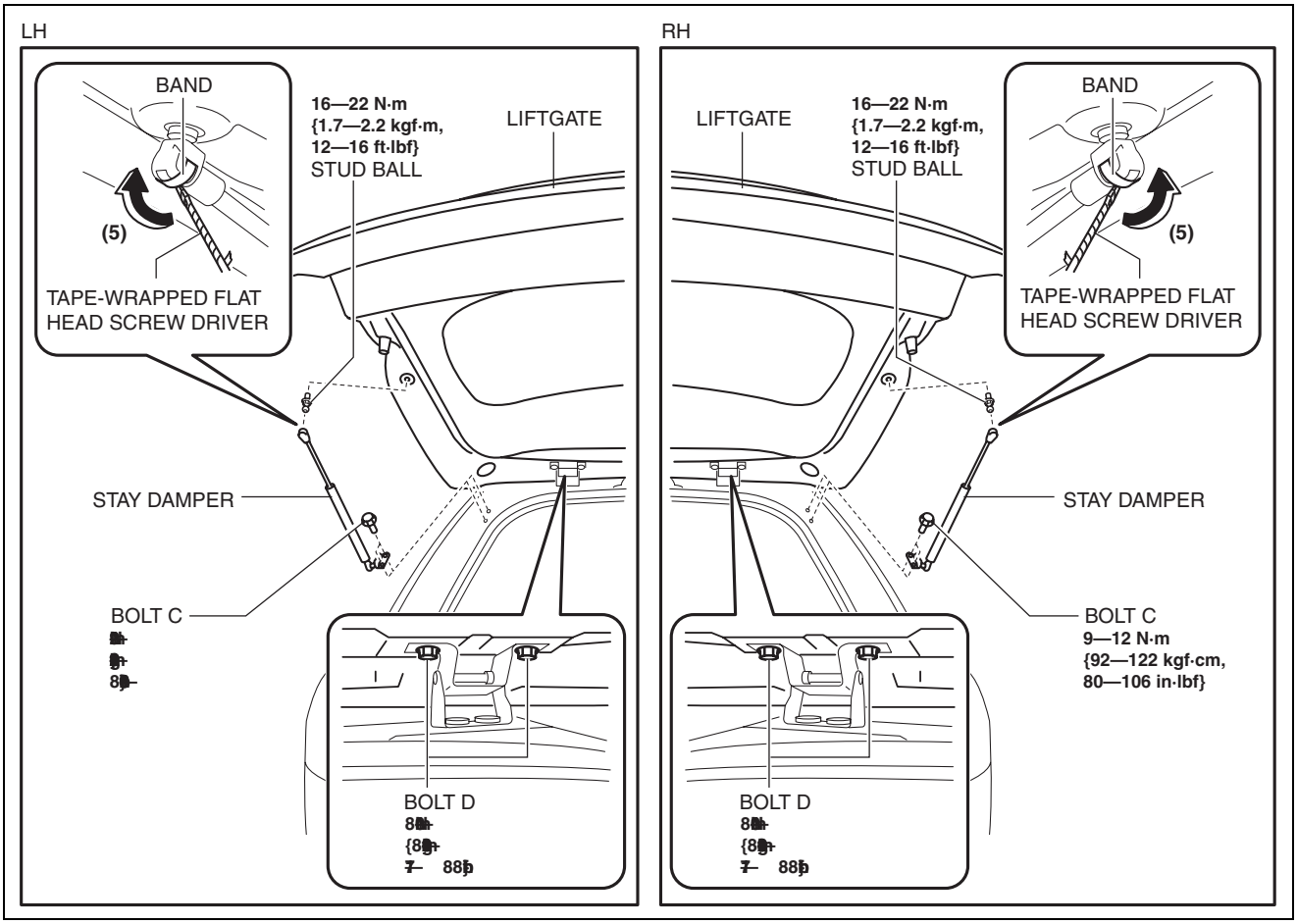

ac5wzw0000282

12. Remove bolts C.
13. Remove the stay dampers.
14. Remove the stud balls.
15. Remove bolts D.
16. Remove the liftgate.
17. Install in the reverse order of removal.
18. Adjust the liftgate. (See 09-11-23 LIFTGATE ADJUSTMENT.)

DOORS AND LIFTGATE

LIFTGATE HINGE REMOVAL/INSTALLATION

id091100521300

1. Disconnect the negative battery cable. (See 01-17A-11 NEGATIVE BATTERY CABLE DISCONNECTION/CONNECTION [SKYACTIV-G 2.0].) (See 01-17A-13 NEGATIVE BATTERY CABLE DISCONNECTION/CONNECTION [SKYACTIV-G 2.0 (WITHOUT i-stop)].) (See 01-17B-9 NEGATIVE BATTERY CABLE DISCONNECTION/CONNECTION [SKYACTIV-D 2.2].)
2. Remove the following parts:
   (1) Rear scuff plate (See 09-17-63 REAR SCUFF PLATE REMOVAL/INSTALLATION.)
   (2) Trunk end trim (See 09-17-78 TRUNK END TRIM REMOVAL/INSTALLATION.)
   (3) Trunk side trim (See 09-17-80 TRUNK SIDE TRIM REMOVAL/INSTALLATION.)
   (4) C-pillar trim (See 09-17-59 C-PILLAR TRIM REMOVAL/INSTALLATION.)
   (5) D-pillar trim (See 09-17-60 D-PILLAR TRIM REMOVAL/INSTALLATION.)
   (6) Liftgate (See 09-11-18 LIFTGATE REMOVAL/INSTALLATION.)
3. Remove fasteners.
4. While partially peeling back the rear part of the headliner, remove nuts.

Caution

- **Peeling back the headliner without supporting it may cause the headliner to bend excessively and create a fold seam. Peel back the headliner while supporting it.**

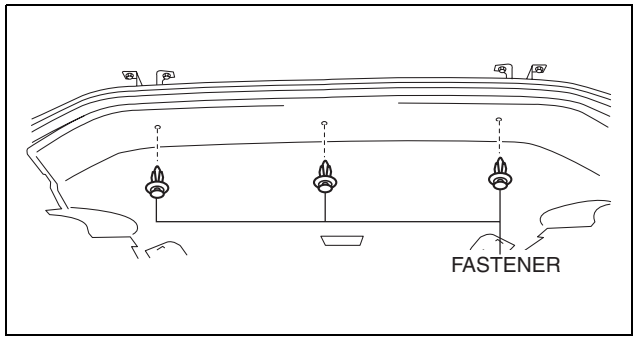

ac5wzw0000308

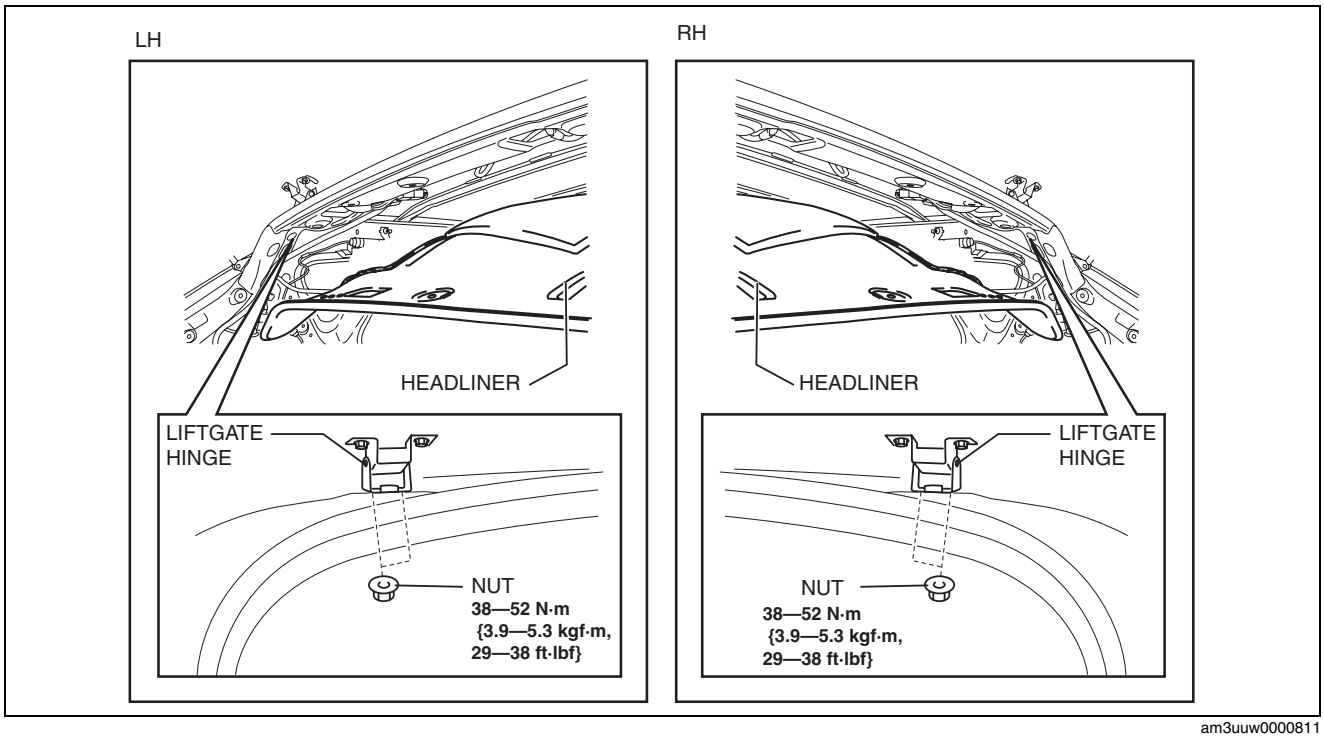

am3uuw0000811

5. Remove the liftgate hinges.
6. Install in the reverse order of removal.

DOORS AND LIFTGATE

STAY DAMPER DISPOSAL

id091100521000

Note
- The stay damper contains colorless, odorless, nontoxic gas.

1. Wear protective eye wear.

Caution
- **When cutting the stay damper, wear protective eye wear to prevent the gas or oil from getting into your eyes. Otherwise, the force of the gas and oil spraying out could lead to injury.**

2. Position the stay damper horizontally.
3. Drain gas and oil by cutting the position indicated in the figure to a **2—3 mm {0.08—0.11 in}** depth using a metal saw.

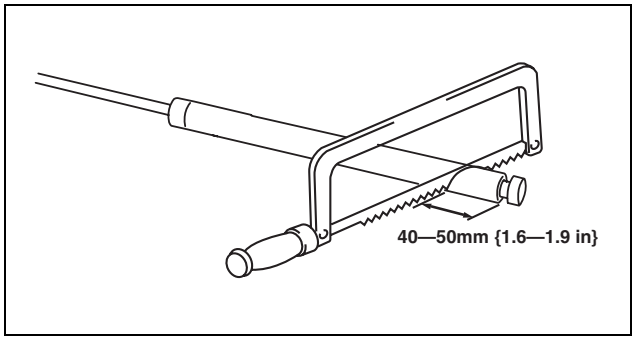

am2zzw0000043

4. Verify that the gas and oil is drained completely by pulling and pushing the piston rod several times with the cut position facing downward.

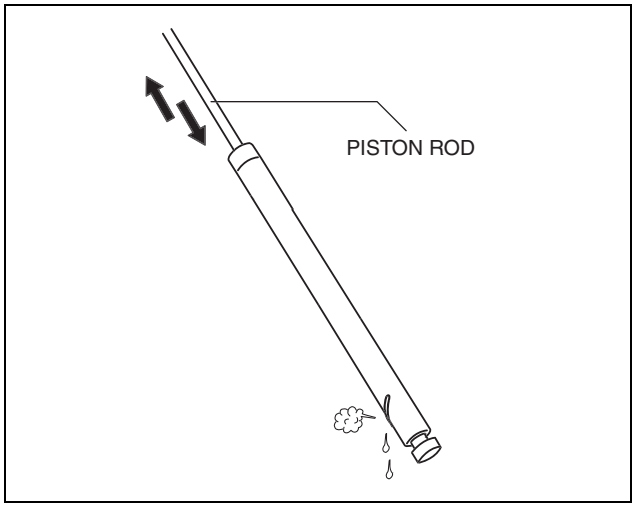

am2zzw0000043

5. Cut off the bottom of the stay damper.
6. Dispose of the stay damper.

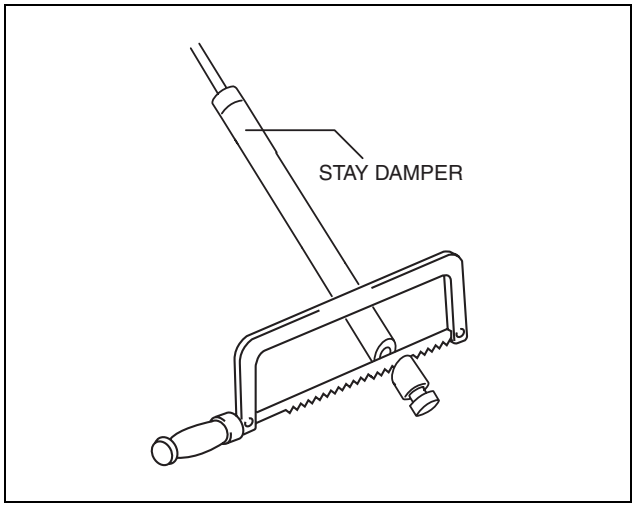

am3uuw0000798

DOORS AND LIFTGATE

LIFTGATE ADJUSTMENT

id091100521400

1. Measure the gap and height difference between the liftgate and the body.
2. Loosen the liftgate hinge installation bolts and adjust the liftgate.

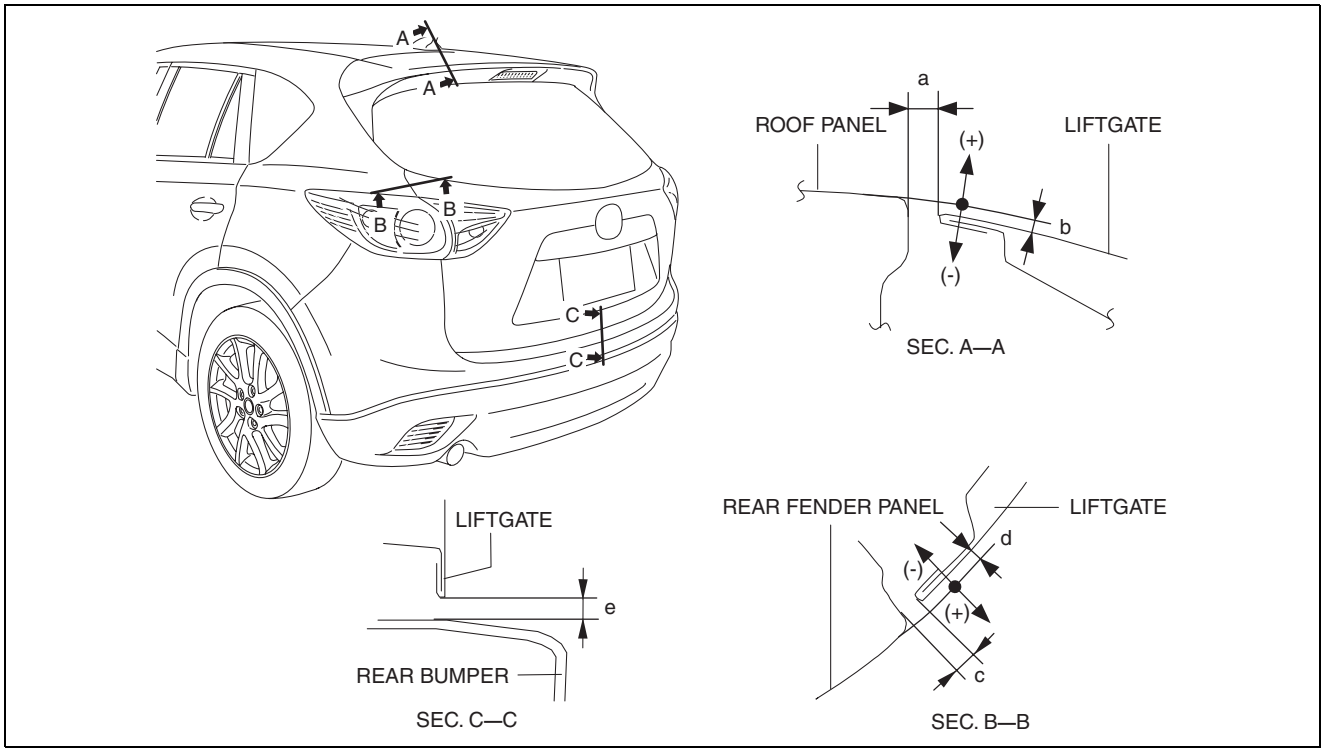

ac8

Standard clearance
a: 5.2—7.2 mm {0.21—0.28 in}
b: -2.0—0 mm {-0.078—0.000 in}
c: 3.8—6.2 mm {0.15—0.24 in}
d: -1.6—0.8 mm {-0.06—0.03 in}
e: 3.8—7.8 mm {0.15—0.30 in}

3. Tighten the liftgate hinge installation bolts. (See 09-11-18 LIFTGATE REMOVAL/INSTALLATION.)
4. If the liftgate does not open/close smoothly, adjust it by loosening the liftgate lock striker installation screw. (See 09-14-52 LIFTGATE LOCK STRIKER REMOVAL/INSTALLATION.)
5. Spray or pour water on the door and surrounding area using a hose or high pressure water pressure car wash and verify that there is no water leakage.

09-12 GLASS/WINDOWS/MIRRORS

GLASS/WINDOWS/MIRRORS LOCATION INDEX. 09-12–2
FRONT DOOR GLASS REMOVAL/INSTALLATION. 09-12–4
Front Door Glass Preparation 09-12–6
REAR DOOR GLASS REMOVAL/INSTALLATION. 09-12–7
REAR DOOR QUARTER GLASS REMOVAL/INSTALLATION. 09-12–9
Rear Door Glass Run Channel Installation Note 09-12–14
Glass Guide Installation Note 09-12–15
WINDSHIELD REMOVAL 09-12–17
Not Reusing Windshield. 09-12–17
Reusing Windshield 09-12–18
WINDSHIELD INSTALLATION 09-12–19
QUARTER WINDOW GLASS REMOVAL 09-12–24
QUARTER WINDOW GLASS INSTALLATION 09-12–26
REAR WINDOW GLASS REMOVAL . . . 09-12–30
REAR WINDOW GLASS INSTALLATION 09-12–33
FILAMENT INSPECTION 09-12–38
FILAMENT REPAIR. 09-12–38
FRONT POWER WINDOW REGULATOR REMOVAL/INSTALLATION. 09-12–39
REAR POWER WINDOW REGULATOR REMOVAL/INSTALLATION. 09-12–42
POWER WINDOW MOTOR REMOVAL/INSTALLATION. 09-12–45
Front Power Window Motor 09-12–45
Rear Power Window Motor 09-12–45
POWER WINDOW MOTOR INSPECTION. 09-12–47
Auto-open/close Function For All Windows 09-12–47
Auto-open/close Function For Driver-side 09-12–49
POWER WINDOW MAIN SWITCH REMOVAL/INSTALLATION. 09-12–52
POWER WINDOW MAIN SWITCH INSPECTION 09-12–54
Terminal Voltage Table (Reference) . . . 09-12–54
Inspection Using an Oscilloscope (Reference). 09-12–60
POWER WINDOW SUBSWITCH REMOVAL/INSTALLATION. 09-12–61
POWER WINDOW SUBSWITCH INSPECTION 09-12–63
Auto-open/close Function For All Windows 09-12–63
Terminal voltage table (reference). 09-12–63
Auto-open/close Function For Driver-side. 09-12–64
Inspection Using an Oscilloscope (Reference) 09-12–65
POWER WINDOW SYSTEM INITIALIZATION PROCEDURE 09-12–66
POWER OUTER MIRROR REMOVAL/INSTALLATION 09-12–67
POWER OUTER MIRROR INSPECTION. 09-12–69
Mirror Glass Adjustment, Retract/Return. 09-12–69
Heated Outer Mirror Inspection. 09-12–70
RVM Indicator Light Inspection 09-12–71
BSM Indicator Light Inspection 09-12–72
OUTER MIRROR GLASS REMOVAL 09-12–73
OUTER MIRROR GLASS INSTALLATION 09-12–78
OUTER MIRROR GLASS INSPECTION. 09-12–81
Heated Outer Mirror 09-12–81
RVM Indicator Light. 09-12–82
BSM Indicator Light. 09-12–83
OUTER MIRROR GARNISH REMOVAL/INSTALLATION 09-12–84
POWER OUTER MIRROR SWITCH REMOVAL/INSTALLATION 09-12–86
POWER OUTER MIRROR SWITCH INSPECTION 09-12–87
With Retract/return Function 09-12–87
Without Retract/return Function 09-12–91
AUTO-DIMMING MIRROR REMOVAL/INSTALLATION 09-12–94
With Forward Sensing Camera Or Smart City Brake Support (SCBS) 09-12–94
Without Forward Sensing Camera Or Smart City Brake Support (SCBS) 09-12–96
AUTO-DIMMING MIRROR INSPECTION. 09-12–98
Terminal Voltage Table (Reference) 09-12–98
REARVIEW MIRROR REMOVAL/INSTALLATION 09-12–98
MIRROR BASE REMOVAL 09-12–99
MIRROR BASE INSTALLATION 09-12–99

GLASS/WINDOWS/MIRRORS

GLASS/WINDOWS/MIRRORS LOCATION INDEX

id091200000000

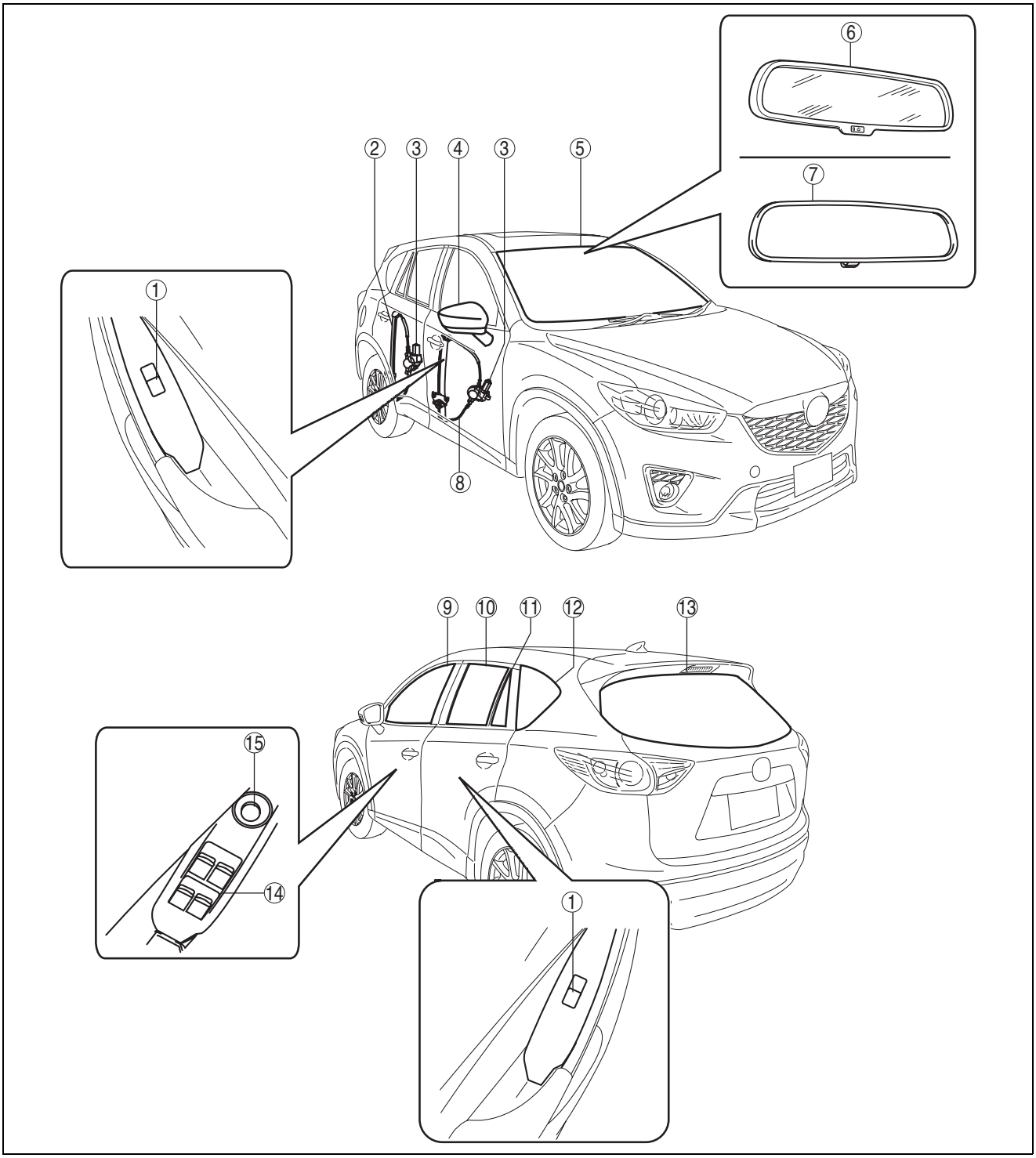

ac5wzw0000267

1	Power window subswitch (See 09-12-61 POWER WINDOW SUBSWITCH REMOVAL/INSTALLATION.) (See 09-12-63 POWER WINDOW SUBSWITCH INSPECTION.)
2	Rear power window regulator (See 09-12-42 REAR POWER WINDOW REGULATOR REMOVAL/INSTALLATION.)

3	Power window motor (See 09-12-45 POWER WINDOW MOTOR REMOVAL/INSTALLATION.) (See 09-12-47 POWER WINDOW MOTOR INSPECTION.)

GLASS/WINDOWS/MIRRORS

4	Power outer mirror (See 09-12-67 POWER OUTER MIRROR REMOVAL/INSTALLATION.) (See 09-12-69 POWER OUTER MIRROR INSPECTION.) (See 09-12-73 OUTER MIRROR GLASS REMOVAL.) (See 09-12-78 OUTER MIRROR GLASS INSTALLATION.) (See 09-12-81 OUTER MIRROR GLASS INSPECTION.) (See 09-12-84 OUTER MIRROR GARNISH REMOVAL/INSTALLATION.)
5	Windshield (See 09-12-17 WINDSHIELD REMOVAL.) (See 09-12-19 WINDSHIELD INSTALLATION.)
6	Auto-dimming mirror (See 09-12-94 AUTO-DIMMING MIRROR REMOVAL/INSTALLATION.) (See 09-12-98 AUTO-DIMMING MIRROR INSPECTION.) (See 09-12-99 MIRROR BASE REMOVAL.) (See 09-12-99 MIRROR BASE INSTALLATION.)
7	Rearview mirror (See 09-12-98 REARVIEW MIRROR REMOVAL/INSTALLATION.) (See 09-12-99 MIRROR BASE REMOVAL.) (See 09-12-99 MIRROR BASE INSTALLATION.)
8	Front power window regulator (See 09-12-39 FRONT POWER WINDOW REGULATOR REMOVAL/INSTALLATION.)
9	Front door glass (See 09-12-4 FRONT DOOR GLASS REMOVAL/INSTALLATION.)
10	Rear door glass (See 09-12-7 REAR DOOR GLASS REMOVAL/INSTALLATION.)
11	Rear door quarter glass (See 09-12-9 REAR DOOR QUARTER GLASS REMOVAL/INSTALLATION.)
12	Quarter window glass (See 09-12-24 QUARTER WINDOW GLASS REMOVAL.) (See 09-12-26 QUARTER WINDOW GLASS INSTALLATION.)
13	Rear window glass (See 09-12-30 REAR WINDOW GLASS REMOVAL.) (See 09-12-33 REAR WINDOW GLASS INSTALLATION.) (See 09-12-38 FILAMENT INSPECTION.) (See 09-12-38 FILAMENT REPAIR.)
14	Power window main switch (See 09-12-52 POWER WINDOW MAIN SWITCH REMOVAL/INSTALLATION.) (See 09-12-54 POWER WINDOW MAIN SWITCH INSPECTION.) (See 09-12-66 POWER WINDOW SYSTEM INITIALIZATION PROCEDURE.)
15	Power outer mirror switch (See 09-12-86 POWER OUTER MIRROR SWITCH REMOVAL/INSTALLATION.) (See 09-12-87 POWER OUTER MIRROR SWITCH INSPECTION.)

GLASS/WINDOWS/MIRRORS

FRONT DOOR GLASS REMOVAL/INSTALLATION

id091200000100

1. Perform the front door glass preparation. (See 09-12-6 Front Door Glass Preparation.)

Note
- Before removing the front door glass, the removal procedure for the front door glass installation bolt can be facilitated by adjusting the top of the front door glass to the position **approx. 90 mm {3.5 in}** away from the upper part of the front beltline molding.

2. Disconnect the negative battery cable. (See 01-17A-11 NEGATIVE BATTERY CABLE DISCONNECTION/CONNECTION [SKYACTIV-G 2.0].) (See 01-17A-13 NEGATIVE BATTERY CABLE DISCONNECTION/CONNECTION [SKYACTIV-G 2.0 (WITHOUT i-stop)].) (See 01-17B-9 NEGATIVE BATTERY CABLE DISCONNECTION/CONNECTION [SKYACTIV-D 2.2].)
3. Remove the following parts:
   (1) Inner garnish (See 09-17-65 INNER GARNISH REMOVAL/INSTALLATION.)
   (2) Front door trim (See 09-17-65 FRONT DOOR TRIM REMOVAL/INSTALLATION.)
   (3) Front door speaker (See 09-20-15 FRONT DOOR SPEAKER REMOVAL/INSTALLATION.)
4. Remove the weather strip arrow (1) shown in the figure.

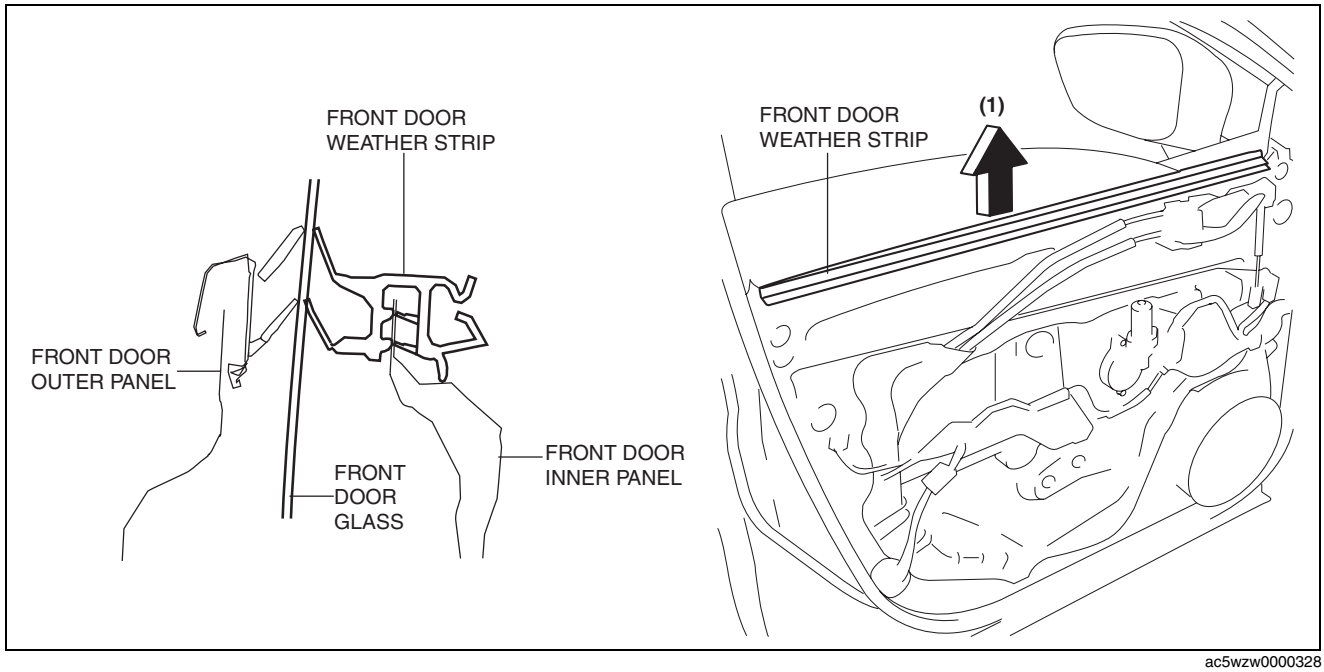

ac5wzw0000328

5. Press the center of the service hole cover in the direction of arrow (2) shown in the figure.

GLASS/WINDOWS/MIRRORS

6. Remove the service hole cover by holding its rib and partially peeling it back in the direction of arrow (3) shown in the figure.
7. Insert your hand through the front door speaker installation hole while supporting the front door glass and adjust the position of the front door glass so that the front door glass installation bolt is in a position in which it can be removed from the service hole cover opening.

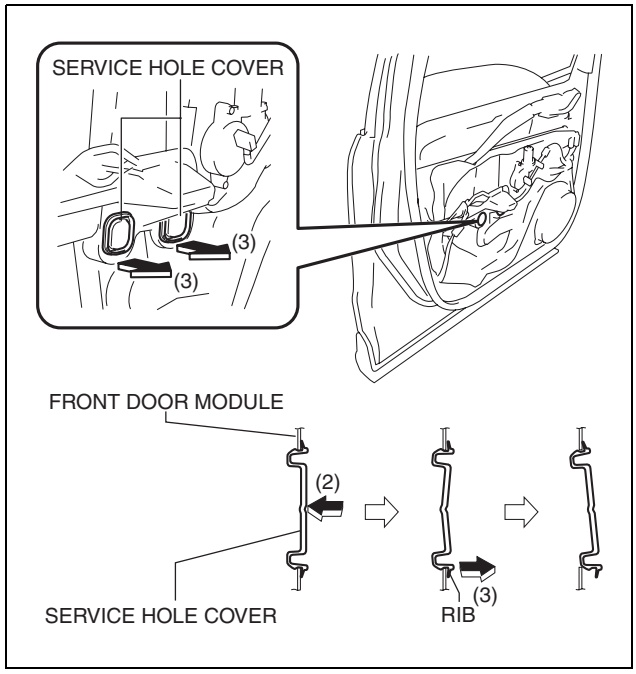

ac5uuw00001051

8. Remove bolts.

Caution

- **If the bolts are removed without supporting the front door glass, the front door glass may fall off and be damaged. Remove the bolts while inserting your hand into the front door speaker installation hole to support the front door glass.**

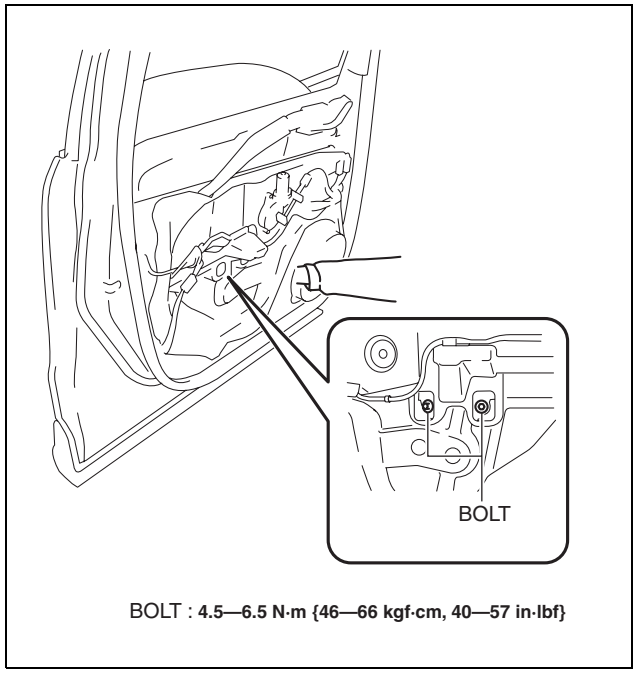

ac5wzw0000296

GLASS/WINDOWS/MIRRORS

9. Lift up the front door glass, tilt it in the direction of arrow (1) shown in the figure, then remove it in the direction of arrow (2).

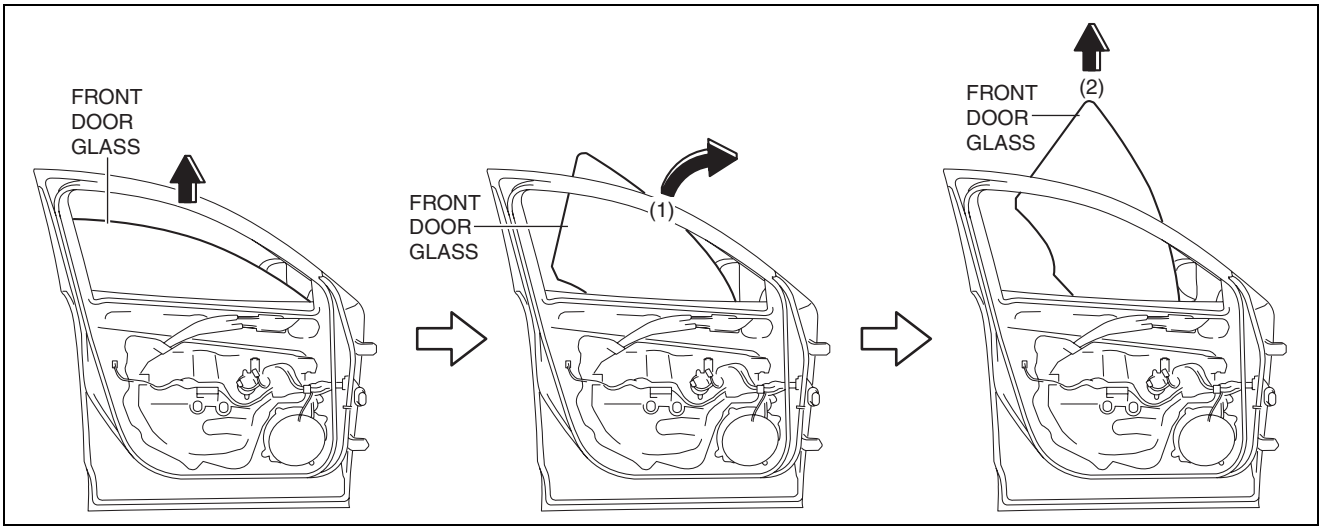

ac5uuw00001053

10. Install in the reverse order of removal.

Front Door Glass Preparation

- Perform the adjusting the top of the front door glass to the position **approx. 90 mm {3.5 in}** away from the upper part of the front door trim.

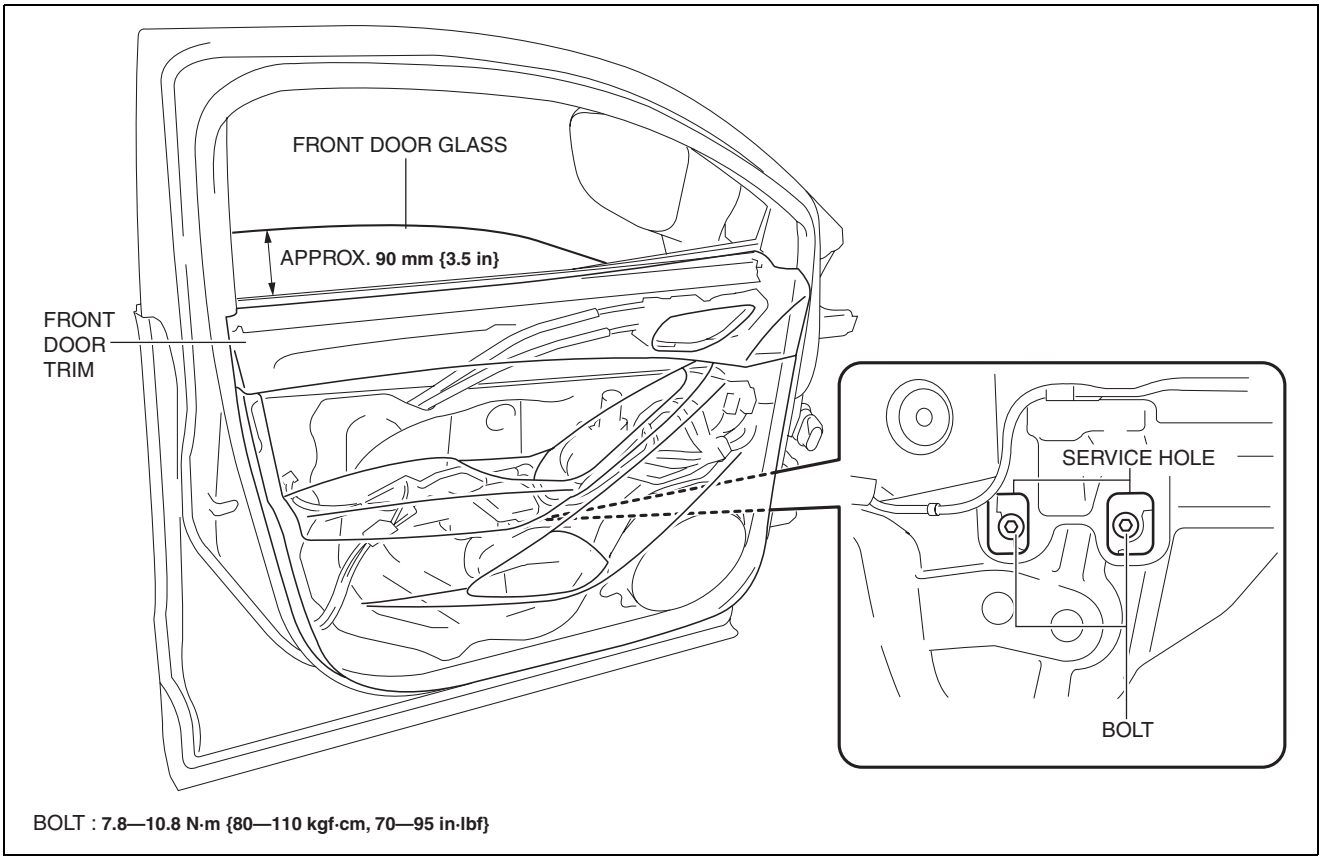

BOLT : **7.8—10.8 N·m {80—110 kgf·cm, 70—95 in·lbf}**

ac5wzw0000267

GLASS/WINDOWS/MIRRORS

REAR DOOR GLASS REMOVAL/INSTALLATION

id091200000300

1. Fully lower the rear door glass.
2. Disconnect the negative battery cable. (See 01-17A-11 NEGATIVE BATTERY CABLE DISCONNECTION/CONNECTION [SKYACTIV-G 2.0].) (See 01-17A-13 NEGATIVE BATTERY CABLE DISCONNECTION/CONNECTION [SKYACTIV-G 2.0 (WITHOUT i-stop)].) (See 01-17B-9 NEGATIVE BATTERY CABLE DISCONNECTION/CONNECTION [SKYACTIV-D 2.2].)
3. Remove the following parts:
   (1) Rear door trim (See 09-17-74 REAR DOOR TRIM REMOVAL/INSTALLATION.)
   (2) Rear door quarter glass (See 09-12-9 REAR DOOR QUARTER GLASS REMOVAL/INSTALLATION.)
   (3) Rear door speaker (See 09-20-19 REAR DOOR SPEAKER REMOVAL/INSTALLATION.)
   (4) Rear power window motor (See 09-12-45 POWER WINDOW MOTOR REMOVAL/INSTALLATION.)
4. Press the center of the service hole cover in the direction of arrow (1) shown in the figure.
5. Remove the service hole cover by holding its rib and partially peeling it back in the direction of arrow (2) shown in the figure.
6. Remove the bolt.

Caution

- **If the bolts are removed without supporting the rear door glass, the rear door glass may fall off and be damaged. Remove the bolts while inserting your hand into the rear door speaker installation hole to support the rear door glass.**

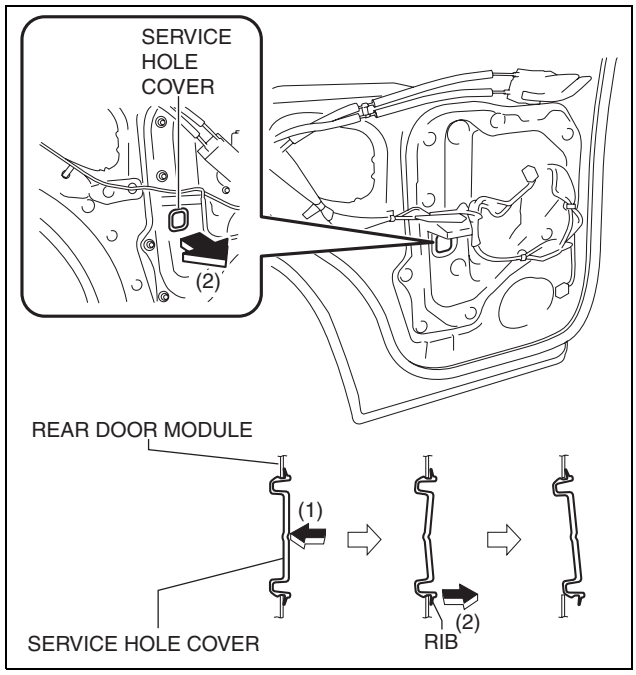

ac5uuw00002599

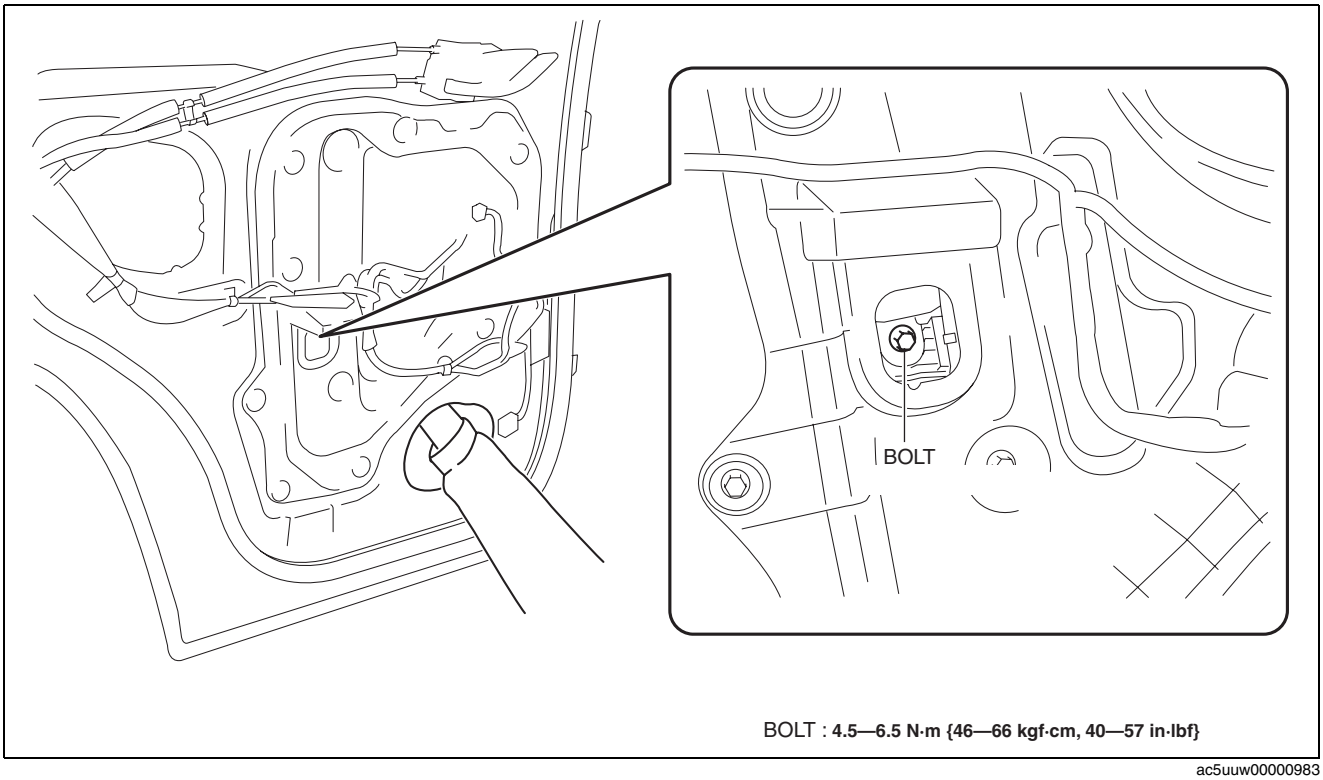

ac5uuw00000983

7. Lift the rear door glass up and remove while tilting it.

GLASS/WINDOWS/MIRRORS

8. Lift up the rear door glass, tilt it in the direction of arrow (3) shown in the figure.

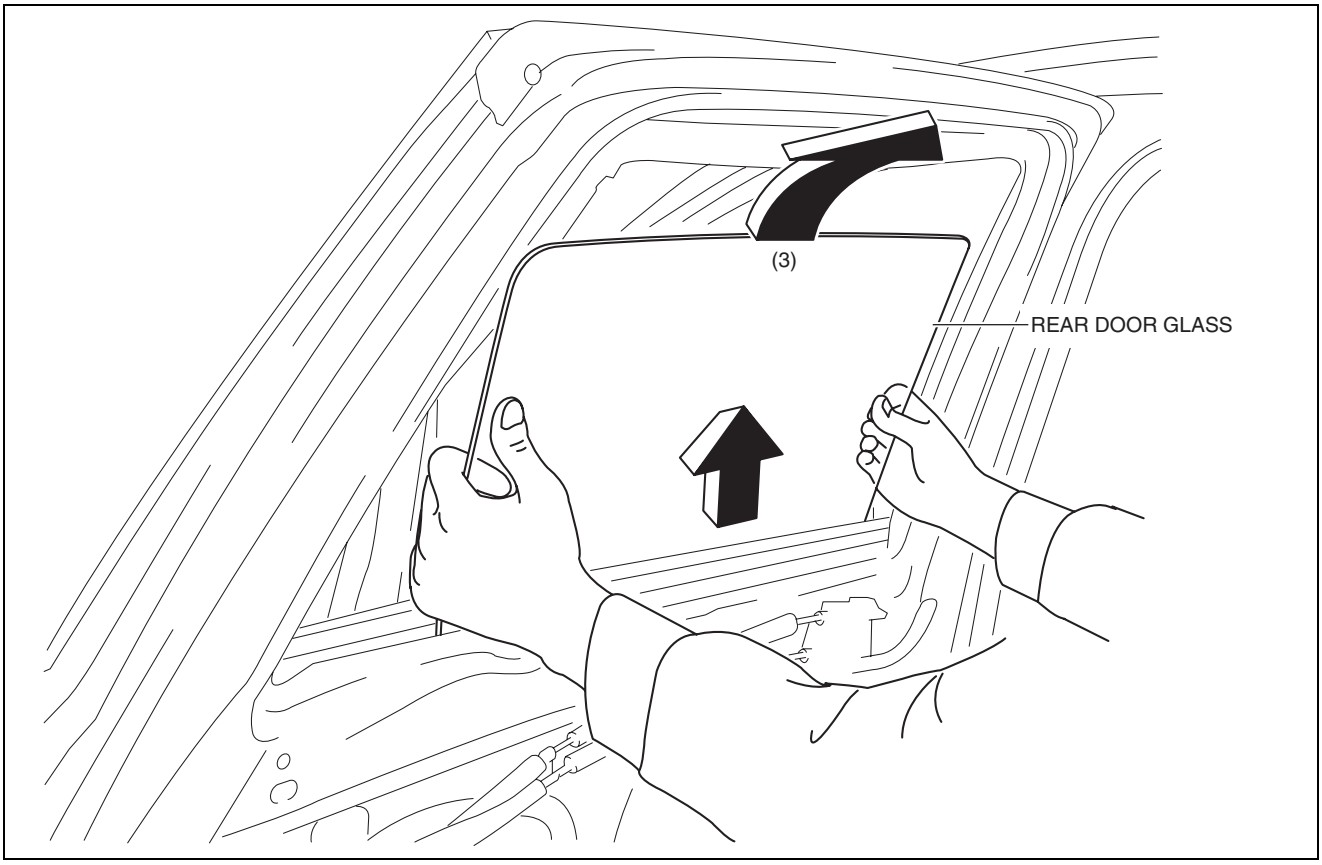

ac5uuw00002600

9. Install in the reverse order of removal.

GLASS/WINDOWS/MIRRORS

REAR DOOR QUARTER GLASS REMOVAL/INSTALLATION

id091200005600

1. Fully lower the rear door glass.
2. Disconnect the negative battery cable. (See 01-17A-11 NEGATIVE BATTERY CABLE DISCONNECTION/CONNECTION [SKYACTIV-G 2.0].) (See 01-17A-13 NEGATIVE BATTERY CABLE DISCONNECTION/CONNECTION [SKYACTIV-G 2.0 (WITHOUT i-stop)].) (See 01-17B-9 NEGATIVE BATTERY CABLE DISCONNECTION/CONNECTION [SKYACTIV-D 2.2].)
3. Remove the rear door trim. (See 09-17-74 REAR DOOR TRIM REMOVAL/INSTALLATION.)
4. Remove the rear door weather strip arrow (1) shown in the figure.

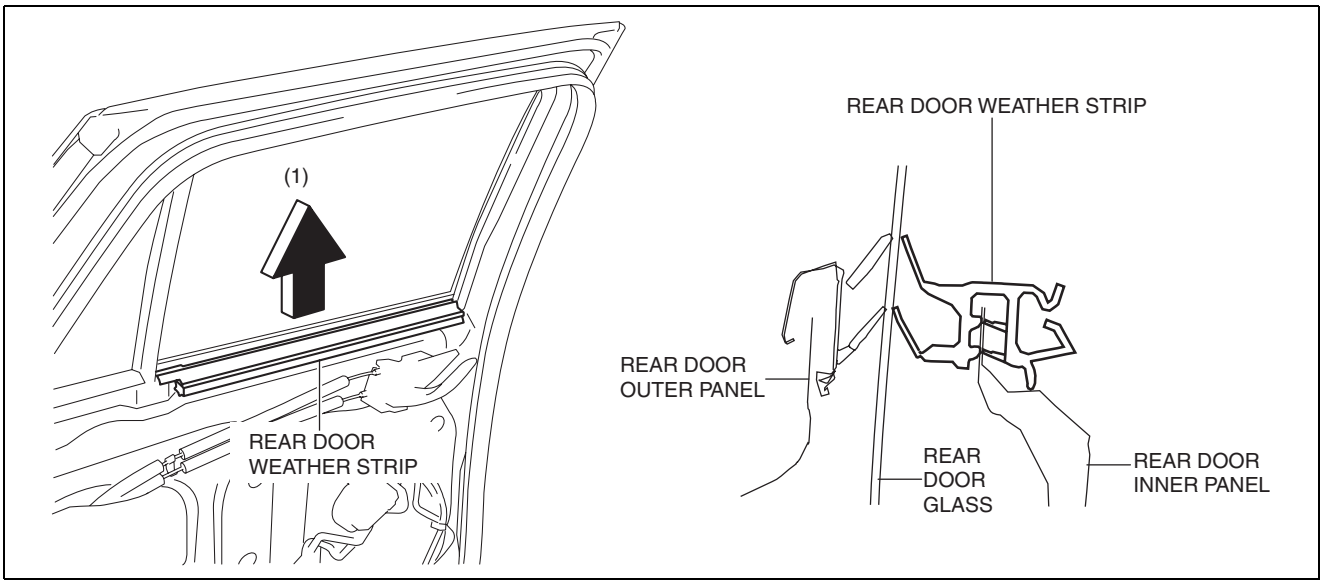

ac5uuw00001825

5. Remove the service hole cover No.1 arrow (2) shown in the figure.

Caution

- **When removing service hole cover No.1, remove it while gradually stripping the butyl rubber.**

Otherwise service hole cover No.1 may be deformed.

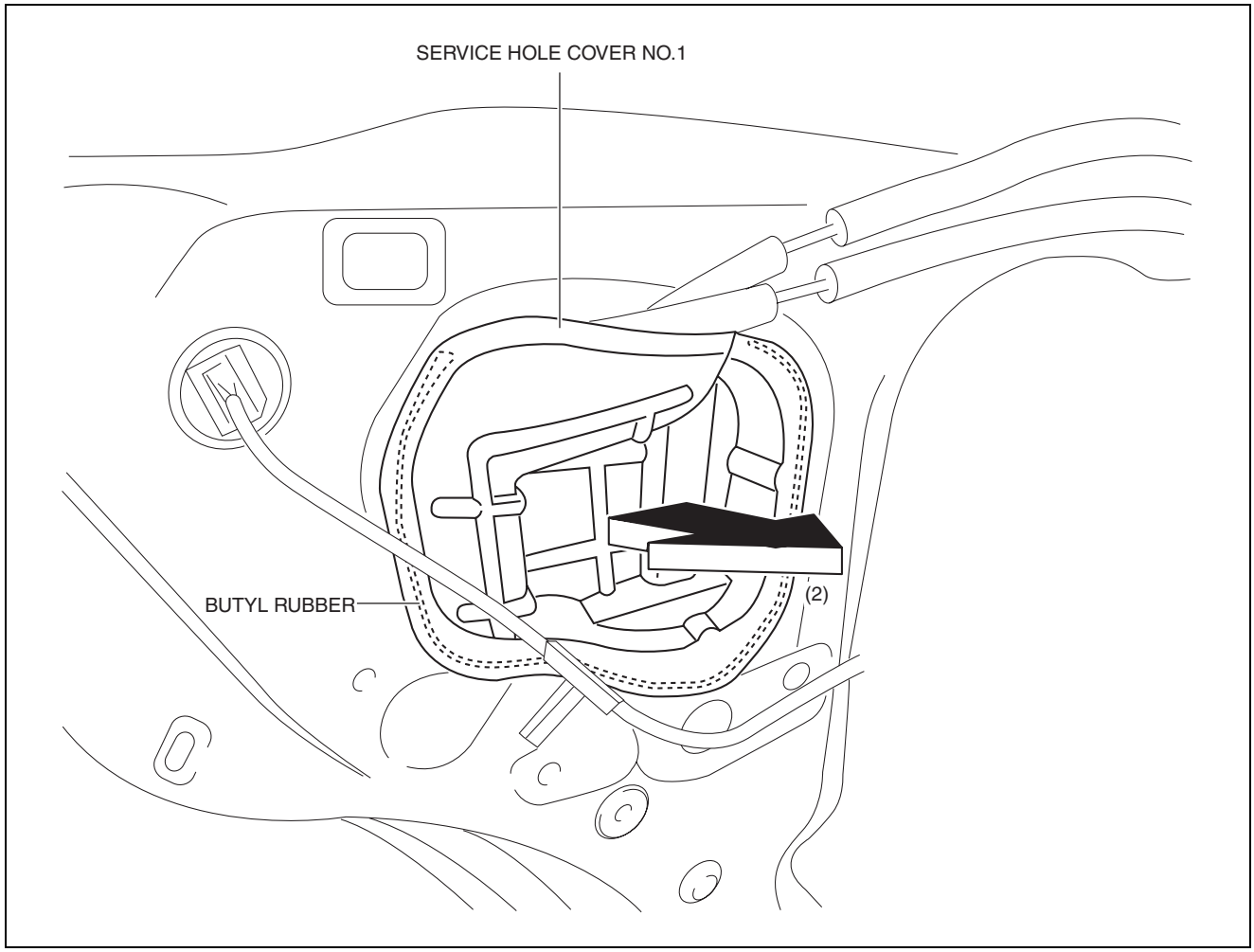

ac5uuw00001973

6. Remove the service hole cover No.2 arrow in the order of (3), (4) shown in the figure.

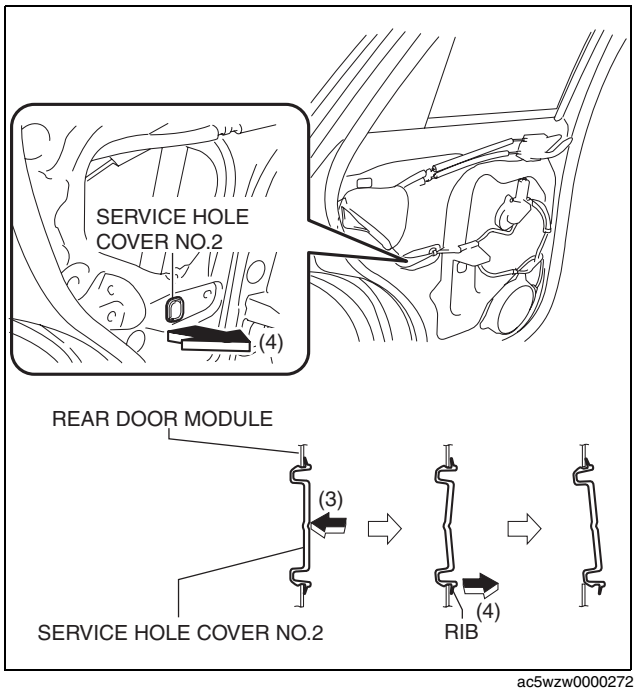

ac5wzw0000272

GLASS/WINDOWS/MIRRORS

7. Partially peel back rear door weather strip.
8. Remove screw B.

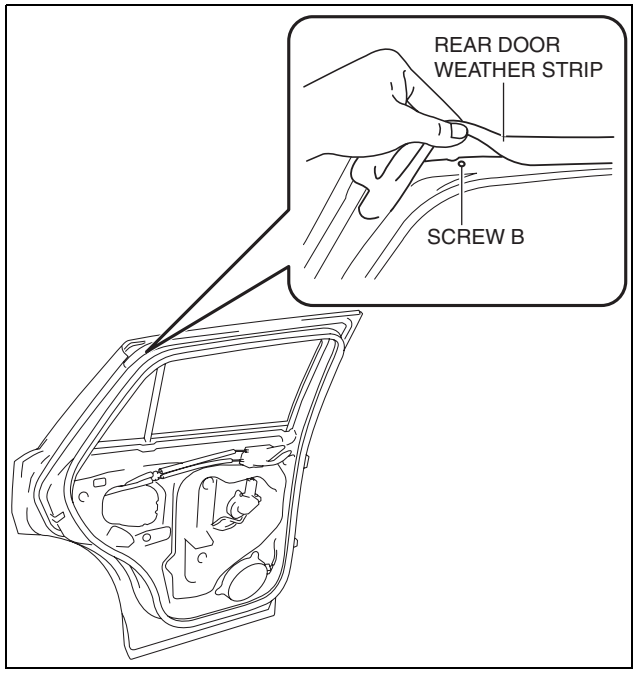

ac5uuw00001827

9. Remove bolts C.

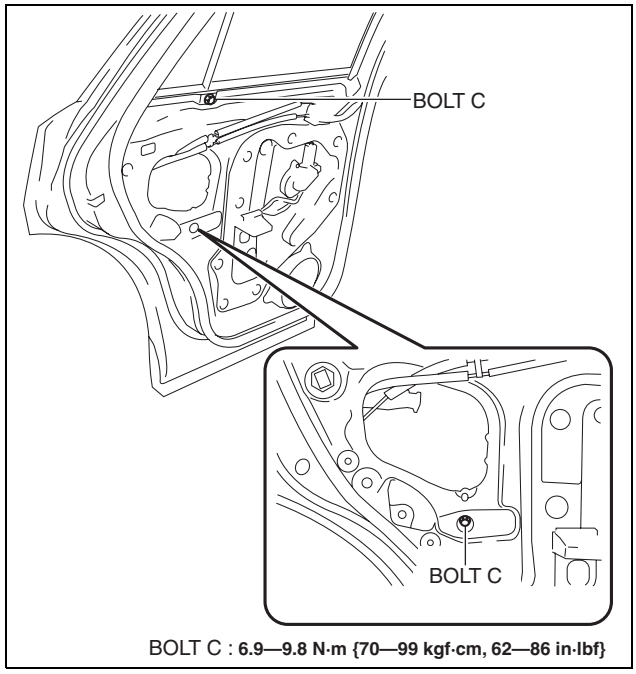

BOLT C : **6.9—9.8 N·m {70—99 kgf·cm, 62—86 in·lbf}**

ac5uuw00001974

GLASS/WINDOWS/MIRRORS

10. Partially peel back the rear door glass run channel.

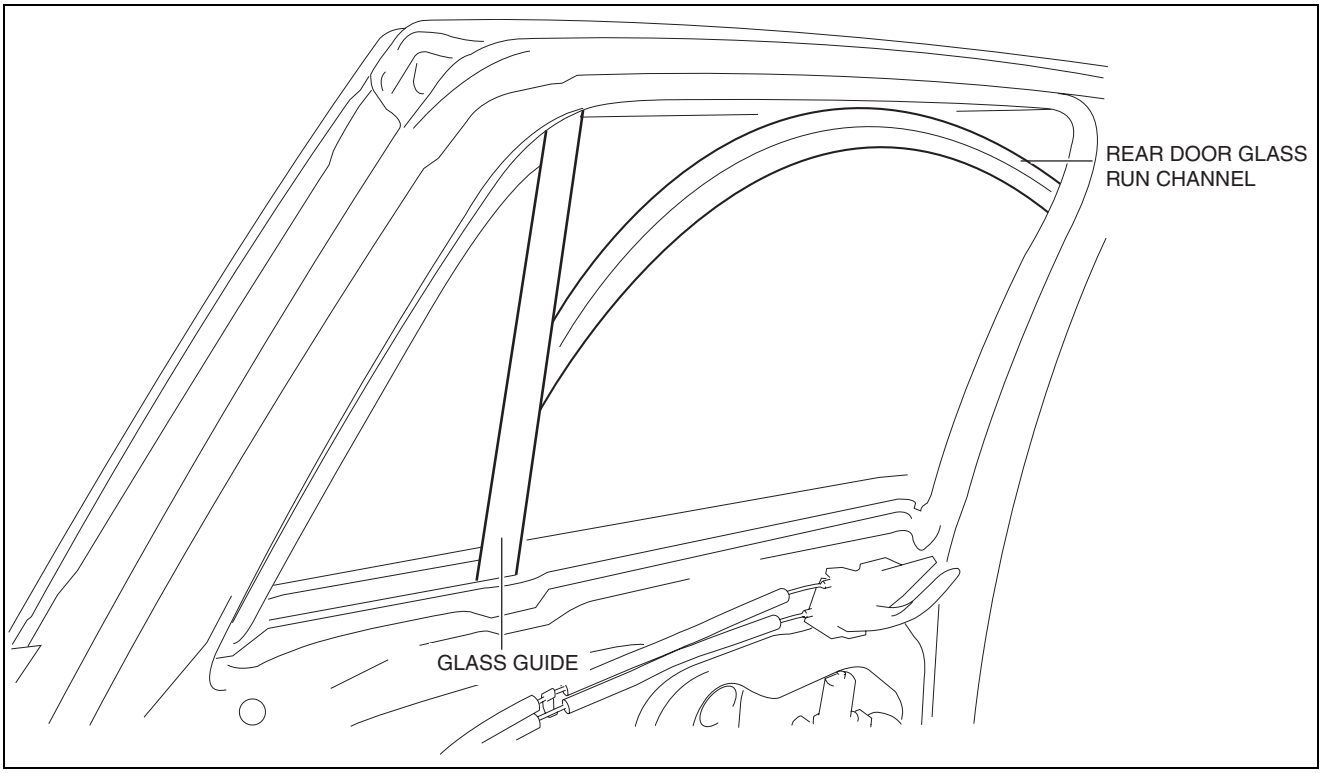

ac5wzw0000298

11. Pull the glass guide in the direction of the arrow (5) shown in the figure, then remove the glass guide direction of the arrow (6) shown in the figure. (See 09-12-14 Rear Door Glass Run Channel Installation Note.) (See 09-12-15 Glass Guide Installation Note.)

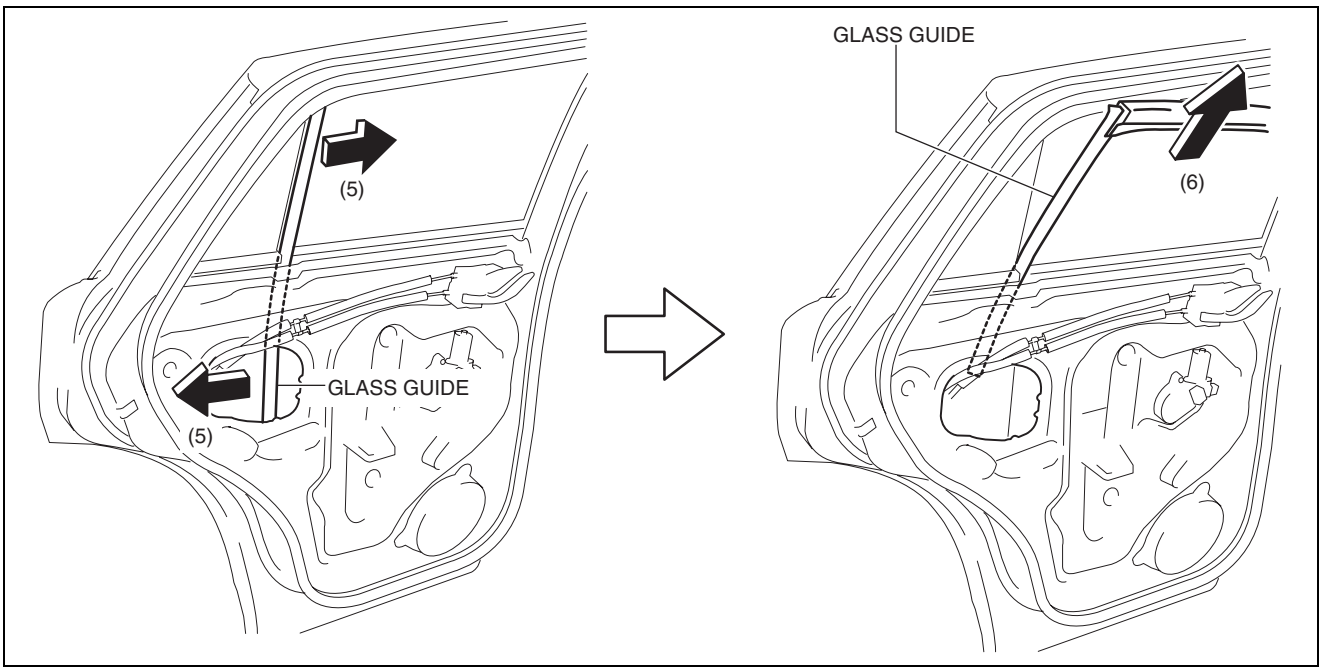

ac5wzw0000298

GLASS/WINDOWS/MIRRORS

12. Pull the rear door glass run channel in the direction of the arrow in the order of (7),(8),(9) then remove the rear door glass run channel.
13. Slide the rear door quarter glass and rear door quarter glass guide as a single unit in the direction of the arrow (10) shown in the figure.

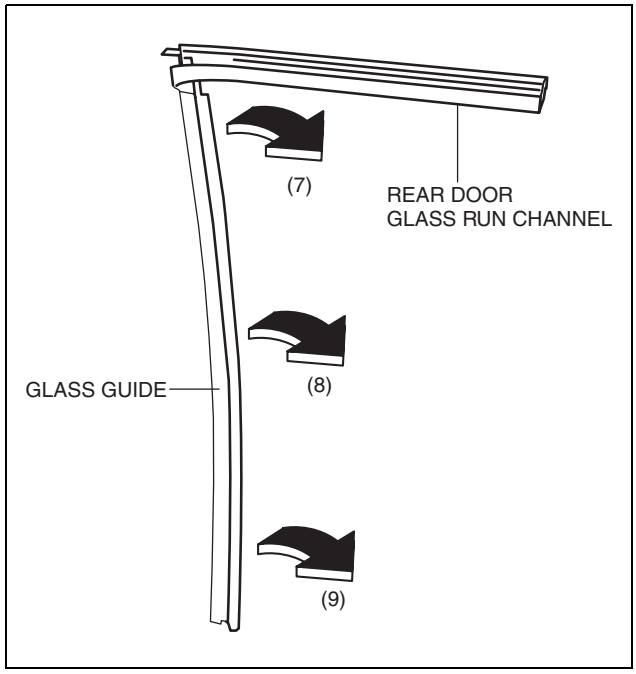

ac5uuw00001830

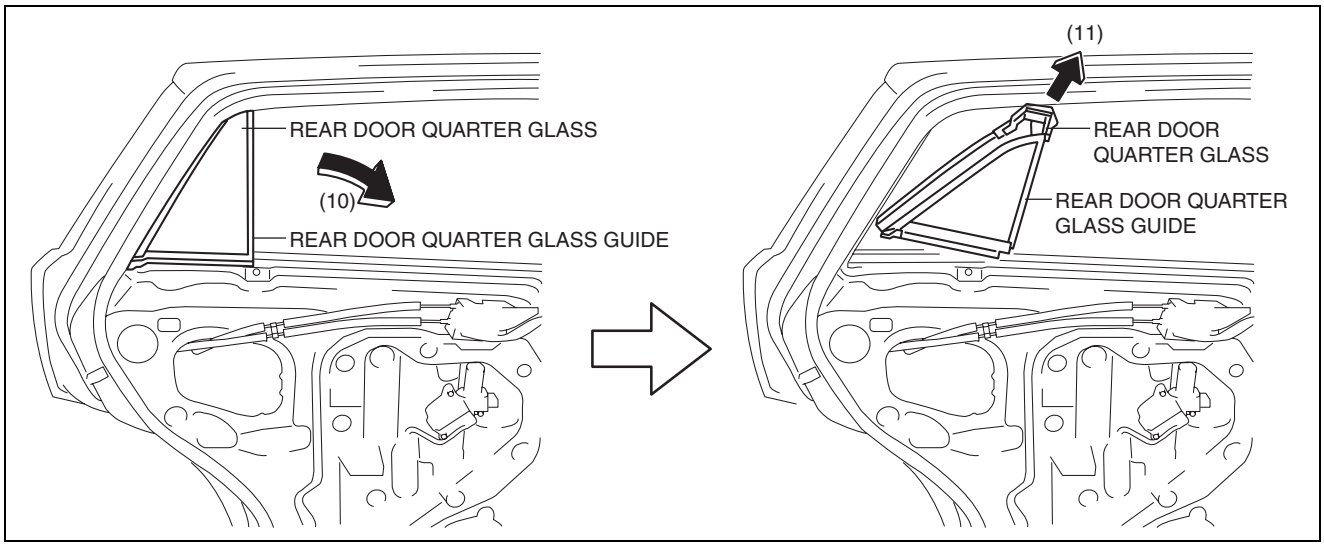

ac5uuw00001975

14. Remove the rear door quarter glass and rear door quarter glass guide as a single unit in the direction of the arrow (11) shown in the figure.

GLASS/WINDOWS/MIRRORS

15. Pull the rear door quarter glass guide in the direction of the arrow in the order of (12), (13), (14) and remove the rear door quarter glass.

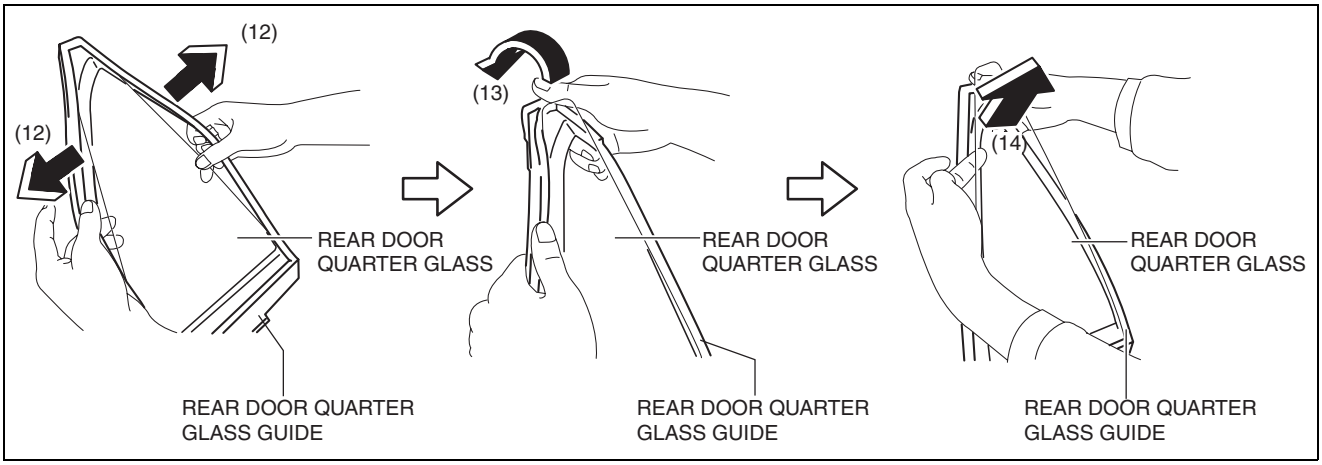

ac5uuw00001976

16. Install in the reverse order of removal.

Rear Door Glass Run Channel Installation Note

- Install the rear door glass run channel so that the glass guide is aligned with the top of the rear door glass run channel.

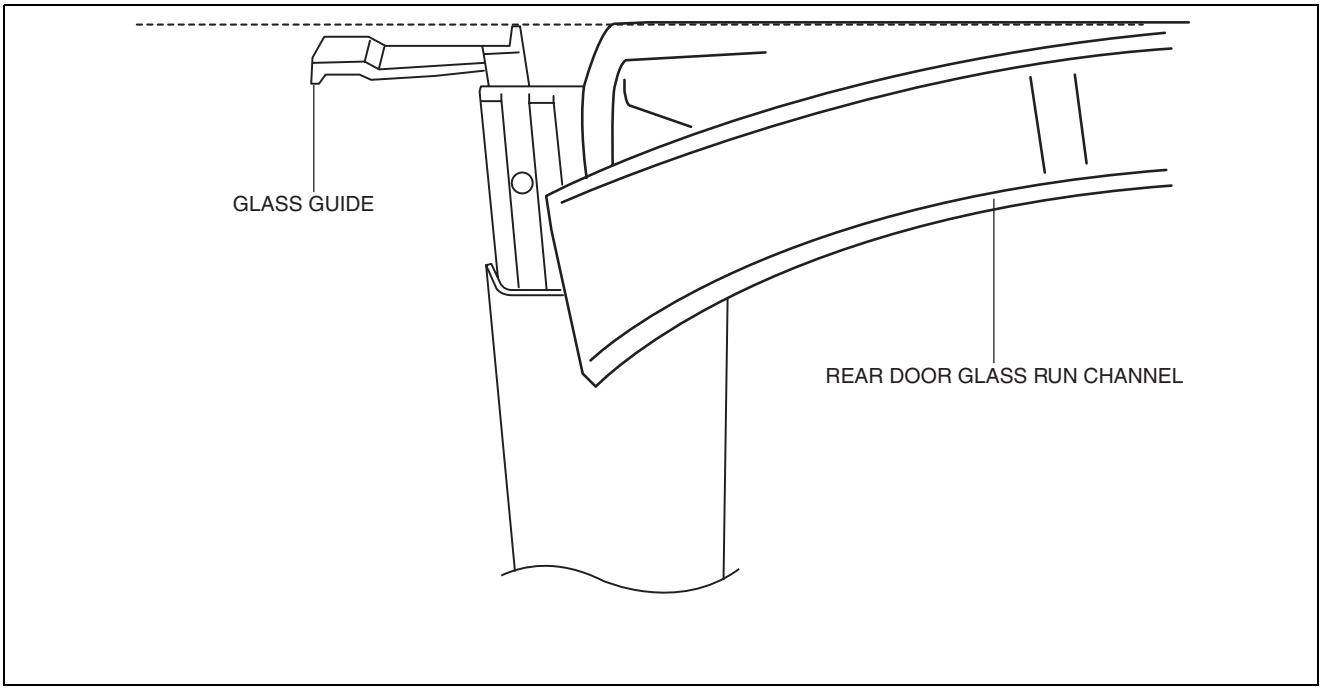

ac5uuw00001831

GLASS/WINDOWS/MIRRORS

Glass Guide Installation Note

1. Set the glass guide in the direction shown in the figure, and insert the bolt installation hole in the direction of arrow (1) until it reaches area A.

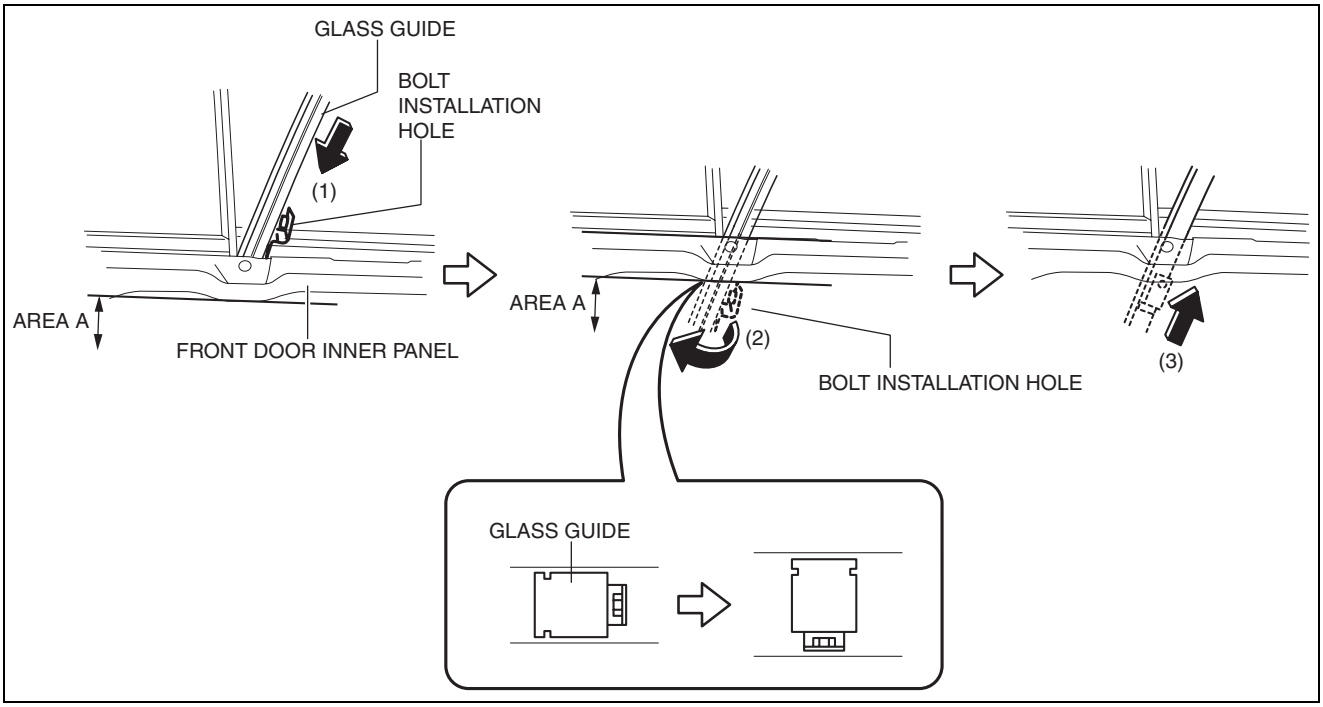

ac5uuw00001832

2. When the bolt installation hole of the glass guide reaches area A, rotate the glass guide in the direction of arrow (2) shown in the figure.
3. Move the glass guide in the direction of arrow (3) shown in the figure to adjust the position of the front door inner panel and the bolt installation holes of the glass guide.

GLASS/WINDOWS/MIRRORS

4. Move the glass guide in the direction of arrow (4) shown in the figure and while aligning it to the screw installation hole in the rear door inner panel, set it to the rear door quarter glass and the rear door glass.

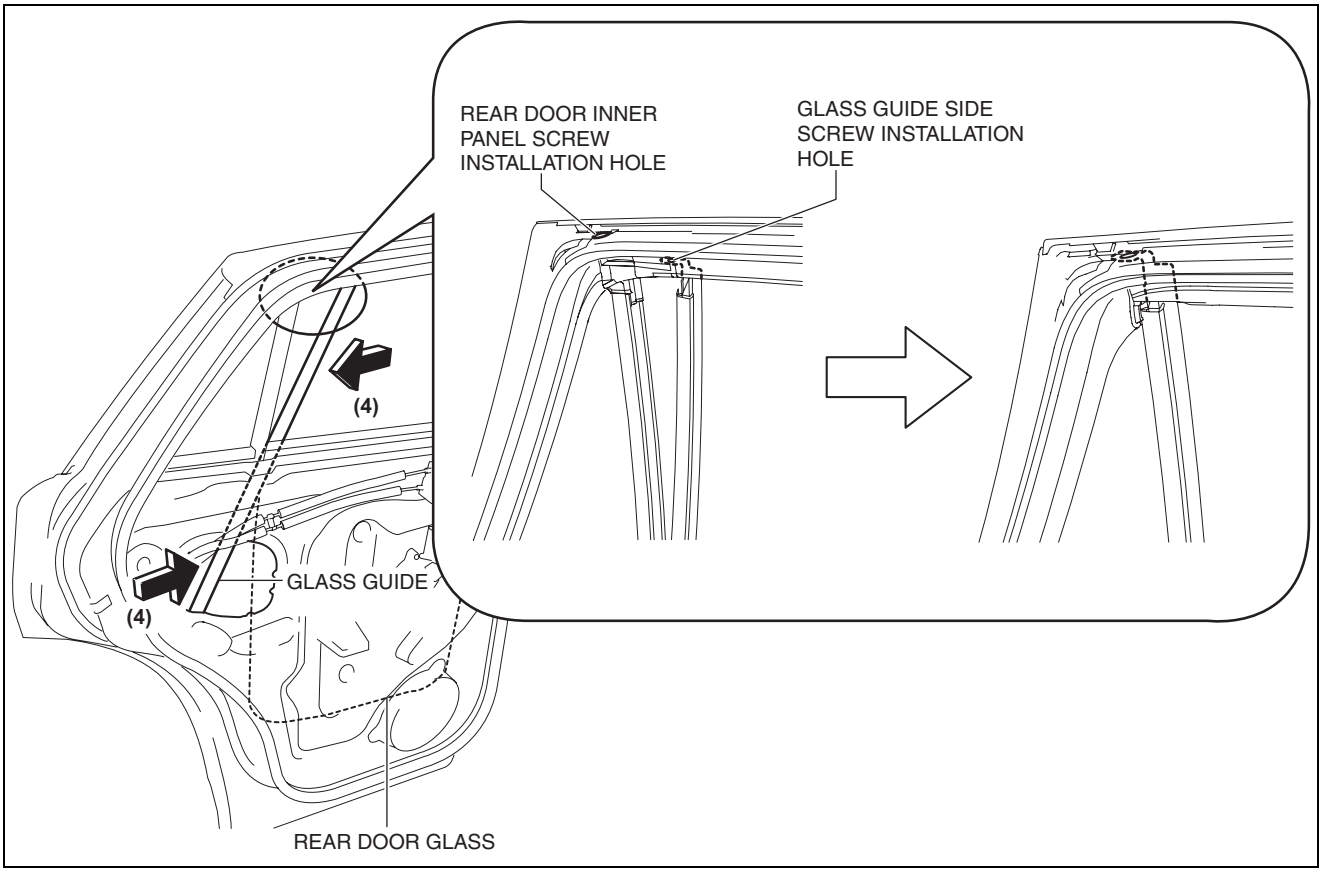

ac5wzw0000298

GLASS/WINDOWS/MIRRORS

WINDSHIELD REMOVAL

id091200000500

1. Disconnect the negative battery cable. (See 01-17A-11 NEGATIVE BATTERY CABLE DISCONNECTION/CONNECTION [SKYACTIV-G 2.0].) (See 01-17A-13 NEGATIVE BATTERY CABLE DISCONNECTION/CONNECTION [SKYACTIV-G 2.0 (WITHOUT i-stop)].) (See 01-17B-9 NEGATIVE BATTERY CABLE DISCONNECTION/CONNECTION [SKYACTIV-D 2.2].)
2. Remove the following parts:
   (1) Windshield wiper arm and blade (See 09-19-3 WINDSHIELD WIPER ARM AND BLADE REMOVAL/INSTALLATION.)
   (2) Cowl grille (See 09-16-3 COWL GRILLE REMOVAL/INSTALLATION.)
   (3) Cover (See 09-22-98 FORWARD SENSING CAMERA (FSC) REMOVAL/INSTALLATION.)
   (4) Forward sensing camera (FSC) (with high beam control (HBC) system) (See 09-22-98 FORWARD SENSING CAMERA (FSC) REMOVAL/INSTALLATION.)
   (5) Laser sensor (with smart city brake support (SCBS)) (See 04-15-17 LASER SENSOR REMOVAL/INSTALLATION.)
   (6) Rain sensor (with auto light/wiper system) (See 09-19-58 RAIN SENSOR REMOVAL/INSTALLATION.)
   (7) Auto-dimming mirror (with auto-dimming mirror) (See 09-12-94 AUTO-DIMMING MIRROR REMOVAL/INSTALLATION.)
   (8) Rearview mirror (without auto-dimming mirror) (See 09-12-98 REARVIEW MIRROR REMOVAL/INSTALLATION.)
   (9) A-pillar trim (See 09-17-53 A-PILLAR TRIM REMOVAL/INSTALLATION.)
   (10)Sunvisor (See 09-17-93 SUNVISOR REMOVAL/INSTALLATION.)
   (11)Front map light (See 09-18-95 MAP LIGHT REMOVAL/INSTALLATION.)
   (12)Assist handle (See 09-17-91 ASSIST HANDLE REMOVAL/INSTALLATION.)
3. Set the headliner out of the way.
4. Apply protective tape along the edge of the body.

Note
- Overlap and adhere the protective tape to the corners to prevent damage.

5. Remove the windshield molding by pulling it outward.

Note
- If the windshield molding is difficult to remove, warm the windshield molding using a hot air blower.
- The windshield molding is a replacement part.

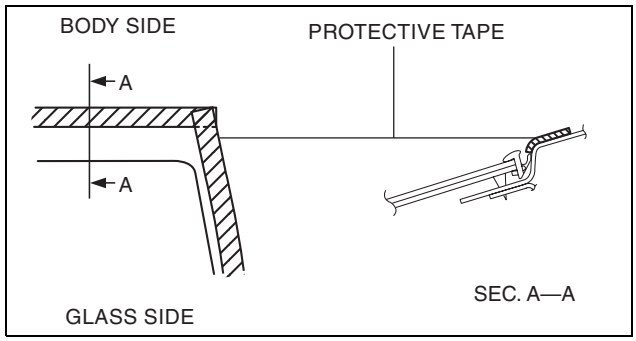

ac5uuw00001038

Not Reusing Windshield

Warning
- **Using piano wire with bare hands can cause injury. Always wear gloves when using piano wire.**

Note
- If it is difficult to cut sealant, use piano wire and follow the procedure under “Reusing Windshield”.

1. Cut out the sealant all around the glass using a sealant remover.
2. Remove the windshield.

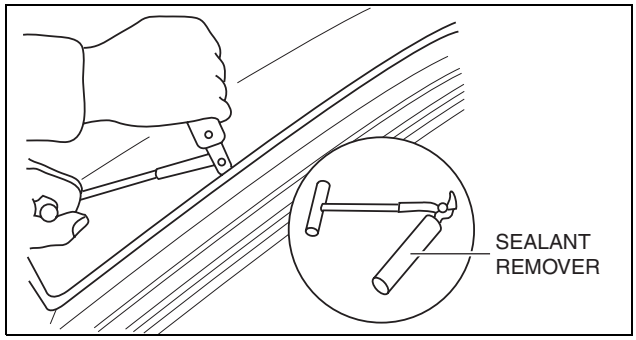

ac5wzw0000132

GLASS/WINDOWS/MIRRORS

Reusing Windshield

Warning
- **Using piano wire with bare hands can cause injury. Always wear gloves when using piano wire.**

Caution
- **Because the lens for rainfall/illumination level detection is integrated with the windshield, the auto light/wiper systems may not operate correctly if the lens is damaged. When removing the windshield, be careful not to damage the lens. If the lens is damaged, replace the windshield.**

Note
- Before removing the windshield from the body, mark the position of the windshield by affixing tape to the windshield and body panel.

1. Avoiding the pin on the inside of the vehicle, insert piano wire which has been cut to sufficient length.
2. Wind each end of piano wire around a bar.

Note
- Use a long sawing action to spread the work over the whole length of piano wire to prevent it from breaking due to localized heating.

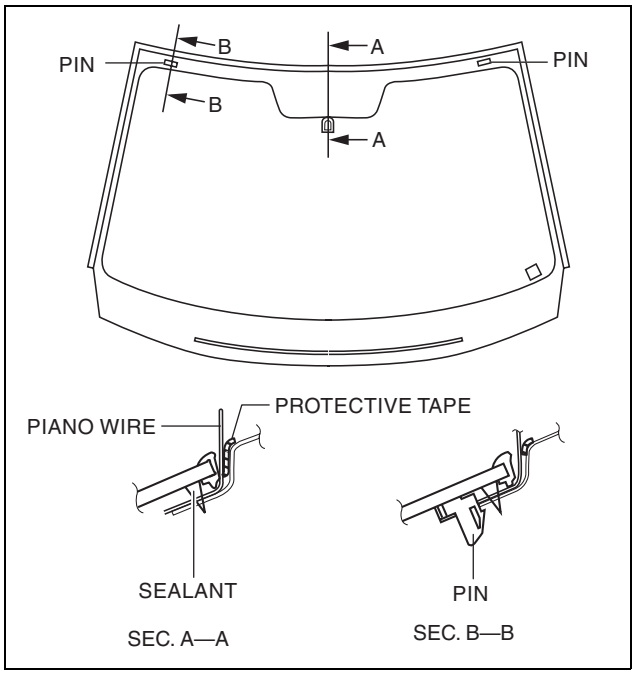

ac5uuw00001870

3. Secure one end of piano wire, and while pulling the other end, cut the sealant around the windshield.
4. Pinch the pin from the inside of the vehicle and detach it.
5. Remove the windshield.
6. If the pin is damaged, remove the pin.

Note
- Before removing the pin from the windshield glass, place an alignment mark on the windshield.

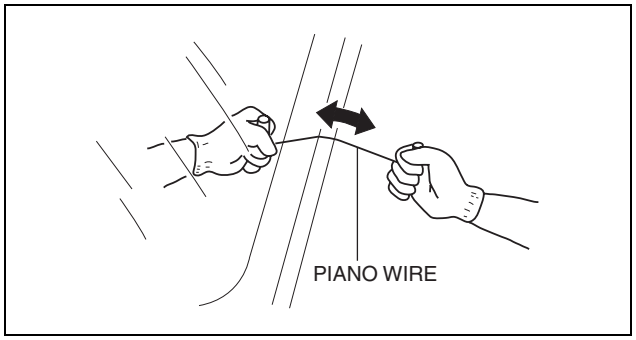

ac5wzw0000132

GLASS/WINDOWS/MIRRORS

WINDSHIELD INSTALLATION

id091200000700

Warning
- **Using a utility knife with bare hands can cause injury. Always wear gloves when using a utility knife.**

Caution
- **If a door is opened or closed when all the window glass is closed, the resulting change in air pressure could cause the sealant to crack preventing the proper installation of the windshield. Keep the door glass opened until the windshield installation is completed.**

1. Remove the sealant along the perimeter of the glass using a utility knife. (When reusing the glass)
2. Clean and degrease an **approx. 50 mm {2.0 in}** wide strip along the perimeter of the windshield.
3. Inspect the glass for cracks. If it is cracked, chamfer it using sandpaper.
4. Align the alignment marks made before removal and install the pin to the windshield referring to the figure. (Reusing glass, pin removed)

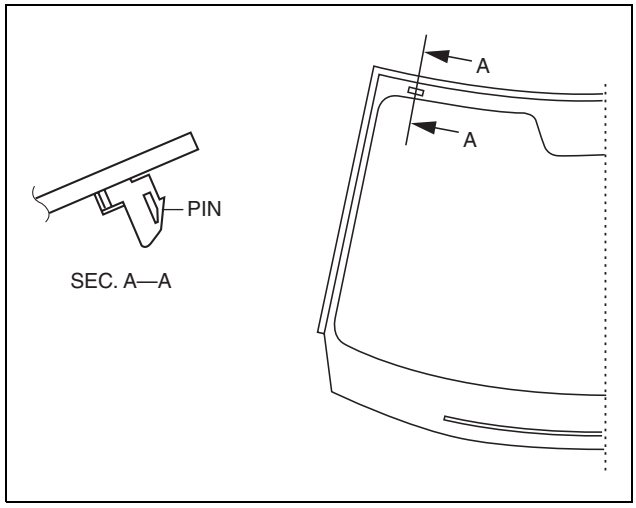

ac5wzw0000291

5. Install the windshield molding.
6. Apply glass primer on the glass as shown in the figure, then allow it to dry for **approx. 30 min**.

Caution
- **To prevent weakening of the primer adhesion, keep the bonding surface free of dirt, moisture, and grease. Do not touch the surface with your hand.**

Note
- Apply primer to the hollowed marks in the ceramic coating.

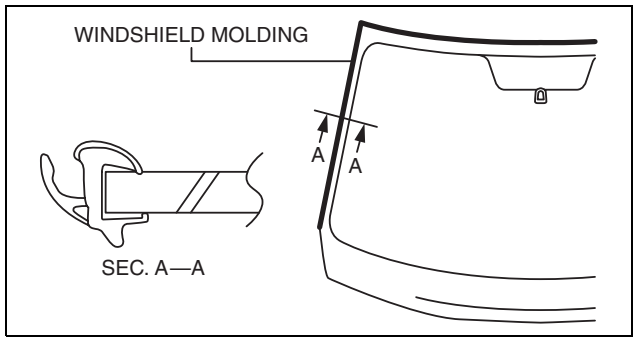

ac5uuw00001719

GLASS/WINDOWS/MIRRORS

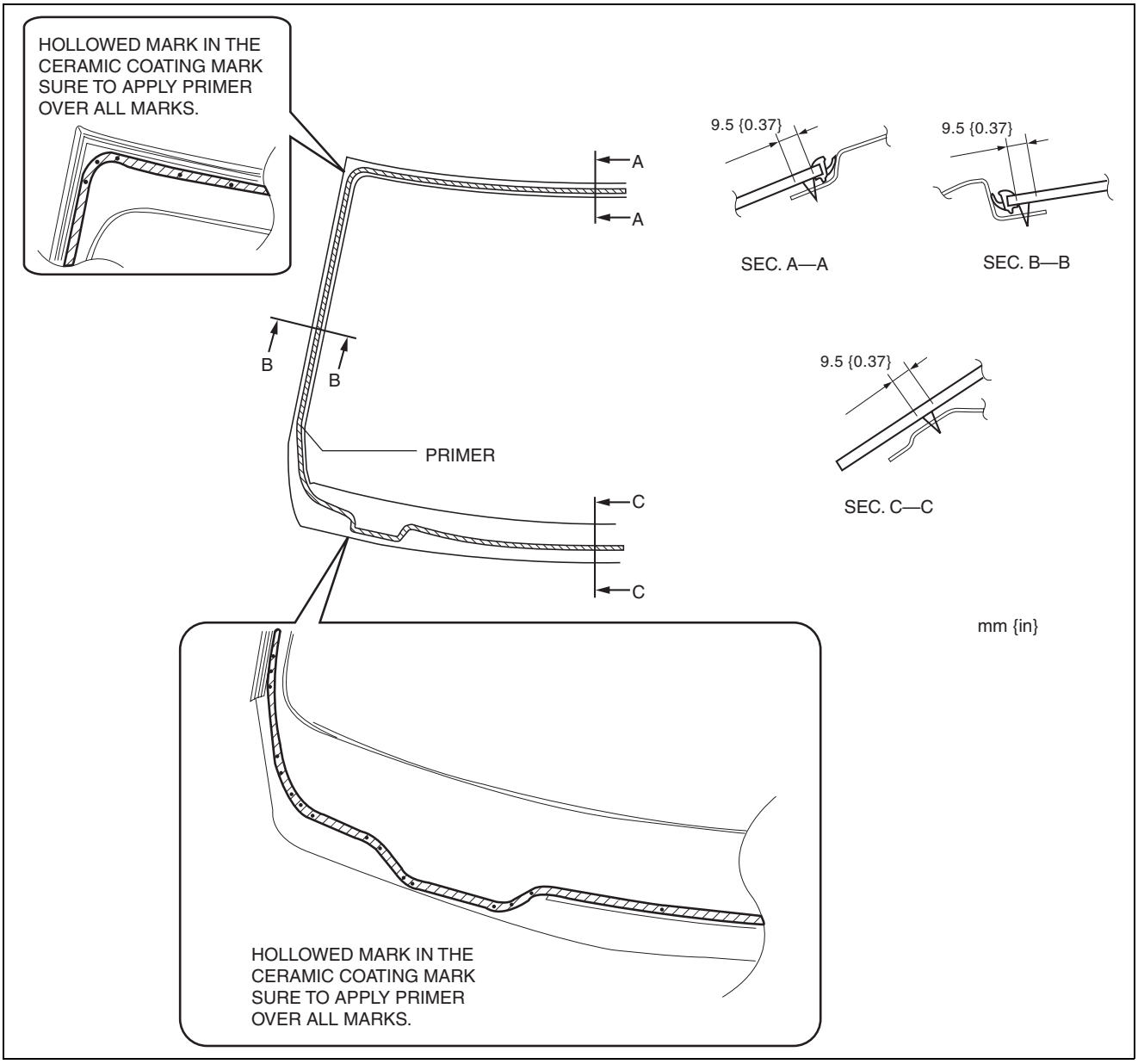

ac5uuw00002633

7. Cut away the old sealant using a utility knife so that **1—2 mm {0.04—0.07 in}** thickness of sealant remains along the perimeter of the frame.
8. If the sealant has come off completely in any one place, apply some primer after degreasing, and allow it **approx. 30 min** to dry. Then **apply 2 mm {0.07 in} thickness** of new sealant.

Caution
- **To prevent weakening of the primer adhesion, keep the bonding surface free of dirt, moisture, and grease. Do not touch the surface with your hand.**

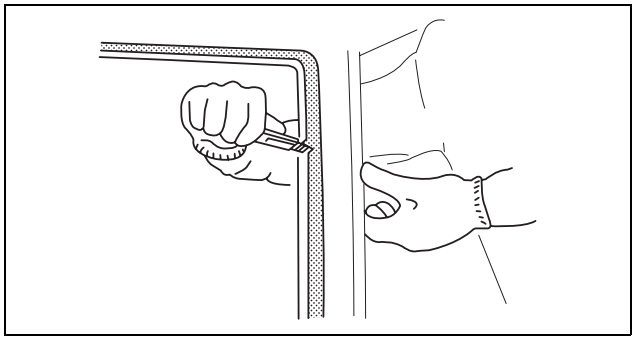

ac5uuw00001058

9. [illegible]

approx. 30 min.

Caution
- **Using the dowel for applying primer, apply primer 65 to the area shown in the figure.**

GLASS/WINDOWS/MIRRORS

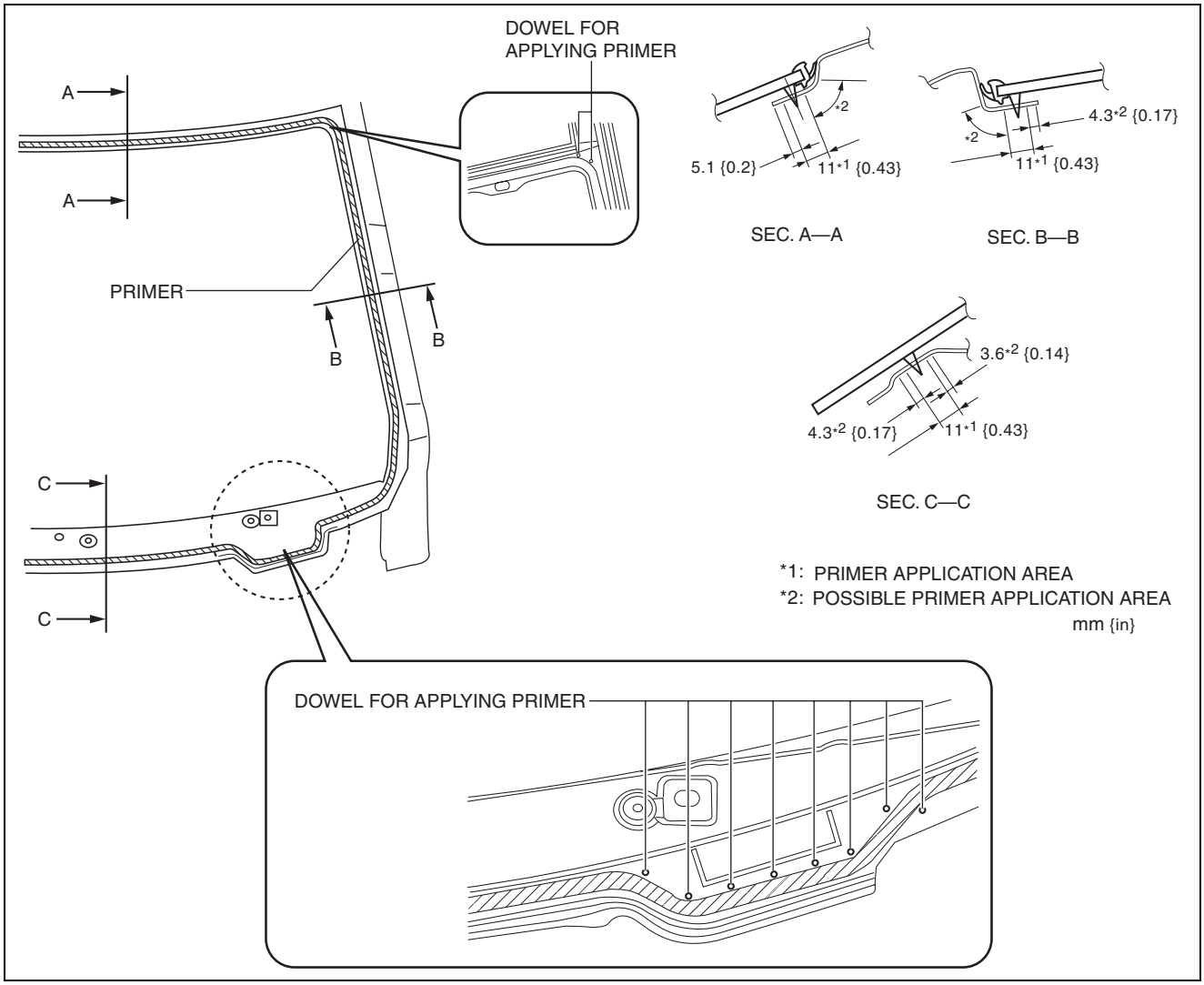

ac5uuw00002601

GLASS/WINDOWS/MIRRORS

11. Apply sealant to the area of the glass surface as shown in the figure.

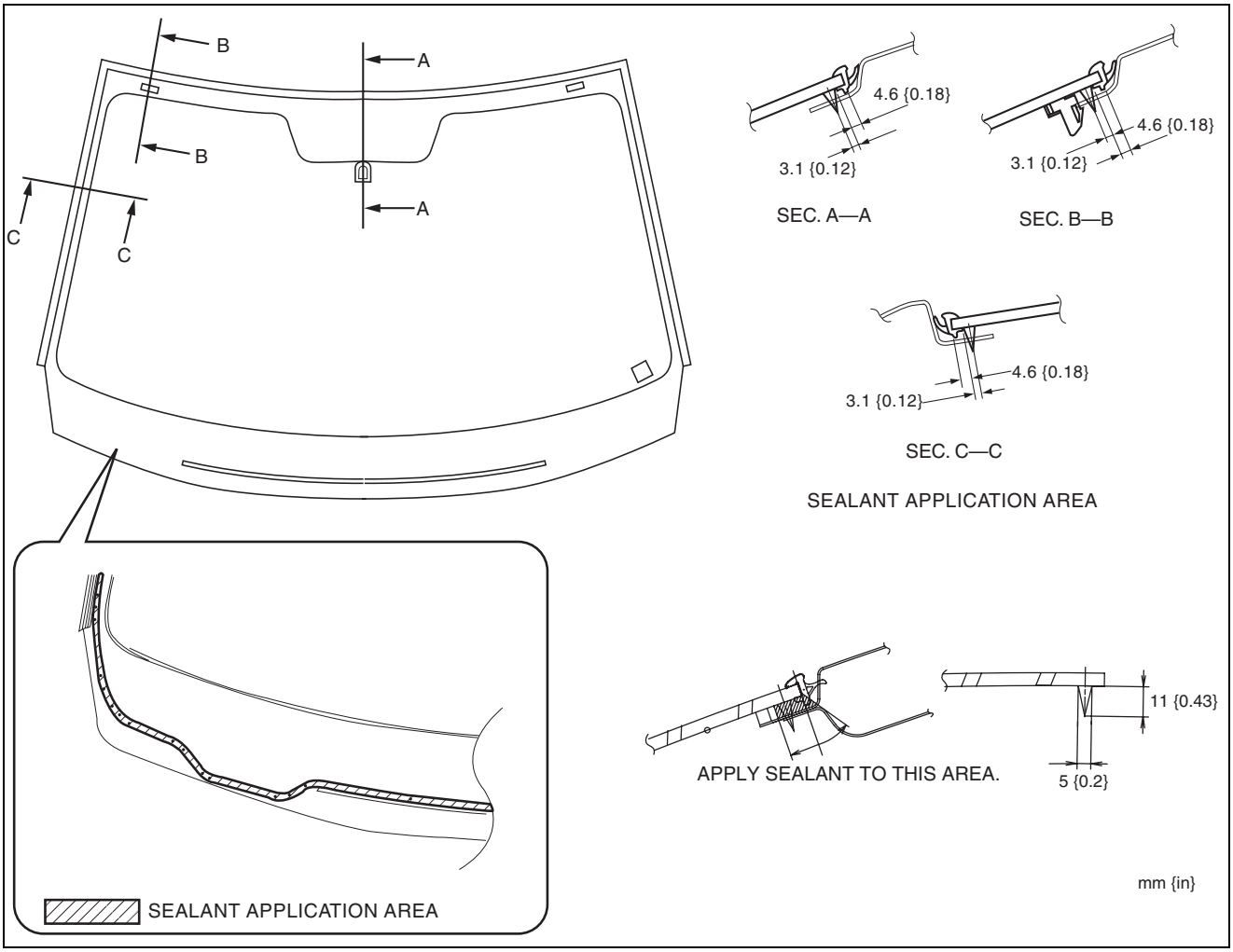

ac5wzw0000292

12. Insert the positioning pins to the body and install the windshield.
13. Verify that the clearance between the A-pillar and the roof is within the range shown in the figure, and press along the perimeter of the glass.

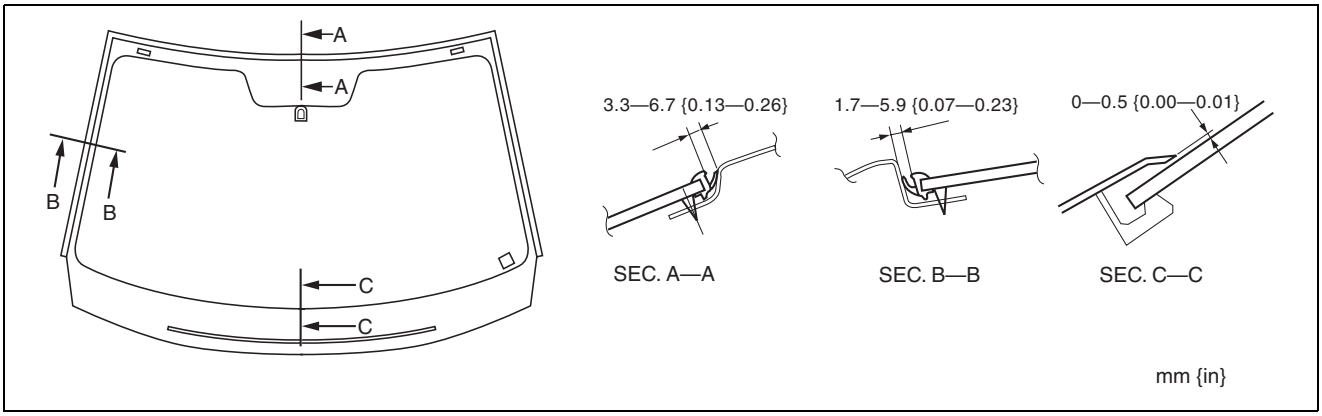

ac5uuw00002530

14. Install the headliner.
15. Install the following parts:
    (1) Assist handle (See 09-17-91 ASSIST HANDLE REMOVAL/INSTALLATION.)
    (2) Front map light (See 09-18-95 MAP LIGHT REMOVAL/INSTALLATION.)
    (3) Sunvisor (See 09-17-93 SUNVISOR REMOVAL/INSTALLATION.)
    (4) A-pillar trim (See 09-17-53 A-PILLAR TRIM REMOVAL/INSTALLATION.)
    (5) Rearview mirror (without auto-dimming mirror) (See 09-12-98 REARVIEW MIRROR REMOVAL/INSTALLATION.)
    (6) Auto-dimming mirror (with auto-dimming mirror) (See 09-12-94 AUTO-DIMMING MIRROR REMOVAL/

INSTALLATION.)
(7) Rain sensor (with auto light / wiper system) (See 09-19-58 RAIN SENSOR REMOVAL/INSTALLATION.)
(8) Cowl grille (See 09-16-3 COWL GRILLE REMOVAL/INSTALLATION.)
(9) Windshield wiper arm and blade (See 09-19-3 WINDSHIELD WIPER ARM AND BLADE REMOVAL/INSTALLATION.)

16. Connect the negative battery cable. (See 01-17A-11 NEGATIVE BATTERY CABLE DISCONNECTION/CONNECTION [SKYACTIV-G 2.0].) (See 01-17A-13 NEGATIVE BATTERY CABLE DISCONNECTION/CONNECTION [SKYACTIV-G 2.0 (WITHOUT i-stop)].) (See 01-17B-9 NEGATIVE BATTERY CABLE DISCONNECTION/CONNECTION [SKYACTIV-D 2.2].)
17. Allow the sealant to harden completely.

Sealant hardening time: 24 h

GLASS/WINDOWS/MIRRORS

QUARTER WINDOW GLASS REMOVAL

id091200002500

1. Disconnect the negative battery cable. (See 01-17A-11 NEGATIVE BATTERY CABLE DISCONNECTION/CONNECTION [SKYACTIV-G 2.0].) (See 01-17A-13 NEGATIVE BATTERY CABLE DISCONNECTION/CONNECTION [SKYACTIV-G 2.0 (WITHOUT i-stop)].) (See 01-17B-9 NEGATIVE BATTERY CABLE DISCONNECTION/CONNECTION [SKYACTIV-D 2.2].)
2. Remove the following parts:
   (1) Trunk board (See 09-17-85 TRUNK BOARD REMOVAL/INSTALLATION.)
   (2) Trunk end trim (See 09-17-78 TRUNK END TRIM REMOVAL/INSTALLATION.)
   (3) Rear scuff plate (See 09-17-63 REAR SCUFF PLATE REMOVAL/INSTALLATION.)
   (4) Trunk side trim (See 09-17-80 TRUNK SIDE TRIM REMOVAL/INSTALLATION.)
   (5) D-pillar trim (See 09-17-60 D-PILLAR TRIM REMOVAL/INSTALLATION.)
   (6) C-pillar trim (See 09-17-59 C-PILLAR TRIM REMOVAL/INSTALLATION.)
3. Apply protective tape along the edge of the body and the quarter window glass.

   Warning
   - **Using the piano wire with bare hands can cause injury. Always wear gloves when using the piano wire.**

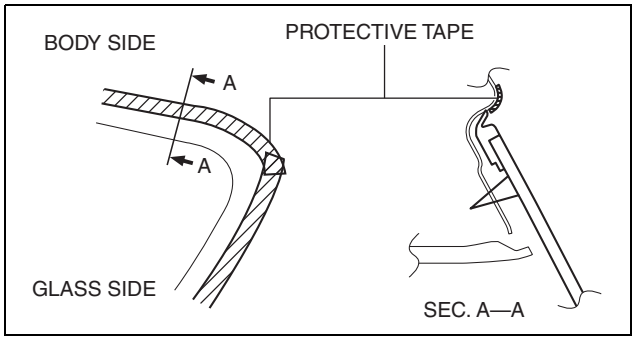

ac5uuw00001011

4. Avoiding pins on the inside of the vehicle, insert the piano wire which has been cut to sufficient length.

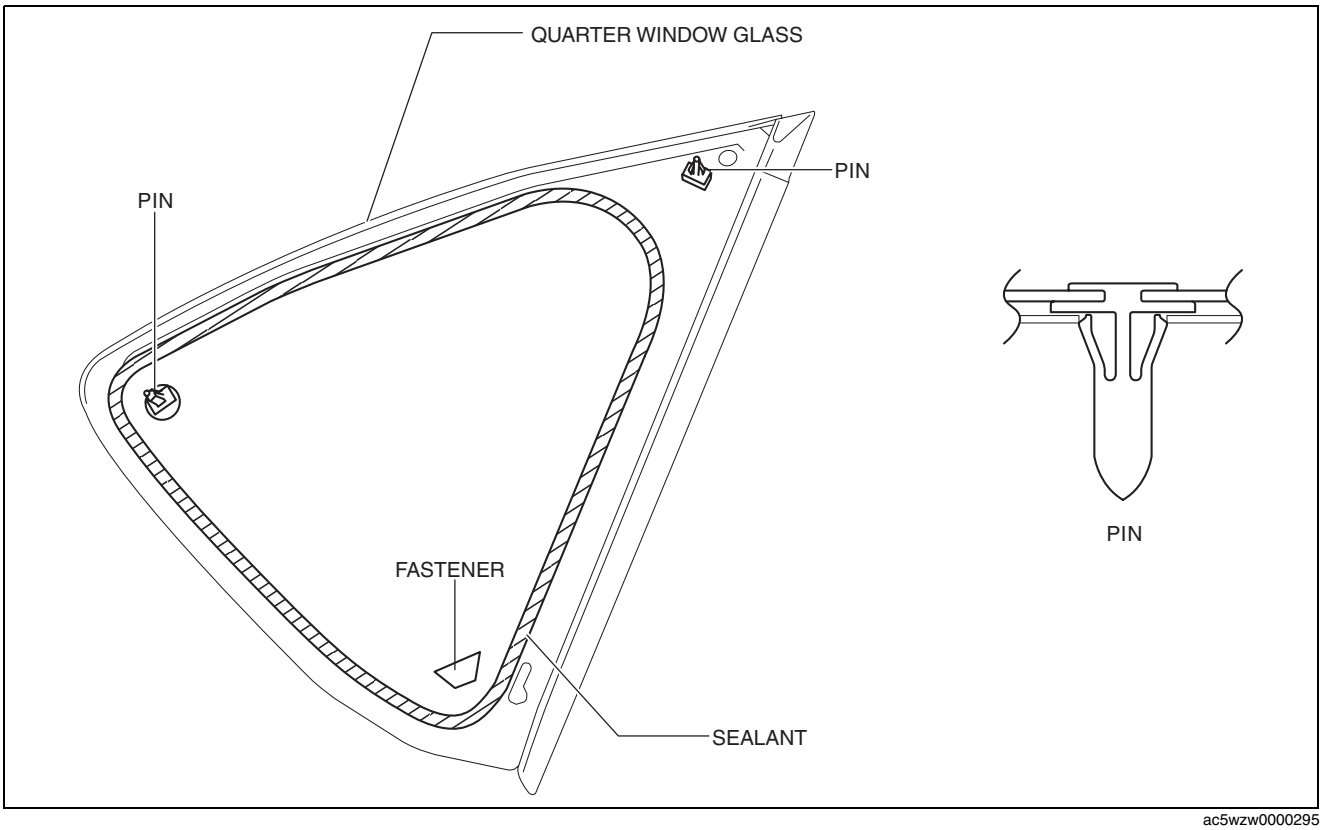

ac5wzw0000295

5. Wind each end of the piano wire around a bar.

   Note
   - Use a long sawing action to spread the work over the whole length of the piano wire to prevent it from breaking due to localized heating.

GLASS/WINDOWS/MIRRORS

6. Secure one end of the piano wire, and while pulling the other end, cut the sealant around the quarter window glass.
7. Pull the quarter window glass outward and detach the pins from the body.
8. If a pins or fastener is damaged, remove it.

Note
- Before removing the pins or spacers from the quarter window glass, place alignment marks on the quarter window glass.

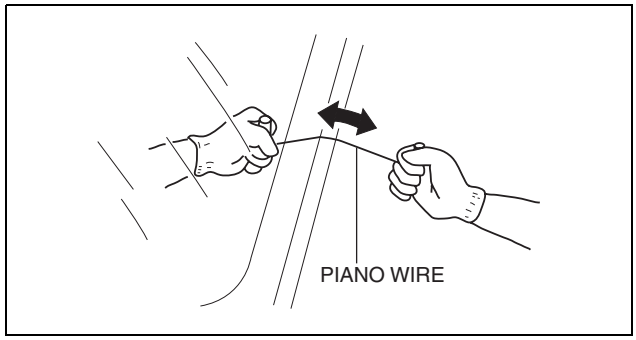

ac5wzw0000133

GLASS/WINDOWS/MIRRORS

QUARTER WINDOW GLASS INSTALLATION

id091200002600

Warning
- **Using a razor with bare hands can cause injury. Always wear gloves when using a razor.**

Caution
- **If a door is opened or closed when all the window glass is closed, the resulting change in air pressure could cause the sealant to crack preventing the proper installation of the glass. Keep the door glass open until the quarter window glass installation is completed.**

1. Remove sealant along the perimeter of the glass using a razor or scraper. (when reusing the glass)
2. Clean and degrease the ceramic part along the perimeter of the glass.
3. Inspect the glass for cracks. If it is cracked, chamfer it using sandpaper.
4. If the glass is reused, attach pins and fastener to the glass as shown in the figure.

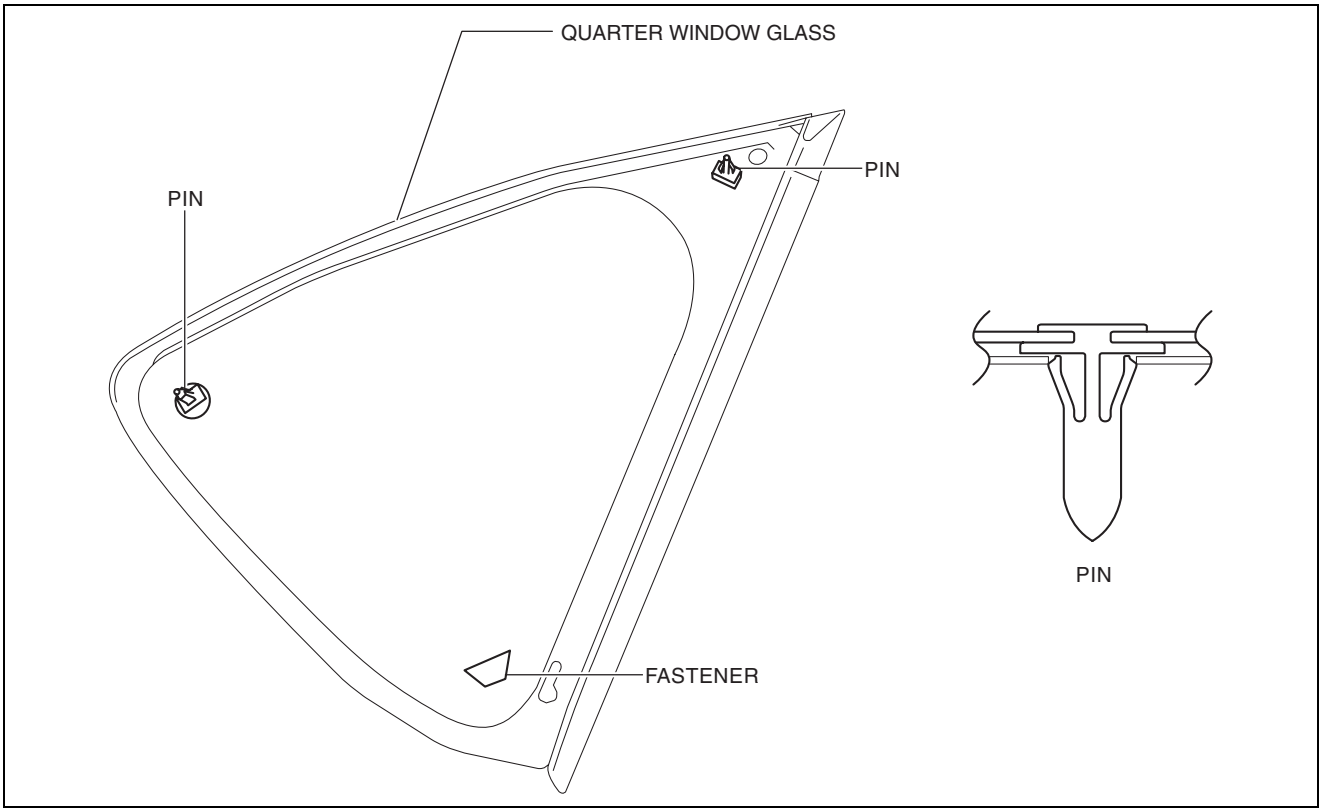

ac5wzw0000296

Note
- Align with the alignment marks marked before removing the glass.

5. Apply glass primer along the hollowed marks in the ceramic coating on the new glass, along the sealant tracks on the reused glass, then allow it to dry for **approx. 30 min.**

Caution
- **To prevent weakening of the primer adhesion, keep the bonding surface free of dirt, moisture, and grease. Do not touch the surface with your hand.**

Note
- Apply primer to the hollowed marks in the ceramic coating.

GLASS/WINDOWS/MIRRORS

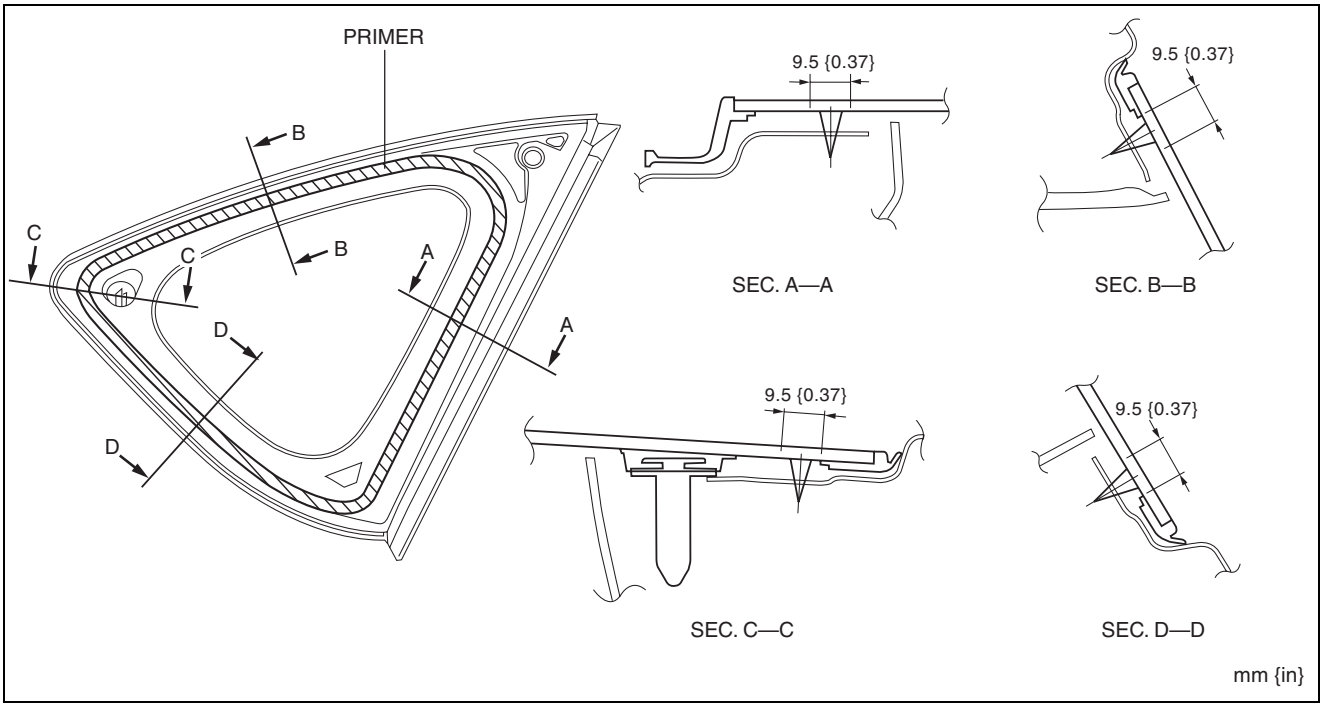

ac5wzw0000296

6. Cut away the old sealant using a razor or scraper so that **1—2 mm {0.04—0.07 in}** thickness of sealant remains along the perimeter of the frame.
7. If the sealant has come off completely in any one place, apply some primer after degreasing, and allow it **approx. 30 min** to dry. Then apply **2 mm {0.07 in}** thickness of new sealant.
8. Clean and degrease the bonding surface along the perimeter of the body.
9. Apply body primer on the body as shown in the figure, then allow it to dry for **approx. 30 min.**

Caution

- **To prevent weakening of the primer adhesion, keep the bonding surface free of dirt, moisture, and grease. Do not touch the surface with your hand.**

GLASS/WINDOWS/MIRRORS

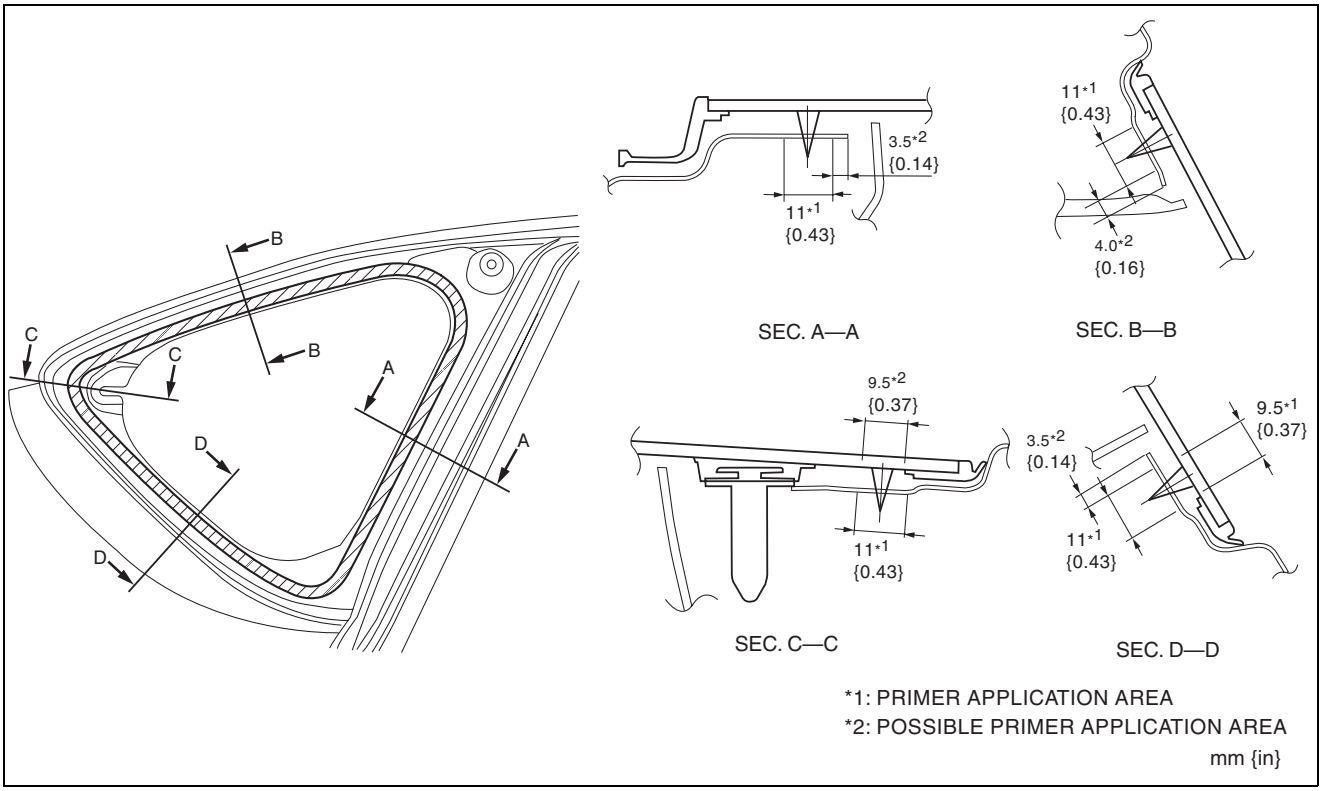

ac5wzw0000296

10. After the primer has dried, apply **11 mm {0.43 in}** in thickness, **5 mm {0.20 in}** in width of sealant using a sealant gun. Where it is not applied properly, correctly apply it using a spatula.

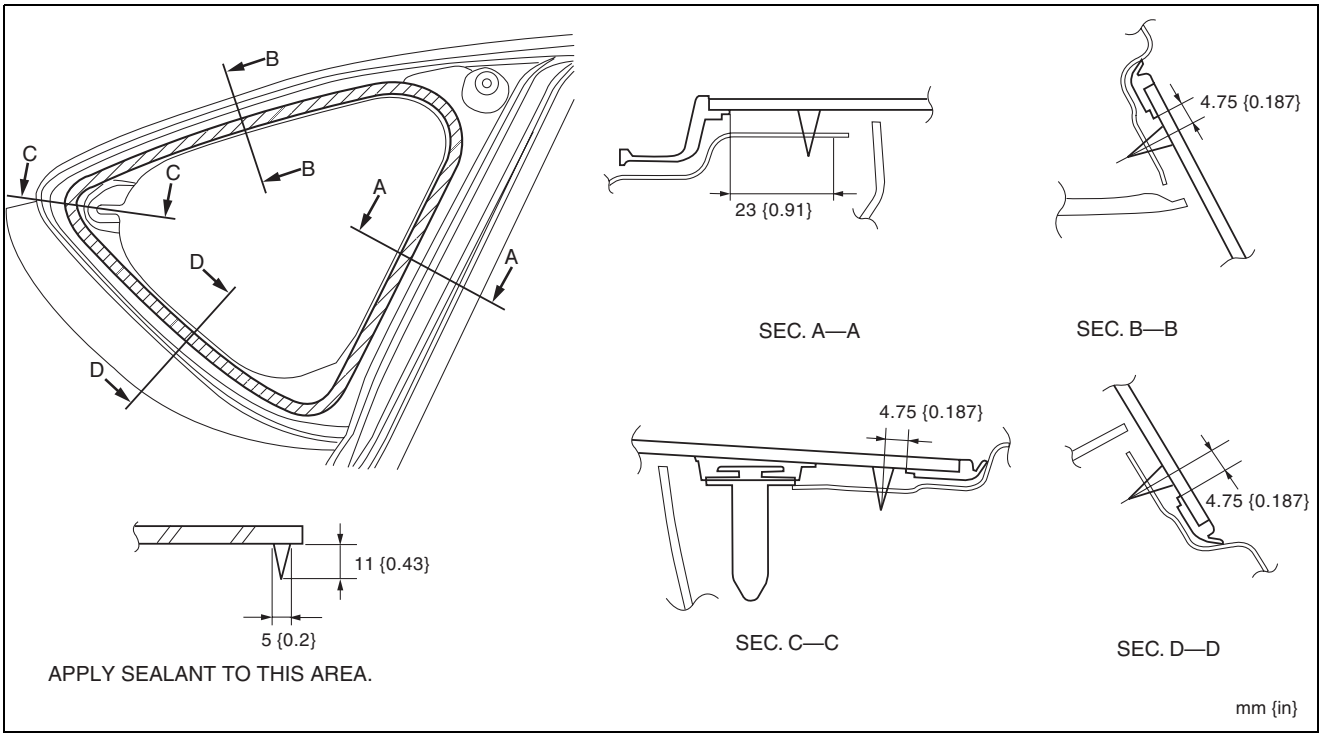

ac5wzw0000296

11. Insert the positioning pins to the body and install the quarter window glass.

GLASS/WINDOWS/MIRRORS

12. Verify that the gap at the upper and side parts of the glass is within the specification shown in the figure, then press along the perimeter of the glass.

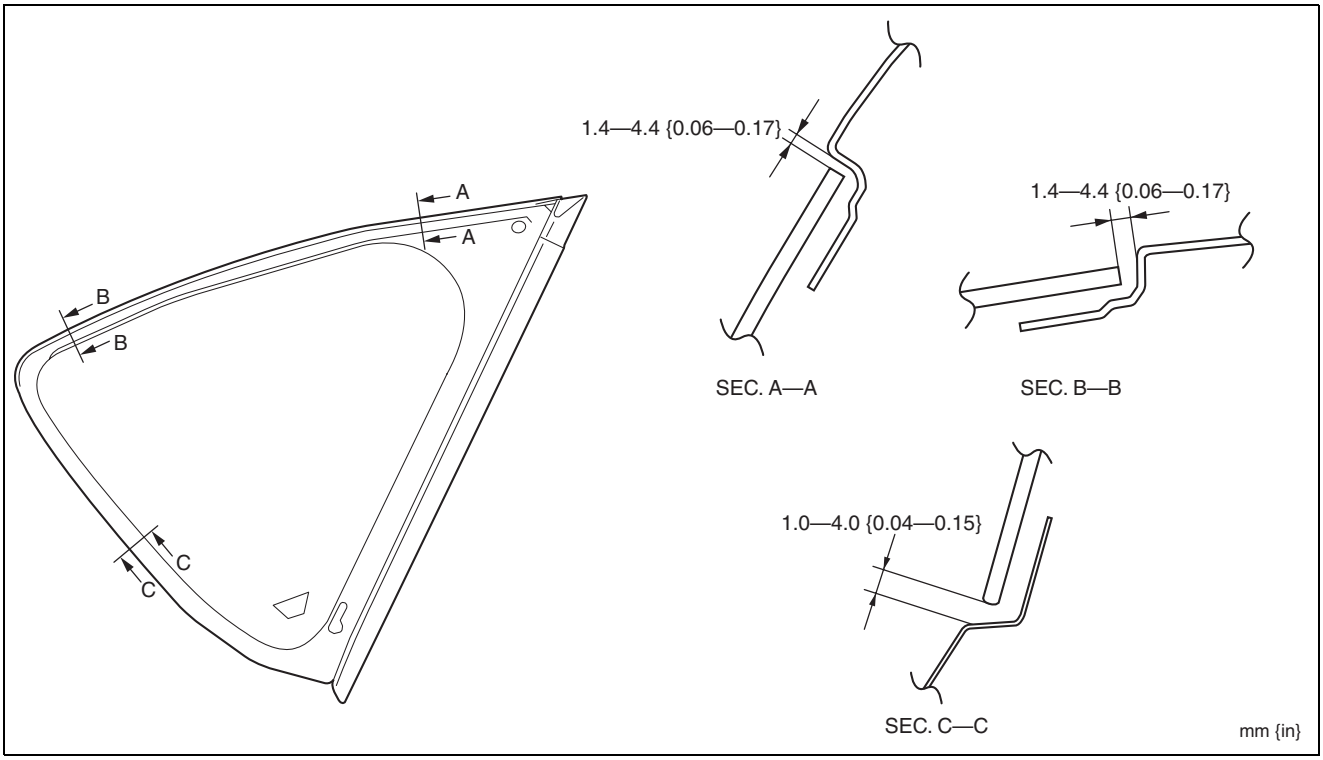

ac5wzw0000272

13. Install the following parts:
    (1) C-pillar trim (See 09-17-59 C-PILLAR TRIM REMOVAL/INSTALLATION.)
    (2) D-pillar trim (See 09-17-60 D-PILLAR TRIM REMOVAL/INSTALLATION.)
    (3) Trunk side trim (See 09-17-80 TRUNK SIDE TRIM REMOVAL/INSTALLATION.)
    (4) Rear scuff plate (See 09-17-63 REAR SCUFF PLATE REMOVAL/INSTALLATION.)
    (5) Trunk end trim (See 09-17-78 TRUNK END TRIM REMOVAL/INSTALLATION.)
    (6) Trunk board (See 09-17-85 TRUNK BOARD REMOVAL/INSTALLATION.)
14. Connect the negative battery cable. (See 01-17A-11 NEGATIVE BATTERY CABLE DISCONNECTION/CONNECTION [SKYACTIV-G 2.0].) (See 01-17A-13 NEGATIVE BATTERY CABLE DISCONNECTION/CONNECTION [SKYACTIV-G 2.0 (WITHOUT i-stop)].) (See 01-17B-9 NEGATIVE BATTERY CABLE DISCONNECTION/CONNECTION [SKYACTIV-D 2.2].)
15. Allow the sealant to harden completely.

    Sealant hardening time: 24 h

GLASS/WINDOWS/MIRRORS

REAR WINDOW GLASS REMOVAL

id091200000600

1. Disconnect the negative battery cable. (See 01-17A-11 NEGATIVE BATTERY CABLE DISCONNECTION/CONNECTION [SKYACTIV-G 2.0].) (See 01-17A-13 NEGATIVE BATTERY CABLE DISCONNECTION/CONNECTION [SKYACTIV-G 2.0 (WITHOUT i-stop)].) (See 01-17B-9 NEGATIVE BATTERY CABLE DISCONNECTION/CONNECTION [SKYACTIV-D 2.2].)
2. Remove the following parts:
   (1) Liftgate upper trim (See 09-17-87 LIFTGATE UPPER TRIM REMOVAL/INSTALLATION.)
   (2) Liftgate side trim (See 09-17-87 LIFTGATE SIDE TRIM REMOVAL/INSTALLATION.)
   (3) Liftgate recess (See 09-17-89 LIFTGATE RECESS REMOVAL/INSTALLATION.)
   (4) Liftgate lower trim (See 09-17-89 LIFTGATE LOWER TRIM REMOVAL/INSTALLATION.)
   (5) Rear spoiler (See 09-16-33 REAR SPOILER REMOVAL/INSTALLATION.)
   (6) Rear wiper arm and blade (See 09-19-32 REAR WIPER ARM AND BLADE REMOVAL/INSTALLATION.)
3. Using a screwdriver wrapped in protective tape, pull the antenna feeder No.3 connector in the direction of the arrow (2) shown in the figure while pressing glass antenna terminal in the direction of the arrow (1) shown in the figure, and disengage the glass antenna terminal from the antenna feeder No.3 connector. (with RDS (radio data system))
4. Disconnect the antenna feeder No.3 connector. (with RDS (radio data system))

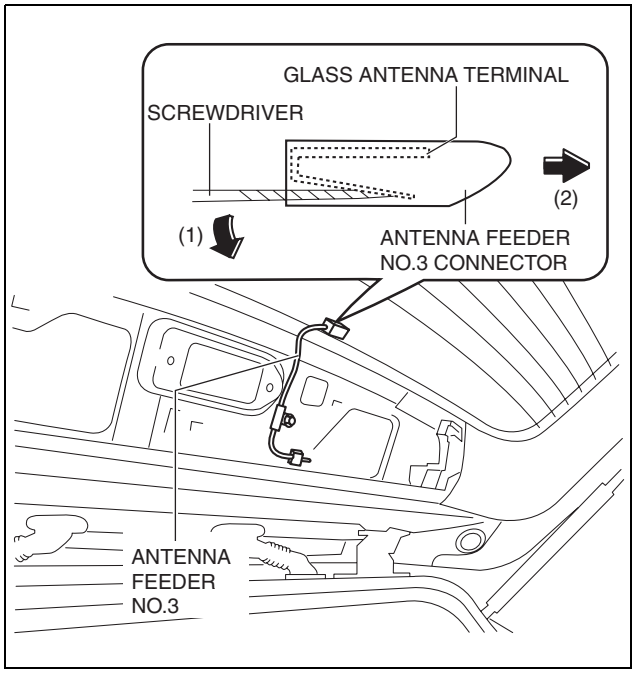

ac5wzw0000305

5. Disconnect the filament connectors in the direction of the arrow in the order of (3), (4) shown in the figure.

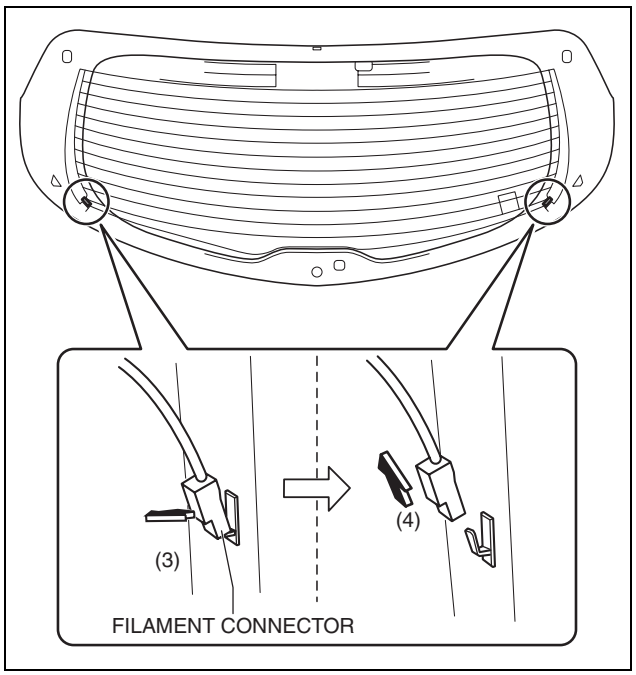

ac5wzw0000306

GLASS/WINDOWS/MIRRORS

6. Apply protective tape along the edge of the body.

Note
- Overlap and adhere the protective tape to the corners to prevent damage.

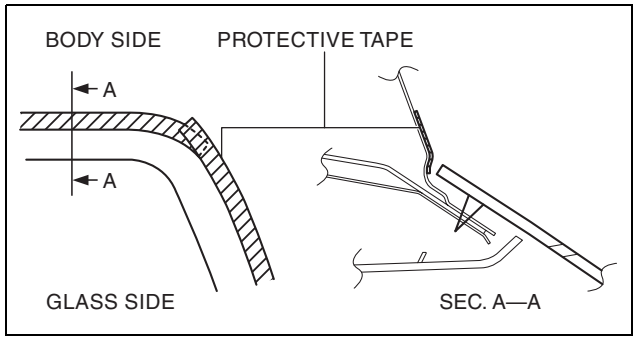

ac5uuw00001717

7. Avoiding the pin on the inside of the vehicle, insert piano wire which has been cut to sufficient length.

Warning
- **Using piano wire with bare hands can cause injury. Always wear gloves when using piano wire.**

Note
- Before removing the rear window glass from the body, mark the position of the glass by affixing tape to the glass and body panel.

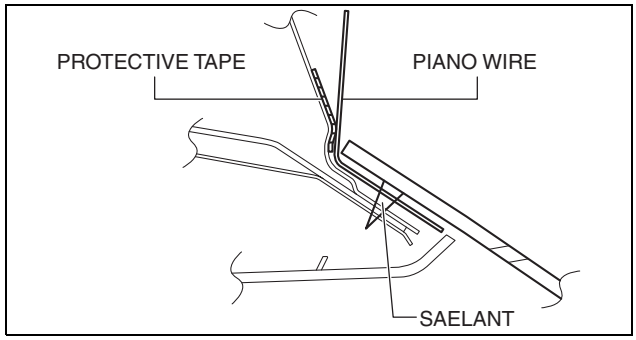

ac5uuw00001718

8. Wind each end of piano wire around a bar.

Note
- Use a long sawing action to spread the work over the whole length of piano wire to prevent it from breaking due to localized heating.

9. Secure one end of piano wire, and while pulling the other end, cut the sealant around the rear window glass.

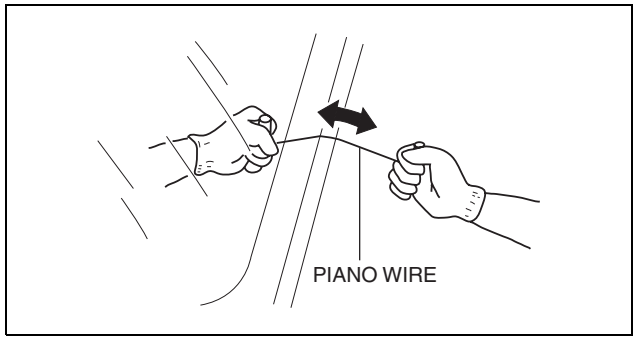

ac5wzw0000132

GLASS/WINDOWS/MIRRORS

10. Pinch pins from the inside of the vehicle and detach it.
11. Remove the rear window glass.

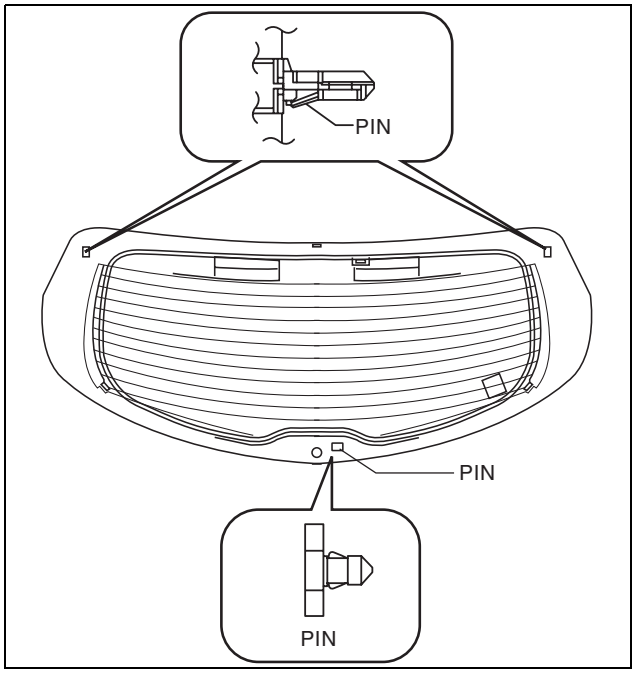

ac5uuw00001871

GLASS/WINDOWS/MIRRORS

REAR WINDOW GLASS INSTALLATION

id091200000800

Warning
- **Using a utility knife with bare hands can cause injury. Always wear gloves when using a utility knife.**

Caution
- **Proper installation of the glass may be difficult if sealant is cracked or the glass is pushed out by air pressure when a door is opened/closed with all the window glass closed. Keep the door glass open until the rear window glass installation is completed.**

1. Remove sealant along the perimeter of the glass using a utility knife or scraper. (When reusing the glass)
2. Clean and degrease an **approx. 50 mm {2.0 in}** wide strip along the perimeter of the glass.
3. Inspect the glass for cracks. If it is cracked, chamfer it using sandpaper.
4. Install spacers, pins and fastener to the glass as shown in the figure.

Note
- When reusing the glass, align it with the alignment mark placed before the glass was removed.

5. Apply glass primer on the glass as shown in the figure then allow it to dry for **approx. 30 min**.

Caution
- **To prevent weakening of the primer adhesion, keep the bonding surface free of dirt, moisture, and grease. Do not touch the surface with your hand.**

Note
- Apply primer to the hollowed marks in the ceramic coating.

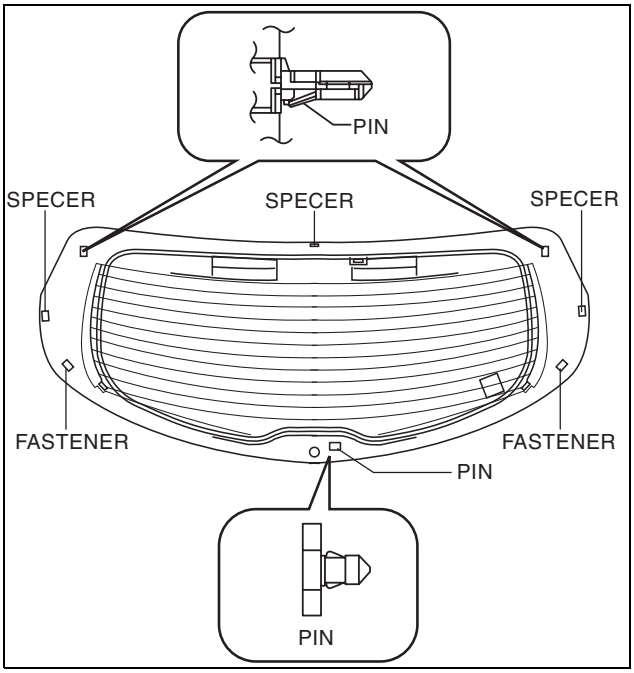

ac5wzw0000295

GLASS/WINDOWS/MIRRORS

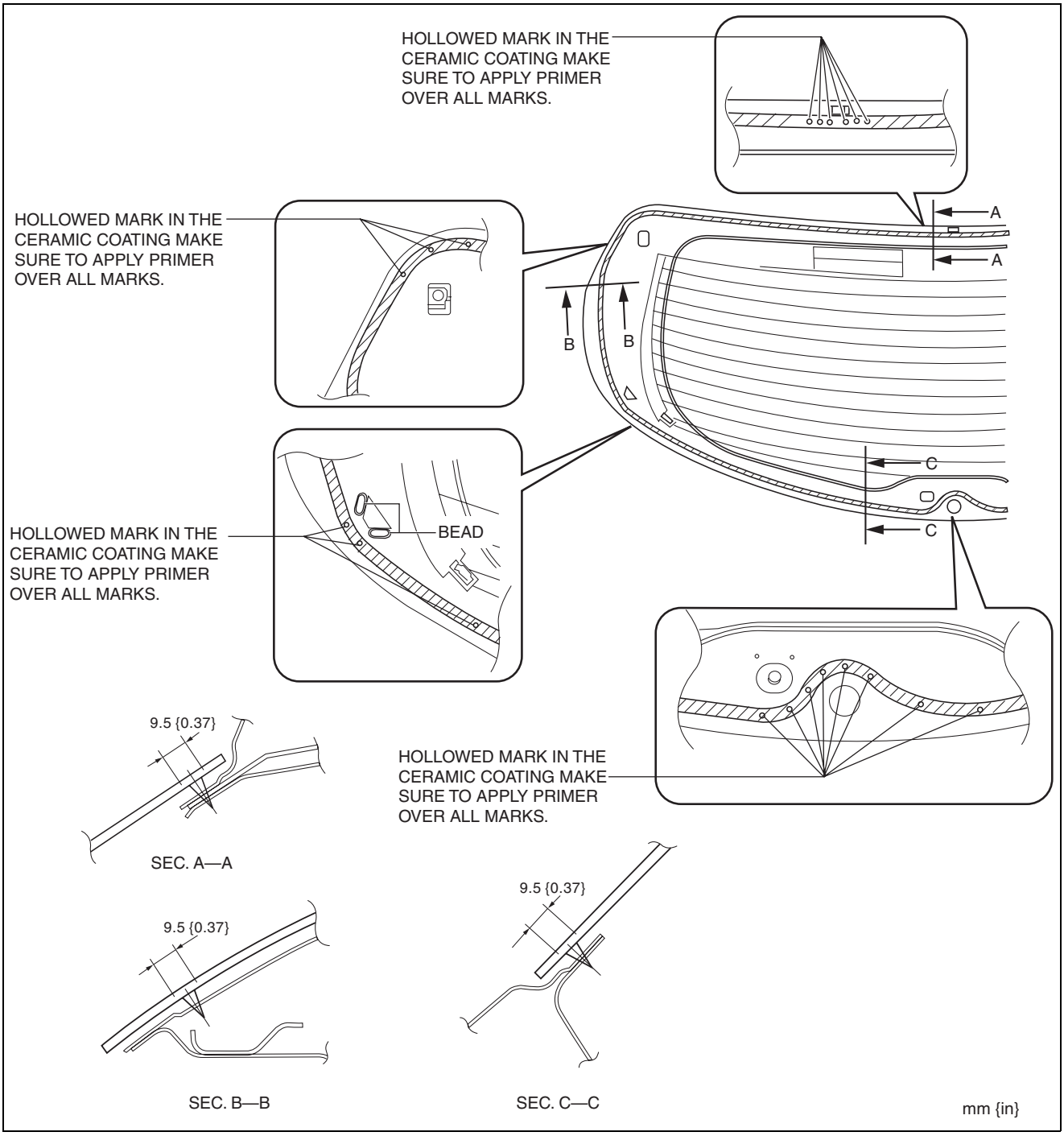

ac5wzw0000295

6. Cut away the old sealant using a utility knife or scraper so that **1—2 mm {0.04—0.07 in}** thickness of sealant remains along the perimeter of the frame.
7. Clean and degrease along the perimeter of the bonding area on the body.
8. If the sealant has come off completely in any one place, apply some primer, and allow it to dry for **approx. 30 min**.

Caution

- **To prevent weakening of the primer adhesion, keep the bonding surface free of dirt, moisture, and grease. Do not touch the surface with your hand.**

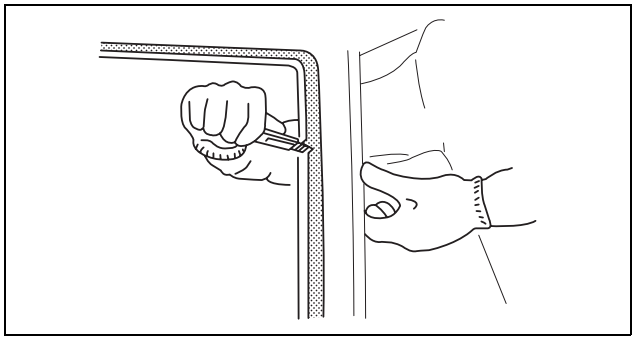

ac5uuw00001064

GLASS/WINDOWS/MIRRORS

9. Apply body primer on the body as shown in the figure, then allow it to dry for **approx. 30 min**.

Caution

- **To prevent weakening of the primer adhesion, keep the bonding surface free of dirt, moisture, and grease. Do not touch the surface with your hand.**

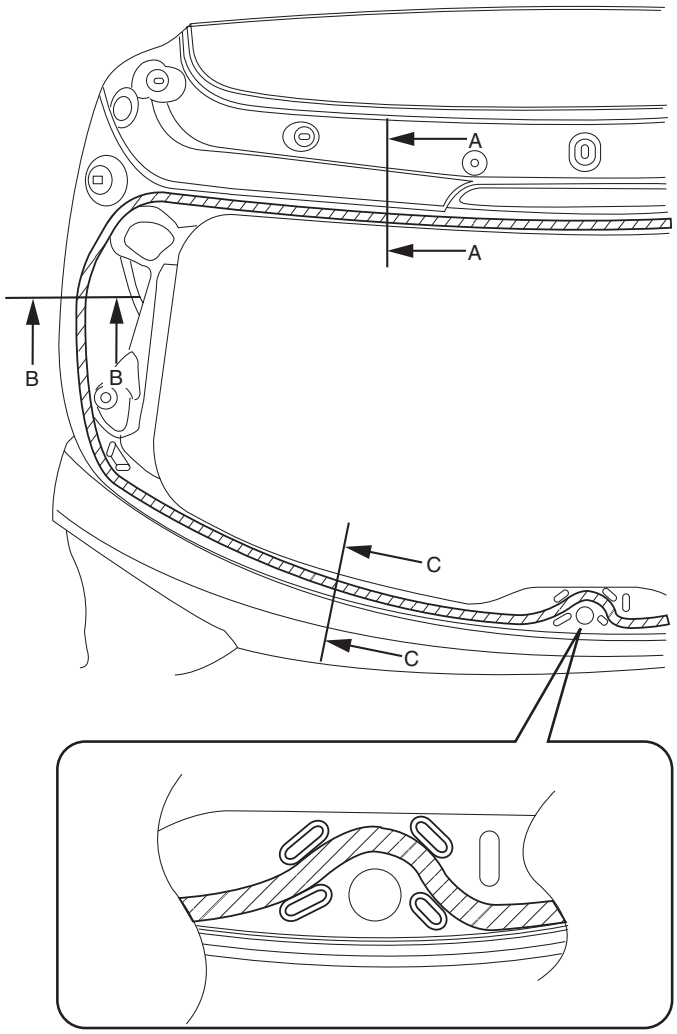

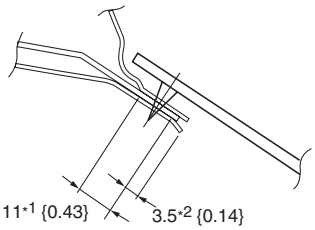

SEC. A—A

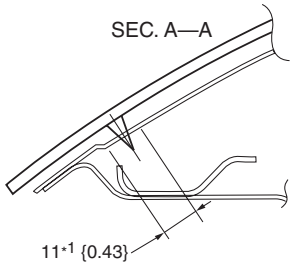

SEC. B—B

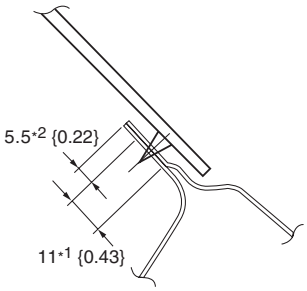

SEC. C—C

*1: PRIMER APPLICATION AREA
*2: POSSIBLE PRIMER APPLICATION AREA

mm {in}

ac5uuw00001879

GLASS/WINDOWS/MIRRORS

10. Apply sealant to the area of the glass surface as shown in the figure.

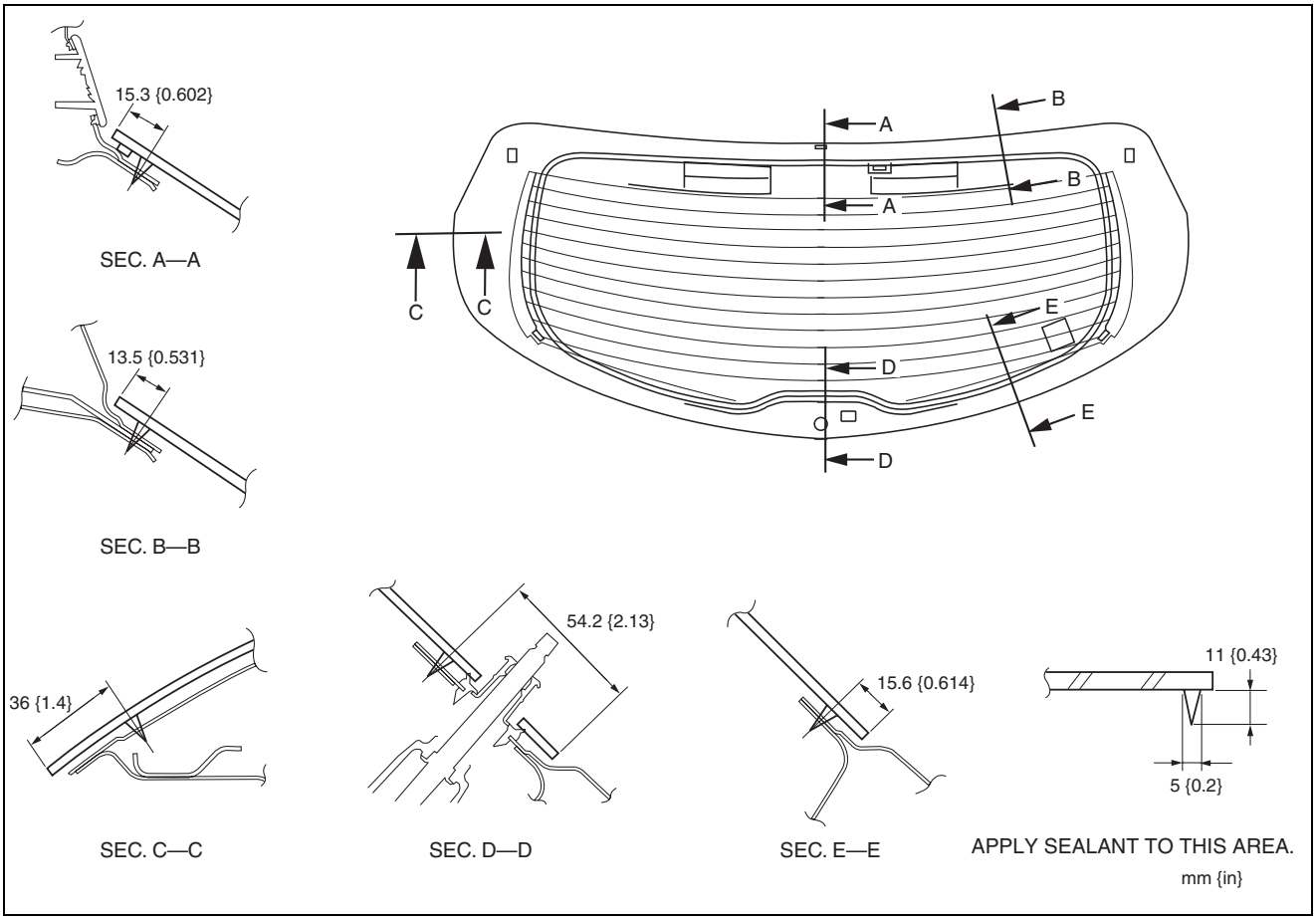

ac5wzw0000295

11. Install the rear window glass.
12. Verify that the gap at the upper and lower parts of the glass is within the specification shown in the figure, then press along the perimeter of the glass.

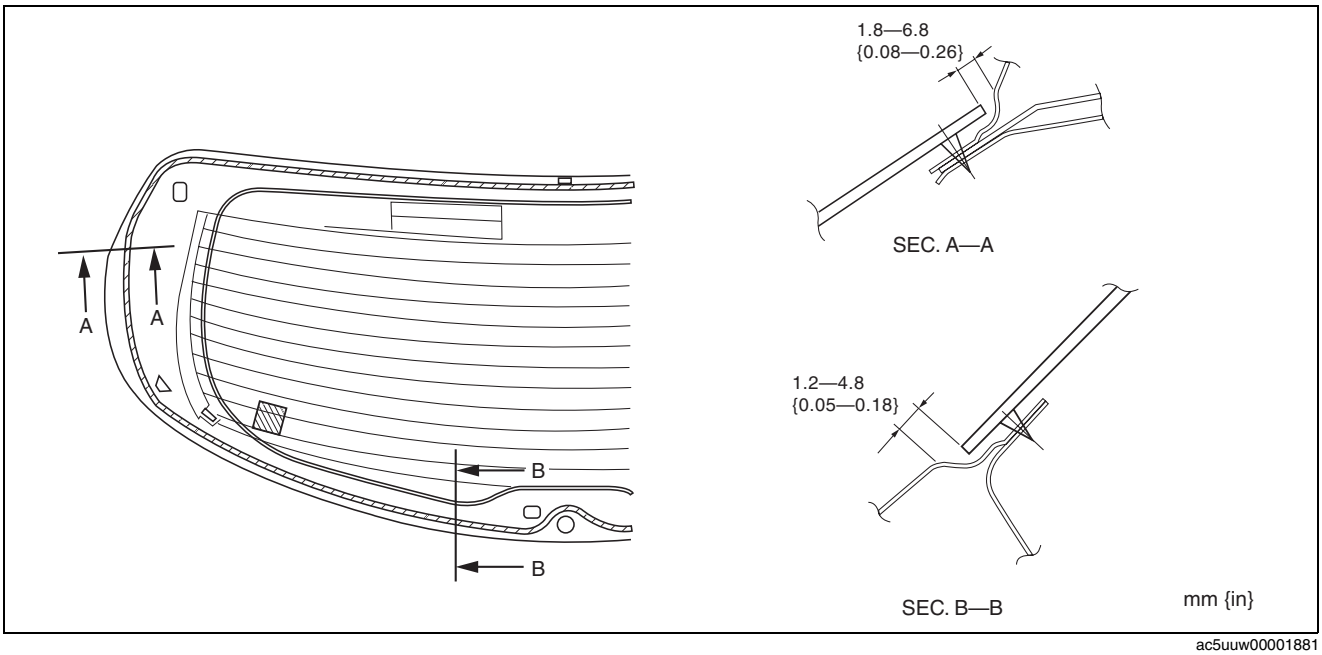

ac5uuw00001881

GLASS/WINDOWS/MIRRORS

13. Connect the filament connectors in the direction of the arrow in the order of (1), (2) shown in the figure.
14. Connect the antenna feeder No.3 connector.
15. Install the following parts:
    (1) Rear wiper arm and blade (See 09-19-32 REAR WIPER ARM AND BLADE REMOVAL/INSTALLATION.)
    (2) Rear spoiler (See 09-16-33 REAR SPOILER REMOVAL/INSTALLATION.)
    (3) Liftgate lower trim (See 09-17-89 LIFTGATE LOWER TRIM REMOVAL/INSTALLATION.)
    (4) Liftgate recess (See 09-17-89 LIFTGATE RECESS REMOVAL/INSTALLATION.)
    (5) Liftgate side trim (See 09-17-87 LIFTGATE SIDE TRIM REMOVAL/INSTALLATION.)
    (6) Liftgate upper trim (See 09-17-87 LIFTGATE UPPER TRIM REMOVAL/INSTALLATION.)
16. Connect the negative battery cable. (See 01-17A-11 NEGATIVE BATTERY CABLE DISCONNECTION/CONNECTION [SKYACTIV-G 2.0].) (See 01-17A-13 NEGATIVE BATTERY CABLE DISCONNECTION/CONNECTION [SKYACTIV-G 2.0 (WITHOUT i-stop)].) (See 01-17B-9 NEGATIVE BATTERY CABLE DISCONNECTION/CONNECTION [SKYACTIV-D 2.2].)
17. Allow the sealant to harden completely.

    Sealant hardening time: 24 h

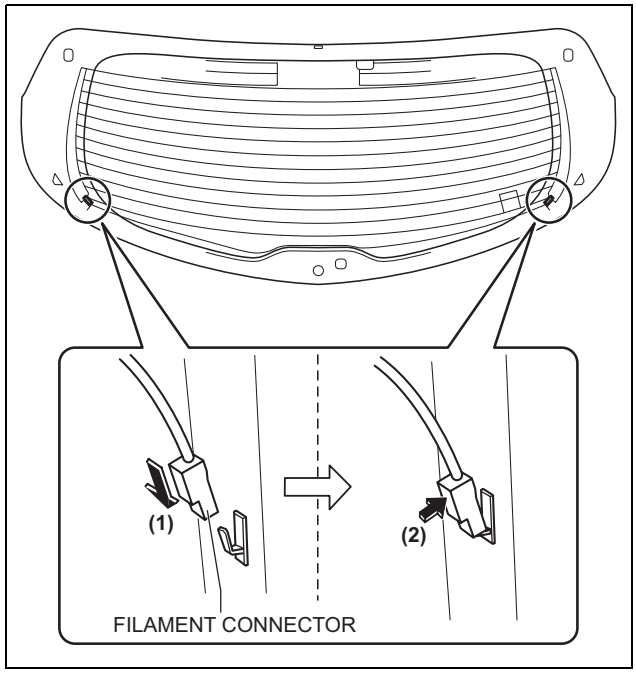

ac5uuw00001720

GLASS/WINDOWS/MIRRORS

FILAMENT INSPECTION

id091200003600

1. Switch the ignition ON (engine off).
2. Turn the rear window defroster switch on.

Caution
- **Directly touching the rear window defroster filament with the lead of the tester could damage it. Wrap aluminum foil around the end of the lead and inspect the filament by touching it with the aluminum foil.**

3. Connect the positive lead of the tester to the positive side of each filament and the negative lead to ground.
4. Gradually slide the positive lead from the positive side to the negative side and verify that the voltage decreases accordingly.
   - If the voltage changes rapidly, the filament has a malfunction. Repair the filament.

Measured part	Voltage (Reference)
(1) to (2)	Approx. 11 V to 0 V

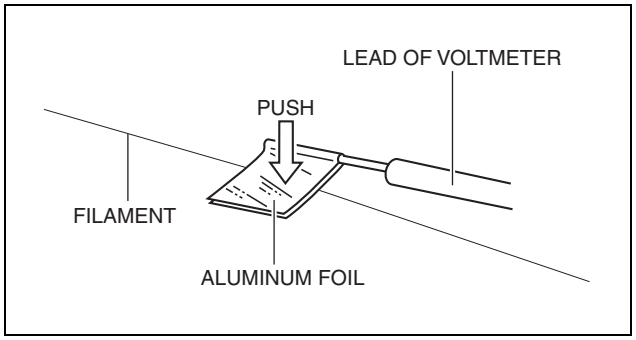

ac5wzw0000134

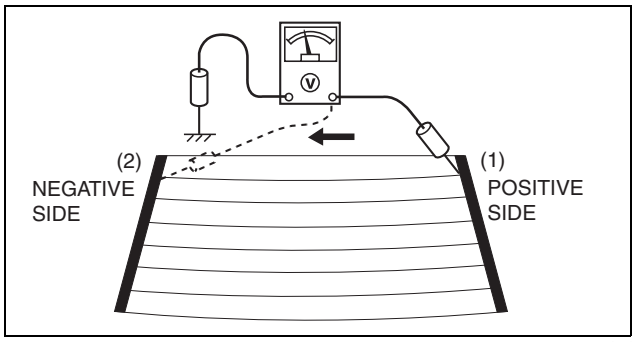

ac5wzw0000134

FILAMENT REPAIR

id091200003700

1. Clean the filament using isopropyl alcohol.
2. Attach tape to both sides of the filament.
3. Using a small brush or marking pen, apply silver paint.
4. After **2—3 min,** carefully remove the tape without damaging the applied area.

Caution
- **Do not operate the rear window defroster until the paint is completely dry. It may cause other malfunctions if it is used before the paint is dry.**

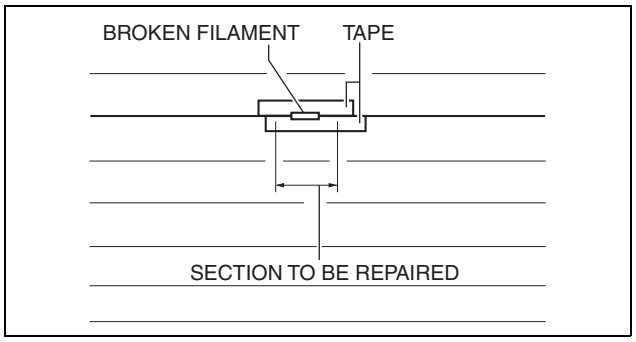

ac5wzw0000134

5. Dry the repaired part according to the following procedure.
   - When the room temperature is **25 °C {77 °F},** leave it as it is for **24 h.**
   - When a hot air blower is used, dry with the **150 °C {302 °F}** air for **30 min.**

GLASS/WINDOWS/MIRRORS

FRONT POWER WINDOW REGULATOR REMOVAL/INSTALLATION

id091200001100

1. Perform the front door glass preparation. (See 09-12-4 FRONT DOOR GLASS REMOVAL/INSTALLATION.)
2. Disconnect the negative battery cable. (See 01-17A-11 NEGATIVE BATTERY CABLE DISCONNECTION/CONNECTION [SKYACTIV-G 2.0].) (See 01-17A-13 NEGATIVE BATTERY CABLE DISCONNECTION/CONNECTION [SKYACTIV-G 2.0 (WITHOUT i-stop)].) (See 01-17B-9 NEGATIVE BATTERY CABLE DISCONNECTION/CONNECTION [SKYACTIV-D 2.2].)
3. Remove the following parts:
   (1) Inner garnish (See 09-17-65 INNER GARNISH REMOVAL/INSTALLATION.)
   (2) Front door trim (See 09-17-65 FRONT DOOR TRIM REMOVAL/INSTALLATION.)
   (3) Front door glass (See 09-12-4 FRONT DOOR GLASS REMOVAL/INSTALLATION.)
   (4) Front door speaker (See 09-20-15 FRONT DOOR SPEAKER REMOVAL/INSTALLATION.)
   (5) Front power window motor (See 09-12-45 POWER WINDOW MOTOR REMOVAL/INSTALLATION.)
4. Remove bolt A.
5. Remove nuts B.

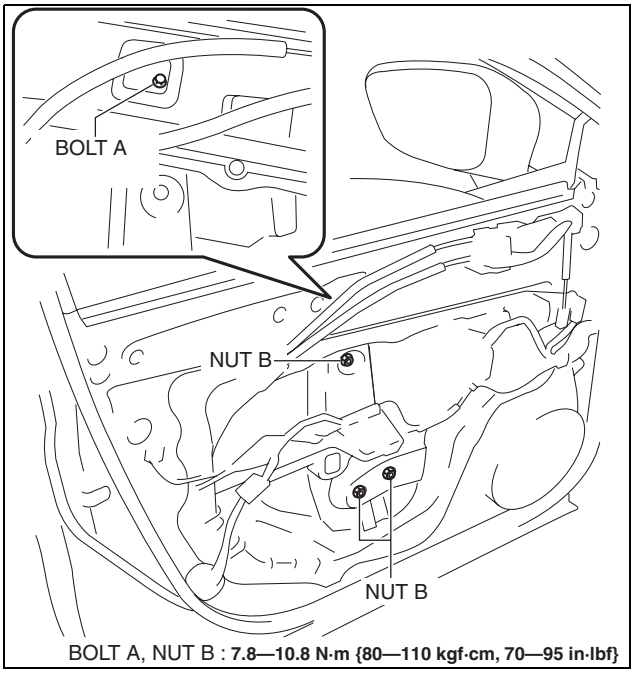

ac5wzw0000281

GLASS/WINDOWS/MIRRORS

6. Insert a hand through the speaker installation hole, rotate the drum housing in the direction shown in the figure to detach tabs from the front door module panel.

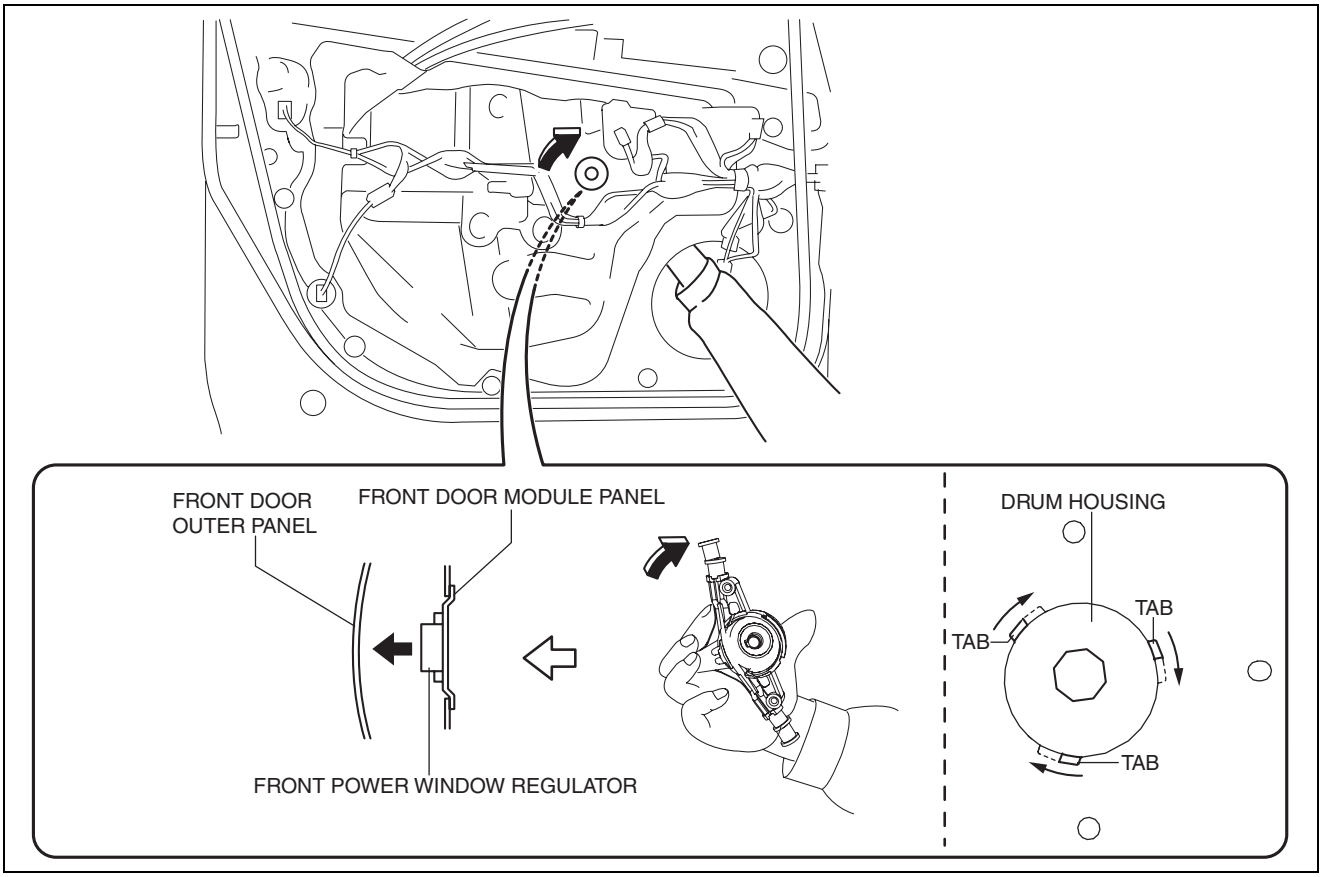

ac5wzw0000314

7. Remove the front power window regulator through the speaker installation hole.

Caution

- **When removing the front power window regulator, the front power window regulator may contact the front door speaker installation hole, and the coating film of the front door inner panel and the front power window regulator could be damaged. Remove the front power window regulator while verifying that the front power window regulator and the front door speaker installation hole do not contact each other.**

GLASS/WINDOWS/MIRRORS

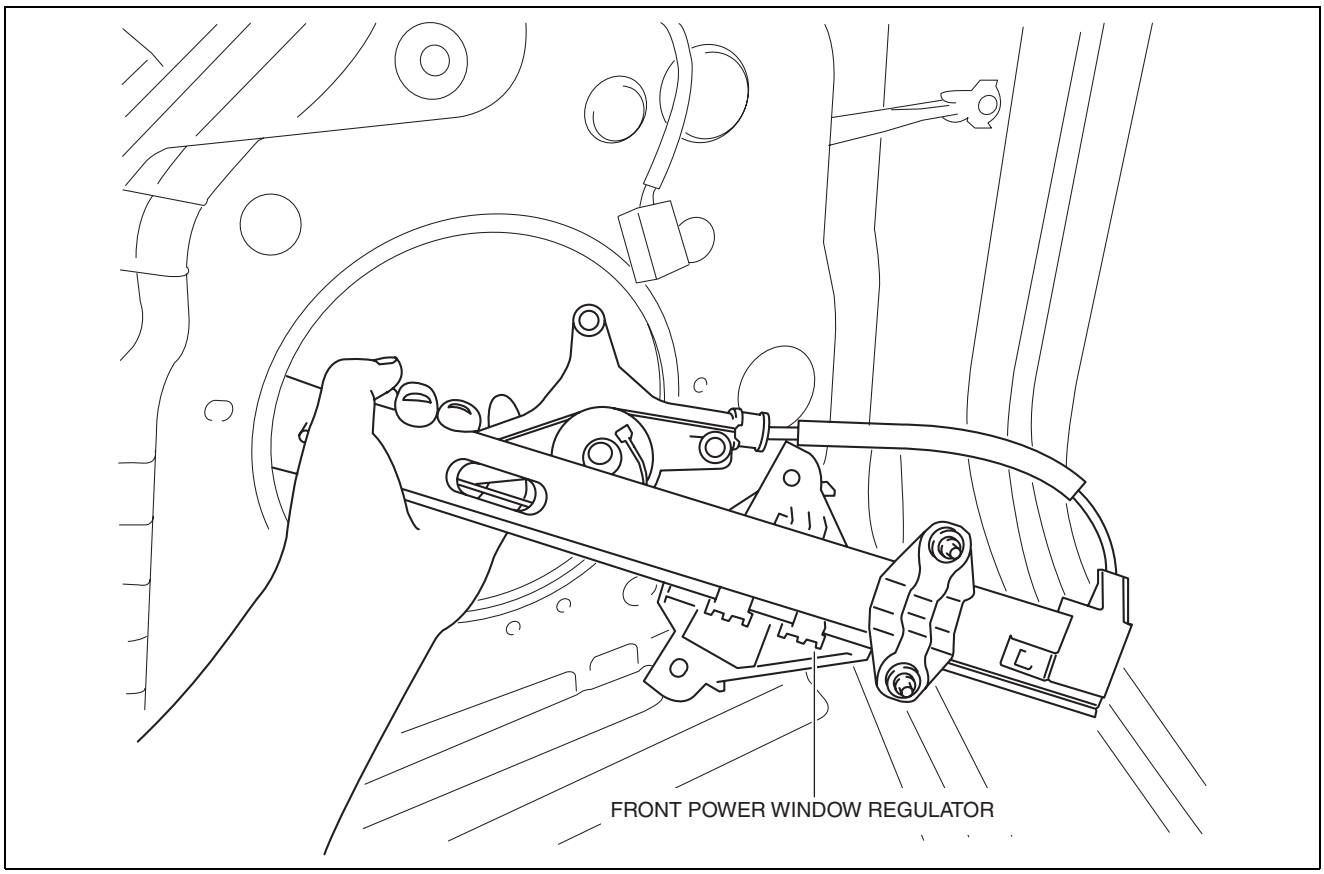

ac5wzw0000123

8. Install in the reverse order of removal.

GLASS/WINDOWS/MIRRORS

REAR POWER WINDOW REGULATOR REMOVAL/INSTALLATION

id091200001200

1. Fully lower the rear door glass.
2. Disconnect the negative battery cable. (See 01-17A-11 NEGATIVE BATTERY CABLE DISCONNECTION/CONNECTION [SKYACTIV-G 2.0].) (See 01-17A-13 NEGATIVE BATTERY CABLE DISCONNECTION/CONNECTION [SKYACTIV-G 2.0 (WITHOUT i-stop)].) (See 01-17B-9 NEGATIVE BATTERY CABLE DISCONNECTION/CONNECTION [SKYACTIV-D 2.2].)
3. Remove the following parts:
   (1) Rear door trim (See 09-17-74 REAR DOOR TRIM REMOVAL/INSTALLATION.)
   (2) Rear door quarter glass (See 09-12-9 REAR DOOR QUARTER GLASS REMOVAL/INSTALLATION.)
   (3) Rear door speaker (See 09-20-19 REAR DOOR SPEAKER REMOVAL/INSTALLATION.)
   (4) Rear power window motor (See 09-12-45 POWER WINDOW MOTOR REMOVAL/INSTALLATION.)
   (5) Rear door glass (See 09-12-7 REAR DOOR GLASS REMOVAL/INSTALLATION.)
4. Remove bolts.

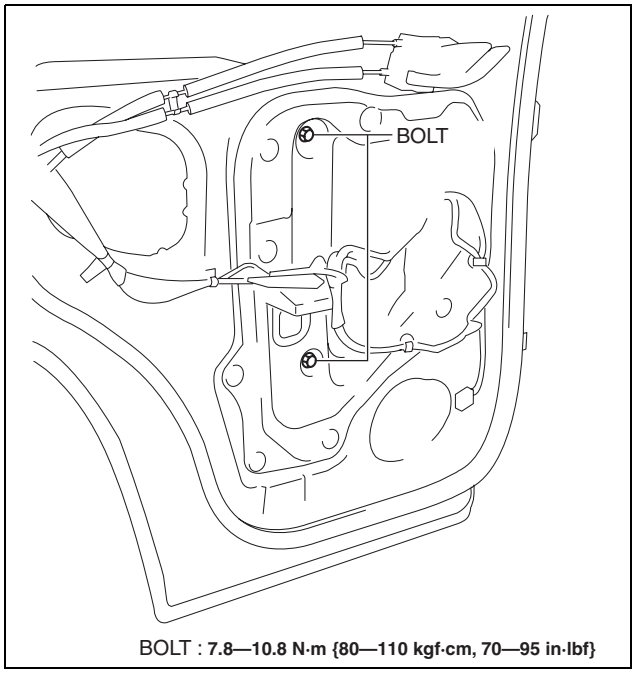

BOLT : **7.8—10.8 N·m {80—110 kgf·cm, 70—95 in·lbf}**

ac5wzw0000281

GLASS/WINDOWS/MIRRORS

5. Insert a hand through the speaker installation hole, rotate the drum housing in the direction shown in the figure to detach tabs from the rear door module panel.

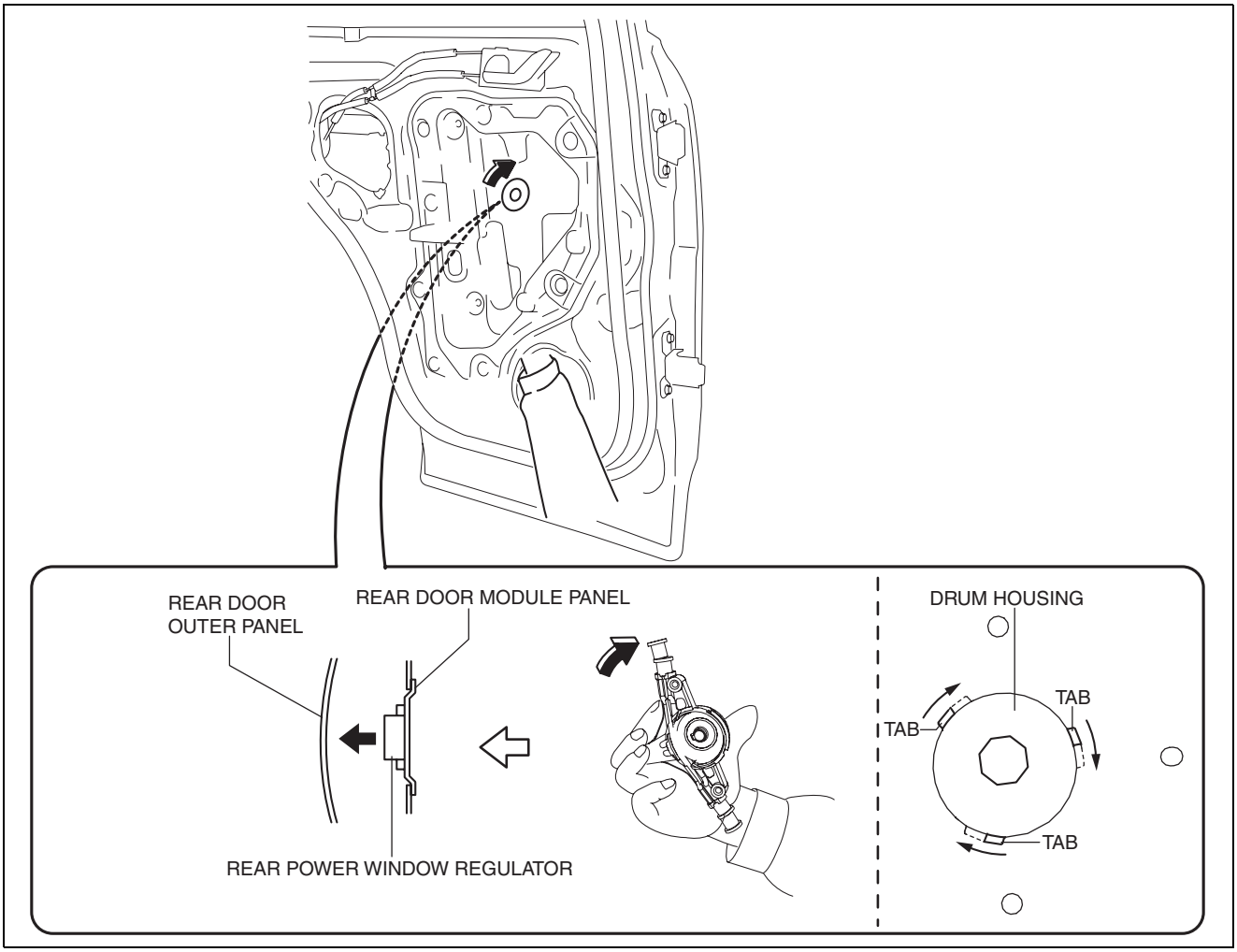

ac5wzw0000314

6. Remove the rear power window regulator through the speaker installation hole.

Caution

- **When removing the rear power window regulator, the rear power window regulator may contact the rear door speaker installation hole, and the coating film of the rear door inner panel and the rear power window regulator could be damaged. Remove the rear power window regulator while verifying that the rear power window regulator and the rear door speaker installation hole do not contact each other.**

GLASS/WINDOWS/MIRRORS

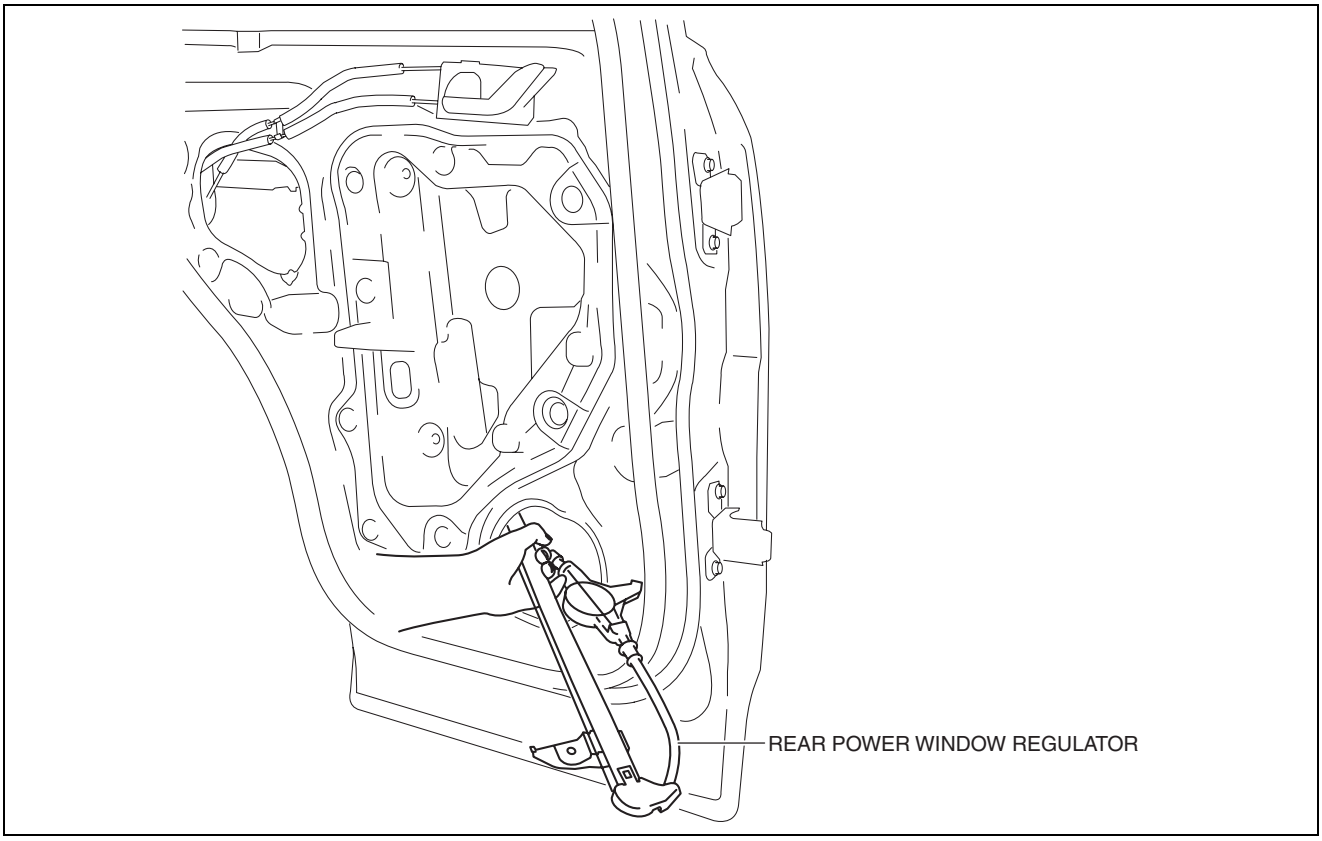

ac5wzw0000123

7. Install in the reverse order of removal.

GLASS/WINDOWS/MIRRORS

POWER WINDOW MOTOR REMOVAL/INSTALLATION

id091200001400

Front Power Window Motor

1. Fully lower the front door glass.
2. Disconnect the negative battery cable. (See 01-17A-11 NEGATIVE BATTERY CABLE DISCONNECTION/CONNECTION [SKYACTIV-G 2.0].) (See 01-17A-13 NEGATIVE BATTERY CABLE DISCONNECTION/CONNECTION [SKYACTIV-G 2.0 (WITHOUT i-stop)].) (See 01-17B-9 NEGATIVE BATTERY CABLE DISCONNECTION/CONNECTION [SKYACTIV-D 2.2].)
3. Remove the inner garnish. (See 09-17-65 INNER GARNISH REMOVAL/INSTALLATION.)
4. Remove the front door trim. (See 09-17-65 FRONT DOOR TRIM REMOVAL/INSTALLATION.)
5. Disconnect the front power window motor connector.
6. Remove bolt A.
7. Remove bolt B.
8. Remove bolt C.
9. Remove the front power window motor.
10. Install in the reverse order of removal.

Note

- When installing the power window motor to the power window regulator drum, the drum housing tab may come off the door unit. If this happens, remove the door speaker, insert your hand in the speaker installation hole, connect the drum housing tabs, and while supporting the drum housing, install the power window motor to the drum.

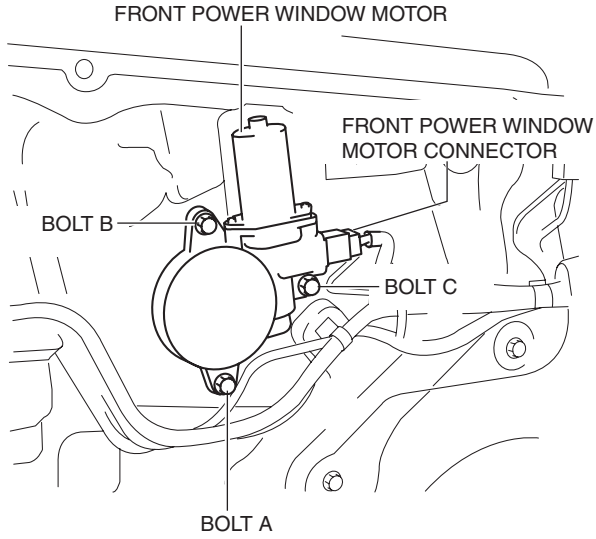

BOLT A, B, C : **6.2—8.2 N·m {64—83 kgf·cm, 55—72 in·lbf}**

ac5wzw0000306

Rear Power Window Motor

1. Fully lower the rear door glass.
2. Disconnect the negative battery cable. (See 01-17A-11 NEGATIVE BATTERY CABLE DISCONNECTION/CONNECTION [SKYACTIV-G 2.0].) (See 01-17A-13 NEGATIVE BATTERY CABLE DISCONNECTION/CONNECTION [SKYACTIV-G 2.0 (WITHOUT i-stop)].) (See 01-17B-9 NEGATIVE BATTERY CABLE DISCONNECTION/CONNECTION [SKYACTIV-D 2.2].)
3. Remove the rear door trim. (See 09-17-74 REAR DOOR TRIM REMOVAL/INSTALLATION.)

4. Disconnect the rear power window motor connector.
5. Remove bolts A.
6. Remove bolt B.
7. Remove the rear power window motor.
8. Install in the reverse order of removal.

Note

- When installing the power window motor to the power window regulator drum, the drum housing tab may come off the door unit. If this happens, remove the door speaker, insert your hand in the speaker installation hole, connect the drum housing tabs, and while supporting the drum housing, install the power window motor to the drum.

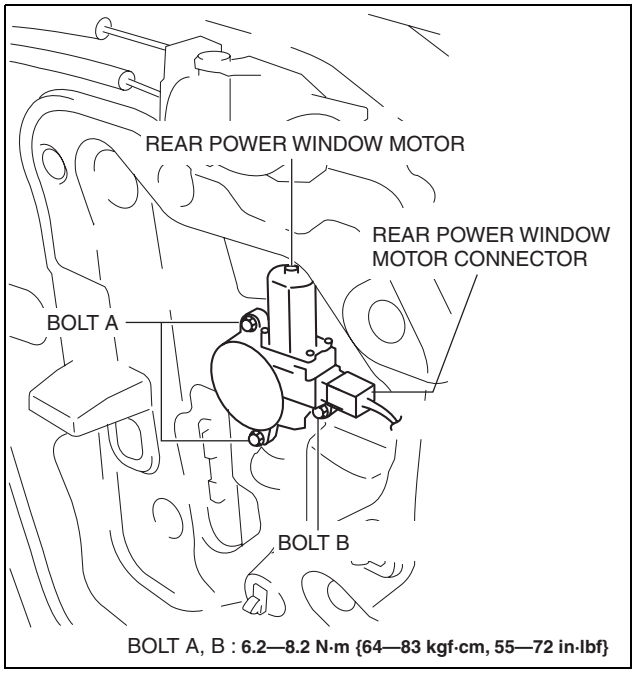

ac5wzw0000306

GLASS/WINDOWS/MIRRORS

POWER WINDOW MOTOR INSPECTION

id091200001700

Auto-open/close Function For All Windows

Front power window motor

1. Disconnect the negative battery cable. (See 01-17A-11 NEGATIVE BATTERY CABLE DISCONNECTION/CONNECTION [SKYACTIV-G 2.0].) (See 01-17A-13 NEGATIVE BATTERY CABLE DISCONNECTION/CONNECTION [SKYACTIV-G 2.0 (WITHOUT i-stop)].) (See 01-17B-9 NEGATIVE BATTERY CABLE DISCONNECTION/CONNECTION [SKYACTIV-D 2.2].)
2. Remove the inner garnish. (See 09-17-65 INNER GARNISH REMOVAL/INSTALLATION.)
3. Remove the front door trim. (See 09-17-65 FRONT DOOR TRIM REMOVAL/INSTALLATION.)
4. Disconnect the power window motor connector.
5. Apply battery positive voltage and connect the ground to power window motor terminals E and F, and then inspect the power window motor operation.

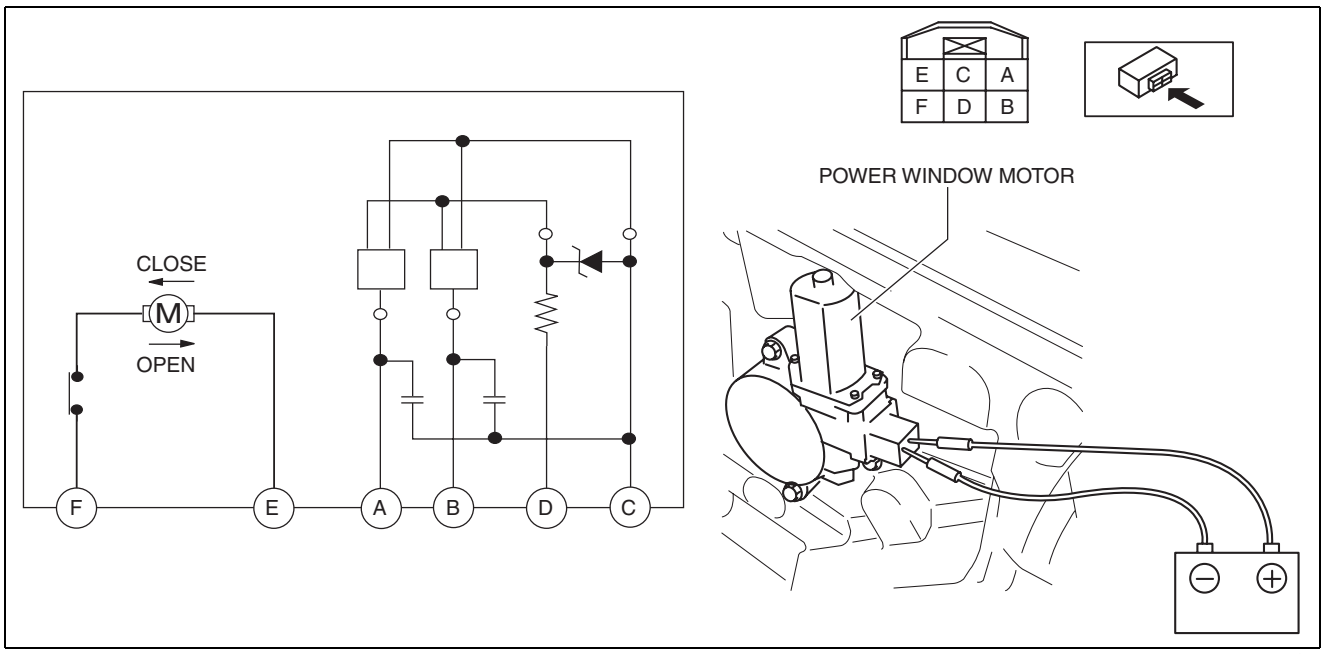

ac5wzw0000123

- If the power window motor does not operate as indicated in the table, replace it.

Operation	Terminal	
	E	F
Open	B+	Ground
Close	Ground	B+

6. Connect the battery positive voltage to power window motor terminal D and connect terminal C to ground.
7. Operate the power window motor and verify the wave patterns for terminals A and B.
   - Terminal:
     A, B(+) ⇔ ground (-)
   - Oscilloscope setting: 2 V/DIV (Y), 1 ms/DIV (X), DC range
   - If the malfunction, replace the power window motor.

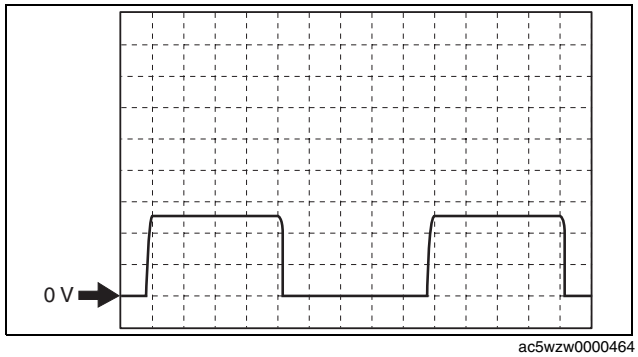

ac5wzw0000464

GLASS/WINDOWS/MIRRORS

Rear power window motor

1. Disconnect the negative battery cable. (See 01-17A-11 NEGATIVE BATTERY CABLE DISCONNECTION/CONNECTION [SKYACTIV-G 2.0].) (See 01-17A-13 NEGATIVE BATTERY CABLE DISCONNECTION/CONNECTION [SKYACTIV-G 2.0 (WITHOUT i-stop)].) (See 01-17B-9 NEGATIVE BATTERY CABLE DISCONNECTION/CONNECTION [SKYACTIV-D 2.2].)
2. Remove the rear door trim. (See 09-17-74 REAR DOOR TRIM REMOVAL/INSTALLATION.)
3. Disconnect the power window motor connector.
4. Apply battery positive voltage and connect the ground to power window motor terminals E and F, and then inspect the power window motor operation.

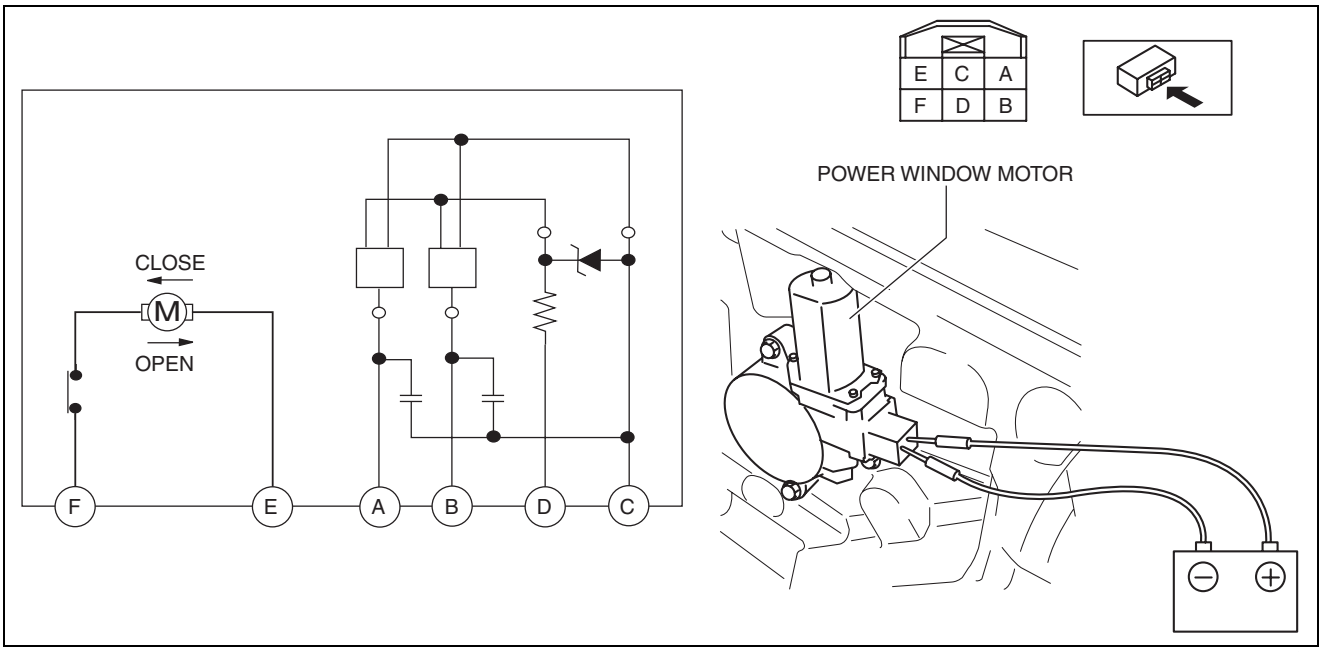

ac5wzw0000123

- If the power window motor does not operate as indicated in the table, replace it.

Operation	Terminal	
	E	F
Open	B+	Ground
Close	Ground	B+

5. Connect the battery positive voltage to power window motor terminal D and connect terminal C to ground.
6. Operate the power window motor and verify the wave patterns for terminals A and B.
   - Terminal:
     A, B(+) ⇔ ground (-)
   - Oscilloscope setting: 2 V/DIV (Y), 1 ms/DIV (X), DC range
   - If the malfunction, replace the power window motor.

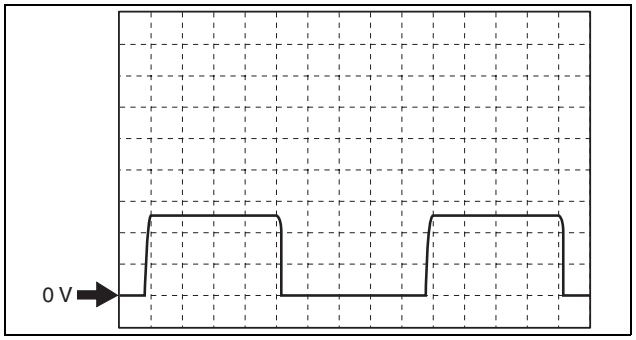

ac5wzw0000464

GLASS/WINDOWS/MIRRORS

Auto-open/close Function For Driver-side
Front power window motor (for driver-side)

1. Disconnect the negative battery cable. (See 01-17A-11 NEGATIVE BATTERY CABLE DISCONNECTION/CONNECTION [SKYACTIV-G 2.0].) (See 01-17A-13 NEGATIVE BATTERY CABLE DISCONNECTION/CONNECTION [SKYACTIV-G 2.0 (WITHOUT i-stop)].) (See 01-17B-9 NEGATIVE BATTERY CABLE DISCONNECTION/CONNECTION [SKYACTIV-D 2.2].)
2. Remove the inner garnish. (See 09-17-65 INNER GARNISH REMOVAL/INSTALLATION.)
3. Remove the front door trim. (See 09-17-65 FRONT DOOR TRIM REMOVAL/INSTALLATION.)
4. Disconnect the power window motor connector.
5. Apply battery positive voltage and connect the ground to power window motor terminals E and F, and then inspect the power window motor operation.

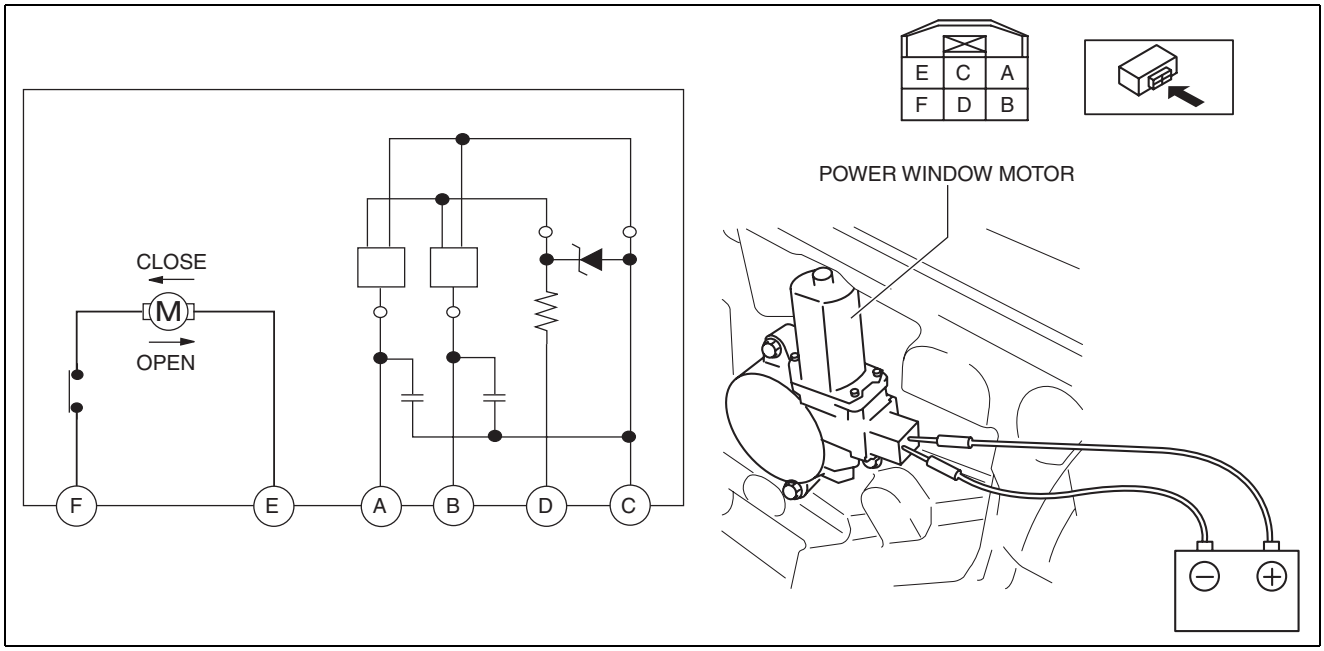

ac5wzw0000123

- If the power window motor does not operate as indicated in the table, replace it.

Operation	Terminal	
	E	F
Open	B+	Ground
Close	Ground	B+

6. Connect the battery positive voltage to power window motor terminal D and connect terminal C to ground.
7. Operate the power window motor and verify the wave patterns for terminals A and B.
   - Terminal:
     A, B(+) ⇔ ground (-)
   - Oscilloscope setting: 2 V/DIV (Y), 1 ms/DIV (X), DC range
   - If the malfunction, replace the power window motor.

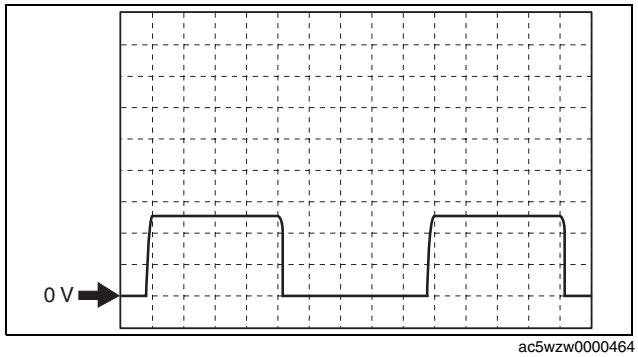

ac5wzw0000464

GLASS/WINDOWS/MIRRORS

Front power window motor (for passenger-side)

1. Disconnect the negative battery cable. (See 01-17A-11 NEGATIVE BATTERY CABLE DISCONNECTION/CONNECTION [SKYACTIV-G 2.0].) (See 01-17A-13 NEGATIVE BATTERY CABLE DISCONNECTION/CONNECTION [SKYACTIV-G 2.0 (WITHOUT i-stop)].) (See 01-17B-9 NEGATIVE BATTERY CABLE DISCONNECTION/CONNECTION [SKYACTIV-D 2.2].)
2. Remove the inner garnish. (See 09-17-65 INNER GARNISH REMOVAL/INSTALLATION.)
3. Remove the front door trim. (See 09-17-65 FRONT DOOR TRIM REMOVAL/INSTALLATION.)
4. Disconnect the power window motor connector.
5. Apply battery positive voltage and connect the ground to power window motor terminals E and F, and then inspect the power window motor operation.

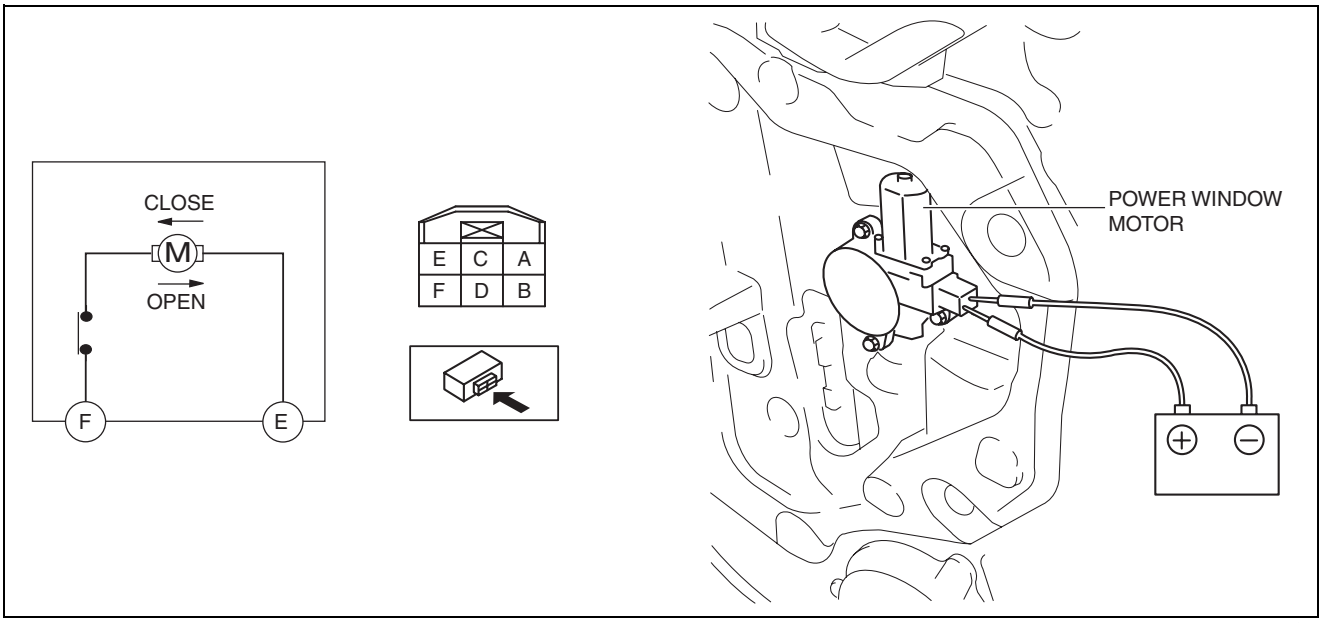

ac5wzw0000123

- If the power window motor does not operate as indicated in the table, replace it.

Operation	Terminal	
	E	F
Close	B+	Ground
Open	Ground	B+

Rear power window motor

1. Disconnect the negative battery cable. (See 01-17A-11 NEGATIVE BATTERY CABLE DISCONNECTION/CONNECTION [SKYACTIV-G 2.0].) (See 01-17A-13 NEGATIVE BATTERY CABLE DISCONNECTION/CONNECTION [SKYACTIV-G 2.0 (WITHOUT i-stop)].) (See 01-17B-9 NEGATIVE BATTERY CABLE DISCONNECTION/CONNECTION [SKYACTIV-D 2.2].)
2. Remove the rear door trim (See 09-17-74 REAR DOOR TRIM REMOVAL/INSTALLATION.)
3. Disconnect the power window motor connector.

GLASS/WINDOWS/MIRRORS

4. Apply battery positive voltage and connect the ground to power window motor terminals E and F, and then inspect the power window motor operation.

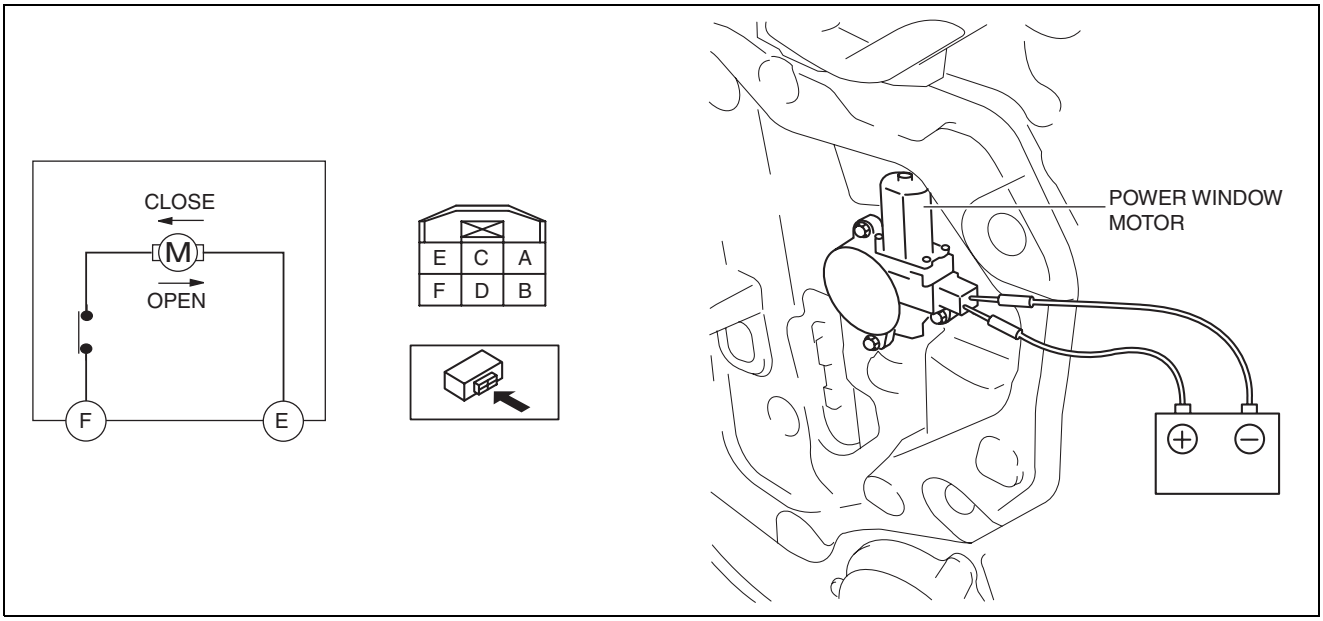

ac5wzw0000123

- If the power window motor does not operate as indicated in the table, replace it.

Operation	Terminal	
	E	F
Close	B+	Ground
Open	Ground	B+

GLASS/WINDOWS/MIRRORS

POWER WINDOW MAIN SWITCH REMOVAL/INSTALLATION

id091200002000

1. Disconnect the negative battery cable. (See 01-17A-11 NEGATIVE BATTERY CABLE DISCONNECTION/CONNECTION [SKYACTIV-G 2.0].) (See 01-17A-13 NEGATIVE BATTERY CABLE DISCONNECTION/CONNECTION [SKYACTIV-G 2.0 (WITHOUT i-stop)].) (See 01-17B-9 NEGATIVE BATTERY CABLE DISCONNECTION/CONNECTION [SKYACTIV-D 2.2].)
2. Remove the cover A.
3. Insert a tape-wrapped flathead screwdriver shown in the figure and remove the tab B in the direction of arrow (1).

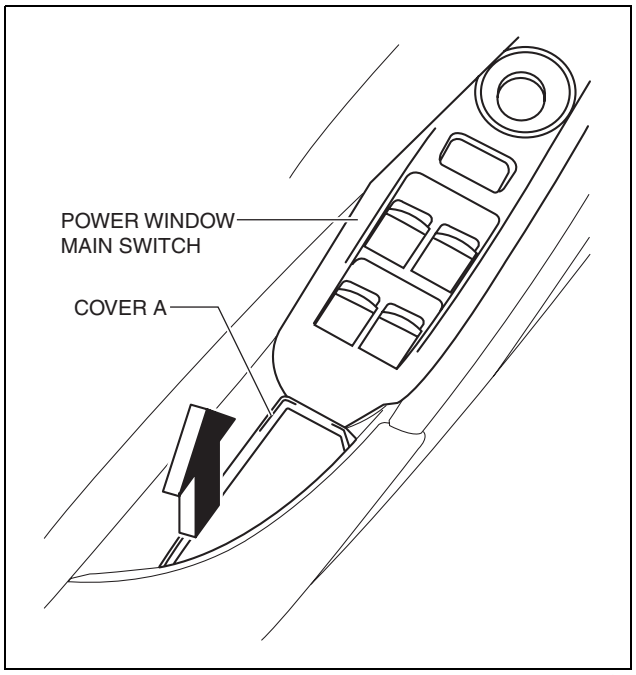

ac5wzw0000123

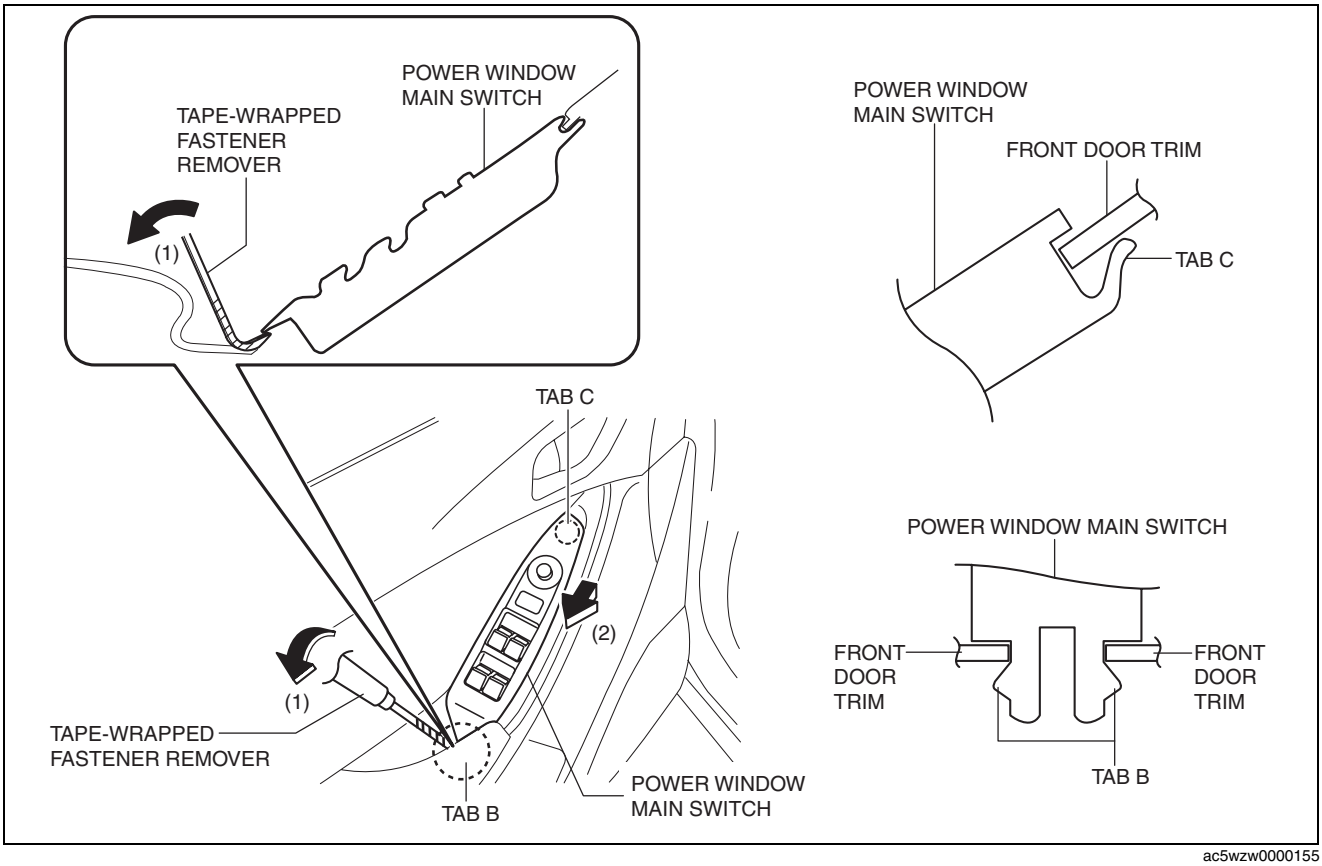

ac5wzw0000155

4. Slide the power window main switch in the direction of the arrow (2) shown in the figure and remove the tab C.
5. Disconnect the power window main switch connector.

GLASS/WINDOWS/MIRRORS

6. Pull the edge of power window main switch cover in the direction of arrow (3) and detach tabs D.

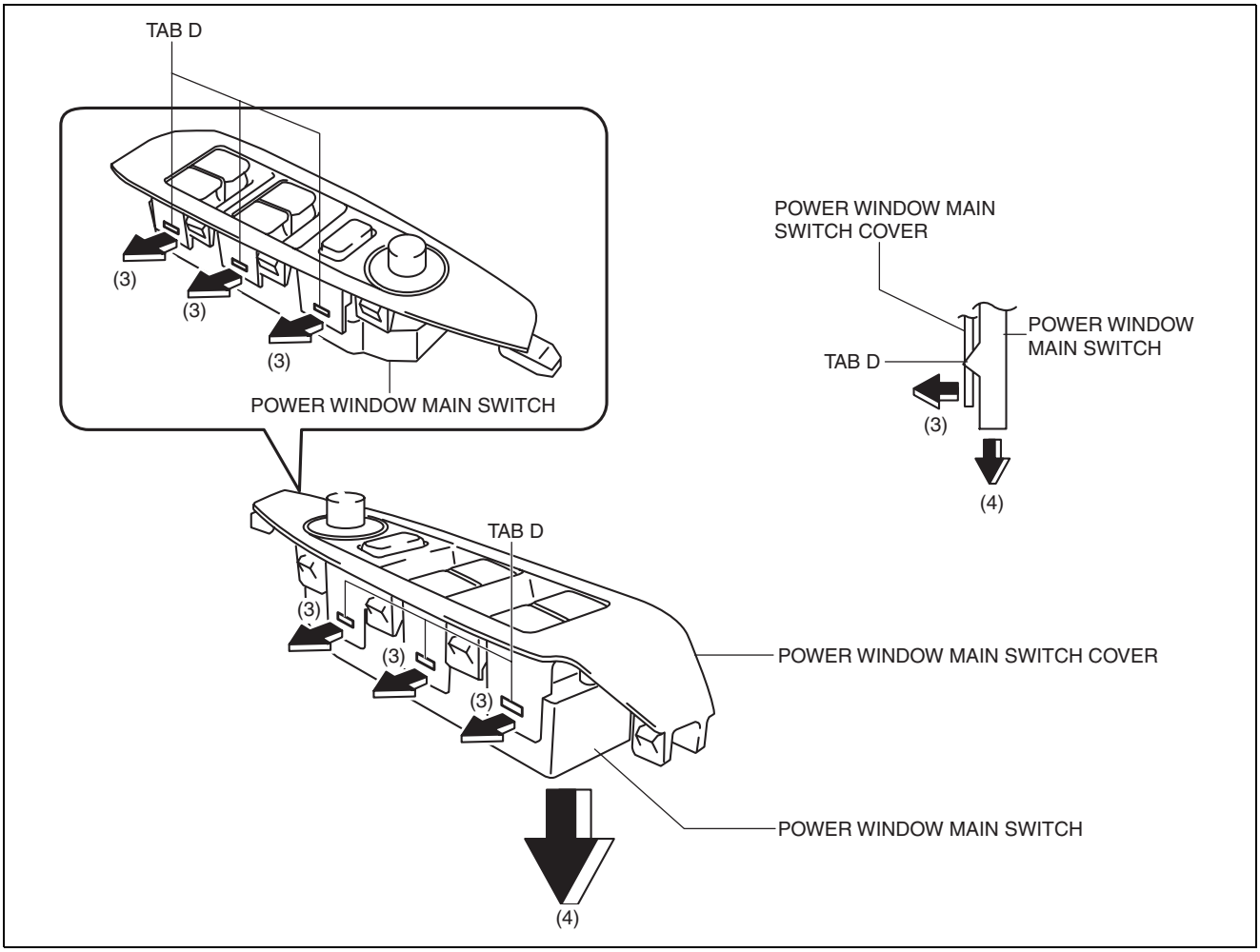

ac5wzw0000124

7. Remove the power window main switch in the direction of arrow (4) shown in the figure.
8. Install in the reverse order of removal.

GLASS/WINDOWS/MIRRORS

POWER WINDOW MAIN SWITCH INSPECTION

id091200002100

1. Disconnect the negative battery cable. (See 01-17A-11 NEGATIVE BATTERY CABLE DISCONNECTION/CONNECTION [SKYACTIV-G 2.0].) (See 01-17A-13 NEGATIVE BATTERY CABLE DISCONNECTION/CONNECTION [SKYACTIV-G 2.0 (WITHOUT i-stop)].) (See 01-17B-9 NEGATIVE BATTERY CABLE DISCONNECTION/CONNECTION [SKYACTIV-D 2.2].)
2. Remove the following parts:
   (1) Inner garnish. (driver's side) (See 09-17-65 INNER GARNISH REMOVAL/INSTALLATION.)
   (2) Front door trim. (driver's side) (See 09-17-65 FRONT DOOR TRIM REMOVAL/INSTALLATION.)
   (3) Power window main switch (See 09-12-52 POWER WINDOW MAIN SWITCH REMOVAL/INSTALLATION.)
3. Connect the power window main switch connector.
4. Connect the negative battery cable. (See 01-17A-11 NEGATIVE BATTERY CABLE DISCONNECTION/CONNECTION [SKYACTIV-G 2.0].) (See 01-17A-13 NEGATIVE BATTERY CABLE DISCONNECTION/CONNECTION [SKYACTIV-G 2.0 (WITHOUT i-stop)].) (See 01-17B-9 NEGATIVE BATTERY CABLE DISCONNECTION/CONNECTION [SKYACTIV-D 2.2].)
5. Measure the voltage at each terminal.
   - If the voltage is not as specified in the terminal voltage table, inspect the parts under Inspection item (s) and related wiring harnesses.
     — If the system does not work normally even though the inspection items or related wiring harnesses do not have any malfunction, replace the power window main switch.

Terminal Voltage Table (Reference)

POWER WINDOW MAIN SWITCH WIRING HARNESS SIDE CONNECTOR

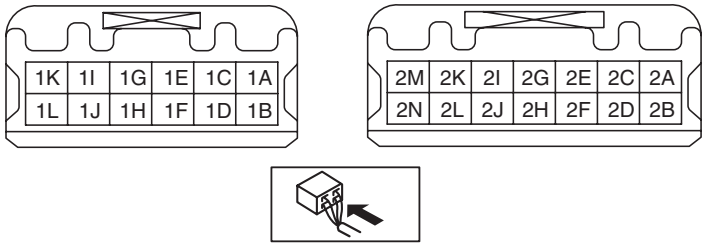

ac5wzw0000490

GLASS/WINDOWS/MIRRORS

Auto-open/close Function For All Windows

Terminal	Signal name	Connected to	Measurement condition	Voltage (V)	Inspection item (s)
1A	Sensor power supply	Power window motor (driver's side)	Switch the ignition ON (engine on or off)	B+	• Power window motor (driver's side) (See 09-12-47 POWER WINDOW MOTOR INSPECTION.) • Related wiring harness
			Switch the ignition ACC or OFF	1.0 or less	
1B	Power supply	P.WINDOW3 30A fuse	Under any condition	B+	• P.WINDOW3 30A fuse • Related wiring harness
1C	-	-	-	-	-
1D	Driver's side window open signal	Power window motor (driver's side)	Door glass (driver's side) opening	B+	• Power window motor (driver's side) (See 09-12-47 POWER WINDOW MOTOR INSPECTION.) • Related wiring harness
			while door glass (driver-side) is opening for approx. 40 s after ignition is switched OFF (LOCK) from ON	B+	
			Other	1.0 or less	
1E	Door open/ close signal	Rear body control module (RBCM)	Any door is open	1.0 or less	• Rear body control module (RBCM) • Related wiring harness
			All door is close	approx. 6.0	
1F	Driver's side window close signal	Power window motor (driver's side)	Door glass (driver's side) closing	B+	• Power window motor (driver's side) (See 09-12-47 POWER WINDOW MOTOR INSPECTION.) • Related wiring harness
			while door glass (driver-side) is closing for approx. 40 s after ignition is switched OFF (LOCK) from ON	B+	
			Other	1.0 or less	
1G	IG1	C/U IG1 15A fuse	Switch the ignition ON (engine on or off)	B+	• C/U IG1 15A fuse • Related wiring harness
			Switch the ignition OFF (LOCK)	1.0 or less	
1H	-	-	-	-	-
1I	Sensor ground	Power window motor (driver's side)	Under any condition	1.0 or less	• Power window motor (driver's side) (See 09-12-47 POWER WINDOW MOTOR INSPECTION.) • Related wiring harness
1J	-	-	-	-	-
1K	GND	Body ground	Under any condition	1.0 or less	• Related wiring harness
1L	Serial communication	Power window subswitch	Because this terminal is for communication, good/no good judgment by terminal voltage is not possible		• Power window subswitch (See 09-12-47 POWER WINDOW MOTOR INSPECTION.) • Related wiring harness
2A	ACC	MIRROR 7.5 A fuse	Switch the ignition to ACC	1.0 or less	• MIRROR 7.5 A fuse • Related wiring harness
			Other	B+	
2B	Power outer mirror control signal	Power outer mirror	Inspect the power outer mirror switch. (See 09-12-87 POWER OUTER MIRROR SWITCH INSPECTION.)		
2C	Power outer mirror control signal	Power outer mirror	Inspect the power outer mirror switch. (See 09-12-87 POWER OUTER MIRROR SWITCH INSPECTION.)		
2D	Pulse 1	Power window motor (driver's side)	Door glass (driver's side) operating	Wave pattern (See 09-12-60 Inspection Using an Oscilloscope (Reference).)	• Related wiring harness • Power window motor (driver's side) (See 09-12-47 POWER WINDOW MOTOR INSPECTION.)
2E	Power outer mirror control signal	Power outer mirror	Inspect the power outer mirror switch. (See 09-12-87 POWER OUTER MIRROR SWITCH INSPECTION.)		

GLASS/WINDOWS/MIRRORS

Terminal	Signal name	Connected to	Measurement condition	Voltage (V)	Inspection item (s)
2F	Pulse 2	Power window motor (driver's side)	Door glass (driver's side) operating	Wave pattern (See 09-12-60 Inspection Using an Oscilloscope (Reference).)	• Power window motor (driver's side) (See 09-12-47 POWER WINDOW MOTOR INSPECTION.) • Related wiring harness
2G	Power outer mirror control signal	Power outer mirror	Inspect the power outer mirror switch. (See 09-12-87 POWER OUTER MIRROR SWITCH INSPECTION.)		
2H	Power outer mirror control signal	Power outer mirror	Inspect the power outer mirror switch. (See 09-12-87 POWER OUTER MIRROR SWITCH INSPECTION.)		
2I	Power outer mirror control signal	Power outer mirror	Inspect the power outer mirror switch. (See 09-12-87 POWER OUTER MIRROR SWITCH INSPECTION.)		
2J	Power outer mirror control signal	Power outer mirror	Inspect the power outer mirror switch. (See 09-12-87 POWER OUTER MIRROR SWITCH INSPECTION.)		
2K	-	-	-	-	-
2L	-	-	-	-	-
2M	-	-	-	-	-
2N	GND	Body ground	Under any condition	1.0 or less	• Related wiring harness

GLASS/WINDOWS/MIRRORS

Auto-open/close Function for Driver-side (R.H.D.)

Terminal	Signal name	Connected to	Measurement condition	Voltage (V)	Inspection item (s)
1A	Rear right side window open signal	Power window motor (rear right side)	Door glass (rear right side) opening	B+	• Power window motor (rear right side) (See 09-12-47 POWER WINDOW MOTOR INSPECTION.) • Related wiring harness
			Other	1.0 or less	
1B	Door open/ close signal	Rear body control module (RBCM)	Any door is open	1.0 or less	• Rear body control module (RBCM) • Related wiring harness
			All door is close	approx. 6.0	
1C	Rear right side window close signal	Power window motor (rear right side)	Door glass (rear right side) closing	B+	• Power window motor (rear right side) (See 09-12-47 POWER WINDOW MOTOR INSPECTION.) • Related wiring harness
			Other	1.0 or less	
1D	Passenger's side window open signal	Power window motor (passenger's side)	Door glass (passenger's side) opening	B+	• Power window motor (passenger's side) (See 09-12-47 POWER WINDOW MOTOR INSPECTION.) • Related wiring harness
			Other	1.0 or less	
1E	-	-	-	-	-
1F	Driver's side window open signal	Power window motor (driver's side)	Door glass (driver's side) opening	B+	• Power window motor (driver's side) (See 09-12-47 POWER WINDOW MOTOR INSPECTION.) • Related wiring harness
			Other	1.0 or less	
1G	Rear left side window open signal	Power window motor (rear left side)	Door glass (rear left side) opening	B+	• Power window motor (rear left side) (See 09-12-47 POWER WINDOW MOTOR INSPECTION.) • Related wiring harness
			Other	1.0 or less	
1H	Driver's side window close signal	Power window motor (driver's side)	Door glass (driver's side) closing	B+	• Power window motor (driver's side) (See 09-12-47 POWER WINDOW MOTOR INSPECTION.) • Related wiring harness
			Other	1.0 or less	
1I	Rear left side window close signal	Power window motor (rear left side)	Door glass (rear left side) closing	B+	• Power window motor (rear left side) (See 09-12-47 POWER WINDOW MOTOR INSPECTION.) • Related wiring harness
			Other	1.0 or less	
1J	Passenger's side window close signal	Power window motor (passenger's side)	Door glass (passenger's side) closing	B+	• Power window motor (passenger's side) (See 09-12-47 POWER WINDOW MOTOR INSPECTION.) • Related wiring harness
			Other	1.0 or less	
1K	IG1	P.WINDOW1 30 A fuse	Switch the ignition ON (engine on or off)	B+	• P.WINDOW3 30 A fuse • Related wiring harness
1L	Power supply	P.WINDOW2 25 A fuse	Under any condition	V_B	• P.WINDOW2 25 A fuse • Related wiring harness
2A	GND	Body ground	Under any condition	1.0 or less	• Related wiring harness
2B	Sensor ground	Power window motor (driver's side)	Under any condition	1.0 or less	• Power window motor (driver's side) (See 09-12-47 POWER WINDOW MOTOR INSPECTION.) • Related wiring harness

GLASS/WINDOWS/MIRRORS

Terminal	Signal name	Connected to	Measurement condition	Voltage (V)	Inspection item (s)
2C	Power outer mirror control signal	Power outer mirror	Inspect the power outer mirror switch. (See 09-12-87 POWER OUTER MIRROR SWITCH INSPECTION.)		
2D	Pulse 1	Power window motor (driver's side)	Door glass (driver's side) operating	Wave pattern (See 09-12-60 Inspection Using an Oscilloscope (Reference).)	• Related wiring harness • Power window motor (driver's side) (See 09-12-47 POWER WINDOW MOTOR INSPECTION.)
2E	Power outer mirror control signal	Power outer mirror	Inspect the power outer mirror switch. (See 09-12-87 POWER OUTER MIRROR SWITCH INSPECTION.)		
2F	Pulse 2	Power window motor (driver's side)	Door glass (driver's side) opening	Wave pattern (See 09-12-60 Inspection Using an Oscilloscope (Reference).)	• Power window motor (driver's side) (See 09-12-47 POWER WINDOW MOTOR INSPECTION.) • Related wiring harness
2G	GND	Body ground	Under any condition	1.0 or less	• Related wiring harness
2H	Power outer mirror control signal	Power outer mirror	Inspect the power outer mirror switch. (See 09-12-87 POWER OUTER MIRROR SWITCH INSPECTION.)		
2I	Power outer mirror control signal	Power outer mirror	Inspect the power outer mirror switch. (See 09-12-87 POWER OUTER MIRROR SWITCH INSPECTION.)		
2J	Power outer mirror control signal	Power outer mirror	Inspect the power outer mirror switch. (See 09-12-87 POWER OUTER MIRROR SWITCH INSPECTION.)		
2K	Power outer mirror control signal	Power outer mirror	Inspect the power outer mirror switch. (See 09-12-87 POWER OUTER MIRROR SWITCH INSPECTION.)		
2L	Power outer mirror control signal	Power outer mirror	Inspect the power outer mirror switch. (See 09-12-87 POWER OUTER MIRROR SWITCH INSPECTION.)		
2M	ACC	MIRROR 7.5 A fuse	Switch the ignition to ACC	1.0 or less	• MIRROR 7.5 A fuse • Related wiring harness
			Other	B+	
2N	GND	Body ground	Under any condition	1.0 or less	• Related wiring harness

Inspection Using an Oscilloscope (Reference)

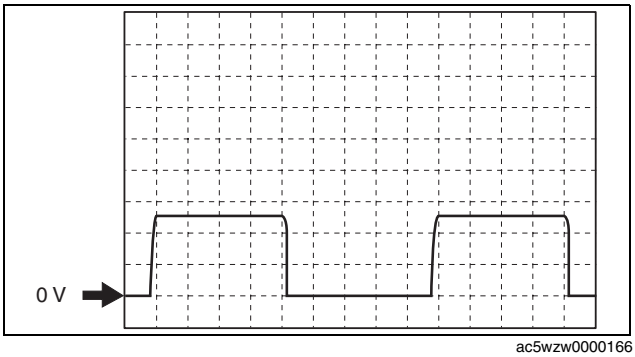

ac5wzw0000166

- Terminal:
  2D, 2F(+) ⇔ ground (-)
- Oscilloscope setting: 2 V/DIV (Y), 1 ms/DIV (X), DC range

GLASS/WINDOWS/MIRRORS

POWER WINDOW SUBSWITCH REMOVAL/INSTALLATION

id091200002200

1. Disconnect the negative battery cable. (See 01-17A-11 NEGATIVE BATTERY CABLE DISCONNECTION/CONNECTION [SKYACTIV-G 2.0].) (See 01-17A-13 NEGATIVE BATTERY CABLE DISCONNECTION/CONNECTION [SKYACTIV-G 2.0 (WITHOUT i-stop)].) (See 01-17B-9 NEGATIVE BATTERY CABLE DISCONNECTION/CONNECTION [SKYACTIV-D 2.2].)
2. Remove the cover A.
3. Insert a tape-wrapped flathead screwdriver shown in the figure and remove the tab B in the direction of arrow (1).

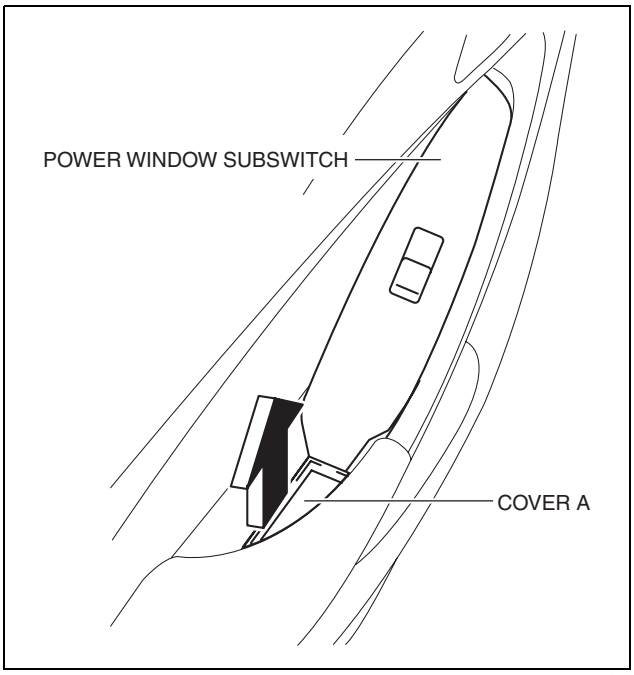

ac5wzw0000124

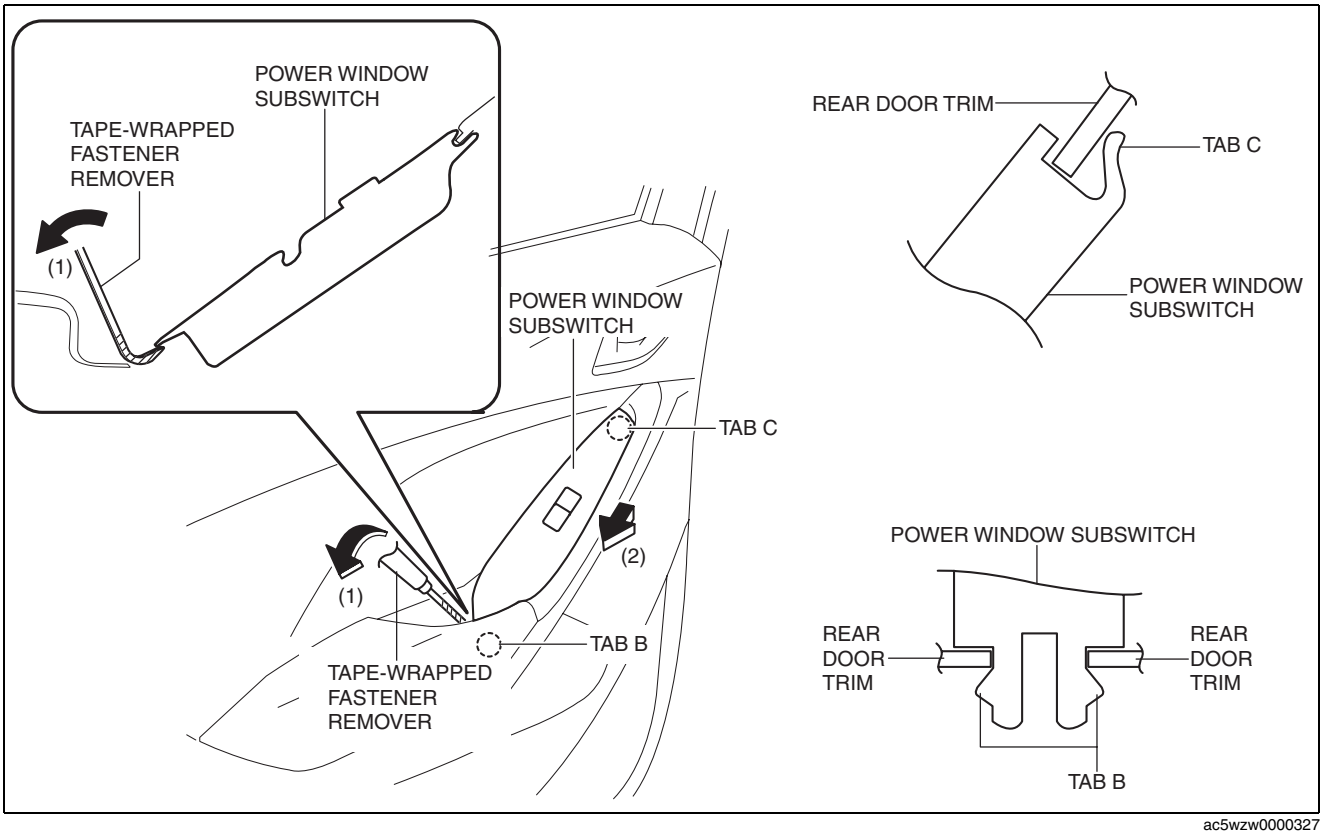

ac5wzw0000327

4. Slide the power window subswitch in the direction of the arrow (2) shown in the figure and remove the tab C.
5. Disconnect the power window subswitch connector.

GLASS/WINDOWS/MIRRORS

6. Pull the edge of power window subswitch cover in the direction of arrow (3) and detach the tab D.

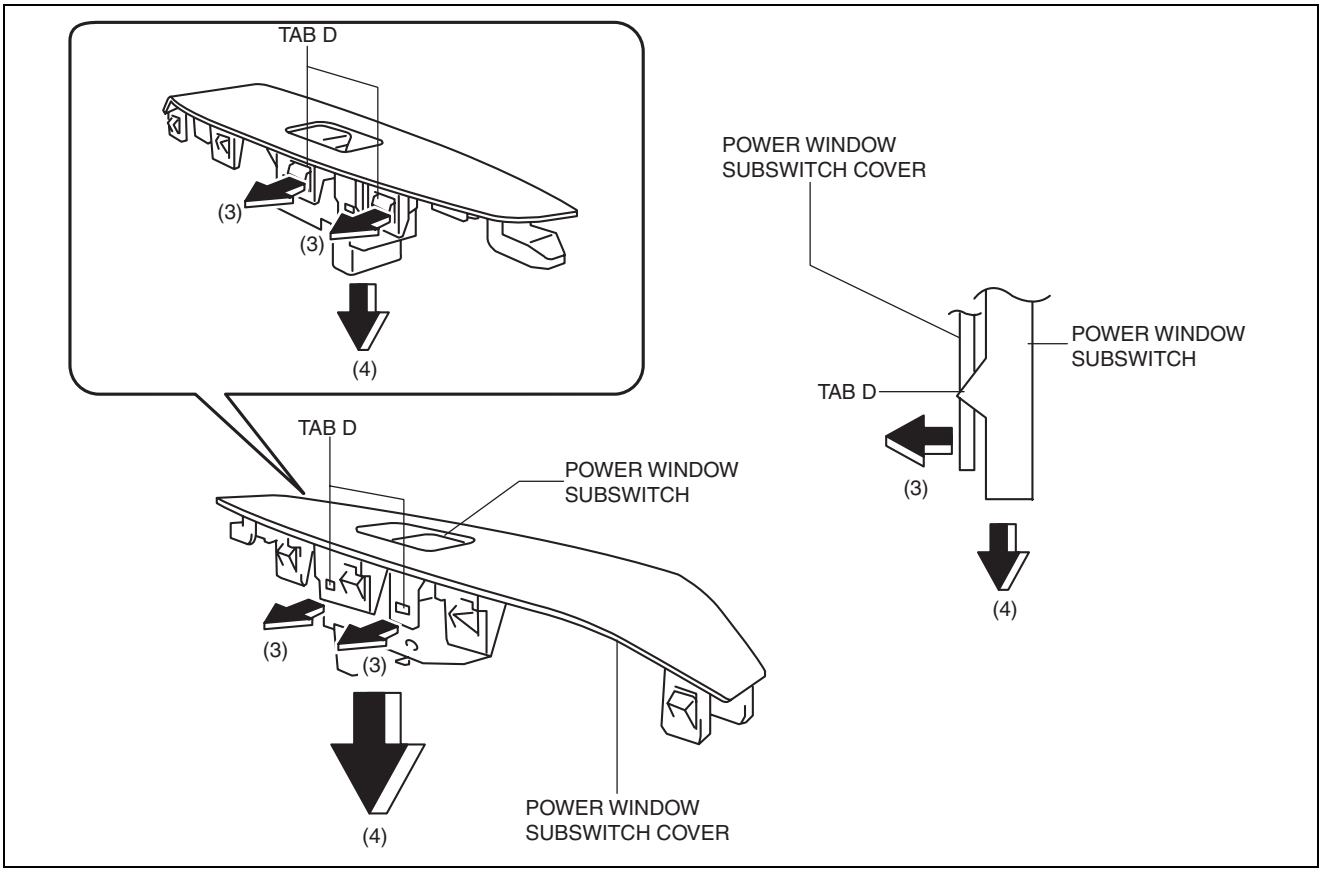

ac5wzw0000124

7. Remove the power window subswitch in the direction of arrow (4) shown in the figure.
8. Install in the reverse order of removal.

GLASS/WINDOWS/MIRRORS

POWER WINDOW SUBSWITCH INSPECTION

id091200002300

Auto-open/close Function For All Windows

1. Disconnect the negative battery cable. (See 01-17A-11 NEGATIVE BATTERY CABLE DISCONNECTION/CONNECTION [SKYACTIV-G 2.0].) (See 01-17A-13 NEGATIVE BATTERY CABLE DISCONNECTION/CONNECTION [SKYACTIV-G 2.0 (WITHOUT i-stop)].) (See 01-17B-9 NEGATIVE BATTERY CABLE DISCONNECTION/CONNECTION [SKYACTIV-D 2.2].)
2. Remove the power window subswitch. (See 09-12-61 POWER WINDOW SUBSWITCH REMOVAL/INSTALLATION.)
3. Connect the negative battery cable. (See 01-17A-11 NEGATIVE BATTERY CABLE DISCONNECTION/CONNECTION [SKYACTIV-G 2.0].) (See 01-17A-13 NEGATIVE BATTERY CABLE DISCONNECTION/CONNECTION [SKYACTIV-G 2.0 (WITHOUT i-stop)].) (See 01-17B-9 NEGATIVE BATTERY CABLE DISCONNECTION/CONNECTION [SKYACTIV-D 2.2].)
4. Connect the power window subswitch connector.
5. Measure the voltage at each terminal.
   - If the voltage is not as specified in the terminal voltage table, inspect the parts under “Inspection item(s)” and related wiring harnesses.
     — If the system does not work properly even though the inspection items or related wiring harnesses do not have any malfunction, replace the power window subswitch.

Terminal voltage table (reference)

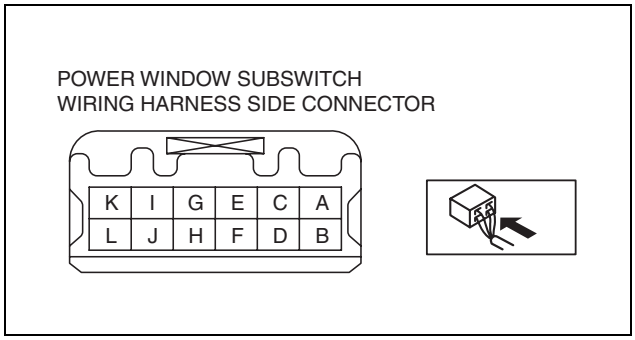

ac5jjw00000858

Terminal	Signal name	Connected to	Measurement condition	Voltage (V)	Inspection item (s)
A	Serial communication	Power window main switch	Because this terminal is for communication, good/no good judgment by terminal voltage is not possible		• Power window subswitch (See 09-12-63 POWER WINDOW SUBSWITCH INSPECTION.) • Related wiring harness
C	Power supply	P.WIND2 25 A fuse	Under any condition	B+	• P.WIND2 25 A fuse • Related wiring harness
D	Pulse 2	Power window motor	Door glass operating	Wave pattern (See 09-12-65 Inspection Using an Oscilloscope (Reference).)	• Power window motor (See 09-12-47 POWER WINDOW MOTOR INSPECTION.) • Related wiring harness
F	Pulse 1	Power window motor	Door glass operating	Wave pattern (See 09-12-65 Inspection Using an Oscilloscope (Reference).)	• Power window motor (See 09-12-47 POWER WINDOW MOTOR INSPECTION.) • Related wiring harness

GLASS/WINDOWS/MIRRORS

Terminal	Signal name	Connected to	Measurement condition	Voltage (V)	Inspection item (s)
H	Close output	Power window motor	Door glass closing	B+	• Power window motor (See 09-12-47 POWER WINDOW MOTOR INSPECTION.) • Related wiring harness
			while door glass is closing for approx. 40 s after ignition is switched OFF (LOCK) from ON	B+	
			Other	1.0 or less	
I	Open output	Power window motor	Door glass opening	B+	• Power window motor (See 09-12-47 POWER WINDOW MOTOR INSPECTION.) • Related wiring harness
			while door glass is opening for approx. 40 s after ignition is switched OFF (LOCK) from ON	B+	
			Other	1.0 or less	
J	Power supply	Power window motor	Switch the ignition to ACC or ON (engine off)	B+	• Power window motor (See 09-12-47 POWER WINDOW MOTOR INSPECTION.) • Related wiring harness
			Switch the ignition OFF (LOCK)	1.0 or less	
K	GND	Body ground	Under any condition:	1.0 or less	• Related wiring harness
L	Sensor ground	Power window motor	Under any condition:	1.0 or less	• Power window motor (See 09-12-47 POWER WINDOW MOTOR INSPECTION.) • Related wiring harness

Auto-open/close Function For Driver-side

1. Disconnect the negative battery cable. (See 01-17A-11 NEGATIVE BATTERY CABLE DISCONNECTION/CONNECTION [SKYACTIV-G 2.0].) (See 01-17A-13 NEGATIVE BATTERY CABLE DISCONNECTION/CONNECTION [SKYACTIV-G 2.0 (WITHOUT i-stop)].) (See 01-17B-9 NEGATIVE BATTERY CABLE DISCONNECTION/CONNECTION [SKYACTIV-D 2.2].)
2. Remove the power window subswitch. (See 09-12-61 POWER WINDOW SUBSWITCH REMOVAL/INSTALLATION.)
3. Verify that the continuity is as indicated in the table using a tester.

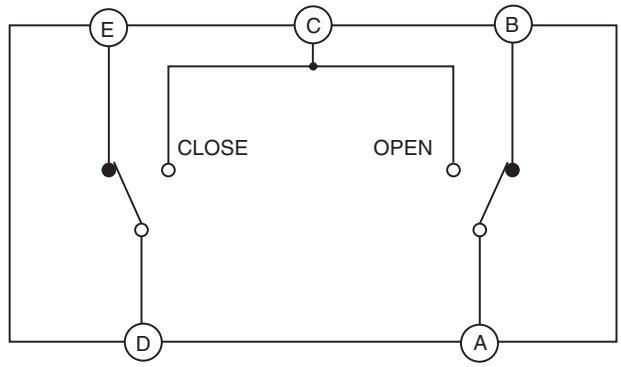

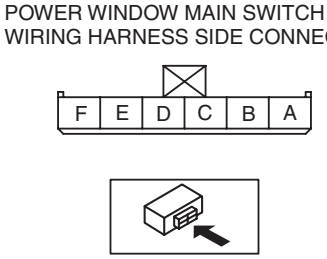

ac5wzw0000124

- If not as indicated in the table, replace the power window subswitch.

○—○ : Continuity

Switch position	Terminal				
	A	B	C	D	E
CLOSE	○—○		○—○		
OFF	○—○			○—○	
OPEN	○		○	○—○	

ac5wzw0000136

GLASS/WINDOWS/MIRRORS

Inspection Using an Oscilloscope (Reference)

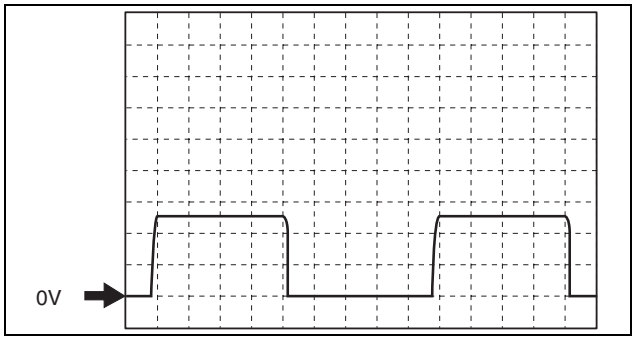

ac5wzw0000124

- Terminal:
  D, F(+) ⇔ ground (-)
- Oscilloscope setting: 2 V/DIV (Y), 1 ms/DIV (X), DC range

GLASS/WINDOWS/MIRRORS

POWER WINDOW SYSTEM INITIALIZATION PROCEDURE

id091200004100

Note

- If the following operations have been performed, initial setting is reset, and auto up/down operation are disabled. Therefore, performing initial setting is necessary.
  - — Negative battery cable is disconnected.
  - — Power window main switch connector is disconnected.
  - — Power window system power supply fuse is removed.

1. Switch the ignition ON (engine off).
2. Press the driver's seat switch to fully open the door glass.
3. Pull up the driver's seat switch to the manual-up position to fully close the door glass and keep holding the switch up at the position for **approx. 2 s**.

GLASS/WINDOWS/MIRRORS

POWER OUTER MIRROR REMOVAL/INSTALLATION

id091200002400

1. Disconnect the negative battery cable. (See 01-17A-11 NEGATIVE BATTERY CABLE DISCONNECTION/CONNECTION [SKYACTIV-G 2.0].) (See 01-17A-13 NEGATIVE BATTERY CABLE DISCONNECTION/CONNECTION [SKYACTIV-G 2.0 (WITHOUT i-stop)].) (See 01-17B-9 NEGATIVE BATTERY CABLE DISCONNECTION/CONNECTION [SKYACTIV-D 2.2].)
2. Remove the inner garnish. (See 09-17-65 INNER GARNISH REMOVAL/INSTALLATION.)
3. Remove the front door trim. (See 09-17-65 FRONT DOOR TRIM REMOVAL/INSTALLATION.)
4. Insert a tape-wrapped flathead screwdriver into the service hole and remove hooks A in the direction of arrow (1).

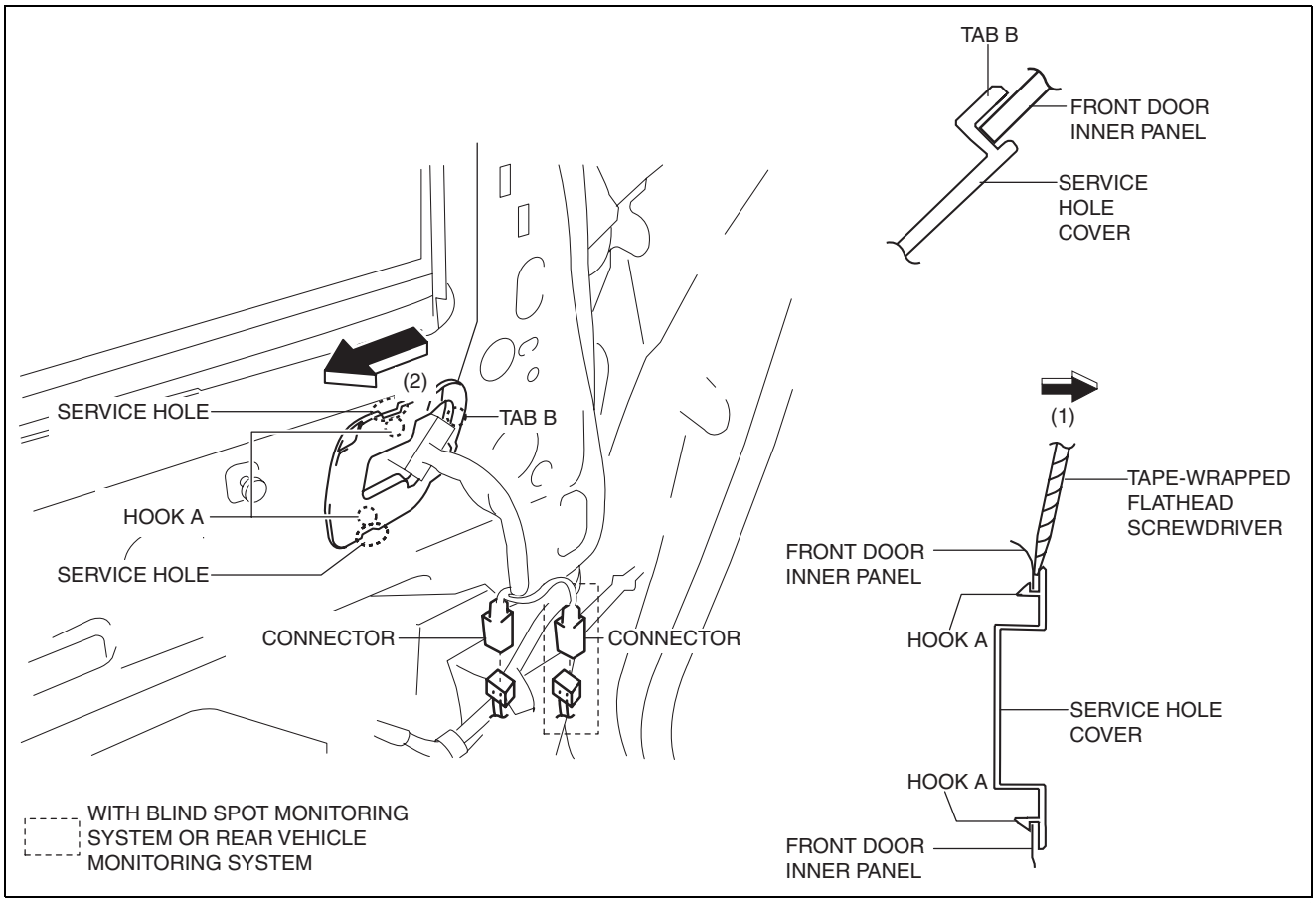

ac5wzw0000254

5. Slide the service hole cover in the direction of the arrow (2) shown in the figure and remove tabs B.
6. Disconnect the connector.

GLASS/WINDOWS/MIRRORS

7. Remove nuts C.

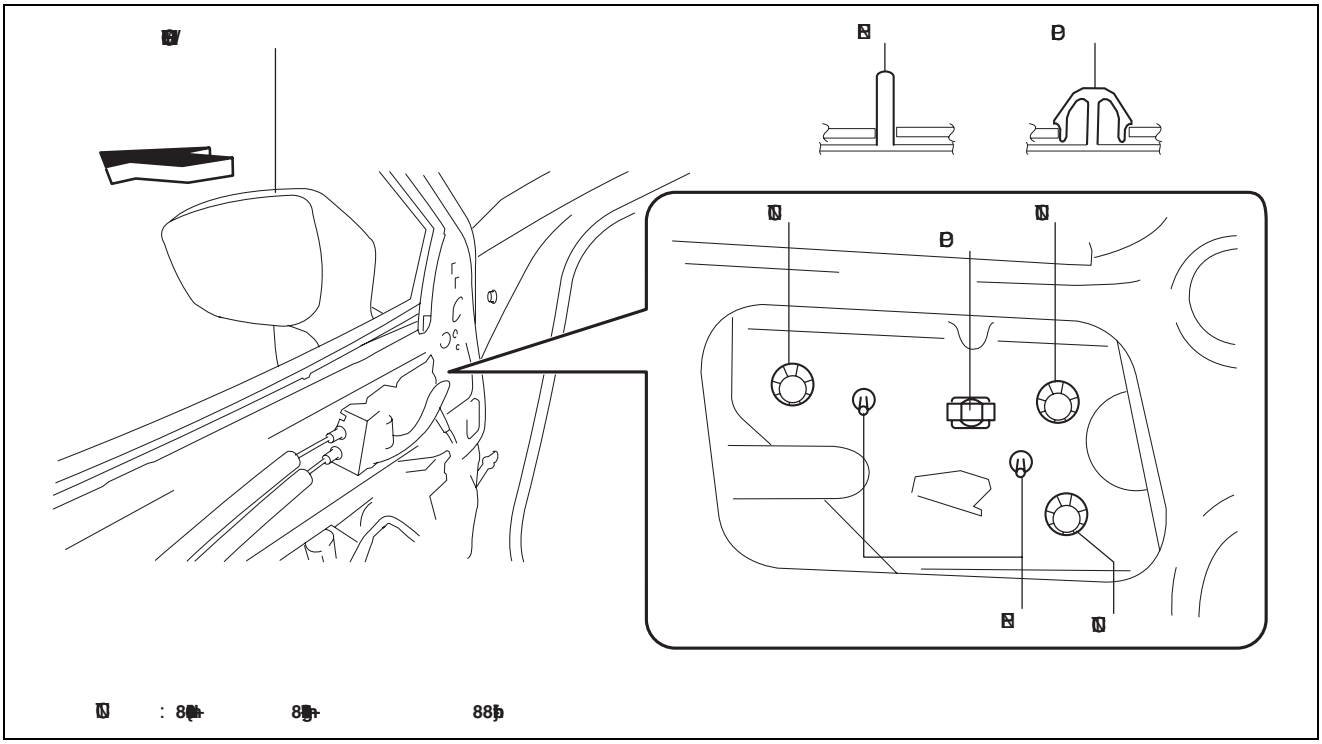

ac5wzw0000327

8. Pull the power outer mirror in the direction of the arrow while remove clips D, pin E.

Caution
- **If the clip D of the power outer mirror is detached, the power outer mirror may fall off and be damaged. When detaching clip D of the power outer mirror, hold the power outer mirror by hand during the servicing.**

9.

GLASS/WINDOWS/MIRRORS

POWER OUTER MIRROR INSPECTION

id091200002700

Mirror Glass Adjustment, Retract/Return

1. Disconnect the negative battery cable. (See 01-17A-11 NEGATIVE BATTERY CABLE DISCONNECTION/CONNECTION [SKYACTIV-G 2.0].) (See 01-17A-13 NEGATIVE BATTERY CABLE DISCONNECTION/CONNECTION [SKYACTIV-G 2.0 (WITHOUT i-stop)].) (See 01-17B-9 NEGATIVE BATTERY CABLE DISCONNECTION/CONNECTION [SKYACTIV-D 2.2].)
2. Remove the following parts:
   (1) Inner garnish (See 09-17-65 INNER GARNISH REMOVAL/INSTALLATION.)
   (2) Front door trim (See 09-17-65 FRONT DOOR TRIM REMOVAL/INSTALLATION.)
   (3) Power outer mirror (See 09-12-67 POWER OUTER MIRROR REMOVAL/INSTALLATION.)
3. Apply battery positive voltage and connect the ground to the power outer mirror terminals and inspect the power outer mirror operation.

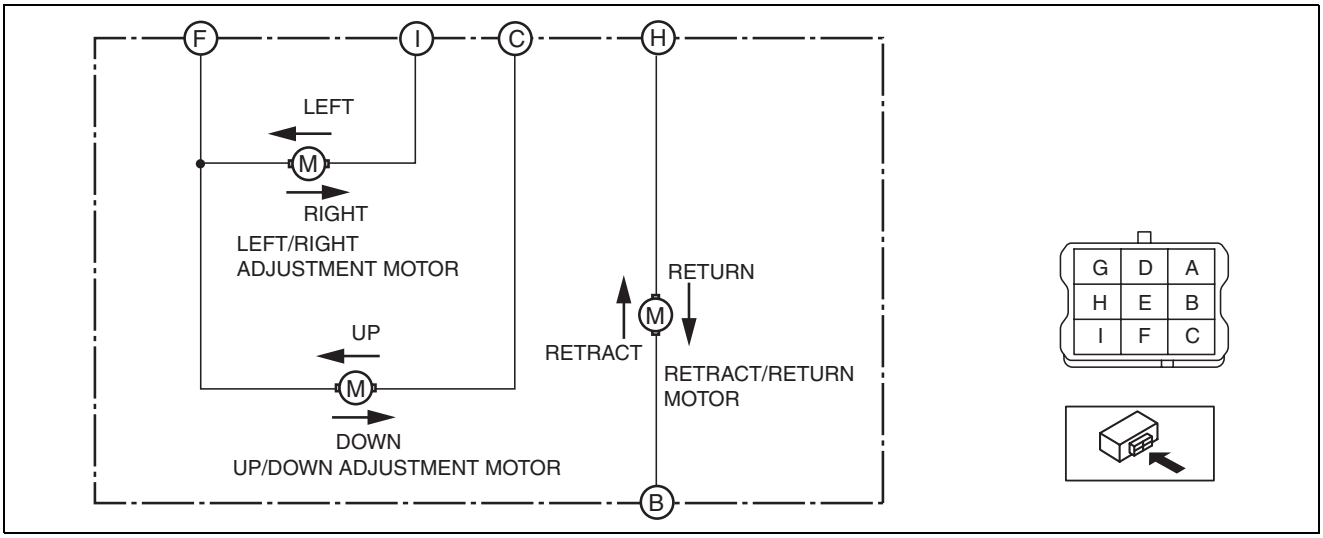

ac5wzw0000124

- If the power outer mirror does not operate as indicated in the table, replace the power outer mirror.

Mirror operation direction	Battery positive voltage connect terminal	Ground connect terminal
Up	C	F
Down	F	C
Left	I	F
Right	F	I
Retract	B	H
Return	H	B

GLASS/WINDOWS/MIRRORS

Heated Outer Mirror Inspection

1. Disconnect the negative battery cable. (See 01-17A-11 NEGATIVE BATTERY CABLE DISCONNECTION/CONNECTION [SKYACTIV-G 2.0].) (See 01-17A-13 NEGATIVE BATTERY CABLE DISCONNECTION/CONNECTION [SKYACTIV-G 2.0 (WITHOUT i-stop)].) (See 01-17B-9 NEGATIVE BATTERY CABLE DISCONNECTION/CONNECTION [SKYACTIV-D 2.2].)
2. Remove the following parts:
   (1) Inner garnish (See 09-17-65 INNER GARNISH REMOVAL/INSTALLATION.)
   (2) Front door trim (See 09-17-65 FRONT DOOR TRIM REMOVAL/INSTALLATION.)
   (3) Power outer mirror (See 09-12-67 POWER OUTER MIRROR REMOVAL/INSTALLATION.)
   (4) Outer mirror glass (See 09-12-73 OUTER MIRROR GLASS REMOVAL.) (See 09-12-78 OUTER MIRROR GLASS INSTALLATION.)
3. Verify that the continuity between heated outer mirror connector terminals is as indicated in the table.

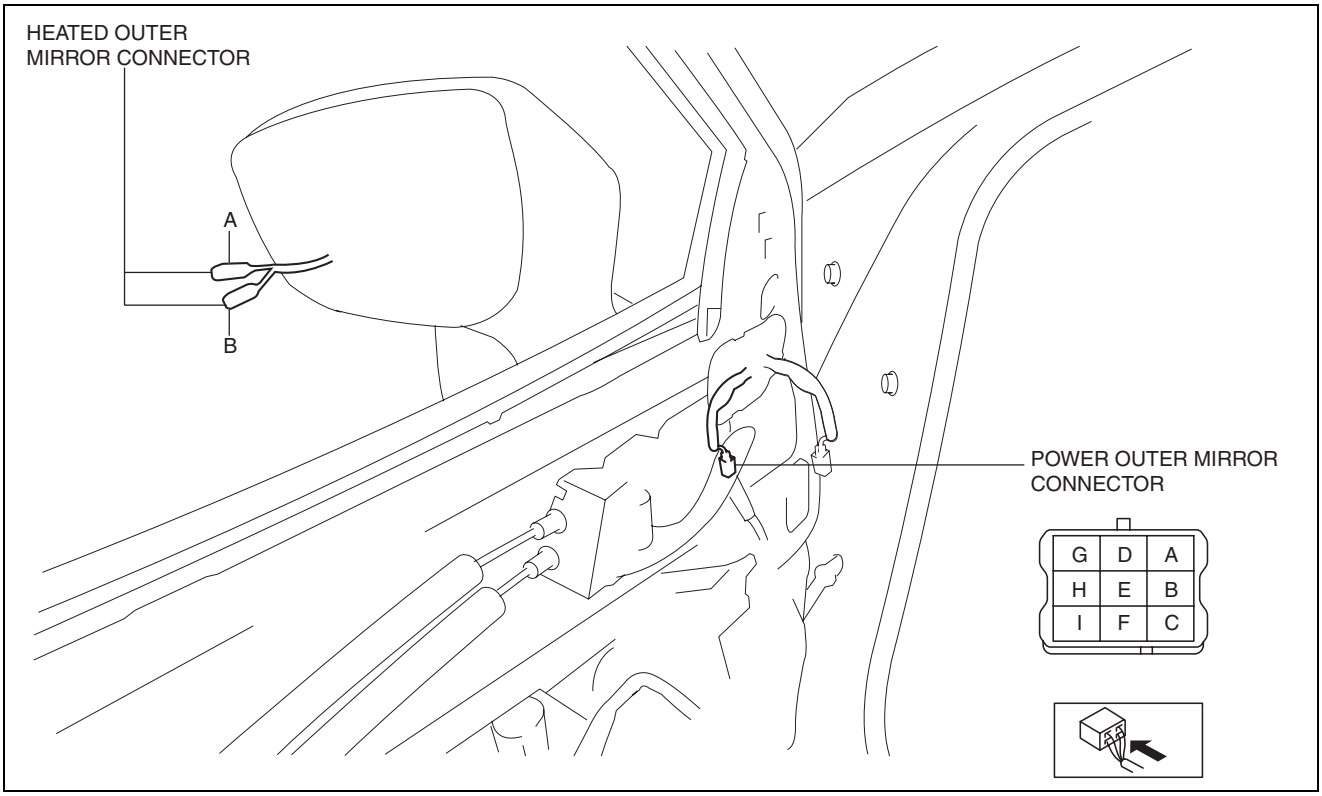

ac5wzw0000254

- If not as indicated in the table, replace the power outer mirror. (See 09-12-67 POWER OUTER MIRROR REMOVAL/INSTALLATION.)

Continuity

Test condition	Terminal			
	A	G	A	B
Under any condition	○			○
		○	○	

ac5wzw0000254

GLASS/WINDOWS/MIRRORS

RVM Indicator Light Inspection

1. Disconnect the negative battery cable. (See 01-17A-11 NEGATIVE BATTERY CABLE DISCONNECTION/CONNECTION [SKYACTIV-G 2.0].) (See 01-17A-13 NEGATIVE BATTERY CABLE DISCONNECTION/CONNECTION [SKYACTIV-G 2.0 (WITHOUT i-stop)].) (See 01-17B-9 NEGATIVE BATTERY CABLE DISCONNECTION/CONNECTION [SKYACTIV-D 2.2].)
2. Remove the following parts:
   (1) Inner garnish (See 09-17-65 INNER GARNISH REMOVAL/INSTALLATION.)
   (2) Front door trim (See 09-17-65 FRONT DOOR TRIM REMOVAL/INSTALLATION.)
   (3) Power outer mirror (See 09-12-67 POWER OUTER MIRROR REMOVAL/INSTALLATION.)
   (4) Outer mirror glass (See 09-12-73 OUTER MIRROR GLASS REMOVAL.) (See 09-12-78 OUTER MIRROR GLASS INSTALLATION.)
3. Verify that the continuity between RVM indicator light connector terminals is as indicated in the table.

ac5wzw0000253

- If not as indicated in the table, replace the power outer mirror. (See 09-12-67 POWER OUTER MIRROR REMOVAL/INSTALLATION.)

Continuity

Test condition	Terminal			
	D	G	A	B
Under any condition	○		○	
		○		○

ac5wzw0000307

GLASS/WINDOWS/MIRRORS

BSM Indicator Light Inspection

1. Disconnect the negative battery cable. (See 01-17A-11 NEGATIVE BATTERY CABLE DISCONNECTION/CONNECTION [SKYACTIV-G 2.0].) (See 01-17A-13 NEGATIVE BATTERY CABLE DISCONNECTION/CONNECTION [SKYACTIV-G 2.0 (WITHOUT i-stop)].) (See 01-17B-9 NEGATIVE BATTERY CABLE DISCONNECTION/CONNECTION [SKYACTIV-D 2.2].)
2. Remove the following parts:
   (1) Inner garnish (See 09-17-65 INNER GARNISH REMOVAL/INSTALLATION.)
   (2) Front door trim (See 09-17-65 FRONT DOOR TRIM REMOVAL/INSTALLATION.)
   (3) Power outer mirror (See 09-12-67 POWER OUTER MIRROR REMOVAL/INSTALLATION.)
   (4) Outer mirror glass (See 09-12-73 OUTER MIRROR GLASS REMOVAL.) (See 09-12-78 OUTER MIRROR GLASS INSTALLATION.)
3. Verify that the continuity between BSM indicator light connector terminals is as indicated in the table.

ac5wzw0000306

- If not as indicated in the table, replace the power outer mirror. (See 09-12-67 POWER OUTER MIRROR REMOVAL/INSTALLATION.)

Continuity

Test condition	Terminal			
	G	H	A	B
Under any condition	○		○	
		○		○

ac5wzw0000307

GLASS/WINDOWS/MIRRORS

OUTER MIRROR GLASS REMOVAL

id091200002800

1. Disconnect the negative battery cable. (See 01-17A-11 NEGATIVE BATTERY CABLE DISCONNECTION/CONNECTION [SKYACTIV-G 2.0].) (See 01-17A-13 NEGATIVE BATTERY CABLE DISCONNECTION/CONNECTION [SKYACTIV-G 2.0 (WITHOUT i-stop)].) (See 01-17B-9 NEGATIVE BATTERY CABLE DISCONNECTION/CONNECTION [SKYACTIV-D 2.2].)
2. Press area A of the outer mirror glass shown in the figure so that area B moves outward.
3. Put your hand on the lower part of the outer mirror glass and while supporting the hatch-marked area shown in the figure, remove pin C in the direction of the arrow (1).

Caution

- **When removing the outer mirror glass, if excessive force is applied to the area other than cross-hatched area, the outer mirror glass could be damaged.**

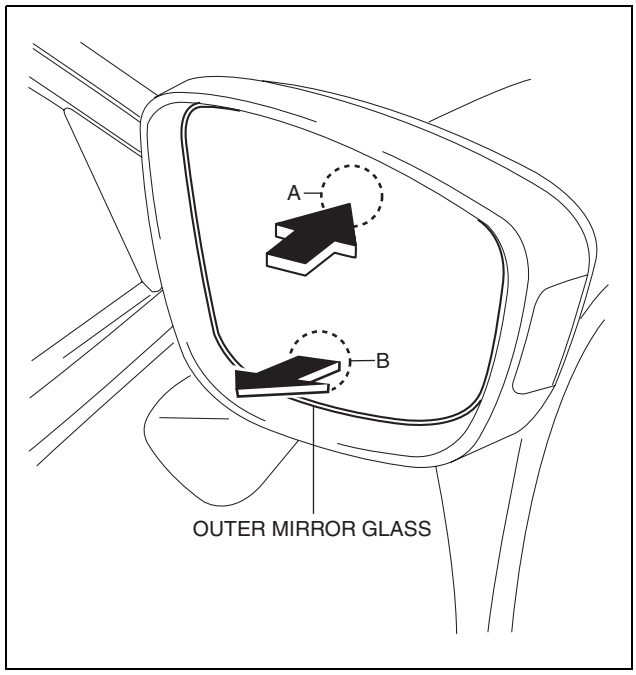

ac5wzw0000327

GLASS/WINDOWS/MIRRORS

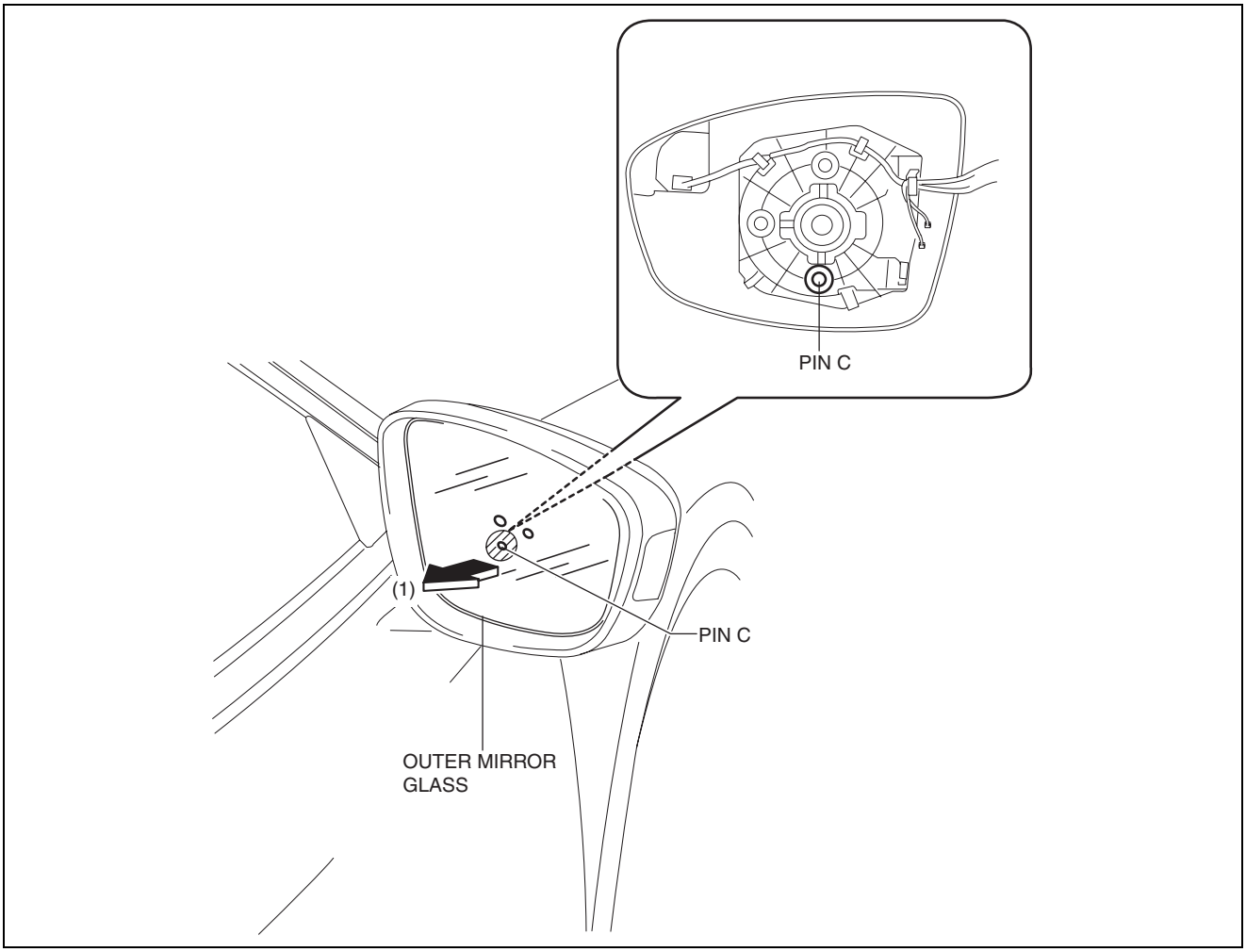

ac5wzw0000327

4. Press area D of the outer mirror glass shown in the figure so that area E moves outward.
5. Put your hand on the side part of the outer mirror glass and while supporting the hatch-marked area shown in the figure, remove pin F, pin G in the direction of the arrow (2).

Caution

- **When removing the outer mirror glass, if excessive force is applied to the area other than cross-hatched area, the outer mirror glass could be damaged.**

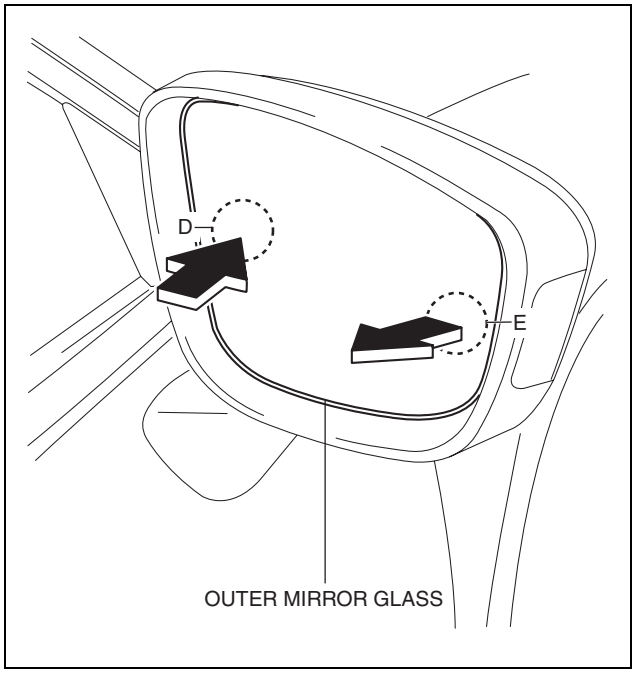

ac5uuw00002070

GLASS/WINDOWS/MIRRORS

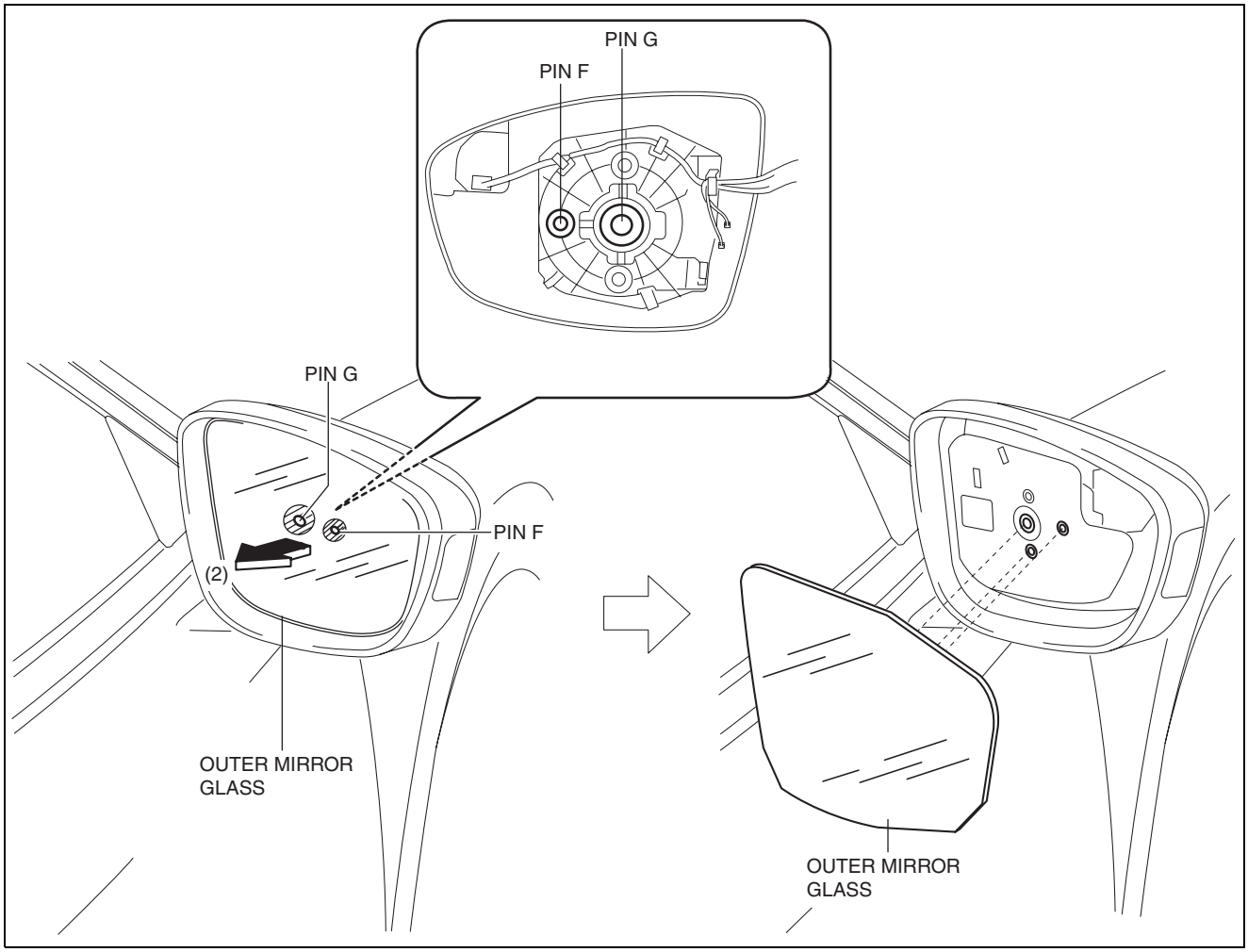

ac5wzw0000327

6. Pull the outer mirror glass in the direction of the arrow (1) and remove it while detaching the pin E from the mirror glass holder.
7. Remove the harness from hooks F.

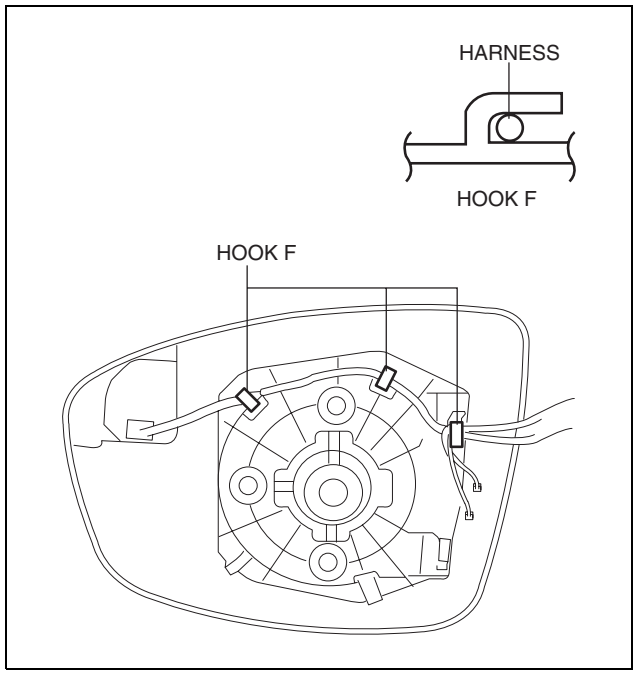

ac5wzw0000280

GLASS/WINDOWS/MIRRORS

8. Disconnect the mirror heater connectors. (with heated outer mirror)
9. Insert a tape-wrapped flathead screwdriver to the position shown in the figure, remove the RVM indicator light connector (with rear vehicle monitoring system) or BSM indicator light connector (with blind spot monitoring system).

Caution

- **The connector can be easily deformed, therefore do not apply excessive force.**

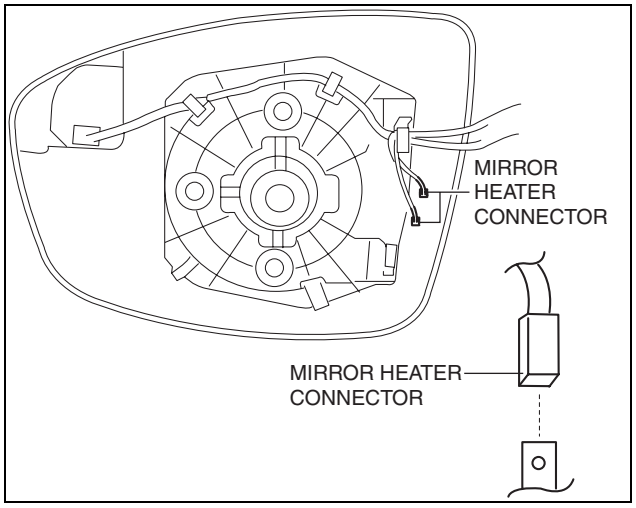

ac5uuw00000995

GLASS/WINDOWS/MIRRORS

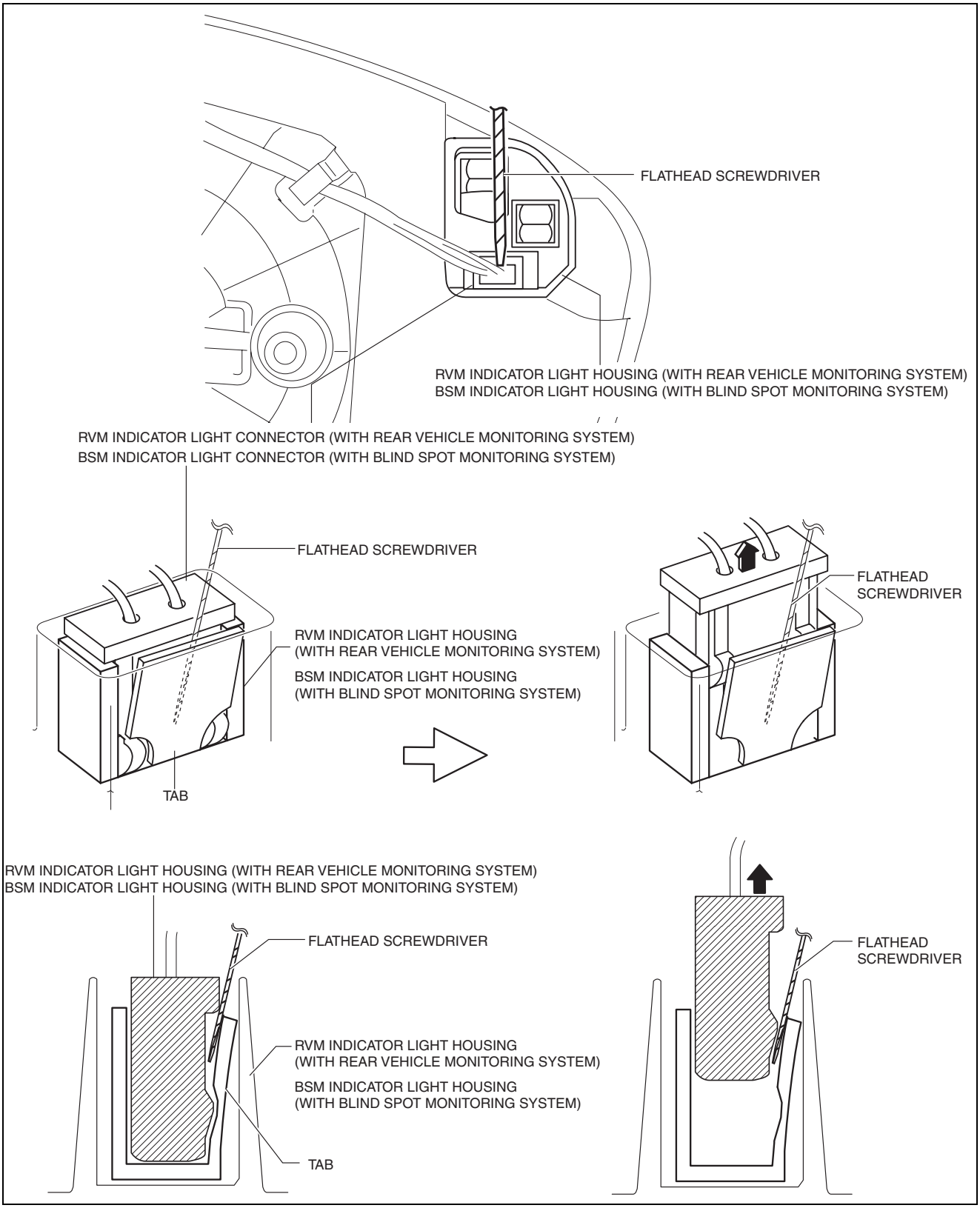

ac5wzw0000327

10. Remove the mirror glass holder and the outer mirror glass as a single unit.

GLASS/WINDOWS/MIRRORS

OUTER MIRROR GLASS INSTALLATION

id091200002900

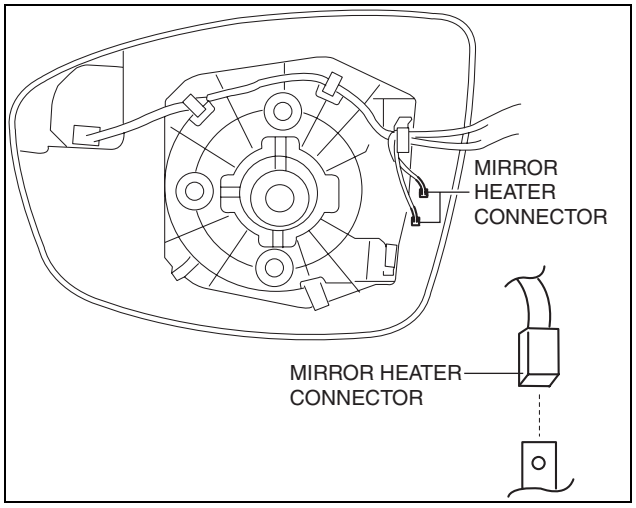

ac5uuw00000997

1. Connect the mirror heater connectors. (with heated outer mirror)
2. Connect the RVM indicator light connector (with blind spot monitoring system) or BSM indicator light connector (with blind spot monitoring system).

Note

- Lightly pull the RVM indicator light connector and verify that the RVM indicator light housing cannot be pulled off. If the connection is poor, insert a tape-wrapped flathead screwdriver into position A shown in the figure and engage the connector. (with rear vehicle monitoring system)
- Lightly pull the BSM indicator light connector and verify that the BSM indicator light housing cannot be pulled off. If the connection is poor, insert a tape-wrapped flathead screwdriver into position A shown in the figure and engage the connector. (with blind spot monitoring system)

GLASS/WINDOWS/MIRRORS

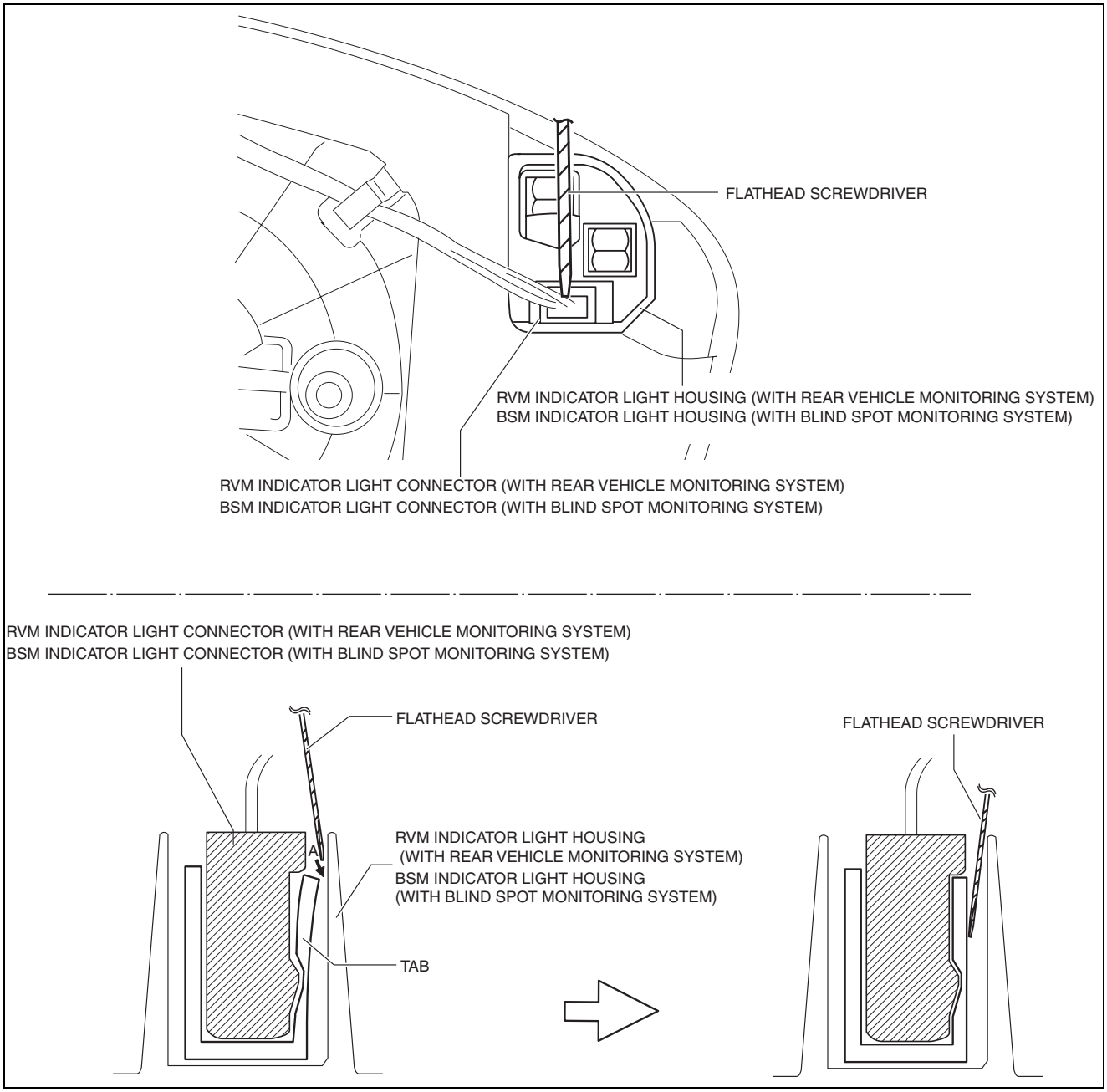

ac5wzw0000254

GLASS/WINDOWS/MIRRORS

3. Install the harness from the hook.
4. Press part A on the outer mirror glass and install pin A.

Caution

- **When installing the outer mirror glass, if excessive force is applied to the area other than cross-hatched area, the outer mirror glass could be damaged.**

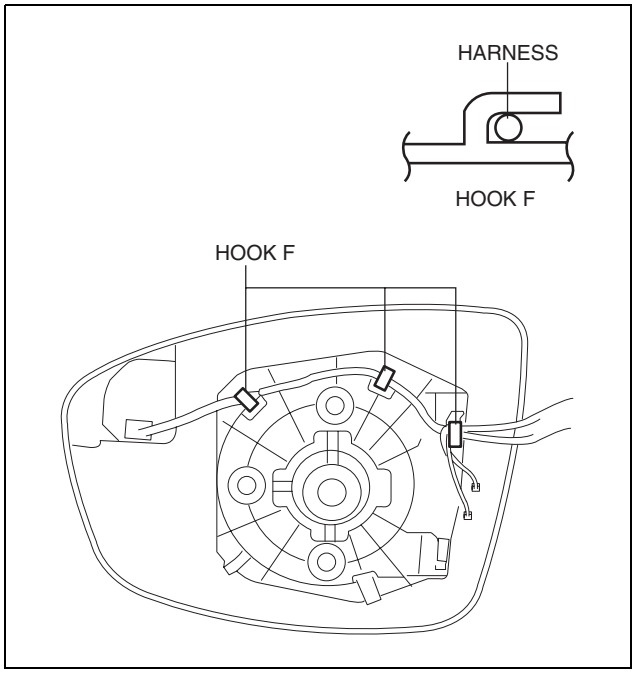

ac5wzw0000280

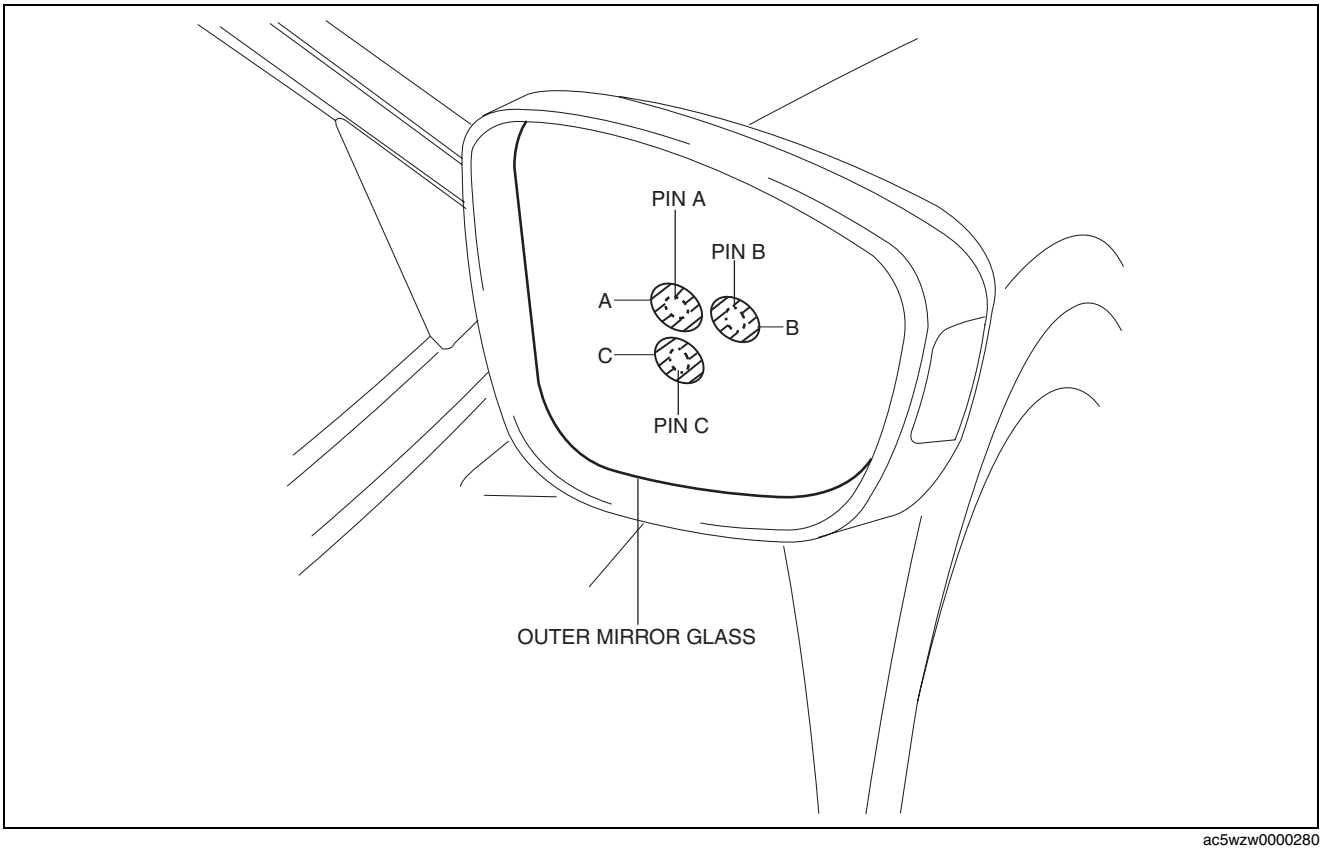

ac5wzw0000280

5. Press part B on the outer mirror glass and install pin B.
6. Press part C on the outer mirror glass and install pin C.
7. Connect the negative battery cable. (See 01-17A-11 NEGATIVE BATTERY CABLE DISCONNECTION/CONNECTION [SKYACTIV-G 2.0].) (See 01-17A-13 NEGATIVE BATTERY CABLE DISCONNECTION/CONNECTION [SKYACTIV-G 2.0 (WITHOUT i-stop)].) (See 01-17B-9 NEGATIVE BATTERY CABLE DISCONNECTION/CONNECTION [SKYACTIV-D 2.2].)

GLASS/WINDOWS/MIRRORS

OUTER MIRROR GLASS INSPECTION

id091200010400

Heated Outer Mirror

1. Disconnect the negative battery cable. (See 01-17A-11 NEGATIVE BATTERY CABLE DISCONNECTION/CONNECTION [SKYACTIV-G 2.0].) (See 01-17A-13 NEGATIVE BATTERY CABLE DISCONNECTION/CONNECTION [SKYACTIV-G 2.0 (WITHOUT i-stop)].) (See 01-17B-9 NEGATIVE BATTERY CABLE DISCONNECTION/CONNECTION [SKYACTIV-D 2.2].)
2. Remove the outer mirror glass. (See 09-12-73 OUTER MIRROR GLASS REMOVAL.)(See 09-12-78 OUTER MIRROR GLASS INSTALLATION.)
3. Verify that the resistance and continuity between the heated outer mirror terminals is as indicated in the table.

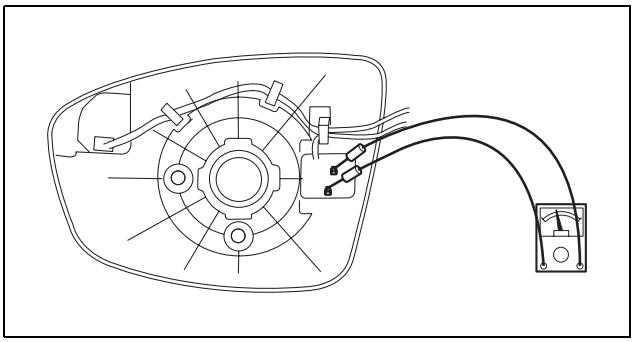

ac5wzw0000298

- If not as indicated in the table, or if the resistance is not within the specification, replace the outer mirror glass.

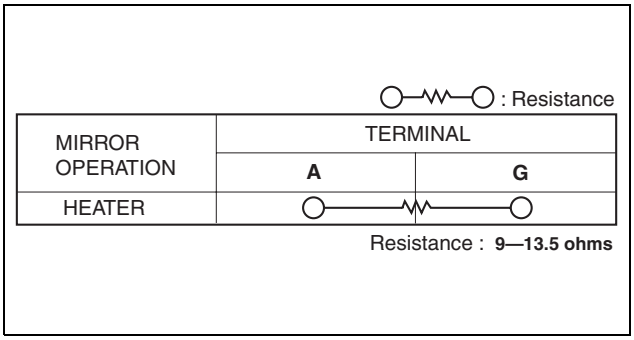

ac5uuw00001093

GLASS/WINDOWS/MIRRORS

RVM Indicator Light

1. Disconnect the negative battery cable. (See 01-17A-11 NEGATIVE BATTERY CABLE DISCONNECTION/CONNECTION [SKYACTIV-G 2.0].) (See 01-17A-13 NEGATIVE BATTERY CABLE DISCONNECTION/CONNECTION [SKYACTIV-G 2.0 (WITHOUT i-stop)].) (See 01-17B-9 NEGATIVE BATTERY CABLE DISCONNECTION/CONNECTION [SKYACTIV-D 2.2].)
2. Remove the outer mirror glass. (See 09-12-73 OUTER MIRROR GLASS REMOVAL.)(See 09-12-78 OUTER MIRROR GLASS INSTALLATION.)
3. Connect the battery voltage as shown in the figure.

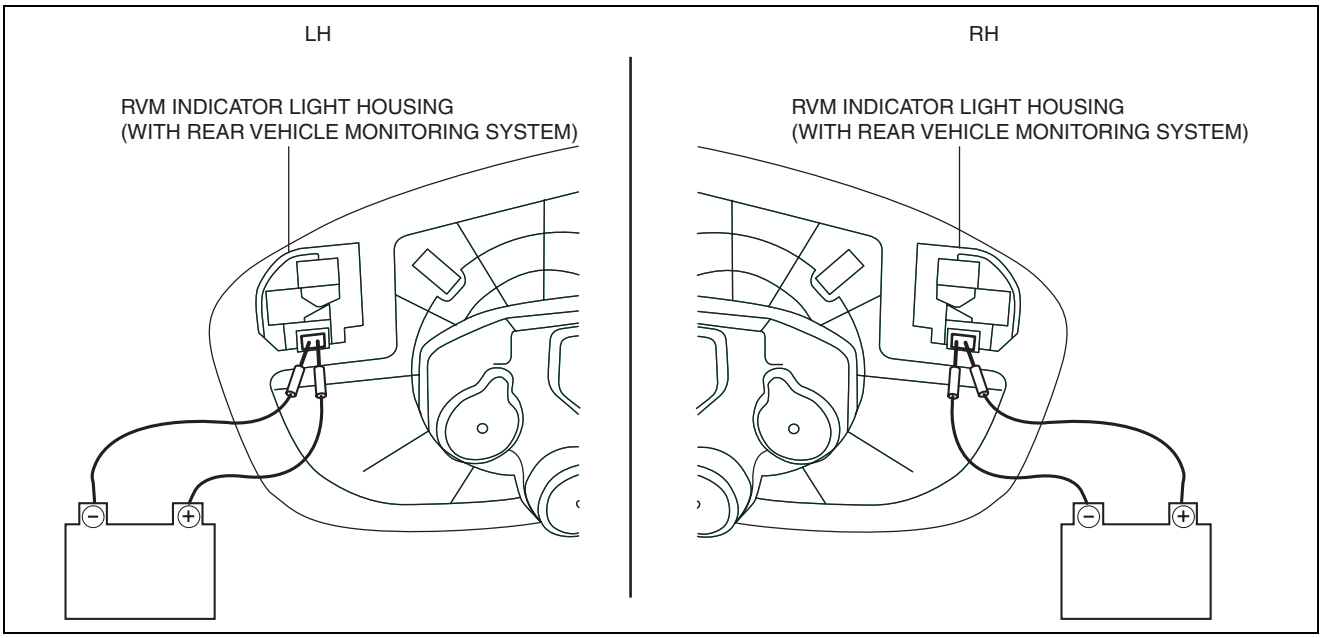

ac5wzw0000298

- If the RVM indicator light does illuminate, replace the power outer mirror.

GLASS/WINDOWS/MIRRORS

BSM Indicator Light

1. Disconnect the negative battery cable. (See 01-17A-11 NEGATIVE BATTERY CABLE DISCONNECTION/CONNECTION [SKYACTIV-G 2.0].) (See 01-17A-13 NEGATIVE BATTERY CABLE DISCONNECTION/CONNECTION [SKYACTIV-G 2.0 (WITHOUT i-stop)].) (See 01-17B-9 NEGATIVE BATTERY CABLE DISCONNECTION/CONNECTION [SKYACTIV-D 2.2].)
2. Remove the outer mirror glass. (See 09-12-73 OUTER MIRROR GLASS REMOVAL.) (See 09-12-78 OUTER MIRROR GLASS INSTALLATION.)
3. Connect the battery voltage as shown in the figure.

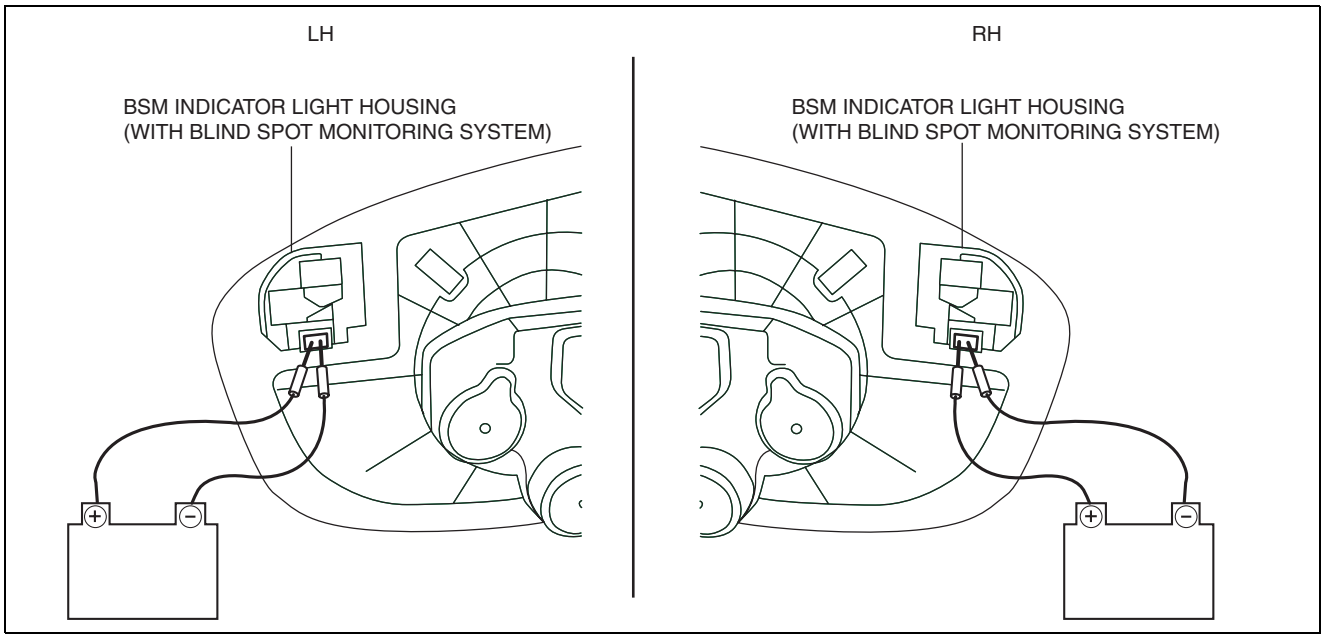

ac5wzw0000299

- If the BSM indicator light does illuminate, replace the power outer mirror.

GLASS/WINDOWS/MIRRORS

OUTER MIRROR GARNISH REMOVAL/INSTALLATION

id091200003000

1. Disconnect the negative battery cable. (See 01-17A-11 NEGATIVE BATTERY CABLE DISCONNECTION/CONNECTION [SKYACTIV-G 2.0].) (See 01-17A-13 NEGATIVE BATTERY CABLE DISCONNECTION/CONNECTION [SKYACTIV-G 2.0 (WITHOUT i-stop)].) (See 01-17B-9 NEGATIVE BATTERY CABLE DISCONNECTION/CONNECTION [SKYACTIV-D 2.2].)
2. Remove the outer mirror glass. (See 09-12-73 OUTER MIRROR GLASS REMOVAL.) (See 09-12-78 OUTER MIRROR GLASS INSTALLATION.)
3. Insert a tape-wrapped flathead screwdriver into the upper outer mirror garnish and remove tab A, B, C, D in the direction of arrow (1).

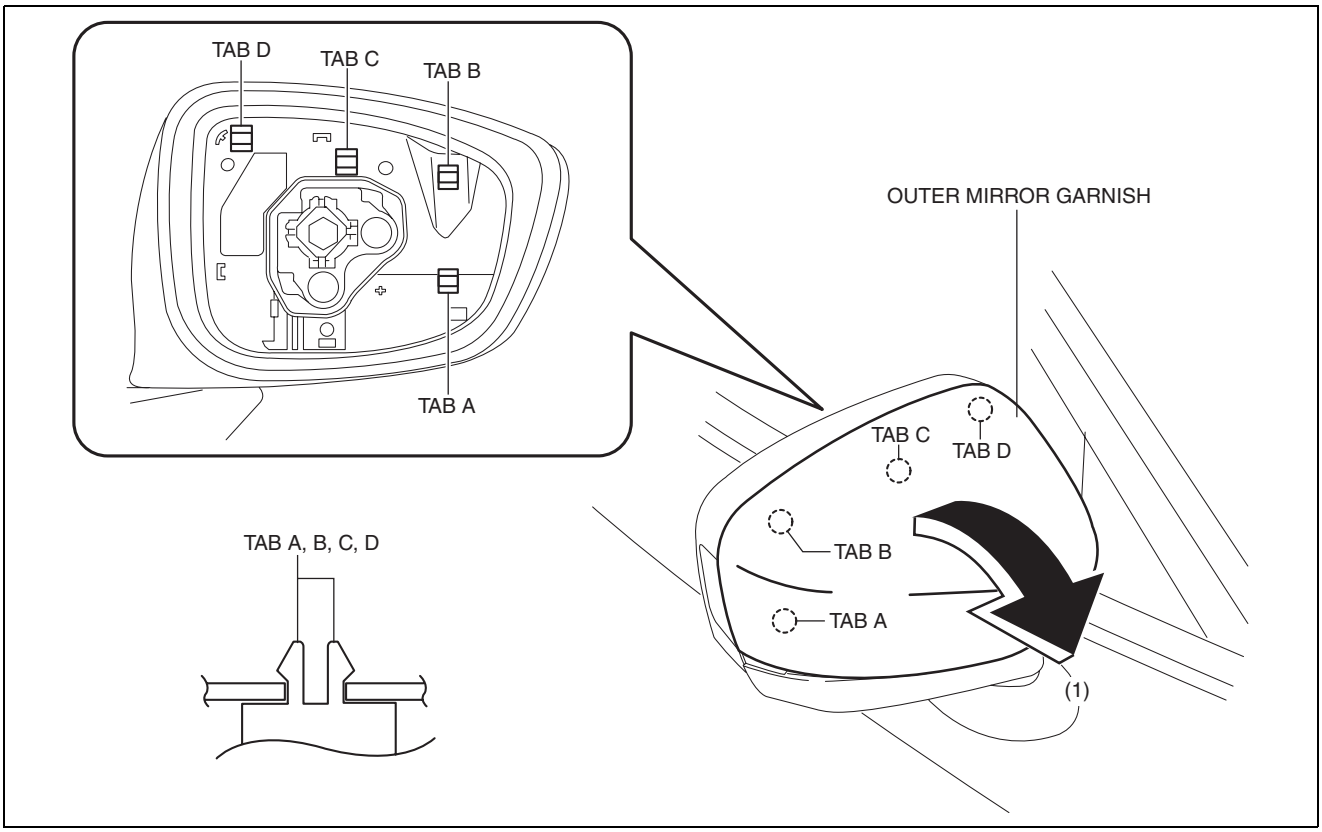

ac5wzw0000291

GLASS/WINDOWS/MIRRORS

4. Insert a tape-wrapped flathead screwdriver into the upper outer mirror garnish and remove tab F, G in the direction of arrow (2).

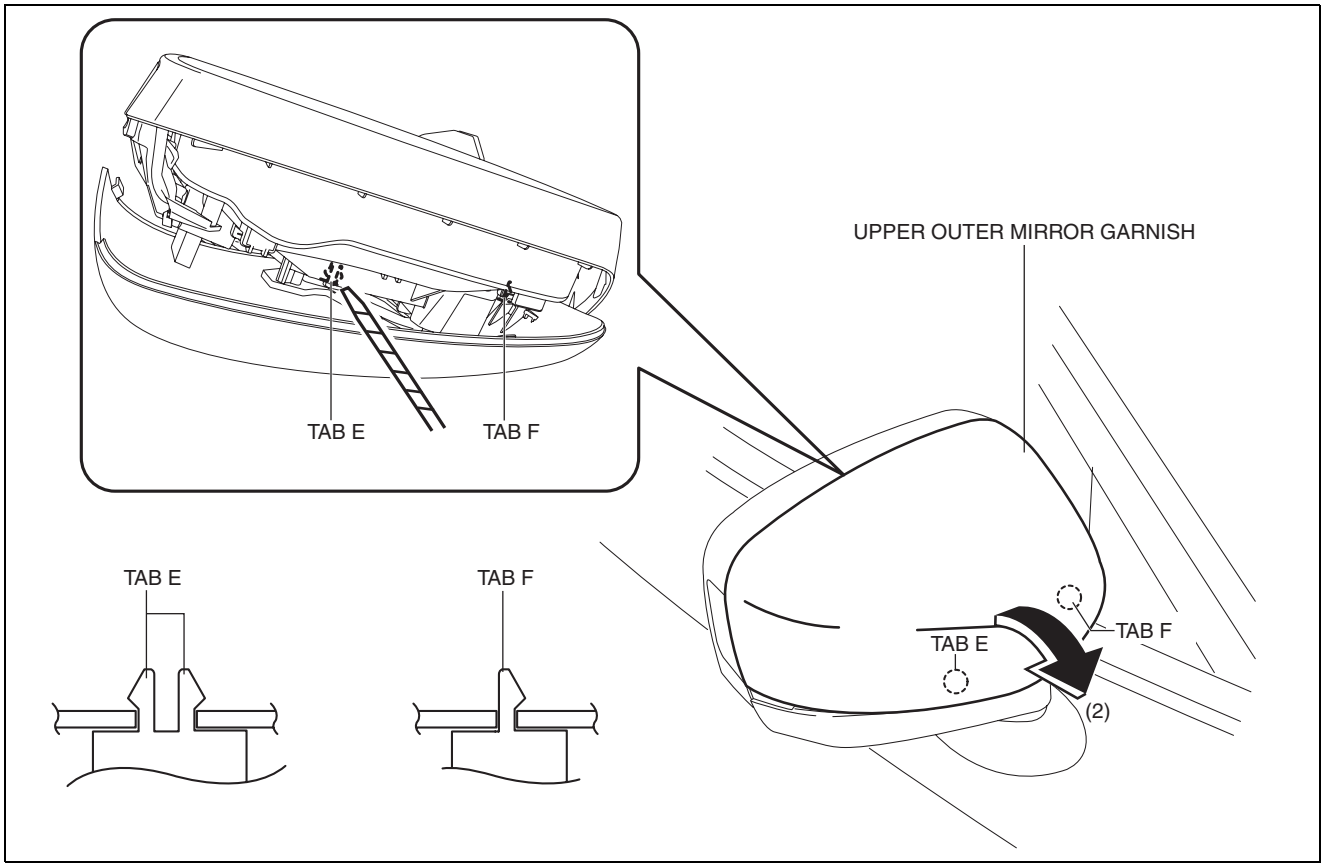

ac5wzw0000291

5. Install in the reverse order of removal.

GLASS/WINDOWS/MIRRORS

POWER OUTER MIRROR SWITCH REMOVAL/INSTALLATION

id091200003500

Note
- The power outer mirror switch is integrated with the power window main switch.

1. Disconnect the negative battery cable. (See 01-17A-11 NEGATIVE BATTERY CABLE DISCONNECTION/CONNECTION [SKYACTIV-G 2.0].) (See 01-17A-13 NEGATIVE BATTERY CABLE DISCONNECTION/CONNECTION [SKYACTIV-G 2.0 (WITHOUT i-stop)].) (See 01-17B-9 NEGATIVE BATTERY CABLE DISCONNECTION/CONNECTION [SKYACTIV-D 2.2].)
2. Remove the power window main switch. (See 09-12-52 POWER WINDOW MAIN SWITCH REMOVAL/INSTALLATION.)
3. Install in the reverse order of removal.

GLASS/WINDOWS/MIRRORS

POWER OUTER MIRROR SWITCH INSPECTION

id091200003400

With Retract/return Function

1. Disconnect the negative battery cable. (See 01-17A-11 NEGATIVE BATTERY CABLE DISCONNECTION/CONNECTION [SKYACTIV-G 2.0].) (See 01-17A-13 NEGATIVE BATTERY CABLE DISCONNECTION/CONNECTION [SKYACTIV-G 2.0 (WITHOUT i-stop)].) (See 01-17B-9 NEGATIVE BATTERY CABLE DISCONNECTION/CONNECTION [SKYACTIV-D 2.2].)
2. Remove the power outer mirror switch. (See 09-12-86 POWER OUTER MIRROR SWITCH REMOVAL/INSTALLATION.)
3. Verify that the continuity between the power outer mirror switch terminals is as indicated in the table.
   - If not as indicated in the table, replace the power outer mirror switch. (See 09-12-86 POWER OUTER MIRROR SWITCH REMOVAL/INSTALLATION.)

Auto-open/close function for all windows

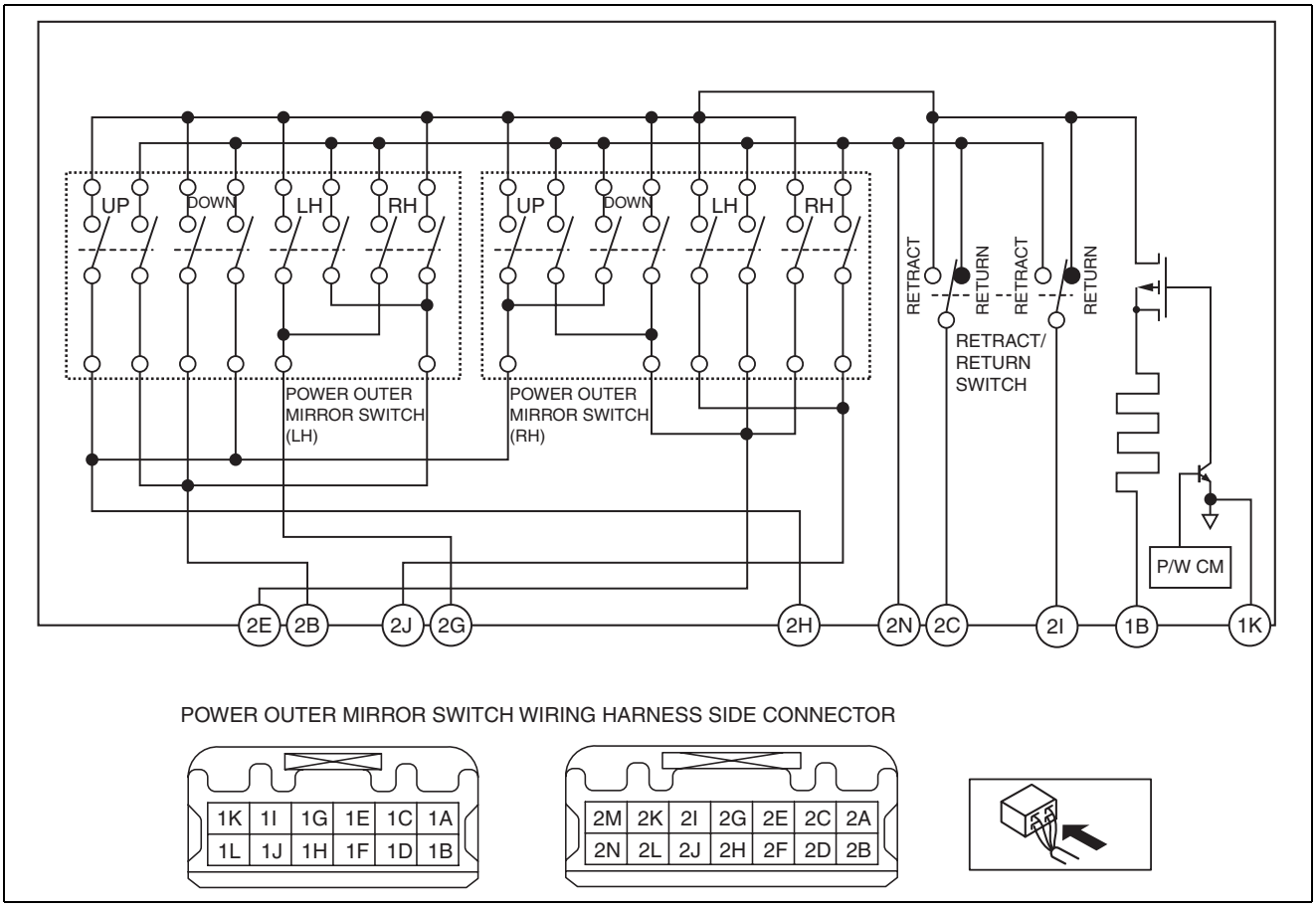

ac5wzw0000254

GLASS/WINDOWS/MIRRORS

Auto-open/close function for driver-side

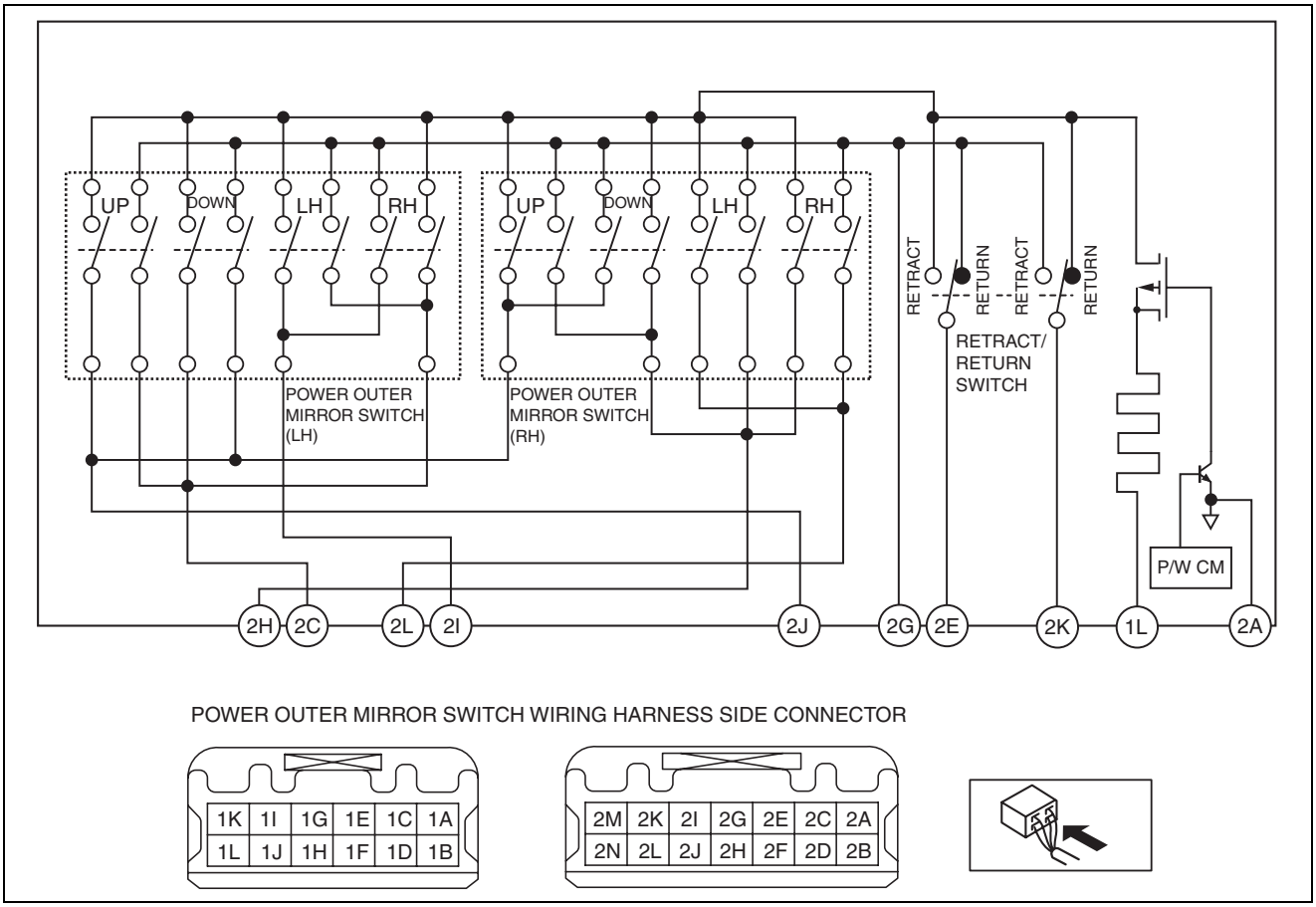

ac5wzw0000464

Auto-open/close function for all windows

○—○ : Continuity

Operation		2N	2B	2C	2E	2G	2H	2I	2J
LH	UP	○	○						
	DOWN	○					○		
	LEFT	○	○						
	RIGHT	○				○			
RH	UP	○			○				
	DOWN	○					○		
	LEFT	○			○				
	RIGHT	○							○
RETRACT SWITCH	RETRACT	○						○	
	RETURN	○		○					

ac5wzw0000254

GLASS/WINDOWS/MIRRORS

Auto-open/close function for driver-side

○—○ : Continuity

Operation		2G	2C	2E	2H	2I	2J	2K	2L
LH	UP	○	○						
	DOWN	○					○		
	LEFT	○	○						
	RIGHT	○				○			
RH	UP	○			○				
	DOWN	○					○		
	LEFT	○			○				
	RIGHT	○							○
RETRACT SWITCH	RETRACT	○						○	
	RETURN	○		○					

ac5wzw0000464

4. Connect the power outer mirror connector.
5. Connect the negative battery cable. (See 01-17A-11 NEGATIVE BATTERY CABLE DISCONNECTION/CONNECTION [SKYACTIV-G 2.0].) (See 01-17A-13 NEGATIVE BATTERY CABLE DISCONNECTION/CONNECTION [SKYACTIV-G 2.0 (WITHOUT i-stop)].) (See 01-17B-9 NEGATIVE BATTERY CABLE DISCONNECTION/CONNECTION [SKYACTIV-D 2.2].)
6. Measure the voltage at each terminal.
   - If the voltage is not as specified in the terminal voltage table, inspect the parts under Inspection item (s) and related wiring harnesses.
     — If the system does not work normally even though the inspection items or related wiring harnesses do not have any malfunction, replace the power window main switch.

GLASS/WINDOWS/MIRRORS

Auto-open/close function for all windows

Terminal	Signal name	Connected to	Measurement condition	Voltage (V)	Inspection item (s)
2B	Right/down signal	Power outer mirror (LH)	While outer mirror glass (LH) is moving downward or towards right	B+	• Related wiring harness • Power outer mirror (See 09-12-69 POWER OUTER MIRROR INSPECTION.)
			Other	1.0 or less	
2C	Retract signal	Power outer mirror (LH/RH)	While power outer mirror (LH/RH) is retracting	B+	• Related wiring harness • Power outer mirror (See 09-12-69 POWER OUTER MIRROR INSPECTION.)
			Other	1.0 or less	
2E	Right/down signal	Power outer mirror (RH)	While outer mirror glass (RH) is moving downward or towards right	B+	• Related wiring harness • Power outer mirror (See 09-12-69 POWER OUTER MIRROR INSPECTION.)
			Other	1.0 or less	
2G	Left signal	Power outer mirror (LH)	While outer mirror glass (LH) is moving towards left	B+	• Related wiring harness • Power outer mirror (See 09-12-69 POWER OUTER MIRROR INSPECTION.)
			Other	1.0 or less	
2H	Up signal	Power outer mirror (LH/RH)	While outer mirror glass (LH/RH) is moving upward	B+	• Related wiring harness • Power outer mirror (See 09-12-69 POWER OUTER MIRROR INSPECTION.)
			Other	1.0 or less	
2I	Return signal	Power outer mirror (LH/RH)	While power outer mirror (LH/RH) is returning	B+	• Related wiring harness • Power outer mirror (See 09-12-69 POWER OUTER MIRROR INSPECTION.)
			Other	1.0 or less	
2J	Left signal	Power outer mirror (RH)	While outer mirror glass (RH) is moving towards left	B+	• Related wiring harness • Power outer mirror (See 09-12-69 POWER OUTER MIRROR INSPECTION.)
			Other	1.0 or less	
2N	GND	Body ground	Under any condition	1.0 or less	• Related wiring harness

Auto-open/close function for driver-side

Terminal	Signal name	Connected to	Measurement condition	Voltage (V)	Inspection item (s)
2C	Right/down signal	Power outer mirror (LH)	While outer mirror glass (LH) is moving downward or towards right	B+	• Related wiring harness • Power outer mirror (See 09-12-69 POWER OUTER MIRROR INSPECTION.)
			Other	1.0 or less	
2E	Retract signal	Power outer mirror (LH/RH)	While power outer mirror (LH/RH) is retracting	B+	• Related wiring harness • Power outer mirror (See 09-12-69 POWER OUTER MIRROR INSPECTION.)
			Other	1.0 or less	
2G	GND	Body ground	Under any condition	1.0 or less	• Related wiring harness
2H	Right/down signal	Power outer mirror (RH)	While outer mirror glass (RH) is moving downward or towards right	B+	• Related wiring harness • Power outer mirror (See 09-12-69 POWER OUTER MIRROR INSPECTION.)
			Other	1.0 or less	
2I	Left signal	Power outer mirror (LH)	While outer mirror glass (LH) is moving towards left	B+	• Related wiring harness • Power outer mirror (See 09-12-69 POWER OUTER MIRROR INSPECTION.)
			Other	1.0 or less	

GLASS/WINDOWS/MIRRORS

Terminal	Signal name	Connected to	Measurement condition	Voltage (V)	Inspection item (s)
2J	Up signal	Power outer mirror (LH/RH)	While outer mirror glass (LH/RH) is moving upward	B+	• Related wiring harness • Power outer mirror (See 09-12-69 POWER OUTER MIRROR INSPECTION.)
			Other	1.0 or less	
2K	Return signal	Power outer mirror (LH/RH)	While power outer mirror (LH/RH) is returning	B+	• Related wiring harness • Power outer mirror (See 09-12-69 POWER OUTER MIRROR INSPECTION.)
			Other	1.0 or less	
2L	Left signal	Power outer mirror (RH)	While outer mirror glass (RH) is moving towards left	B+	• Related wiring harness • Power outer mirror (See 09-12-69 POWER OUTER MIRROR INSPECTION.)
			Other	1.0 or less	

Without Retract/return Function

1. Disconnect the negative battery cable. (See 01-17A-11 NEGATIVE BATTERY CABLE DISCONNECTION/CONNECTION [SKYACTIV-G 2.0].) (See 01-17A-13 NEGATIVE BATTERY CABLE DISCONNECTION/CONNECTION [SKYACTIV-G 2.0 (WITHOUT i-stop)].) (See 01-17B-9 NEGATIVE BATTERY CABLE DISCONNECTION/CONNECTION [SKYACTIV-D 2.2].)
2. Remove the power outer mirror switch. (See 09-12-86 POWER OUTER MIRROR SWITCH REMOVAL/INSTALLATION.)
3. Verify that the continuity between the power outer mirror switch terminals is as indicated in the table.
   - If not as indicated in the table, replace the power outer mirror switch. (See 09-12-86 POWER OUTER MIRROR SWITCH REMOVAL/INSTALLATION.)

Auto-open/close function for all windows

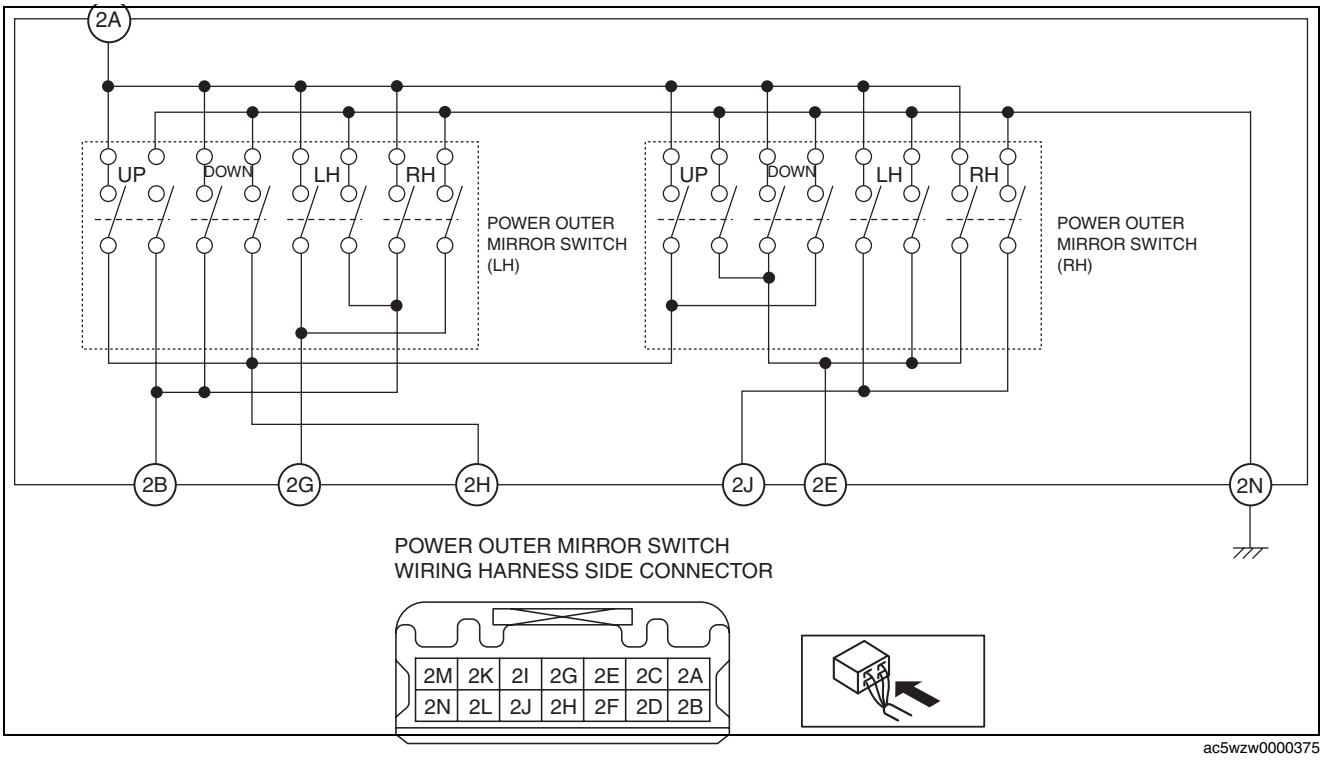

ac5wzw0000375

GLASS/WINDOWS/MIRRORS

Auto-open/close function for driver-side

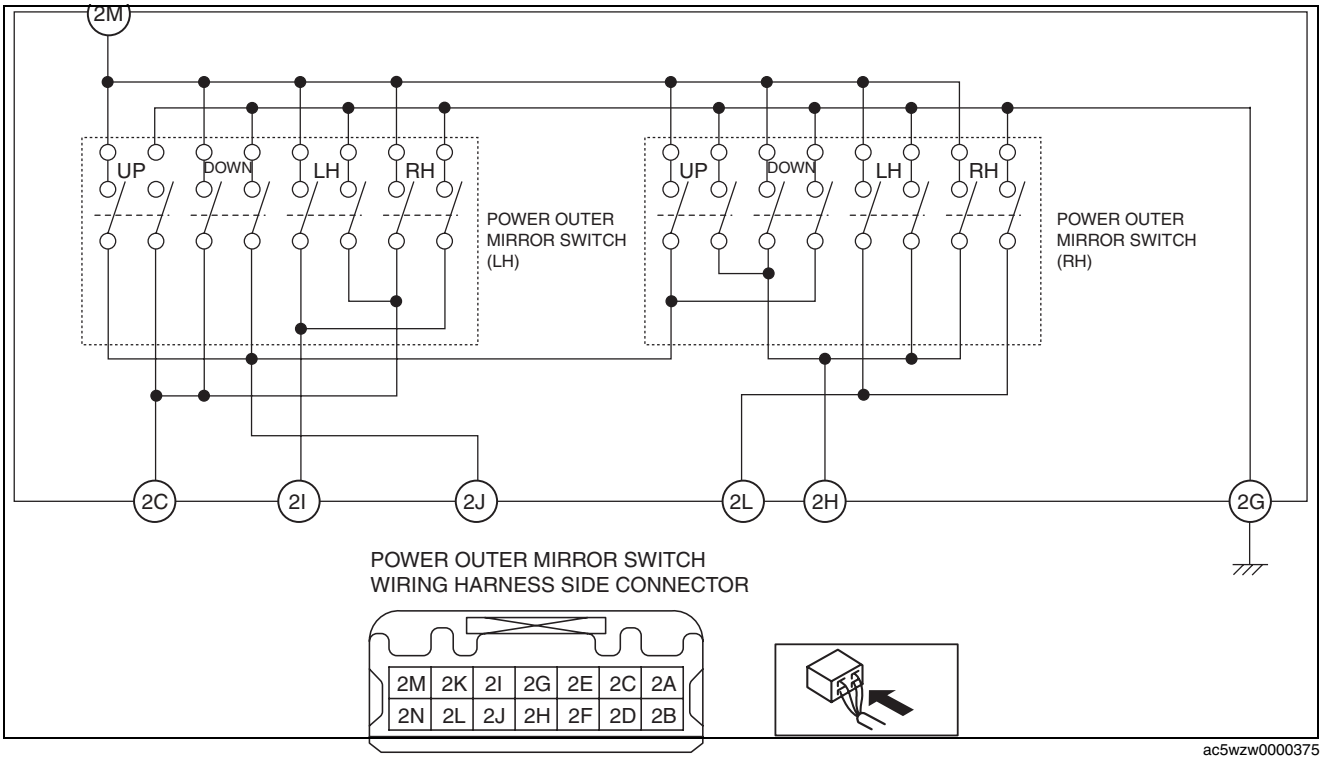

ac5wzw0000375

Auto-open/close function for all windows

○—○ : Continuity

Operation		2A	2B	2E	2G	2H	2J	2N
LH	UP	○				○		○
	DOWN	○	○			○		○
	LEFT	○			○			○
	RIGHT	○	○		○			○
RH	UP	○				○		○
	DOWN	○		○		○		○
	LEFT	○					○	○
	RIGHT	○		○			○	○

ac5wzw0000375

GLASS/WINDOWS/MIRRORS

Auto-open/close function for driver-side

○—○ : Continuity

Operation		2M	2C	2H	2I	2J	2L	2G
LH	UP	○	○			○		○
	DOWN	○	○			○		○
	LEFT	○	○		○			○
	RIGHT	○	○		○			○
RH	UP	○		○		○		○
	DOWN	○		○		○		○
	LEFT	○		○			○	○
	RIGHT	○		○			○	○

ac5wzw0000376

GLASS/WINDOWS/MIRRORS

AUTO-DIMMING MIRROR REMOVAL/INSTALLATION

id091200099900

With Forward Sensing Camera Or Smart City Brake Support (SCBS)

1. Disconnect the negative battery cable. (See 01-17A-11 NEGATIVE BATTERY CABLE DISCONNECTION/CONNECTION [SKYACTIV-G 2.0].) (See 01-17A-13 NEGATIVE BATTERY CABLE DISCONNECTION/CONNECTION [SKYACTIV-G 2.0 (WITHOUT i-stop)].) (See 01-17B-9 NEGATIVE BATTERY CABLE DISCONNECTION/CONNECTION [SKYACTIV-D 2.2].)
2. Remove the cover. (See 09-22-98 FORWARD SENSING CAMERA (FSC) REMOVAL/INSTALLATION.)
3. Disconnect the auto-dimming mirror connector.
4. Remove the screw A.

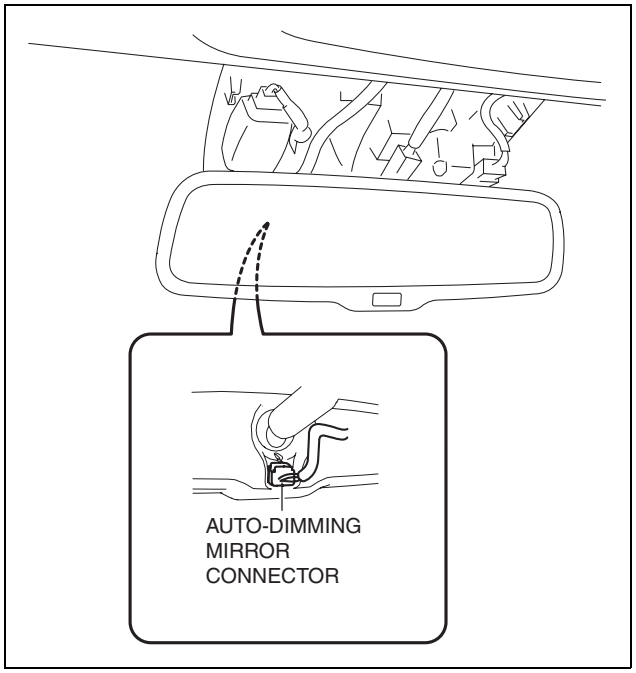

ac5wzw0000135

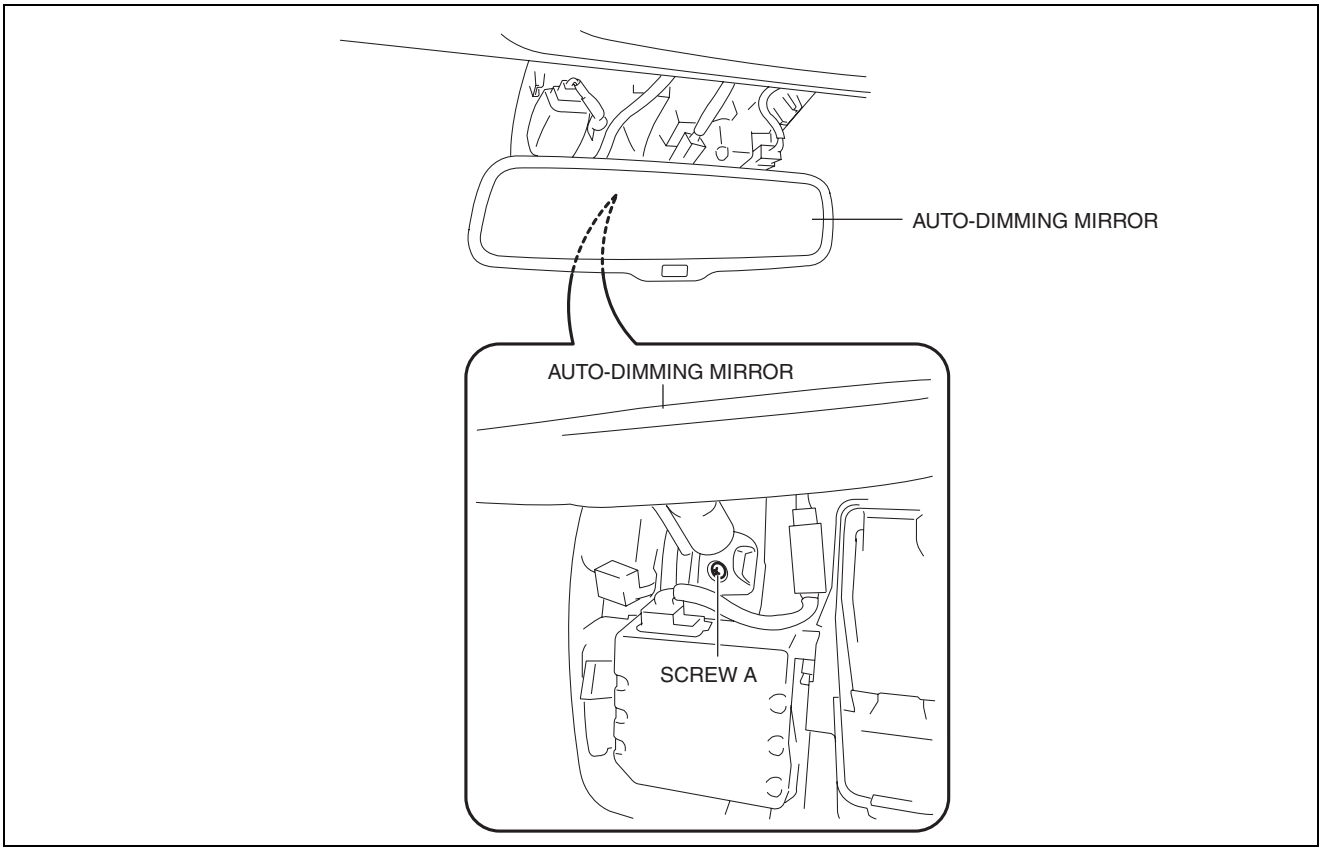

ac5wzw0000135

GLASS/WINDOWS/MIRRORS

5. Remove the auto-dimming mirror in the direction of arrow (1) shown in the figure.

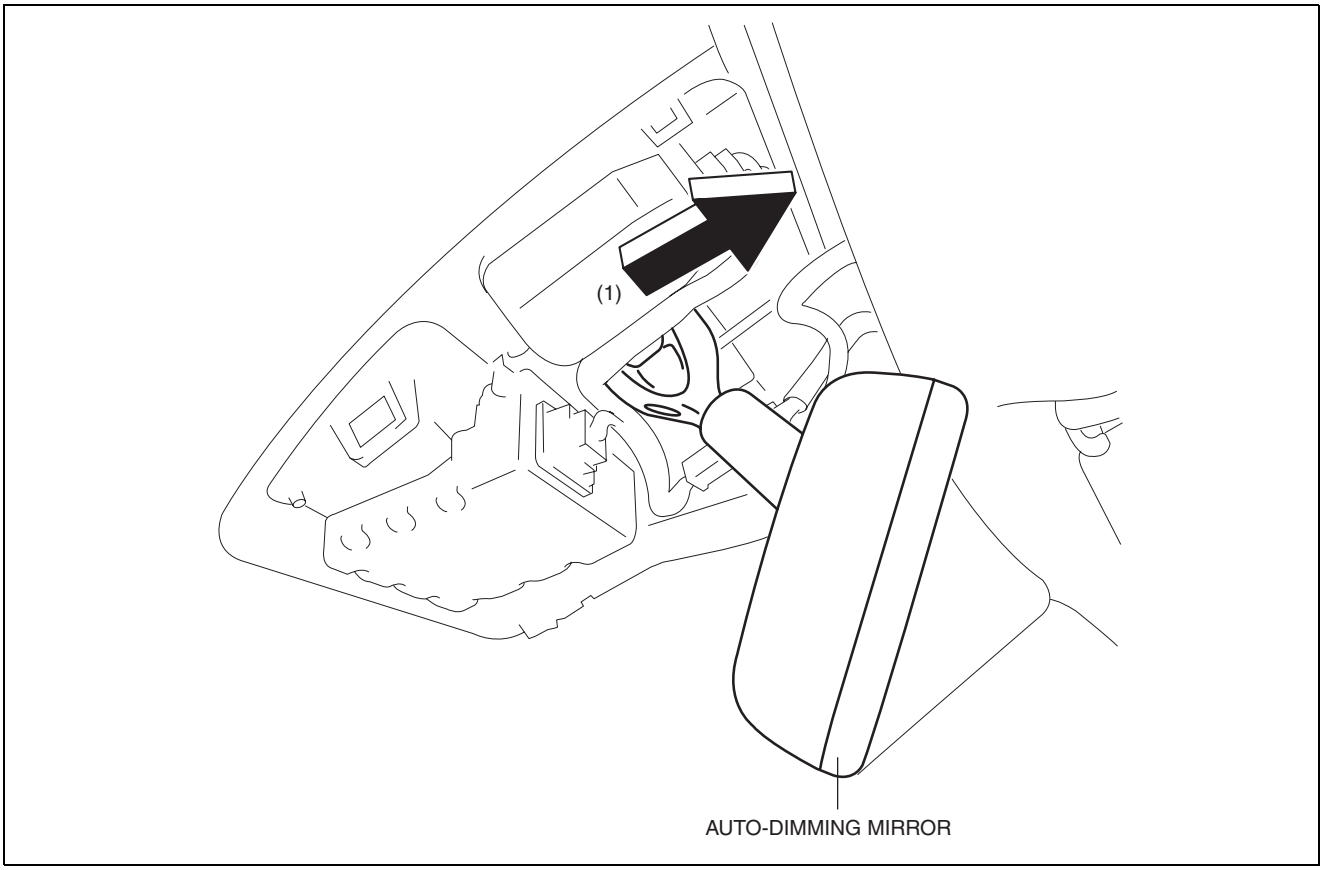

ac5wzw0000135

6. Install in the reverse order of removal.

GLASS/WINDOWS/MIRRORS

Without Forward Sensing Camera Or Smart City Brake Support (SCBS)

1. Disconnect the negative battery cable. (See 01-17A-11 NEGATIVE BATTERY CABLE DISCONNECTION/CONNECTION [SKYACTIV-G 2.0].) (See 01-17A-13 NEGATIVE BATTERY CABLE DISCONNECTION/CONNECTION [SKYACTIV-G 2.0 (WITHOUT i-stop)].) (See 01-17B-9 NEGATIVE BATTERY CABLE DISCONNECTION/CONNECTION [SKYACTIV-D 2.2].)
2. Remove the screw B.

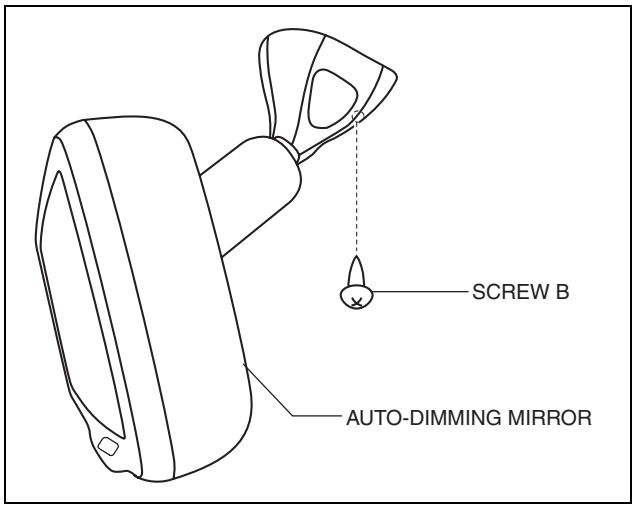

ac5wzw0000299

3. Remove the auto-dimming mirror in the direction of arrow (1) shown in the figure.
4. Detach tabs while push the cover No.2 in the direction of the arrow (2) shown in the figure, then remove the cover No.2 in the direction of the arrow (3).

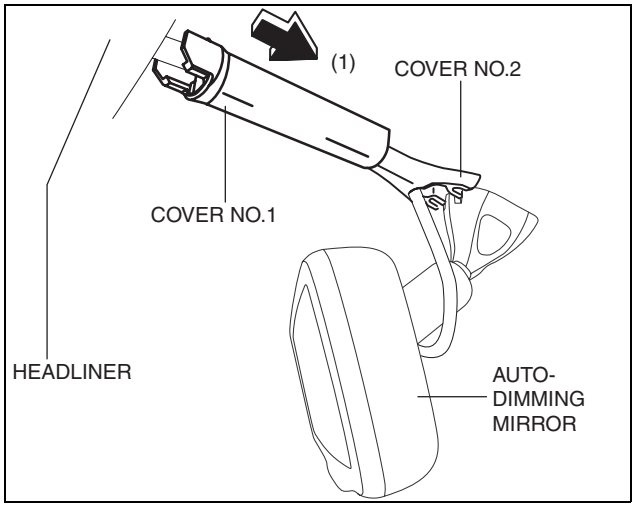

ac5wzw0000299

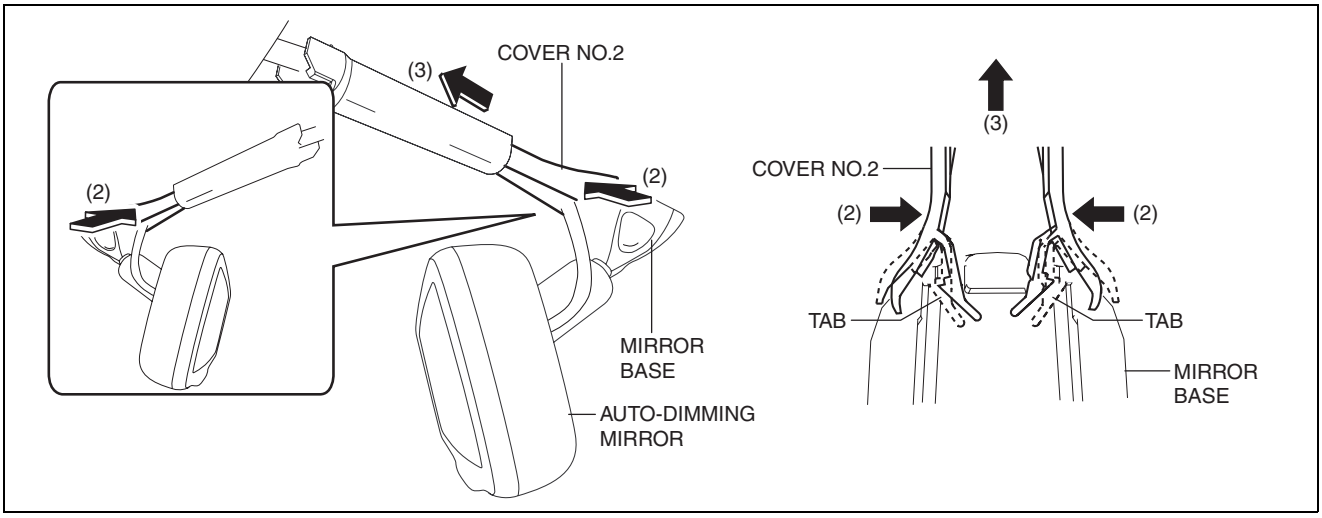

ac5wzw0000299

GLASS/WINDOWS/MIRRORS

5. Disconnect the auto-dimming mirror connector.

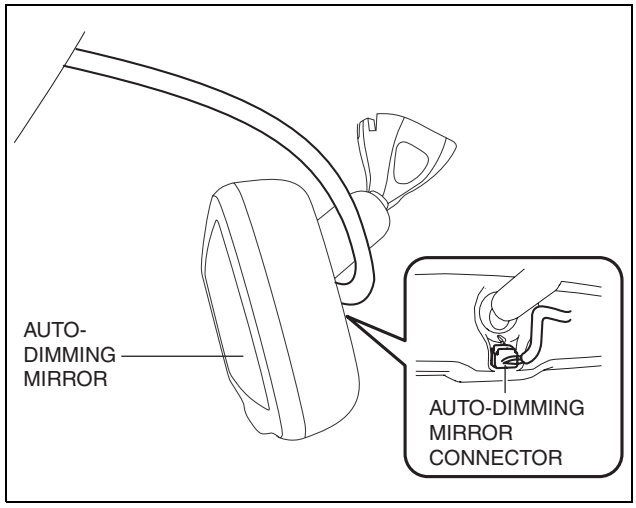

ac5wzw0000299

6. Remove the auto-dimming mirror in the direction of arrow (4) from the mirror base.
7. Install in the reverse order of removal.

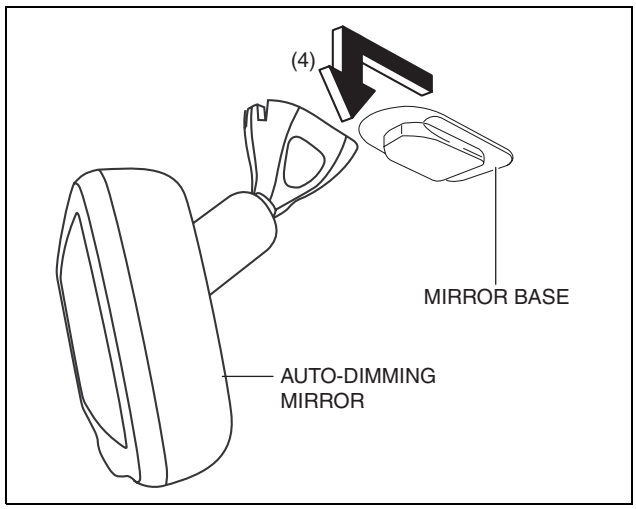

ac5wzw0000299

GLASS/WINDOWS/MIRRORS

AUTO-DIMMING MIRROR INSPECTION

id091200004800

1. Remove the cover. (See 09-18-94 FORWARD SENSING CAMERA (FSC) REMOVAL/INSTALLATION.)
2. Measure the voltage at each terminal.
   - If the voltage is not as specified in the Terminal Voltage Table (Reference), inspect the parts under "Inspection item (s)" and related wiring harnesses.
     — If the system does not work properly even though the inspection items or related wiring harnesses do not have any malfunction, replace the auto-dimming mirror.

Terminal Voltage Table (Reference)

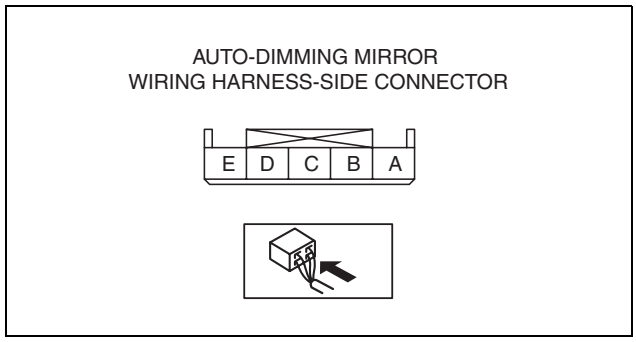

ac5wzw0000135

Terminal	Signal name	Connected to	Measured condition	Voltage (V)	Inspection item(s)
A	—	—	—	—	—
B	—	—	—	—	—
C	R position signal	Rear body control module (RBCM)	R position	B+	• Rear body control module (RBCM) • Related wiring harnesses
			Other than R position	1.0 or less	
D	GND	Body ground	Under any condition	1.0 or less	• Related wiring harnesses
E	Power supply (IG1)	• Ignition switch • C/U IG1 15A fuse	Switch the ignition ON (engine on or off)	B+	• Ignition switch • C/U IG1 15A fuse • Related wiring harnesses
			Switch the ignition OFF (LOCK)	1.0 or less	

REARVIEW MIRROR REMOVAL/INSTALLATION

id091200009200

1. Remove the screw.
2. Pull the rearview mirror in the direction of the arrow (1) shown in the figure
3. Install in the reverse order of removal.

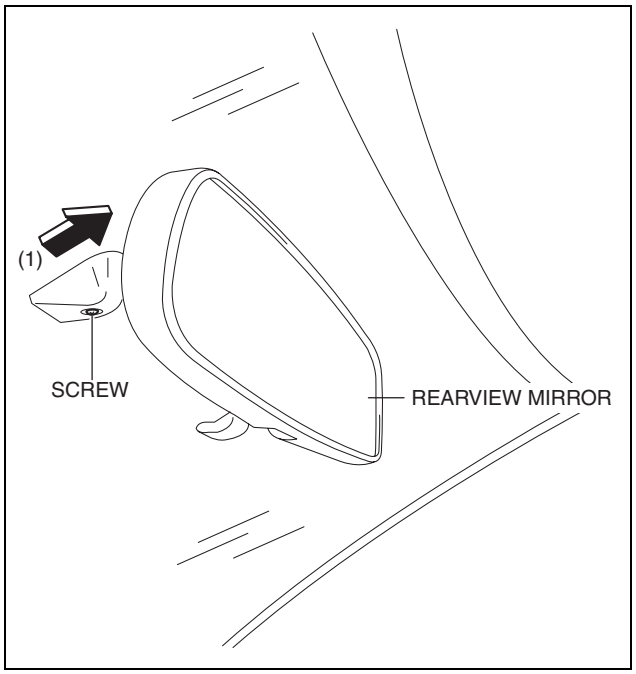

ac5wzw0000229

GLASS/WINDOWS/MIRRORS

MIRROR BASE REMOVAL

id091200005300

1. Disconnect the negative battery cable. (See 01-17A-11 NEGATIVE BATTERY CABLE DISCONNECTION/CONNECTION [SKYACTIV-G 2.0].) (See 01-17A-13 NEGATIVE BATTERY CABLE DISCONNECTION/CONNECTION [SKYACTIV-G 2.0 (WITHOUT i-stop)].) (See 01-17B-9 NEGATIVE BATTERY CABLE DISCONNECTION/CONNECTION [SKYACTIV-D 2.2].)
2. Remove the following parts:
   (1) Rearview mirror (without auto-dimming mirror) (See 09-12-98 REARVIEW MIRROR REMOVAL/INSTALLATION.)
   (2) Cover A (with forward sensing camera) (See 09-22-98 FORWARD SENSING CAMERA (FSC) REMOVAL/INSTALLATION.)
   (3) Cover B (with forward sensing camera) (See 09-22-98 FORWARD SENSING CAMERA (FSC) REMOVAL/INSTALLATION.)
   (4) Auto-dimming mirror (with auto-dimming mirror) (See 09-12-94 AUTO-DIMMING MIRROR REMOVAL/INSTALLATION.)
3. Wind each end of a wire around a bar.

   Warning
   - **Using the piano wire with bare hands can cause injury. Always wear gloves when using the piano wire.**

   Note
   - Use a long sawing action to spread the work over the whole length of the piano wire to prevent it from breaking.

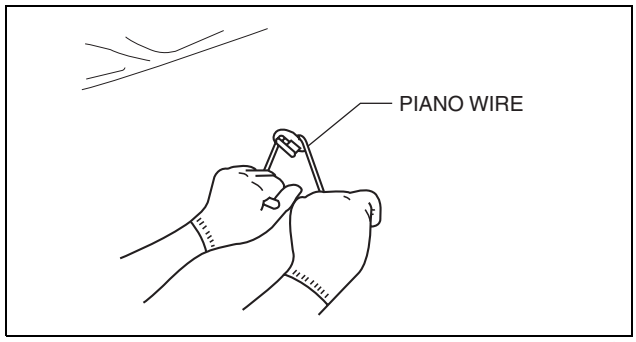

ac5wzw0000135

4. Fix one end of the piano wire, and while pulling the other end, cut the sealant to remove the base.

MIRROR BASE INSTALLATION

id091200005400

1. Cut away all of the original sealant using a razor.

   Warning
   - **Using a razor with bare hands can cause injury. Always wear gloves when using a razor.**

2. Clean and degrease the ceramic coating on the glass and the base.

   Caution
   - **Keep the area free of dirt and grease, and do not touch the surface. Otherwise, the primer may not properly bond to the surface of the glass.**

3. Apply primer to the bonding area of the glass and the base.
4. Use only glass primer on the glass, and body primer on the base. Allow the primer to dry for **approx. 30 min.**
5. Apply **3.0 mm {0.12 in}** layer of sealant to the base.

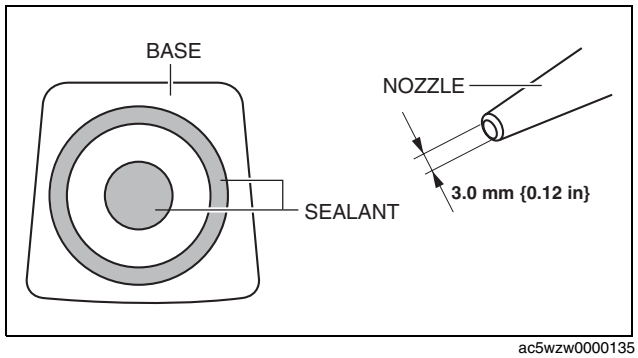

ac5wzw0000135

GLASS/WINDOWS/MIRRORS

6. Center the base in the ceramic coating and press it onto the glass.
7. Use isopropyl alcohol to remove any excess repair sealant.

Hardening time of sealant

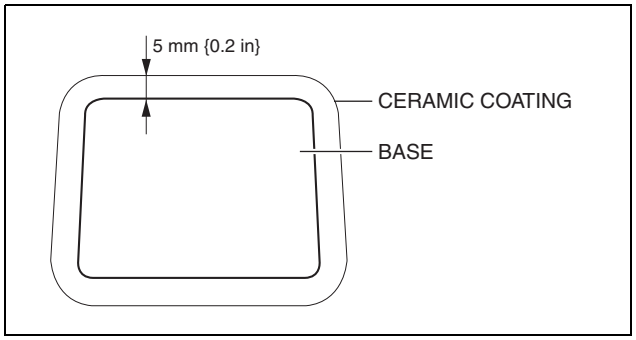

ac5wzw0000135

Temperature	Surface hardening time	Time required until car can be put into service
5 °C {41 °F}	Approx. 1.5 h	Approx. 12 h
20 °C {68 °F}	Approx. 1 h	Approx. 4 h
35 °C {95 °F}	Approx. 10 min	Approx. 2 h

8. Install the rearview mirror. (without auto-dimming mirror) (See 09-12-98 REARVIEW MIRROR REMOVAL/INSTALLATION.)
9. Install the auto-dimming mirror. (with auto-dimming mirror) (See 09-12-94 AUTO-DIMMING MIRROR REMOVAL/INSTALLATION.)

09-13 SEATS

SEATS LOCATION INDEX 09-13–3
FRONT SEAT
REMOVAL/INSTALLATION. 09-13–4
FRONT SEAT
BACK COMPONENT
REMOVAL/INSTALLATION. 09-13–6
Driver-side
(with power seat system) 09-13–6
Driver-side
(without power seat system) 09-13–8
Passenger-side 09-13–10
FRONT SEAT
BACK TRIM
REMOVAL/INSTALLATION. 09-13–11
Driver-side
(with power seat system) 09-13–11
Driver-side
(without power seat system) 09-13–16
Passenger-side 09-13–21
FRONT SEAT
CUSHION TRIM
REMOVAL/INSTALLATION. 09-13–26
Driver-side
(with power seat system) 09-13–26
Driver-side
(without power seat system) 09-13–29
Passenger-side 09-13–31
FRONT SEAT
CUSHION FRAME
REMOVAL/INSTALLATION. 09-13–34
FRONT SEAT
ADJUSTER UNIT
REMOVAL/INSTALLATION. 09-13–35
Driver-side
(with power seat system) 09-13–35
Driver-side
(without power seat system) 09-13–37
Passenger-side 09-13–39
FRONT SEAT
SIDE COVER
REMOVAL/INSTALLATION. 09-13–41
Front Door Side 09-13–41
Rear Console Side 09-13–51
FRONT SEAT
RAIL GUIDE COVER
REMOVAL/INSTALLATION. 09-13–53
FRONT SEAT
RAIL COVER
REMOVAL/INSTALLATION. 09-13–55
OCCUPANCY
SENSOR INSPECTION. 09-13–55
REAR SEAT
REMOVAL/INSTALLATION. 09-13–56
Rear Seat Carry Into Vehicle Note. . . . 09-13–59
Rear Hinge Removal Note 09-13–60
Rear Hinge Installation Note 09-13–60
Rear Seat Installation Note 09-13–60
REAR SEAT BACK
REMOVAL/INSTALLATION. 09-13–61
6:4 Split Type 09-13–61
4:2:4 Split Type 09-13–63
REAR SEAT BACK FRAME
REMOVAL/INSTALLATION 09-13–64
6:4 Split Type. 09-13–64
4:2:4 Split Type 09-13–68
REAR SEAT BACK TRIM
REMOVAL/INSTALLATION 09-13–74
6:4 Split Type. 09-13–74
4:2:4 Split Type 09-13–75
REAR SEAT CUSHION
REMOVAL/INSTALLATION 09-13–76
6:4 Split Type. 09-13–76
4:2:4 Split Type 09-13–78
REAR SEAT CUSHION TRIM
REMOVAL/INSTALLATION 09-13–79
6:4 Split Type. 09-13–79
4:2:4 Split Type 09-13–81
REAR SEAT BACK STRIKER
REMOVAL/INSTALLATION 09-13–82
REAR SEAT CENTER ARMREST
REMOVAL/INSTALLATION 09-13–83
REMOTE HANDLE LEVER
REMOVAL/INSTALLATION 09-13–85
Remote Handle Lever
Installation Note 09-13–86
FRONT TILT
MOTOR INSPECTION 09-13–87
L.H.D. 09-13–87
R.H.D. 09-13–87
LIFT MOTOR
REMOVAL/INSTALLATION 09-13–88
LIFT MOTOR INSPECTION 09-13–89
L.H.D. 09-13–89
R.H.D. 09-13–89
SLIDE MOTOR
REMOVAL/INSTALLATION 09-13–90
SLIDE MOTOR INSPECTION. 09-13–92
L.H.D. 09-13–92
R.H.D. 09-13–92
RECLINER MOTOR INSPECTION. 09-13–93
L.H.D. 09-13–93
R.H.D. 09-13–94
LUMBER SUPPORT MOTOR
REMOVAL/INSTALLATION 09-13–95
LUMBER SUPPORT
MOTOR INSPECTION 09-13–97
L.H.D. 09-13–97
R.H.D. 09-13–98
POWER SEAT SWITCH
REMOVAL/INSTALLATION 09-13–99
POWER SEAT
SWITCH INSPECTION. 09-13–100
L.H.D. 09-13–100
R.H.D. 09-13–101
SEAT WARMER SWITCH
REMOVAL/INSTALLATION 09-13–103
SEAT WARMER CONTROL UNIT
REMOVAL/INSTALLATION 09-13–104
SEAT WARMER CONTROL
UNIT INSPECTION. 09-13–105
Forward 09-13–105
System Diagram 09-13–106
Symptom Trouble Shooting Index 09-13–107

SEATS

Inspection Procedure (No.1 Seat Warmer Function Is Inoperative) 09-13–107
Inspection Procedure (No.2 Seat Warmer Always Operations) 09-13–109
Inspection Procedure (No.3 Temperature Of Seat Warmer Cannot Be Adjusted) 09-13–110
SEAT WARMER UNIT INSPECTION 09-13–112
Driver-Side 09-13–112
Passenger-Side 09-13–115

SEATS

SEATS LOCATION INDEX

id091300800100

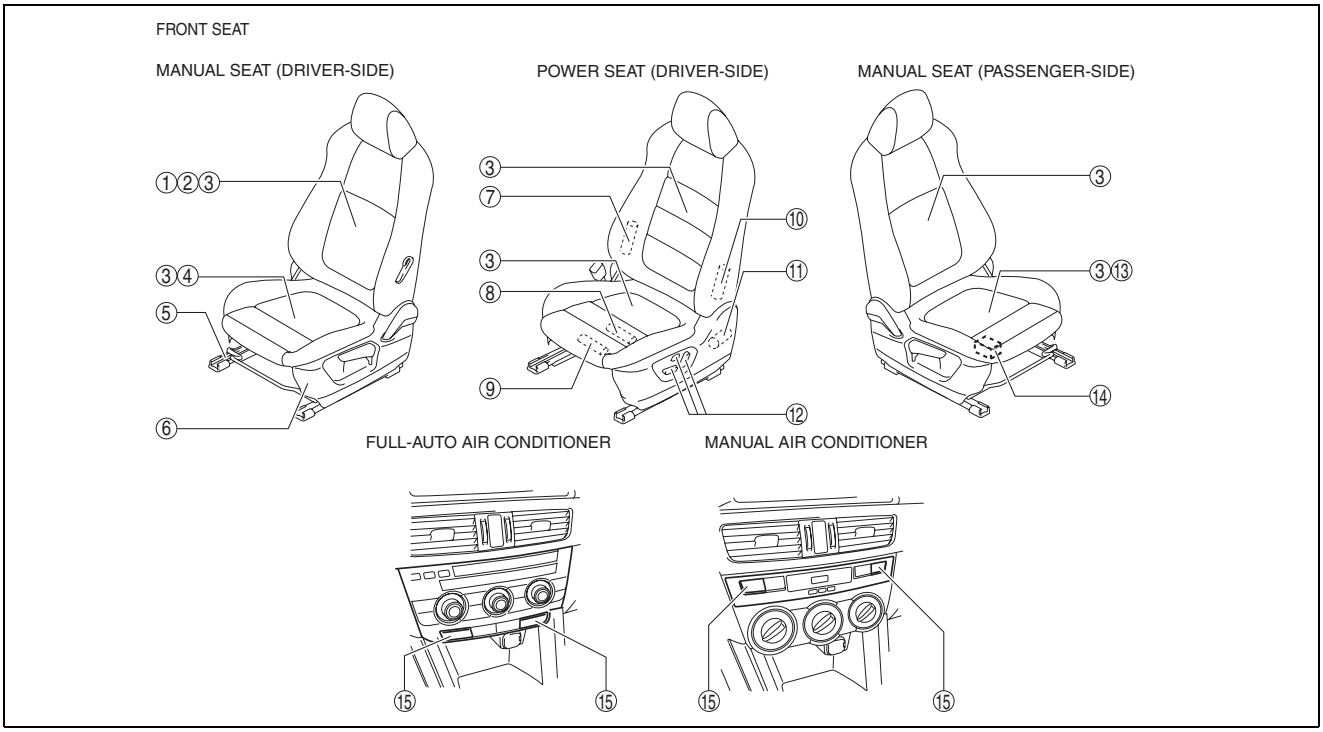

ac5wzw0000514

1	Front seat (See 09-13-4 FRONT SEAT REMOVAL/INSTALLATION.)
2	Front seat back (See 09-13-6 FRONT SEAT BACK COMPONENT REMOVAL/INSTALLATION.) (See 09-13-11 FRONT SEAT BACK TRIM REMOVAL/INSTALLATION.)
3	Seat warmer unit (See 09-13-112 SEAT WARMER UNIT INSPECTION.)
4	Front seat cushion (See 09-13-26 FRONT SEAT CUSHION TRIM REMOVAL/INSTALLATION.) (See 09-13-34 FRONT SEAT CUSHION FRAME REMOVAL/INSTALLATION.)
5	Front seat adjuster unit (See 09-13-35 FRONT SEAT ADJUSTER UNIT REMOVAL/INSTALLATION.) (See 09-13-53 FRONT SEAT RAIL GUIDE COVER REMOVAL/INSTALLATION.) (See 09-13-55 FRONT SEAT RAIL COVER REMOVAL/INSTALLATION.)
6	Front seat side cover (See 09-13-41 FRONT SEAT SIDE COVER REMOVAL/INSTALLATION.)
7	Recliner motor (See 09-13-93 RECLINER MOTOR INSPECTION.)
8	Slide motor (See 09-13-90 SLIDE MOTOR REMOVAL/INSTALLATION.) (See 09-13-92 SLIDE MOTOR INSPECTION.)
9	Front tilt motor (See 09-13-87 FRONT TILT MOTOR INSPECTION.)
10	Lumber support motor (See 09-13-95 LUMBER SUPPORT MOTOR REMOVAL/INSTALLATION.) (See 09-13-97 LUMBER SUPPORT MOTOR INSPECTION.)
11	Lift motor (See 09-13-88 LIFT MOTOR REMOVAL/INSTALLATION.) (See 09-13-89 LIFT MOTOR INSPECTION.)
12	Power seat switch (See 09-13-99 POWER SEAT SWITCH REMOVAL/INSTALLATION.) (See 09-13-100 POWER SEAT SWITCH INSPECTION.)
13	Occupancy sensor (See 09-13-55 OCCUPANCY SENSOR INSPECTION.)
14	Seat warmer control unit (See 09-13-104 SEAT WARMER CONTROL UNIT REMOVAL/INSTALLATION.) (See 09-13-105 SEAT WARMER CONTROL UNIT INSPECTION.)
15	Seat warmer switch (See 09-13-103 SEAT WARMER SWITCH REMOVAL/INSTALLATION.)

SEATS

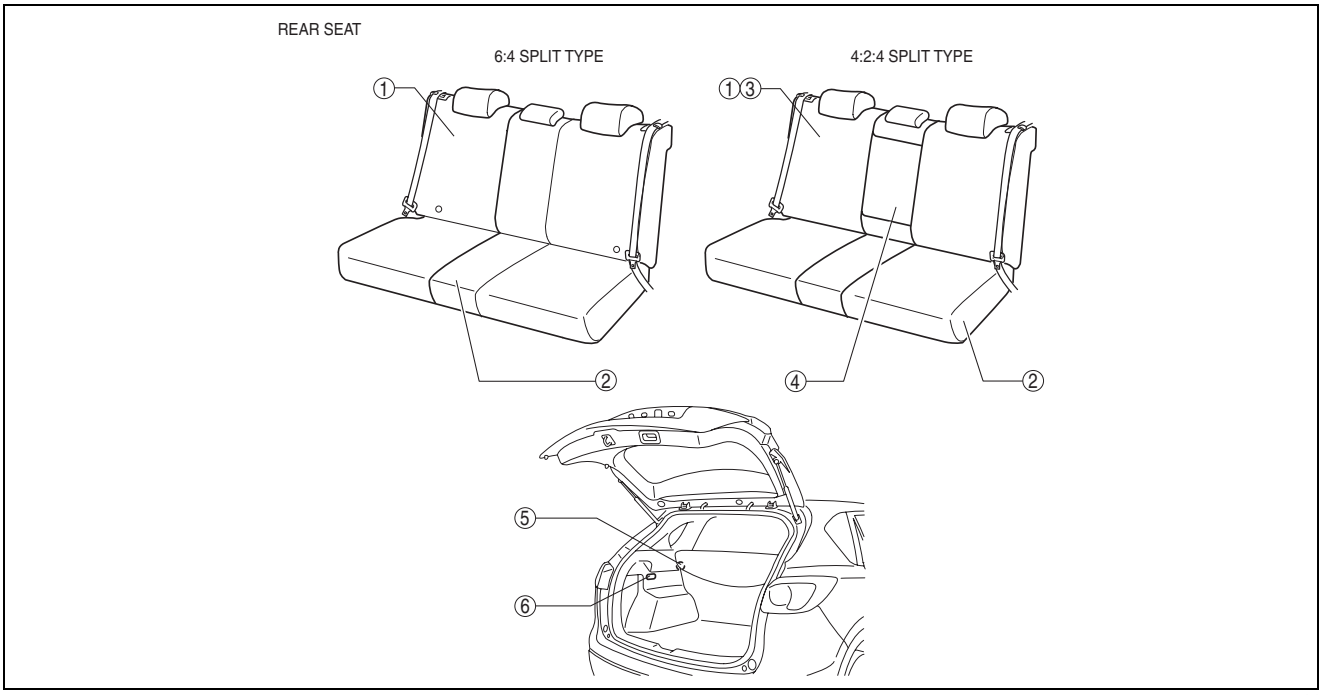

ac5wzw0000514

1	Rear seat back (See 09-13-61 REAR SEAT BACK REMOVAL/INSTALLATION.) (See 09-13-64 REAR SEAT BACK FRAME REMOVAL/INSTALLATION.) (See 09-13-74 REAR SEAT BACK TRIM REMOVAL/INSTALLATION.)
2	Rear seat cushion (See 09-13-76 REAR SEAT CUSHION REMOVAL/INSTALLATION.) (See 09-13-79 REAR SEAT CUSHION TRIM REMOVAL/INSTALLATION.)
3	Rear seat (See 09-13-56 REAR SEAT REMOVAL/INSTALLATION.)
4	Rear seat center armrest (See 09-13-83 REAR SEAT CENTER ARMREST REMOVAL/INSTALLATION.)
5	Rear seat back striker (See 09-13-82 REAR SEAT BACK STRIKER REMOVAL/INSTALLATION.)
6	Remote handle lever (See 09-13-85 REMOTE HANDLE LEVER REMOVAL/INSTALLATION.)

FRONT SEAT REMOVAL/INSTALLATION

id091300800200

Warning

- **Handling a side air bag improperly can accidentally operate (deploy) the air bag, which may seriously injure you. Read the service warnings/cautions in the Workshop Manual before handling the front seat (side air bag integrated). (See 08-10-3 AIR BAG SYSTEM SERVICE WARNINGS.) (See 08-10-5 AIR BAG SYSTEM SERVICE CAUTIONS.)**
- **If the sliding mechanisms on both sides are not locked after assembling the front seat, the front seat will operate accidentally while the vehicle is driven, which could result in serious injury. After assembling the front seat, shake it up and down and verify that the sliding mechanism on the both sides are locked.**

Caution

- **If the slide bar is operated after the front seat is removed, the left/right slide positions will deviate and the adjuster unit could be damaged after the front seat is installed. After removing a front seat, do not operate the slider lever.**
- **Verify that there are no malfunctions in the forward/back slide of the seat and in the adjuster unit after installing a front seat.**
- **When performing the procedure with a front seat removed from the vehicle, perform the procedure on a clean cloth so as not to damage or soil the seat.**

SEATS

Note
- When removing the front seat from the vehicle or putting it back in, it can be performed smoothly by removing the headrest.

1. Switch the ignition off (LOCK).
2. Disconnect the negative battery cable and wait for **1 min**. (See 01-17A-11 NEGATIVE BATTERY CABLE DISCONNECTION/CONNECTION [SKYACTIV-G 2.0].) (See 01-17A-13 NEGATIVE BATTERY CABLE DISCONNECTION/CONNECTION [SKYACTIV-G 2.0 (WITHOUT i-stop)].) (See 01-17B-9 NEGATIVE BATTERY CABLE DISCONNECTION/CONNECTION [SKYACTIV-D 2.2].)
3. Press part A in the direction of the arrow (1) shown in the figure and disengage tabs, move the lever in the direction of the arrow (2) and disconnect the connector in the direction of the arrow (3).

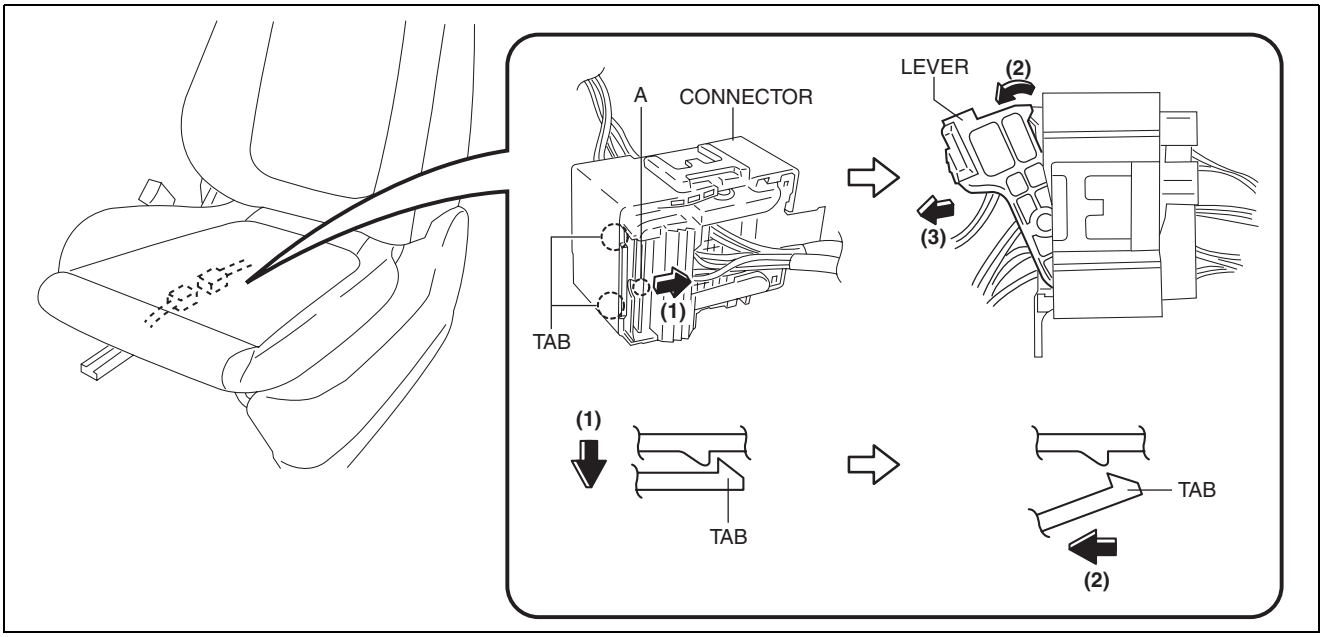

ac5wzw0000319

4. Remove the bolts in the order of (1), (2), (3), (4) shown in the figure, then take the front seat out from the opened front door.

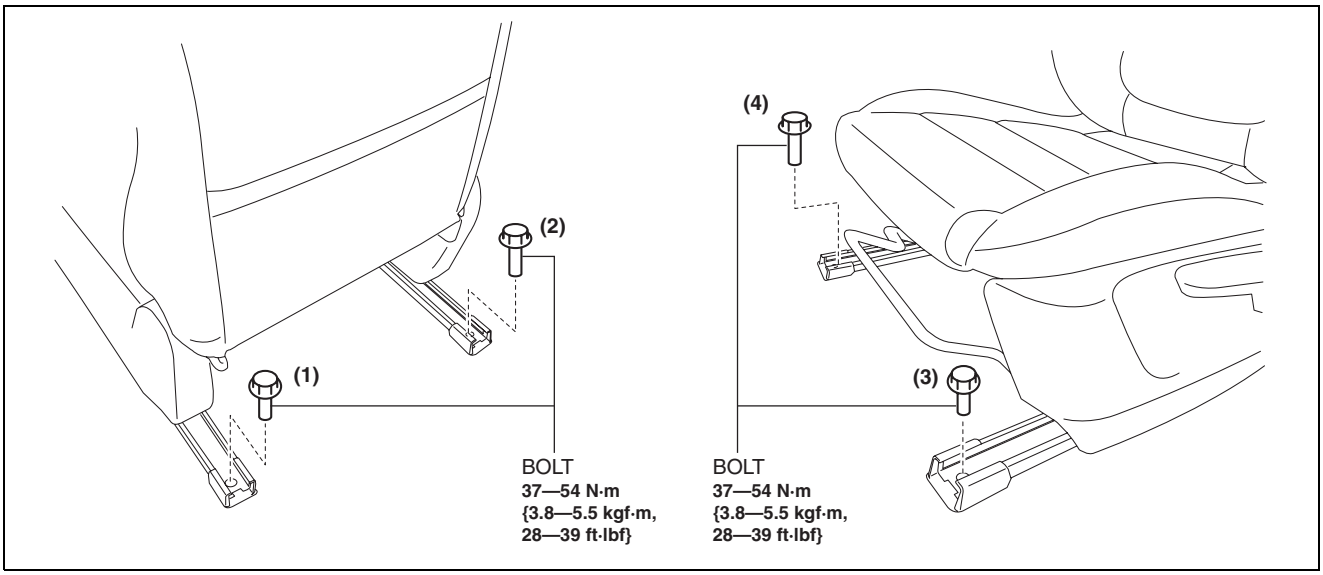

ac5wzw0000310

5. Install in the reverse order of removal.

SEATS

FRONT SEAT BACK COMPONENT REMOVAL/INSTALLATION

id091300911200

Warning

- **Handling a side air bag improperly can accidentally operate (deploy) the air bag, which may seriously injure you. Read the service warnings/cautions in the Workshop Manual before handling the front seat (side air bag integrated). (See 08-10-3 AIR BAG SYSTEM SERVICE WARNINGS.) (See 08-10-5 AIR BAG SYSTEM SERVICE CAUTIONS.)**
- **If the sliding mechanisms on both sides are not locked after assembling the front seat, the front seat will operate accidentally while the vehicle is driven, which could result in serious injury. After assembling the front seat, shake it up and down and verify that the sliding mechanism on the both sides are locked.**

Caution

- **If the slide bar is operated after the front seat is removed, the left/right slide positions will deviate and the adjuster unit could be damaged after the front seat is installed. After removing a front seat, do not operate the slider lever.**
- **Verify that there are no malfunctions in the forward/back slide of the seat and in the adjuster unit after installing a front seat.**
- **When performing the procedure with a front seat removed from the vehicle, perform the procedure on a clean cloth so as not to damage or soil the seat.**

Driver-side (with power seat system)

1. Switch the ignition off (LOCK).
2. Disconnect the negative battery cable and wait for **1 min**. (See 01-17A-11 NEGATIVE BATTERY CABLE DISCONNECTION/CONNECTION [SKYACTIV-G 2.0].) (See 01-17A-13 NEGATIVE BATTERY CABLE DISCONNECTION/CONNECTION [SKYACTIV-G 2.0 (WITHOUT i-stop)].) (See 01-17B-9 NEGATIVE BATTERY CABLE DISCONNECTION/CONNECTION [SKYACTIV-D 2.2].)
3. Remove the front seat. (See 09-13-4 FRONT SEAT REMOVAL/INSTALLATION.)
4. Remove the front seat side cover. (See 09-13-41 FRONT SEAT SIDE COVER REMOVAL/INSTALLATION.)
5. Remove fasteners A and set the front seat cushion trim aside.

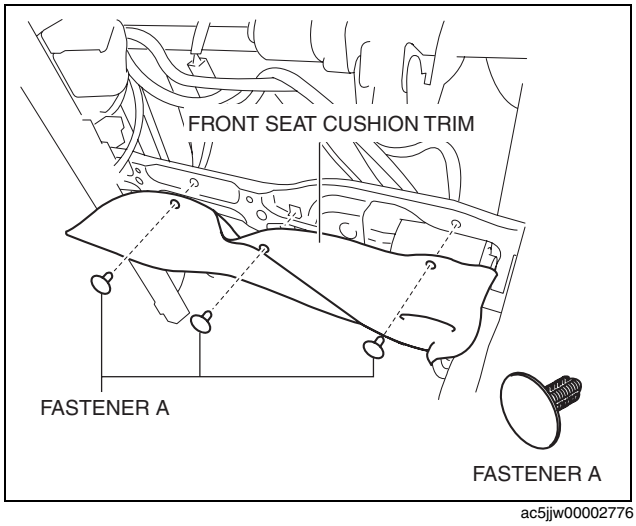

ac5jjw00002776

SEATS

6. Disconnect the side air bag module connector.

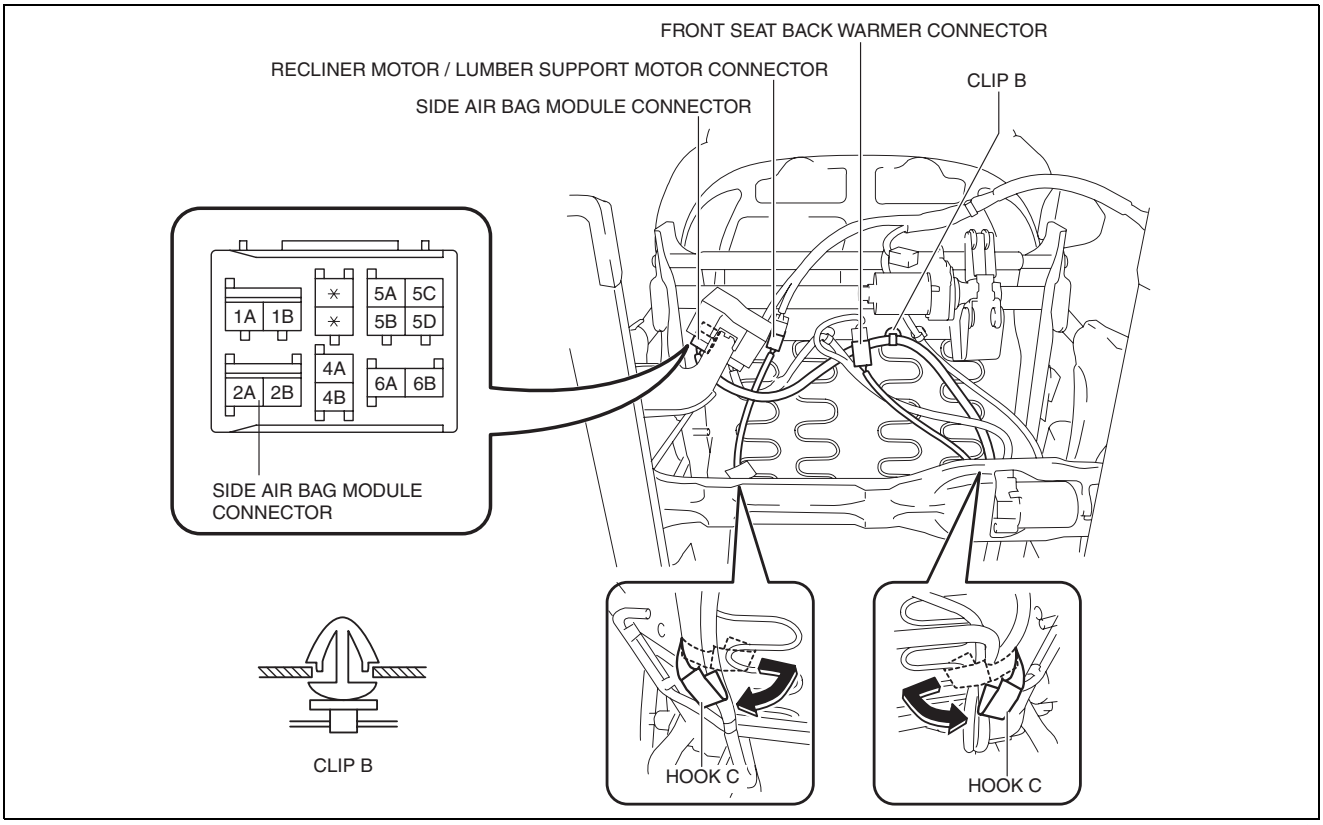

ac5wzw0000315

7. Disengage clip B.
8. Disconnect the front seat back warmer connector.
9. Disconnect the recliner motor/lumber support motor connectors.
10. Set hooks C aside in the direction of the arrow (1) shown in the figure.
11. Remove the bolts A, then remove the front seat back component.

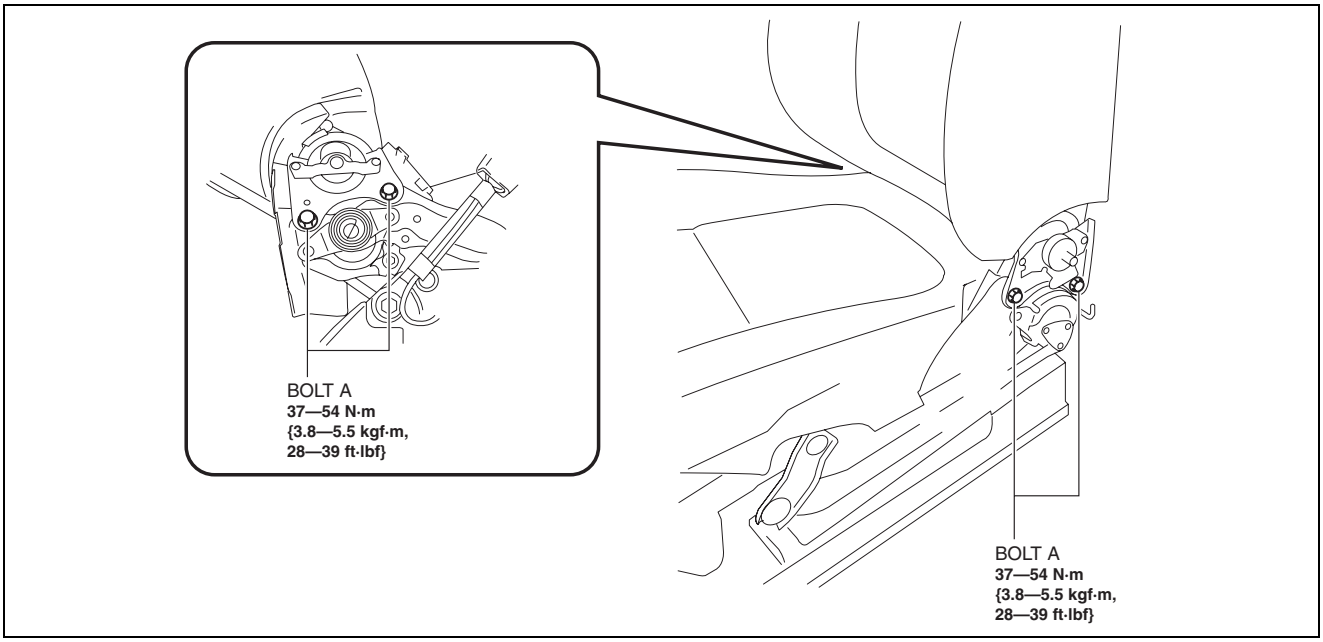

ac5jjw00002744

12. Install in the reverse order of removal.

SEATS

Driver-side (without power seat system)

1. Switch the ignition off (LOCK).
2. Disconnect the negative battery cable and wait for **1 min**. (See 01-17A-11 NEGATIVE BATTERY CABLE DISCONNECTION/CONNECTION [SKYACTIV-G 2.0].) (See 01-17A-13 NEGATIVE BATTERY CABLE DISCONNECTION/CONNECTION [SKYACTIV-G 2.0 (WITHOUT i-stop)].) (See 01-17B-9 NEGATIVE BATTERY CABLE DISCONNECTION/CONNECTION [SKYACTIV-D 2.2].)
3. Remove the front seat. (See 09-13-4 FRONT SEAT REMOVAL/INSTALLATION.)
4. Remove the front seat side cover. (See 09-13-41 FRONT SEAT SIDE COVER REMOVAL/INSTALLATION.)
5. Slide hook A in the order of arrows (1), (2), (3) shown in the figure and set the front seat cushion trim aside.
6. Disconnect the side air bag module connector.

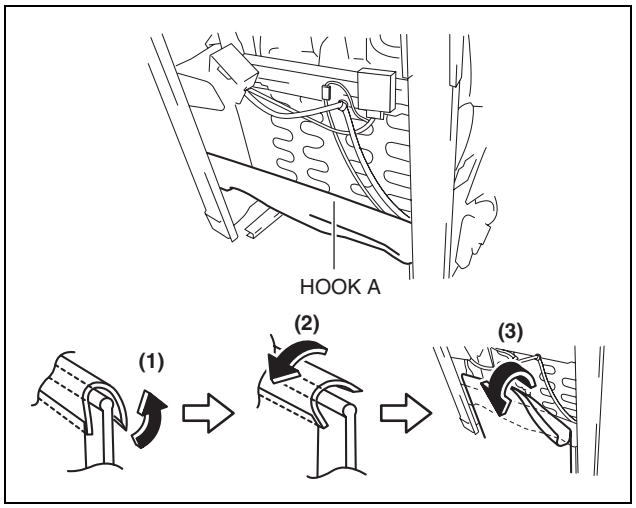

ac5wzw0000315

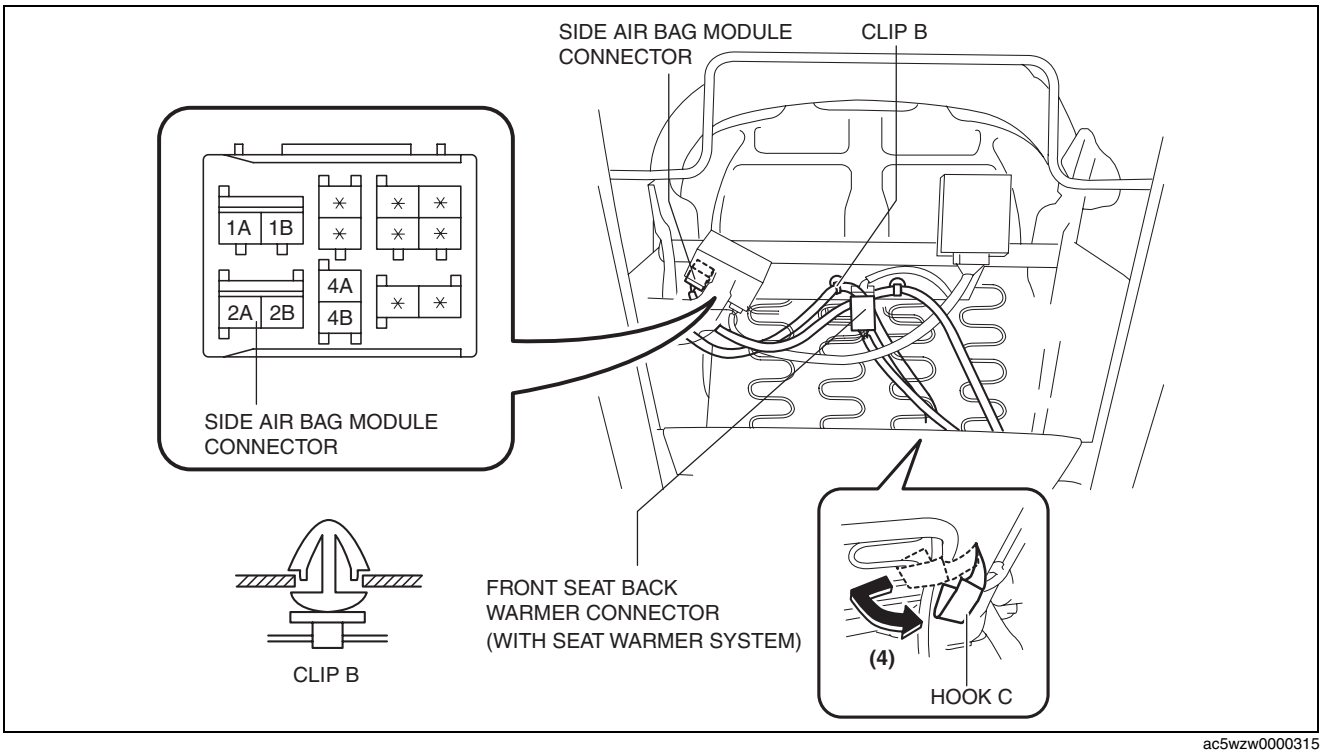

ac5wzw0000315

7. Disengage clip B.
8. Disconnect the front seat back warmer connector. (with seat warmer system)
9. Set hook C aside in the direction of the arrow (4) shown in the figure.

SEATS

10. Remove the bolts A, then remove the front seat back component.

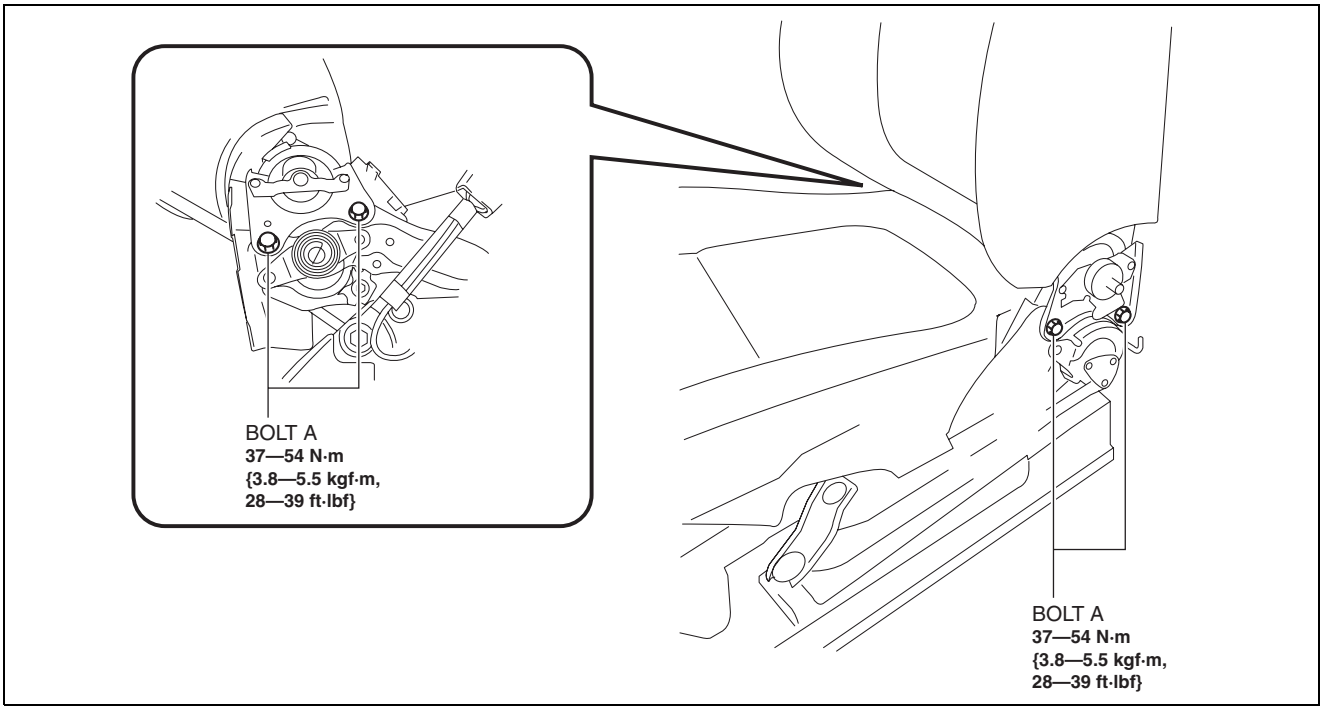

ac5jjw00002744

11. Install in the reverse order of removal.

SEATS

Passenger-side

1. Switch the ignition off (LOCK).
2. Disconnect the negative battery cable and wait for **1 min**. (See 01-17A-11 NEGATIVE BATTERY CABLE DISCONNECTION/CONNECTION [SKYACTIV-G 2.0].) (See 01-17A-13 NEGATIVE BATTERY CABLE DISCONNECTION/CONNECTION [SKYACTIV-G 2.0 (WITHOUT i-stop)].) (See 01-17B-9 NEGATIVE BATTERY CABLE DISCONNECTION/CONNECTION [SKYACTIV-D 2.2].)
3. Remove the front seat. (See 09-13-4 FRONT SEAT REMOVAL/INSTALLATION.)
4. Remove the front seat side cover. (See 09-13-41 FRONT SEAT SIDE COVER REMOVAL/INSTALLATION.)
5. Slide hook A in the order of arrows (1), (2), (3) shown in the figure and set the front seat cushion trim aside.
6. Disconnect the side air bag module connector.

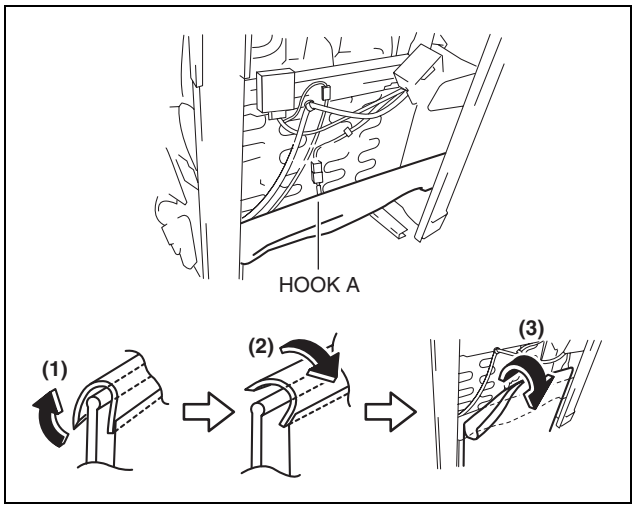

ac5wzw0000315

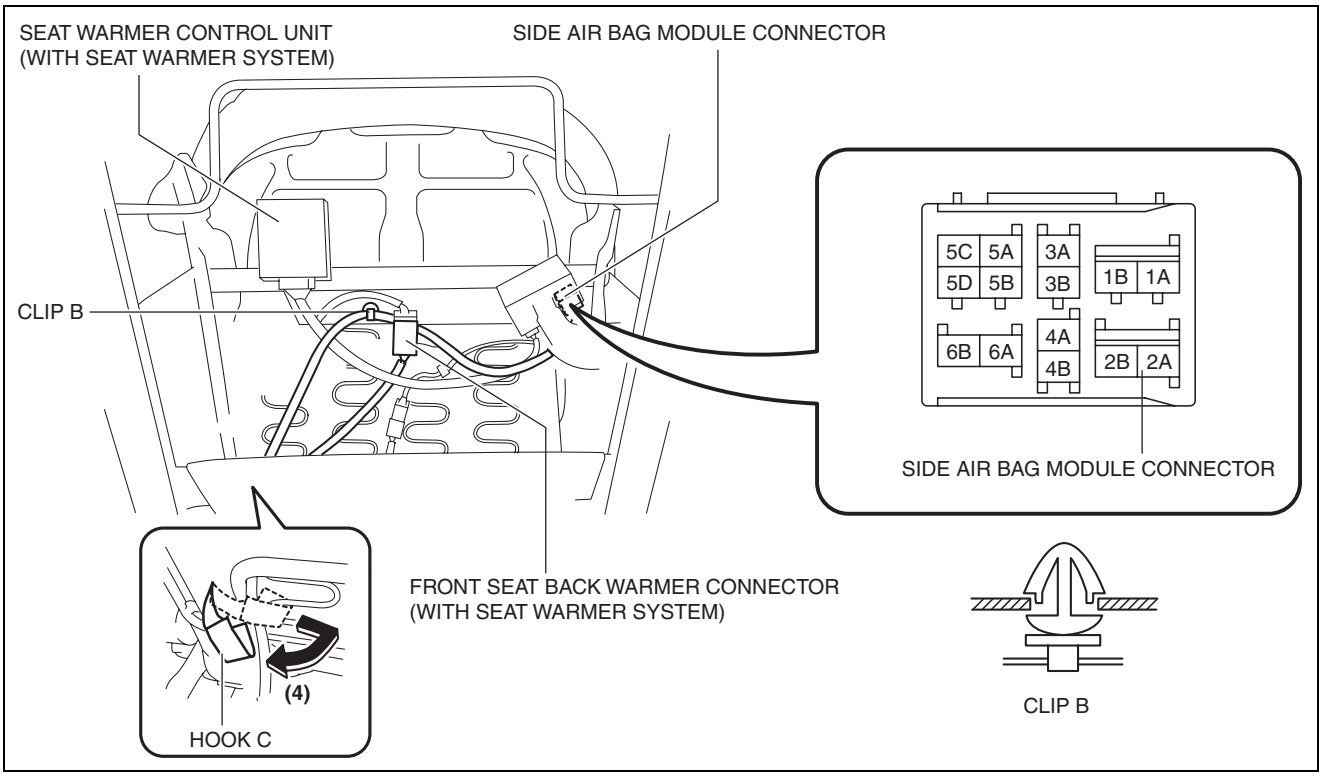

ac5wzw0000311

7. Disconnect the front seat back warmer connector. (With seat warmer system)
8. Disengage clip B.
9. Set hook C aside in the direction of the arrow (4) shown in the figure.

10. Remove the bolts A, then remove the front seat back component.

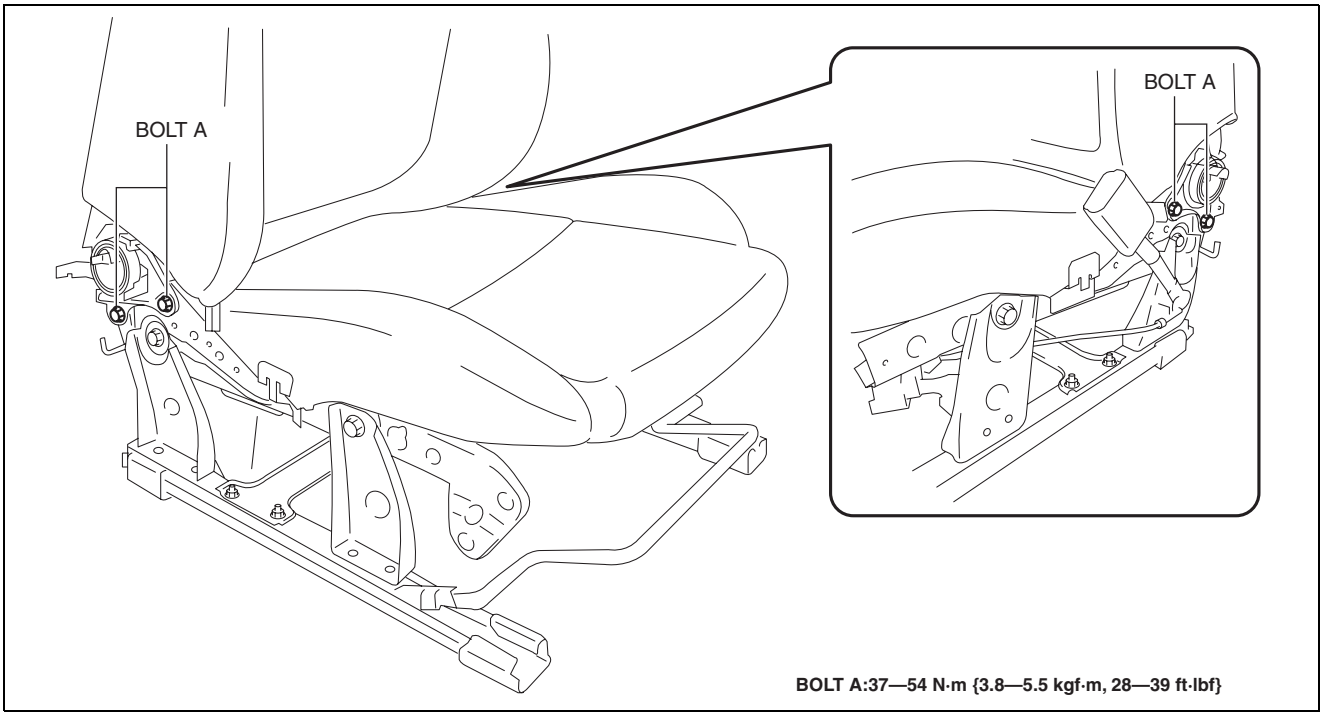

ac5wzw0000316

11. Install in the reverse order of removal.

FRONT SEAT BACK TRIM REMOVAL/INSTALLATION

id091300912000

Warning

- **Handling a side air bag improperly can accidentally operate (deploy) the air bag, which may seriously injure you. Read the service warnings/cautions in the Workshop Manual before handling the front seat (side air bag integrated). (See 08-10-3 AIR BAG SYSTEM SERVICE WARNINGS.) (See 08-10-5 AIR BAG SYSTEM SERVICE CAUTIONS.)**
- **If the sliding mechanisms on both sides are not locked after assembling the front seat, the front seat will operate accidentally while the vehicle is driven, which could result in serious injury. After assembling the front seat, shake it up and down and verify that the sliding mechanism on the both sides are locked.**

Caution

- **If the slide bar is operated after the front seat is removed, the left/right slide positions will deviate and the adjuster unit could be damaged after the front seat is installed. After removing a front seat, do not operate the slider lever.**
- **Verify that there are no malfunctions in the forward/back slide of the seat and in the adjuster unit after installing a front seat.**
- **When performing the procedure with a front seat removed from the vehicle, perform the procedure on a clean cloth so as not to damage or soil the seat.**

Driver-side (with power seat system)

1. Switch the ignition off (LOCK).
2. Disconnect the negative battery cable and wait for **1 min**. (See 01-17A-11 NEGATIVE BATTERY CABLE DISCONNECTION/CONNECTION [SKYACTIV-G 2.0].) (See 01-17A-13 NEGATIVE BATTERY CABLE DISCONNECTION/CONNECTION [SKYACTIV-G 2.0 (WITHOUT i-stop)].) (See 01-17B-9 NEGATIVE BATTERY CABLE DISCONNECTION/CONNECTION [SKYACTIV-D 2.2].)
3. Remove the headrest.
4. Remove the front seat. (See 09-13-4 FRONT SEAT REMOVAL/INSTALLATION.)

SEATS

5. Remove fasteners A and set the front seat cushion trim aside.
6. Disconnect the side air bag module connector.

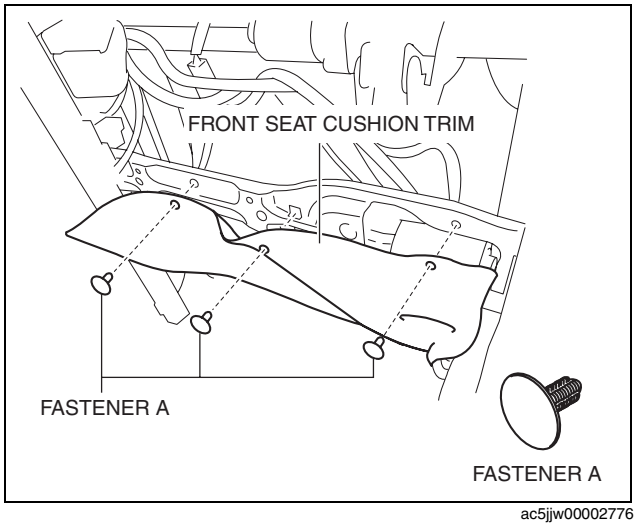

ac5jjw00002776

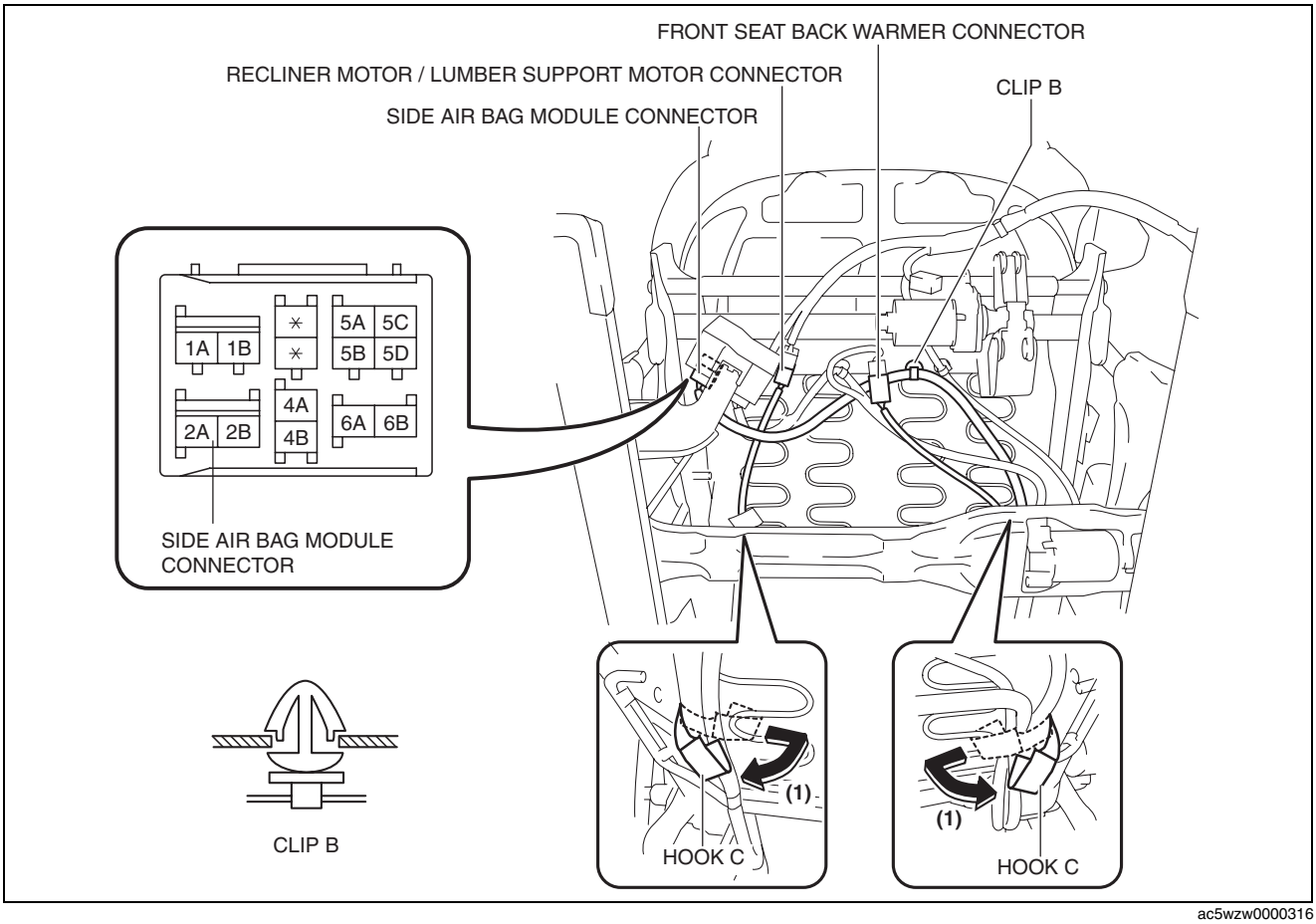

ac5wzw0000316

7. Disengage clip B.
8. Disconnect the front seat back warmer connector.
9. Disconnect the recliner motor/lumber support motor connectors.
10. Set hooks C aside in the direction of the arrow (1) shown in the figure.

SEATS

11. Slide hook D in the order of arrows (2), (3), (4) shown in the figure and disconnect them from hook E.

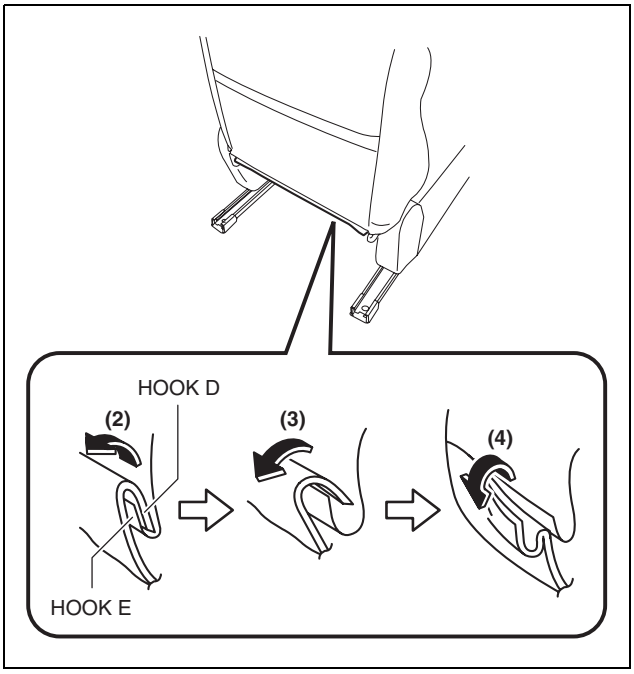

ac5wzw0000316

12. Open fasteners F.
13. Partially peel back the seat back trim, release tabs G in the direction of the arrow (5) shown in the figure and pull out the pole guide in the direction of the arrow (6).

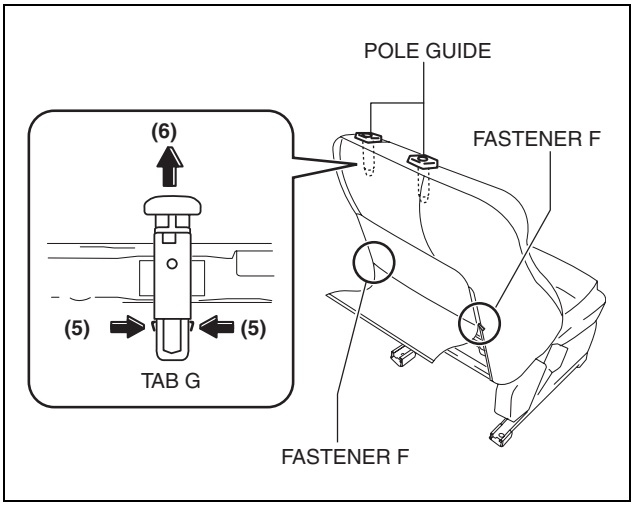

ac5wzw0000316

14. Partially peel back the front seat back trim and slide hook H in the order of the arrows (7), (8), and (9) shown in the figure, and remove it from the front seat back frame.

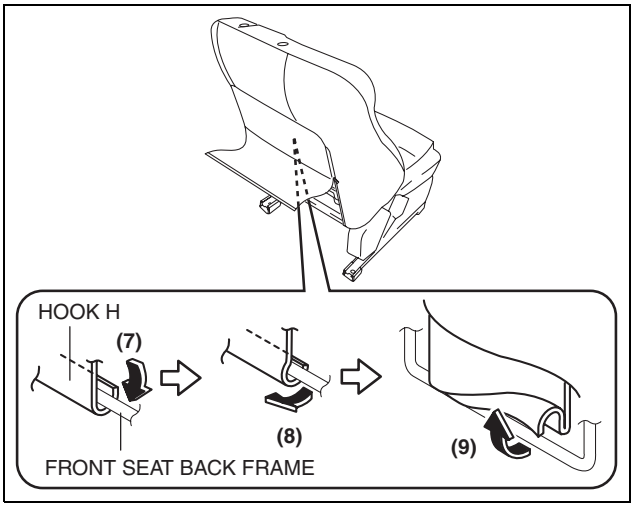

ac5wzw0000316

SEATS

15. Pull out pin I in the direction of the arrow (10) shown in the figure, and using a flathead screwdriver wrapped in protective tape, release the tabs J in the direction of the arrow (11) shown in the figure while removing the clip K in the direction of the arrow (12).

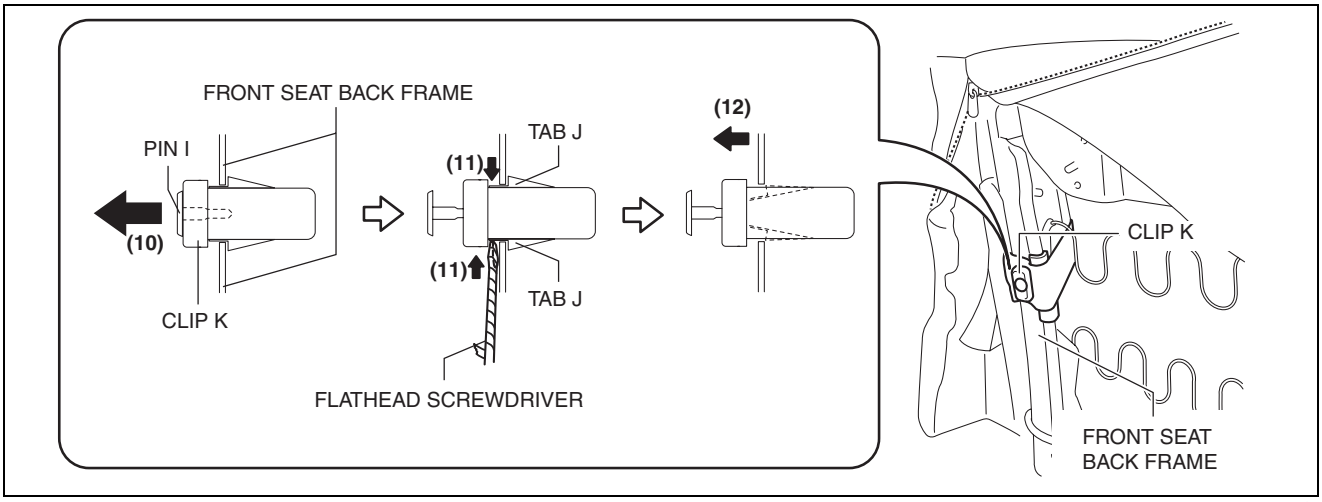

ac5wzw0000317

16. Remove the side air bag module securing belt from the front seat back frame.

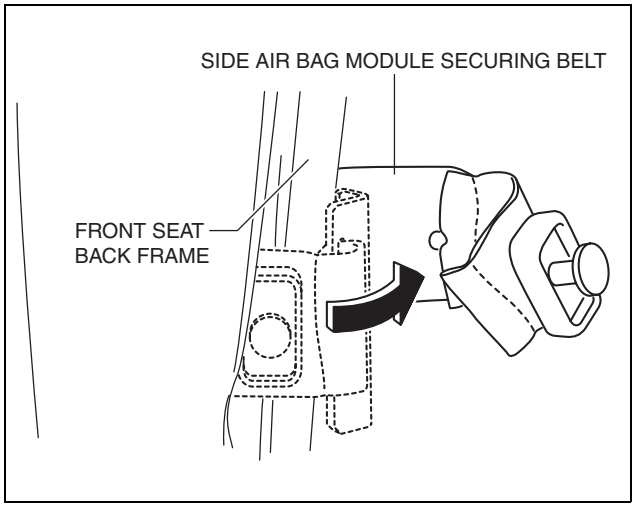

ac5uuw00002092

17. Pull the side air bag module wiring harness in the direction of the arrow (13) shown in the figure, and pull it out through the hole in the front seat back pad.
18. Pull the recliner motor wiring harness and lumber support wiring harness in the direction of the arrow (14) shown in the figure, and pull it out through the hole in the front seat back pad.

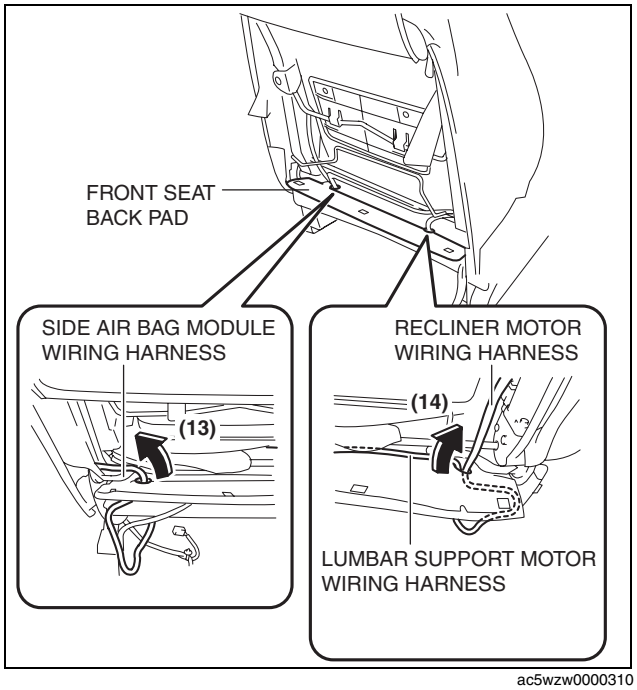

ac5wzw0000310

SEATS

19. Pull out the front seat back pad and front seat back trim, and the front seat back warmer connector towards the front of the front seat.

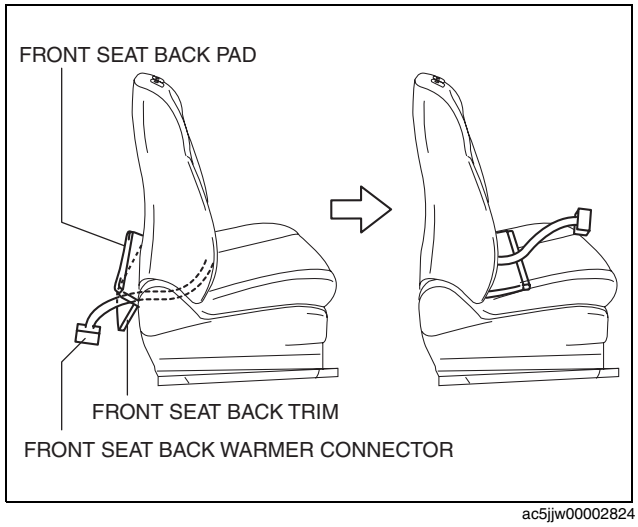

ac5jjw00002824

20. Lift up the front seat back trim and front seat back pad in the direction of the arrow (15) as a single unit and remove it from the front seat back frame.

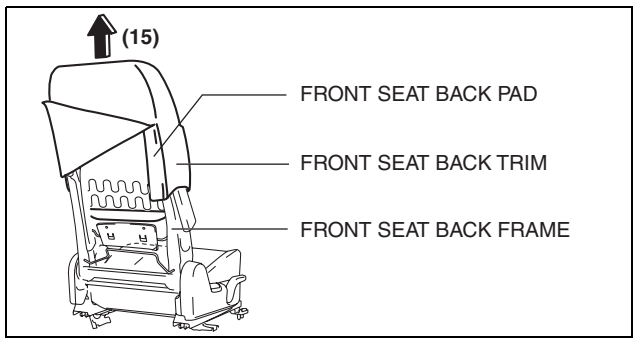

ac5wzw0000310

21. Remove the C rings in the order of (16), (17), (18), (19), (20), and (21), shown in the figure, then remove the front seat back trim from the front seat back pad.

Caution

- **If a damaged C rings are reused, it may not be possible to install the front seat back trim and front seat back pad correctly. When removing and installing C rings, be careful not to damage them.**
- **If the C rings are damaged, replace it with a new one.**

22. Install in the reverse order of removal.

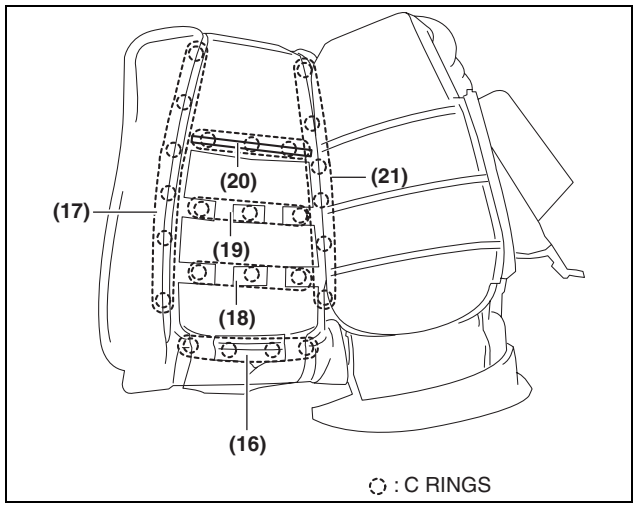

ac5wzw0000310

SEATS

Driver-side (without power seat system)

Note
- There are two types of passenger-side front seats, A and B types. The location and the number of C-rings installed to the front seat back trim and front seat back pad differ depending on the type.

1. Switch the ignition off (LOCK).
2. Disconnect the negative battery cable and wait for **1 min**. (See 01-17A-11 NEGATIVE BATTERY CABLE DISCONNECTION/CONNECTION [SKYACTIV-G 2.0].) (See 01-17A-13 NEGATIVE BATTERY CABLE DISCONNECTION/CONNECTION [SKYACTIV-G 2.0 (WITHOUT i-stop)].) (See 01-17B-9 NEGATIVE BATTERY CABLE DISCONNECTION/CONNECTION [SKYACTIV-D 2.2].)
3. Remove the headrest.
4. Remove the front seat. (See 09-13-4 FRONT SEAT REMOVAL/INSTALLATION.)
5. Slide hook A in the order of arrows (1), (2), (3) shown in the figure and set the front seat cushion trim aside.
6. Disconnect the side air bag module connector.

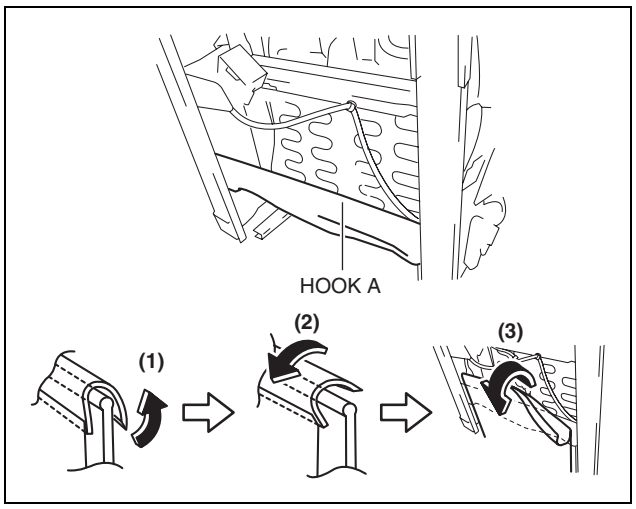

ac5uuw00001914

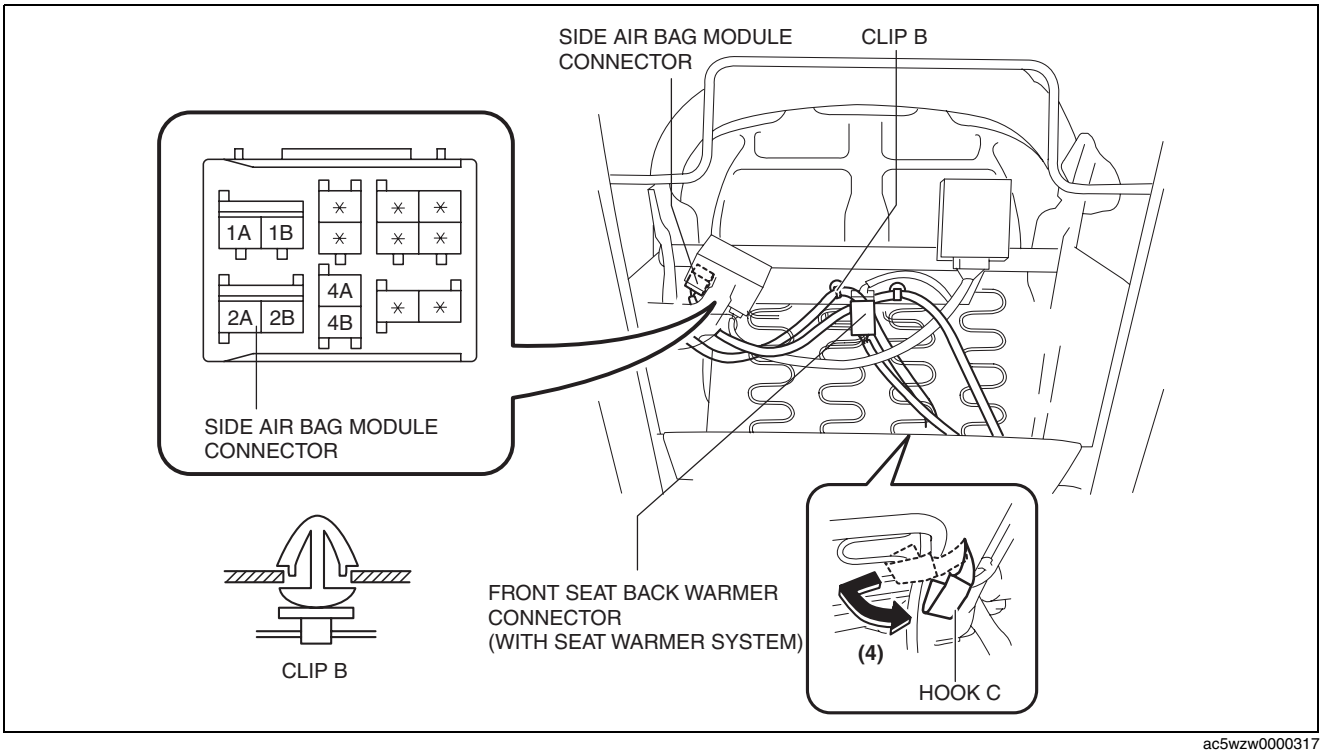

ac5wzw0000317

7. Disconnect the front seat back warmer connector. (with seat warmer system)
8. Disengage clip B.
9. Set hook C aside in the direction of the arrow (4) shown in the figure.

SEATS

10. Slide hook D in the order of arrows (5), (6), (7) shown in the figure and disconnect them from hook E.

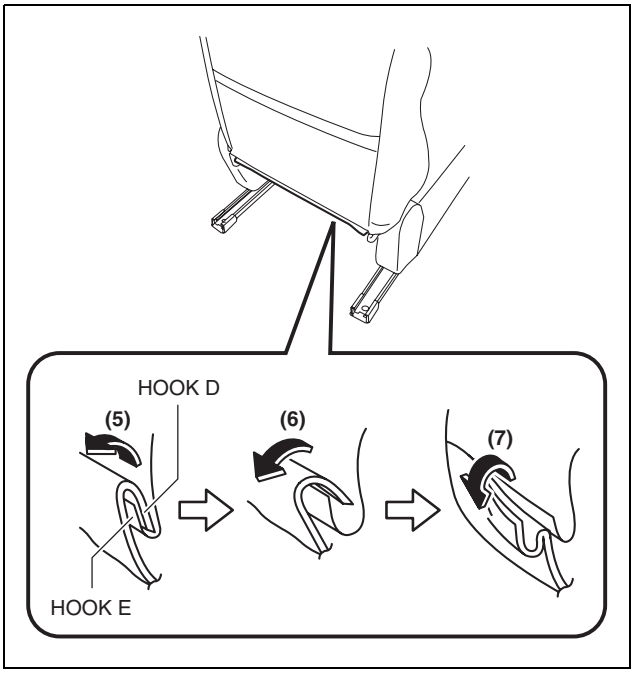

ac5uuw00002095

11. Open fasteners F.
12. Partially peel back the seat back trim, release tabs G in the direction of the arrow (8) shown in the figure and pull out the pole guide in the direction of the arrow (9).

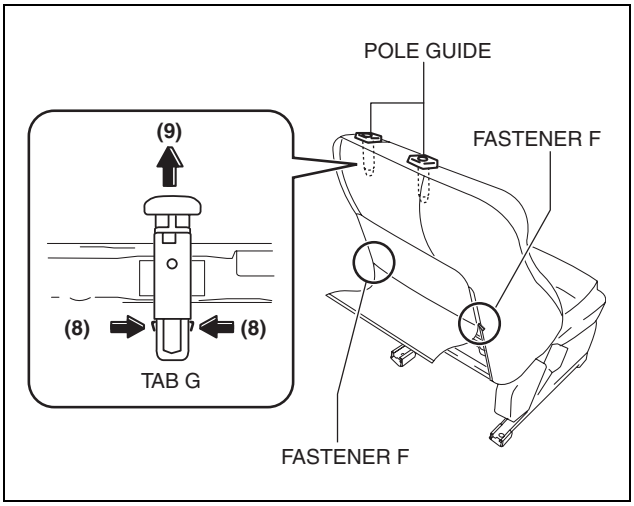

ac5uuw00002096

13. Partially peel back the front seat back trim and slide hook H in the order of the arrows (10), (11), and (12) shown in the figure, and remove it from the front seat back frame.

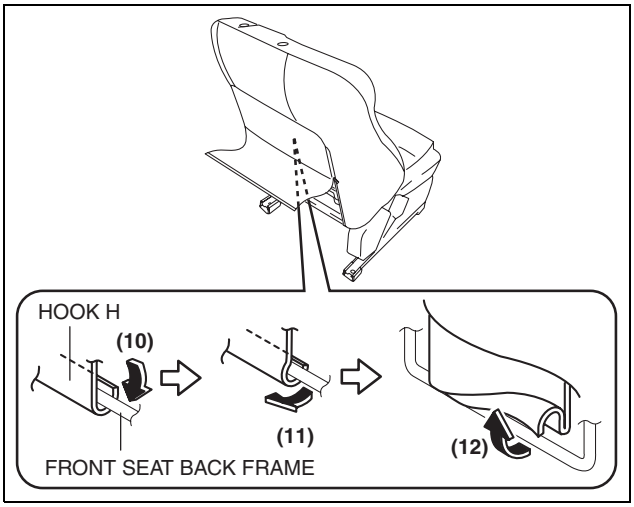

ac5uuw00002097

SEATS

14. Pull out pin I in the direction of the arrow (13) shown in the figure, and using a flathead screwdriver wrapped in protective tape, release the tabs J in the direction of the arrow (14) shown in the figure while removing the clip K in the direction of the arrow (15).

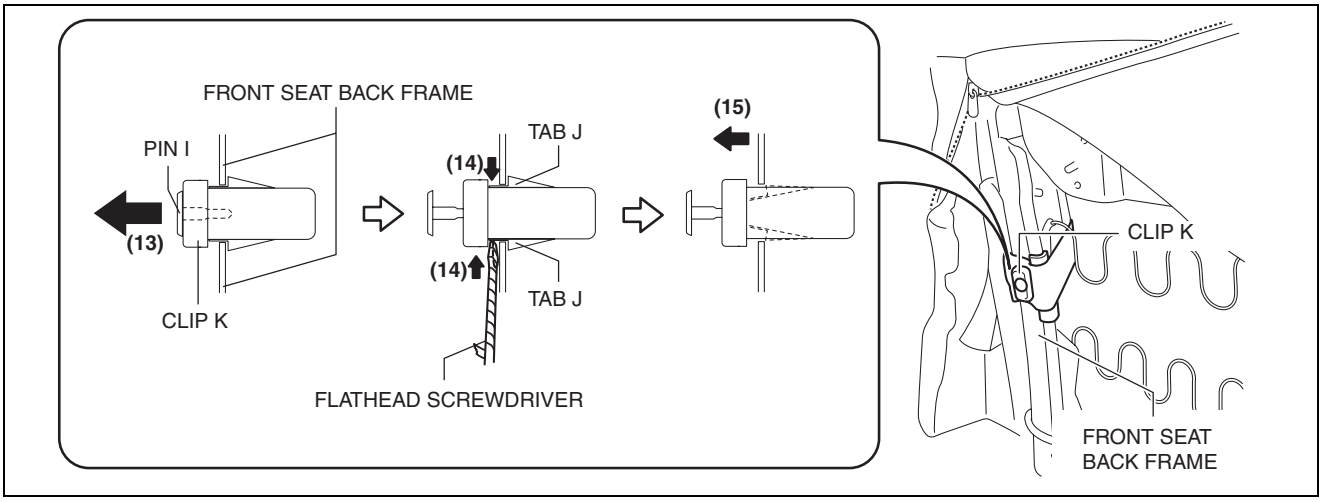

ac5wzw0000378

15. Remove the side air bag module securing belt from the front seat back frame.

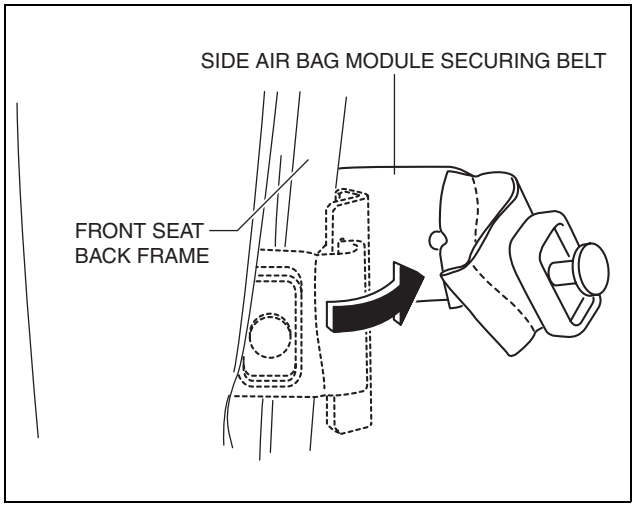

ac5uuw00002092

16. Pull the side air bag module wiring harness in the direction of the arrow (16) shown in the figure, and pull it out through the hole in the front seat back pad.

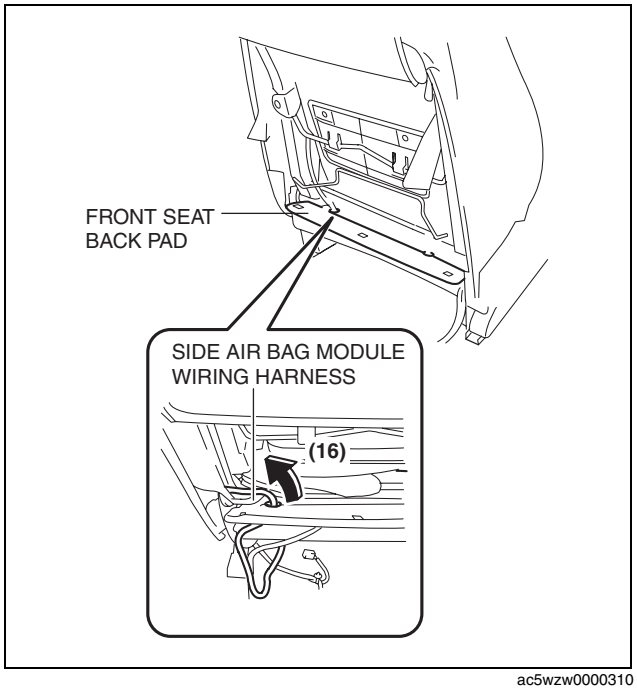

ac5wzw0000310

SEATS

17. Pull out the front seat back pad and front seat back trim, and the front seat back warmer connector (with seat warmer system) towards the front of the front seat.

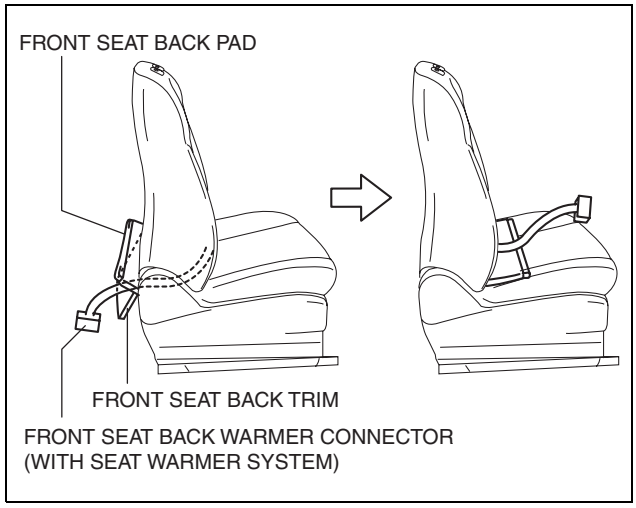

ac5wzw0000317

18. Lift up the front seat back trim and front seat back pad in the direction of the arrow (17) as a single unit and remove it from the front seat back frame.

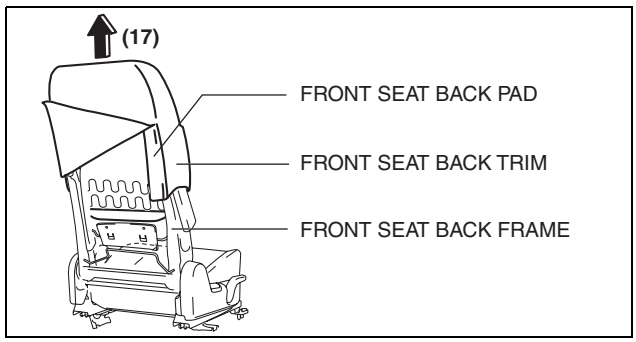

ac5wzw0000311

19. Remove the C rings in the order of (18), (19), (20), and (21) shown in the figure, and remove the front seat back trim from the front seat back pad. (type A)

Caution

- **If a damaged C rings are reused, it may not be possible to install the front seat back trim and front seat back pad correctly. When removing and installing C rings, be careful not to damage them.**
- **If a C ring are damaged, replace it with a new one.**

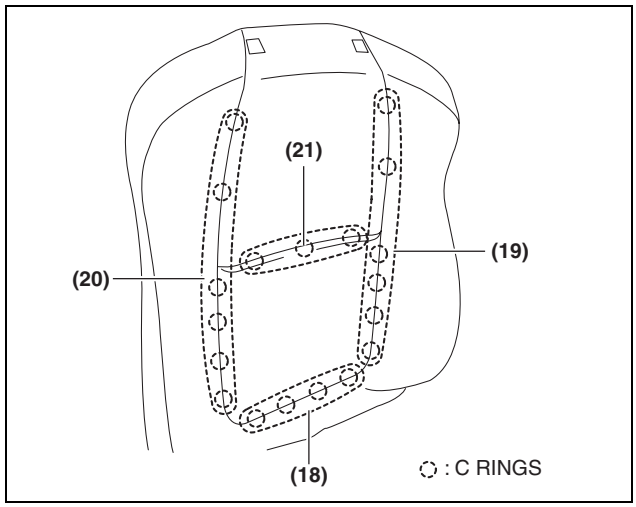

ac5uuw00002101

20. Remove the C rings in the order of (22), (23), (24), (25), (26), and (27), shown in the figure, then remove the front seat back trim from the front seat back pad. (type B)

Caution

- **If a damaged C rings are reused, it may not be possible to install the front seat back trim and front seat back pad correctly. When removing and installing C rings, be careful not to damage them.**
- **If the C rings are damaged, replace it with a new one.**

21. Install in the reverse order of removal.

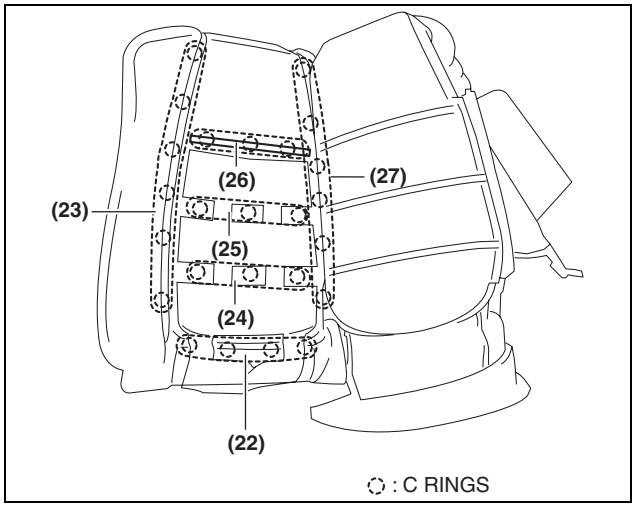

ac5wzw0000318

SEATS

Passenger-side

Note
- There are two types of passenger-side front seats, A and B types. The location and the number of C-rings installed to the front seat back trim and front seat back pad differ depending on the type.

1. Switch the ignition off (LOCK).
2. Disconnect the negative battery cable and wait for **1 min**. (See 01-17A-11 NEGATIVE BATTERY CABLE DISCONNECTION/CONNECTION [SKYACTIV-G 2.0].) (See 01-17A-13 NEGATIVE BATTERY CABLE DISCONNECTION/CONNECTION [SKYACTIV-G 2.0 (WITHOUT i-stop)].) (See 01-17B-9 NEGATIVE BATTERY CABLE DISCONNECTION/CONNECTION [SKYACTIV-D 2.2].)
3. Remove the headrest.
4. Remove the front seat. (See 09-13-4 FRONT SEAT REMOVAL/INSTALLATION.)
5. Slide hook A in the order of arrows (1), (2), (3) shown in the figure and set the front seat cushion trim aside.
6. Disconnect the side air bag module connector.

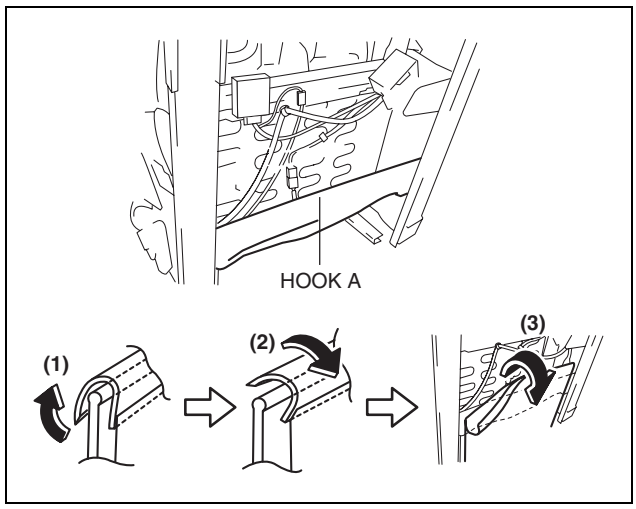

ac5wzw0000317

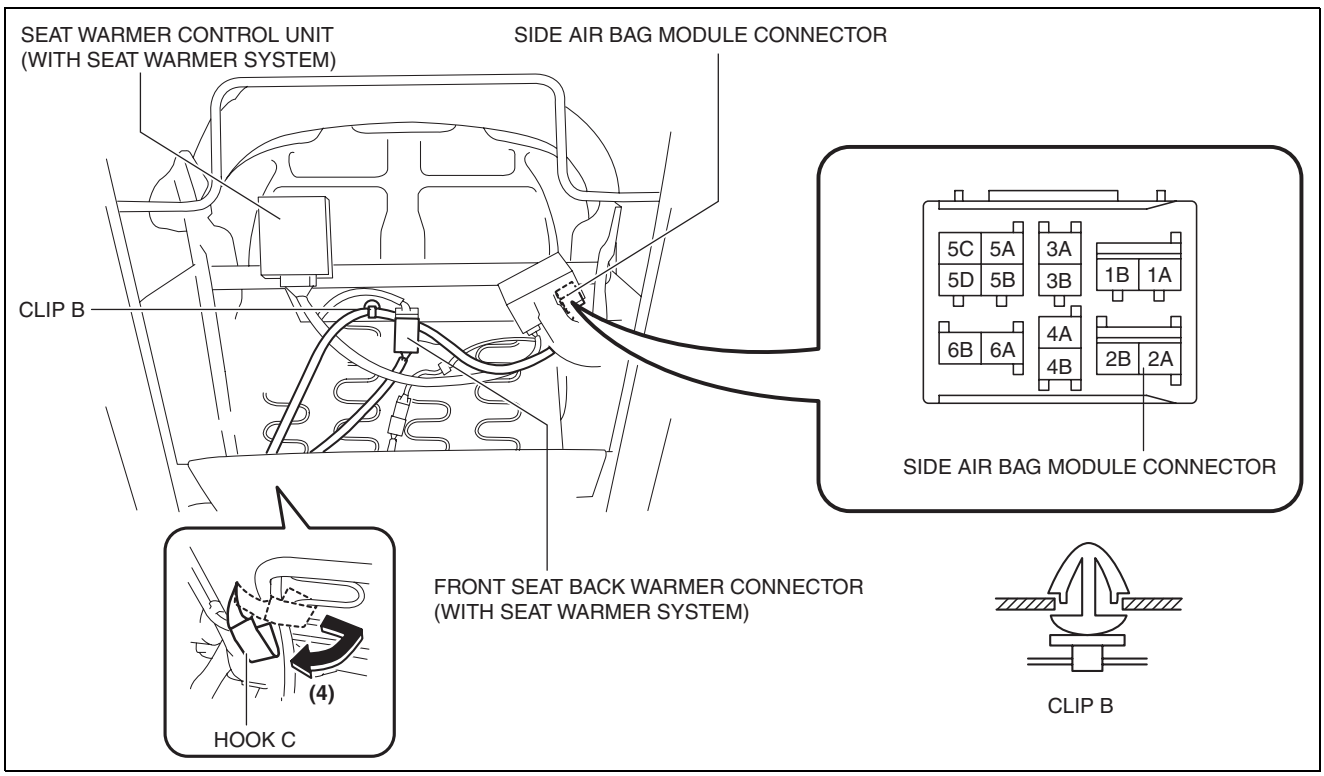

ac5wzw0000317

7. Disconnect the front seat back warmer connector. (with seat warmer system)
8. Disengage clip B.
9. Set hook C aside in the direction of the arrow (4) shown in the figure.

SEATS

10. Slide hook D in the order of arrows (5), (6), (7) shown in the figure and disconnect them from hook E.

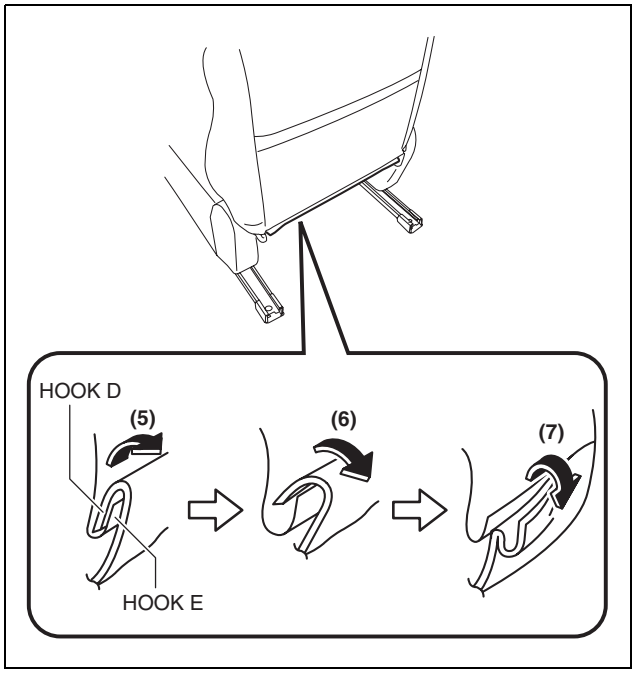

ac5uuw00002102

11. Open fasteners F.
12. Partially peel back the seat back trim, release tabs G in the direction of the arrow (8) shown in the figure and pull out the pole guide in the direction of the arrow (9).

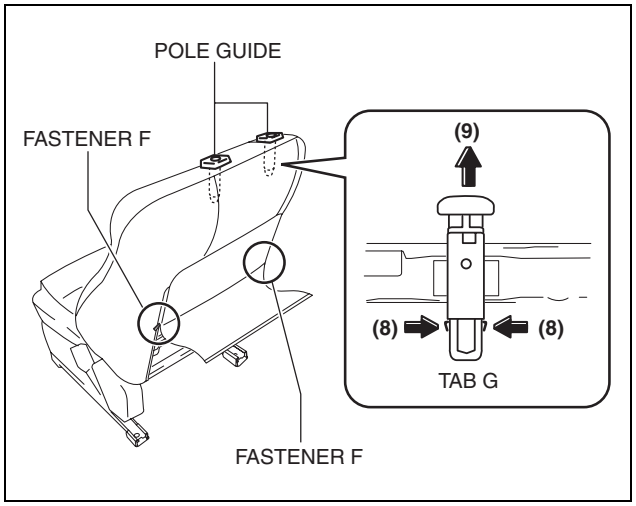

ac5uuw00002103

13. Partially peel back the front seat back trim and slide hook H in the order of the arrows (10), (11), and (12) shown in the figure, and remove it from the front seat back frame.

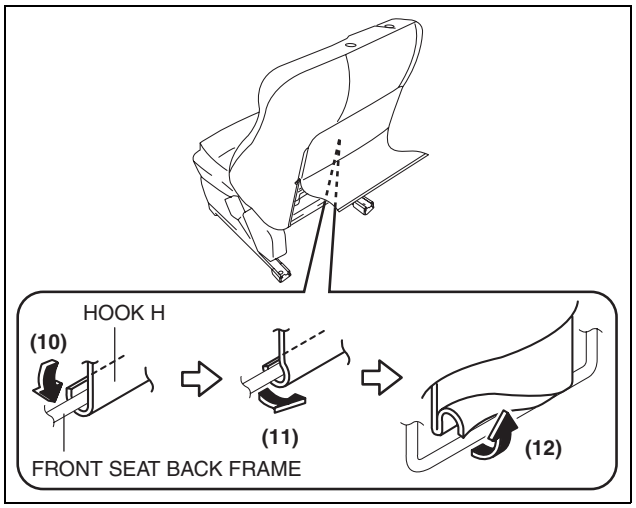

ac5uuw00001920

SEATS

14. Pull out pin I in the direction of the arrow (13) shown in the figure, and using a flathead screwdriver wrapped in protective tape, release the tabs J in the direction of the arrow (14) shown in the figure while removing the clip K in the direction of the arrow (15).

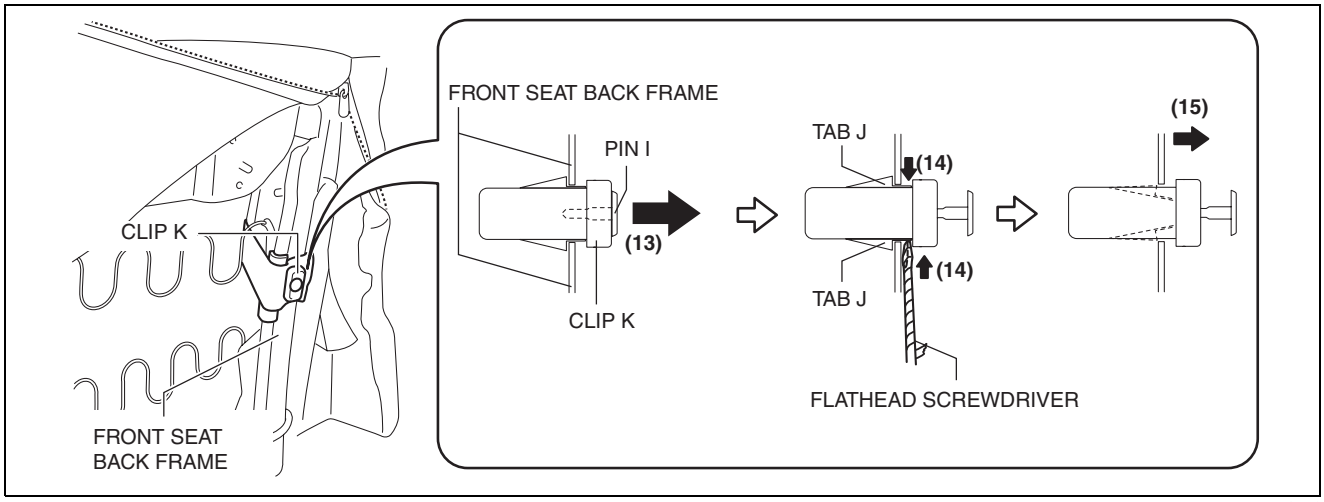

ac5uuw00001921

15. Remove the side air bag module securing belt from the front seat back frame.

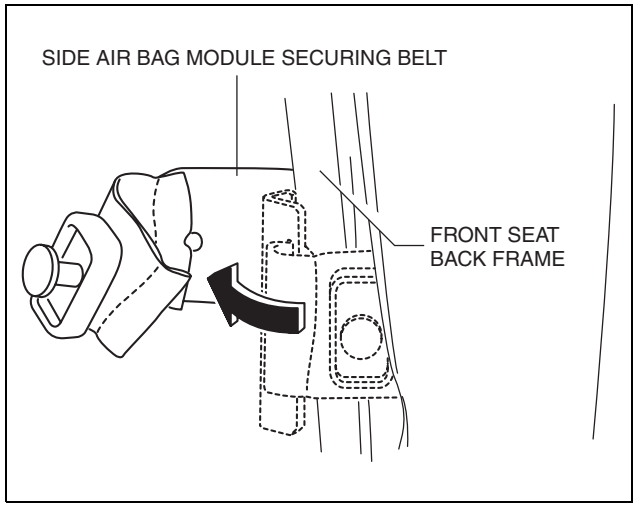

ac5uuw00001922

16. Pull the side air bag module wiring harness in the direction of the arrow (16) shown in the figure, and pull it out through the hole in the front seat back pad.

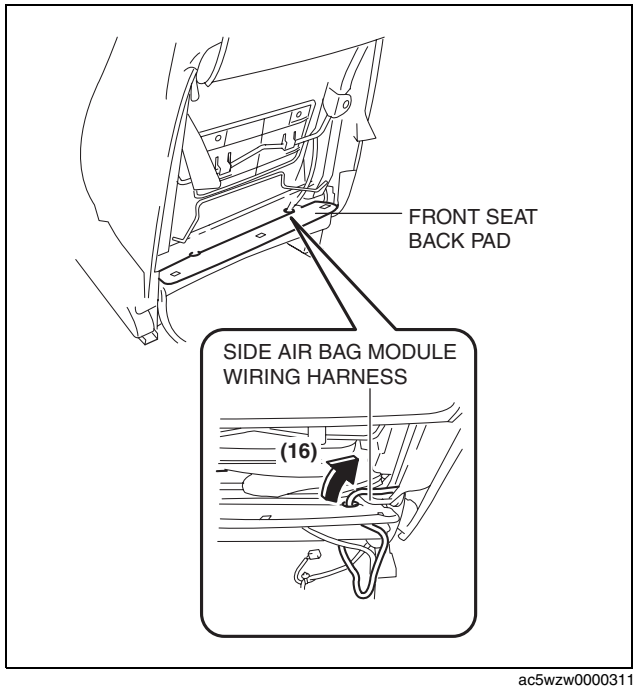

ac5wzw0000311

SEATS

17. Pull out the front seat back pad and front seat back trim, and the front seat back warmer connector (with seat warmer system) towards the front of the front seat.

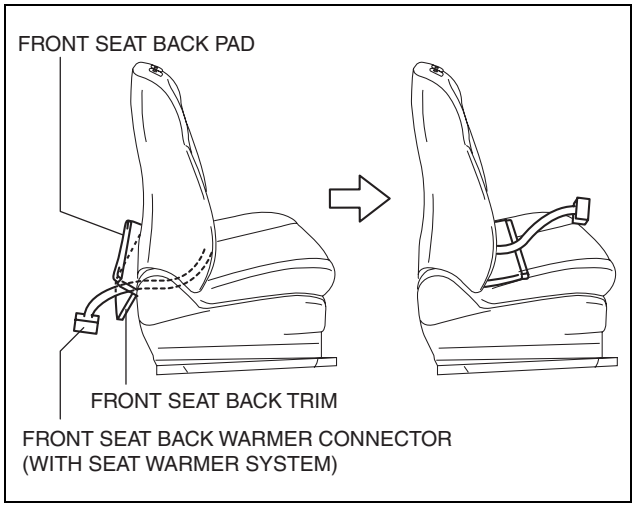

ac5wzw0000317

18. Lift up the front seat back trim and front seat back pad in the direction of the arrow (17) as a single unit and remove it from the front seat back frame.

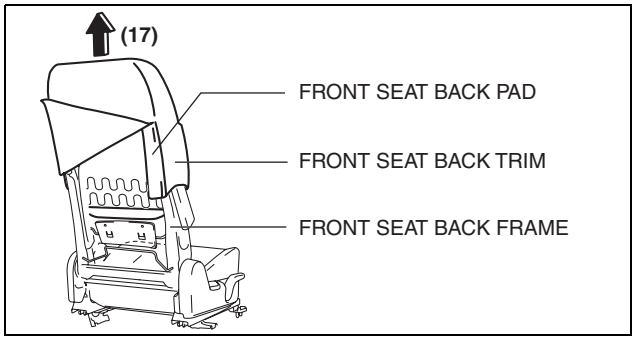

ac5wzw0000311

19. Remove the C rings in the order of (18), (19), (20), (21), (22), and (23) shown in the figure, then remove the front seat back trim from the front seat back pad. (type A)

Caution

- **If a damaged C rings are reused, it may not be possible to install the front seat back trim and front seat back pad correctly. When removing and installing C rings, be careful not to damage them.**
- **If the C rings are damaged, replace it with a new one.**

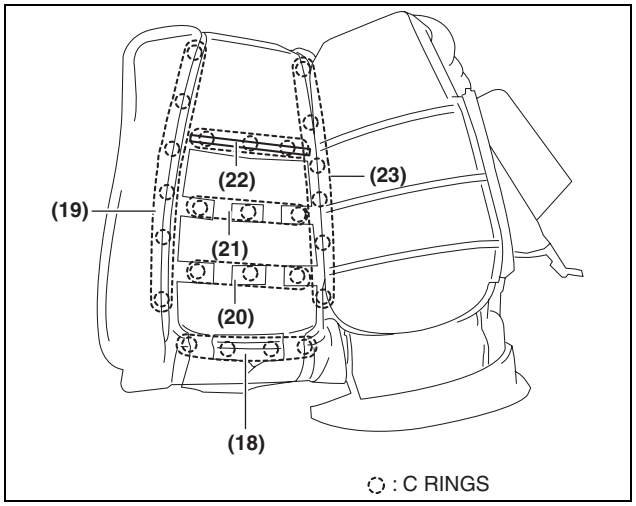

ac5wzw0000317

SEATS

20. Remove the C rings in the order of (24), (25), (26), and (27) shown in the figure, then remove the front seat back trim from the front seat back pad. (type B)

    Caution
    - **If a damaged C rings are reused, it may not be possible to install the front seat back trim and front seat back pad correctly. When removing and installing C rings, be careful not to damage them.**
    - **If the C rings are damaged, replace it with a new one.**

21. Install in the reverse order of removal.

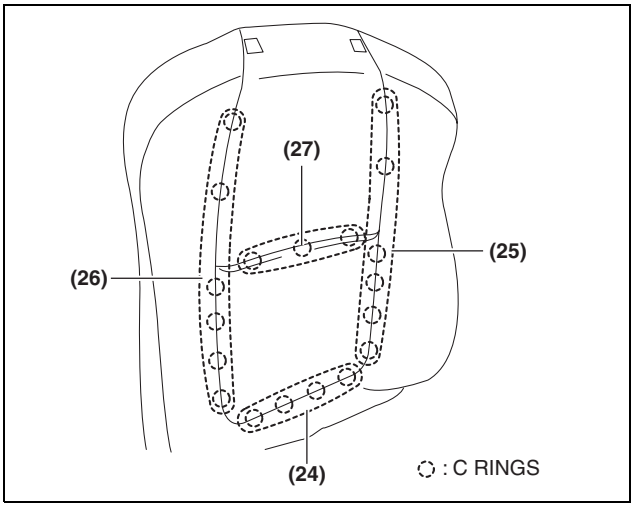

ac5wzw0000311

SEATS

FRONT SEAT CUSHION TRIM REMOVAL/INSTALLATION

id091300911700

Warning

- **Handling a side air bag improperly can accidentally operate (deploy) the air bag, which may seriously injure you. Read the service warnings/cautions in the Workshop Manual before handling the front seat (side air bag integrated). (See 08-10-3 AIR BAG SYSTEM SERVICE WARNINGS.) (See 08-10-5 AIR BAG SYSTEM SERVICE CAUTIONS.)**
- **If the sliding mechanisms on both sides are not locked after assembling the front seat, the front seat will operate accidentally while the vehicle is driven, which could result in serious injury. After assembling the front seat, shake it up and down and verify that the sliding mechanism on the both sides are locked.**

Caution

- **If the slide bar is operated after the front seat is removed, the left/right slide positions will deviate and the adjuster unit could be damaged after the front seat is installed. After removing a front seat, do not operate the slider lever.**
- **Verify that there are no malfunctions in the forward/back slide of the seat and in the adjuster unit after installing a front seat.**
- **When performing the procedure with a front seat removed from the vehicle, perform the procedure on a clean cloth so as not to damage or soil the seat.**

Driver-side (with power seat system)

1. Switch the ignition off (LOCK).
2. Disconnect the negative battery cable and wait for **1 min**. (See 01-17A-11 NEGATIVE BATTERY CABLE DISCONNECTION/CONNECTION [SKYACTIV-G 2.0].) (See 01-17A-13 NEGATIVE BATTERY CABLE DISCONNECTION/CONNECTION [SKYACTIV-G 2.0 (WITHOUT i-stop)].) (See 01-17B-9 NEGATIVE BATTERY CABLE DISCONNECTION/CONNECTION [SKYACTIV-D 2.2].)
3. Remove the headrest.
4. Remove the front seat. (See 09-13-4 FRONT SEAT REMOVAL/INSTALLATION.)
5. Remove the front seat side cover. (See 09-13-41 FRONT SEAT SIDE COVER REMOVAL/INSTALLATION.)
6. Remove fasteners A and set the front seat cushion trim aside.

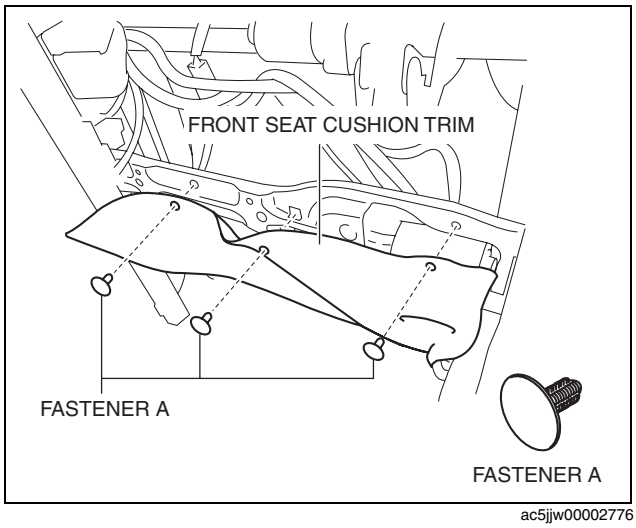

ac5jjw00002776

SEATS

7. Disconnect the front seat warmer connector.

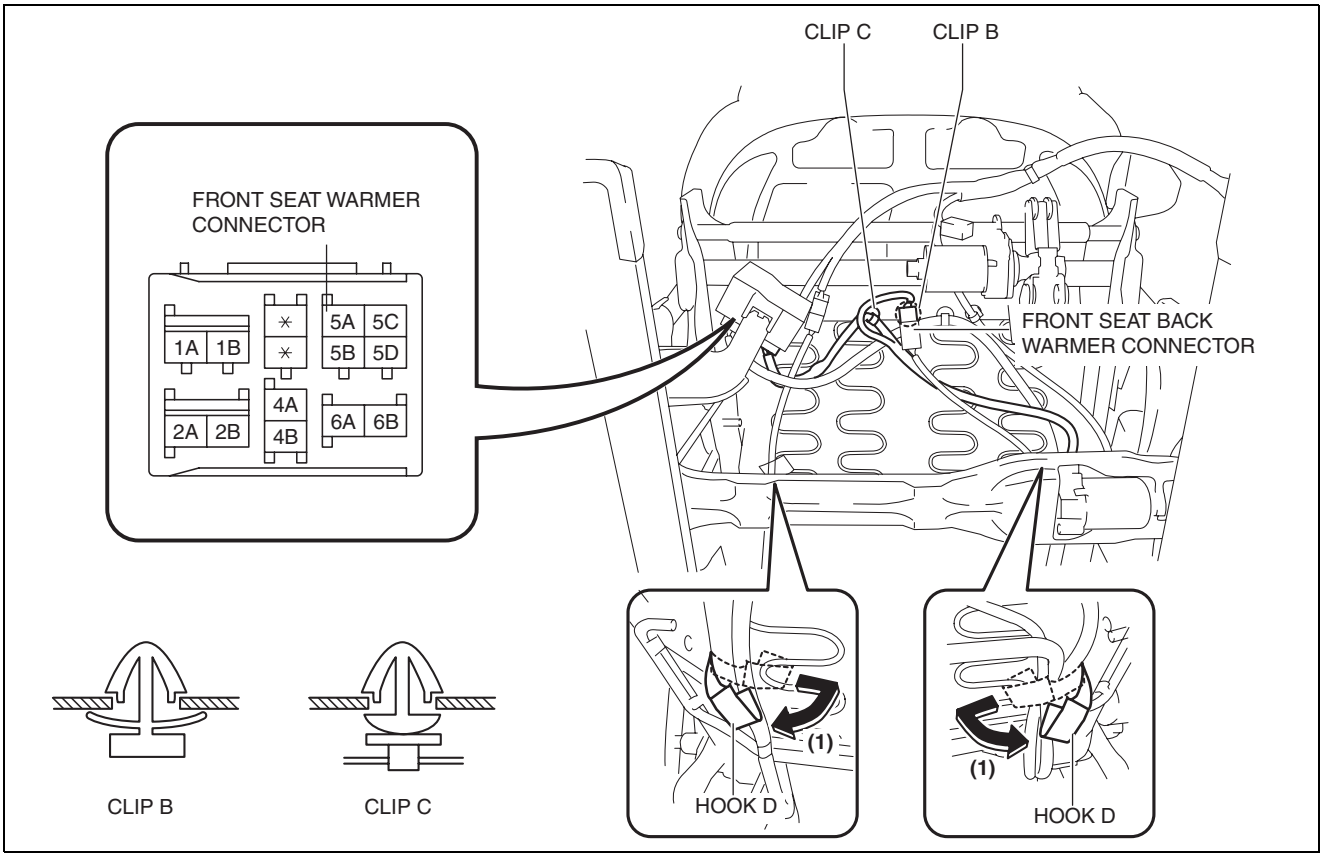

ac5uuw00001965

8. Disconnect the front seat back warmer connector.
9. Disengage clip B.
10. Disconnect clip C.
11. Set hooks D aside in the direction of the arrow (1) shown in the figure.

SEATS

12. Move the front seat cushion trim in the direction of the arrow (2) shown in the figure and set it aside.

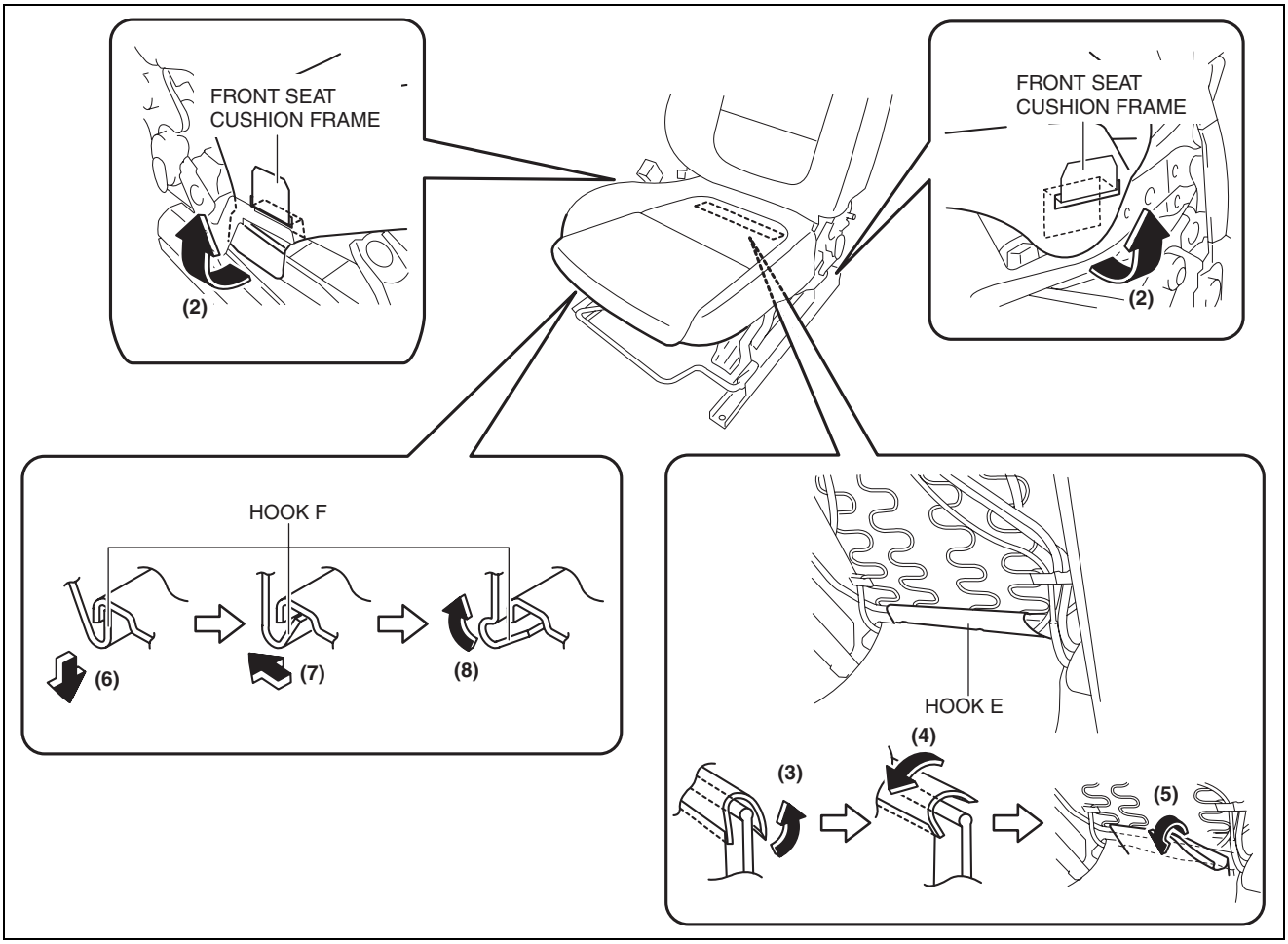

ac5uuw00001966

13. Slide hook E in the order of arrows (3), (4), (5) shown in the figure and set the front seat cushion frame aside.
14. Slide hook F in the order of arrows (6), (7), (8) shown in the figure and set the front seat cushion frame aside.
15. Remove the C rings in the order of (9), (10), (11), (12), and (13) shown in the figure, and remove the front seat cushion trim from the front seat cushion pad.

Caution

- **If a damaged C rings are reused, it may not be possible to install the front seat cushion trim and front seat cushion pad correctly. When removing and installing C rings, be careful not to damage them.**
- **If the C rings are damaged, replace the C rings with a new one.**

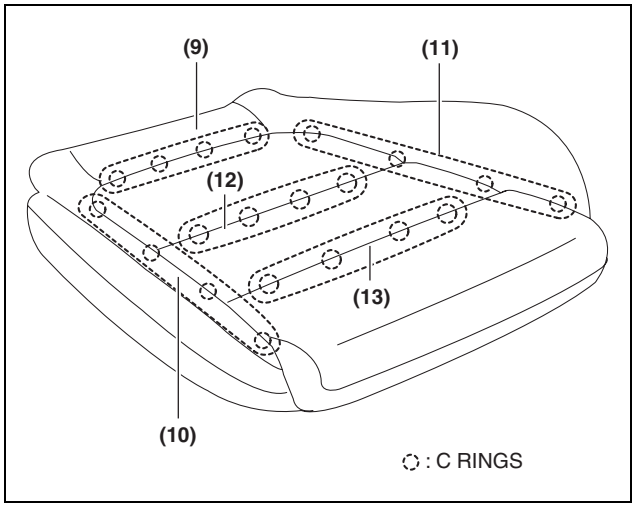

ac5wzw0000318

16. Install in the reverse order of removal.

SEATS

Driver-side (without power seat system)

Note
- There are two types of passenger-side front seats, A and B types. The location and the number of C-rings installed to the front seat back trim and front seat back pad differ depending on the type.

1. Switch the ignition off (LOCK).
2. Disconnect the negative battery cable and wait for **1 min**. (See 01-17A-11 NEGATIVE BATTERY CABLE DISCONNECTION/CONNECTION [SKYACTIV-G 2.0].) (See 01-17A-13 NEGATIVE BATTERY CABLE DISCONNECTION/CONNECTION [SKYACTIV-G 2.0 (WITHOUT i-stop)].) (See 01-17B-9 NEGATIVE BATTERY CABLE DISCONNECTION/CONNECTION [SKYACTIV-D 2.2].)
3. Remove the headrest.
4. Remove the front seat. (See 09-13-4 FRONT SEAT REMOVAL/INSTALLATION.)
5. Remove the front seat side cover. (See 09-13-41 FRONT SEAT SIDE COVER REMOVAL/INSTALLATION.)
6. Slide hook A in the order of arrows (1), (2), (3) shown in the figure and set the front seat cushion trim aside.
7. Move the front seat cushion trim in the direction of the arrow (4) shown in the figure and set it aside.

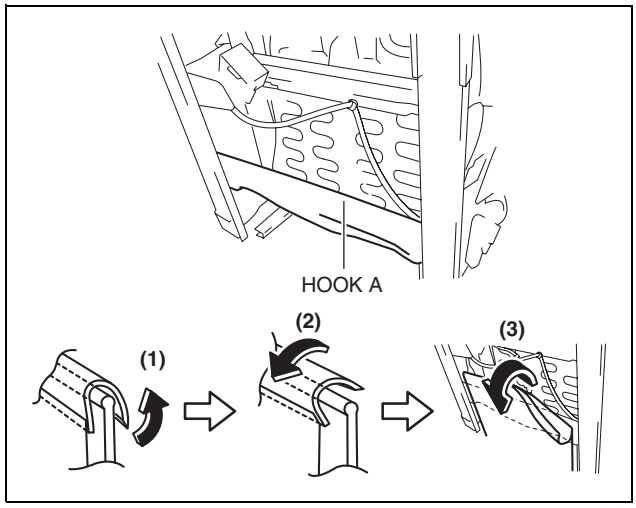

ac5uuw00001914

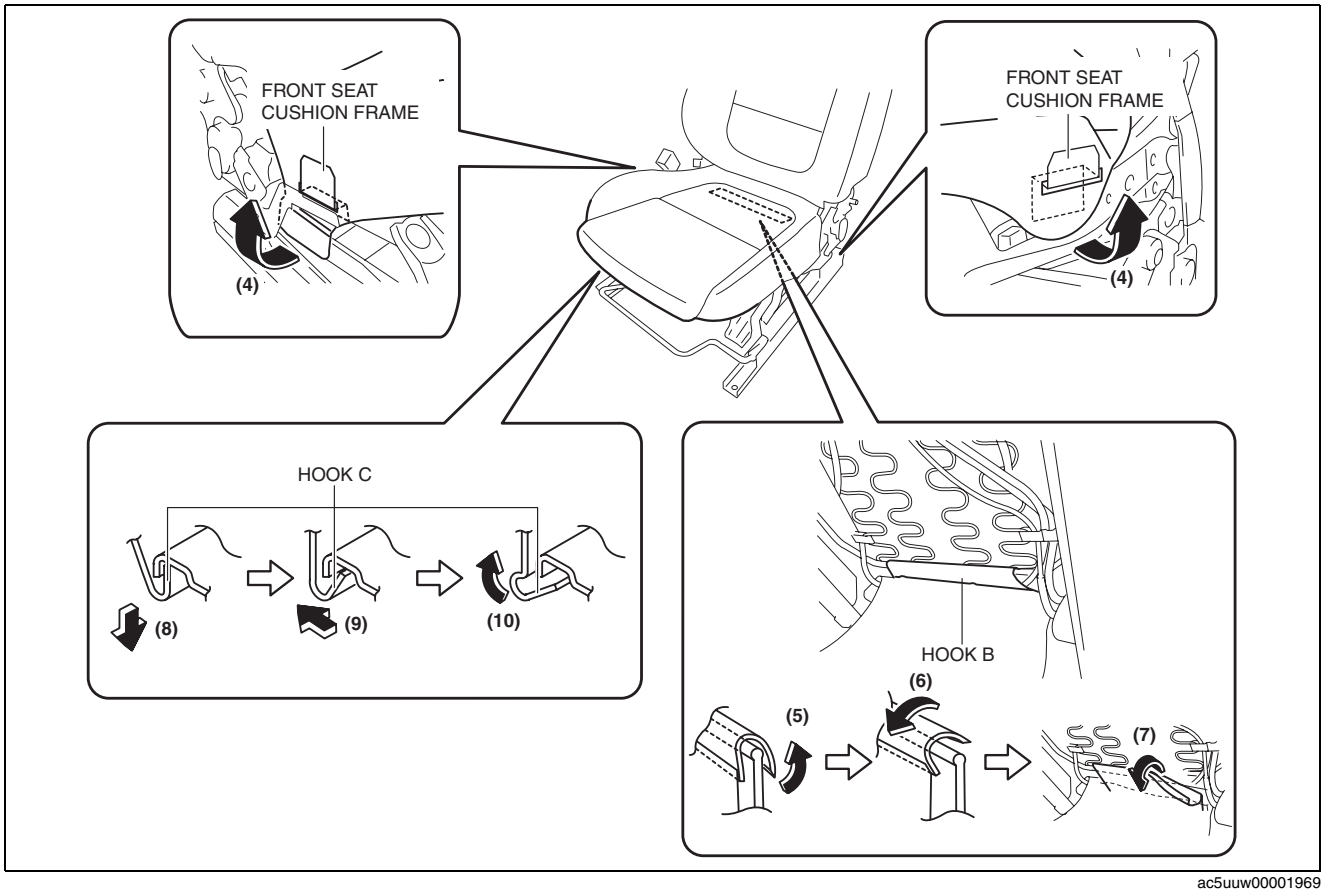

ac5uuw00001969

8. Slide hook B in the order of arrows (5), (6), (7) shown in the figure and set the front seat cushion frame aside.

SEATS

9. Slide hook C in the order of arrows (8), (9), (10) shown in the figure and set the front seat cushion frame aside. Remove the C rings in the order of (11), (12), (13), (14), and (15) shown in the figure, and remove the front seat cushion trim from the front seat cushion pad. (type A)

Caution
- **If a damaged C rings are reused, it may not be possible to install the front seat cushion trim and front seat cushion pad correctly. When removing and installing C rings, be careful not to damage them.**
- **If the C rings are damaged, replace the C rings with a new one.**

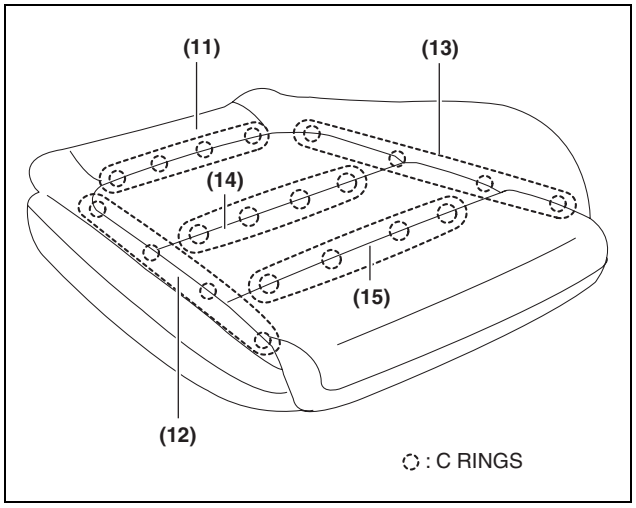

ac5wzw0000318

10. Remove the C rings in the order of (16), (17), (18), and (19) shown in the figure, and remove the front seat cushion trim from the front seat cushion pad. (type B)

Caution
- **If a damaged C rings are reused, it may not be possible to install the front seat cushion trim and front seat cushion pad correctly. When removing and installing C rings, be careful not to damage them.**
- **If the C rings are damaged, replace the C rings with a new one.**

11. Install in the reverse order of removal.

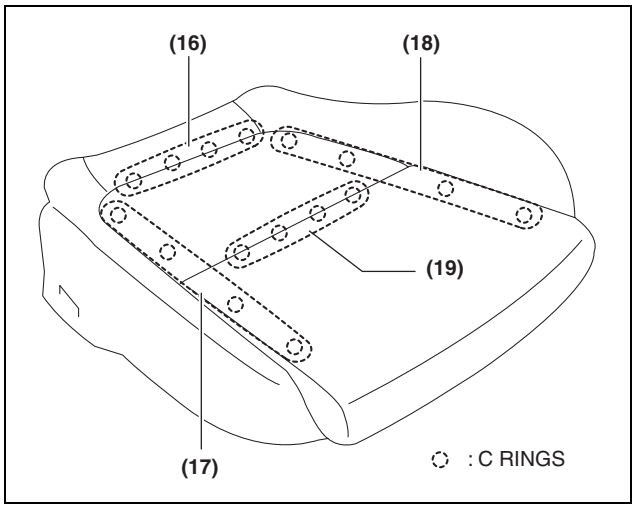

ac5wzw0000318

SEATS

Passenger-side

Note
- There are two types of passenger-side front seats, A and B types. The location and the number of C-rings installed to the front seat back trim and front seat back pad differ depending on the type.

1. Switch the ignition off (LOCK).
2. Disconnect the negative battery cable and wait for **1 min**. (See 01-17A-11 NEGATIVE BATTERY CABLE DISCONNECTION/CONNECTION [SKYACTIV-G 2.0].) (See 01-17A-13 NEGATIVE BATTERY CABLE DISCONNECTION/CONNECTION [SKYACTIV-G 2.0 (WITHOUT i-stop)].) (See 01-17B-9 NEGATIVE BATTERY CABLE DISCONNECTION/CONNECTION [SKYACTIV-D 2.2].)
3. Remove the headrest.
4. Remove the front seat. (See 09-13-4 FRONT SEAT REMOVAL/INSTALLATION.)
5. Remove the front seat side cover. (See 09-13-41 FRONT SEAT SIDE COVER REMOVAL/INSTALLATION.)
6. Slide hook A in the order of arrows (1), (2), (3) shown in the figure and set the front seat cushion trim aside.
7. Disconnect the seat warmer connector. (With seat warmer system)

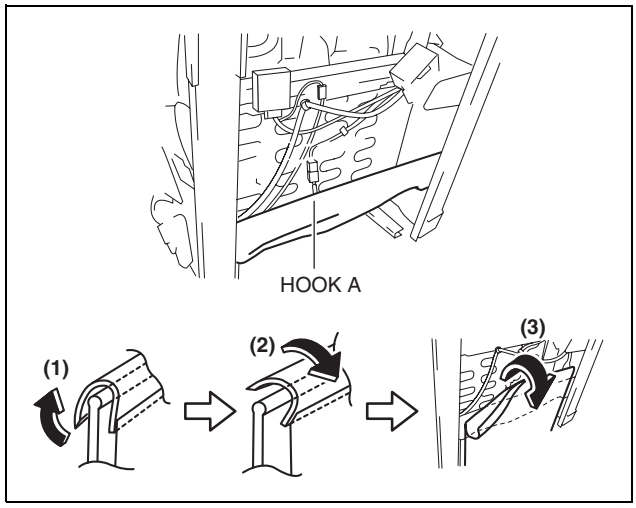

ac5wzw0000316

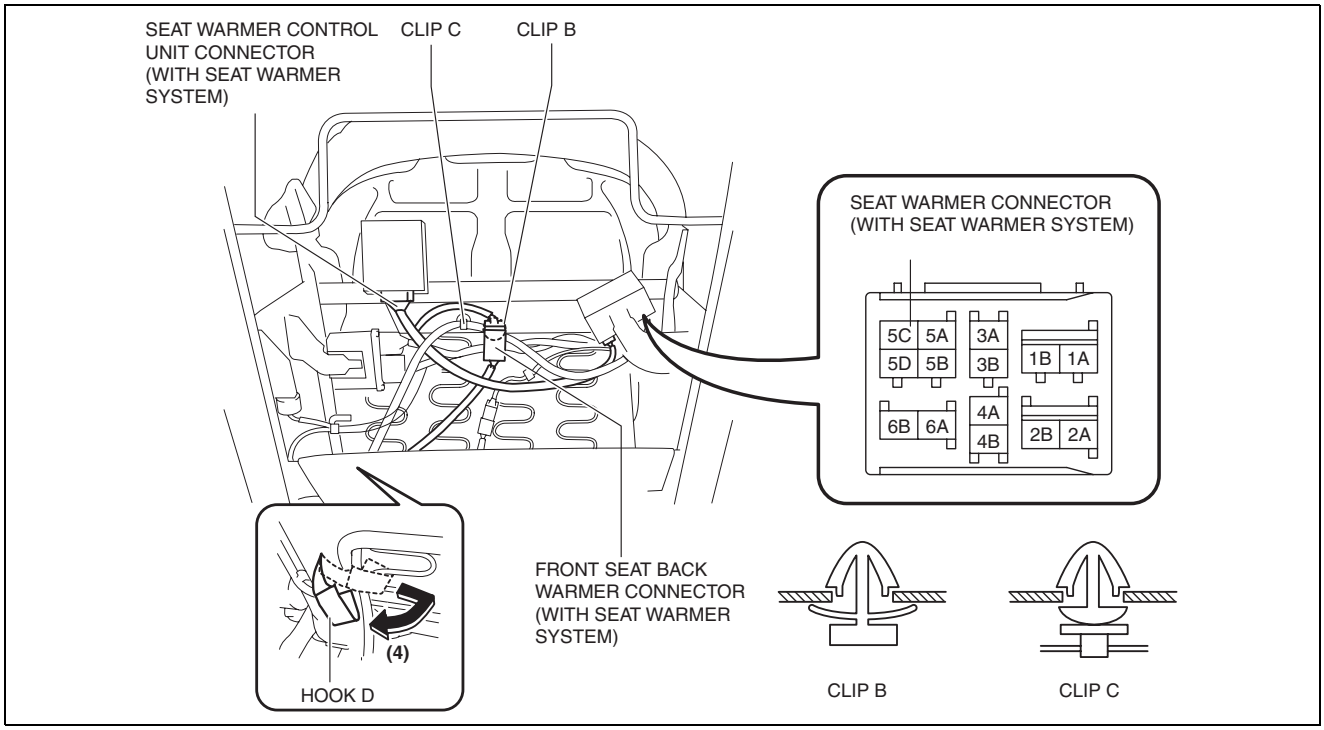

ac5uuw00001971

8. Disconnect the seat warmer control unit connector. (With seat warmer system)
9. Disconnect the front seat back warmer connector. (With seat warmer system)
10. Disengage clip B. (With seat warmer system)
11. Disconnect clip C. (With seat warmer system)
12. Set hooks D aside in the direction of the arrow (4) shown in the figure. (With seat warmer system)

SEATS

13. Move the front seat cushion trim in the direction of the arrow (5) shown in the figure and set it aside.

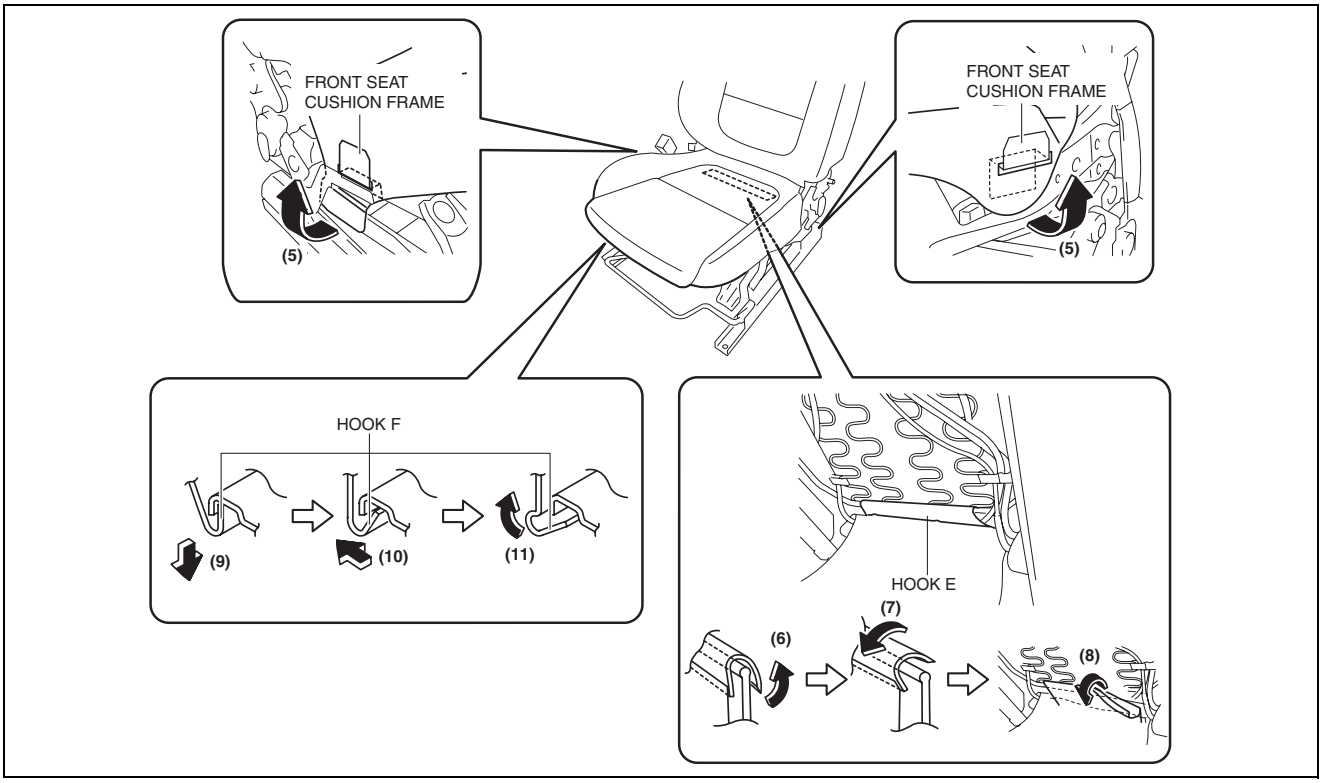

ac5uuw00001972

14. Slide hook E in the order of arrows (6), (7), (8) shown in the figure and set the front seat cushion frame aside.
15. Slide hook F in the order of arrows (9), (10), (11) shown in the figure and set the front seat cushion frame aside.
16. Remove the C rings in the order of (12), (13), (14), (15), and (16) shown in the figure, and remove the front seat cushion trim from the front seat cushion pad. (type A)

Caution

- **If a damaged C rings are reused, it may not be possible to install the front seat cushion trim and front seat cushion pad correctly. When removing and installing C rings, be careful not to damage them.**
- **If the C rings are damaged, replace the C rings with a new one.**

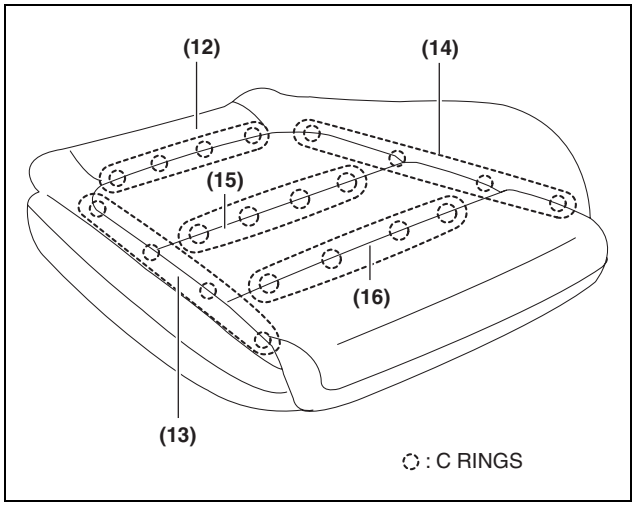

ac5wzw0000318

SEATS

17. Remove the C rings in the order of (17), (18), (19), and (20) shown in the figure, and remove the front seat cushion trim from the front seat cushion pad. (type B)

    Caution
    - **If a damaged C rings are reused, it may not be possible to install the front seat cushion trim and front seat cushion pad correctly. When removing and installing C rings, be careful not to damage them.**
    - **If the C rings are damaged, replace the C rings with a new one.**

18. Install in the reverse order of removal.

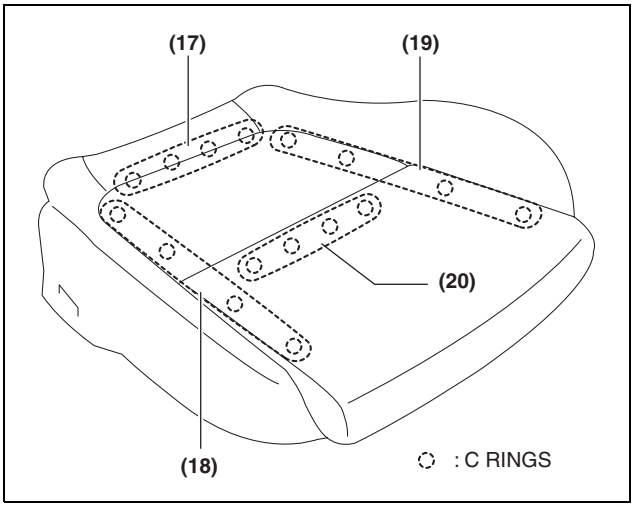

ac5wzw0000318

SEATS

FRONT SEAT CUSHION FRAME REMOVAL/INSTALLATION

id091300979700

Warning

- **Handling a side air bag improperly can accidentally operate (deploy) the air bag, which may seriously injure you. Read the service warnings/cautions in the Workshop Manual before handling the front seat (side air bag integrated). (See 08-10-3 AIR BAG SYSTEM SERVICE WARNINGS.) (See 08-10-5 AIR BAG SYSTEM SERVICE CAUTIONS.)**
- **If the sliding mechanisms on both sides are not locked after assembling the front seat, the front seat will operate accidentally while the vehicle is driven, which could result in serious injury. After assembling the front seat, shake it up and down and verify that the sliding mechanism on the both sides are locked.**

Caution

- **If the slide bar is operated after the front seat is removed, the left/right slide positions will deviate and the adjuster unit could be damaged after the front seat is installed. After removing a front seat, do not operate the slider lever.**
- **Verify that there are no malfunctions in the forward/back slide of the seat and in the adjuster unit after installing a front seat.**
- **When performing the procedure with a front seat removed from the vehicle, perform the procedure on a clean cloth so as not to damage or soil the seat.**

1. Switch the ignition off (LOCK).
2. Disconnect the negative battery cable and wait for **1 min**. (See 01-17A-11 NEGATIVE BATTERY CABLE DISCONNECTION/CONNECTION [SKYACTIV-G 2.0].) (See 01-17A-13 NEGATIVE BATTERY CABLE DISCONNECTION/CONNECTION [SKYACTIV-G 2.0 (WITHOUT i-stop)].) (See 01-17B-9 NEGATIVE BATTERY CABLE DISCONNECTION/CONNECTION [SKYACTIV-D 2.2].)
3. Remove the following parts:
   (1) Front seat (See 09-13-4 FRONT SEAT REMOVAL/INSTALLATION.)
   (2) Front seat side cover (See 09-13-41 FRONT SEAT SIDE COVER REMOVAL/INSTALLATION.)
   (3) Front seat back component (See 09-13-6 FRONT SEAT BACK COMPONENT REMOVAL/INSTALLATION.)
   (4) Front seat cushion trim (See 09-13-26 FRONT SEAT CUSHION TRIM REMOVAL/INSTALLATION.)
   (5) Front seat adjuster unit (See 09-13-35 FRONT SEAT ADJUSTER UNIT REMOVAL/INSTALLATION.)
4. Install in the reverse order of removal.

SEATS

FRONT SEAT ADJUSTER UNIT REMOVAL/INSTALLATION

id091300968000

Warning

- **Handling a side air bag improperly can accidentally operate (deploy) the air bag, which may seriously injure you. Read the service warnings/cautions in the Workshop Manual before handling the front seat (side air bag integrated). (See 08-10-3 AIR BAG SYSTEM SERVICE WARNINGS.) (See 08-10-5 AIR BAG SYSTEM SERVICE CAUTIONS.)**
- **If the sliding mechanisms on both sides are not locked after assembling the front seat, the front seat will operate accidentally while the vehicle is driven, which could result in serious injury. After assembling the front seat, shake it up and down and verify that the sliding mechanism on the both sides are locked.**

Caution

- **If the slide bar is operated after the front seat is removed, the left/right slide positions will deviate and the adjuster unit could be damaged after the front seat is installed. After removing a front seat, do not operate the slider lever.**
- **Verify that there are no malfunctions in the forward/back slide of the seat and in the adjuster unit after installing a front seat.**
- **When performing the procedure with a front seat removed from the vehicle, perform the procedure on a clean cloth so as not to damage or soil the seat.**

Driver-side (with power seat system)

1. Switch the ignition off (LOCK).
2. Disconnect the negative battery cable and wait for **1 min**. (See 01-17A-11 NEGATIVE BATTERY CABLE DISCONNECTION/CONNECTION [SKYACTIV-G 2.0].) (See 01-17A-13 NEGATIVE BATTERY CABLE DISCONNECTION/CONNECTION [SKYACTIV-G 2.0 (WITHOUT i-stop)].) (See 01-17B-9 NEGATIVE BATTERY CABLE DISCONNECTION/CONNECTION [SKYACTIV-D 2.2].)
3. Remove the following parts:
   (1) Front seat (See 09-13-4 FRONT SEAT REMOVAL/INSTALLATION.)
   (2) Front seat side cover (See 09-13-41 FRONT SEAT SIDE COVER REMOVAL/INSTALLATION.)
   (3) Front buckle (See 08-11-9 FRONT BUCKLE REMOVAL/INSTALLATION.)
4. Remove fasteners A and set the front seat cushion trim aside.

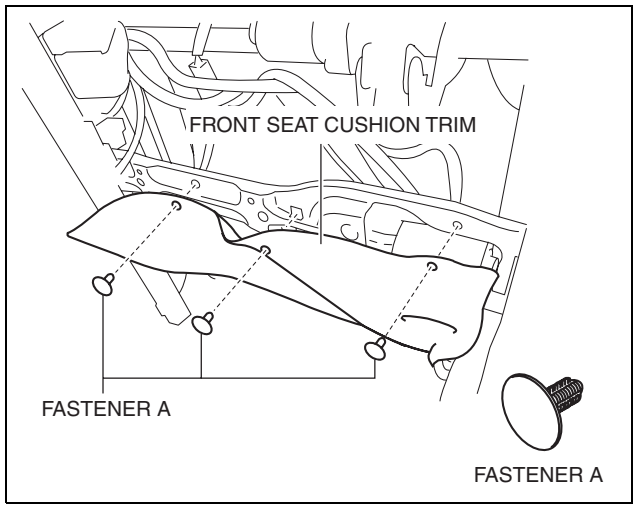

ac5jjw00002776

SEATS

5. Using a flathead screwdriver, disconnect the connector in the direction of the arrow (2) while releasing tab B in the direction of the arrow (1) shown in the figure.

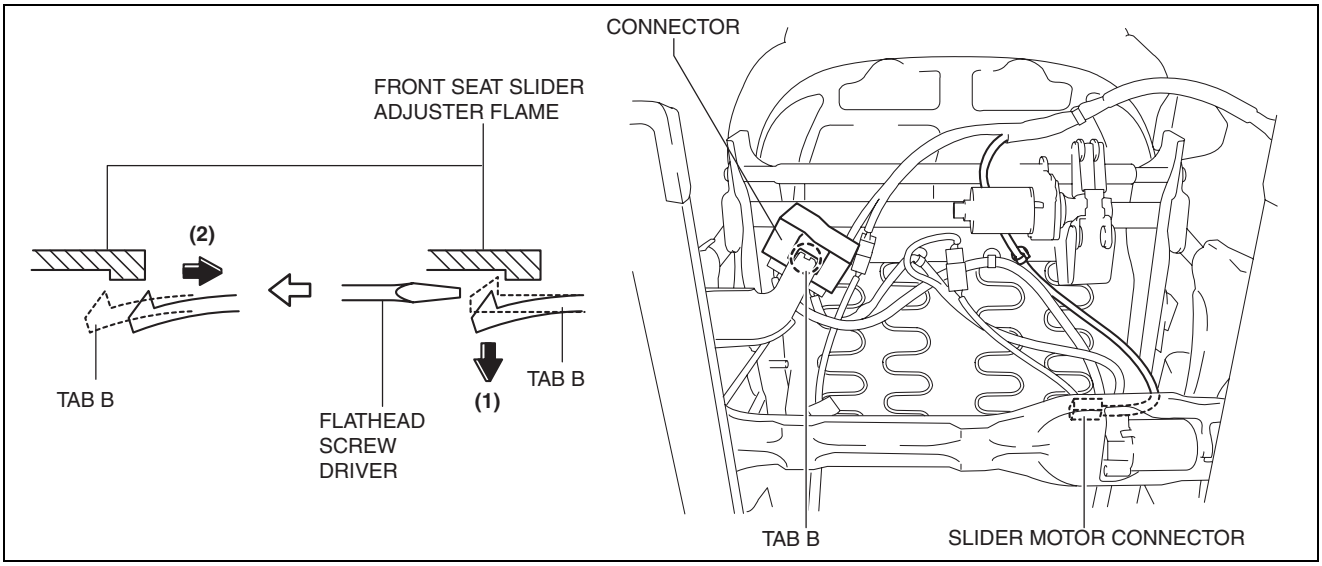

ac5uuw00001998

6. Disconnect the slide motor connector.
7. Remove bolts A
8. Remove the front seat adjuster unit.
9. Install in the reverse order of removal.

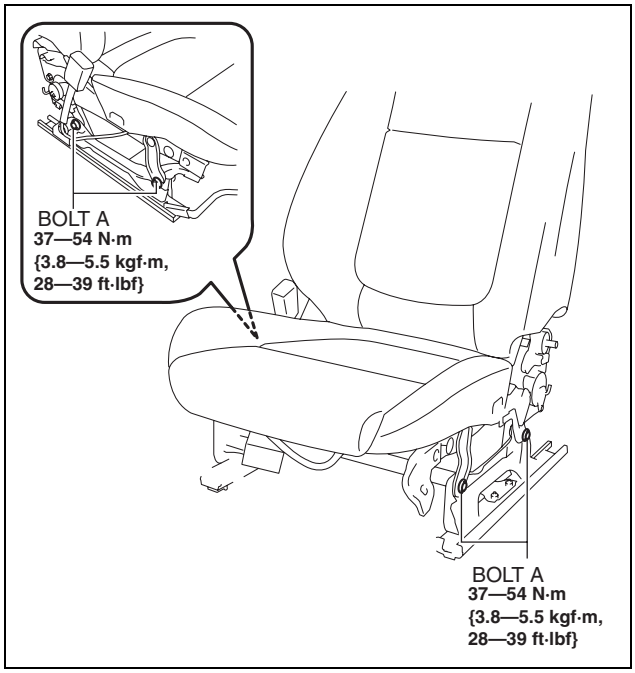

ac5uuw00001999

SEATS

Driver-side (without power seat system)

1. Switch the ignition off (LOCK).
2. Disconnect the negative battery cable and wait for **1 min**. (See 01-17A-11 NEGATIVE BATTERY CABLE DISCONNECTION/CONNECTION [SKYACTIV-G 2.0].) (See 01-17A-13 NEGATIVE BATTERY CABLE DISCONNECTION/CONNECTION [SKYACTIV-G 2.0 (WITHOUT i-stop)].) (See 01-17B-9 NEGATIVE BATTERY CABLE DISCONNECTION/CONNECTION [SKYACTIV-D 2.2].)
3. Remove the following parts:
   (1) Front seat (See 09-13-4 FRONT SEAT REMOVAL/INSTALLATION.)
   (2) Front seat side cover (See 09-13-41 FRONT SEAT SIDE COVER REMOVAL/INSTALLATION.)
   (3) Front buckle (See 08-11-9 FRONT BUCKLE REMOVAL/INSTALLATION.)
4. Slide hook A in the order of arrows (1), (2), (3) shown in the figure and set the front seat cushion trim aside.
5. Using a flathead screwdriver, disconnect the connector in the direction of the arrow (5) while releasing tab B in the direction of the arrow (4) shown in the figure.

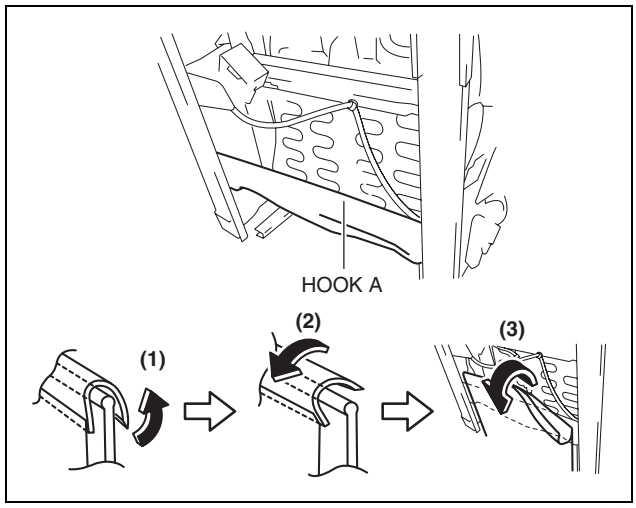

ac5uuw00001914

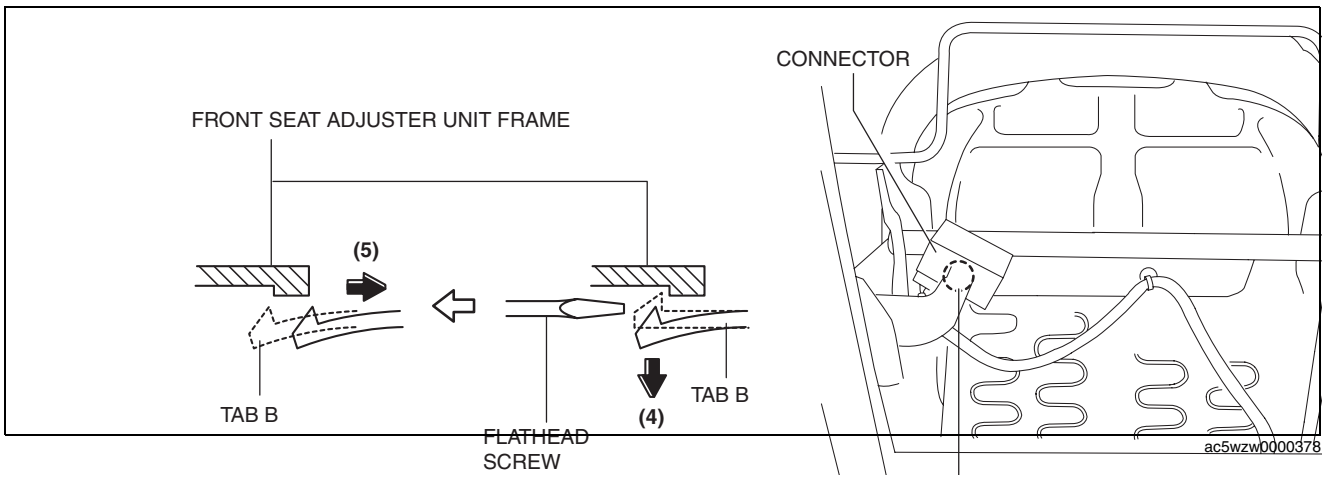

ac5wzw0000378

SEATS

6. Remove bolts A
7. Install in the reverse order of removal.

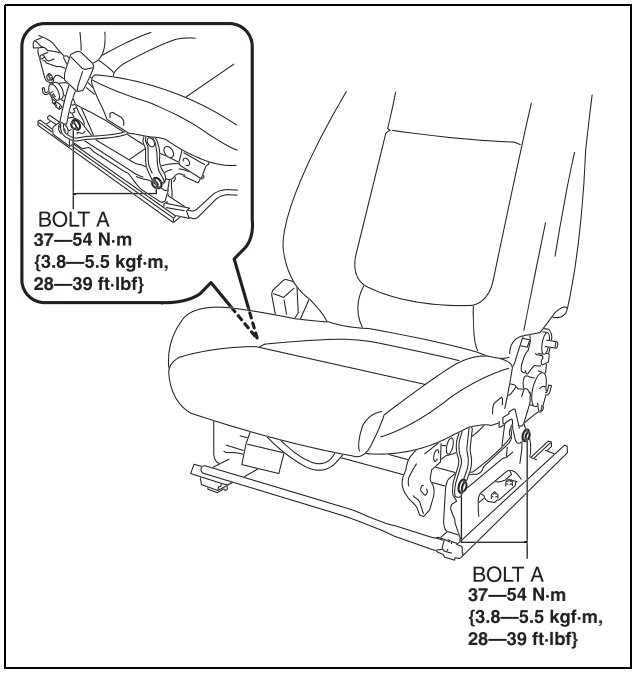

ac5jjw00001337

SEATS

Passenger-side

1. Switch the ignition off (LOCK).
2. Disconnect the negative battery cable and wait for **1 min**. (See 01-17A-11 NEGATIVE BATTERY CABLE DISCONNECTION/CONNECTION [SKYACTIV-G 2.0].) (See 01-17A-13 NEGATIVE BATTERY CABLE DISCONNECTION/CONNECTION [SKYACTIV-G 2.0 (WITHOUT i-stop)].) (See 01-17B-9 NEGATIVE BATTERY CABLE DISCONNECTION/CONNECTION [SKYACTIV-D 2.2].)
3. Remove the following parts:
   (1) Front seat (See 09-13-4 FRONT SEAT REMOVAL/INSTALLATION.)
   (2) Front seat side cover (See 09-13-41 FRONT SEAT SIDE COVER REMOVAL/INSTALLATION.)
   (3) Front buckle (See 08-11-9 FRONT BUCKLE REMOVAL/INSTALLATION.)
4. Slide hook A in the order of arrows (1), (2), (3) shown in the figure and set the front seat cushion trim aside.
5. Using a flathead screwdriver, disconnect the connector in the direction of the arrow (5) while releasing tab B in the direction of the arrow (4) shown in the figure.

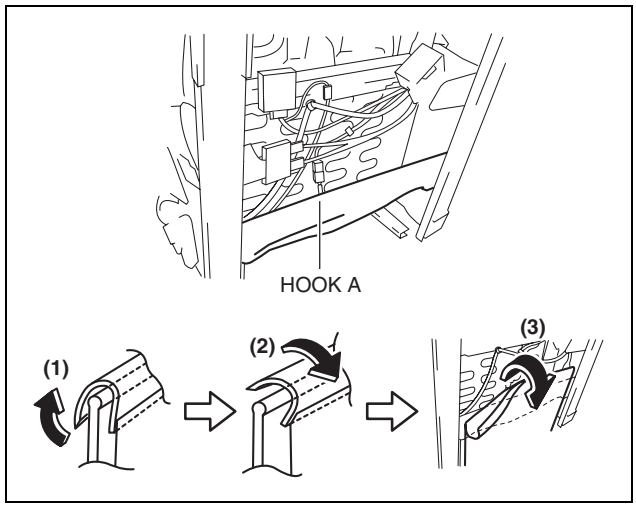

ac5jjw00002784

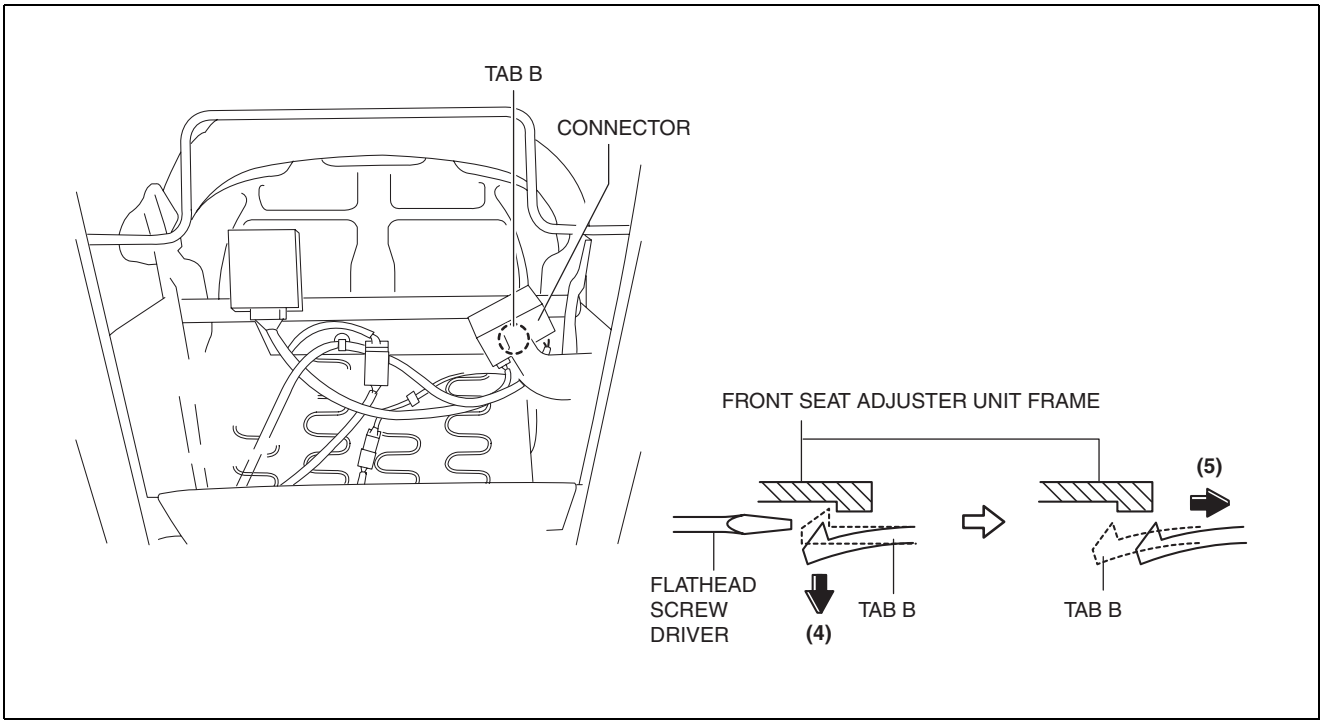

ac5wzw0000317

SEATS

6. Remove bolts A.

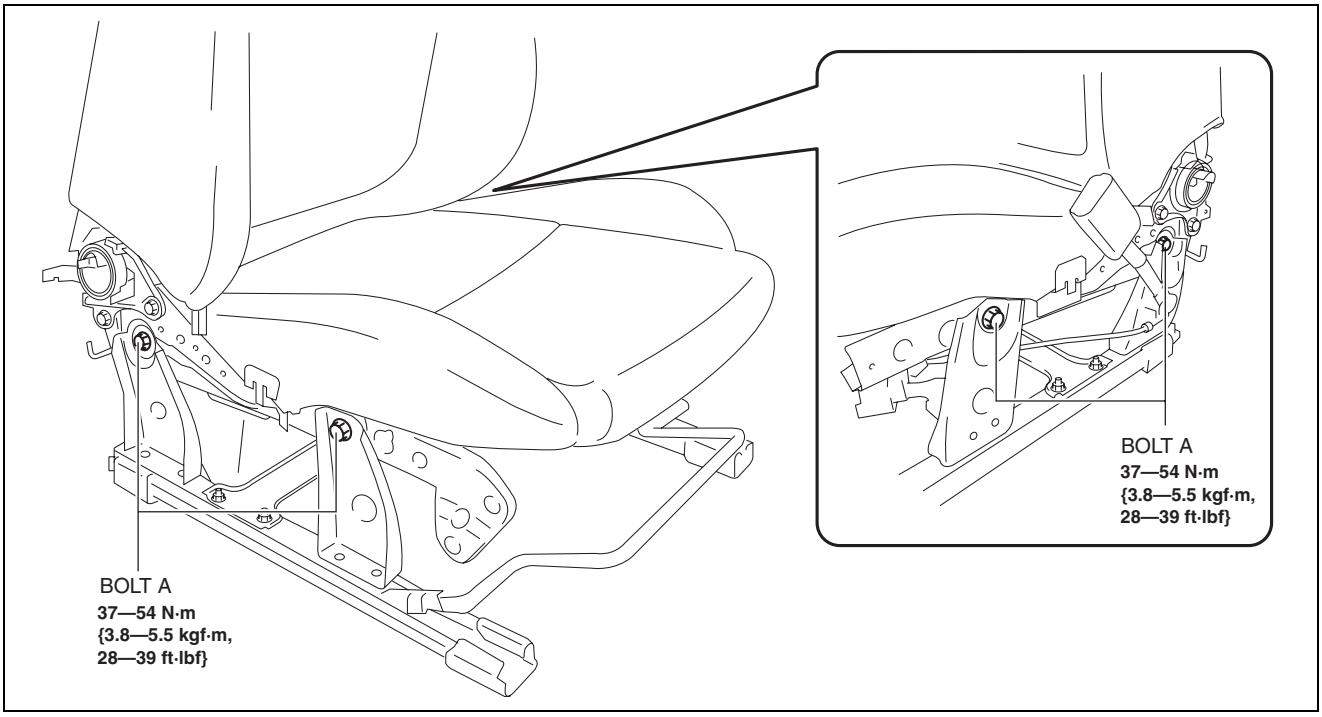

ac5uuw00002002

7. Install in the reverse order of removal.

SEATS

FRONT SEAT SIDE COVER REMOVAL/INSTALLATION

id091300912100

Warning

- **Handling a side air bag improperly can accidentally operate (deploy) the air bag, which may seriously injure you. Read the service warnings in the Workshop Manual before handling the front seat (side air bag integrated). (See 08-10-3 AIR BAG SYSTEM SERVICE WARNINGS.) (See 08-10-5 AIR BAG SYSTEM SERVICE CAUTIONS.)**
- **If the sliding mechanisms on both sides are not locked after assembling the front seat, the front seat will operate accidentally while the vehicle is driven, which could result in serious injury. After assembling the front seat, shake it up and down and verify that the sliding mechanism on the both sides are locked.**

Caution

- **If the slide bar is operated after the front seat is removed, the left/right slide positions will deviate and the adjuster unit could be damaged after the front seat is installed. After removing a front seat, do not operate the slider lever.**
- **Verify that there are no malfunctions in the forward/back slide of the seat and in the adjuster unit after installing a front seat.**
- **When performing the procedure with a front seat removed from the vehicle, perform the procedure on a clean cloth so as not to damage or soil the seat.**

Front Door Side
Driver-side (With Power Seat System)

1. Switch the ignition off (LOCK).
2. Disconnect the negative battery cable and wait for **1 min**. (See 01-17A-11 NEGATIVE BATTERY CABLE DISCONNECTION/CONNECTION [SKYACTIV-G 2.0].) (See 01-17A-13 NEGATIVE BATTERY CABLE DISCONNECTION/CONNECTION [SKYACTIV-G 2.0 (WITHOUT i-stop)].) (See 01-17B-9 NEGATIVE BATTERY CABLE DISCONNECTION/CONNECTION [SKYACTIV-D 2.2].)
3. Pull the power seat switch knob in the direction of the arrow (1) shown in the figure, and remove it while disengaging tabs A and B.

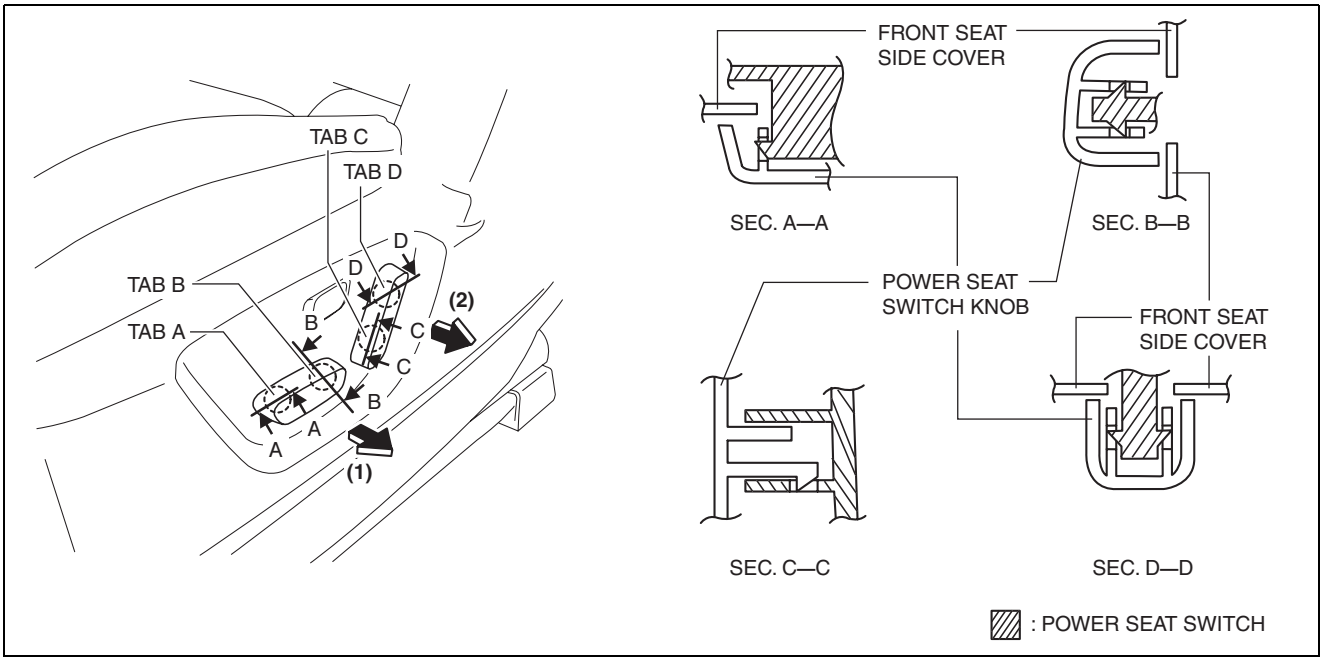

ac5uuw00002003

4. Pull the power seat switch knob in the direction of the arrow (2) shown in the figure, and remove it while disengaging tabs C and D.

SEATS

5. Remove clips E from the front seat cushion frame.

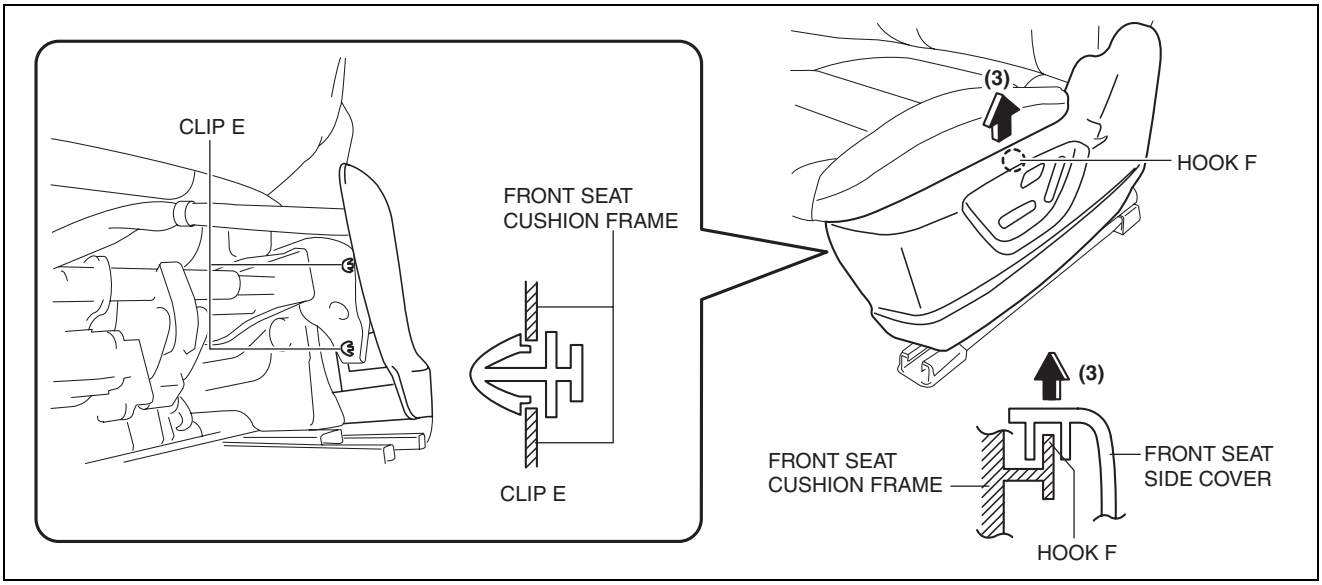

ac5wzw0000375

6. Pull up the front seat side cover in the direction of the arrow (3) shown in the figure and set hook F aside.
7. Pull the front seat side cover in the direction of the arrow (4) shown in the figure and disengage the tabs G and H, and the pin.

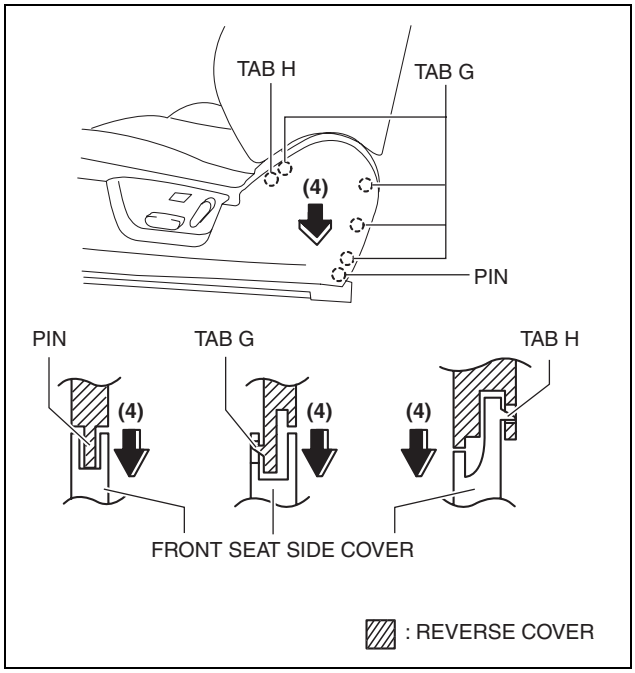

ac5wzw0000319

SEATS

8. Pull the front seat side cover in the direction of the arrow (5) shown in the figure and set hook I aside.

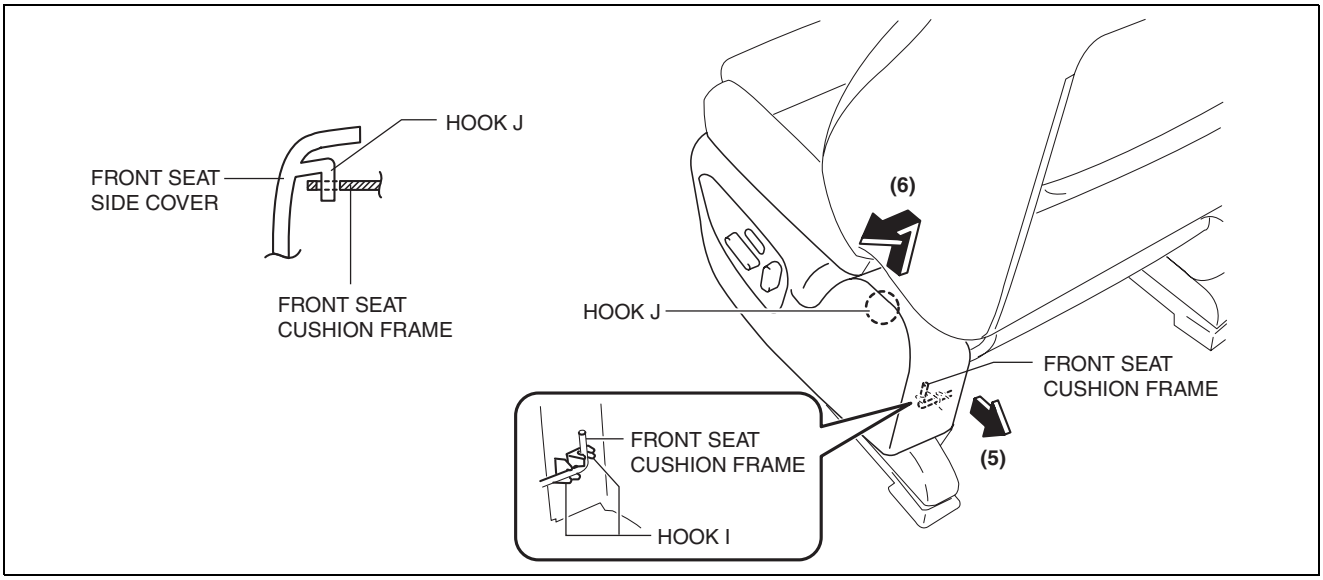

ac5uuw00002006

9. Pull the front seat side cover in the direction of the arrow (6) shown in the figure and set hook J aside.
10. Disconnect the power seat switch connector.
11. Set the wiring harness aside from hooks K and L, and remove the front seat side cover in the direction of the arrow (7) shown in the figure.
12. Remove the power seat switch. (See 09-13-99 POWER SEAT SWITCH REMOVAL/ INSTALLATION.)
13. Install in the reverse order of removal.

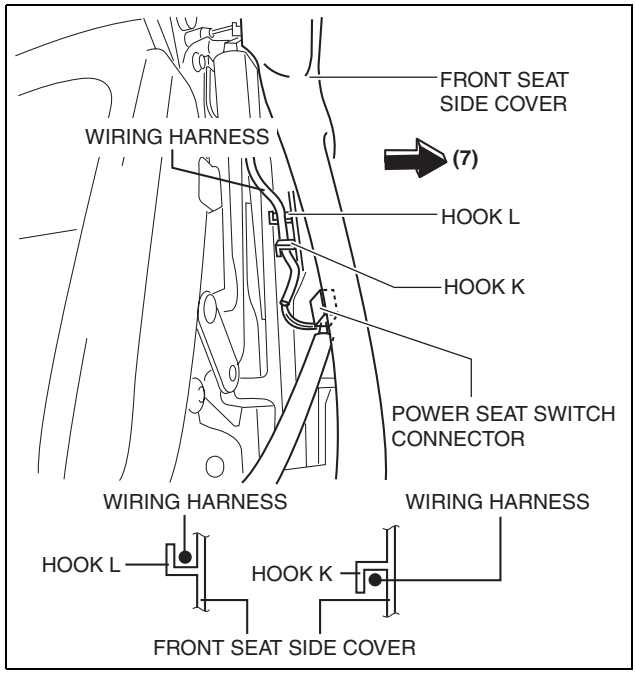

ac5uuw00002007

SEATS

Driver-side (Without power seat system)

Caution
- **The seat back folds forward when the recliner knob is operated. Be careful when operating the recliner lever.**

1. Switch the ignition off (LOCK).
2. Disconnect the negative battery cable and wait for **1 min**. (See 01-17A-11 NEGATIVE BATTERY CABLE DISCONNECTION/CONNECTION [SKYACTIV-G 2.0].) (See 01-17A-13 NEGATIVE BATTERY CABLE DISCONNECTION/CONNECTION [SKYACTIV-G 2.0 (WITHOUT i-stop)].) (See 01-17B-9 NEGATIVE BATTERY CABLE DISCONNECTION/CONNECTION [SKYACTIV-D 2.2].)
3. Move the flathead screwdriver wrapped in protective tape in the direction of the arrow (1) shown in the figure and disengage tab A. (with lever type recliner knob))

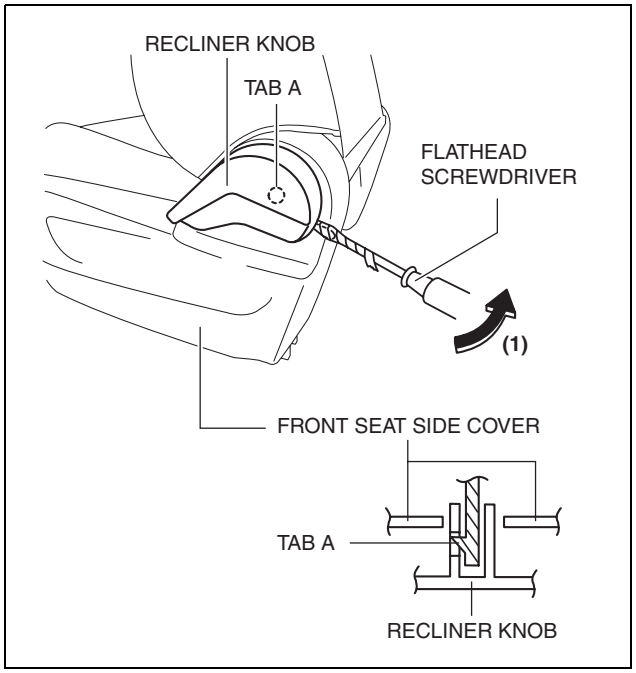

ac5uuw00002014

4. Move the flathead screwdriver wrapped in protective tape in the direction of the arrow (2) shown in the figure and disengage tab B. (with lever type recliner knob)

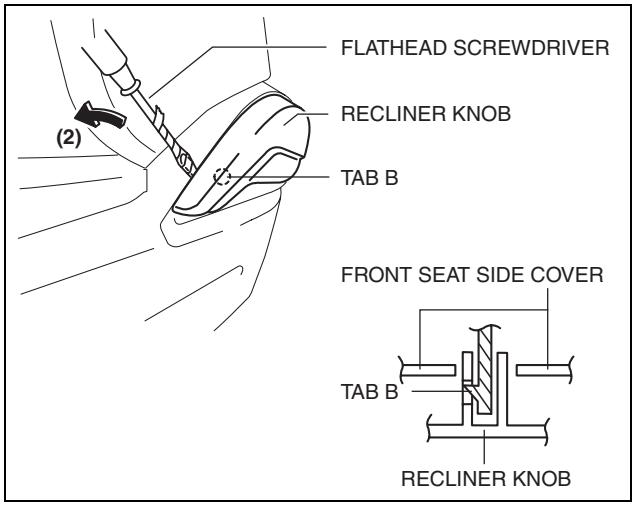

ac5uuw00002015

SEATS

5. Remove the recliner knob in the direction of the arrow (3) shown in the figure. (with lever type recliner knob)

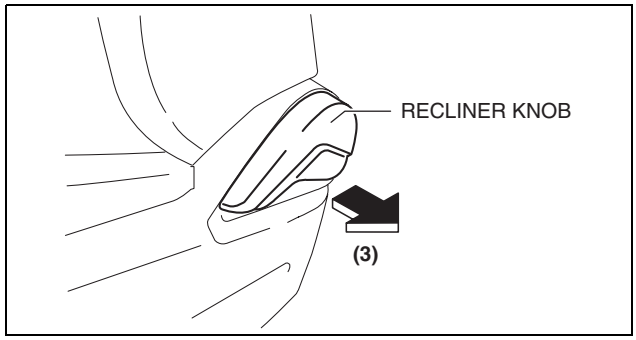

ac5uuw00002016

6. Remove the clip then remove the recliner knob. (with dial type recliner knob)

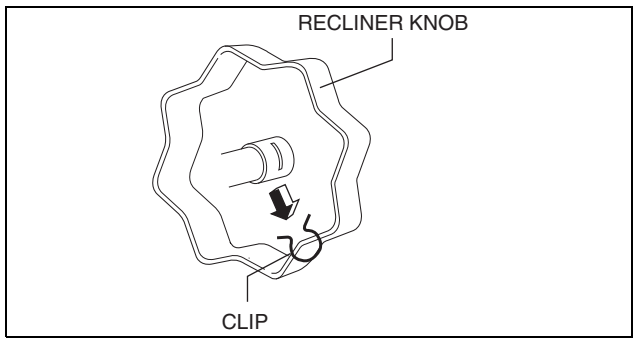

am6zzw0000296

7. Remove the screw. (with dial type recliner knob)
8. Affix the protective tape to the position shown in the figure.

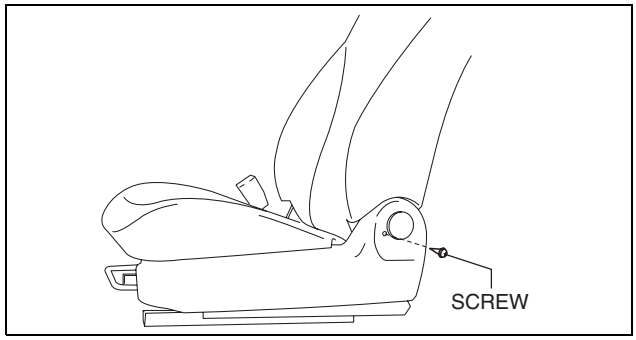

ac5wzw0000316

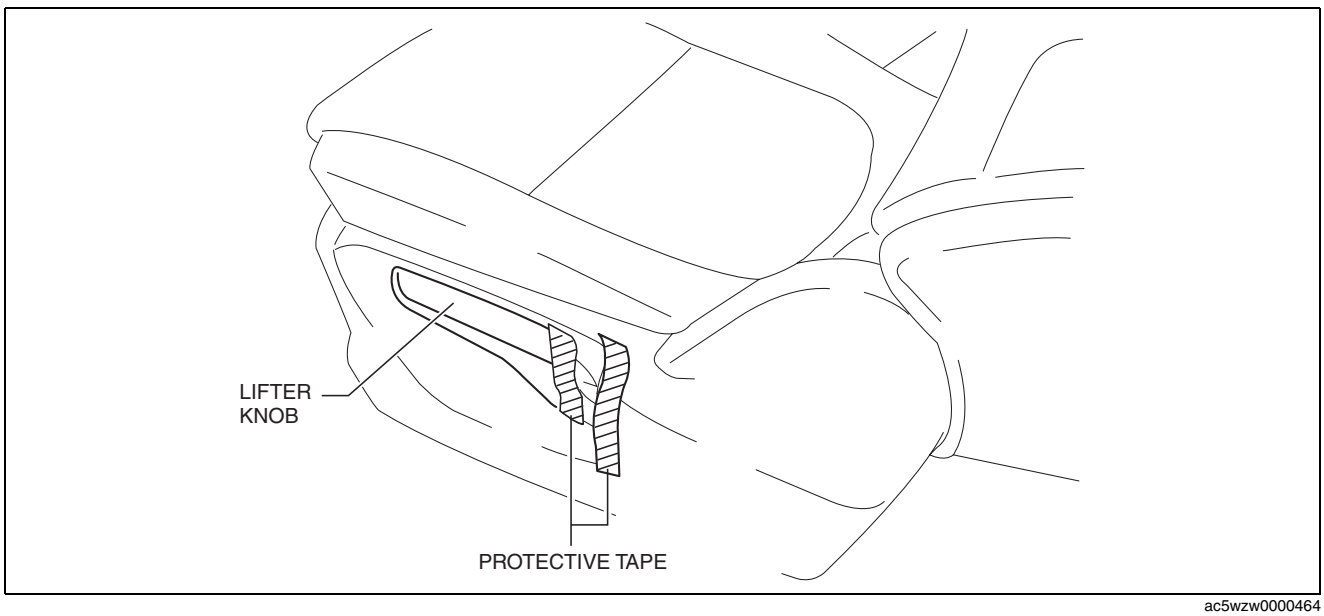

ac5wzw0000464

SEATS

9. Using a wood slab, tap the end of the lifter knob with the plastic hammer and remove it in the direction of the arrow (4).

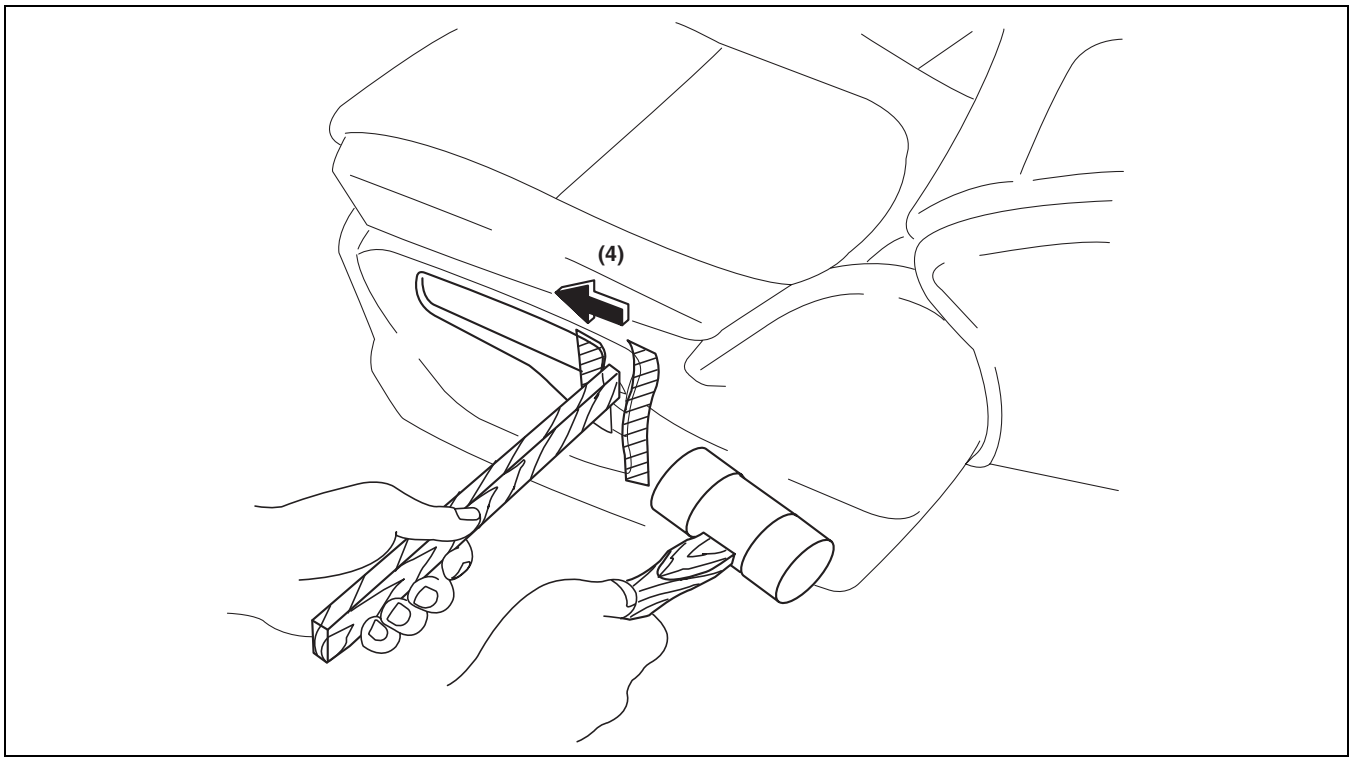

ac5uuw00002017

10. Remove clips D from the front seat cushion frame.

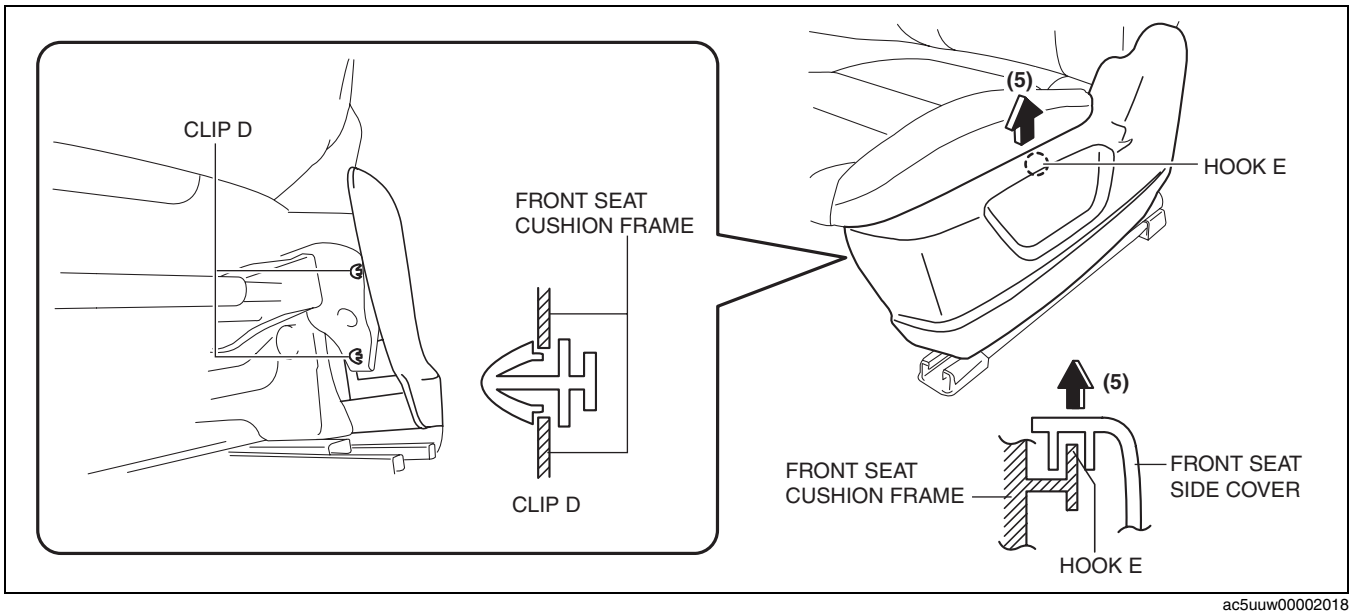

ac5uuw00002018

11. Pull up the front seat side cover in the direction of the arrow (5) shown in the figure and set hook E aside.

SEATS

12. Pull the front seat side cover in the direction of the arrow (6) shown in the figure and disengage the tabs F and G, and the pin.
13. Pull the front seat side cover in the direction of the arrow (7) shown in the figure and set hook H aside.

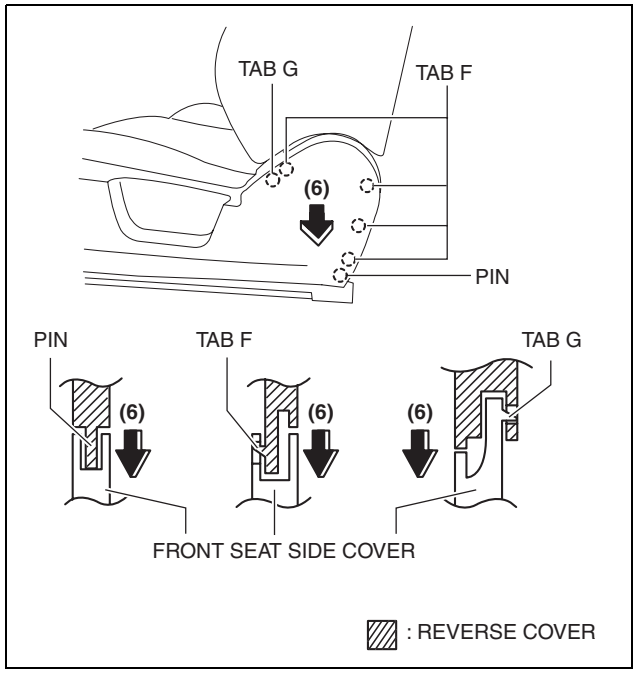

ac5wzw0000319

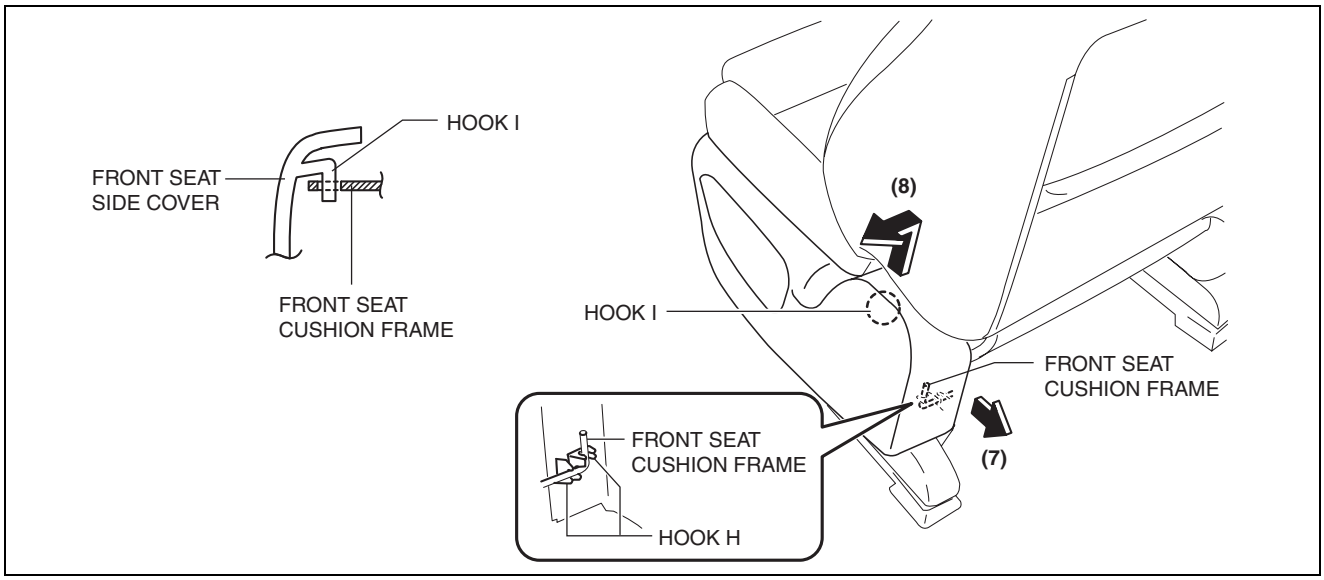

ac5wzw0000375

14. Pull the front seat side cover in the direction of the arrow (8) shown in the figure and set hook I aside.
15. Remove the front seat side cover
16. Install in the reverse order of removal.

SEATS

Passenger-side

Caution
- **The seat back folds forward when the recliner knob is operated. Be careful when operating the recliner lever.**

1. Switch the ignition off (LOCK).
2. Disconnect the negative battery cable and wait for **1 min**. (See 01-17A-11 NEGATIVE BATTERY CABLE DISCONNECTION/CONNECTION [SKYACTIV-G 2.0].) (See 01-17A-13 NEGATIVE BATTERY CABLE DISCONNECTION/CONNECTION [SKYACTIV-G 2.0 (WITHOUT i-stop)].) (See 01-17B-9 NEGATIVE BATTERY CABLE DISCONNECTION/CONNECTION [SKYACTIV-D 2.2].)
3. Using a tape-wrapped flathead screwdriver, detach tab A in the direction of arrows (1) shown in the figure. (with lever type recliner knob)

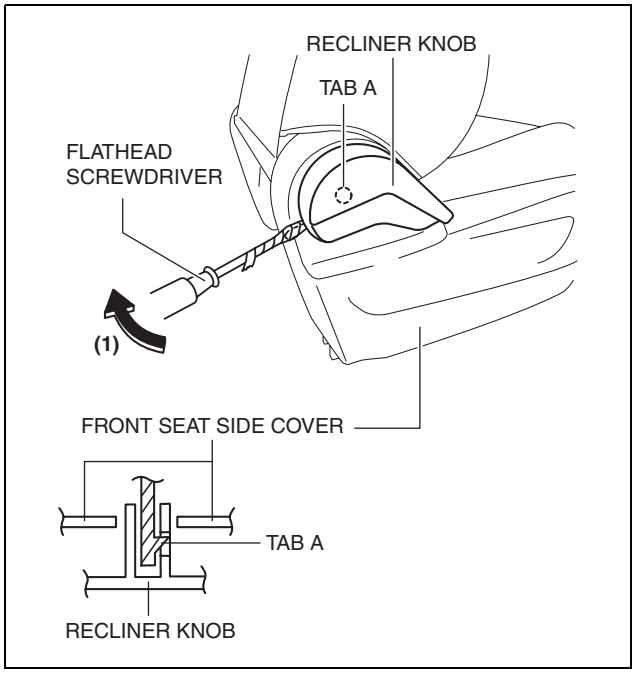

ac5uuw00002008

4. Using a tape-wrapped flathead screwdriver, detach tab B in the direction of arrows (2) shown in the figure. (with lever type recliner knob)

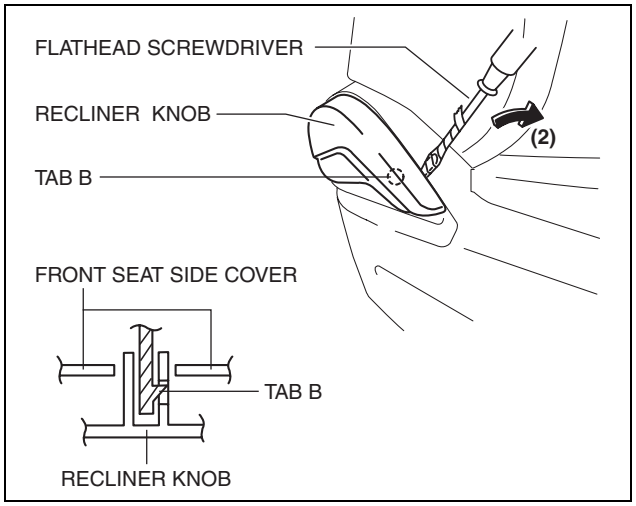

ac5uuw00002009

SEATS

5. Remove the recliner knob in the direction of the arrow (3) shown in the figure. (with lever type recliner knob)

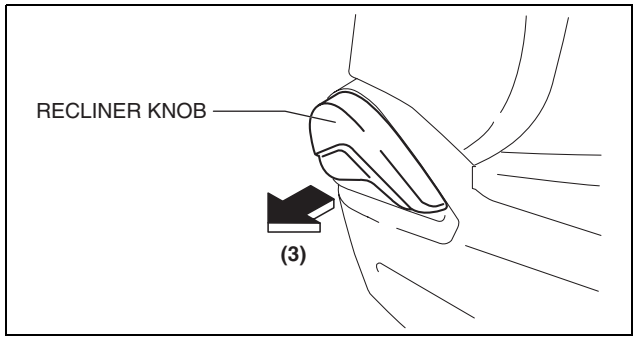

ac5uuw00002010

6. Remove the clip then remove the recliner knob. (with dial type recliner knob)

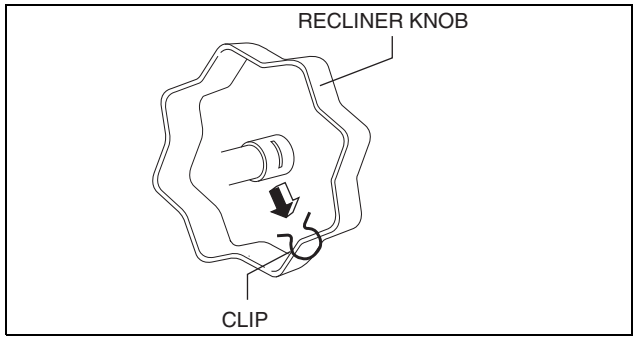

am6zzw0000296

7. Remove the screw. (with dial type recliner knob)
8. Remove clips C from the front seat cushion frame.

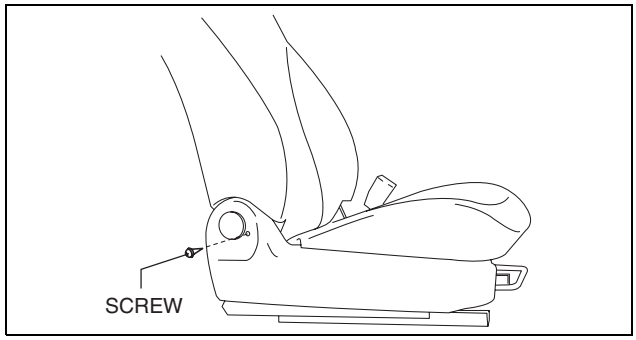

ac5wzw0000316

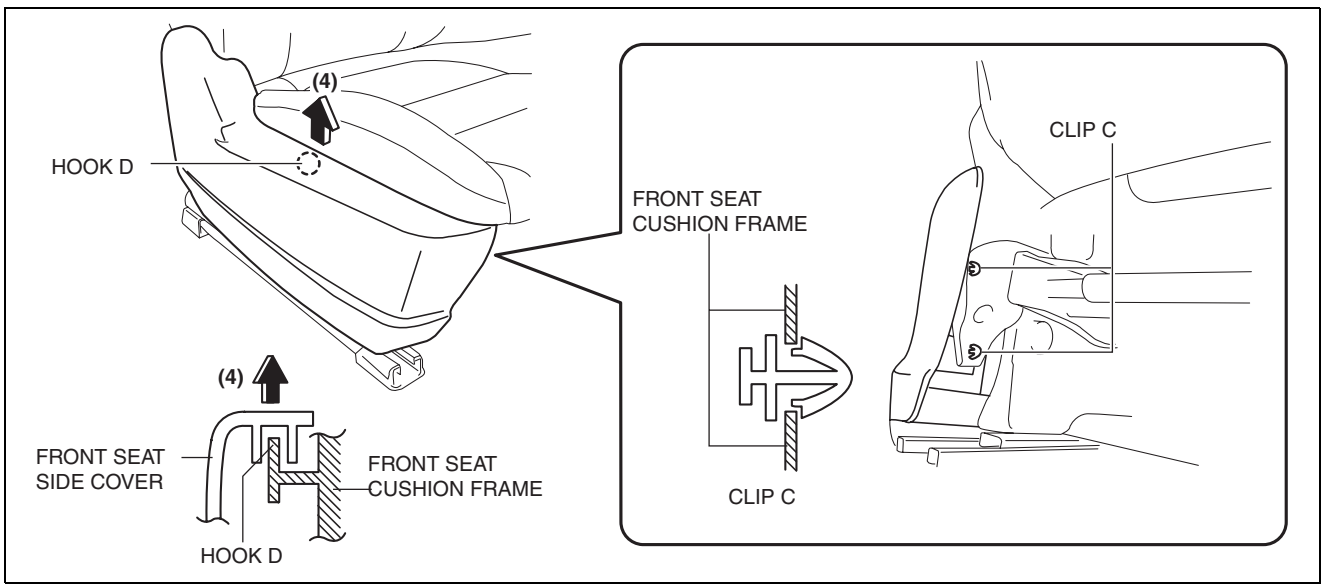

ac5wzw0000375

9. Pull up the front seat side cover in the direction of the arrow (4) shown in the figure and set hook D aside.

SEATS

10. Pull the front seat side cover in the direction of the arrow (5) shown in the figure and disengage the tabs E and F, and the pin.
11. Pull the front seat side cover in the direction of the arrow (6) shown in the figure and set hook G aside.

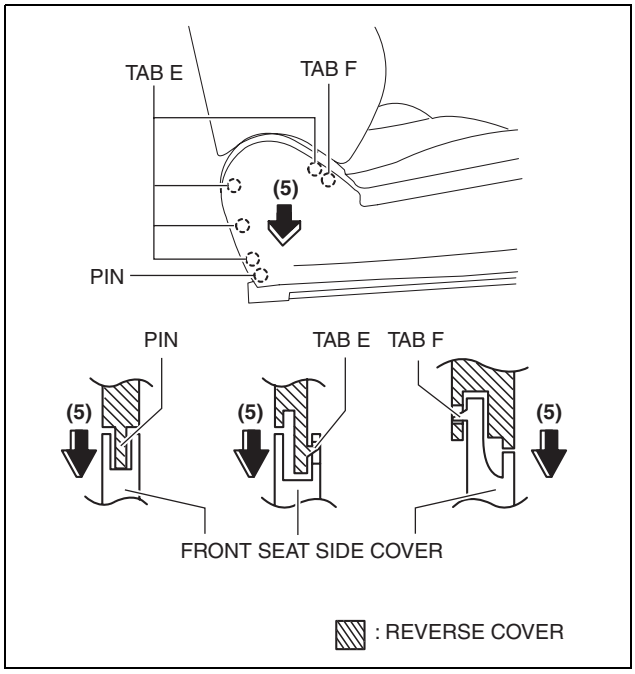

ac5wzw0000319

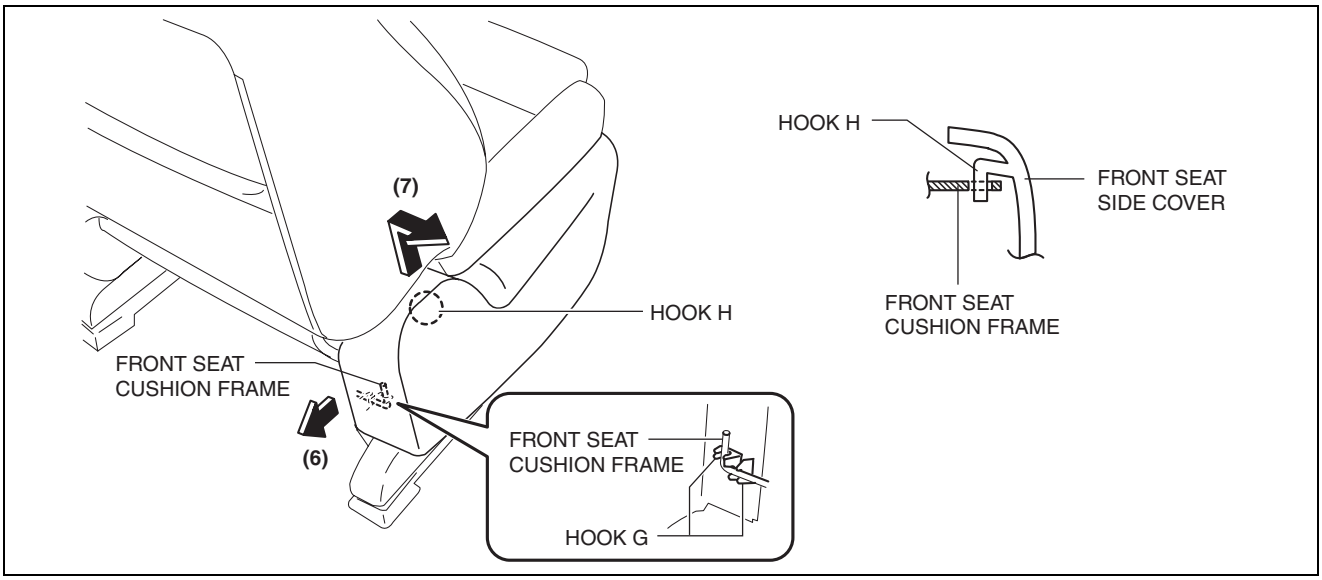

ac5uuw00002013

12. Pull the front seat side cover in the direction of the arrow (7) shown in the figure and set hook H aside.
13. Remove the front seat side cover
14. Install in the reverse order of removal.

SEATS

Rear Console Side

1. Switch the ignition off (LOCK).
2. Disconnect the negative battery cable and wait for **1 min**. (See 01-17A-11 NEGATIVE BATTERY CABLE DISCONNECTION/CONNECTION [SKYACTIV-G 2.0].) (See 01-17A-13 NEGATIVE BATTERY CABLE DISCONNECTION/CONNECTION [SKYACTIV-G 2.0 (WITHOUT i-stop)].) (See 01-17B-9 NEGATIVE BATTERY CABLE DISCONNECTION/CONNECTION [SKYACTIV-D 2.2].)
3. Remove the front seat. (See 09-13-4 FRONT SEAT REMOVAL/INSTALLATION.)
4. Remove screw A.
5. Pull up the front seat side cover in the direction of the arrow (1) shown in the figure and set hook B aside.

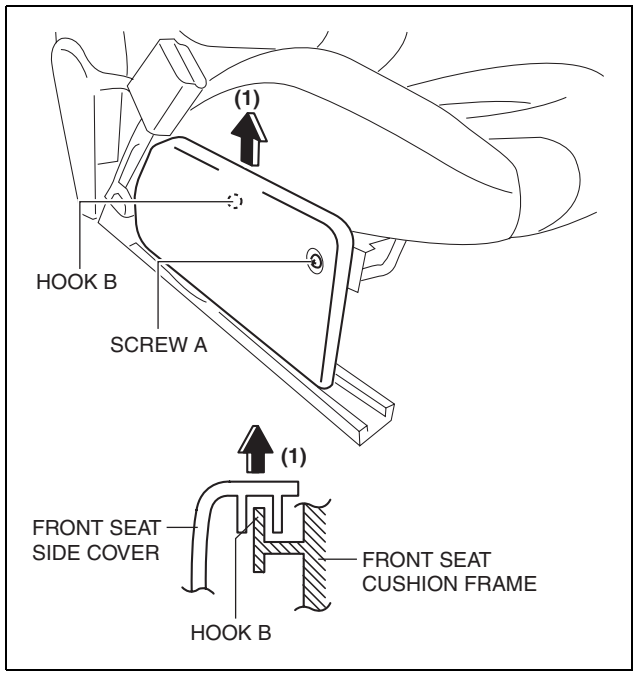

ac5wzw0000375

6. Pull the front seat side cover in the direction of the arrow (2) shown in the figure and disengage the tabs C and D, and the pin.

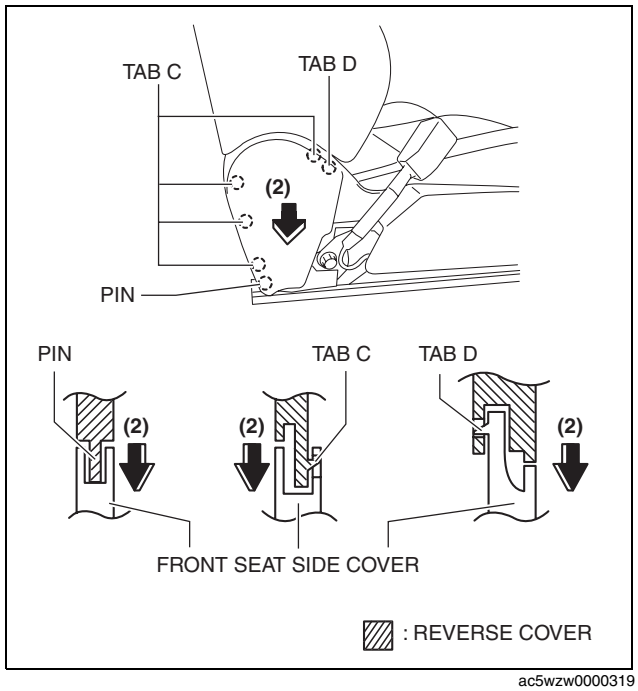

ac5wzw0000319

SEATS

7. Pull the front seat side cover in the direction of the arrow (3) shown in the figure and set hook E aside.

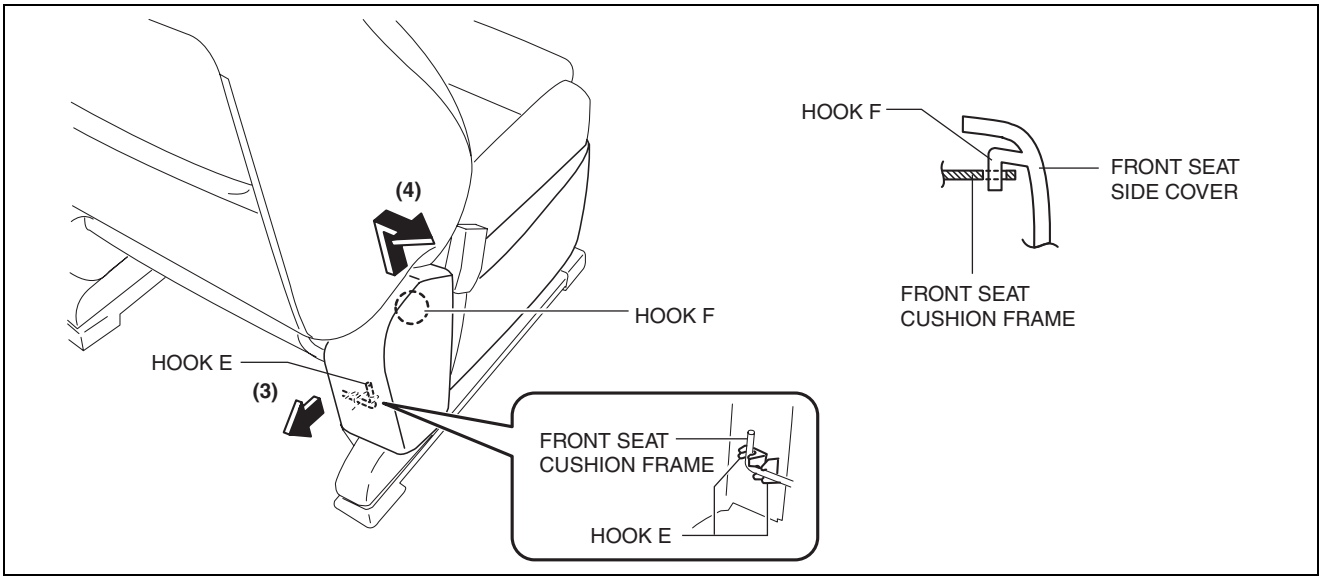

ac5uuw00002023

8. Pull the front seat side cover in the direction of the arrow (4) shown in the figure and set hook F aside.
9. Remove the front seat side cover
10. Install in the reverse order of removal.

SEATS

FRONT SEAT RAIL GUIDE COVER REMOVAL/INSTALLATION

id091300989200

Warning

- **Handling a side air bag improperly can accidentally operate (deploy) the air bag, which may seriously injure you. Read the service warnings/cautions in the Workshop Manual before handling the front seat (side air bag integrated). (See 08-10-3 AIR BAG SYSTEM SERVICE WARNINGS.) (See 08-10-5 AIR BAG SYSTEM SERVICE CAUTIONS.)**
- **If the sliding mechanisms on both sides are not locked after assembling the front seat, the front seat will operate accidentally while the vehicle is driven, which could result in serious injury. After assembling the front seat, shake it up and down and verify that the sliding mechanism on the both sides are locked.**

Caution

- **If the slide bar is operated after the front seat is removed, the left/right slide positions will deviate and the adjuster unit could be damaged after the front seat is installed. After removing a front seat, do not operate the slider lever.**
- **Verify that there are no malfunctions in the forward/back slide of the seat and in the adjuster unit after installing a front seat.**
- **When performing the procedure with a front seat removed from the vehicle, perform the procedure on a clean cloth so as not to damage or soil the seat.**

Note

- When removing the front seat from the vehicle or putting it back in, it can be performed easier by removing the headrest.

1. Switch the ignition off (LOCK).
2. Disconnect the negative battery cable and wait for **1 min**. (See 01-17A-11 NEGATIVE BATTERY CABLE DISCONNECTION/CONNECTION [SKYACTIV-G 2.0].) (See 01-17A-13 NEGATIVE BATTERY CABLE DISCONNECTION/CONNECTION [SKYACTIV-G 2.0 (WITHOUT i-stop)].) (See 01-17B-9 NEGATIVE BATTERY CABLE DISCONNECTION/CONNECTION [SKYACTIV-D 2.2].)
3. Remove the following parts:
   (1) Front seat (See 09-13-4 FRONT SEAT REMOVAL/INSTALLATION.)
   (2) Front seat side cover (See 09-13-41 FRONT SEAT SIDE COVER REMOVAL/INSTALLATION.)
4. Remove screws A.

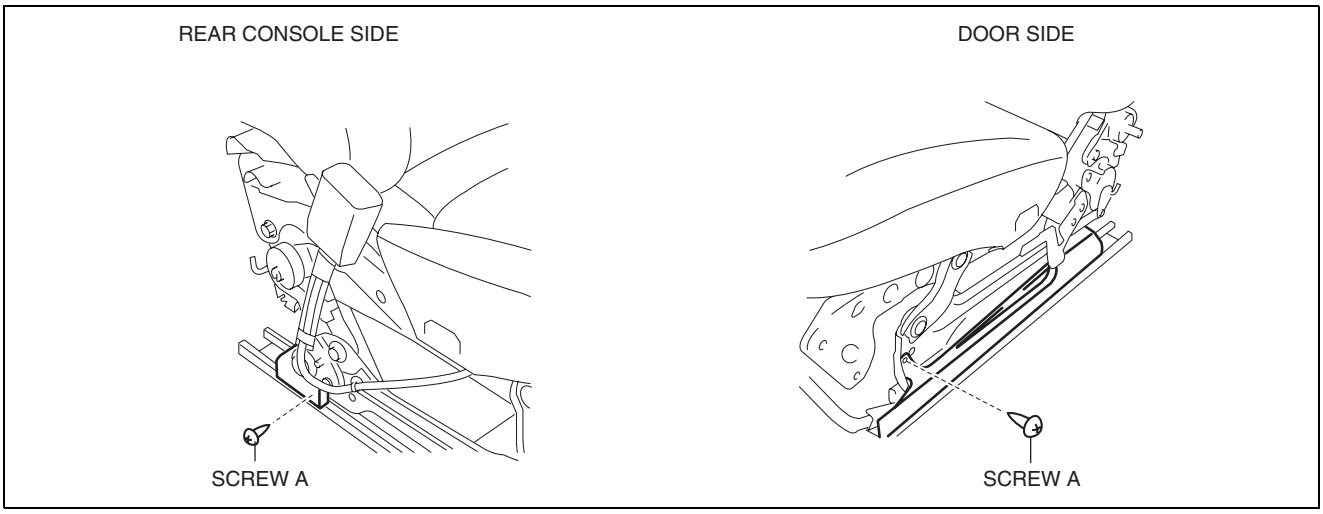

ac5uuw00002024

SEATS

5. Detach clips B.

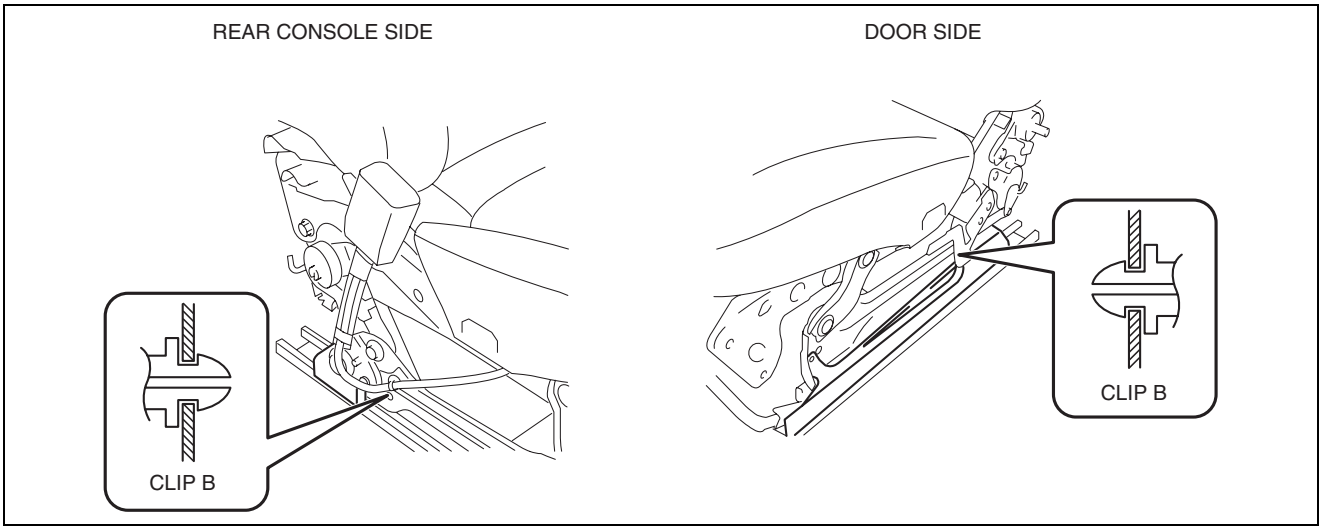

ac5uuw00002025

6. Pull the front seat rail guide cover in the direction of the arrow (1) shown in the figure and remove it in the direction of the arrow (2).

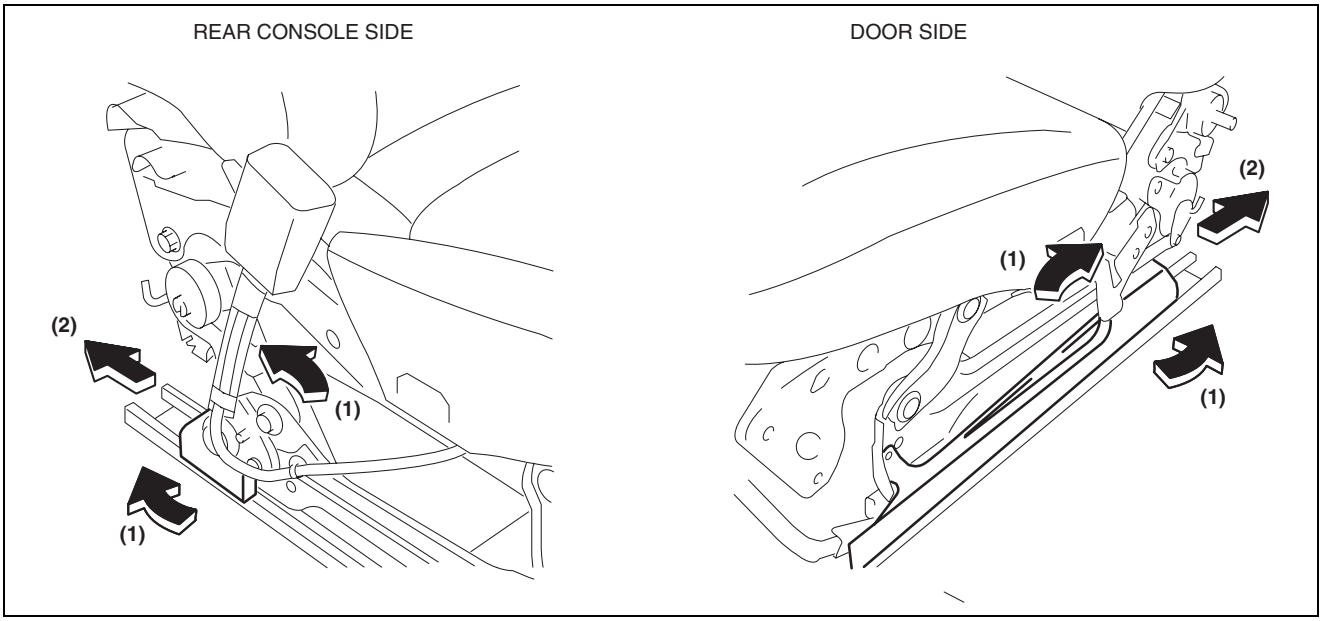

ac5uuw00002026

7. Install in the reverse order of removal.

SEATS

FRONT SEAT RAIL COVER REMOVAL/INSTALLATION

id091300912200

1. Detach hooks while pulling the front seat rail cover in the direction of the arrow (1) and remove it in the direction of arrow (2) shown in the figure.

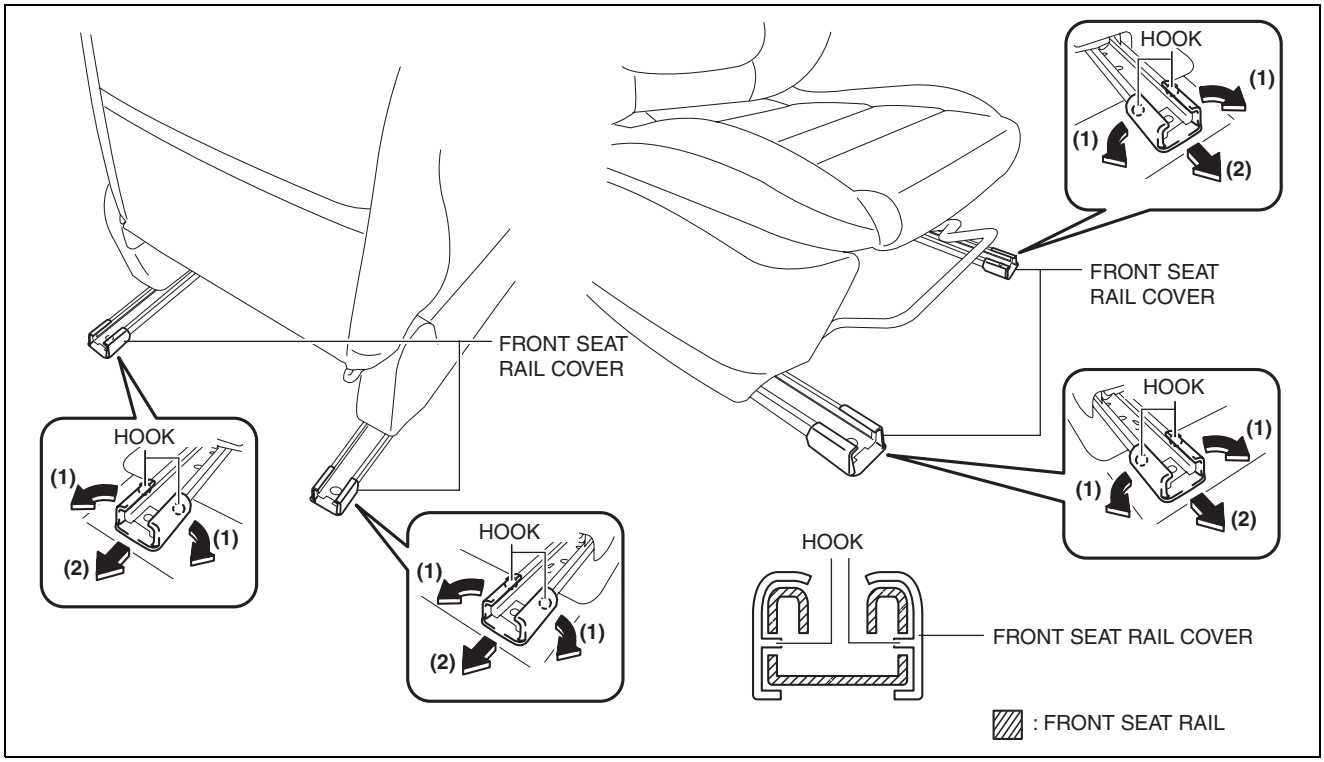

ac5wzw0000315

2. Install in the reverse order of removal.

OCCUPANCY SENSOR INSPECTION

id091300998800

1. Disconnect the occupancy sensor connector.
2. Verify that the continuity between the occupancy sensor terminals is as indicated in the table.

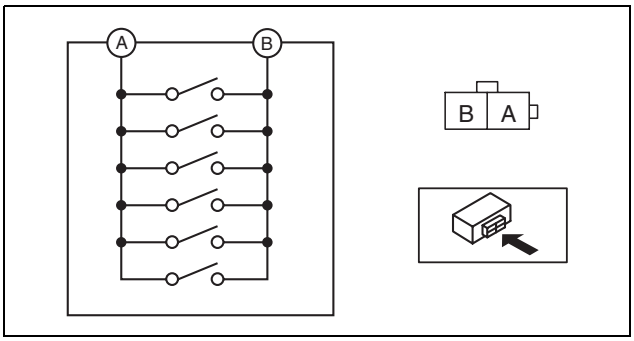

ac5wzw0000280

- If not as indicated in the table, replace the passenger side front seat cushion pad. (See 09-13-26 FRONT SEAT CUSHION TRIM REMOVAL/INSTALLATION.)

○—○: Continuity

Condition	Terminal	
	A	B
Seat one person in the front passenger seat	○	○
Seat no person in the front passenger seat		

am6zzw0000099

SEATS

REAR SEAT REMOVAL/INSTALLATION

id091300800400

Caution

- **When removing or putting in the rear seat, contact with the surrounding areas of the vehicle could cause scratches and damage. When removing or putting in the rear seat, always use two or more persons to perform the work and be careful not to scratch or damage the rear seat and the surrounding area of the vehicle.**
- **When performing the procedure with a rear seat removed from the vehicle, perform the procedure on a clean cloth so as not to damage or soil the seat.**

Note

- When removing the rear seat from the vehicle or putting it back in, it can be performed smoothly by removing the headrest

1. Remove the trunk board. (See 09-17-85 TRUNK BOARD REMOVAL/INSTALLATION.)
2. Disconnect the remote cable on the remote handle lever side from the remote cable on the rear seat side. (See 09-13-85 REMOTE HANDLE LEVER REMOVAL/INSTALLATION.)
3. Detach tabs A in the direction of the arrow (1) shown in the figure while lifting cover A in the direction of the arrow (2), detach hook B, and then remove cover A.

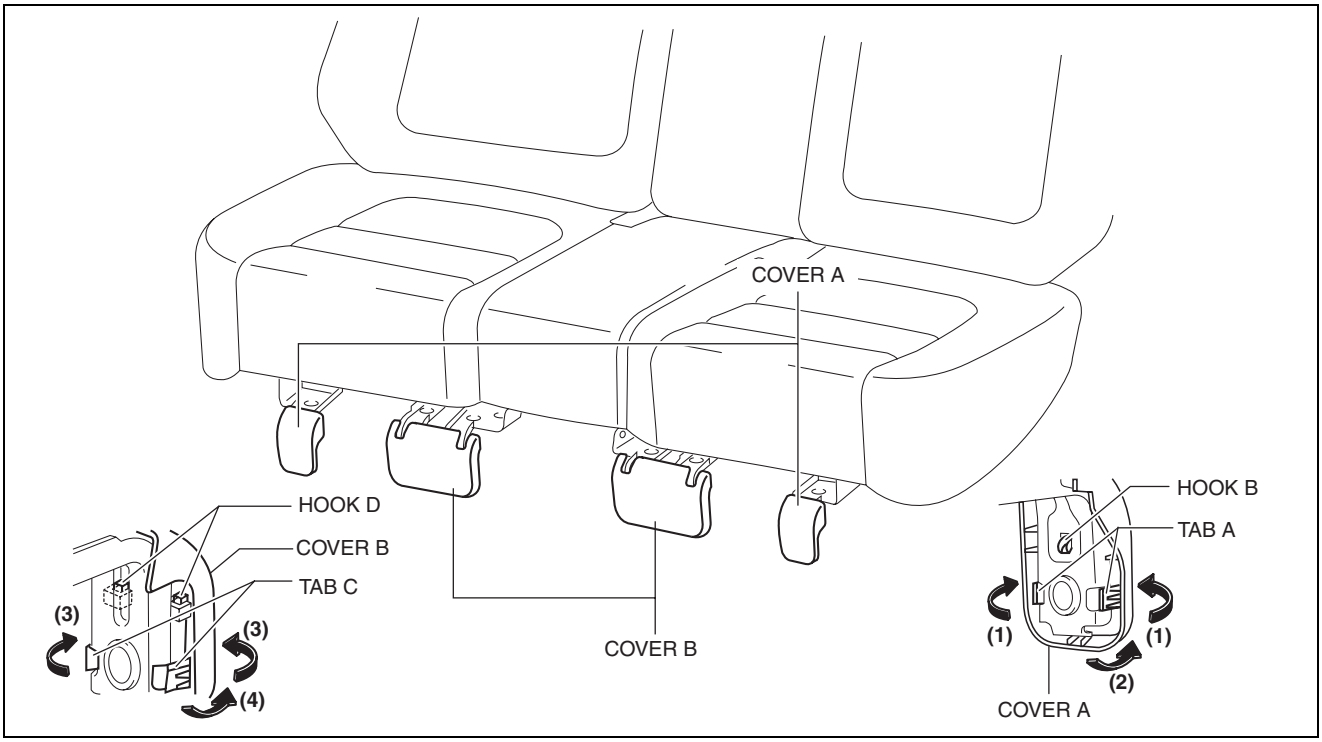

ac5uuw00001894

4. Detach tabs C in the direction of the arrow (3) shown in the figure while lifting cover B in the direction of the arrow (4), detach hook D, and then remove cover B.

SEATS

5. Remove bolts A.
6. Press the push knob to fold the rear seat back.

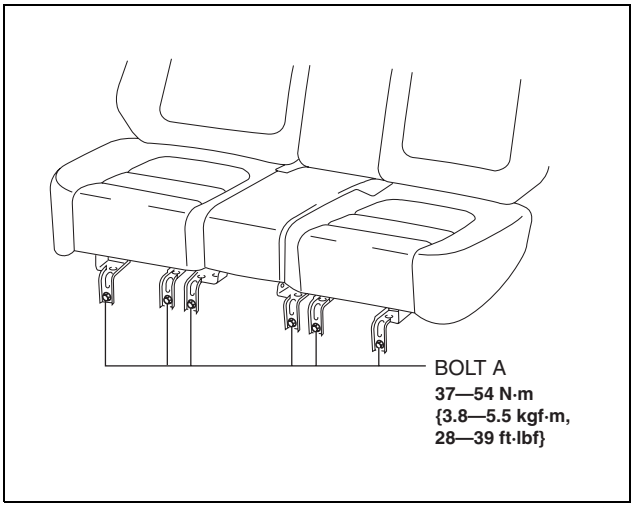

ac5uuw00001895

7. Remove bolts B.

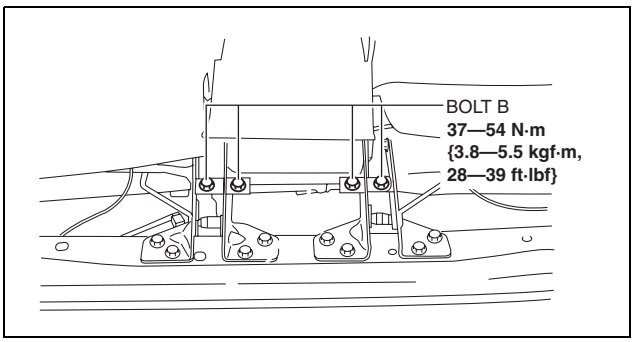

ac5uuw00001896

8. Remove the plate in the direction of the arrow (5) shown in the figure.

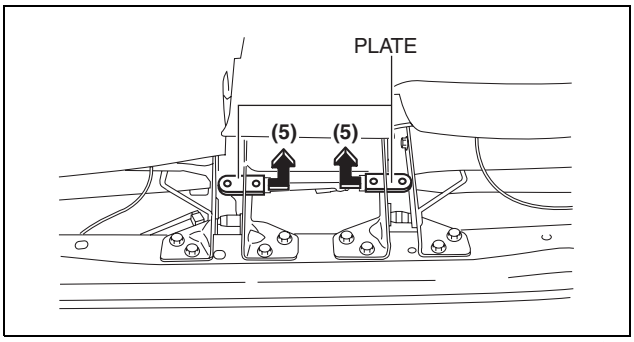

ac5uuw00001897

9. Remove bolts C.
10. Hold up the rear seat back.

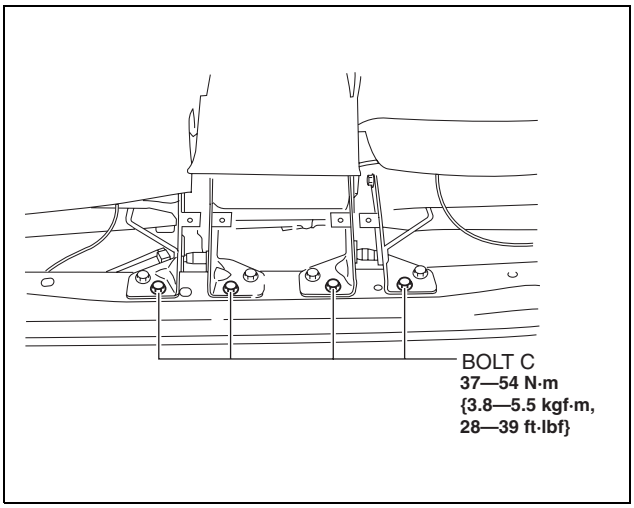

ac5uuw00001898

SEATS

11. Remove bolts D. (See 09-13-60 Rear Hinge Removal Note.)

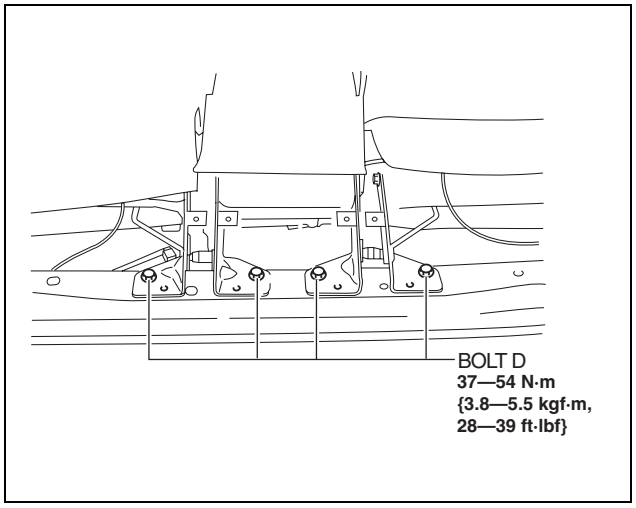

ac5uuw00001899

12. Move the rear hinge in the direction of the arrow (6) shown in the figure and disconnect pins E. (See Rear Hinge Installation Note.)

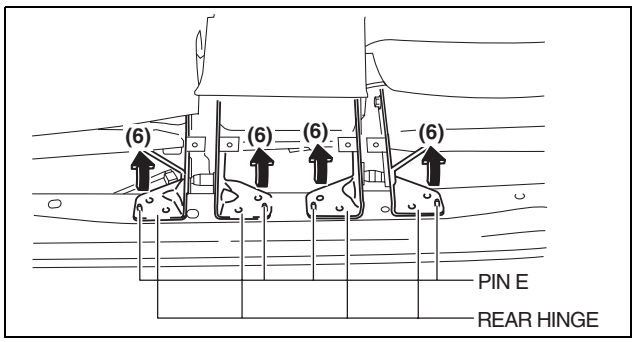

ac5uuw00001900

13. Remove bolt E.

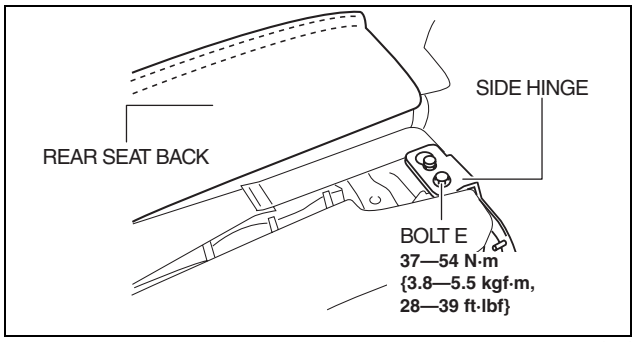

ac5uuw00001901

14. After moving the rear seat in the direction of the arrow (7) shown in the figure, remove pin F while moving the side hinge in the direction of the arrow (8).

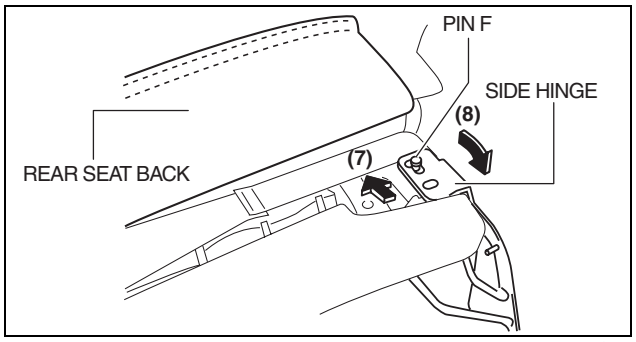

ac5uuw00001902

SEATS

15. Lift up the rear seat cushion in the direction of the arrow (9) shown in the figure and set pins G aside from the front hinge.
16. Remove the rear seat. (See 09-13-59 Rear Seat Carry Into Vehicle Note.)
17. Install in the reverse order of removal. (See 09-13-60 Rear Seat Installation Note.)

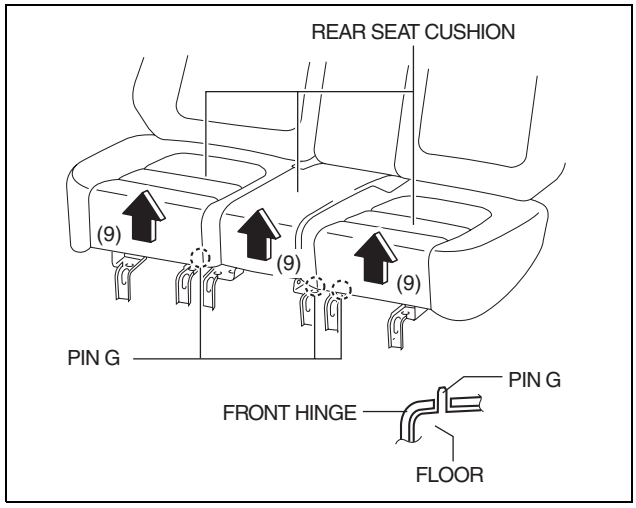

ac5wzw0000319

Rear Seat Carry Into Vehicle Note

1. Before carrying the rear seat into the vehicle, shift the rear buckle in the direction of the arrow (1).

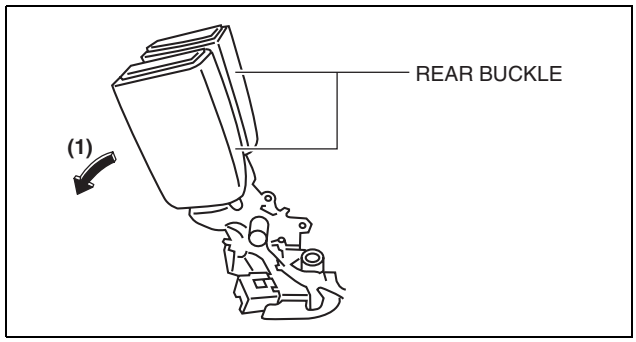

ac5uuw00002040

2. Insert a needle into area A shown in the figure and fix the rear buckle in the down condition
3. Carry the rear seat into the vehicle.

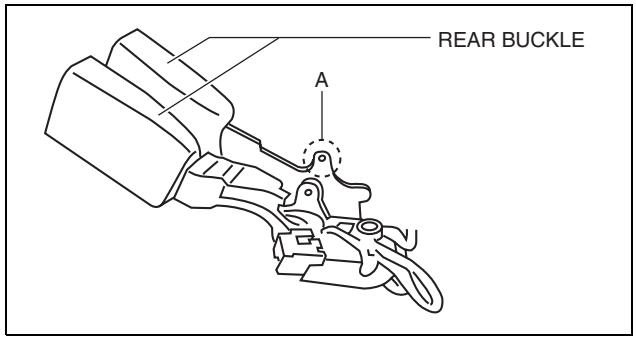

ac5uuw00002041

4. Remove the needle fixing the rear buckle tilted frontward, and fold the rear buckle to area B shown in the figure.

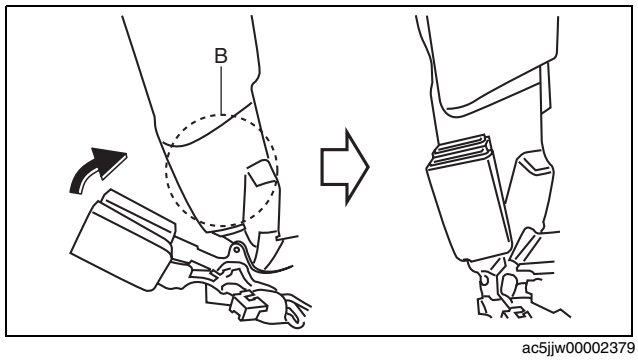

ac5jjw00002379

SEATS

5. Fold the rear seat cushion, and verify that the rear buckle is folded into the rear seat cushion.

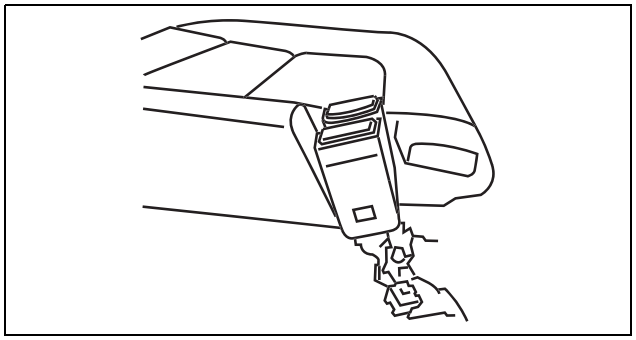
ac5jjw00002380

Rear Hinge Removal Note

1. While moving the rear seat back in the direction of arrow shown in the figure, remove the rear hinge to pin E.

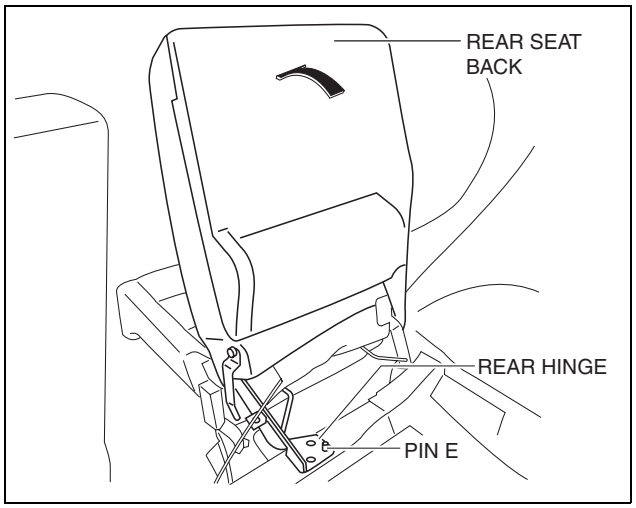

ac5wzw0000312

Rear Hinge Installation Note

1. While moving the rear seat back in the direction of arrow shown in the figure, install the rear hinge to pin E.

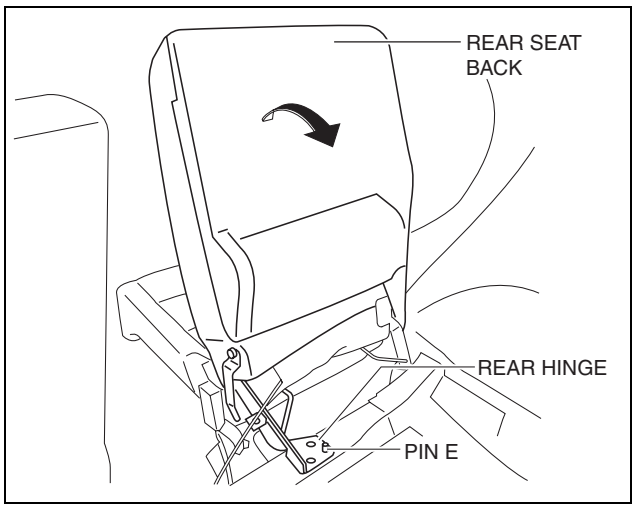

ac5jjw00002381

Rear Seat Installation Note

1. When installing the rear seat, temporarily tighten all of the tightening bolts.
2. After temporarily tightening all of the tightening bolts, shake the entire rear seat forward and back/left and right with the rear seat back folded to improve the installation fit of the entire seat.
3. Completely tighten the bolts in the reverse order of removal.

SEATS

REAR SEAT BACK REMOVAL/INSTALLATION

id091300912400

Caution

- **When removing or putting in the rear seat, contact with the surrounding areas of the vehicle could cause scratches and damage. When removing or putting in the rear seat, always use two or more persons to perform the work and be careful not to scratch or damage the rear seat and the surrounding area of the vehicle.**
- **When performing the procedure with a rear seat back removed from the vehicle, perform the procedure on a clean cloth so as not to damage or soil the seat.**

Note

- When removing the rear seat back from the vehicle or putting it back in, it can be performed easier by removing the headrest

6:4 Split Type

1. Remove the trunk board. (See 09-17-85 TRUNK BOARD REMOVAL/INSTALLATION.)
2. Press the push knob to fold the rear seat back.
3. Remove bolts A.

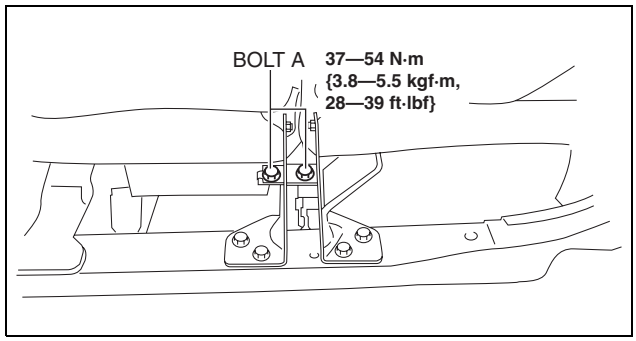

ac5uuw00001904

4. Remove the plate in the direction of the arrow (1) shown in the figure.

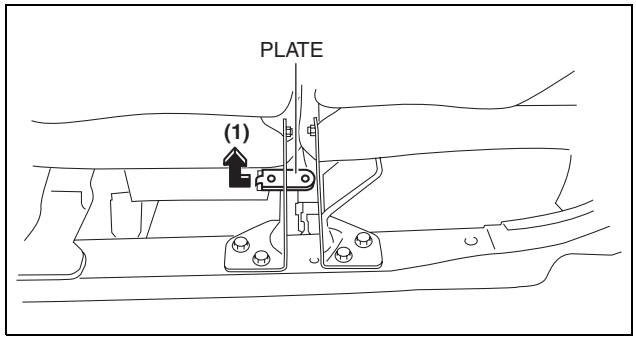

ac5uuw00001905

5. Remove bolts B.

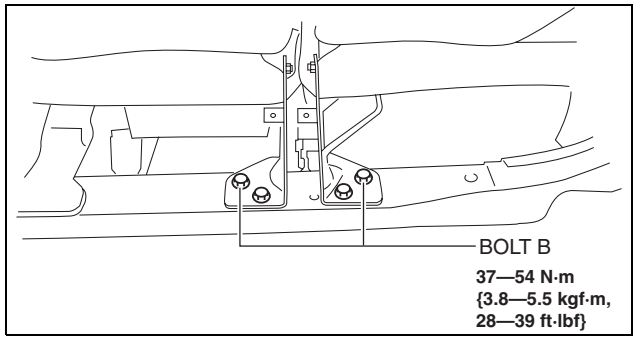

ac5uuw00001906

SEATS

6. Remove bolts C.

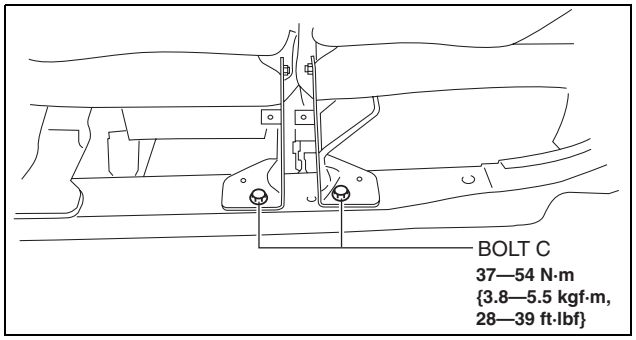

ac5uuw00001907

7. Remove bolt D

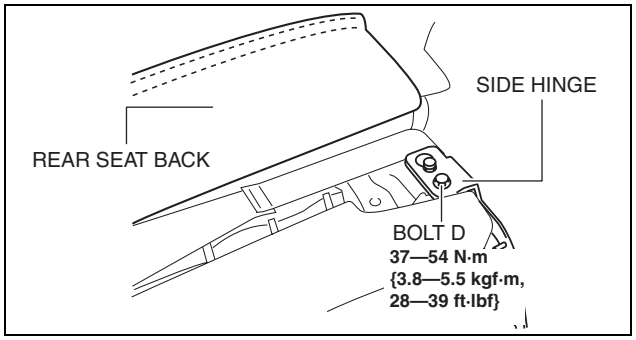

ac5uuw00001909

8. After moving the rear seat in the direction of the arrow (2) shown in the figure, remove pin A while moving the side hinge in the direction of the arrow (3).

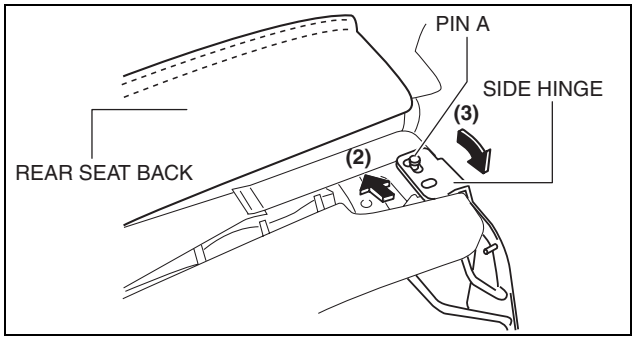

ac5ww0000312

9. Move the rear hinge in the direction of the arrow (4) shown in the figure and set pin B aside.
10. Remove the rear seat back.

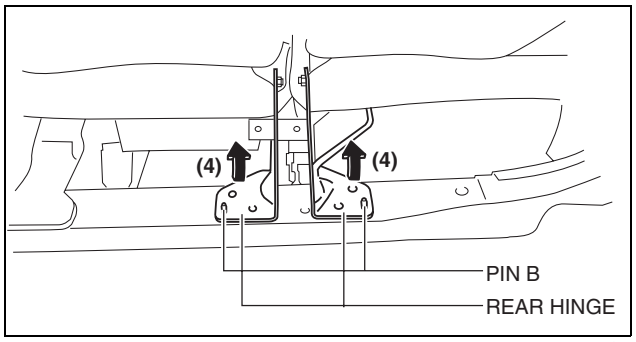

ac5ww0000312

SEATS

4:2:4 Split Type

1. Remove the trunk board. (See 09-17-85 TRUNK BOARD REMOVAL/INSTALLATION.)
2. Remove the rear seat. (See 09-13-56 REAR SEAT REMOVAL/INSTALLATION.)
3. Remove bolts.

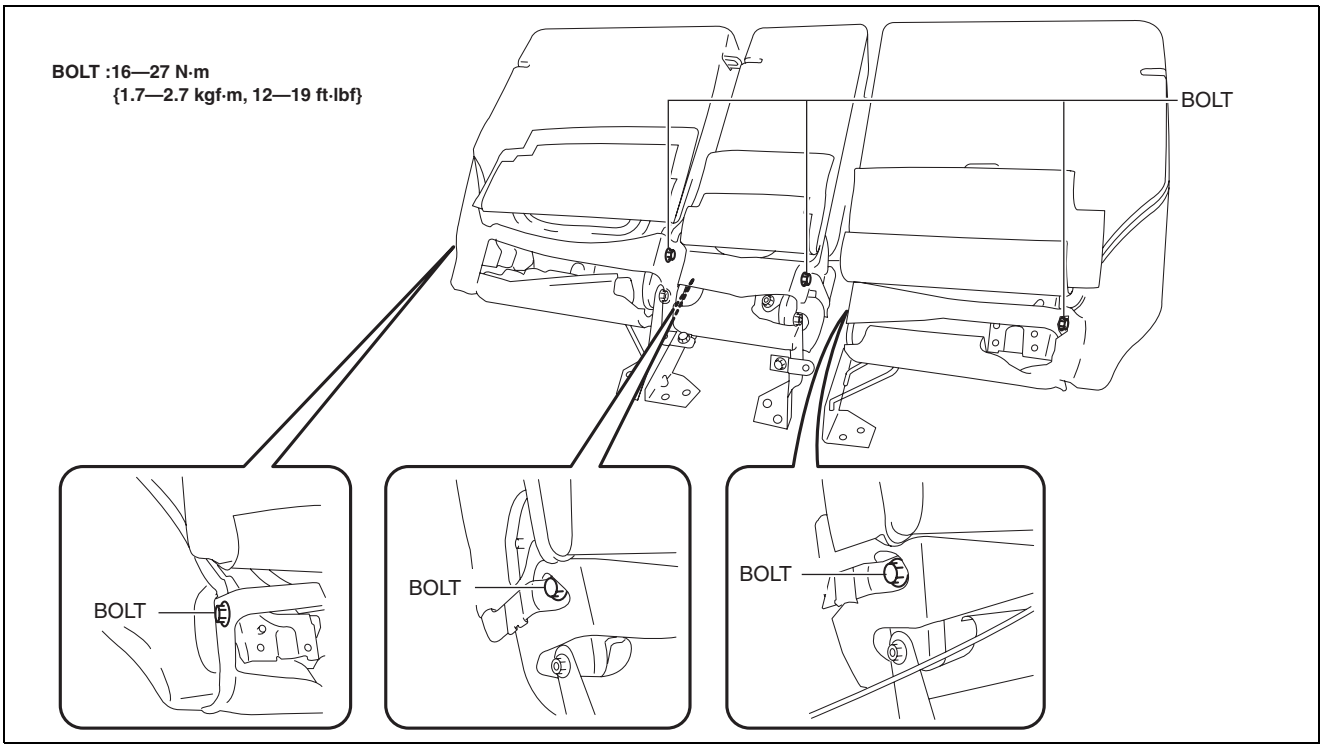

ac5wzw0000312

4. Remove the rear seat back.
5. Install in the reverse order of removal.

SEATS

REAR SEAT BACK FRAME REMOVAL/INSTALLATION

id091300912500

Caution
- **When performing the procedure with a rear seat removed from the vehicle, perform the procedure on a clean cloth so as not to damage or soil the seat.**

6:4 Split Type

1. Remove the trunk board. (See 09-17-85 TRUNK BOARD REMOVAL/INSTALLATION.)
2. Remove the rear seat back. (See 09-13-61 REAR SEAT BACK REMOVAL/INSTALLATION.)
3. Remove the headrest.
4. Open fasteners A.
5. Slide hooks B in the order of the arrows (1) and (2) shown in the figure, and set the rear seat back frames aside.

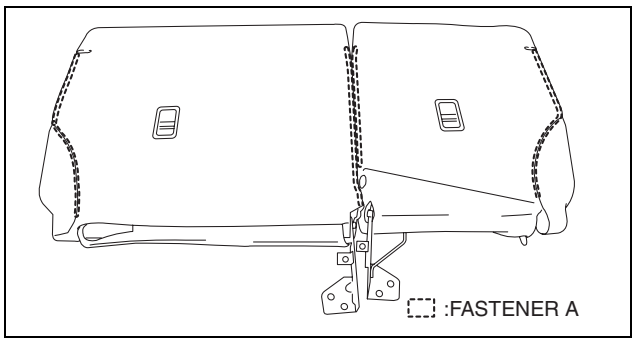

ac5uuw00001925

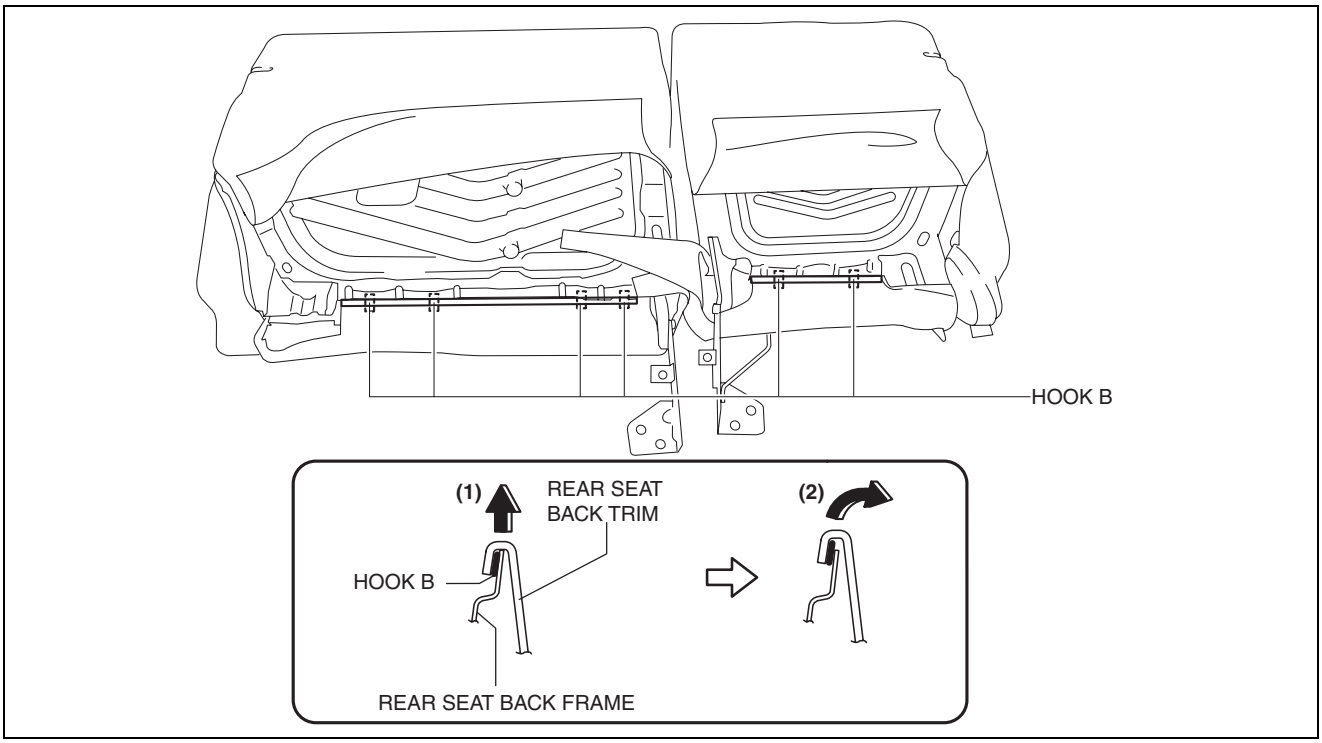

ac5uuw00001926

SEATS

6. Release tabs C in the direction of the arrow (3) shown in the figure and remove the top tether anchor cover in the direction of the arrow (4).

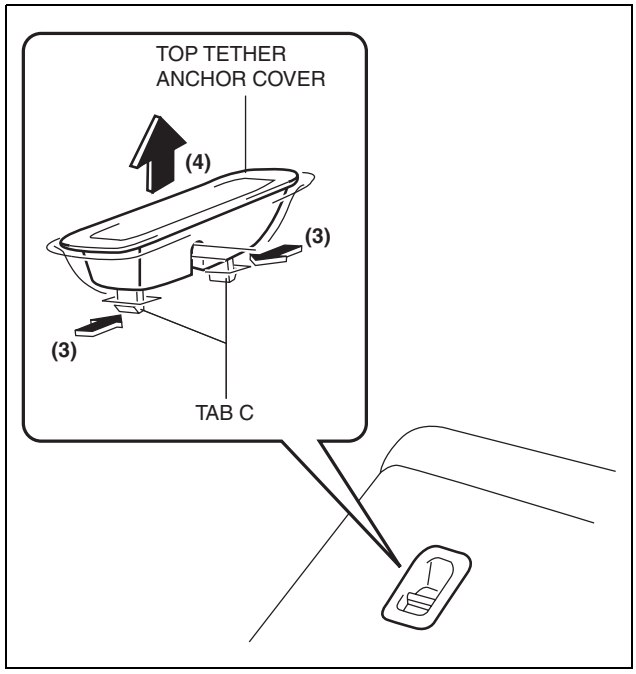

ac5wxw0000311

7. Remove screws A, and remove the seat belt cover in the direction of the arrow (5) shown in the figure while setting hooks D aside.
8. Remove screw B.

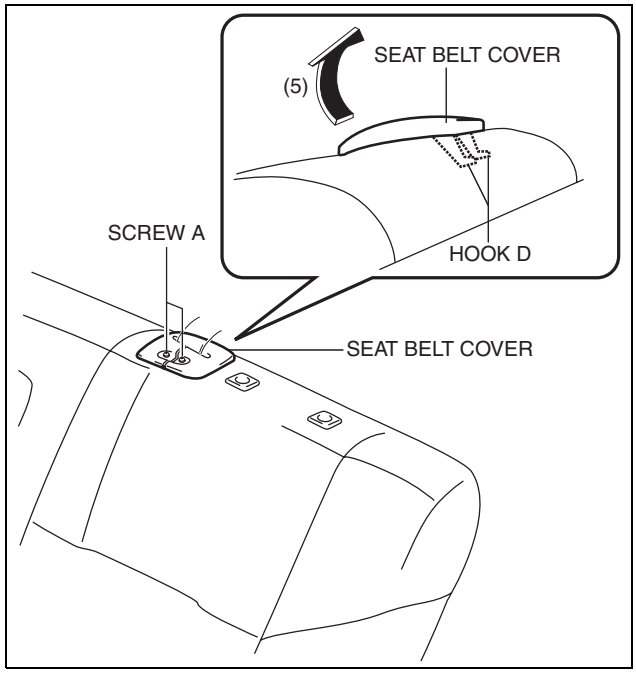

ac5wxw0000320

SEATS

9. Remove clip E, and remove the push knob cover in the direction of the arrow (6) shown in the figure while setting hook F aside.

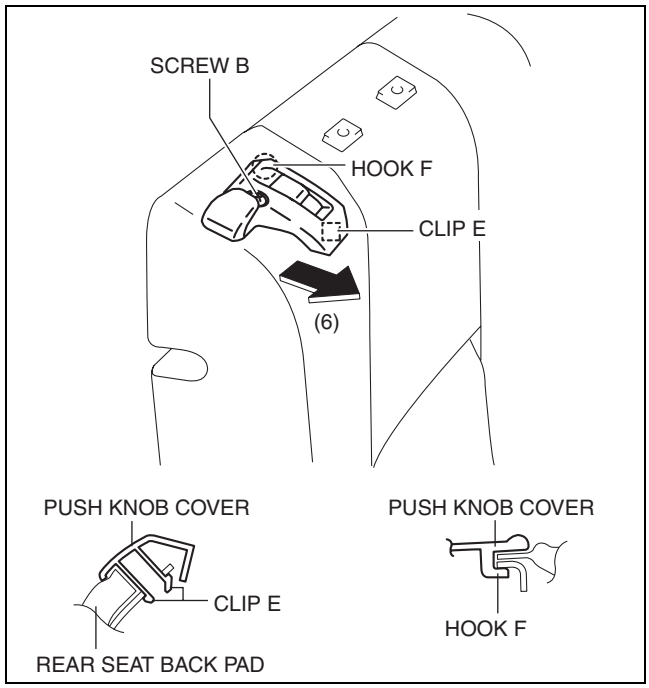

ac5wzw0000320

10. Peel back the rear seat back pad, and pull out the pole guide in the direction of the arrow (7) while releasing the tabs H in the direction of the arrow (8) shown in the figure.

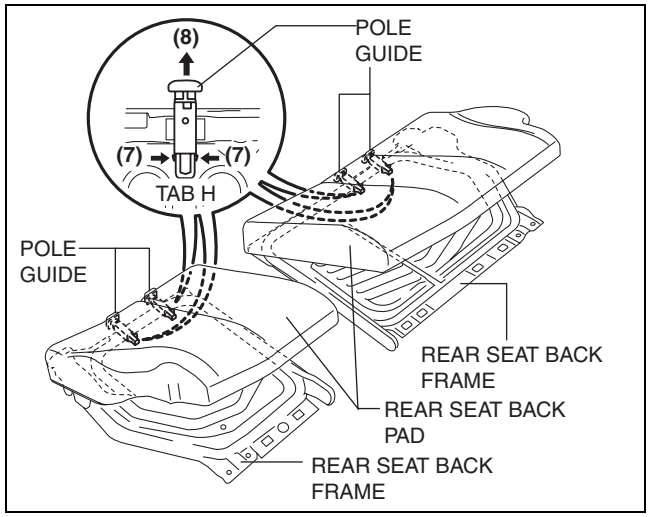

ac5wzw0000313

11. Pull the rear seat back frame in the direction of the arrow (9) shown in the figure, and remove it from the rear set back pad.

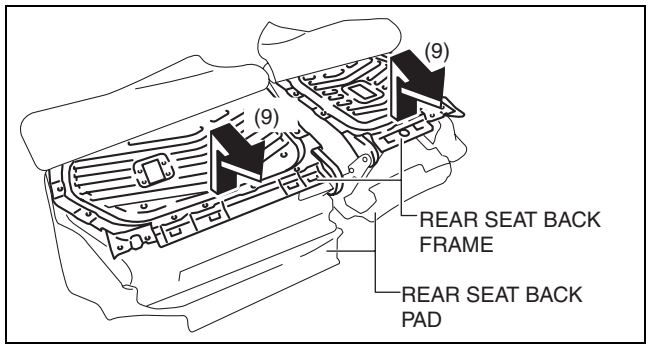

ac5wzw0000313

SEATS

12. Remove tabs G in the direction of the arrow (10) shown in the figure and remove the push knob in the direction of the arrow (11).

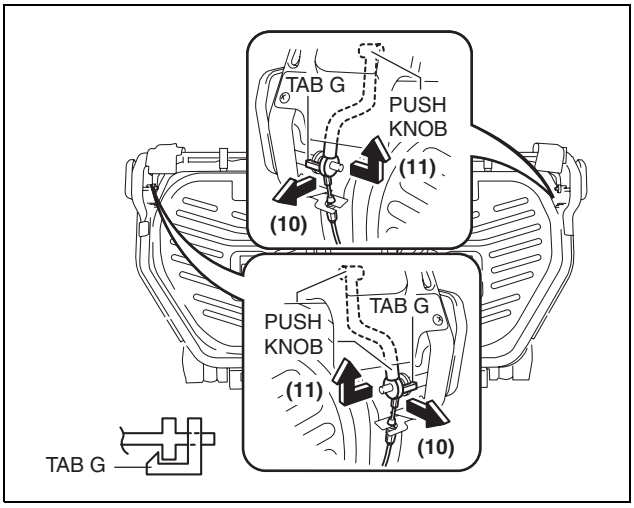

ac5wzw0000313

13. Remove nuts, and then remove the rear center seat belt.

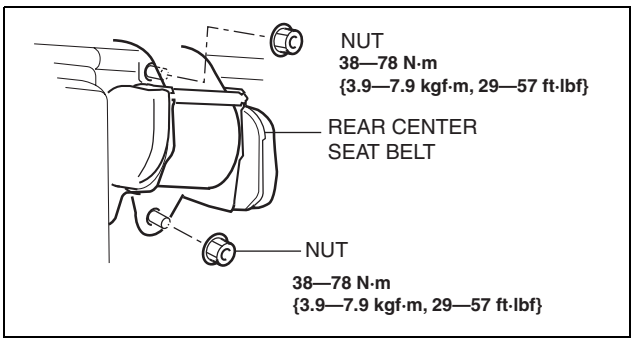

ac5wzw0000312

14. Remove the clips I, and then remove the striker cover in the direction of the arrow (12) while setting hooks J aside.
15. Install in the reverse order of removal.

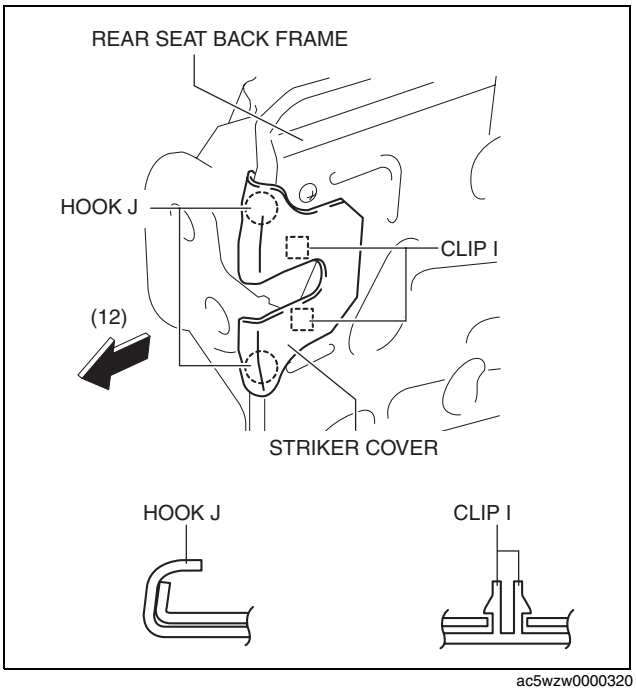

ac5wzw0000320

SEATS

4:2:4 Split Type

1. Remove the rear seat center armrest. (See 09-13-83 REAR SEAT CENTER ARMREST REMOVAL/INSTALLATION.)
2. Remove the rear seat. (See 09-13-56 REAR SEAT REMOVAL/INSTALLATION.)
3. Remove the rear seat back. (See 09-13-61 REAR SEAT BACK REMOVAL/INSTALLATION.)
4. Remove the headrest.
5. After releasing tab A in the direction of the arrow (1) shown in the figure, release tab B in the direction of the arrow (2) shown in the figure, and remove the rear seat center armrest hinge cover (LH) in the direction of the arrow (3).

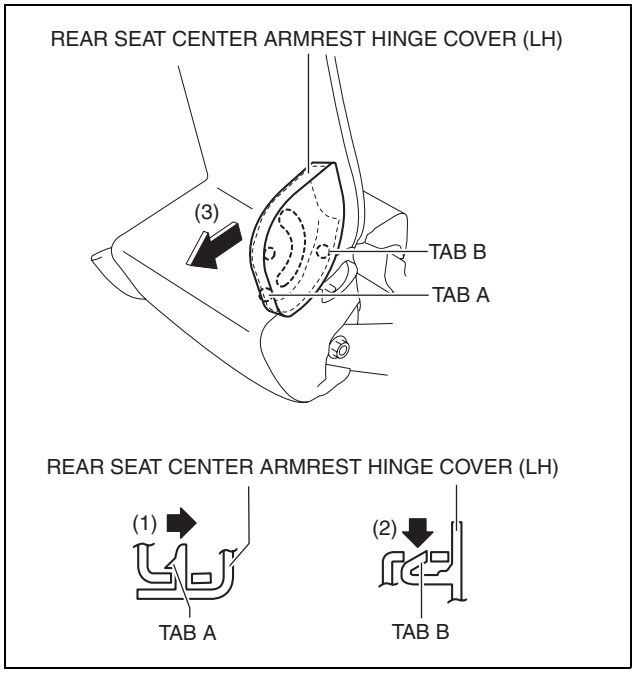

ac5wzw0000320

6. Open fasteners C.

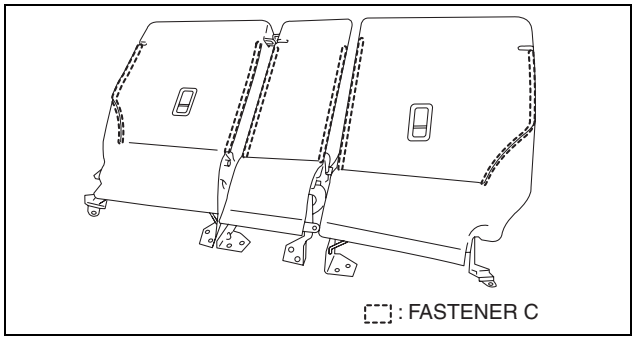

ac5uuw00001936

SEATS

7. Slide hooks D in the order of the arrows (4) and (5) shown in the figure, and set the rear seat back frames aside.

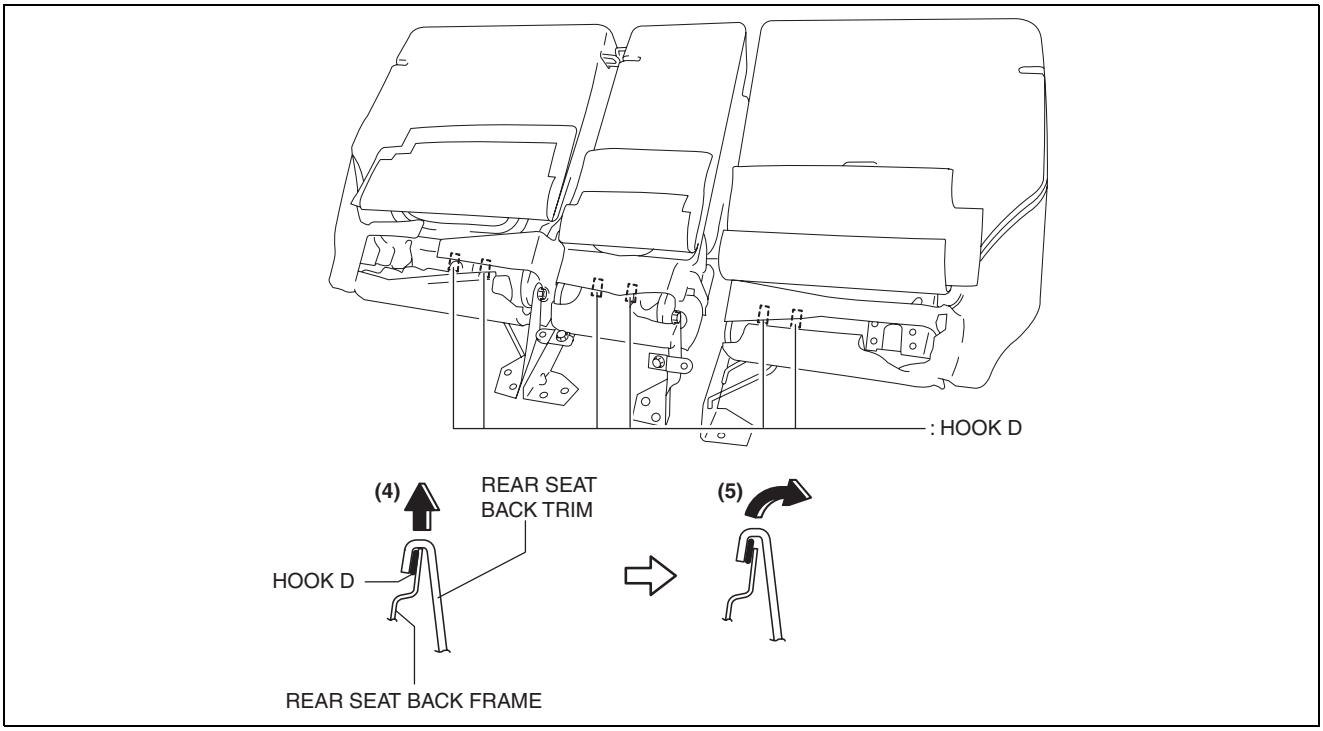

ac5wxw0000375

8. Release tabs E in the direction of the arrow (6) shown in the figure and remove the top tether anchor cover in the direction of the arrow (7).

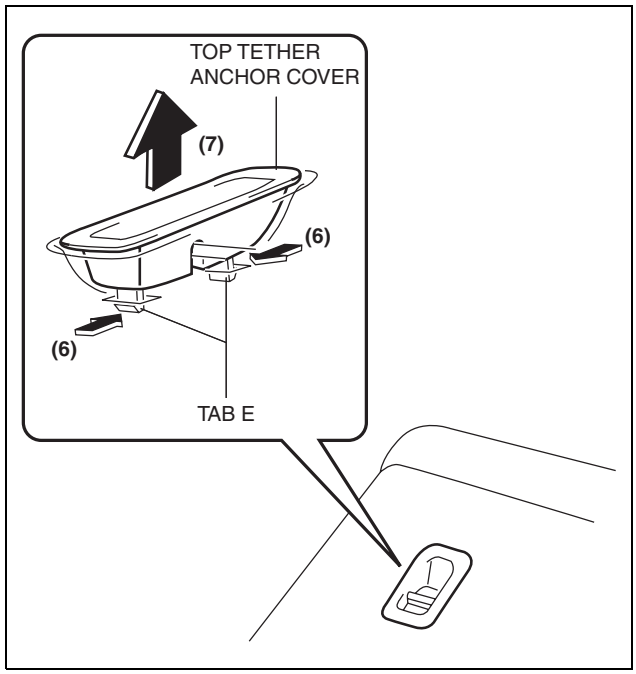

ac5wxw0000312

SEATS

9. Remove screws A, and remove the seat belt cover in the direction of the arrow (8) shown in the figure while setting hooks F aside.
10. Remove screw B.

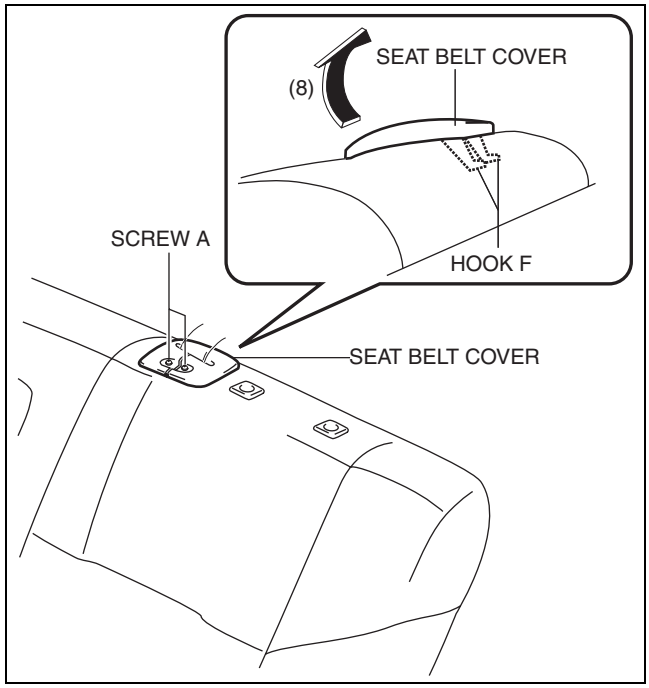

ac5wzw0000320

11. Remove clip G, and remove the push knob cover in the direction of the arrow (9) shown in the figure while setting hook H aside.

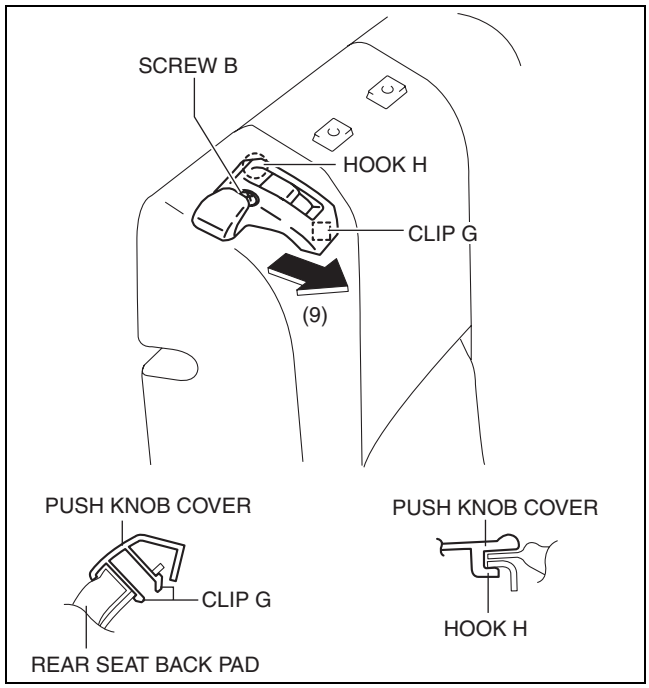

ac5wzw0000320

SEATS

12. Partially peel back the rear seat back pad, release tabs I in the direction of the arrow (10) shown in the figure and pull out the pole guide in the direction of the arrow (11).

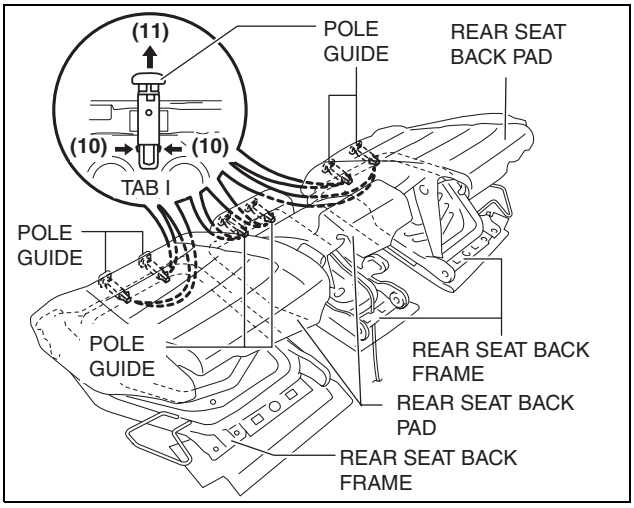

ac5wzw0000313

13. Pull the rear seat back frame in the direction of the arrow (12) shown in the figure, and remove it from the rear set back pad.

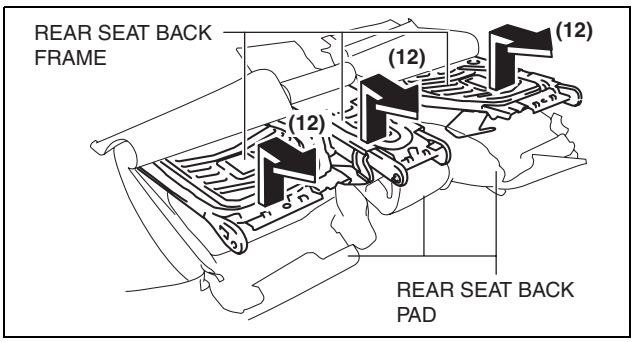

ac5wzw0000313

14. Remove tabs J in the direction of the arrow (13) shown in the figure and remove the push knob in the direction of the arrow (14).

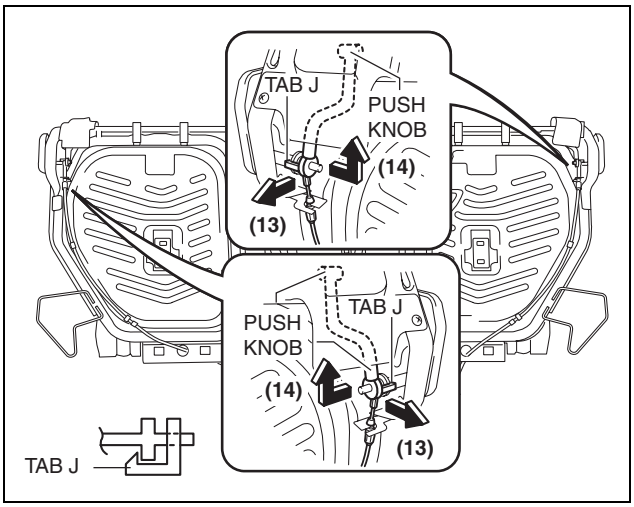

ac5wzw0000313

SEATS

15. Remove clips K.
16. Remove the remote cable in the direction of the arrow (15) and (16) shown in the figure.

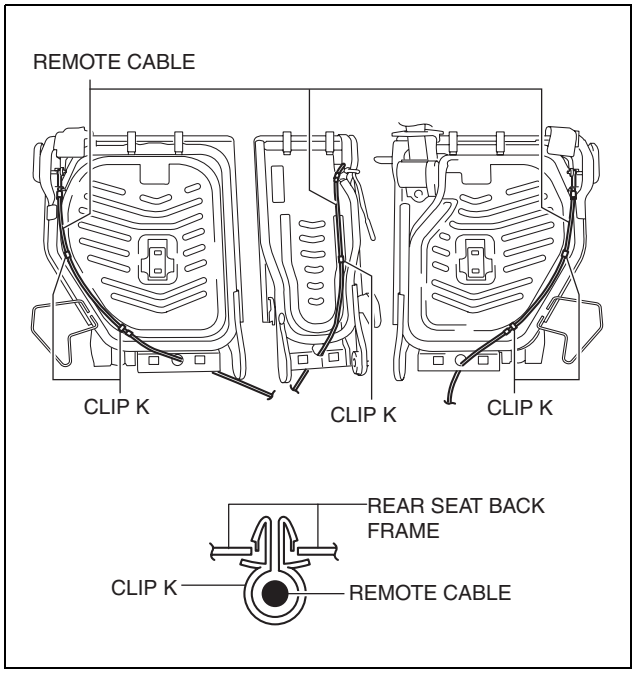

ac5uuw00001944

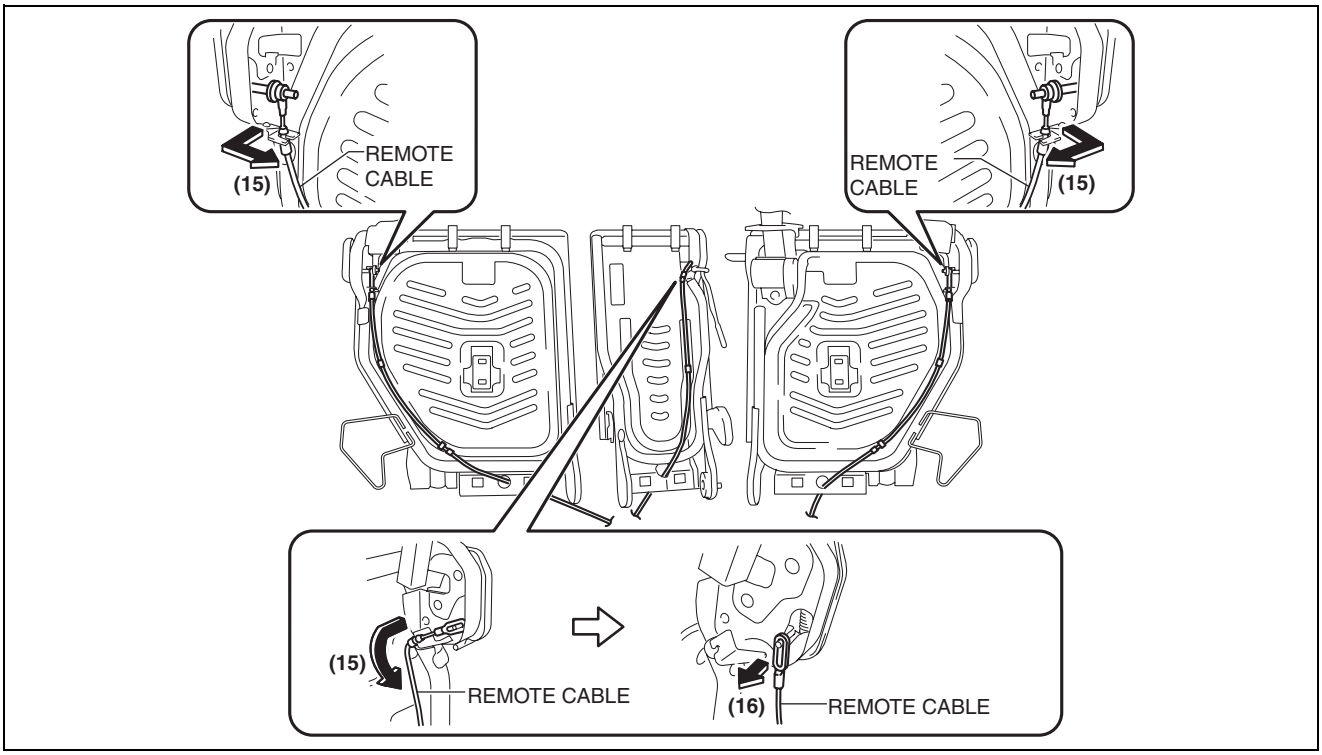

ac5wxw0000318

17. Remove screw C.
18. Remove the strap.

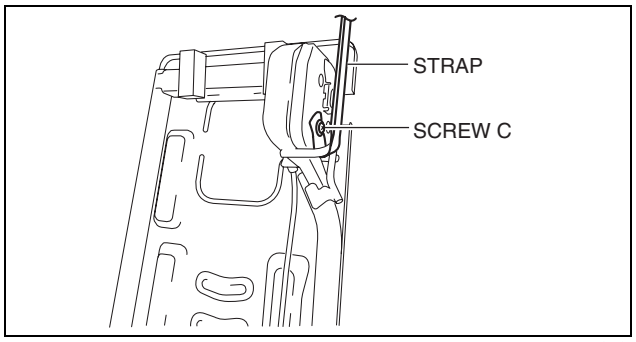

ac5uuw00001946

SEATS

19. Remove clips L, and then remove the striker cover in the direction of the arrow (17) while setting hooks M aside.

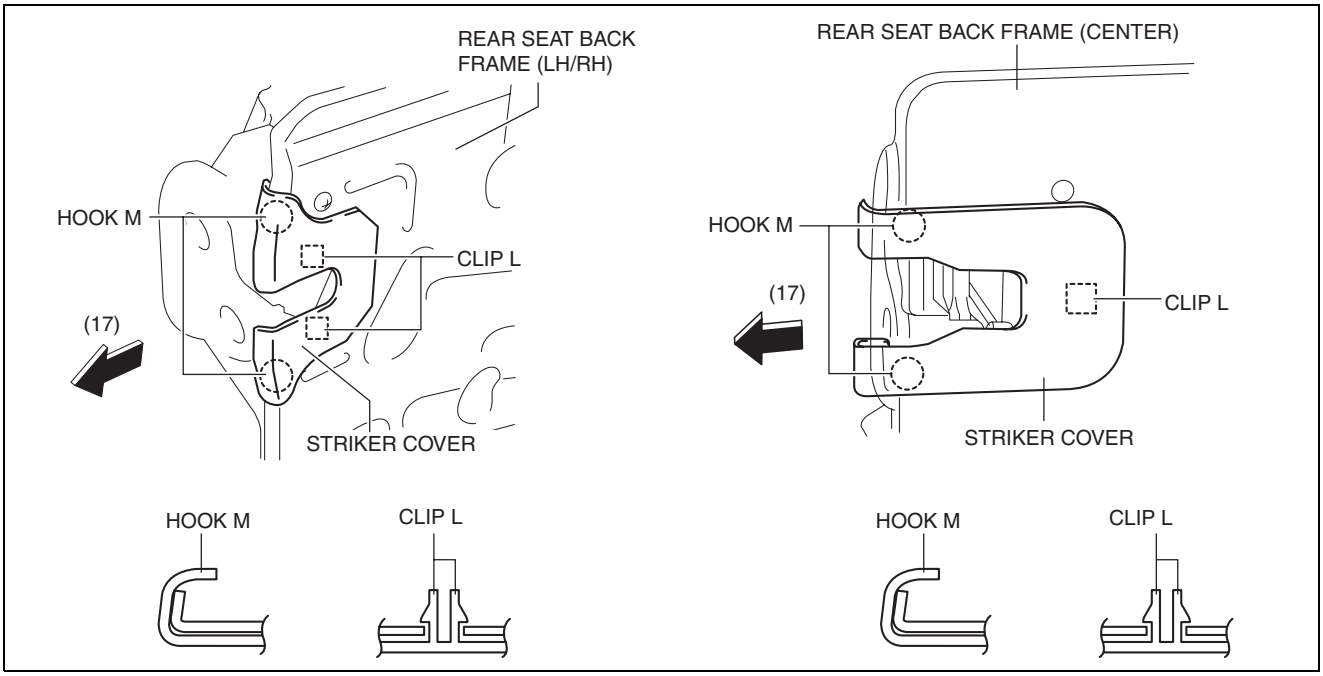

ac5wzw0000320

20. Remove nuts, and then remove the rear center seat belt.
21. Install in the reverse order of removal.

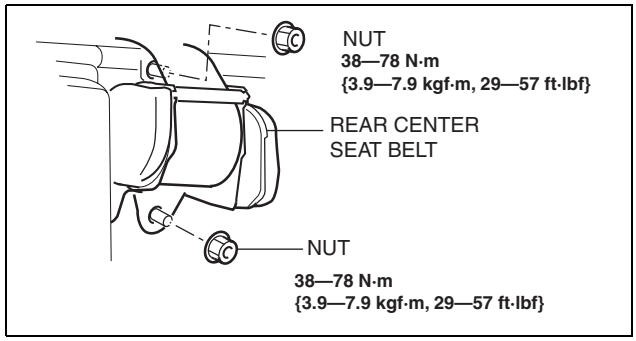

ac5wzw0000312

SEATS

REAR SEAT BACK TRIM REMOVAL/INSTALLATION

id091300989400

6:4 Split Type

1. Remove the trunk board. (See 09-17-85 TRUNK BOARD REMOVAL/INSTALLATION.)
2. Remove the rear seat back. (See 09-13-61 REAR SEAT BACK REMOVAL/INSTALLATION.)
3. Remove the headrest.
4. Remove the rear seat back frame. (See 09-13-64 REAR SEAT BACK FRAME REMOVAL/INSTALLATION.)
5. Remove the C rings in the order of (1), (2), (3), and (4) shown in the figure, and remove the rear seat back trim from the rear seat back pad.

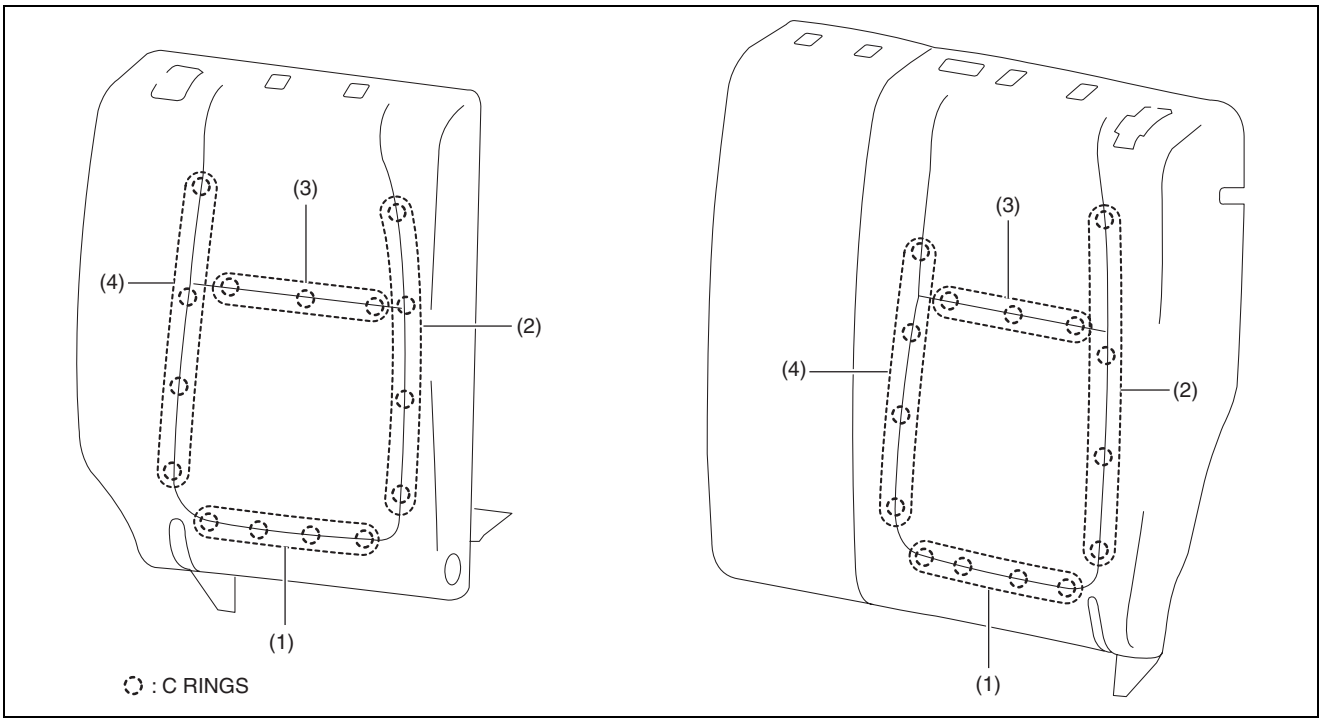

ac5uuw00001958

Caution

- **If a damaged C rings are reused, it may not be possible to install the rear seat back trim and rear seat back pad correctly. When removing and installing C rings, be careful not to damage them.**
- **If a C rings are damaged, replace it with a new one.**

6. Install in the reverse order of removal.

SEATS

4:2:4 Split Type

1. Remove the trunk board. (See 09-17-85 TRUNK BOARD REMOVAL/INSTALLATION.)
2. Remove the rear seat. (See 09-13-56 REAR SEAT REMOVAL/INSTALLATION.)
3. Remove the rear seat back. (See 09-13-61 REAR SEAT BACK REMOVAL/INSTALLATION.)
4. Remove the headrest.
5. Remove the rear seat back frame. (See 09-13-64 REAR SEAT BACK FRAME REMOVAL/INSTALLATION.)
6. Partially peal back the rear seat back trim from the rear seat back pad, remove C rings in the order of (1), (2), (3), (4), (5), (6) shown in the figure. (LH/RH)

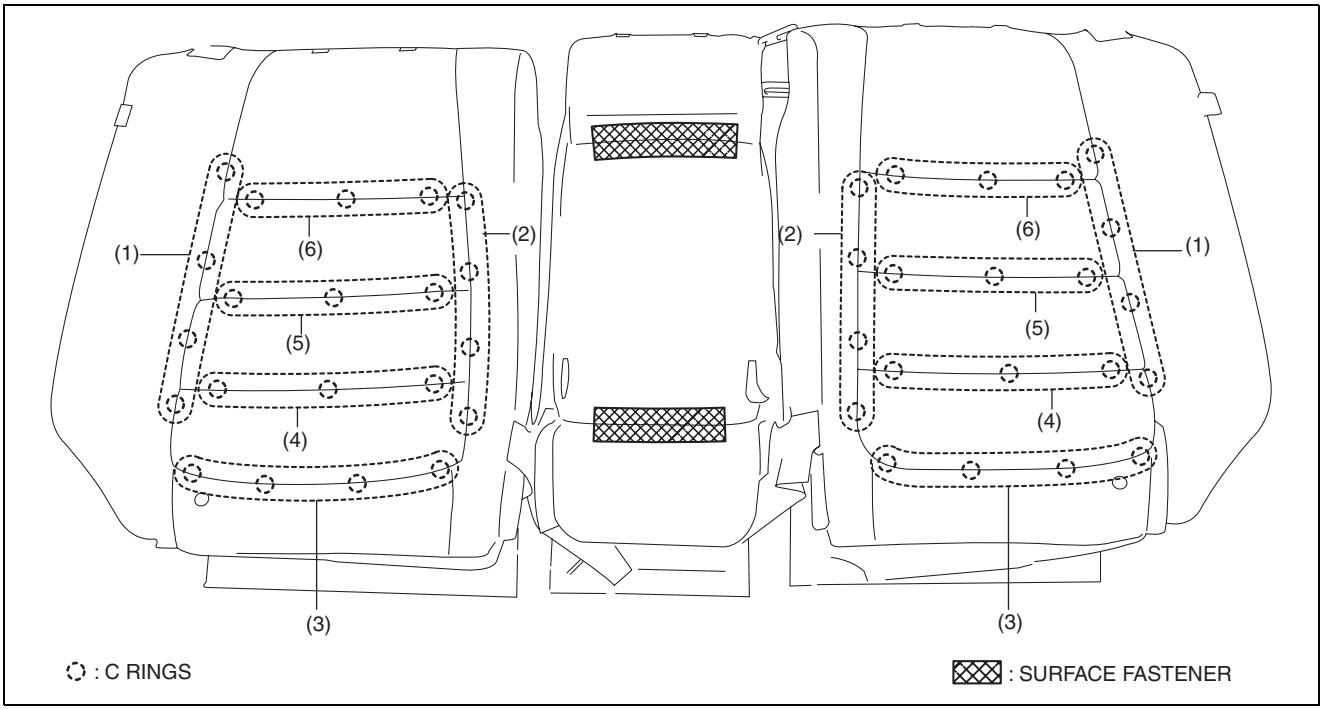

ac5uuw00001959

Caution

- **If a damaged C rings are reused, it may not be possible to install the rear seat back trim and rear seat back pad correctly. When removing and installing C rings, be careful not to damage them.**
- **If a C rings are damaged, replace it with a new one.**

7. Remove the surface fasteners while peeling back the rear seat back trim, and remove the rear seat back trim from the rear seat back pad.
8. Install in the reverse order of removal.

SEATS

REAR SEAT CUSHION REMOVAL/INSTALLATION

id091300912600

Caution

- **When removing or putting in the rear seat cushion, contact with the surrounding areas of the vehicle could cause scratches and damage. When removing or putting in the rear seat cushion, always use two or more persons to perform the work and be careful not to scratch or damage the rear seat cushion and the surrounding area of the vehicle.**
- **When performing the procedure with a rear seat cushion removed from the vehicle, perform the procedure on a clean cloth so as not to damage or soil the seat.**

6:4 Split Type

1. Detach tabs A in the direction of the arrow (1) shown in the figure while lifting cover A in the direction of the arrow (2), detach hook B, and then remove cover A.

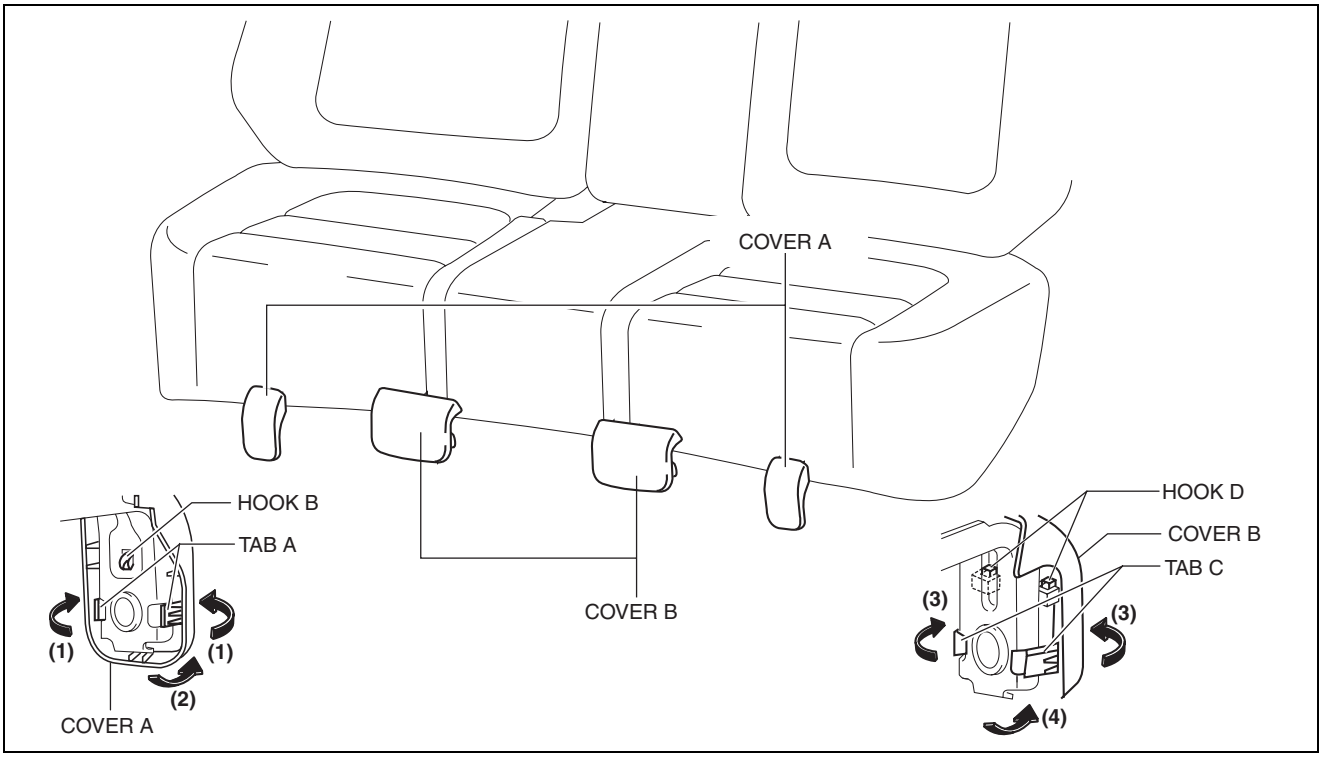

ac5uuw00001949

2. Detach tabs C in the direction of the arrow (3) shown in the figure while lifting cover B in the direction of the arrow (4), detach hook D, and then remove cover B.
3. Remove bolts A.

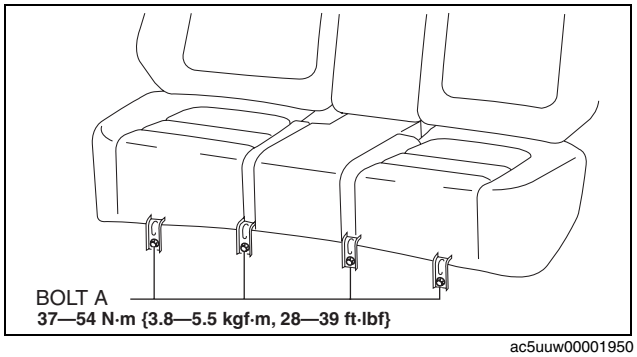

ac5uuw00001950

SEATS

4. Lift up the rear seat cushion in the direction of the arrow (5) shown in the figure and set the pin E aside from the front hinge.

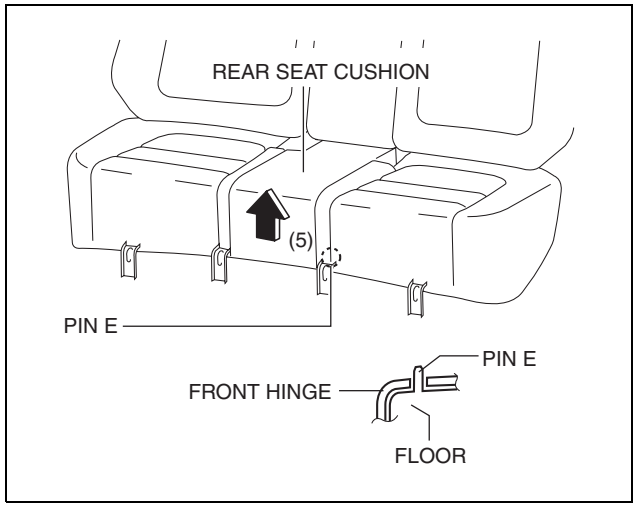

ac5wxw0000320

5. Move the rear seat cushion in the direction of the arrow (6), (7)shown in the figure and set the hook F aside.
6. Remove the rear seat cushion.
7. Install in the reverse order of removal.

Warning

- **If the hook and wire are not locked, the seat may move during a collision and the occupant may be injured. After installing the rear seat cushion, verify that the hook and wire are locked.**

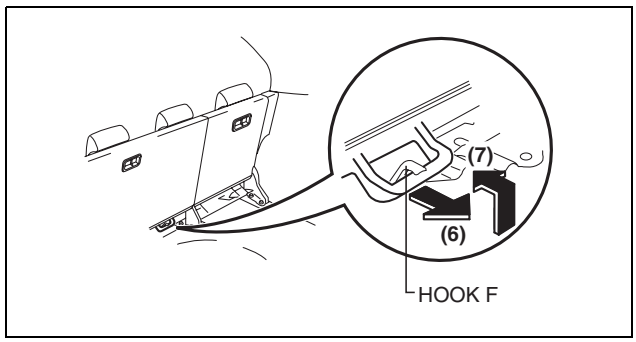

ac5uuw00001952

SEATS

4:2:4 Split Type

1. Remove the trunk board. (See 09-17-85 TRUNK BOARD REMOVAL/INSTALLATION.)
2. Remove the rear seat. (See 09-13-56 REAR SEAT REMOVAL/INSTALLATION.)
3. Remove bolts A.

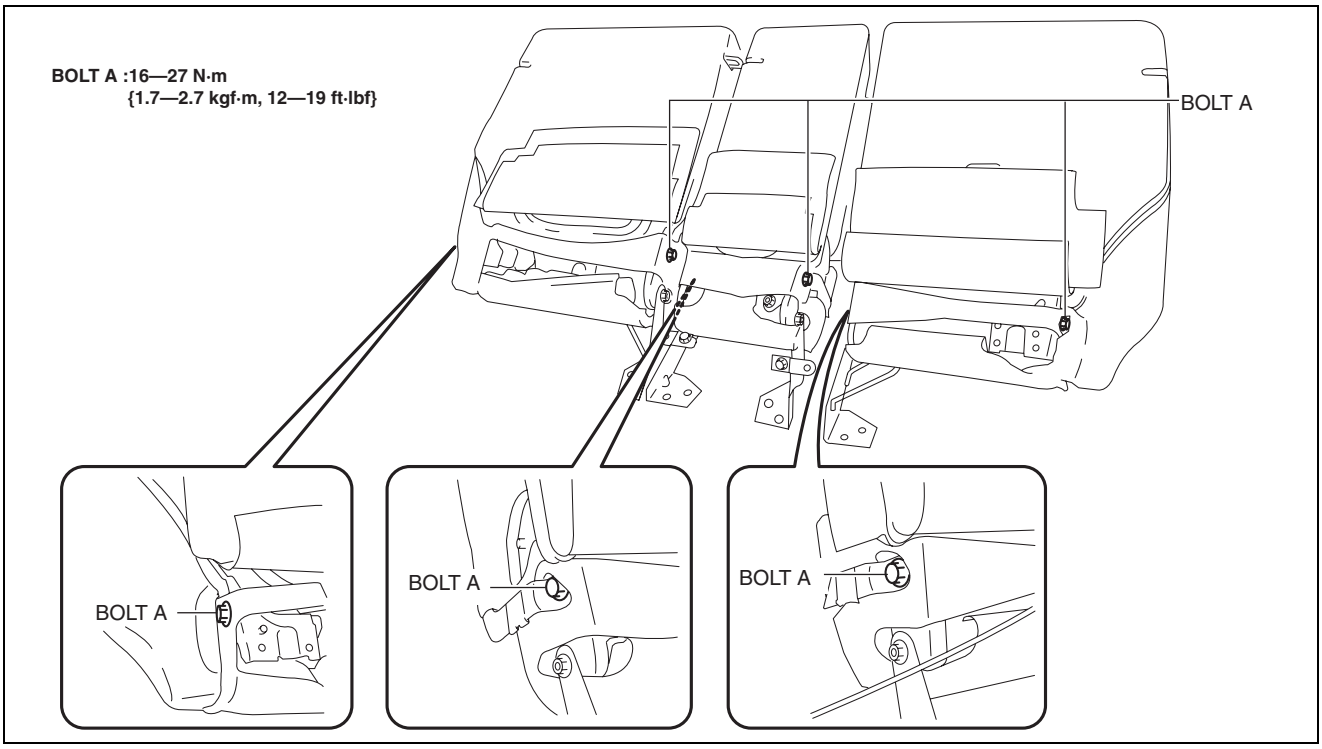

ac5wzw0000311

4. Remove the rear seat cushion.
5. Install in the reverse order of removal.

SEATS

REAR SEAT CUSHION TRIM REMOVAL/INSTALLATION

id091300912700

Caution

- **When removing or putting in the rear seat cushion, contact with the surrounding areas of the vehicle could cause scratches and damage. When removing or putting in the rear seat cushion, always use two or more persons to perform the work and be careful not to scratch or damage the rear seat cushion and the surrounding area of the vehicle.**
- **When performing the procedure with a rear seat cushion removed from the vehicle, perform the procedure on a clean cloth so as not to damage or soil the seat.**

6:4 Split Type

1. Remove the rear seat cushion. (See 09-13-76 REAR SEAT CUSHION REMOVAL/INSTALLATION.)
2. Slide hooks A in the order of (1), (2) shown in the figure to detach it from the rear seat cushion pad.

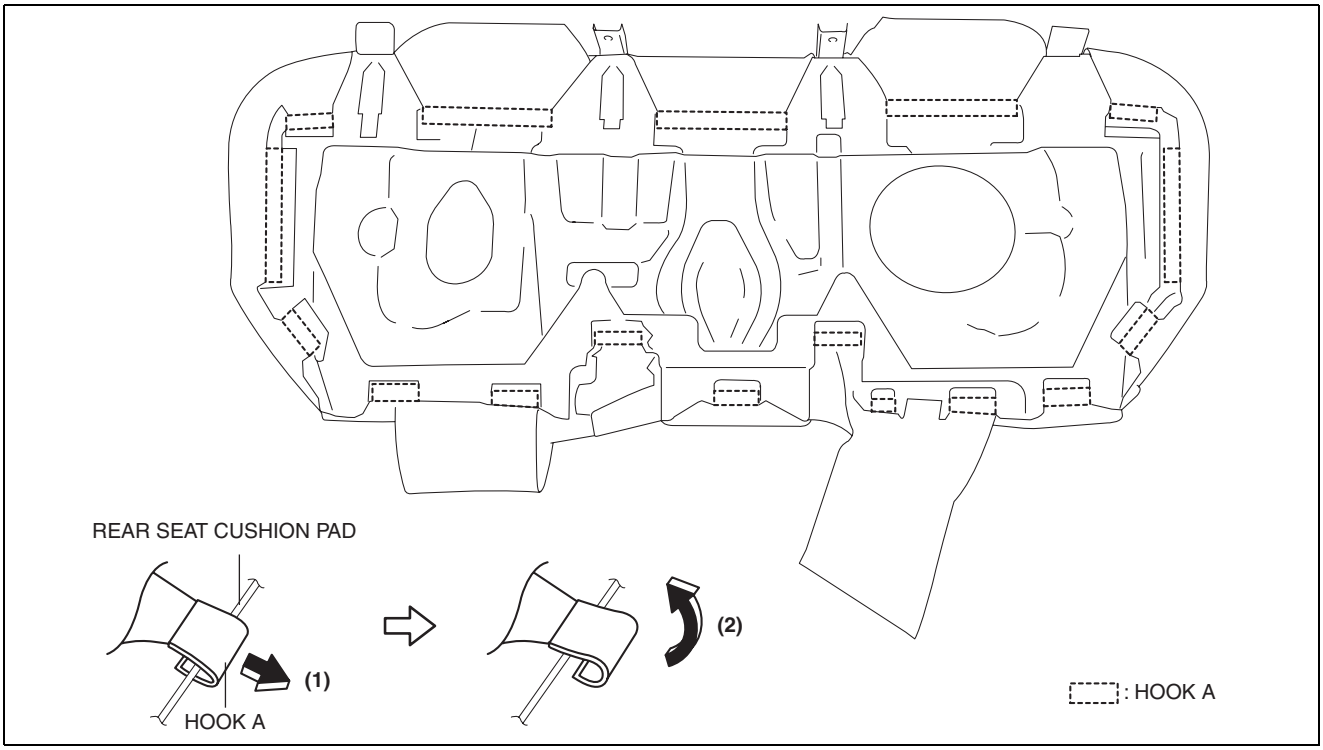

ac5uuw00001954

SEATS

3. Partially peal back the rear seat cushion trim from the rear seat cushion pad, remove C rings in the order of (3), (4), (5), (6), (7), (8), (9), (10) shown in the figure,

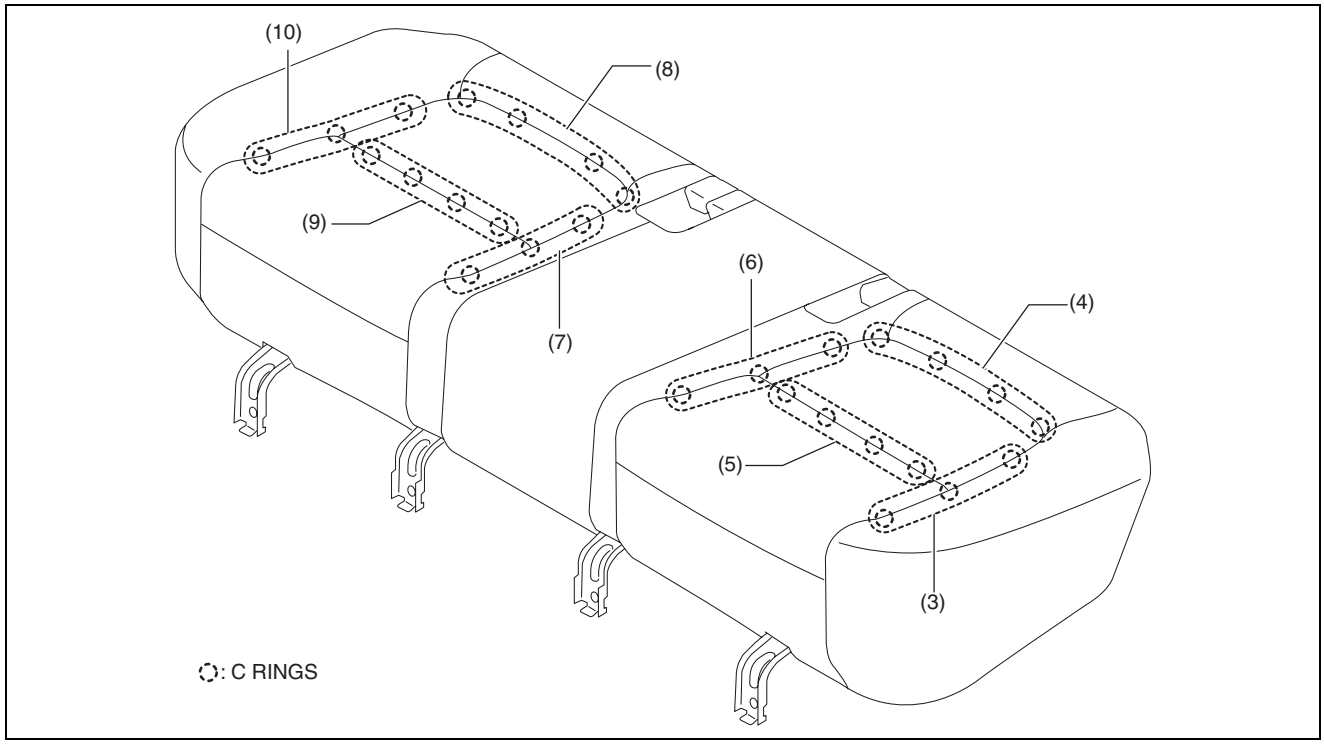

ac5uuw00001955

Caution
- **If a damaged C rings are reused, it may not be possible to install the rear seat cushion trim and rear seat cushion pad correctly. When removing and installing C rings, be careful not to damage them.**
- **If a C rings are damaged, replace it with a new one.**

4. Install in the reverse order of removal.

SEATS

4:2:4 Split Type

1. Remove the following parts:
   (1) Trunk board (See 09-17-85 TRUNK BOARD REMOVAL/INSTALLATION.)
   (2) Rear seat (See 09-13-56 REAR SEAT REMOVAL/INSTALLATION.)
   (3) Rear seat cushion (See 09-13-76 REAR SEAT CUSHION REMOVAL/INSTALLATION.)
2. Slide hooks A in the order of (1), (2) shown in the figure to detach it from the rear seat cushion pad.

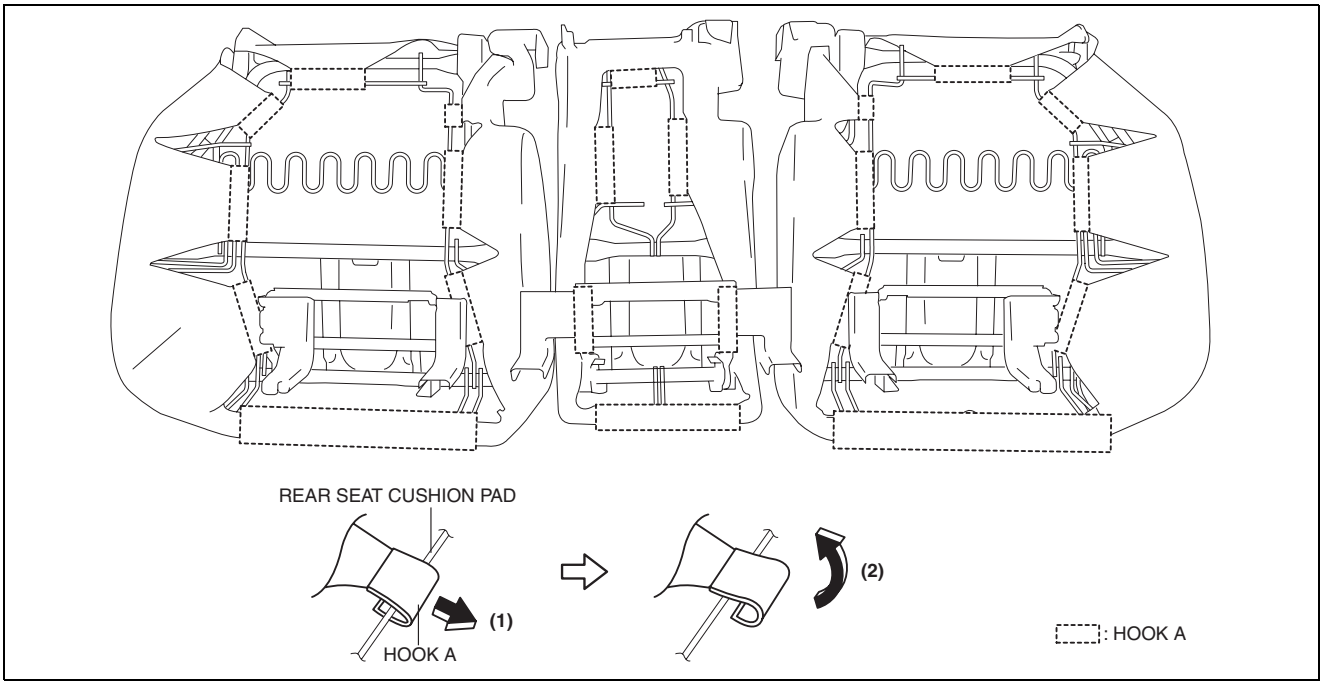

ac5uuw00001956

3. Partially peal back the rear seat cushion trim from the rear seat cushion pad, remove C rings in the order of (3), (4), (5), (6), (7) shown in the figure,

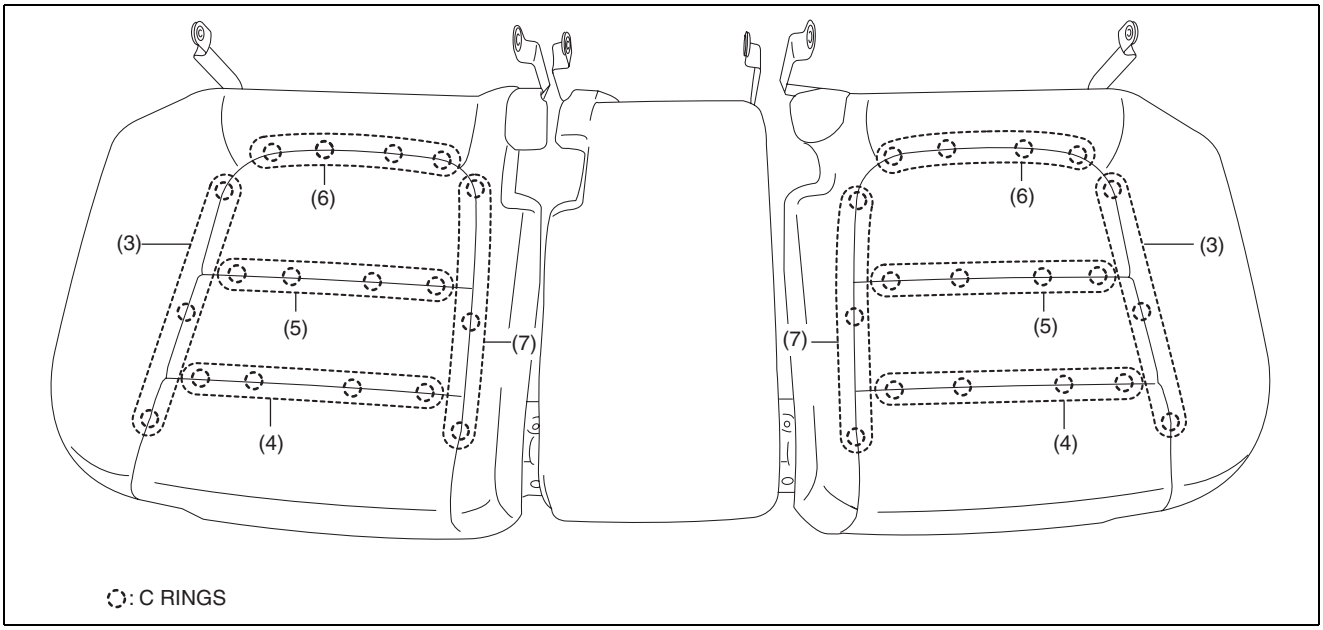

ac5uuw00001957

Caution

- **If a damaged C rings are reused, it may not be possible to install the rear seat cushion trim and rear seat cushion pad correctly. When removing and installing C rings, be careful not to damage them.**
- **If a C rings are damaged, replace it with a new one.**

4. Install in the reverse order of removal.

SEATS

REAR SEAT BACK STRIKER REMOVAL/INSTALLATION

id091300812100

1. Disconnect the negative battery cable. (See 01-17A-11 NEGATIVE BATTERY CABLE DISCONNECTION/CONNECTION [SKYACTIV-G 2.0].) (See 01-17A-13 NEGATIVE BATTERY CABLE DISCONNECTION/CONNECTION [SKYACTIV-G 2.0 (WITHOUT i-stop)].) (See 01-17B-9 NEGATIVE BATTERY CABLE DISCONNECTION/CONNECTION [SKYACTIV-D 2.2].)
2. Press the push knob to fold the rear seat back.
3. Remove the following parts:
   (1) Trunk board (See 09-17-85 TRUNK BOARD REMOVAL/INSTALLATION.)
   (2) Trunk end trim (See 09-17-78 TRUNK END TRIM REMOVAL/INSTALLATION.)
   (3) Rear scuff plate (See 09-17-63 REAR SCUFF PLATE REMOVAL/INSTALLATION.)
   (4) Trunk side trim (See 09-17-80 TRUNK SIDE TRIM REMOVAL/INSTALLATION.)
4. Remove the bolts.
5. Remove the rear seat back striker.
6. Install in the reverse order of removal.

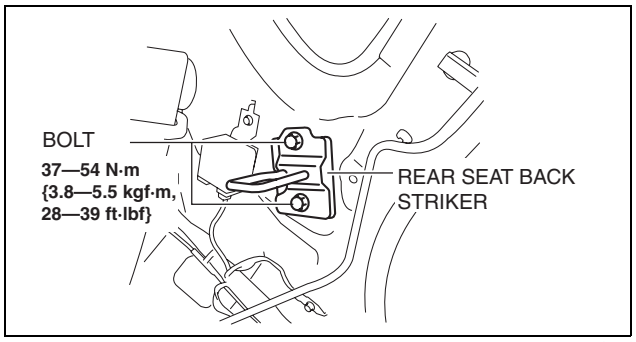

ac5uuw00001984

SEATS

REAR SEAT CENTER ARMREST REMOVAL/INSTALLATION

id091300812200

1. Operate the push knob (RH) and lower the rear seat back (RH).
2. Remove screw A.
3. Remove the rear seat center armrest hinge cover (RH) in the direction of the arrow (1) shown in the figure while setting hook A aside.

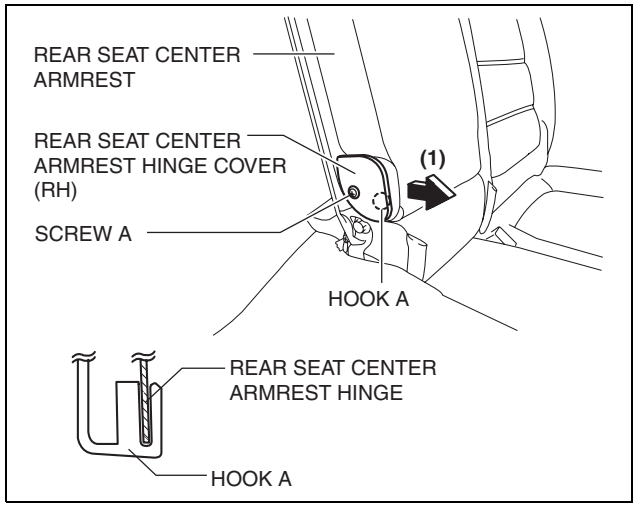

ac5uuw00001985

4. Remove bolt B.
5. Remove the rear seat center armrest in the direction of the arrow (2) shown in the figure while setting the pins aside.

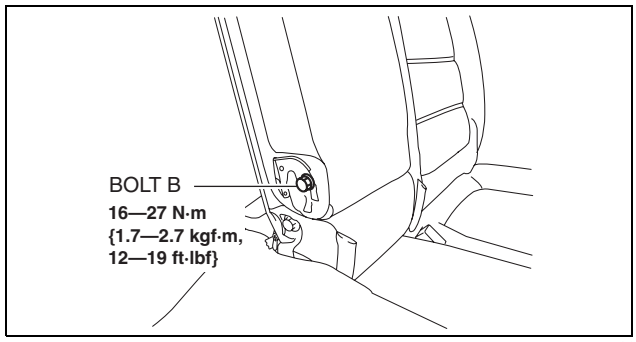

ac5wzw0000311

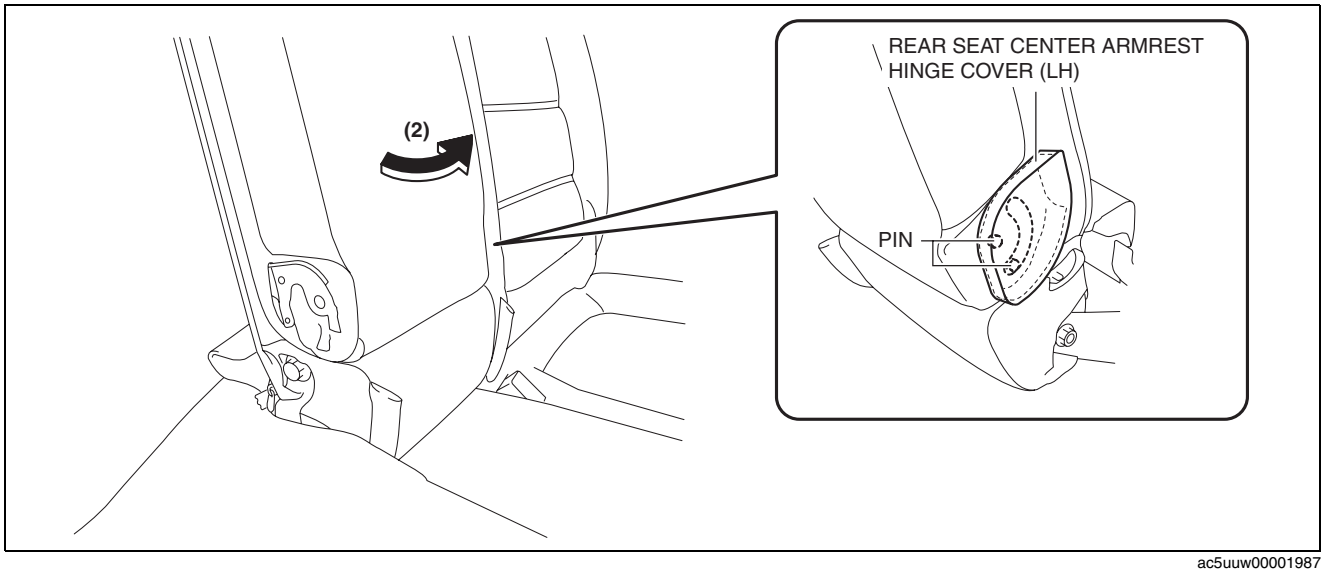

ac5uuw00001987

SEATS

6. Using a flathead screwdriver wrapped in protective tape, insert it in the gap between the cup holder and the rear seat center armrest in the direction of the arrow (3) shown in the figure, and disengage tabs B.

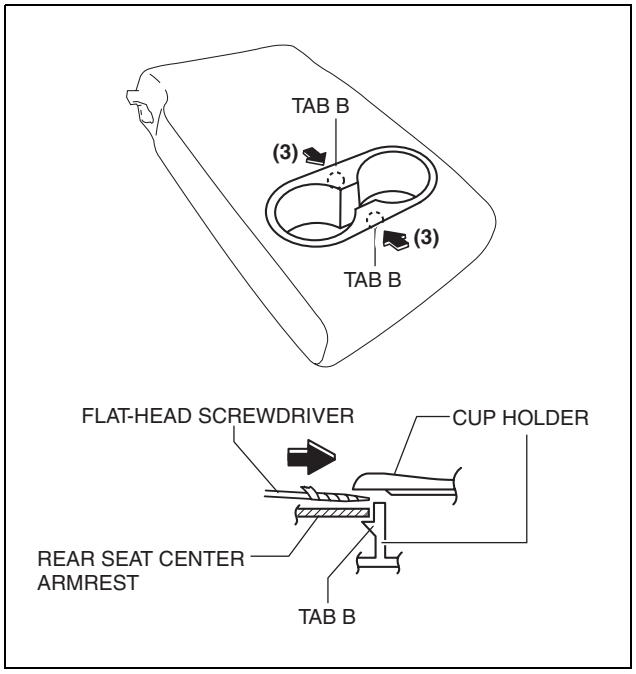

ac5uuw00001988

7. Using a flathead screwdriver wrapped in protective tape, insert it in the gap between the cup holder and the rear seat center armrest in the direction of the arrow (4) shown in the figure, and disengage tabs C.

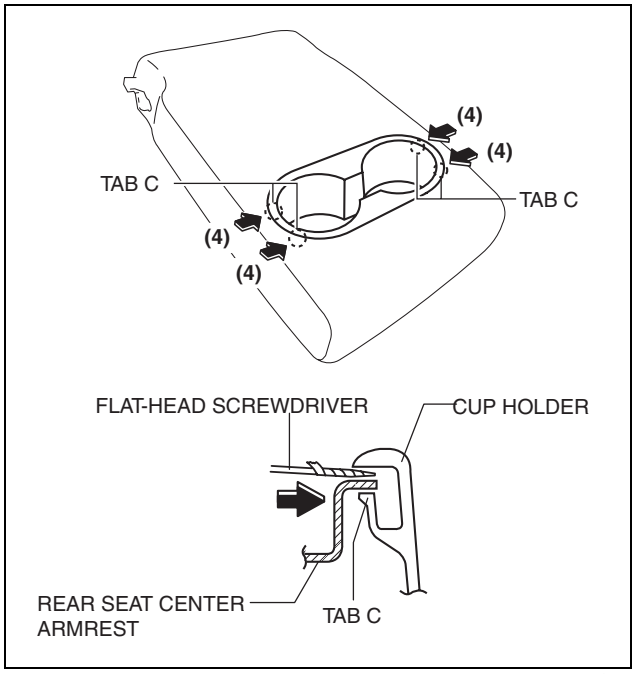

ac5uuw00001989

8. Remove the cup holder in the direction of the arrow (5) shown in the figure.
9. Install in the reverse order of removal.

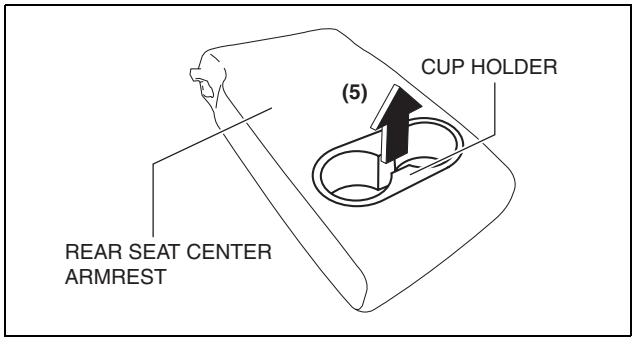

ac5uuw00001990

SEATS

REMOTE HANDLE LEVER REMOVAL/INSTALLATION

id091300809300

1. Disconnect the negative battery cable. (See 01-17A-11 NEGATIVE BATTERY CABLE DISCONNECTION/CONNECTION [SKYACTIV-G 2.0].) (See 01-17A-13 NEGATIVE BATTERY CABLE DISCONNECTION/CONNECTION [SKYACTIV-G 2.0 (WITHOUT i-stop)].) (See 01-17B-9 NEGATIVE BATTERY CABLE DISCONNECTION/CONNECTION [SKYACTIV-D 2.2].)
2. Remove the following parts:
   (1) Trunk board (See 09-17-85 TRUNK BOARD REMOVAL/INSTALLATION.)
   (2) Trunk end trim (See 09-17-78 TRUNK END TRIM REMOVAL/INSTALLATION.)
   (3) Rear scuff plate (See 09-17-63 REAR SCUFF PLATE REMOVAL/INSTALLATION.)
   (4) Trunk side trim (See 09-17-80 TRUNK SIDE TRIM REMOVAL/INSTALLATION.)
3. Disconnect the remote cable on the remote handle lever side from the remote cable on the rear seat side.

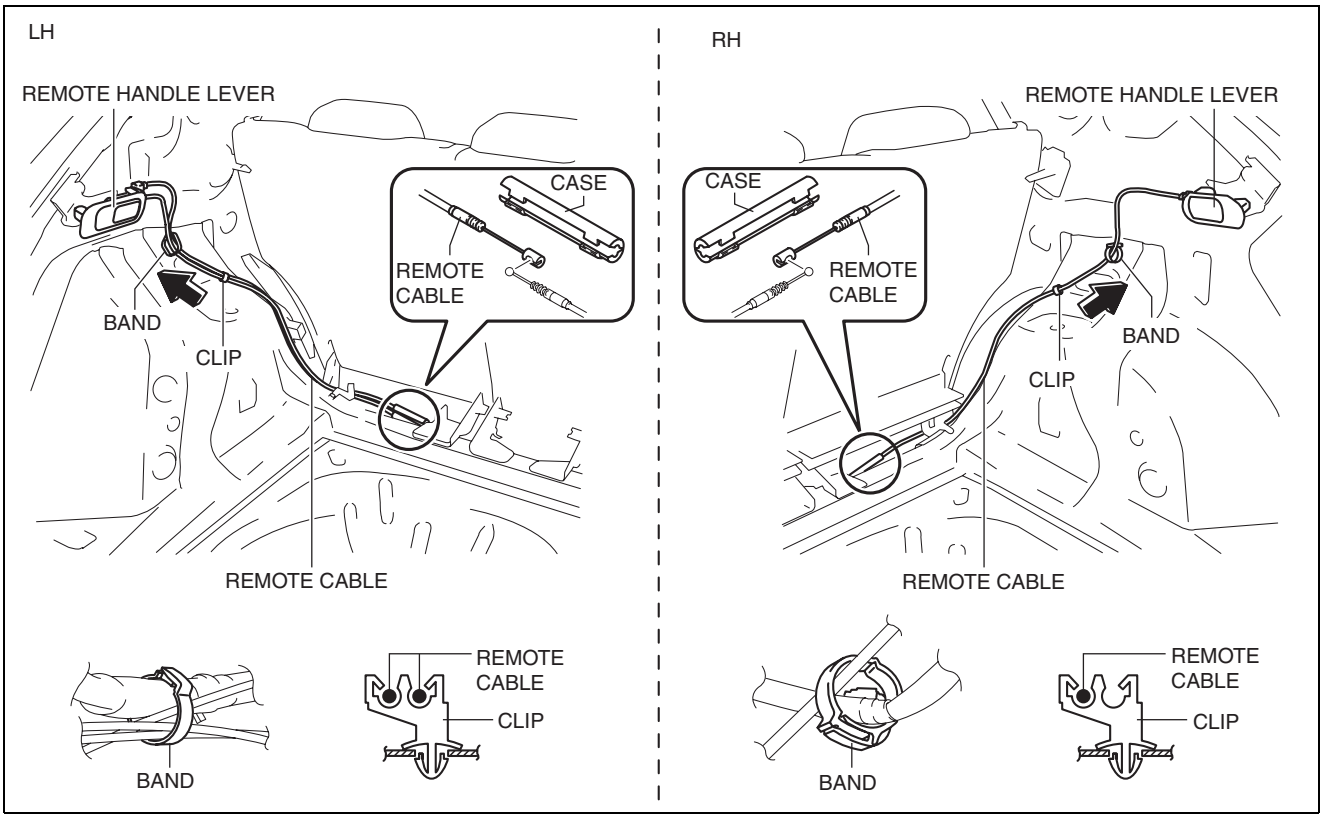

ac5wzw0000319

4. Remove the remote cable on the remote handle lever side from the clip.
5. Pull out the remote cable on the remote handle lever side from the band in the direction of the arrow shown in the figure, and remove the remove handle lever.
6. Install in the reverse order of removal. (See 09-13-86 Remote Handle Lever Installation Note.)

SEATS

Remote Handle Lever Installation Note

1. Assemble the remote cable being careful of the following:
   - For the remote cable (center), route through the lower part of the rear hinge.
   - For the remote cable (LH/RH), route through the lower part of the ISO FIX anchor from the upper part.
   - Place the case on the mat of the rear part of the rear seat cushion.
2. After assembling the remote cable, shake the rear seat back up and down and verify that the rear seat back striker is securely locked to the rear seat back.
   - If there is a malfunction in locking, adjust the fixed position of the cable in the case.

Caution

- **If the remote cable is not installed using the correct routing, the remote seat back operation could malfunction causing the cable to break. When installing the remote cable, always install it using the route shown in the figure.**

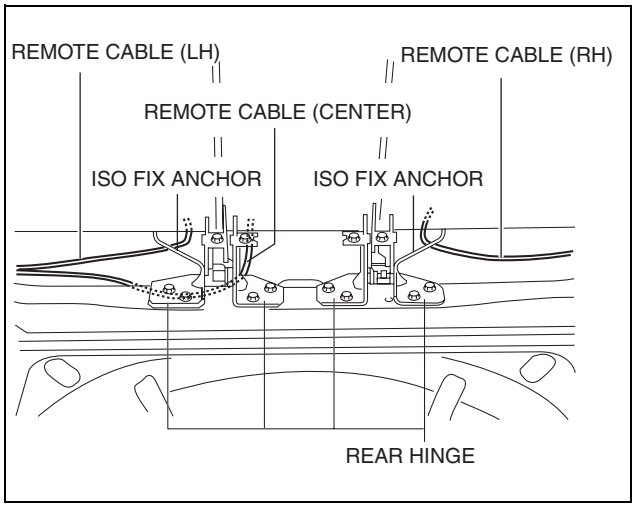

ac5wzw0000375

SEATS

FRONT TILT MOTOR INSPECTION

id091300800700

Warning

- **Handling a side air bag improperly can accidentally operate (deploy) the air bag, which may seriously injure you. Read the service warnings/cautions in the Workshop Manual before handling the front seat (side air bag integrated). (See 08-10-3 AIR BAG SYSTEM SERVICE WARNINGS.) (See 08-10-5 AIR BAG SYSTEM SERVICE CAUTIONS.)**

Caution

- **When performing the procedure with a front seat removed from the vehicle, perform the procedure on a clean cloth so as not to damage or soil the seat.**

Note

- When removing the front seat from the vehicle or putting it back in, it can be performed easier by removing the headrest.

R.H.D.

1. Disconnect the negative battery cable and wait for **1 min**. (See 01-17A-11 NEGATIVE BATTERY CABLE DISCONNECTION/CONNECTION [SKYACTIV-G 2.0].) (See 01-17A-13 NEGATIVE BATTERY CABLE DISCONNECTION/CONNECTION [SKYACTIV-G 2.0 (WITHOUT i-stop)].) (See 01-17B-9 NEGATIVE BATTERY CABLE DISCONNECTION/CONNECTION [SKYACTIV-D 2.2].)
2. Disconnect the front tilt motor connector.
3. Apply battery positive voltage to the front tilt motor terminals and inspect the front seat operation.
   - If not as specified, replace the front seat cushion frame.(See 09-13-34 FRONT SEAT CUSHION FRAME REMOVAL/ INSTALLATION.)

Front seat operation	Connection	
	B	D
Up	B+	GND
Down	GND	B+

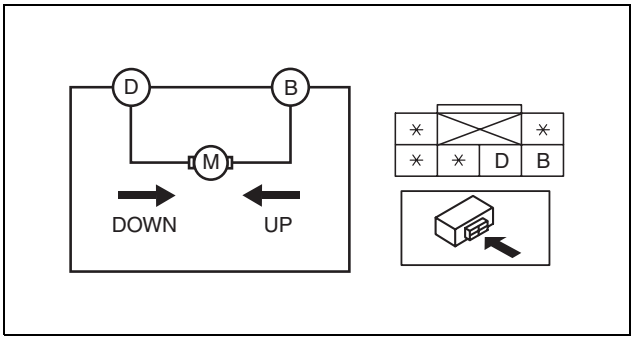

ac5wzw0000379

SEATS

LIFT MOTOR REMOVAL/INSTALLATION

id091300881100

1. Switch the ignition off (LOCK).
2. Disconnect the negative battery cable and wait for **1 min**. (See 01-17A-11 NEGATIVE BATTERY CABLE DISCONNECTION/CONNECTION [SKYACTIV-G 2.0].) (See 01-17A-13 NEGATIVE BATTERY CABLE DISCONNECTION/CONNECTION [SKYACTIV-G 2.0 (WITHOUT i-stop)].) (See 01-17B-9 NEGATIVE BATTERY CABLE DISCONNECTION/CONNECTION [SKYACTIV-D 2.2].)
3. Remove the front sear side cover. (See 09-13-41 FRONT SEAT SIDE COVER REMOVAL/INSTALLATION.)
4. Remove the bolt.
5. Remove the lift motor.
6. Install in the reverse order of removal.

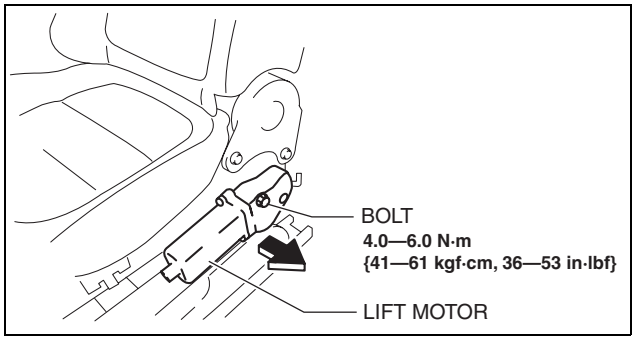

ac5wzw0000314

SEATS

LIFT MOTOR INSPECTION

id091300881000

Warning

- **Handling a side air bag improperly can accidentally operate (deploy) the air bag, which may seriously injure you. Read the service warnings/cautions in the Workshop Manual before handling the front seat (side air bag integrated). (See 08-10-3 AIR BAG SYSTEM SERVICE WARNINGS.) (See 08-10-5 AIR BAG SYSTEM SERVICE CAUTIONS.)**

R.H.D.

1. Disconnect the negative battery cable and wait for **1 min**. (See 01-17A-11 NEGATIVE BATTERY CABLE DISCONNECTION/CONNECTION [SKYACTIV-G 2.0].) (See 01-17A-13 NEGATIVE BATTERY CABLE DISCONNECTION/CONNECTION [SKYACTIV-G 2.0 (WITHOUT i-stop)].) (See 01-17B-9 NEGATIVE BATTERY CABLE DISCONNECTION/CONNECTION [SKYACTIV-D 2.2].)
2. Remove the front sear side cover. (See 09-13-41 FRONT SEAT SIDE COVER REMOVAL/INSTALLATION.)
3. Disconnect the lift motor connector.
4. Apply battery positive voltage to the lift motor terminals and inspect the front seat operation.
   - If not as specified, replace the lift motor. (See 09-13-88 LIFT MOTOR REMOVAL/INSTALLATION.)

Front seat operation	Connection	
	A	B
Up	GND	B+
Down	B+	GND

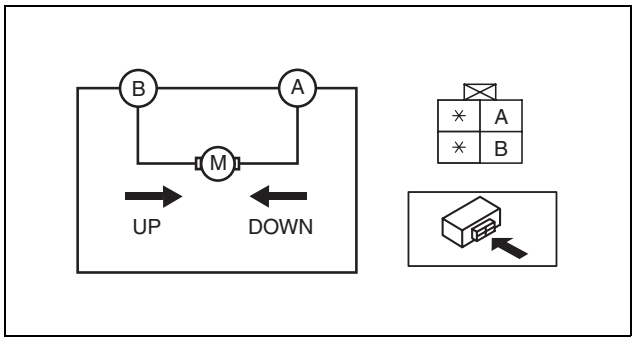

ac5wzw0000379

SEATS

SLIDE MOTOR REMOVAL/INSTALLATION

id091300809000

Warning

- **Handling a side air bag improperly can accidentally operate (deploy) the air bag, which may seriously injure you. Read the service warnings/cautions in the Workshop Manual before handling the front seat (side air bag integrated). (See 08-10-3 AIR BAG SYSTEM SERVICE WARNINGS.) (See 08-10-5 AIR BAG SYSTEM SERVICE CAUTIONS.)**
- **If the sliding mechanisms on both sides are not locked after assembling the front seat, the front seat will operate accidentally while the vehicle is driven, which could result in serious injury. After assembling the front seat, shake it up and down and verify that the sliding mechanism on the both sides are locked.**

Caution

- **If the slide bar is operated after the front seat is removed, the left/right slide positions will deviate and the adjuster unit could be damaged after the front seat is installed. After removing a front seat, do not operate the slider lever.**
- **Verify that there are no malfunctions in the forward/back slide of the seat and in the adjuster unit after installing a front seat.**
- **When performing the procedure with a front seat removed from the vehicle, perform the procedure on a clean cloth so as not to damage or soil the seat.**

1. Switch the ignition off (LOCK).
2. Disconnect the negative battery cable and wait for **1 min**. (See 01-17A-11 NEGATIVE BATTERY CABLE DISCONNECTION/CONNECTION [SKYACTIV-G 2.0].) (See 01-17A-13 NEGATIVE BATTERY CABLE DISCONNECTION/CONNECTION [SKYACTIV-G 2.0 (WITHOUT i-stop)].) (See 01-17B-9 NEGATIVE BATTERY CABLE DISCONNECTION/CONNECTION [SKYACTIV-D 2.2].)
3. Remove the following parts:
   (1) Front seat (See 09-13-4 FRONT SEAT REMOVAL/INSTALLATION.)
   (2) Front seat side cover (See 09-13-41 FRONT SEAT SIDE COVER REMOVAL/INSTALLATION.)
   (3) Front seat adjuster unit (See 09-13-35 FRONT SEAT ADJUSTER UNIT REMOVAL/INSTALLATION.)
4. Lift up cable A in the direction of the arrow (1) shown in the figure and remove it from the hook B.

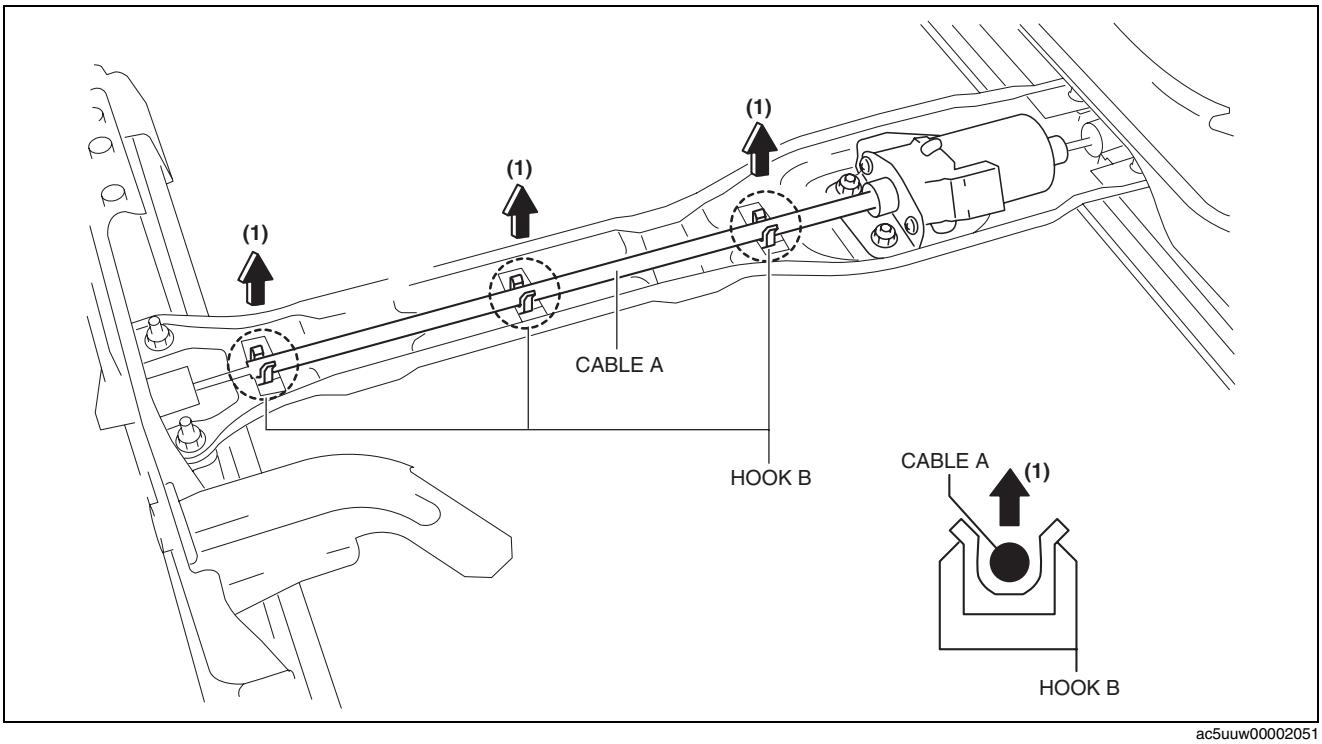

ac5uuw00002051

SEATS

5. Lift up cable A in the direction of the arrow (2) shown in the figure, and pull out the adjuster unit and slide motor in the direction of the arrow (3).

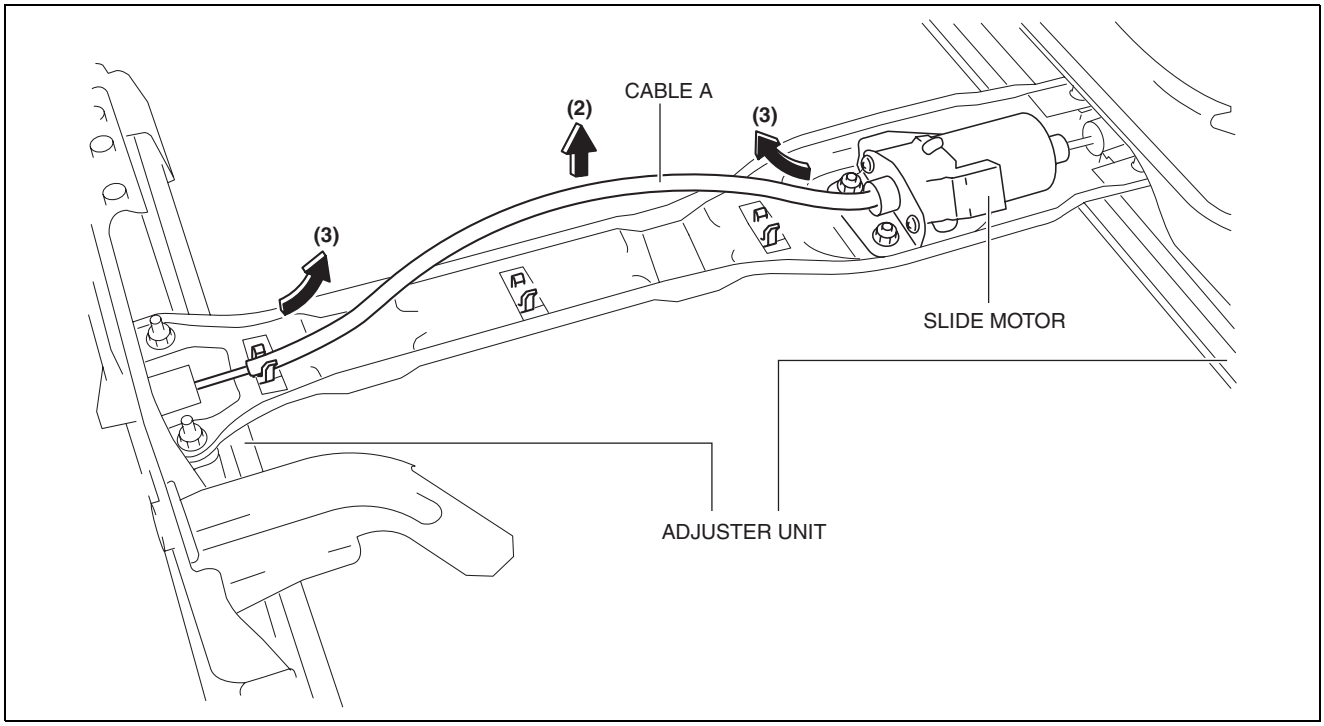

ac5uuw00002052

6. Remove nuts A, and remove the slide motor and cable B.

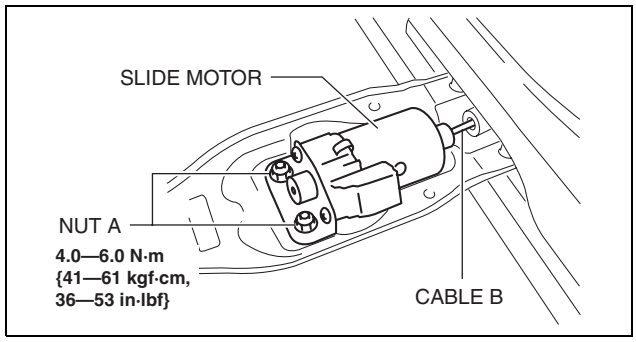

ac5wzw0000316

7. Remove screws B, and remove the bracket from the slide motor.
8. Install in the reverse order of removal.

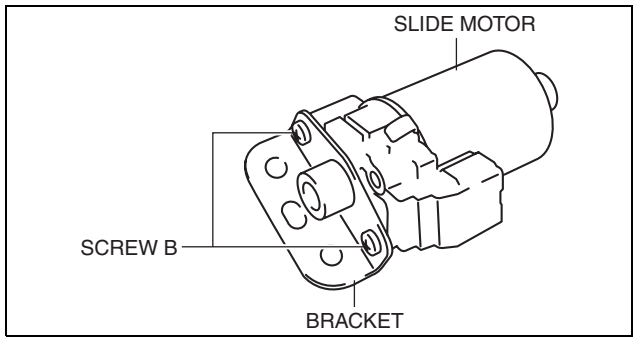

ac5uuw00002054

SEATS

SLIDE MOTOR INSPECTION

id091300800900

Warning

- **Handling a side air bag improperly can accidentally operate (deploy) the air bag, which may seriously injure you. Read the service warnings/cautions in the Workshop Manual before handling the front seat (side air bag integrated). (See 08-10-3 AIR BAG SYSTEM SERVICE WARNINGS.) (See 08-10-5 AIR BAG SYSTEM SERVICE CAUTIONS.)**

Caution

- **When performing the procedure with a front seat removed from the vehicle, perform the procedure on a clean cloth so as not to damage or soil the seat.**

Note

- When removing the front seat from the vehicle or putting it back in, it can be performed easier by removing the headrest.

R.H.D.

1. Disconnect the negative battery cable and wait for **1 min**. (See 01-17A-11 NEGATIVE BATTERY CABLE DISCONNECTION/CONNECTION [SKYACTIV-G 2.0].) (See 01-17A-13 NEGATIVE BATTERY CABLE DISCONNECTION/CONNECTION [SKYACTIV-G 2.0 (WITHOUT i-stop)].) (See 01-17B-9 NEGATIVE BATTERY CABLE DISCONNECTION/CONNECTION [SKYACTIV-D 2.2].)
2. Disconnect the slide motor connector.
3. Apply battery positive voltage to the slide motor terminals and inspect the front seat operation.

Front seat operation	Connection	
	B	D
Forward	B+	GND
Backward	GND	B+

- If not as specified, replace the slide motor. (See 09-13-90 SLIDE MOTOR REMOVAL/INSTALLATION.)

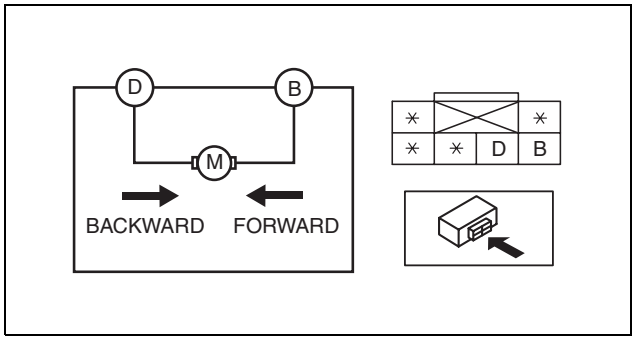

ac5wzw0000314

SEATS

RECLINER MOTOR INSPECTION

id091300801000

Warning

- **Handling a side air bag improperly can accidentally operate (deploy) the air bag, which may seriously injure you. Read the service warnings/cautions in the Workshop Manual before handling the front seat (side air bag integrated). (See 08-10-3 AIR BAG SYSTEM SERVICE WARNINGS.) (See 08-10-5 AIR BAG SYSTEM SERVICE CAUTIONS.)**

R.H.D.

1. Disconnect the negative battery cable and wait for **1 min**. (See 01-17A-11 NEGATIVE BATTERY CABLE DISCONNECTION/CONNECTION [SKYACTIV-G 2.0].) (See 01-17A-13 NEGATIVE BATTERY CABLE DISCONNECTION/CONNECTION [SKYACTIV-G 2.0 (WITHOUT i-stop)].) (See 01-17B-9 NEGATIVE BATTERY CABLE DISCONNECTION/CONNECTION [SKYACTIV-D 2.2].)
2. Slide hooks A in the order of arrows (1), (2), (3) shown in the figure and disconnect them from hooks B.

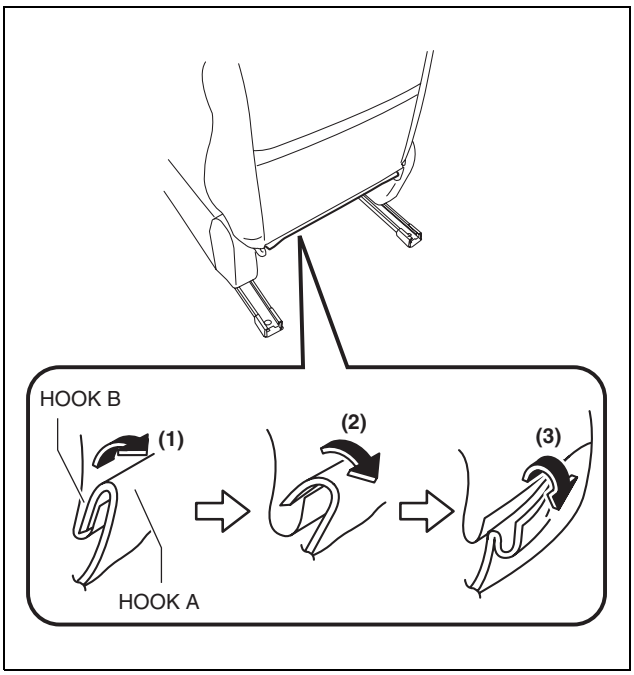

ac5uuw00002045

3. Open fasteners C.
4. Disconnect the recliner motor connector.

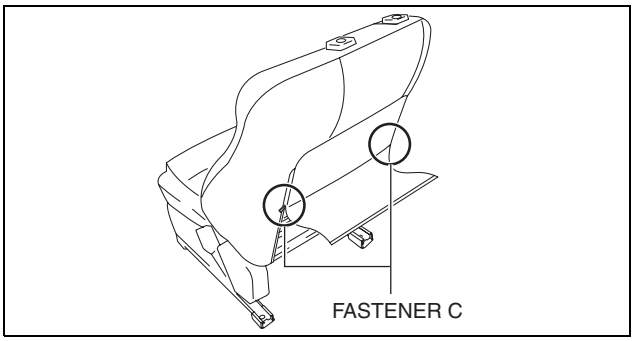

ac5uuw00002046

5. Apply battery positive voltage to the recliner motor terminals and inspect the front seat operation.

Front seat operation	Connection	
	A	B
Forward	GND	B+
Backward	B+	GND

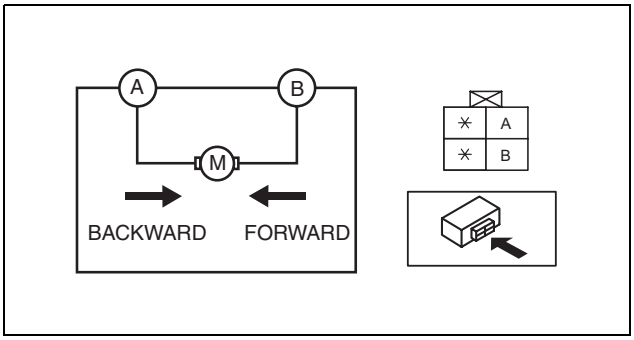

ac5wxw0000314

- If not as specified, replace the front seat back frame. (See 09-13-11 FRONT SEAT BACK TRIM REMOVAL/INSTALLATION.)

SEATS

LUMBER SUPPORT MOTOR REMOVAL/INSTALLATION

id091300809100

Warning

- **Handling a side air bag improperly can accidentally operate (deploy) the air bag, which may seriously injure you. Read the service warnings/cautions in the Workshop Manual before handling the front seat (side air bag integrated). (See 08-10-3 AIR BAG SYSTEM SERVICE WARNINGS.) (See 08-10-5 AIR BAG SYSTEM SERVICE CAUTIONS.)**
- **If the sliding mechanisms on both sides are not locked after assembling the front seat, the front seat will operate accidentally while the vehicle is driven, which could result in serious injury. After assembling the front seat, shake it up and down and verify that the sliding mechanism on the both sides are locked.**

Caution

- **If the slide bar is operated after the front seat is removed, the left/right slide positions will deviate and the slide adjuster unit could be damaged after the front seat is installed. After removing a front seat, do not operate the slider lever.**
- **Verify that there are no malfunctions in the sliding mechanism after installing a front seat.**
- **When performing the procedure with a front seat removed from the vehicle, perform the procedure on a clean cloth so as not to damage or soil the seat.**

1. Operate the lumber support switch and adjust the lumber support unit to the farthest rear position.
2. Switch the ignition off (LOCK).
3. Disconnect the negative battery cable and wait for **1 min**. (See 01-17A-11 NEGATIVE BATTERY CABLE DISCONNECTION/CONNECTION [SKYACTIV-G 2.0].) (See 01-17A-13 NEGATIVE BATTERY CABLE DISCONNECTION/CONNECTION [SKYACTIV-G 2.0 (WITHOUT i-stop)].) (See 01-17B-9 NEGATIVE BATTERY CABLE DISCONNECTION/CONNECTION [SKYACTIV-D 2.2].)
4. Remove the front seat. (See 09-13-4 FRONT SEAT REMOVAL/INSTALLATION.)
5. Remove the headrest.
6. Remove the front seat back trim. (See 09-13-11 FRONT SEAT BACK TRIM REMOVAL/INSTALLATION.)
7. Remove the lumber support motor connector.

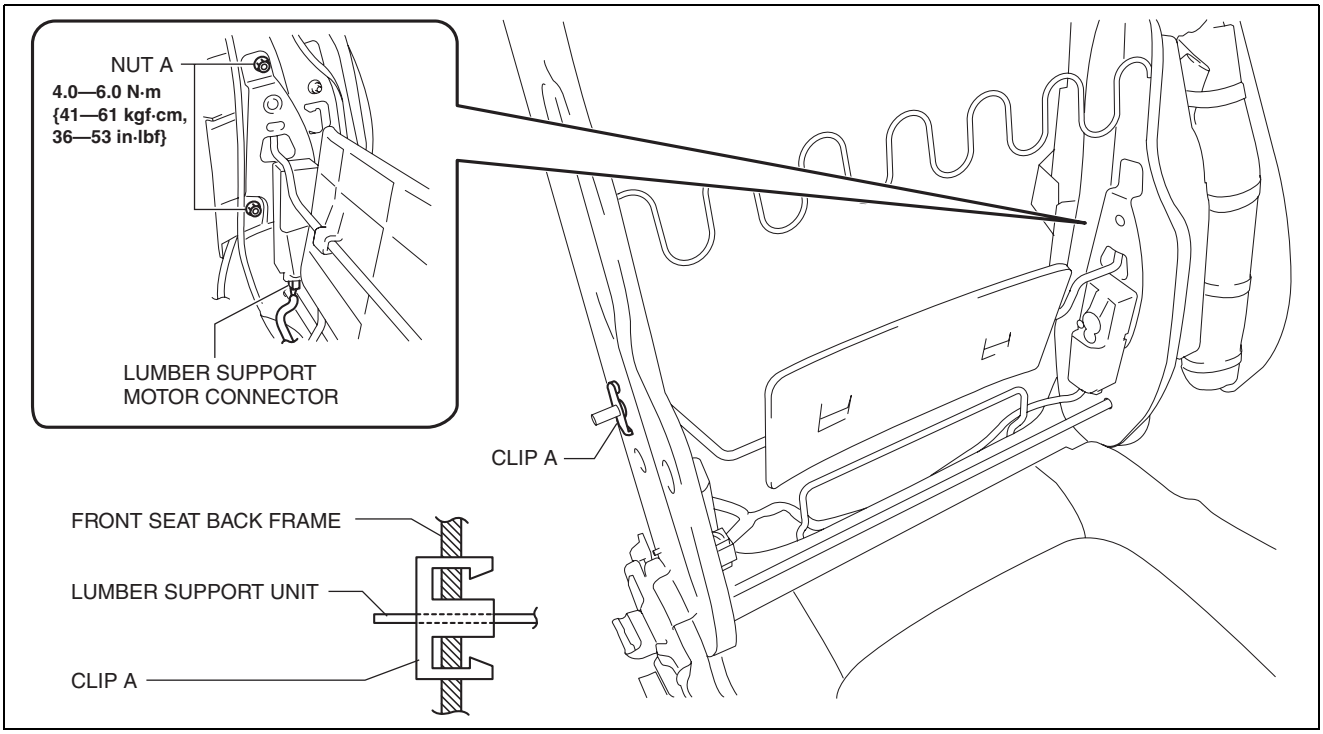

ac5wzw0000316

8. Remove nuts A.
9. Detach clip A.

SEATS

10. Remove the lumber support unit in the direction of the arrow (1), (2) shown in the figure.

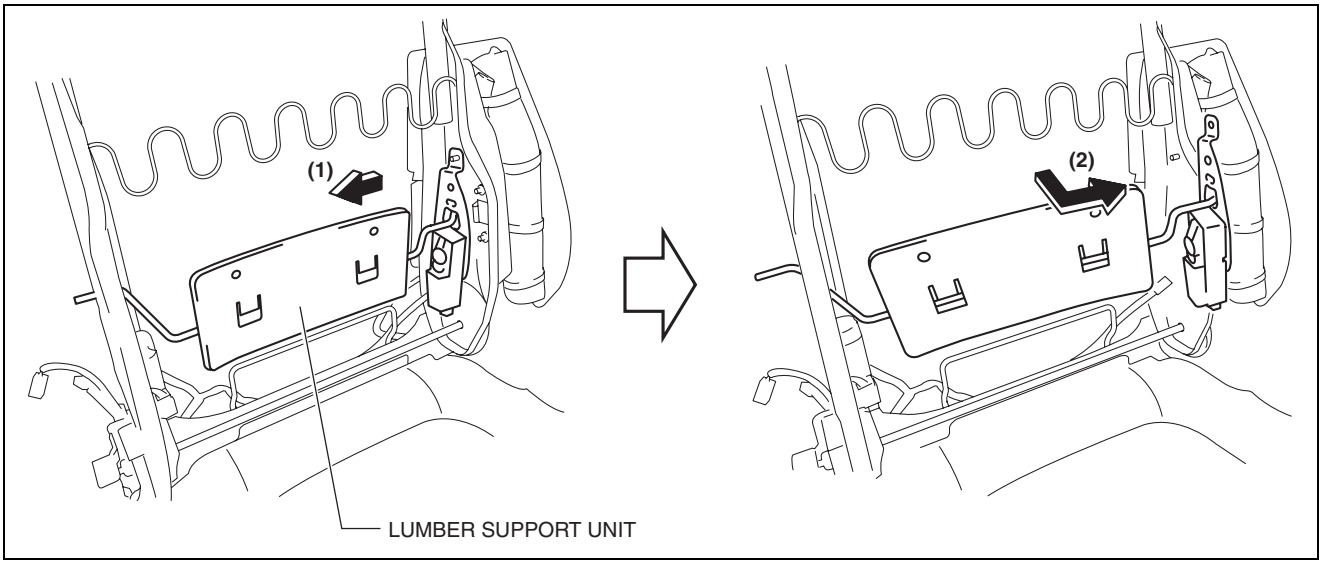

ac5uuw00002056

11. Remove screws B and C.

Caution

- **If the installation position is incorrect, it could damage the lumbar support motor because the shapes of screws B and C differ. Make sure that the installation positions are correct when installing screws B and C.**

12. Remove the lumber support motor.
13. Install in the reverse order of removal.

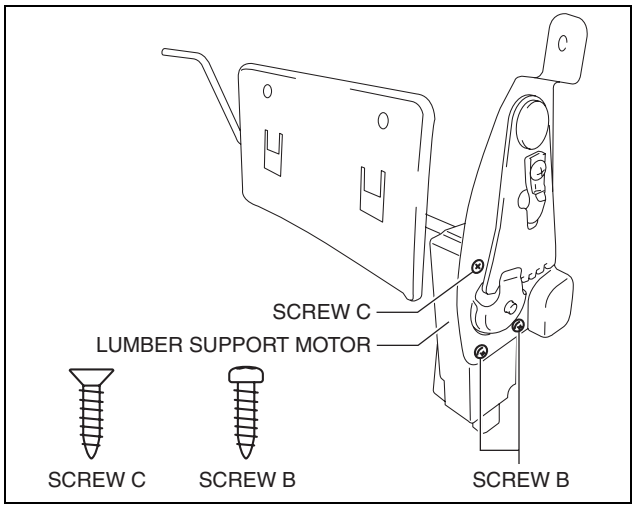

ac5uuw00002057

SEATS

LUMBER SUPPORT MOTOR INSPECTION

id091300804300

Warning

- **Handling a side air bag improperly can accidentally operate (deploy) the air bag, which may seriously injure you. Read the service warnings/cautions in the Workshop Manual before handling the front seat (side air bag integrated). (See 08-10-3 AIR BAG SYSTEM SERVICE WARNINGS.) (See 08-10-5 AIR BAG SYSTEM SERVICE CAUTIONS.)**

R.H.D.

1. Disconnect the negative battery cable and wait for **1 min**. (See 01-17A-11 NEGATIVE BATTERY CABLE DISCONNECTION/CONNECTION [SKYACTIV-G 2.0].) (See 01-17A-13 NEGATIVE BATTERY CABLE DISCONNECTION/CONNECTION [SKYACTIV-G 2.0 (WITHOUT i-stop)].) (See 01-17B-9 NEGATIVE BATTERY CABLE DISCONNECTION/CONNECTION [SKYACTIV-D 2.2].)
2. Slide hooks A in the order of arrows (1), (2), (3) shown in the figure and disconnect them from hooks B.

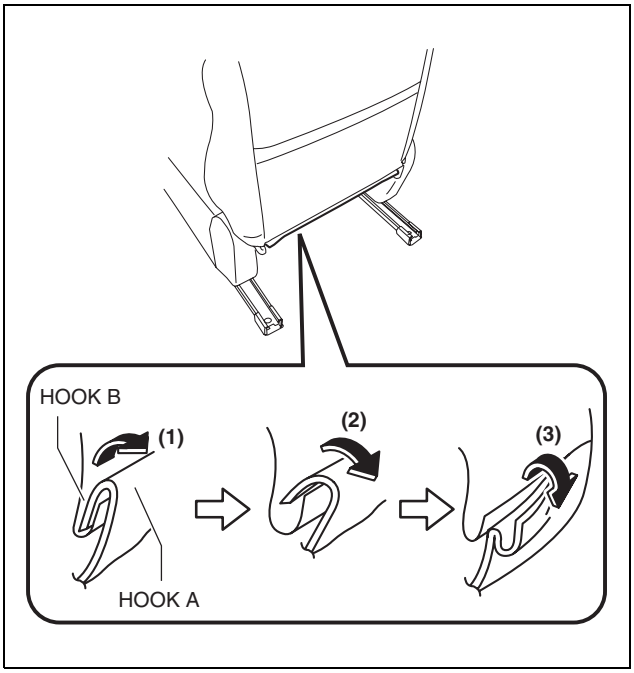

ac5uuw00002049

3. Open fasteners C.
4. Disconnect the lumber support motor connector.

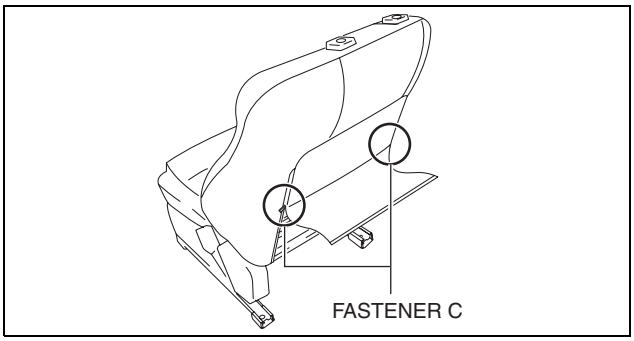

ac5uuw00002050

Apply battery positive voltage to the lumber support motor terminals and inspect the front seat operation.

- If not as specified, replace the lumber support motor. (See 09-13-95 LUMBER SUPPORT MOTOR REMOVAL/INSTALLATION.)

Front seat operation	Connection	
	A	B
Forward	GND	B+
Backward	B+	GND

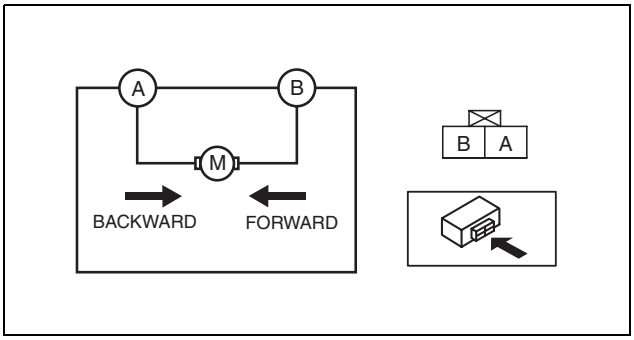

ac5wzw0000315

SEATS

POWER SEAT SWITCH REMOVAL/INSTALLATION

id091300998700

Warning

- **Handling a side air bag improperly can accidentally operate (deploy) the air bag, which may seriously injure you. Read the service warnings in the Workshop Manual before handling the front seat (side air bag integrated). (See 08-10-3 AIR BAG SYSTEM SERVICE WARNINGS.) (See 08-10-5 AIR BAG SYSTEM SERVICE CAUTIONS.)**

1. Switch the ignition off (LOCK).
2. Disconnect the negative battery cable and wait for **1 min**. (See 01-17A-11 NEGATIVE BATTERY CABLE DISCONNECTION/CONNECTION [SKYACTIV-G 2.0].) (See 01-17A-13 NEGATIVE BATTERY CABLE DISCONNECTION/CONNECTION [SKYACTIV-G 2.0 (WITHOUT i-stop)].) (See 01-17B-9 NEGATIVE BATTERY CABLE DISCONNECTION/CONNECTION [SKYACTIV-D 2.2].)
3. Remove the front seat side cover. (See 09-13-41 FRONT SEAT SIDE COVER REMOVAL/INSTALLATION.)
4. Remove the screws.
5. Remove the power seat switch.
6. Install in the reverse order of removal.

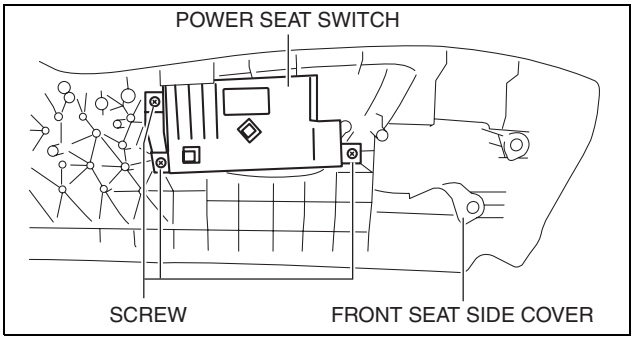

ac5uuw00002059

SEATS

POWER SEAT SWITCH INSPECTION

id091300801100

Warning

- **Handling a side air bag improperly can accidentally operate (deploy) the air bag, which may seriously injure you. Read the service warnings in the Workshop Manual before handling the front seat (side air bag integrated). (See 08-10-3 AIR BAG SYSTEM SERVICE WARNINGS.) (See 08-10-5 AIR BAG SYSTEM SERVICE CAUTIONS.)**

R.H.D.

1. Switch the ignition off (LOCK).
2. Disconnect the negative battery cable and wait for **1 min**. (See 01-17A-11 NEGATIVE BATTERY CABLE DISCONNECTION/CONNECTION [SKYACTIV-G 2.0].) (See 01-17A-13 NEGATIVE BATTERY CABLE DISCONNECTION/CONNECTION [SKYACTIV-G 2.0 (WITHOUT i-stop)].) (See 01-17B-9 NEGATIVE BATTERY CABLE DISCONNECTION/CONNECTION [SKYACTIV-D 2.2].)
3. Remove the front seat side cover. (See 09-13-41 FRONT SEAT SIDE COVER REMOVAL/INSTALLATION.)
4. Remove the power seat switch. (See 09-13-99 POWER SEAT SWITCH REMOVAL/INSTALLATION.)
5. Connect the power seat switch connector.
6. Inspect for continuity between the power seat switch connector terminals using an ohmmeter.
   - If not as specified, replace the power seat switch. (See 09-13-99 POWER SEAT SWITCH REMOVAL/INSTALLATION.)

SEATS

○—○ : Continuity

Switch position		Terminal											
		A	B	C	D	E	F	H	J	K	L	M	N
Recliner	Forward	○	○	○								○	
	Off		○	○								○	
	Backward	○	○	○								○	
Lumber support	Forward	○			○	○						○	
	Off				○	○						○	
	Backward	○			○	○						○	
Slide	Forward	○									○	○	○
	Off										○	○	○
	Backward	○									○	○	○
Front tilt	Up	○							○	○		○	
	Off								○	○		○	
	Down	○							○	○		○	
Lift	Up	○						○				○	
	Off						○	○				○	
	Down	○					○	○				○	

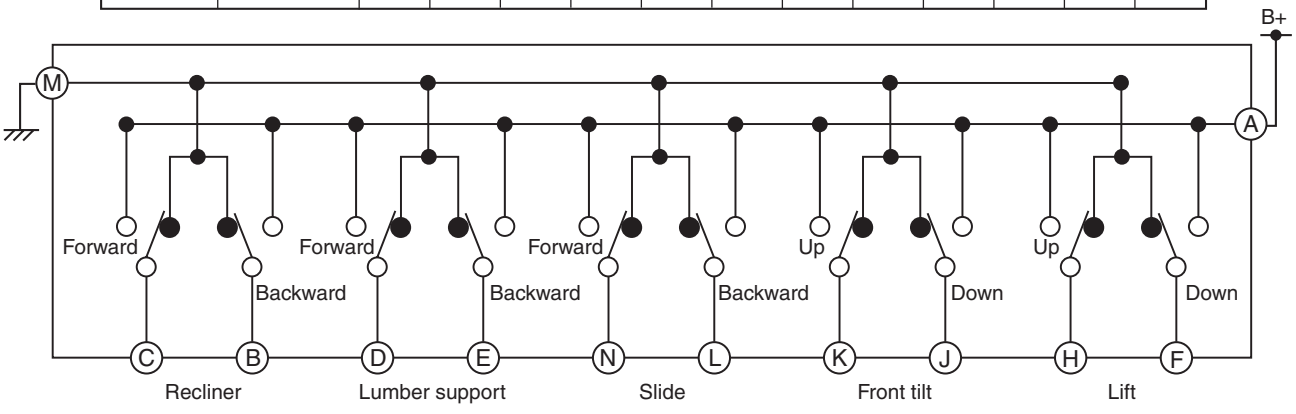

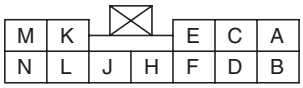

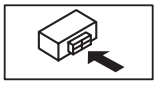

ac5ww0000315

SEATS

SEAT WARMER SWITCH REMOVAL/INSTALLATION

id091300801200

Note

- The seat warmer switch are integrated into the climate control unit. (with full-auto air conditioner system)
- The seat warmer switch are integrated into the clock. (with manual air conditioner system)
- For the seat warmer switch removal/installation, refer to the climate control unit removal/installation. (See 07-40A-32 CLIMATE CONTROL UNIT REMOVAL/INSTALLATION [FULL-AUTO AIR CONDITIONER].) (with full-auto air conditioner system)
- For the seat warmer switch removal/installation, refer to the clock removal/installation. (See 09-22-92 CLOCK REMOVAL/INSTALLATION.) (with full-auto air conditioner system)

SEATS

SEAT WARMER CONTROL UNIT REMOVAL/INSTALLATION

id091300977500

Warning

- **Handling a side air bag improperly can accidentally operate (deploy) the air bag, which may seriously injure you. Read the service warnings/cautions in the Workshop Manual before handling the front seat (side air bag integrated). (See 08-10-3 AIR BAG SYSTEM SERVICE WARNINGS.) (See 08-10-5 AIR BAG SYSTEM SERVICE CAUTIONS.)**

1. Switch the ignition off (LOCK).
2. Disconnect the negative battery cable and wait for **1 min**. (See 01-17A-11 NEGATIVE BATTERY CABLE DISCONNECTION/CONNECTION [SKYACTIV-G 2.0].) (See 01-17A-13 NEGATIVE BATTERY CABLE DISCONNECTION/CONNECTION [SKYACTIV-G 2.0 (WITHOUT i-stop)].) (See 01-17B-9 NEGATIVE BATTERY CABLE DISCONNECTION/CONNECTION [SKYACTIV-D 2.2].)
3. Disconnect the connector.

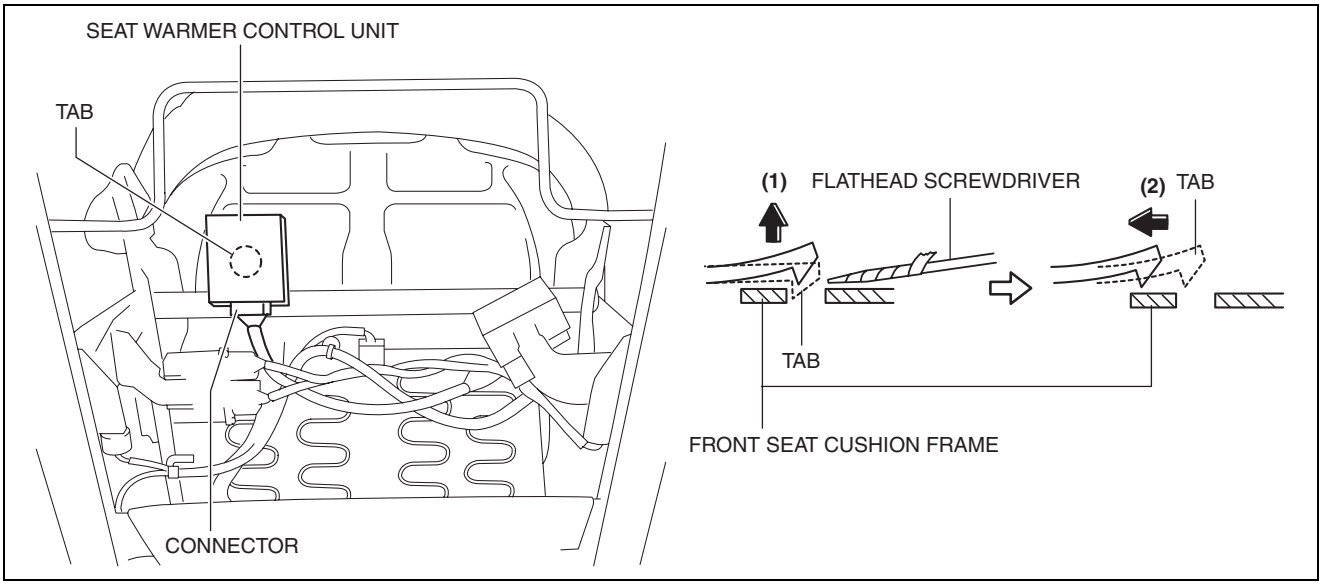

ac5uuw00002086

4. Using a flathead screwdriver, disconnect the seat warmer control unit in the direction of the arrow (2) while releasing tab in the direction of the arrow (1) shown in the figure.
5. Install in the reverse order of removal.

SEATS

SEAT WARMER CONTROL UNIT INSPECTION

id091300976500

Warning

- **Handling a front seat (with built-in side air bag) improperly can accidentally operate (deploy) the air bag, which may seriously injure you. Read the service warnings before handling a front seat (with built-in side air bag). (See 08-10-3 AIR BAG SYSTEM SERVICE WARNINGS.) (See 08-10-5 AIR BAG SYSTEM SERVICE CAUTIONS.)**

Caution

- **After removing a front seat, do not operate the slider lever. If the slider lever is operated, the left and right slide positions will deviate, and the slide adjuster may be damaged after the front seat is installed.**
- **Verify that there are no malfunctions in the sliding mechanism after installing a front seat.**
- **When performing the procedure with a front seat removed from the vehicle, perform the procedure on a clean rag so as not to damage or soil the seat.**

Forward

- When performing an asterisked (*) troubleshooting inspection, shake the wiring harness and connectors while performing the inspection to discover whether poor contact points are the cause of any intermittent malfunction. If there is a problem, inspect to make sure connectors, terminals and wiring harnesses are connected correctly and undamaged.

SEATS

System Diagram

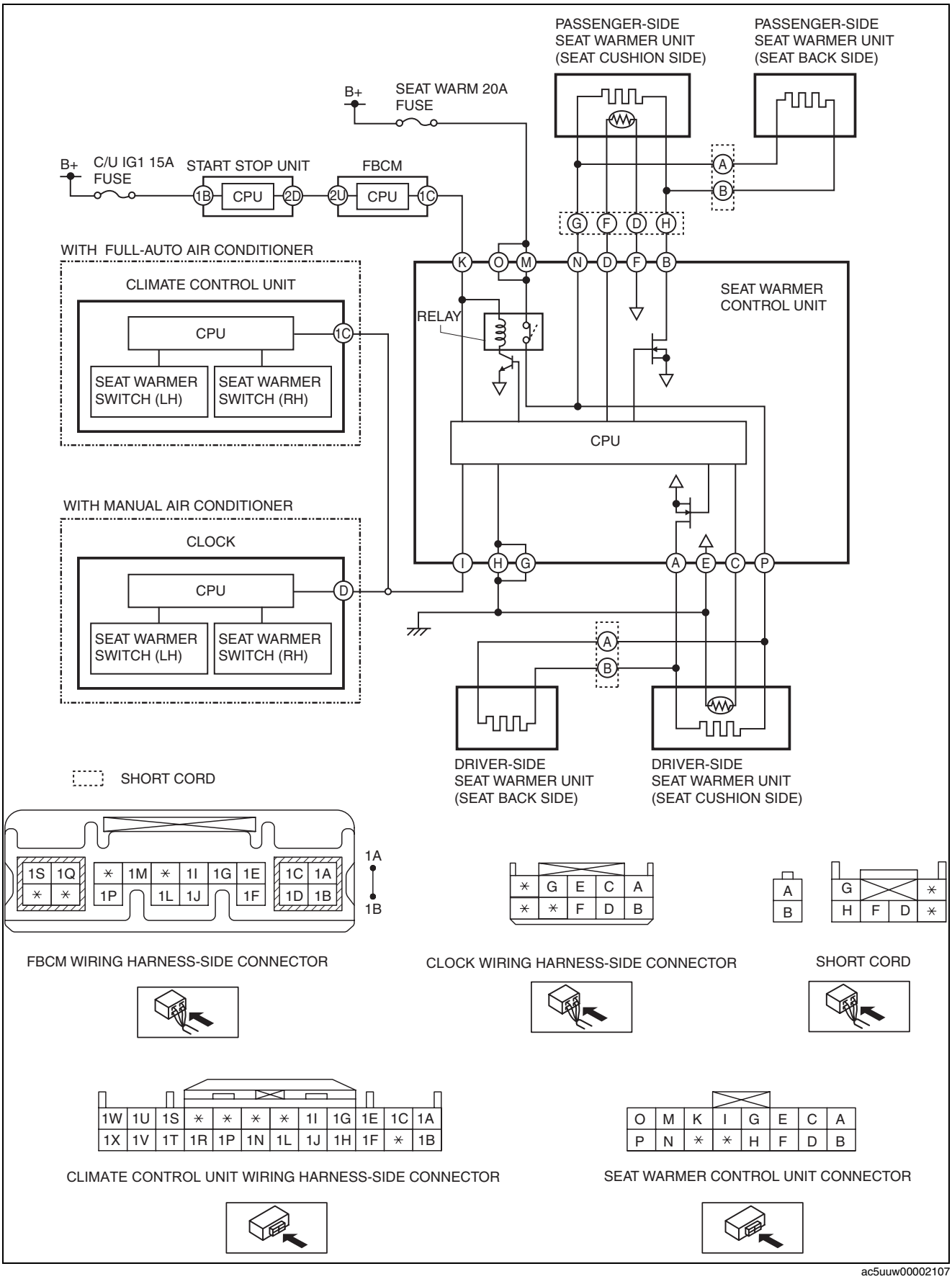

ac5uuw00002107

SEATS

Symptom Trouble Shooting Index

No.	Troubleshooting item	Description
1	Seat warmer function is inoperative (See 09-13-107 Inspection Procedure (No.1 Seat Warmer Function Is Inoperative).)	Seat warmer does not warm seat even though seat warmer switch is on
2	Seat warmer always operations (See 09-13-109 Inspection Procedure (No.2 Seat Warmer Always Operations).)	Seat warmer warms seat even though seat warmer switch is off
3	Temperature of the seat warmer cannot be adjusted (See 09-13-110 Inspection Procedure (No.3 Temperature Of Seat Warmer Cannot Be Adjusted).)	• Seat warmer does not adjust temperature even though seat warmer switch is switched between low and high • Seat warmer temperature continues to rise

Inspection Procedure (No.1 Seat Warmer Function Is Inoperative)

No.1	Seat warmer function is inoperative
DETECTION	Seat warmer does not warm seat even though seat warmer switch is on
POSSIBLE CAUSE	**The power supply is not supplied to filament of seat warmer** • Open circuit in seat warmer control unit power supply circuit: — Seat warmer control unit terminal O—Battery positive terminal — Seat warmer control unit terminal M—Battery positive terminal • SEAT WARM **20 A** fuse malfunction (Blown fuse): — Seat warmer control unit terminal O—Battery positive termina — Seat warmer control unit terminal M—Battery positive termina • Poor connect the connector: — Driver-side seat warmer unit connector—Seat warmer control unit connector — Passenger-side seat warmer unit connector—Seat warmer control unit connector • Open circuit in wiring harness between the following terminal: — Driver-side seat warmer unit terminal P—Driver-side seat warmer unit terminal A — Passenger-side seat warmer unit terminal N—Passenger-side seat warmer unit terminal B **Seat warmer control unit not operation** • Open circuit or short to ground in wiring harness between the following terminal: — FBCM terminal 1C—Seat warmer control unit terminal K — Seat warmer control unit terminal H—Body ground — Seat warmer control unit terminal G—Body ground **Seat warmer unit cannot control filament on** • Seat warmer control malfunction **Seat warmer filament does not generate heat** • Driver-side seat warmer unit (seat cushion side) malfunction • Driver-side seat warmer unit (seat back side) malfunction • Passenger-side seat warmer unit (seat cushion side) malfunction • Passenger-side seat warmer unit (seat back side) malfunction **Seat warmer control unit cannot receive operation signal** • Seat warmer control unit malfunction • Open circuit or short to ground in wiring harness between the following terminal: — Seat warmer control unit terminal I—Climate control unit terminal 1C (with full-auto air conditioner) — Seat warmer control unit terminal I—Clock terminal D (with manual air conditioner)

SEATS

Diagnostic procedure

STEP	INSPECTION		ACTION
1	**PERFORM DTC INSPECTION** • Perform meter and climate control unit DTC inspection. • Verify the meter DTC inspection and clock output check mode. • Are DTCs and error codes output?	Yes	Perform the diagnosis according to the inspection procedure for each code.
		No	Go to the next step.
2	**DETERMINE IF THE MALFUNCTION CAUSE IS THE SEAT WARMER SWITCH** • Select either Low, Mid, or High on the seat warmer switch. • Does the seat warmer switch LED illuminate?	Yes	Go to the next step.
		No	Inspect the climate control unit or clock. (See 07-40A-33 CLIMATE CONTROL UNIT INSPECTION [FULL-AUTO AIR CONDITIONER].) (See 09-22-95 CLOCK INSPECTION.)
3	**DETERMINE MALFUNCTIONING SYSTEM** • Are the seat warmers on both sides not operating?	Yes	Go to step 9.
		No	Go to the next step.
4	**INSPECT THE SEAT WARMER CONTROL UNIT POWER SUPPLY FUSE** • Inspect the SEAT WARM **20 A** fuse. • Is the fuse normal?	Yes	Go to the next step.
		No	• If the fuse is deterioration: — Replace the malfunctioning fuse. • If the fuse is blown Repair the short to ground in wiring harness between the following terminals: — SEAT WARM **20 A** fuse—Seat warmer control unit O — SEAT WARM **20 A** fuse—Seat warmer control unit M
5*	**DETERMINE IF CAUSE OF MALFUNCTION IS CONTROLLER POWER SUPPLY WIRING HARNESS FOR SEAT WARMER OR OTHER CAUSE** • Switch the ignition off (LOCK). • Disconnect the seat warmer control unit connector. • Measure the voltage at the following terminal (wiring harness-side): — Seat warmer control unit terminal M — Seat warmer control unit terminal O • Is the voltage **B+**?	Yes	Go to the next step.
		No	• Repair or replace the open circuit at the following wiring harness. — SEAT WARMER 20 A fuse—Seat warmer control unit
6*	**VERIFY IF MALFUNCTION CAUSE IS OPEN CIRCUIT IN SEAT WARMER CONTROL UNIT POWER SUPPLY WIRING HARNESS** • Seat warmer control unit connector are disconnected. • Switch the ignition off (LOCK). • Measure the voltage at the following terminal (wiring harness-side): — Seat warmer control unit terminal K • Is the voltage **B+**?	Yes	Go to the next step.
		No	• Inspect the FBCM 1C terminal. (See 09-40-3 FRONT BODY CONTROL MODULE (FBCM) INSPECTION.) • Repair or replace the open circuit at the following wiring harness. — FBCM terminal 1C—Seat warmer control unit terminal K
7*	**VERIFY IF MALFUNCTION CAUSE IS SHORT TO GROUND IN SEAT WARMER CONTROL UNIT** • Seat warmer control unit connector on the side that is not operating is disconnected. • Inspect for continuity between the following terminals (wiring harness-side): — Seat warmer control unit terminal on the side that is not operating H—Ground — Seat warmer control unit terminal on the side that is not operating G—Ground • Is there continuity?	Yes	Go to the next step.
		No	• Inspect the open circuit following. — Seat warmer unit terminal H—GND — Seat warmer unit terminal G—GND • Inspect the GND connector terminals for poor connection. • Repair or replace the malfunction.

SEATS

STEP	INSPECTION		ACTION
8*	**VERIFY IF MALFUNCTION CAUSE IS OPEN CIRCUIT IN WIRING HARNESS OF SEAT WARMER SWITCH SIGNAL** • Seat warmer control unit connector is disconnected. • Inspect for continuity between the following terminals (wiring harness-side): **With full-auto air conditioner** — Seat warmer control unit terminal I—Climate control terminal 1C **With manual air conditioner** — Seat warmer control unit terminal I—Clock terminal D • Is there continuity?	Yes	Go to the next step.
		No	• Inspect the open circuit following. — Seat warmer control unit terminal I—Climate control terminal 1C — Seat warmer control unit terminal I—Clock terminal D
9*	**INSPECT SEAT WARMER CONTROL UNIT AND SEAT WARMER UNIT CONNECTOR** • Disconnect the seat warmer control unit and seat warmer unit connector on the side not operating. • Inspect the seat warmer control unit and seat warmer unit connector terminals for poor connection (such as damaged/pulled-out pins, and corrosion). • Is there any malfunction?	Yes	Repair or replace the malfunctions.
		No	Go to the next step.
10*	**VERIFY IF MALFUNCTION CAUSE IS OPEN CIRCUIT IN WIRING HARNESS OF SEAT WARMER UNIT CIRCUIT** • Switch the ignition off (LOCK). • Disconnect the seat warmer control unit connector. • Inspect for continuity between the following terminals (wiring harness-side): — Driver-side seat warmer unit terminal P—A — Passenger-side seat warmer unit terminal N—B • Is there continuity?	Yes	Go to the next step.
		No	Replace the seat warmer unit.
11	**DETERMINE IF THE MALFUNCTION CAUSE IS SEAT WARMER CONTROL UNIT** **With full-auto air conditioner** — Replace the climate control unit. **With manual air conditioner** — Replace the clock. • Does the seat warmer system operate?	Yes	Troubleshooting completed.
		No	Replace the seat warmer control unit.

Inspection Procedure (No.2 Seat Warmer Always Operations)

No.2	Seat warmer always operations
DETECTION	Seat warmer warms seat even though seat warmer switch is off
POSSIBLE CAUSE	**Seat warmer switch is always ON** • Seat warmer switch malfunction **Seat warmer control unit falsely detects seat warmer switch is ON** • Seat warmer control unit malfunction • Short circuit in wiring harness between the following terminal: — Seat warmer control unit terminal I—Climate control unit terminal 1C — Seat warmer control unit terminal I—Clock terminal D

SEATS

Diagnostic procedure

STEP	INSPECTION		ACTION
1*	**DETERMINE IF THE MALFUNCTION CAUSE IS THE SEAT WARMER SWITCH** • Switch the ignition off (LOCK). **With full-auto air conditioner** — Disconnect the climate control unit connector. **With manual air conditioner** — Disconnect the clock connector. • Switch the ignition ON (engine off or on). • Is the seat warmer system operating?	Yes	Go to the next step.
		No	Replace the climate control unit or clock.
2	**DETERMINE IF THE MALFUNCTION CAUSE IS THE SEAT WARMER COTROL UNIT** • Disconnect the seat warmer control unit connector. • Measure the voltage between seat warmer control unit terminal I and body ground. • Is the voltage **1.0 or more**?	Yes	Repair or replace for a short to ground in the wiring harness.
		No	Replace the seat warmer control unit. (See 09-13-104 SEAT WARMER CONTROL UNIT REMOVAL/INSTALLATION.)

Inspection Procedure (No.3 Temperature Of Seat Warmer Cannot Be Adjusted)

No.3	Temperature of seat warmer cannot be adjusted
DETECTION	• Seat warmer does not adjust temperature even though seat warmer Lo/Mid/Hi switch is switched between low and high • Seat warmer temperature continues to rise
POSSIBLE CAUSE	**Seat warmer switch does not Low/Mid/Hi switched** • Seat warmer switch malfunction **Seat warmer control unit falsely detects always seat warmer switch to Low, Mid or Hi** • Seat warmer control unit malfunction • Short to ground in wiring harness between the following terminal: — Seat warmer control unit terminal I—Climate control unit terminal 1C — Seat warmer control unit terminal I—Clock terminal D **Seat warmer control unit cannot control seat warmer unit** • Seat warmer control unit malfunction • Thermostat (Built-in seat warmer unit) malfunction • Short to ground circuit in wiring harness between the following terminal: — Driver-side seat warmer unit—Seat warmer control unit terminal C — Passenger-side seat warmer unit—Seat warmer control unit terminal D

SEATS

Diagnostic procedure

STEP	INSPECTION		ACTION
1	**DETERMINE MALFUNCTIONING SYSTEM** • Are the seat warmers on both sides not operating?	Yes	Replace the seat warmer control unit. (See 09-13-104 SEAT WARMER CONTROL UNIT REMOVAL/INSTALLATION.)
		No	Go to the next step.
2*	**VERIFY IF MALFUNCTION CAUSE IS OPEN CIRCUIT IN WIRING HARNESS OF SEAT WARMER UNIT CIRCUIT** • Switch the ignition off (LOCK). • Disconnect the seat warmer control unit connector. • Inspect for continuity between the following terminals (wiring harness-side): — Driver-side seat warmer unit terminal C—E — Passenger-side seat warmer unit terminal D—F • Is there continuity?	Yes	Go to the next step.
		No	Replace the seat warmer unit.
3*	**VERIFY IF MALFUNCTION CAUSE IS SHORT CIRCUIT IN WIRING HARNESS OF SEAT WARMER UNIT CIRCUIT** • Inspect for continuity between the following terminals (wiring harness-side): — Driver-side seat warmer unit terminal C—Body ground — Passenger-side seat warmer unit terminal D—Body ground • Is there continuity?	Yes	Repair or replace for a short to ground in the wiring harness.
		No	Replace the seat warmer control unit.

SEATS

SEAT WARMER UNIT INSPECTION

id091300801400

Warning

- **Handling a side air bag improperly can accidentally operate (deploy) the air bag, which may seriously injure you. Read the service warnings in the Workshop Manual before handling the front seat (side air bag integrated). (See 08-10-3 AIR BAG SYSTEM SERVICE WARNINGS.) (See 08-10-5 AIR BAG SYSTEM SERVICE CAUTIONS.)**
- **If the sliding mechanisms on both sides are not locked after assembling the front seat, the front seat will operate accidentally while the vehicle is driven, which could result in serious injury. After assembling the front seat, shake it up and down and verify that the sliding mechanism on the both sides are locked.**

Caution

- **If the slide bar is operated after the front seat is removed, the left/right slide positions will deviate and the adjuster unit could be damaged after the front seat is installed. After removing a front seat, do not operate the slider lever.**
- **Verify that there are no malfunctions in the forward/back slide of the seat and in the adjuster unit after installing a front seat.**
- **When performing the procedure with a front seat removed from the vehicle, perform the procedure on a clean cloth so as not to damage or soil the seat.**

Driver-Side
Seat cushion side

1. Switch the ignition to off.
2. Disconnect the negative battery cable and wait **1 min. or more**. (See 01-17A-11 NEGATIVE BATTERY CABLE DISCONNECTION/CONNECTION [SKYACTIV-G 2.0].) (See 01-17A-13 NEGATIVE BATTERY CABLE DISCONNECTION/CONNECTION [SKYACTIV-G 2.0 (WITHOUT i-stop)].) (See 01-17B-9 NEGATIVE BATTERY CABLE DISCONNECTION/CONNECTION [SKYACTIV-D 2.2].)
3. Remove the front seat. (See 09-13-4 FRONT SEAT REMOVAL/INSTALLATION.)
4. Inspect for continuity between the seat warmer unit connector terminal 5C—5D.

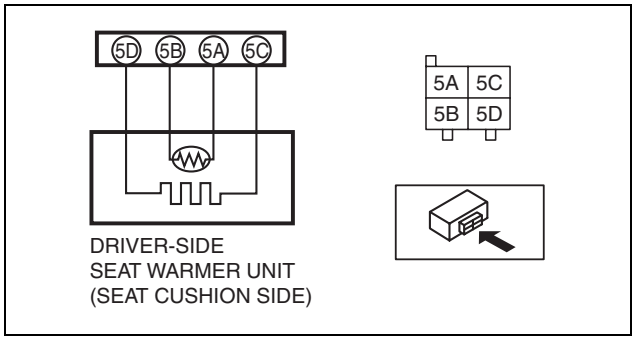

DRIVER-SIDE
SEAT WARMER UNIT
(SEAT CUSHION SIDE)

ac5uuw00002128

- If not as specified, replace the front seat cushion pad. (See 09-13-26 FRONT SEAT CUSHION TRIM REMOVAL/INSTALLATION.)

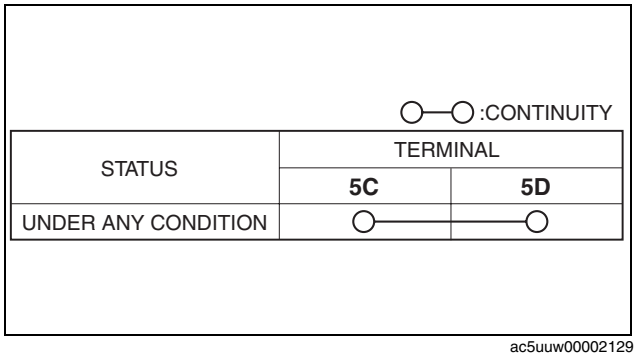

ac5uuw00002129

SEATS

5. Measure the temperature around the thermostat.

   Note
   - To make the temperature around the thermostat at the normal temperature, the seat warmer is left for 30 minutes or more while turned off.

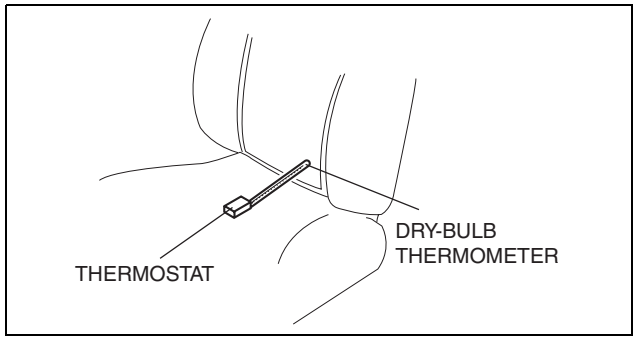

am6zzw0000756

6. Measure the resistance between the seat warmer unit connector terminal 5A—5B, records with the surrounding temperature of the thermostat measured beforehand.
7. Connect the negative battery cable.
8. Connect the seat warmer unit connector.
9. Switch the seat warmer switch to Lo position, and warm the seat warmer.
10. Measure the resistance between the seat warmer unit connector terminal 5A—5B, and record it.
11. Switch the seat warmer switch to High position, and warm the seat warmer.
12. Measure the resistance between the seat warmer unit connector terminal 5A—5B, it is confirmed that there is a change from the resistance recorded beforehand.
    - If the change in resistance cannot be confirmed, replace the front seat cushion pad. (See 09-13-26 FRONT SEAT CUSHION TRIM REMOVAL/INSTALLATION.)

SEATS

Seat back side

1. Switch the ignition to off.
2. Disconnect the negative battery cable and wait **1 min. or more**. (See 01-17A-11 NEGATIVE BATTERY CABLE DISCONNECTION/CONNECTION [SKYACTIV-G 2.0].) (See 01-17A-13 NEGATIVE BATTERY CABLE DISCONNECTION/CONNECTION [SKYACTIV-G 2.0 (WITHOUT i-stop)].) (See 01-17B-9 NEGATIVE BATTERY CABLE DISCONNECTION/CONNECTION [SKYACTIV-D 2.2].)
3. Remove the front seat. (See 09-13-4 FRONT SEAT REMOVAL/INSTALLATION.)
4. Inspect for continuity between the seat warmer unit connector (short code) terminal A—B.

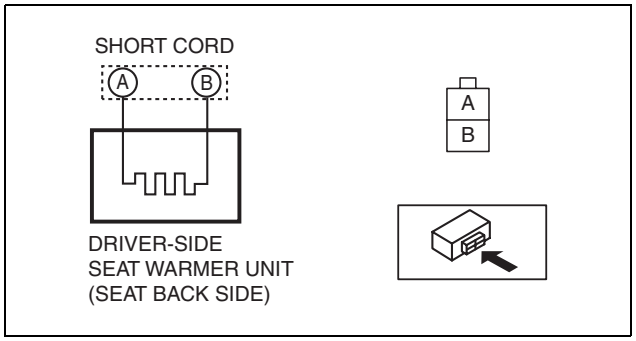

ac5uuw00002130

- If not as specified, replace the front seat back pad. (See 09-13-11 FRONT SEAT BACK TRIM REMOVAL/INSTALLATION.)

:CONTINUITY

STATUS	TERMINAL	
	A	B
UNDER ANY CONDITION	○——	——○

am6zw0000756

SEATS

Passenger-Side
Seat cushion side

1. Switch the ignition to off.
2. Disconnect the negative battery cable and wait **1 min. or more**. (See 01-17A-11 NEGATIVE BATTERY CABLE DISCONNECTION/CONNECTION [SKYACTIV-G 2.0].) (See 01-17A-13 NEGATIVE BATTERY CABLE DISCONNECTION/CONNECTION [SKYACTIV-G 2.0 (WITHOUT i-stop)].) (See 01-17B-9 NEGATIVE BATTERY CABLE DISCONNECTION/CONNECTION [SKYACTIV-D 2.2].)
3. Remove the front seat. (See 09-13-4 FRONT SEAT REMOVAL/INSTALLATION.)
4. Inspect for continuity between the seat warmer unit connector (short code) terminal G—H.

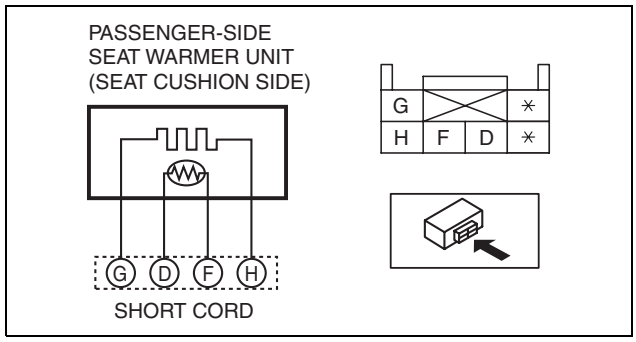

ac5uuw00002131

- If not as specified, replace the front seat cushion pad. (See 09-13-26 FRONT SEAT CUSHION TRIM REMOVAL/INSTALLATION.)

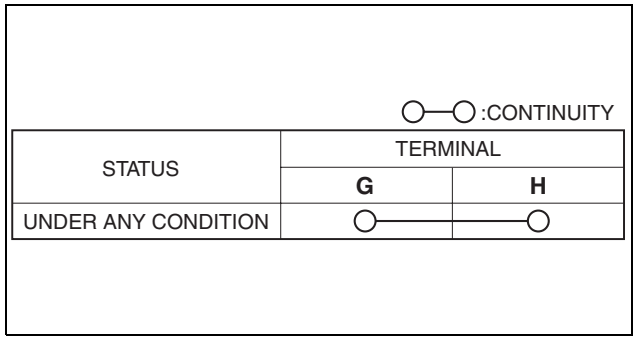

STATUS	TERMINAL	
	G	H
UNDER ANY CONDITION	○	○

ac5uuw00002132

5. Measure the temperature around the thermostat.

Note
- To make the temperature around the thermostat at the normal temperature, the seat warmer is left for 30 minutes or more while turned off.

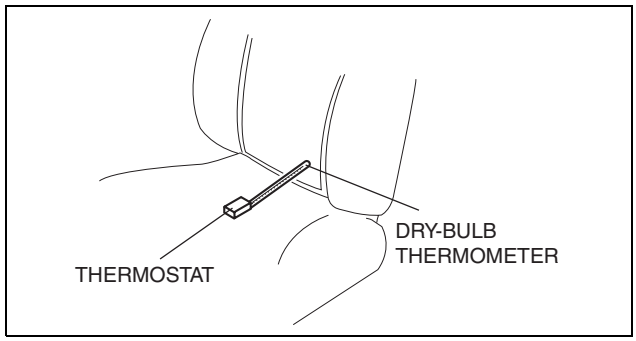

am6xw0000756

6. Measure the resistance between the seat warmer unit connector terminal D—F, records with the surrounding temperature of the thermostat measured beforehand.
7. Connect the negative battery cable.
8. Connect the seat warmer unit connector.
9. Switch the seat warmer switch to Lo position, and warm the seat warmer.
10. Measure the resistance between the seat warmer unit connector terminal D—F, and record it.
11. Switch the seat warmer switch to High position, and warm the seat warmer.
12. Measure the resistance between the seat warmer unit connector terminal D—F, it is confirmed that there is a change from the resistance recorded beforehand.
    - If the change in resistance cannot be confirmed, replace the front seat cushion pad. (See 09-13-26 FRONT SEAT CUSHION TRIM REMOVAL/INSTALLATION.)

SEATS

Seat back side

1. Switch the ignition to off.
2. Disconnect the negative battery cable and wait **1 min. or more**. (See 01-17A-11 NEGATIVE BATTERY CABLE DISCONNECTION/CONNECTION [SKYACTIV-G 2.0].) (See 01-17A-13 NEGATIVE BATTERY CABLE DISCONNECTION/CONNECTION [SKYACTIV-G 2.0 (WITHOUT i-stop)].) (See 01-17B-9 NEGATIVE BATTERY CABLE DISCONNECTION/CONNECTION [SKYACTIV-D 2.2].)
3. Remove the front seat. (See 09-13-4 FRONT SEAT REMOVAL/INSTALLATION.)
4. Inspect for continuity between the seat warmer unit connector (short code) terminal A—B.

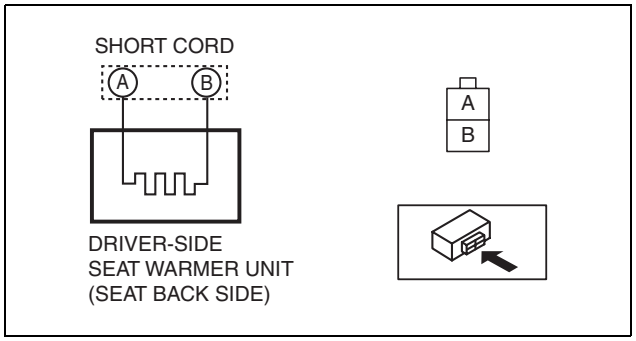

ac5uuw00002130

- If not as specified, replace the front seat back pad. (See 09-13-11 FRONT SEAT BACK TRIM REMOVAL/INSTALLATION.)

:CONTINUITY

STATUS	TERMINAL	
	A	B
UNDER ANY CONDITION	○——	——○

am6zw0000756

09-14 SECURITY AND LOCKS

SECURITY AND LOCKS
LOCATION INDEX. 09-14–3
Locks and Openers 09-14–3
Advanced Keyless Entry System / Push Button Start System / Immobilizer System 09-14–5
Keyless entry system / Push Button Start System / immobilizer system. . . 09-14–6
Theft-deterrent System 09-14–7
FRONT OUTER HANDLE REMOVAL/INSTALLATION. 09-14–8
Front Outer Handle Bracket Installation Note 09-14–11
REAR OUTER HANDLE REMOVAL/INSTALLATION. 09-14–11
Rear Outer Handle Bracket Installation Note 09-14–15
INNER HANDLE REMOVAL/INSTALLATION. 09-14–15
Front Inner Handle 09-14–15
Rear Inner Handle 09-14–15
DOOR LOCK SWITCH REMOVAL/INSTALLATION. 09-14–16
DOOR LOCK SWITCH INSPECTION. . . 09-14–16
BONNET LATCH AND RELEASE LEVER REMOVAL/INSTALLATION . . . 09-14–16
Bonnet Latch 09-14–16
Bonnet Release Lever 09-14–18
BONNET RELEASE CABLE REMOVAL/INSTALLATION. 09-14–19
BONNET LATCH SWITCH INSPECTION. 09-14–20
FUEL-FILLER LID OPENER AND LEVER REMOVAL/INSTALLATION . . . 09-14–20
Fuel-filler Lid Opener 09-14–20
Fuel-filler Lid Opener Lever 09-14–22
FUEL-FILLER LID OPENER CABLE REMOVAL/INSTALLATION. 09-14–23
L.H.D. 09-14–23
R.H.D. 09-14–26
FRONT DOOR KEY CYLINDER REMOVAL/INSTALLATION. 09-14–30
FRONT DOOR KEY CYLINDER SWITCH INSPECTION 09-14–32
Front Door Key Cylinder Switch Lock-Side Inspection 09-14–32
Front Door Key Cylinder Switch Unlock-Side Inspection 09-14–34
FRONT DOOR LATCH AND LOCK ACTUATOR REMOVAL/INSTALLATION. 09-14–35
FRONT DOOR LATCH AND LOCK ACTUATOR INSPECTION 09-14–37
FRONT DOOR LOCK ACTUATOR INSPECTION. 09-14–38
FRONT DOOR LATCH SWITCH INSPECTION 09-14–40
DOOR LOCK-LINK SWITCH INSPECTION 09-14–40
Front Door Lock-link Inspection 09-14–40
Rear Door Lock-link Inspection 09-14–41
DOOR LOCK STRIKER REMOVAL/INSTALLATION. 09-14–42
REAR DOOR LATCH AND LOCK ACTUATOR REMOVAL/INSTALLATION 09-14–42
REAR DOOR LATCH AND LOCK ACTUATOR INSPECTION. 09-14–44
REAR DOOR LOCK ACTUATOR INSPECTION 09-14–45
REAR DOOR LATCH SWITCH INSPECTION. 09-14–46
DOOR LOCK SYSTEM OPERATION RECORD. 09-14–48
LIFTGATE LATCH AND LOCK ACTUATOR REMOVAL/INSTALLATION 09-14–48
LIFTGATE LATCH AND LOCK ACTUATOR INSPECTION. 09-14–49
LIFTGATE LOCK ACTUATOR INSPECTION 09-14–49
LIFTGATE LATCH SWITCH INSPECTION 09-14–50
LIFTGATE LOCK STRIKER REMOVAL/INSTALLATION 09-14–51
LIFTGATE OPENER SWITCH REMOVAL/INSTALLATION 09-14–52
LIFTGATE OPENER SWITCH INSPECTION 09-14–52
START STOP UNIT REMOVAL/INSTALLATION 09-14–53
Start Stop Unit Installation Note 09-14–55
START STOP UNIT INSPECTION 09-14–55
Terminal Voltage Table (Reference) . . . 09-14–56
START STOP UNIT CONFIGURATION (USING READ/WRITE FUNCTION). . . . 09-14–58
START STOP UNIT CONFIGURATION (USING AS-BUILT DATA). 09-14–59
LF CONTROL UNIT REMOVAL/INSTALLATION 09-14–59
LF CONTROL UNIT INSPECTION. 09-14–60
Terminal Voltage Table (Reference) . . . 09-14–61
Inspection Using an Oscilloscope (Reference) 09-14–62
SECURITY AND LOCKS PERSONALIZATION FEATURES SETTING PROCEDURE. 09-14–62
Advanced Keyless Entry System 09-14–62
Keyless Entry System 09-14–63
Power Door Lock System 09-14–64
REQUEST SWITCH REMOVAL/INSTALLATION 09-14–64
Driver's Door/Passenger's Door 09-14–64
Liftgate 09-14–64
REQUEST SWITCH INSPECTION. 09-14–65
Driver's Door/Passenger's Door 09-14–65
Liftgate 09-14–65
KEYLESS ANTENNA REMOVAL/INSTALLATION 09-14–66
With Advanced Keyless Entry System. 09-14–66
With Keyless Entry System 09-14–71
KEYLESS BEEPER REMOVAL/INSTALLATION 09-14–72
KEYLESS BEEPER INSPECTION. 09-14–73

SECURITY AND LOCKS

KEYLESS RECEIVER REMOVAL/INSTALLATION **09-14–73**
KEYLESS RECEIVER INSPECTION . . . **09-14–74**
Terminal Voltage Table (Reference) **09-14–74**
REMOTE TRANSMITTER DISASSEMBLY/ASSEMBLY **09-14–75**
Disassembly **09-14–75**
Assembly **09-14–76**
REMOTE TRANSMITTER ID CODE REGISTRATION **09-14–77**
CLEARING REMOTE TRANSMITTER **09-14–77**
REMOTE TRANSMITTER BATTERY VOLTAGE INSPECTION **09-14–77**
Operation procedure for remote transmitter battery low warning **09-14–77**
IMMOBILIZER SYSTEM-RELATED PARTS PROGRAMMING **09-14–77**
Foreword **09-14–77**
Selection of Procedure for Immobilizer System-Related Parts Programming **09-14–78**
M-MDS Connecting Procedure **09-14–78**
Procedure for communication between coil antenna and remote transmitter **09-14–79**
No.1 Additional Remote Transmitter Programming Procedure (Using the M-MDS) **09-14–79**
No.2 Programming Procedure After PCM Replacement **09-14–80**
No.3 Start stop unit replacement and programming procedure due to simultaneous replacement of start stop unit/PCM **09-14–82**
No.4 Remote transmitter replacement or remote transmitter clearing **09-14–84**
THEFT-DETERRENT SIREN REMOVAL/INSTALLATION **09-14–86**
THEFT-DETERRENT SIREN INSPECTION **09-14–88**
Terminal Voltage Table (Reference) . . . **09-14–89**
Continuity Inspection Of Short Wiring Harness Connector **09-14–89**
INTRUDER SENSOR REMOVAL/INSTALLATION **09-14–90**
INTRUDER SENSOR INSPECTION **09-14–91**
Terminal Voltage Table (Reference) . . . **09-14–91**
Continuity Inspection Of Short Wiring Harness Connector **09-14–92**
THEFT-DETERRENT HORN REMOVAL/INSTALLATION **09-14–92**
THEFT-DETERRENT HORN INSPECTION **09-14–93**
THEFT-DETERRENT SYSTEM OPERATION RECORD **09-14–93**

SECURITY AND LOCKS

SECURITY AND LOCKS LOCATION INDEX

id091400510000

Locks and Openers

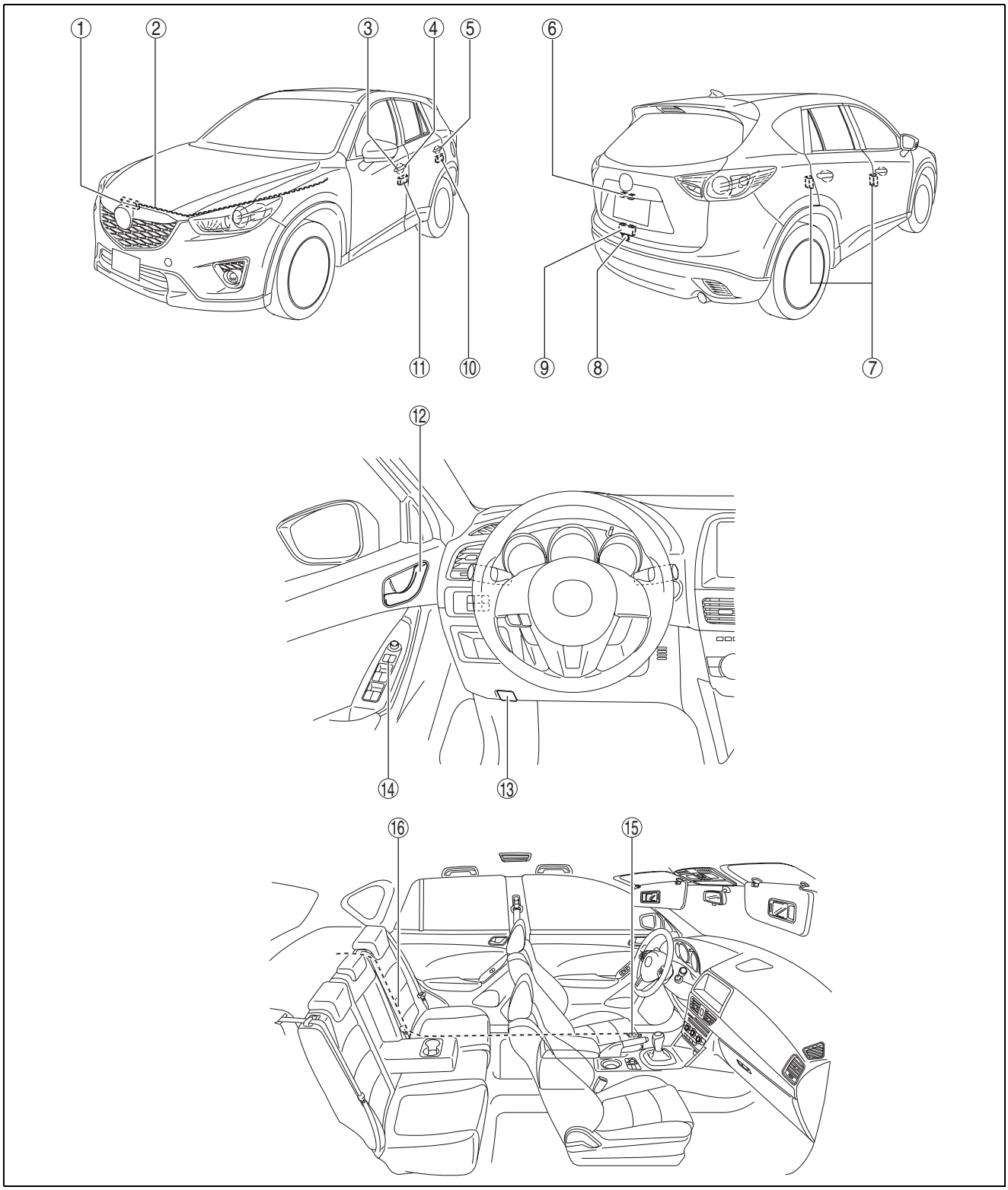

ac5jjw00000445

1	Bonnet latch (See 09-14-16 BONNET LATCH AND RELEASE LEVER REMOVAL/ INSTALLATION.)
2	Bonnet release cable (See 09-14-19 BONNET RELEASE CABLE REMOVAL/INSTALLATION.)

3	Front outer handle (See 09-14-8 FRONT OUTER HANDLE REMOVAL/INSTALLATION.)

SECURITY AND LOCKS

4	Front door key cylinder (See 09-14-30 FRONT DOOR KEY CYLINDER REMOVAL/INSTALLATION.) (See 09-14-32 FRONT DOOR KEY CYLINDER SWITCH INSPECTION.)
5	Rear outer handle (See 09-14-11 REAR OUTER HANDLE REMOVAL/INSTALLATION.)
6	Liftgate opener switch (See 09-14-52 LIFTGATE OPENER SWITCH REMOVAL/INSTALLATION.) (See 09-14-52 LIFTGATE OPENER SWITCH INSPECTION.)
7	Door lock striker (See 09-14-42 DOOR LOCK STRIKER REMOVAL/INSTALLATION.)
8	Liftgate lock striker (See 09-14-51 LIFTGATE LOCK STRIKER REMOVAL/INSTALLATION.)
9	Liftgate latch and lock actuator (See 09-14-48 LIFTGATE LATCH AND LOCK ACTUATOR REMOVAL/INSTALLATION.) (See 09-14-49 LIFTGATE LATCH AND LOCK ACTUATOR INSPECTION.) (See 09-14-49 LIFTGATE LOCK ACTUATOR INSPECTION.)
10	Rear door latch and lock actuator (See 09-14-42 REAR DOOR LATCH AND LOCK ACTUATOR REMOVAL/INSTALLATION.) (See 09-14-44 REAR DOOR LATCH AND LOCK ACTUATOR INSPECTION.) (See 09-14-45 REAR DOOR LOCK ACTUATOR INSPECTION.) (See 09-14-46 REAR DOOR LATCH SWITCH INSPECTION.) (See 09-14-40 DOOR LOCK-LINK SWITCH INSPECTION.)
11	Front door latch and lock actuator (See 09-14-35 FRONT DOOR LATCH AND LOCK ACTUATOR REMOVAL/INSTALLATION.) (See 09-14-37 FRONT DOOR LATCH AND LOCK ACTUATOR INSPECTION.) (See 09-14-38 FRONT DOOR LOCK ACTUATOR INSPECTION.) (See 09-14-46 REAR DOOR LATCH SWITCH INSPECTION.) (See 09-14-40 DOOR LOCK-LINK SWITCH INSPECTION.)
12	Inner handle (See 09-14-15 INNER HANDLE REMOVAL/INSTALLATION.)
13	Bonnet release lever (See 09-14-16 BONNET LATCH AND RELEASE LEVER REMOVAL/INSTALLATION.)
14	Door lock switch (With door lock switch) (See 09-14-16 DOOR LOCK SWITCH REMOVAL/INSTALLATION.) (See 09-14-16 DOOR LOCK SWITCH INSPECTION.)
15	Fuel-filler lid opener lever (See 09-14-20 FUEL-FILLER LID OPENER AND LEVER REMOVAL/INSTALLATION.)
16	Fuel-filler lid opener cable (See 09-14-23 FUEL-FILLER LID OPENER CABLE REMOVAL/INSTALLATION.)

SECURITY AND LOCKS

Advanced Keyless Entry System / Push Button Start System / Immobilizer System

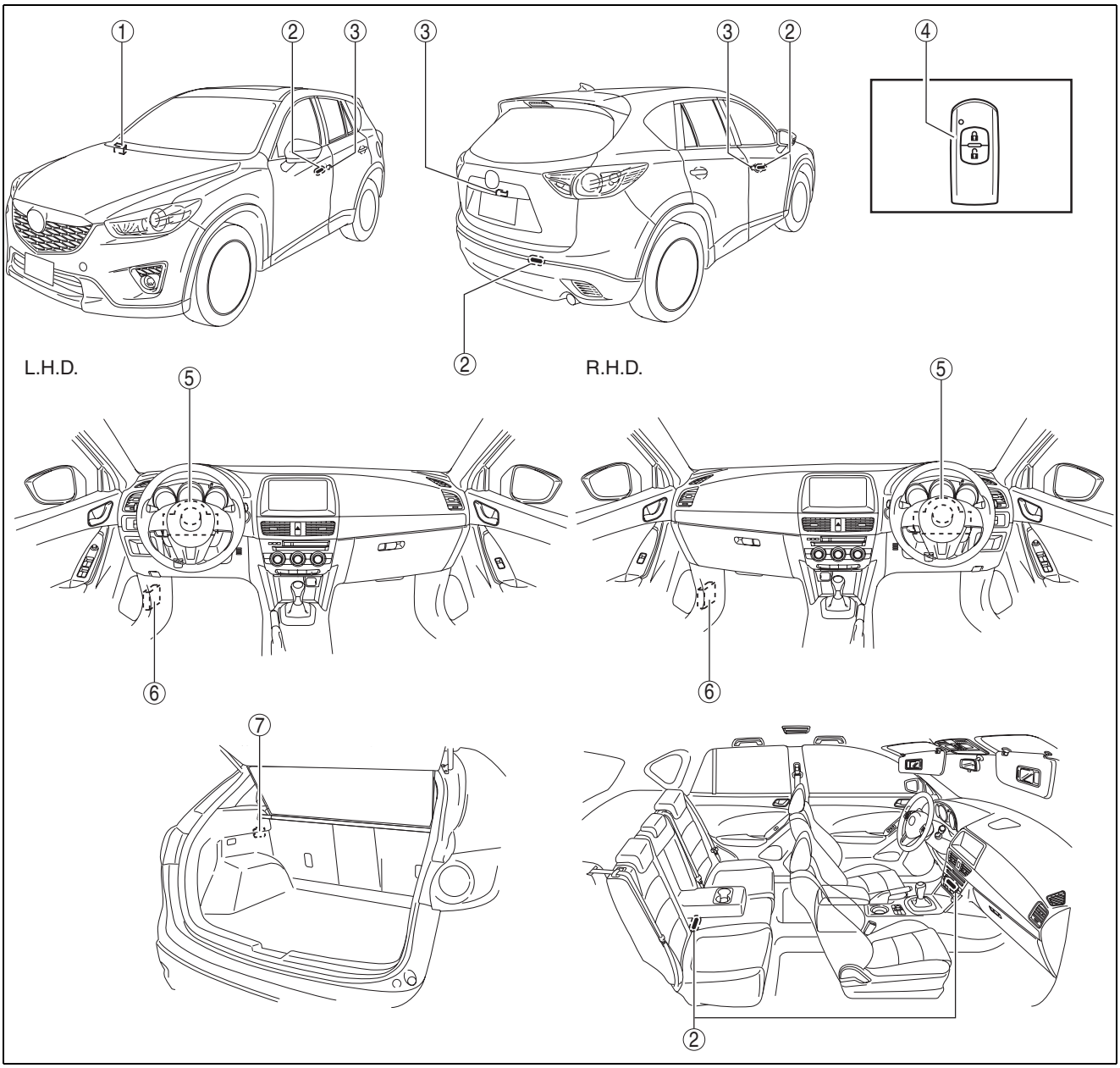

ac5wzw0000000

1	Keyless beeper (See 09-14-72 KEYLESS BEEPER REMOVAL/INSTALLATION.) (See 09-14-73 KEYLESS BEEPER INSPECTION.)
2	Keyless antenna (See 09-14-66 KEYLESS ANTENNA REMOVAL/INSTALLATION.)
3	Request switch (See 09-14-64 REQUEST SWITCH REMOVAL/INSTALLATION.) (See 09-14-65 REQUEST SWITCH INSPECTION.)

4	Remote transmitter (See 09-14-75 REMOTE TRANSMITTER DISASSEMBLY/ASSEMBLY.) (See 09-14-77 REMOTE TRANSMITTER ID CODE REGISTRATION.) (See 09-14-77 CLEARING REMOTE TRANSMITTER.) (See 09-14-77 REMOTE TRANSMITTER BATTERY VOLTAGE INSPECTION.)

SECURITY AND LOCKS

5	Start stop unit (See 09-14-53 START STOP UNIT REMOVAL/INSTALLATION.) (See 09-14-55 START STOP UNIT INSPECTION.) (See 09-14-58 START STOP UNIT CONFIGURATION (USING READ/WRITE FUNCTION).) (See 09-14-59 START STOP UNIT CONFIGURATION (USING AS-BUILT DATA).) (See 09-14-62 SECURITY AND LOCKS PERSONALIZATION FEATURES SETTING PROCEDURE.)
6	LF control unit (See 09-14-59 LF CONTROL UNIT REMOVAL/INSTALLATION.) (See 09-14-60 LF CONTROL UNIT INSPECTION.)
7	Keyless receiver (See 09-14-73 KEYLESS RECEIVER REMOVAL/INSTALLATION.) (See 09-14-74 KEYLESS RECEIVER INSPECTION.)

Keyless entry system / Push Button Start System / immobilizer system

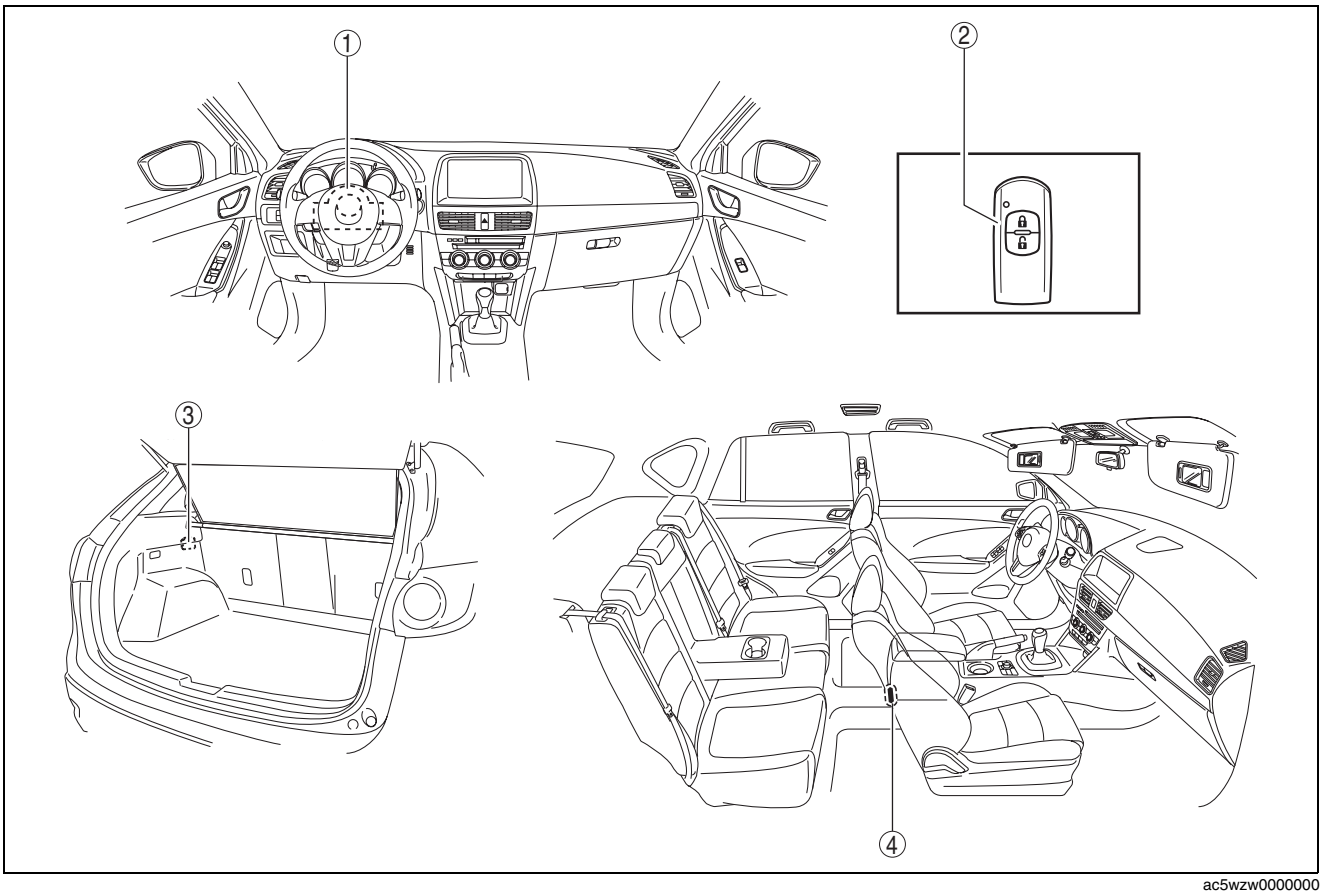

ac5wzw0000000

SECURITY AND LOCKS

1	Start stop unit (See 09-14-53 START STOP UNIT REMOVAL/INSTALLATION.) (See 09-14-55 START STOP UNIT INSPECTION.) (See 09-14-58 START STOP UNIT CONFIGURATION (USING READ/WRITE FUNCTION).) (See 09-14-59 START STOP UNIT CONFIGURATION (USING AS-BUILT DATA).) (See 09-14-62 SECURITY AND LOCKS PERSONALIZATION FEATURES SETTING PROCEDURE.)
2	Remote transmitter (See 09-14-75 REMOTE TRANSMITTER DISASSEMBLY/ASSEMBLY.) (See 09-14-77 REMOTE TRANSMITTER ID CODE REGISTRATION.) (See 09-14-77 CLEARING REMOTE TRANSMITTER.) (See 09-14-77 REMOTE TRANSMITTER BATTERY VOLTAGE INSPECTION.)
3	Keyless receiver (See 09-14-73 KEYLESS RECEIVER REMOVAL/INSTALLATION.) (See 09-14-74 KEYLESS RECEIVER INSPECTION.)
4	Keyless antenna (See 09-14-66 KEYLESS ANTENNA REMOVAL/INSTALLATION.)

Theft-deterrent System
With intruder sensor

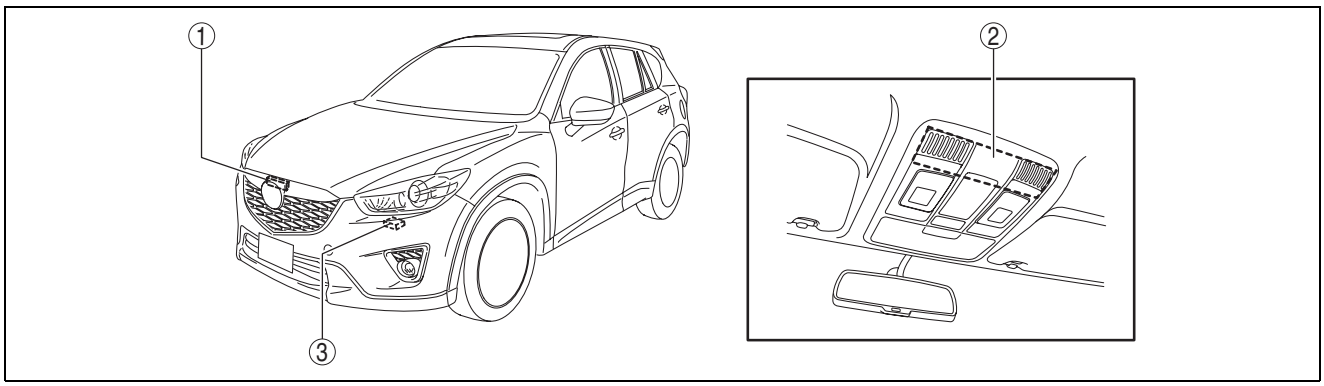

ac5wzw0000247

1	Bonnet latch switch (See 09-14-20 BONNET LATCH SWITCH INSPECTION.)
2	Intruder sensor (See 09-14-90 INTRUDER SENSOR REMOVAL/INSTALLATION.) (See 09-14-91 INTRUDER SENSOR INSPECTION.)
3	Theft-deterrent siren (See 09-14-86 THEFT-DETERRENT SIREN REMOVAL/INSTALLATION.) (See 09-14-88 THEFT-DETERRENT SIREN INSPECTION.)

SECURITY AND LOCKS

Without intruder sensor

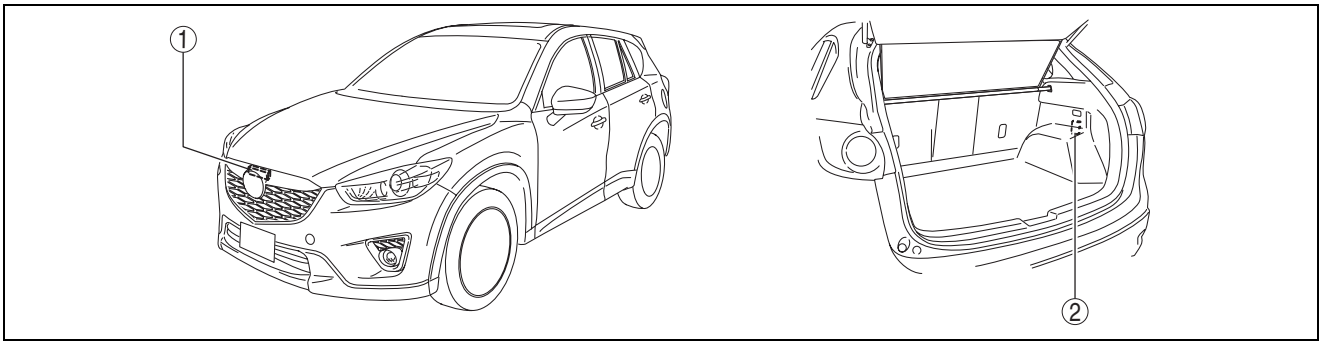

ac5wzw0000247

1	Bonnet latch switch (See 09-14-20 BONNET LATCH SWITCH INSPECTION.)
2	Theft-deterrent horn (See 09-14-92 THEFT-DETERRENT HORN REMOVAL/INSTALLATION.) (See 09-14-93 THEFT-DETERRENT HORN INSPECTION.)

FRONT OUTER HANDLE REMOVAL/INSTALLATION

id091400510100

1. Perform the front door glass preparation. (See 09-12-4 FRONT DOOR GLASS REMOVAL/INSTALLATION.)
2. Disconnect the negative battery cable. (See 01-17A-11 NEGATIVE BATTERY CABLE DISCONNECTION/CONNECTION [SKYACTIV-G 2.0].) (See 01-17A-13 NEGATIVE BATTERY CABLE DISCONNECTION/CONNECTION [SKYACTIV-G 2.0 (WITHOUT i-stop)].) (See 01-17B-9 NEGATIVE BATTERY CABLE DISCONNECTION/CONNECTION [SKYACTIV-D 2.2].)
3. Remove the following parts:
   (1) Inner garnish (See 09-17-65 INNER GARNISH REMOVAL/INSTALLATION.)
   (2) Front door trim (See 09-17-65 FRONT DOOR TRIM REMOVAL/INSTALLATION.)
   (3) Front door glass (See 09-12-4 FRONT DOOR GLASS REMOVAL/INSTALLATION.)
   (4) Front door module panel (See 09-11-6 FRONT DOOR MODULE PANEL REMOVAL/INSTALLATION.)
   (5) Front door key cylinder (See 09-14-30 FRONT DOOR KEY CYLINDER REMOVAL/INSTALLATION.)
4. Disconnect the keyless antenna connector (With advanced keyless entry system).

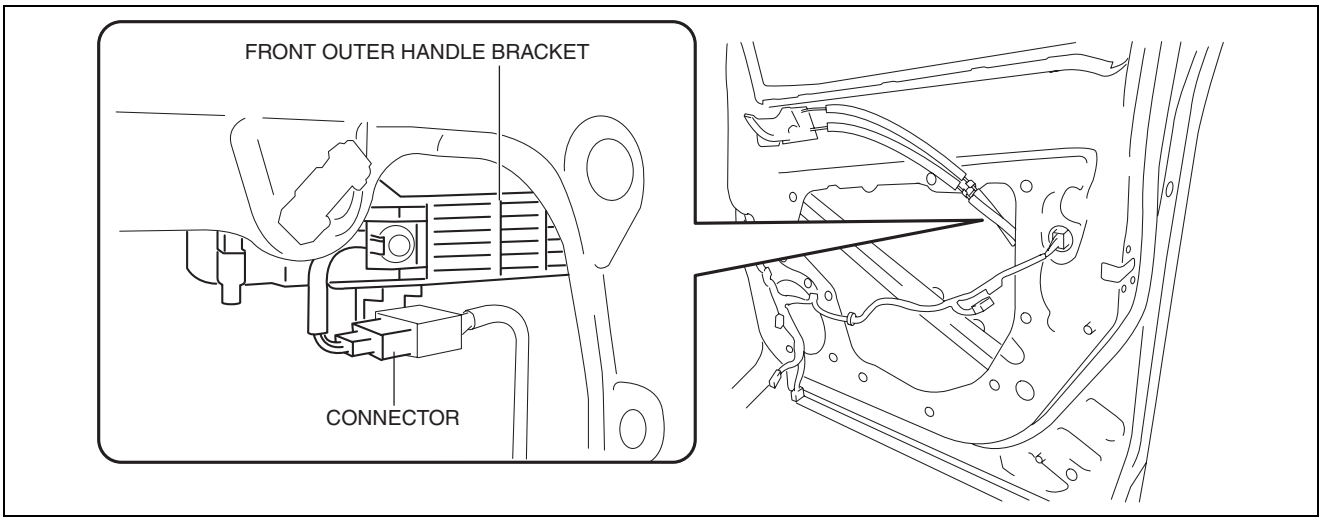

ac5wzw0000095

SECURITY AND LOCKS

5. While pulling the front outer handle bracket pin in the direction of arrow (1) shown in the figure, pull the front outer handle in the direction of arrow (2) to detach the front outer handle bracket pin and the front outer handle.

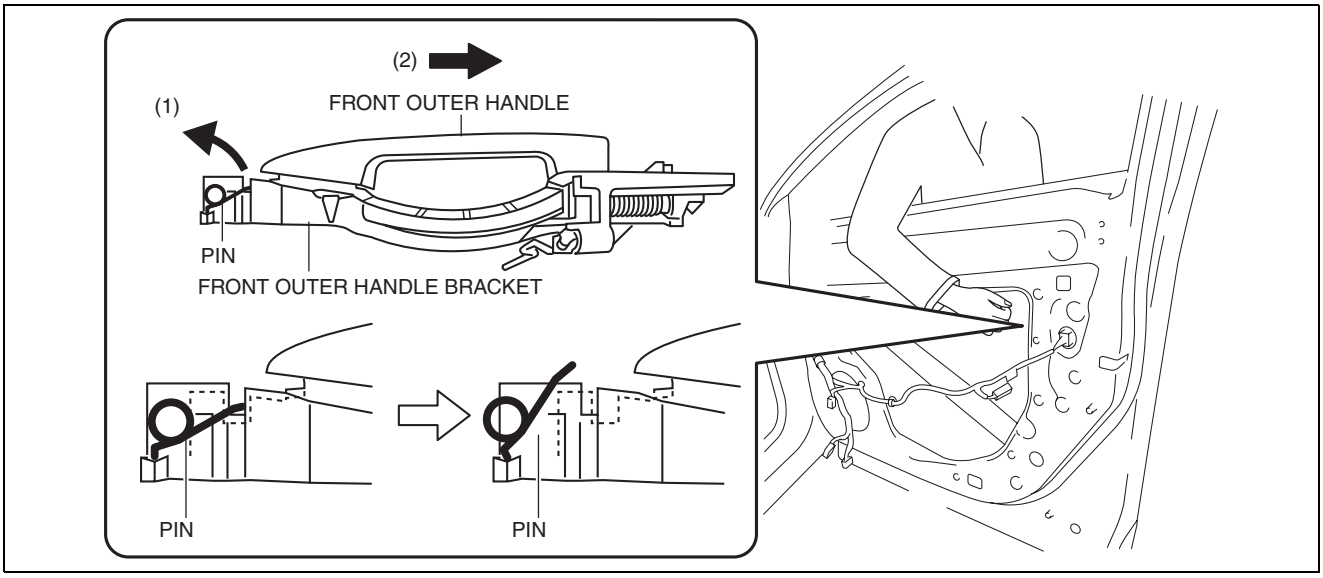

ac5wzw0000095

6. Remove the front outer handle in the direction of the arrow shown in the figure.
7. Loosen the screw securing the front outer handle bracket.

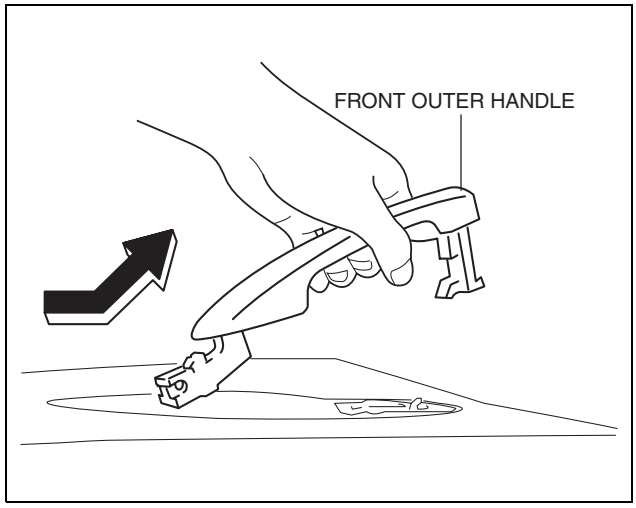

ac5wzw0000095

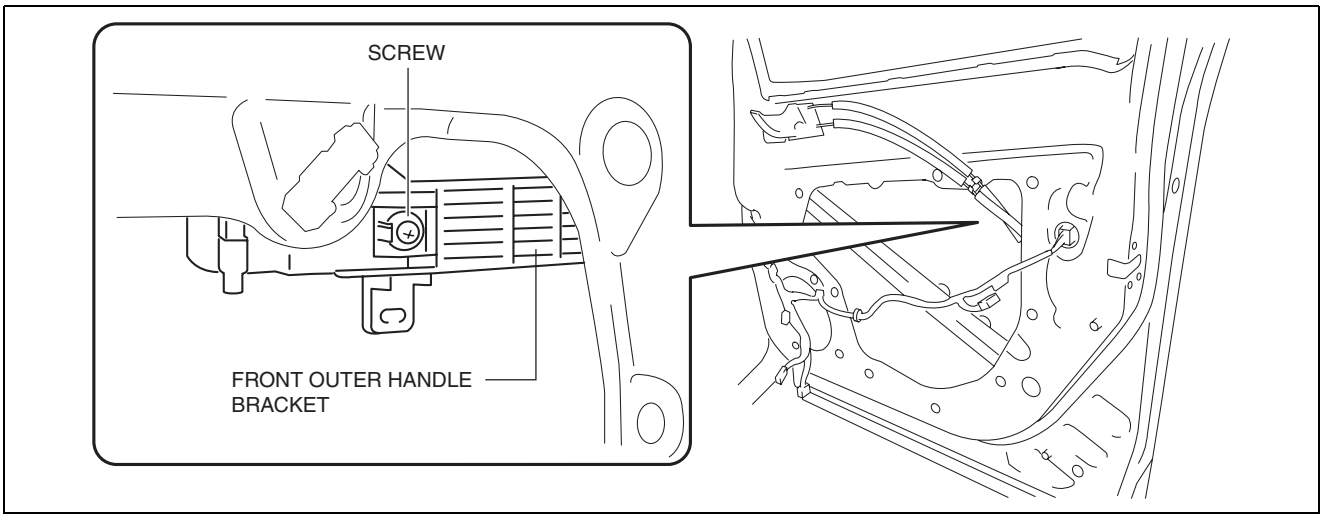

ac5wzw0000095

Note

- The screw cannot be removed because the front outer handle bracket has a stopper which prevents the screw from falling.

SECURITY AND LOCKS

8. Pull the front outer handle bracket in the direction of arrow (1) shown in the figure and detach the front outer handle bracket hooks from the body.
9. Lift the front outer handle bracket in the direction of arrow (2) shown in the figure to pull the rod out of the rod holder. (See 09-14-11 Front Outer Handle Bracket Installation Note.)

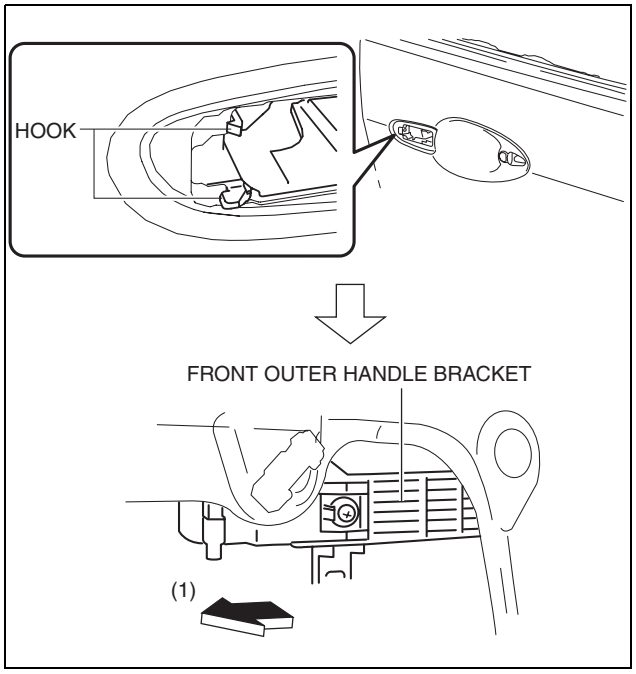

ac5wzw0000096

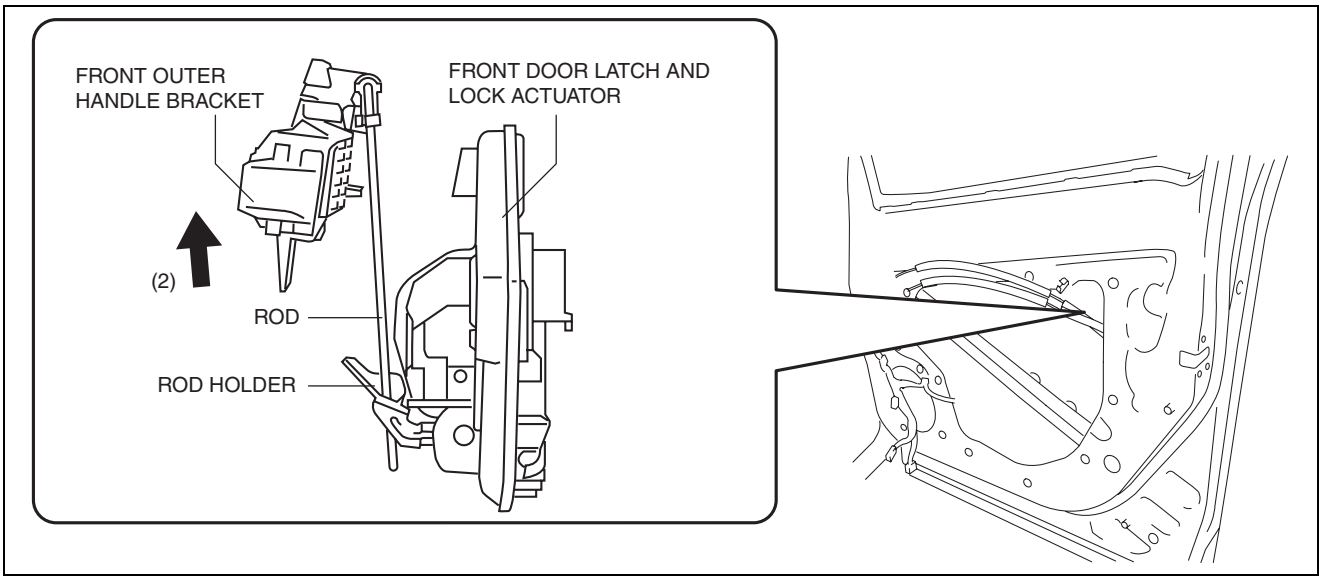

ac5wzw0000318

10. Remove the front outer handle bracket.
11. Remove the handle seat from the body.
12. Install in the reverse order of removal.

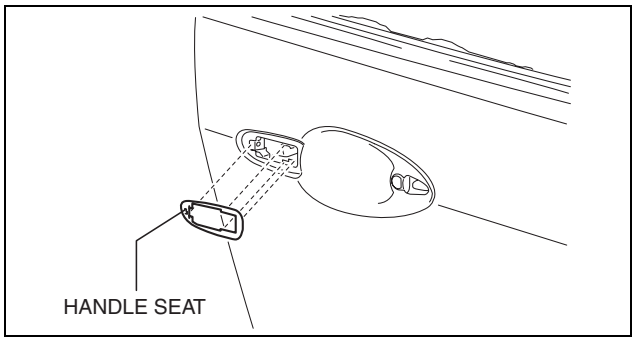

ac5wzw0000274

SECURITY AND LOCKS

Front Outer Handle Bracket Installation Note

- To assure that the rod is inserted into the rod holder hole, verify that the there is no excessive play.

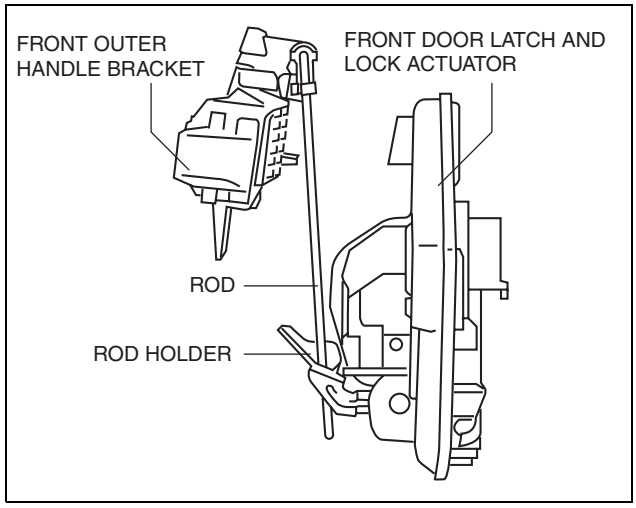

ac5wzw0000275

REAR OUTER HANDLE REMOVAL/INSTALLATION

id091400510200

1. To provide enough work space when removing the rear outer handle, open the rear door glass completely.
2. Disconnect the negative battery cable. (See 01-17A-11 NEGATIVE BATTERY CABLE DISCONNECTION/CONNECTION [SKYACTIV-G 2.0].) (See 01-17A-13 NEGATIVE BATTERY CABLE DISCONNECTION/CONNECTION [SKYACTIV-G 2.0 (WITHOUT i-stop)].) (See 01-17B-9 NEGATIVE BATTERY CABLE DISCONNECTION/CONNECTION [SKYACTIV-D 2.2].)
3. Remove the rear door trim. (See 09-17-74 REAR DOOR TRIM REMOVAL/INSTALLATION.)
4. Remove service hole cover No. 1 in the direction of the arrow shown in the figure.

Caution

- **When removing service hole cover No.1, remove it while gradually stripping the butyl rubber. Otherwise service hole cover No.1 may be deformed.**

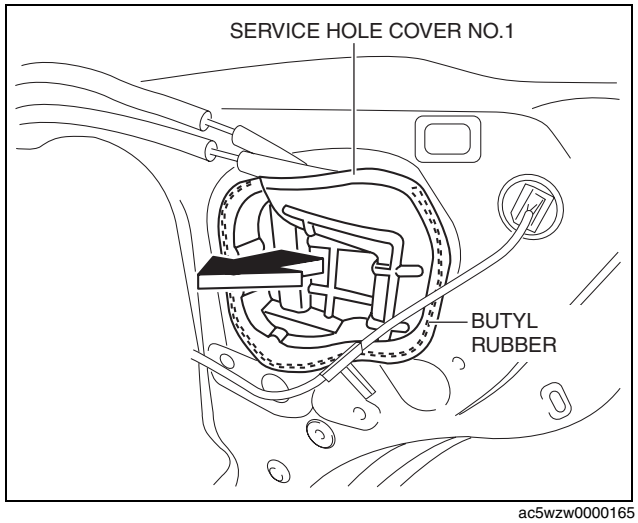

ac5wzw0000165

SECURITY AND LOCKS

5. Remove the service hole cover.

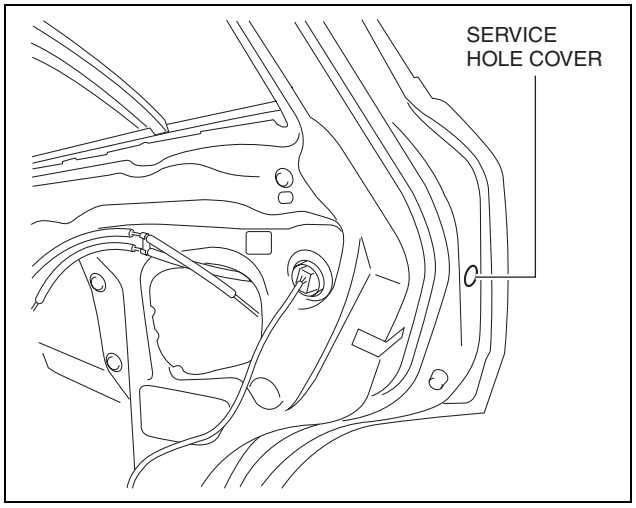

ac5wzw0000165

6. Loosen the screw from the rear outer handle bracket.

Note
- The screw cannot be removed because the rear outer handle bracket has a stopper which prevents the screw from falling.

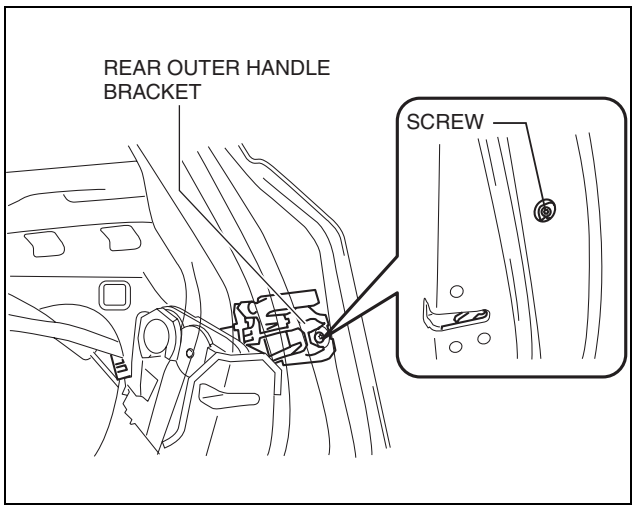

ac5wzw0000165

7. While pressing the rear outer handle bracket in the direction of arrow (1) shown in the figure, pull the outer handle garnish in the direction of arrow (2) to detach the rear outer handle bracket from the outer handle garnish.
8. Remove the outer handle garnish from the rear outer handle bracket.

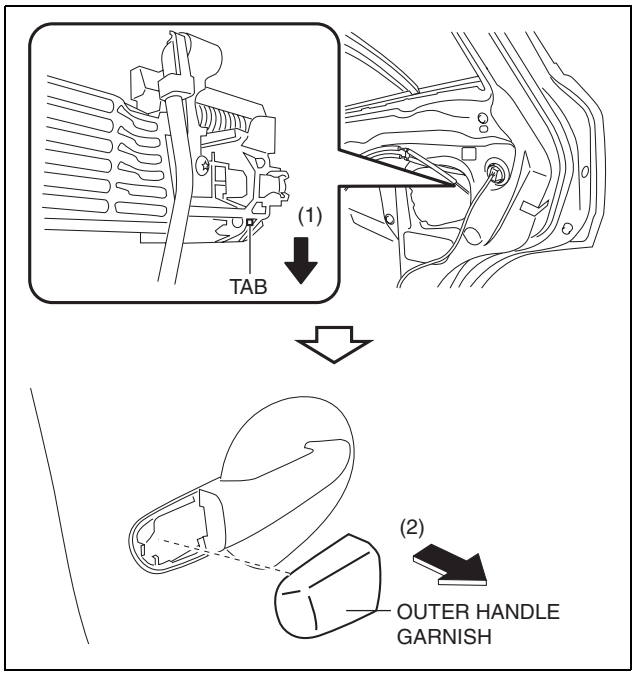

ac5wzw0000165

SECURITY AND LOCKS

9. While pulling the rear outer handle bracket in the direction of arrow (3) shown in the figure, pull the rear outer handle in the direction of arrow (4) to detach the rear outer handle bracket pin from the rear outer handle.

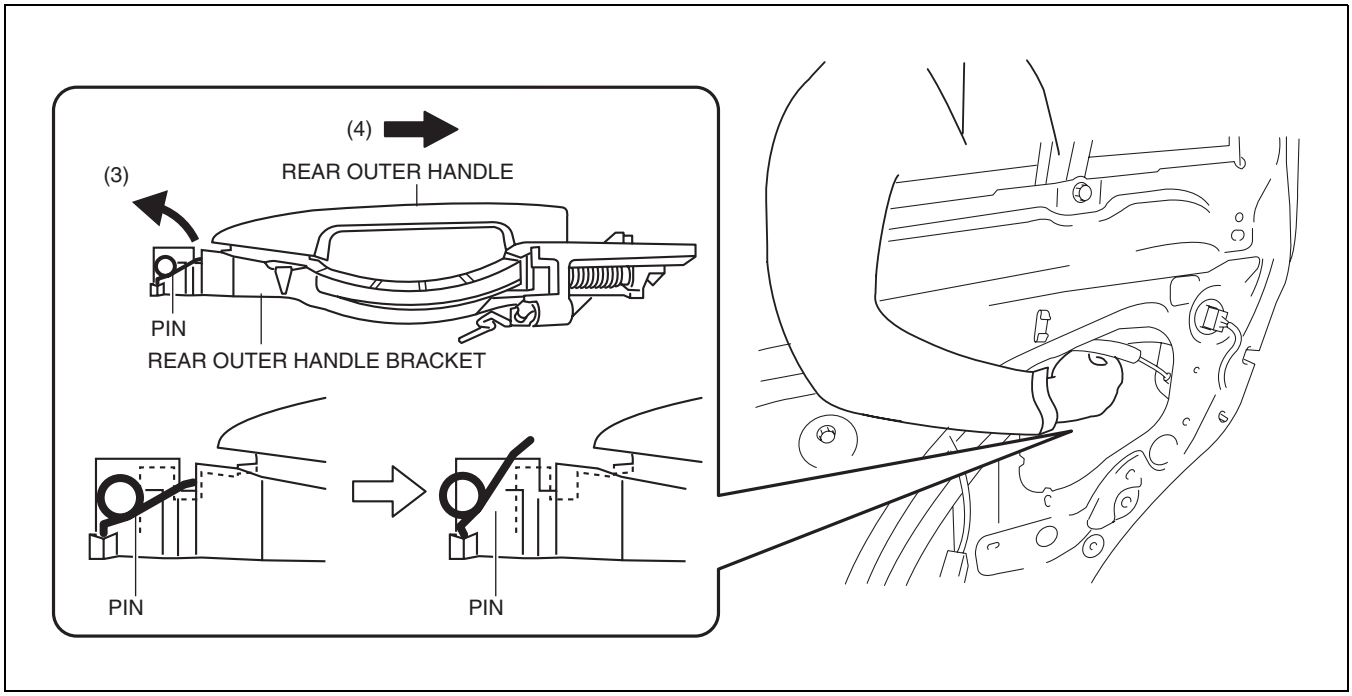

ac5wzw0000165

10. Remove the rear outer handle in the direction of the arrow shown in the figure.
11. Loosen the screw from the rear outer handle bracket.

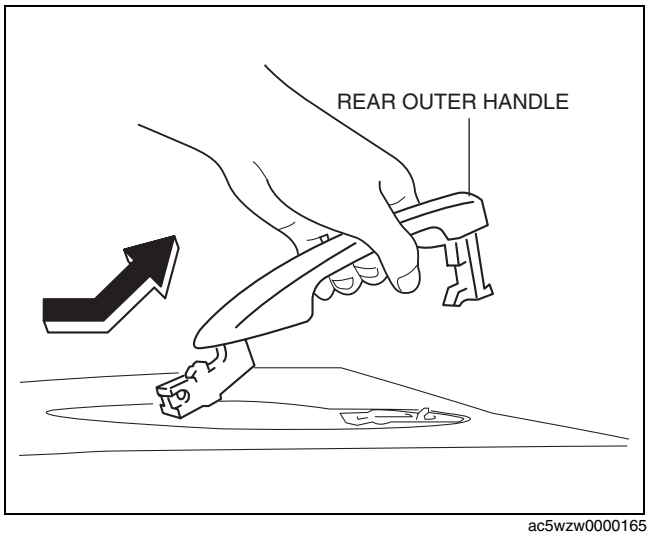

ac5wzw0000165

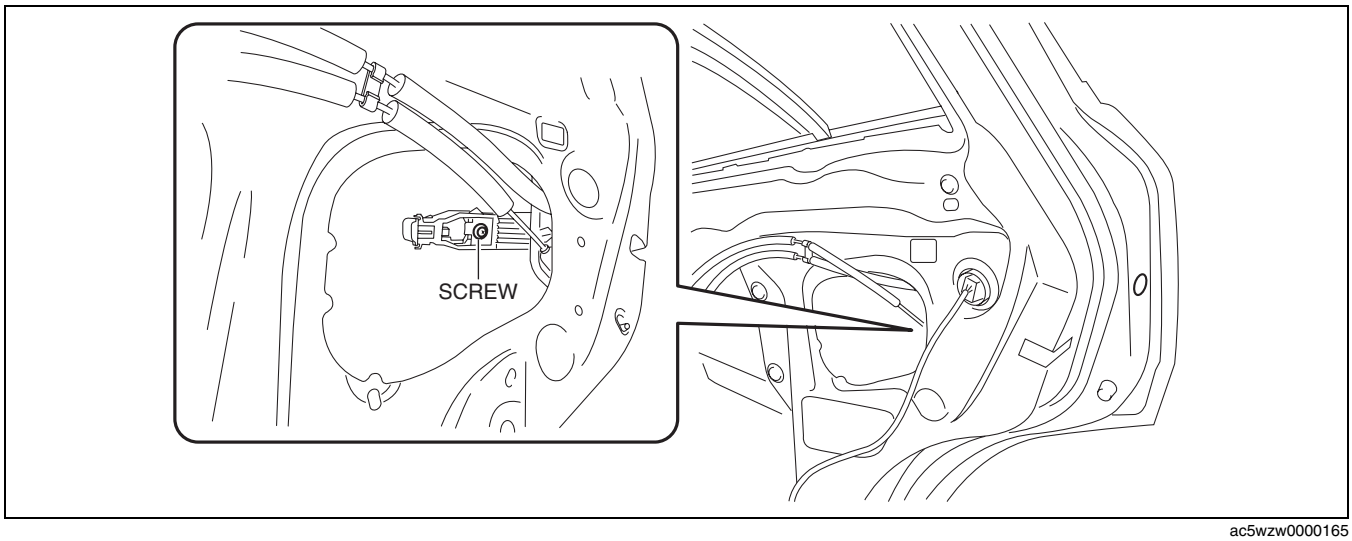

ac5wzw0000165

SECURITY AND LOCKS

Note
- The screw cannot be removed because the rear outer handle bracket has a stopper which prevents the screw from falling.

12. Pull the rear outer handle bracket in the direction of arrow (5) shown in the figure and detach the rear outer handle bracket hooks from the body.
13. Lift the rear outer handle bracket in the direction of arrow (6) shown in the figure to pull the rod out of the rod holder. (See 09-14-15 Rear Outer Handle Bracket Installation Note.)

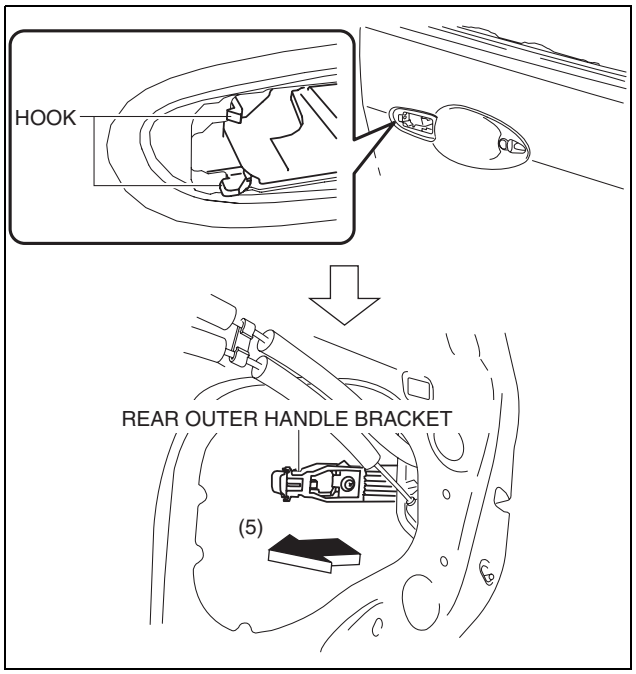

ac5wzw0000166

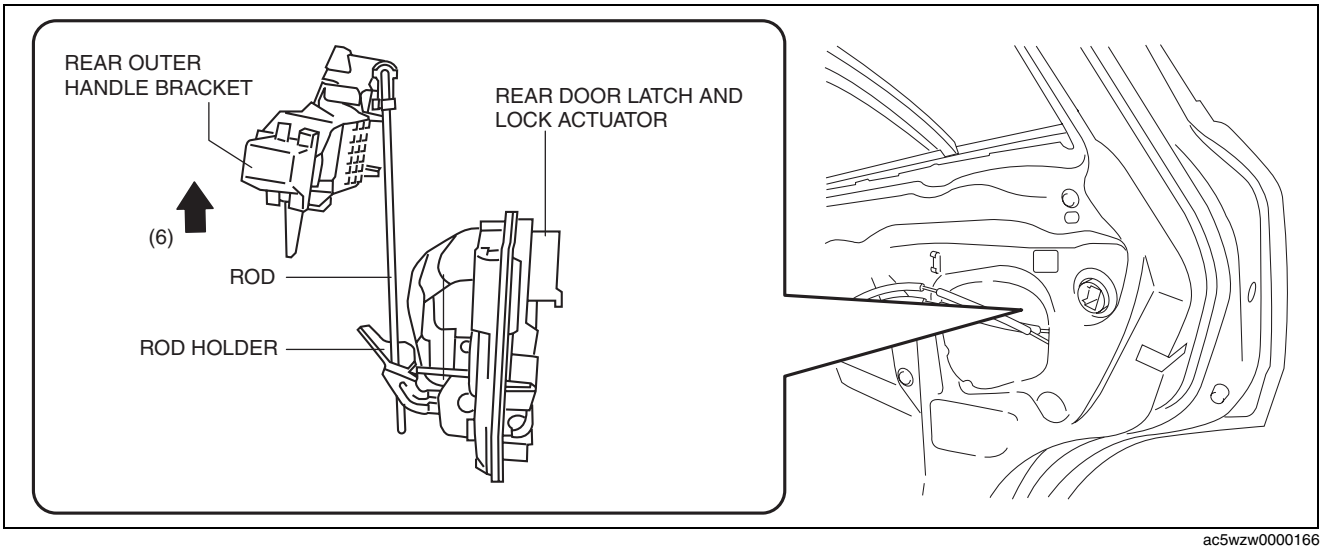

ac5wzw0000166

14. Remove the rear outer handle bracket.
15. Remove the handle seat from the body.
16. Install in the reverse order of removal.

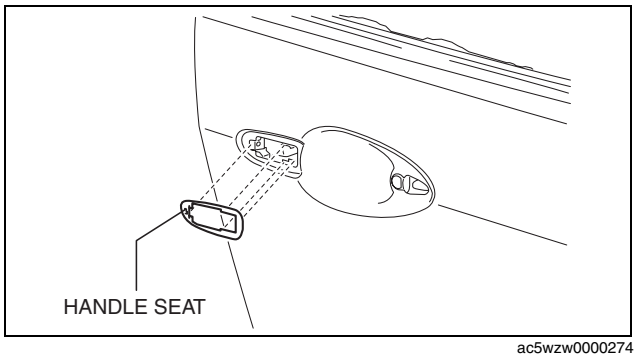

ac5wzw0000274

SECURITY AND LOCKS

Rear Outer Handle Bracket Installation Note

- To assure that the rod is inserted into the rod holder hole, verify that the there is no excessive play.

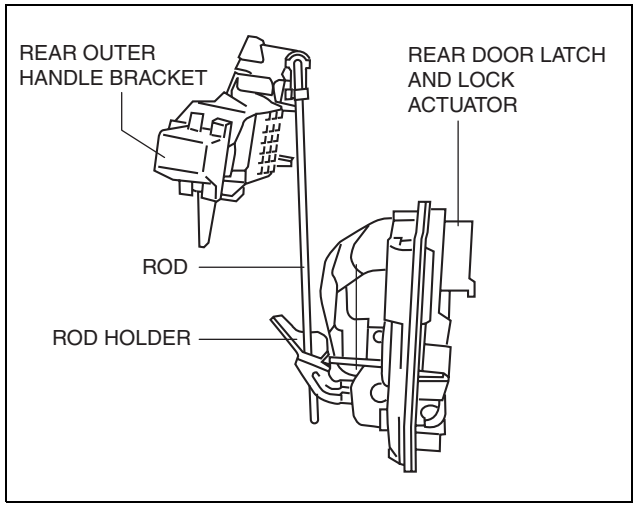

ac5wzw0000275

INNER HANDLE REMOVAL/INSTALLATION

id091400510300

Front Inner Handle

1. Disconnect the negative battery cable. (See 01-17A-11 NEGATIVE BATTERY CABLE DISCONNECTION/CONNECTION [SKYACTIV-G 2.0].) (See 01-17A-13 NEGATIVE BATTERY CABLE DISCONNECTION/CONNECTION [SKYACTIV-G 2.0 (WITHOUT i-stop)].) (See 01-17B-9 NEGATIVE BATTERY CABLE DISCONNECTION/CONNECTION [SKYACTIV-D 2.2].)
2. Remove the inner garnish. (See 09-17-65 INNER GARNISH REMOVAL/INSTALLATION.)
3. Remove the front door trim. (See 09-17-65 FRONT DOOR TRIM REMOVAL/INSTALLATION.)
4. Disconnect the door lock knob cable and the inner handle cable from the front inner handle.
5. Install in the reverse order of removal.

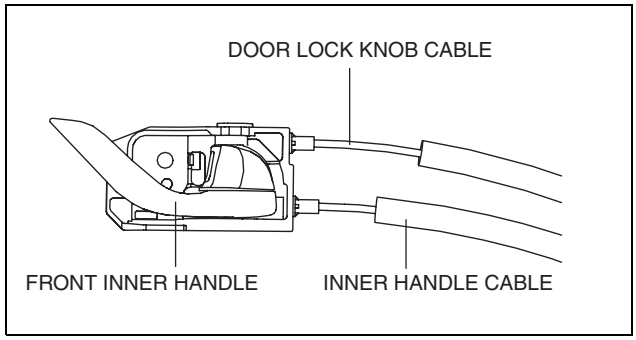

ac5wzw0000169

Rear Inner Handle

1. Disconnect the negative battery cable. (See 01-17A-11 NEGATIVE BATTERY CABLE DISCONNECTION/CONNECTION [SKYACTIV-G 2.0].) (See 01-17A-13 NEGATIVE BATTERY CABLE DISCONNECTION/CONNECTION [SKYACTIV-G 2.0 (WITHOUT i-stop)].) (See 01-17B-9 NEGATIVE BATTERY CABLE DISCONNECTION/CONNECTION [SKYACTIV-D 2.2].)
2. Remove the rear door trim. (See 09-17-74 REAR DOOR TRIM REMOVAL/INSTALLATION.)
3. Disconnect the door lock knob cable and the inner handle cable from the rear inner handle.
4. Install in the reverse order of removal.

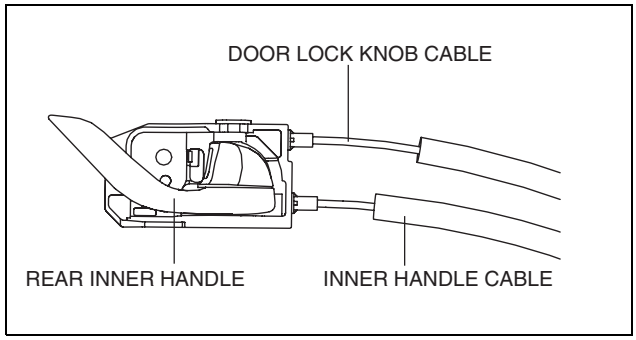

ac5wzw0000169

SECURITY AND LOCKS

DOOR LOCK SWITCH REMOVAL/INSTALLATION

id091400518600

- The door lock switch cannot be removed as a single unit because it is built into the power window main switch. If the door lock switch is replaced, replace the power window main switch. (See 09-12-52 POWER WINDOW MAIN SWITCH REMOVAL/INSTALLATION.)

DOOR LOCK SWITCH INSPECTION

id091400518700

1. Disconnect the negative battery cable. (See 01-17A-11 NEGATIVE BATTERY CABLE DISCONNECTION/CONNECTION [SKYACTIV-G 2.0].)(See 01-17A-13 NEGATIVE BATTERY CABLE DISCONNECTION/CONNECTION [SKYACTIV-G 2.0 (WITHOUT i-stop)].)(See 01-17B-9 NEGATIVE BATTERY CABLE DISCONNECTION/CONNECTION [SKYACTIV-D 2.2].)
2. Remove the door lock switch. (See 09-12-52 POWER WINDOW MAIN SWITCH REMOVAL/INSTALLATION.)
3. Verify that the continuity is as indicated in the table.

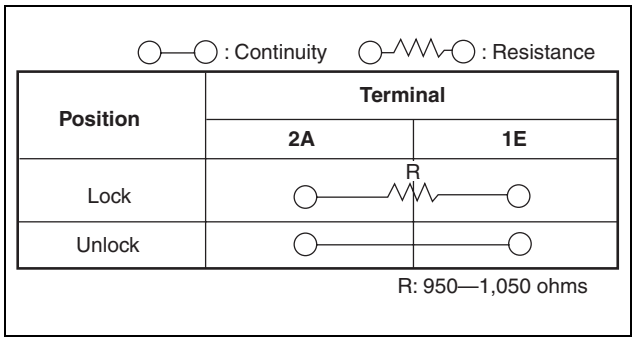

ac5wzw0000458

- If the continuity is not as indicated in the table, replace the door lock switch.

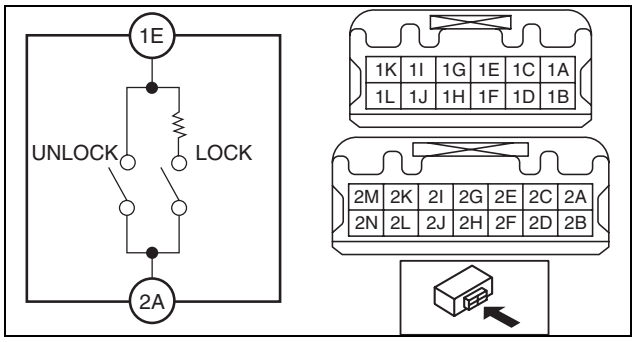

ac5wzw0000458

BONNET LATCH AND RELEASE LEVER REMOVAL/INSTALLATION

id091400510400

Bonnet Latch

1. Open the bonnet.
2. Disconnect the negative battery cable. (See 01-17A-11 NEGATIVE BATTERY CABLE DISCONNECTION/CONNECTION [SKYACTIV-G 2.0].) (See 01-17A-13 NEGATIVE BATTERY CABLE DISCONNECTION/CONNECTION [SKYACTIV-G 2.0 (WITHOUT i-stop)].) (See 01-17B-9 NEGATIVE BATTERY CABLE DISCONNECTION/CONNECTION [SKYACTIV-D 2.2].)
3. Remove the front bumper. (See 09-10-10 FRONT BUMPER REMOVAL/INSTALLATION.)

SECURITY AND LOCKS

4. Insert a tape-wrapped flathead screwdriver into the position shown in the figure.
5. Move the tape-wrapped flathead screwdriver in the direction of arrow (1) shown in the figure to press the bonnet latch protector tab, and lift the tab up in the direction of arrow (2) and detach its tab from the fuse box.
6. Detach all the bonnet latch protector tabs from the bonnet latch and remove the bonnet latch protector.

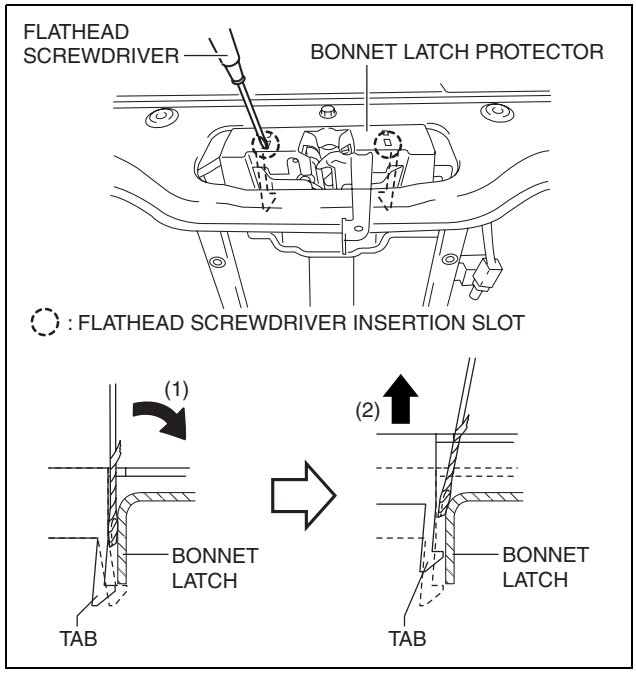

ac5wzw0000096

7. While pressing the tabs of the clip in the direction of arrow (1) shown in the figure, press it in the direction of arrow (2) to detach the connector tabs from the body.
8. Remove the connector antenna from the body.
9. Disconnect the connector.

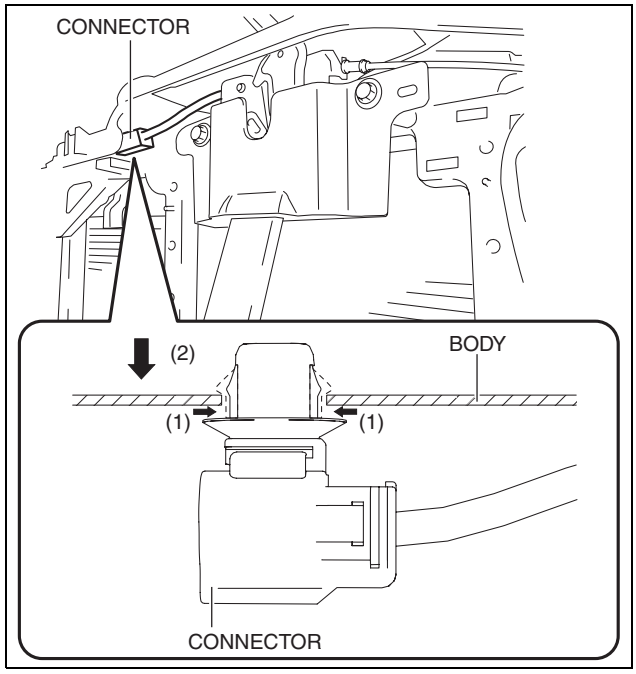

ac5wzw0000069

SECURITY AND LOCKS

10. Disconnect the bonnet release cable.
11. Remove the bolts.
12. Remove the bonnet latch.
13. Install in the reverse order of removal.
14. Adjust the bonnet. (See 09-10-6 BONNET ADJUSTMENT.)

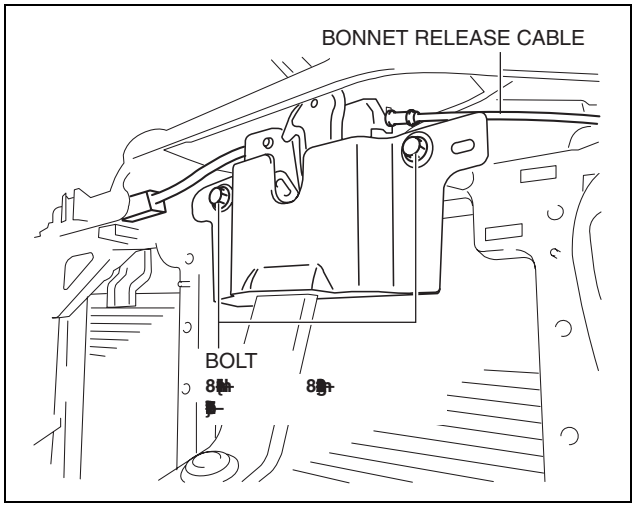

ac5wzw0000071

Bonnet Release Lever

1. While pulling the bonnet release lever, insert a tape-wrapped flathead screwdriver into the position shown in the figure.

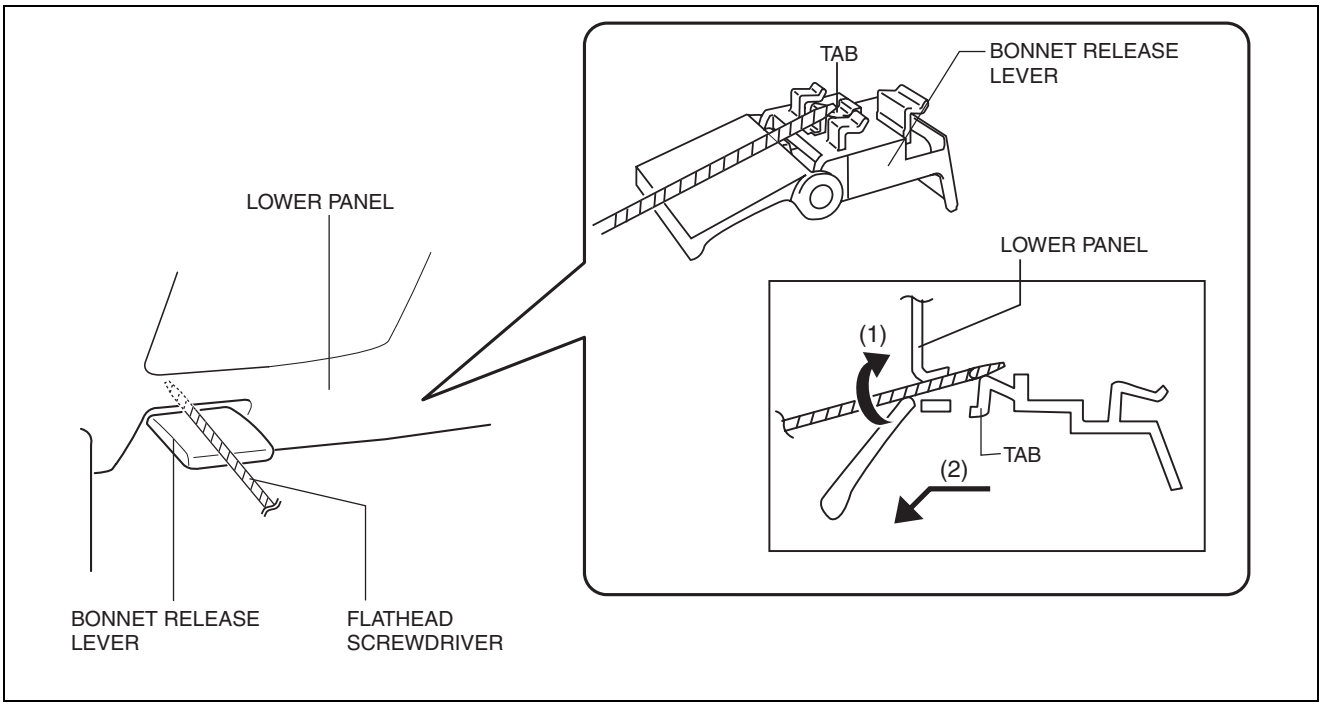

ac5wzw0000096

2. Move the tape-wrapped flathead screwdriver in the direction of arrow (1) shown in the figure to press the tab, and pull the bonnet release lever in the direction of arrow (2) to detach it from the lower panel.

Caution

- **Remove the bonnet release lever while being careful not to damage the bonnet release cable with the flathead screwdriver.**

SECURITY AND LOCKS

3. Pull the bonnet release lever to remove it from the lower panel.
4. Disconnect the bonnet release cable from the bonnet release lever.
5. Install in the reverse order of removal.

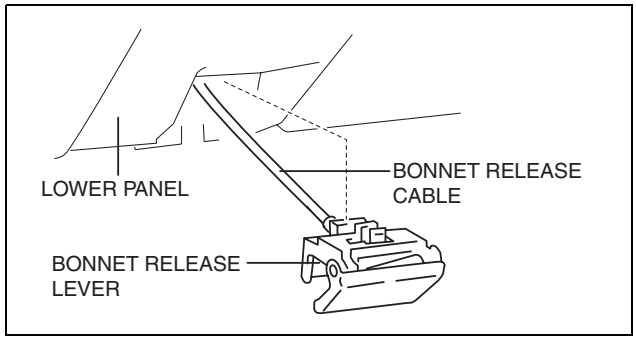

ac5wzw0000031

BONNET RELEASE CABLE REMOVAL/INSTALLATION

id091400510500

1. Disconnect the negative battery cable. (See 01-17A-11 NEGATIVE BATTERY CABLE DISCONNECTION/CONNECTION [SKYACTIV-G 2.0].) (See 01-17A-13 NEGATIVE BATTERY CABLE DISCONNECTION/CONNECTION [SKYACTIV-G 2.0 (WITHOUT i-stop)].) (See 01-17B-9 NEGATIVE BATTERY CABLE DISCONNECTION/CONNECTION [SKYACTIV-D 2.2].)
2. Remove the following parts:
   (1) Front bumper (See 09-10-10 FRONT BUMPER REMOVAL/INSTALLATION.)
   (2) Front combination light (Driver's side) (See 09-18-7 FRONT COMBINATION LIGHT REMOVAL/INSTALLATION.)
   (3) Front over fender (Driver's side) (See 09-10-31 FRONT OVER FENDER REMOVAL/INSTALLATION.)
   (4) Front mudguard (Driver's side) (See 09-16-47 MUDGUARD REMOVAL/INSTALLATION.)
   (5) Bonnet release lever (See 09-14-16 BONNET LATCH AND RELEASE LEVER REMOVAL/INSTALLATION.)
3. Disconnect the bonnet release cable from the bonnet latch.
4. While pressing the tabs of the clip in the direction of arrow (1) shown in the figure, pull the clip in the direction of arrow (2) to detach it from the body.

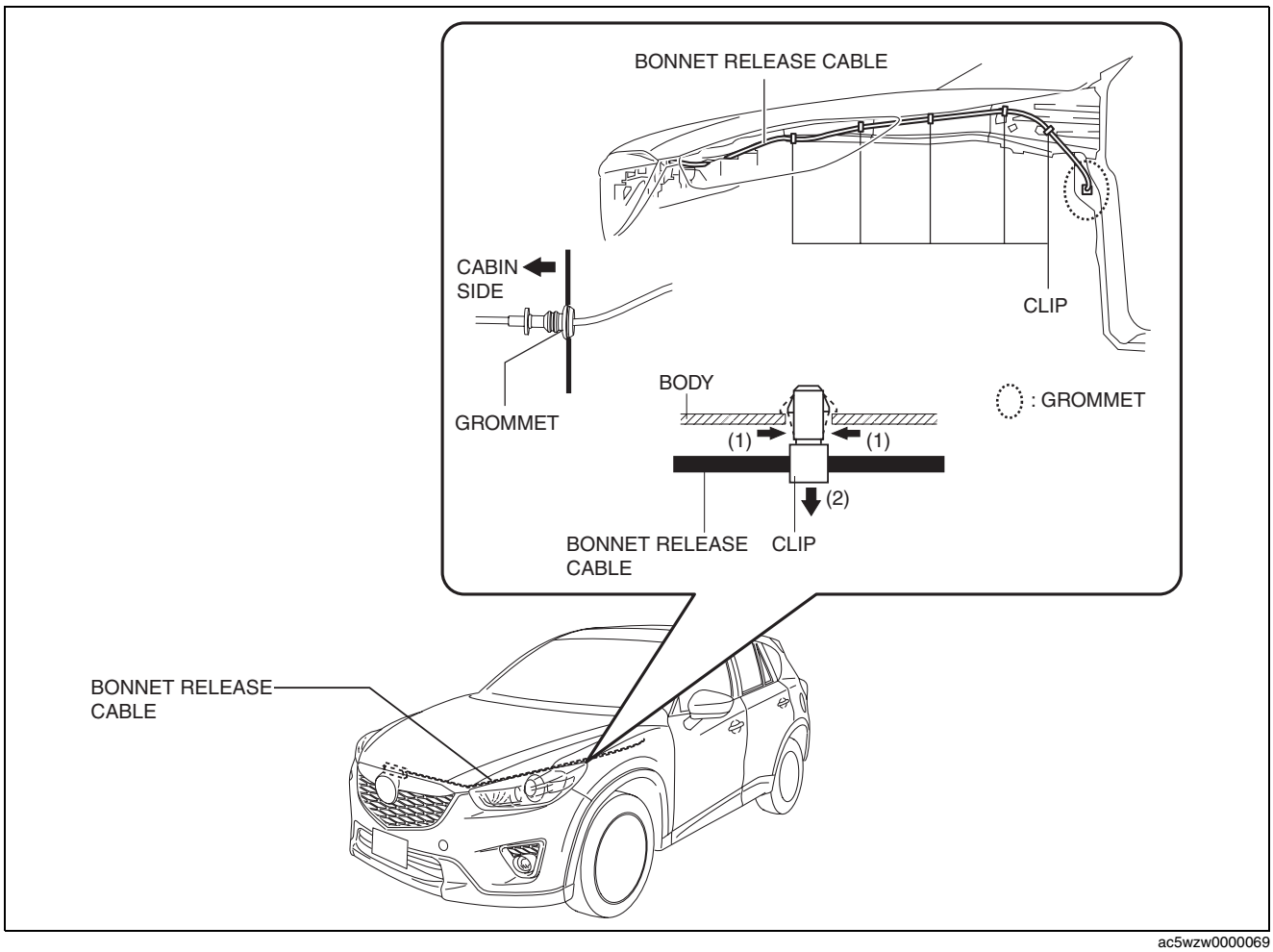

ac5wzw0000069

5. Remove the clip from the body.
6. Press the grommet into the cabin side.

SECURITY AND LOCKS

7. Remove the bonnet release cable from the cabin side.
8. Install in the reverse order of removal.

BONNET LATCH SWITCH INSPECTION

id091400510600

1. Disconnect the negative battery cable. (See 01-17A-11 NEGATIVE BATTERY CABLE DISCONNECTION/CONNECTION [SKYACTIV-G 2.0].) (See 01-17A-13 NEGATIVE BATTERY CABLE DISCONNECTION/CONNECTION [SKYACTIV-G 2.0 (WITHOUT i-stop)].) (See 01-17B-9 NEGATIVE BATTERY CABLE DISCONNECTION/CONNECTION [SKYACTIV-D 2.2].)
2. Remove the front bumper. (See 09-10-10 FRONT BUMPER REMOVAL/INSTALLATION.)
3. Disconnect the bonnet latch switch connector. (See 09-14-16 BONNET LATCH AND RELEASE LEVER REMOVAL/INSTALLATION.)
4. Verify that the continuity is as indicated in the table.

Note

- Inspect the continuity when the bonnet is open and closed.

○—○ :CONTINUITY

BONNET LATCH SWITCH (BONNET CONDITION)	TERMINAL	
	A	B
ON (CLOSE)	○	○
OFF (OPEN)		

ac5wzw0000038

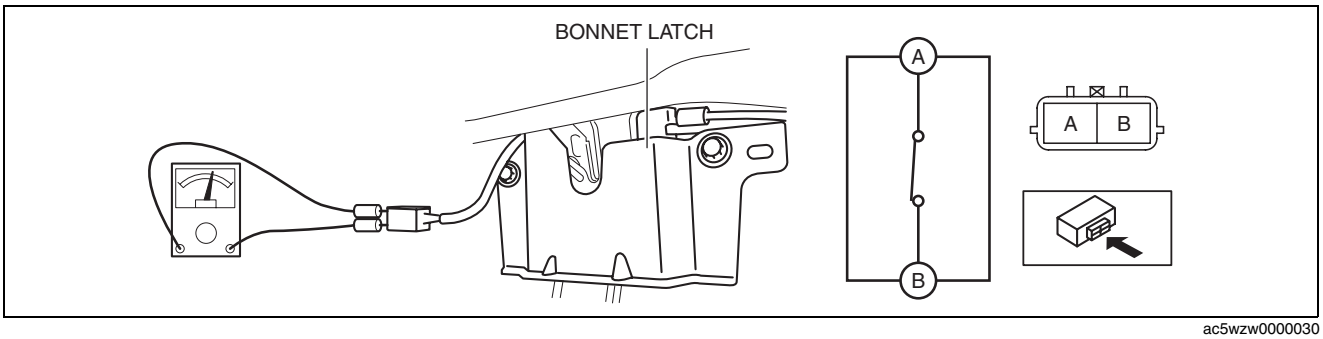

ac5wzw0000030

- If the operation as indicated in the table cannot be verified, replace the bonnet latch.

FUEL-FILLER LID OPENER AND LEVER REMOVAL/INSTALLATION

id091400510700

Fuel-filler Lid Opener

1. Open the fuel-filler lid.

SECURITY AND LOCKS

2. Remove the nut.

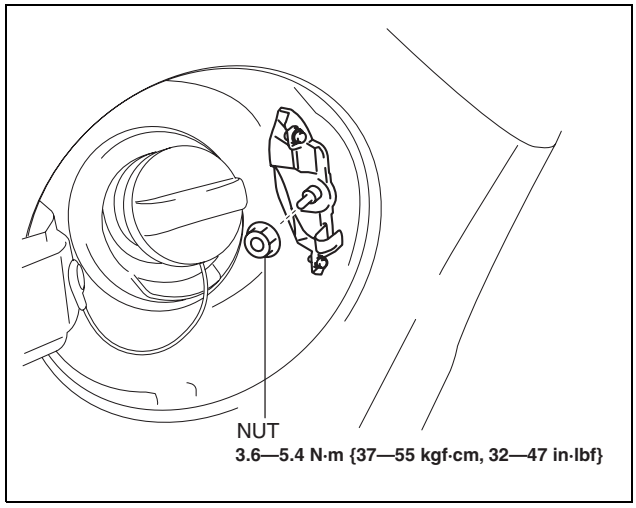

ac5wzw0000031

3. Remove the service hole cover on the trunk side trim.
4. While pressing the tabs of the stopper bracket in the direction of arrow (1) shown in the figure, press it in the direction of arrow (2) to detach it from the body.

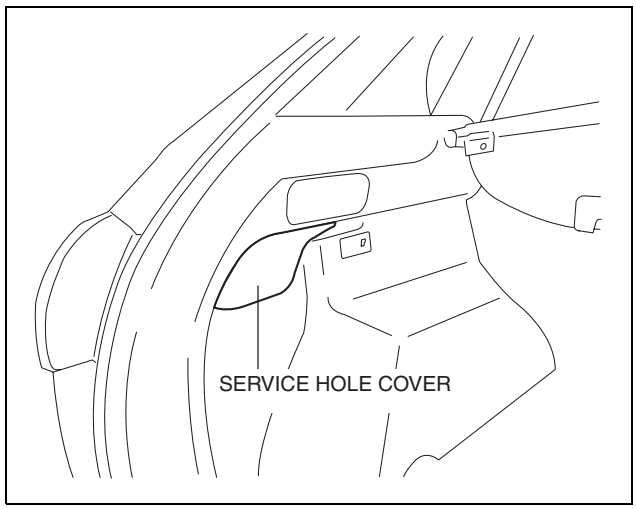

ac5wzw0000031

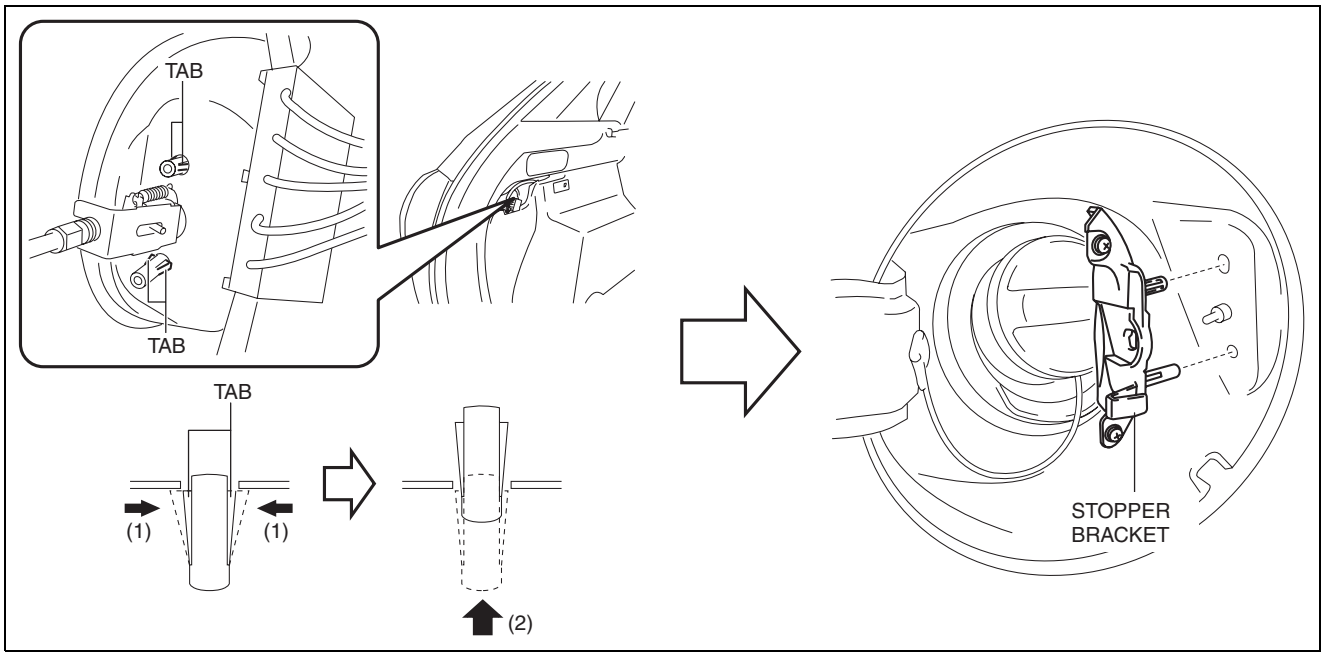

ac5wzw0000274

5. Detach all the stopper bracket tabs from the body and remove the stopper bracket.

SECURITY AND LOCKS

6. Remove the fuel-filler lid opener in the direction of the arrow.

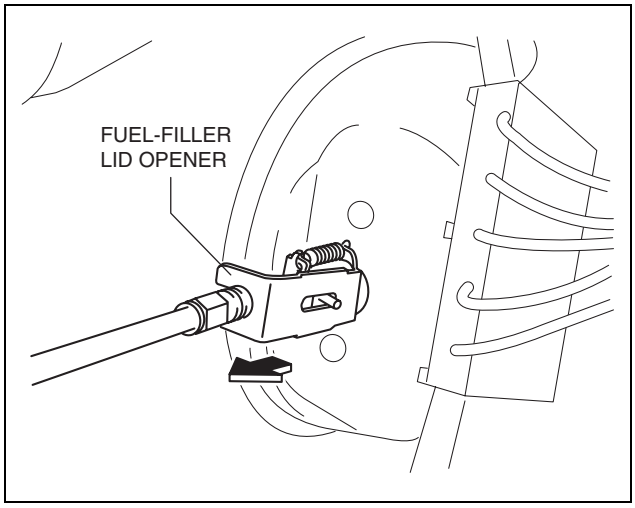

ac5wzw0000031

7. Disconnect the fuel-filler lid opener cable from the fuel-filler lid opener.
8. Install in the reverse order of removal.

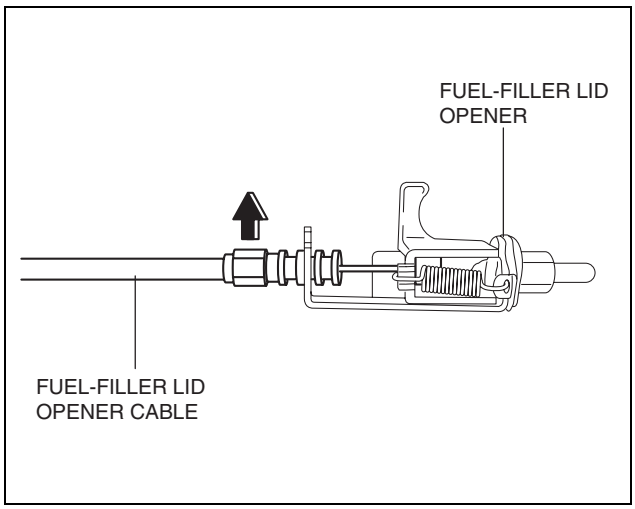

ac5wzw0000031

Fuel-filler Lid Opener Lever

1. Remove the front scuff plate. (Driver's side) (See 09-17-61 FRONT SCUFF PLATE REMOVAL/INSTALLATION.)
2. Remove the front side trim. (Driver's side) (See 09-17-62 FRONT SIDE TRIM REMOVAL/INSTALLATION.)
3. Partially peel back the floor covering.
4. Remove the bolts.

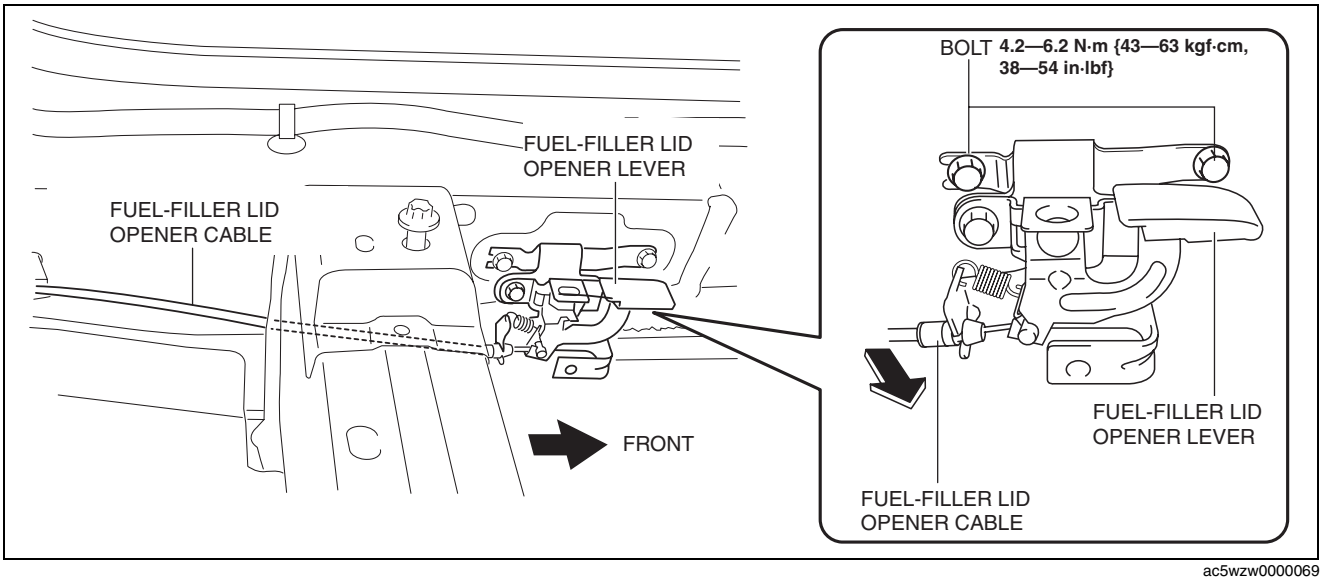

ac5wzw0000069

5. Disconnect the fuel-filler lid opener cable from the fuel-filler lid opener lever.
6. Install in the reverse order of removal.

FUEL-FILLER LID OPENER CABLE REMOVAL/INSTALLATION

id091400510800

R.H.D.

1. Disconnect the negative battery cable. (See 01-17A-11 NEGATIVE BATTERY CABLE DISCONNECTION/CONNECTION [SKYACTIV-G 2.0].) (See 01-17A-13 NEGATIVE BATTERY CABLE DISCONNECTION/CONNECTION [SKYACTIV-G 2.0 (WITHOUT i-stop)].) (See 01-17B-9 NEGATIVE BATTERY CABLE DISCONNECTION/CONNECTION [SKYACTIV-D 2.2].)
2. Remove the following parts:
   (1) Front scuff plate (RH) (See 09-17-61 FRONT SCUFF PLATE REMOVAL/INSTALLATION.)
   (2) Front seat (RH) (See 09-13-4 FRONT SEAT REMOVAL/INSTALLATION.)
   (3) Rear scuff plate (See 09-17-63 REAR SCUFF PLATE REMOVAL/INSTALLATION.)
   (4) B-pillar lower trim (RH) (See 09-17-57 B-PILLAR LOWER TRIM REMOVAL/INSTALLATION.)
   (5) Rear seat (4:2:4 split type) (See 09-13-56 REAR SEAT REMOVAL/INSTALLATION.)
   (6) Rear seat cushion (6:4 split type) (See 09-13-76 REAR SEAT CUSHION REMOVAL/INSTALLATION.)
   (7) Rear seat back (6:4 split type) (See 09-13-61 REAR SEAT BACK REMOVAL/INSTALLATION.)
   (8) D-pillar trim (See 09-17-60 D-PILLAR TRIM REMOVAL/INSTALLATION.)
   (9) C-pillar trim (See 09-17-59 C-PILLAR TRIM REMOVAL/INSTALLATION.)
   (10) Trunk end trim (See 09-17-78 TRUNK END TRIM REMOVAL/INSTALLATION.)
   (11) Trunk side trim (See 09-17-80 TRUNK SIDE TRIM REMOVAL/INSTALLATION.)
   (12) Fuel-filler lid opener (See 09-14-20 FUEL-FILLER LID OPENER AND LEVER REMOVAL/INSTALLATION.)
   (13) Fuel-filler lid opener lever (See 09-14-20 FUEL-FILLER LID OPENER AND LEVER REMOVAL/INSTALLATION.)

SECURITY AND LOCKS

3. Remove the fuel-filler lid opener cable from clip A.

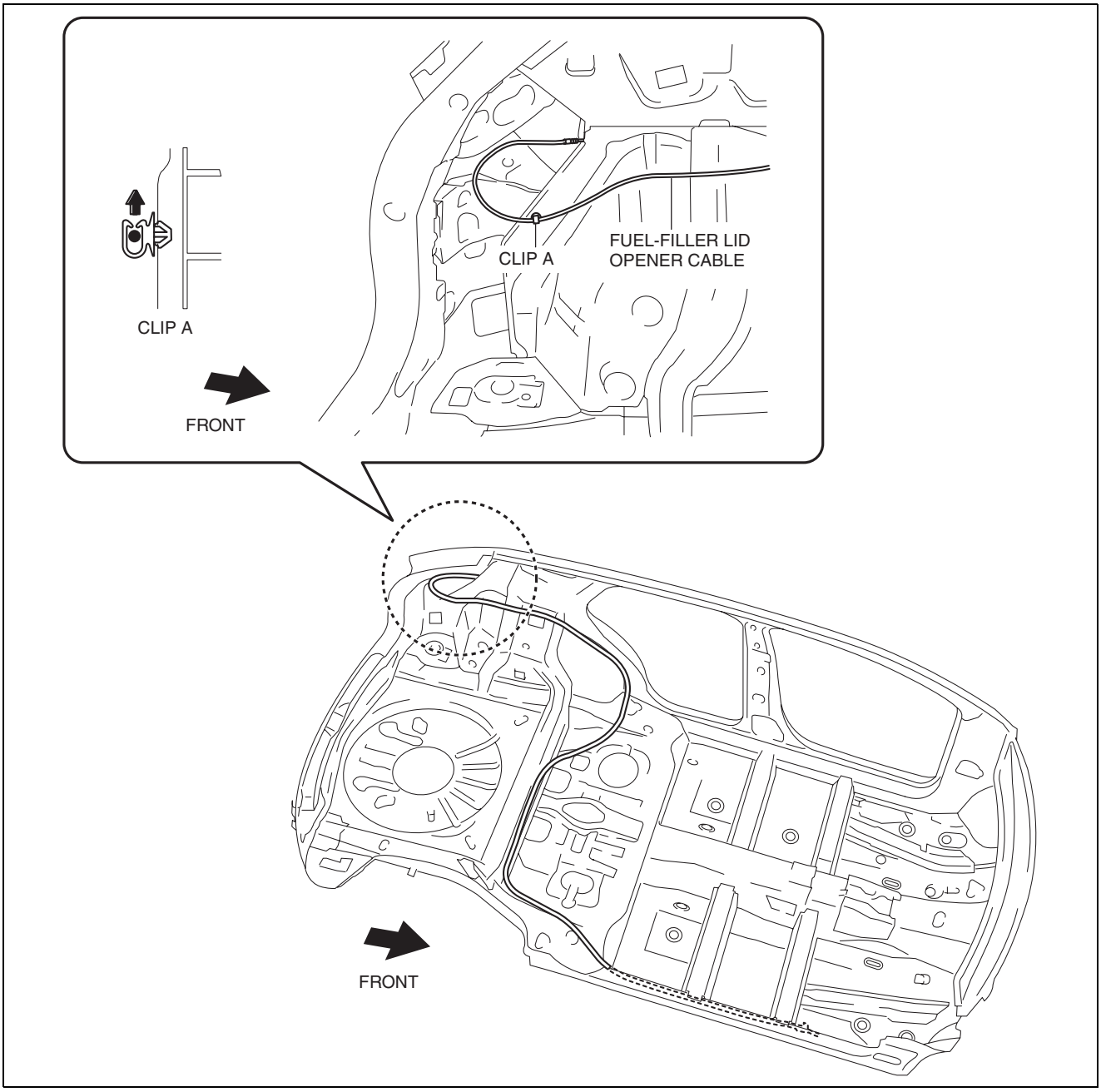

ac5wzw0000031

SECURITY AND LOCKS

4. Remove the fuel-filler lid opener cable from clips B, C, and D.

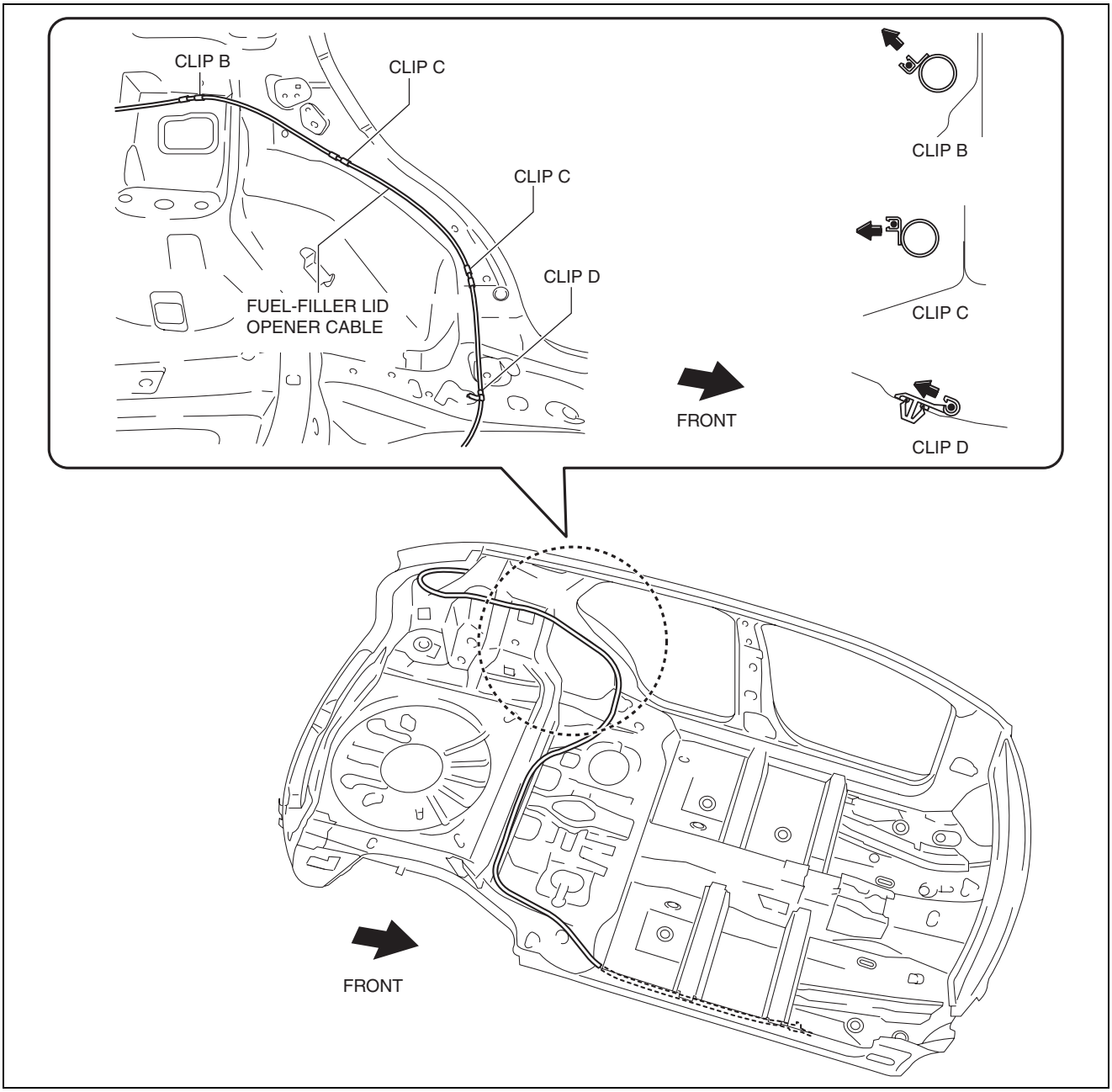

ac5wzw0000031

SECURITY AND LOCKS

5. Remove the fuel-filler lid opener cable from clips E.

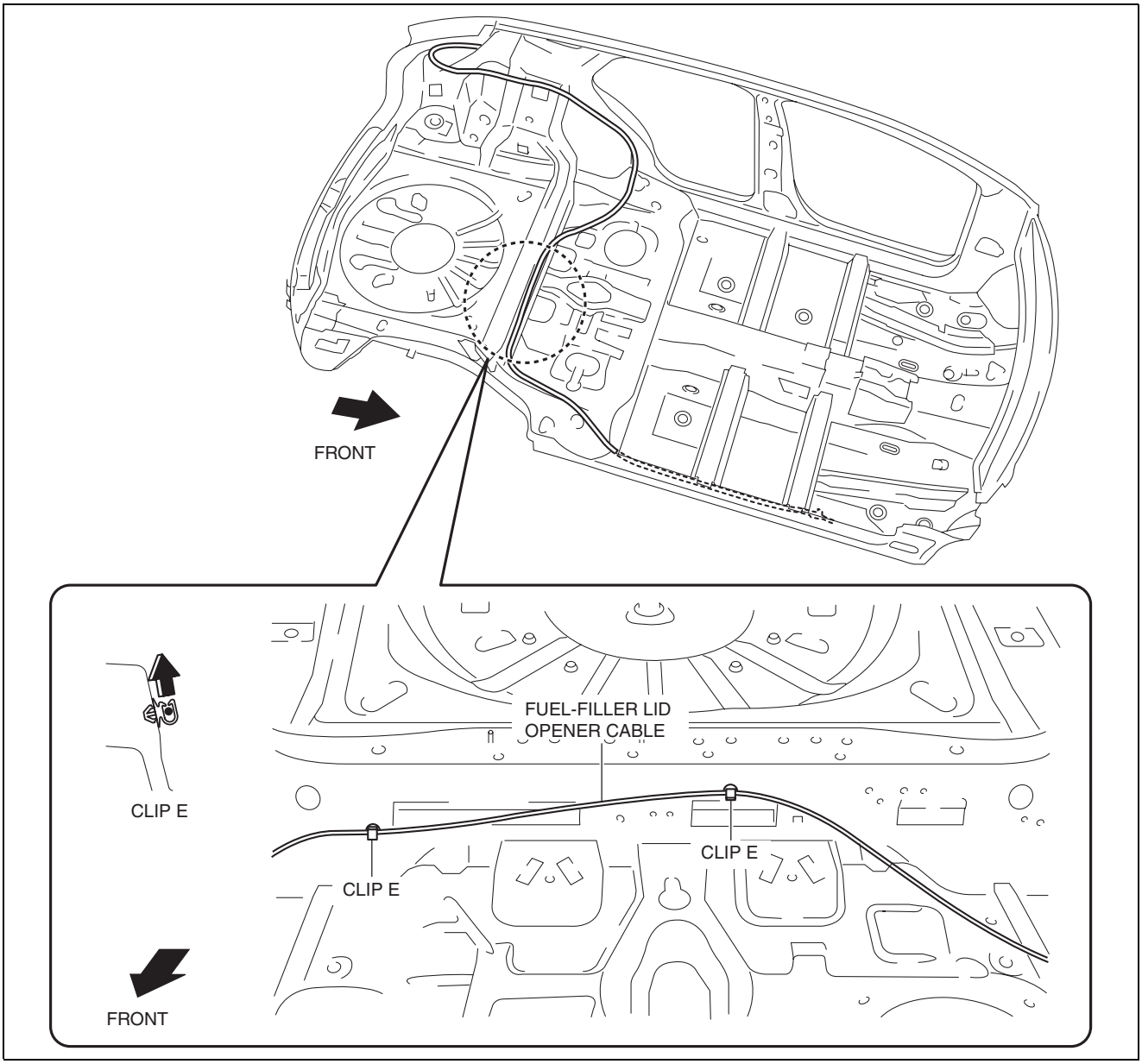

ac5wzw0000031

SECURITY AND LOCKS

6. Remove the fuel-filler lid opener cable from clips F and G.

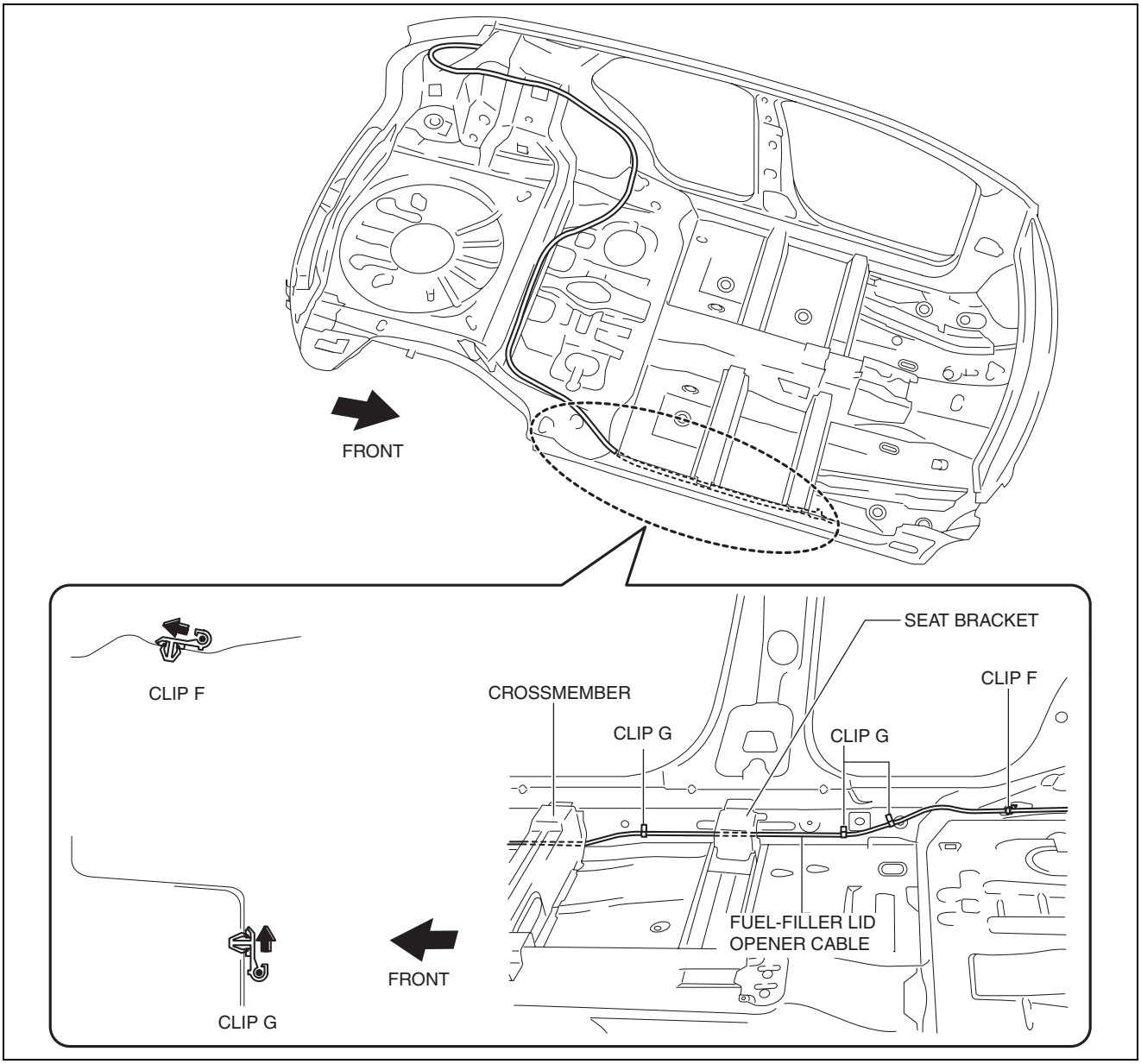

ac5wzw0000032

7. Pull the fuel-filler lid opener cable from the crossmember and the seat bracket.
8. Install in the reverse order of removal.

FRONT DOOR KEY CYLINDER REMOVAL/INSTALLATION

id091400510900

1. Disconnect the negative battery cable. (See 01-17A-11 NEGATIVE BATTERY CABLE DISCONNECTION/CONNECTION [SKYACTIV-G 2.0].) (See 01-17A-13 NEGATIVE BATTERY CABLE DISCONNECTION/CONNECTION [SKYACTIV-G 2.0 (WITHOUT i-stop)].) (See 01-17B-9 NEGATIVE BATTERY CABLE DISCONNECTION/CONNECTION [SKYACTIV-D 2.2].)

SECURITY AND LOCKS

2. Remove the service hole cover.

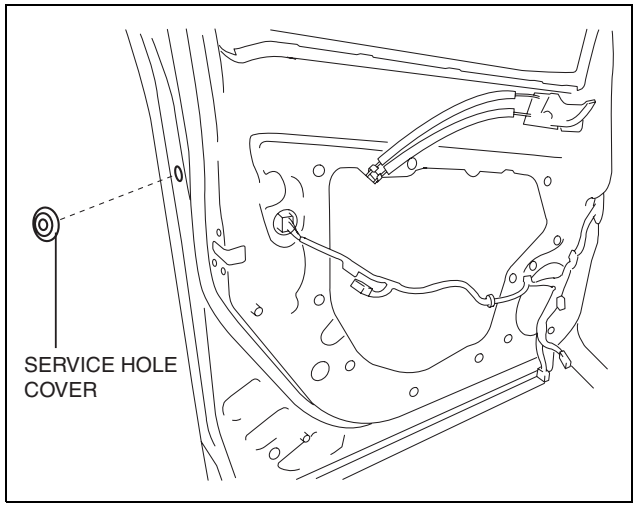

ac5wzw0000069

3. Detach the screw from the front door key cylinder.

Note
- The screw cannot be removed because the front outer handle bracket has a stopper which prevents the screw from falling.

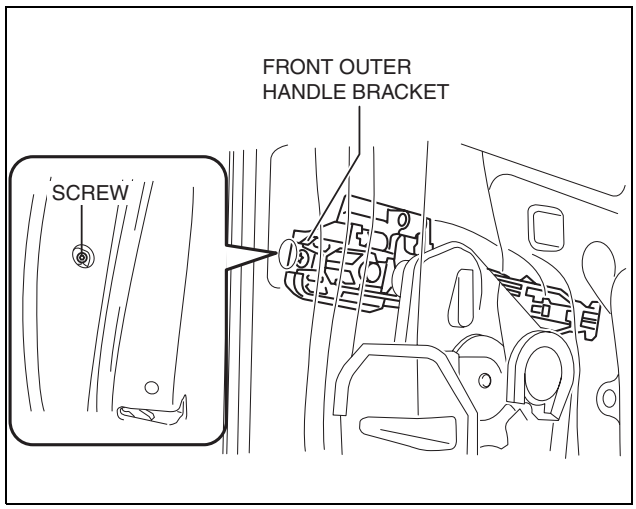

ac5wzw0000069

4. While pressing the outer handle bracket tab in the direction of arrow (1) shown in the figure, pull the front door key cylinder in the direction of arrow (2) to detach the outer handle bracket and the front door key cylinder.
5. Remove the front door key cylinder from the outer handle bracket.

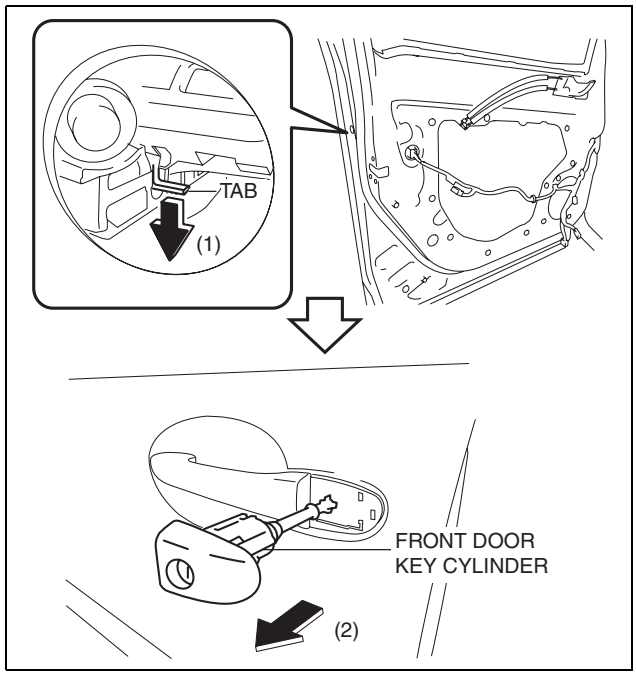

ac5wzw0000069

SECURITY AND LOCKS

6. Insert a tape-wrapped flathead screwdriver into the position shown in the figure.
7. Move the tape-wrapped flathead screwdriver in the direction of the arrow shown in the figure to lift up the collar cap, and detach the collar cap from the front door key cylinder tab.
8. Remove the collar cap from the front door key cylinder.
9. Install in the reverse order of removal.

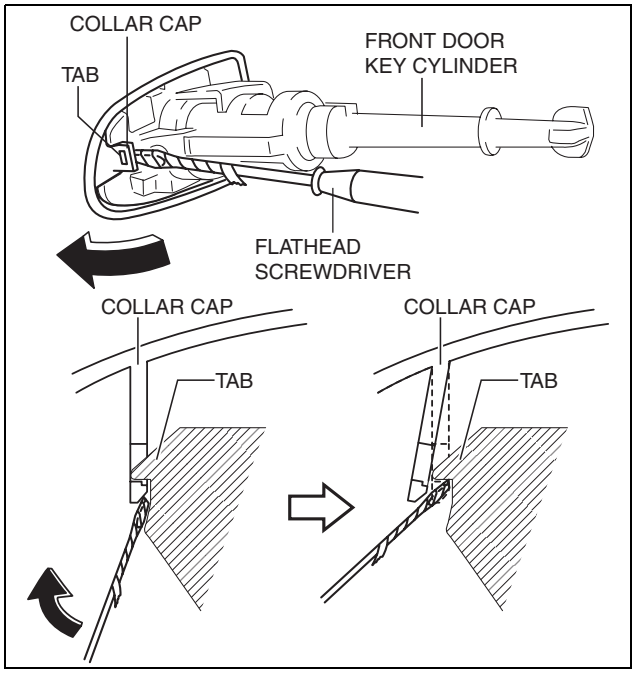

ac5wzw0000069

FRONT DOOR KEY CYLINDER SWITCH INSPECTION

id091400511000

1. Perform the front door glass preparation. (See 09-12-4 FRONT DOOR GLASS REMOVAL/INSTALLATION.)
2. Disconnect the negative battery cable. (See 01-17A-11 NEGATIVE BATTERY CABLE DISCONNECTION/CONNECTION [SKYACTIV-G 2.0].) (See 01-17A-13 NEGATIVE BATTERY CABLE DISCONNECTION/CONNECTION [SKYACTIV-G 2.0 (WITHOUT i-stop)].) (See 01-17B-9 NEGATIVE BATTERY CABLE DISCONNECTION/CONNECTION [SKYACTIV-D 2.2].)
3. Remove the following parts:
   (1) Inner garnish (See 09-17-65 INNER GARNISH REMOVAL/INSTALLATION.)
   (2) Front door trim (See 09-17-65 FRONT DOOR TRIM REMOVAL/INSTALLATION.)
   (3) Front door key cylinder (See 09-14-30 FRONT DOOR KEY CYLINDER REMOVAL/INSTALLATION.)
   (4) Front door glass (See 09-12-4 FRONT DOOR GLASS REMOVAL/INSTALLATION.)
   (5) Front door module panel (See 09-11-6 FRONT DOOR MODULE PANEL REMOVAL/INSTALLATION.)
   (6) Front door latch and lock actuator (See 09-14-35 FRONT DOOR LATCH AND LOCK ACTUATOR REMOVAL/INSTALLATION.)

Front Door Key Cylinder Switch Lock-Side Inspection

1. Press in the latch lever of the front door latch and lock actuator using a flathead screwdriver, and set it to the latched condition.

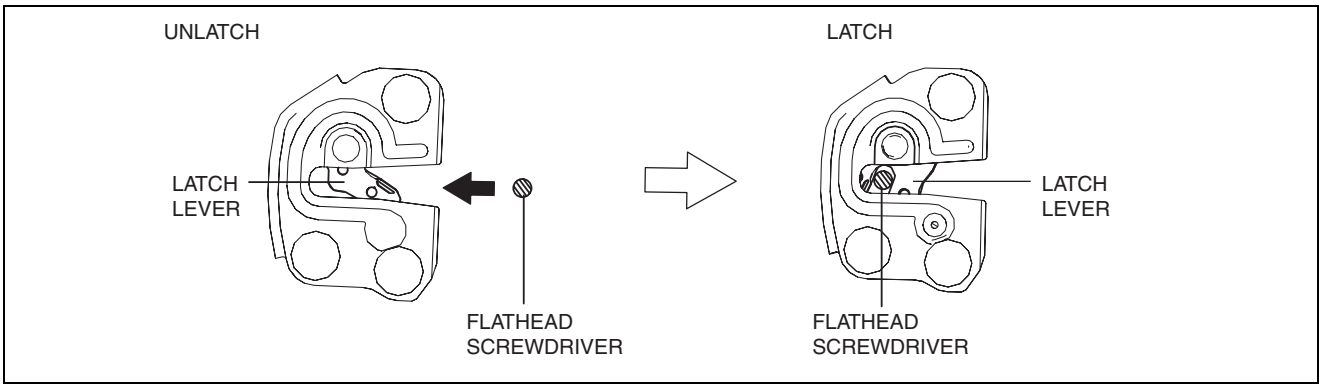

ac5wzw0000250

SECURITY AND LOCKS

2. Rotate the front door key cylinder in the direction of the arrow until it stops to set the front door key cylinder switch to the locked condition.
3. To verify that the switch is in the locked position, press down the rod holder in the direction of the arrow and verify that the latch lever does not move.

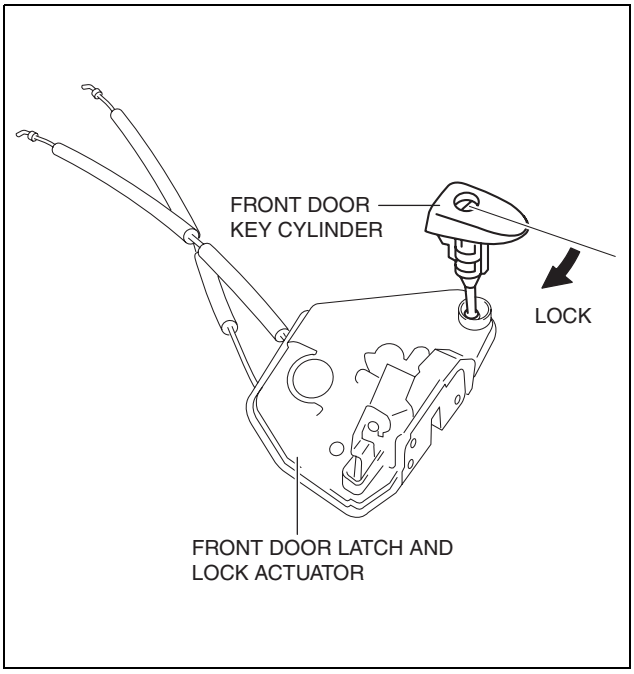

ac5wzw0000250

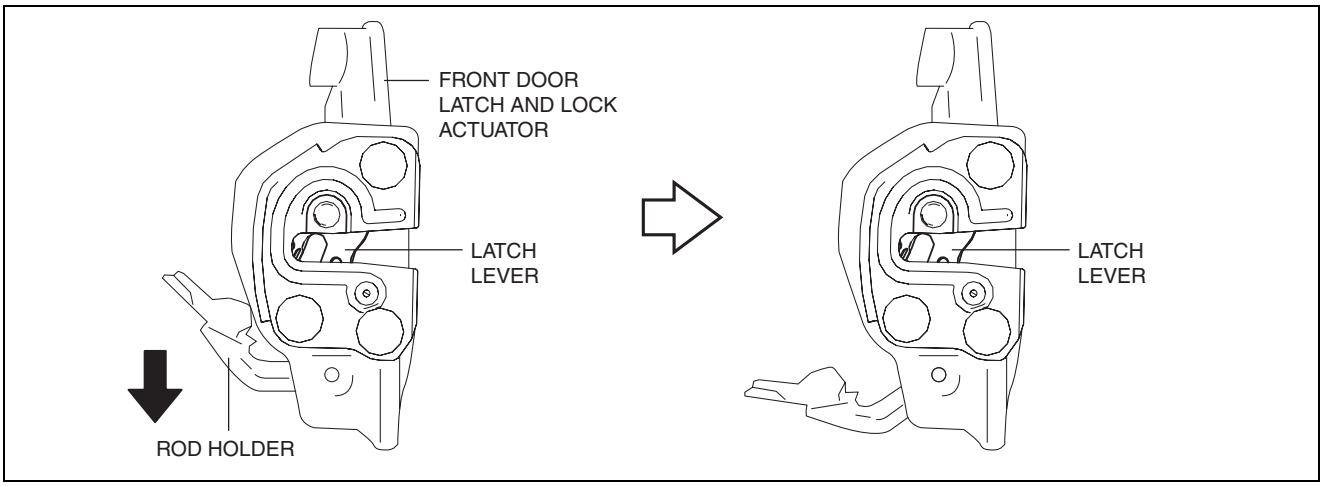

ac5wzw0000251

Note

- If the latch lever moves, the front door key cylinder switch is not in the locked position. Repeat the procedure from Step 1.

4. Verify that the continuity of the front door key cylinder is as indicated in the table.

: Resistance

FRONT DOOR KEY CYLINDER SWITCH	Terminal	
	LH: J **RH: D**	**LH: H** **RH: F**
LOCK	R	

R: 1 kilohm

ac5wzw0000251

SECURITY AND LOCKS

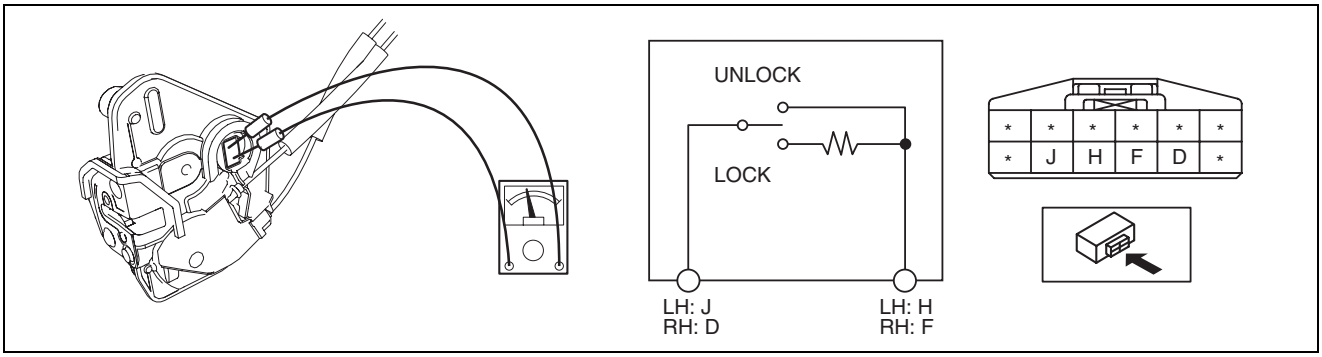

ac5wzw0000251

- If not as indicated in the table, replace the front door latch and lock actuator.

Front Door Key Cylinder Switch Unlock-Side Inspection

1. Press in the latch lever of the front door latch and lock actuator using a flathead screwdriver, and set it to the latched condition.

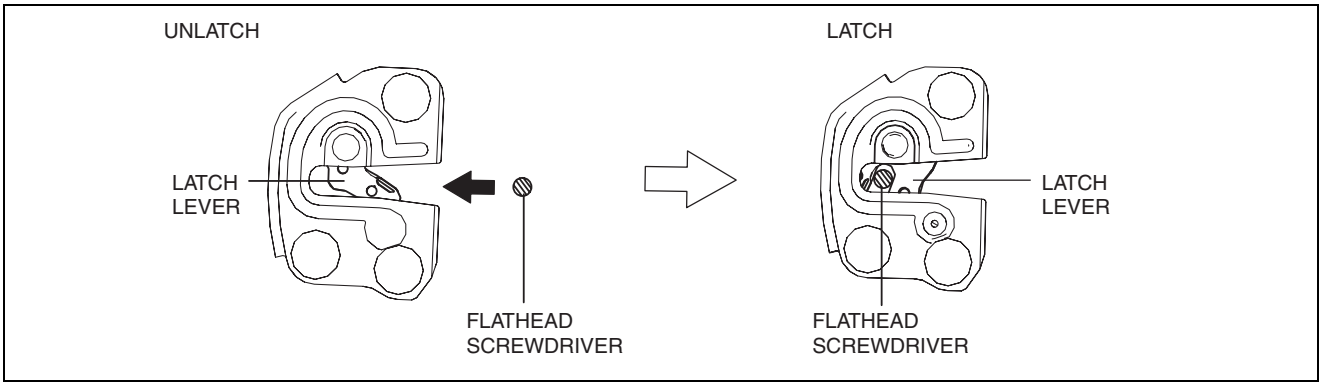

ac5wzw0000250

2. Rotate the front door key cylinder in the direction of the arrow until it stops to set the front door key cylinder switch to the unlocked condition.

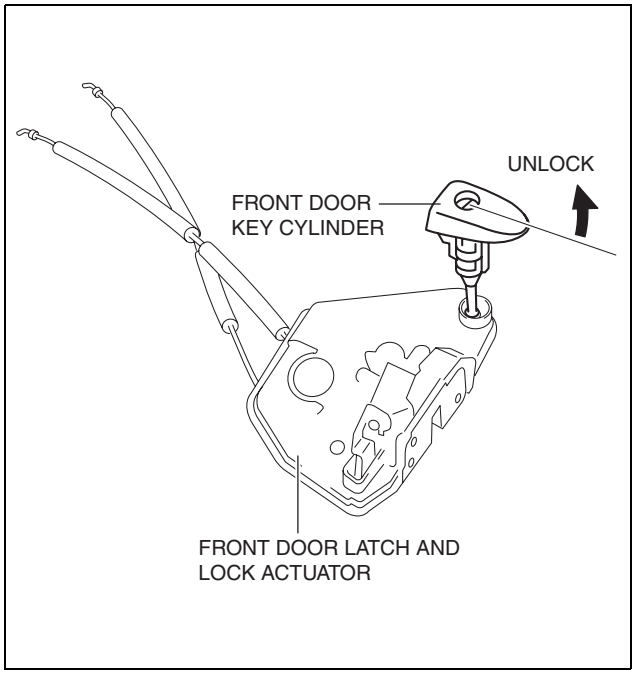

ac5wzw0000251

SECURITY AND LOCKS

3. To verify that the switch is in the unlocked position, press down the rod holder in the direction of the arrow and verify that the latch lever moves.

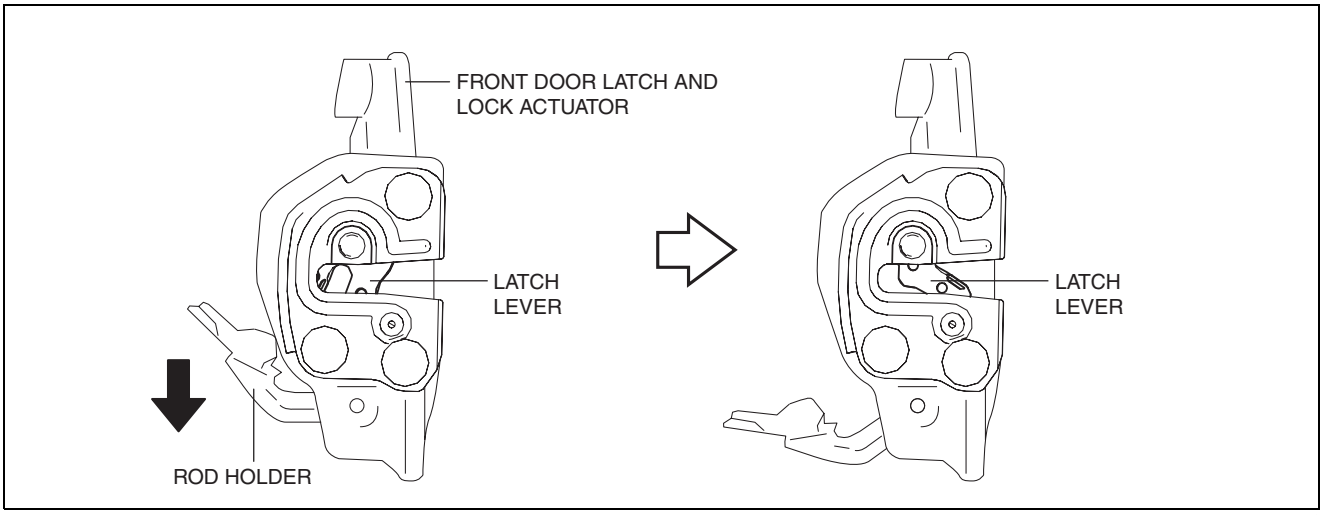

ac5wzw0000251

Note
- If the latch lever does not move, the front door key cylinder switch is not in the unlocked position. Repeat the procedure from Step 2.

4. Verify that the continuity of the front door key cylinder is as indicated in the table.

○—○: Continuity

FRONT DOOR KEY CYLINDER SWITCH	Terminal	
	LH: J RH: D	LH: H RH: F
UNLOCK	○	○

ac5wzw0000251

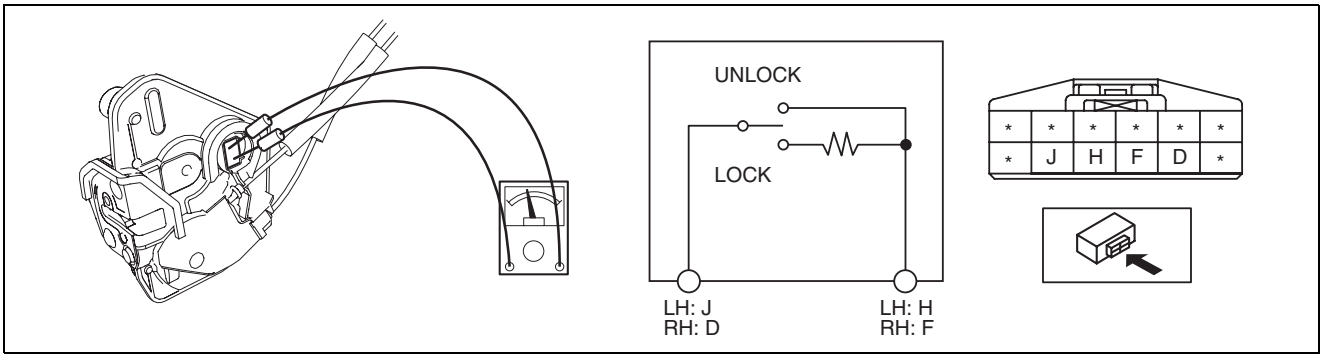

ac5wzw0000251

- If not as indicated in the table, replace the front door latch and lock actuator.

FRONT DOOR LATCH AND LOCK ACTUATOR REMOVAL/INSTALLATION

id091400511100

1. Perform the front door glass preparation. (See 09-12-4 FRONT DOOR GLASS REMOVAL/INSTALLATION.)
2. Disconnect the negative battery cable. (See 01-17A-11 NEGATIVE BATTERY CABLE DISCONNECTION/CONNECTION [SKYACTIV-G 2.0].) (See 01-17A-13 NEGATIVE BATTERY CABLE DISCONNECTION/CONNECTION [SKYACTIV-G 2.0 (WITHOUT i-stop)].) (See 01-17B-9 NEGATIVE BATTERY CABLE DISCONNECTION/CONNECTION [SKYACTIV-D 2.2].)
3. Remove the following parts:
   (1) Inner garnish (See 09-17-65 INNER GARNISH REMOVAL/INSTALLATION.)
   (2) Front door trim (See 09-17-65 FRONT DOOR TRIM REMOVAL/INSTALLATION.)
   (3) Inner handle (See 09-14-15 INNER HANDLE REMOVAL/INSTALLATION.)

SECURITY AND LOCKS

(4) Front door glass (See 09-12-4 FRONT DOOR GLASS REMOVAL/INSTALLATION.)
(5) Front door module panel (See 09-11-6 FRONT DOOR MODULE PANEL REMOVAL/INSTALLATION.)
(6) Front door key cylinder (See 09-14-30 FRONT DOOR KEY CYLINDER REMOVAL/INSTALLATION.)

4. Remove the door lock knob cable and inner handle cable from the clip.

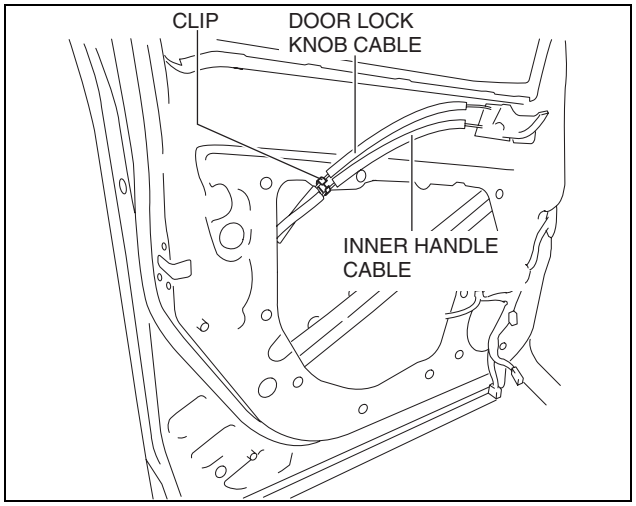

ac5wzw0000070

5. Remove the screws.

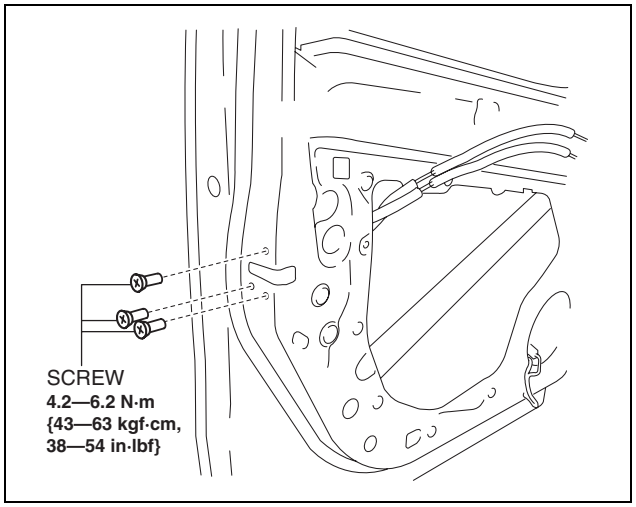

ac5wzw0000070

SECURITY AND LOCKS

6. Tilt the front door latch and lock actuator in the direction of arrow (1) shown in the figure and lift it in the direction of arrow (2) to detach the hook of the front door latch and lock actuator.

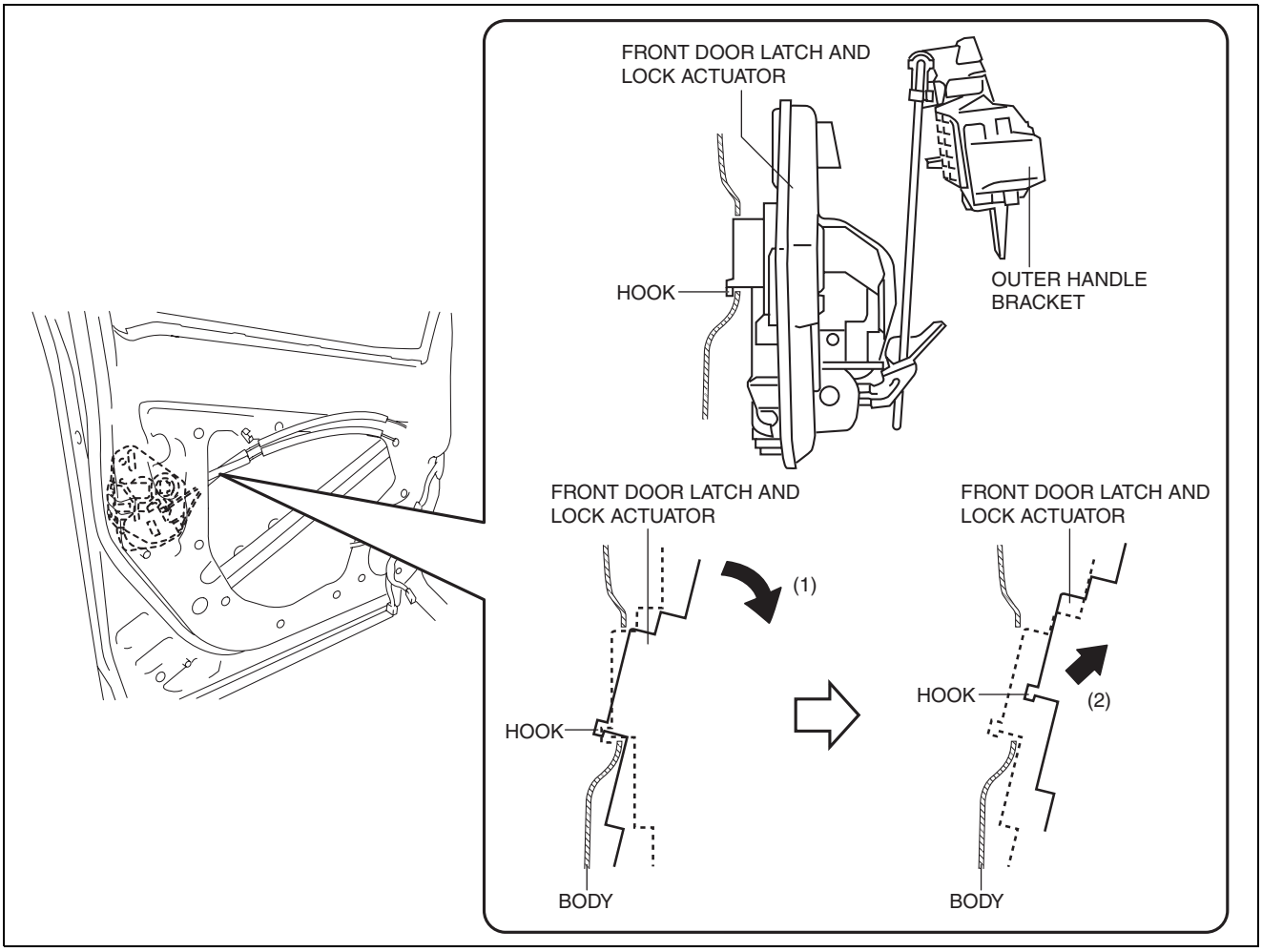

ac5wzw0000070

7. Move the front door latch and lock actuator down in the direction of arrow (3) shown in the figure to remove the rod from the rod holder.
8. Remove the front door latch and lock actuator.
9. Install in the reverse order of removal.

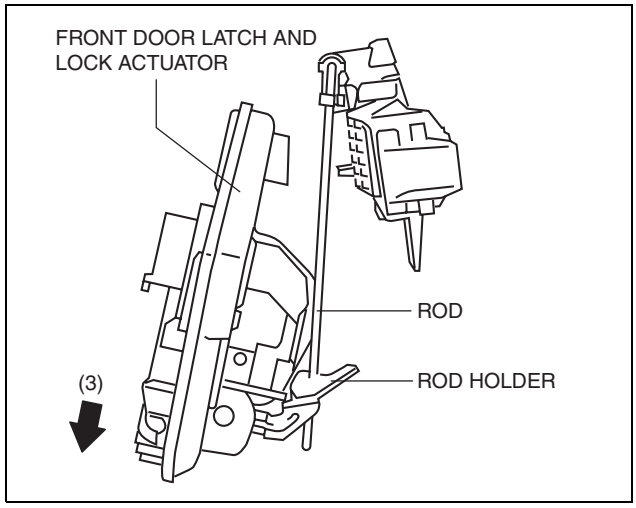

ac5wzw0000070

FRONT DOOR LATCH AND LOCK ACTUATOR INSPECTION

id091400511200

- The following actuator and switches are integrated with the front door latch and lock actuator.
- From the actuator/switch name and operation in the following table, select the actuator or switch to be inspected, and perform the inspection following the inspection procedure described in the reference.

Actuator/Switch name	Operation	Reference
Front door lock actuator	Electrically switches the lock/unlock of the front doors.	09-14-38 FRONT DOOR LOCK ACTUATOR INSPECTION

SECURITY AND LOCKS

Actuator/Switch name	Operation	Reference
Front door lock-link switch	Turns on/off in conjunction with the lock/unlock so that the lock/unlock condition is detected.	09-14-40 DOOR LOCK-LINK SWITCH INSPECTION
Front door latch switch	Turns on/off in conjunction with the latch lever operation so that the front door open/closed condition is detected.	09-14-40 FRONT DOOR LATCH SWITCH INSPECTION
Front door key cylinder switch	Turns on/off in conjunction with the lock/unlock of the front door key cylinder so that the key cylinder operation condition is detected.	09-14-32 FRONT DOOR KEY CYLINDER SWITCH INSPECTION

FRONT DOOR LOCK ACTUATOR INSPECTION

id091400511300

1. Perform the front door glass preparation. (See 09-12-4 FRONT DOOR GLASS REMOVAL/INSTALLATION.)
2. Disconnect the negative battery cable. (See 01-17A-11 NEGATIVE BATTERY CABLE DISCONNECTION/CONNECTION [SKYACTIV-G 2.0].) (See 01-17A-13 NEGATIVE BATTERY CABLE DISCONNECTION/CONNECTION [SKYACTIV-G 2.0 (WITHOUT i-stop)].) (See 01-17B-9 NEGATIVE BATTERY CABLE DISCONNECTION/CONNECTION [SKYACTIV-D 2.2].)
3. Remove the following parts:
   (1) Inner garnish (See 09-17-65 INNER GARNISH REMOVAL/INSTALLATION.)
   (2) Front door trim (See 09-17-65 FRONT DOOR TRIM REMOVAL/INSTALLATION.)
   (3) Front door glass (See 09-12-4 FRONT DOOR GLASS REMOVAL/INSTALLATION.)
   (4) Front door module panel (See 09-11-6 FRONT DOOR MODULE PANEL REMOVAL/INSTALLATION.)
   (5) Front door key cylinder (See 09-14-30 FRONT DOOR KEY CYLINDER REMOVAL/INSTALLATION.)
   (6) Front door latch and lock actuator (See 09-14-35 FRONT DOOR LATCH AND LOCK ACTUATOR REMOVAL/INSTALLATION.)
4. Apply battery positive voltage and connect the ground to the front door lock actuator terminals as indicated in the table and verify the operation condition.

WITH DOUBLE LOCKING SYSTEM

FRONT DOOR LOCK ACTUATOR	B+ Terminal	Ground Terminal	Operation
LH	C	G	LOCK
	A	G	DOUBLE LOCK
	G	A,C	UNLOCK
RH	I	E	LOCK
	K	E	DOUBLE LOCK
	E	K,I	UNLOCK

WITHOUT DOUBLE LOCKING SYSTEM

FRONT DOOR LOCK ACTUATOR	B+ Terminal	Ground Terminal	Operation
LH	A	G	LOCK
	G	A	UNLOCK
RH	K	E	LOCK
	E	K	UNLOCK

ac5jjw00000237

SECURITY AND LOCKS

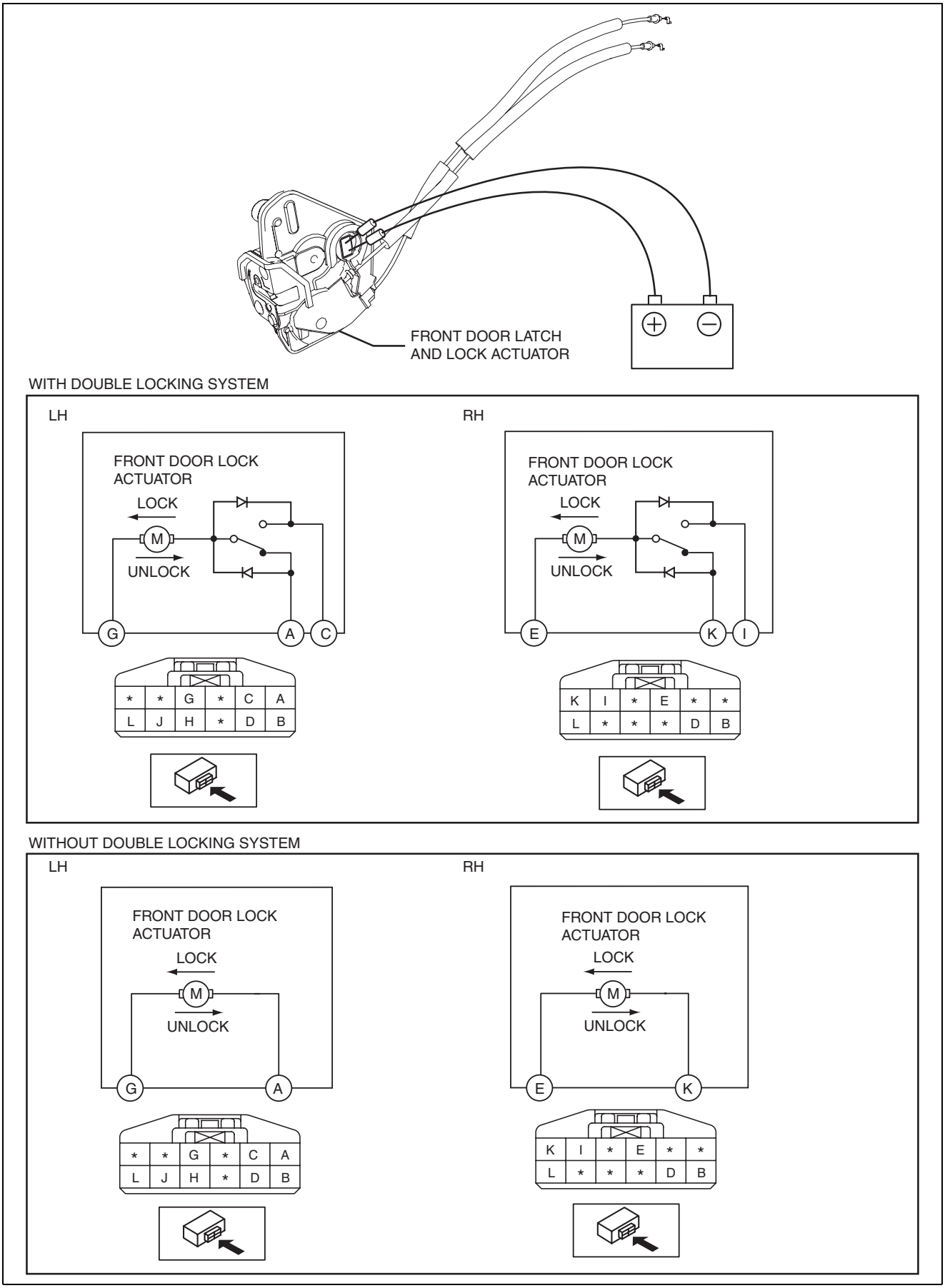

ac5jjw00000014

- If not as indicated in the table, replace the front door latch and lock actuator.

SECURITY AND LOCKS

FRONT DOOR LATCH SWITCH INSPECTION

id091400511400

1. Perform the front door glass preparation. (See 09-12-4 FRONT DOOR GLASS REMOVAL/INSTALLATION.)
2. Disconnect the negative battery cable. (See 01-17A-11 NEGATIVE BATTERY CABLE DISCONNECTION/CONNECTION [SKYACTIV-G 2.0].) (See 01-17A-13 NEGATIVE BATTERY CABLE DISCONNECTION/CONNECTION [SKYACTIV-G 2.0 (WITHOUT i-stop)].) (See 01-17B-9 NEGATIVE BATTERY CABLE DISCONNECTION/CONNECTION [SKYACTIV-D 2.2].)
3. Remove the following parts:
   (1) Inner garnish (See 09-17-65 INNER GARNISH REMOVAL/INSTALLATION.)
   (2) Front door trim (See 09-17-65 FRONT DOOR TRIM REMOVAL/INSTALLATION.)
   (3) Front door glass (See 09-12-4 FRONT DOOR GLASS REMOVAL/INSTALLATION.)
   (4) Front door module panel (See 09-11-6 FRONT DOOR MODULE PANEL REMOVAL/INSTALLATION.)
   (5) Front door key cylinder (See 09-14-30 FRONT DOOR KEY CYLINDER REMOVAL/INSTALLATION.)
   (6) Front door latch and lock actuator (See 09-14-35 FRONT DOOR LATCH AND LOCK ACTUATOR REMOVAL/INSTALLATION.)
4. Verify that the continuity is as indicated in the table.

: CONTINUITY

DOOR LATCH SWITCH	TERMINAL	
	LH:L RH:B	LH:J RH:D
LATCH		
UNLATCH	○	○

ac5jjw00000021

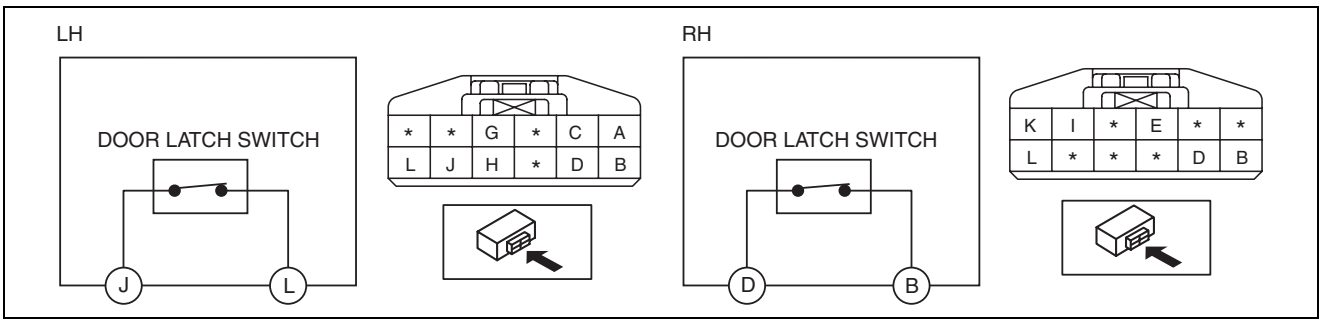

ac5jjw00000019

- If not as indicated in the table, replace the front door latch and lock actuator.

Note

- When inspecting the latch side of the front door latch switch, press in the latch lever using a flathead screwdriver and set it to the latched position.

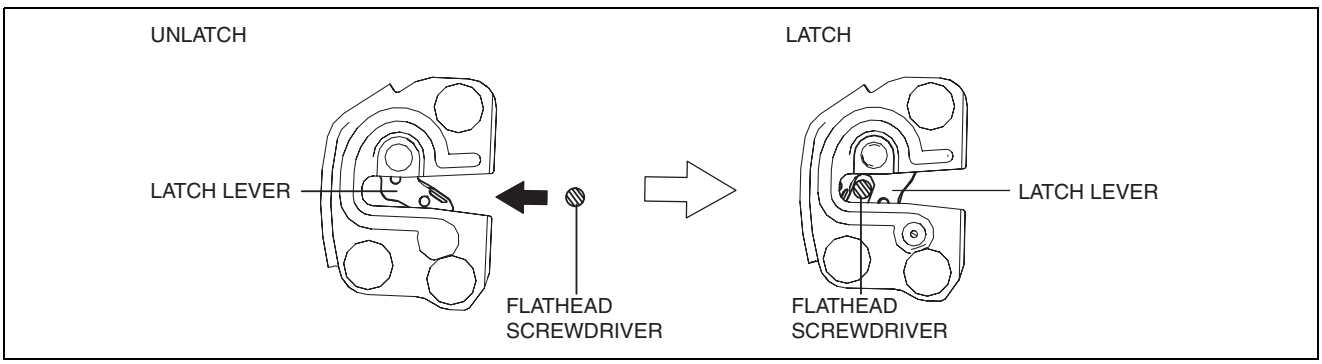

ac5jjw00000020

DOOR LOCK-LINK SWITCH INSPECTION

id091400511500

Front Door Lock-link Inspection

1. Perform the front door glass preparation. (See 09-12-4 FRONT DOOR GLASS REMOVAL/INSTALLATION.)

SECURITY AND LOCKS

2. Disconnect the negative battery cable. (See 01-17A-11 NEGATIVE BATTERY CABLE DISCONNECTION/CONNECTION [SKYACTIV-G 2.0].) (See 01-17A-13 NEGATIVE BATTERY CABLE DISCONNECTION/CONNECTION [SKYACTIV-G 2.0 (WITHOUT i-stop)].) (See 01-17B-9 NEGATIVE BATTERY CABLE DISCONNECTION/CONNECTION [SKYACTIV-D 2.2].)
3. Remove the following parts:
   (1) Inner garnish (See 09-17-65 INNER GARNISH REMOVAL/INSTALLATION.)
   (2) Front door trim (See 09-17-65 FRONT DOOR TRIM REMOVAL/INSTALLATION.)
   (3) Front door glass (See 09-12-4 FRONT DOOR GLASS REMOVAL/INSTALLATION.)
   (4) Front door module panel (See 09-11-6 FRONT DOOR MODULE PANEL REMOVAL/INSTALLATION.)
   (5) Front door key cylinder (See 09-14-30 FRONT DOOR KEY CYLINDER REMOVAL/INSTALLATION.)
   (6) Front door latch and lock actuator (See 09-14-35 FRONT DOOR LATCH AND LOCK ACTUATOR REMOVAL/INSTALLATION.)
4. When the door lock-link switch cable is pulled or pressed in, verify that the continuity is as indicated in the table.

○—○ : CONTINUITY

LOCK KNOB POSITION	TERMINAL		
	LH:D RH:J	LH:J RH:D	LH:B RH:L
LOCK	○—○		
UNLOCK		○—○	

am3uuw0000454

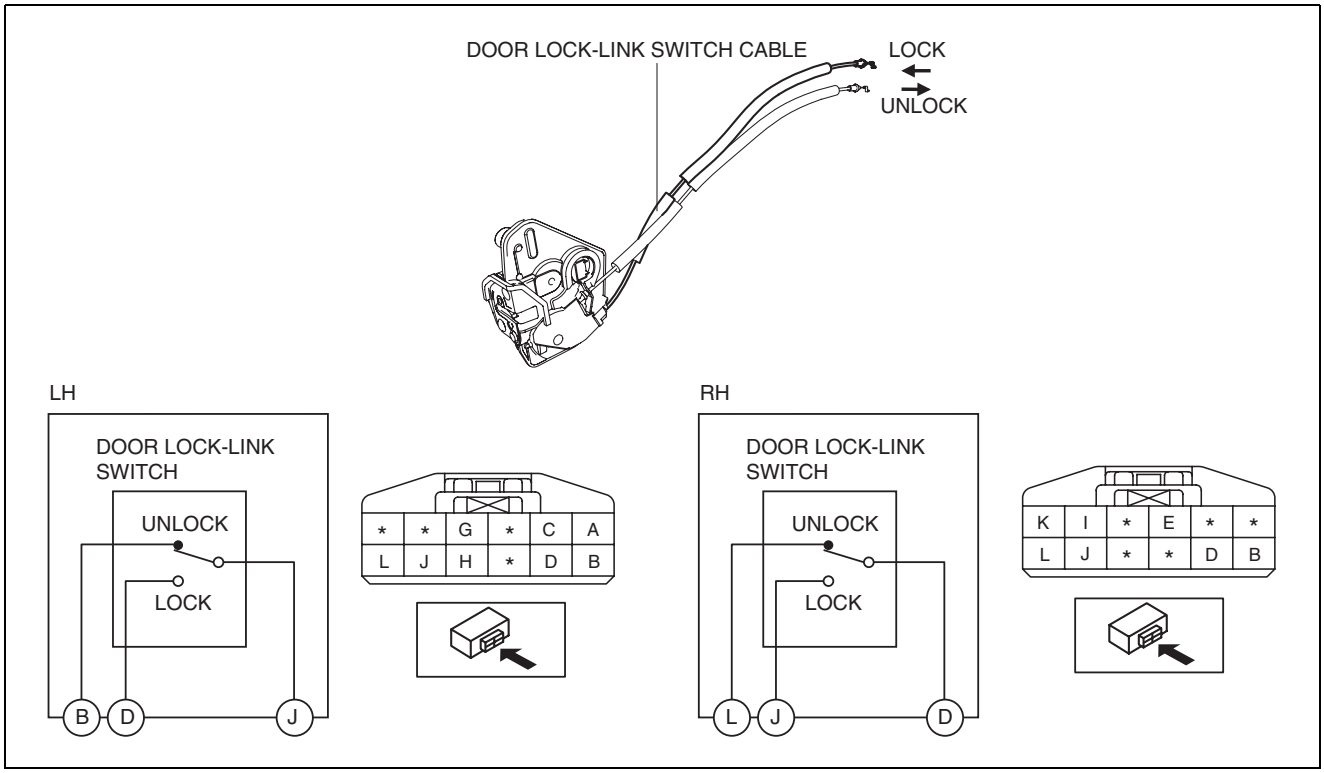

ac5wzw0000070

- If not as indicated in the table, replace the front door latch and lock actuator.

Rear Door Lock-link Inspection

1. Disconnect the negative battery cable. (See 01-17A-11 NEGATIVE BATTERY CABLE DISCONNECTION/CONNECTION [SKYACTIV-G 2.0].) (See 01-17A-13 NEGATIVE BATTERY CABLE DISCONNECTION/CONNECTION [SKYACTIV-G 2.0 (WITHOUT i-stop)].) (See 01-17B-9 NEGATIVE BATTERY CABLE DISCONNECTION/CONNECTION [SKYACTIV-D 2.2].)
2. Remove the following parts:
   (1) Rear door trim (See 09-17-74 REAR DOOR TRIM REMOVAL/INSTALLATION.)
   (2) Rear inner handle (See 09-14-15 INNER HANDLE REMOVAL/INSTALLATION.)
   (3) Rear door latch and lock actuator (See 09-14-42 REAR DOOR LATCH AND LOCK ACTUATOR REMOVAL/INSTALLATION.)

SECURITY AND LOCKS

3. If the door lock condition is to be inspected, pull the door lock-link switch cable, or press it in.
4. Verify that the continuity is as indicated in the table.

○—○ : CONTINUITY

LOCK KNOB POSITION	TERMINAL		
	LH:D RH:J	LH:J RH:D	LH:B RH:L
LOCK	○—○		
UNLOCK		○—○	

am3uuw0000454

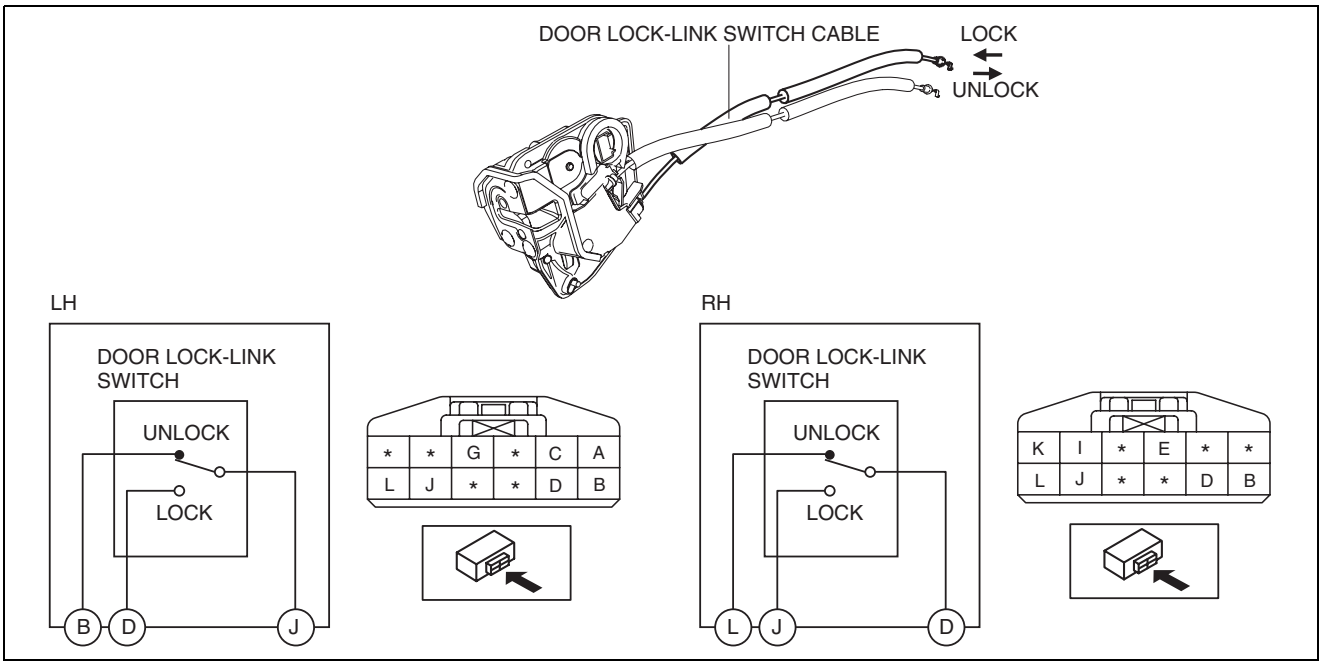

ac5wzw0000070

- If not as indicated in the table, replace the rear door latch and lock actuator.

DOOR LOCK STRIKER REMOVAL/INSTALLATION

id091400511600

1. Remove the screws, and then remove the door lock striker.
2. Install in the reverse order of removal.
3. Adjust the door. (See 09-11-17 DOOR ADJUSTMENT.)

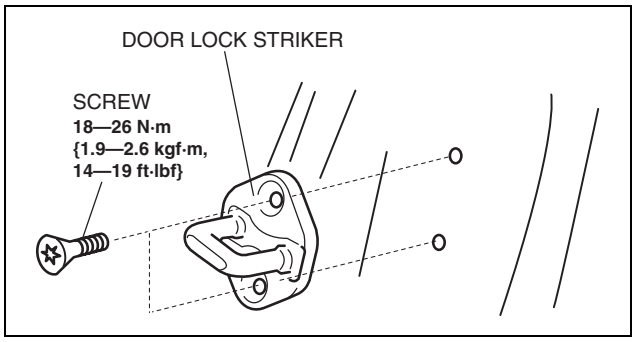

ac5wzw0000034

REAR DOOR LATCH AND LOCK ACTUATOR REMOVAL/INSTALLATION

id091400511700

1. Disconnect the negative battery cable. (See 01-17A-11 NEGATIVE BATTERY CABLE DISCONNECTION/CONNECTION [SKYACTIV-G 2.0].) (See 01-17A-13 NEGATIVE BATTERY CABLE DISCONNECTION/CONNECTION [SKYACTIV-G 2.0 (WITHOUT i-stop)].) (See 01-17B-9 NEGATIVE BATTERY CABLE DISCONNECTION/CONNECTION [SKYACTIV-D 2.2].)
2. Remove the rear door trim. (See 09-17-74 REAR DOOR TRIM REMOVAL/INSTALLATION.)
3. Remove the rear inner handle. (See 09-14-15 INNER HANDLE REMOVAL/INSTALLATION.)
4. Remove service hole cover No. 1 in the direction of the arrow shown in the figure.

SECURITY AND LOCKS

Caution

- **When removing service hole cover No.1, remove it while gradually stripping the butyl rubber. Otherwise service hole cover No.1 may be deformed.**

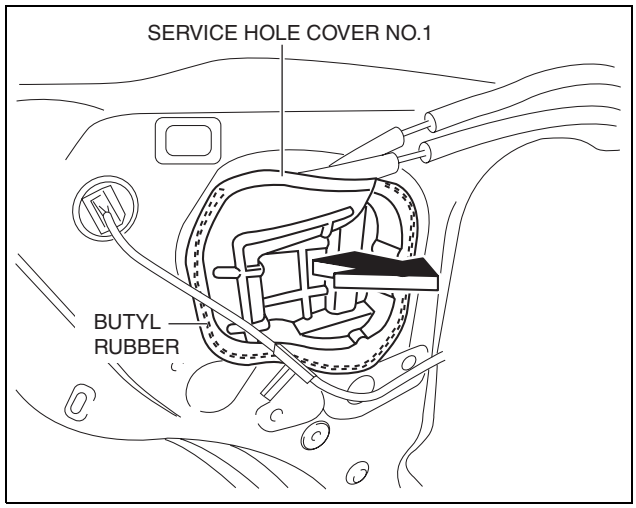

ac5wzw0000251

5. Disconnect the connector.
6. Remove the door lock knob cable and the inner handle cable from the clip.

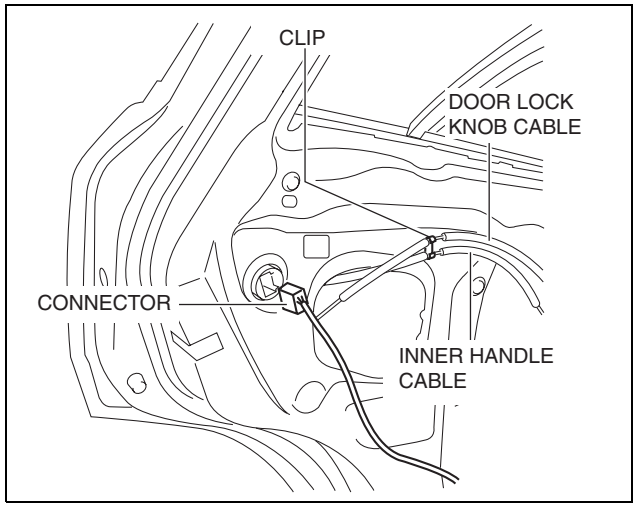

ac5wzw0000071

7. Remove the screws.

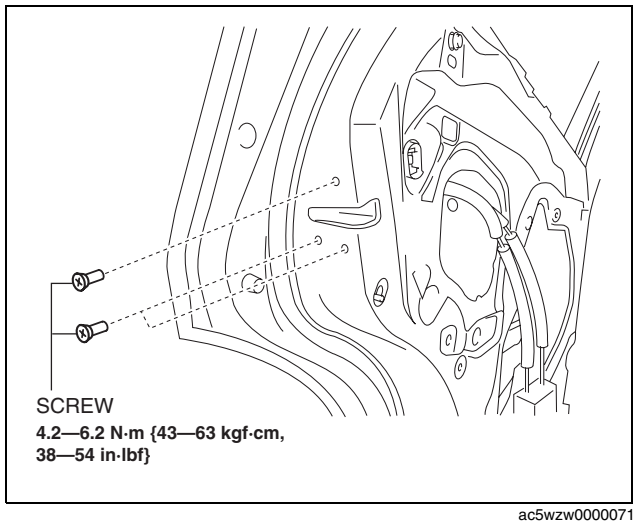

ac5wzw0000071

SECURITY AND LOCKS

8. Tilt the rear door latch and lock actuator in the direction of arrow (1) shown in the figure and lift it in the direction of arrow (2) to detach the hook of the rear door latch and lock actuator.

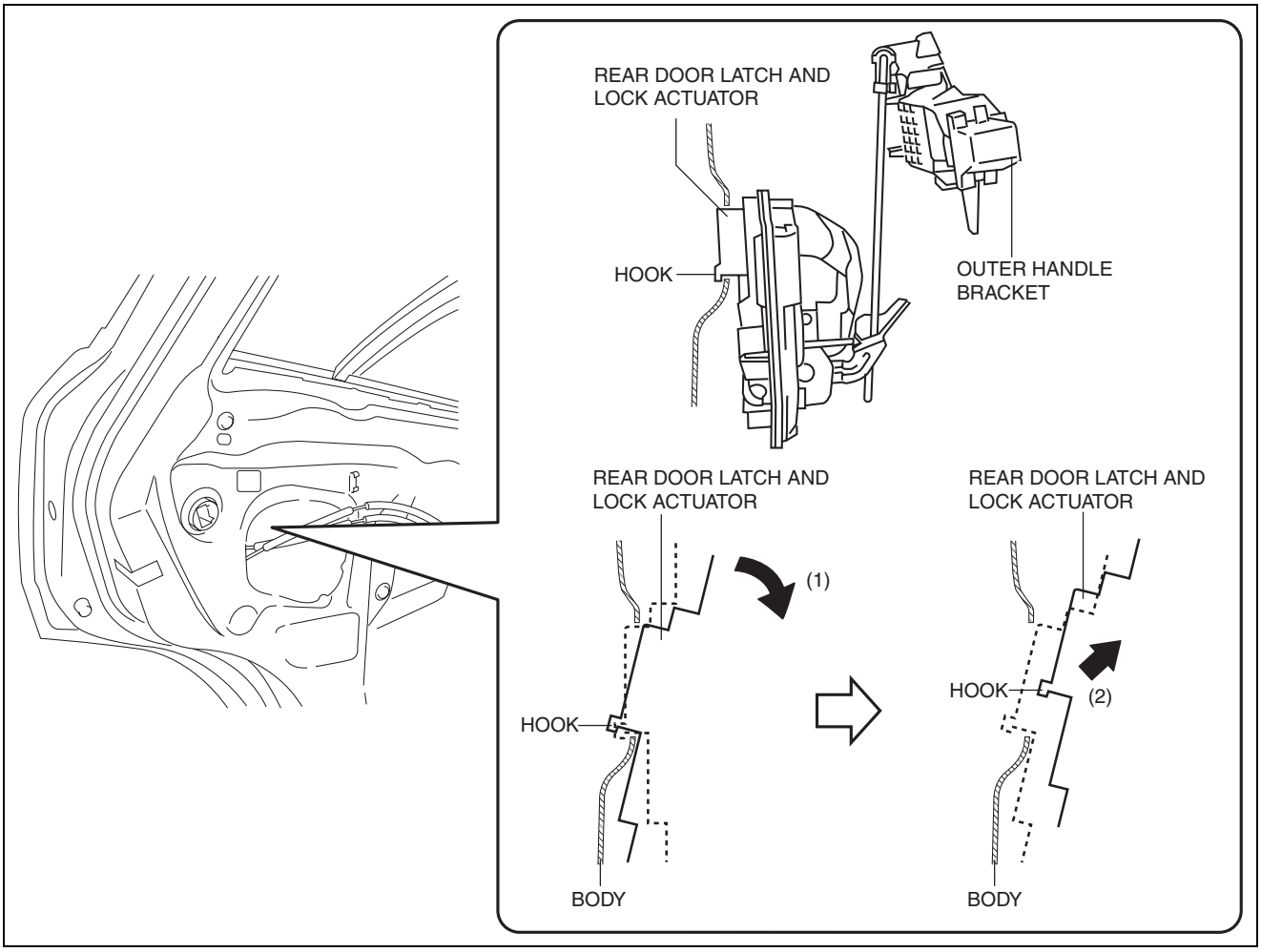

ac5wzw0000071

9. Move the front door latch and lock actuator down in the direction of arrow (3) shown in the figure to remove the rod from the rod holder.
10. Remove the rear door latch and lock actuator.
11. Install in the reverse order of removal.

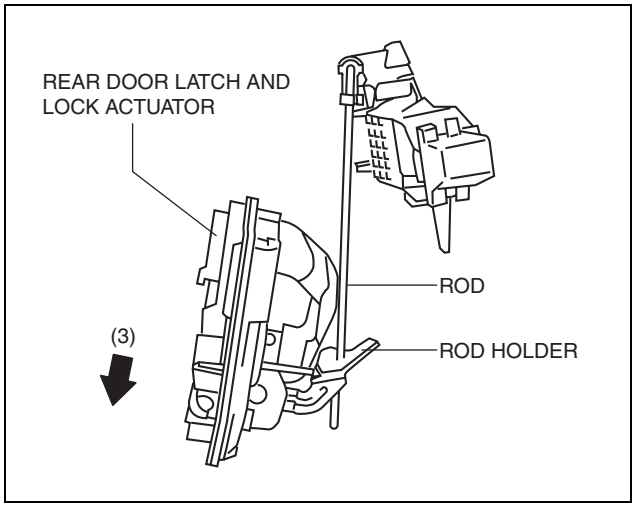

ac5wzw0000071

REAR DOOR LATCH AND LOCK ACTUATOR INSPECTION

id091400511800

- The following actuator and switch are integrated with the rear door latch and lock actuator.
- From the actuator/switch name and operation in the following table, select the actuator or switch to be inspected, and perform the inspection following the inspection procedure described in the reference.

Actuator/Switch name	Operation	Reference
Rear door lock actuator	Electrically switches the lock/unlock of the rear doors.	09-14-45 REAR DOOR LOCK ACTUATOR INSPECTION

SECURITY AND LOCKS

Actuator/Switch name	Operation	Reference
Rear door lock-link switch	Turns on/off in conjunction with the lock/unlock so that the lock/unlock condition is detected.	09-14-40 DOOR LOCK-LINK SWITCH INSPECTION
Rear door latch switch	Turns on/off in conjunction with the latch lever operation so that the rear door open/closed condition is detected.	09-14-46 REAR DOOR LATCH SWITCH INSPECTION

REAR DOOR LOCK ACTUATOR INSPECTION

id091400512000

1. Disconnect the negative battery cable. (See 01-17A-11 NEGATIVE BATTERY CABLE DISCONNECTION/CONNECTION [SKYACTIV-G 2.0].) (See 01-17A-13 NEGATIVE BATTERY CABLE DISCONNECTION/CONNECTION [SKYACTIV-G 2.0 (WITHOUT i-stop)].) (See 01-17B-9 NEGATIVE BATTERY CABLE DISCONNECTION/CONNECTION [SKYACTIV-D 2.2].)
2. Remove the following parts:
   (1) Rear door trim (See 09-17-74 REAR DOOR TRIM REMOVAL/INSTALLATION.)
   (2) Rear inner handle (See 09-14-15 INNER HANDLE REMOVAL/INSTALLATION.)
   (3) Rear door latch and lock actuator (See 09-14-42 REAR DOOR LATCH AND LOCK ACTUATOR REMOVAL/INSTALLATION.)
3. Apply battery positive voltage and connect the ground to the rear door lock actuator terminals as indicated in the table below and verify the operation condition.

WITH DOUBLE LOCKING SYSTEM

FRONT DOOR LOCK ACTUATOR	B+ Terminal	Ground Terminal	Operation
LH	C	G	LOCK
	A	G	DOUBLE LOCK
	G	A,C	UNLOCK
RH	I	E	LOCK
	K	E	DOUBLE LOCK
	E	K,I	UNLOCK

WITHOUT DOUBLE LOCKING SYSTEM

FRONT DOOR LOCK ACTUATOR	B+ Terminal	Ground Terminal	Operation
LH	A	G	LOCK
	G	A	UNLOCK
RH	K	E	LOCK
	E	K	UNLOCK

ac5wzw0000068

SECURITY AND LOCKS

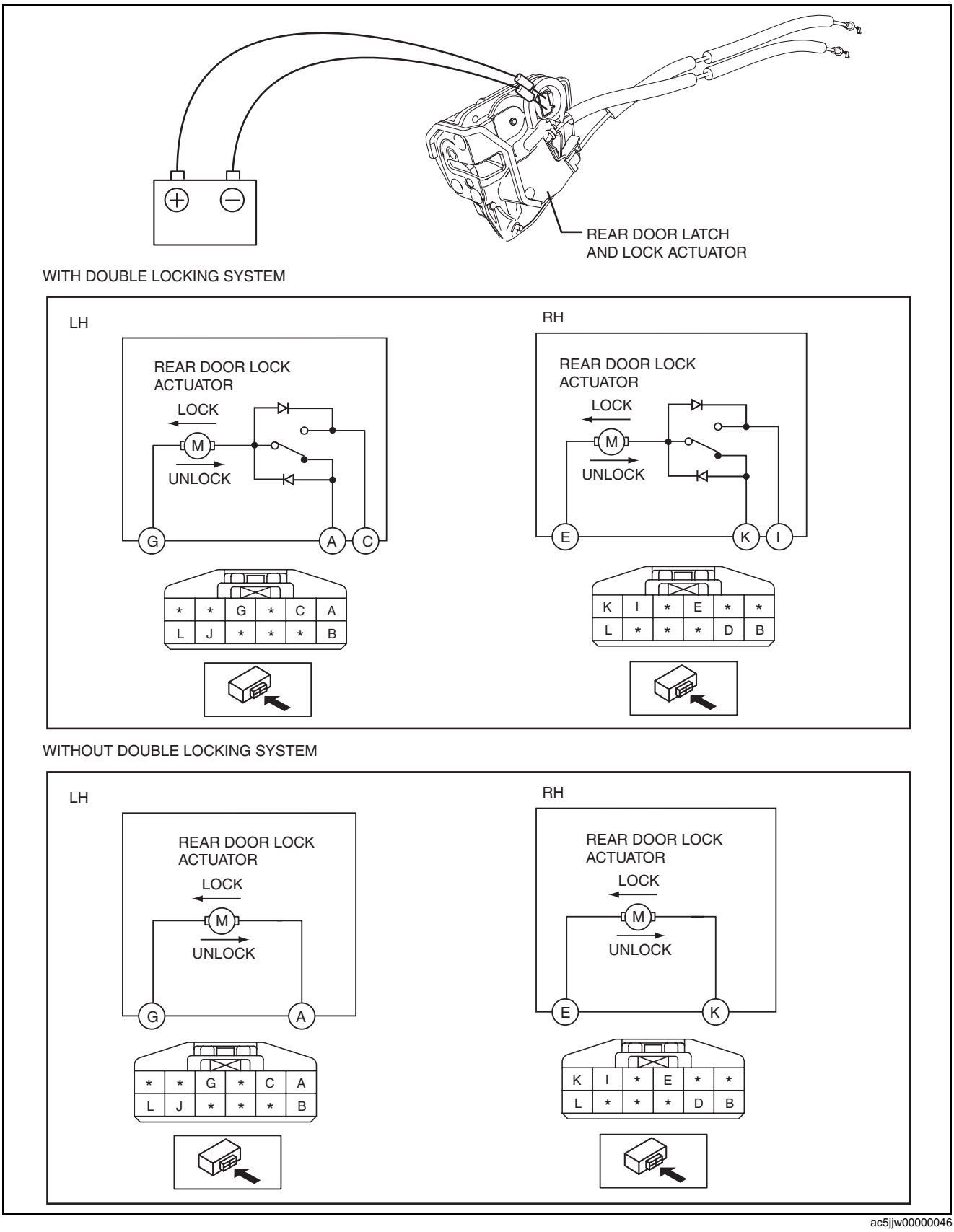

ac5jjw00000046

- If not as indicated in the table, replace the rear door latch and lock actuator.

REAR DOOR LATCH SWITCH INSPECTION

id091400511900

1. Disconnect the negative battery cable. (See 01-17A-11 NEGATIVE BATTERY CABLE DISCONNECTION/

SECURITY AND LOCKS

CONNECTION [SKYACTIV-G 2.0].) (See 01-17A-13 NEGATIVE BATTERY CABLE DISCONNECTION/CONNECTION [SKYACTIV-G 2.0 (WITHOUT i-stop)].) (See 01-17B-9 NEGATIVE BATTERY CABLE DISCONNECTION/CONNECTION [SKYACTIV-D 2.2].)

2. Remove the following parts:
   (1) Rear door trim (See 09-17-74 REAR DOOR TRIM REMOVAL/INSTALLATION.)
   (2) Rear inner handle (See 09-14-15 INNER HANDLE REMOVAL/INSTALLATION.)
   (3) Rear door latch and lock actuator (See 09-14-42 REAR DOOR LATCH AND LOCK ACTUATOR REMOVAL/INSTALLATION.)
3. Verify that the continuity is as indicated in the table.

○—○: CONTINUITY

DOOR LATCH SWITCH	TERMINAL	
	LH:L RH:B	**LH:J RH:D**
LATCH		
UNLATCH	○	○

ac5jjw00000042

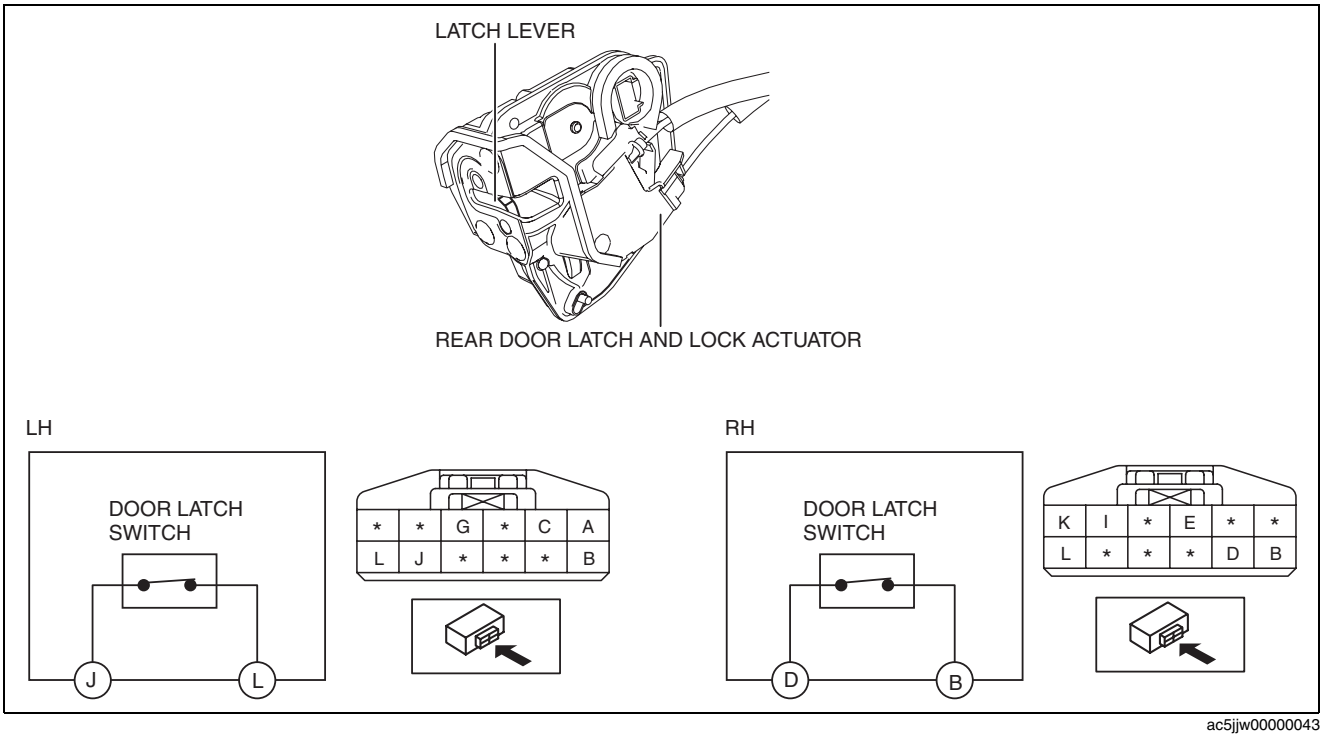

ac5jjw00000043

- If not as indicated in the table, replace the rear door latch and lock actuator.

SECURITY AND LOCKS

Note
- When inspecting the latch side of the rear door latch switch, press in the latch lever using a flathead screwdriver and set it to the latched position.

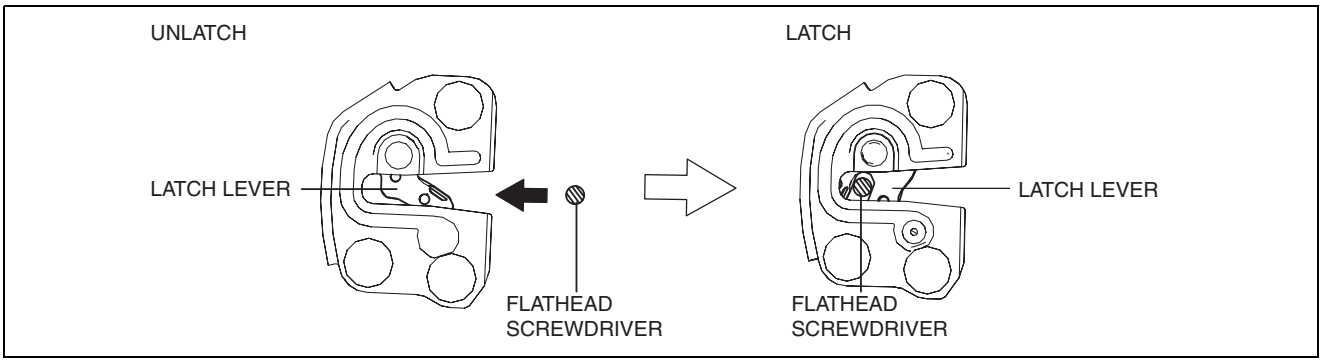

ac5jjw00000020

DOOR LOCK SYSTEM OPERATION RECORD

id091400005100

1. Connect the M-MDS to the DLC-2.
2. After vehicle identification, select the following from the M-MDS initial screen.
   1. “Operational Record”
3. Then, select the following from the screen menu.
   1. “Door Lock System”
4. Display the door lock system operation history according to the screen instructions.

LIFTGATE LATCH AND LOCK ACTUATOR REMOVAL/INSTALLATION

id091400516900

1. Disconnect the negative battery cable. (See 01-17A-11 NEGATIVE BATTERY CABLE DISCONNECTION/CONNECTION [SKYACTIV-G 2.0].) (See 01-17A-13 NEGATIVE BATTERY CABLE DISCONNECTION/CONNECTION [SKYACTIV-G 2.0 (WITHOUT i-stop)].) (See 01-17B-9 NEGATIVE BATTERY CABLE DISCONNECTION/CONNECTION [SKYACTIV-D 2.2].)
2. Remove the following parts:
   (1) Liftgate upper trim (See 09-17-87 LIFTGATE UPPER TRIM REMOVAL/INSTALLATION.)
   (2) Liftgate side trim (See 09-17-87 LIFTGATE SIDE TRIM REMOVAL/INSTALLATION.)
   (3) Liftgate lower trim (See 09-17-89 LIFTGATE LOWER TRIM REMOVAL/INSTALLATION.)
3. Remove the fastener. (With liftgate latch and lock actuator cover)
4. Remove the liftgate latch and lock actuator cover. (With liftgate latch and lock actuator cover)

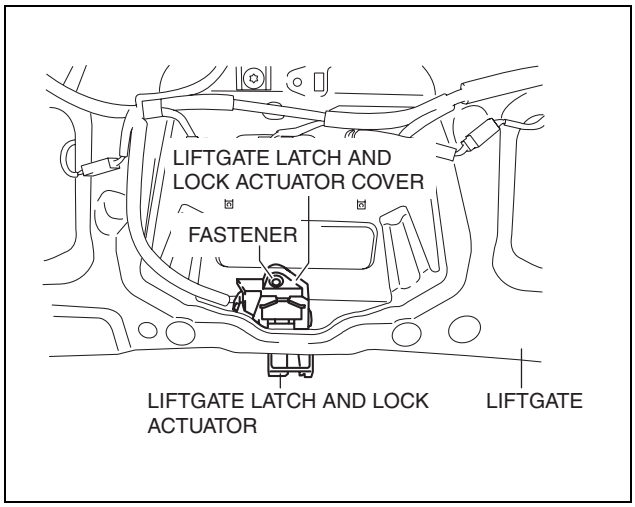

ac5wzw0000094

SECURITY AND LOCKS

5. Disconnect the connector.

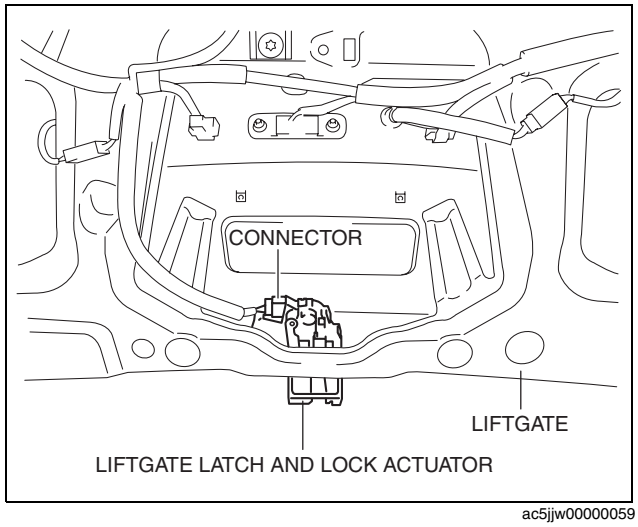

ac5jjw00000059

6. Remove the bolts.
7. Remove the liftgate latch and lock actuator from the liftgate.
8. Install in the reverse order of removal.

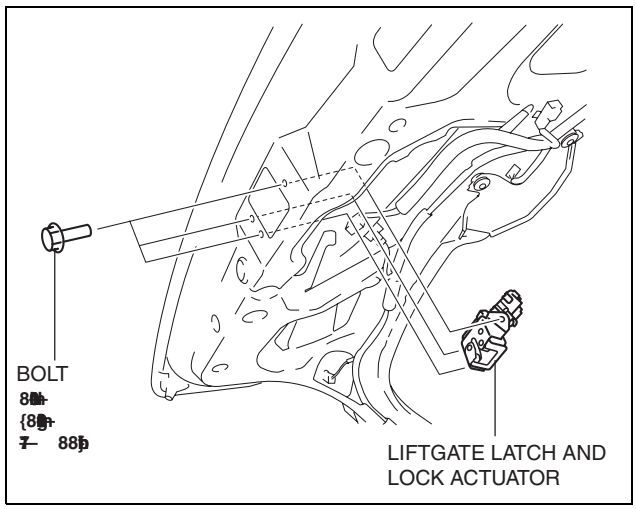

ac5jjw00000060

LIFTGATE LATCH AND LOCK ACTUATOR INSPECTION

id091400517000

- The following actuator and switch are integrated with the liftgate latch and lock actuator.
- From the actuator/switch name and operation in the following table, select the actuator or switch to be inspected, and perform the inspection following the inspection procedure described in the reference.

Actuator/Switch name	Operation	Reference
Liftgate lock actuator	Electrically unlatches the liftgate based on the signal from the rear body control module (RBCM).	09-14-49 LIFTGATE LOCK ACTUATOR INSPECTION
Liftgate latch switch	Turns on/off in conjunction with the latch lever rotation so that the liftgate open/closed condition is detected.	09-14-50 LIFTGATE LATCH SWITCH INSPECTION

LIFTGATE LOCK ACTUATOR INSPECTION

id091400512100

1. Disconnect the negative battery cable. (See 01-17A-11 NEGATIVE BATTERY CABLE DISCONNECTION/CONNECTION [SKYACTIV-G 2.0].) (See 01-17A-13 NEGATIVE BATTERY CABLE DISCONNECTION/CONNECTION [SKYACTIV-G 2.0 (WITHOUT i-stop)].) (See 01-17B-9 NEGATIVE BATTERY CABLE DISCONNECTION/CONNECTION [SKYACTIV-D 2.2].)
2. Remove the following parts:
   (1) Liftgate upper trim (See 09-17-87 LIFTGATE UPPER TRIM REMOVAL/INSTALLATION.)
   (2) Liftgate side trim (See 09-17-87 LIFTGATE SIDE TRIM REMOVAL/INSTALLATION.)
   (3) Liftgate lower trim (See 09-17-89 LIFTGATE LOWER TRIM REMOVAL/INSTALLATION.)
   (4) Liftgate latch and lock actuator (See 09-14-48 LIFTGATE LATCH AND LOCK ACTUATOR REMOVAL/INSTALLATION.)

SECURITY AND LOCKS

3. Press in the latch lever of the liftgate latch and lock actuator using a flathead screwdriver, and set it to the latched condition.

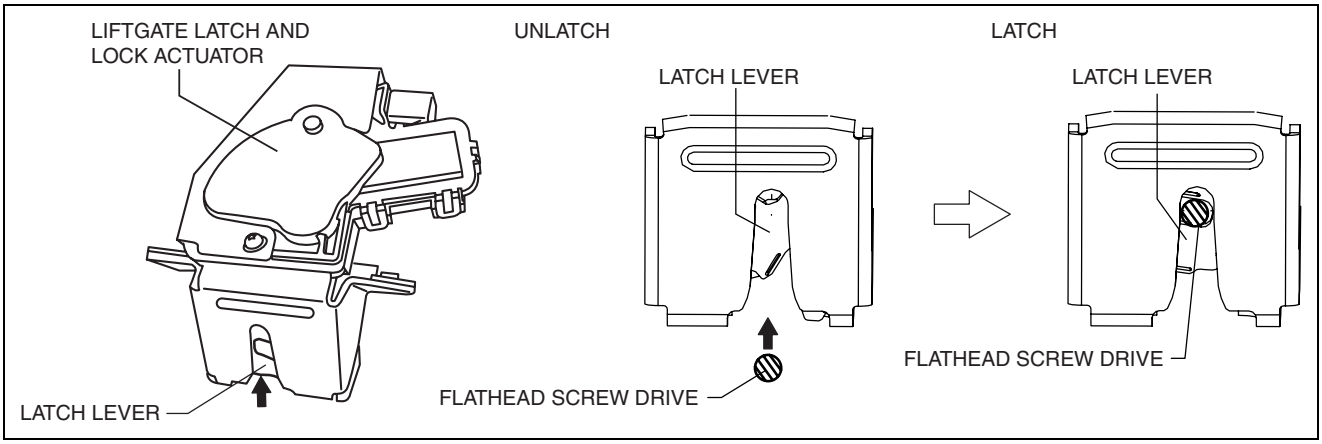

ac5wzw0000077

4. Connect terminal D to the positive battery voltage, connect terminal B to the ground, and verify that the latch lever is released and the condition changes to the unlatch condition.
   - If the operation cannot be verified, replace the liftgate latch and lock actuator.

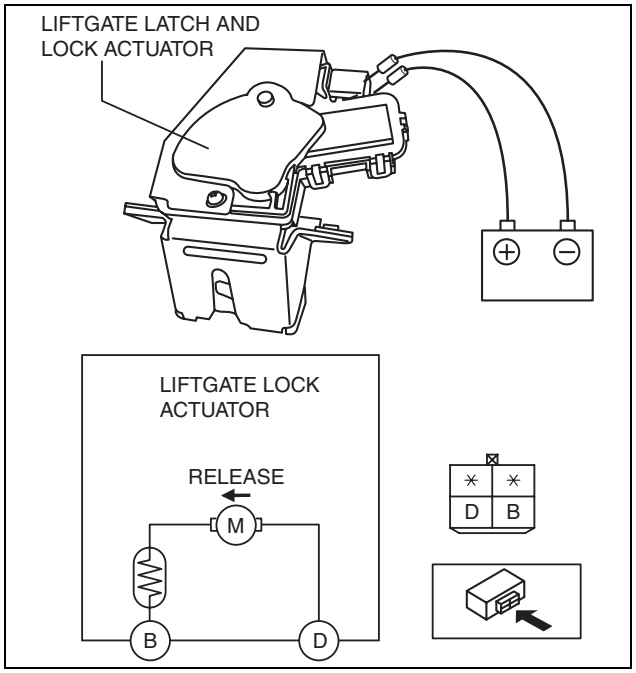

ac5jjw00000224

LIFTGATE LATCH SWITCH INSPECTION

id091400512200

1. Disconnect the negative battery cable. (See 01-17A-11 NEGATIVE BATTERY CABLE DISCONNECTION/CONNECTION [SKYACTIV-G 2.0].) (See 01-17A-13 NEGATIVE BATTERY CABLE DISCONNECTION/CONNECTION [SKYACTIV-G 2.0 (WITHOUT i-stop)].) (See 01-17B-9 NEGATIVE BATTERY CABLE DISCONNECTION/CONNECTION [SKYACTIV-D 2.2].)
2. Remove the following parts:
   (1) Liftgate upper trim (See 09-17-87 LIFTGATE UPPER TRIM REMOVAL/INSTALLATION.)
   (2) Liftgate side trim (See 09-17-87 LIFTGATE SIDE TRIM REMOVAL/INSTALLATION.)
   (3) Liftgate lower trim (See 09-17-89 LIFTGATE LOWER TRIM REMOVAL/INSTALLATION.)
   (4) Liftgate latch and lock actuator (See 09-14-48 LIFTGATE LATCH AND LOCK ACTUATOR REMOVAL/INSTALLATION.)

SECURITY AND LOCKS

3. Verify that the continuity is as indicated in the table.

○—○: CONTINUITY

LIFTGATE LATCH SWITCH	TERMINAL	
	A	C
LATCH (LIFTGATE CLOSE)		
UNLATCH (LIFTGATE OPEN)	○	○

ac5jjw00000225

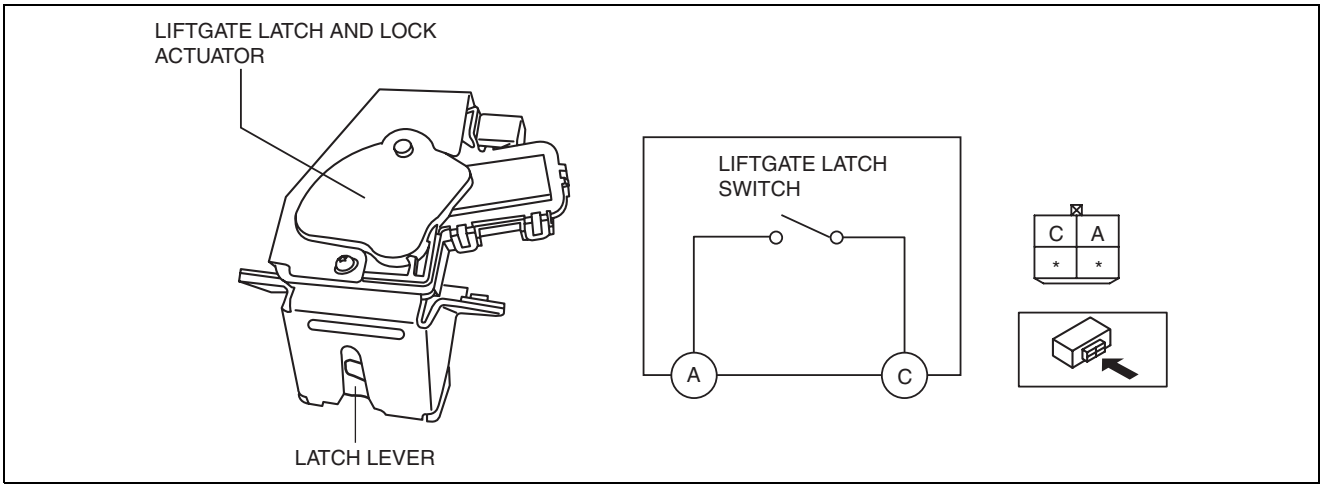

ac5jjw00000226

- If not as indicated in the table, replace the liftgate latch and lock actuator.

Note

- When inspecting the latch condition of the liftgate latch switch, press in the latch lever using a flathead screwdriver and set it to the latched position.

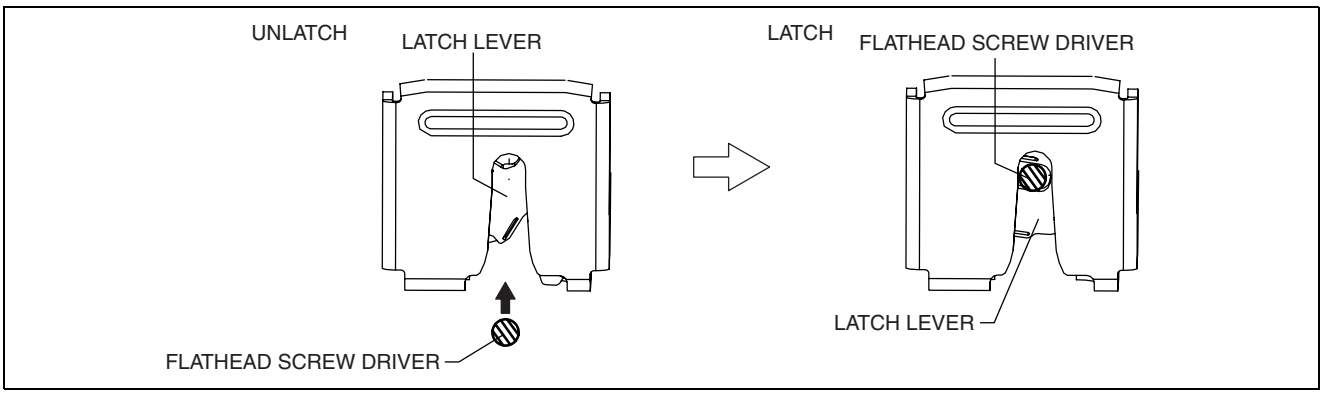

ac5jjw00000227

LIFTGATE LOCK STRIKER REMOVAL/INSTALLATION

id091400513000

1. Remove the trunk end trim. (See 09-17-78 TRUNK END TRIM REMOVAL/INSTALLATION.)

SECURITY AND LOCKS

2. Remove the bolts, then remove the liftgate lock striker.
3. Install in the reverse order of removal.
4. Adjust the liftgate. (See 09-11-23 LIFTGATE ADJUSTMENT.)

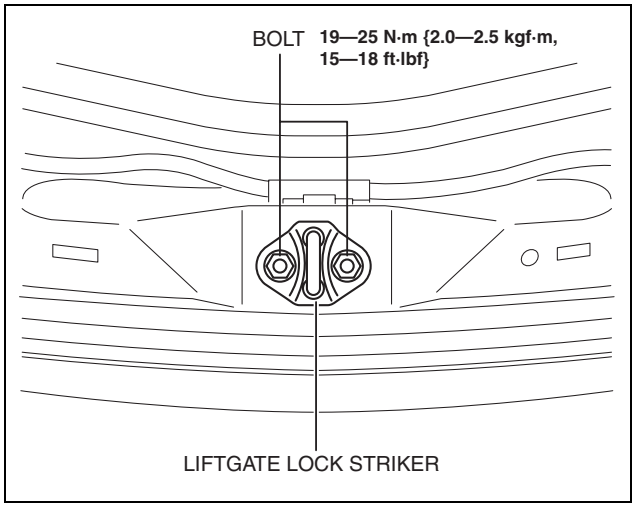

ac5wzw0000026

LIFTGATE OPENER SWITCH REMOVAL/INSTALLATION

id091400516100

1. Disconnect the negative battery cable. (See 01-17A-11 NEGATIVE BATTERY CABLE DISCONNECTION/CONNECTION [SKYACTIV-G 2.0].) (See 01-17A-13 NEGATIVE BATTERY CABLE DISCONNECTION/CONNECTION [SKYACTIV-G 2.0 (WITHOUT i-stop)].) (See 01-17B-9 NEGATIVE BATTERY CABLE DISCONNECTION/CONNECTION [SKYACTIV-D 2.2].)
2. Remove the following parts:
   (1) Liftgate upper trim (See 09-17-87 LIFTGATE UPPER TRIM REMOVAL/INSTALLATION.)
   (2) Liftgate side trim (See 09-17-87 LIFTGATE SIDE TRIM REMOVAL/INSTALLATION.)
   (3) Liftgate lower trim (See 09-17-89 LIFTGATE LOWER TRIM REMOVAL/INSTALLATION.)
   (4) Liftgate garnish (See 09-16-53 LIFTGATE GARNISH REMOVAL/INSTALLATION.)
3. Remove the liftgate opener switch from the liftgate garnish.
4. Install in the reverse order of removal.

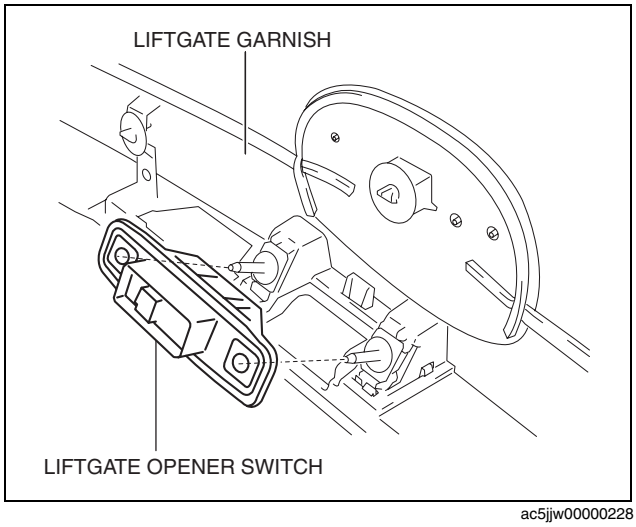

ac5jjw00000228

LIFTGATE OPENER SWITCH INSPECTION

id091400516200

1. Disconnect the negative battery cable. (See 01-17A-11 NEGATIVE BATTERY CABLE DISCONNECTION/CONNECTION [SKYACTIV-G 2.0].) (See 01-17A-13 NEGATIVE BATTERY CABLE DISCONNECTION/CONNECTION [SKYACTIV-G 2.0 (WITHOUT i-stop)].) (See 01-17B-9 NEGATIVE BATTERY CABLE DISCONNECTION/CONNECTION [SKYACTIV-D 2.2].)
2. Remove the following parts:
   (1) Liftgate upper trim (See 09-17-87 LIFTGATE UPPER TRIM REMOVAL/INSTALLATION.)
   (2) Liftgate side trim (See 09-17-87 LIFTGATE SIDE TRIM REMOVAL/INSTALLATION.)
   (3) Liftgate lower trim (See 09-17-89 LIFTGATE LOWER TRIM REMOVAL/INSTALLATION.)
   (4) Liftgate garnish (See 09-16-53 LIFTGATE GARNISH REMOVAL/INSTALLATION.)
   (5) Liftgate opener switch (See 09-14-52 LIFTGATE OPENER SWITCH REMOVAL/INSTALLATION.)

SECURITY AND LOCKS

3. Verify the continuity of liftgate opener switch terminals B and C.

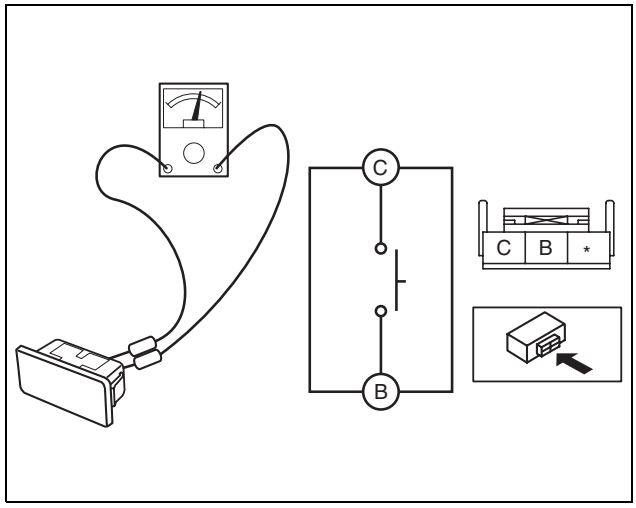

ac5wzw0000276

- If not as indicated in the table, replace the liftgate opener switch.

○—○: CONTINUITY

SWITCH POSITION	TERMINAL	
	B	C
ON (PUSH)	○	○
OFF (RELEASE)		

ac5jjw00000229

START STOP UNIT REMOVAL/INSTALLATION

id091400110300

Caution

- **Never remove bolts and screws other than the bolt in Steps 7 and 8. Otherwise, it will damage internally and the steering lock cannot be unlocked, resulting in the inability to perform the start-stop unit removal/installation.**
- **If configuration is not performed when the start stop unit is replaced with a new one, the vehicle specification information is not stored in the start stop unit and the system will not operate normally.**
- **When performing configuration, it is necessary to read the vehicle specification information from the start stop unit before replacing it. Connect the M-MDS to the vehicle and perform vehicle identification before removing the start stop unit. The vehicle specification information is temporarily stored in the M-MDS.**

Note

- The start stop unit prior to replacement stores the vehicle specification information.
- A new start stop unit does not store any vehicle specification information.
- If the vehicle specification information from the start stop unit prior to replacement cannot be read, perform the configuration using As-Built data.

1. When replacing the start stop unit, perform the configuration. (See 09-14-58 START STOP UNIT CONFIGURATION (USING READ/WRITE FUNCTION).)
2. Switch the ignition to off.

Note

- If the ignition is switched off from ON (engine off or on) with the driver's door open, the steering lock operation can be temporarily released.

3. Disconnect the negative battery cable. (See 01-17A-11 NEGATIVE BATTERY CABLE DISCONNECTION/CONNECTION [SKYACTIV-G 2.0].) (See 01-17A-13 NEGATIVE BATTERY CABLE DISCONNECTION/CONNECTION [SKYACTIV-G 2.0 (WITHOUT i-stop)].) (See 01-17B-9 NEGATIVE BATTERY CABLE DISCONNECTION/CONNECTION [SKYACTIV-D 2.2].)
4. Remove the following parts:

SECURITY AND LOCKS

(1) Driver-side air bag module (See 08-10-6 DRIVER-SIDE AIR BAG MODULE REMOVAL/INSTALLATION.)
(2) Steering wheel (See 06-13-4 STEERING WHEEL AND COLUMN REMOVAL/INSTALLATION.)
(3) Clock spring (See 08-10-24 CLOCK SPRING REMOVAL/INSTALLATION.)
(4) Column cover (See 09-17-25 COLUMN COVER REMOVAL/INSTALLATION.)
(5) Wiper and washer switch (See 09-19-45 WIPER AND WASHER SWITCH REMOVAL/INSTALLATION.)
(6) Light switch (See 09-18-84 LIGHT SWITCH REMOVAL/INSTALLATION.)

5. Disconnect the connector.
6. While pressing the tabs of the clip in the direction of arrow (1) shown in the figure, press it in the direction of arrow (2) to detach the connector tabs from the start stop unit.
7. Remove the wiring harness clip from the start stop unit.

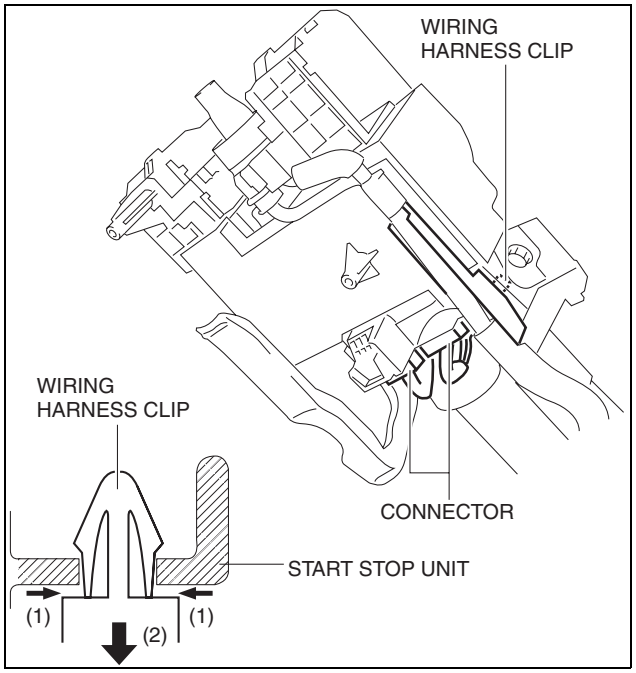

ac5wzw0000165

8. Make a groove on the bolt head by punching it with a chisel using a hammer, and remove the bolts by rotating them counterclockwise.
9. Remove the bolts.

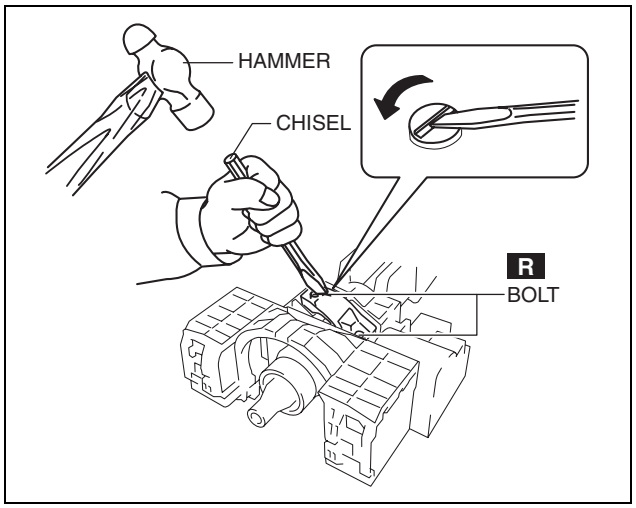

ac5wzw0000303

SECURITY AND LOCKS

10. Remove the start stop unit from the steering shaft by pulling it in the direction of the arrow shown in the figure.
11. Install in the reverse order of removal. (See 09-14-55 Start Stop Unit Installation Note.)

Note
- If configuration cannot be performed by reading/writing of the vehicle specification information, perform the configuration using As-Built information after replacing the start stop unit. (See 09-14-59 START STOP UNIT CONFIGURATION (USING AS-BUILT DATA).)

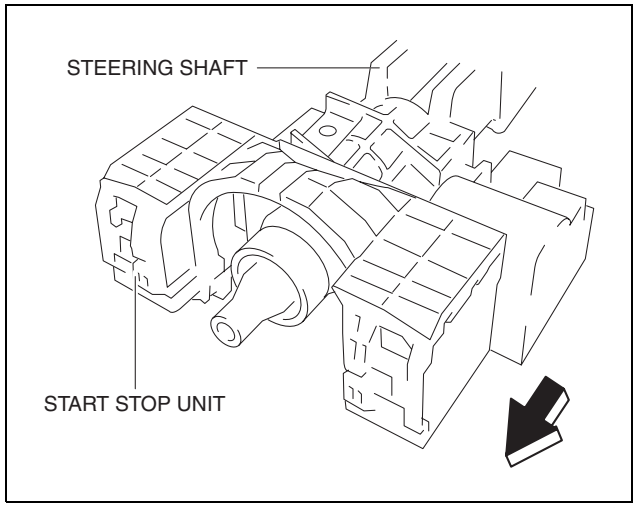

ac5wzw0000165

Start Stop Unit Installation Note
1. Temporarily install the start stop unit to the steering shaft using new start stop unit installation bolts.
2. Tighten the start stop unit installation bolts until the heads break off.

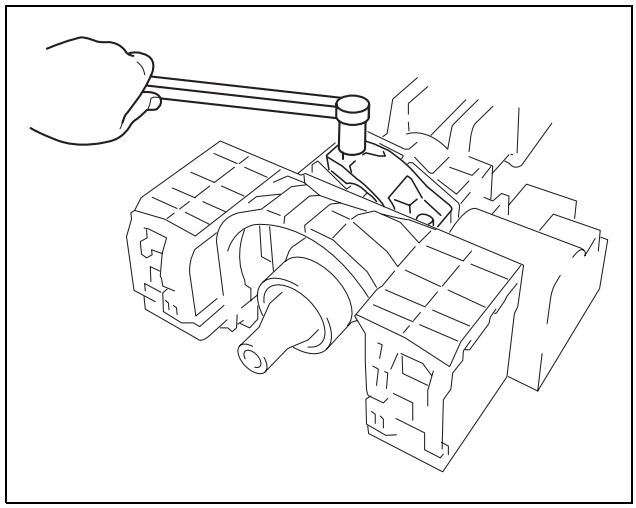
ac5jjw00000877

START STOP UNIT INSPECTION

id091400110400

1. Remove the following parts:
   (1) Column cover (See 09-17-25 COLUMN COVER REMOVAL/INSTALLATION.)
2. Verify that the voltages of each of the terminals are as indicated in the terminal voltage table (reference).
   - If the voltage is not as specified in the terminal voltage table (reference), inspect the parts under Inspection item(s) and related wiring harnesses.
     — If the system does not work normally even though the inspection items or related wiring harnesses do not have any malfunction, replace the start stop unit.

SECURITY AND LOCKS

Terminal Voltage Table (Reference)

START STOP UNIT
WIRING HARNESS SIDE CONNECTOR

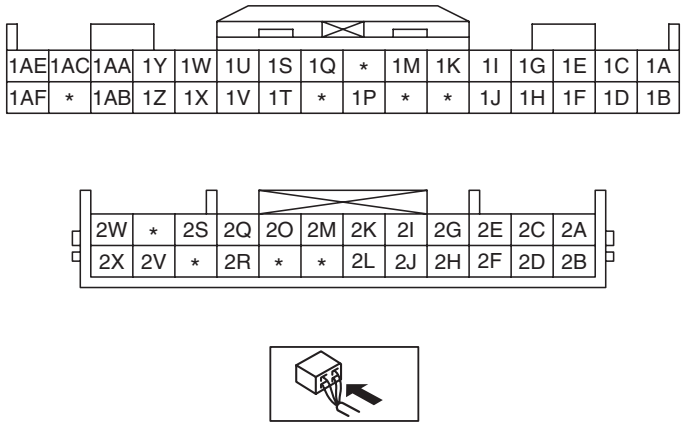

ac5wzw0000376

Terminal	Signal name	Connected to	Measurement conditions		Voltage (V)	Inspection item(s)
1A	Power supply	ROOM 15 A fuse	Under any condition		B+	• ROOM 15 A fuse • Battery
1B	Power supply	IG1 15 A fuse	Ignition switched ON (engine off)		B+	• IG1 15 A fuse • Battery
			Ignition switched OFF (LOCK) or at ACC		1.0 or less	
1C*1	Brake switch	Brake switch	Brake pedal depressed		B+	Brake switch
			Brake pedal not depressed		1.0 or less	
1D	Starter monitor (MTX)	Starter relay	Ignition switched ON (engine off)	Clutch pedal not depressed	B+	• Starter relay • Battery
				Clutch pedal depressed	1.0 or less	
	Starter monitor (ATX)	Starter relay	Ignition switched ON (engine off)	Other than selector lever is in P or N position	B+	• Starter relay • Battery
				Selector lever is in P or N position	1.0 or less	
1E	ACC monitor	MIRROR 7.5 A fuse	Switch the ignition to ACC or ON (engine off)		B+	• MIRROR 7.5 A fuse • Battery
			Ignition switched OFF (LOCK)		1.0 or less	
1F	Starter interlock switch (MTX)	Starter interlock switch	Clutch pedal not depressed		B+	Starter interlock switch
			Clutch pedal depressed		1.0 or less	
	Selector lever position switch (ATX)	TCM	Other than selector lever is in P or N position		B+	TCM
			Selector lever is in P or N position		1.0 or less	
1G	Hazard warning switch signal	Hazard warning switch	Hazard warning switch not pressed (OFF)		B+	• MIRROR 7.5 A fuse • Battery
			Hazard warning switch pressed (ON)		1.0 or less	
1H	Push button start 1	Push button start	Push button start pressed		1.0 or less	Push button start
			Push button start not pressed		B+	
1I	Push button illumination	Push button start	Determination using terminal voltage inspection is not possible.			Push button start
1J*1	P position	Not P position switch	Selector lever is in P position		B+	Not P position switch
			Except above		1.0 or less	

SECURITY AND LOCKS

Terminal	Signal name	Connected to	Measurement conditions		Voltage (V)	Inspection item(s)
1K	Push button illumination (green)	Push button start	Engine starting conditions are met		1.0 or less	Push button start
			Except above		B+	
1M	Push button illumination (amber)	Push button start	Ignition switched to ACC or ON (engine off)		1.0 or less	Push button start
			Except above		B+	
1P	Lock input	Door lock-link switch (driver's door)	Driver's door locked		1.0 or less	Door lock-link switch (driver's door)
			Driver's door unlocked		Approx. 5	
1Q	Rear body control module (RBCM) communication	Rear body control module (RBCM)	Because this terminal is for communication, determination using terminal voltage inspection is not possible.			
1S* 5	Steering angle sensor power supply	Steering angle sensor	The specified time has elapsed since key placed outside vehicle and all doors locked		1.0 or less	Steering angle sensor
			Except above		Approx. 5	
1T* 5	Steering angle sensor ground	Steering angle sensor	Under any condition		1.0 or less	Steering angle sensor
1U* 5	Steering angle sensor (signal A/D1)	Steering angle sensor	Steering wheel is turned to left and right		4.00—4.75⇔0.25—0.75	Steering angle sensor
1V	Windshield wiper switch signal (LO)	Front body control module (FBCM)	Ignition switch ON (engine off or on)	Other than windshield wiper switch at LO and HI	B+	Front body control module (FBCM)
				Windshield wiper switch at LO	1.0 or less	
1W	Steering angle sensor (signal A/D1)	Steering angle sensor	Steering wheel is turned to left and right		4.00—4.75⇔0.25—0.75	Steering angle sensor
1X	Headlight switch signal (LO)	Front body control module (FBCM)	Light switch at position other than HEAD and passing		B+	Front body control module (FBCM)
			Light switch at HEAD position		1.0 or less	
1Y	Cruise control switch signal	Cruise control switch	RESUME switch is pressed		Approx. 1.5	Cruise control switch
			CANCEL switch is pressed		1.0 or less	
			ON switch is pressed		Approx. 1.9	
			OFF switch is pressed		1.0 or less	
			SET (+) switch is pressed			
			SET (-) switch is pressed			
			Except above		Approx. 3.6	
1Z	Cruise control switch ground	Cruise control switch	Under any condition		1.0 or less	Cruise control switch
1AA	Steering switch signal	Steering switch	Up switch is pressed		1.0 or less	Steering switch
			Down switch is pressed		Approx. 1.2	
			INFO button is pressed		Approx. 2.2	
			Except above		Approx. 3.3	
1AB	Steering switch ground	Steering switch	Under any condition		1.0 or less	Steering switch
1AC	PATS+	Coil antenna (push button start)	Because this terminal is for communication, determination using terminal voltage inspection is not possible.			
1AE	PATS-	Coil antenna (push button start)	Because this terminal is for communication, determination using terminal voltage inspection is not possible.			
1AF	GROUND	Body ground	Under any condition		1.0 or less	Body ground
2A	GROUND	Body ground	Under any condition		1.0 or less	Body ground
2B	GROUND	Body ground	Under any condition		1.0 or less	Body ground
2C	ACC relay control	ACC relay	Switch the ignition to ACC or ON (engine off or on)		B+	ACC relay
			Ignition switched OFF (LOCK)		1.0 or less	

SECURITY AND LOCKS

Terminal	Signal name	Connected to	Measurement conditions		Voltage (V)	Inspection item(s)
2D	IG2 relay control	Front body control module (FBCM)	Ignition switched ON (engine off)		B+	Front body control module (FBCM)
			Ignition switched OFF (LOCK) or at ACC		1.0 or less	
2E*2	CPP switch	CPP switch	Clutch pedal not depressed		B+	CPP switch
			Clutch pedal depressed		1.0 or less	
2F*3	LF control unit communication	LF control unit	Because this terminal is for communication, determination using terminal voltage inspection is not possible.			
2G*1	Shift lock	Shift lock solenoid	Ignition switch ON (engine off or on)	Selector lever at position except P	B+	Shift lock solenoid
				Selector lever at P position and brake pedal depressed	1.0 or less	
2H*3	LF control unit communication	LF control unit	Because this terminal is for communication, determination using terminal voltage inspection is not possible.			
2I*4	Keyless antenna (inside vehicle, center)	Keyless antenna (inside vehicle, center)	Because this terminal is for communication, determination using terminal voltage inspection is not possible.			
2J	Push button start 2	Push button start	Push button start pressed		1.0 or less	Push button start
			Push button start not pressed		B+	
2K*4	Keyless antenna (inside vehicle, center)	Keyless antenna (inside vehicle, center)	Because this terminal is for communication, determination using terminal voltage inspection is not possible.			
2L*4	GROUND	Shield ground	Under any condition		1.0 or less	Body ground
2M	HS-CAN+	-	Because this terminal is for communication, determination using terminal voltage inspection is not possible.			
2O	HS-CAN-	-	Because this terminal is for communication, determination using terminal voltage inspection is not possible.			
2Q	Keyless receiver power supply	Keyless receiver	Under any condition		Approx. 5	Keyless receiver
2R	Keyless receiver communication	Keyless receiver	Because this terminal is for communication, determination using terminal voltage inspection is not possible.			
2S	IG1 relay control	IG1 relay	Ignition switched ON (engine off)		B+	IG1 relay
			Ignition switched OFF (LOCK) or at ACC		1.0 or less	
2V	Starter relay	Starter relay	When cranking		B+	Starter relay
			Except above		1.0 or less	
2W	Power supply	AT 15 A fuse	Under any condition		B+	• AT 15 A fuse • Battery
2X	Power supply (ESCL)	SRS2 / ESCL 15 A fuse	Under any condition		B+	• SRS2 / ESCL 15 A fuse • Battery

*1 : ATX
*2 : MTX
*3 : With advanced keyless system
*4 : Without advanced keyless system
*5 : With steering angle sensor

START STOP UNIT CONFIGURATION (USING READ/WRITE FUNCTION)

id091400112500

Note

- When performing configuration, it is necessary to read the vehicle specification information from the start stop unit before replacing it. Connect the M-MDS to the vehicle and perform vehicle identification before removing the start stop unit. The vehicle specification information is temporarily stored in the M-MDS.

SECURITY AND LOCKS

1. Connect the M-MDS to the DLC-2.
2. After the vehicle is identified, select the following items from the initialization screen of the M-MDS.
    1. Select “Module Programming”.
3. Then, select items from the screen menu in the following order.
    1. Select “Programmable Module Installation”.
    2. Select “SSU”.
4. Perform the configuration according to the directions on the screen.

    Caution
    - **When the configuration is performed, CAN communication between the start stop unit and control module connected to the CAN line is cut temporarily, and communication error DTCs may be detected. After performing the configuration, verify the DTCs for the control module connected to the CAN line and clear it if any DTC is detected.**

5. Verify the DTCs for all of the control modules connected to the CAN line.
    - If any DTC is stored, clear it.
    - If the DTC is cleared, finish the procedure because the configuration has been completed normally.
    - If the DTC remains, perform troubleshooting according to the DTC.

START STOP UNIT CONFIGURATION (USING AS-BUILT DATA)

id091400112600

Note
- If the configuration is performed using As-Built data, the set value of the personalization function is reset to the initial value (condition when shipped from factory). Verify the set value with the customer and perform the personalization function setting after performing the configuration using As-Built data.

1. Connect the M-MDS to the DLC-2.
2. After the vehicle is identified, select the following items from the initialization screen of the M-MDS.
    1. Select “Module Programming”.
3. Then, select items from the screen menu in the following order.
    1. Select “As-Built”.
    2. Select “SSU”.
4. Perform the configuration according to the directions on the screen.

    Caution
    - **When the configuration is performed, CAN communication between the start stop unit and control module connected to the CAN line is cut temporarily, and communication error DTCs may be detected. After performing the configuration, verify the DTCs for the control module connected to the CAN line and clear it if any DTC is detected.**

5. Verify the DTCs for all of the control modules connected to the CAN line.
    - If any DTC is stored, clear it.
    - If the DTC is cleared, finish the procedure because the configuration has been completed normally.
    - If the DTC remains, perform troubleshooting according to the DTC.

LF CONTROL UNIT REMOVAL/INSTALLATION

id091400110500

1. Disconnect the negative battery cable. (See 01-17A-11 NEGATIVE BATTERY CABLE DISCONNECTION/CONNECTION [SKYACTIV-G 2.0].) (See 01-17A-13 NEGATIVE BATTERY CABLE DISCONNECTION/CONNECTION [SKYACTIV-G 2.0 (WITHOUT i-stop)].) (See 01-17B-9 NEGATIVE BATTERY CABLE DISCONNECTION/CONNECTION [SKYACTIV-D 2.2].)

SECURITY AND LOCKS

2. Remove the service hole cover on the front side trim.

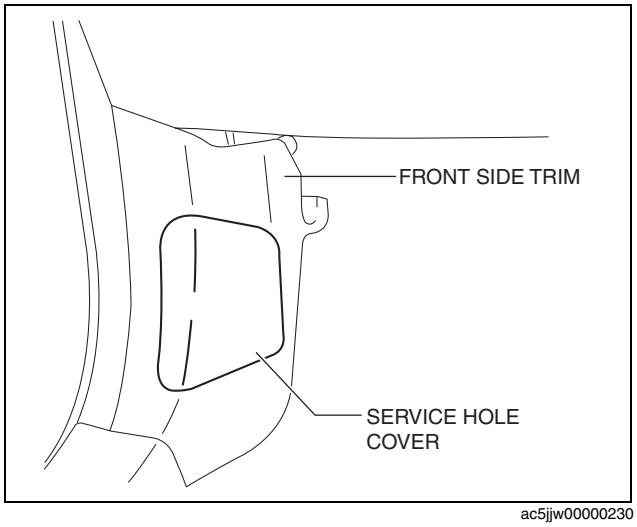

ac5jjw00000230

3. Disconnect the connector.

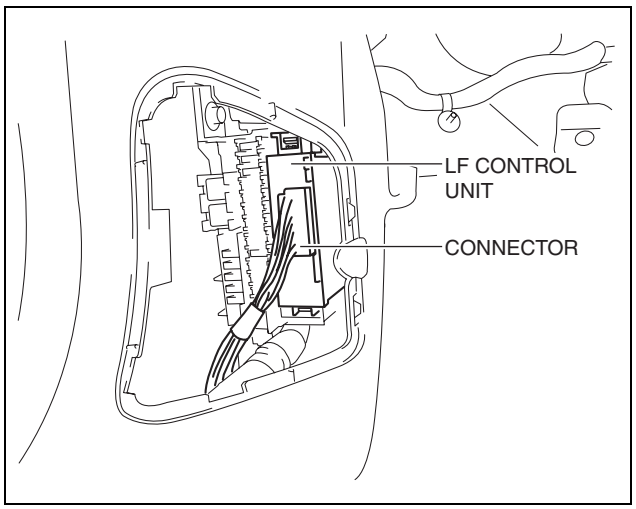

ac5wzw0000094

4. Pull the LF control unit in the direction of the arrow (2) shown in the figure and remove it while pressing the tab in the direction of the arrow (1).

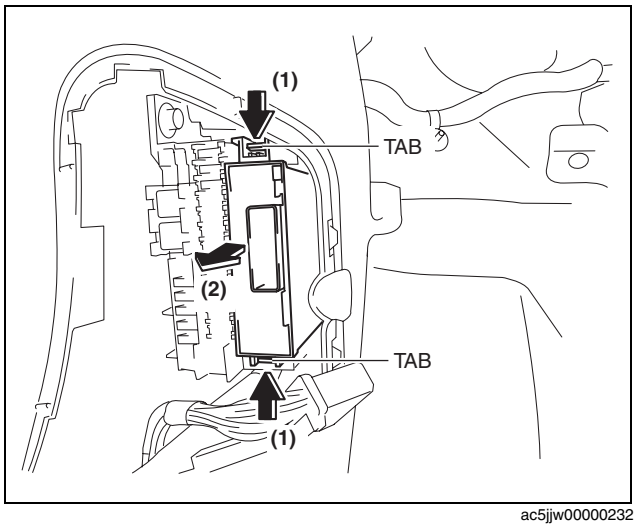

ac5jjw00000232

LF CONTROL UNIT INSPECTION

id091400110600

1. Remove the service hole cover on the front side trim. (See 09-14-59 LF CONTROL UNIT REMOVAL/INSTALLATION.)
2. Verify that the voltages of each of the terminals are as indicated in the terminal voltage table (reference).
   - If the voltage is not as specified in the terminal voltage table (reference), inspect the parts under Inspection item(s).
     — If the system does not work normally even though the inspection items are normal, replace the LF control unit.

SECURITY AND LOCKS

Terminal Voltage Table (Reference)

LF CONTROL UNIT
WIRING HARNESS SIDE CONNECTOR

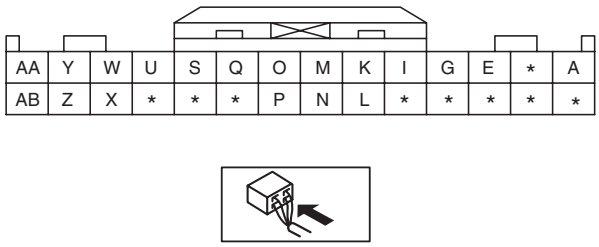

ac5wzw0000094

Terminal	Signal name	Connected to	Measurement conditions	Voltage (V)	Inspection item (s)
A	Power supply	ROOM 15 A fuse	Under any condition	B+	• ROOM 15 A fuse • Battery • Related wiring harness
E	Request switch signal (Driver's side)	Request switch (RF)	When driver's side request switch is pressed	1.0 or less	• Front outer handle (driver's side) • Related wiring harness
			When driver's side request switch is not pressed	5.0	
G	Request switch signal (Passenger's side)	Request switch (LF)	When passenger's side request switch is pressed	1.0 or less	• Front outer handle (passenger's side) • Related wiring harness
			When passenger's side request switch is not pressed	5.0	
I	Request switch signal (liftgate)	Request switch (Liftgate)	When liftgate request switch is pressed	1.0 or less	• Request switch (Liftgate) • Related wiring harness
			When liftgate request switch is not pressed	5.0	
L	Keyless beeper power supply	Keyless beeper	When lock button on remote transmitter is pressed	Wave pattern (See 09-14-62 Pattern 1.)	• Related wiring harness • Keyless beeper
			Except above	1.0 or less	
N	GROUND	Keyless beeper	Under any condition	1.0 or less	• Related wiring harness • Keyless beeper
O	Keyless antenna (interior, front)	Keyless antenna (interior, front)	Because this terminal is for communication, determination using terminal voltage inspection is not possible.		
Q	Keyless antenna (interior, front)	Keyless antenna (interior, front)	Because this terminal is for communication, determination using terminal voltage inspection is not possible.		
S	Keyless antenna (LF)	Keyless antenna (LF)	Because this terminal is for communication, determination using terminal voltage inspection is not possible.		
U	Keyless antenna (LF)	Keyless antenna (LF)	Because this terminal is for communication, determination using terminal voltage inspection is not possible.		
W	Keyless antenna (RF)	Keyless antenna (RF)	Because this terminal is for communication, determination using terminal voltage inspection is not possible.		
X	Keyless antenna (interior, rear)	Keyless antenna (interior, rear)	Because this terminal is for communication, determination using terminal voltage inspection is not possible.		
Y	Keyless antenna (RF)	Keyless antenna (RF)	Because this terminal is for communication, determination using terminal voltage inspection is not possible.		
Z	Keyless antenna (interior, rear)	Keyless antenna (interior, rear)	Because this terminal is for communication, determination using terminal voltage inspection is not possible.		
AA	Keyless antenna (exterior, rear)	Keyless antenna (exterior, rear)	Because this terminal is for communication, determination using terminal voltage inspection is not possible.		

SECURITY AND LOCKS

Terminal	Signal name	Connected to	Measurement conditions	Voltage (V)	Inspection item (s)
AB	Keyless antenna (exterior, rear)	Keyless antenna (exterior, rear)	Because this terminal is for communication, determination using terminal voltage inspection is not possible.		

Inspection Using an Oscilloscope (Reference)
Pattern 1

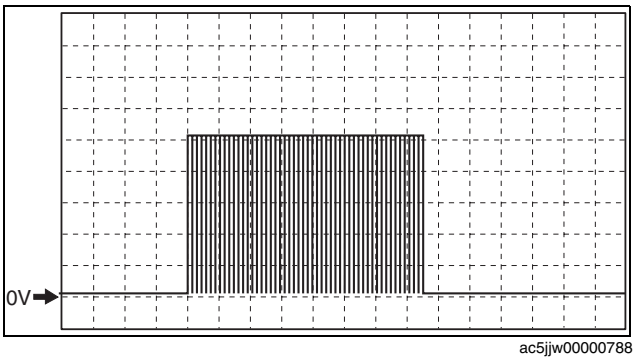

ac5jjw00000788

- LF control unit: L (+) ⇔ body ground (-)
- Oscilloscope setting: 2 V/DIV (Y), 100 ms/DIV (X), DC range

SECURITY AND LOCKS PERSONALIZATION FEATURES SETTING PROCEDURE

id091400112900

Advanced Keyless Entry System
Using M-MDS

1. Connect the M-MDS to DLC-2.
2. After the vehicle is identified, select the following items from the initial screen of the M-MDS.
   1. Select the "Module Programming".
   2. Select "Programmable Parameters".
3. Select menu in the SSU.
4. Select an item name, and then select option.

M-MDS display	Function	Initial setting	Setting content	Control unit
Advanced keyless function.*1	The advanced keyless entry system and push button start system functions can be disabled.	Enabled.	Enabled. / Disabled.	Start stop unit
Walk Away Lock.	The out-of-area (reception area) type auto lock function can be set.	OFF	Not Adopted. / OFF / ON	Start stop unit
Auto Re-lock Time.	The operation start time of the auto re-lock function can be changed.	30 seconds	Not Adopted. / 30 seconds / 60 seconds / 90 seconds	Start stop unit
Lock Beep Volume.	The keyless beeper volume can be adjusted.	Medium	Not Adopted. / Off / Low / Medium / High	Start stop unit

*1 : Because the push button start system function has been disabled, to start the engine press the upper part of the remote transmitter against the center of the push button start.

Setting method by operation of remote transmitter button

- The following setting can be changed by operation of the remote transmitter button.

M-MDS display	Function	Initial setting	Setting content	Control unit
Lock Beep Volume.	The keyless beeper volume can be adjusted.	Medium	Off / Low / Medium / High	Start stop unit

- Change the setting for the keyless beeper volume referring to the following procedure:

Note

- If any of the following conditions is met during procedure, the setting for changing the keyless beeper volume is finished.

SECURITY AND LOCKS

— The ignition is switched to ACC or ON (engine off or on).
— The driver's door is closed.
— The liftgate is open.
— The remote transmitter operation is not performed for approx. 10 s.
— The UNLOCK button on the remote transmitter is pressed.
— A request switch is pressed.

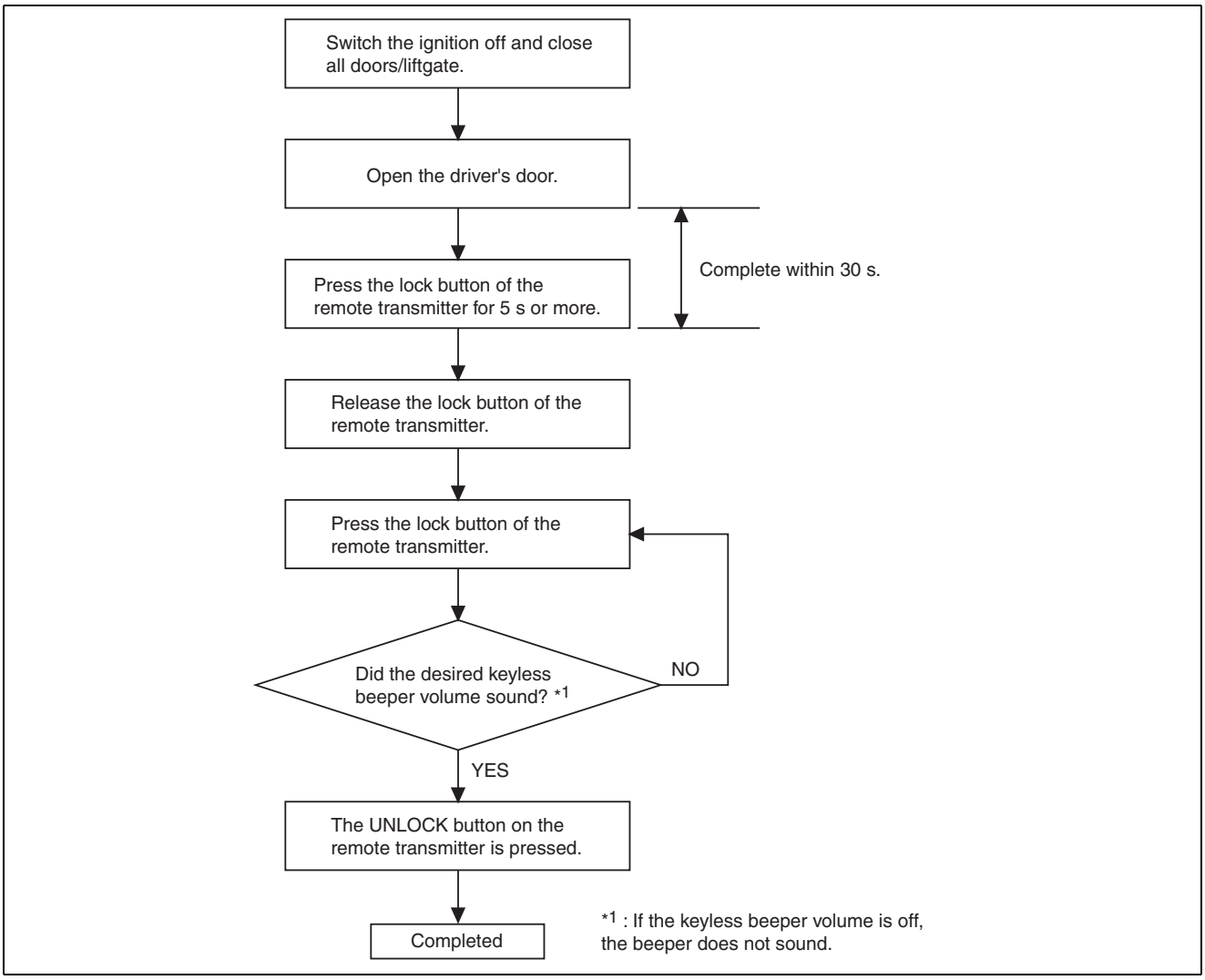

ac5wzw0000461

Using audio unit (with color LCD)

- (See 09-20-9 AUDIO UNIT PERSONALIZATION FEATURES SETTING PROCEDURE.)

Keyless Entry System
Using M-MDS

1. Connect the M-MDS to DLC-2.
2. After the vehicle is identified, select the following items from the initial screen of the M-MDS.
   1. Select the "Module Programming".
   2. Select "Programmable Parameters".
3. Select menu in the SSU.
4. Select an item name, and then select option.

M-MDS display	Function	Initial setting	Setting content	Control unit
Advanced keyless function.*1	The keyless entry system and push button start system functions can be disabled.	Enabled.	Enabled. / Disabled.	Start stop unit

SECURITY AND LOCKS

M-MDS display	Function	Initial setting	Setting content	Control unit
Auto Re-lock Time.	The operation start time of the auto re-lock function can be changed.	30 seconds	Not Adopted. / 30 seconds / 60 seconds / 90 seconds	Start stop unit

*1 : Because the push button start system function has been disabled, to start the engine press the upper part of the remote transmitter against the center of the push button start.

Using audio unit (with color LCD)
- (See 09-20-9 AUDIO UNIT PERSONALIZATION FEATURES SETTING PROCEDURE.)

Power Door Lock System
- For the auto door lock function, refer to the personalization features for the rear body control module (RBCM). (See 09-40-16 CONTROL SYSTEM PERSONALIZATION FEATURES SETTING PROCEDURE.)

REQUEST SWITCH REMOVAL/INSTALLATION

id091400515200

Driver's Door/Passenger's Door

Note
- The request switch cannot be removed as a single unit because it is built into the front outer handle. If the request switch is replaced, replace the front outer handle. (See 09-14-8 FRONT OUTER HANDLE REMOVAL/INSTALLATION.)

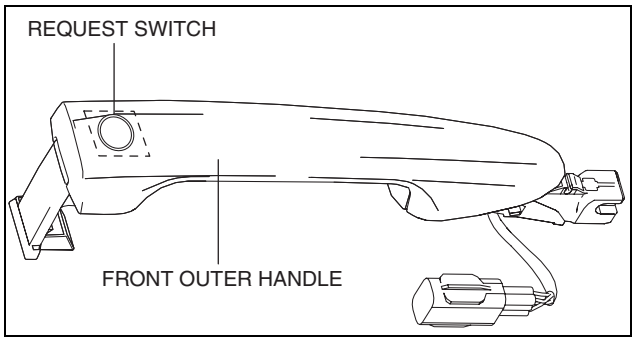

ac5wzw0000026

Liftgate
1. Disconnect the negative battery cable. (See 01-17A-11 NEGATIVE BATTERY CABLE DISCONNECTION/CONNECTION [SKYACTIV-G 2.0].) (See 01-17A-13 NEGATIVE BATTERY CABLE DISCONNECTION/CONNECTION [SKYACTIV-G 2.0 (WITHOUT i-stop)].) (See 01-17B-9 NEGATIVE BATTERY CABLE DISCONNECTION/CONNECTION [SKYACTIV-D 2.2].)
2. Remove the following parts:
   (1) Liftgate upper trim (See 09-17-87 LIFTGATE UPPER TRIM REMOVAL/INSTALLATION.)
   (2) Liftgate side trim (See 09-17-87 LIFTGATE SIDE TRIM REMOVAL/INSTALLATION.)
   (3) Liftgate recess (See 09-17-89 LIFTGATE RECESS REMOVAL/INSTALLATION.)
   (4) Liftgate lower trim (See 09-17-89 LIFTGATE LOWER TRIM REMOVAL/INSTALLATION.)
   (5) Liftgate garnish (See 09-16-53 LIFTGATE GARNISH REMOVAL/INSTALLATION.)
3. Push out the request switch in the direction of the arrow (2) shown in the figure while pressing the request switch tab in the direction of the arrow (1) shown in the figure, detach the request switch tab and liftgate garnish, and then remove the request switch from the liftgate garnish.
4. Install in the reverse order of removal.

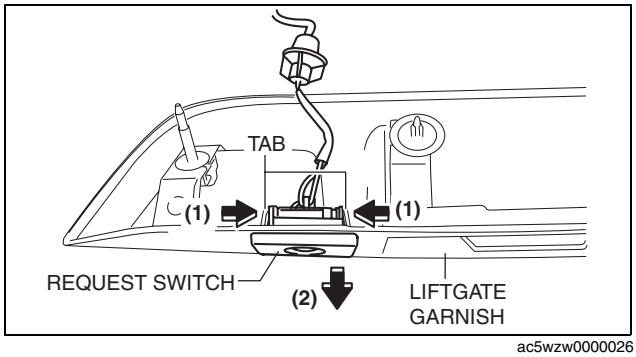

ac5wzw0000026

SECURITY AND LOCKS

REQUEST SWITCH INSPECTION

id091400515400

Driver's Door/Passenger's Door

1. Perform the front door glass preparation. (See 09-12-4 FRONT DOOR GLASS REMOVAL/INSTALLATION.)
2. Disconnect the negative battery cable. (See 01-17A-11 NEGATIVE BATTERY CABLE DISCONNECTION/CONNECTION [SKYACTIV-G 2.0].) (See 01-17A-13 NEGATIVE BATTERY CABLE DISCONNECTION/CONNECTION [SKYACTIV-G 2.0 (WITHOUT i-stop)].) (See 01-17B-9 NEGATIVE BATTERY CABLE DISCONNECTION/CONNECTION [SKYACTIV-D 2.2].)
3. Remove the following parts:
   (1) Inner garnish (See 09-17-65 INNER GARNISH REMOVAL/INSTALLATION.)
   (2) Front door trim (See 09-17-65 FRONT DOOR TRIM REMOVAL/INSTALLATION.)
   (3) Front door glass (See 09-12-4 FRONT DOOR GLASS REMOVAL/INSTALLATION.)
   (4) Front door module panel (See 09-11-6 FRONT DOOR MODULE PANEL REMOVAL/INSTALLATION.)
   (5) Front door key cylinder (driver's side) (See 09-14-30 FRONT DOOR KEY CYLINDER REMOVAL/INSTALLATION.)
   (6) Front outer handle (See 09-14-8 FRONT OUTER HANDLE REMOVAL/INSTALLATION.)
4. Verify that the continuity is as indicated in the table.

○—○ :CONTINUITY

REQUEST SWITCH (REQUEST SWITCH CONDITION)	TERMINAL	
	A	D
ON (PRESSED)	○	○
OFF (NOT PRESSED)		

ac5wzw0000094

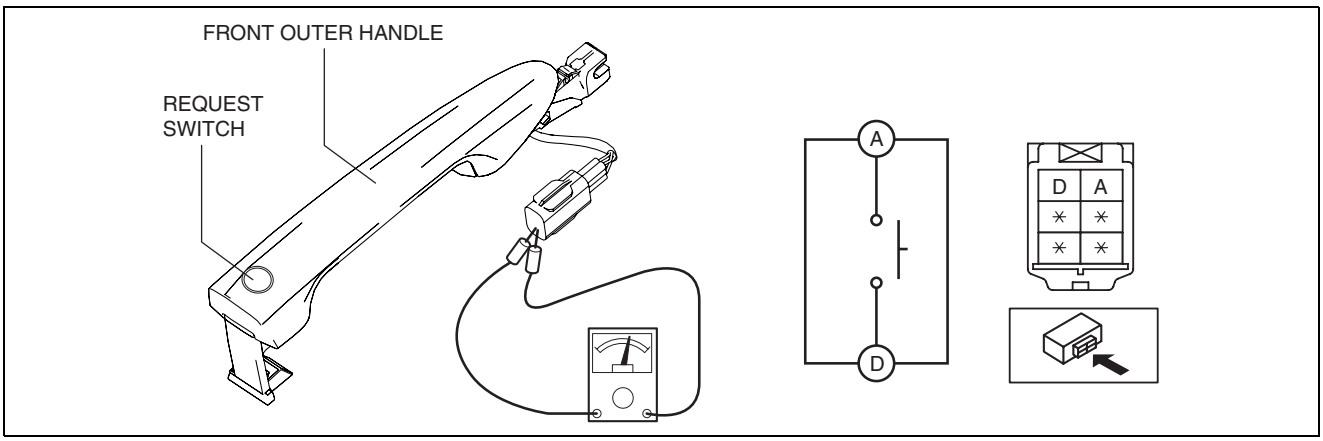

ac5wzw0000026

- If not as indicated in the table, replace the front outer handle.

Liftgate

1. Disconnect the negative battery cable. (See 01-17A-11 NEGATIVE BATTERY CABLE DISCONNECTION/CONNECTION [SKYACTIV-G 2.0].) (See 01-17A-13 NEGATIVE BATTERY CABLE DISCONNECTION/CONNECTION [SKYACTIV-G 2.0 (WITHOUT i-stop)].) (See 01-17B-9 NEGATIVE BATTERY CABLE DISCONNECTION/CONNECTION [SKYACTIV-D 2.2].)
2. Remove the following parts:
   (1) Liftgate upper trim (See 09-17-87 LIFTGATE UPPER TRIM REMOVAL/INSTALLATION.)
   (2) Liftgate side trim (See 09-17-87 LIFTGATE SIDE TRIM REMOVAL/INSTALLATION.)
   (3) Liftgate recess (See 09-17-89 LIFTGATE RECESS REMOVAL/INSTALLATION.)
   (4) Liftgate lower trim (See 09-17-89 LIFTGATE LOWER TRIM REMOVAL/INSTALLATION.)
   (5) Liftgate garnish (See 09-16-53 LIFTGATE GARNISH REMOVAL/INSTALLATION.)
   (6) Request switch (liftgate)(See 09-14-64 REQUEST SWITCH REMOVAL/INSTALLATION.)

SECURITY AND LOCKS

3. Verify that the continuity is as indicated in the table.

○—○ :CONTINUITY

REQUEST SWITCH (REQUEST SWITCH CONDITION)	TERMINAL	
	A	B
ON (PRESSED)	○	○
OFF (NOT PRESSED)		

ac5wzw0000094

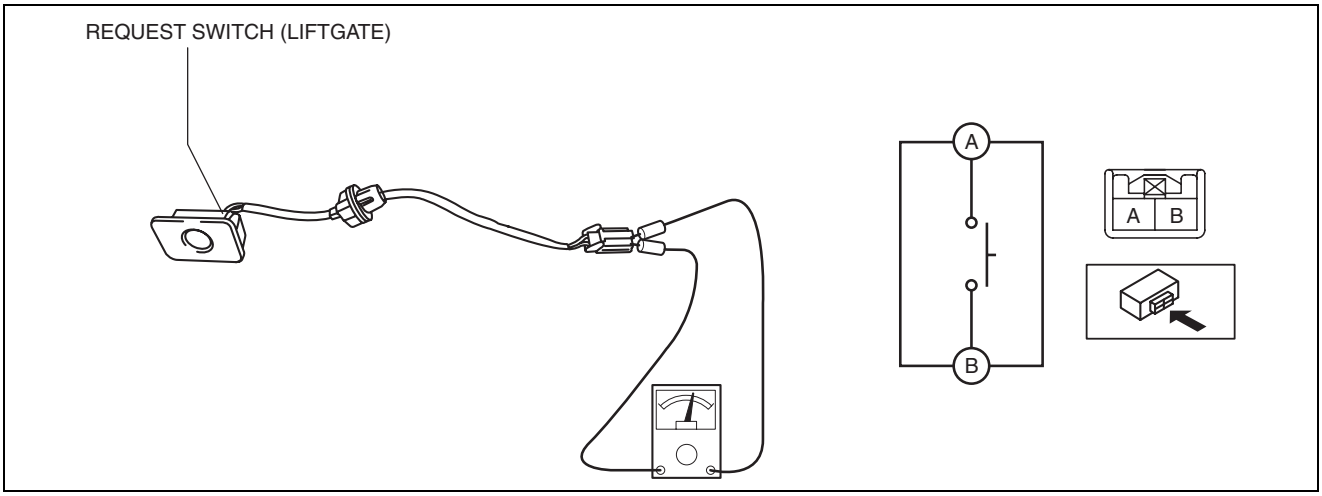

ac5wzw0000026

- If not as indicated in the table, replace the request switch.

KEYLESS ANTENNA REMOVAL/INSTALLATION

id091400514900

With Advanced Keyless Entry System
Vehicle interior, front

1. Disconnect the negative battery cable. (See 01-17A-11 NEGATIVE BATTERY CABLE DISCONNECTION/CONNECTION [SKYACTIV-G 2.0].) (See 01-17A-13 NEGATIVE BATTERY CABLE DISCONNECTION/CONNECTION [SKYACTIV-G 2.0 (WITHOUT i-stop)].) (See 01-17B-9 NEGATIVE BATTERY CABLE DISCONNECTION/CONNECTION [SKYACTIV-D 2.2].)
2. Remove the following parts:
   (1) Decoration panel (See 09-17-33 DECORATION PANEL REMOVAL/INSTALLATION.)
   (2) Shift lever knob (MTX) (See 05-16A-1 MANUAL TRANSAXLE SHIFT MECHANISM REMOVAL/INSTALLATION [C66M-R, C66MX-R].) (See 05-16B-1 MANUAL TRANSAXLE SHIFT MECHANISM REMOVAL/INSTALLATION [D66M-R, D66MX-R].)
   (3) Front console box (See 09-17-40 FRONT CONSOLE BOX REMOVAL/INSTALLATION.)
   (4) Shift panel (See 09-17-42 SHIFT PANEL REMOVAL/INSTALLATION.)
   (5) Upper panel (See 09-17-44 UPPER PANEL REMOVAL/INSTALLATION.)
   (6) Rear console (See 09-17-45 REAR CONSOLE REMOVAL/INSTALLATION.)
   (7) Side wall (See 09-17-49 SIDE WALL REMOVAL/INSTALLATION.)
   (8) Front console (See 09-17-50 FRONT CONSOLE REMOVAL/INSTALLATION.)

SECURITY AND LOCKS

3. Disconnect the connector from the keyless antenna.

Caution

- **Disconnect the connector while holding the keyless antenna, otherwise the keyless antenna bracket could be damaged.**

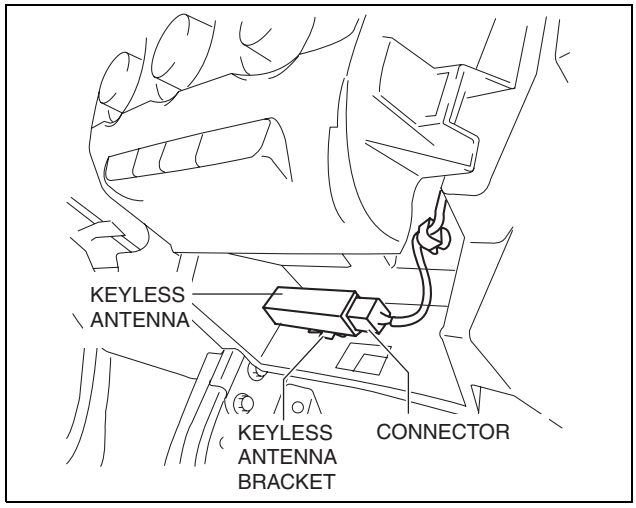

ac5wzw0000274

4. While pressing the keyless antenna bracket tab in the direction of arrow (1) shown in the figure, press it in the direction of arrow (2) to detach the keyless antenna bracket tab from the instrument panel.
5. Remove the keyless antenna from the instrument panel.
6. Insert a tape-wrapped flathead screwdriver into the position shown in the figure.

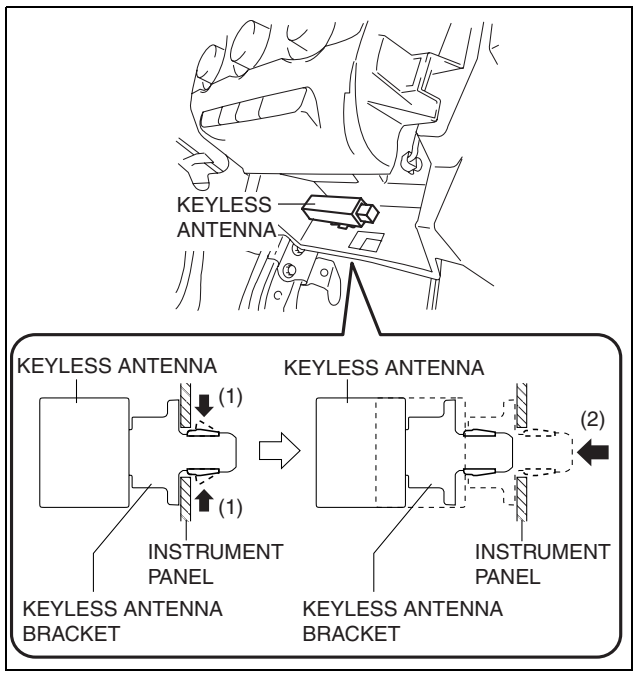

ac5wzw0000025

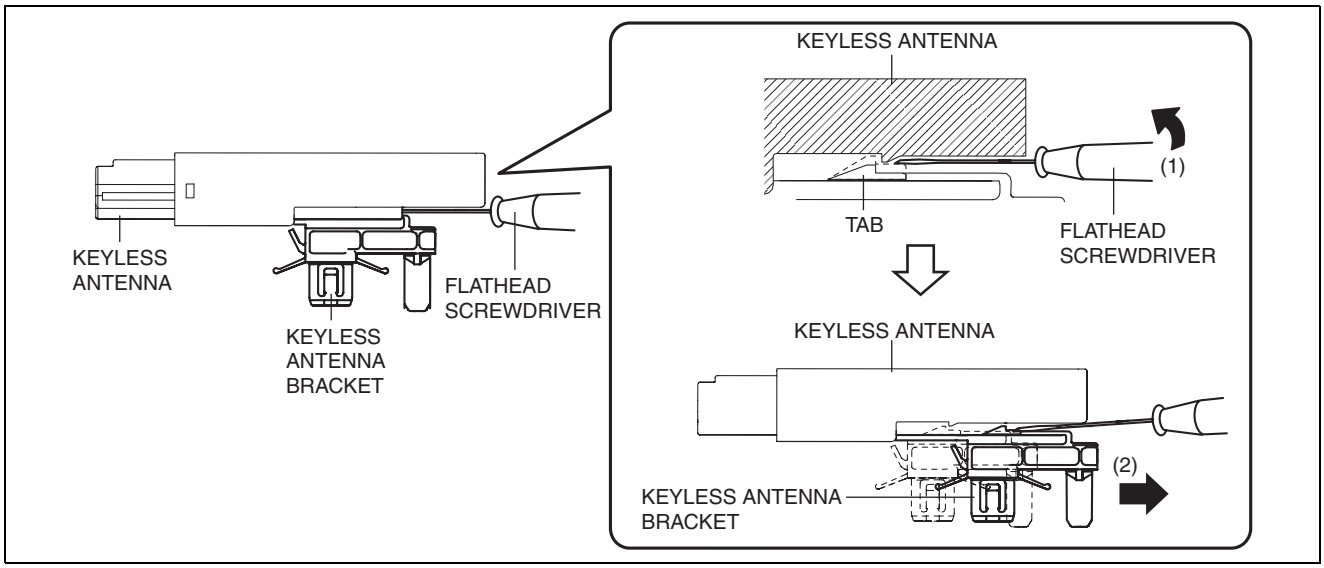

ac5wzw0000025

SECURITY AND LOCKS

7. Move the tape-wrapped flathead screwdriver in the direction of arrow (1) shown in the figure to press the keyless antenna bracket tab, and pull it in the direction of arrow (2) to detach the keyless antenna bracket from the keyless antenna.
8. Remove the keyless antenna bracket from the keyless antenna.
9. Install in the reverse order of removal.

Vehicle interior, rear

1. Disconnect the negative battery cable. (See 01-17A-11 NEGATIVE BATTERY CABLE DISCONNECTION/CONNECTION [SKYACTIV-G 2.0].) (See 01-17A-13 NEGATIVE BATTERY CABLE DISCONNECTION/CONNECTION [SKYACTIV-G 2.0 (WITHOUT i-stop)].) (See 01-17B-9 NEGATIVE BATTERY CABLE DISCONNECTION/CONNECTION [SKYACTIV-D 2.2].)
2. Remove the trunk board. (See 09-17-85 TRUNK BOARD REMOVAL/INSTALLATION.)
3. Disconnect the connector from the keyless antenna.

Caution

- **Disconnect the connector while holding the keyless antenna, otherwise the keyless antenna bracket could be damaged.**

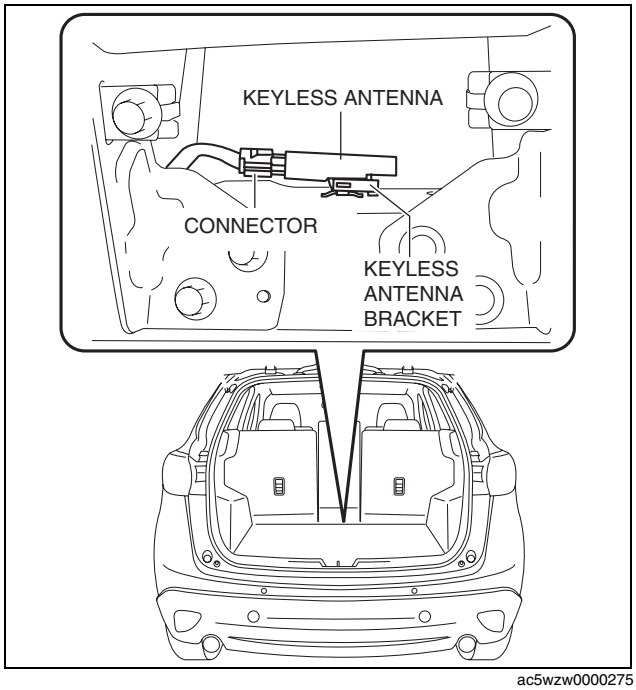

ac5wzw0000275

4. While pressing the keyless antenna bracket tab in the direction of arrow (1) shown in the figure, press it in the direction of arrow (2) to detach the keyless antenna bracket tab from the body.
5. Remove the keyless antenna from the body.

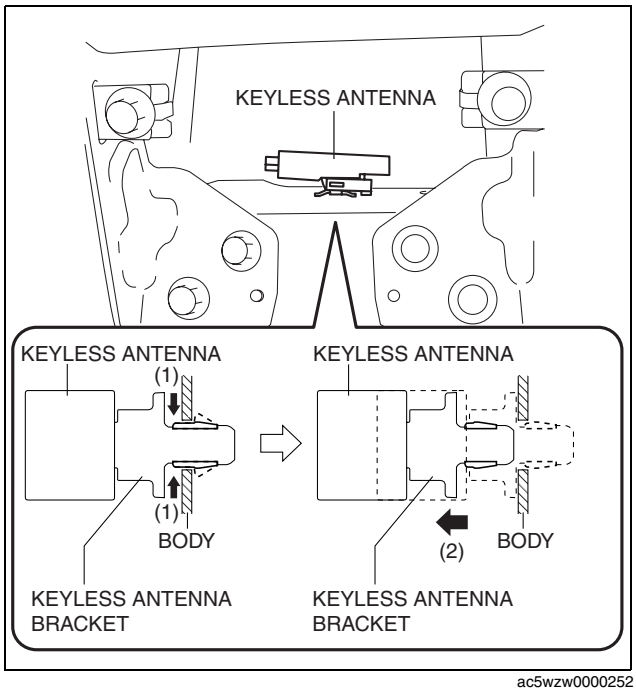

ac5wzw0000252

SECURITY AND LOCKS

6. Insert a tape-wrapped flathead screwdriver into the position shown in the figure.

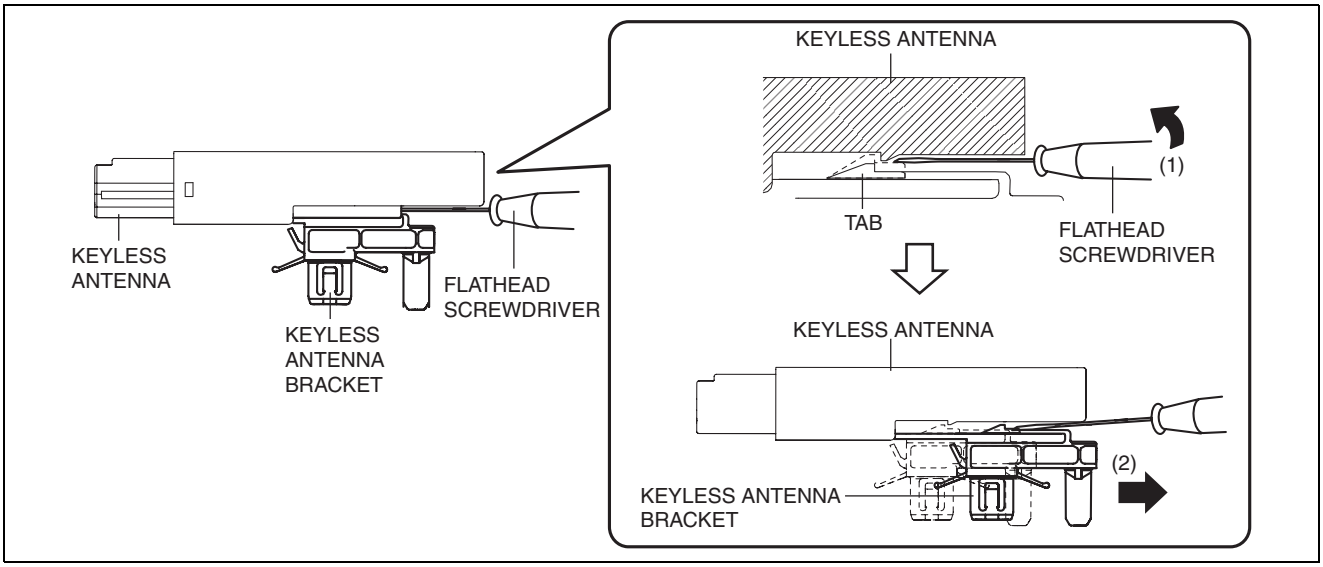

ac5wzw0000025

7. Move the tape-wrapped flathead screwdriver in the direction of arrow (1) shown in the figure to press the keyless antenna bracket tab, and pull it in the direction of arrow (2) to detach the keyless antenna bracket from the keyless antenna.
8. Remove the keyless antenna bracket from the keyless antenna.
9. Install in the reverse order of removal.

Vehicle exterior, rear

1. Disconnect the negative battery cable. (See 01-17A-11 NEGATIVE BATTERY CABLE DISCONNECTION/CONNECTION [SKYACTIV-G 2.0].) (See 01-17A-13 NEGATIVE BATTERY CABLE DISCONNECTION/CONNECTION [SKYACTIV-G 2.0 (WITHOUT i-stop)].) (See 01-17B-9 NEGATIVE BATTERY CABLE DISCONNECTION/CONNECTION [SKYACTIV-D 2.2].)
2. Disconnect the connector from the keyless antenna.

Caution

- **Disconnect the connector while holding the keyless antenna, otherwise the keyless antenna bracket could be damaged.**

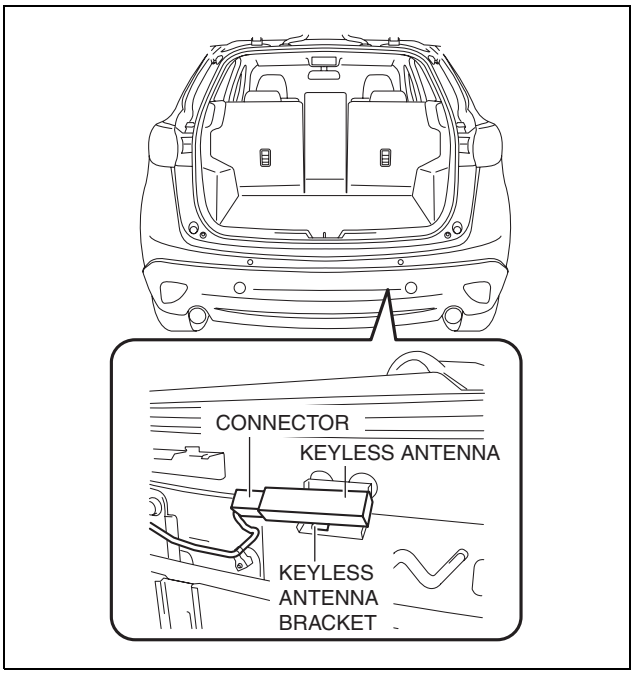

ac5wzw0000275

SECURITY AND LOCKS

3. While pressing the keyless antenna bracket tab in the direction of arrow (1) shown in the figure, press it in the direction of arrow (2) to detach the keyless antenna bracket tab from the bracket.
4. Remove the keyless antenna from the bracket.
5. Insert a tape-wrapped flathead screwdriver into the position shown in the figure.

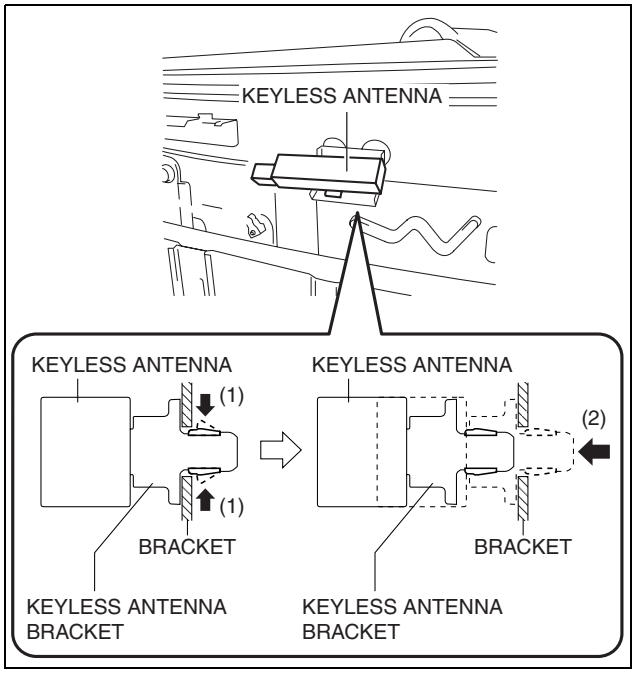

ac5wzw0000025

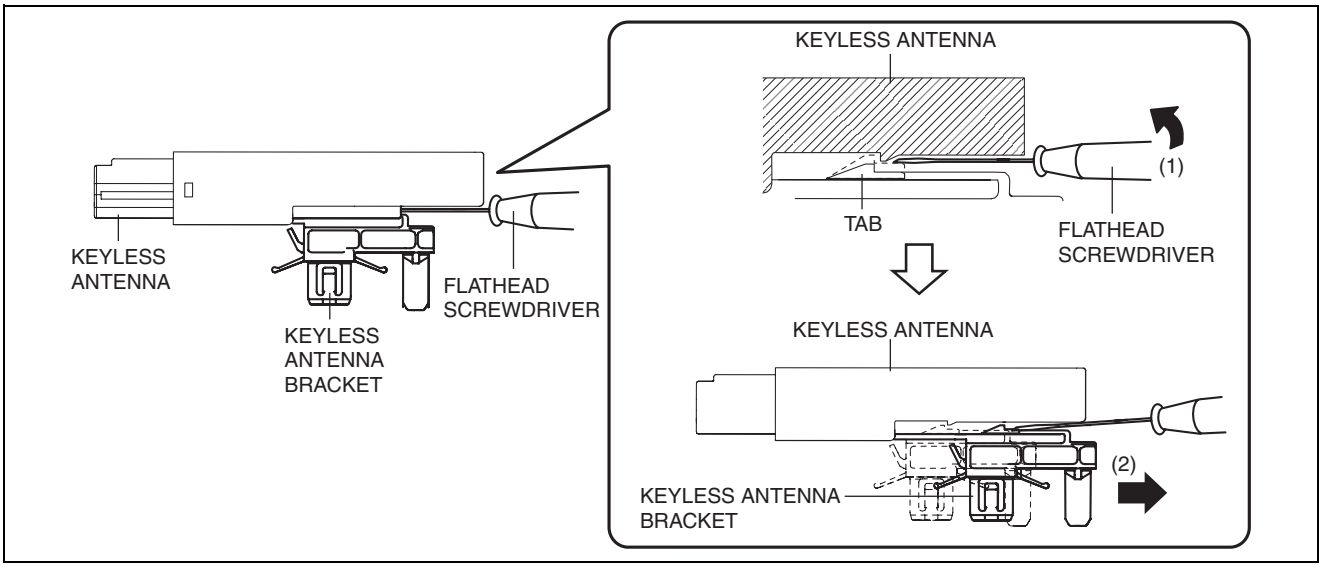

ac5wzw0000025

6. Move the tape-wrapped flathead screwdriver in the direction of arrow (1) shown in the figure to press the keyless antenna bracket tab, and pull it in the direction of arrow (2) to detach the keyless antenna bracket from the keyless antenna.
7. Remove the keyless antenna bracket from the keyless antenna.
8. Install in the reverse order of removal.

Vehicle exterior, driver's side/passenger's side

Note

- The keyless antenna (vehicle exterior, driver's side/passenger's side) cannot be removed as a single unit because it is built into the front outer handle. To replace the keyless antenna (vehicle exterior, driver's side/passenger's side), replace the front outer handle. (See 09-14-8 FRONT OUTER HANDLE REMOVAL/INSTALLATION.)

SECURITY AND LOCKS

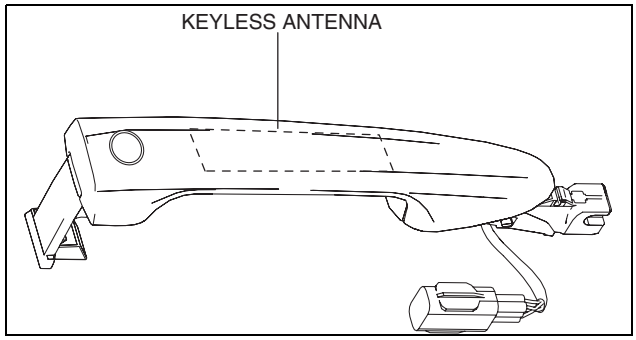

ac5wzw0000025

With Keyless Entry System
Vehicle interior, center

1. Disconnect the negative battery cable. (See 01-17A-11 NEGATIVE BATTERY CABLE DISCONNECTION/CONNECTION [SKYACTIV-G 2.0].) (See 01-17A-13 NEGATIVE BATTERY CABLE DISCONNECTION/CONNECTION [SKYACTIV-G 2.0 (WITHOUT i-stop)].) (See 01-17B-9 NEGATIVE BATTERY CABLE DISCONNECTION/CONNECTION [SKYACTIV-D 2.2].)
2. Remove the following parts:
   (1) Decoration panel (See 09-17-33 DECORATION PANEL REMOVAL/INSTALLATION.)
   (2) Shift lever knob (MTX) (See 05-16A-1 MANUAL TRANSAXLE SHIFT MECHANISM REMOVAL/INSTALLATION [C66M-R, C66MX-R].) (See 05-16B-1 MANUAL TRANSAXLE SHIFT MECHANISM REMOVAL/INSTALLATION [D66M-R, D66MX-R].)
   (3) Front console box (See 09-17-40 FRONT CONSOLE BOX REMOVAL/INSTALLATION.)
   (4) Shift panel (See 09-17-42 SHIFT PANEL REMOVAL/INSTALLATION.)
   (5) Upper panel (See 09-17-44 UPPER PANEL REMOVAL/INSTALLATION.)
   (6) Rear console (See 09-17-45 REAR CONSOLE REMOVAL/INSTALLATION.)
3. Disconnect the connector from the keyless antenna.

Caution
- **Disconnect the connector while holding the keyless antenna, otherwise the keyless antenna bracket could be damaged.**

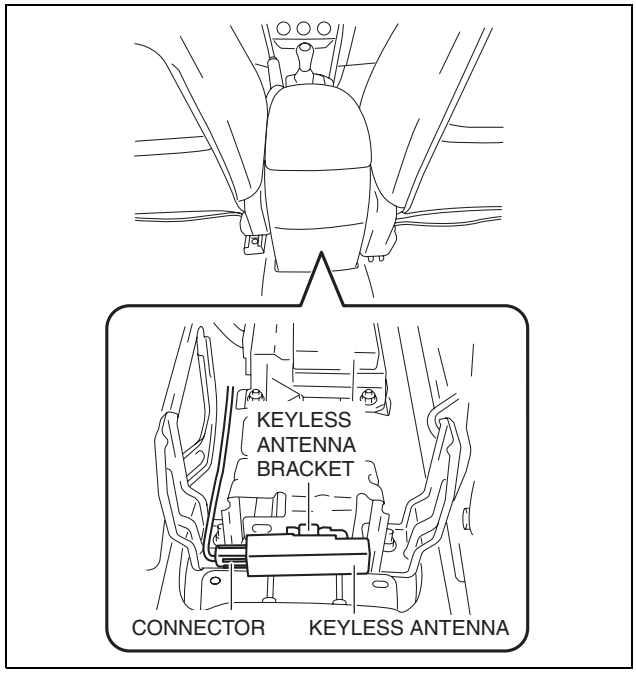

ac5wzw0000275

SECURITY AND LOCKS

4. While pressing the keyless antenna bracket tab in the direction of arrow (1) shown in the figure, press it in the direction of arrow (2) to detach the keyless antenna bracket tab from the bracket.
5. Remove the keyless antenna from the bracket.
6. Insert a tape-wrapped flathead screwdriver into the position shown in the figure.

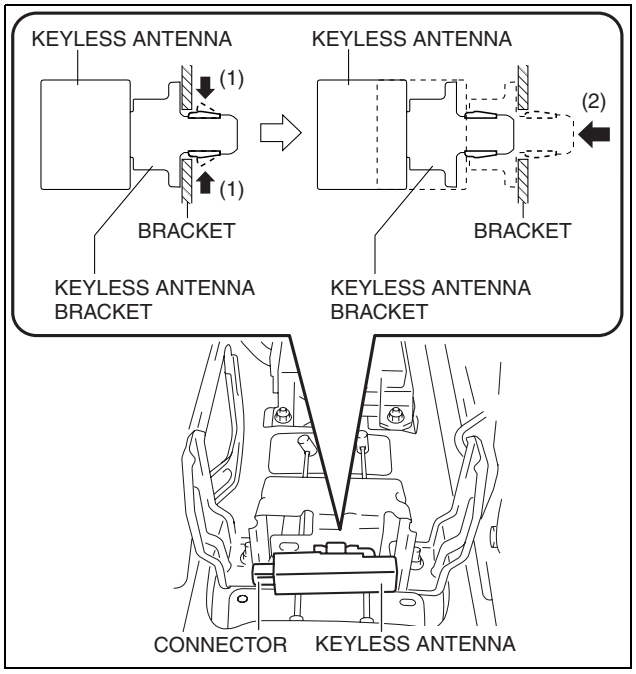

ac5wzw0000026

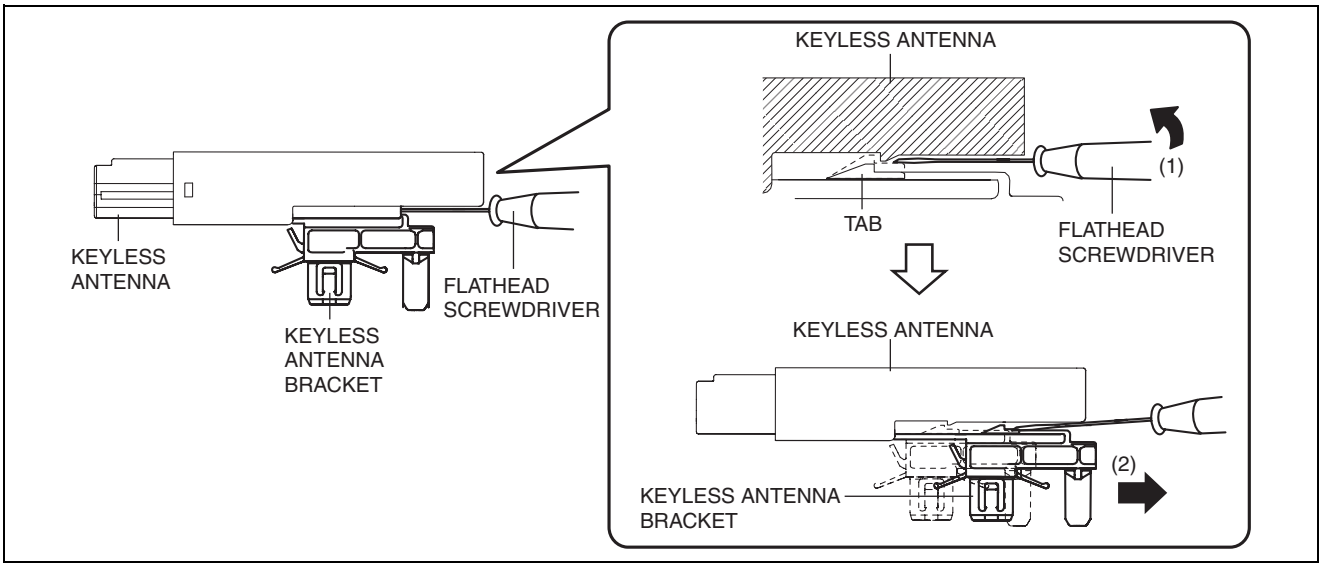

ac5wzw0000025

7. Move the tape-wrapped flathead screwdriver in the direction of arrow (1) shown in the figure to press the keyless antenna bracket tab, and pull it in the direction of arrow (2) to detach the keyless antenna bracket from the keyless antenna.
8. Remove the keyless antenna bracket from the keyless antenna.
9. Install in the reverse order of removal.

KEYLESS BEEPER REMOVAL/INSTALLATION

id091400515000

1. Disconnect the negative battery cable. (See 01-17A-11 NEGATIVE BATTERY CABLE DISCONNECTION/CONNECTION [SKYACTIV-G 2.0].) (See 01-17A-13 NEGATIVE BATTERY CABLE DISCONNECTION/CONNECTION [SKYACTIV-G 2.0 (WITHOUT i-stop)].) (See 01-17B-9 NEGATIVE BATTERY CABLE DISCONNECTION/CONNECTION [SKYACTIV-D 2.2].)
2. Remove the cowl grille. (See 09-16-3 COWL GRILLE REMOVAL/INSTALLATION.)

SECURITY AND LOCKS

3. Disconnect the connector.

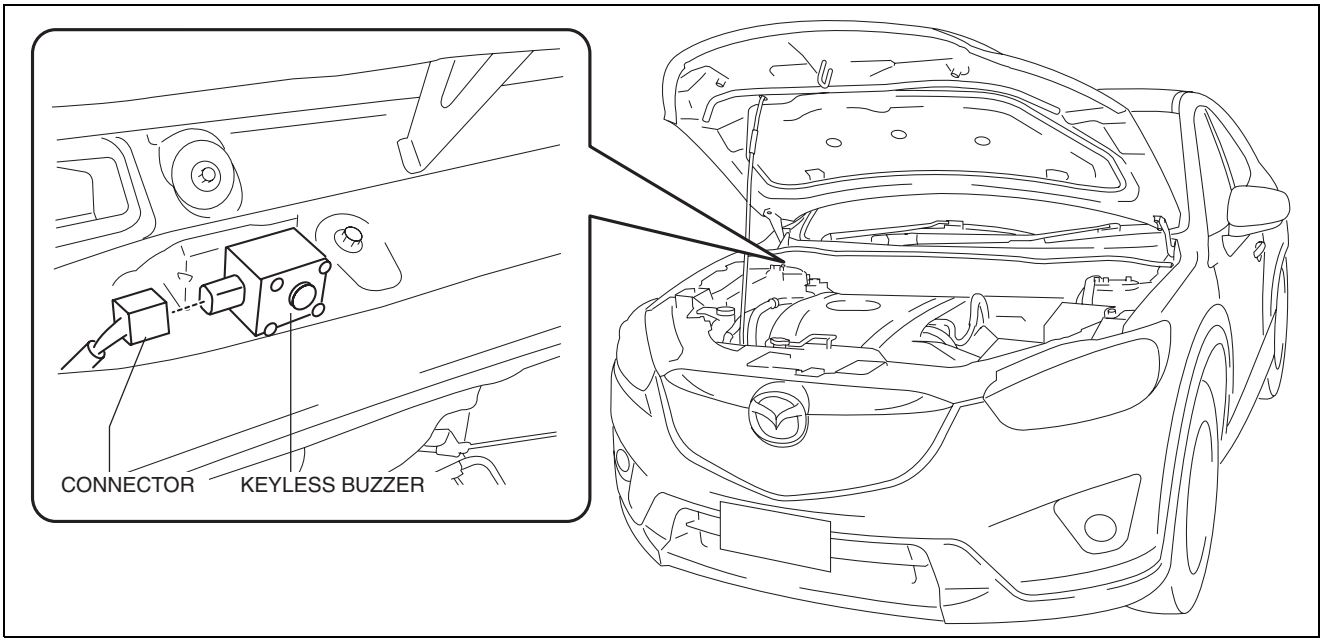

ac5wzw0000378

4. Pull the keyless buzzer in the direction of the arrow (2) shown in the figure while pressing the keyless buzzer tab in the direction of the arrow (1) shown in the figure, detach the keyless buzzer tab and bracket, and then remove the keyless buzzer from the bracket.
5. Install in the reverse order of removal.

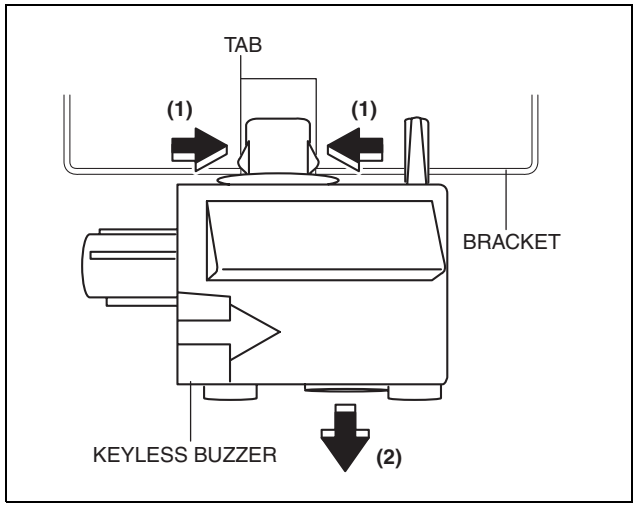

ac5wzw0000026

KEYLESS BEEPER INSPECTION

id091400515100

- Because no oscillation circuit is integrated in the keyless beeper, a beep sound is not heard by applying rated voltage to the keyless beeper itself. To inspect the keyless beeper, refer to symptom troubleshooting. (See 09-03B-15 ANSWER-BACK BUZZER DOES NOT SOUND [SECURITY AND LOCKS].)

KEYLESS RECEIVER REMOVAL/INSTALLATION

id091400514300

1. Disconnect the negative battery cable. (See 01-17A-11 NEGATIVE BATTERY CABLE DISCONNECTION/CONNECTION [SKYACTIV-G 2.0].) (See 01-17A-13 NEGATIVE BATTERY CABLE DISCONNECTION/CONNECTION [SKYACTIV-G 2.0 (WITHOUT i-stop)].) (See 01-17B-9 NEGATIVE BATTERY CABLE DISCONNECTION/CONNECTION [SKYACTIV-D 2.2].)
2. Remove the following parts:
   (1) Trunk end trim (See 09-17-78 TRUNK END TRIM REMOVAL/INSTALLATION.)
   (2) Rear scuff plate (LH) (See 09-17-63 REAR SCUFF PLATE REMOVAL/INSTALLATION.)
   (3) Trunk side trim (LH) (See 09-17-80 TRUNK SIDE TRIM REMOVAL/INSTALLATION.)

SECURITY AND LOCKS

3. Disconnect the connector.
4. Remove the bolt.
5. Remove the keyless receiver.
6. Install in the reverse order of removal.

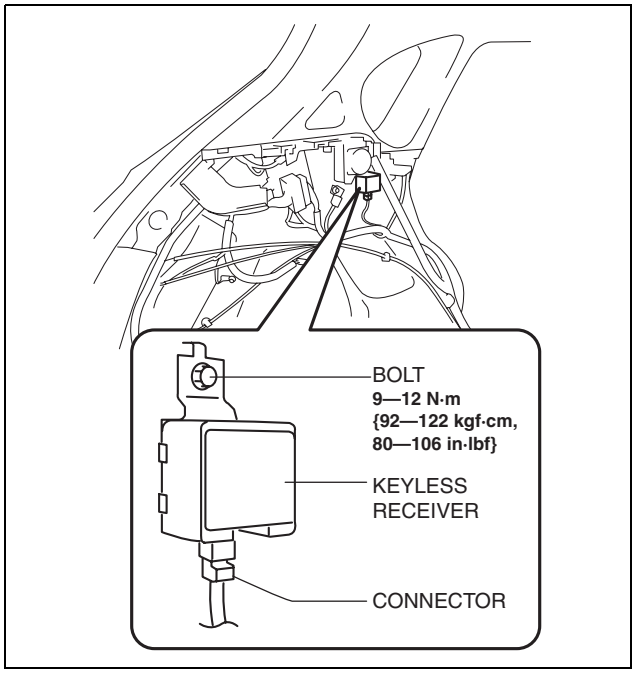

ac5jjw00000233

KEYLESS RECEIVER INSPECTION

id091400514400

1. Remove the following parts:
   (1) Trunk end trim (See 09-17-78 TRUNK END TRIM REMOVAL/INSTALLATION.)
   (2) Rear scuff plate (LH) (See 09-17-63 REAR SCUFF PLATE REMOVAL/INSTALLATION.)
   (3) Trunk side trim (LH) (See 09-17-80 TRUNK SIDE TRIM REMOVAL/INSTALLATION.)
2. Remove the keyless receiver with the connector still connected. (See 09-14-73 KEYLESS RECEIVER REMOVAL/INSTALLATION.)
3. Verify that the voltages of each of the terminals are as indicated in the terminal voltage table (reference).
   - If the voltage is not as specified in the terminal voltage table (reference), inspect the parts under Inspection item(s) and related wiring harnesses.
     — If the system does not operate normally even though the parts under Inspection Item(s) and related wiring harnesses do not have any malfunction, replace the keyless receiver.

Terminal Voltage Table (Reference)

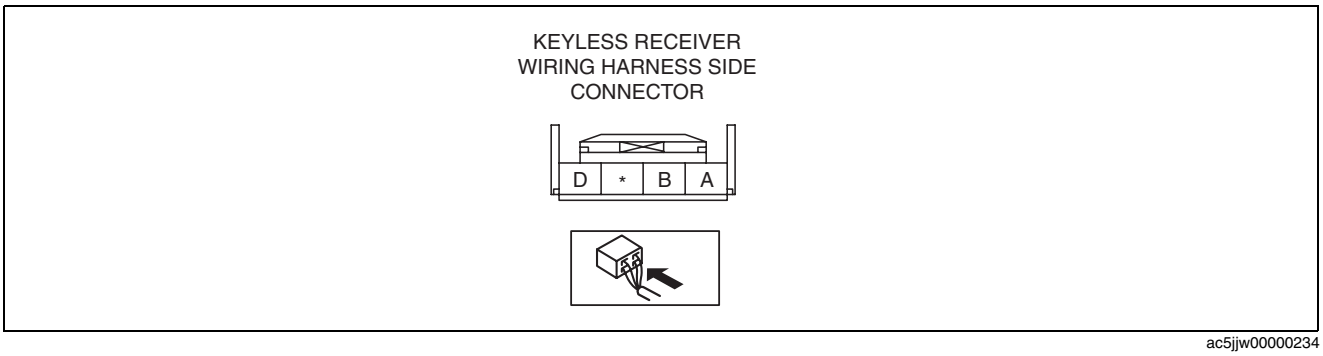

ac5jjw00000234

Terminal	Signal name	Connected to	Measurement conditions	Voltage (V)	Inspection item(s)
A	Power supply	Start stop unit	Under any condition	Approx. 5	Start stop unit
B	DATA	Start stop unit	Because this terminal is for communication, determination using terminal voltage inspection is not possible.		Start stop unit
D	GND	Body ground	Under any condition	1.0 or less	Ground

SECURITY AND LOCKS

REMOTE TRANSMITTER DISASSEMBLY/ASSEMBLY

id091400112200

Disassembly

1. Press the knob on the remote transmitter and pull the auxiliary key out.

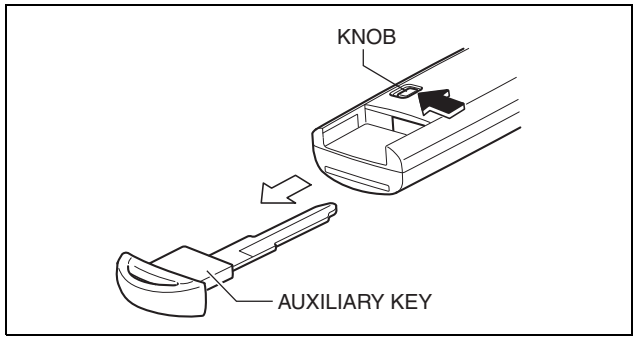

ac5wzw0000094

2. Insert a tape-wrapped flathead screwdriver into the notch on the remote transmitter and turn it in the direction of the arrow shown in the figure to detach tabs A from the remote transmitter.

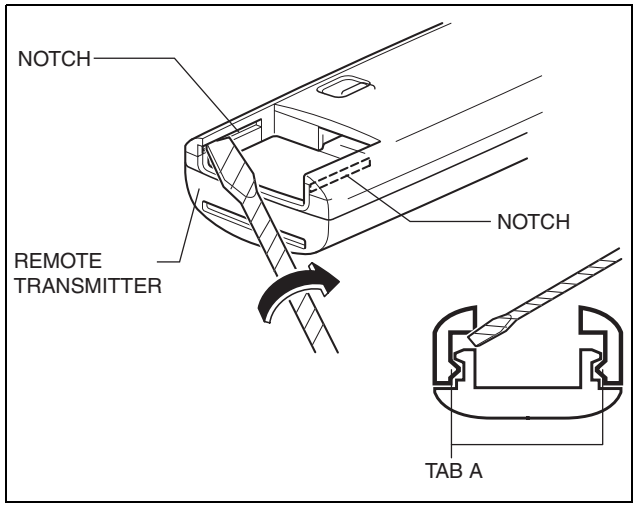

ac5wzw0000094

3. Insert a tape-wrapped flathead screwdriver between the remote transmitter and the cover and slide it in the direction of arrow (1) shown in the figure.
4. Turn the screwdriver in the direction of arrow (2) shown in the figure to detach tabs B of the cover from the remote transmitter.
5. Remove the cover.

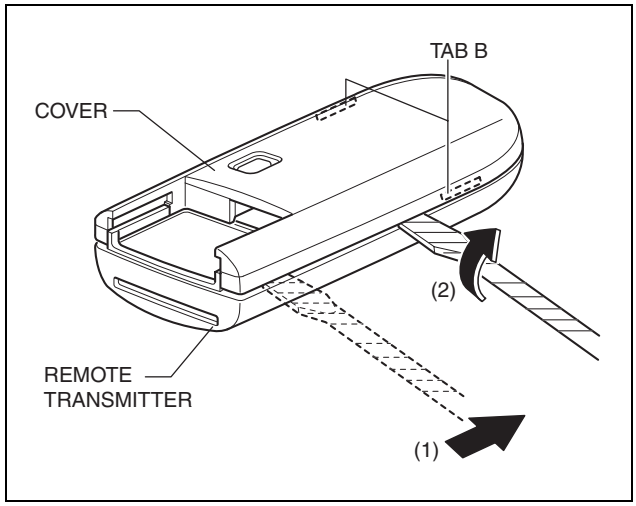

ac5wzw0000095

SECURITY AND LOCKS

6. Remove the cap and the battery from the remote transmitter.

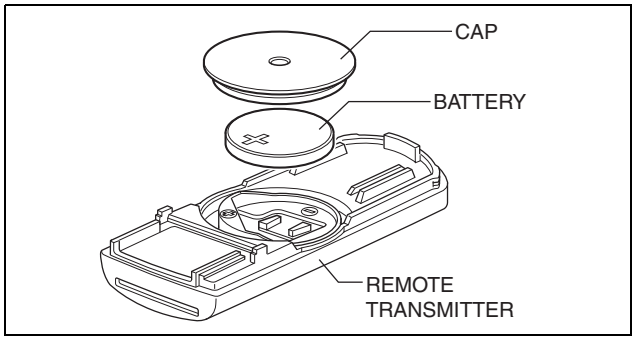

ac5wzw0000095

Assembly

1. Verify that the O-ring is installed to the remote transmitter.

   Note
   - If the O-ring is removed, install it before installing the battery.

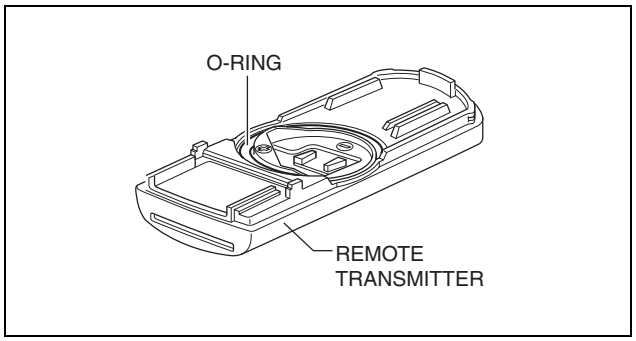

ac5wzw0000095

2. Install a new battery (CR2025) in the direction of the arrow shown in the figure with the negative pole facing down.
3. Install the cap.

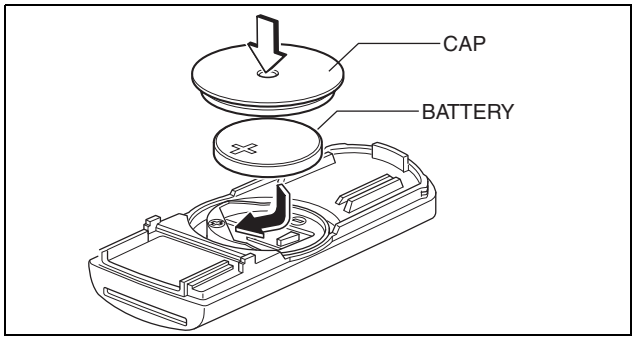

ac5wzw0000095

4. Align the cover to the transmitter from its end and press it in the direction of the arrow shown in the figure to engage the tabs of the cover with the remote transmitter.

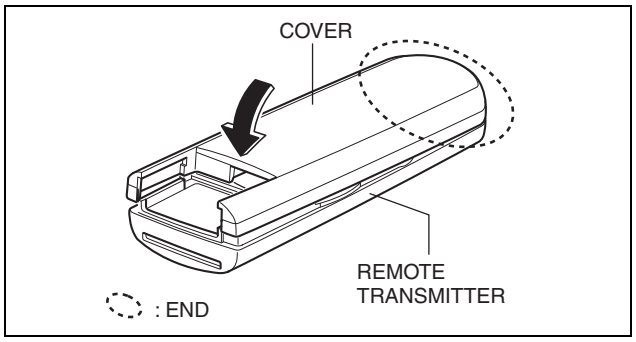

ac5wzw0000095

SECURITY AND LOCKS

5. Insert the auxiliary key.

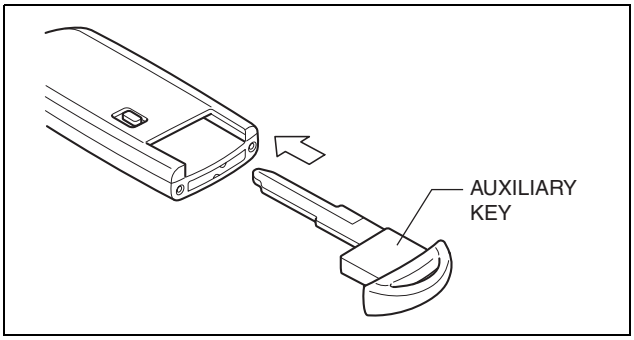

ac5wzw0000318

REMOTE TRANSMITTER ID CODE REGISTRATION

id091400112300

- When the remote transmitter is replaced or an additional remote transmitter is programmed, the remote transmitter has to be programmed to the immobilizer system-related parts. When replacing or adding a remote transmitter, refer to immobilizer system-related parts programming and perform the remote transmitter programming. (See 09-14-77 IMMOBILIZER SYSTEM-RELATED PARTS PROGRAMMING.)

CLEARING REMOTE TRANSMITTER

id091400112400

- The remote transmitter clearing procedure clears remote transmitters from the immobilizer system-related parts, and after the clearing procedure is implemented, all transmitters that were programmed can no longer be used.
- For the remote transmitter clearing procedure, refer to clearing of remote transmitters in programming of immobilizer system- related parts. (See 09-14-77 IMMOBILIZER SYSTEM-RELATED PARTS PROGRAMMING.)

REMOTE TRANSMITTER BATTERY VOLTAGE INSPECTION

id091400111800

Note

- Because the remote transmitter battery power cannot be determined using the battery itself, determine by the remote transmitter battery low warning operation conditions.

Operation procedure for remote transmitter battery low warning

1. Place the remote transmitter inside the vehicle and close all of the doors.
2. Switch the ignition ON (engine off) and wait approx. 30 s.
3. With the brake pedal not depressed, switch the ignition off (LOCK).
4. Verify that the KEY indicator light (green) (without TFT LCD) in the instrument cluster flashes or the warning does not display in the TFT LCD (with TFT LCD).
   — KEY indicator light (green) (without TFT LCD) flashes for approx. 30 s, or warning displays in the TFT LCD (with TFT LCD): Replace the remote transmitter battery because the remote transmitter battery power is depleted. (See 09-14-75 REMOTE TRANSMITTER DISASSEMBLY/ ASSEMBLY.)

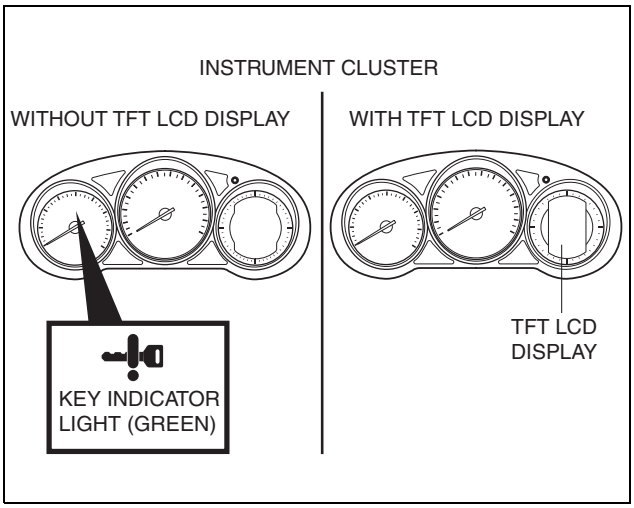

ac5jjw00002859

IMMOBILIZER SYSTEM-RELATED PARTS PROGRAMMING

id091400514700

Foreword

- When replacing immobilizer system-related parts or programming an additional remote transmitter, or clearing a remote transmitter, program the immobilizer system-related parts so that the system operates normally. For immobilizer system-related parts programming, select the programming procedures according to the service. (See 09-14-78 Selection of Procedure for Immobilizer System-Related Parts Programming.)

SECURITY AND LOCKS

Caution

- **The engine cannot be started if any step or procedure for each service operation is skipped. Perform all procedures in the order of the steps.**
- **If any metallic or magnetic object is near the remote transmitter, communication between the remote transmitter and the vehicle may be obstructed, resulting in a failure to program the immobilizer system-related parts. Remove any metallic or magnetic objects, such as key holders, from the remote transmitter when programming immobilizer system-related parts.**
- **If any of the following devices are inside the vehicle, programming of immobilizer system-related parts may fail. Do not bring any of the following devices or similar products inside the vehicle when programming immobilizer system-related parts.**
  - **— M-MDS**
  - **— Personal computer**
  - **— Devices that can send/receive radio waves**
- **If the engine is started during immobilizer system-related parts programming, the programming mode cancels. Therefore, do not start the engine unless indicated in the procedure. Repeat the procedure from the beginning if the engine is started during the immobilizer system-related parts programming.**
- **If a remote transmitter is near the vehicle during immobilizer system-related parts programming, it may be programmed mistakenly. Keep the remote transmitter 1 m away from the vehicle unless indicated in the procedure.**
- **The SSU in the procedure indicates the start stop unit. In addition, the advanced key indicates the remote transmitter.**

Note

- Two or more remote transmitters must be programmed for the engine to start.
- A maximum of six remote transmitters can be programmed to one vehicle.
- The number of programmed key ID numbers can be verified using the M-MDS.
- Do not select any screen menu other than the ones indicated in the procedure during M-MDS operation.
- When programming the immobilizer system-related parts, the incode must be searched.

Selection of Procedure for Immobilizer System-Related Parts Programming

1. Verify that the ROOM fuse, AT fuse, and SRS2/ESCL fuse are installed.
2. Select the applicable programming procedure from the service content of the immobilizer system-related parts.

Immobilizer System-Related Parts Service and Programming Procedure Table

No.	Service		Programming procedure
1	Additional remote transmitter programming	Have remote transmitter that can start engine	(See 09-14-79 No.1 Additional Remote Transmitter Programming Procedure (Using the M-MDS).)
2	Programming due to PCM replacement		(See 09-14-80 No.2 Programming Procedure After PCM Replacement.)
3	Start stop unit replacement and programming due to simultaneous replacement of start stop unit/PCM		(See 09-14-82 No.3 Start stop unit replacement and programming procedure due to simultaneous replacement of start stop unit/PCM.)
4	Remote transmitter replacement or clearing		(See 09-14-84 No.4 Remote transmitter replacement or remote transmitter clearing.)

M-MDS Connecting Procedure

Note

- Do not place the M-MDS in the vehicle while programming the immobilizer system.

1. Fully lower the door glass.
2. Connect the M-MDS to the DLC-2.
3. Place the M-MDS outside the vehicle.

Caution

- **Cover the vehicle body with a rag so as not to damage the vehicle body with the cable.**

SECURITY AND LOCKS

Procedure for communication between coil antenna and remote transmitter

- While the push button start indicator light (green) is flashing, press the top part of the remote transmitter against the center of the push button start.

Note

- The coil antenna is integrated with the push button start.

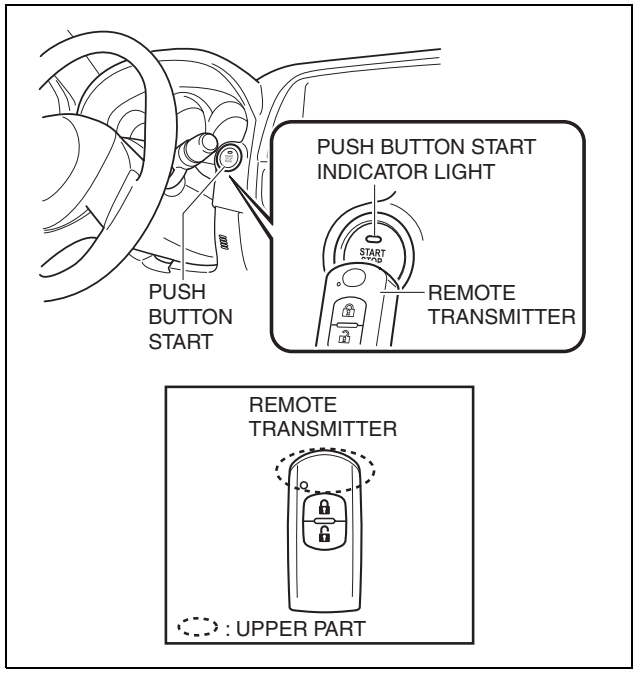

ac5wzw0000292

No.1 Additional Remote Transmitter Programming Procedure (Using the M-MDS)

Caution

- **The engine cannot be started if any step or procedure is skipped. Perform all procedures in the order of the steps.**

Vehicle condition

- There is a remote transmitter that can start the engine.

Note

- If a remote transmitter cannot be programmed, verify the number of programmed remote transmitter using the M-MDS.
- Perform the DTC inspection for the start stop unit using the M-MDS.

Procedure

VALID REMOTE TRANSMITTER	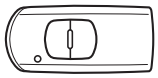 REMOTE TRANSMITTER 1
REMOTE TRANSMITTER TO BE PROGRAMMED	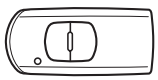 REMOTE TRANSMITTER 2

ac5wzw0000238

SECURITY AND LOCKS

Step	Procedure	Action after procedure	
1	**VERIFY THAT REMOTE TRANSMITTER WHICH CAN START ENGINE IS REMOTE TRANSMITTER 1** 1. Switch the ignition ON (engine off) using remote transmitter 1. 2. Verify that the security light illuminates for approx. 3 s, and then turns off. 3. Switch the ignition off (LOCK).	Go to the next step.	
2	**PERFORM ADDITIONAL PROGRAMMING OF REMOTE TRANSMITTER 2** 1. Connect the M-MDS to the DLC-2. (See 09-14-78 M-MDS Connecting Procedure.) 2. Switch the ignition ON (engine off) using remote transmitter 1. 3. After vehicle identification, select the following from the M-MDS initial screen. 1. “Body” 2. “Security” 3. “PATS (immobilizer) function” 4. Then, select the following from the screen menu. • Additional advanced key programming 5. Input the start stop unit incode and cancel the security access according to the directions on the M-MDS screen. **Note** • "Security access permitted" is displayed on the M-MDS screen. 6. Depress the clutch (MTX) or the brakes (ATX) according to the instructions on the M-MDS, and press remote transmitter 2 against the push button start while the push button start indicator light (green) is flashing. (See 09-14-79 Procedure for communication between coil antenna and remote transmitter.) 7. Verify that the remote transmitter 2 programming is completed on the M-MDS screen, and release the clutch (MTX) or brake (ATX) pedal. 8. Are there other remote transmitters to be programmed?	Yes	Change the remote transmitter and repeat Step 2.
		No	Switch the ignition off (LOCK), then go to the next step.
3	**PERFORM IMMOBILIZER SYSTEM FUNCTION VERIFICATION** **Note** • Each remote transmitter is brought inside the vehicle one at a time to start the engine. 1. Depress the clutch (MTX)/brake (ATX) pedal. 2. After pressing remote transmitter 2 against the push button start, press the push button start to start the engine. (See 09-14-79 Procedure for communication between coil antenna and remote transmitter.) 3. Are there other remote transmitters to be programmed?	Yes	Change the key and repeat Step 3.
		No	Go to the next step.
4	**VERIFY THAT REMOTE TRANSMITTER IS PROGRAMMED** Place only the programmed remote transmitter on the passenger seat and verify that the engine can be started with the programmed key.	Go to the next step.	
5	**M-MDS COMPLETION** 1. Wait for 5 s or more after the M-MDS is completed and switch the ignition off (LOCK).	Procedure is completed.	

No.2 Programming Procedure After PCM Replacement

Caution
- **The engine cannot be started if any step or procedure is skipped. Perform all procedures in the order of the steps.**

Vehicle condition
- There is a remote transmitter that can start the engine.

SECURITY AND LOCKS

Procedure

VALID REMOTE TRANSMITTER	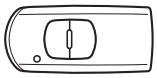 REMOTE TRANSMITTER

ac5wzw0000238

Step	Procedure	Action after procedure	
1	**REPLACE PCM** Refer to PCM REMOVAL/INSTALLATION to perform PCM replacement. (See 01-40-10 PCM REMOVAL/INSTALLATION [SKYACTIV-G 2.0].)	Go to the next step.	
2	**PERFORM PARAMETER RESET** 1. Connect the M-MDS to the DLC-2. (See 09-14-78 M-MDS Connecting Procedure.) 2. Switch the ignition ON (engine off). **Note** • Although the security indicator light illuminates for approx. 3 s and then turns off or flashes, continue to perform the procedure as indicated. 3. After vehicle identification, select the following from the M-MDS initial screen. 1. “Body” 2. “Security” 3. “PATS (immobilizer) function” 4. Then, select the following from the screen menu. • “Parameter reset” 5. Input the start stop unit and PCM incode and cancel the security access according to the directions on the M-MDS screen. **Note** • "Security access permitted" is displayed on the M-MDS screen. 6. Perform the operation according to the directions on the M-MDS screen. **Note** • "Parameter reset completed" is displayed on the M-MDS screen. 7. Select "No" according to the directions on the M-MDS. **Caution** • **Because the procedure switches to the procedure for key ID number clearing, if "Yes" is selected on the M-MDS screen, select "No".**	Go to the next step.	
3	**M-MDS COMPLETION** 1. Wait for 5 s or more after the M-MDS is completed and switch the ignition off (LOCK).	Go to the next step.	
4	**PERFORM IMMOBILIZER SYSTEM FUNCTION VERIFICATION** 1. Bring each remote transmitter into the vehicle one at a time and switch the ignition ON (engine off). 2. Verify that the security indicator light illuminates, and switch the ignition off. 3. Are there other remote transmitters to be programmed?	Yes	Change the key and repeat Step 4.
		No	Go to the next step.
5	**VERIFY PARAMETER RESET IS COMPLETED** **Note** • Each remote transmitter is brought inside the vehicle one at a time to start the engine. 1. Place only the programmed remote transmitter on the passenger seat and verify that the engine starts. 2. Does engine start?	Yes	Procedure is completed.
		No	Perform the related DTC inspection to repair the malfunctioning part.

SECURITY AND LOCKS

No.3 Start stop unit replacement and programming procedure due to simultaneous replacement of start stop unit/PCM

Caution

- **The engine cannot be started if any step or procedure is skipped. Perform all procedures in the order of the steps.**
- **Because it is necessary to program two or more remote transmitters to the immobilizer system-related parts to start the engine, perform the remote transmitter programming after clearing the remote transmitter.**

Note

- Before beginning the procedure, verify that the customer has provided all of the remote transmitters for the vehicle.
- The engine cannot be started unless two or more remote transmitters are programmed after the replacement.

Vehicle condition

- Have two or more remote transmitters to be programmed after the replacement.

Procedure

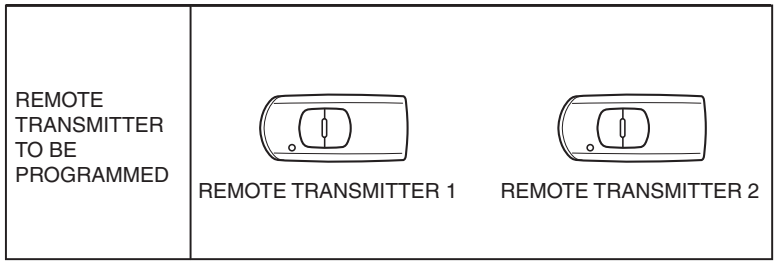

ac5wzw0000238

Step	Procedure	Action after procedure
1	**REPLACE START STOP UNIT AND REPLACE START STOP UNIT/PCM SIMULTANEOUSLY** Refer to START STOP UNIT REMOVAL/INSTALLATION to perform start stop unit replacement. (See 09-14-53 START STOP UNIT REMOVAL/INSTALLATION.) Refer to PCM REMOVAL/INSTALLATION to perform PCM replacement. (See 01-40-10 PCM REMOVAL/INSTALLATION [SKYACTIV-G 2.0].)	Go to the next step.

SECURITY AND LOCKS

Step	Procedure	Action after procedure	
2	**PERFORM PARAMETER RESET** 1. Connect the M-MDS to the DLC-2. (See 09-14-78 M-MDS Connecting Procedure.) 2. Remove the remote transmitter from the vehicle (keep them 1 m or more from the vehicle) and switch the ignition ON (engine off) according to the directions on the M-MDS screen. 3. Select the following from the M-MDS initial screen. 1. “Body” 2. “Forced ignition ON” 4. Press the push button start and switch the ignition ON (engine off) according to the instructions on the M-MDS. 5. Select the following from the M-MDS initial screen. 1. “Body” 2. “Security” 3. “PATS (immobilizer) function” 6. Then, select the following from the screen menu. • “Parameter reset” 7. Input the start stop unit and PCM incode and cancel the security access according to the directions on the M-MDS screen. **Note** • "Security access permitted" is displayed on the M-MDS screen. 8. Perform the operation according to the directions on the M-MDS screen. **Note** • "Parameter reset completed" is displayed on the M-MDS screen. 9. Select "Yes" according to the directions on the M-MDS. **Caution** • **Because the procedure will not switch to the procedure for key ID number clearing, if "No" is selected on the M-MDS screen, select "Yes".**	Go to the next step.	
3	**PERFORM KEY ID NUMBER CLEARING** 1. Perform the key ID number clearing and switch the ignition off (LOCK) according to the directions on the M-MDS screen.	Go to the next step.	
4	**PERFORM REMOTE TRANSMITTER 1 PROGRAMMING** 1. Switch the ignition ON (engine off). **Note** • Although the security indicator light illuminates for approx. 10 s and then turns off or flashes, continue to perform the procedure as indicated. 2. While the push button start indicator light (green) is flashing, press the top part of the remote transmitter 1 against the center of the push button start. (See 09-14-79 Procedure for communication between coil antenna and remote transmitter.) 3. Verify that remote transmitter 1 programming is completed on the M-MDS screen. **Note** • When the programming is completed, the security indicator light turns off and DTC 21 is displayed after approx. 1 min. • If the programming fails, the security indicator light flashes and DTC 13 is displayed after approx. 1 min.	Switch the ignition off (LOCK), then go to the next step.	
5	**PERFORM REMOTE TRANSMITTER 2 PROGRAMMING** 1. Switch the ignition ON (engine off). 2. While the push button start indicator light (green) is flashing, press the top part of the remote transmitter 2 against the center of the push button start. (See 09-14-79 Procedure for communication between coil antenna and remote transmitter.) 3. Verify that the remote transmitter 2 programming is completed on the M-MDS screen. **Note** • If the programming fails, the security indicator light flashes and DTC 13 is displayed after approx. 1 min. 4. Are there other remote transmitters to be programmed?	Yes	If other remote transmitters are programmed, repeat Step 5.
		No	Go to the next step.
6	**M-MDS COMPLETION** 1. Wait for 5 s or more after the M-MDS is completed and switch the ignition off (LOCK)	Go to the next step.	

SECURITY AND LOCKS

Step	Procedure	Action after procedure	
7	**PERFORM IMMOBILIZER SYSTEM FUNCTION VERIFICATION (REMOTE TRANSMITTER 1)** **Note** • Each remote transmitter is brought inside the vehicle one at a time to start the engine. 1. Depress the clutch (MTX)/brake (ATX) pedal. 2. While the push button start indicator light (green) is flashing, press the top part of the remote transmitter 1 against the center of the push button start. (See 09-14-79 Procedure for communication between coil antenna and remote transmitter.) 3. After the push button start indicator light (green) goes from flashing to illumination, press the push button start to start the engine.	Switch the ignition off (LOCK), then go to the next step.	
8	**PERFORM IMMOBILIZER SYSTEM FUNCTION VERIFICATION (REMOTE TRANSMITTER 2)** **Note** • Each remote transmitter is brought inside the vehicle one at a time to start the engine. 1. Depress the clutch (MTX)/brake (ATX) pedal. 2. While the push button start indicator light (green) is flashing, press the top part of the remote transmitter 2 against the center of the push button start. (See 09-14-79 Procedure for communication between coil antenna and remote transmitter.) 3. After the push button start indicator light (green) goes from flashing to illumination, press the push button start to start the engine.	Yes	If there are other remote transmitters to be programmed, repeat Step 7.
		No	Go to the next step.
9	**VERIFY THAT REMOTE TRANSMITTER IS PROGRAMMED** **Note** • Each remote transmitter is brought inside the vehicle one at a time to start the engine. 1. Place only the programmed remote transmitter on the passenger seat and verify that the engine starts. 2. Does engine start?	Yes	Procedure is completed.
		No	Perform the related DTC inspection to repair the malfunctioning part.

No.4 Remote transmitter replacement or remote transmitter clearing

Caution
- **The engine cannot be started if any step or procedure is skipped. Perform all procedures in the order of the steps.**
- **Because it is necessary to program two or more remote transmitters to the immobilizer system-related parts to start the engine, perform the remote transmitter programming after clearing the remote transmitter.**

Vehicle condition
- Have two remote transmitters to be programmed.

Procedure

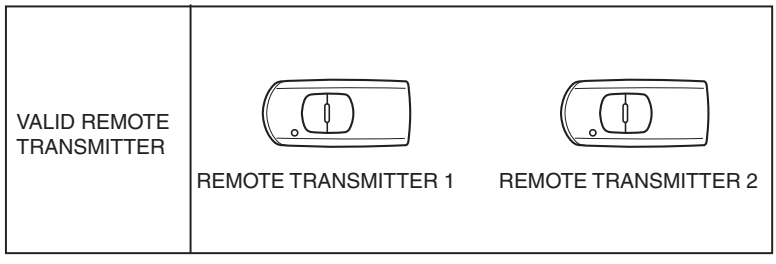

ac5wzw0000238

SECURITY AND LOCKS

Step	Procedure	Action after procedure	
1	**PERFORM KEY ID NUMBER CLEARING** 1. Connect the M-MDS to the DLC-2. (See 09-14-78 M-MDS Connecting Procedure.) 2. Switch the ignition ON (engine off). 3. After vehicle identification, select the following from the M-MDS initial screen. 1. “Body” 2. “Security” 3. “PATS (immobilizer) function” 4. Then, select the following from the screen menu. • “Advanced key clearing” 5. Input the start stop unit incode and cancel the security access according to the directions on the M-MDS screen. **Note** • "Security access permitted" is displayed on the M-MDS screen. 6. Perform the remote transmitter clearing according to the directions on the M-MDS. **Note** • "Advanced key clearing completed" is displayed on the M-MDS screen.	Switch the ignition off (LOCK), then go to the next step.	
2	**PERFORM REMOTE TRANSMITTER 1 PROGRAMMING** 1. Switch the ignition ON (engine off). **Note** • Although the security indicator light illuminates for approx. 10 s and then turns off or flashes, continue to perform the procedure as indicated. 2. While the push button start indicator light (green) is flashing, press the top part of the remote transmitter 1 against the center of the push button start. (See 09-14-79 Procedure for communication between coil antenna and remote transmitter.) 3. Verify that the remote transmitter 1 programming is completed on the M-MDS screen. **Note** • When the programming is completed, the security indicator light turns off and DTC 21 is displayed after approx. 1 min. • If the programming fails, the security indicator light flashes and DTC 13 is displayed after approx. 1 min.	Switch the ignition off (LOCK), then go to the next step.	
3	**PERFORM REMOTE TRANSMITTER 2 PROGRAMMING** 1. Switch the ignition ON (engine off). **Note** • Although the security indicator light illuminates for approx. 10 s and then turns off or flashes, continue to perform the procedure as indicated. 2. While the push button start indicator light (green) is flashing, press the top part of the remote transmitter 2 against the center of the push button start. (See 09-14-79 Procedure for communication between coil antenna and remote transmitter.) 3. Verify that the remote transmitter 2 programming is completed on the M-MDS screen. **Note** • If the programming fails, the security indicator light flashes and DTC 13 is displayed after approx. 1 min. 4. Are there other remote transmitters to be programmed?	Yes	Change the key and repeat Step 3.
		No	Go to the next step.
4	**M-MDS COMPLETION** 1. Wait for 5 s or more after the M-MDS is completed and switch the ignition off (LOCK).	Go to the next step.	

SECURITY AND LOCKS

Step	Procedure	Action after procedure	
5	**PERFORM IMMOBILIZER SYSTEM FUNCTION VERIFICATION (REMOTE TRANSMITTER 1)** **Note** • Each remote transmitter is brought inside the vehicle one at a time to start the engine. 1. Depress the clutch (MTX)/brake (ATX) pedal. 2. While the push button start indicator light (green) is flashing, press the top part of the remote transmitter 1 against the center of the push button start. (See 09-14-79 Procedure for communication between coil antenna and remote transmitter.) 3. After the push button start indicator light (green) goes from flashing to illumination, press the push button start to start the engine.	Switch the ignition off (LOCK), then go to the next step.	
6	**PERFORM IMMOBILIZER SYSTEM FUNCTION VERIFICATION (REMOTE TRANSMITTER 2)** **Note** • Each remote transmitter is brought inside the vehicle one at a time to start the engine. 1. Depress the clutch (MTX)/brake (ATX) pedal. 2. While the push button start indicator light (green) is flashing, press the top part of the remote transmitter 2 against the center of the push button start. (See 09-14-79 Procedure for communication between coil antenna and remote transmitter.) 3. After the push button start indicator light (green) goes from flashing to illumination, press the push button start to start the engine.	Yes	If there are other remote transmitters to be programmed, repeat Step 5.
		No	Go to the next step.
7	**VERIFY THAT REMOTE TRANSMITTER IS PROGRAMMED** **Note** • Each remote transmitter is brought inside the vehicle one at a time to start the engine. 1. Place only the programmed remote transmitter on the passenger seat and verify that the engine starts. 2. Does engine start?	Yes	Procedure is completed.
		No	Perform the related DTC inspection to repair the malfunctioning part.

THEFT-DETERRENT SIREN REMOVAL/INSTALLATION

id091400630100

1. Disconnect the negative battery cable. (See 01-17A-11 NEGATIVE BATTERY CABLE DISCONNECTION/CONNECTION [SKYACTIV-G 2.0].) (See 01-17A-13 NEGATIVE BATTERY CABLE DISCONNECTION/CONNECTION [SKYACTIV-G 2.0 (WITHOUT i-stop)].) (See 01-17B-9 NEGATIVE BATTERY CABLE DISCONNECTION/CONNECTION [SKYACTIV-D 2.2].)
2. Remove the front bumper. (See 09-10-10 FRONT BUMPER REMOVAL/INSTALLATION.)
3. Remove the front combination light (LH). (See 09-18-7 FRONT COMBINATION LIGHT REMOVAL/INSTALLATION.)

SECURITY AND LOCKS

4. Remove the screws.
5. Remove the bracket.

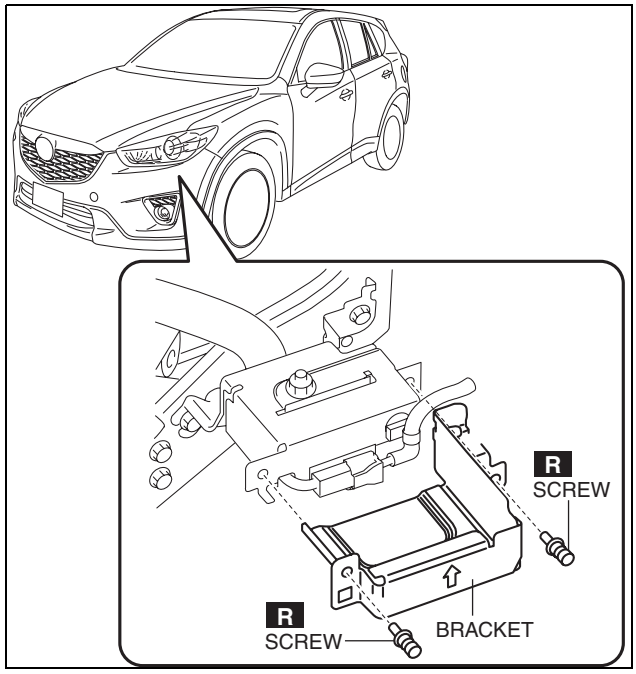

ac5wzw0000303

6. Disconnect the connector.
7. While pressing the tabs of the clip in the direction of arrow (1) shown in the figure, press it in the direction of arrow (2) to detach the clip tab from the bracket.
8. Remove the clip.

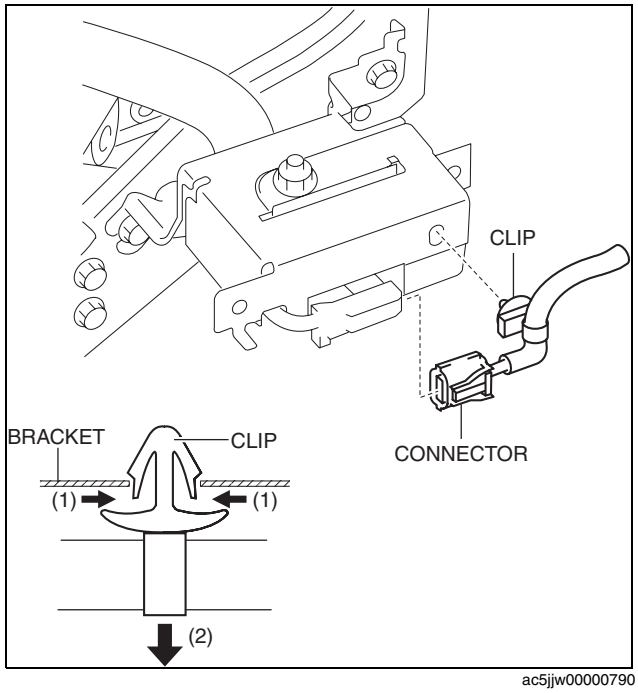

ac5jjw00000790

9. Remove the bolts.
10. Remove the theft-deterrent siren.

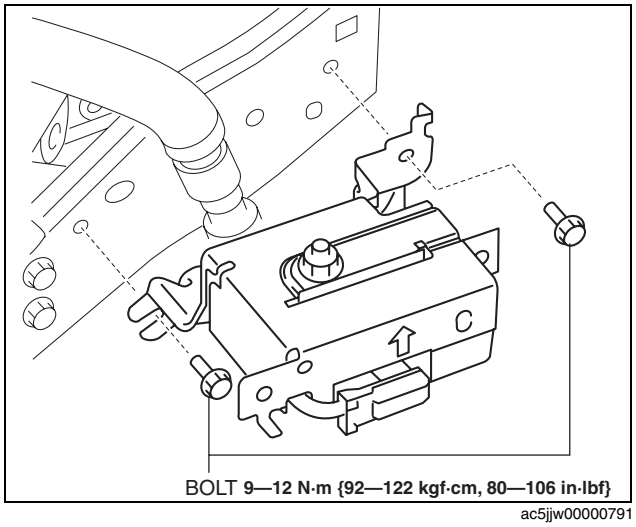

ac5jjw00000791

11. Disconnect the connector from the theft-deterrent siren.
12. Remove the short wiring harness.

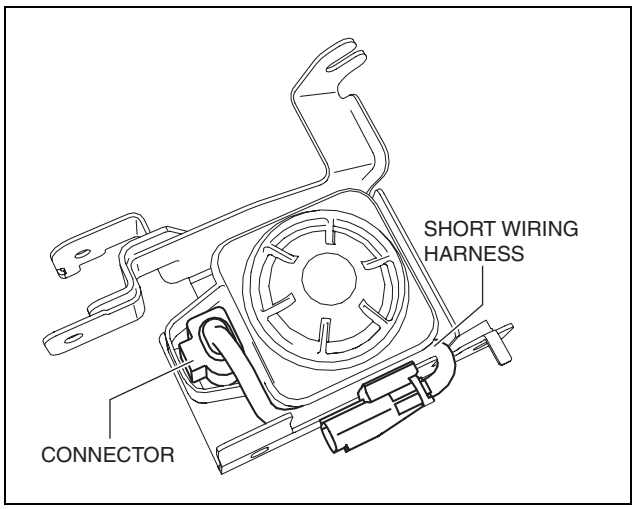

ac5jjw00001284

13. Remove the nut.
14. Remove the theft-deterrent siren.
15. Install in the reverse order of removal.

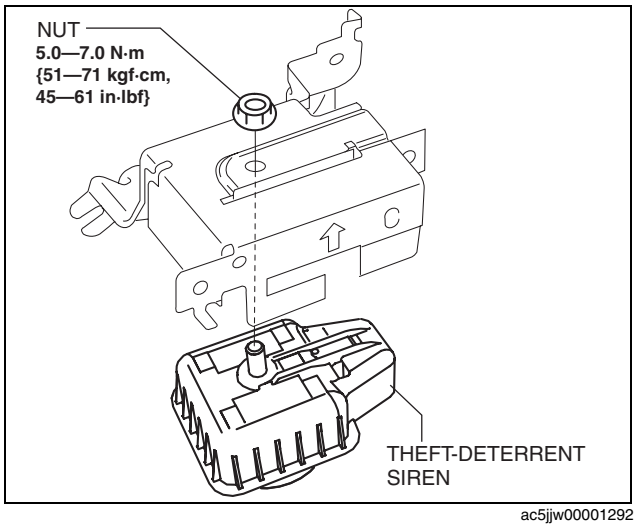

ac5jjw00001292

THEFT-DETERRENT SIREN INSPECTION

id091400630200

1. Disconnect the negative battery cable. (See 01-17A-11 NEGATIVE BATTERY CABLE DISCONNECTION/CONNECTION [SKYACTIV-G 2.0].) (See 01-17A-13 NEGATIVE BATTERY CABLE DISCONNECTION/CONNECTION [SKYACTIV-G 2.0 (WITHOUT i-stop)].) (See 01-17B-9 NEGATIVE BATTERY CABLE DISCONNECTION/CONNECTION [SKYACTIV-D 2.2].)
2. Remove the front bumper. (See 09-10-10 FRONT BUMPER REMOVAL/INSTALLATION.)
3. Remove the front combination light (LH). (See 09-18-7 FRONT COMBINATION LIGHT REMOVAL/INSTALLATION.)

SECURITY AND LOCKS

4. Remove the theft-deterrent siren bracket. (See 09-14-86 THEFT-DETERRENT SIREN REMOVAL/INSTALLATION.)
5. Connect the negative battery cable. (See 01-17A-11 NEGATIVE BATTERY CABLE DISCONNECTION/CONNECTION [SKYACTIV-G 2.0].) (See 01-17A-13 NEGATIVE BATTERY CABLE DISCONNECTION/CONNECTION [SKYACTIV-G 2.0 (WITHOUT i-stop)].) (See 01-17B-9 NEGATIVE BATTERY CABLE DISCONNECTION/CONNECTION [SKYACTIV-D 2.2].)
6. Verify that the voltages of each of the terminals are as indicated in the terminal voltage table (reference).
   - If the voltage is not as specified in the terminal voltage table (reference), inspect the parts under Inspection item(s) and related wiring harnesses.
     — If the system does not work normally even though the parts or related wiring harnesses do not have any malfunction, replace the theft-deterrent siren.

Terminal Voltage Table (Reference)

THEFT-DETERRENT SIREN
TERMINAL-SIDE CONNECTOR

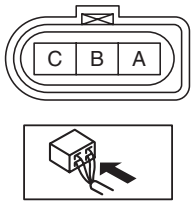

ac5wzw0000276

Terminal	Signal name	Connected to	Measurement condition	Voltage (V)	Inspection item(s)
A	DATA	Rear body control module (RBCM)	Because this terminal is for communication, determination using terminal voltage inspection is not possible.		
B	Ground	Body ground	Under any condition	1.0 or less	Ground
C	Power supply	ROOM 15 A fuse	Under any condition	B+	• ROOM 15 A fuse • Battery

Continuity Inspection Of Short Wiring Harness Connector

1. Verify that the continuity is as indicated in the table.

THEFT-DETERRENT SIREN
WIRING HARNESS SIDE CONNECTOR

VEHICLE WIRING HARNESS
SIDE CONNECTOR (0914-302)

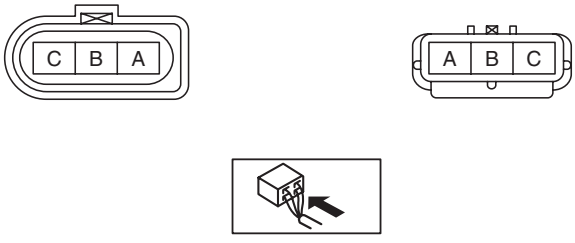

○—○ : CONTINUITY

TEST CONDITION	THEFT-DETERRENT SIREN SIDE CONNECTOR			VEHICLE WIRING HARNESS SIDE CONNECTOR (0914-302)		
	C	B	A	A	B	C
UNDER ANY CONDITION	○			○		
		○			○	
			○			○

ac5jjw00001693

- If not as indicated in the table, replace the short wiring harness.

SECURITY AND LOCKS

INTRUDER SENSOR REMOVAL/INSTALLATION

id091400517200

1. Disconnect the negative battery cable. (See 01-17A-11 NEGATIVE BATTERY CABLE DISCONNECTION/CONNECTION [SKYACTIV-G 2.0].) (See 01-17A-13 NEGATIVE BATTERY CABLE DISCONNECTION/CONNECTION [SKYACTIV-G 2.0 (WITHOUT i-stop)].) (See 01-17B-9 NEGATIVE BATTERY CABLE DISCONNECTION/CONNECTION [SKYACTIV-D 2.2].)
2. Remove the front map light. (See 09-18-95 MAP LIGHT REMOVAL/INSTALLATION.)
3. Disconnect the connector from the intruder sensor.
4. While pulling the bracket in the direction of arrow (1) shown in the figure, pull the intruder sensor in the direction of arrow (2) shown in the figure, and detach the intruder sensor tabs from the bracket.
5. Detach all the intruder sensor tabs from the bracket.

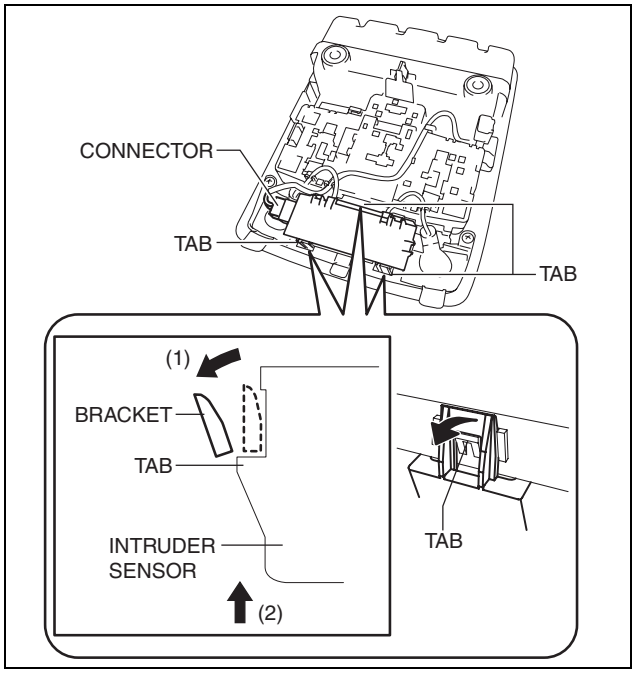

ac5wzw0000295

6. While pulling the bracket in the direction of arrow (3) shown in the figure, pull the intruder sensor in the direction of arrow (4) shown in the figure, and detach the intruder sensor tabs from the bracket.
7. Detach all the intruder sensor tabs from the bracket and remove the intruder sensor.

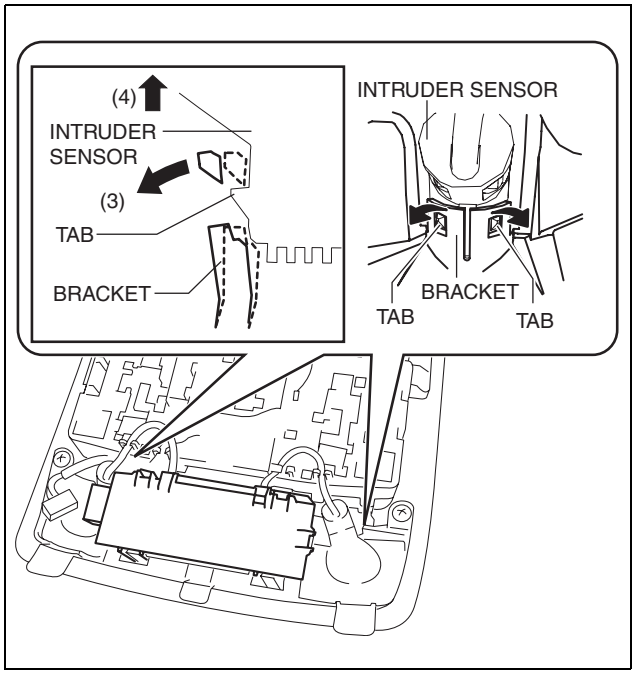

ac5wzw0000295

SECURITY AND LOCKS

8. Remove the short wiring harness.
9. Remove the screws.
10. Remove the bracket.
11. Install in the reverse order of removal.

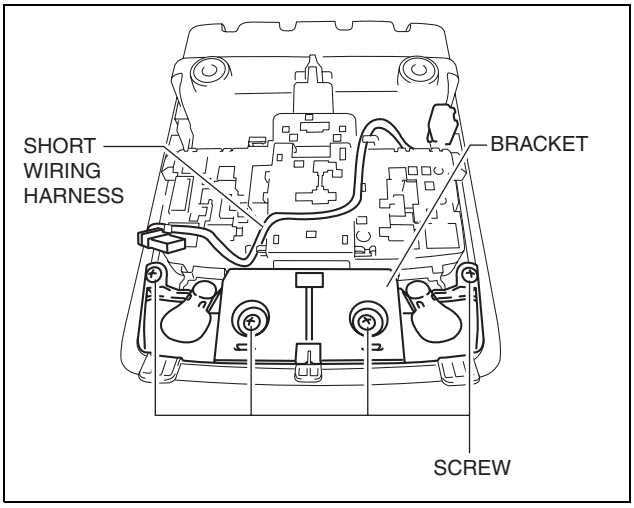

ac5wzw0000295

INTRUDER SENSOR INSPECTION

id091400517300

1. Remove the front map light. (See 09-18-95 MAP LIGHT REMOVAL/INSTALLATION.)
2. Remove the intruder sensor with the connector connected. (See 09-14-90 INTRUDER SENSOR REMOVAL/INSTALLATION.)
3. Verify that the voltages of each of the terminals are as indicated in the terminal voltage table (reference).
   - If the voltage is not as specified in the terminal voltage table (reference), inspect the parts under Inspection item(s) and related wiring harnesses.
     — If the system does not operate normally even though the parts under Inspection Item(s) and related wiring harnesses do not have any malfunction, replace the intruder sensor.

Terminal Voltage Table (Reference)

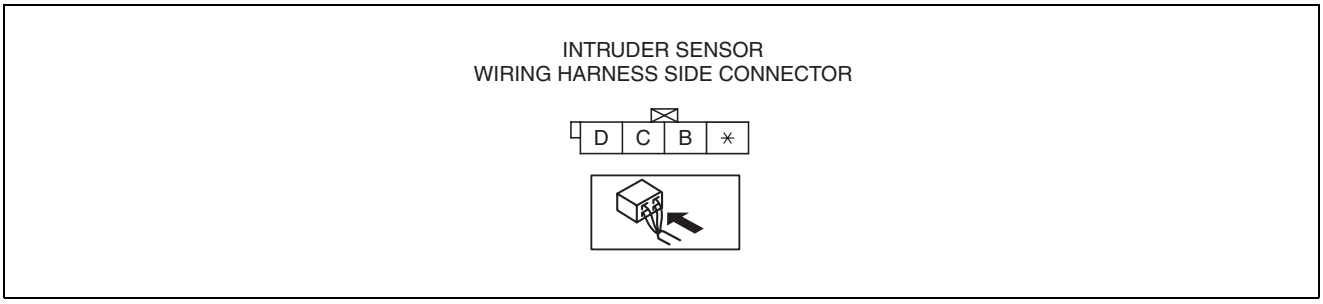

ac5wzw0000276

Terminal	Signal name	Connected to	Measurement condition	Voltage (V)	Inspection item (s)
B	Ground	Body ground	Under any condition	1.0 or less	Ground
C	DATA	Rear body control module (RBCM)	Because this terminal is for communication, determination using terminal voltage inspection is not possible.		
D	Power supply	Rear body control module (RBCM)	Under any condition	B+	Rear body control module (RBCM)

SECURITY AND LOCKS

Continuity Inspection Of Short Wiring Harness Connector

1. Verify that the continuity is as indicated in the table.

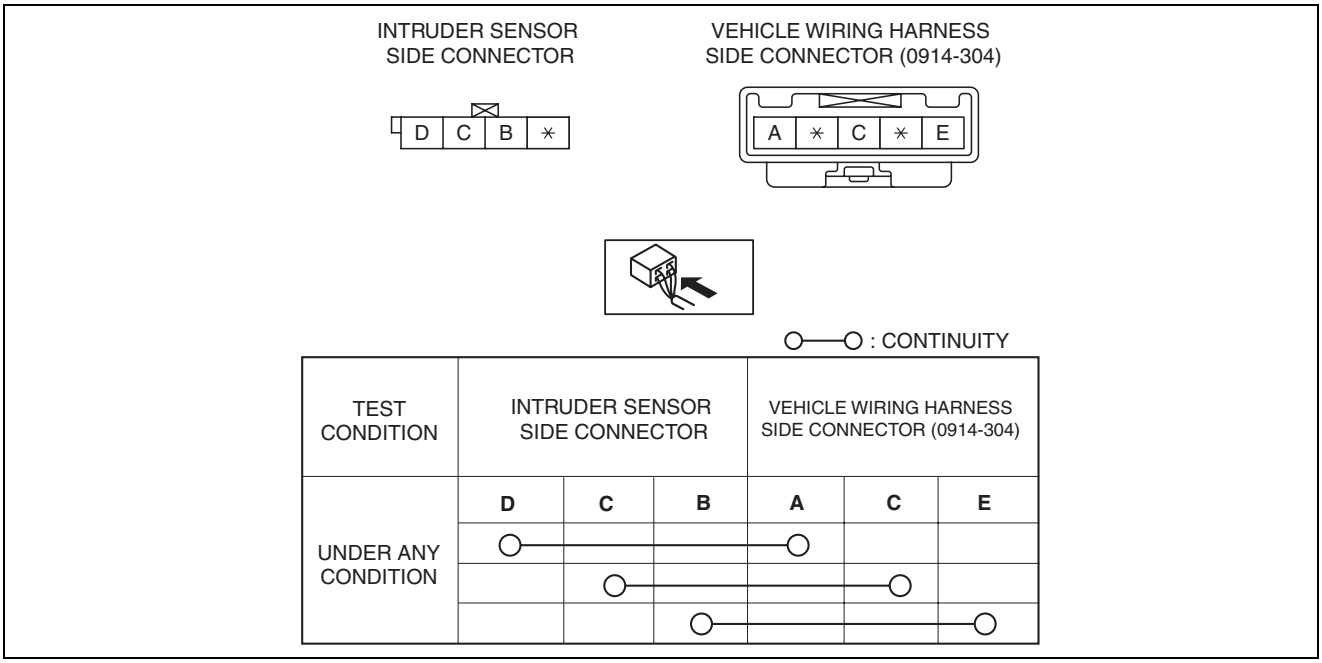

TEST CONDITION	INTRUDER SENSOR SIDE CONNECTOR			VEHICLE WIRING HARNESS SIDE CONNECTOR (0914-304)		
	D	C	B	A	C	E
UNDER ANY CONDITION	○———			○		
		○———			○	
			○———			○

ac5jjw00001261

- If not as indicated in the table, replace the short wiring harness.

THEFT-DETERRENT HORN REMOVAL/INSTALLATION

id091400517500

1. Disconnect the negative battery cable. (See 01-17A-11 NEGATIVE BATTERY CABLE DISCONNECTION/CONNECTION [SKYACTIV-G 2.0].) (See 01-17A-13 NEGATIVE BATTERY CABLE DISCONNECTION/CONNECTION [SKYACTIV-G 2.0 (WITHOUT i-stop)].) (See 01-17B-9 NEGATIVE BATTERY CABLE DISCONNECTION/CONNECTION [SKYACTIV-D 2.2].)
2. Remove the following parts:
   (1) Trunk end trim (See 09-17-78 TRUNK END TRIM REMOVAL/INSTALLATION.)
   (2) Rear scuff plate (RH) (See 09-17-63 REAR SCUFF PLATE REMOVAL/INSTALLATION.)
   (3) Trunk side trim (RH) (See 09-17-80 TRUNK SIDE TRIM REMOVAL/INSTALLATION.)
3. Disconnect the connector.
4. Remove the bolt.
5. Remove the theft-deterrent horn.
6. Install in the reverse order of removal.

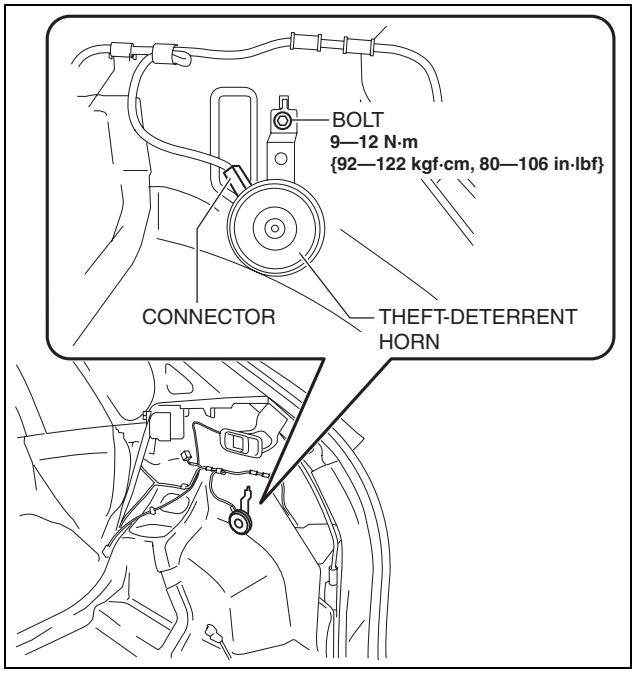

ac5jjw00001281

SECURITY AND LOCKS

THEFT-DETERRENT HORN INSPECTION

id091400004900

1. Disconnect the negative battery cable. (See 01-17A-11 NEGATIVE BATTERY CABLE DISCONNECTION/CONNECTION [SKYACTIV-G 2.0].) (See 01-17A-13 NEGATIVE BATTERY CABLE DISCONNECTION/CONNECTION [SKYACTIV-G 2.0 (WITHOUT i-stop)].) (See 01-17B-9 NEGATIVE BATTERY CABLE DISCONNECTION/CONNECTION [SKYACTIV-D 2.2].)
2. Remove the following parts:
   (1) Trunk end trim (See 09-17-78 TRUNK END TRIM REMOVAL/INSTALLATION.)
   (2) Rear scuff plate (RH) (See 09-17-63 REAR SCUFF PLATE REMOVAL/INSTALLATION.)
   (3) Trunk side trim (RH) (See 09-17-80 TRUNK SIDE TRIM REMOVAL/INSTALLATION.)
   (4) Theft-deterrent horn (See 09-14-92 THEFT-DETERRENT HORN REMOVAL/INSTALLATION.)
3. Apply battery positive voltage to horn terminal A, and connect the horn retaining bolt to ground as shown in the figure, and then verify that the horn sounds.
   - If the horn does not sound, replace the horn.

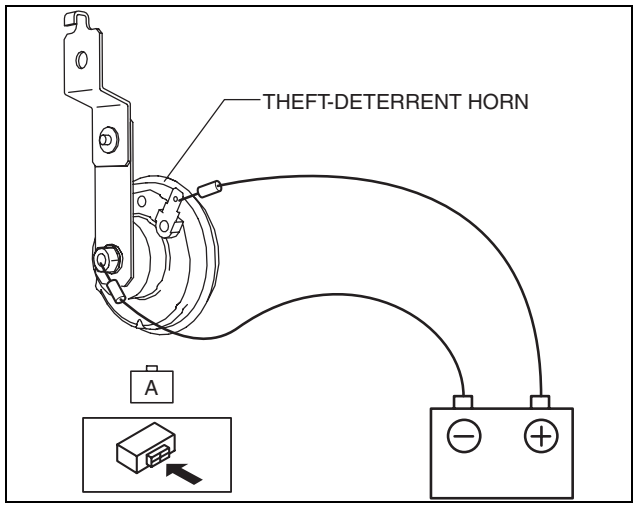

ac5jjw00001192

THEFT-DETERRENT SYSTEM OPERATION RECORD

id091400005200

1. Connect the M-MDS to the DLC-2.
2. After vehicle identification, select the following from the M-MDS initial screen.
   1. “Operational Record”
3. Then, select the following from the screen menu.
   1. “Burglar Alarm System”
4. Display the theft-deterrent system operation history according to the screen instructions.

09-15 SUNROOF

SUNROOF LOCATION INDEX 09-15–1
DEFLECTOR
REMOVAL/INSTALLATION 09-15–2
GLASS PANEL
REMOVAL/INSTALLATION 09-15–2
Weatherstrip Installation Note **09-15–4**
GLASS PANEL ADJUSTMENT 09-15–4
SUNROOF UNIT
REMOVAL/INSTALLATION 09-15–6
SUNROOF UNIT
DISASSEMBLY/ASSEMBLY 09-15–8
Sunshade Disassembly Note **09-15–9**
Front Guide Disassembly Note **09-15–10**
Decoration Link Assembly Note **09-15–11**
SUNROOF MOTOR
REMOVAL/INSTALLATION 09-15–11
SUNROOF MOTOR INSPECTION 09-15–12
Terminal Voltage Table (Reference) . . . **09-15–12**
SUNROOF SWITCH
REMOVAL/INSTALLATION 09-15–13
SUNROOF SWITCH INSPECTION 09-15–13
FRONT DRAIN HOSE
REMOVAL/INSTALLATION 09-15–14
REAR DRAIN HOSE
REMOVAL/INSTALLATION 09-15–16
SUNROOF SYSTEM INITIALIZATION
PROCEDURE 09-15–18

SUNROOF

SUNROOF LOCATION INDEX

id091500800100

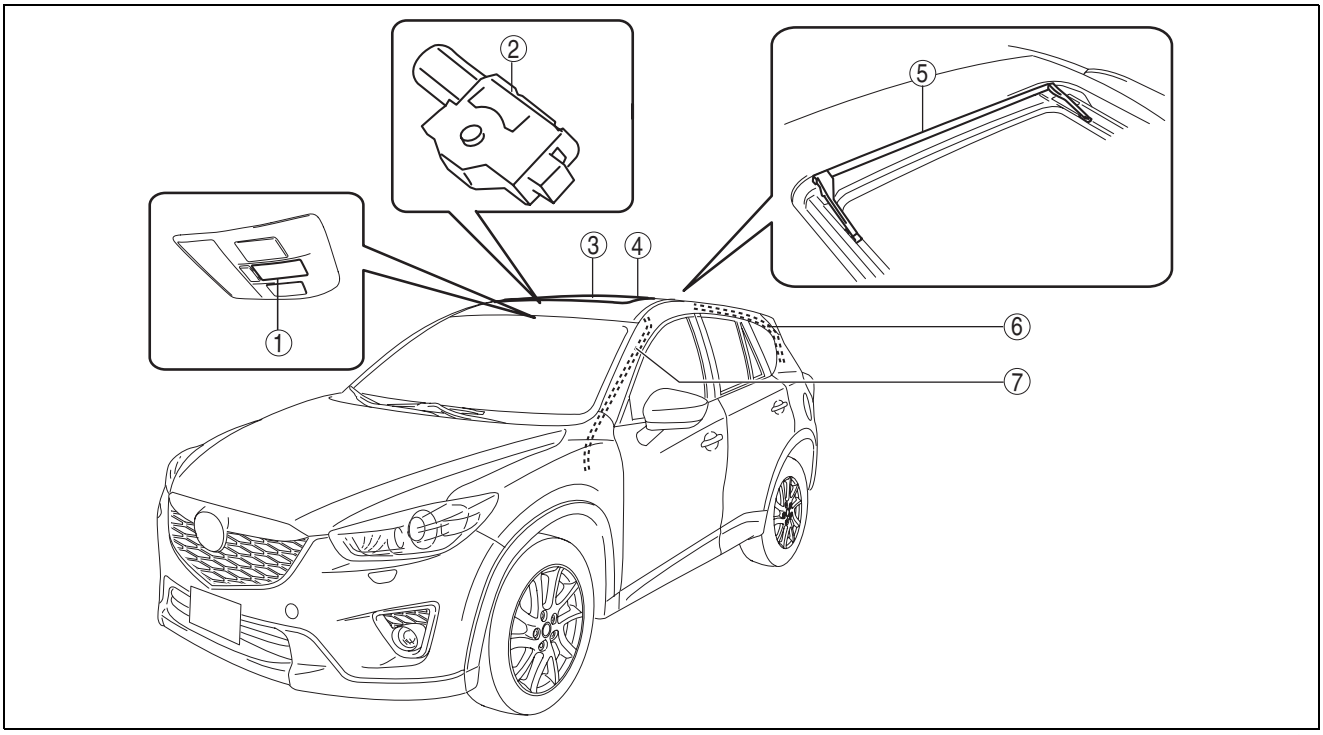

ac5wzw0000172

1	Sunroof switch (See 09-15-13 SUNROOF SWITCH REMOVAL/INSTALLATION.) (See 09-15-13 SUNROOF SWITCH INSPECTION.) (See 09-15-18 SUNROOF SYSTEM INITIALIZATION PROCEDURE.)
2	Sunroof motor (See 09-15-11 SUNROOF MOTOR REMOVAL/INSTALLATION.) (See 09-15-12 SUNROOF MOTOR INSPECTION.)
3	Glass panel (See 09-15-2 GLASS PANEL REMOVAL/INSTALLATION.) (See 09-15-4 GLASS PANEL ADJUSTMENT.)

4	Sunroof unit (See 09-15-6 SUNROOF UNIT REMOVAL/INSTALLATION.) (See 09-15-8 SUNROOF UNIT DISASSEMBLY/ASSEMBLY.)
5	Deflector (See 09-15-2 DEFLECTOR REMOVAL/INSTALLATION.)
6	Rear drain hose (See 09-15-16 REAR DRAIN HOSE REMOVAL/INSTALLATION.)
7	Front drain hose (See 09-15-14 FRONT DRAIN HOSE REMOVAL/INSTALLATION.)

SUNROOF

DEFLECTOR REMOVAL/INSTALLATION

id091500800400

1. Fully open the glass panel.
2. Remove the spring in the direction of the arrow (1) shown in the figure from hooks A.

Caution

- **If the spring is removed forcefully, hooks A located at the spring installation area may be damaged. Carefully remove the spring so as not to damage hooks A.**

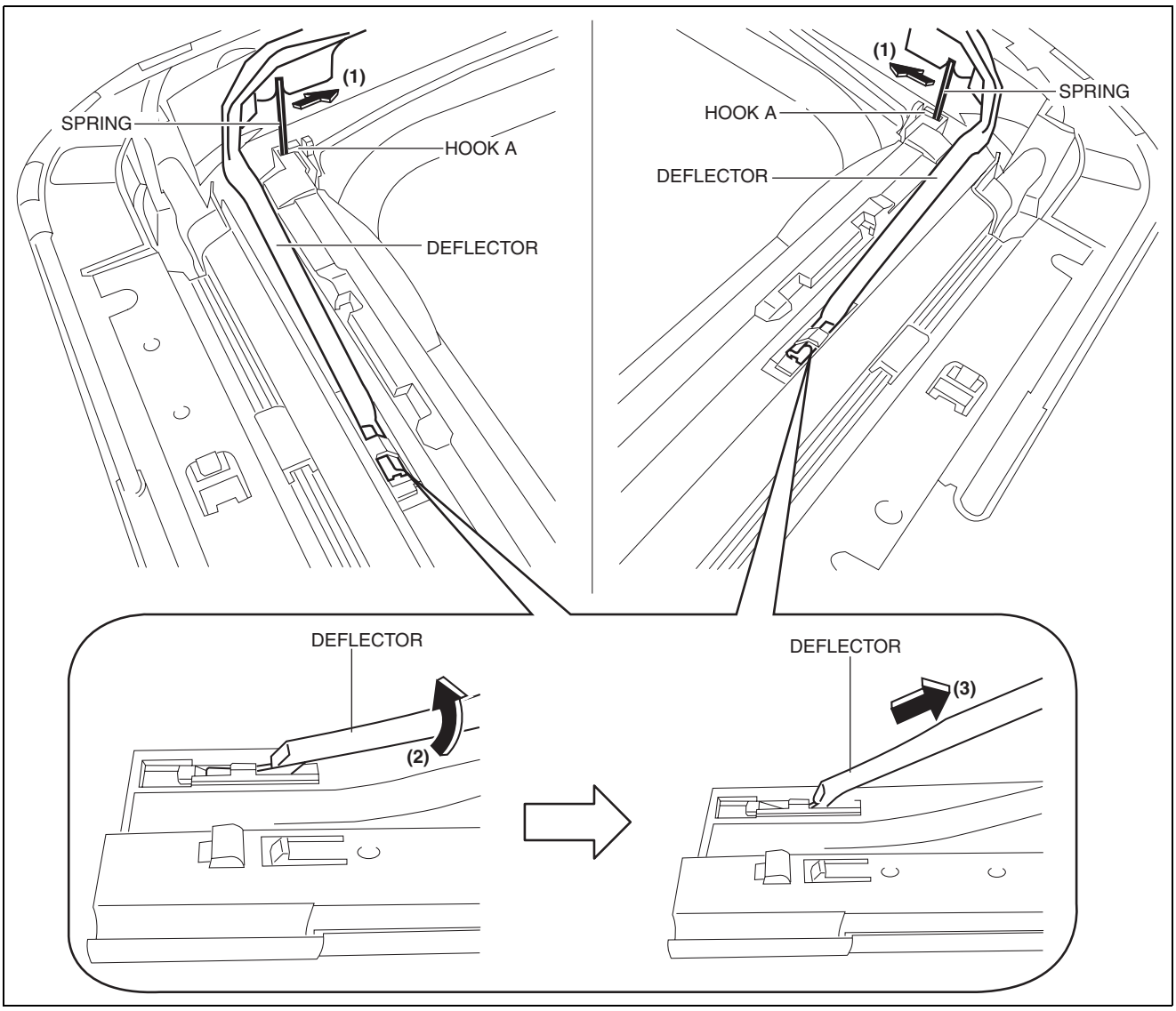

ac5wzw0000150

3. Remove the deflector in the direction of the arrow in the order of (2), (3) shown in the figure.
4. Install in the reverse order of removal.

GLASS PANEL REMOVAL/INSTALLATION

id091500800500

1. Fully open the sunshade.
2. Fully close the glass panel.

SUNROOF

3. Remove screws.

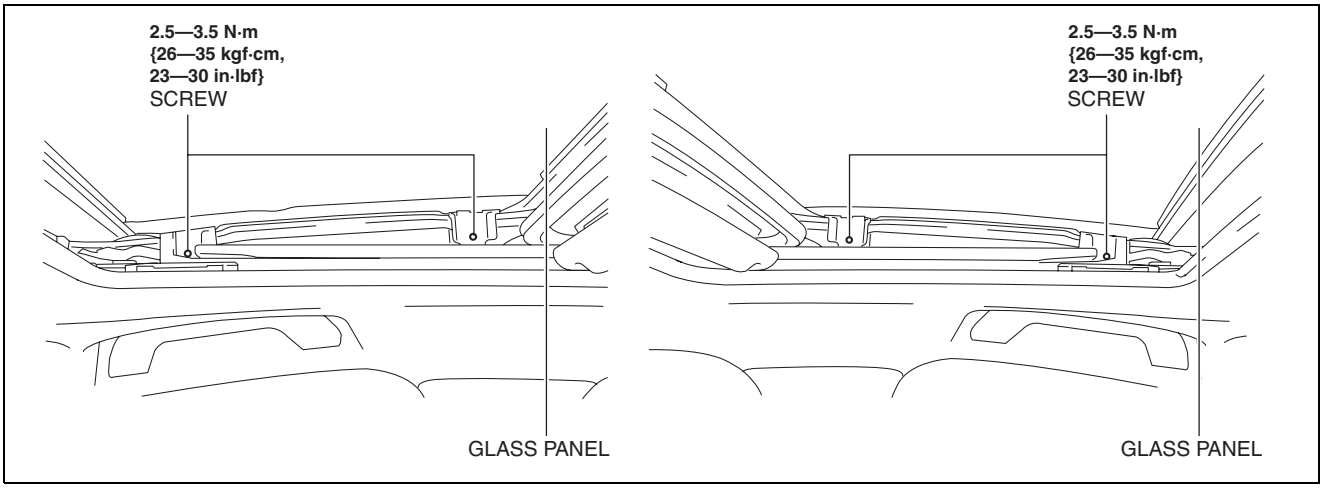

ac5wzw0000150

4. Remove the glass panel in the direction of the arrow in the order of (1), (2), (3) shown in the figure.

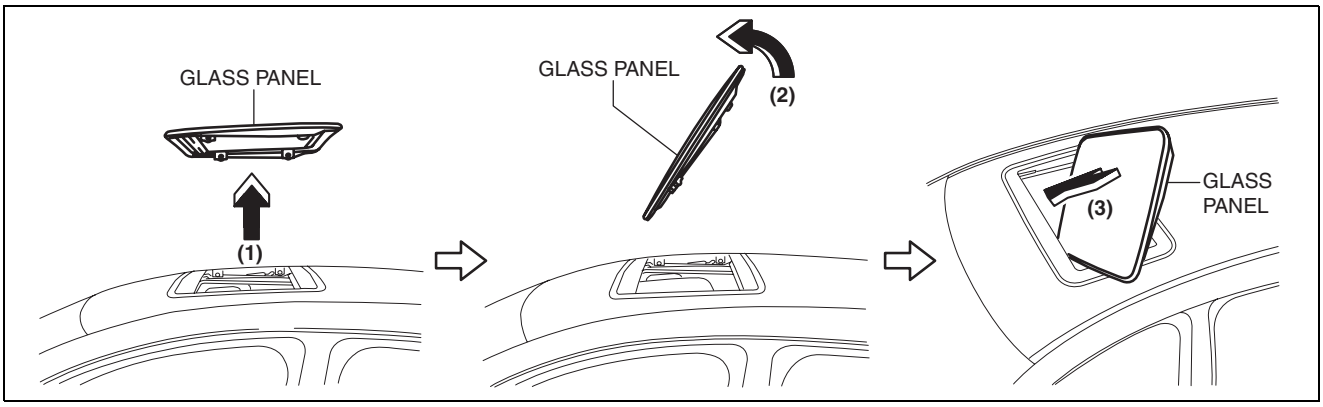

ac5wzw0000150

5. Peel the weatherstrip off the glass panel. (See 09-15-4 Weatherstrip Installation Note.)
6. Install in the reverse order of removal.

SUNROOF

Weatherstrip Installation Note

- When installing the weatherstrip to the glass panel, align the joint line to the position shown in the figure.

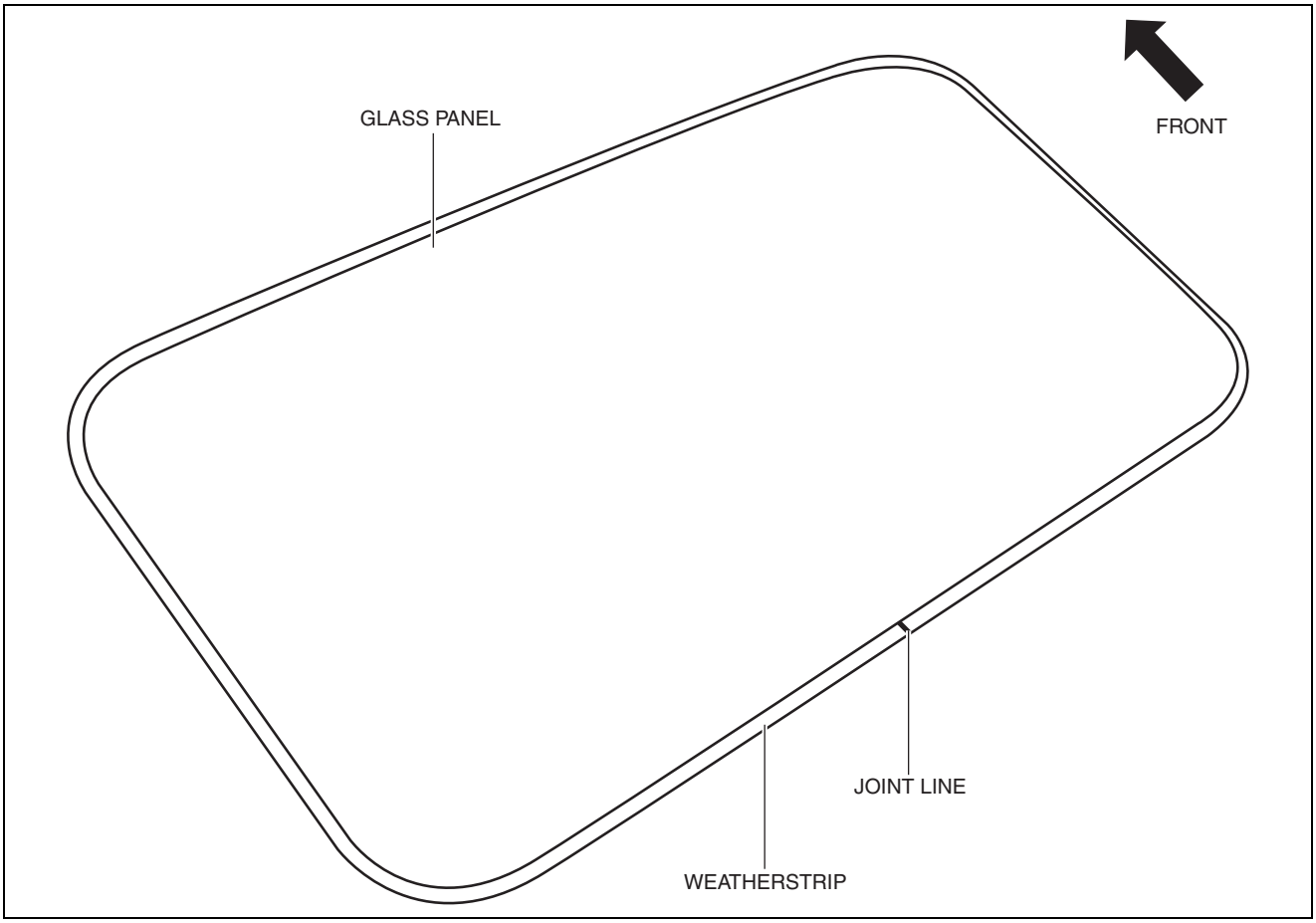

ac5wzw0000150

GLASS PANEL ADJUSTMENT

id091500800600

1. Fully close the glass panel.
2. Measure the gap and height between the glass panel and body.

SUNROOF

3. Loosen the installation screws and adjust the glass panel.

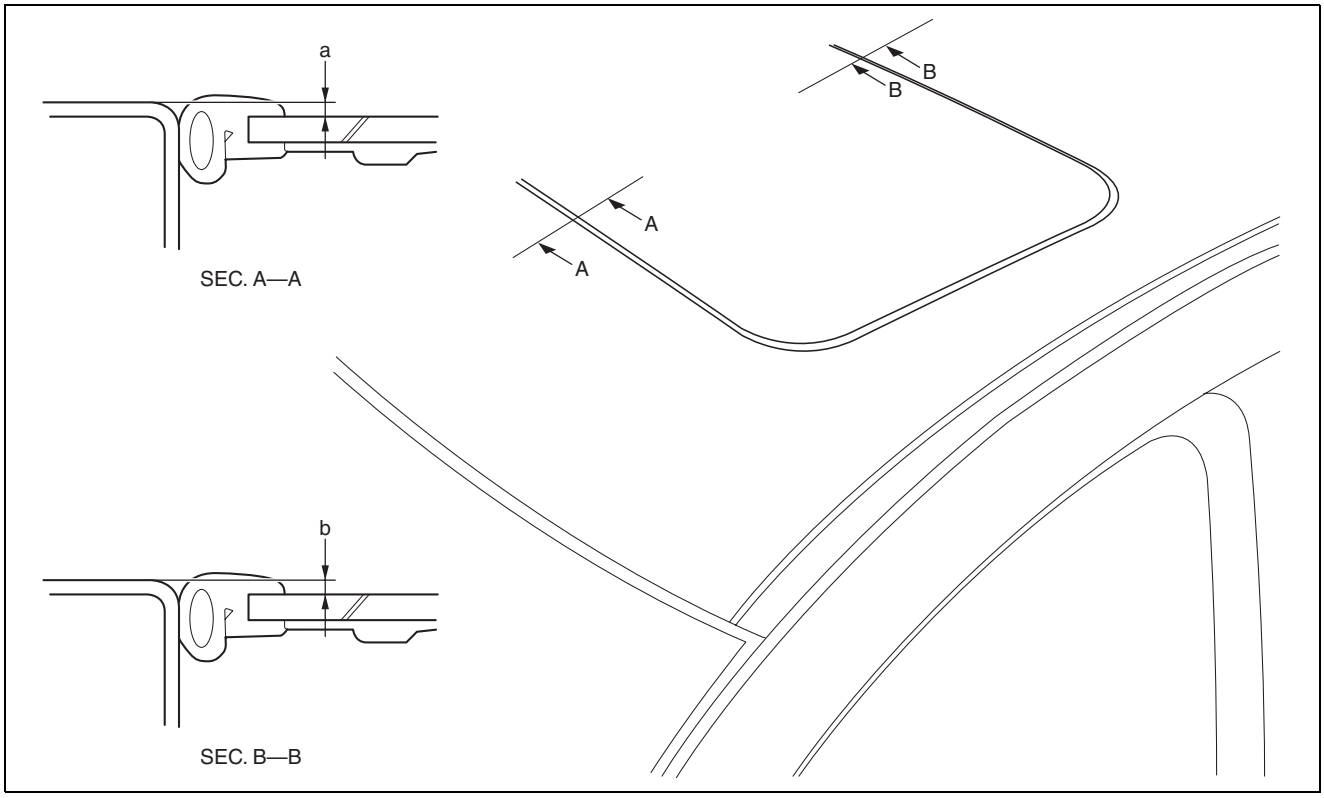

ac5wzw0000289

Standard clearance
a: -2.3—0.3 mm {-0.09—0.01 in}
b: -2.3—0.3 mm {-0.09—0.01 in}

4. Tighten the installation screws. (See 09-15-2 GLASS PANEL REMOVAL/INSTALLATION.)

SUNROOF

5. Insert a plastic card between the weatherstrip and the body of the vehicle. Verify that the sunroof is shut tightly (there is resistance when the plastic card is moved).

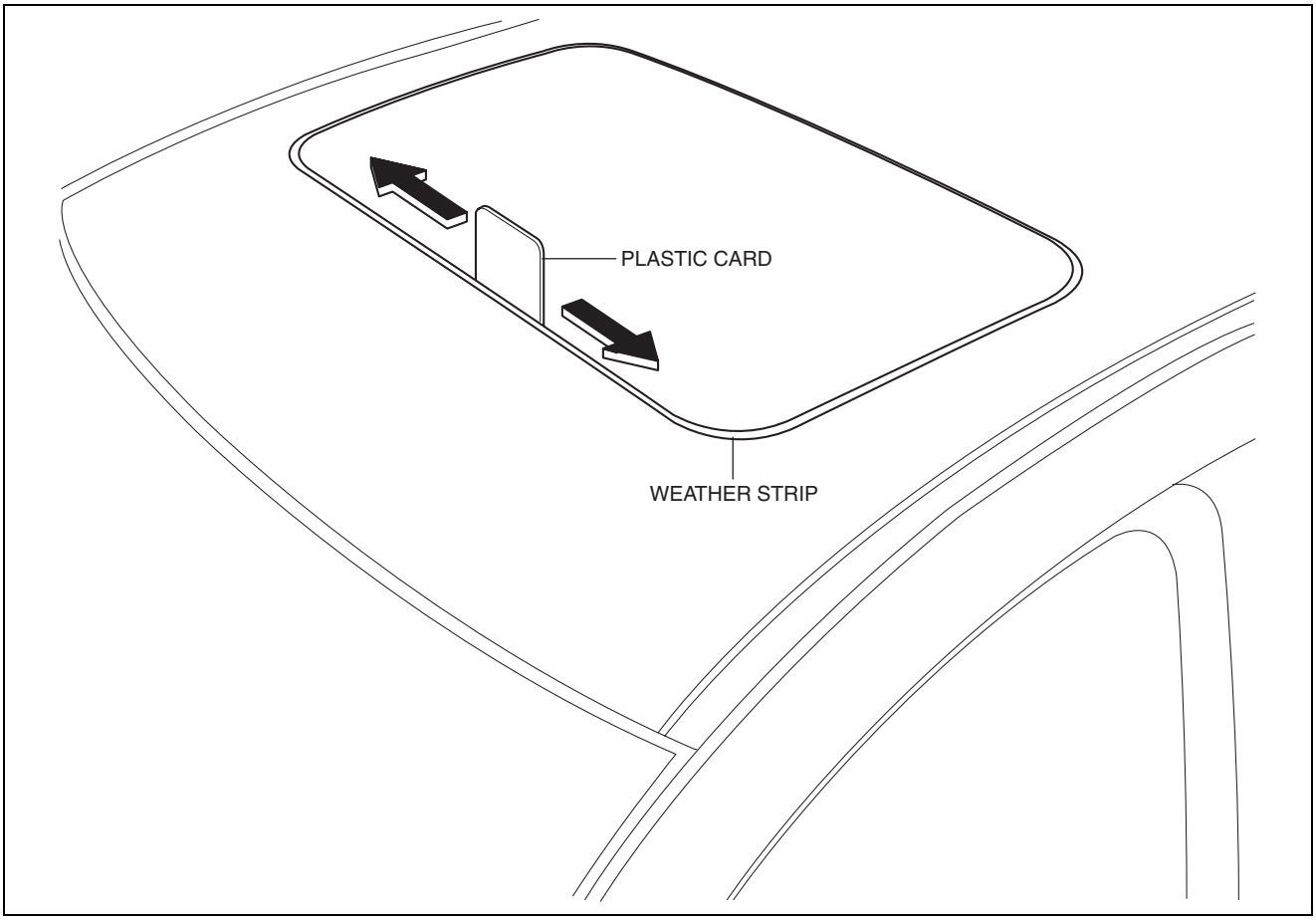

ac5wzw0000150

- If the sunroof is not shut tightly, readjust by performing Steps 3 and 4.

SUNROOF UNIT REMOVAL/INSTALLATION

id091500800700

1. Disconnect the negative battery cable. (See 01-17A-11 NEGATIVE BATTERY CABLE DISCONNECTION/CONNECTION [SKYACTIV-G 2.0].) (See 01-17A-13 NEGATIVE BATTERY CABLE DISCONNECTION/CONNECTION [SKYACTIV-G 2.0 (WITHOUT i-stop)].) (See 01-17B-9 NEGATIVE BATTERY CABLE DISCONNECTION/CONNECTION [SKYACTIV-D 2.2].)
2. Remove the following parts:
   (1) Sunroof seaming welt (See 09-15-6 SUNROOF UNIT REMOVAL/INSTALLATION.)
   (2) A-pillar trim (See 09-17-53 A-PILLAR TRIM REMOVAL/INSTALLATION.)
   (3) Map light (See 09-18-95 MAP LIGHT REMOVAL/INSTALLATION.)
   (4) Sunvisor (See 09-17-93 SUNVISOR REMOVAL/INSTALLATION.)
   (5) Front scuff plate (See 09-17-61 FRONT SCUFF PLATE REMOVAL/INSTALLATION.)
   (6) Rear scuff plate (See 09-17-63 REAR SCUFF PLATE REMOVAL/INSTALLATION.)
   (7) B-pillar lower trim (See 09-17-57 B-PILLAR LOWER TRIM REMOVAL/INSTALLATION.)
   (8) Adjust anchor cover (See 08-11-2 FRONT SEAT BELT REMOVAL/INSTALLATION.)
   (9) Upper anchor installation bolt on the seat belt (See 08-11-2 FRONT SEAT BELT REMOVAL/INSTALLATION.)
   (10) B-pillar upper trim (See 09-17-58 B-PILLAR UPPER TRIM REMOVAL/INSTALLATION.)
   (11) Assist handle (See 09-17-91 ASSIST HANDLE REMOVAL/INSTALLATION.)
   (12) Trunk board (See 09-17-85 TRUNK BOARD REMOVAL/INSTALLATION.)
   (13) Trunk end trim (See 09-17-78 TRUNK END TRIM REMOVAL/INSTALLATION.)
   (14) Trunk side trim (See 09-17-80 TRUNK SIDE TRIM REMOVAL/INSTALLATION.)
   (15) D-pillar trim (See 09-17-60 D-PILLAR TRIM REMOVAL/INSTALLATION.)
   (16) C-pillar trim (See 09-17-59 C-PILLAR TRIM REMOVAL/INSTALLATION.)
   (17) Headliner (See 09-17-94 HEADLINER REMOVAL/INSTALLATION.)

SUNROOF

3. Disconnect the front drain hose and rear drain hose from the sunroof frame in the direction of the arrow shown in the figure.

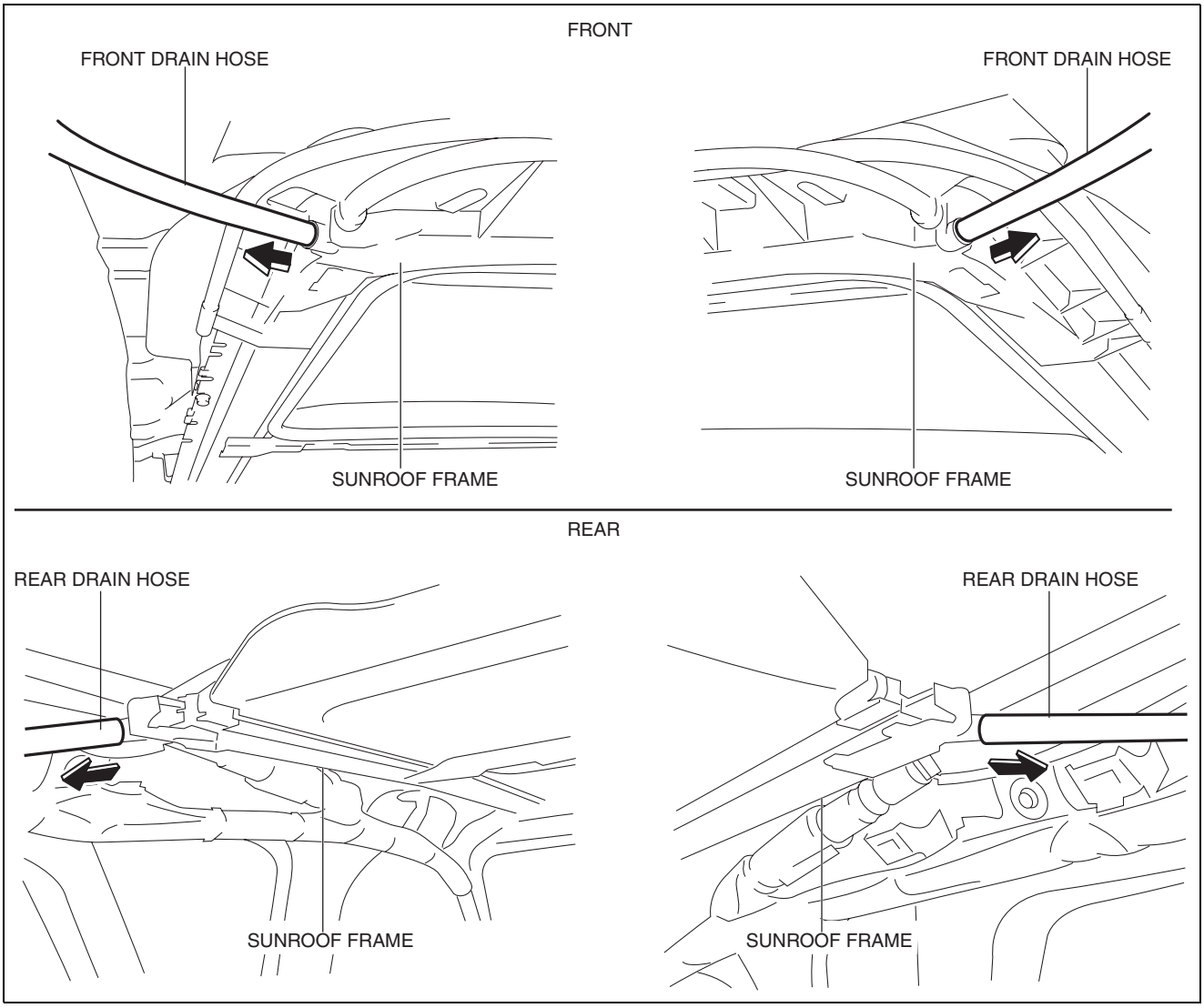

ac5wzw0000172

SUNROOF

4. Remove nuts A shown in the figure.

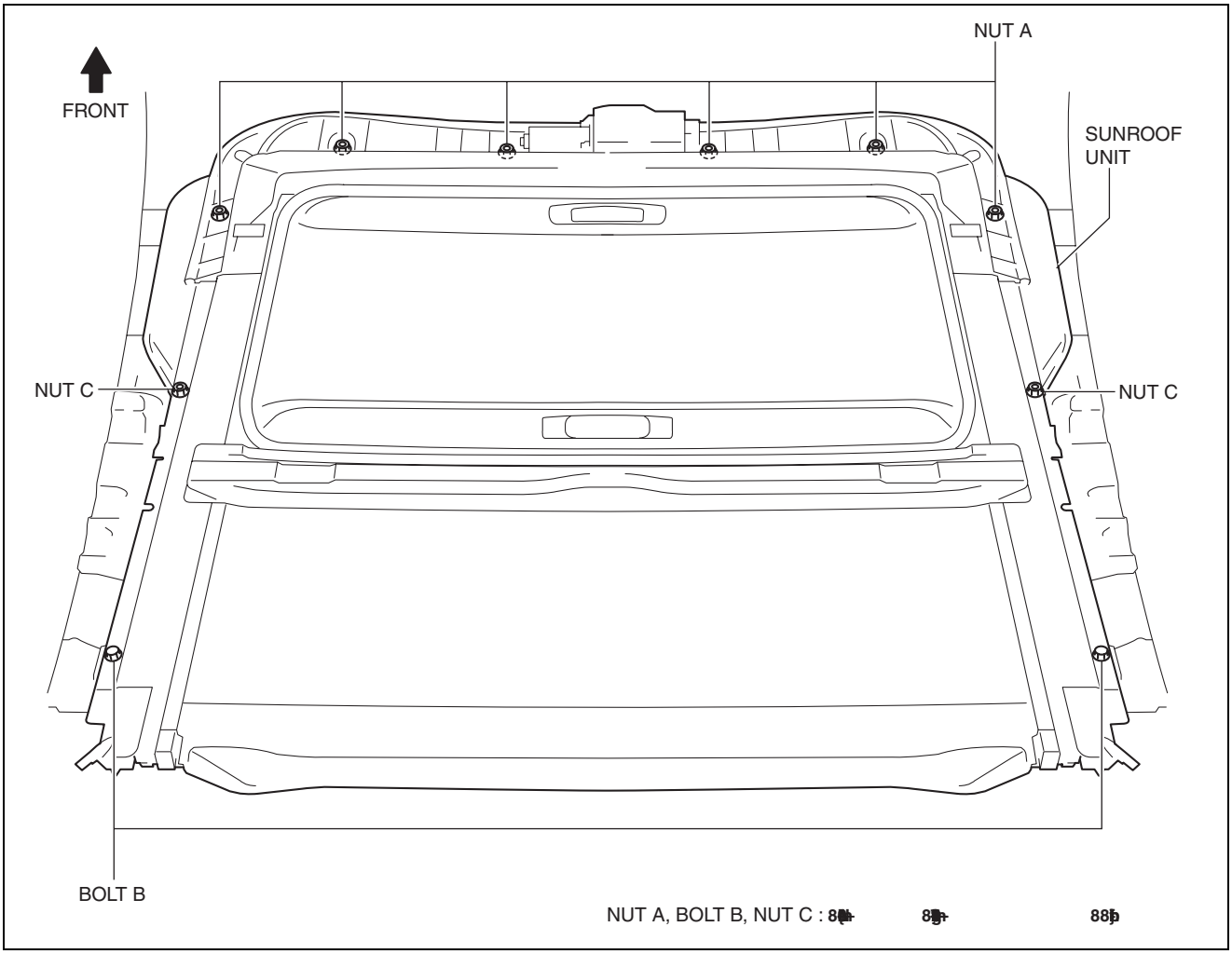

ac5wzw0000151

5. Remove bolts B shown in the figure.
6. Remove nuts C shown in the figure.

Caution
- **Removing nuts C without supporting it could cause the sunroof unit to fall and cause serious injury. Always perform the procedure with at least another person to prevent the sunroof unit from falling.**

7. Take the sunroof unit off from the front driver-side door or front passenger-side door opening.
8. Install in the reverse order of removal.

SUNROOF UNIT DISASSEMBLY/ASSEMBLY

id091500800800

1. Disassemble in the order indicated in the table.

SUNROOF

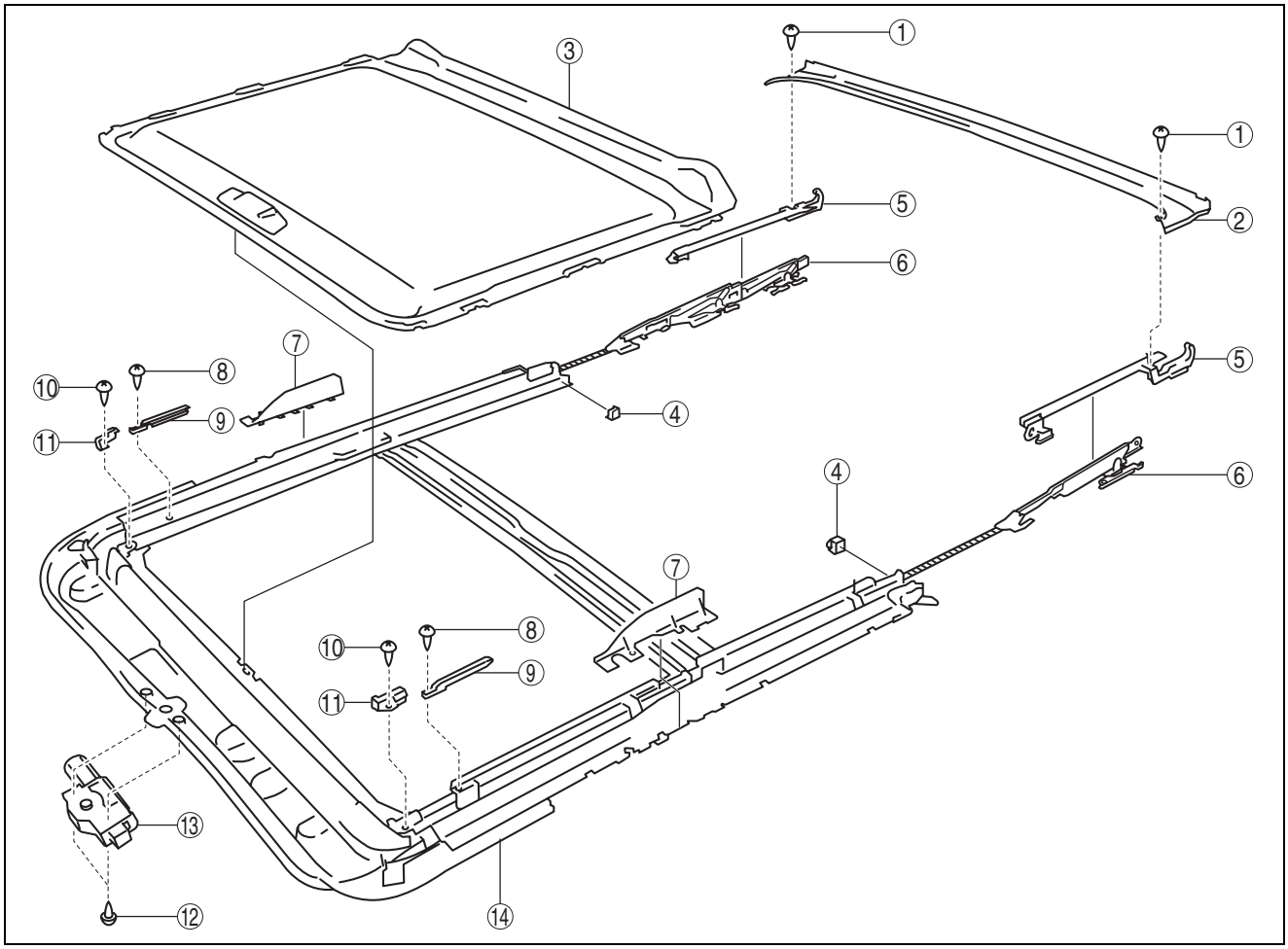

ac5uuw00001725

1	Screw A
2	Drip rail
3	Sunshade (See 09-15-9 Sunshade Disassembly Note.)
4	Rear stopper
5	Front guide (See 09-15-10 Front Guide Disassembly Note.)
6	Decoration link (See 09-15-11 Decoration Link Assembly Note.)

7	Screen
8	Screw B
9	Set plate
10	Screw C
11	Front stopper
12	Screw D
13	Sunroof motor
14	Sunroof frame

2. Assemble in the reverse order of disassembly.

Sunshade Disassembly Note

- Pull the sunshade in the direction of the arrow in the order of (1), (2) and remove it.

Caution

- **The sunshade may contact the sunroof frame and the handle area may be damaged. Remove the sunshade by sliding it in the direction of arrow (2) shown in the figure while lifting it in the direction of arrow (1).**

SUNROOF

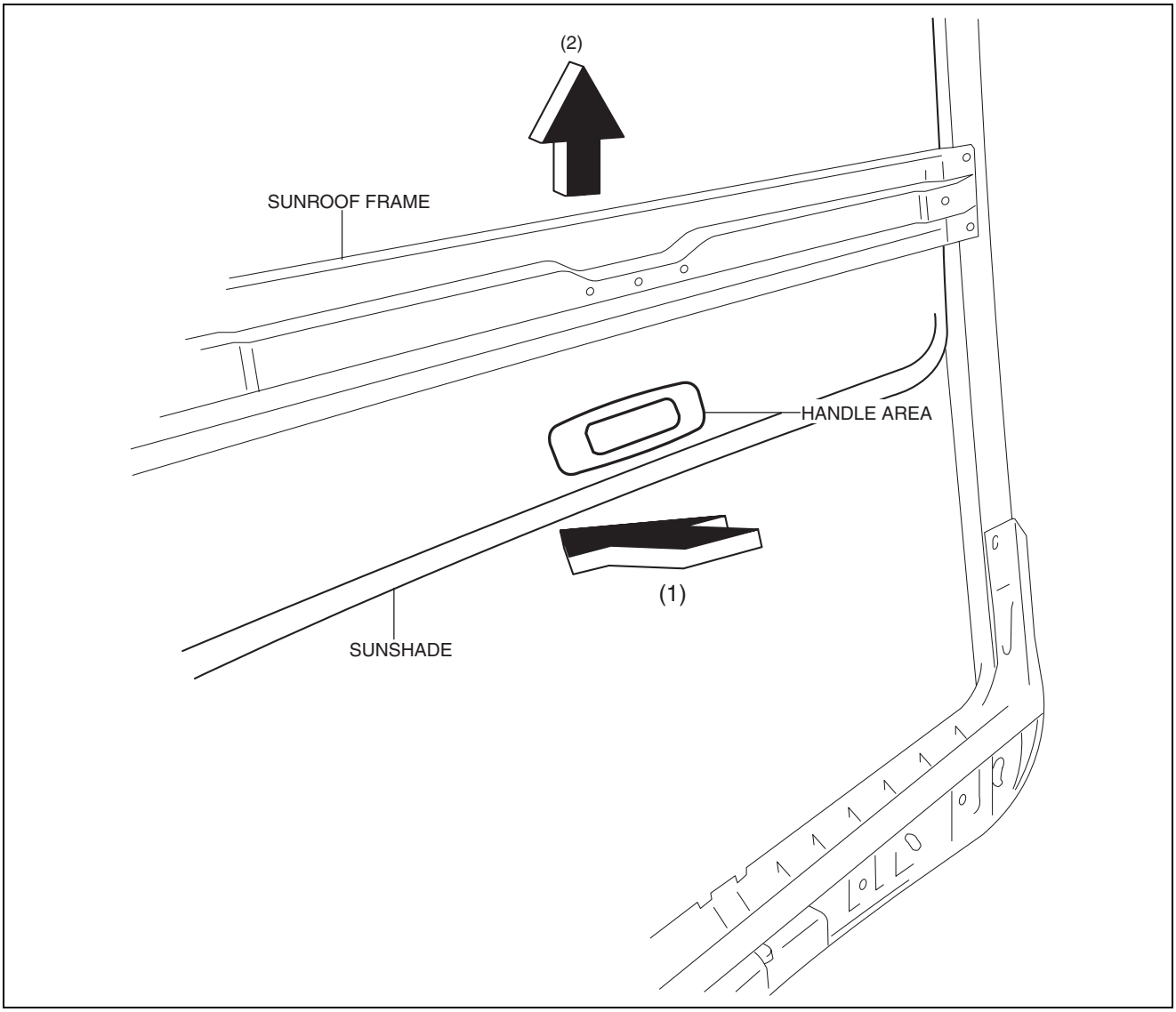

ac5uuw00001978

Front Guide Disassembly Note

- Perform mark the position shown in the figure for correct positioning.

Caution

- **If the front guide is assembled to a wrong position, the glass panel may stop at the wrong position and may be damaged. Before removing the front guide, mark the position shown in the figure for correct positioning.**

SUNROOF

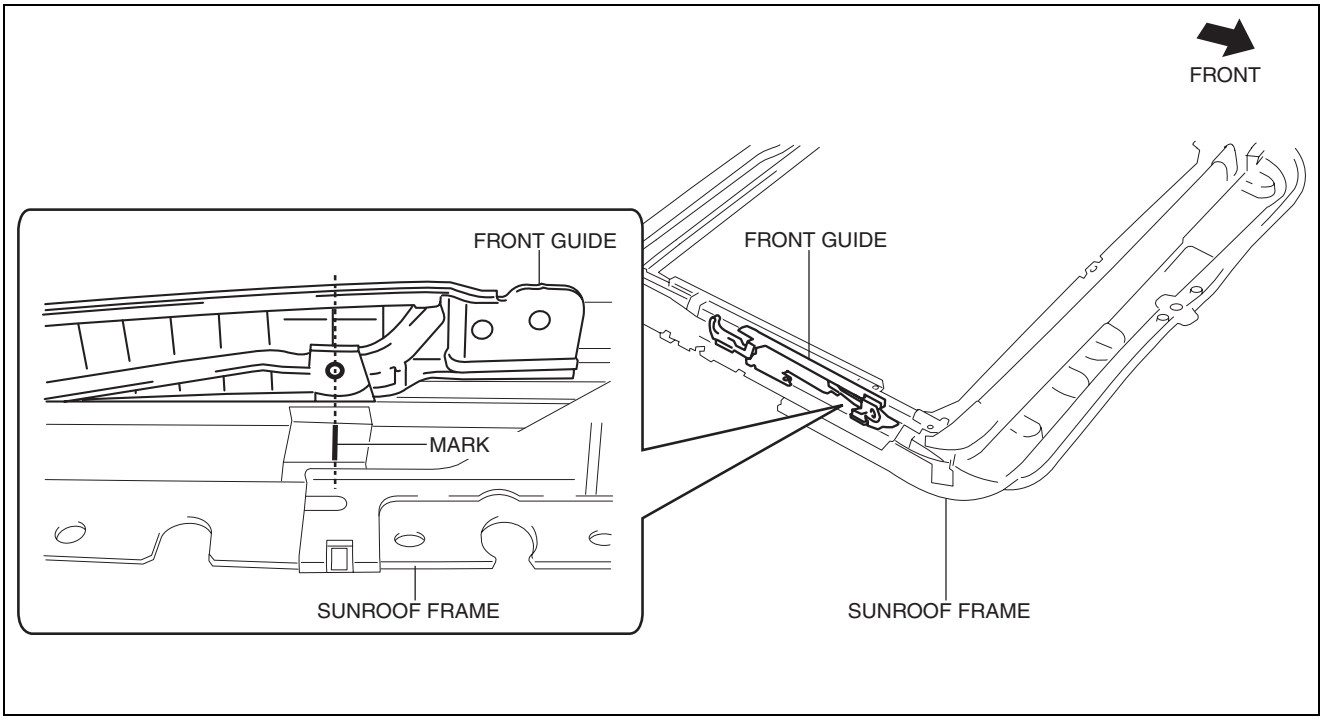

ac5wzw0000172

Decoration Link Assembly Note

- To prevent the wire shown in the figure from coming off the rail, install while aligning the wire in the rail.

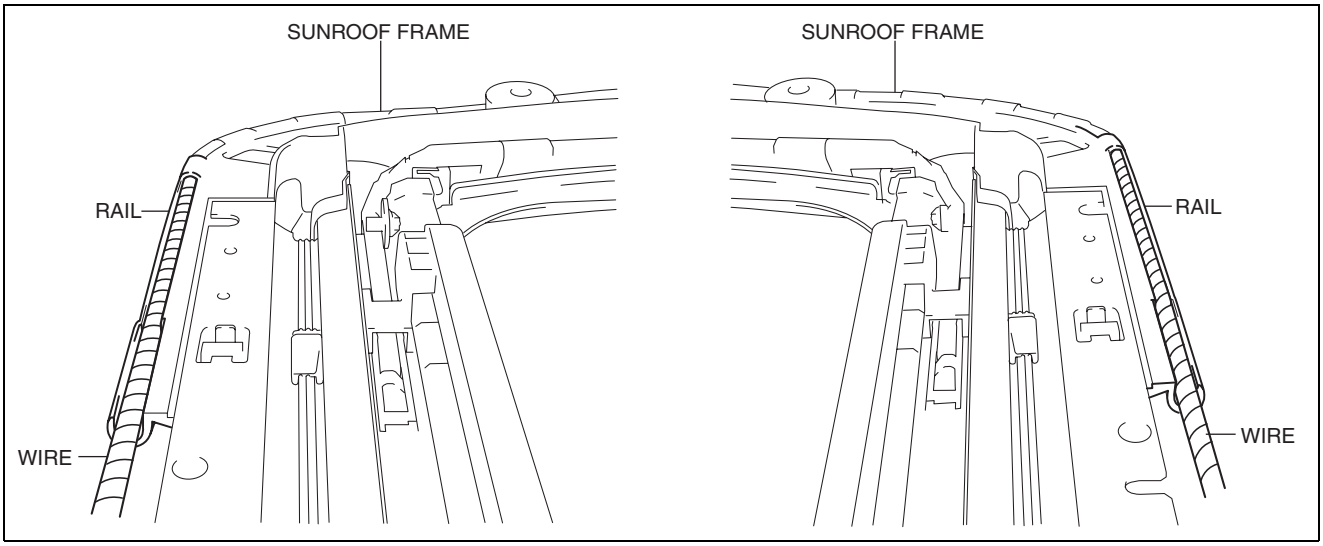

ac5wzw0000151

SUNROOF MOTOR REMOVAL/INSTALLATION

id091500801800

1. Disconnect the negative battery cable. (See 01-17A-11 NEGATIVE BATTERY CABLE DISCONNECTION/CONNECTION [SKYACTIV-G 2.0].) (See 01-17A-13 NEGATIVE BATTERY CABLE DISCONNECTION/CONNECTION [SKYACTIV-G 2.0 (WITHOUT i-stop)].) (See 01-17B-9 NEGATIVE BATTERY CABLE DISCONNECTION/CONNECTION [SKYACTIV-D 2.2].)
2. Remove the map light. (See 09-18-95 MAP LIGHT REMOVAL/INSTALLATION.)

SUNROOF

3. Remove screws.

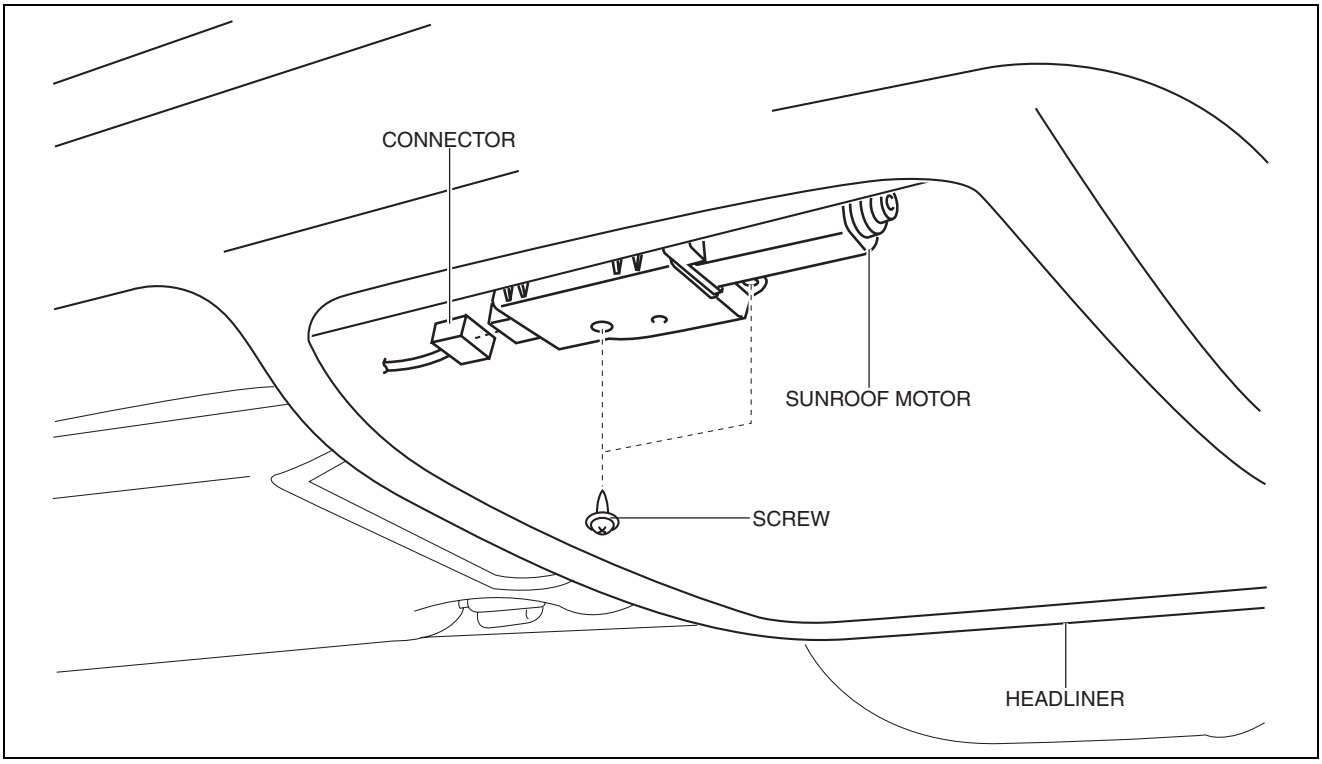

ac5wzw0000151

4. Disconnect the connector.
5. Remove the sunroof motor.
6. Install in the reverse order of removal.

SUNROOF MOTOR INSPECTION

id091500801100

1. Disconnect the negative battery cable. (See 01-17A-11 NEGATIVE BATTERY CABLE DISCONNECTION/CONNECTION [SKYACTIV-G 2.0].) (See 01-17A-13 NEGATIVE BATTERY CABLE DISCONNECTION/CONNECTION [SKYACTIV-G 2.0 (WITHOUT i-stop)].) (See 01-17B-9 NEGATIVE BATTERY CABLE DISCONNECTION/CONNECTION [SKYACTIV-D 2.2].)
2. Remove the map light. (See 09-18-95 MAP LIGHT REMOVAL/INSTALLATION.)
3. Connect the negative battery cable. (See 01-17A-11 NEGATIVE BATTERY CABLE DISCONNECTION/CONNECTION [SKYACTIV-G 2.0].) (See 01-17A-13 NEGATIVE BATTERY CABLE DISCONNECTION/CONNECTION [SKYACTIV-G 2.0 (WITHOUT i-stop)].) (See 01-17B-9 NEGATIVE BATTERY CABLE DISCONNECTION/CONNECTION [SKYACTIV-D 2.2].)
4. Measure the voltage at each terminal.
   - If the voltage is not as specified in the terminal voltage table, inspect the parts under Inspection item (s) and related wiring harnesses.
     — If the system does not work normally even though the inspection items or related wiring harnesses do not have any malfunction, replace the sunroof motor. (See 09-15-11 SUNROOF MOTOR REMOVAL/INSTALLATION.)

Terminal Voltage Table (Reference)

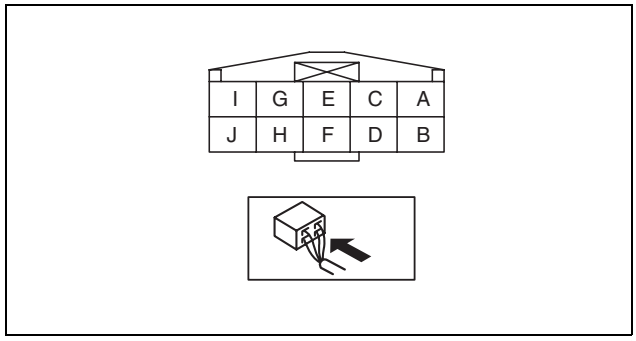

ac5uuw00002034

SUNROOF

Terminal	Signal	Connected to	Test condition	Voltage (V)	Inspection item
A	Slide open	Sunroof switch	Sunroof is opening	B+	• Sunroof switch (See 09-15-13 SUNROOF SWITCH INSPECTION.) • Related wiring harness
			Other	1.0 or less	
B	Slide close/tilt down	Sunroof switch	Sunroof is closing / tilting down	B+	• Sunroof switch (See 09-15-13 SUNROOF SWITCH INSPECTION.) • Related wiring harness
			Other	1.0 or less	
C	Tilt up	Sunroof switch	Sunroof is tilting up	B+	• Sunroof switch (See 09-15-13 SUNROOF SWITCH INSPECTION.) • Related wiring harness
			Other	1.0 or less	
E	IG1	C/U IG1 15A fuse	Switch the ignition ON (engine on or off)	B+	• C/U IG1 15A fuse • Related wiring harness
			Other	1.0 or less	
G	GND	GND	Under any condition	1.0 or less	• Related wiring harness
J	Power supply	SUNROOF 10A fuse	Under any condition	B+	• SUNROOF 10A fuse • Related wiring harness

SUNROOF SWITCH REMOVAL/INSTALLATION

id091500800200

Note
- The sunroof switch is together with the front map light.

1. Disconnect the negative battery cable. (See 01-17A-11 NEGATIVE BATTERY CABLE DISCONNECTION/CONNECTION [SKYACTIV-G 2.0].) (See 01-17A-13 NEGATIVE BATTERY CABLE DISCONNECTION/CONNECTION [SKYACTIV-G 2.0 (WITHOUT i-stop)].) (See 01-17B-9 NEGATIVE BATTERY CABLE DISCONNECTION/CONNECTION [SKYACTIV-D 2.2].)
2. Remove the map light. (See 09-18-95 MAP LIGHT REMOVAL/INSTALLATION.)
3. Install in the reverse order of removal.

SUNROOF SWITCH INSPECTION

id091500800300

1. Disconnect the negative battery cable. (See 01-17A-11 NEGATIVE BATTERY CABLE DISCONNECTION/CONNECTION [SKYACTIV-G 2.0].) (See 01-17A-13 NEGATIVE BATTERY CABLE DISCONNECTION/CONNECTION [SKYACTIV-G 2.0 (WITHOUT i-stop)].) (See 01-17B-9 NEGATIVE BATTERY CABLE DISCONNECTION/CONNECTION [SKYACTIV-D 2.2].)
2. Remove the map light. (See 09-18-95 MAP LIGHT REMOVAL/INSTALLATION.)
3. Verify that the continuity between the sunroof switch terminals is as indicated in the table.

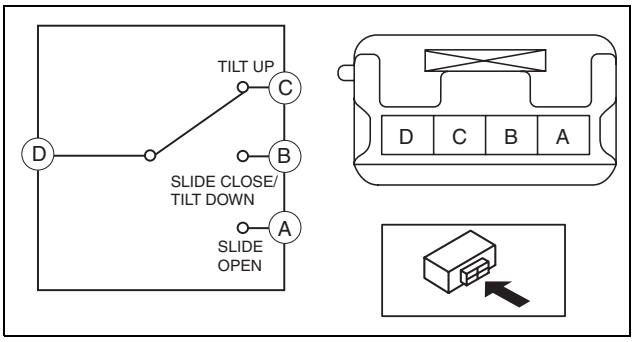

ac5wzw0000299

SUNROOF

- If not as indicated in the table, replace the sunroof switch.

○—○:continuity

Switch position	Terminal			
	A	B	C	D
SLIDE OPEN	○			○
SLIDE CLOSE / TILT DOWN		○		○
TILT UP			○	○

ac5wzw0000172

FRONT DRAIN HOSE REMOVAL/INSTALLATION

id091500443800

1. Disconnect the negative battery cable. (See 01-17A-11 NEGATIVE BATTERY CABLE DISCONNECTION/CONNECTION [SKYACTIV-G 2.0].) (See 01-17A-13 NEGATIVE BATTERY CABLE DISCONNECTION/CONNECTION [SKYACTIV-G 2.0 (WITHOUT i-stop)].) (See 01-17B-9 NEGATIVE BATTERY CABLE DISCONNECTION/CONNECTION [SKYACTIV-D 2.2].)
2. Remove the following parts:
   (1) Sunroof seaming welt (See 09-15-6 SUNROOF UNIT REMOVAL/INSTALLATION.)
   (2) A-pillar trim (See 09-17-53 A-PILLAR TRIM REMOVAL/INSTALLATION.)
   (3) Map light (See 09-18-95 MAP LIGHT REMOVAL/INSTALLATION.)
   (4) Sunvisor (See 09-17-93 SUNVISOR REMOVAL/INSTALLATION.)
   (5) Front scuff plate (See 09-17-61 FRONT SCUFF PLATE REMOVAL/INSTALLATION.)
   (6) Rear scuff plate (See 09-17-63 REAR SCUFF PLATE REMOVAL/INSTALLATION.)
   (7) B-pillar lower trim (See 09-17-57 B-PILLAR LOWER TRIM REMOVAL/INSTALLATION.)
   (8) Adjust anchor cover (See 08-11-2 FRONT SEAT BELT REMOVAL/INSTALLATION.)
   (9) Upper anchor installation bolt on the seat belt (See 08-11-2 FRONT SEAT BELT REMOVAL/INSTALLATION.)
   (10) B-pillar upper trim (See 09-17-58 B-PILLAR UPPER TRIM REMOVAL/INSTALLATION.)
   (11) Assist handle (See 09-17-91 ASSIST HANDLE REMOVAL/INSTALLATION.)
   (12) Trunk board (See 09-17-85 TRUNK BOARD REMOVAL/INSTALLATION.)
   (13) Trunk end trim (See 09-17-78 TRUNK END TRIM REMOVAL/INSTALLATION.)
   (14) Trunk side trim (See 09-17-80 TRUNK SIDE TRIM REMOVAL/INSTALLATION.)
   (15) D-pillar trim (See 09-17-60 D-PILLAR TRIM REMOVAL/INSTALLATION.)
   (16) C-pillar trim (See 09-17-59 C-PILLAR TRIM REMOVAL/INSTALLATION.)
   (17) Headliner (See 09-17-94 HEADLINER REMOVAL/INSTALLATION.)
3. Disconnect the front drain hose from the sunroof frame.

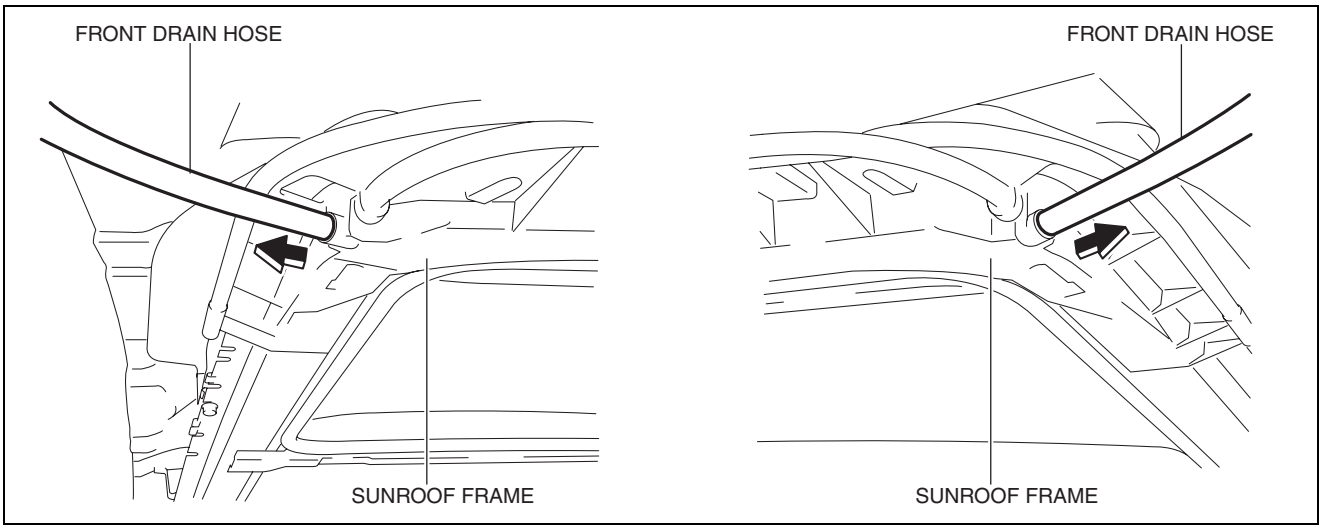

ac5wzw0000171

SUNROOF

4. Pull the front drain hose in the direction of the arrow in the order of (1), (2) and remove it while detaching hooks A.

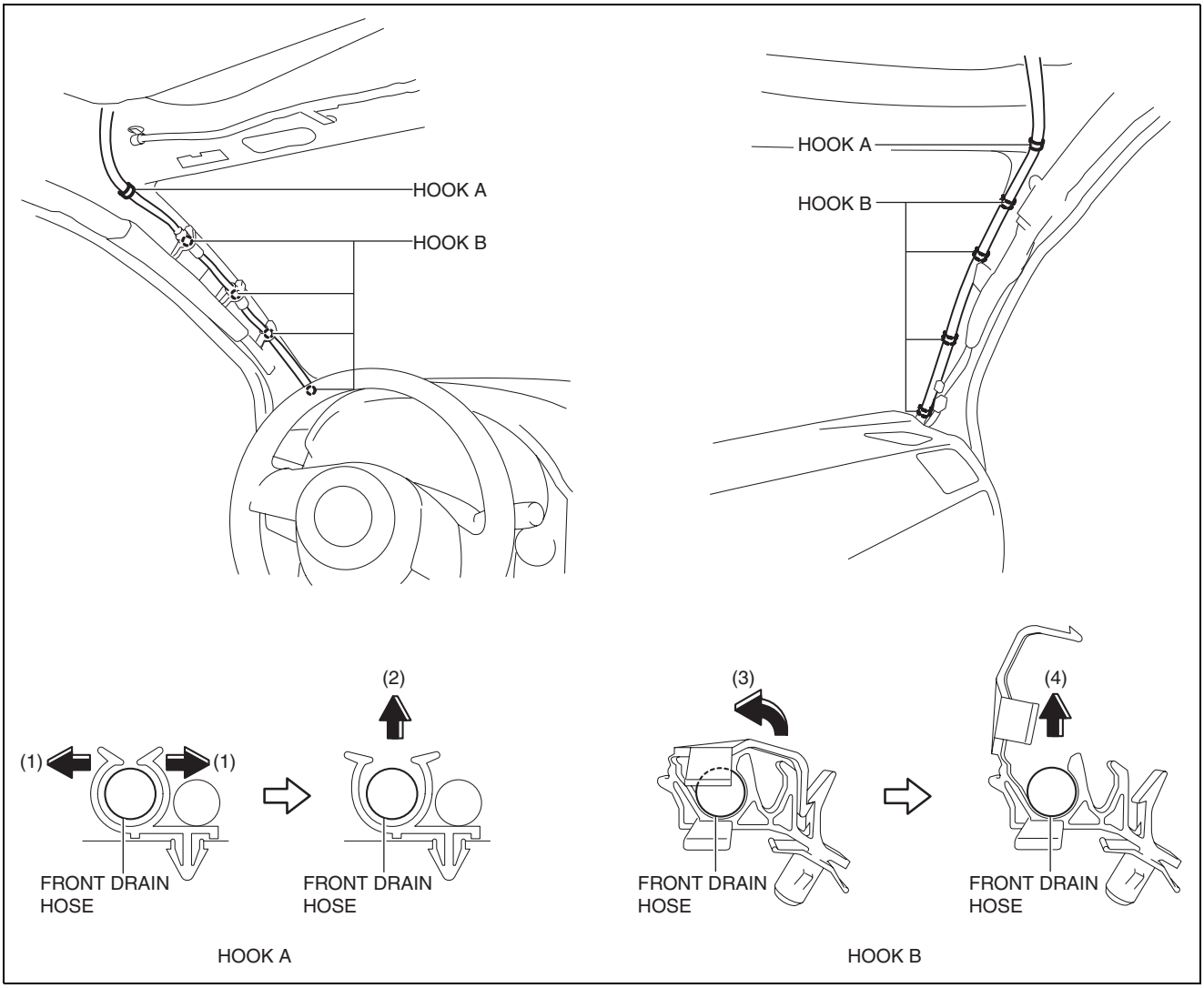

ac5wzw0000172

5. Pull the front drain hose in the direction of the arrow in the order of (3), (4) and remove it while detaching hooks B.
6. Remove the car-navigation unit. (driver-side) (See 09-20-11 CAR-NAVIGATION UNIT REMOVAL/INSTALLATION.)
7. Remove the glove compartment. (passenger-side) (See 09-17-30 GLOVE COMPARTMENT REMOVAL/INSTALLATION.)

SUNROOF

8. While visually verifying from the car-navigation unit opening (driver-side) and glove component opening (passenger-side), partially peel back the dashboard lower insulator, insert a tape-wrapped flathead screwdriver into the position shown in the figure, then remove the grommet in the direction of the arrow.

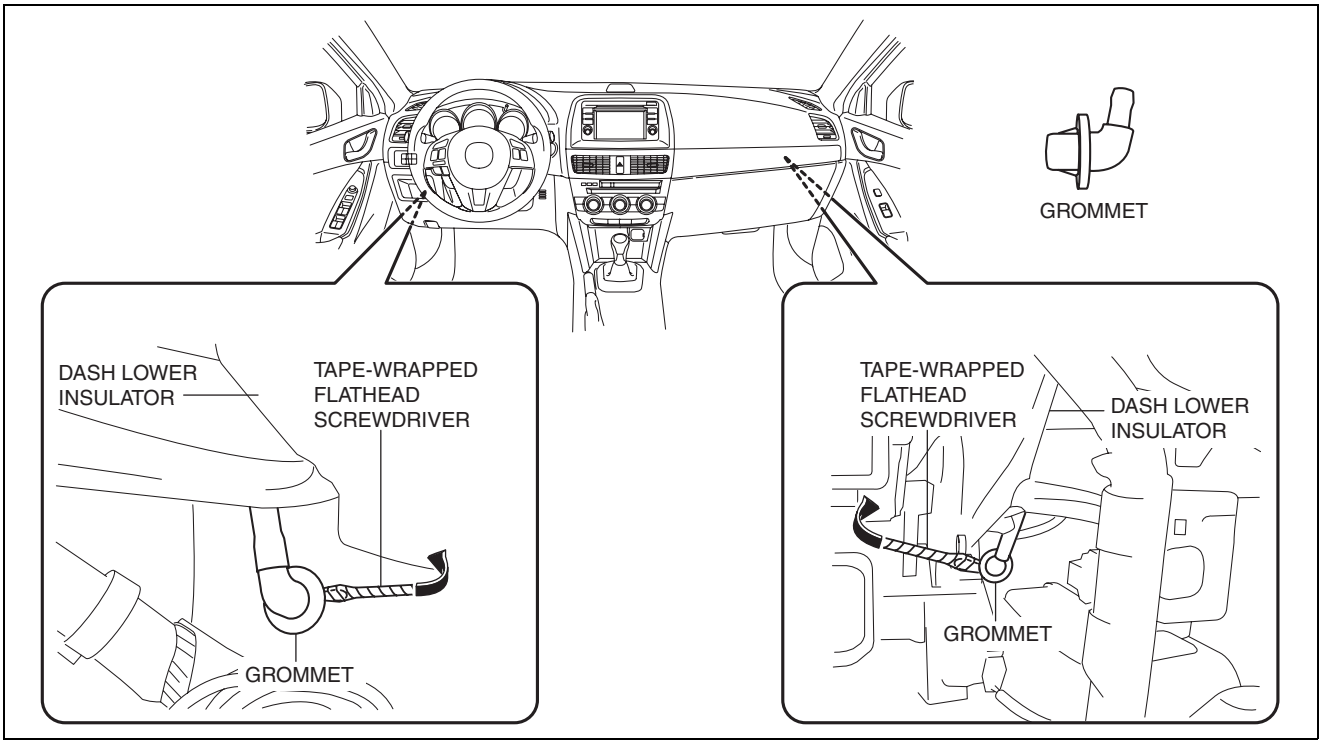

ac5wzw0000150

9. Pull the front drain hose out from the A-pillar side.

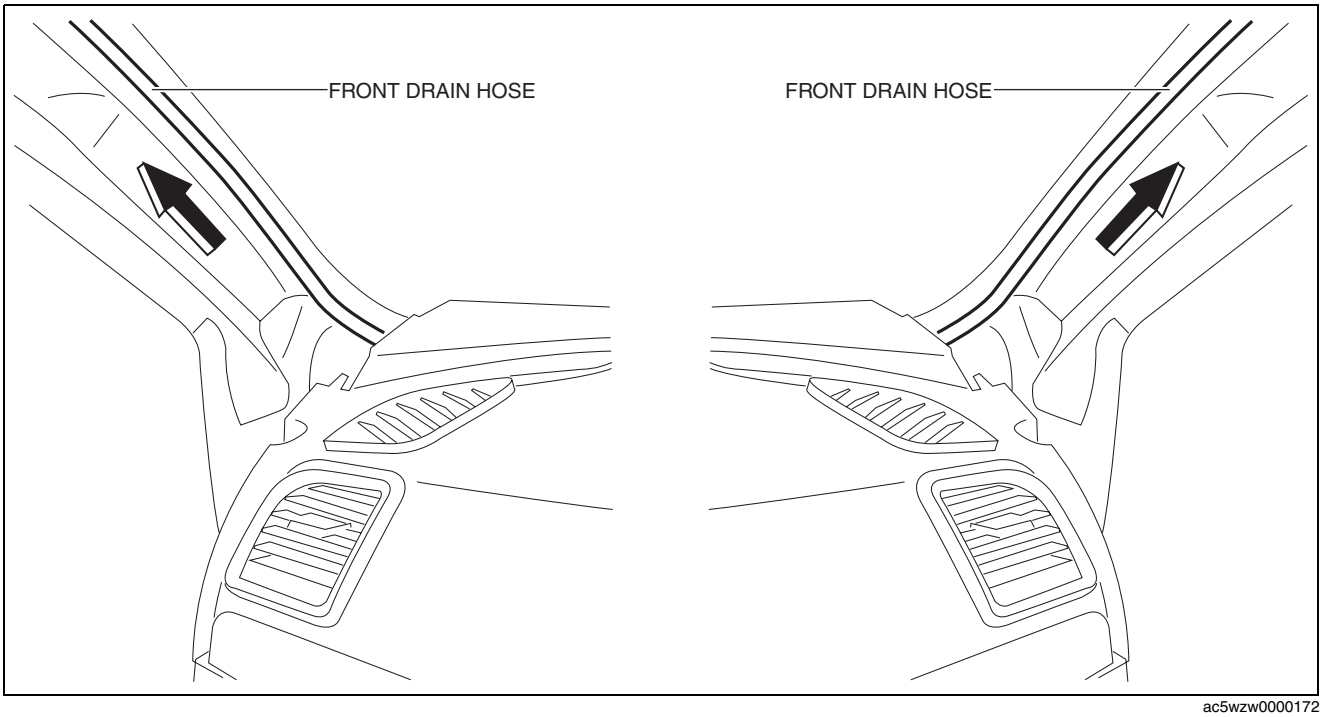

ac5wzw0000172

10. Install in the reverse order of removal.

REAR DRAIN HOSE REMOVAL/INSTALLATION

id091500443900

1. Disconnect the negative battery cable. (See 01-17A-11 NEGATIVE BATTERY CABLE DISCONNECTION/CONNECTION [SKYACTIV-G 2.0].) (See 01-17A-13 NEGATIVE BATTERY CABLE DISCONNECTION/CONNECTION [SKYACTIV-G 2.0 (WITHOUT i-stop)].) (See 01-17B-9 NEGATIVE BATTERY CABLE DISCONNECTION/CONNECTION [SKYACTIV-D 2.2].)
2. Remove the following parts:

SUNROOF

(1) Sunroof seaming welt (See 09-15-6 SUNROOF UNIT REMOVAL/INSTALLATION.)
(2) A-pillar trim (See 09-17-53 A-PILLAR TRIM REMOVAL/INSTALLATION.)
(3) Map light (See 09-18-95 MAP LIGHT REMOVAL/INSTALLATION.)
(4) Sunvisor (See 09-17-93 SUNVISOR REMOVAL/INSTALLATION.)
(5) Front scuff plate (See 09-17-61 FRONT SCUFF PLATE REMOVAL/INSTALLATION.)
(6) Rear scuff plate (See 09-17-63 REAR SCUFF PLATE REMOVAL/INSTALLATION.)
(7) B-pillar lower trim (See 09-17-57 B-PILLAR LOWER TRIM REMOVAL/INSTALLATION.)
(8) Adjust anchor cover (See 08-11-2 FRONT SEAT BELT REMOVAL/INSTALLATION.)
(9) Upper anchor installation bolt on the seat belt (See 08-11-2 FRONT SEAT BELT REMOVAL/INSTALLATION.)
(10) B-pillar upper trim (See 09-17-58 B-PILLAR UPPER TRIM REMOVAL/INSTALLATION.)
(11) Assist handle (See 09-17-91 ASSIST HANDLE REMOVAL/INSTALLATION.)
(12) Trunk board (See 09-17-85 TRUNK BOARD REMOVAL/INSTALLATION.)
(13) Trunk end trim (See 09-17-78 TRUNK END TRIM REMOVAL/INSTALLATION.)
(14) Trunk side trim (See 09-17-80 TRUNK SIDE TRIM REMOVAL/INSTALLATION.)
(15) D-pillar trim (See 09-17-60 D-PILLAR TRIM REMOVAL/INSTALLATION.)
(16) C-pillar trim (See 09-17-59 C-PILLAR TRIM REMOVAL/INSTALLATION.)
(17) Headliner (See 09-17-94 HEADLINER REMOVAL/INSTALLATION.)

3. Disconnect the front drain hose from the sunroof frame.

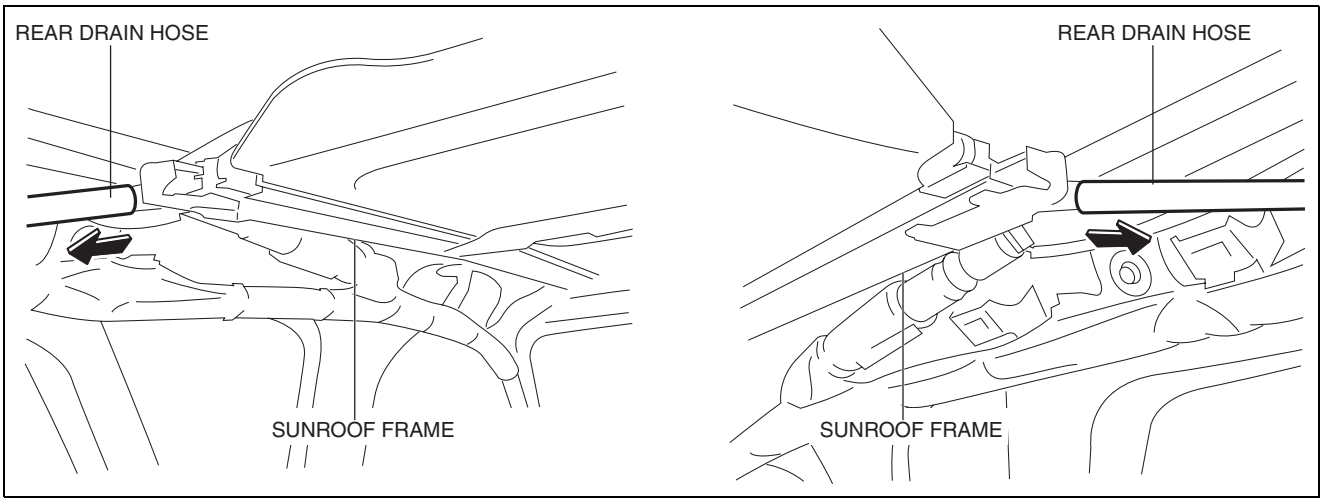

ac5wzw0000172

SUNROOF

4. Pull the rear drain hose in the direction of the arrow in the order of (1), (2) shown in the figure from hooks A.

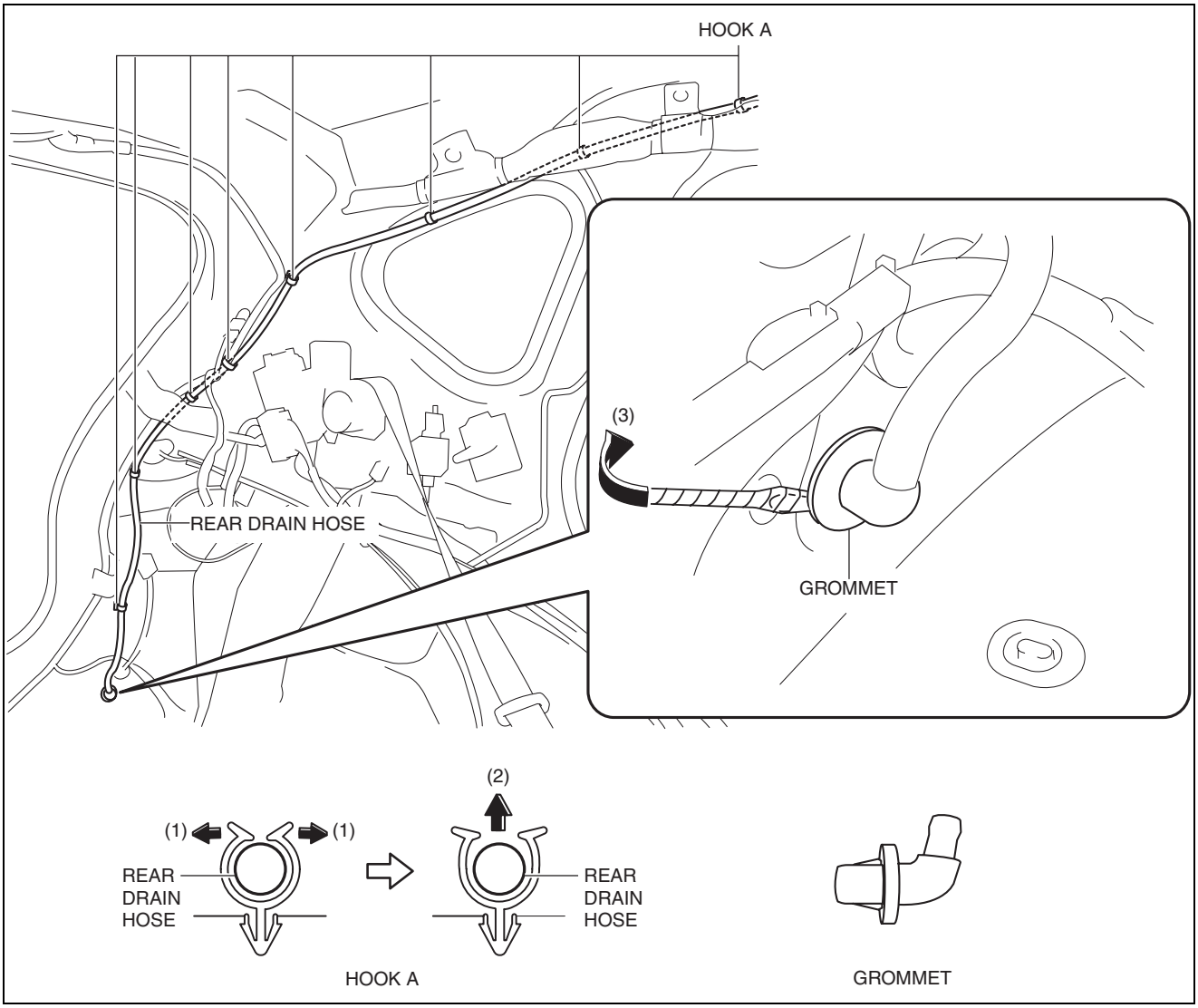

ac5uuw00001977

5. Insert a tape-wrapped flathead screwdriver into the position shown in the figure, then remove the grommet in the direction of the arrow (3).
6. Remove the rear drain hose.
7. Install in the reverse order of removal.

SUNROOF SYSTEM INITIALIZATION PROCEDURE

id091500858000

- If the following operations have been performed, initial setting is reset, and except tilt up operation are disabled. Therefore, performing initial setting is necessary.
  - — Negative battery cable is disconnected. (See 01-17A-11 NEGATIVE BATTERY CABLE DISCONNECTION/CONNECTION [SKYACTIV-G 2.0].) (See 01-17A-13 NEGATIVE BATTERY CABLE DISCONNECTION/CONNECTION [SKYACTIV-G 2.0 (WITHOUT i-stop)].) (See 01-17B-9 NEGATIVE BATTERY CABLE DISCONNECTION/CONNECTION [SKYACTIV-D 2.2].)
  - — Sunroof switch connector is disconnected.
  - — Sunroof system power supply fuse is removed.

1. Switch the ignition ON (engine off or on).
2. Press the tilt up switch to fully tilt up the glass panel.

09-16 EXTERIOR TRIM

EXTERIOR TRIM LOCATION INDEX . . . 09-16–2
COWL GRILLE
REMOVAL/INSTALLATION. 09-16–3
SIDE STEP MOLDING
REMOVAL/INSTALLATION. 09-16–6
FRONT DOOR GARNISH
REMOVAL/INSTALLATION. 09-16–7
Front Door Garnish
Installation Note 09-16–8
SAIL GARNISH
REMOVAL/INSTALLATION. 09-16–9
FRONT BELTLINE MOLDING
REMOVAL/INSTALLATION. 09-16–9
FRONT SASH MOLDING REMOVAL . . . 09-16–12
FRONT SASH MOLDING
INSTALLATION 09-16–15
REAR DOOR GARNISH
REMOVAL/INSTALLATION. 09-16–17
Front. 09-16–17
Rear 09-16–18
Rear Door Garnish
Installation Note 09-16–19
REAR BELTLINE MOLDING
REMOVAL/INSTALLATION. 09-16–20
REAR SASH MOLDING REMOVAL 09-16–21
REAR SASH MOLDING
INSTALLATION 09-16–23
SIDE GARNISH REMOVAL. 09-16–26
Front. 09-16–26
Rear 09-16–27
SIDE GARNISH INSTALLATION 09-16–27
ROOF MOLDING REMOVAL 09-16–29
ROOF MOLDING INSTALLATION 09-16–31
ROOF CARRIER BRACKET
REMOVAL/INSTALLATION 09-16–31
REAR SPOILER
REMOVAL/INSTALLATION 09-16–33
Removal 09-16–33
Installation. 09-16–37
FRONT UNDER COVER No.1
REMOVAL/INSTALLATION 09-16–40
FRONT UNDER COVER No.2
REMOVAL/INSTALLATION 09-16–41
CENTER UNDER COVER
REMOVAL/INSTALLATION 09-16–42
FLOOR UNDER COVER
REMOVAL/INSTALLATION 09-16–44
MUDGUARD
REMOVAL/INSTALLATION 09-16–47
SPLASH SHIELD
REMOVAL/INSTALLATION 09-16–49
Front 09-16–49
Rear splash shield. 09-16–51
EXTRACTOR CHAMBER
REMOVAL/INSTALLATION 09-16–52
LIFTGATE GARNISH
REMOVAL/INSTALLATION 09-16–53

EXTERIOR TRIM

EXTERIOR TRIM LOCATION INDEX

id091600800100

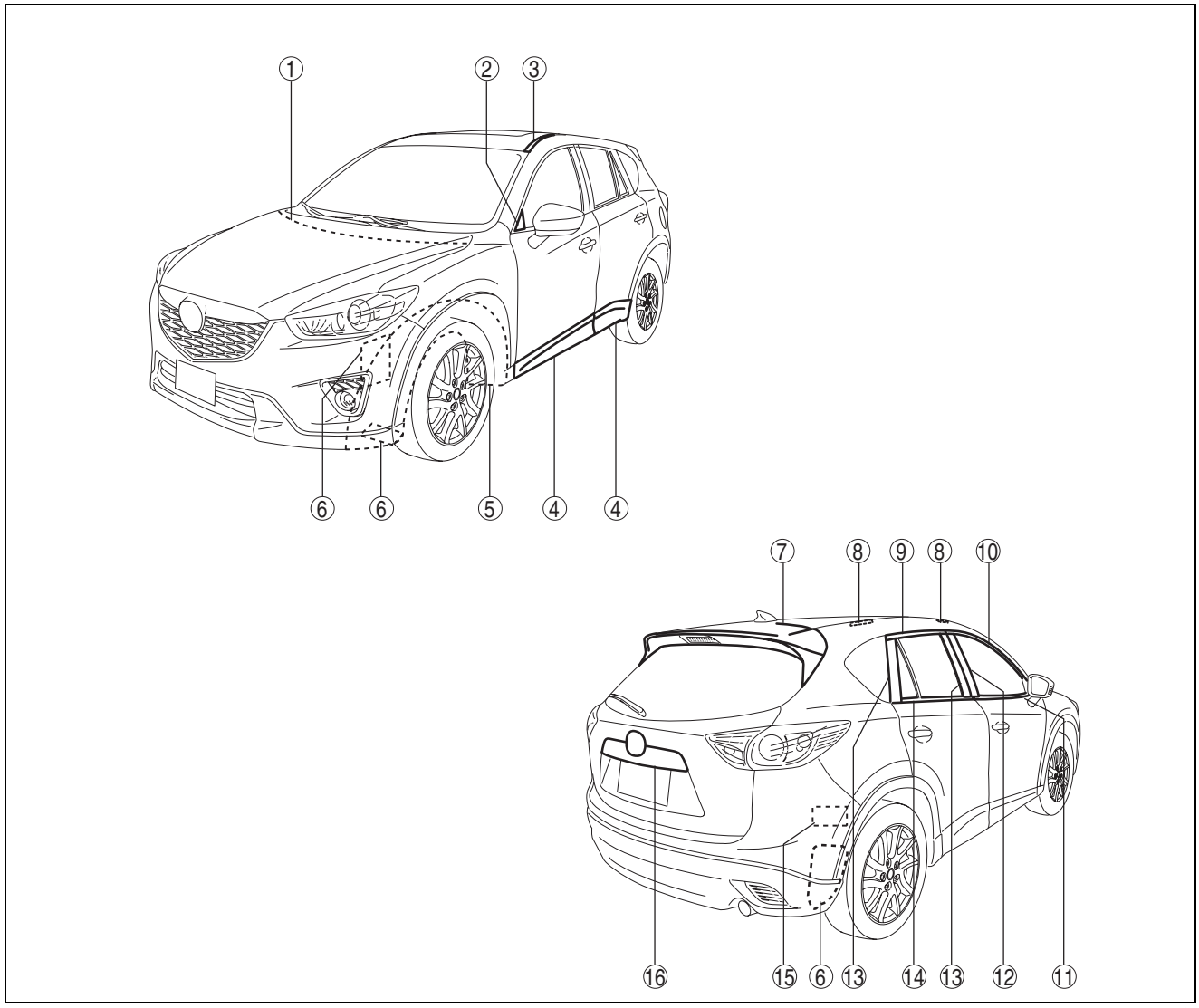

ac5wzw0000310

1	Cowl grille (See 09-16-3 COWL GRILLE REMOVAL/INSTALLATION.)
2	Sail garnish (See 09-16-9 SAIL GARNISH REMOVAL/INSTALLATION.)
3	Roof molding (See 09-16-29 ROOF MOLDING REMOVAL.) (See 09-16-31 ROOF MOLDING INSTALLATION.)
4	Side garnish (See 09-16-27 SIDE GARNISH INSTALLATION.) (See 09-16-26 SIDE GARNISH REMOVAL.)
5	Mudguard (See 09-16-47 MUDGUARD REMOVAL/INSTALLATION.)
6	Splash shield (See 09-16-49 SPLASH SHIELD REMOVAL/INSTALLATION.)
7	Rear spoiler (See 09-16-33 REAR SPOILER REMOVAL/INSTALLATION.)

8	Roof carrier bracket (See 09-16-31 ROOF CARRIER BRACKET REMOVAL/INSTALLATION.)
9	Rear sash molding (See 09-16-21 REAR SASH MOLDING REMOVAL.) (See 09-16-23 REAR SASH MOLDING INSTALLATION.)
10	Front sash molding (See 09-16-12 FRONT SASH MOLDING REMOVAL.) (See 09-16-15 FRONT SASH MOLDING INSTALLATION.)
11	Front beltline molding (See 09-16-9 FRONT BELTLINE MOLDING REMOVAL/INSTALLATION.)
12	Front door garnish (See 09-16-7 FRONT DOOR GARNISH REMOVAL/INSTALLATION.)
13	Rear door garnish (See 09-16-17 REAR DOOR GARNISH REMOVAL/INSTALLATION.)
14	Rear beltline molding (See 09-16-20 REAR BELTLINE MOLDING REMOVAL/INSTALLATION.)

EXTERIOR TRIM

15	Extractor chamber (See 09-16-52 EXTRACTOR CHAMBER REMOVAL/INSTALLATION.)
16	Liftgate garnish (See 09-16-53 LIFTGATE GARNISH REMOVAL/INSTALLATION.)

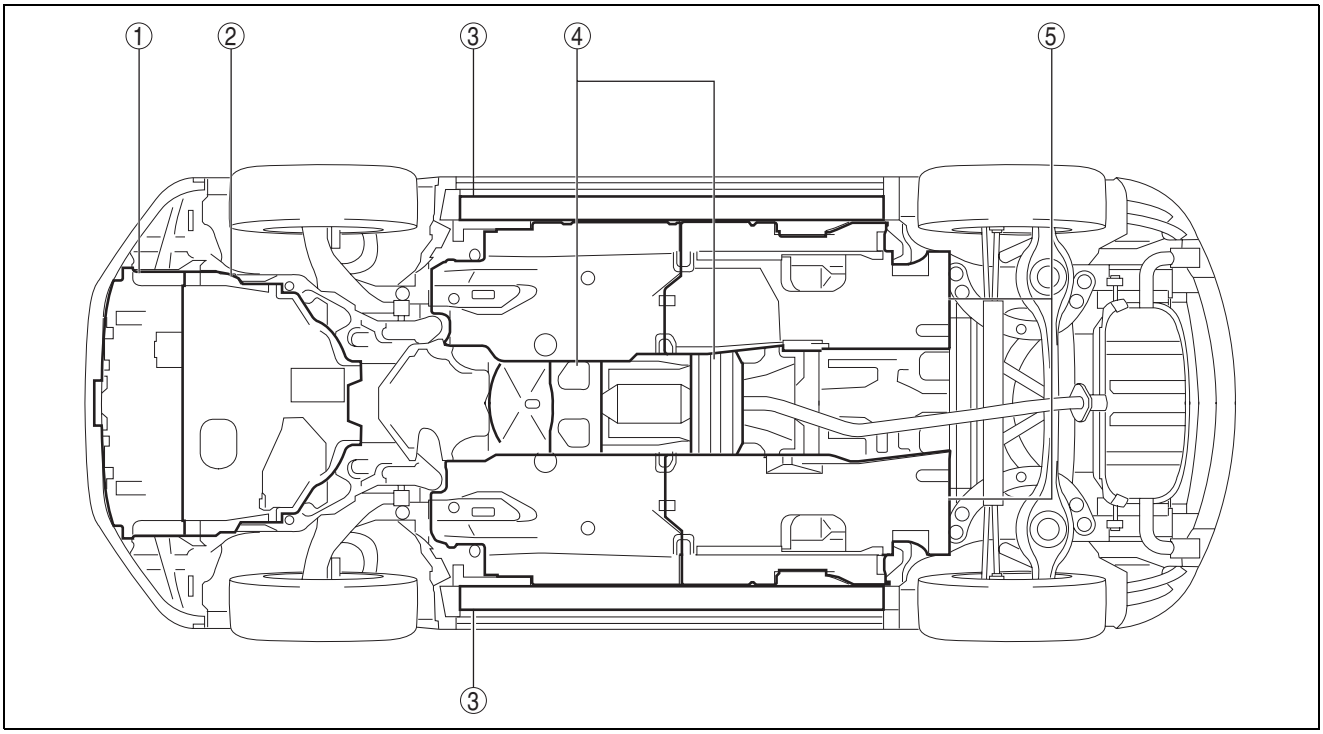

ac5uuw00001867

1	Front under cover No.1 (See 09-16-40 FRONT UNDER COVER No.1 REMOVAL/INSTALLATION.)
2	Front under cover No.2 (See 09-16-41 FRONT UNDER COVER No.2 REMOVAL/INSTALLATION.)
3	Side step molding (See09-16-6 SIDE STEP MOLDING REMOVAL/INSTALLATION.)

4	Center under cover (See 09-16-42 CENTER UNDER COVER REMOVAL/INSTALLATION.)
5	Floor under cover (See 09-16-44 FLOOR UNDER COVER REMOVAL/INSTALLATION.)

COWL GRILLE REMOVAL/INSTALLATION

id091600801000

1. Remove the windshield wiper arm and blade. (See 09-19-3 WINDSHIELD WIPER ARM AND BLADE REMOVAL/INSTALLATION.)

EXTERIOR TRIM

2. Pull the front fender molding in the direction of the arrow (1) while detaching hook A.

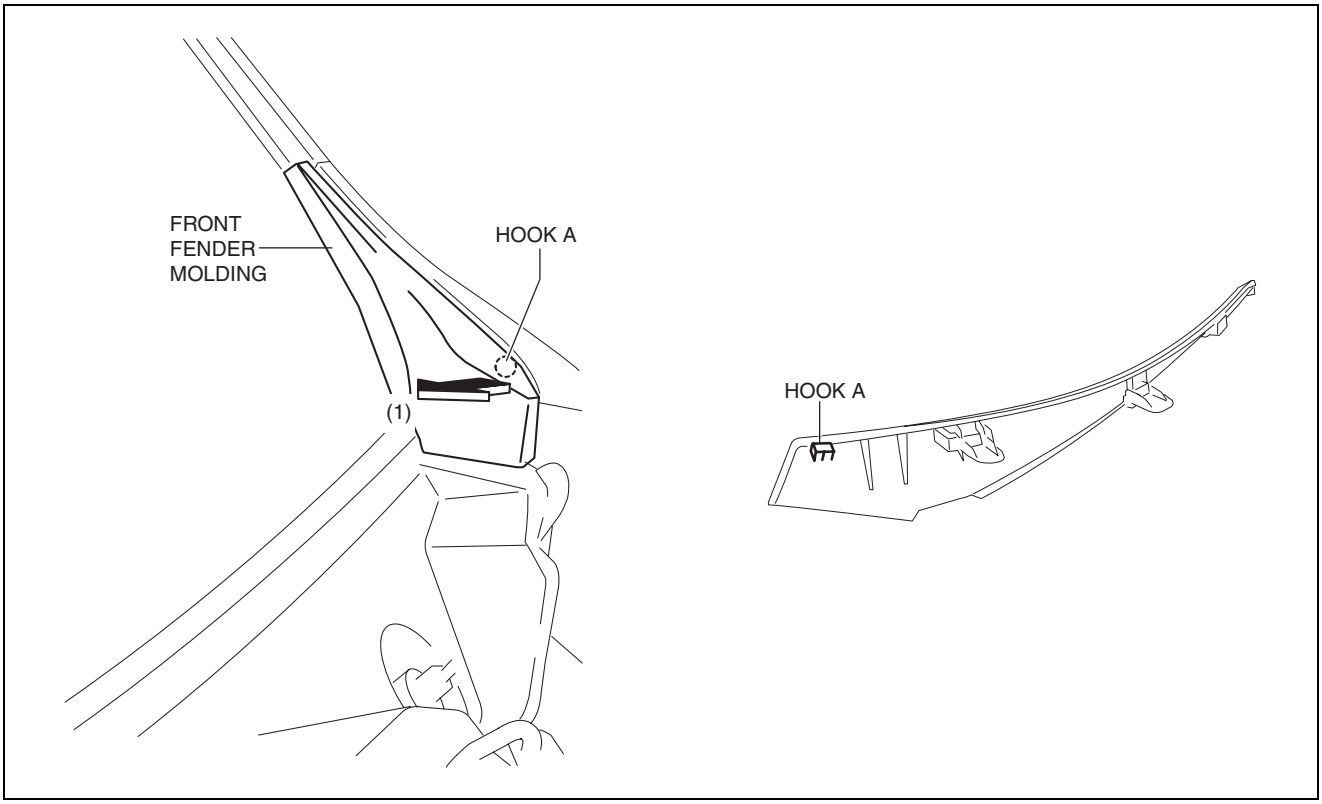

ac5wzw0000289

3. Pull the front fender molding in the direction of the arrow (2) while detaching hook B.

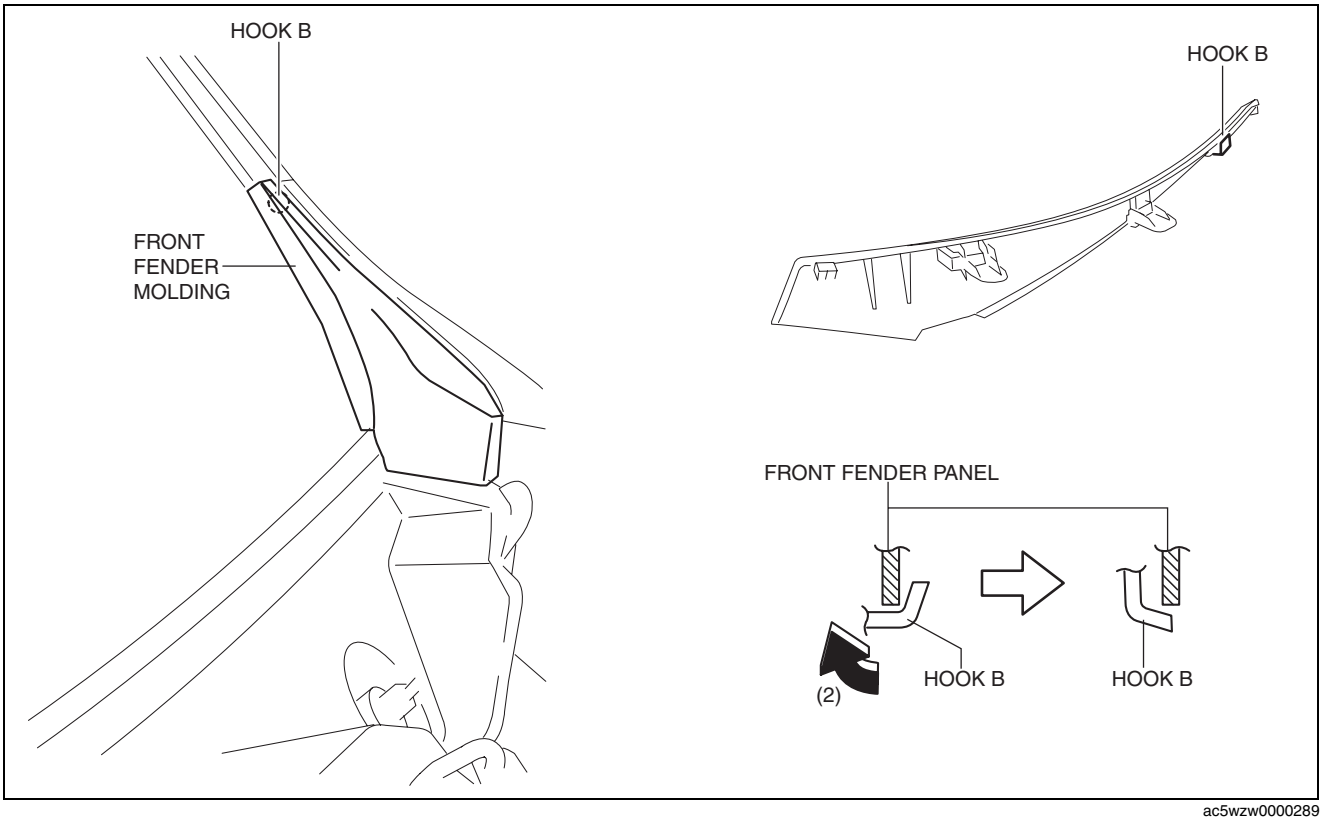

ac5wzw0000289

EXTERIOR TRIM

4. Pull the front fender molding in the direction of the arrow (3) and remove it while detaching tab C.

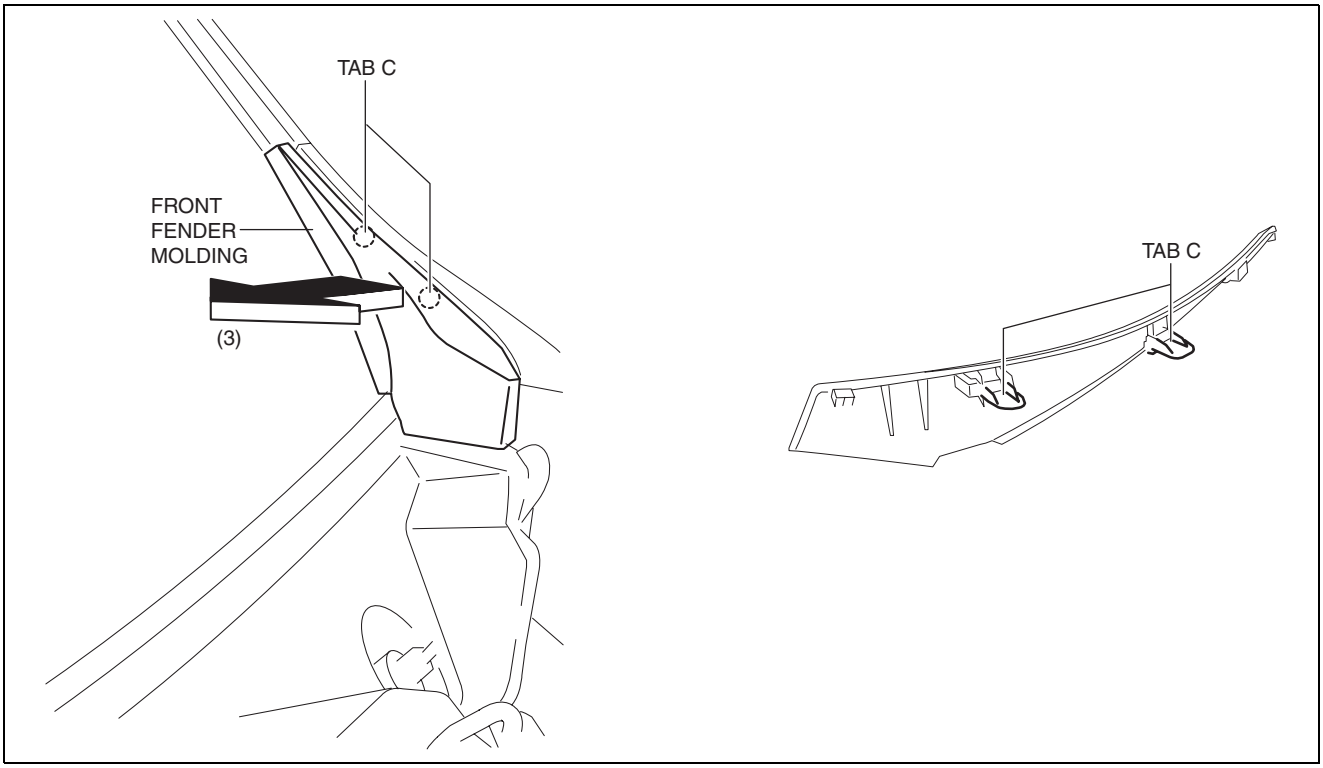

ac5wzw0000289

5. Remove fasteners D shown in the figure.

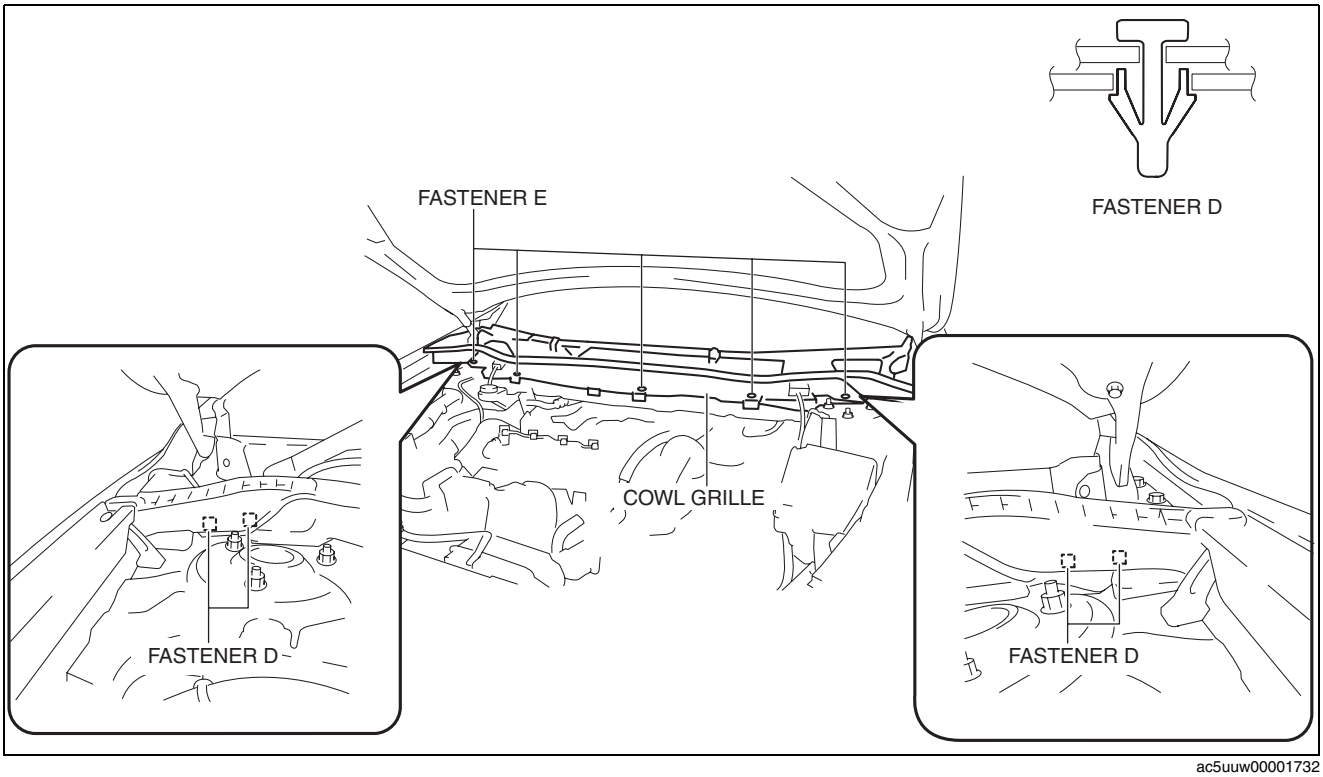

ac5uuw00001732

6. Remove fasteners E shown in the figure.
7. Disconnect the join pipe A of the windshield washer hose. (See 09-19-27 WINDSHIELD WASHER HOSE REMOVAL/INSTALLATION.)

EXTERIOR TRIM

8. Pull the cowl grille in the direction of the arrow in the order of (4), (5), (6), (7), (8) and remove it while detaching tabs F, tabs G.

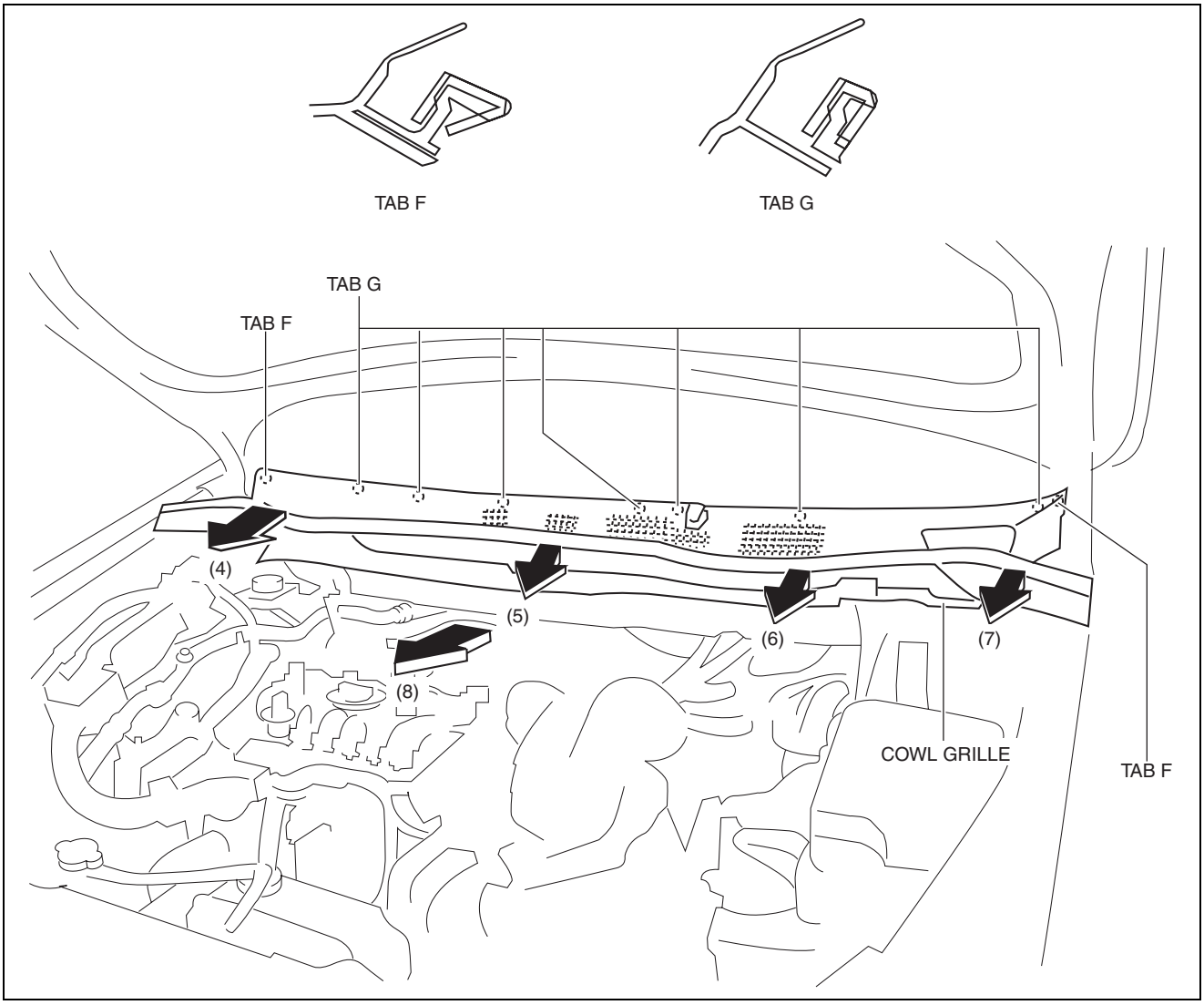

ac5wzw0000289

9. Install in the reverse order of removal.

SIDE STEP MOLDING REMOVAL/INSTALLATION

id091600801800

1. Set the rear over fender aside. (See 09-10-33 REAR OVER FENDER REMOVAL/INSTALLATION.)

EXTERIOR TRIM

2. Insert a tape-wrapped flathead screwdriver shown in the figure and remove the clip A in the direction of arrow (1).

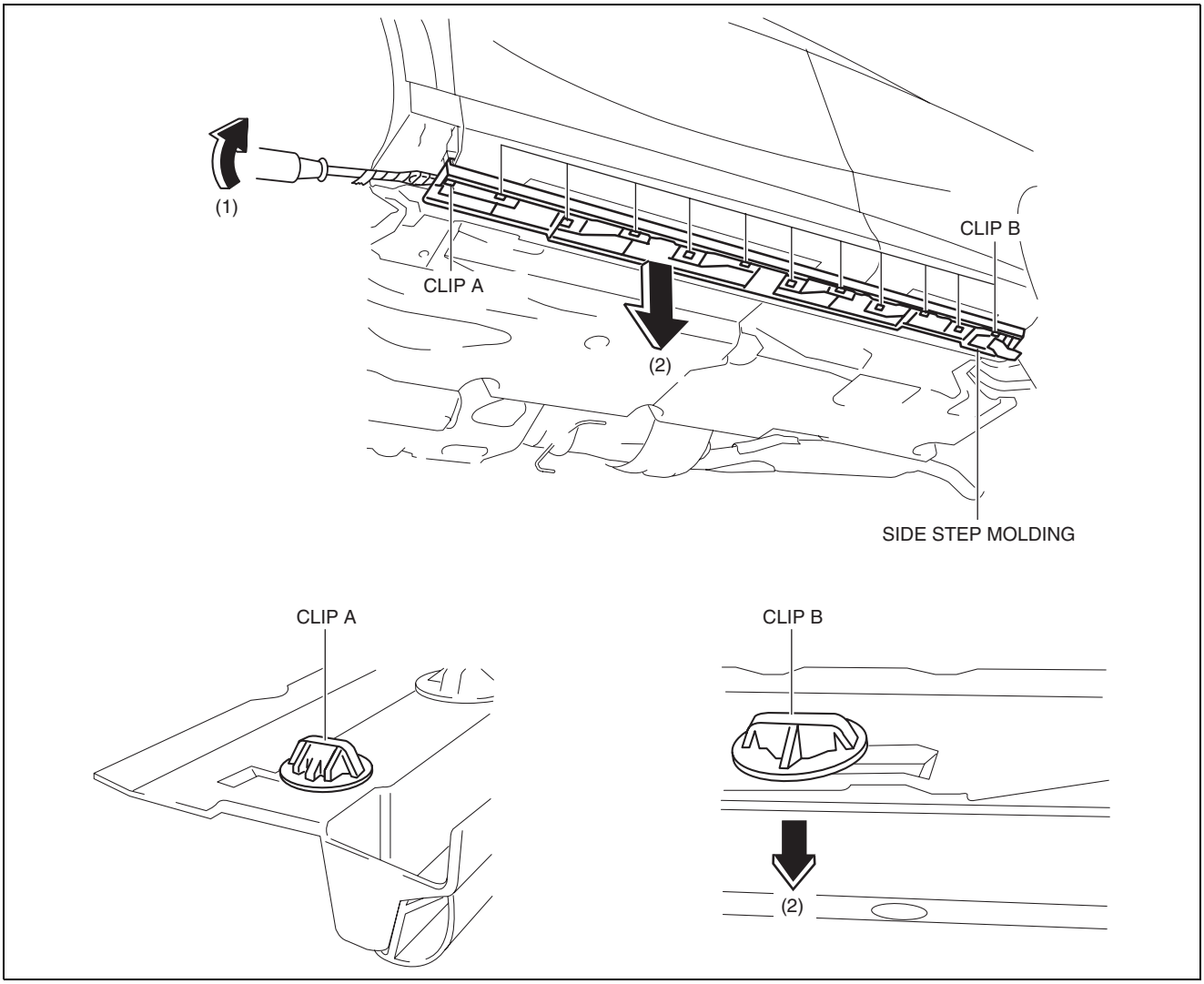

ac5wzw0000310

3. Pull the side step molding in the direction of the arrow (2) shown in the figure and remove clips B from side step molding.
4. After removing the side step molding, remove clip A, clips B from the body using a fastener remover.
5. Install clip A, clips B to the side step molding.
6. Install in the reverse order of removal.

FRONT DOOR GARNISH REMOVAL/INSTALLATION

id091600446300

Warning
- **Using a utility knife with bare hands can cause injury. Always wear gloves when using a utility knife.**

1. Using a tape-wrapped fastener remover, remove clips A in the direction of arrow (1), (2) shown in the figure.

EXTERIOR TRIM

2. Remove the double-sided adhesive tape in the position shown in the figure using the utility knife, remove the rear door garnish from the body.

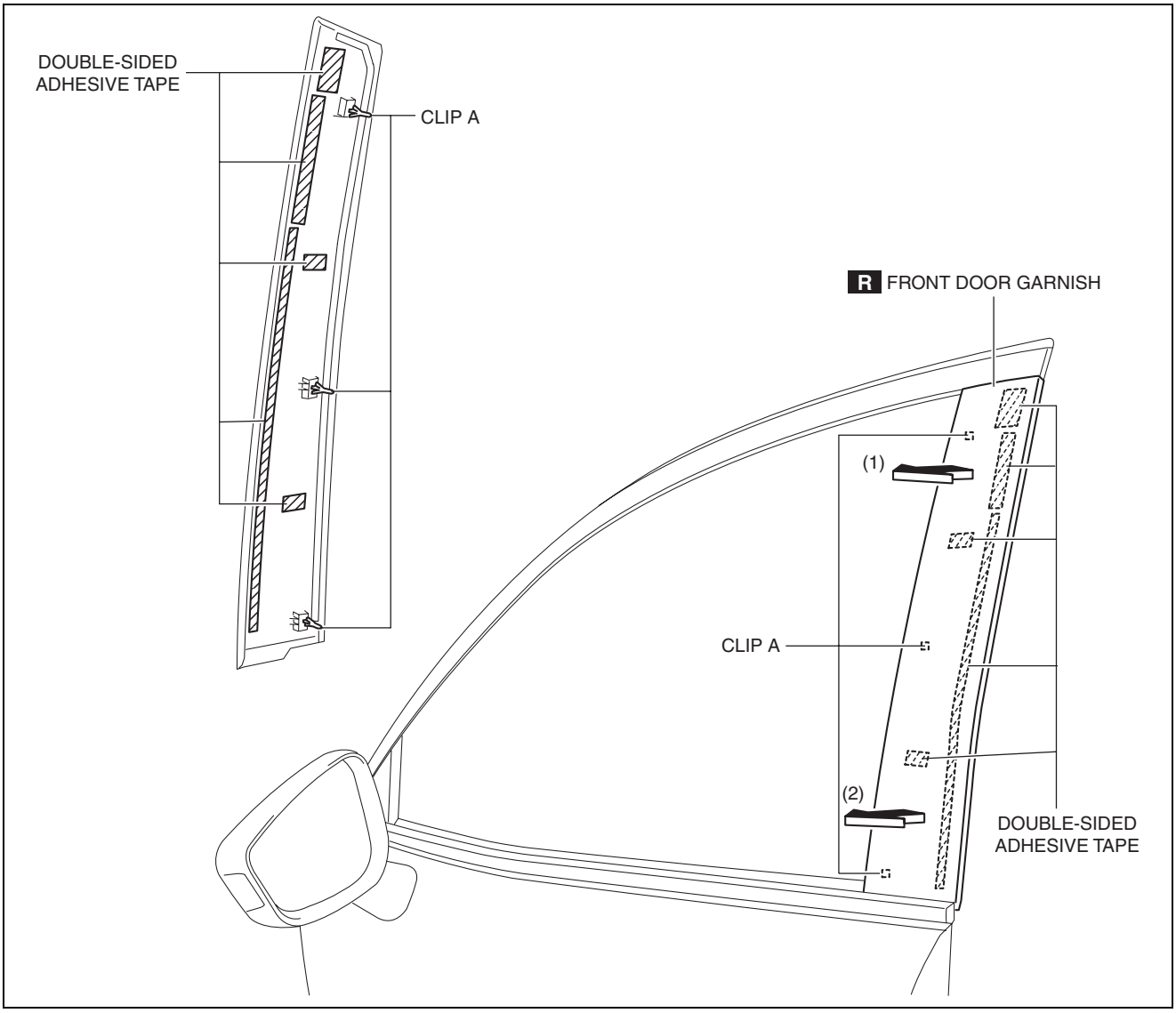

ac5wzw0000126

3. Install in the reverse order of removal. (See 09-16-8 Front Door Garnish Installation Note.)

Front Door Garnish Installation Note

1. When installing a new front door garnish, perform the following procedure:
   (1) Remove the double-sided adhesive tape on the front door sash.
   (2) Remove any grease or dirt from the affixing surface of the front door sash.

EXTERIOR TRIM

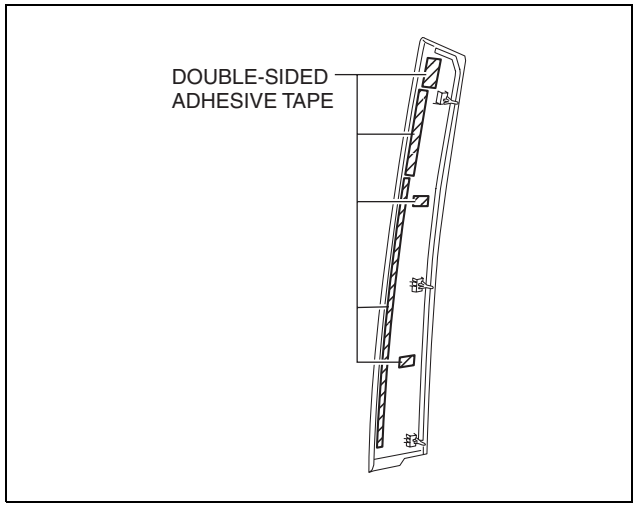

ac5wzw0000462

SAIL GARNISH REMOVAL/INSTALLATION

id091600451200

1. Open the front door.
2. Affix protective tape to the position shown in the figure.

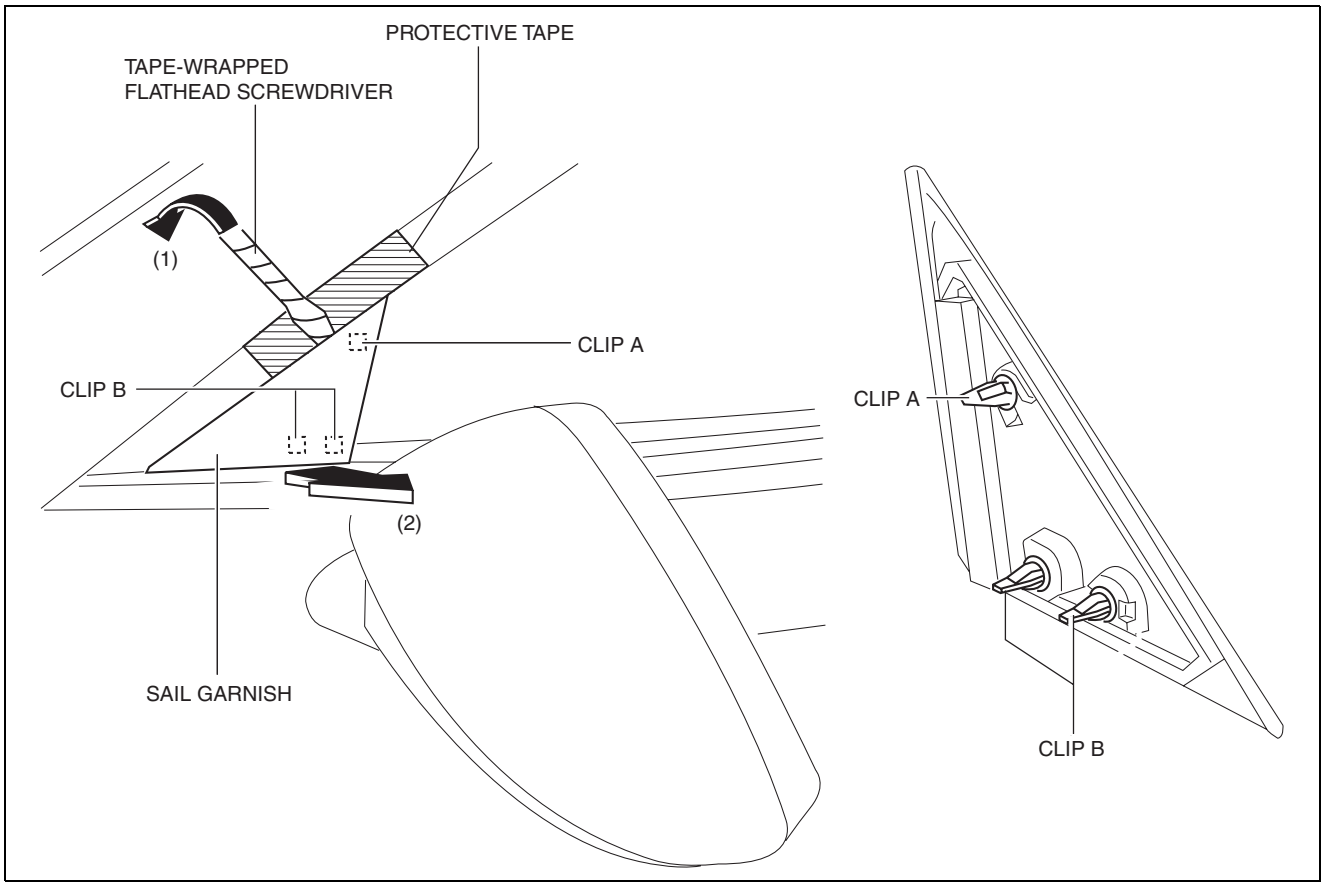

ac5wzw0000341

3. Insert a tape-wrapped flathead screwdriver into the shown in the figure and remove the clip A in the direction of arrow (1).
4. Pull the sail garnish in the direction of the arrow (2) and remove it while detaching clips B.
5. Install in the reverse order of removal.

FRONT BELTLINE MOLDING REMOVAL/INSTALLATION

id091600804800

Caution

- **Affix protective tape to the position shown in the figure.**

EXTERIOR TRIM

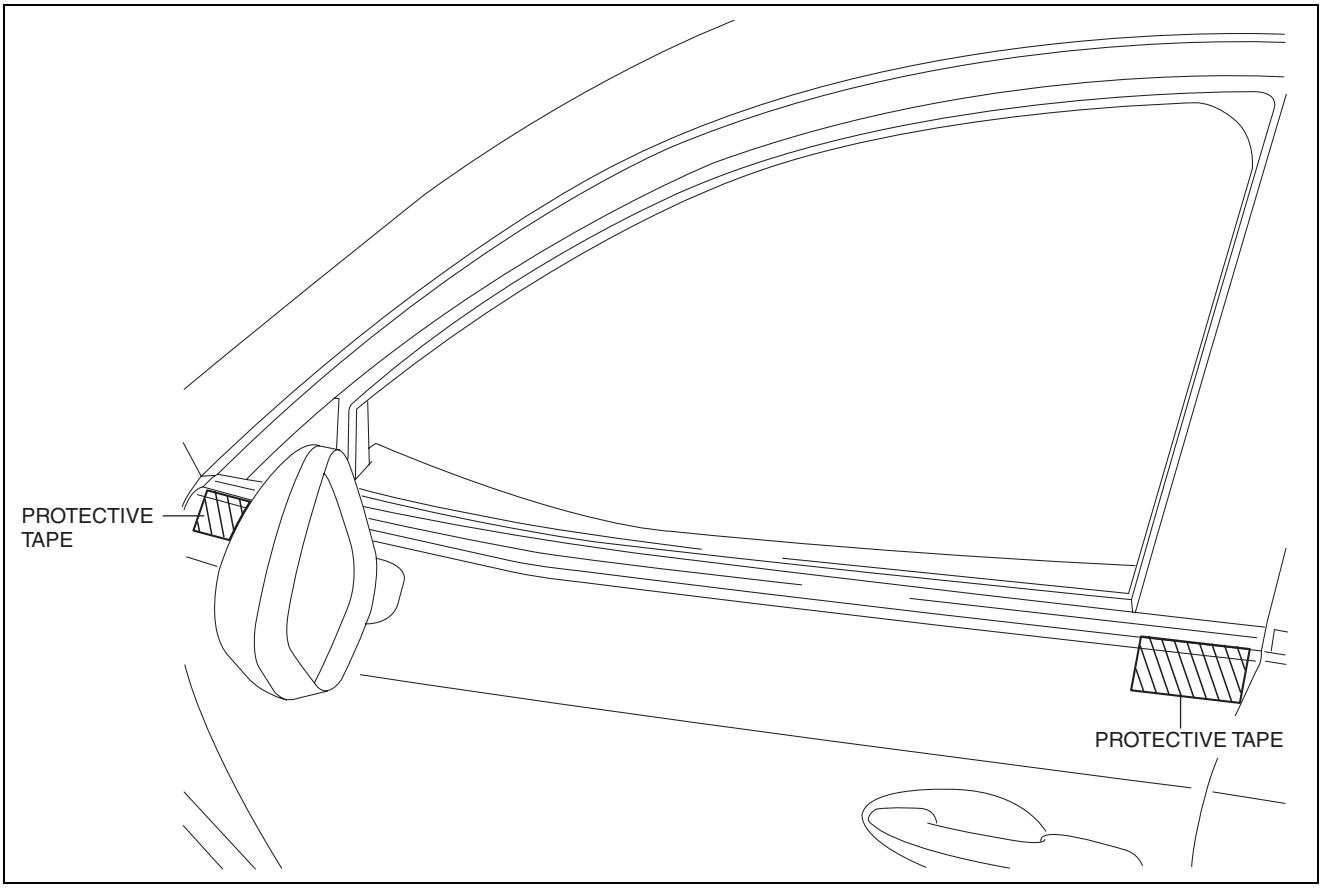

ac5wzw0000128

1. Fully open the front door glass.
2. Insert a tape-wrapped flathead screwdriver and then detach clips A in the direction of arrow (1) shown in the figure.

EXTERIOR TRIM

3. Pull up the front side of front beltline molding in the direction of arrow (2) shown in the figure.

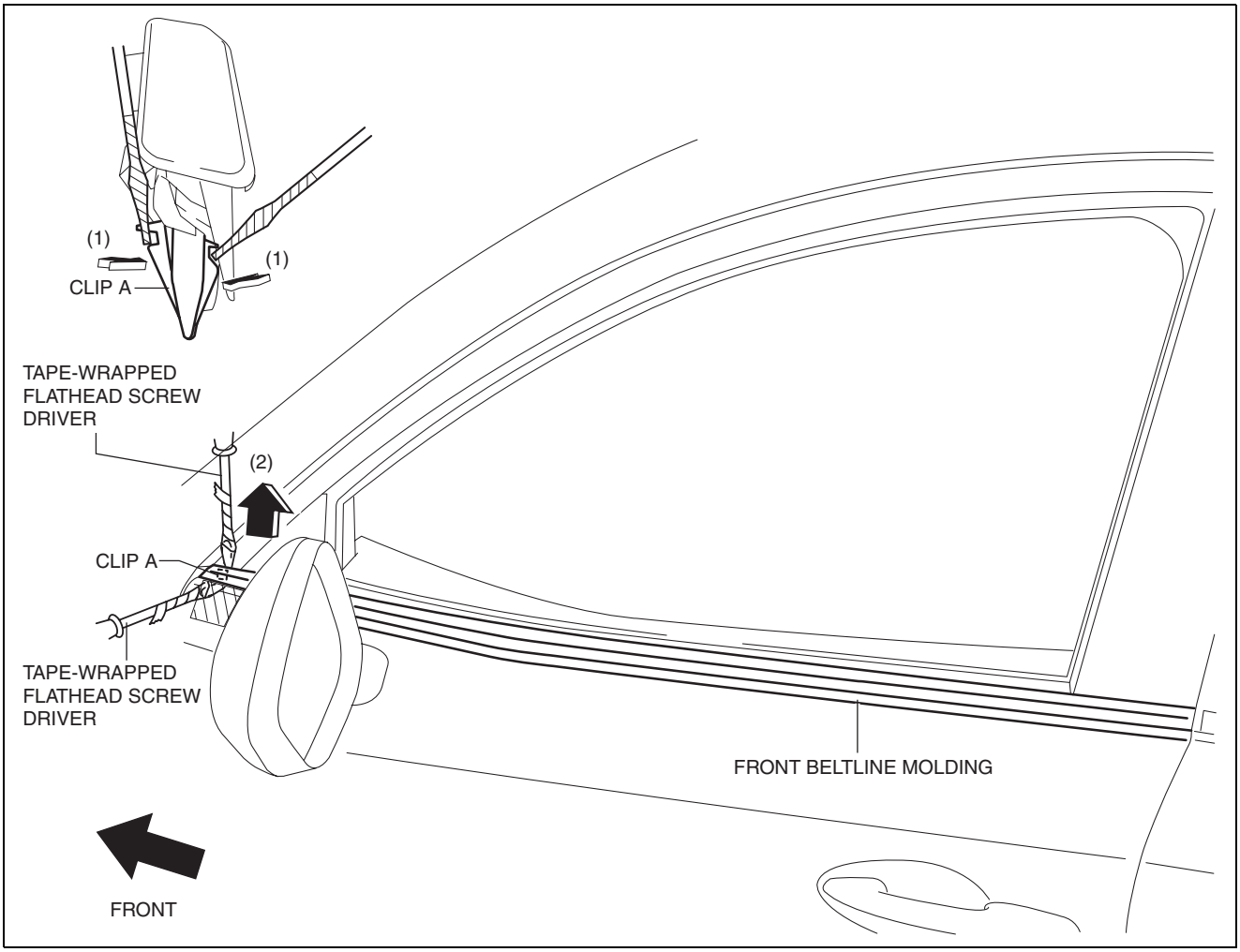

ac5wzw0000218

4. Insert a tape-wrapped flathead screwdriver and then detach clips A in the direction of arrow (3) shown in the figure.
5. Pull up the rear side of front beltline molding in the direction of arrow (4) shown in the figure.

EXTERIOR TRIM

6. Rotate the front beltline molding in the direction of the arrow (5) shown in the figure and remove it while detaching tabs B.

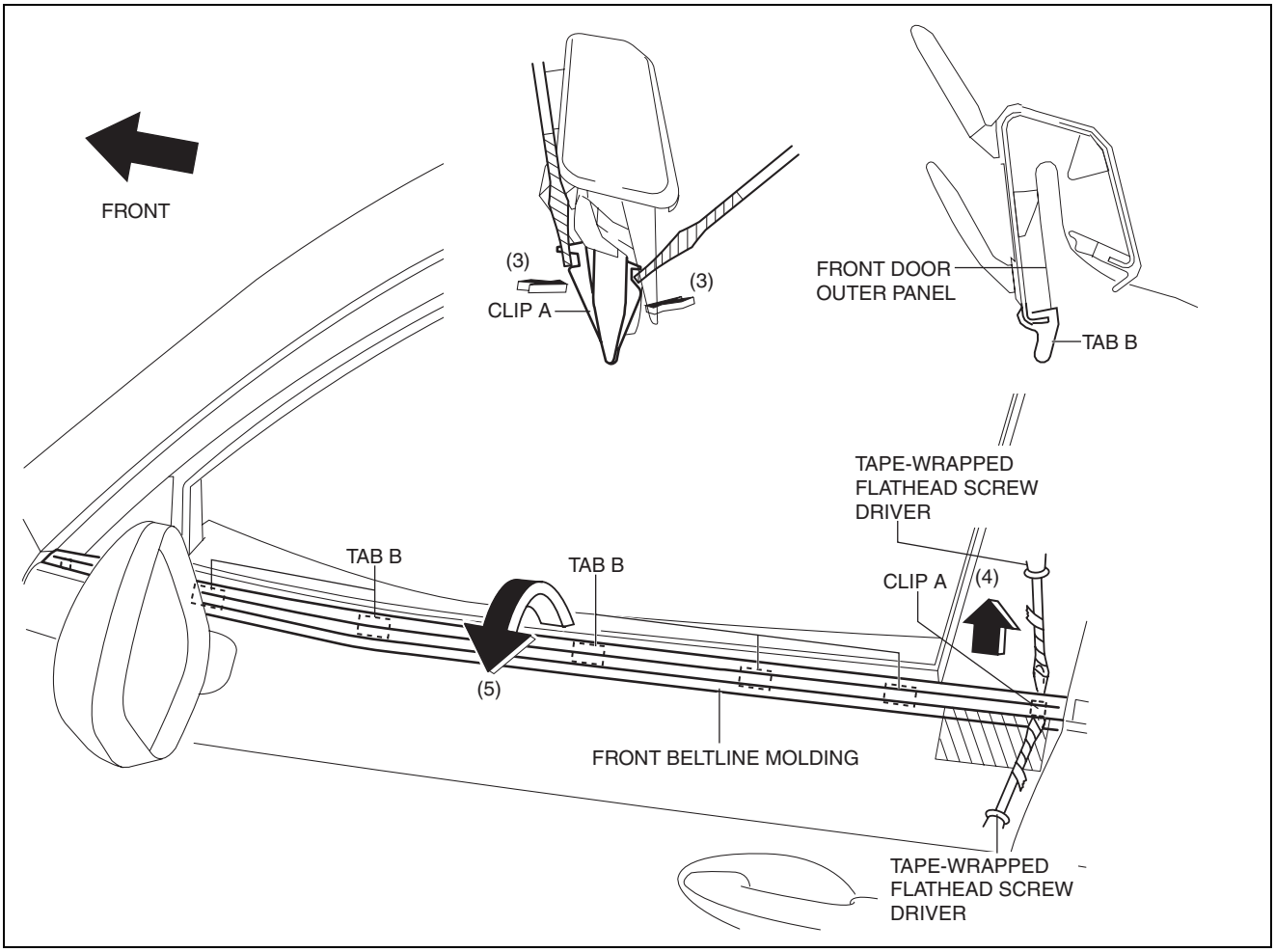

ac5wzw0000218

7. Install in the reverse order of removal.

FRONT SASH MOLDING REMOVAL

id091600805000

Warning
- **Using a utility knife with bare hands can cause injury. Always wear gloves when using a utility knife.**

1. Using a utility knife, carefully remove the double-sided adhesive tape in the locations shown below.

Caution
- **When removing the double-sided adhesive tape, be careful not to damage clip A.**

EXTERIOR TRIM

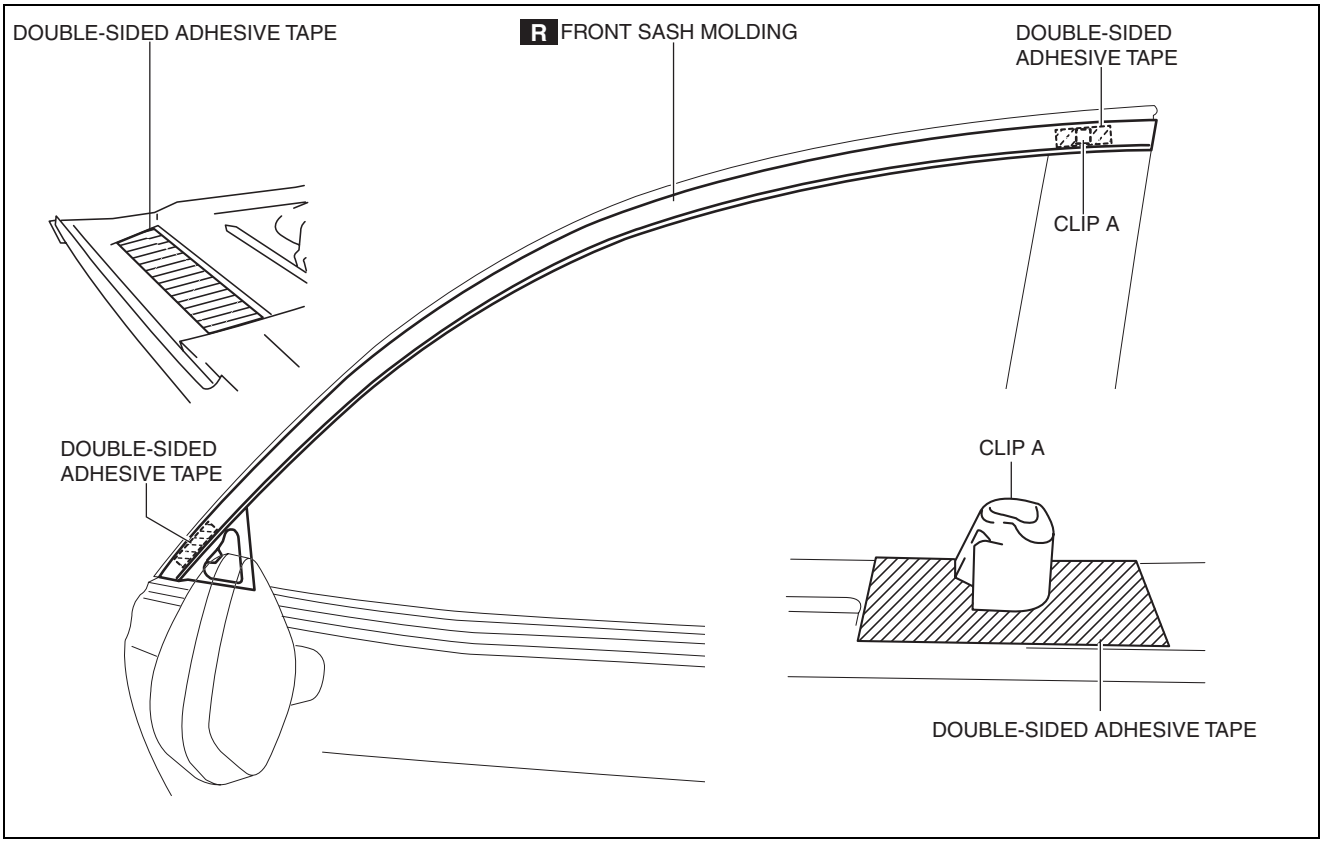

ac5wzw0000208

EXTERIOR TRIM

2. Insert a tape-wrapped flathead screwdriver shown in the figure and remove the protector in the direction of arrow (1).

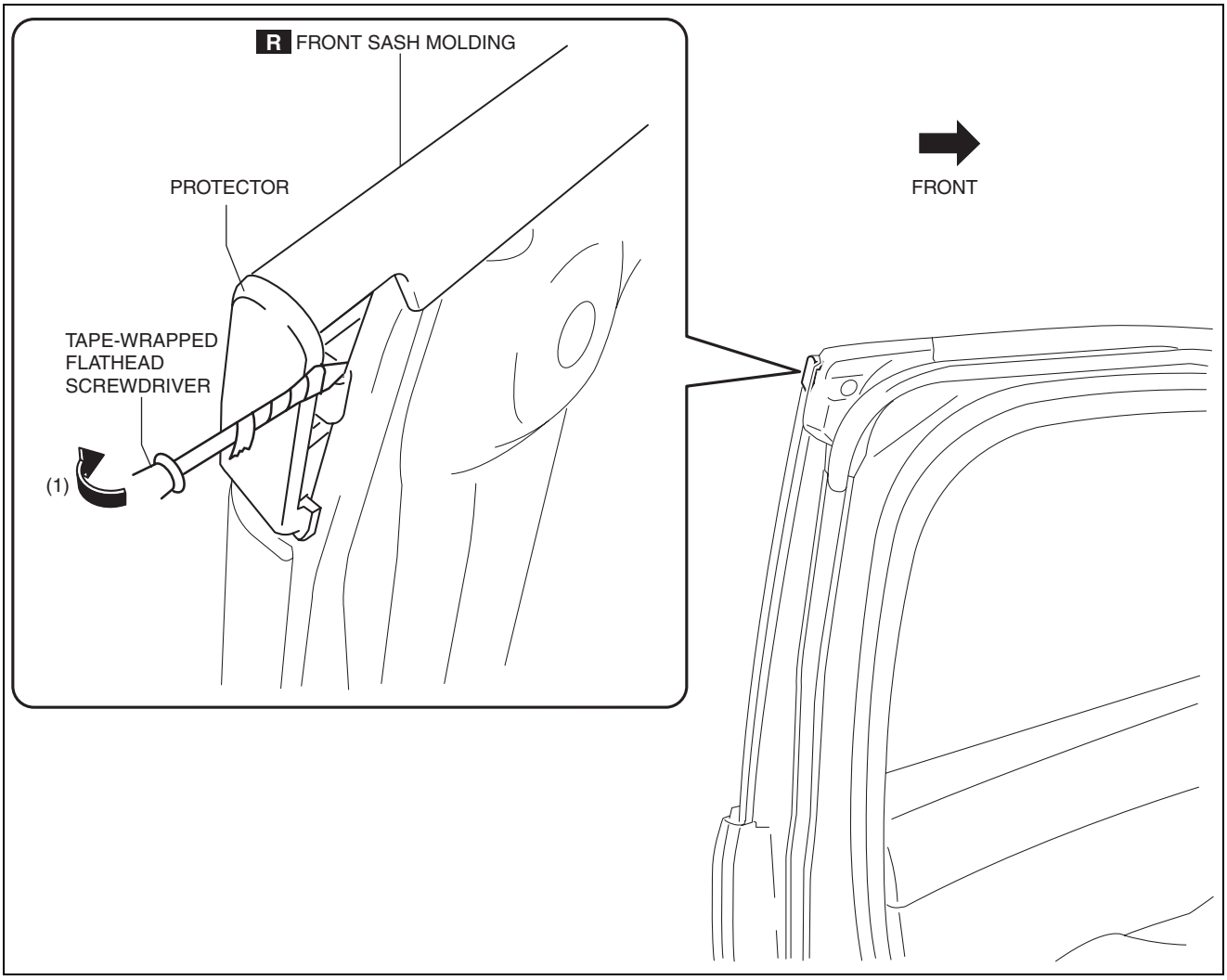

ac5uuw00001979

EXTERIOR TRIM

3. Insert a tape-wrapped flathead screwdriver shown in the figure and remove clip A in the direction of arrow (2).

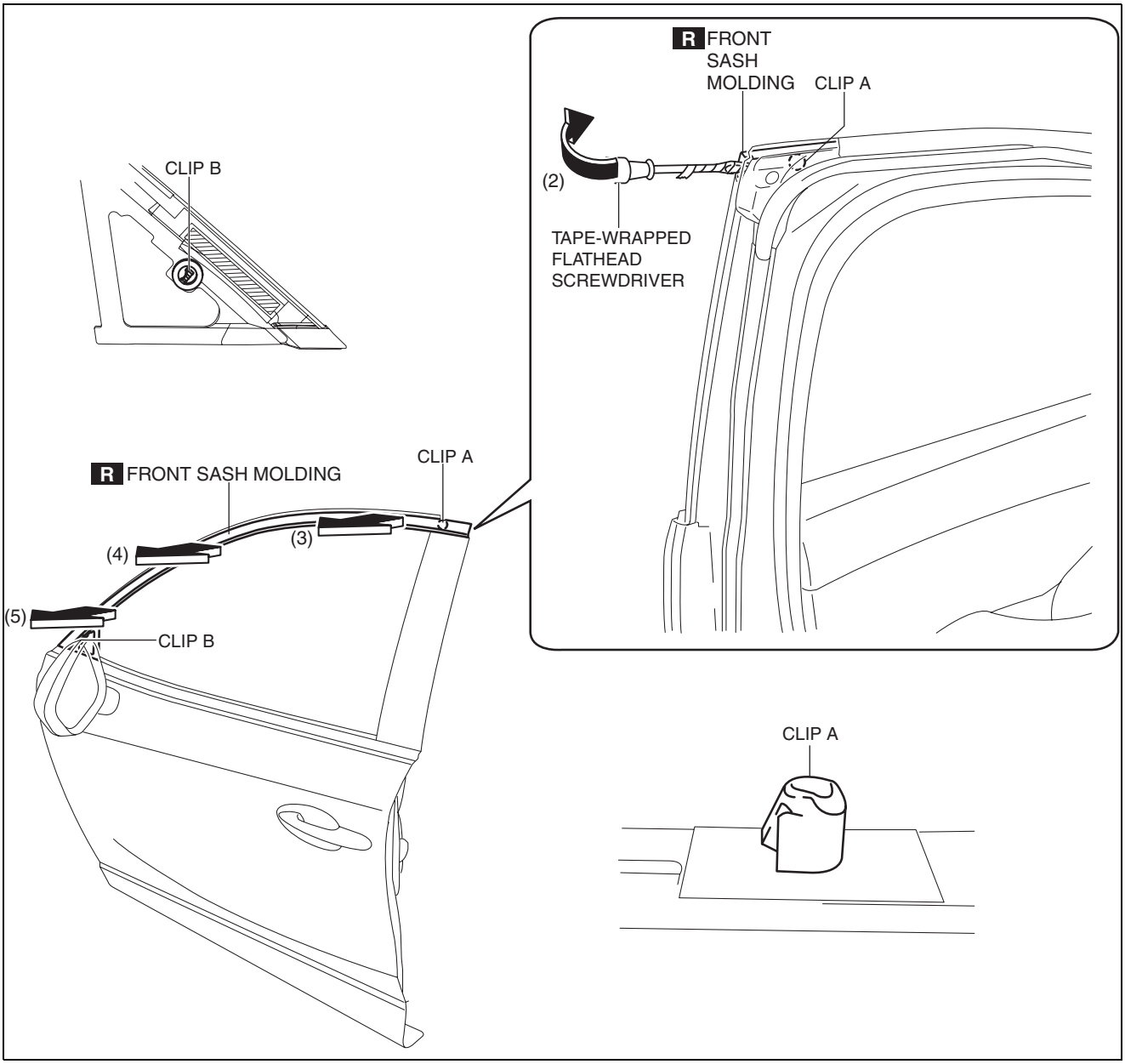

ac5uuw00001980

4. Remove the front sash molding in the direction of arrow in the order of (3), (4), (5) while detaching clip B.
5. Install in the reverse order of removal.

FRONT SASH MOLDING INSTALLATION

id091600807000

Warning
- **Using a utility knife with bare hands can cause injury. Always wear gloves when using a utility knife.**

Note
- Double-sided adhesive tape has already been attached to the new front sash molding.

1. When installing a new front sash molding, follow the procedure below:
   (1) Carefully remove the adhesive remaining on the body using a razor blade.
   (2) Remove any grease or dirt from the adhesion surface of the body.
2. Remove the adhesive remaining on the front sash molding and the body using a razor blade.
   (1) Remove any grease or dirt from the adhesion surface of the front sash molding and the body.
   (2) Apply primer to the bonding area of the front sash molding.

EXTERIOR TRIM

(3) Affix double-sided adhesive tape to the front sash molding as shown in the figure.

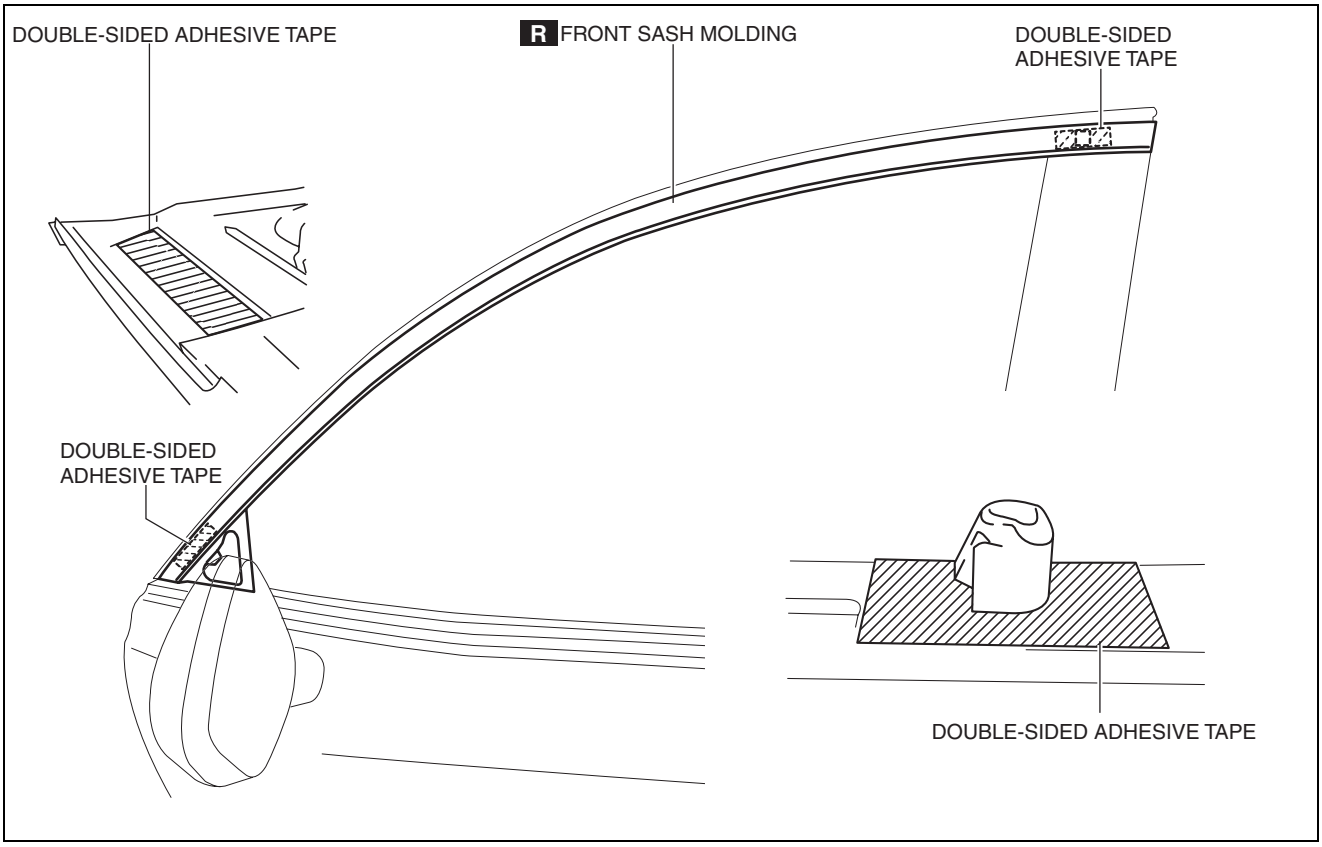

ac5wzw0000209

Note
- As for the double-sided adhesive tape, use 3M GT7120 or equivalent.

3. Peel off the backing of the double-sided adhesive tape.

EXTERIOR TRIM

4. Hook tab A to the body in the position where clip B aligns with the sash holes.

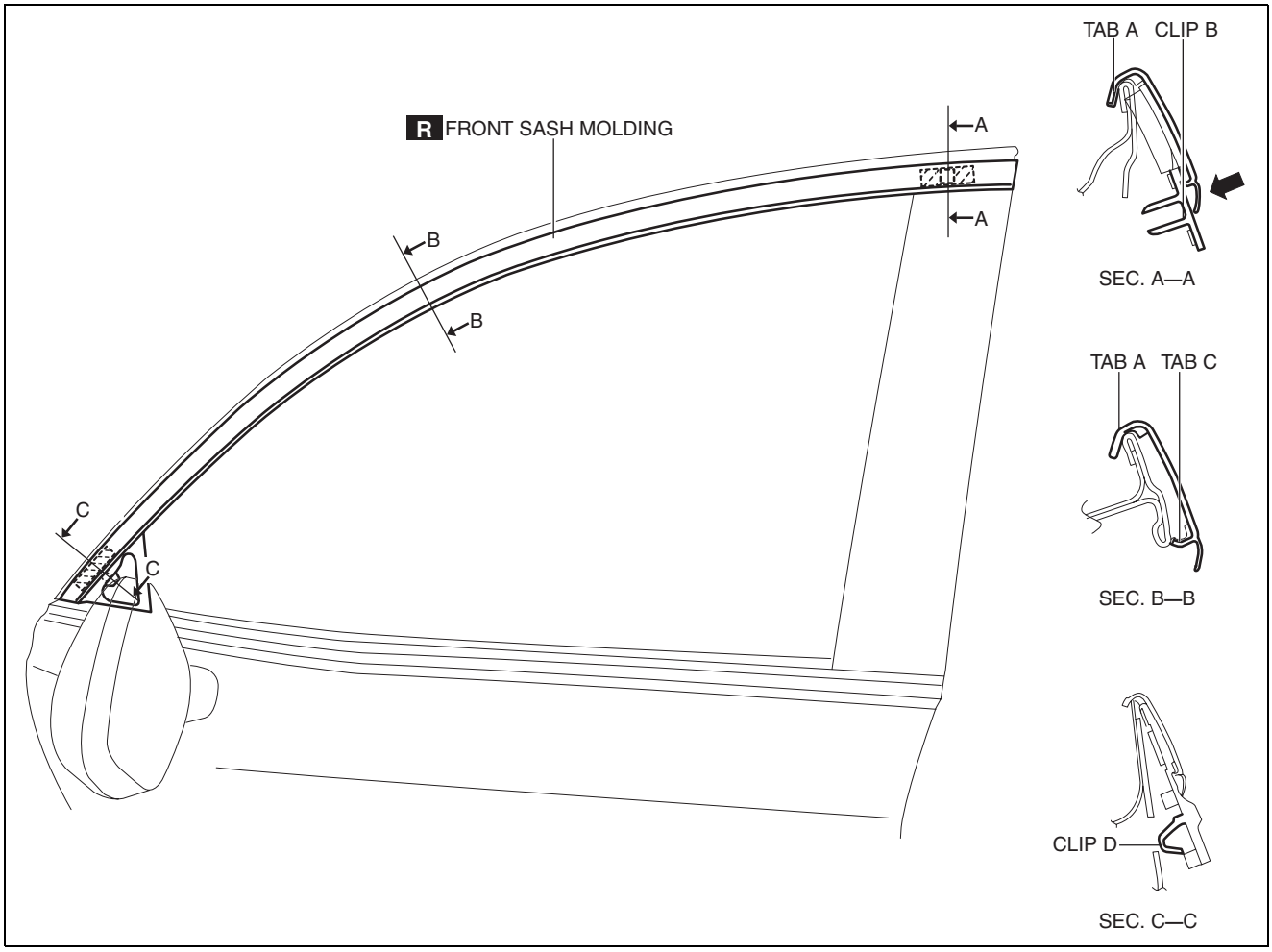

ac5wzw0000209

5. Press the front sash molding in the direction of the arrow and install clip B to the body.

Caution
- **Do not press the front sash molding in any place other than the rubber areas.**

6. Press the front sash molding from the vehicle front in the direction of the arrow and install tab C.
7. Press the front sash molding in the direction of the arrow and install clip D to the body.

Note
- After installing the front sash molding, verify that tabs A and C are connected properly to the body.

REAR DOOR GARNISH REMOVAL/INSTALLATION

id091600445700

Warning
- **Using a utility knife with bare hands can cause injury. Always wear gloves when using a utility knife.**

Front

1. Using a tape-wrapped fastener remover, remove clips A in the direction of arrow (1), (2) shown in the figure.

EXTERIOR TRIM

2. Remove the double-sided adhesive tape in the position shown in the figure using the utility knife, remove the rear door garnish from the rear door sash.

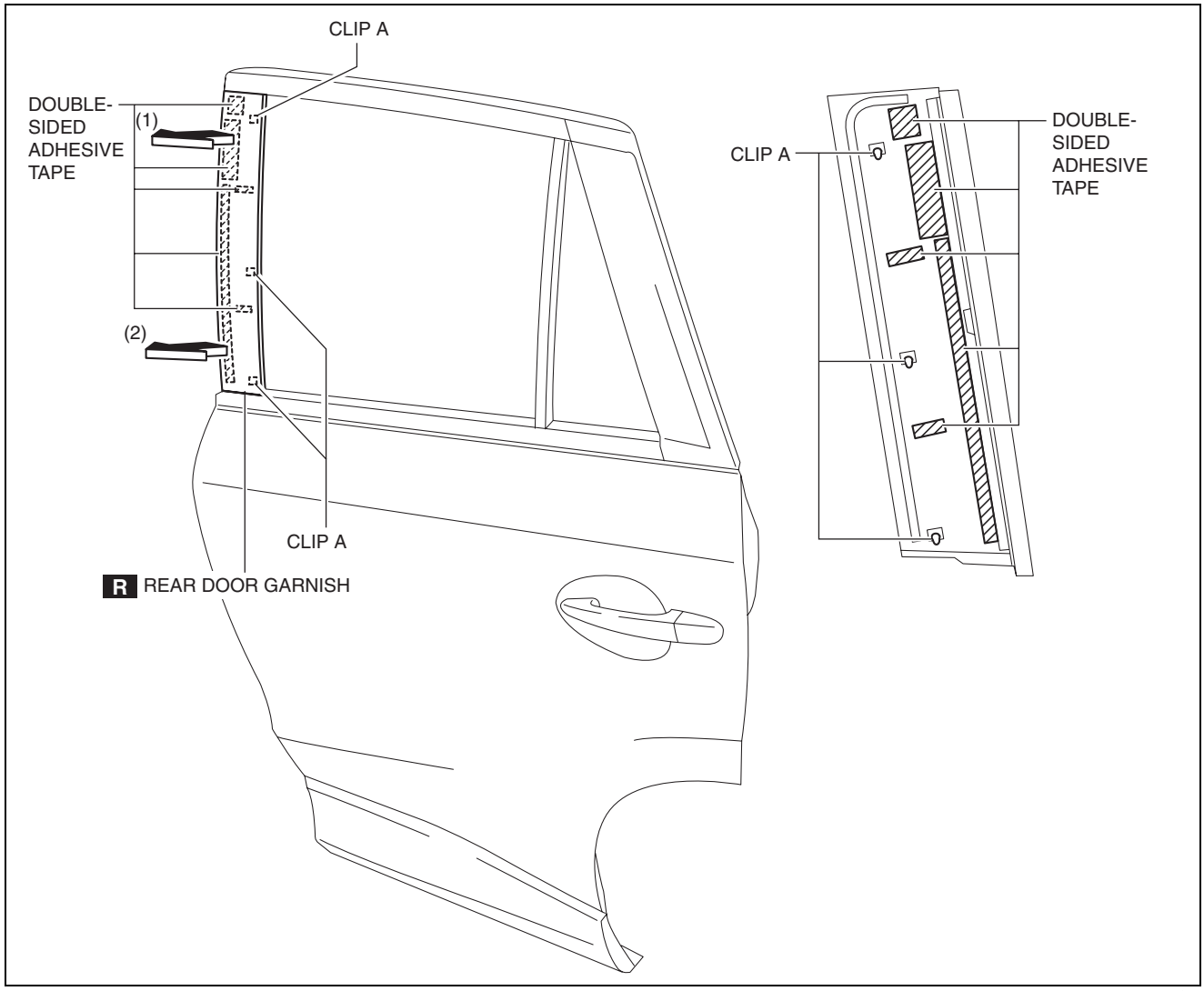

ac5wzw0000126

3. Install in the reverse order of removal. (See 09-16-19 Rear Door Garnish Installation Note.)

Rear

1. Using a tape-wrapped fastener remover, remove clips B in the direction of arrow (1), (2) shown in the figure.

EXTERIOR TRIM

2. Remove the double-sided adhesive tape in the position shown in the figure using the utility knife, remove the rear door garnish from the rear door sash.

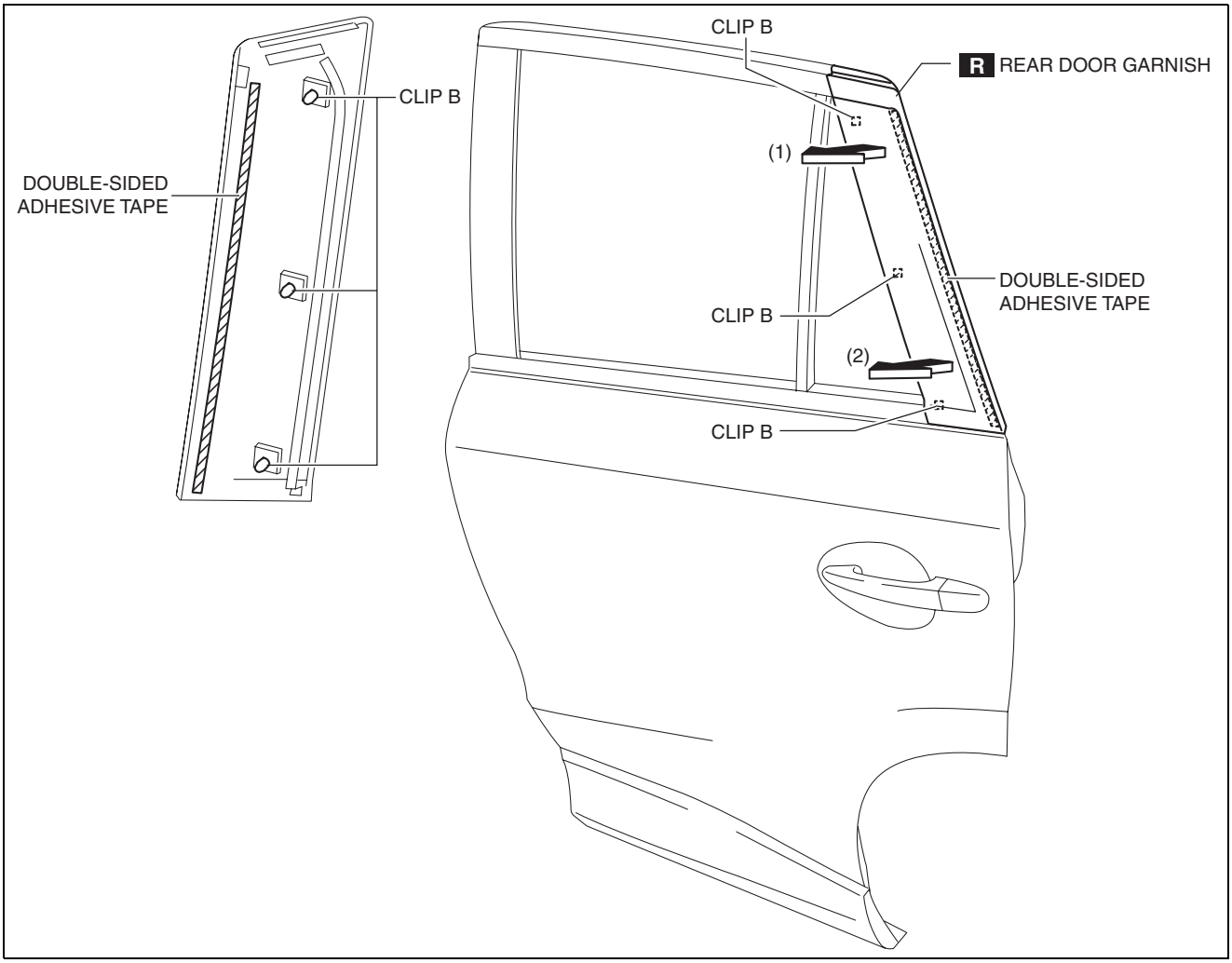

ac5wzw0000126

3. Install in the reverse order of removal. (See 09-16-19 Rear Door Garnish Installation Note.)

Rear Door Garnish Installation Note

1. When installing a new rear door garnish, perform the following procedure:
   (1) Remove the double-sided adhesive tape on the rear door sash.
   (2) Remove any grease or dirt from the affixing surface of the rear door sash.

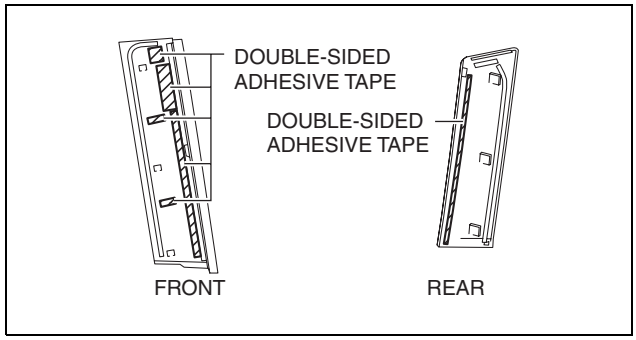

ac5wzw0000462

EXTERIOR TRIM

REAR BELTLINE MOLDING REMOVAL/INSTALLATION

id091600804700

Caution
- **Affix protective tape to the position shown in the figure.**

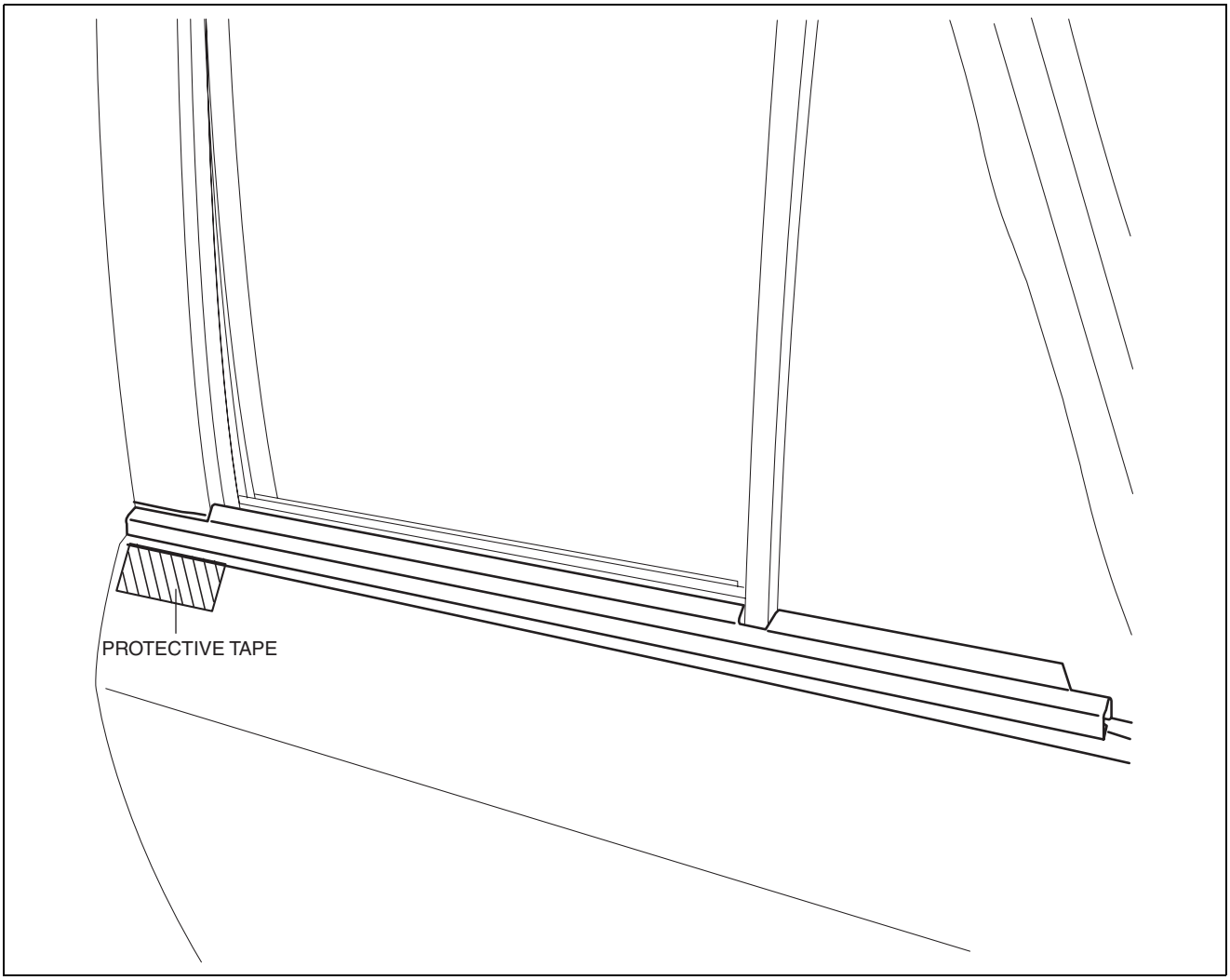

ac5wzw0000128

1. Fully open the rear door glass.
2. Insert a tape-wrapped flathead screwdriver and then detach the clip A in the direction of arrow (1) shown in the figure.
3. Pull up the rear belt line molding in the direction of arrow (2) shown in the figure.

EXTERIOR TRIM

4. Rotate the rear beltline molding in the direction of the arrow (3) shown in the figure and remove it while detaching tabs B.

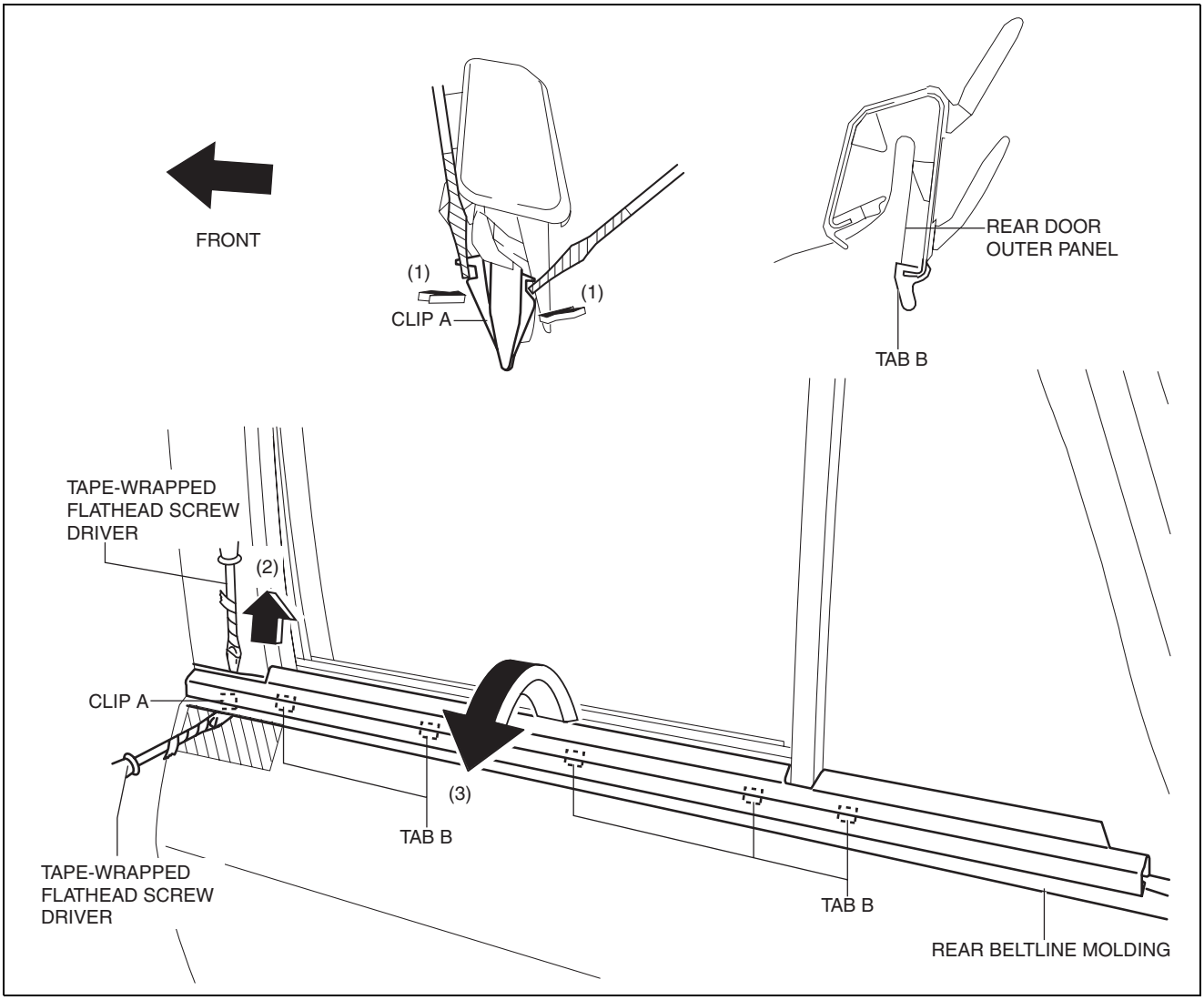

ac5wzw0000217

5. Install in the reverse order of removal.

REAR SASH MOLDING REMOVAL

id091600805100

Warning
- **Using a utility knife with bare hands can cause injury. Always wear gloves when using a utility knife.**

1. Remove the rear door garnish. (rear side) (See 09-16-17 REAR DOOR GARNISH REMOVAL/INSTALLATION.)
2. Remove the double-sided adhesive tape in the position shown in the figure using the utility knife.

Caution
- **When remove the double-sided adhesive tape, be careful not to damage clip A.**

EXTERIOR TRIM

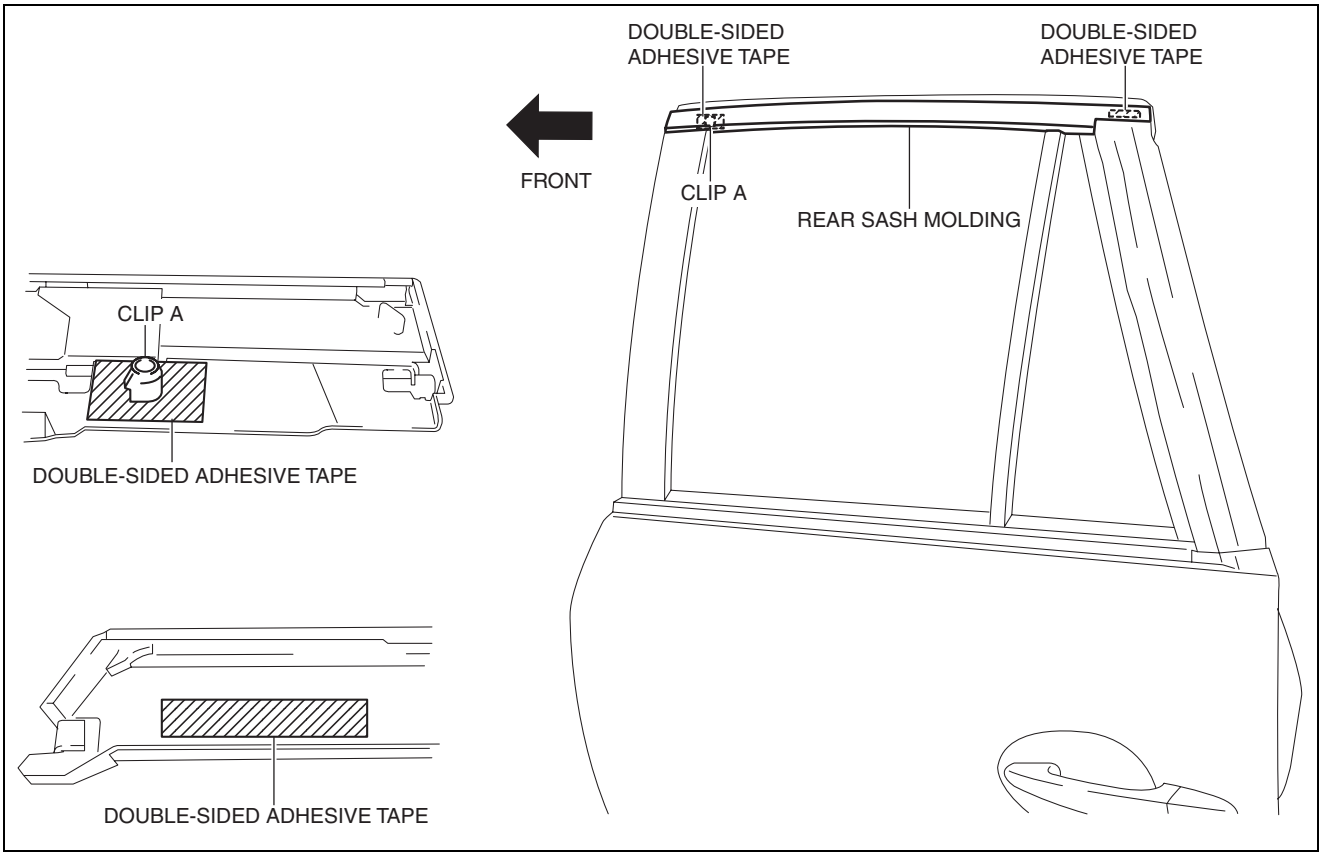

ac5wzw0000209

3. Insert a tape-wrapped flathead screwdriver shown in the figure and remove the protector in the direction of arrow (1).

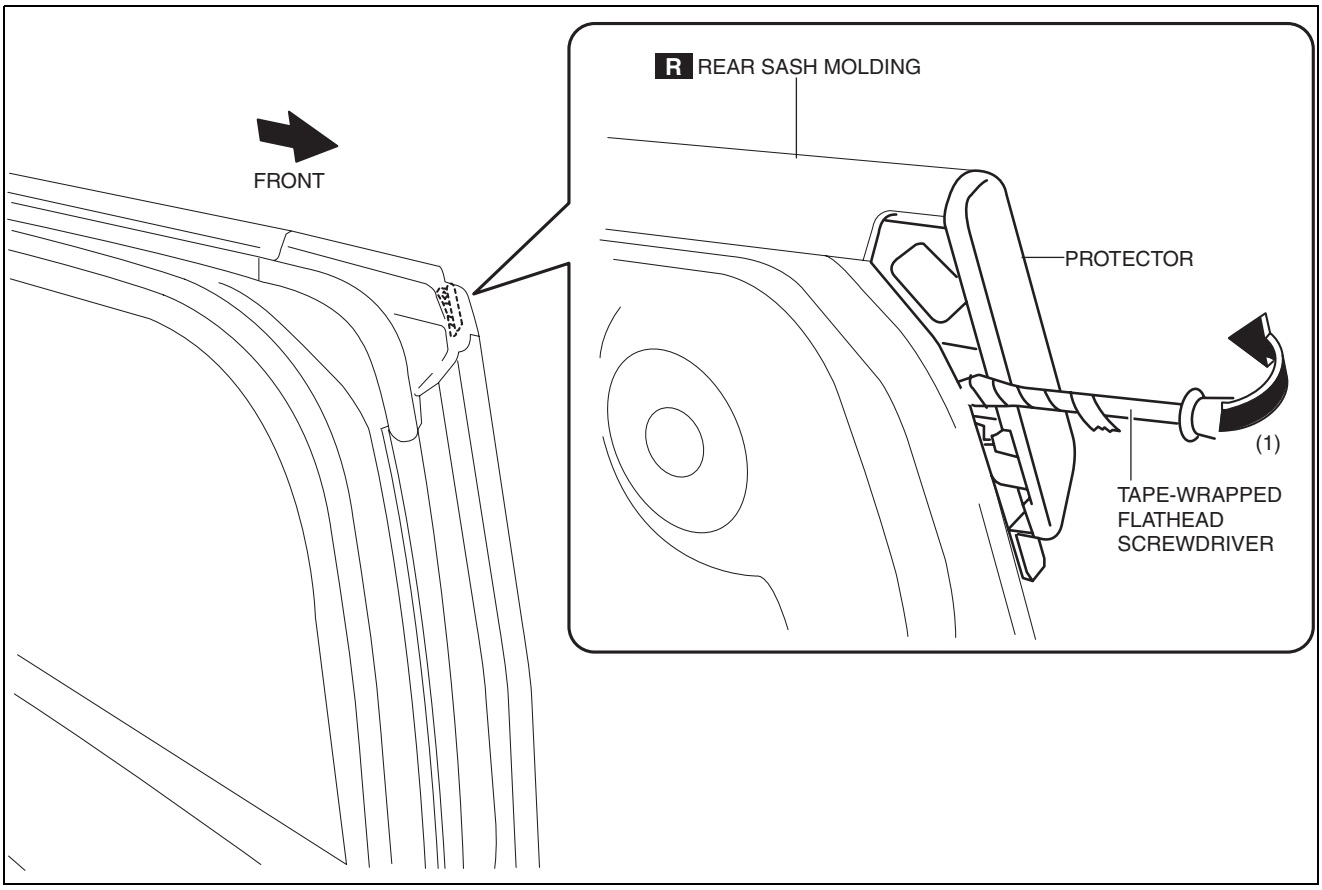

ac5uuw00001981

EXTERIOR TRIM

4. Insert a tape-wrapped flathead screwdriver shown in the figure and remove clips A in the direction of arrow (2).

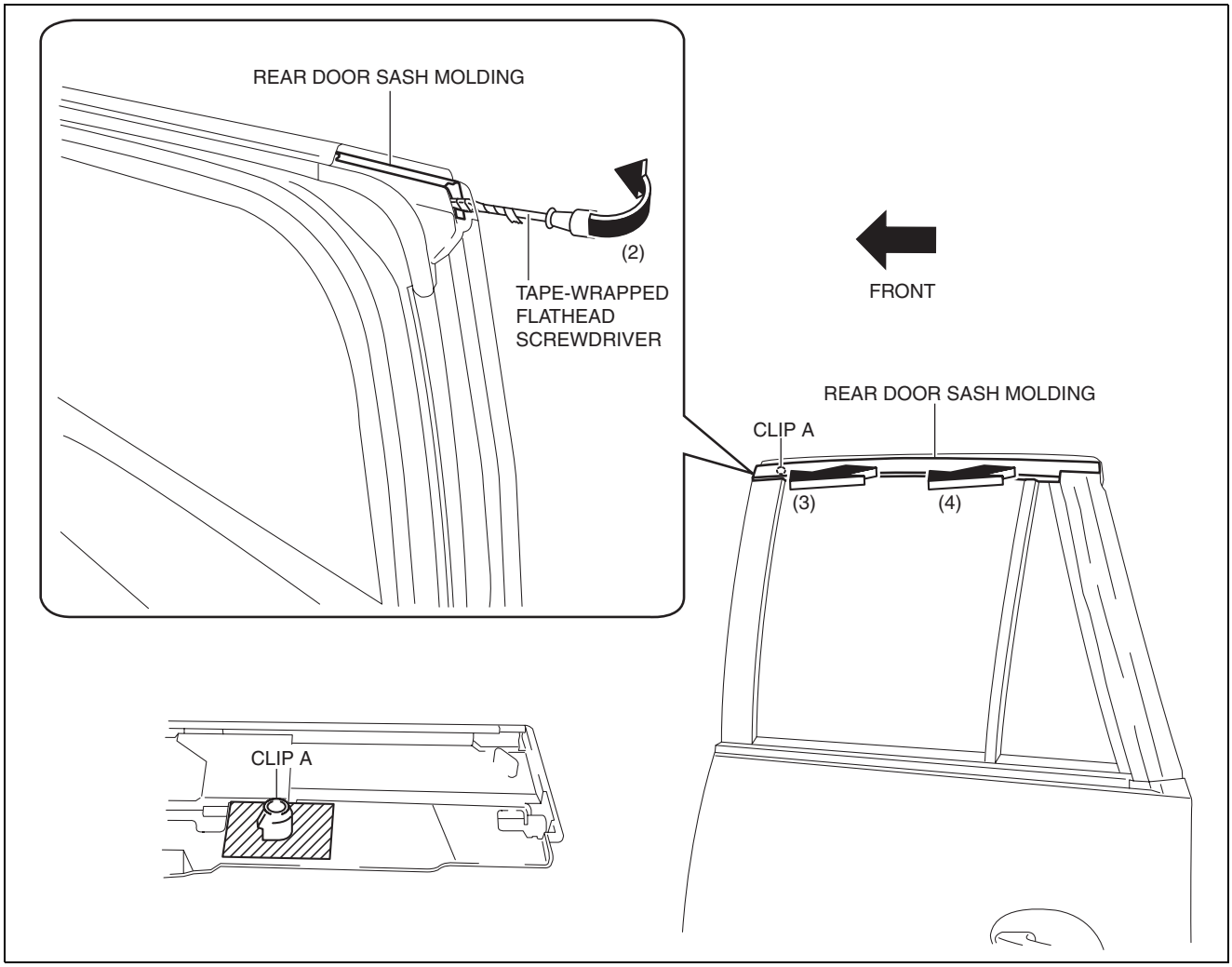

ac5uuw00001982

5. Remove the rear sash molding in the direction of arrow in the order of (3), (4) shown in the figure.

REAR SASH MOLDING INSTALLATION

id091600807100

Warning

- **Using a utility knife with bare hands can cause injury. Always wear gloves when using a utility knife.**

Note

- Double-sided adhesive tape has already been attached to the new rear sash molding.

1. When installing a new rear sash molding, follow the procedure below:
   (1) Carefully remove the adhesive remaining on the body using a razor blade.
   (2) Remove any grease or dirt from the adhesion surface of the body.
2. Remove the adhesive remaining on the rear sash molding and the body using a razor blade.
   (1) Remove any grease or dirt from the adhesion surface of the rear sash molding and the body.
   (2) Apply primer to the bonding area of the rear sash molding.

EXTERIOR TRIM

(3) Affix double-sided adhesive tape to the rear sash molding as shown in the figure.

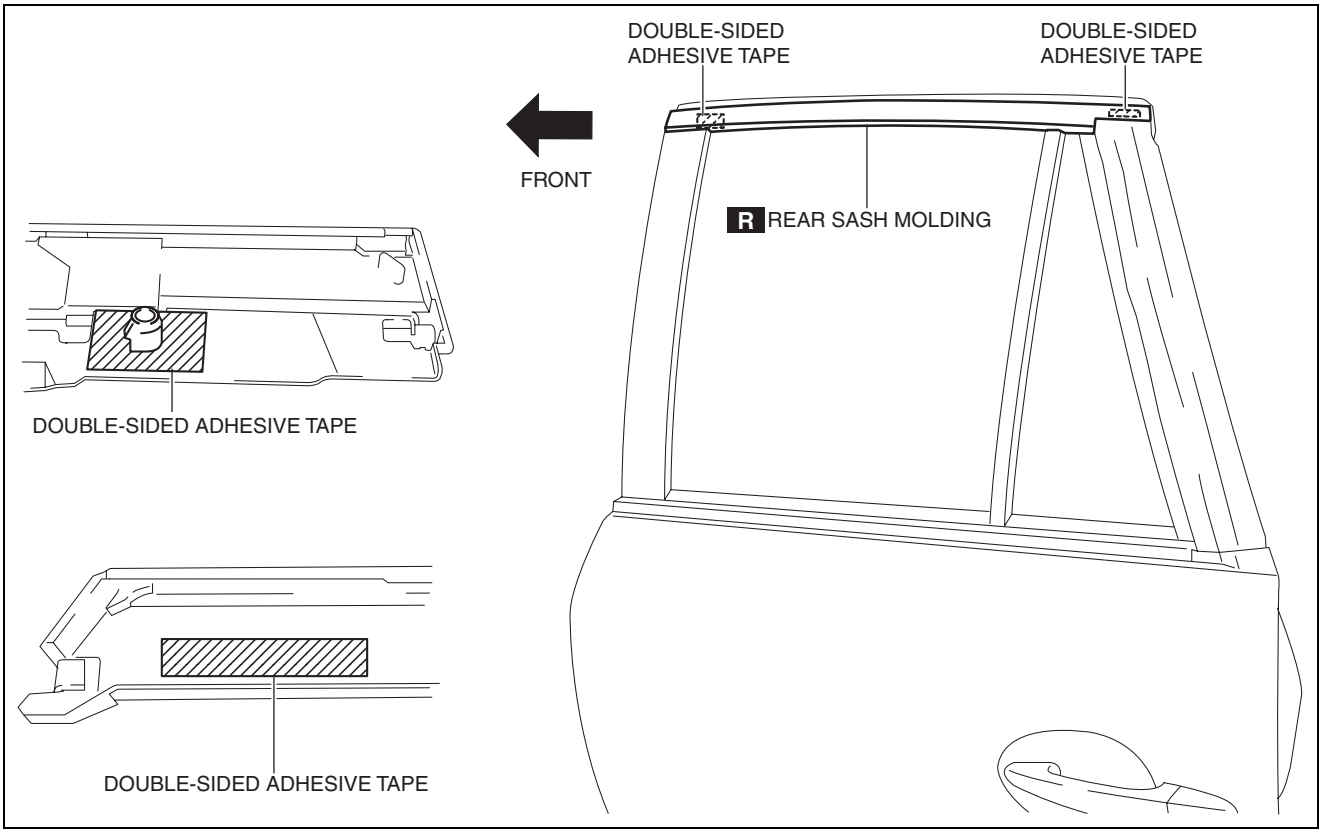

ac5wzw0000209

Note
- As for the double-sided adhesive tape, use 3M GT7120 or equivalent.

3. Peel off the backing of the double-sided adhesive tape.

EXTERIOR TRIM

4. Hook tab A to the body in the position where clip B aligns with the sash holes.

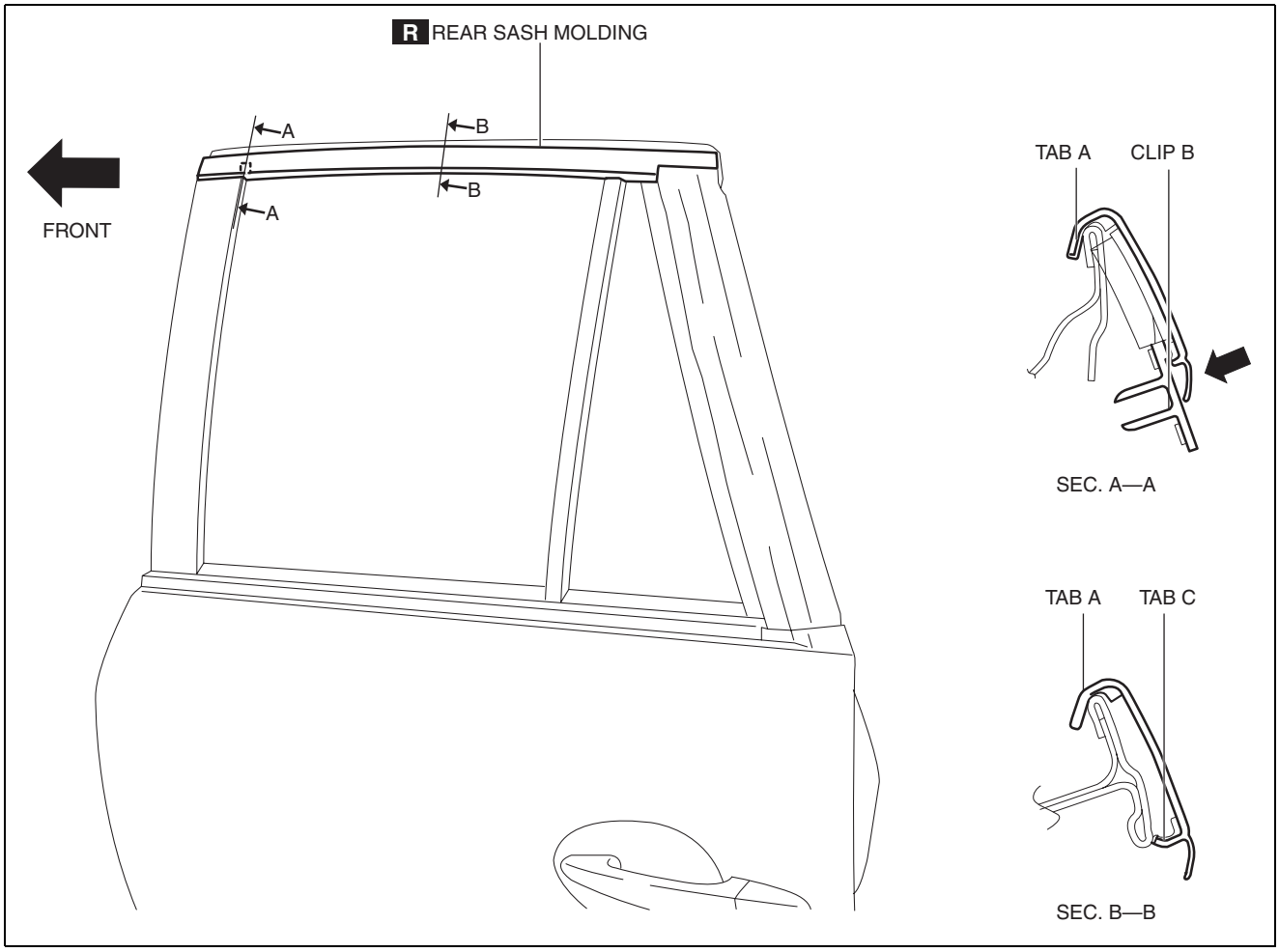

ac5wzw0000209

5. Press the rear sash molding in the direction of the arrow and install clip B to the body.

Caution
- **Do not press the rear sash molding in any place other than the rubber areas.**

6. Press the rear sash molding from the vehicle front in the direction of the arrow and install tab C.

Note
- After installing the rear sash molding, verify that tabs A and C are connected properly to the body.

EXTERIOR TRIM

SIDE GARNISH REMOVAL

id091600453500

Front

1. Insert a tape-wrapped flathead screwdriver in the position shown in the figure, move it in the direction of the arrow (1) to remove the clip A.

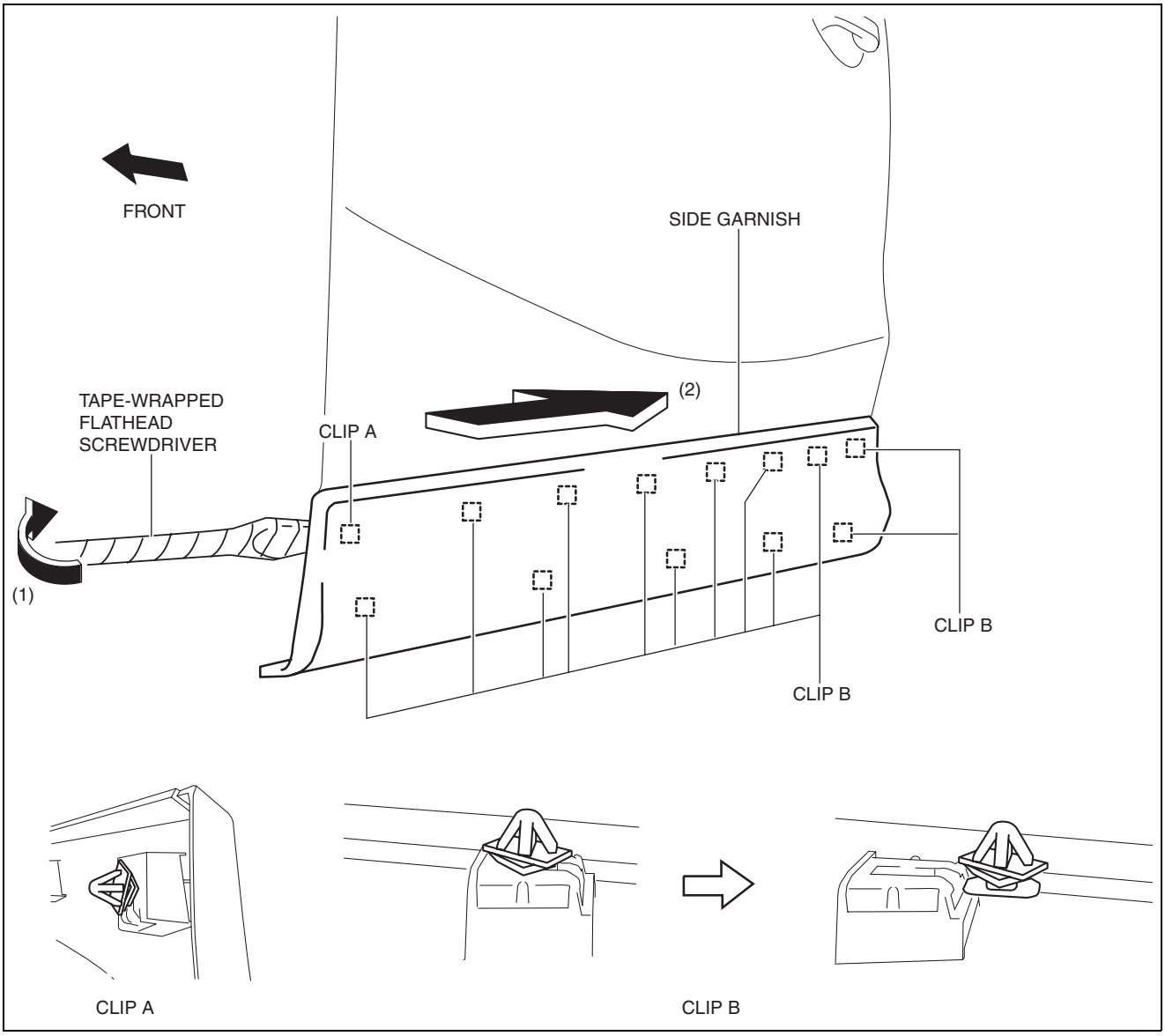

ac5uuw00001729

2. Slide the side garnish in the direction of the arrow (2) shown in the figure and remove clips B from side garnish.
3. Remove clips B from the body.
4. When reusing the side garnish, install clip A and B to the body.

EXTERIOR TRIM

Rear

1. Insert a tape-wrapped flathead screwdriver in the position shown in the figure, move it in the direction of the arrow (1) to remove the clip A.

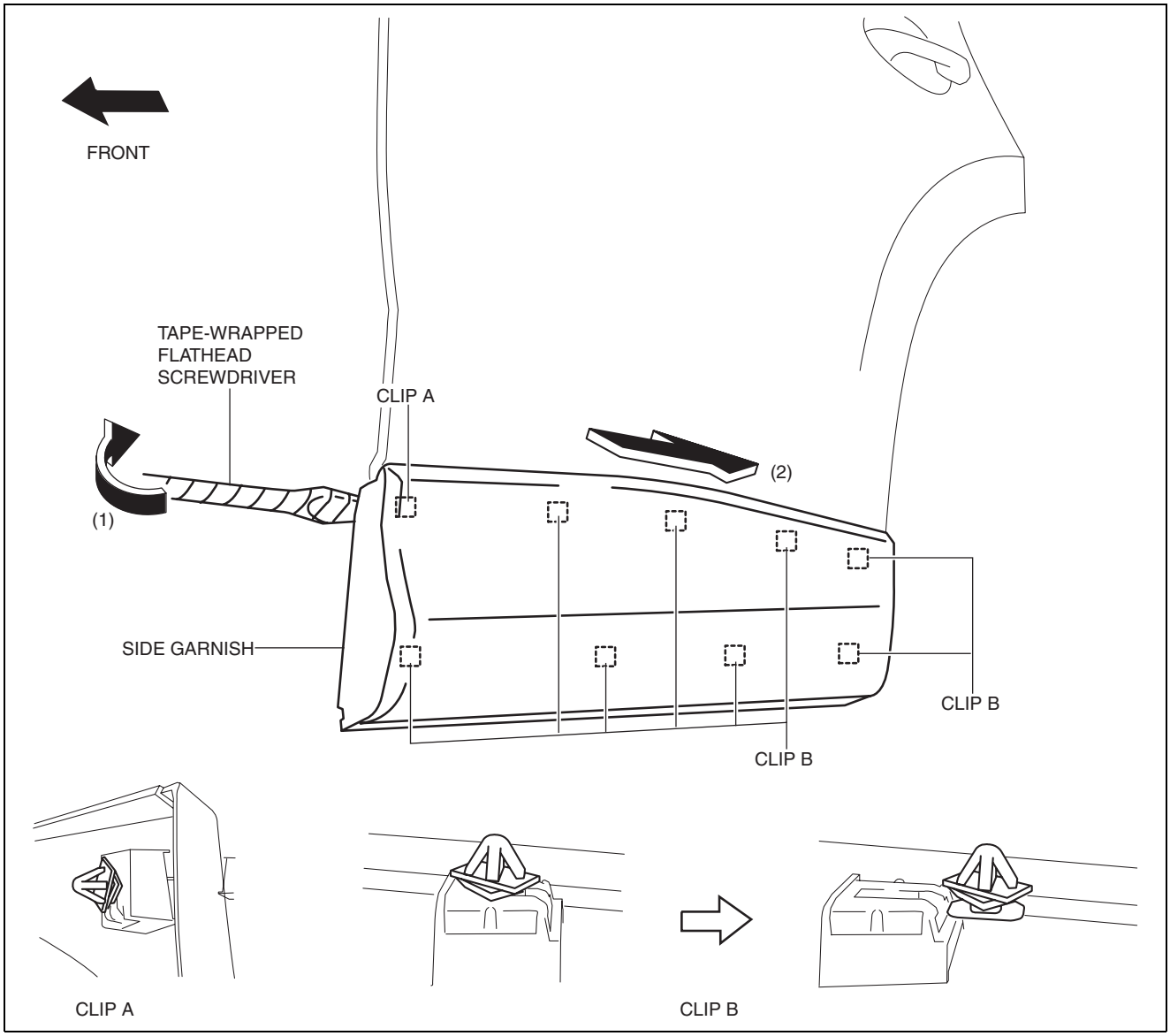

ac5uuw00001730

2. Slide the side garnish in the direction of the arrow (2) shown in the figure and remove clips B from side garnish.
3. Install clips B to the body.
4. When reusing the side garnish, install clip A and B to the body.

SIDE GARNISH INSTALLATION

id091600453400

1. Install clip A and then clips B to the vehicle from the front side.

EXTERIOR TRIM

Front

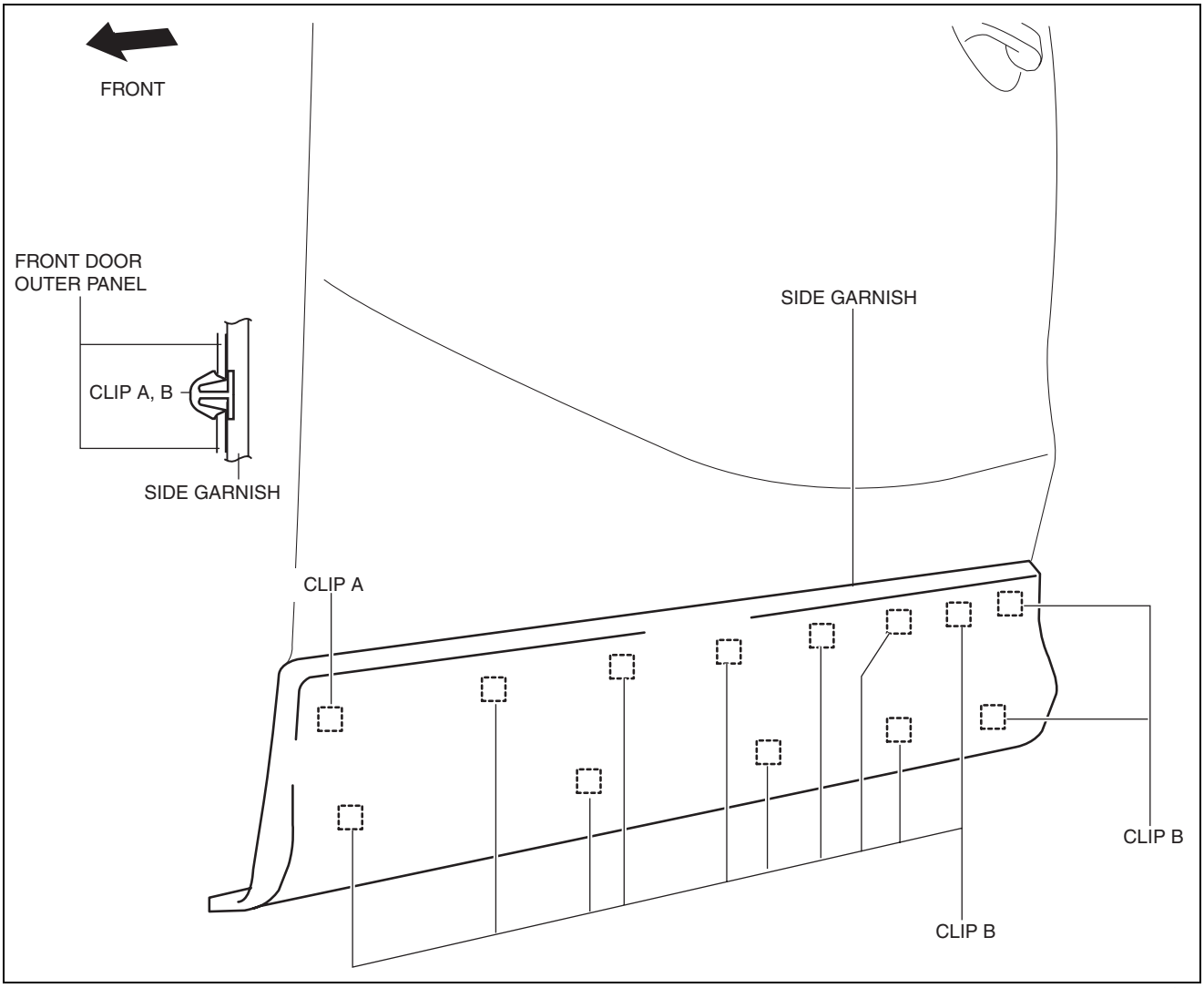

ac5uuw00001727

EXTERIOR TRIM

Rear

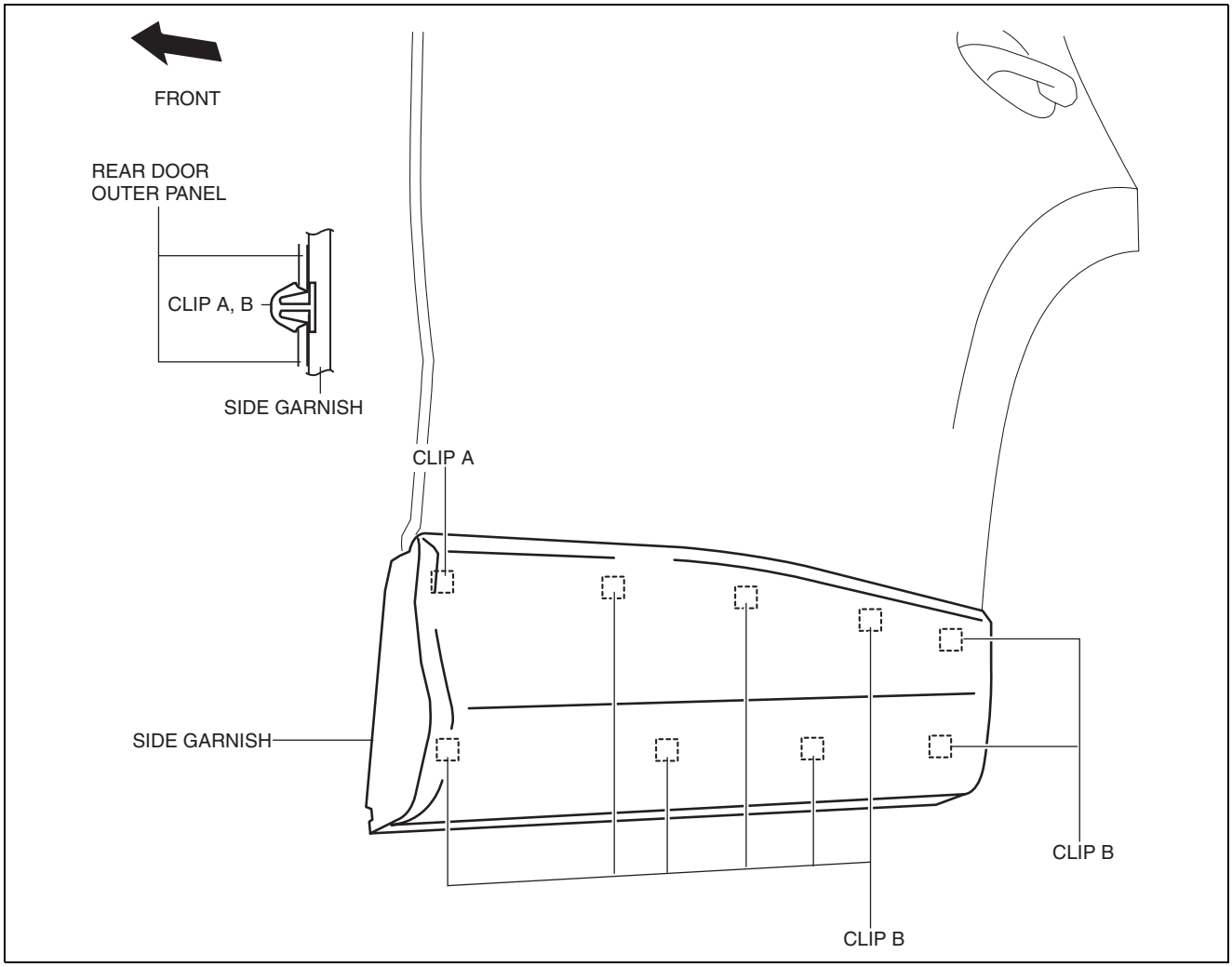

ac5uuw00001728

ROOF MOLDING REMOVAL

id091600447800

1. Insert a tape-wrapped flathead screwdriver in the position shown in the figure.

EXTERIOR TRIM

2. Rotate a tape-wrapped flathead screwdriver in the direction of the arrow in the order of (1), (2) shown in the figure and remove the roof molding from the front T-stud.

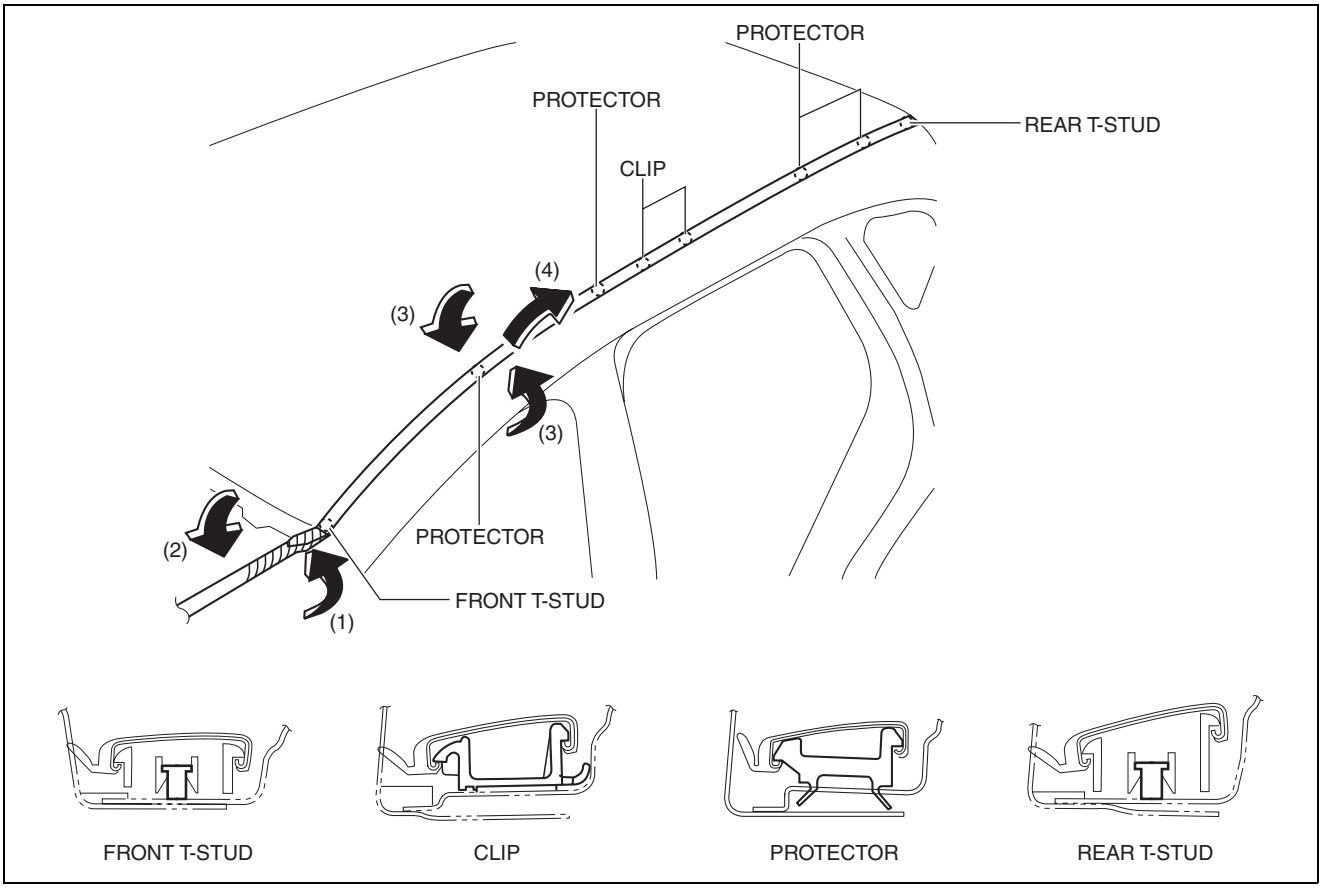

ac5uuw00002036

3. Rotate the roof molding in the direction of the arrow (3) shown in the figure, pull up the roof molding in the direction of the arrow (4) while detaching it from clips and protector, rear T-stud and then remove the roof molding.

EXTERIOR TRIM

ROOF MOLDING INSTALLATION

id091600447600

1. Install the roof molding to the front T-studs.

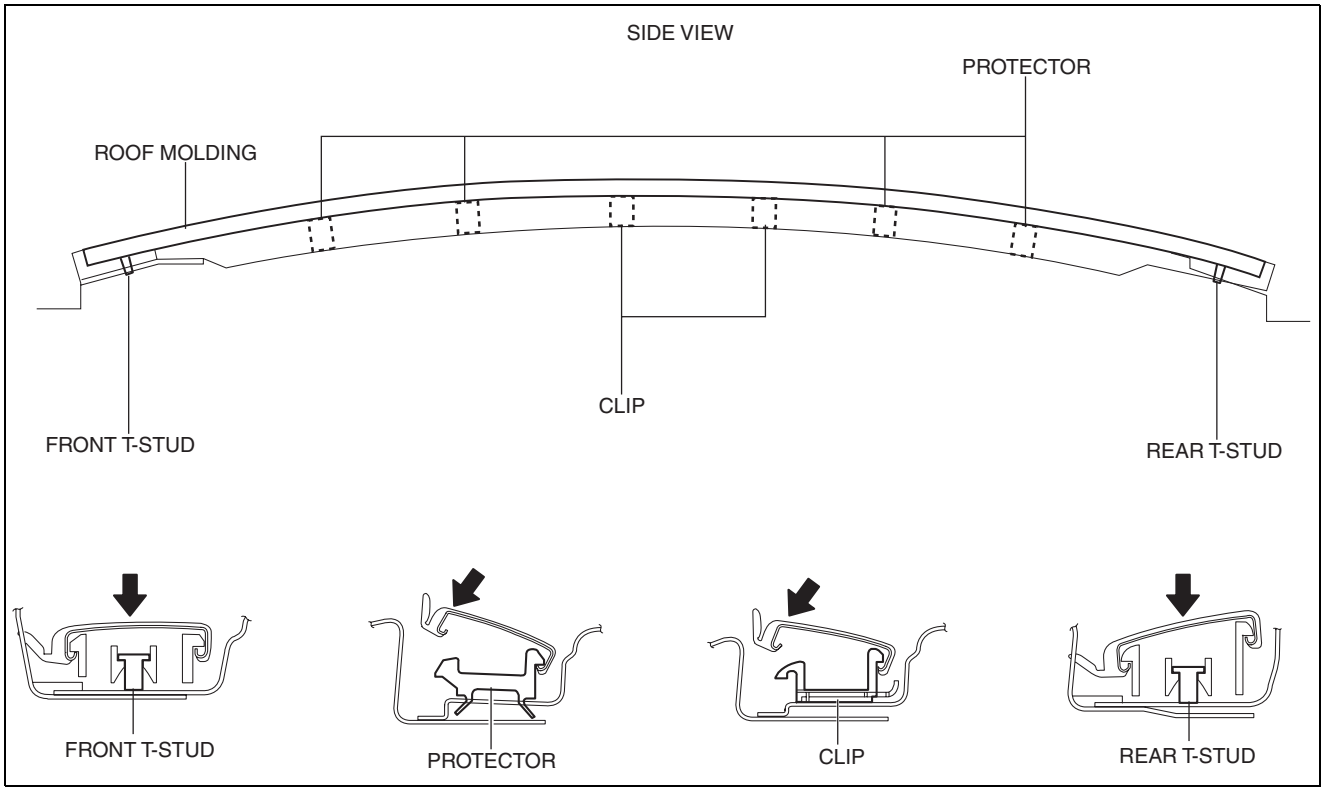

ac5uuw00002035

2. Hook the roof molding to clips and attach the roof molding while pressing it in the direction of the arrow shown in the figure.
3. Install the roof molding to the rear T-stud.
4. Press in the protectors installation positions shown in the figure and firmly adhere them to the body.

ROOF CARRIER BRACKET REMOVAL/INSTALLATION

id091600801700

1. Disconnect the negative battery cable. (See 01-17A-11 NEGATIVE BATTERY CABLE DISCONNECTION/CONNECTION [SKYACTIV-G 2.0].) (See 01-17A-13 NEGATIVE BATTERY CABLE DISCONNECTION/CONNECTION [SKYACTIV-G 2.0 (WITHOUT i-stop)].) (See 01-17B-9 NEGATIVE BATTERY CABLE DISCONNECTION/CONNECTION [SKYACTIV-D 2.2].)
2. Remove the following parts:
   (1) Sunroof seaming welt (with sunroof system) (See 09-15-6 SUNROOF UNIT REMOVAL/INSTALLATION.)
   (2) A-pillar trim (See 09-17-53 A-PILLAR TRIM REMOVAL/INSTALLATION.)
   (3) Map light (See 09-18-95 MAP LIGHT REMOVAL/INSTALLATION.)
   (4) Sunvisor (See 09-17-93 SUNVISOR REMOVAL/INSTALLATION.)
   (5) Front scuff plate (See 09-17-61 FRONT SCUFF PLATE REMOVAL/INSTALLATION.)
   (6) Rear scuff plate (See 09-17-63 REAR SCUFF PLATE REMOVAL/INSTALLATION.)
   (7) B-pillar lower trim (See 09-17-57 B-PILLAR LOWER TRIM REMOVAL/INSTALLATION.)
   (8) Adjust anchor cover (See 08-11-2 FRONT SEAT BELT REMOVAL/INSTALLATION.)
   (9) Upper anchor installation bolt on the seat belt (See 08-11-2 FRONT SEAT BELT REMOVAL/INSTALLATION.)
   (10) B-pillar upper trim (See 09-17-58 B-PILLAR UPPER TRIM REMOVAL/INSTALLATION.)
   (11) Assist handle (See 09-17-91 ASSIST HANDLE REMOVAL/INSTALLATION.)
   (12) Trunk board (See 09-17-85 TRUNK BOARD REMOVAL/INSTALLATION.)
   (13) Trunk end trim (See 09-17-78 TRUNK END TRIM REMOVAL/INSTALLATION.)
   (14) Trunk side trim (See 09-17-80 TRUNK SIDE TRIM REMOVAL/INSTALLATION.)
   (15) D-pillar trim (See 09-17-60 D-PILLAR TRIM REMOVAL/INSTALLATION.)
   (16) C-pillar trim (See 09-17-59 C-PILLAR TRIM REMOVAL/INSTALLATION.)
   (17) Headliner (See 09-17-94 HEADLINER REMOVAL/INSTALLATION.)

EXTERIOR TRIM

3. Remove nuts.

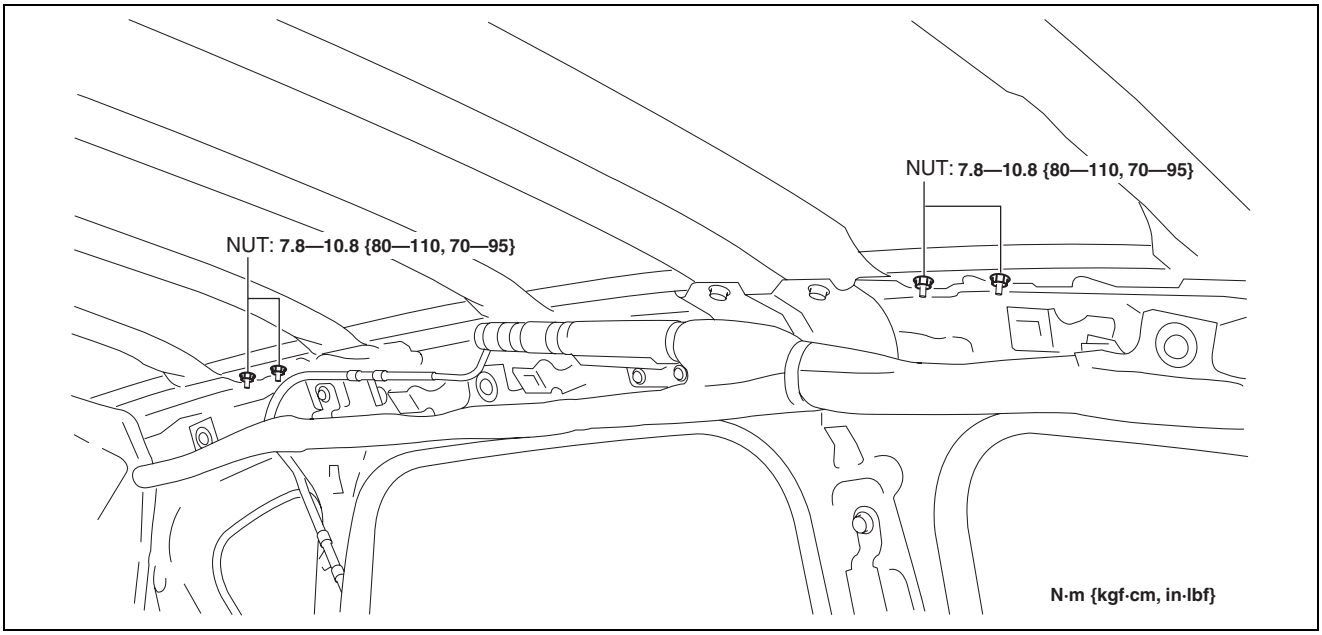

ac5wzw0000302

4. Remove the roof carrier brackets.

5. Install in the reverse order of removal.

Note
- Install the roof carrier bracket so that the arrow on it faces inward.

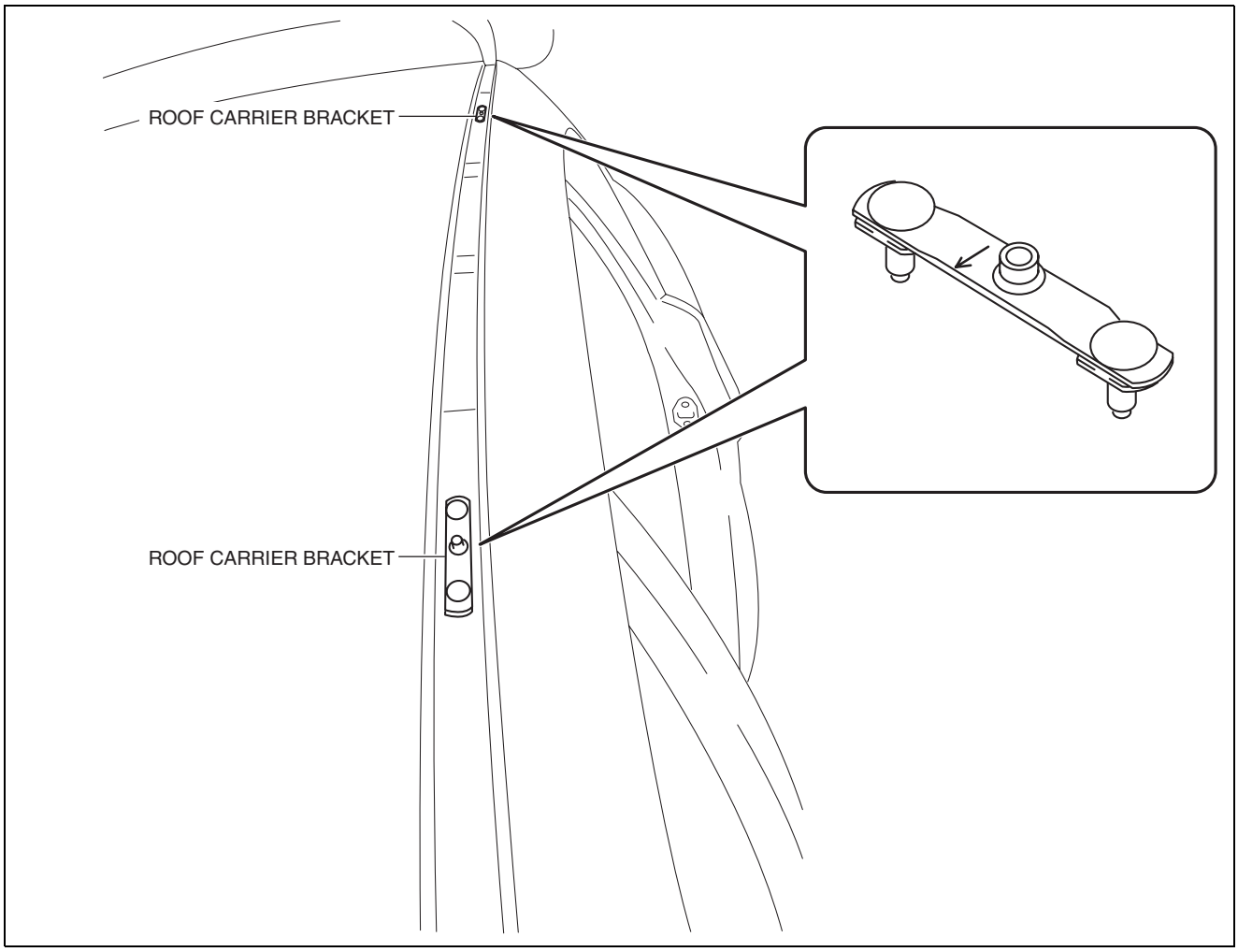

ac5wzw0000230

REAR SPOILER REMOVAL/INSTALLATION

id091600801600

Removal

Warning
- **Using a utility knife with bare hands can cause injury. Always wear gloves when using a utility knife.**

1. Remove the liftgate upper trim (See 09-17-87 LIFTGATE UPPER TRIM REMOVAL/INSTALLATION.)

EXTERIOR TRIM

2. Remove caps A.

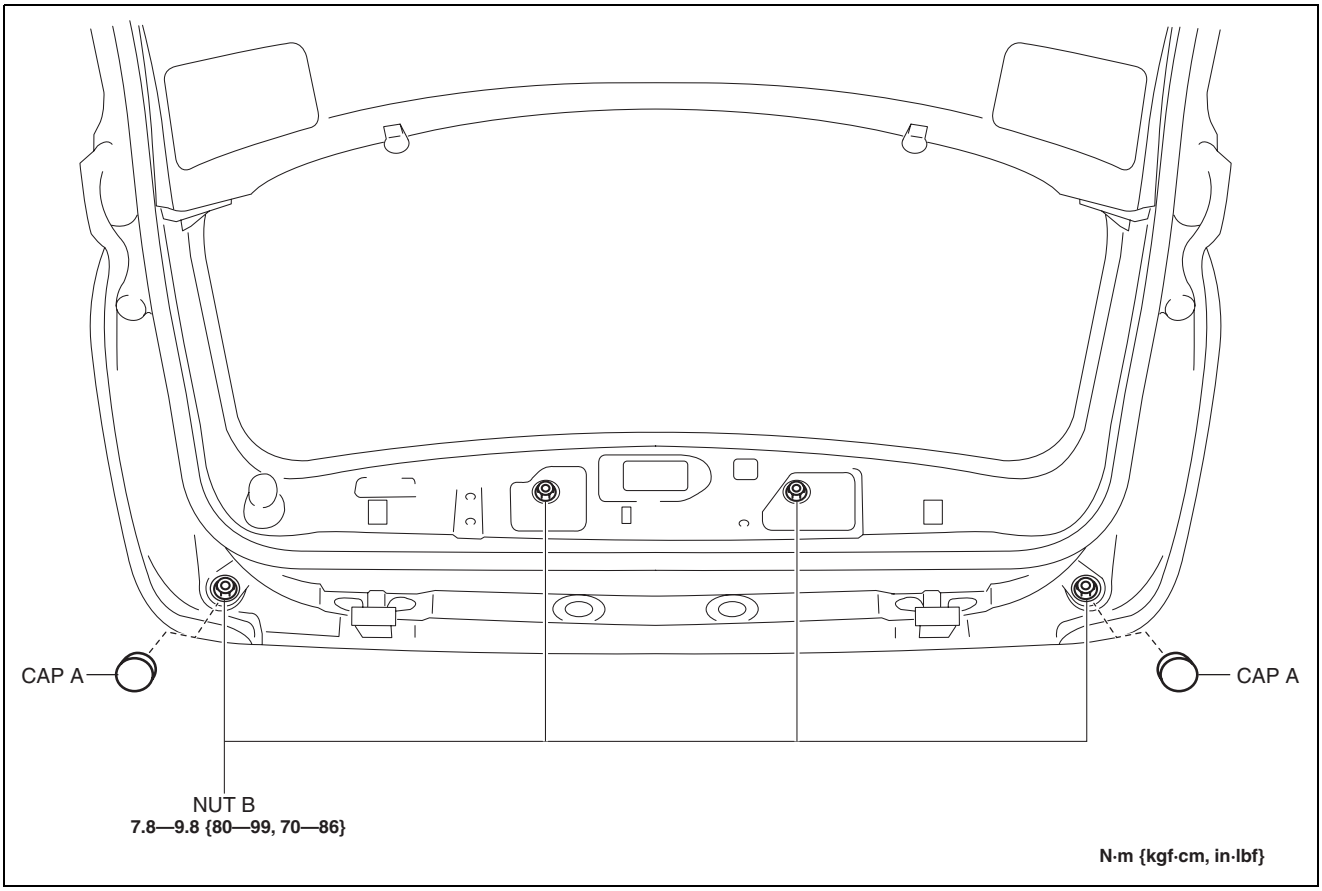

ac5uuw00002038

3. Remove nuts B.
4. Attach a piece of wire between the liftgate striker and liftgate latch to hold the liftgate in the half-opened position as shown below.

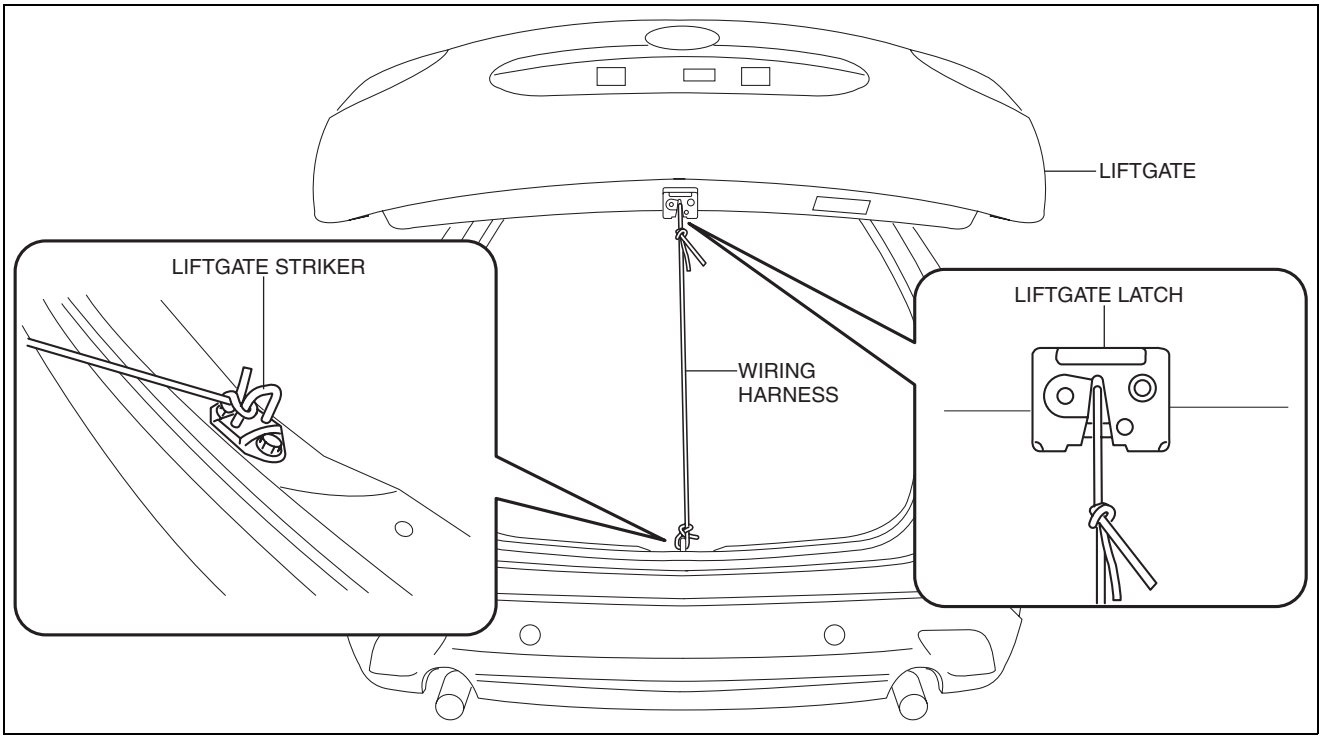

ac5uuw00001734

EXTERIOR TRIM

5. Insert a tape-wrapped flathead screwdriver in the locations shown below to remove clips C and D in the direction of the arrow (1).

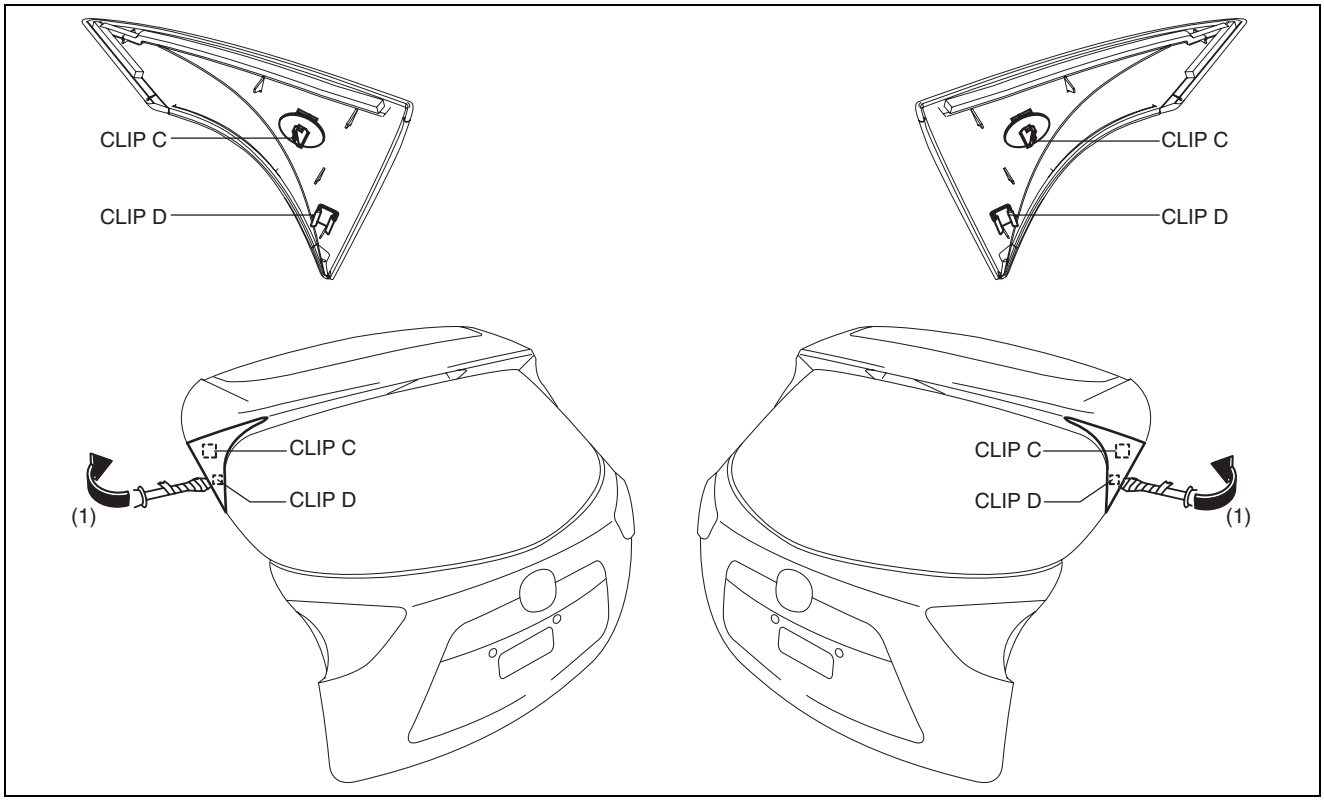

ac5wzw0000208

6. Using a utility knife, carefully remove the double-sided adhesive tape in the locations shown below.

Caution

- **Be careful not the damage the vehicle's paint during tape removal.**

EXTERIOR TRIM

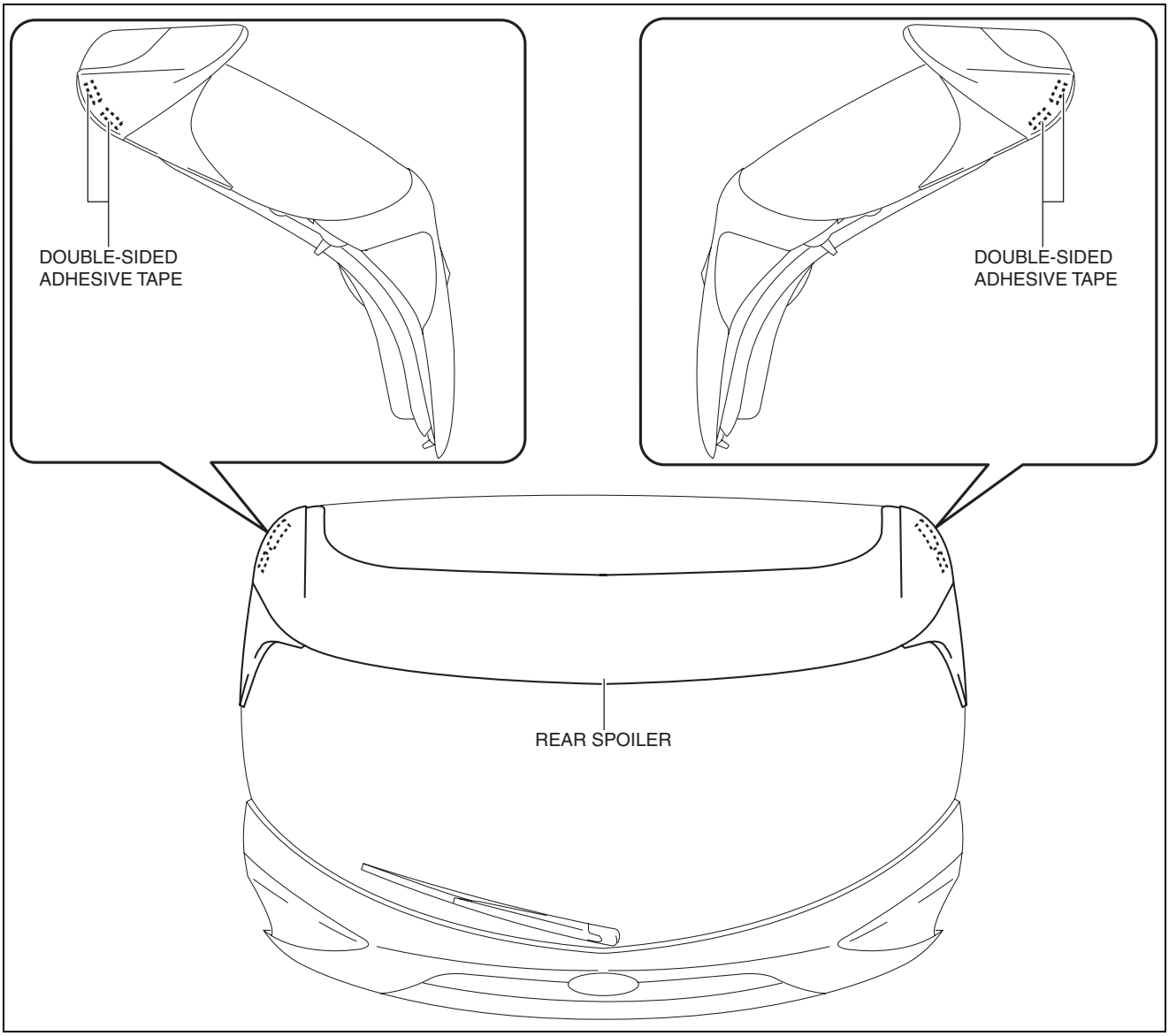

ac5wzw0000208

7. Pull the rear spoiler in the direction of the arrows in the order of (1), (2) and remove it while detaching clips E.

Caution

- **When removing the rear spoiler clips E, the rear spoiler may fall and be damaged. Perform the rear spoiler clip removal using two people.**

EXTERIOR TRIM

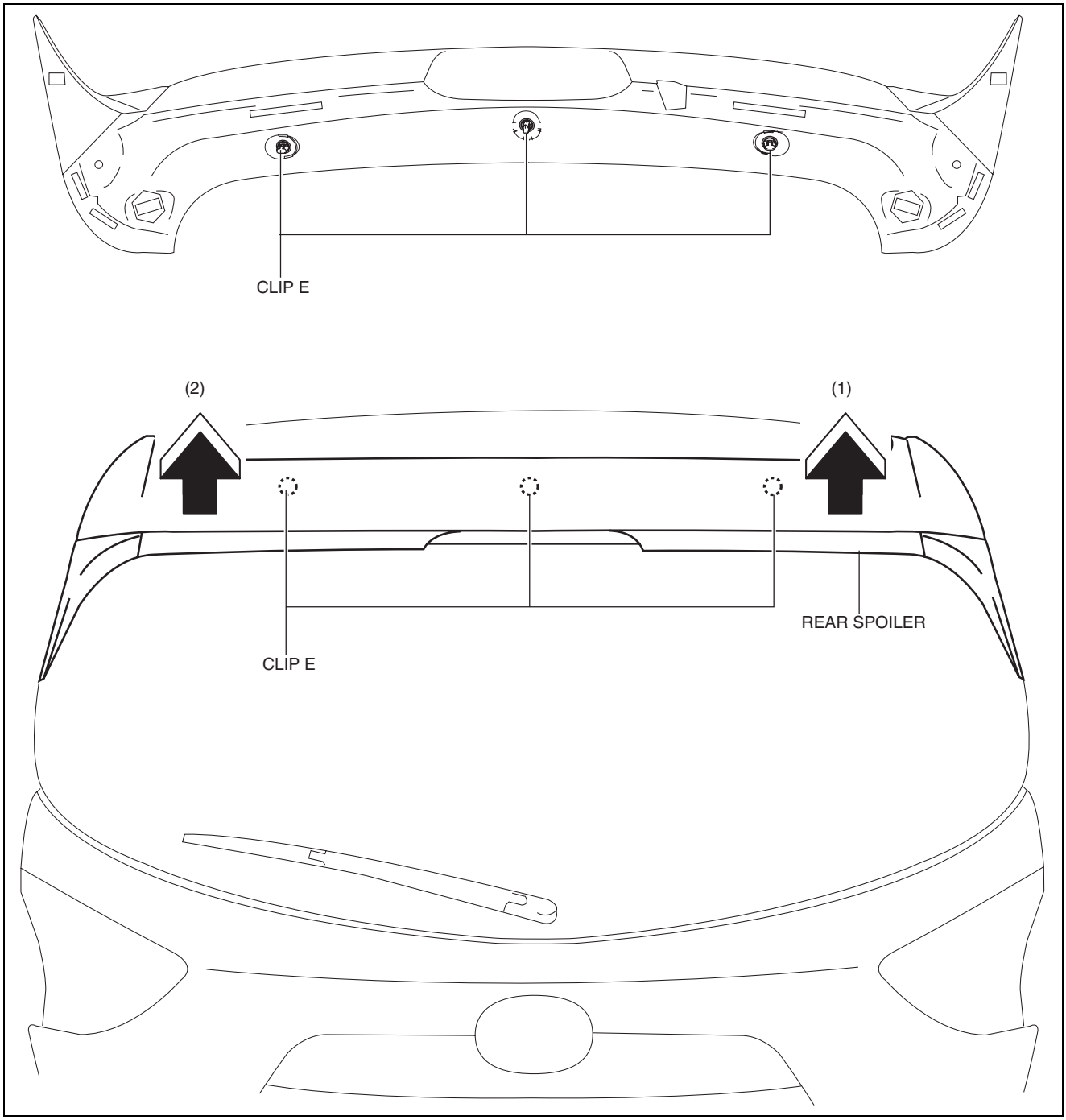

ac5wzw0000208

Installation

Note
- To facilitate the procedure after rear spoiler installation, peel the protective tape adhered during removal before installing the rear spoiler.

1. When a rear spoiler is to be reused, perform the following procedure:
   (1) Remove the packing and protector remaining on the rear spoiler after removal.
   (2) Remove any grease and dirt from the packing and protector affixing area.
   (3) Affix packing and protector to the position shown in the figure.

EXTERIOR TRIM

(4) If the protector is damaged, replace the part that is damaged with a new protector.

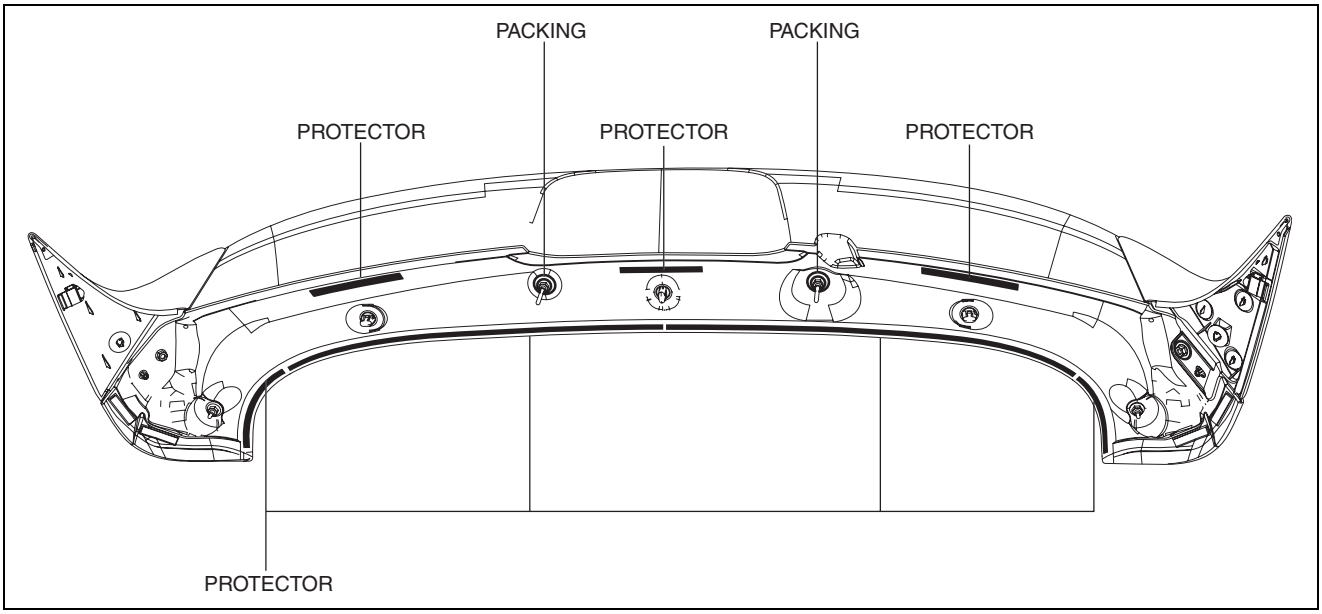

ac5wzw0000208

2. Push the rear spoiler in the direction of the arrows in the order of (1), (2), (3), (4), (5) and install the rear spoiler while install clips C, D and E.

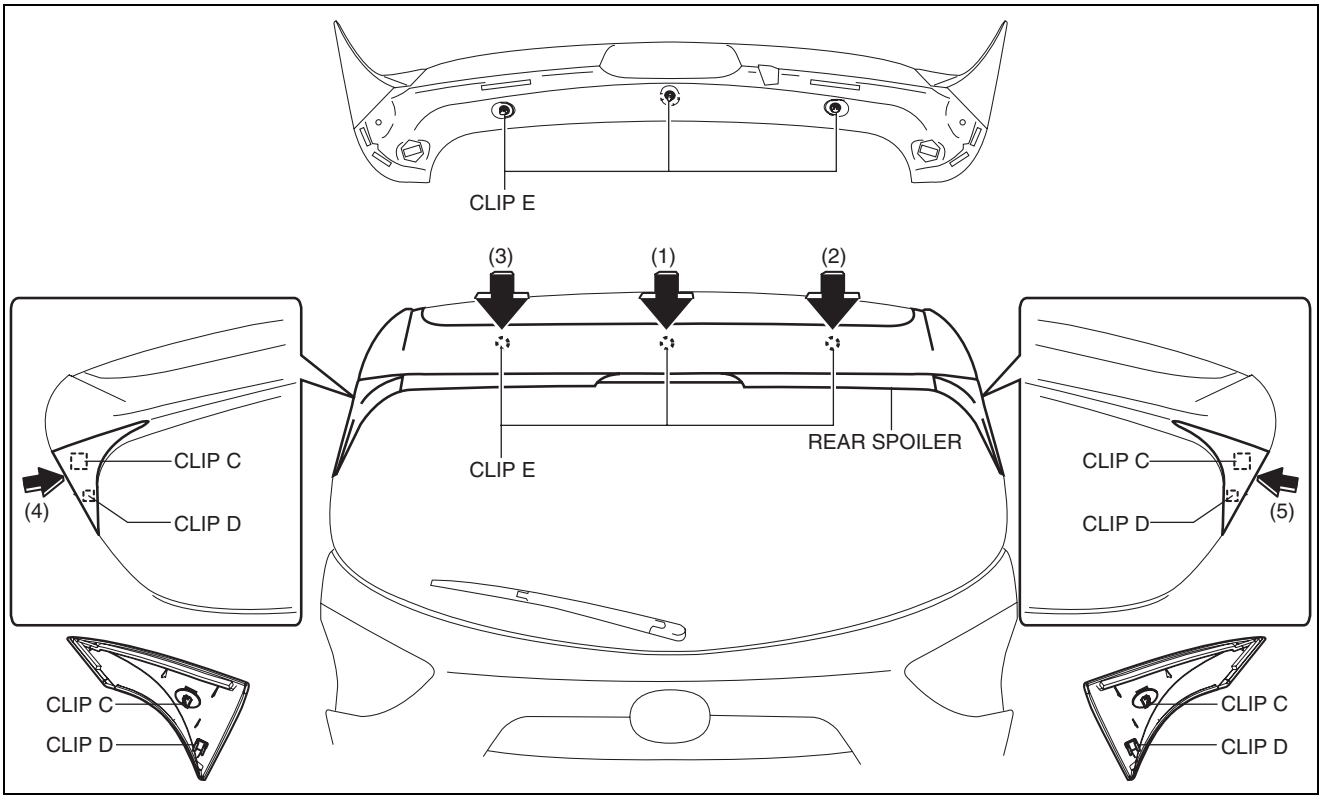

ac5wzw0000462

EXTERIOR TRIM

3. Install nuts B.

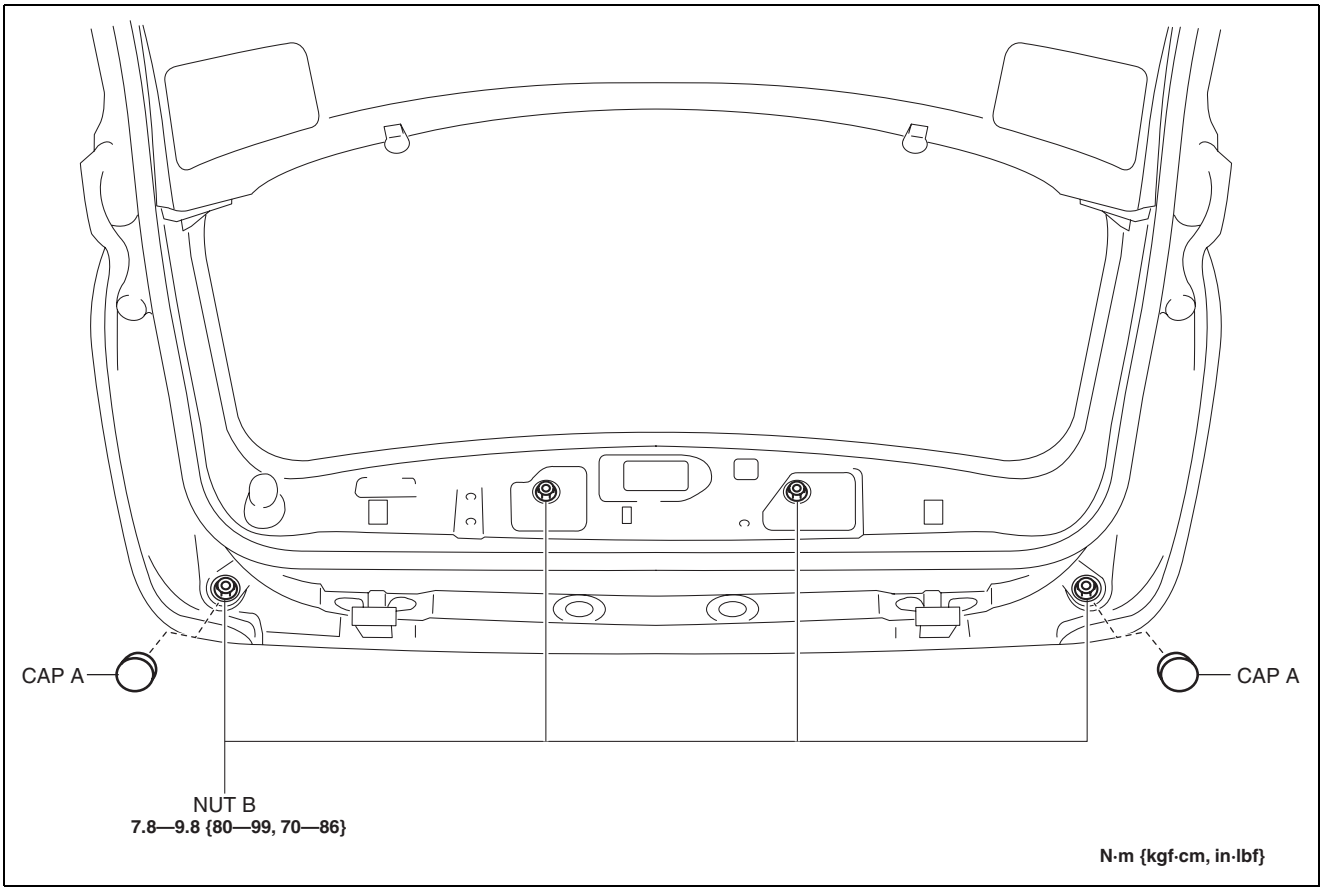

ac5uuw00002038

4. Install caps A.
5. Install the following parts:
   (1) Liftgate upper trim (See 09-17-87 LIFTGATE UPPER TRIM REMOVAL/INSTALLATION.)
   (2) Liftgate side trim (See 09-17-87 LIFTGATE SIDE TRIM REMOVAL/INSTALLATION.)

EXTERIOR TRIM

FRONT UNDER COVER No.1 REMOVAL/INSTALLATION

id091600888800

1. Remove bolts A.

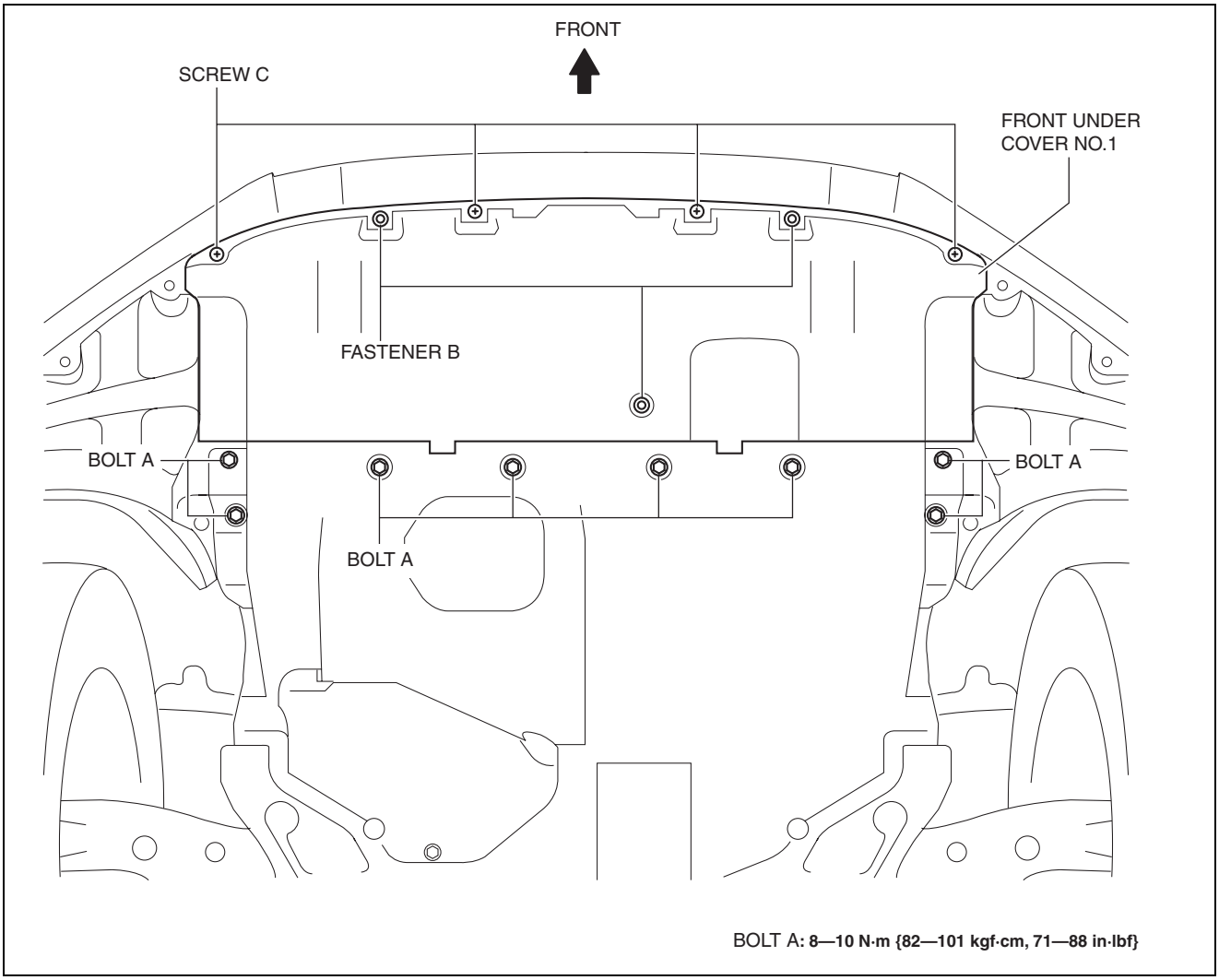

ac5wzw0000129

2. Remove fasteners B.
3. Remove screws C.

4. Remove the front under cover No.1 in the direction of the arrow in the order of (1), (2) shown in the figure while detaching the guide D.

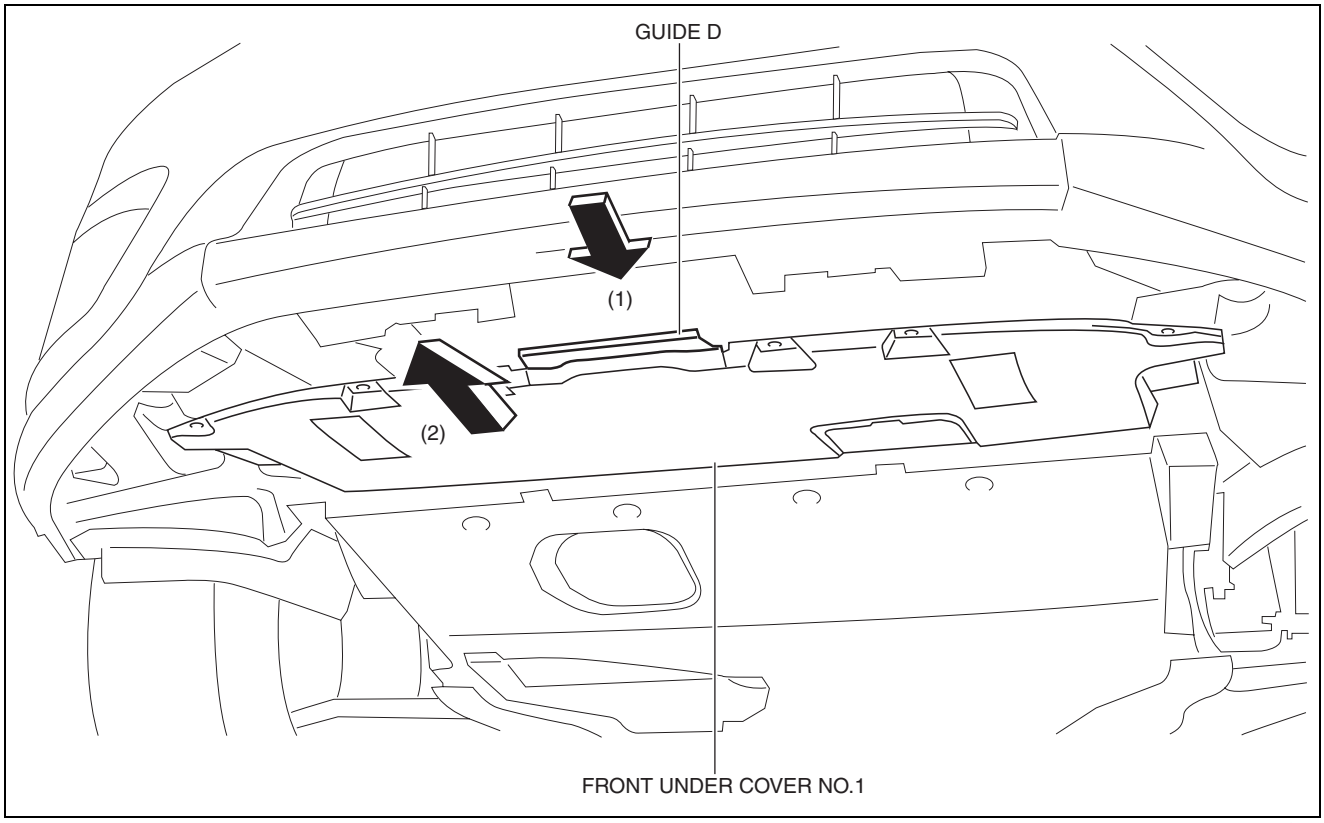

ac5uuw00001738

5. Install in the reverse order of removal.

FRONT UNDER COVER No.2 REMOVAL/INSTALLATION

id091600888900

1. Lift up the vehicle.
2. Remove the front under cover No.1. (See 09-16-40 FRONT UNDER COVER No.1 REMOVAL/INSTALLATION.)

3. Remove fasteners A.

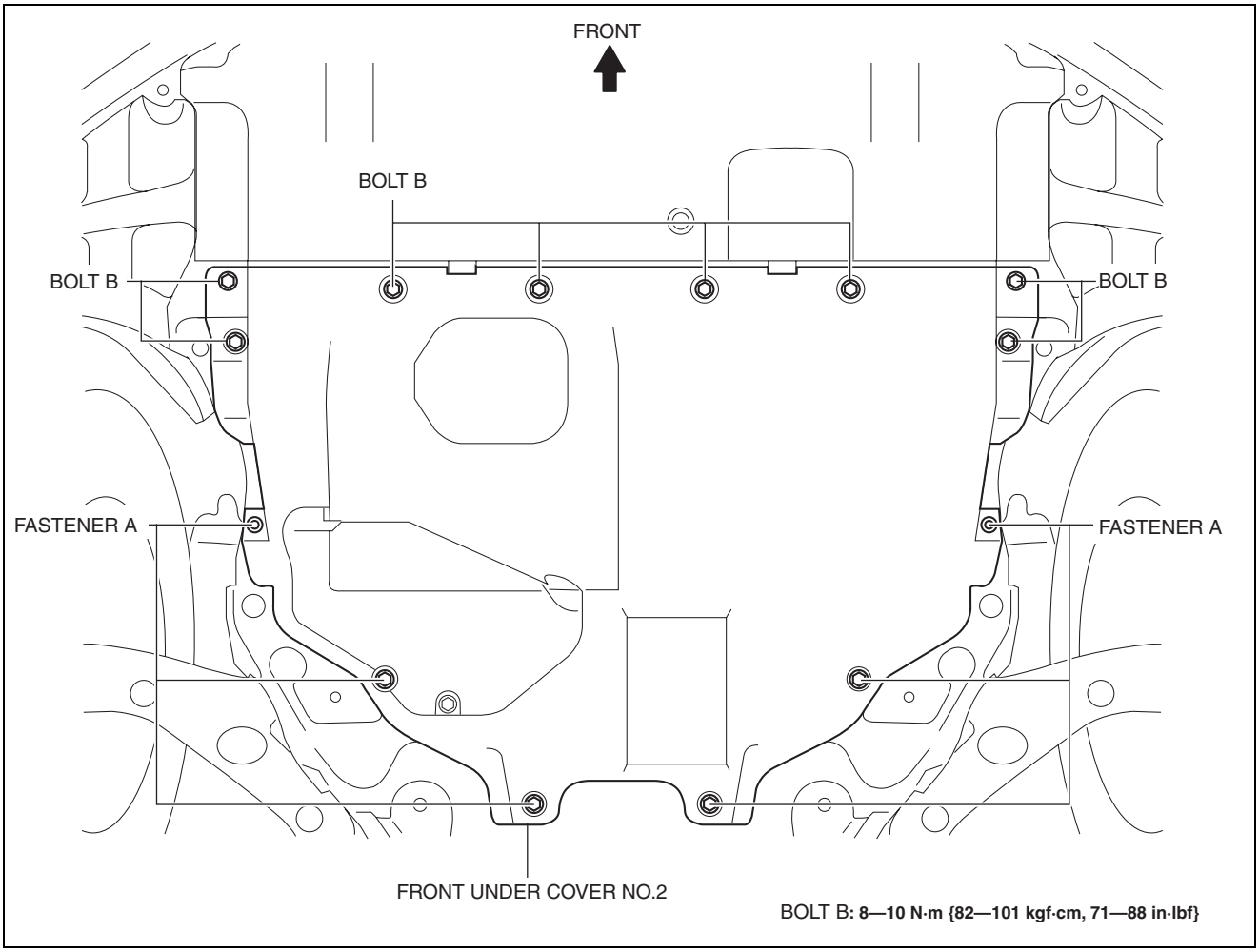

ac5wzw0000303

4. Remove bolts B.
5. Remove the front under cover No.2. (See 09-16-41 FRONT UNDER COVER No.2 REMOVAL/INSTALLATION.)
6. Install in the reverse order of removal.

CENTER UNDER COVER REMOVAL/INSTALLATION

id091600900200

1. Lift up the vehicle.
2. Remove the floor under cover. (See 09-16-44 FLOOR UNDER COVER REMOVAL/INSTALLATION.)
3. Remove bolts.

EXTERIOR TRIM

2WD

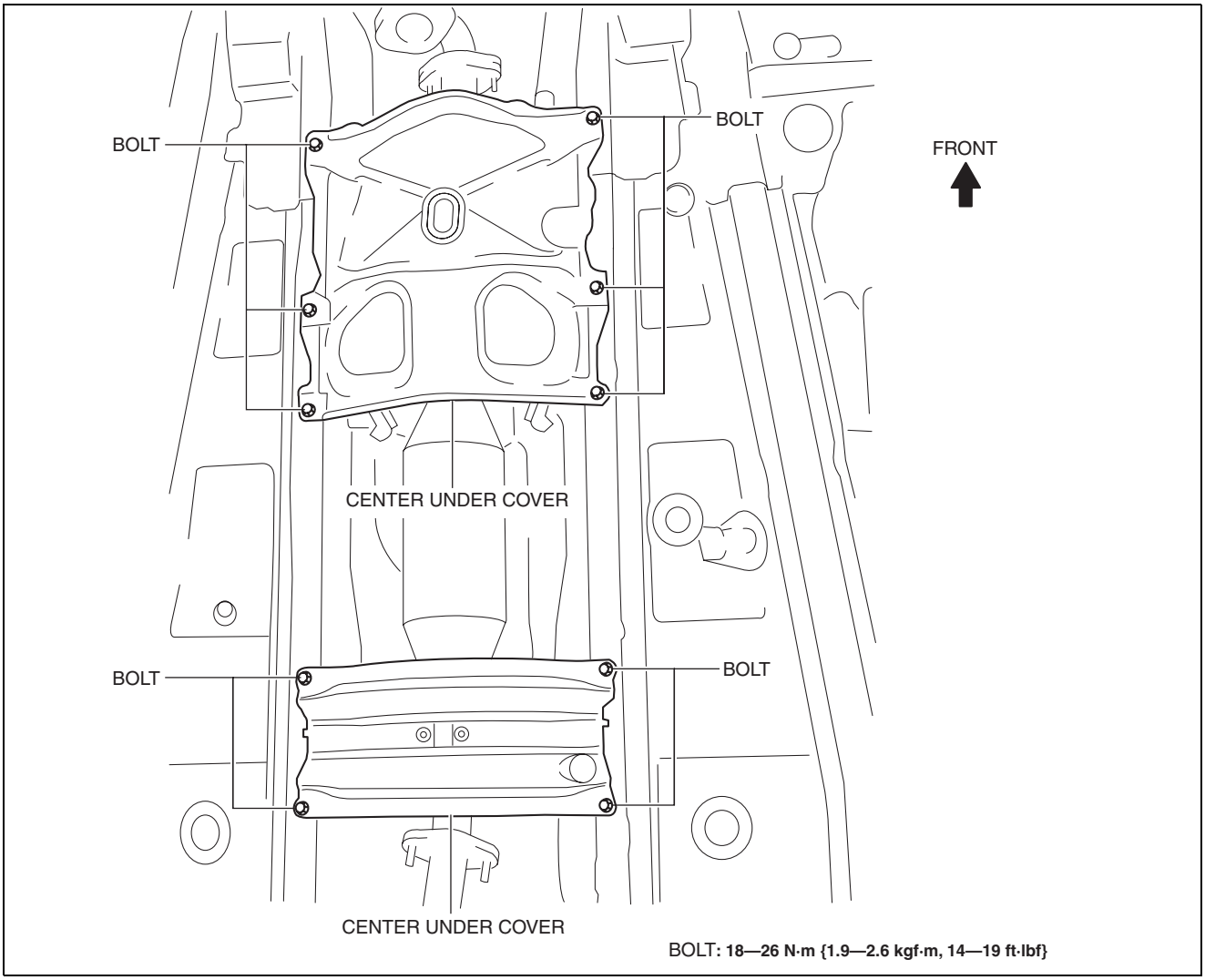

ac5wzw0000129

EXTERIOR TRIM

4WD

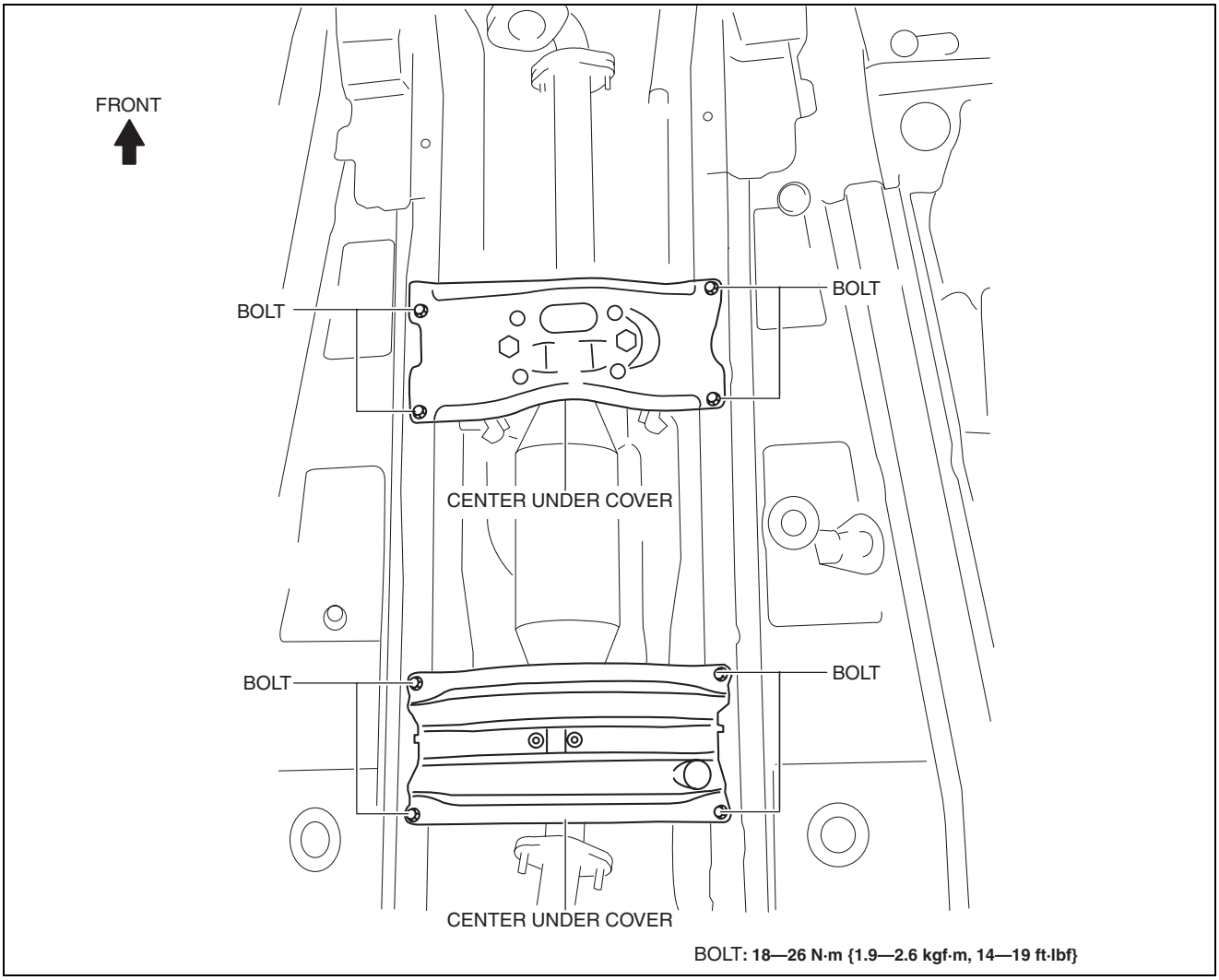

ac5wzw0000129

4. Remove the center under cover.
5. Install in the reverse order of removal.

FLOOR UNDER COVER REMOVAL/INSTALLATION

id091600820200

1. Lift up the vehicle.

EXTERIOR TRIM

2. Remove fasteners A.

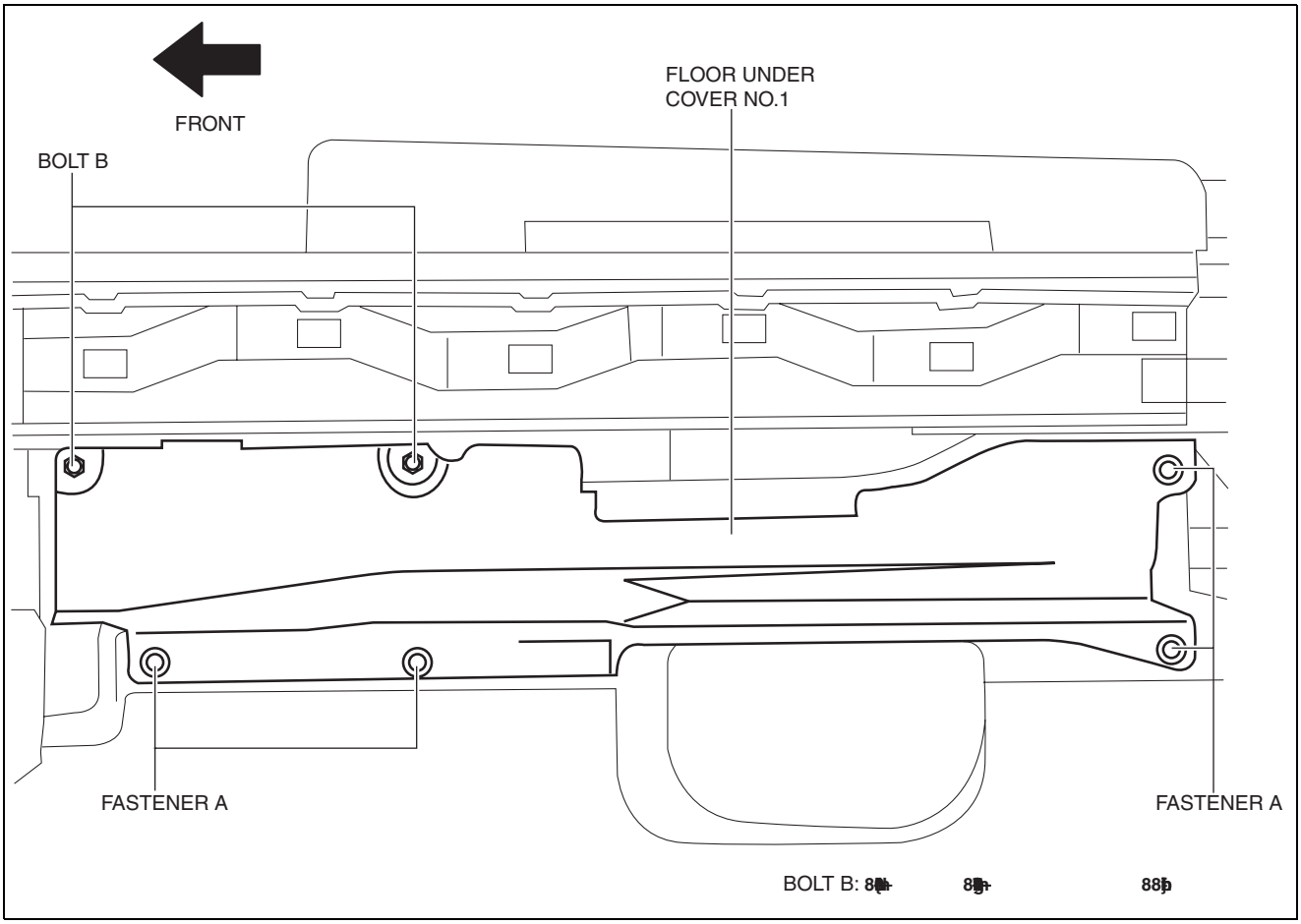

ac5wzw0000302

3. Remove bolts B.
4. Remove the floor under cover No.1.

EXTERIOR TRIM

5. Remove fasteners C.

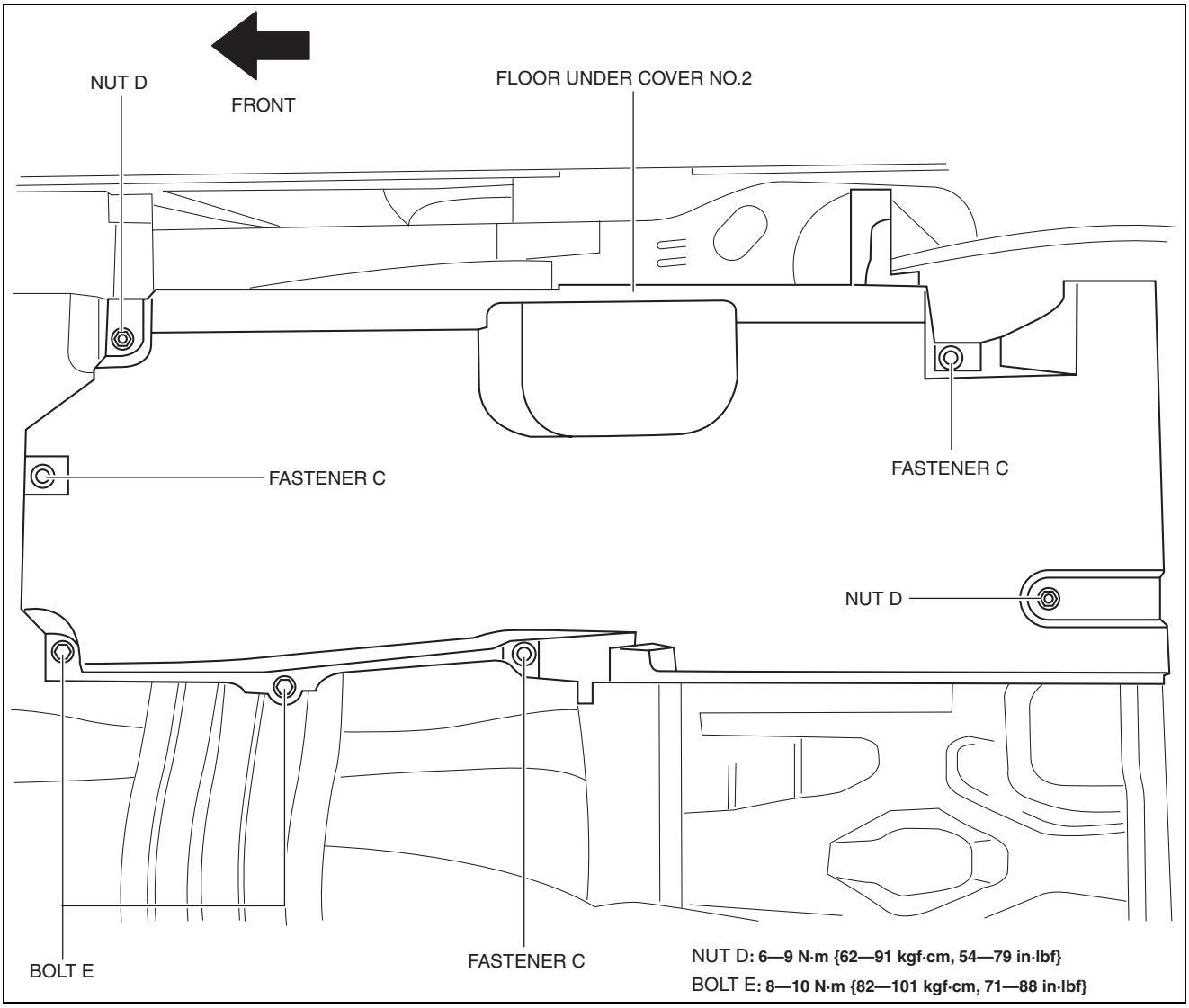

ac5wzw0000302

6. Remove nuts D.
7. Remove bolts E.
8. Remove the floor under cover No.2.

EXTERIOR TRIM

9. Remove bolts F.

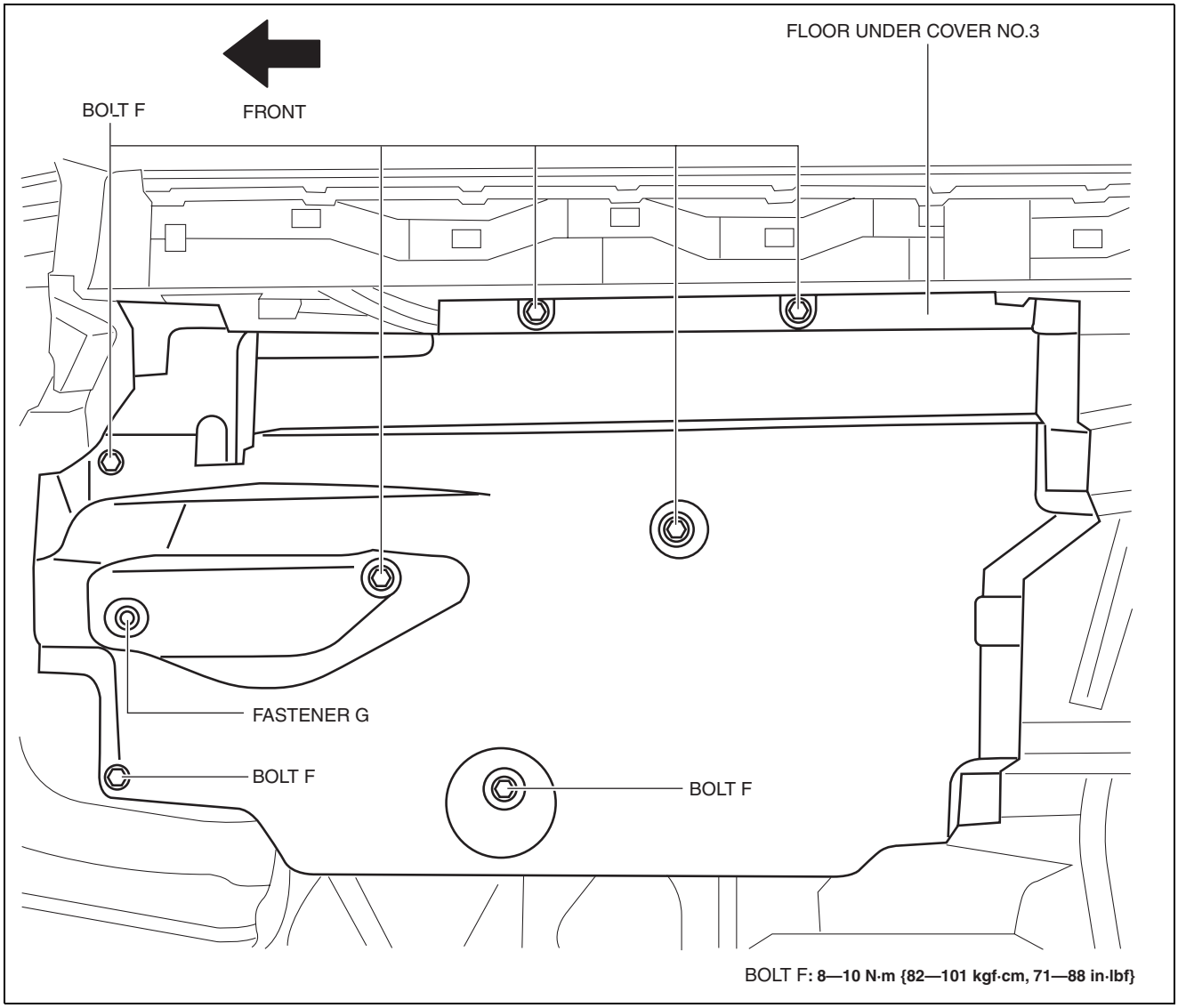

ac5wzw0000302

10. Remove the fastener G.
11. Remove the floor under cover No.3.
12. Install in the reverse order of removal.

MUDGUARD REMOVAL/INSTALLATION

id091600467600

1. Remove the front over fender. (See 09-10-31 FRONT OVER FENDER REMOVAL/INSTALLATION.)

EXTERIOR TRIM

2. Remove screws A.

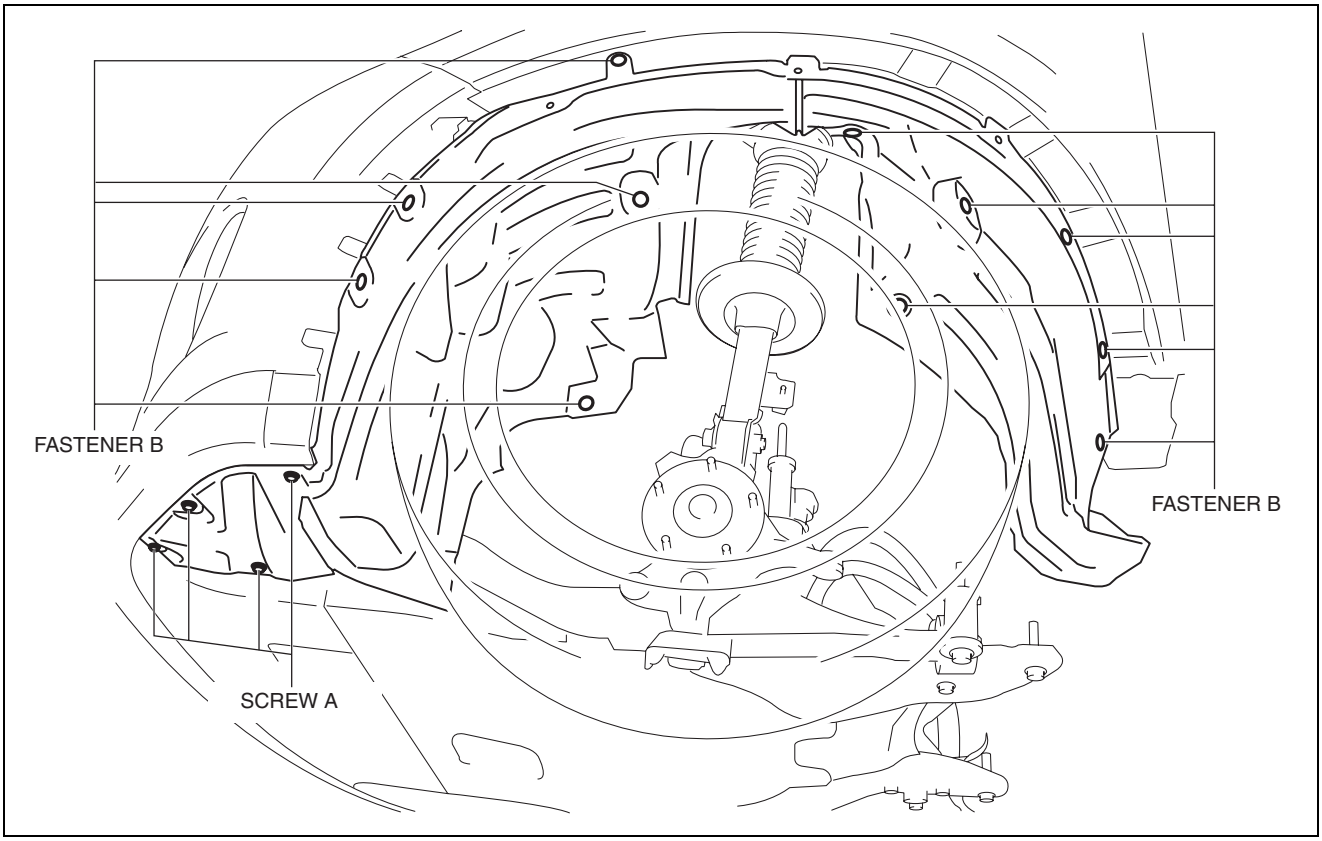

ac5wzw0000302

3. Remove fasteners B.

4. Pull the mudguard in the direction of the arrow shown in the figure.

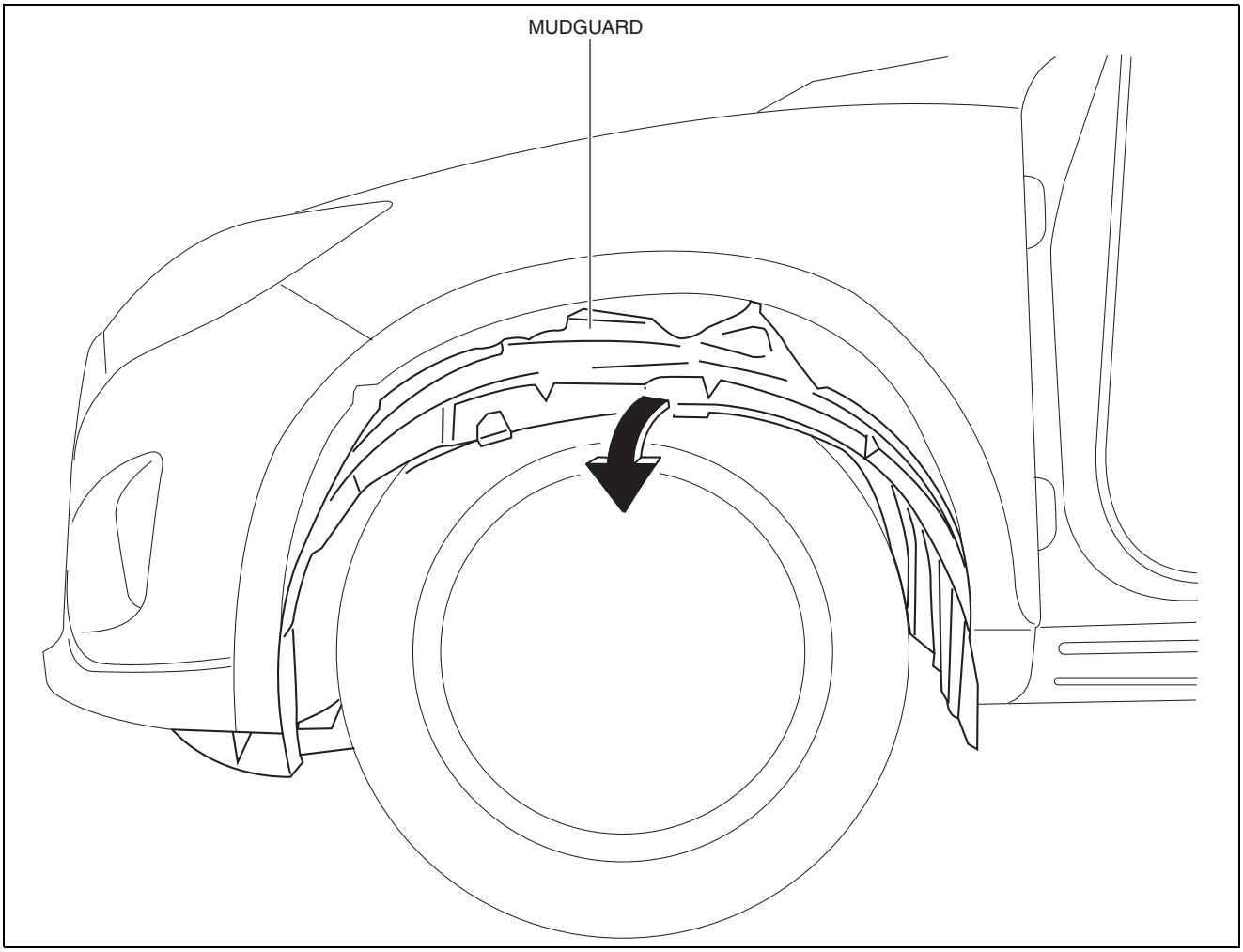

ac5wzw0000127

5. Install in the reverse order of removal.

SPLASH SHIELD REMOVAL/INSTALLATION

id091600808400

Front
Front splash shield No.1

1. Set the mudguard aside. (See 09-16-47 MUDGUARD REMOVAL/INSTALLATION.)

2. Remove fasteners A.

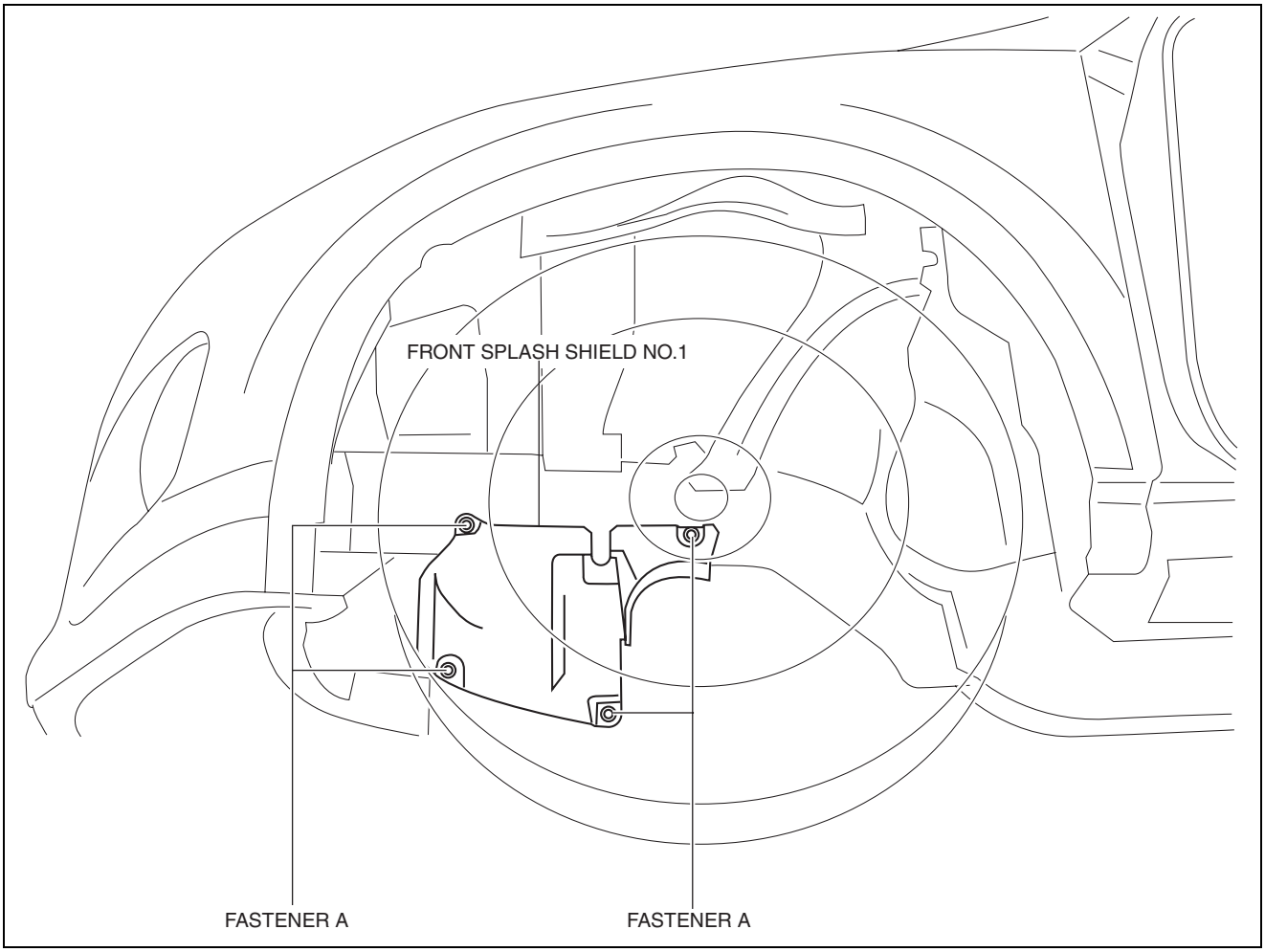

ac5wzw0000128

3. Remove the front splash shield No.1.
4. Install in the reverse order of removal.

EXTERIOR TRIM

Front splash shield No.2

1. Remove fasteners B.

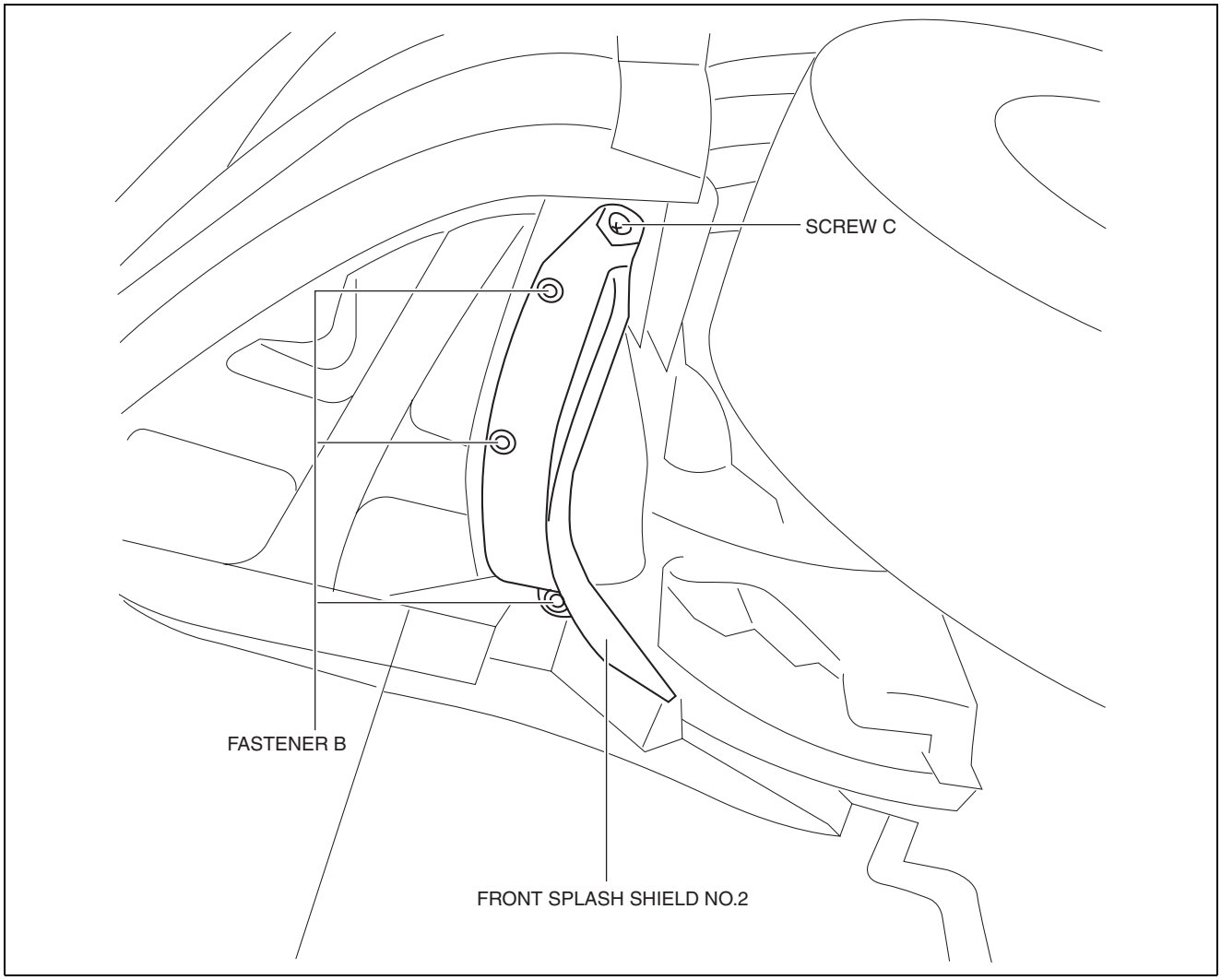

ac5wzw0000128

2. Remove screw C.
3. Remove the front splash shield No.2.
4. Install in the reverse order of removal.

Rear splash shield

1. Set the rear over fender aside. (See 09-10-33 REAR OVER FENDER REMOVAL/INSTALLATION.)

EXTERIOR TRIM

2. Remove fasteners D.

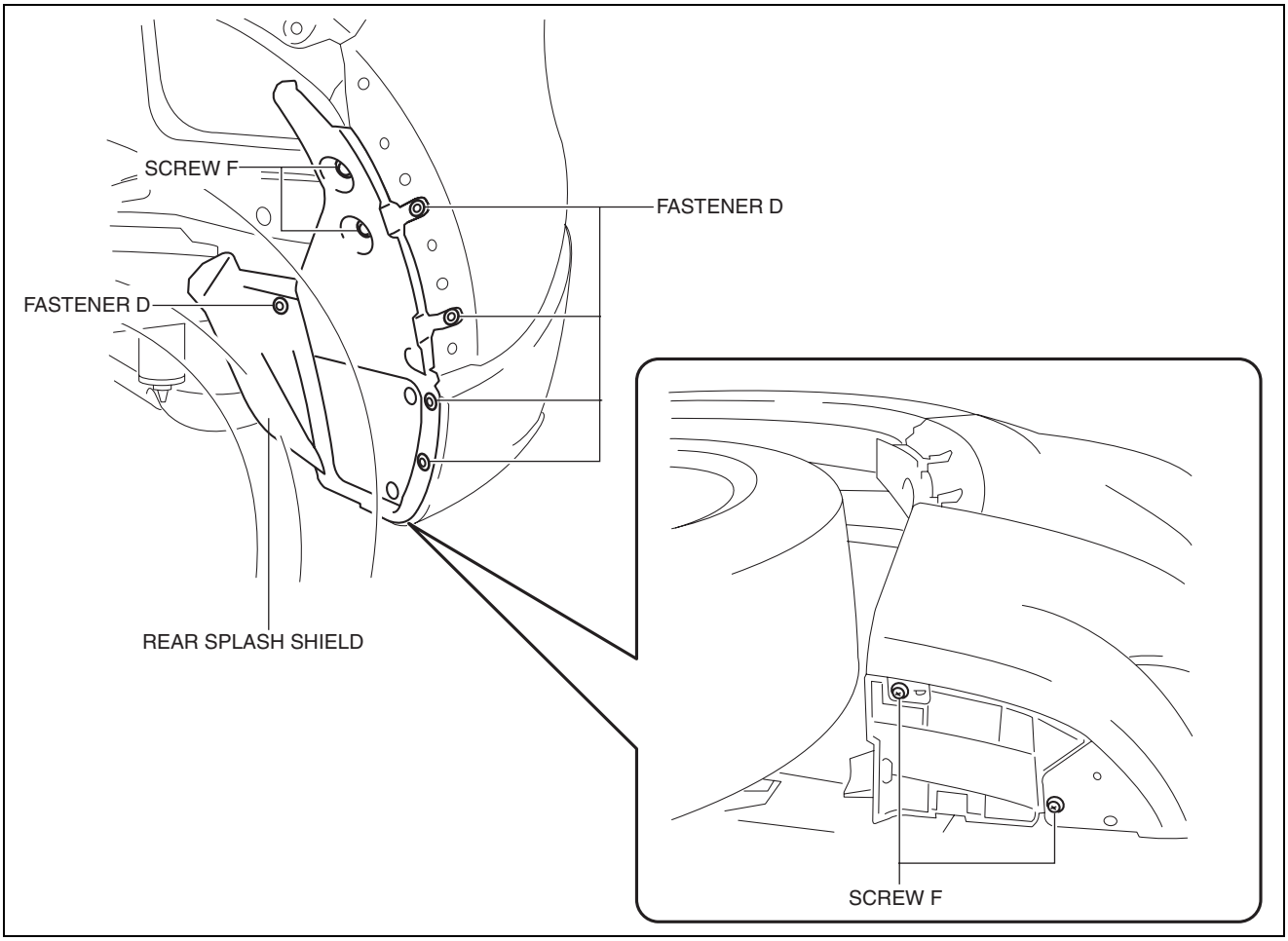

ac5uuw00002039

3. Remove screws F.
4. Remove the rear splash shield.
5. Install in the reverse order of removal.

EXTRACTOR CHAMBER REMOVAL/INSTALLATION

id091600801500

1. Disconnect the negative battery cable. (See 01-17A-11 NEGATIVE BATTERY CABLE DISCONNECTION/CONNECTION [SKYACTIV-G 2.0].) (See 01-17A-13 NEGATIVE BATTERY CABLE DISCONNECTION/CONNECTION [SKYACTIV-G 2.0 (WITHOUT i-stop)].) (See 01-17B-9 NEGATIVE BATTERY CABLE DISCONNECTION/CONNECTION [SKYACTIV-D 2.2].)
2. Remove the following parts:
   (1) Rear splash shield (See 09-16-49 SPLASH SHIELD REMOVAL/INSTALLATION.)
   (2) Rear combination light (See 09-18-54 REAR COMBINATION LIGHT REMOVAL/INSTALLATION.)
   (3) Rear bumper (See 09-10-24 REAR BUMPER REMOVAL/INSTALLATION.)

EXTERIOR TRIM

3. Insert a tape-wrapped flathead screwdriver shown in the figure and remove clips in the direction of arrow (1).

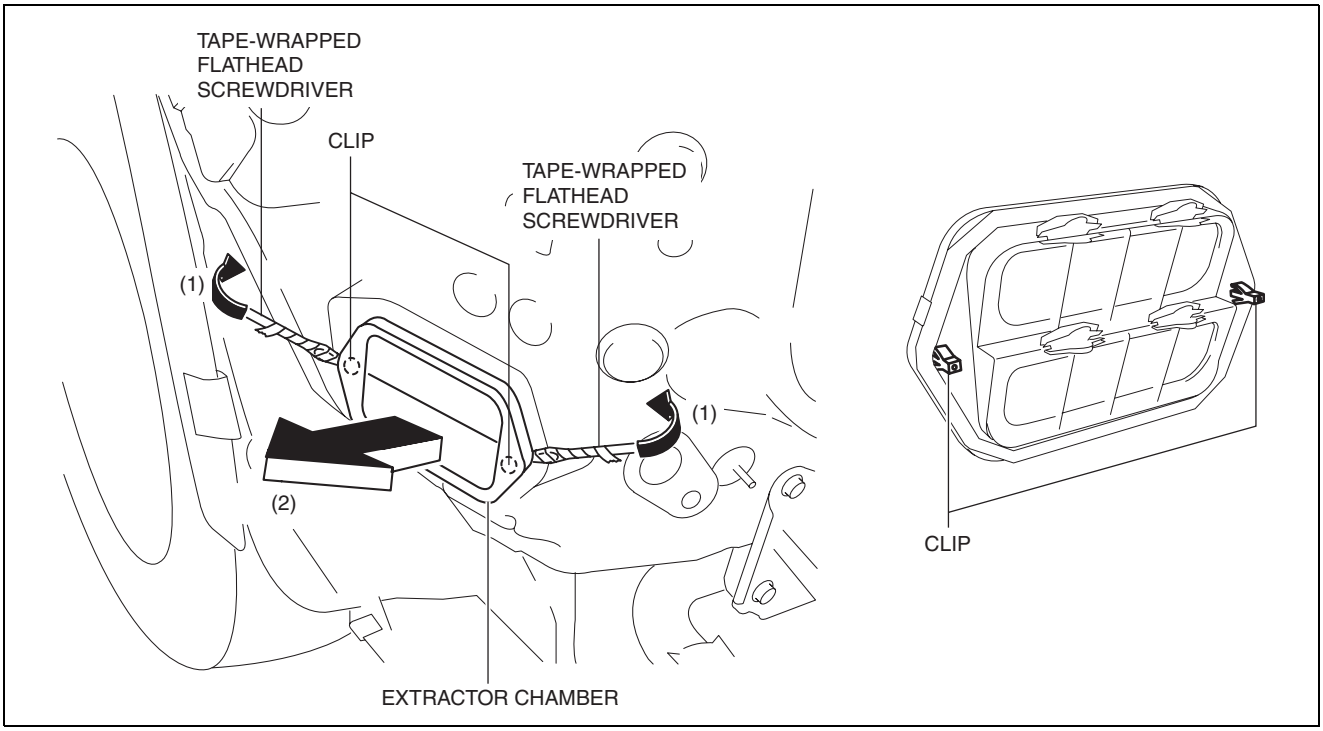

ac5wzw0000127

4. Remove the extractor chamber in the direction of arrow (2).
5. Install in the reverse order of removal.

LIFTGATE GARNISH REMOVAL/INSTALLATION

id091600445800

1. Disconnect the negative battery cable. (See 01-17A-11 NEGATIVE BATTERY CABLE DISCONNECTION/CONNECTION [SKYACTIV-G 2.0].) (See 01-17A-13 NEGATIVE BATTERY CABLE DISCONNECTION/CONNECTION [SKYACTIV-G 2.0 (WITHOUT i-stop)].) (See 01-17B-9 NEGATIVE BATTERY CABLE DISCONNECTION/CONNECTION [SKYACTIV-D 2.2].)
2. Remove the following parts:
   (1) Liftgate upper trim (See 09-17-87 LIFTGATE UPPER TRIM REMOVAL/INSTALLATION.)
   (2) Liftgate side trim (See 09-17-87 LIFTGATE SIDE TRIM REMOVAL/INSTALLATION.)
   (3) Liftgate recess (See 09-17-89 LIFTGATE RECESS REMOVAL/INSTALLATION.)
   (4) Liftgate lower trim (See 09-17-89 LIFTGATE LOWER TRIM REMOVAL/INSTALLATION.)
3. Disconnect the connectors.

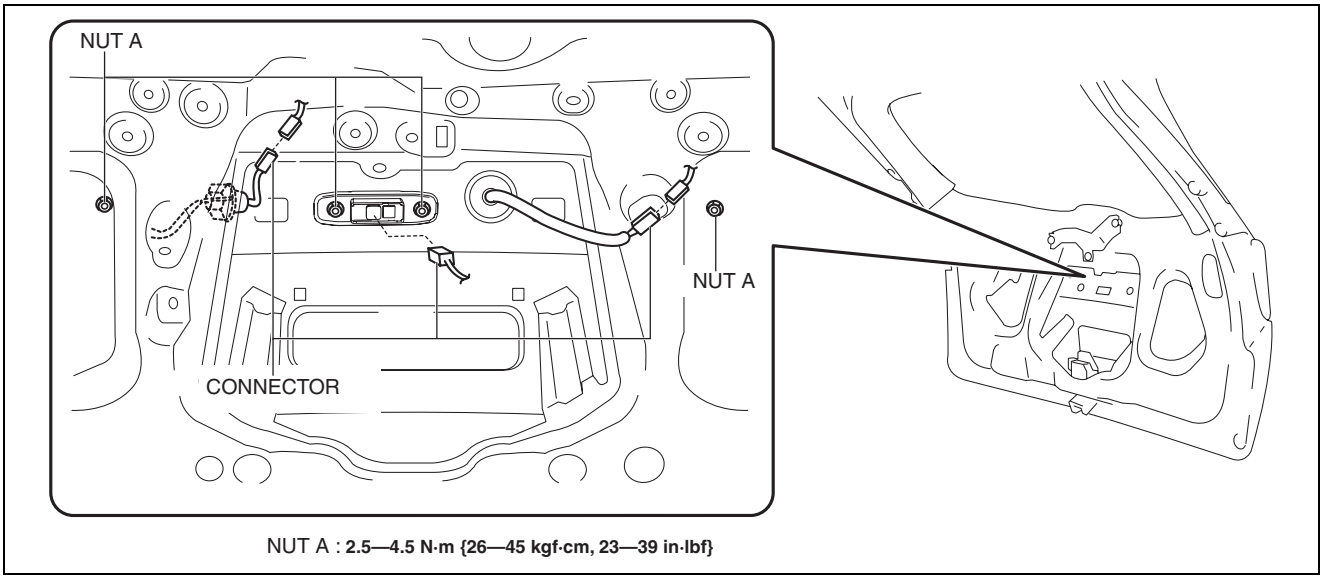

NUT A : **2.5—4.5 N·m {26—45 kgf·cm, 23—39 in·lbf}**

ac5wzw0000303

4. Remove nuts A.

EXTERIOR TRIM

5. Detach clips B shown in the figure.

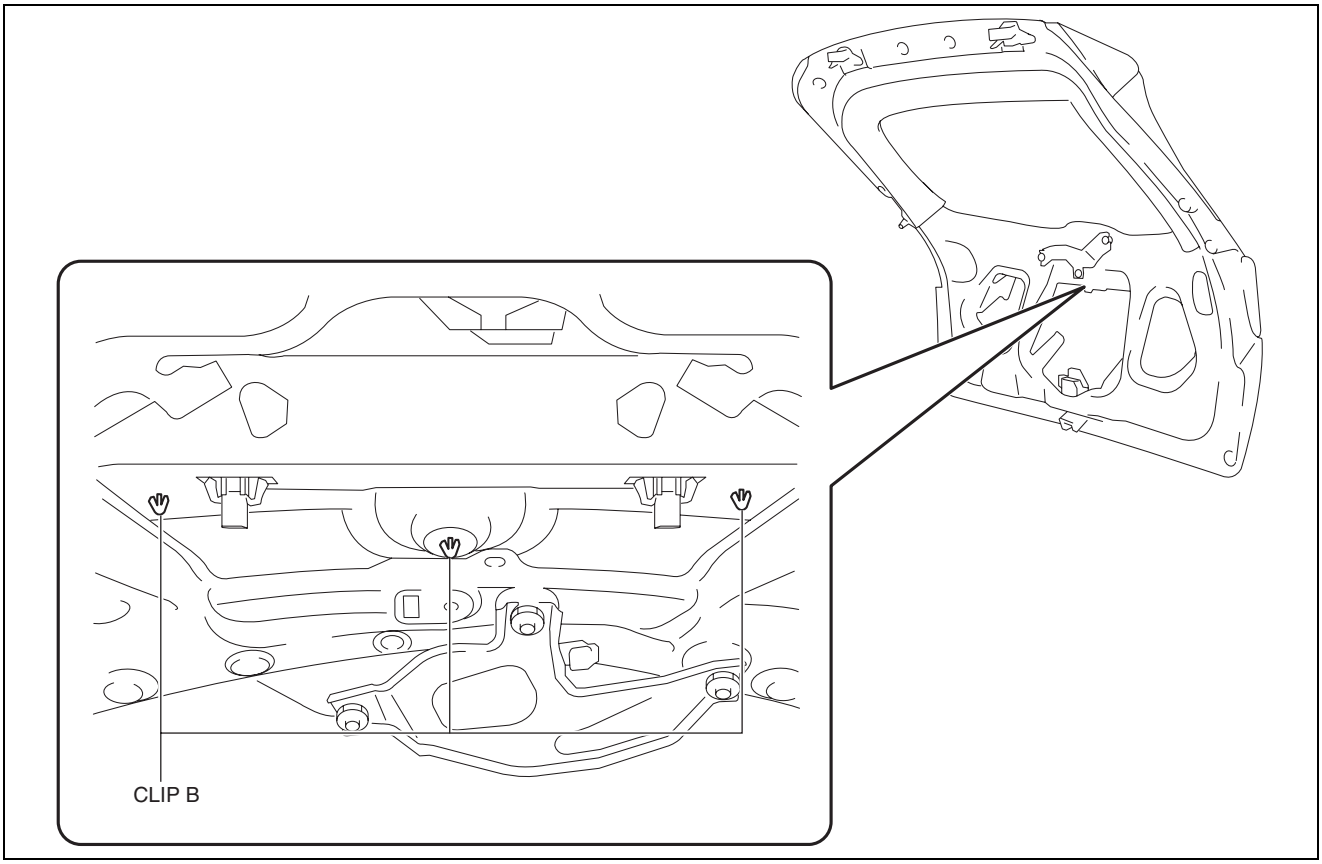

ac5wzw0000126

EXTERIOR TRIM

6. Remove the liftgate garnish shown in the figure.

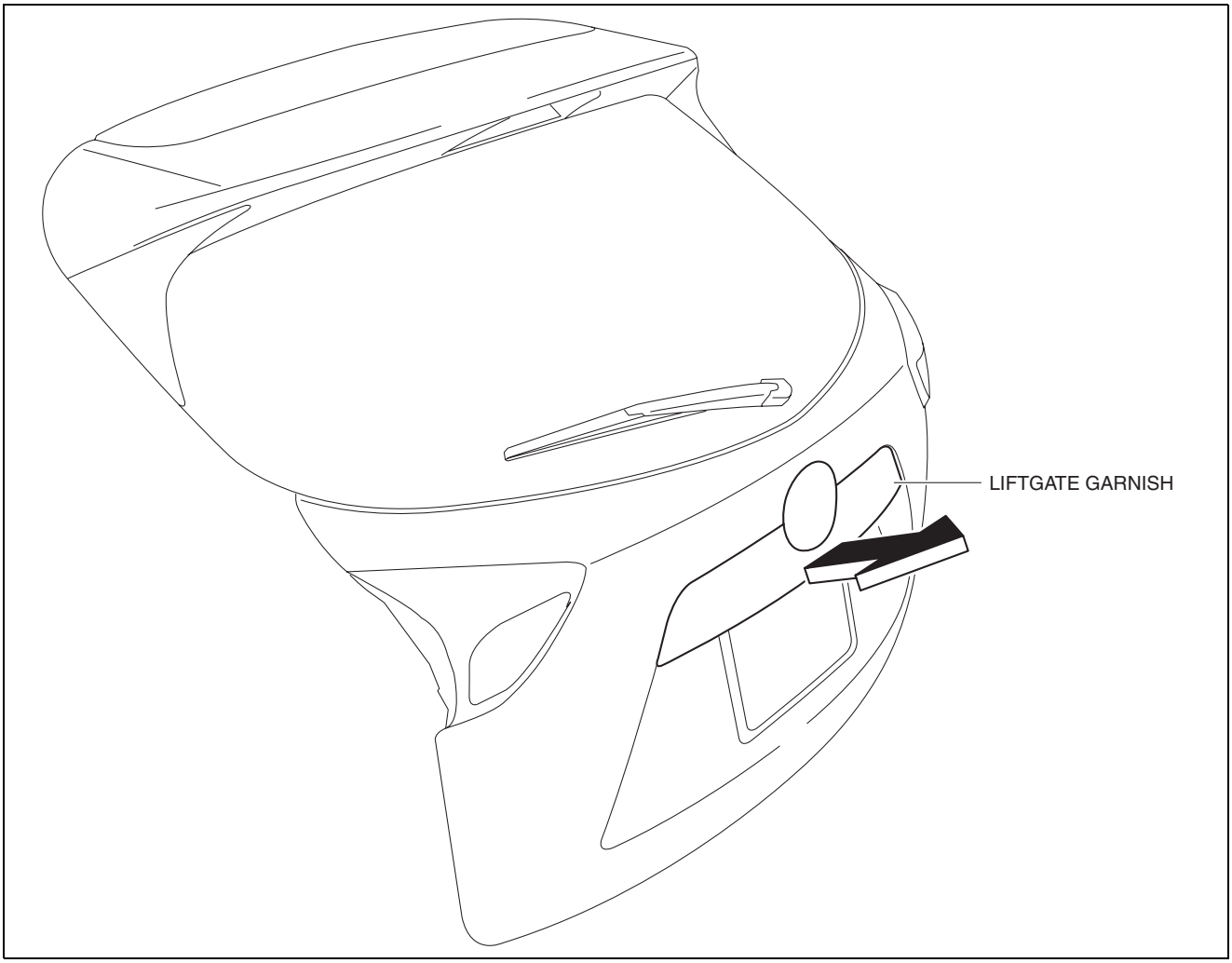

ac5wzw0000126

7. Install in the reverse order of removal.

09-17 INTERIOR TRIM

INTERIOR TRIM LOCATION INDEX. . . . 09-17–2
DASHBOARD
REMOVAL/INSTALLATION. 09-17–4
Dashboard Installation Note. 09-17–13
DASHBOARD
DISASSEMBLY/ASSEMBLY. 09-17–13
SPEAKER GRILLE
REMOVAL/INSTALLATION. 09-17–15
Center Speaker Grille 09-17–15
Side Speaker Grille 09-17–17
SWITCH PANEL
REMOVAL/INSTALLATION. 09-17–18
METER HOOD
REMOVAL/INSTALLATION. 09-17–20
VENTILATOR GRILLE
REMOVAL/INSTALLATION. 09-17–22
Side Ventilator Grille 09-17–22
Center Ventilator Grille. 09-17–24
COLUMN COVER
REMOVAL/INSTALLATION. 09-17–25
CENTER PANEL
REMOVAL/INSTALLATION. 09-17–28
GLOVE COMPARTMENT
REMOVAL/INSTALLATION. 09-17–30
DECORATION PANEL
REMOVAL/INSTALLATION. 09-17–33
DASHBOARD UNDER COVER
REMOVAL/INSTALLATION. 09-17–35
LOWER PANEL
REMOVAL/INSTALLATION. 09-17–35
Driver-side 09-17–35
Passenger-side 09-17–37
FRONT CONSOLE BOX
REMOVAL/INSTALLATION. 09-17–40
SHIFT PANEL
REMOVAL/INSTALLATION. 09-17–42
ATX 09-17–42
MTX 09-17–43
UPPER PANEL
REMOVAL/INSTALLATION. 09-17–44
REAR CONSOLE
REMOVAL/INSTALLATION. 09-17–45
REAR CONSOLE
DISASSEMBLY/ASSEMBLY. 09-17–47
SIDE WALL
REMOVAL/INSTALLATION. 09-17–49
FRONT CONSOLE
REMOVAL/INSTALLATION. 09-17–50
A-PILLAR TRIM
REMOVAL/INSTALLATION. 09-17–53
B-PILLAR LOWER TRIM
REMOVAL/INSTALLATION. 09-17–57
B-PILLAR UPPER TRIM
REMOVAL/INSTALLATION. 09-17–58
C-PILLAR TRIM
REMOVAL/INSTALLATION. 09-17–59
D-PILLAR TRIM
REMOVAL/INSTALLATION 09-17–60
FRONT SCUFF PLATE
REMOVAL/INSTALLATION 09-17–61
FRONT SIDE TRIM
REMOVAL/INSTALLATION 09-17–62
REAR SCUFF PLATE
REMOVAL/INSTALLATION 09-17–63
INNER GARNISH
REMOVAL/INSTALLATION 09-17–65
FRONT DOOR TRIM
REMOVAL/INSTALLATION 09-17–65
FRONT DOOR TRIM
DISASSEMBLY/ASSEMBLY 09-17–69
Driver-side 09-17–69
Passenger-side 09-17–70
Power Window Main Switch And
Power Window Subswitch Removal Note 09-17–70
REAR DOOR TRIM
DISASSEMBLY/ASSEMBLY 09-17–73
Power Window Subswitch
Removal Note 09-17–74
REAR DOOR TRIM
REMOVAL/INSTALLATION 09-17–74
TRUNK COVERING
REMOVAL/INSTALLATION 09-17–78
TRUNK END TRIM
REMOVAL/INSTALLATION 09-17–78
TRUNK SIDE TRIM
REMOVAL/INSTALLATION 09-17–80
TRUNK BOARD
REMOVAL/INSTALLATION 09-17–85
LIFTGATE UPPER TRIM
REMOVAL/INSTALLATION 09-17–87
LIFTGATE SIDE TRIM
REMOVAL/INSTALLATION 09-17–87
LIFTGATE RECESS
REMOVAL/INSTALLATION 09-17–89
LIFTGATE LOWER TRIM
REMOVAL/INSTALLATION 09-17–89
ASSIST HANDLE
REMOVAL/INSTALLATION 09-17–91
Removal 09-17–91
Installation. 09-17–92
SUNVISOR
REMOVAL/INSTALLATION 09-17–93
HEADLINER
REMOVAL/INSTALLATION 09-17–94
FLOOR INSULATOR
REMOVAL/INSTALLATION 09-17–95
Driver-side. 09-17–95
Passenger-side 09-17–96
FLOOR COVERING
REMOVAL/INSTALLATION 09-17–97

INTERIOR TRIM

INTERIOR TRIM LOCATION INDEX

id091700800200

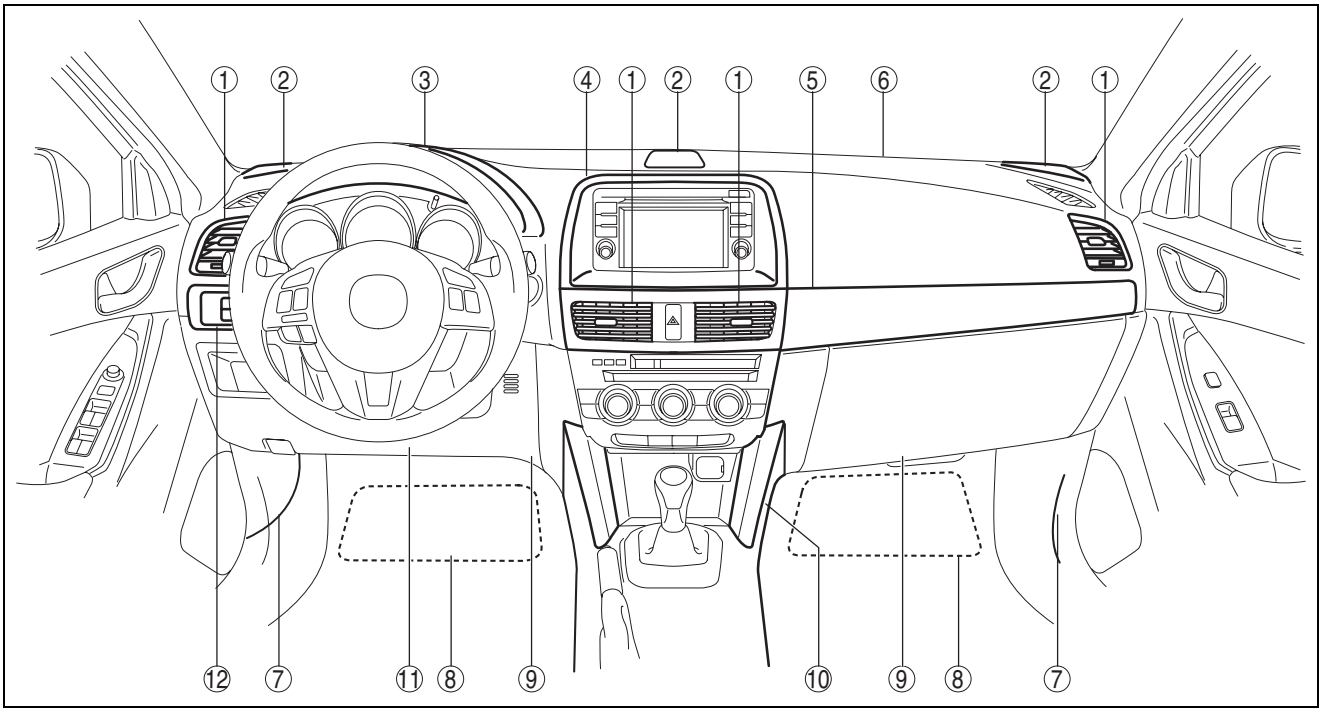

ac5wzw0000280

1	Ventilator grille (See 09-17-22 VENTILATOR GRILLE REMOVAL/INSTALLATION.)
2	Speaker grille (See 09-17-15 SPEAKER GRILLE REMOVAL/INSTALLATION.)
3	Meter hood (See 09-17-20 METER HOOD REMOVAL/INSTALLATION.)
4	Center panel (See 09-17-28 CENTER PANEL REMOVAL/INSTALLATION.)
5	Decoration panel (See 09-17-33 DECORATION PANEL REMOVAL/INSTALLATION.)
6	Dashboard (See 09-17-4 DASHBOARD REMOVAL/INSTALLATION.) (See 09-17-13 DASHBOARD DISASSEMBLY/ASSEMBLY.)

7	Front side trim (See 09-17-62 FRONT SIDE TRIM REMOVAL/INSTALLATION.)
8	Floor insulator (See 09-17-95 FLOOR INSULATOR REMOVAL/INSTALLATION.)
9	Lower panel (See 09-17-35 LOWER PANEL REMOVAL/INSTALLATION.)
10	Front console (See 09-17-50 FRONT CONSOLE REMOVAL/INSTALLATION.)
11	Dashboard under cover (See 09-17-35 DASHBOARD UNDER COVER REMOVAL/INSTALLATION.)
12	Switch panel (See 09-17-18 SWITCH PANEL REMOVAL/INSTALLATION.)

INTERIOR TRIM

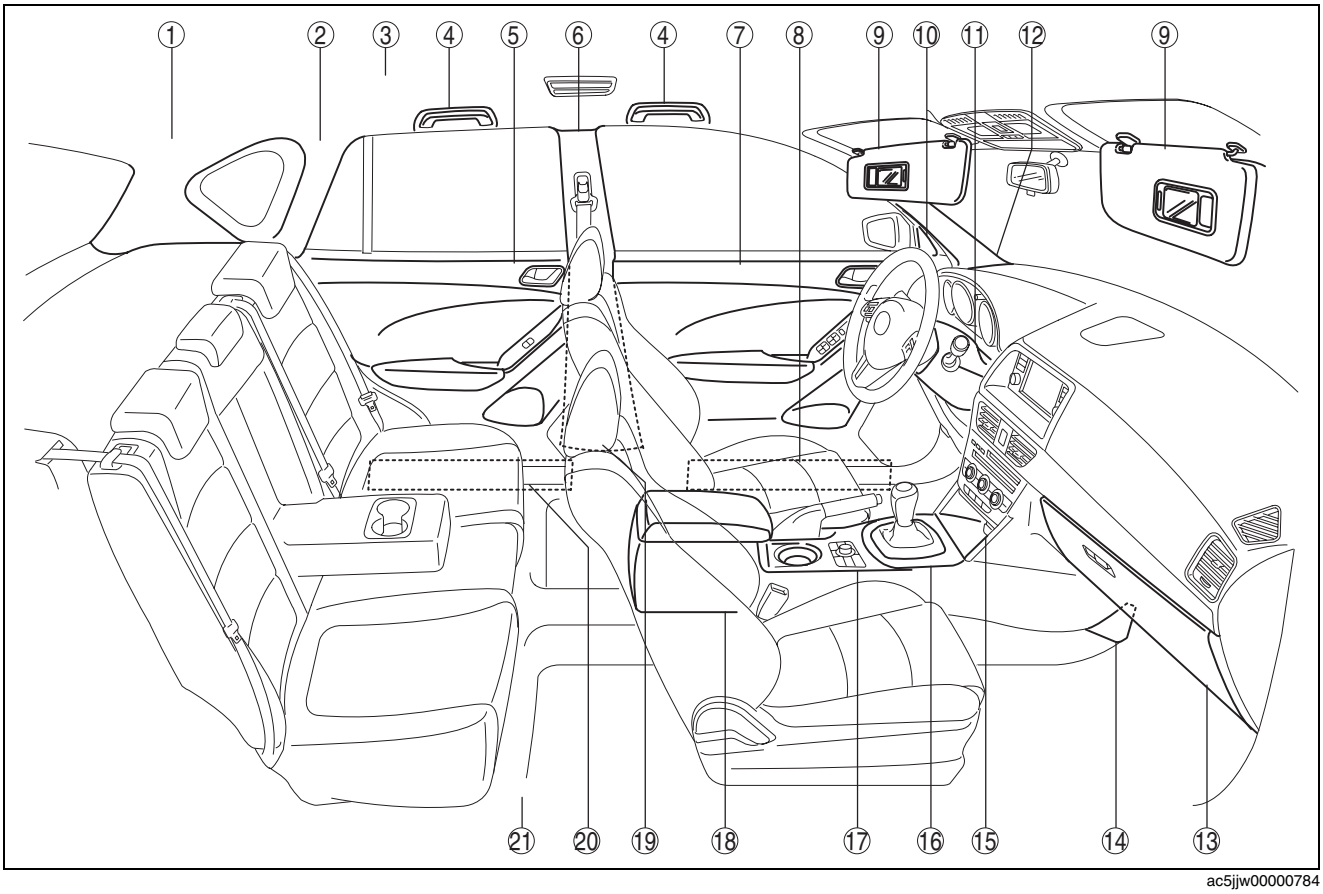

ac5jjw00000784

1	D-pillar trim (See 09-17-60 D-PILLAR TRIM REMOVAL/ INSTALLATION.)
2	C-pillar trim (See 09-17-59 C-PILLAR TRIM REMOVAL/ INSTALLATION.)
3	Headliner (See 09-17-94 HEADLINER REMOVAL/ INSTALLATION.)
4	Assist handle (See 09-17-91 ASSIST HANDLE REMOVAL/ INSTALLATION.)
5	Rear door trim (See 09-17-74 REAR DOOR TRIM REMOVAL/ INSTALLATION.) (See 09-17-73 REAR DOOR TRIM DISASSEMBLY/ ASSEMBLY.)
6	B-pillar upper trim (See 09-17-58 B-PILLAR UPPER TRIM REMOVAL/ INSTALLATION.)
7	Front door trim (See 09-17-65 FRONT DOOR TRIM REMOVAL/ INSTALLATION.) (See 09-17-69 FRONT DOOR TRIM DISASSEMBLY/ASSEMBLY.)
8	Front scuff plate (See 09-17-61 FRONT SCUFF PLATE REMOVAL/ INSTALLATION.)
9	Sunvisor (See 09-17-93 SUNVISOR REMOVAL/ INSTALLATION.)
10	Inner garnish (See 09-17-65 INNER GARNISH REMOVAL/ INSTALLATION.)

11	Column cover (See 09-17-25 COLUMN COVER REMOVAL/ INSTALLATION.)
12	A-pillar trim (See 09-17-53 A-PILLAR TRIM REMOVAL/ INSTALLATION.)
13	Glove compartment (See 09-17-30 GLOVE COMPARTMENT REMOVAL/INSTALLATION.)
14	Side wall (See 09-17-49 SIDE WALL REMOVAL/ INSTALLATION.)
15	Front console box (See 09-17-40 FRONT CONSOLE BOX REMOVAL/ INSTALLATION.)
16	Shift panel (See 09-17-42 SHIFT PANEL REMOVAL/ INSTALLATION.)
17	Upper panel (See 09-17-44 UPPER PANEL REMOVAL/ INSTALLATION.)
18	Rear console (See 09-17-45 REAR CONSOLE REMOVAL/ INSTALLATION.) (See 09-17-47 REAR CONSOLE DISASSEMBLY/ ASSEMBLY.)
19	B-pillar lower trim (See 09-17-57 B-PILLAR LOWER TRIM REMOVAL/ INSTALLATION.)
20	Rear scuff plate (See 09-17-63 REAR SCUFF PLATE REMOVAL/ INSTALLATION.)

INTERIOR TRIM

21	Floor covering (See 09-17-97 FLOOR COVERING REMOVAL/ INSTALLATION.)

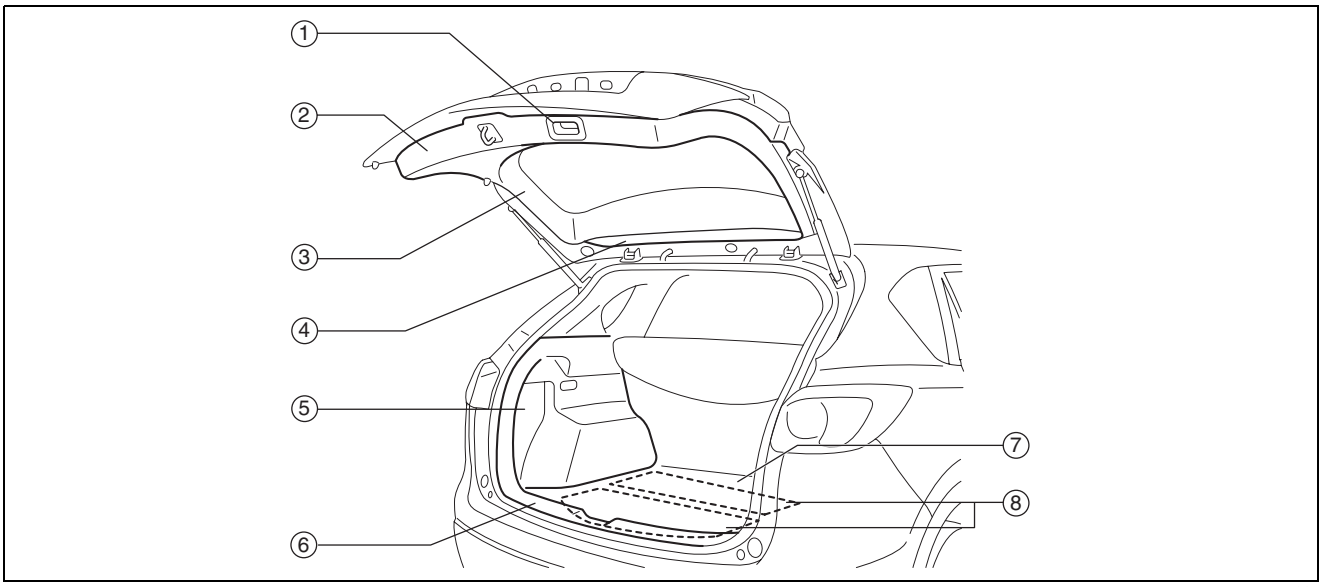

ac5uuw00002110

1	Liftgate recess (See 09-17-89 LIFTGATE RECESS REMOVAL/ INSTALLATION.)
2	Liftgate lower trim (See 09-17-89 LIFTGATE LOWER TRIM REMOVAL/INSTALLATION.)
3	Liftgate side trim (See 09-17-87 LIFTGATE SIDE TRIM REMOVAL/ INSTALLATION.)
4	Liftgate upper trim (See 09-17-87 LIFTGATE UPPER TRIM REMOVAL/ INSTALLATION.)

5	Trunk side trim (See 09-17-80 TRUNK SIDE TRIM REMOVAL/ INSTALLATION.)
6	Trunk end trim (See 09-17-78 TRUNK END TRIM REMOVAL/ INSTALLATION.)
7	Trunk covering (See 09-17-78 TRUNK COVERING REMOVAL/ INSTALLATION.)
8	Trunk board (See 09-17-85 TRUNK BOARD REMOVAL/ INSTALLATION.)

DASHBOARD REMOVAL/INSTALLATION

id091700800300

1. Disconnect the negative battery cable. (See 01-17A-11 NEGATIVE BATTERY CABLE DISCONNECTION/ CONNECTION [SKYACTIV-G 2.0].) (See 01-17A-13 NEGATIVE BATTERY CABLE DISCONNECTION/ CONNECTION [SKYACTIV-G 2.0 (WITHOUT i-stop)].) (See 01-17B-9 NEGATIVE BATTERY CABLE DISCONNECTION/CONNECTION [SKYACTIV-D 2.2].)
2. Remove the following parts:
   (1) Windshield wiper arm and blade (See 09-19-3 WINDSHIELD WIPER ARM AND BLADE REMOVAL/ INSTALLATION.)
   (2) Cowl grille (See 09-16-3 COWL GRILLE REMOVAL/INSTALLATION.)
   (3) Windshield wiper motor (See 09-19-9 WINDSHIELD WIPER MOTOR AND LINK REMOVAL/ INSTALLATION.)
   (4) Front scuff plate (See 09-17-61 FRONT SCUFF PLATE REMOVAL/INSTALLATION.)
   (5) Front side trim (See 09-17-62 FRONT SIDE TRIM REMOVAL/INSTALLATION.)
   (6) Glove compartment (See 09-17-30 GLOVE COMPARTMENT REMOVAL/INSTALLATION.)
   (7) Dashboard under cover (See 09-17-35 DASHBOARD UNDER COVER REMOVAL/INSTALLATION.)
   (8) Decoration panel (See 09-17-33 DECORATION PANEL REMOVAL/INSTALLATION.)
   (9) Center panel (See 09-17-28 CENTER PANEL REMOVAL/INSTALLATION.)
   (10) Audio unit (with audio system) (See 09-20-4 AUDIO UNIT REMOVAL/INSTALLATION.)
   (11) Front console box (See 09-17-40 FRONT CONSOLE BOX REMOVAL/INSTALLATION.)
   (12) Shift lever knob (MTX) (See 05-16A-1 MANUAL TRANSAXLE SHIFT MECHANISM REMOVAL/ INSTALLATION [C66M-R, C66MX-R].) (See 05-16B-1 MANUAL TRANSAXLE SHIFT MECHANISM REMOVAL/INSTALLATION [D66M-R, D66MX-R].)

INTERIOR TRIM

(13)Shift panel (See 09-17-42 SHIFT PANEL REMOVAL/INSTALLATION.)
(14)Upper panel (See 09-17-44 UPPER PANEL REMOVAL/INSTALLATION.)
(15)Rear console (See 09-17-45 REAR CONSOLE REMOVAL/INSTALLATION.)
(16)Side wall (See 09-17-49 SIDE WALL REMOVAL/INSTALLATION.)
(17)Front console (See 09-17-50 FRONT CONSOLE REMOVAL/INSTALLATION.)
(18)Selector lever component (MTX) (See 05-16A-1 MANUAL TRANSAXLE SHIFT MECHANISM REMOVAL/INSTALLATION [C66M-R, C66MX-R].) (See 05-16B-1 MANUAL TRANSAXLE SHIFT MECHANISM REMOVAL/INSTALLATION [D66M-R, D66MX-R].)
(19)Selector lever component (ATX) (See 05-18-2 AUTOMATIC TRANSAXLE SHIFT MECHANISM REMOVAL/INSTALLATION.)
(20)Bonnet release lever (See 09-14-17 BONNET LATCH AND RELEASE LEVER REMOVAL/INSTALLATION.)
(21)Lower panel (See 09-17-35 LOWER PANEL REMOVAL/INSTALLATION.)
(22)Car-navigation unit (See 09-20-11 CAR-NAVIGATION UNIT REMOVAL/INSTALLATION.)
(23)Climate control unit (See 07-40A-32 CLIMATE CONTROL UNIT REMOVAL/INSTALLATION [FULL-AUTO AIR CONDITIONER].) (See 07-40B-16 CLIMATE CONTROL UNIT REMOVAL/INSTALLATION [MANUAL AIR CONDITIONER].)
(24)Column cover (See 09-17-25 COLUMN COVER REMOVAL/INSTALLATION.)
(25)Driver-side air bag module (See 08-10-6 DRIVER-SIDE AIR BAG MODULE REMOVAL/INSTALLATION.)
(26)Steering wheel (See 06-13-4 STEERING WHEEL AND COLUMN REMOVAL/INSTALLATION.)
(27)Steering shaft (See 06-13-4 STEERING WHEEL AND COLUMN REMOVAL/INSTALLATION.)
(28)Switch panel (See 09-17-18 SWITCH PANEL REMOVAL/INSTALLATION.)
(29)Meter hood (See 09-17-20 METER HOOD REMOVAL/INSTALLATION.)
(30)Instrument cluster (See 09-22-6 INSTRUMENT CLUSTER REMOVAL/INSTALLATION.)
(31)A-pillar trim (See 09-17-53 A-PILLAR TRIM REMOVAL/INSTALLATION.)

3. Set the parking brake cover aside.

INTERIOR TRIM

4. Disconnect the dashboard harness connectors at the tunnel area and remove the wiring harness clip.

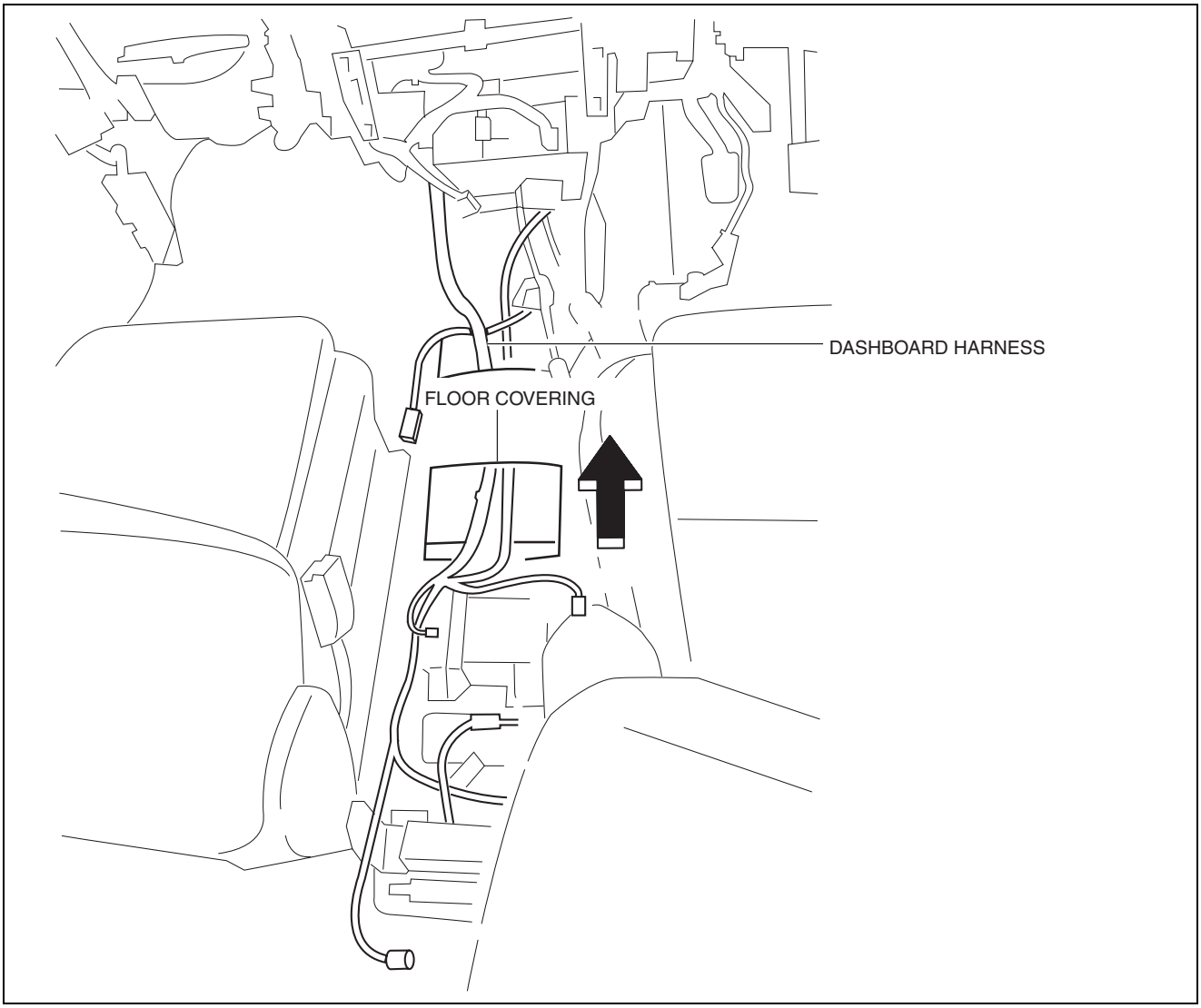

ac5wzw0000141

5. Pull out the dashboard harness in the direction of the arrow shown in the figure while avoiding the floor covering.

Caution

- **When pulling out the dashboard harness, if the connector is hooked to the floor mat, it may cause a short circuit in the wiring harness or the connector may be damaged. Pull out the dashboard harness while lifting the floor mat so as not to hook the connector.**

INTERIOR TRIM

6. Remove the bolts A and nut B shown in the figure.

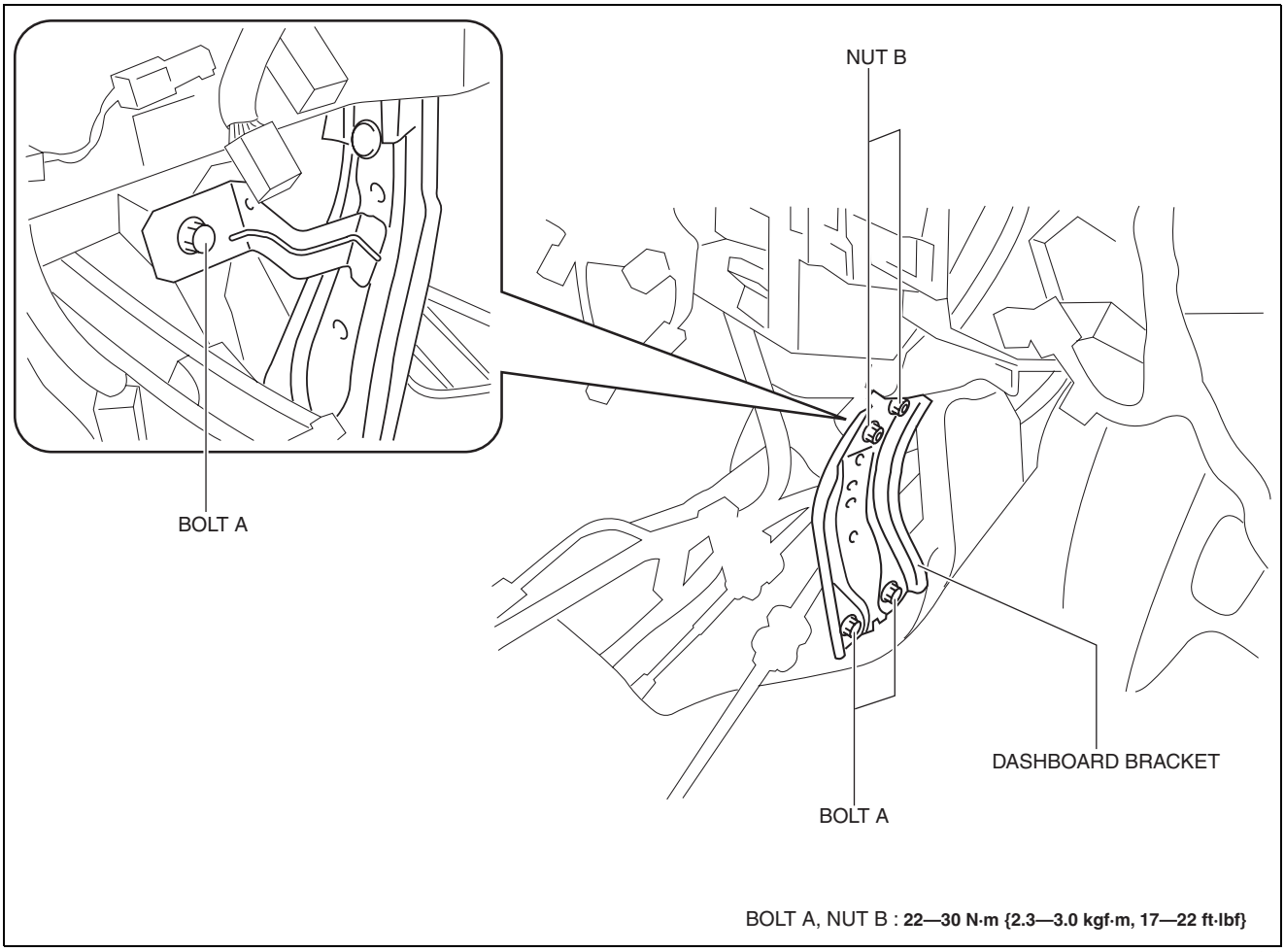

BOLT A, NUT B : **22—30 N·m {2.3—3.0 kgf·m, 17—22 ft·lbf}**

ac5wzw0000141

7. Remove the dashboard bracket.

INTERIOR TRIM

8. Remove the bolt C. (See 09-17-13 Dashboard Installation Note.)

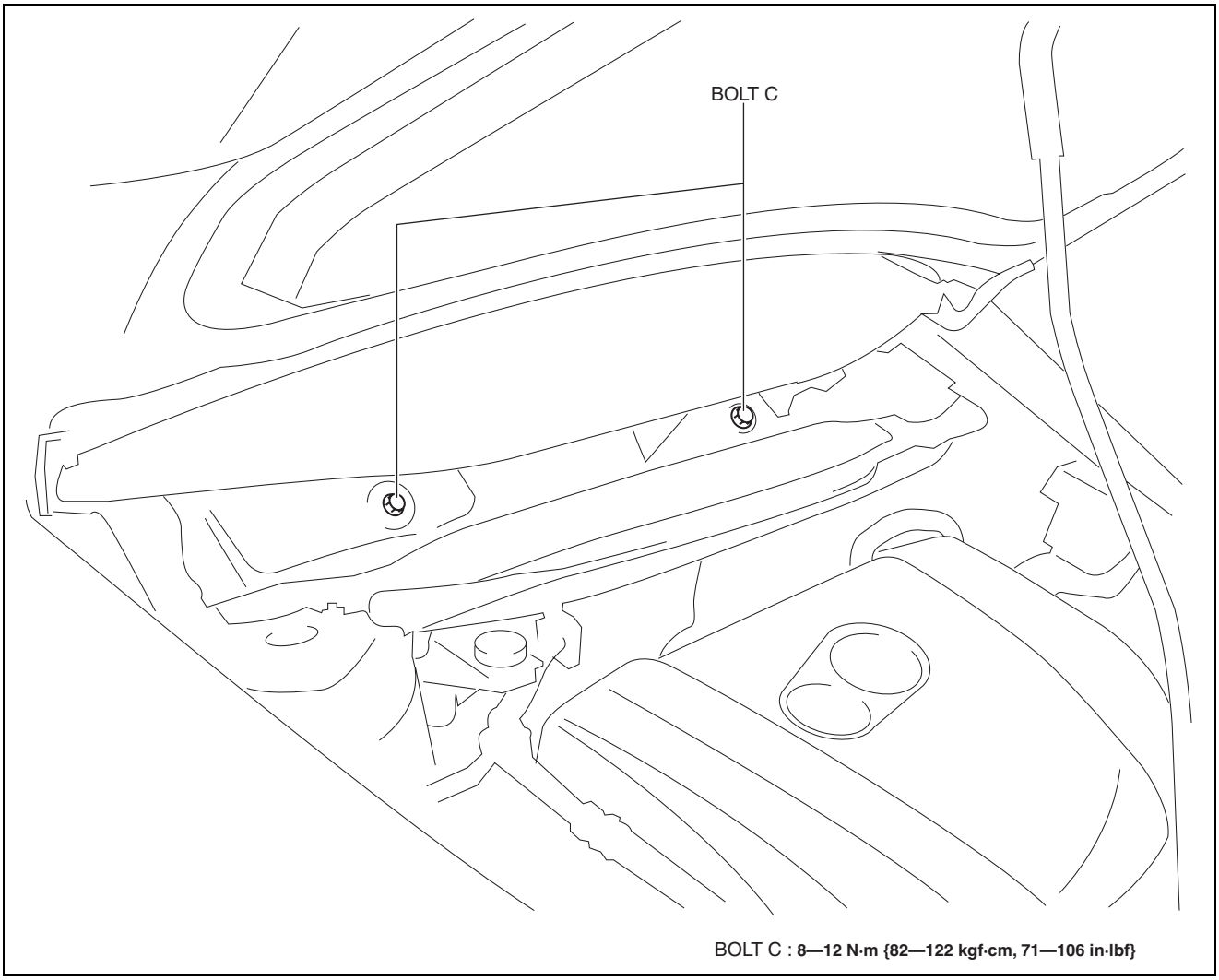

BOLT C : **8—12 N·m {82—122 kgf·cm, 71—106 in·lbf}**

ac5wzw0000141

9. Disconnect the dashboard harness connectors.
10. Remove the caps.

INTERIOR TRIM

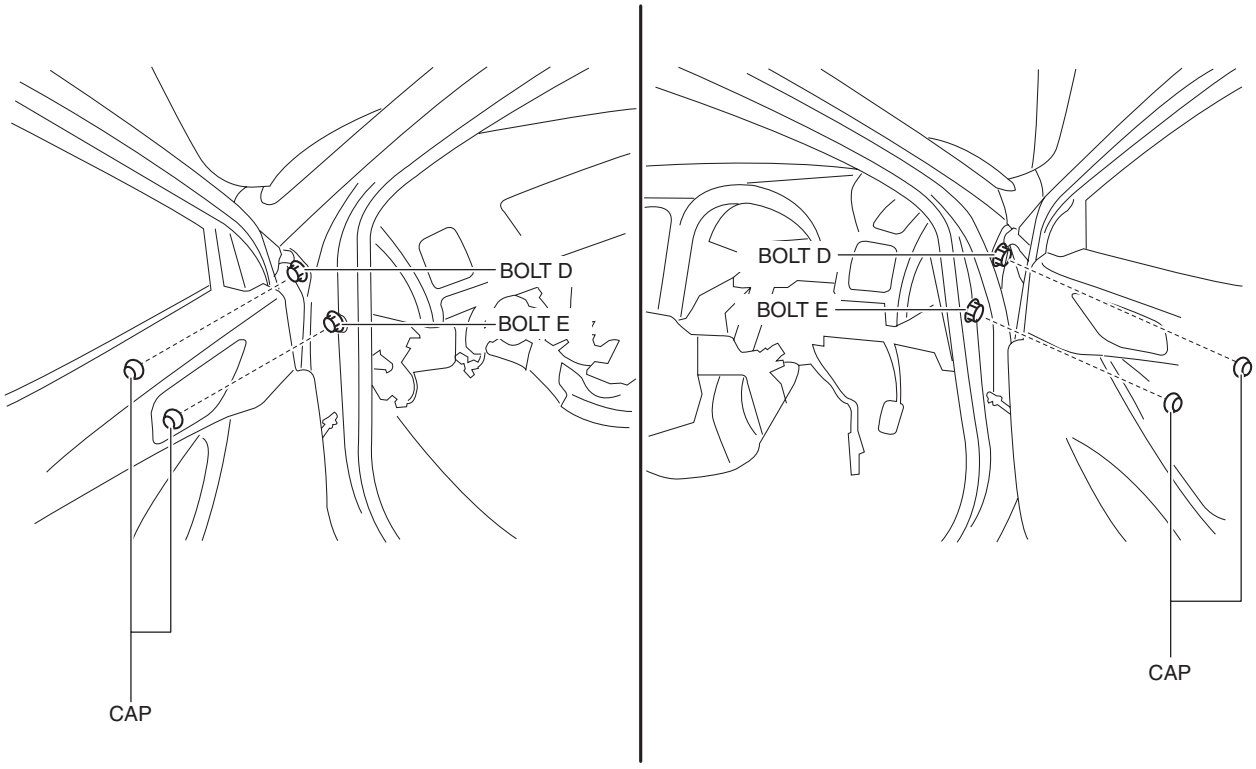

BOLT D BOLT E : **16—22 N·m {1.7—2.2 kgf·m, 12—16 ft·lbf}**

ac5wzw0000141

11. Remove the bolt D and bolt E. (See 09-17-13 Dashboard Installation Note.)

Caution

- **Bolts D cannot be removed completely because they contact the front door. If the front door is closed with the bolts D sticking out, it may cause a dent or damage to the coating film. After taking out the dashboard from the cabin, secure removed bolts D to the vehicle body using tape so that they do not stick out.**

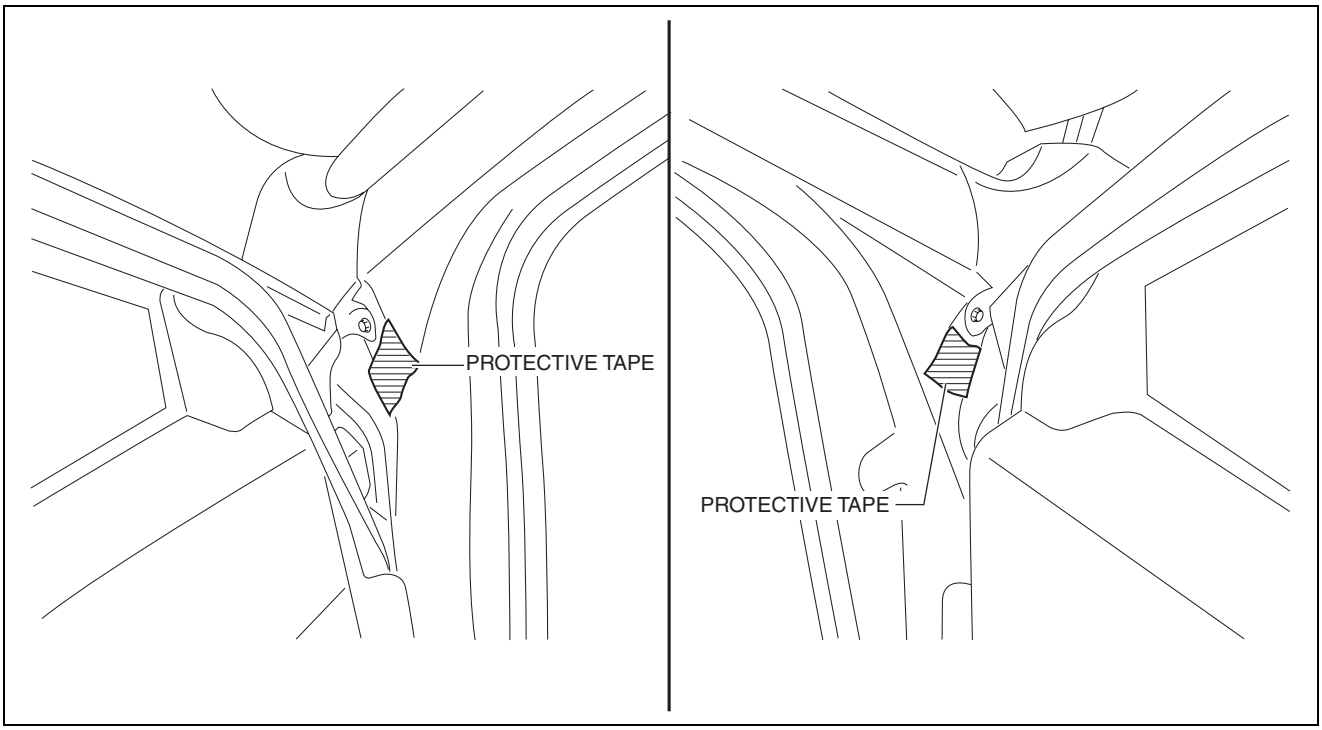

ac5wzw0000141

INTERIOR TRIM

12. Pull up the dashboard in the direction shown in the direction of the arrow (1) shown in the figure, then remove the guide pin.

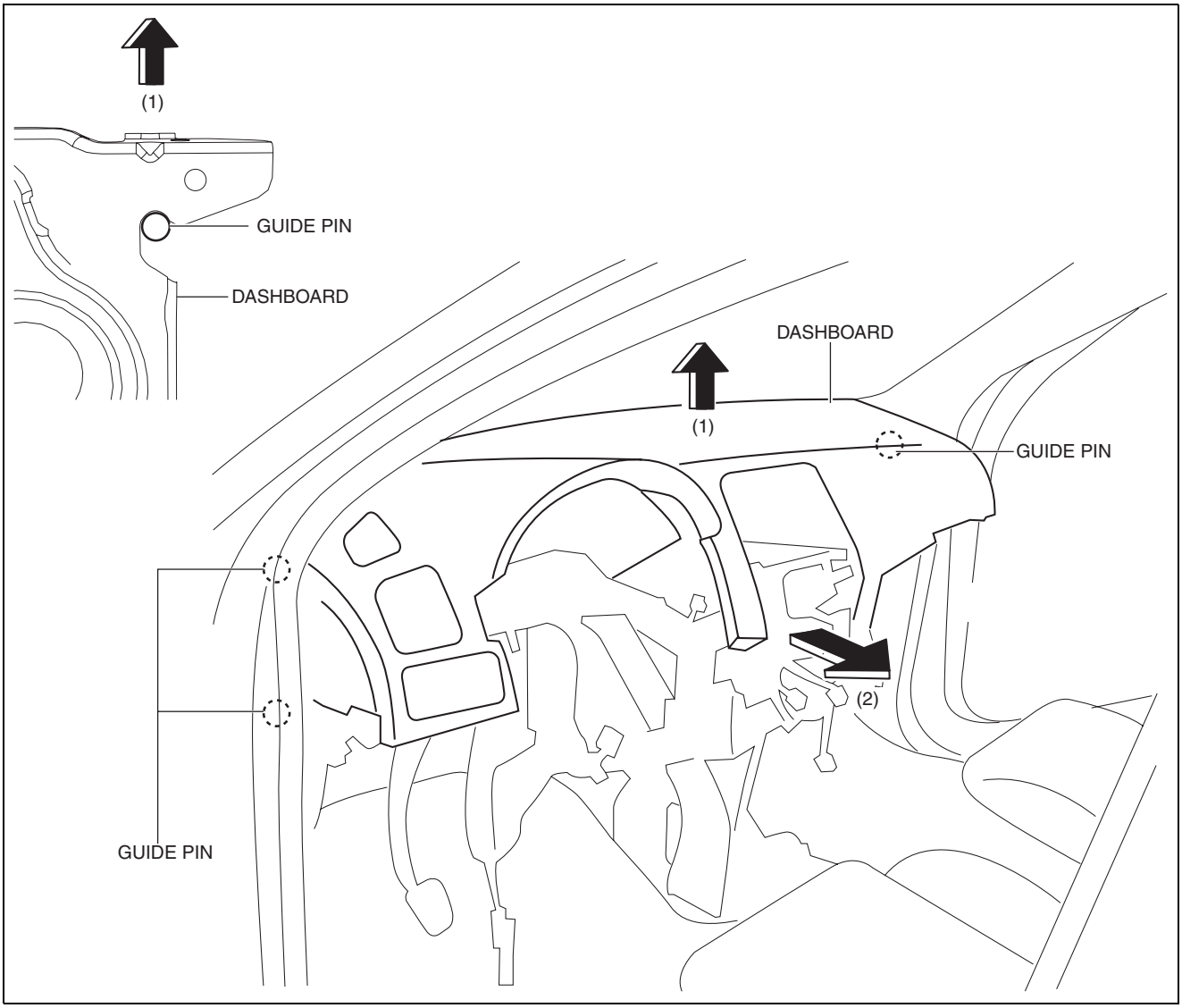

ac5wzw0000515

INTERIOR TRIM

13. Turn the dashboard 90°in the direction of the arrow shown in the figure.

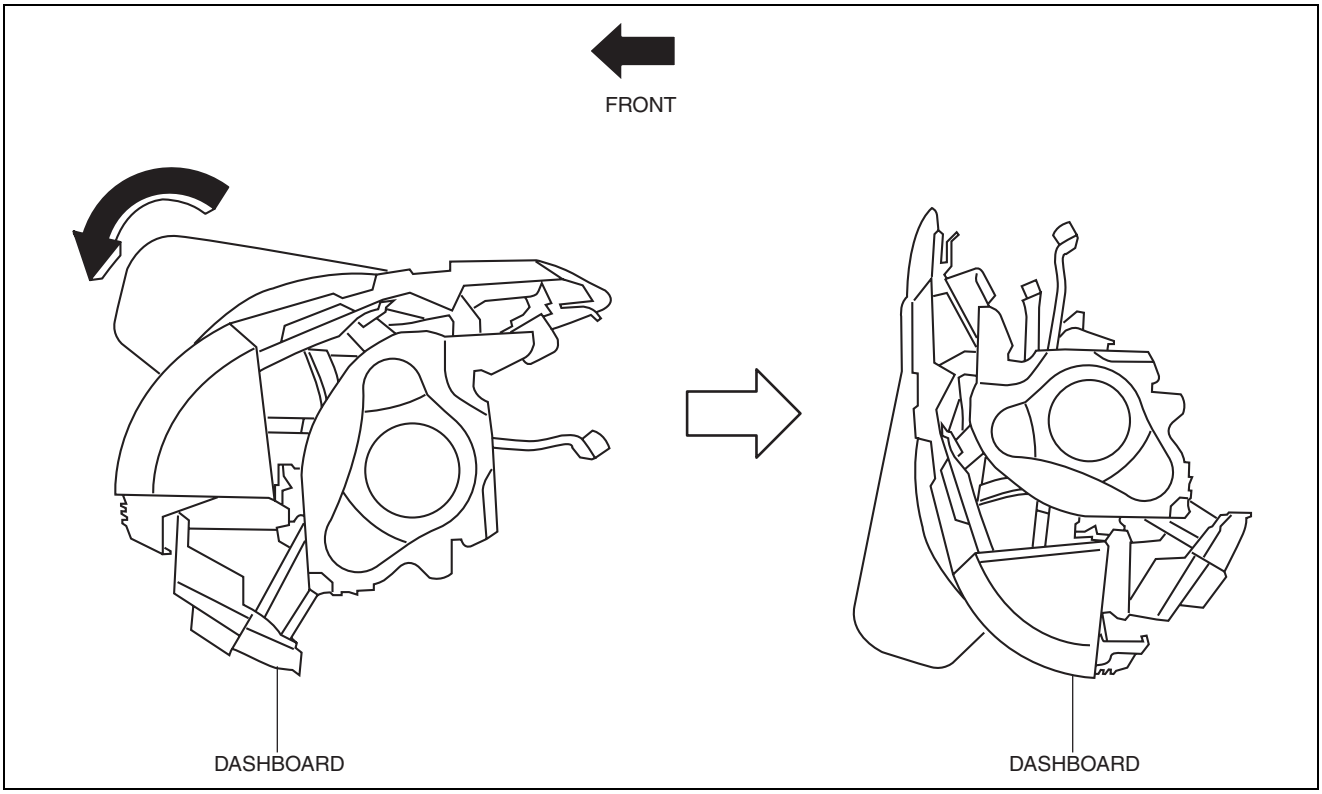

ac5wzw0000141

14. Take the dashboard off from the front driver-side door or front passenger-side door opening.
15. Install in the reverse order of removal.

INTERIOR TRIM

Dashboard Installation Note

- When installing the dashboard, if the position of the member junction is deviated, the bolts cannot be installed. Before installing the dashboard, align the member junction and bolts to the position shown in the figure.

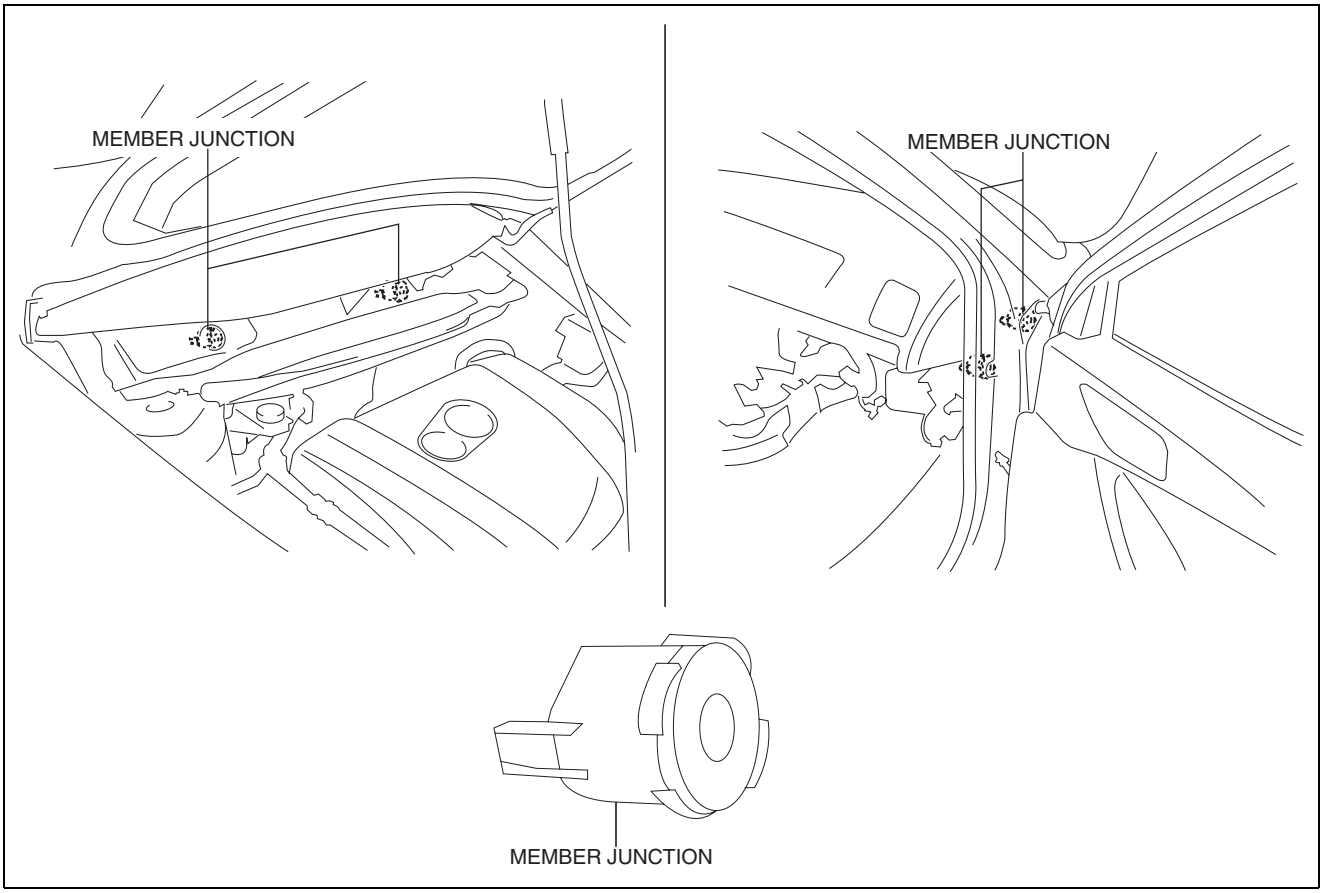

ac5wzw0000166

DASHBOARD DISASSEMBLY/ASSEMBLY

id091700800400

1. Disassemble in the order indicated in the table.

INTERIOR TRIM

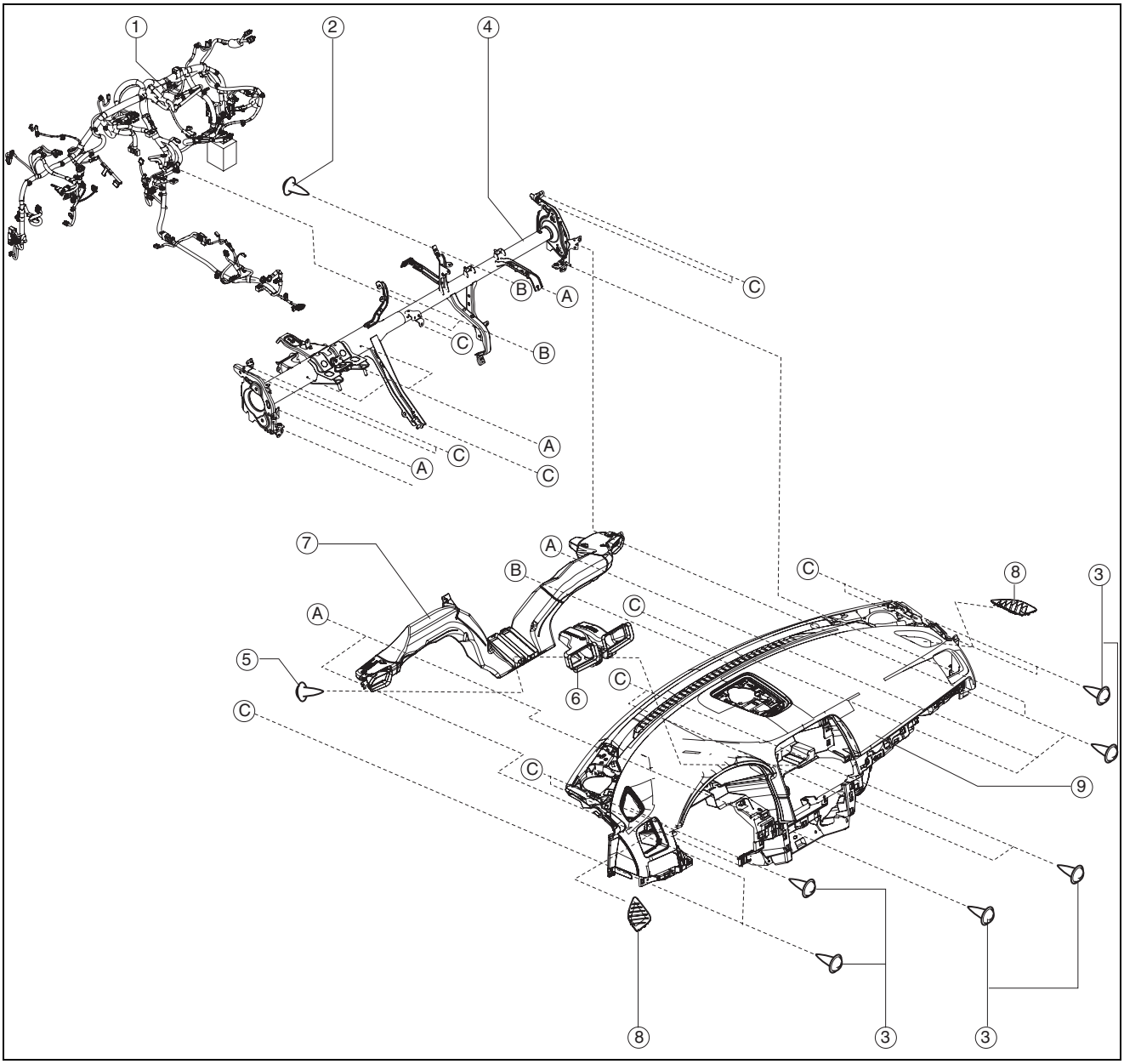

ac5wzw0000299

1	Wiring harness
2	Screw A
3	Screw B
4	Dashboard member
5	Screw C

6	Duct No.1
7	Duct No.2
8	Demister grille
9	Dashboard

2. Assemble in the reverse order of disassembly.

INTERIOR TRIM

SPEAKER GRILLE REMOVAL/INSTALLATION

id091700960700

Center Speaker Grille

1. Insert a tape-wrapped flathead screwdriver into shown in the figure and remove hooks A in the direction of arrow (1).

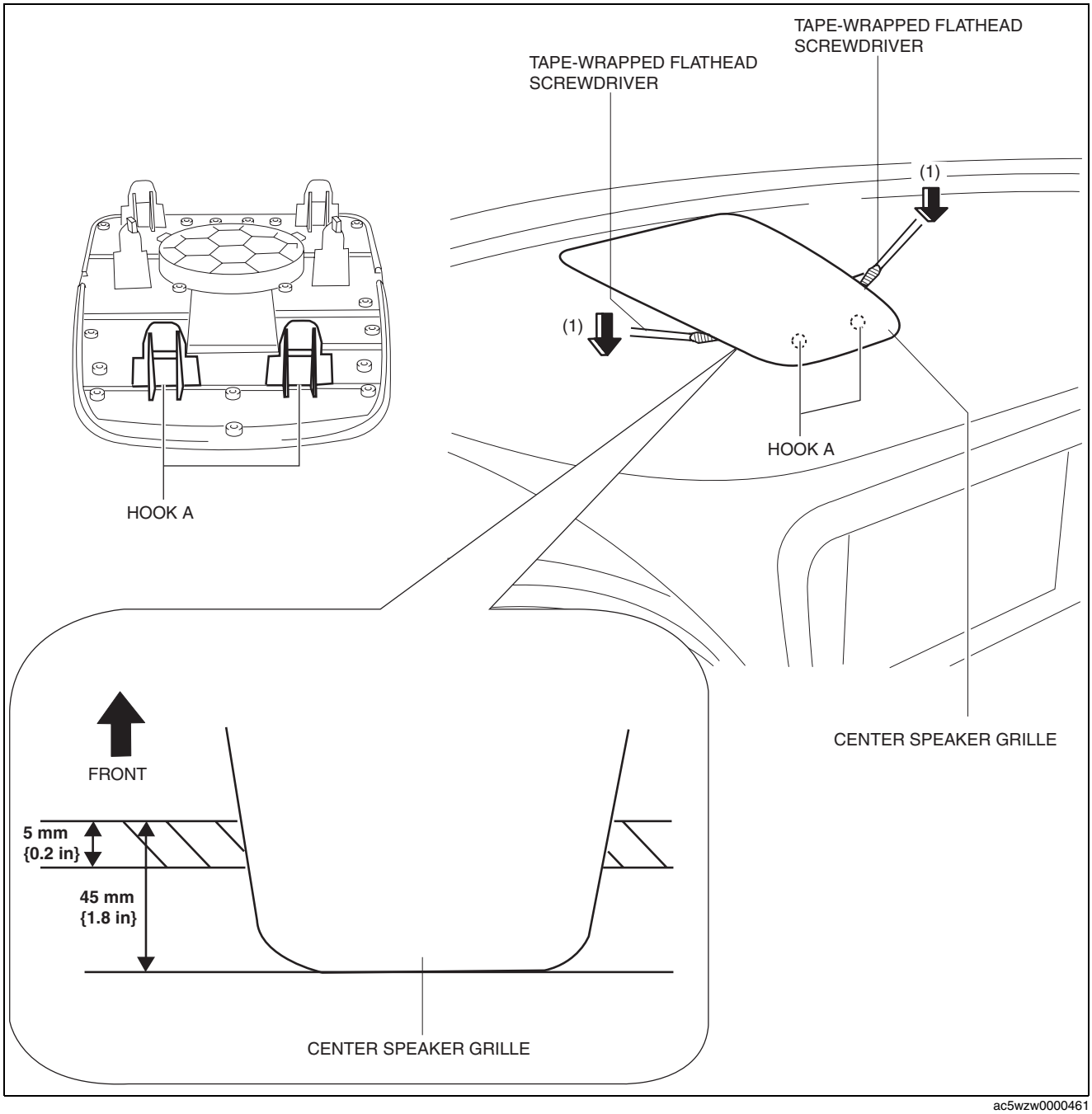

ac5wzw0000461

INTERIOR TRIM

2. Take the shaded area shown in the figure, and remove the center speaker grille in the direction of arrow (2) while detaching hooks B.

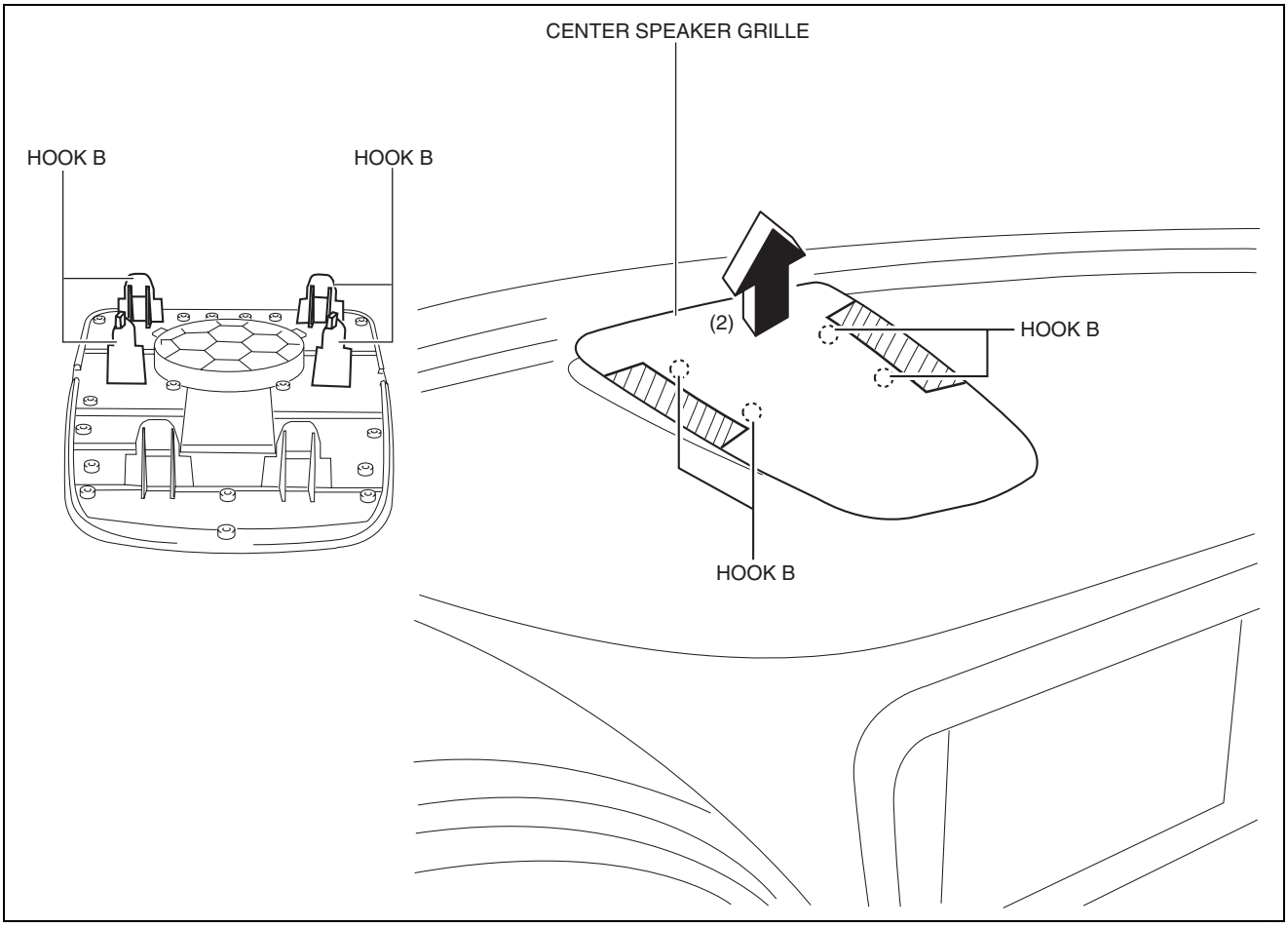

ac5wzw0000462

3. Install in the reverse order of removal.

INTERIOR TRIM

Side Speaker Grille

1. Insert a tape-wrapped flathead screwdriver into the service hole and remove hooks A in the direction of arrow (1).

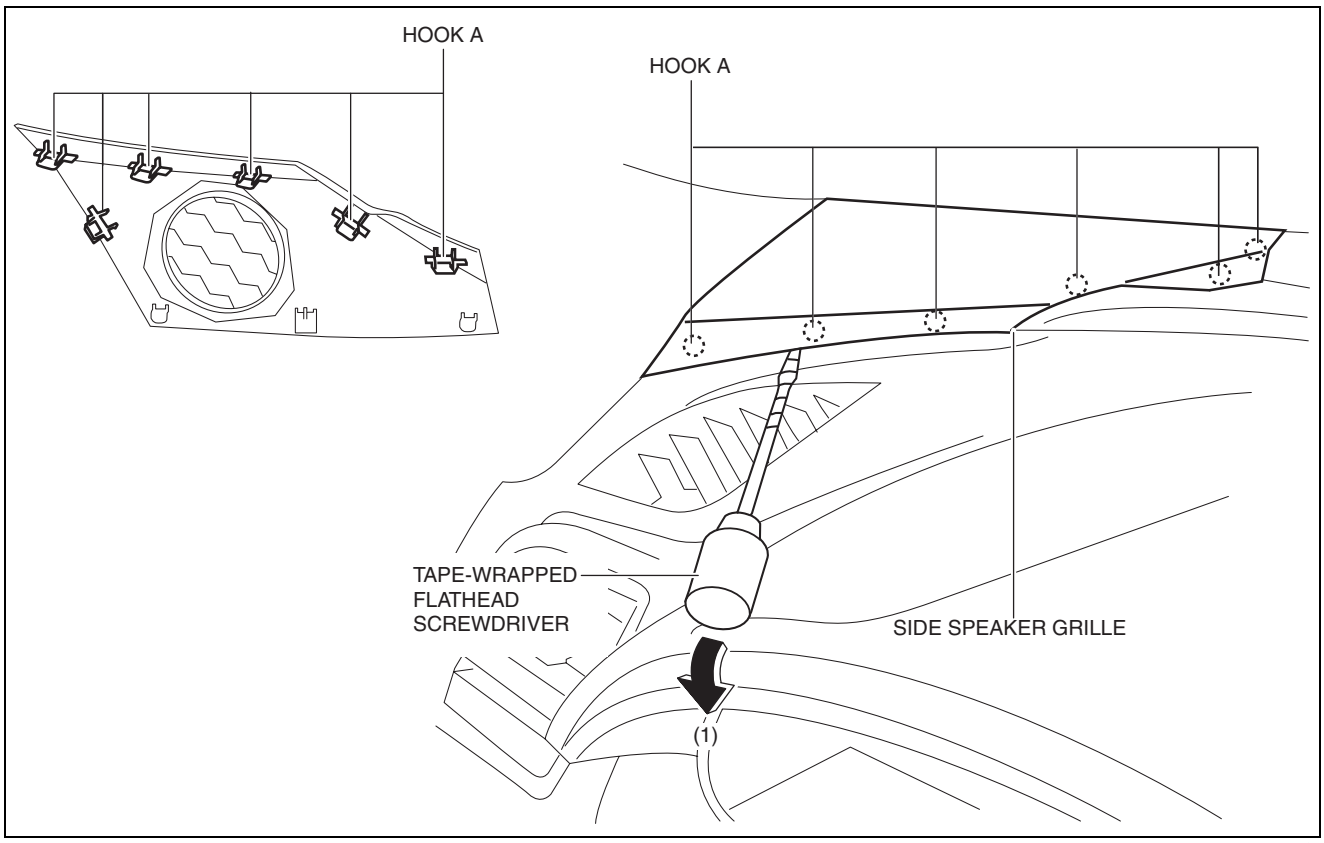

ac5wzw0000515

2. Pull the side speaker grille in the direction of the arrow (2), and remove the side speaker grille while detaching hooks B.

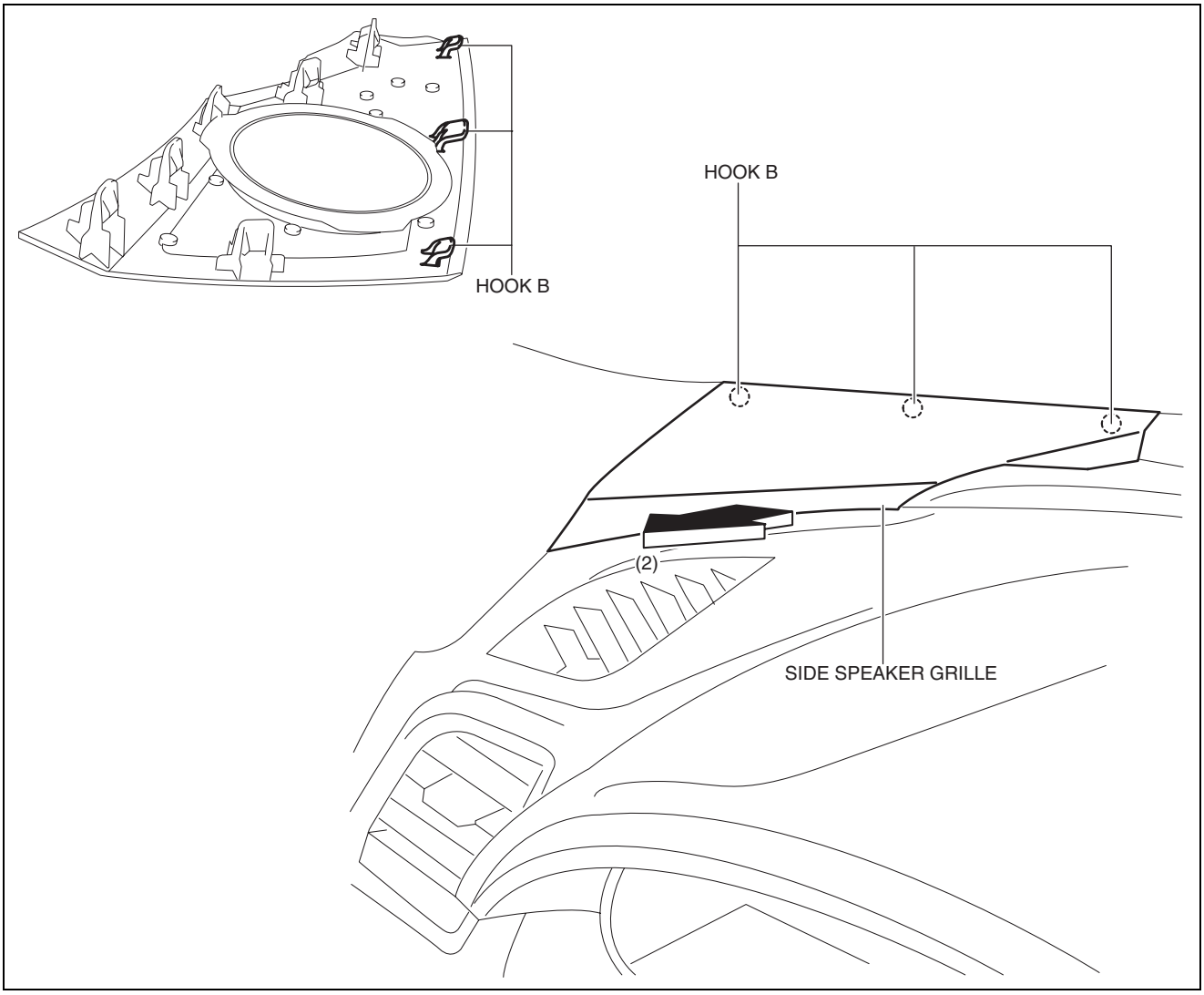

ac5wzw0000321

3. Install in the reverse order of removal.

SWITCH PANEL REMOVAL/INSTALLATION

id091700460400

1. Disconnect the negative battery cable. (See 01-17A-11 NEGATIVE BATTERY CABLE DISCONNECTION/CONNECTION [SKYACTIV-G 2.0].) (See 01-17A-13 NEGATIVE BATTERY CABLE DISCONNECTION/CONNECTION [SKYACTIV-G 2.0 (WITHOUT i-stop)].) (See 01-17B-9 NEGATIVE BATTERY CABLE DISCONNECTION/CONNECTION [SKYACTIV-D 2.2].)
2. Remove the car-navigation unit. (with car-navigation system) (See 09-20-11 CAR-NAVIGATION UNIT REMOVAL/INSTALLATION.)

INTERIOR TRIM

3. Insert your hand from the lower side of the lower panel (without car-navigation system) or the area where the car-navigation unit was installed (with car-navigation system), press the switch panel in the direction of the arrow (1) shown in the figure and remove it while detaching hook A and B and hook C.

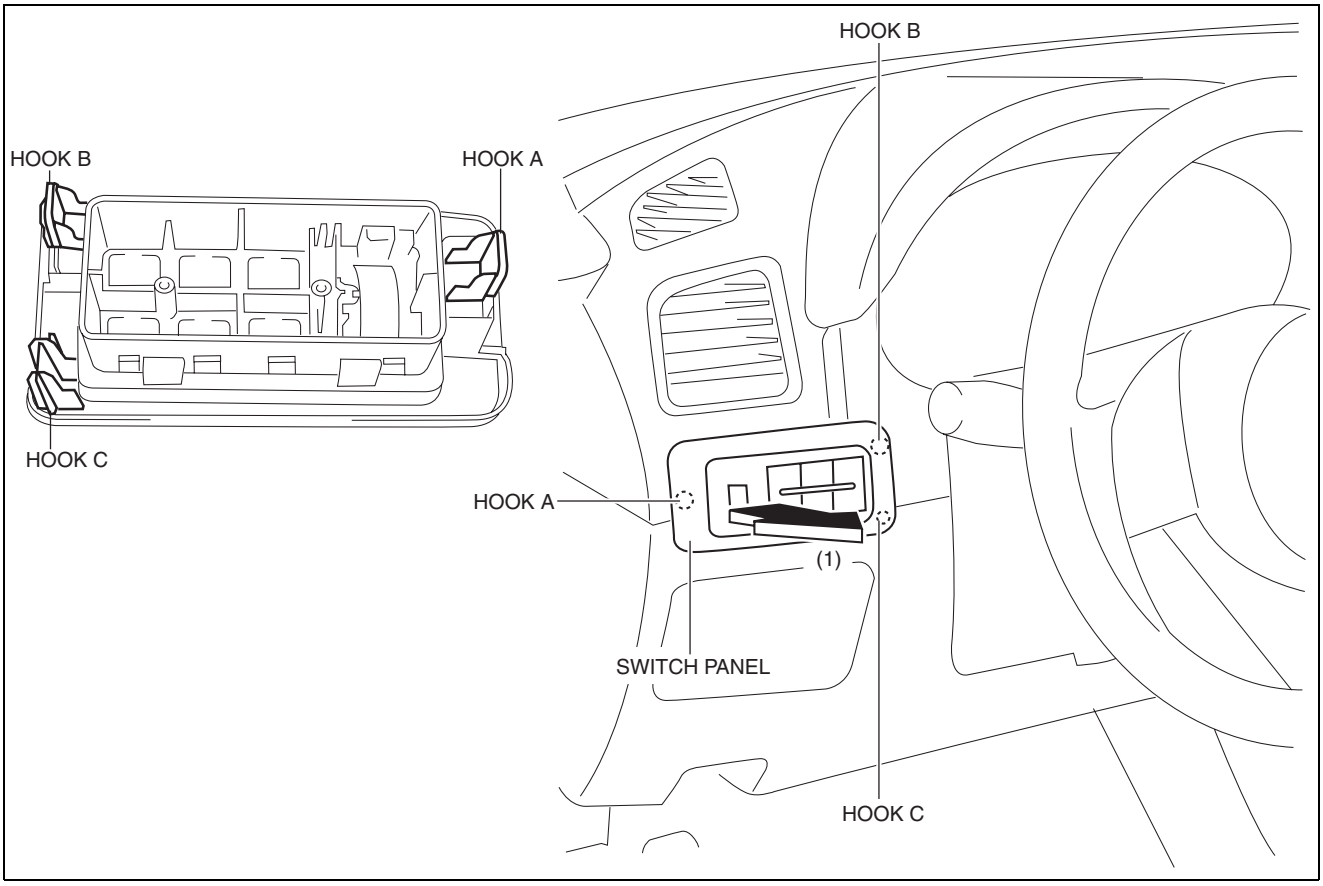

ac5wzw0000299

4. Disconnect the cluster switch connector.

INTERIOR TRIM

5. Remove the cluster switch in the direction of the arrow (3) while detaching hooks D in the direction of the arrow (2).

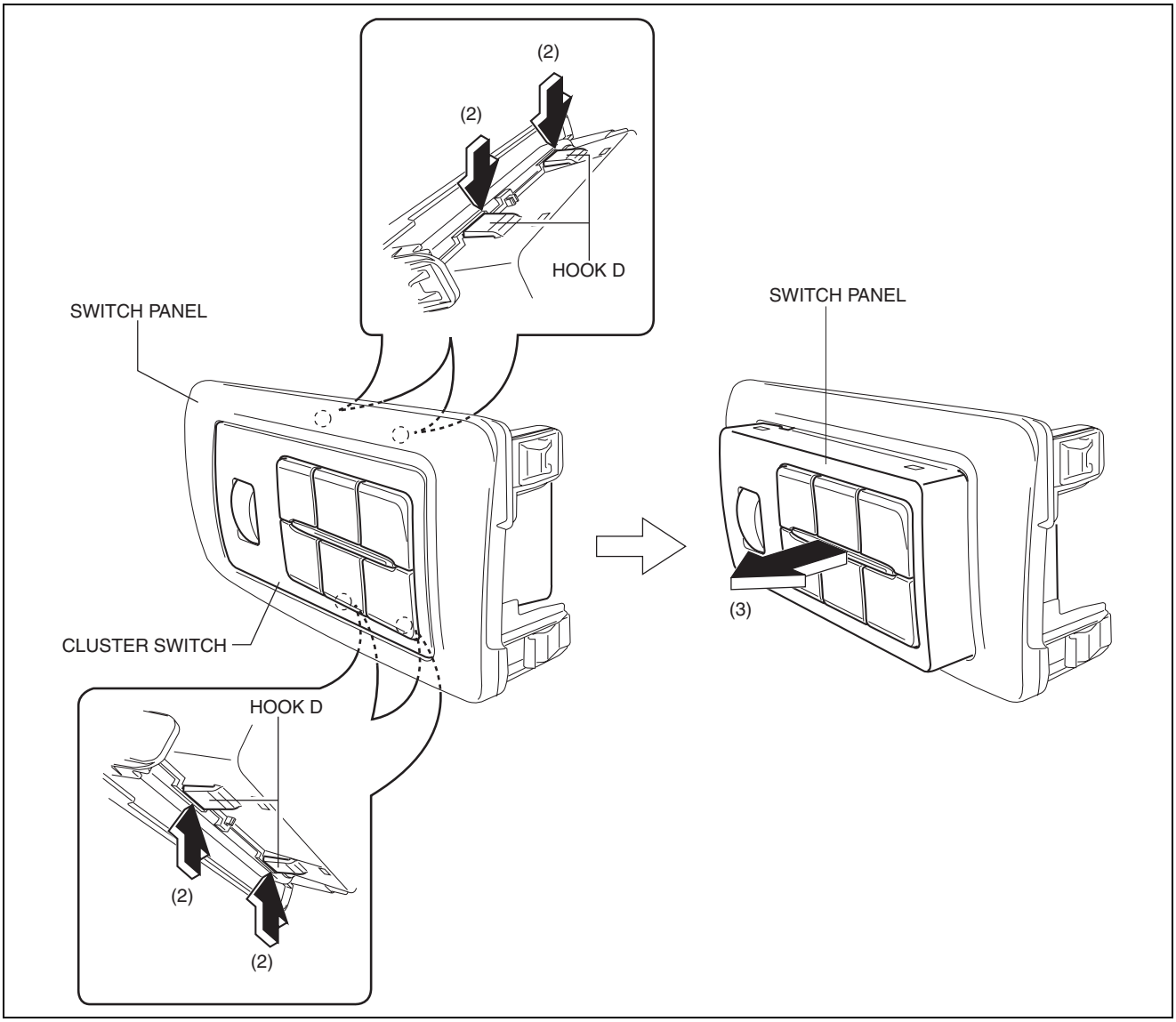

ac5wzw0000140

6. Install in the reverse order of removal.

METER HOOD REMOVAL/INSTALLATION

id091700800900

1. Disconnect the negative battery cable. (See 01-17A-11 NEGATIVE BATTERY CABLE DISCONNECTION/CONNECTION [SKYACTIV-G 2.0].) (See 01-17A-13 NEGATIVE BATTERY CABLE DISCONNECTION/CONNECTION [SKYACTIV-G 2.0 (WITHOUT i-stop)].) (See 01-17B-9 NEGATIVE BATTERY CABLE DISCONNECTION/CONNECTION [SKYACTIV-D 2.2].)
2. Remove the upper column cover (See 09-17-25 COLUMN COVER REMOVAL/INSTALLATION.)

INTERIOR TRIM

3. Using a phillips screwdriver, remove fasteners.

Note

- When pulling up the shaft of fasteners using a phillips screwdriver, the shaft will not be pulled up if it is rotated by pressing the driver. To pull up the shaft of fastener, use the phillips screwdriver to lightly contact fasteners.

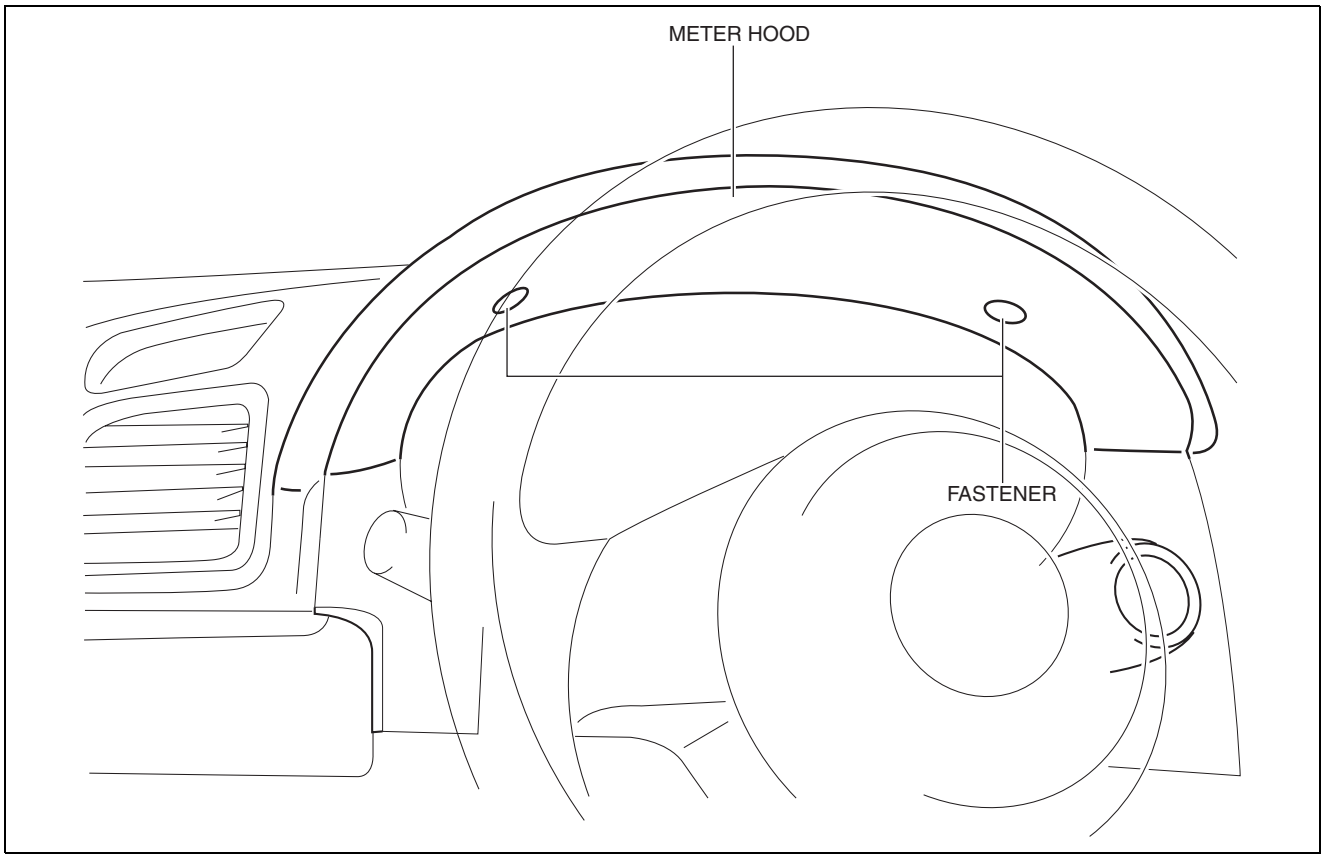

ac5uuw00001755

INTERIOR TRIM

4. Take the shaded area shown in the figure, and remove the meter hood in the direction of the arrow in the order of (1), (2) while detaching the clips A, pins B.

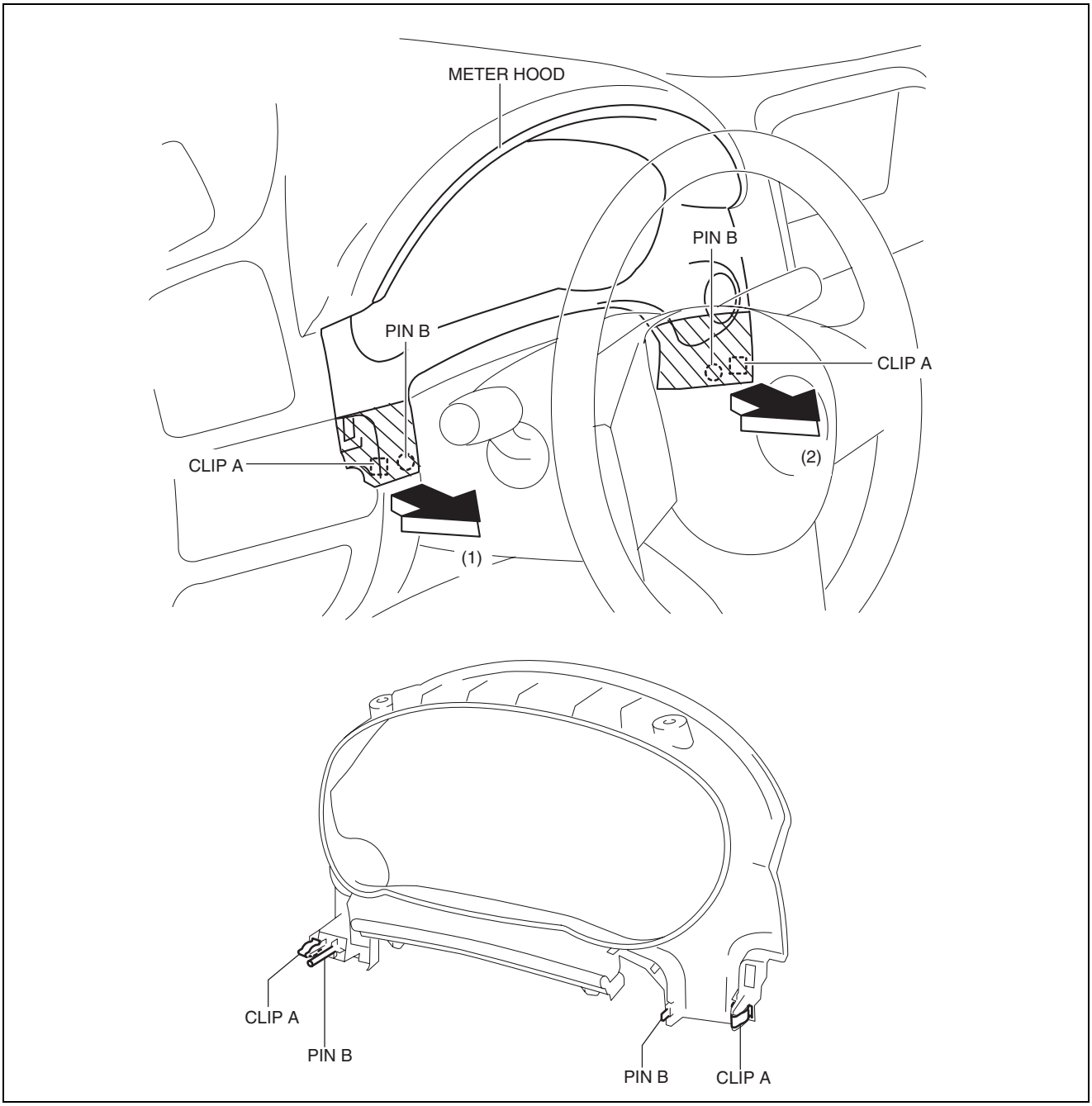

ac5uuw00001756

5. Disconnect the start switch connector
6. Install in the reverse order of removal.

VENTILATOR GRILLE REMOVAL/INSTALLATION

id091700804600

Side Ventilator Grille

Driver-side

1. Disconnect the negative battery cable. (See 01-17A-11 NEGATIVE BATTERY CABLE DISCONNECTION/CONNECTION [SKYACTIV-G 2.0].) (See 01-17A-13 NEGATIVE BATTERY CABLE DISCONNECTION/CONNECTION [SKYACTIV-G 2.0 (WITHOUT i-stop)].) (See 01-17B-9 NEGATIVE BATTERY CABLE DISCONNECTION/CONNECTION [SKYACTIV-D 2.2].)
2. Remove the switch panel. (See 09-17-18 SWITCH PANEL REMOVAL/INSTALLATION.)

INTERIOR TRIM

3. Insert your hand from the area where the switch panel was installed, remove the side ventilator grille in the direction of the arrow shown in the figure while detaching hooks A.

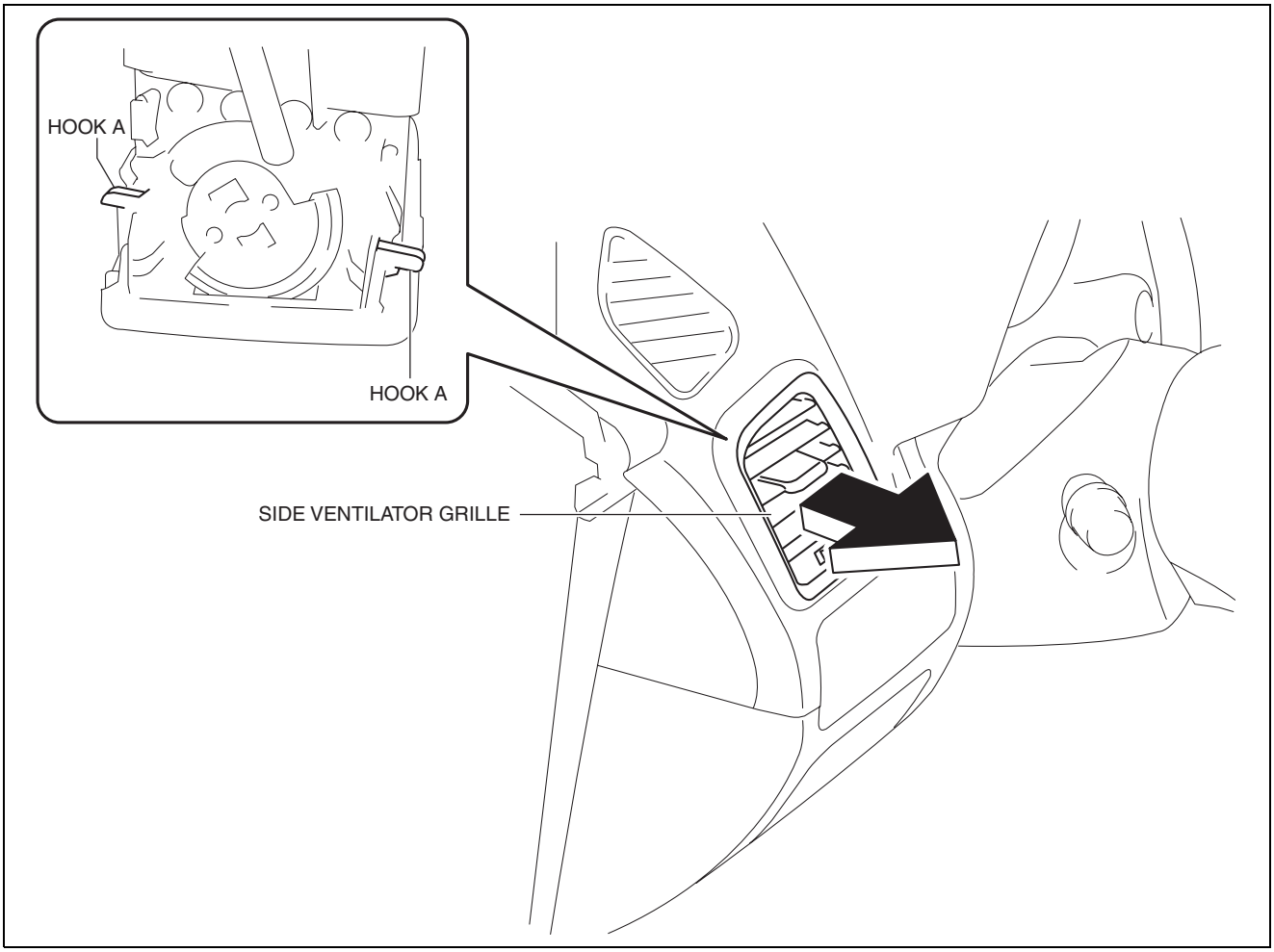

ac5uuw00001792

4. Install in the reverse order of removal.

Passenger-side

1. Disconnect the negative battery cable. (See 01-17A-11 NEGATIVE BATTERY CABLE DISCONNECTION/CONNECTION [SKYACTIV-G 2.0].) (See 01-17A-13 NEGATIVE BATTERY CABLE DISCONNECTION/CONNECTION [SKYACTIV-G 2.0 (WITHOUT i-stop)].) (See 01-17B-9 NEGATIVE BATTERY CABLE DISCONNECTION/CONNECTION [SKYACTIV-D 2.2].)
2. Open the glove compartment.
3. Remove the glove compartment. (See 09-17-30 GLOVE COMPARTMENT REMOVAL/INSTALLATION.)

INTERIOR TRIM

4. Insert your hand from the area where the glove compartment was installed, remove the side ventilator grille in the direction of the arrow shown in the figure while detaching hooks B.

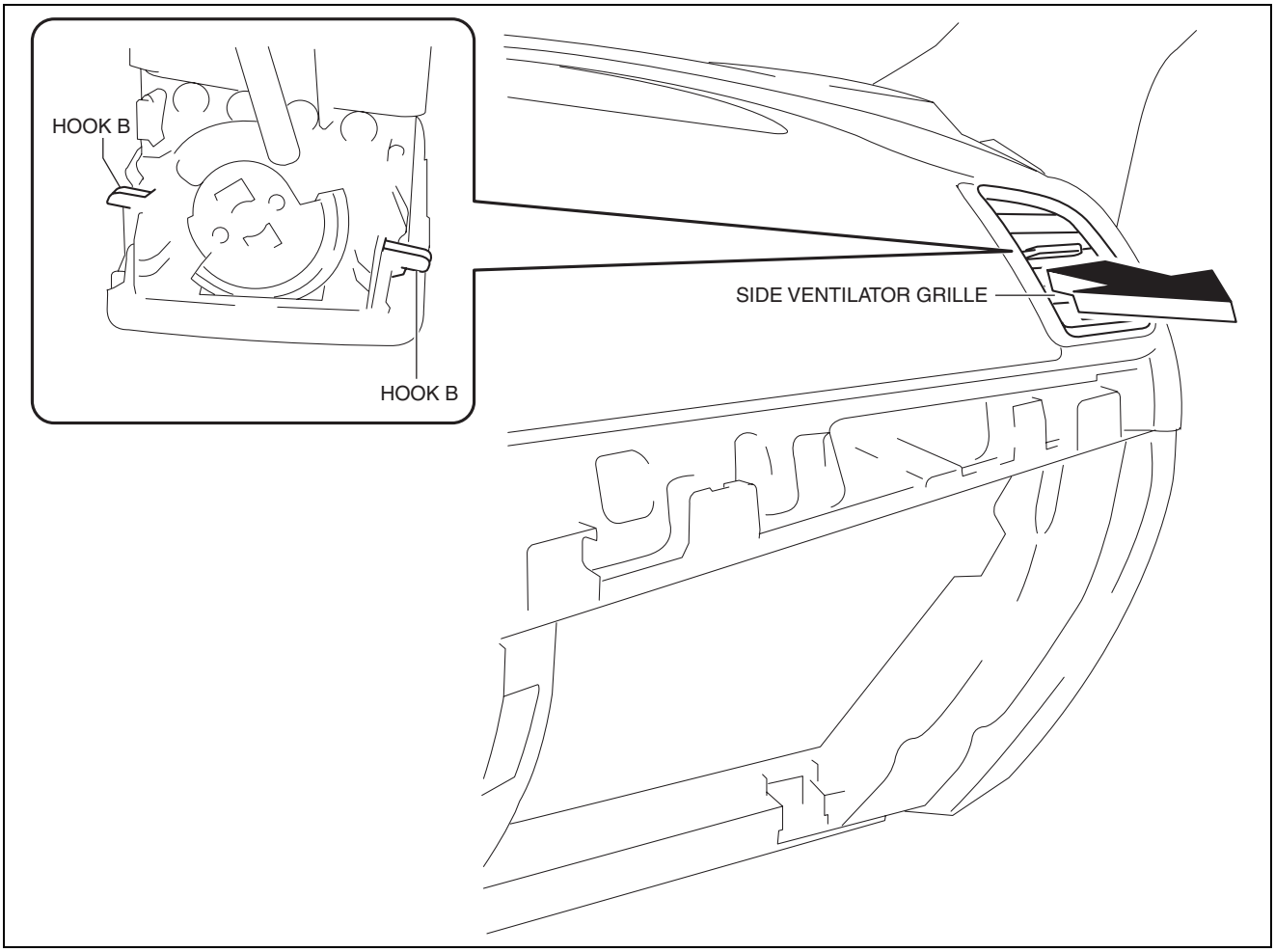

ac5uuw00001793

5. Install in the reverse order of removal.

Center Ventilator Grille

1. Disconnect the negative battery cable. (See 01-17A-11 NEGATIVE BATTERY CABLE DISCONNECTION/CONNECTION [SKYACTIV-G 2.0].) (See 01-17A-13 NEGATIVE BATTERY CABLE DISCONNECTION/CONNECTION [SKYACTIV-G 2.0 (WITHOUT i-stop)].) (See 01-17B-9 NEGATIVE BATTERY CABLE DISCONNECTION/CONNECTION [SKYACTIV-D 2.2].)
2. Remove the decoration panel. (See 09-17-33 DECORATION PANEL REMOVAL/INSTALLATION.)

INTERIOR TRIM

3. Push the edge of center ventilator grille in the direction of arrow (1) and detach hooks C.

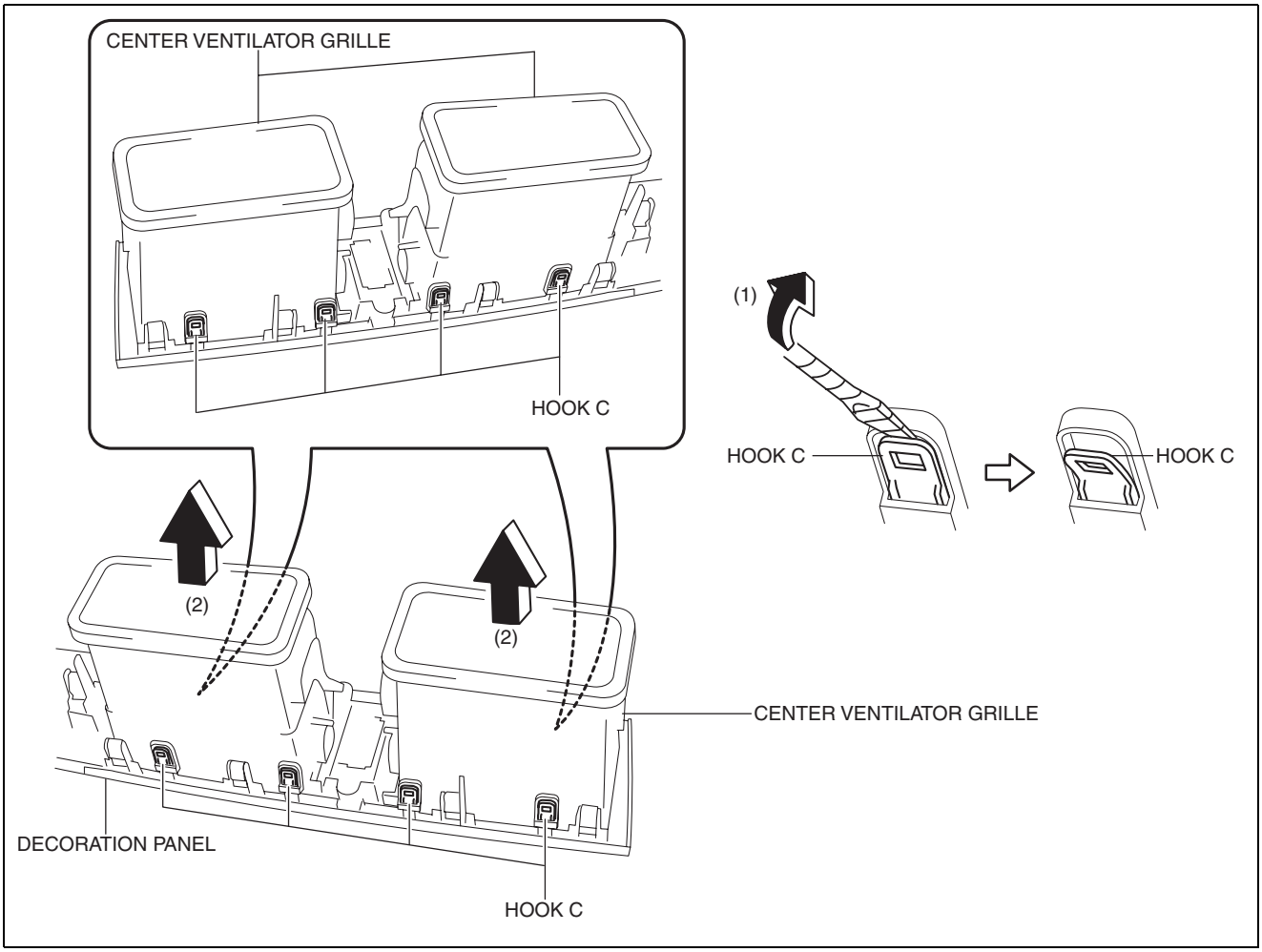

ac5uuw00001794

4. Remove the center ventilator grille in the direction of arrow (2) shown in the figure.
5. Install in the reverse order of removal.

COLUMN COVER REMOVAL/INSTALLATION

id091700800800

1. Pull down the steering wheel.

INTERIOR TRIM

2. Press the shaded area shown in the figure using your thumb, and lift the upper column cover in the direction of arrow (1).

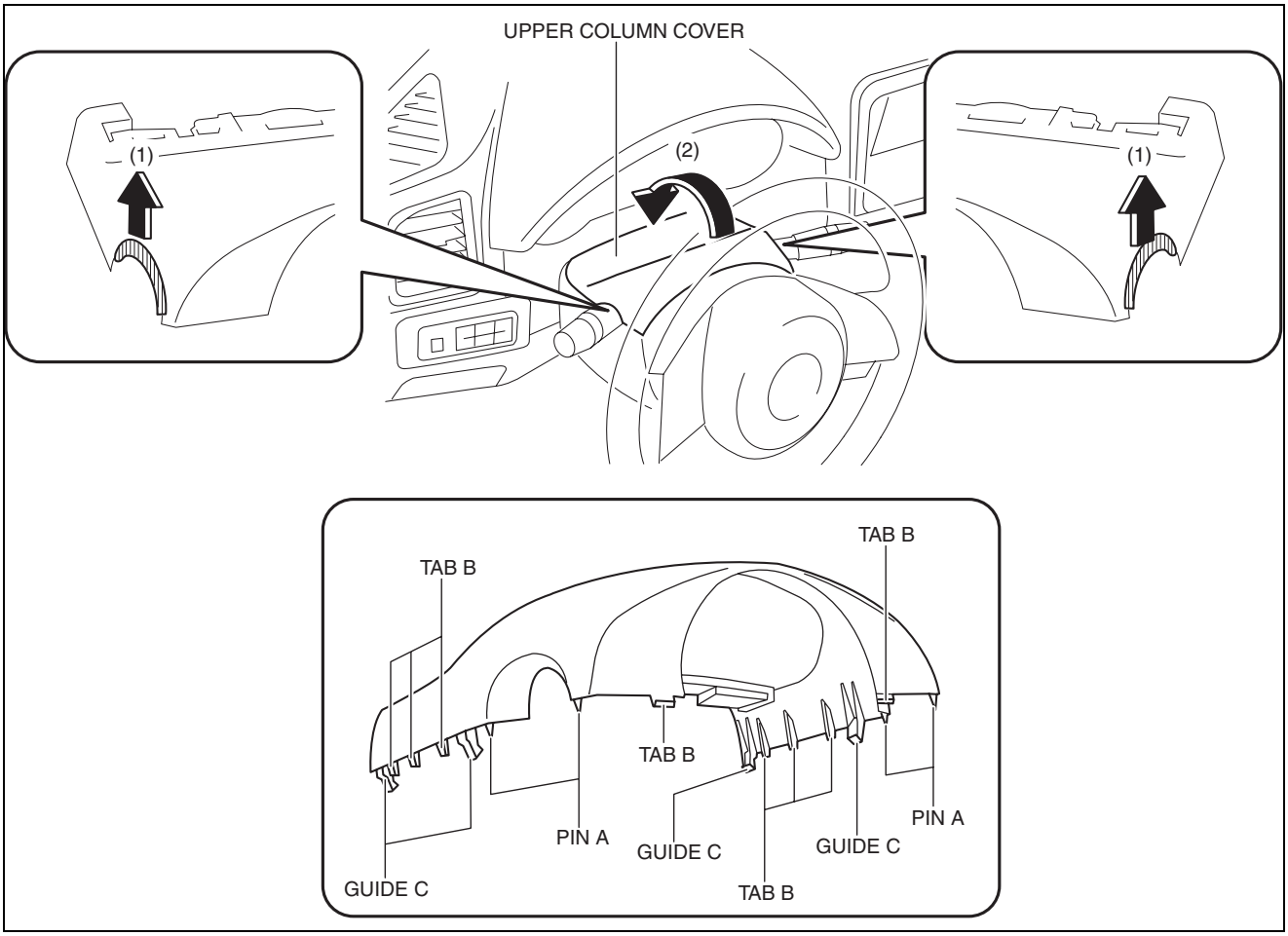

ac5uuw00001753

3. Pull the upper column cover in the direction of the arrow (2) and remove it while detaching pins A, tabs B and guides C.

4. Remove hooks D from the meter hood.

Caution

- **If the cover of the meter hood is deformed, it may not return to its original condition. When removing the cover of the meter hood, detach hooks D one by one from the upper column cover.**

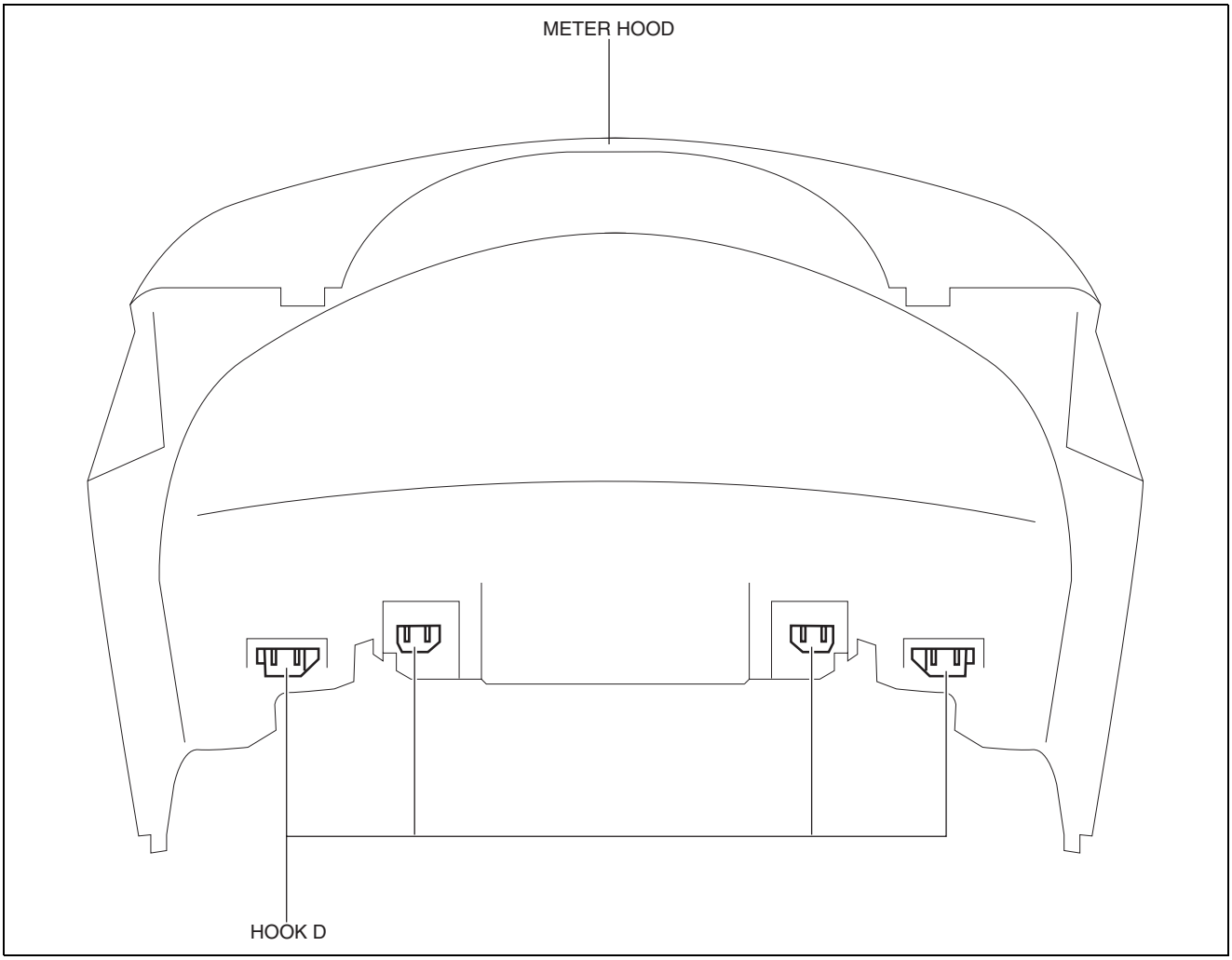

ac5wzw0000142

5. Pull up the steering wheel.

INTERIOR TRIM

6. Remove screws E.

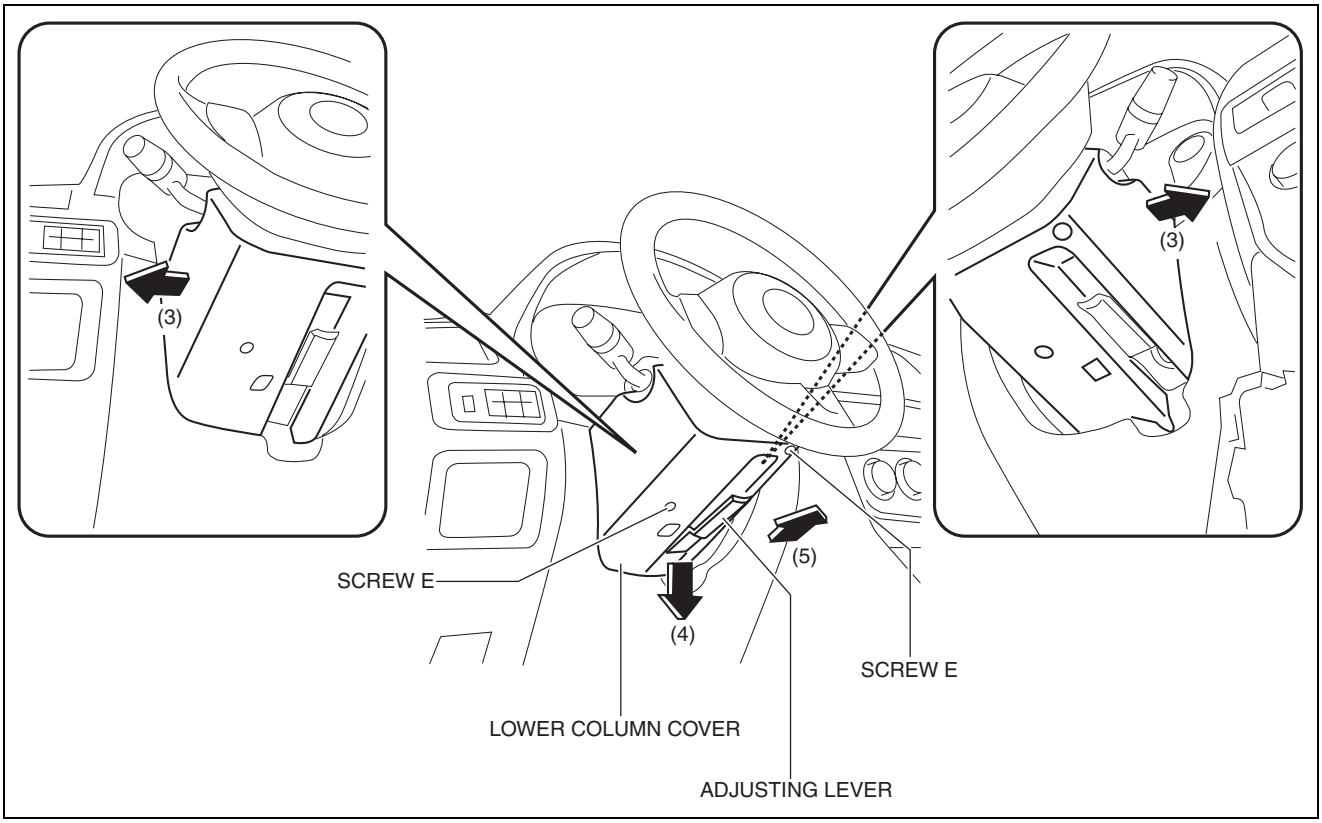

ac5wzw0000280

7. Remove the lower column cover in the direction of the arrow (4),(5) set the adjusting lever aside while keeping it open in the direction of the arrow (3) shown in the figure.
8. Install in the reverse order of removal.

CENTER PANEL REMOVAL/INSTALLATION

id091700804500

1. Disconnect the negative battery cable. (See 01-17A-11 NEGATIVE BATTERY CABLE DISCONNECTION/CONNECTION [SKYACTIV-G 2.0].) (See 01-17A-13 NEGATIVE BATTERY CABLE DISCONNECTION/CONNECTION [SKYACTIV-G 2.0 (WITHOUT i-stop)].) (See 01-17B-9 NEGATIVE BATTERY CABLE DISCONNECTION/CONNECTION [SKYACTIV-D 2.2].)
2. Remove the decoration panel (See 09-17-33 DECORATION PANEL REMOVAL/INSTALLATION.)

INTERIOR TRIM

3. Take the shaded area shown in the figure, and pull the center panel in the direction of the arrow in the order of (1), (2), (3), (4) and remove it while detaching clips A, pins B, hook C and guides D.

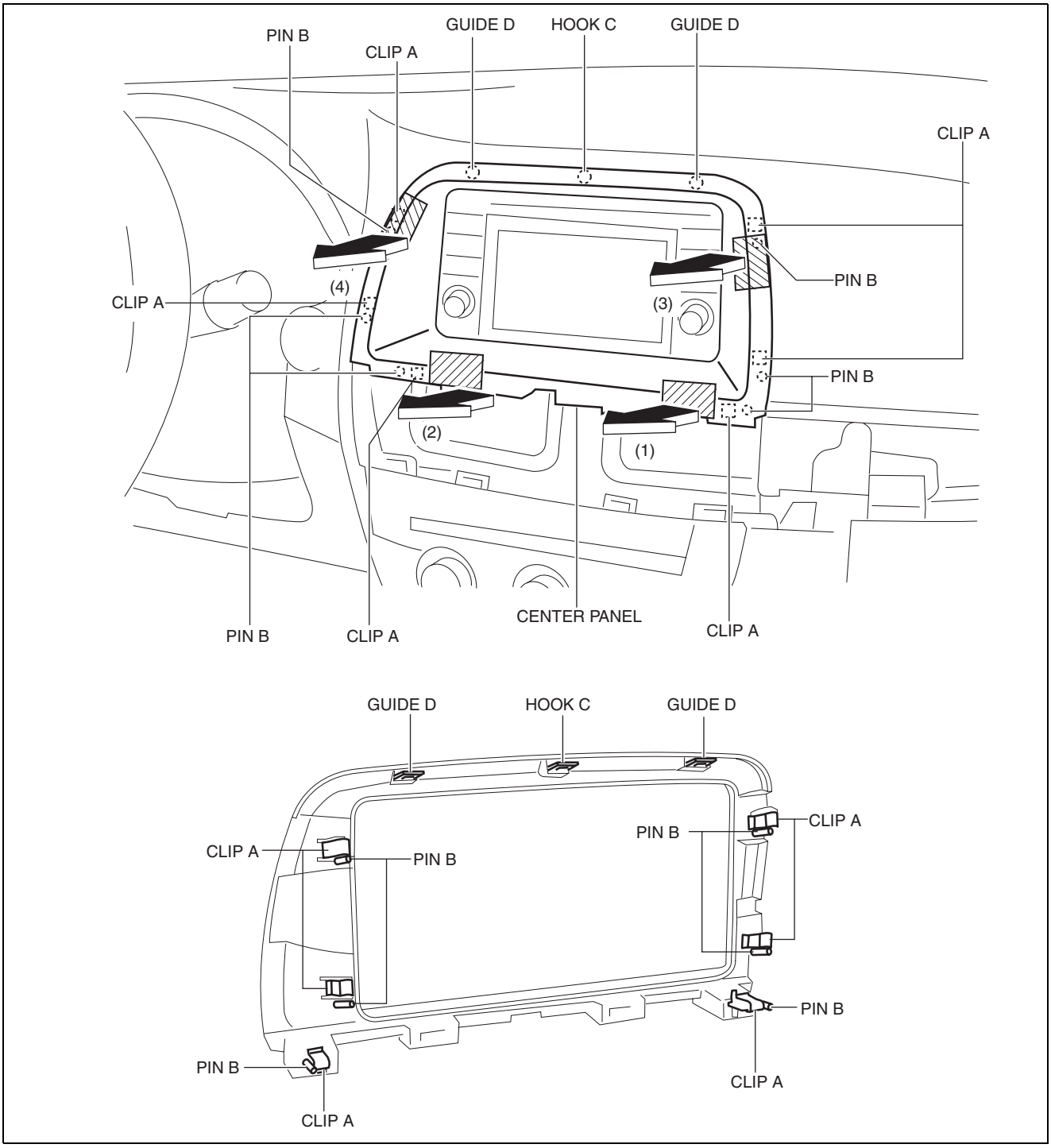

ac5wzw0000458

4. Install in the reverse order of removal.

INTERIOR TRIM

GLOVE COMPARTMENT REMOVAL/INSTALLATION

id091700800700

1. Push the glove compartment in the direction of the arrow (1) and remove hooks A.

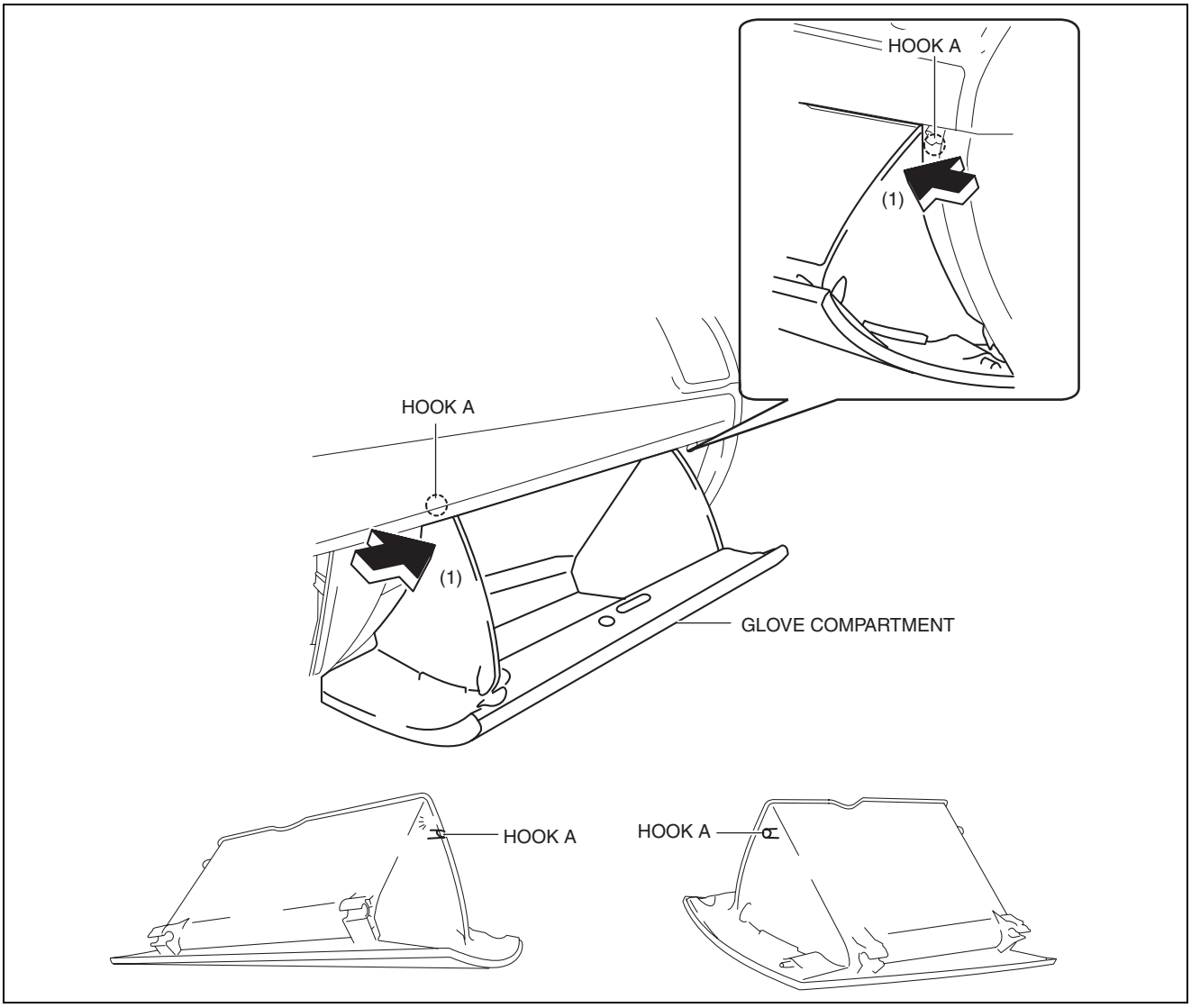

ac5uuw00001750

2. Pull the stay damper in the direction of the arrow (2) shown in the figure and remove the hook B.

Caution

- **If the glove compartment is closed without being joined to the stay damper, the stay damper may be damaged. Verify that the stay damper is joined to the glove compartment before closing the glove compartment.**

INTERIOR TRIM

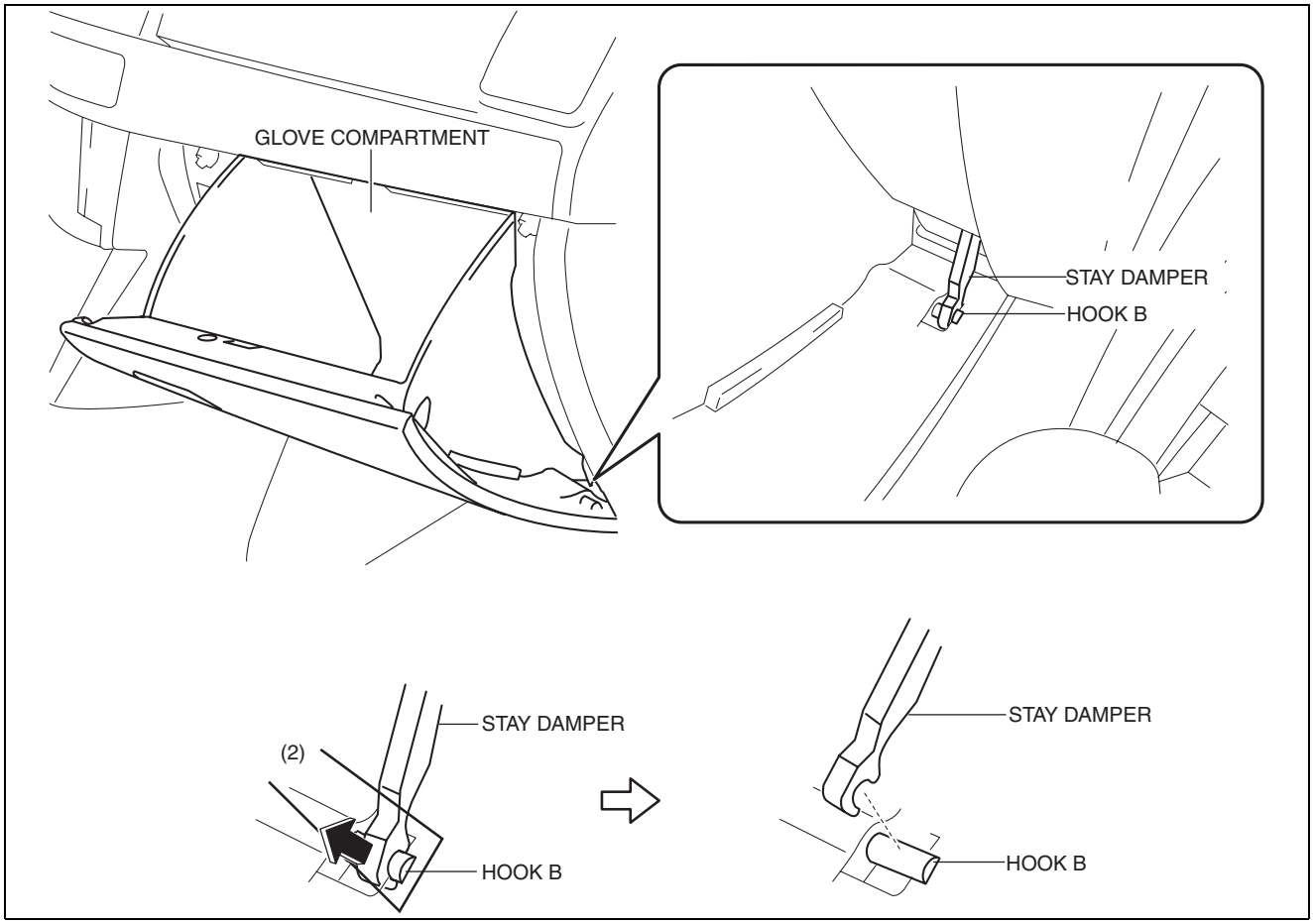

ac5wzw0000461

3. Pull down the glove compartment in the direction of the arrow (3).

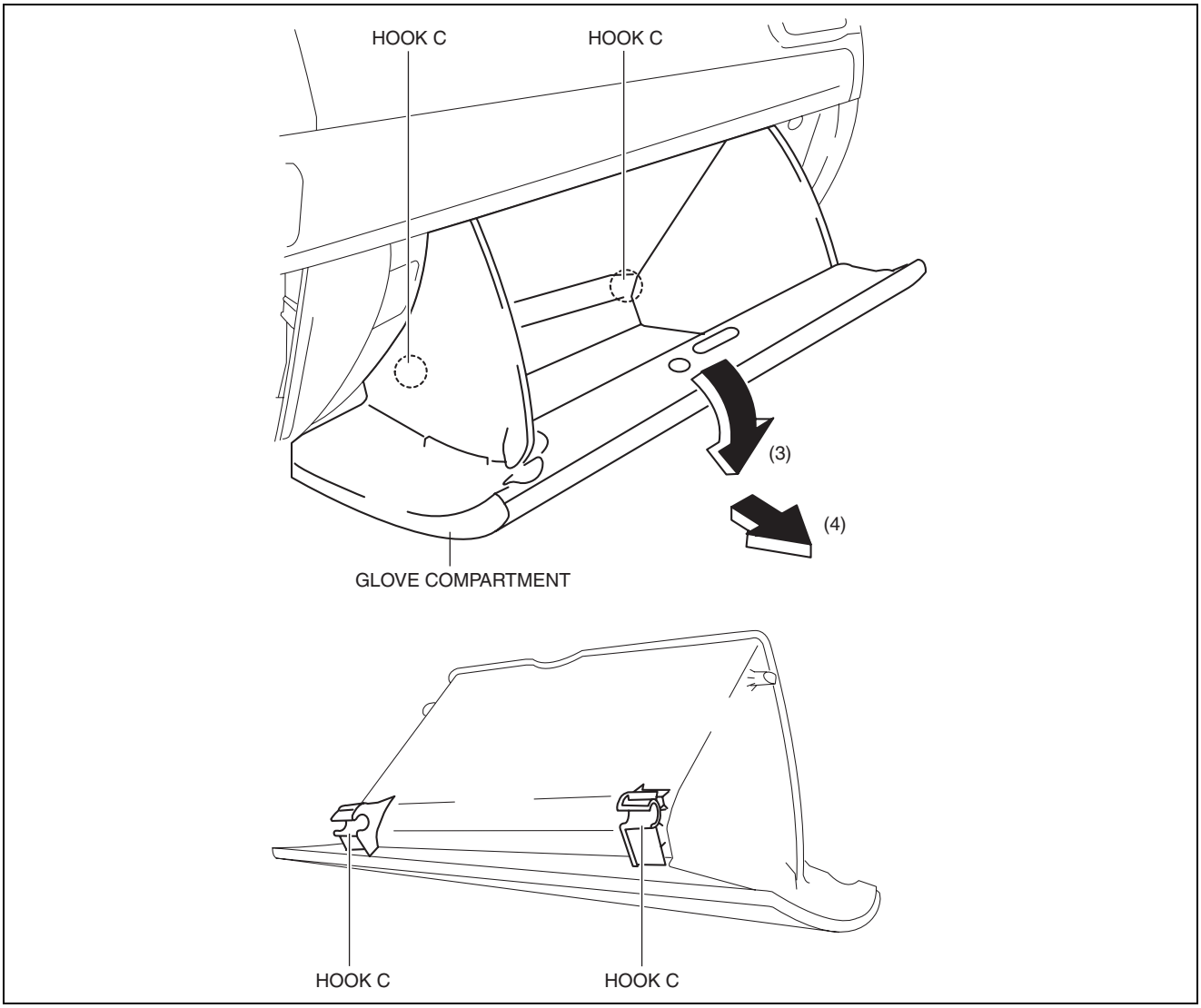

ac5uuw00001752

4. Pull the glove compartment in the direction of the arrow (4) and remove it while detaching hooks C.
5. Install in the reverse order of removal.

INTERIOR TRIM

DECORATION PANEL REMOVAL/INSTALLATION

id091700806600

Caution
- **Affix protective tape to the position shown in the figure.**

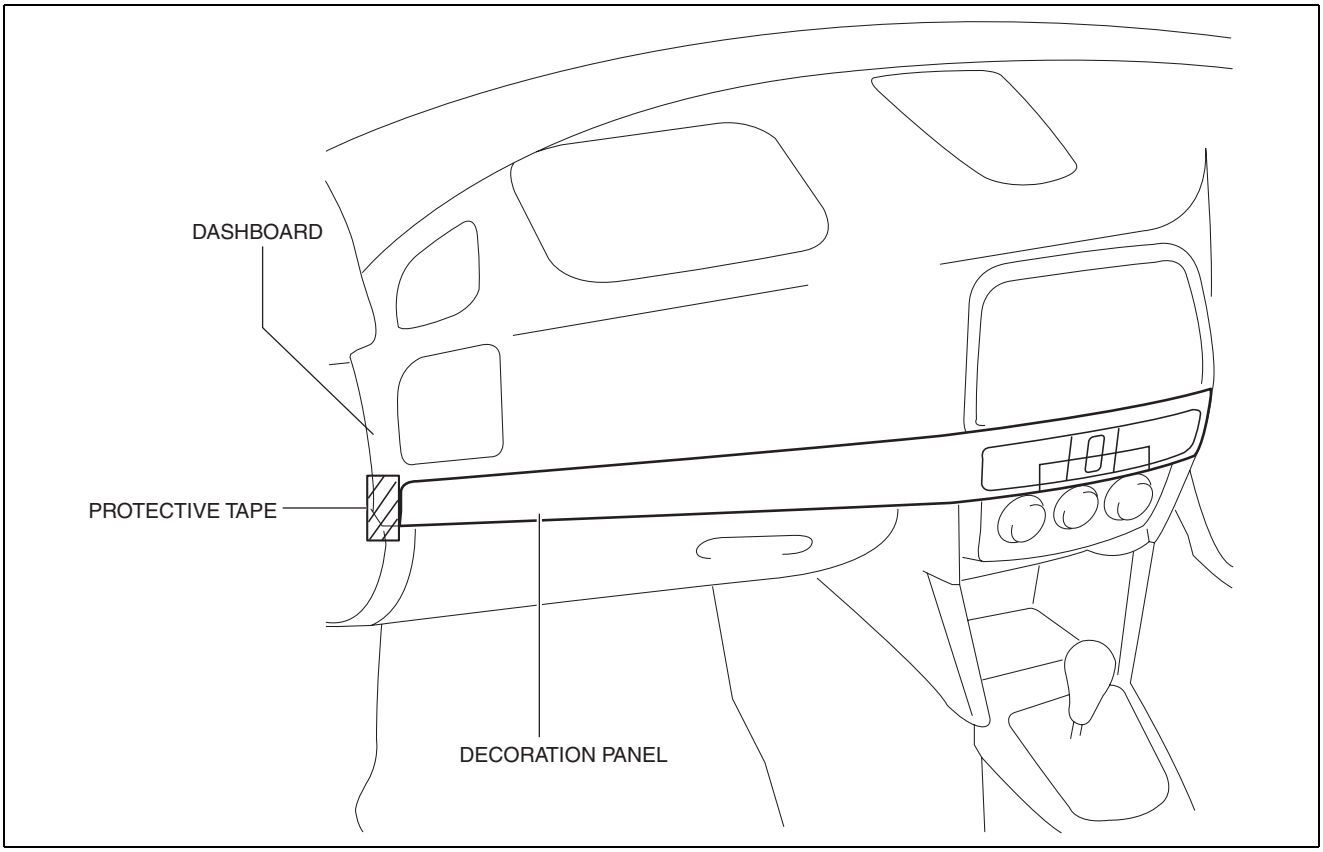

ac5uuw00002064

1. Disconnect the negative battery cable. (See 01-17A-11 NEGATIVE BATTERY CABLE DISCONNECTION/CONNECTION [SKYACTIV-G 2.0].) (See 01-17A-13 NEGATIVE BATTERY CABLE DISCONNECTION/CONNECTION [SKYACTIV-G 2.0 (WITHOUT i-stop)].) (See 01-17B-9 NEGATIVE BATTERY CABLE DISCONNECTION/CONNECTION [SKYACTIV-D 2.2].)
2. Open the glove compartment.

INTERIOR TRIM

3. Insert a tape-wrapped flathead screwdriver in the position indicated by the arrow (1) in the figure and detach clip A.

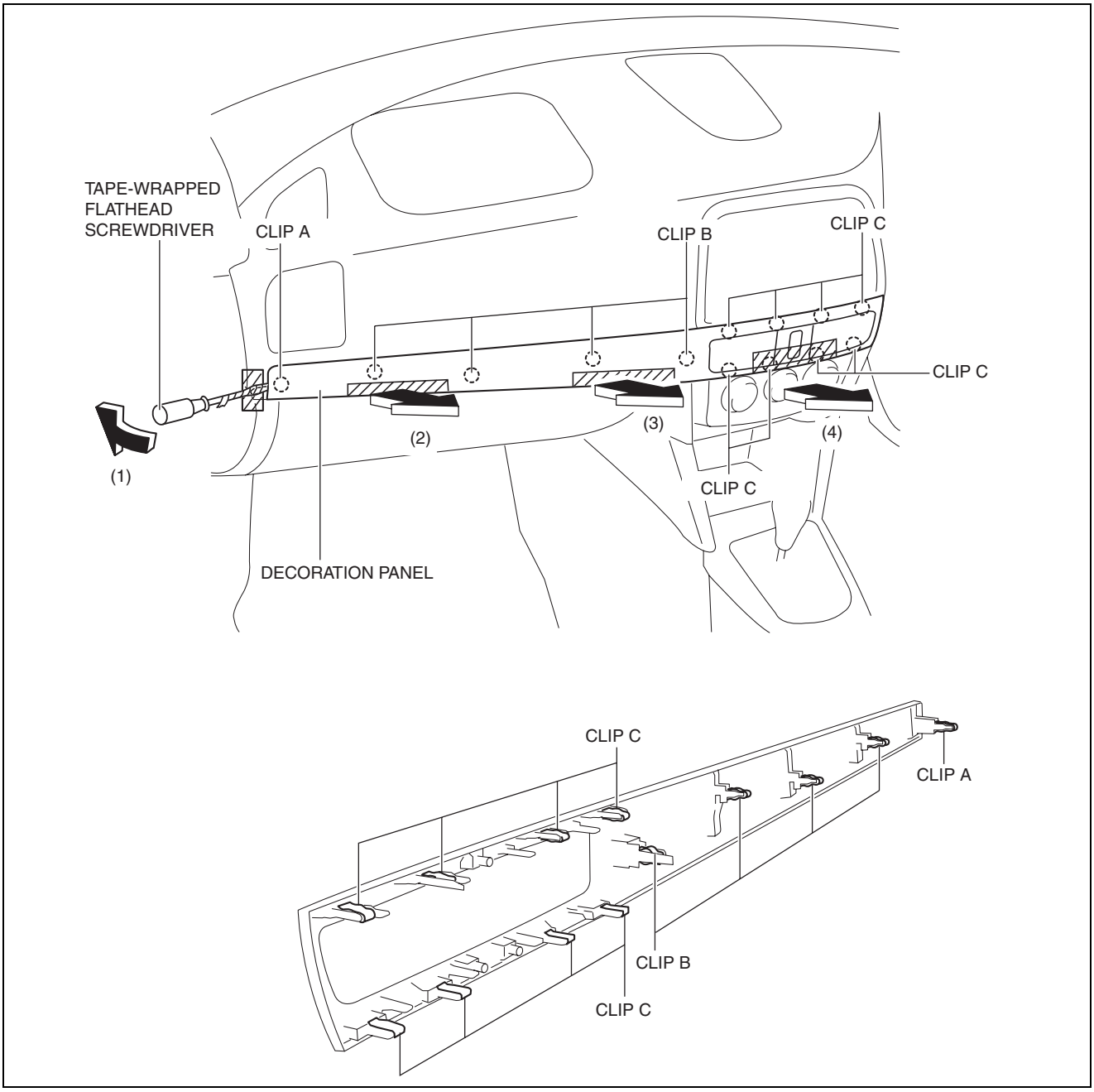

ac5wzw0000300

4. Take the shaded area shown in the figure, and remove the decoration panel in the direction of the arrow in the order of (2), (3), (4) while detaching clips B, clips C.
5. Disconnect the hazard switch connector.
6. Install in the reverse order of removal.

INTERIOR TRIM

DASHBOARD UNDER COVER REMOVAL/INSTALLATION

id091700807200

1. Detach hooks A in the direction of arrow (1) shown in the figure.

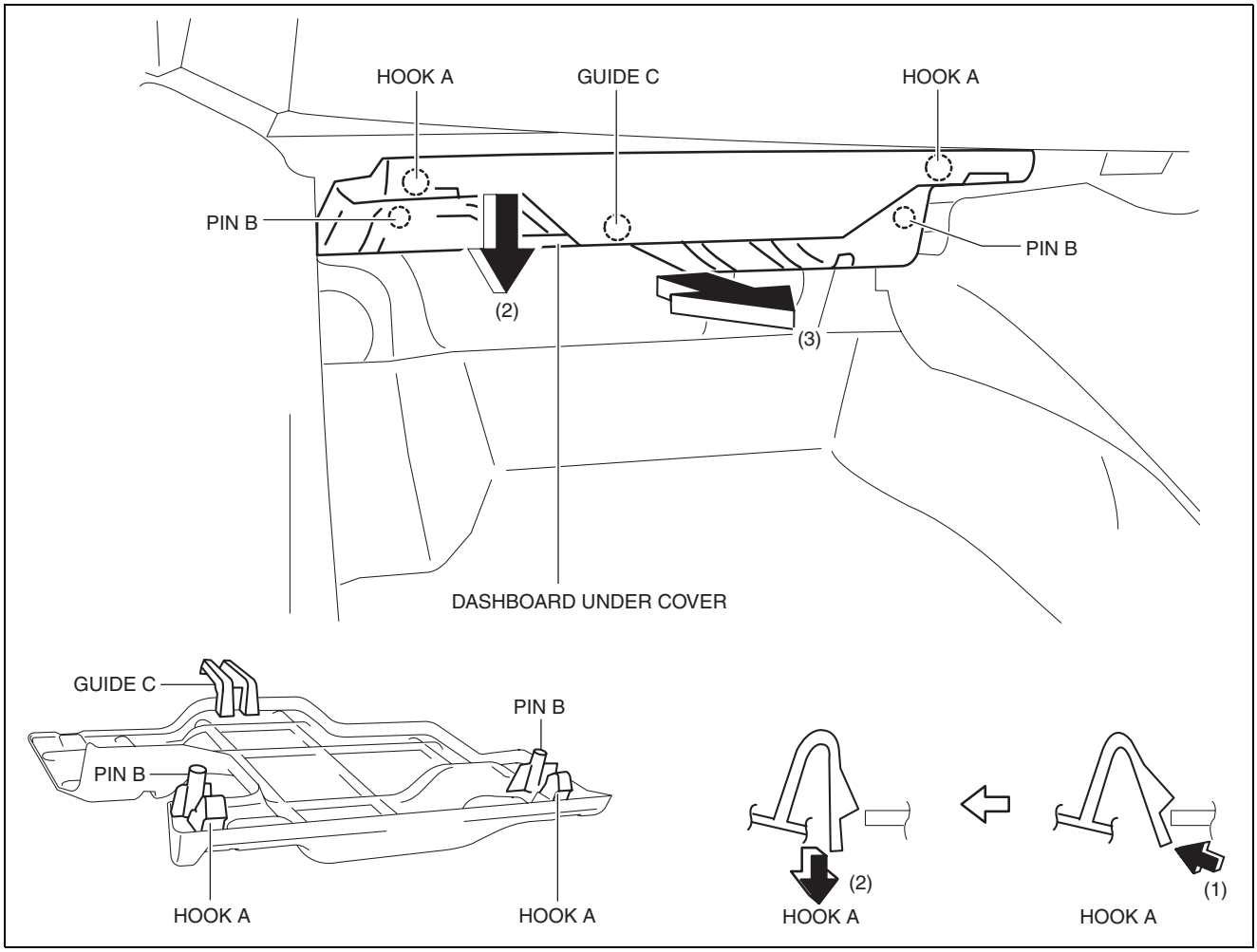

ac5wzw0000461

2. Pull the dashboard under cover in the direction of arrow (2) while detaching pins B.
3. Remove the dashboard under cover in the direction of the arrow (3) shown in the figure while detaching the guide C.

Caution

- **If hooks A and pins B is removed forcefully, guide C may be damaged. Carefully remove hooks A and pins B so as not to damage guide C.**

4. Install in the reverse order of removal.

LOWER PANEL REMOVAL/INSTALLATION

id091700801100

Driver-side

1. Disconnect the negative battery cable. (See 01-17A-11 NEGATIVE BATTERY CABLE DISCONNECTION/CONNECTION [SKYACTIV-G 2.0].) (See 01-17A-13 NEGATIVE BATTERY CABLE DISCONNECTION/CONNECTION [SKYACTIV-G 2.0 (WITHOUT i-stop)].) (See 01-17B-9 NEGATIVE BATTERY CABLE DISCONNECTION/CONNECTION [SKYACTIV-D 2.2].)
2. Remove the following parts:
   (1) Driver-side front scuff plate (See 09-17-61 FRONT SCUFF PLATE REMOVAL/INSTALLATION.)
   (2) Driver-side front side trim (See 09-17-62 FRONT SIDE TRIM REMOVAL/INSTALLATION.)
   (3) Car-navigation unit (with car-navigation system) (See 09-20-11 CAR-NAVIGATION UNIT REMOVAL/INSTALLATION.)
   (4) Switch panel (See 09-17-18 SWITCH PANEL REMOVAL/INSTALLATION.)
   (5) Decoration panel (See 09-17-33 DECORATION PANEL REMOVAL/INSTALLATION.)
   (6) Shift lever knob (MTX) (See 05-16A-1 MANUAL TRANSAXLE SHIFT MECHANISM REMOVAL/INSTALLATION [C66M-R, C66MX-R].) (See 05-16B-1 MANUAL TRANSAXLE SHIFT MECHANISM REMOVAL/INSTALLATION [D66M-R, D66MX-R].)

(7) Front console box (See 09-17-40 FRONT CONSOLE BOX REMOVAL/INSTALLATION.)
(8) Shift panel (See 09-17-42 SHIFT PANEL REMOVAL/INSTALLATION.)
(9) Upper panel (See 09-17-44 UPPER PANEL REMOVAL/INSTALLATION.)
(10)Rear console (See 09-17-45 REAR CONSOLE REMOVAL/INSTALLATION.)
(11)Side wall (See 09-17-49 SIDE WALL REMOVAL/INSTALLATION.)
(12)Front console (See 09-17-50 FRONT CONSOLE REMOVAL/INSTALLATION.)
(13)Bonnet release lever (See 09-14-17 BONNET LATCH AND RELEASE LEVER REMOVAL/INSTALLATION.)

INTERIOR TRIM

3. Remove the screw A.

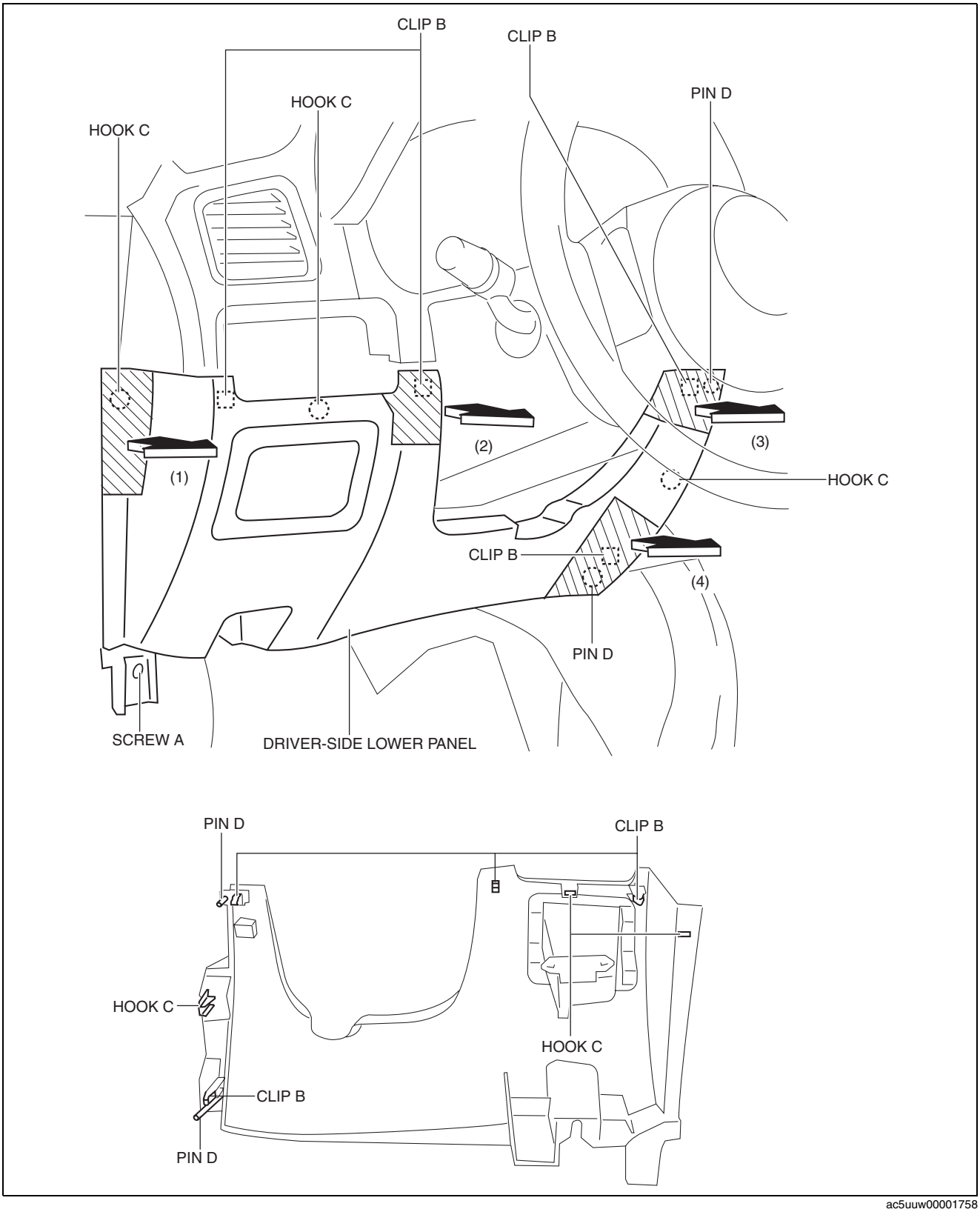

ac5uuw00001758

4. Take the shaded area shown in the figure, and pull the driver-side lower panel in the direction of the arrow in the order of (1), (2), (3),(4) and remove it while detaching clips B, hooks C and pins D.
5. Install in the reverse order of removal.

Passenger-side

1. Disconnect the negative battery cable. (See 01-17A-11 NEGATIVE BATTERY CABLE DISCONNECTION/ CONNECTION [SKYACTIV-G 2.0].) (See 01-17A-13 NEGATIVE BATTERY CABLE DISCONNECTION/

CONNECTION [SKYACTIV-G 2.0 (WITHOUT i-stop)].) (See 01-17B-9 NEGATIVE BATTERY CABLE DISCONNECTION/CONNECTION [SKYACTIV-D 2.2].)

2. Remove the following parts:
   (1) Passenger-side front scuff plate (See 09-17-61 FRONT SCUFF PLATE REMOVAL/INSTALLATION.)
   (2) Passenger-side front side trim (See 09-17-62 FRONT SIDE TRIM REMOVAL/INSTALLATION.)
   (3) Glove compartment (See 09-17-30 GLOVE COMPARTMENT REMOVAL/INSTALLATION.)
   (4) Decoration panel (See 09-17-33 DECORATION PANEL REMOVAL/INSTALLATION.)
   (5) Dashboard under cover (See 09-17-35 DASHBOARD UNDER COVER REMOVAL/INSTALLATION.)

INTERIOR TRIM

3. Remove screws A.

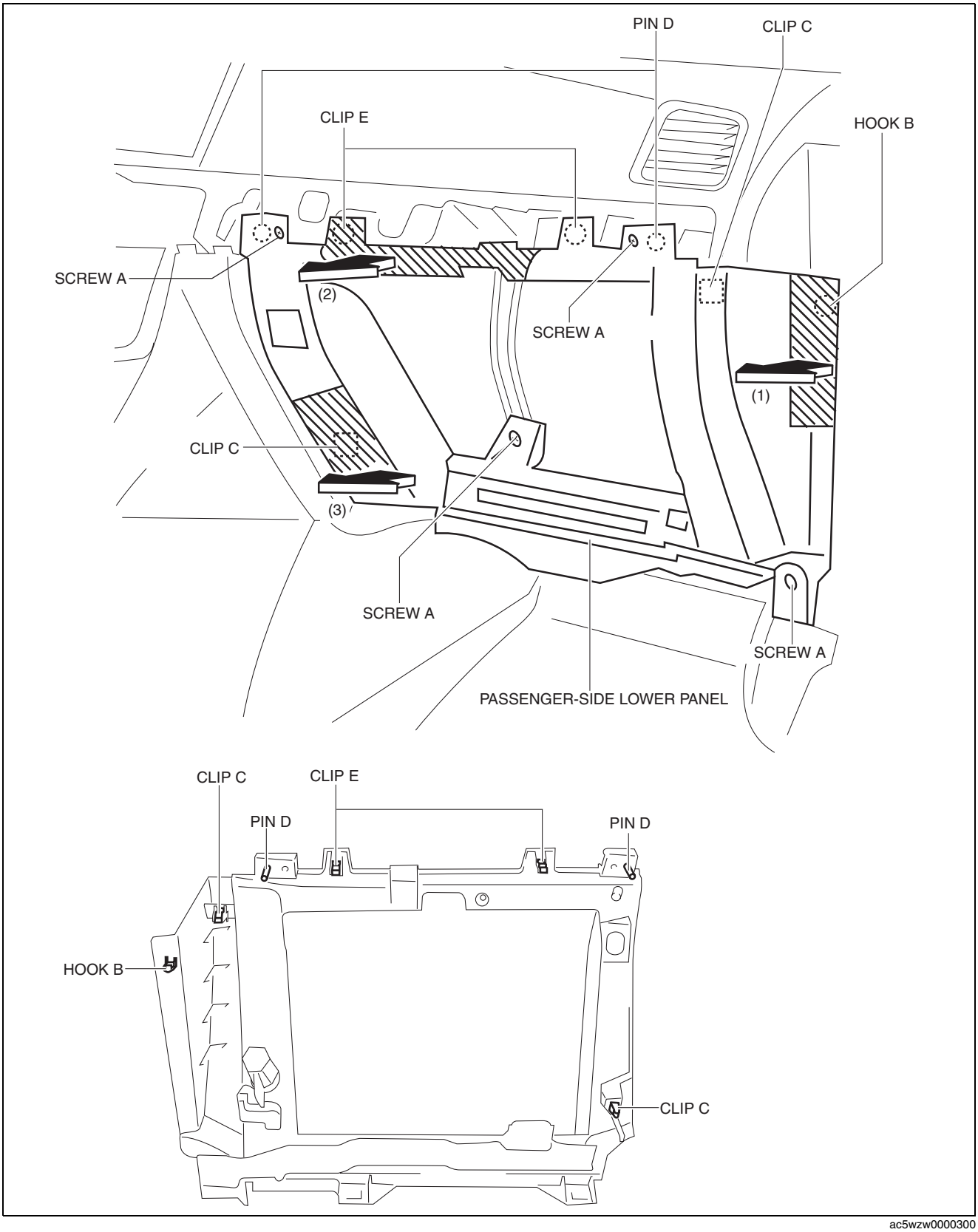

ac5wzw0000300

4. Take the shaded area shown in the figure, and pull the passenger-side lower panel in the direction of the arrow in the order of (1), (2), (3) and remove it while detaching hook B, clips C, pins D and clips E.
5. Install in the reverse order of removal.

INTERIOR TRIM

FRONT CONSOLE BOX REMOVAL/INSTALLATION

id091700803900

Note

- Affix protective tape to the position shown in the figure.

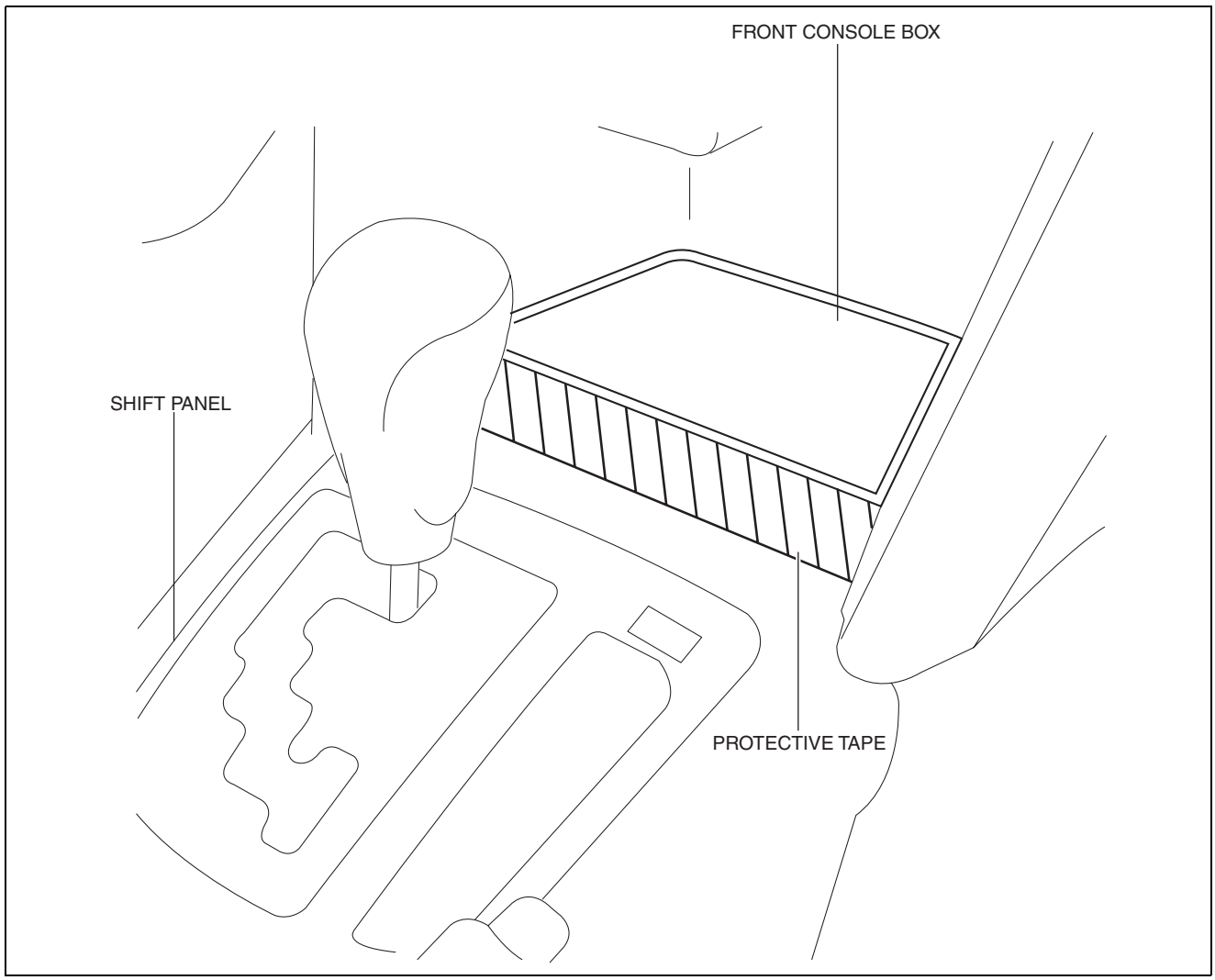

ac5wzw0000144

INTERIOR TRIM

1. Insert a tape-wrapped flathead screwdriver in the position indicated by the arrow in the figure and detach clips A.

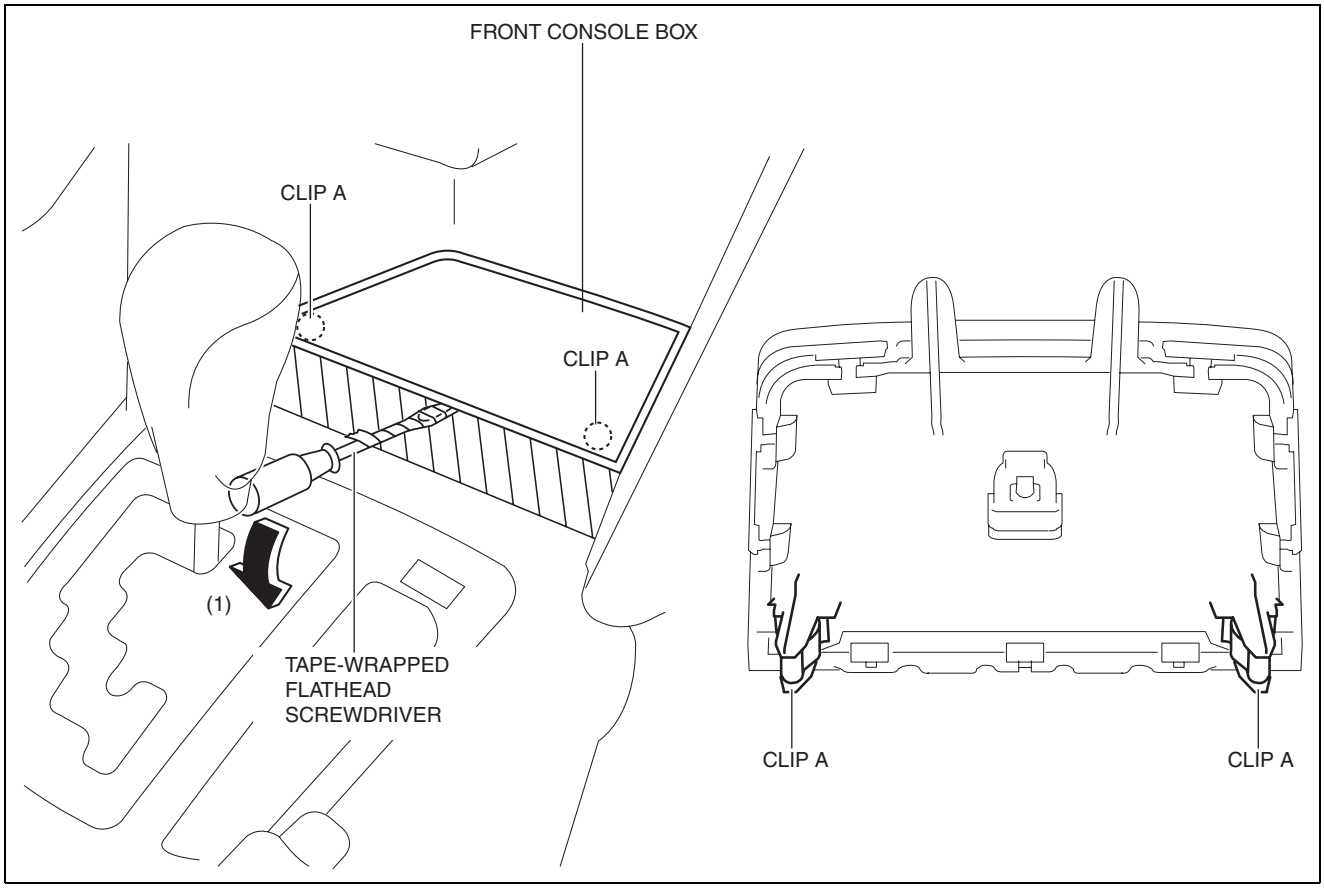

ac5wzw0000321

INTERIOR TRIM

2. Pull the front console box in the direction of the arrow (2) and remove it while detaching the guides B.

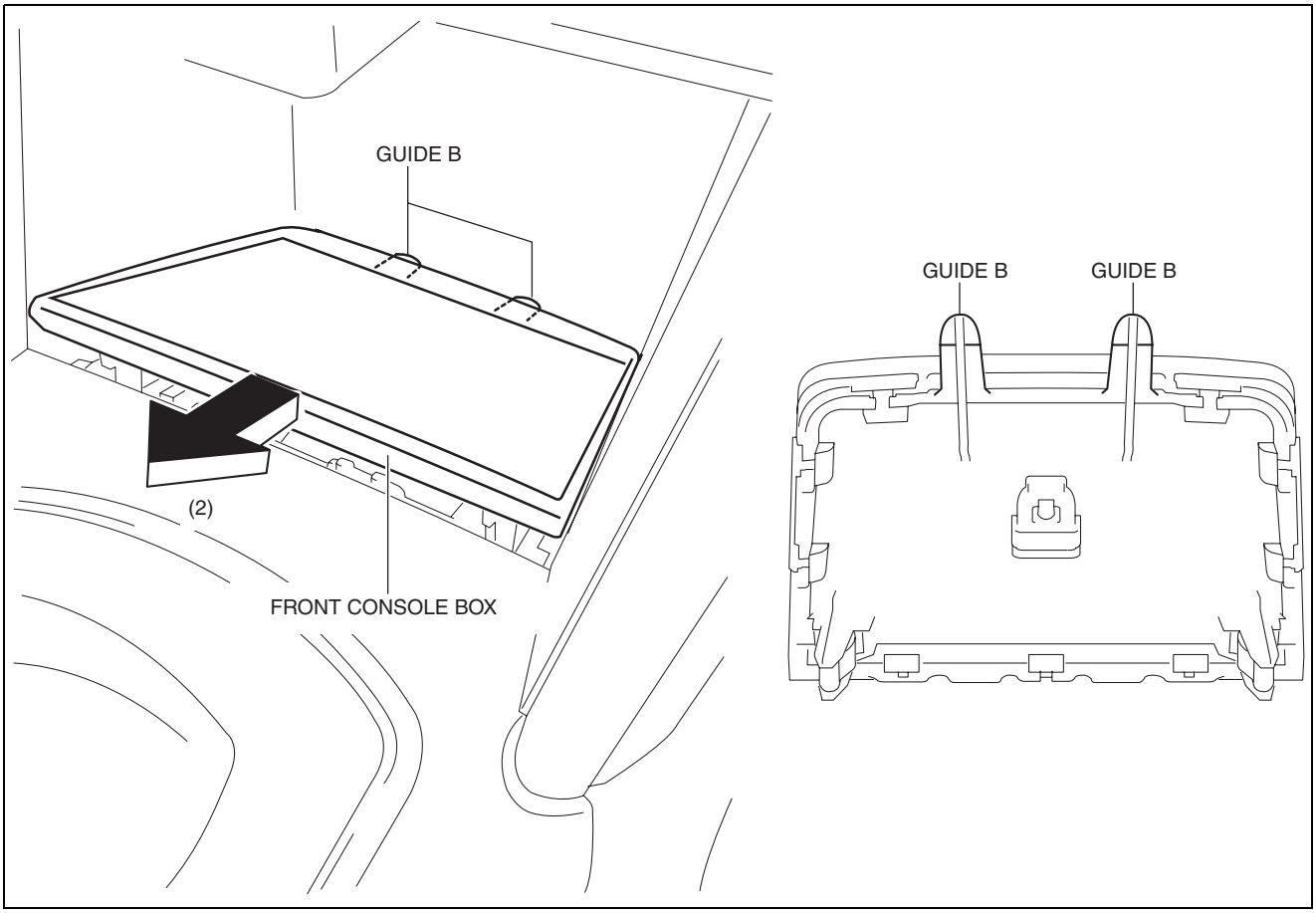

ac5uuw00001785

Note
- When the occur to gap between the front console box and shift panel, remove the shift panel then assemble to the front console box. after install the front console box and shift panel as single unit.

3. Install in the reverse order of removal.

SHIFT PANEL REMOVAL/INSTALLATION

id091700898400

ATX

1. Disconnect the negative battery cable. (See 01-17A-11 NEGATIVE BATTERY CABLE DISCONNECTION/CONNECTION [SKYACTIV-G 2.0].) (See 01-17A-13 NEGATIVE BATTERY CABLE DISCONNECTION/CONNECTION [SKYACTIV-G 2.0 (WITHOUT i-stop)].) (See 01-17B-9 NEGATIVE BATTERY CABLE DISCONNECTION/CONNECTION [SKYACTIV-D 2.2].)
2. Selector lever to neutral position.
3. Remove the front console box. (See 09-17-40 FRONT CONSOLE BOX REMOVAL/INSTALLATION.)

INTERIOR TRIM

4. Take the shaded area shown in the figure, and remove the shift panel in the direction of the arrow in the order of (1), (2) while detaching clips A, hook B.

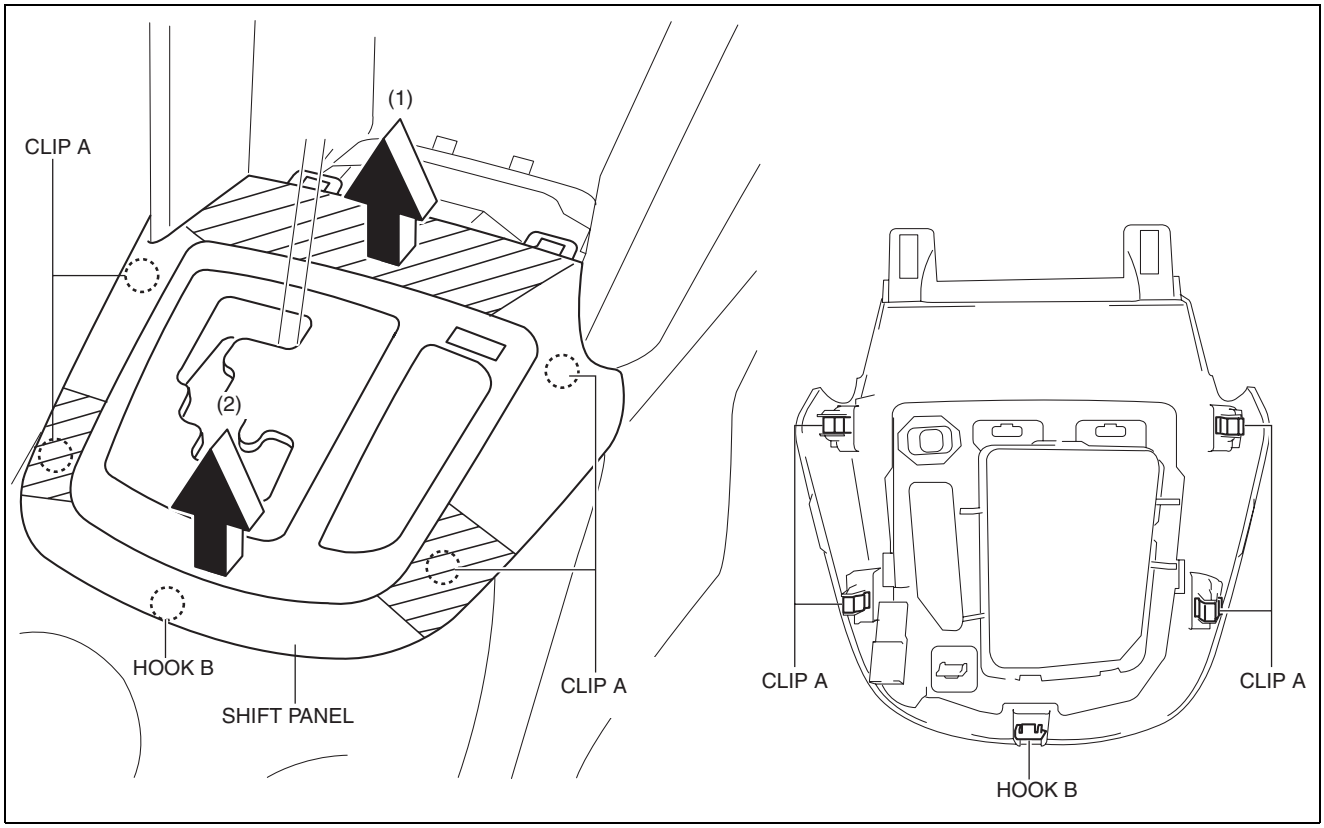

ac5uuw00001801

5. Disconnect the connector.
6. Install in the reverse order of removal.

MTX

1. Disconnect the negative battery cable. (See 01-17A-11 NEGATIVE BATTERY CABLE DISCONNECTION/CONNECTION [SKYACTIV-G 2.0].) (See 01-17A-13 NEGATIVE BATTERY CABLE DISCONNECTION/CONNECTION [SKYACTIV-G 2.0 (WITHOUT i-stop)].) (See 01-17B-9 NEGATIVE BATTERY CABLE DISCONNECTION/CONNECTION [SKYACTIV-D 2.2].)
2. Remove the shift lever knob. (See 05-16A-1 MANUAL TRANSAXLE SHIFT MECHANISM REMOVAL/INSTALLATION [C66M-R, C66MX-R].) (See 05-16B-1 MANUAL TRANSAXLE SHIFT MECHANISM REMOVAL/INSTALLATION [D66M-R, D66MX-R].)

INTERIOR TRIM

3. Take the shaded area shown in the figure, and remove the shift panel in the direction of the arrow in the order of (1), (2) while detaching clips A, pin B, hook C.

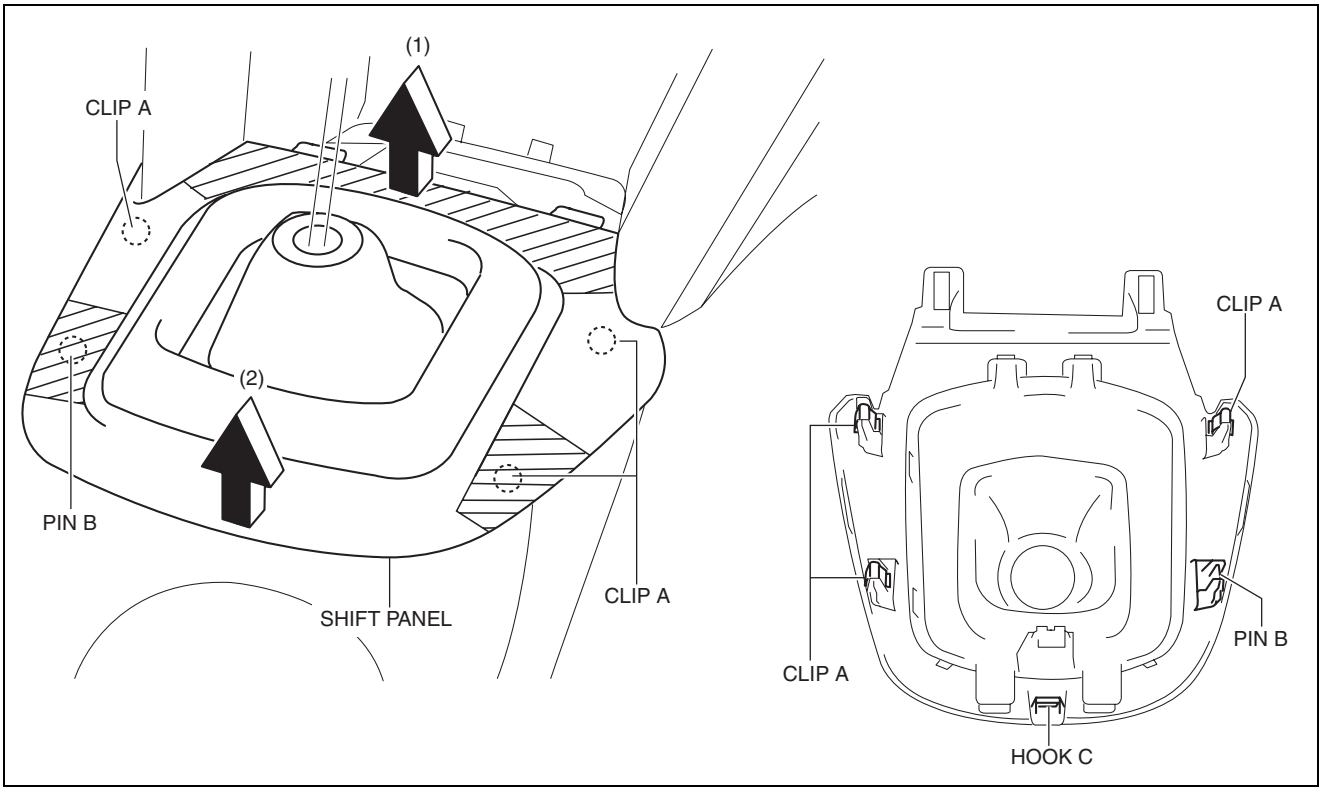

ac5uuw00001802

4. Install in the reverse order of removal.

UPPER PANEL REMOVAL/INSTALLATION

id091700898300

1. Disconnect the negative battery cable. (See 01-17A-11 NEGATIVE BATTERY CABLE DISCONNECTION/CONNECTION [SKYACTIV-G 2.0].) (See 01-17A-13 NEGATIVE BATTERY CABLE DISCONNECTION/CONNECTION [SKYACTIV-G 2.0 (WITHOUT i-stop)].) (See 01-17B-9 NEGATIVE BATTERY CABLE DISCONNECTION/CONNECTION [SKYACTIV-D 2.2].)
2. Remove the following parts:
   (1) Front console box (See 09-17-40 FRONT CONSOLE BOX REMOVAL/INSTALLATION.)
   (2) Shift lever knob (MTX) (See 05-16A-1 MANUAL TRANSAXLE SHIFT MECHANISM REMOVAL/INSTALLATION [C66M-R, C66MX-R].) (See 05-16B-1 MANUAL TRANSAXLE SHIFT MECHANISM REMOVAL/INSTALLATION [D66M-R, D66MX-R].)
   (3) Shift panel (See 09-17-42 SHIFT PANEL REMOVAL/INSTALLATION.)
3. Open the console lid.
4. Remove the button, then open the fastener.

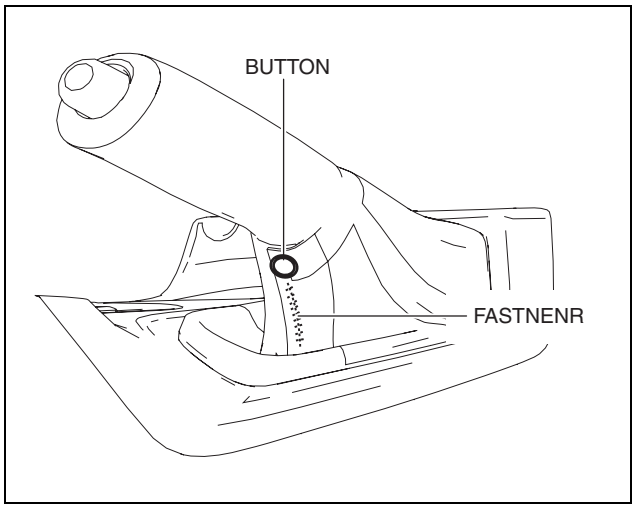

ac5wzw0000313

INTERIOR TRIM

5. Take the shaded area shown in the figure, and remove the upper panel in the direction of the arrow in the order of (1), (2) while detaching clips A, pin B, hooks C.

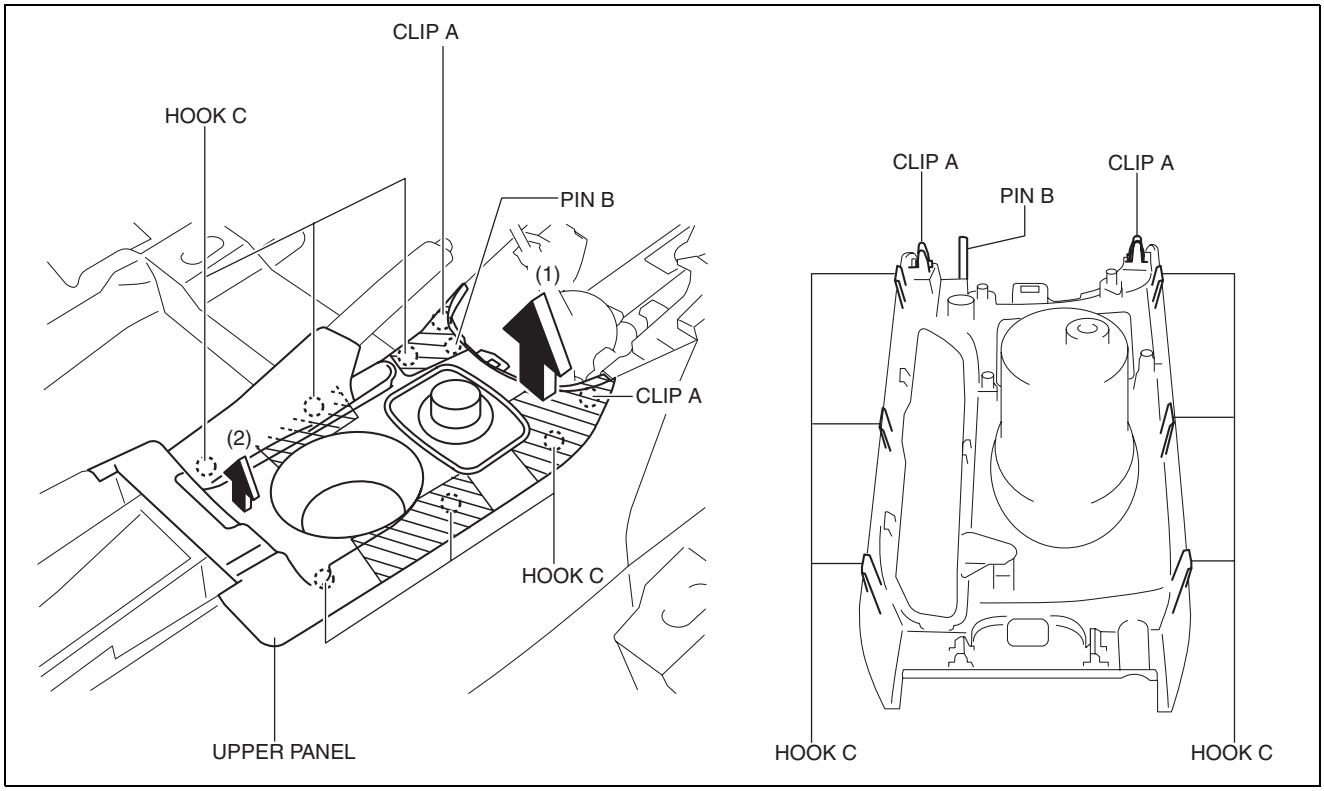

ac5wzw0000280

6. Remove clips D.
7. Disconnect the commander switch connector (with commander switch).
8. Install in the reverse order of removal.

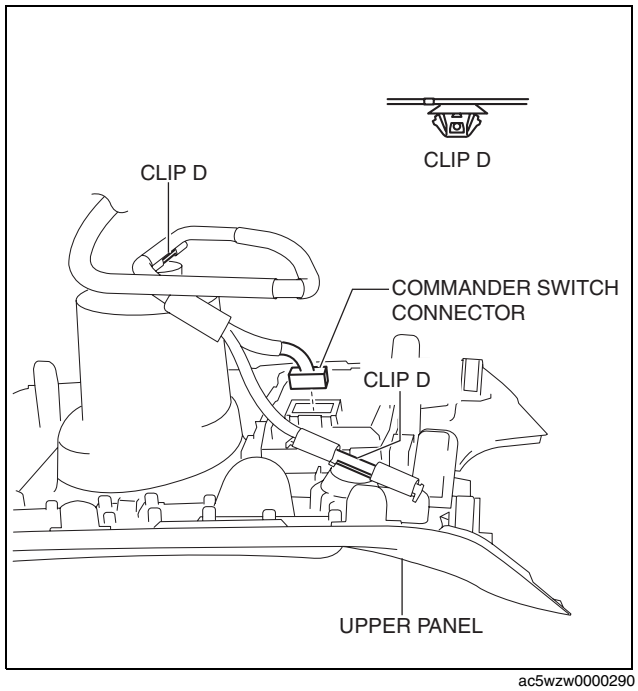

ac5wzw0000290

REAR CONSOLE REMOVAL/INSTALLATION

id091700898500

1. Disconnect the negative battery cable. (See 01-17A-11 NEGATIVE BATTERY CABLE DISCONNECTION/CONNECTION [SKYACTIV-G 2.0].) (See 01-17A-13 NEGATIVE BATTERY CABLE DISCONNECTION/CONNECTION [SKYACTIV-G 2.0 (WITHOUT i-stop)].) (See 01-17B-9 NEGATIVE BATTERY CABLE DISCONNECTION/CONNECTION [SKYACTIV-D 2.2].)
2. Remove the following parts:
   (1) Front console box (See 09-17-40 FRONT CONSOLE BOX REMOVAL/INSTALLATION.)

INTERIOR TRIM

(2) Shift lever knob (MTX) (See 05-16A-1 MANUAL TRANSAXLE SHIFT MECHANISM REMOVAL/INSTALLATION [C66M-R, C66MX-R].) (See 05-16B-1 MANUAL TRANSAXLE SHIFT MECHANISM REMOVAL/INSTALLATION [D66M-R, D66MX-R].)
(3) Shift panel (See 09-17-42 SHIFT PANEL REMOVAL/INSTALLATION.)
(4) Upper panel (See 09-17-44 UPPER PANEL REMOVAL/INSTALLATION.)

3. Remove screws A.

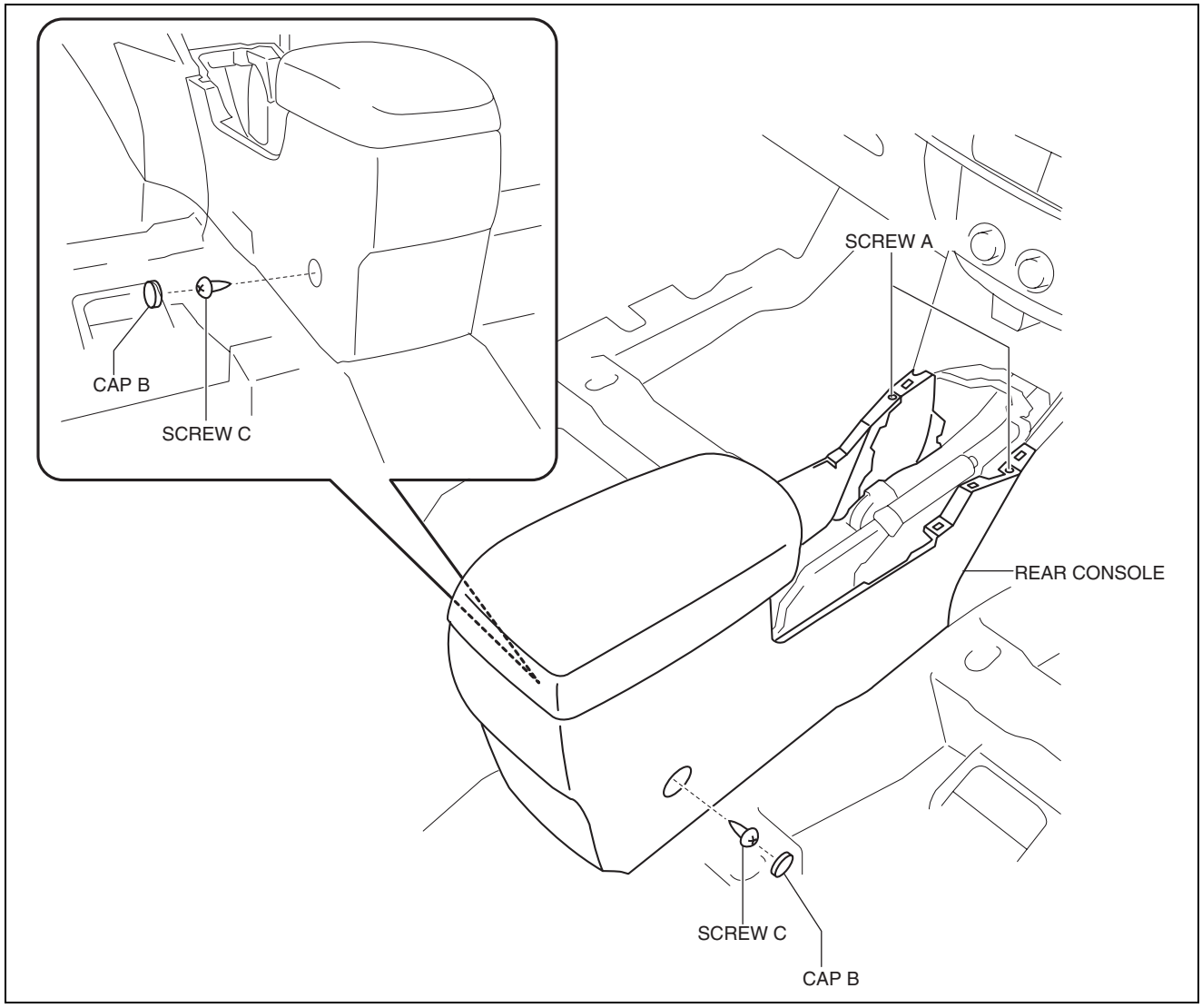

ac5wzw0000145

4. Remove caps B, then remove screws C.

INTERIOR TRIM

5. Pull the rear console in the direction of the arrow (1) while detaching clips D.

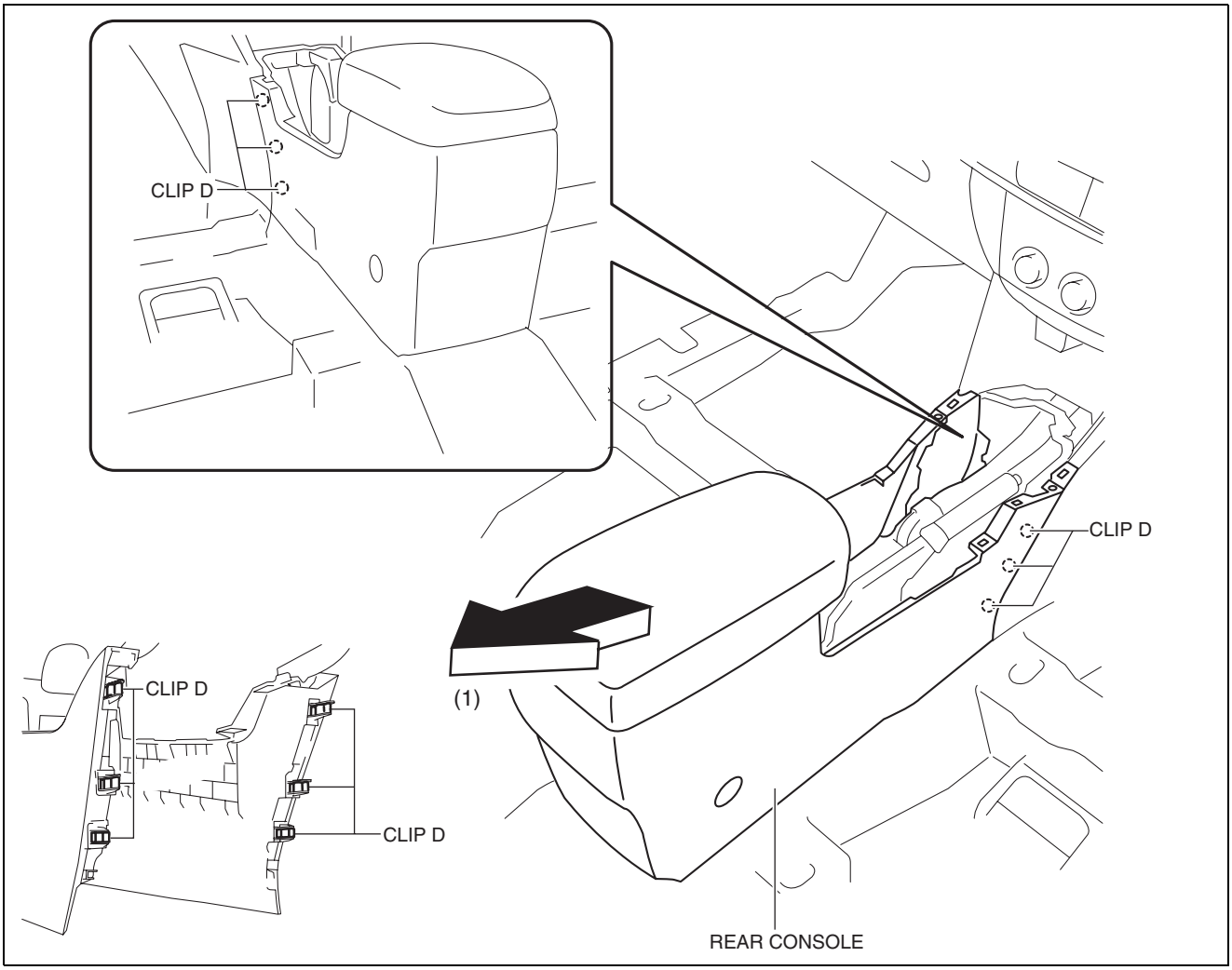

ac5uuw00001803

6. Disconnect the center accessory socket connector and auxiliary jack / USB port connector.
7. Remove the rear console in the direction of the arrow in the order of (2), (3), (4), (5) shown in the figure.

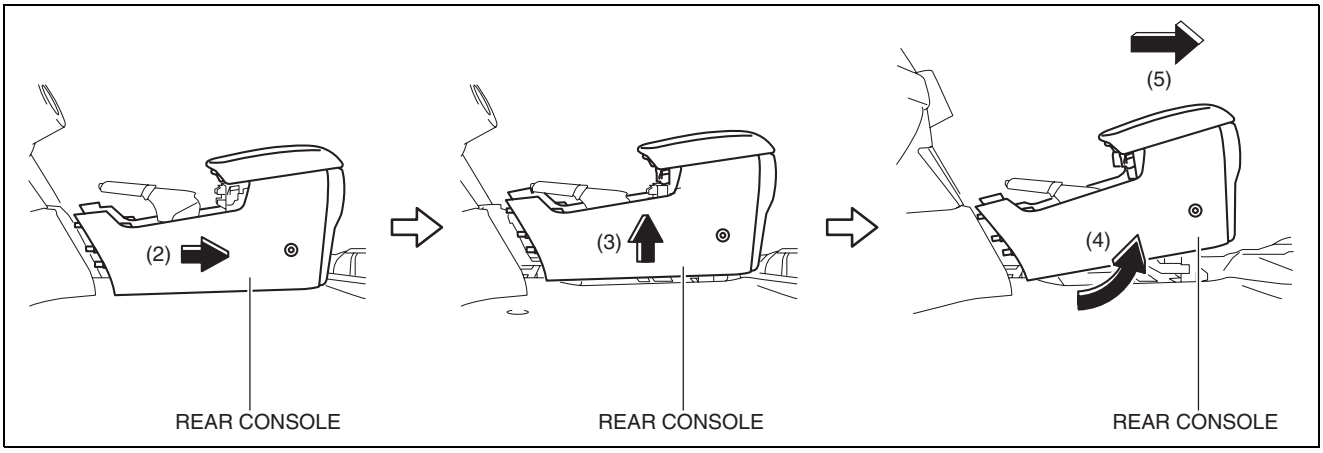

ac5wzw0000300

8. Install in the reverse order of removal.

REAR CONSOLE DISASSEMBLY/ASSEMBLY

id091700898600

1. Disassemble in the order indicated in the table.

INTERIOR TRIM

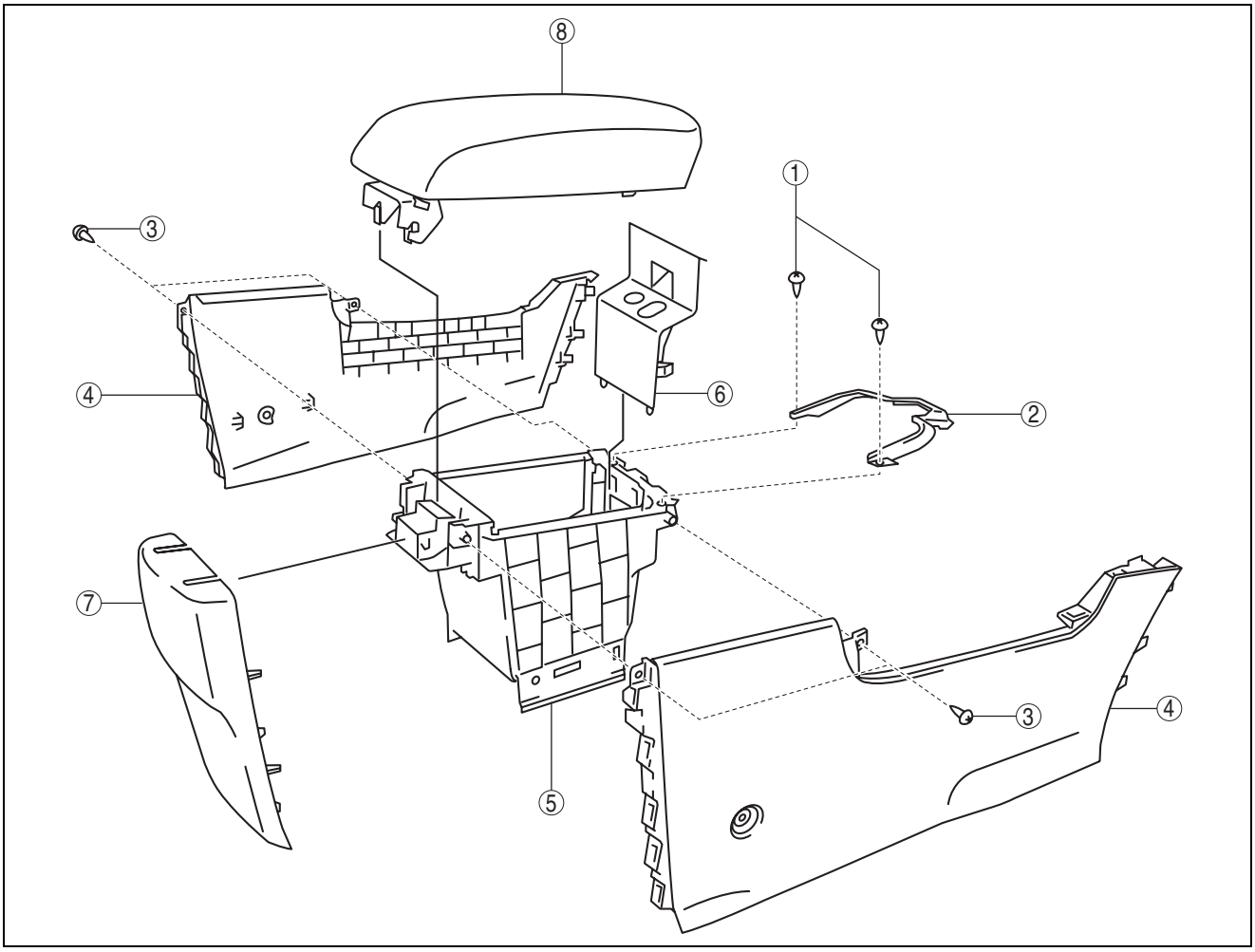

ac5wzw0000145

1	Screw A
2	Rear console bracket
3	Screw B
4	Side panel

5	Rear console box
6	Upper console
7	Rear console cover
8	Rear console lid

2. Assemble in the reverse order of disassembly.

INTERIOR TRIM

SIDE WALL REMOVAL/INSTALLATION

id091700805400

1. Pull the side wall in the direction of the arrow in the order of (1), (2) and remove it while detaching hooks A and clip B.

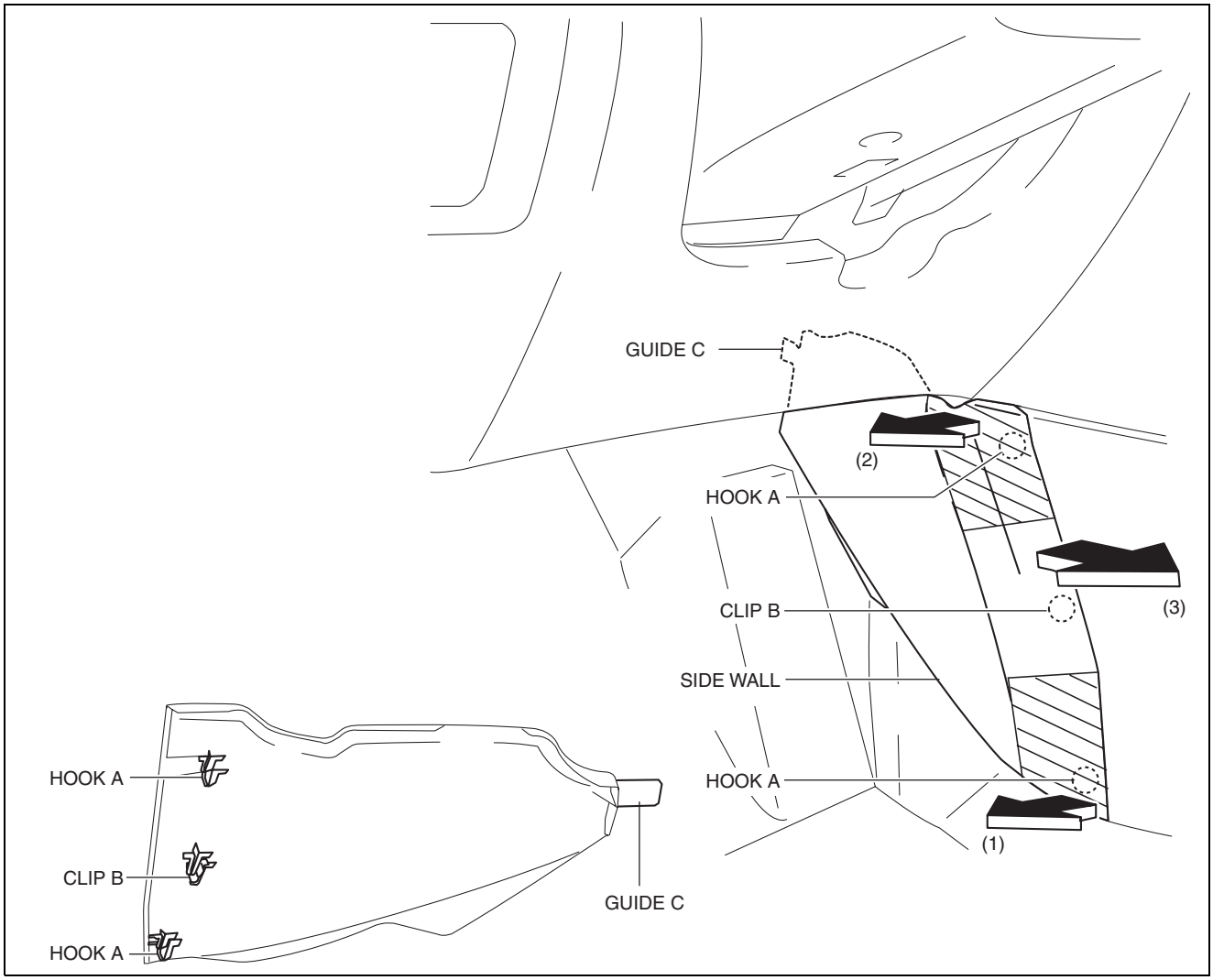

ac5uuw00001795

2. Pull the side wall in the direction of the arrow (3) and remove it while detaching the guide C.

Caution

- **If the hooks A and clip B is removed forcefully, guide C may be damaged. Carefully remove hooks A and clip B so as not to damage guide C.**

3. Install in the reverse order of removal.

INTERIOR TRIM

FRONT CONSOLE REMOVAL/INSTALLATION

id091700457400

Caution
- **Affix protective tape to the position shown in the figure.**

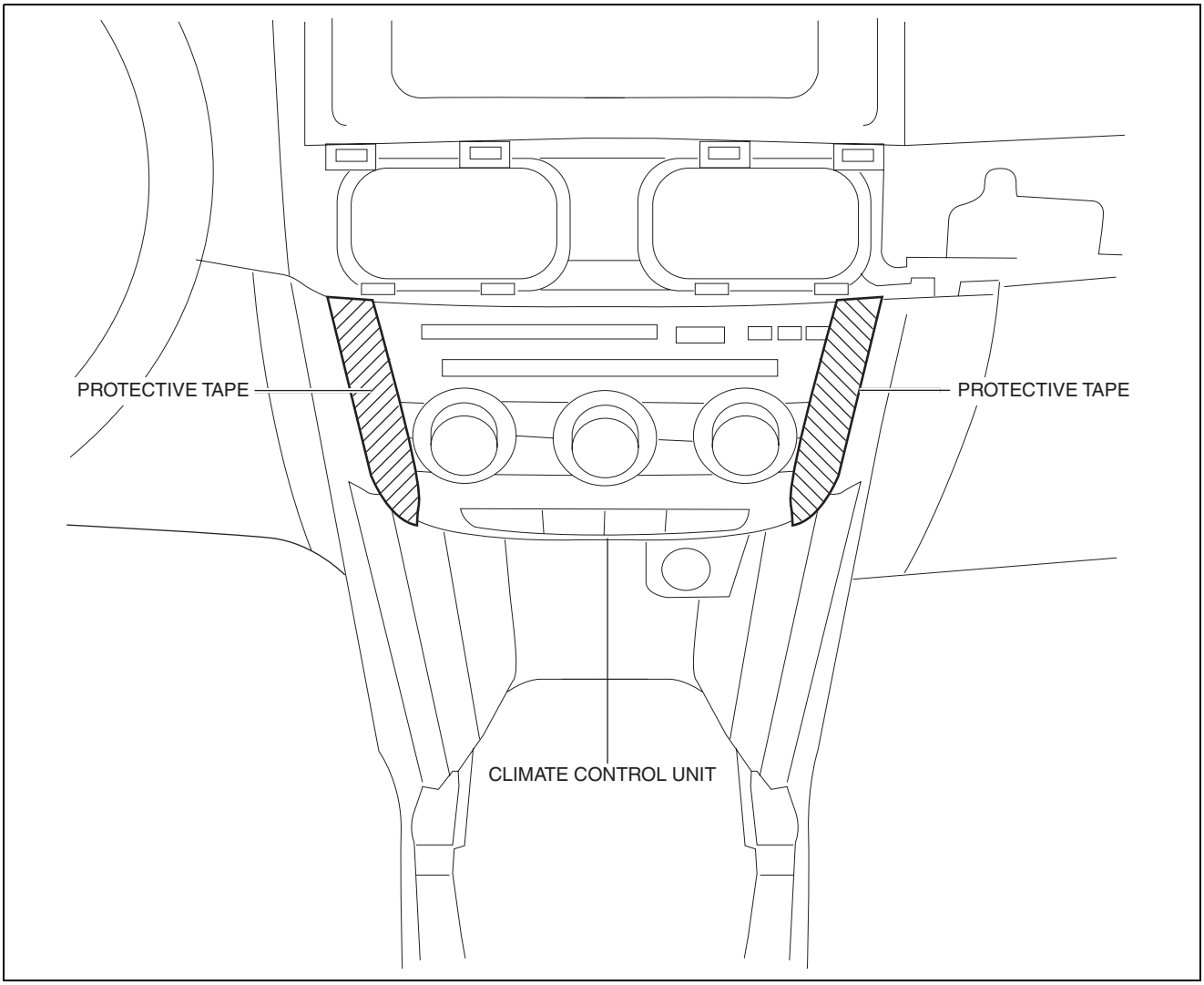

ac5uuw00001739

1. Disconnect the negative battery cable. (See 01-17A-11 NEGATIVE BATTERY CABLE DISCONNECTION/CONNECTION [SKYACTIV-G 2.0].) (See 01-17A-13 NEGATIVE BATTERY CABLE DISCONNECTION/CONNECTION [SKYACTIV-G 2.0 (WITHOUT i-stop)].) (See 01-17B-9 NEGATIVE BATTERY CABLE DISCONNECTION/CONNECTION [SKYACTIV-D 2.2].)
2. Remove the following parts:
   (1) Decoration panel (See 09-17-33 DECORATION PANEL REMOVAL/INSTALLATION.)
   (2) Shift lever knob (MTX) (See 05-16A-1 MANUAL TRANSAXLE SHIFT MECHANISM REMOVAL/INSTALLATION [C66M-R, C66MX-R].) (See 05-16B-1 MANUAL TRANSAXLE SHIFT MECHANISM REMOVAL/INSTALLATION [D66M-R, D66MX-R].)
   (3) Front console box (See 09-17-40 FRONT CONSOLE BOX REMOVAL/INSTALLATION.)
   (4) Shift panel (See 09-17-42 SHIFT PANEL REMOVAL/INSTALLATION.)
   (5) Upper panel (See 09-17-44 UPPER PANEL REMOVAL/INSTALLATION.)
   (6) Rear console (See 09-17-45 REAR CONSOLE REMOVAL/INSTALLATION.)
   (7) Side wall (See 09-17-49 SIDE WALL REMOVAL/INSTALLATION.)

INTERIOR TRIM

3. Take the shaded area shown in the figure, and remove the front console in the direction of the arrow in the order of (1), (2), (3), (4) while detaching clips A, clips B, hooks C, guides D.

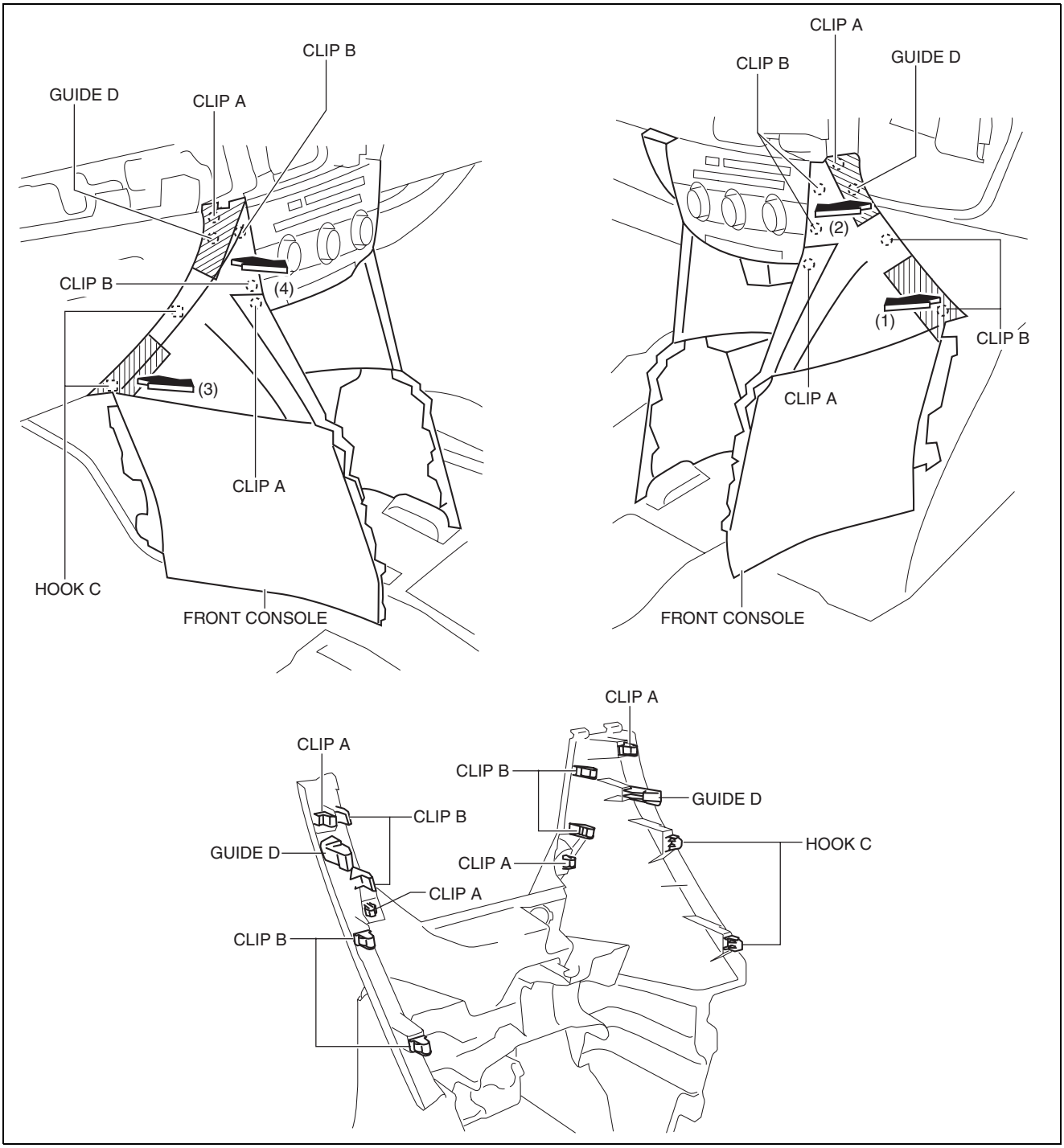

ac5uuw00001740

4. Disconnect the front accessory socket connector.
5. Pull the front console in the direction of the arrow in the order of (5), (6) and remove the front console while detaching the selector lever (ATX) or shift lever (MTX).

INTERIOR TRIM

ATX

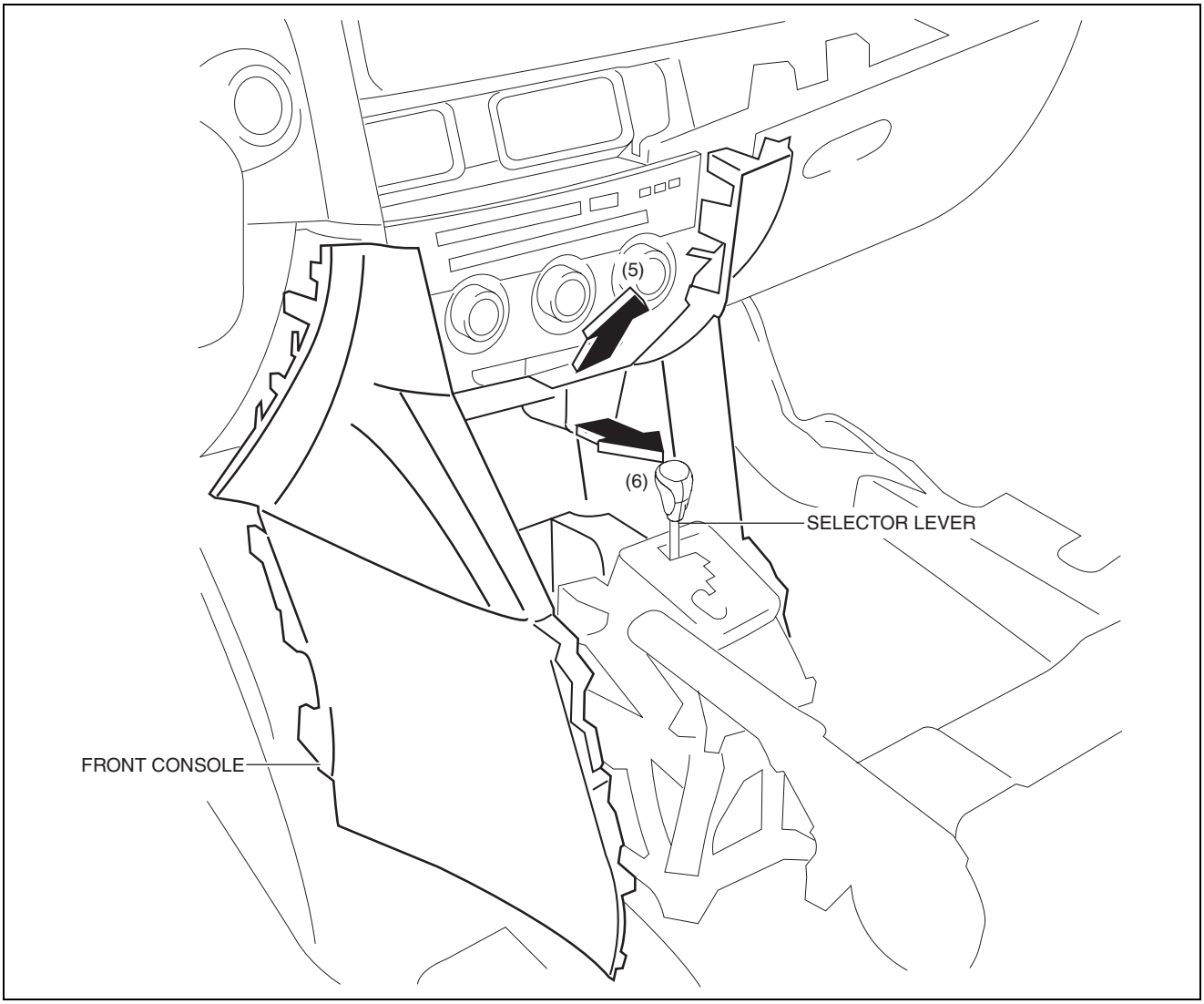

ac5wzw0000461

INTERIOR TRIM

MTX

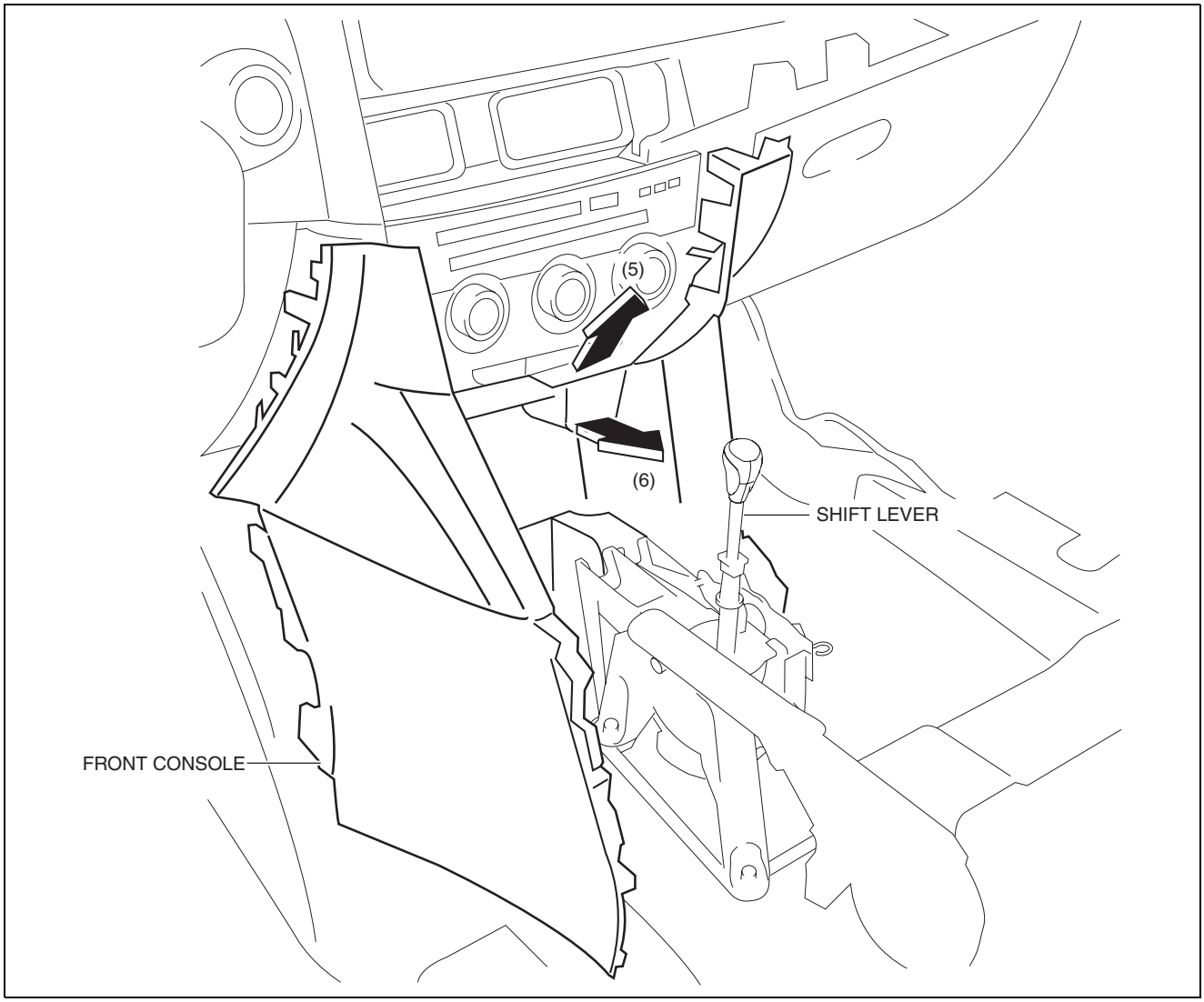

ac5wzw0000461

6. Install in the reverse order of removal.

A-PILLAR TRIM REMOVAL/INSTALLATION

id091700801900

1. Partially peel back the seaming welt.

INTERIOR TRIM

2. Take the shaded area shown in the figure, and pull the A-pillar trim in the direction of the arrow (1) while detaching clip A, clips B.

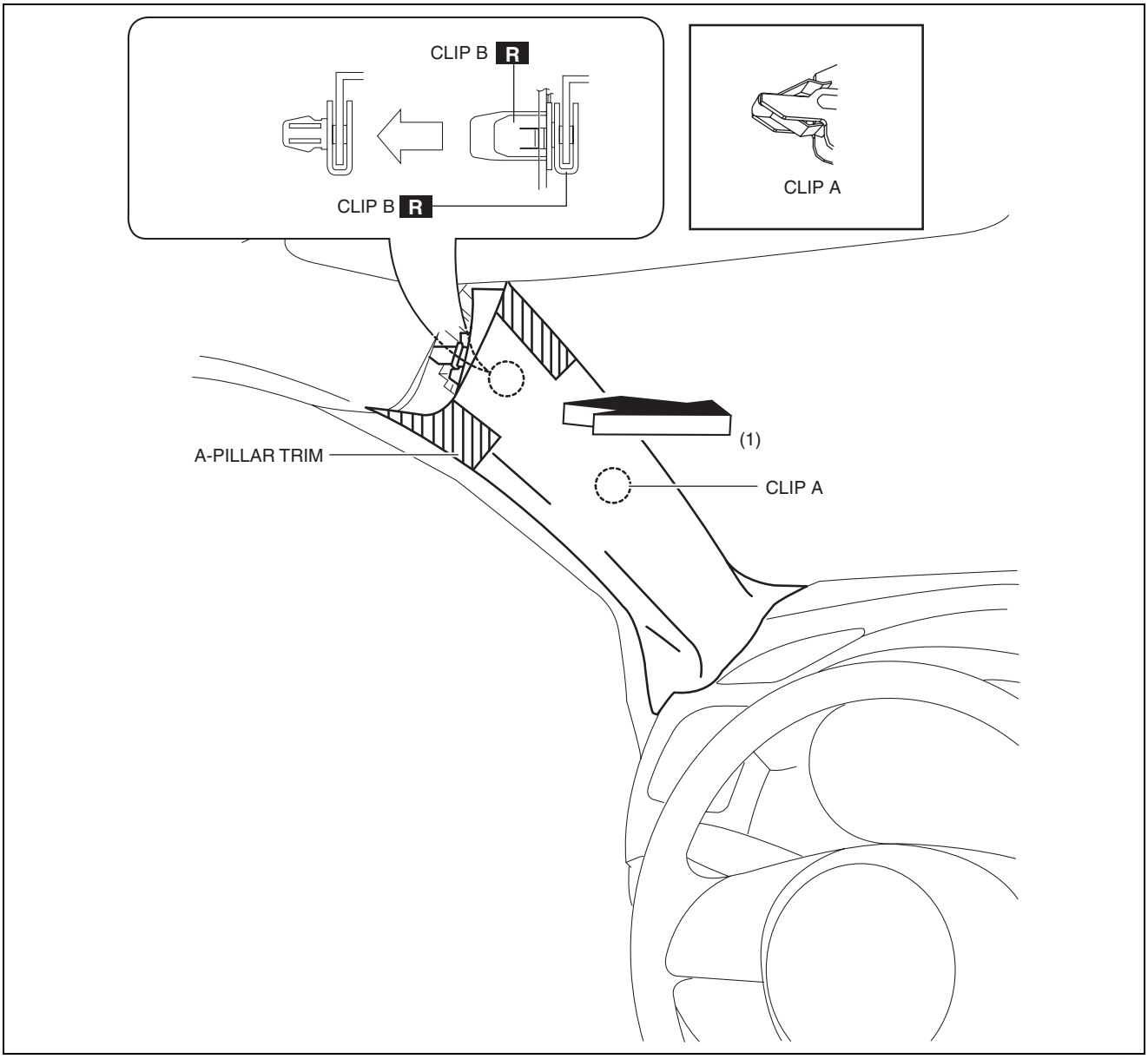

ac5uuw00001762

INTERIOR TRIM

3. Cut the lead wire connecting clips B and grommet using a nipper.

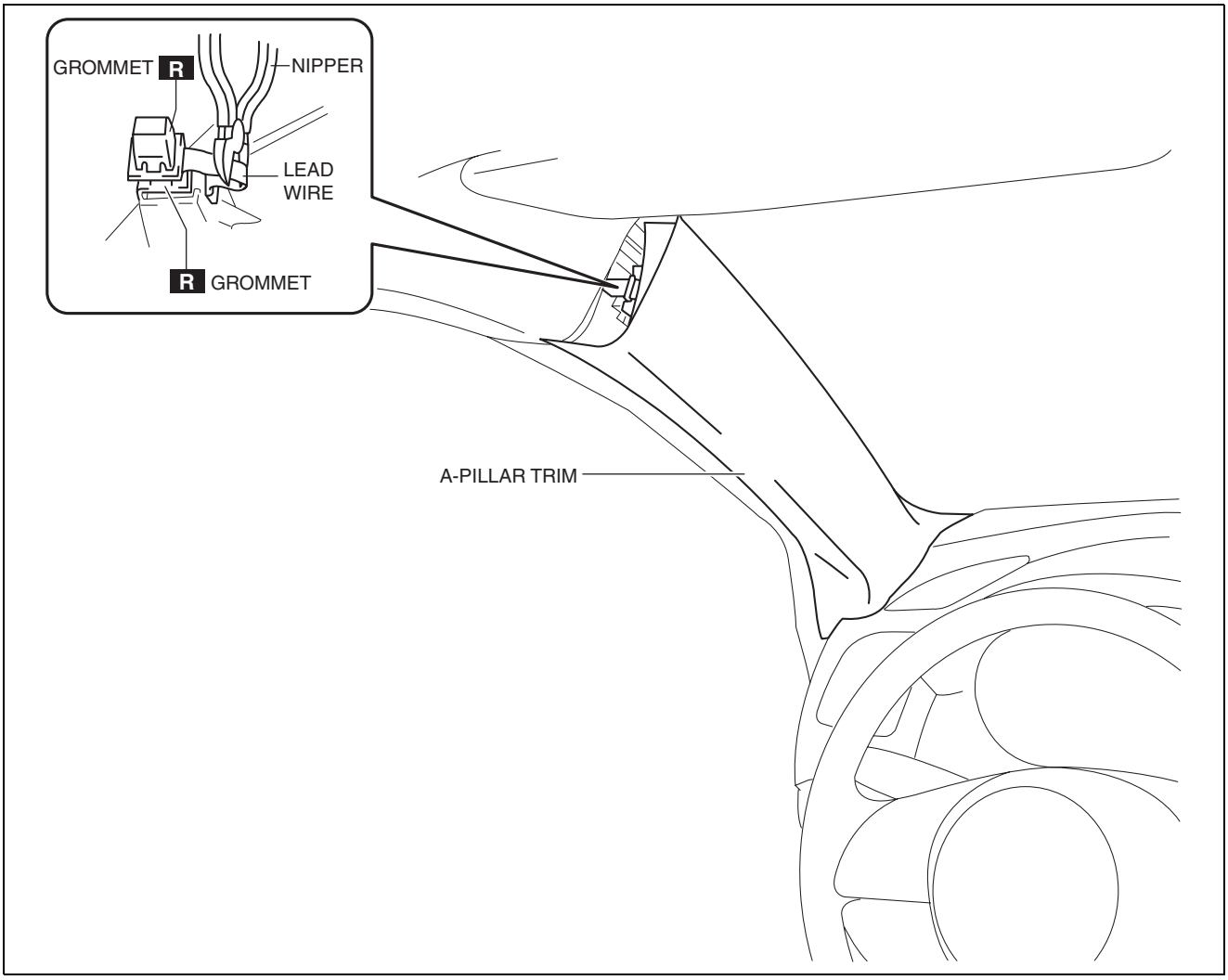

ac5uuw00001763

INTERIOR TRIM

4. Pull the A-pillar trim in the direction of the arrow in the order of (2) and remove the A-pillar trim while detaching guides C.

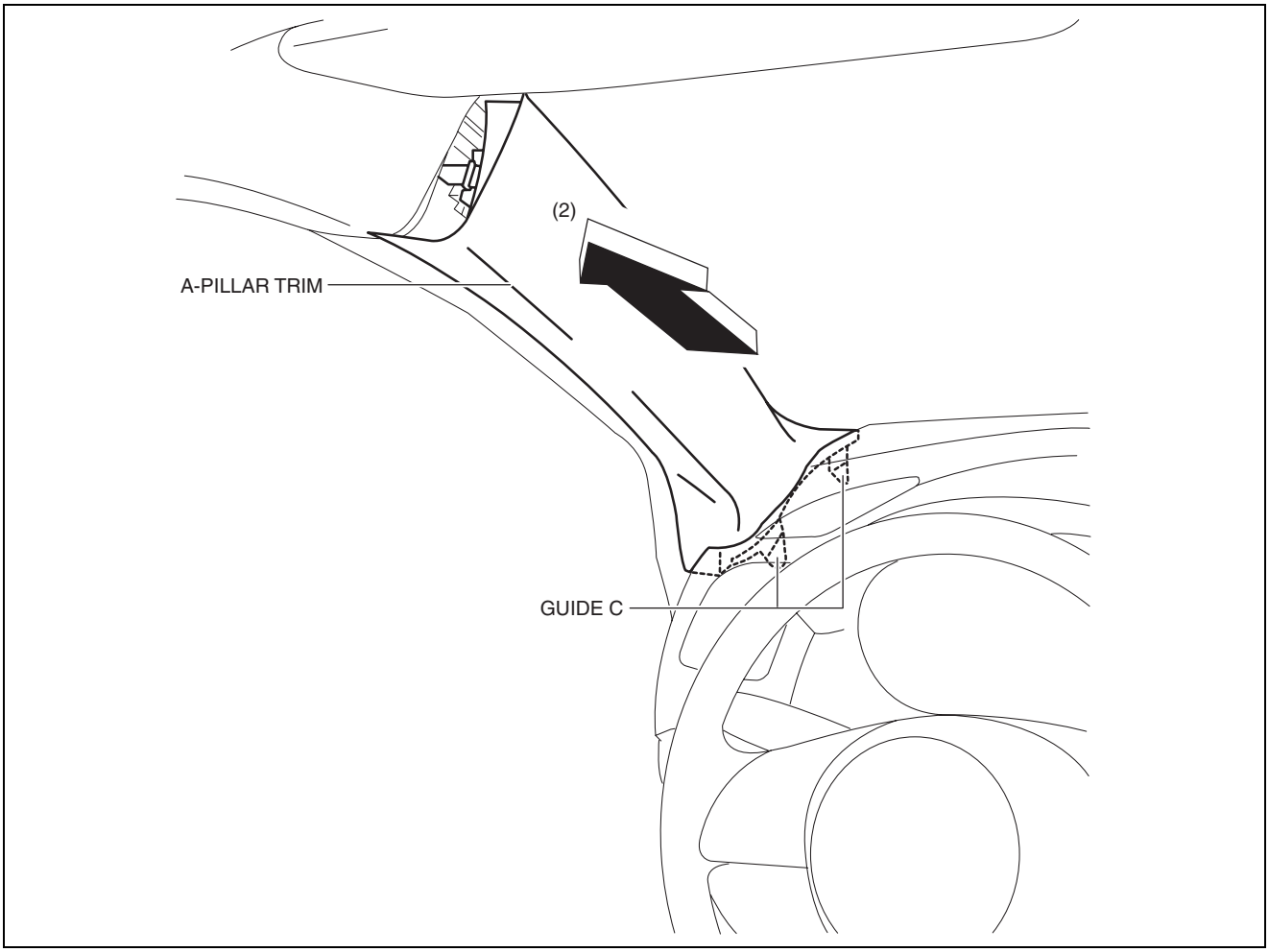

ac5uuw00001764

INTERIOR TRIM

5. Move the hook in the direction of arrows (3) and (4) shown in the figure using a tape-wrapped flathead screwdriver and detach it from the front pillar inner panel.

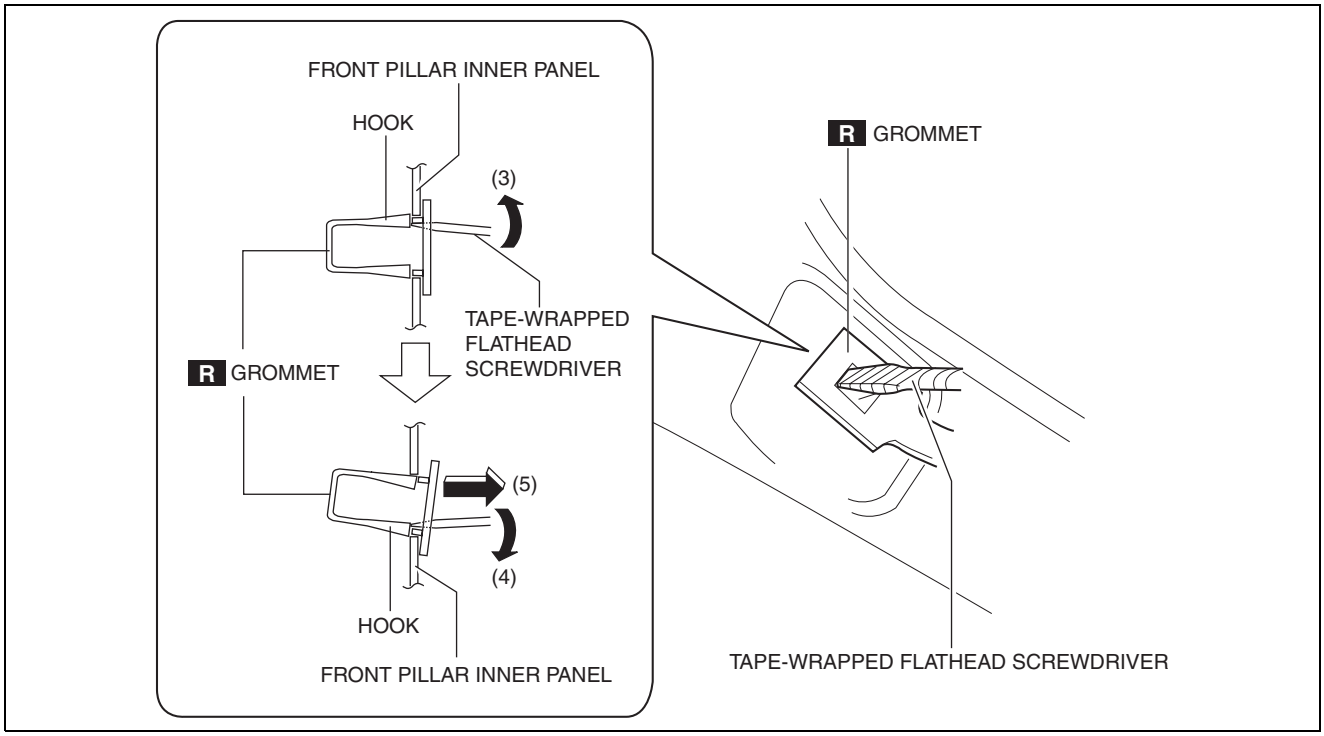

ac5uuw00001765

6. Remove the grommet in the direction of the arrow (5) shown in the figure.
7. When installing the A-pillar, install new clips B and grommet to the A-pillar trim in advance.
8. Install in the reverse order of removal.

B-PILLAR LOWER TRIM REMOVAL/INSTALLATION

id091700802000

1. Remove the front scuff plate. (See 09-17-61 FRONT SCUFF PLATE REMOVAL/INSTALLATION.)
2. Remove the rear scuff plate. (See 09-17-63 REAR SCUFF PLATE REMOVAL/INSTALLATION.)
3. Partially peel back the seaming welt.

INTERIOR TRIM

4. Take the shaded area shown in the figure, and pull the B-pillar lower trim in the direction of the arrow in the order of (1), (2) while detaching hooks A, pins B.

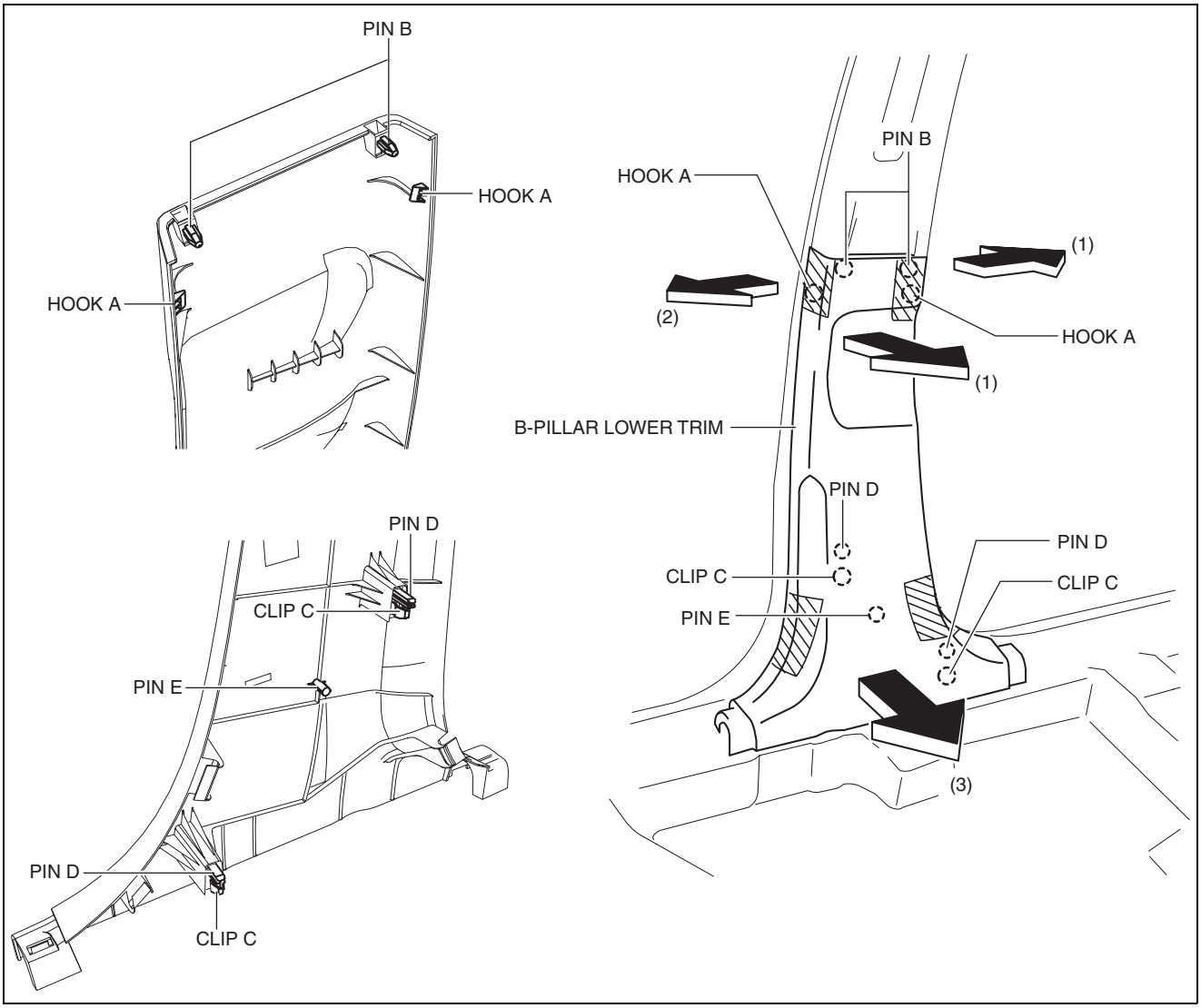

ac5uuw00001766

5. Take the shaded area shown in the figure, and pull the B-pillar lower trim in the direction of the arrow (3) while detaching the clips C, pin D, pin E.
6. Install in the reverse order of removal.

B-PILLAR UPPER TRIM REMOVAL/INSTALLATION

id091700802100

1. Remove the following parts:
   (1) Front scuff plate (See 09-17-61 FRONT SCUFF PLATE REMOVAL/INSTALLATION.)
   (2) Rear scuff plate (See 09-17-63 REAR SCUFF PLATE REMOVAL/INSTALLATION.)
   (3) B-pillar lower trim (See 09-17-57 B-PILLAR LOWER TRIM REMOVAL/INSTALLATION.)
   (4) Adjuster anchor cover (See 08-11-2 FRONT SEAT BELT REMOVAL/INSTALLATION.)
   (5) Upper anchor installation bolts on the front seat belt (See 08-11-2 FRONT SEAT BELT REMOVAL/INSTALLATION.)
2. Partially peel back the seaming welt.

INTERIOR TRIM

3. Take the shaded area shown in the figure, and pull the B-pillar upper trim in the direction of the arrow (1) while detaching clips A, pin B, pin C.

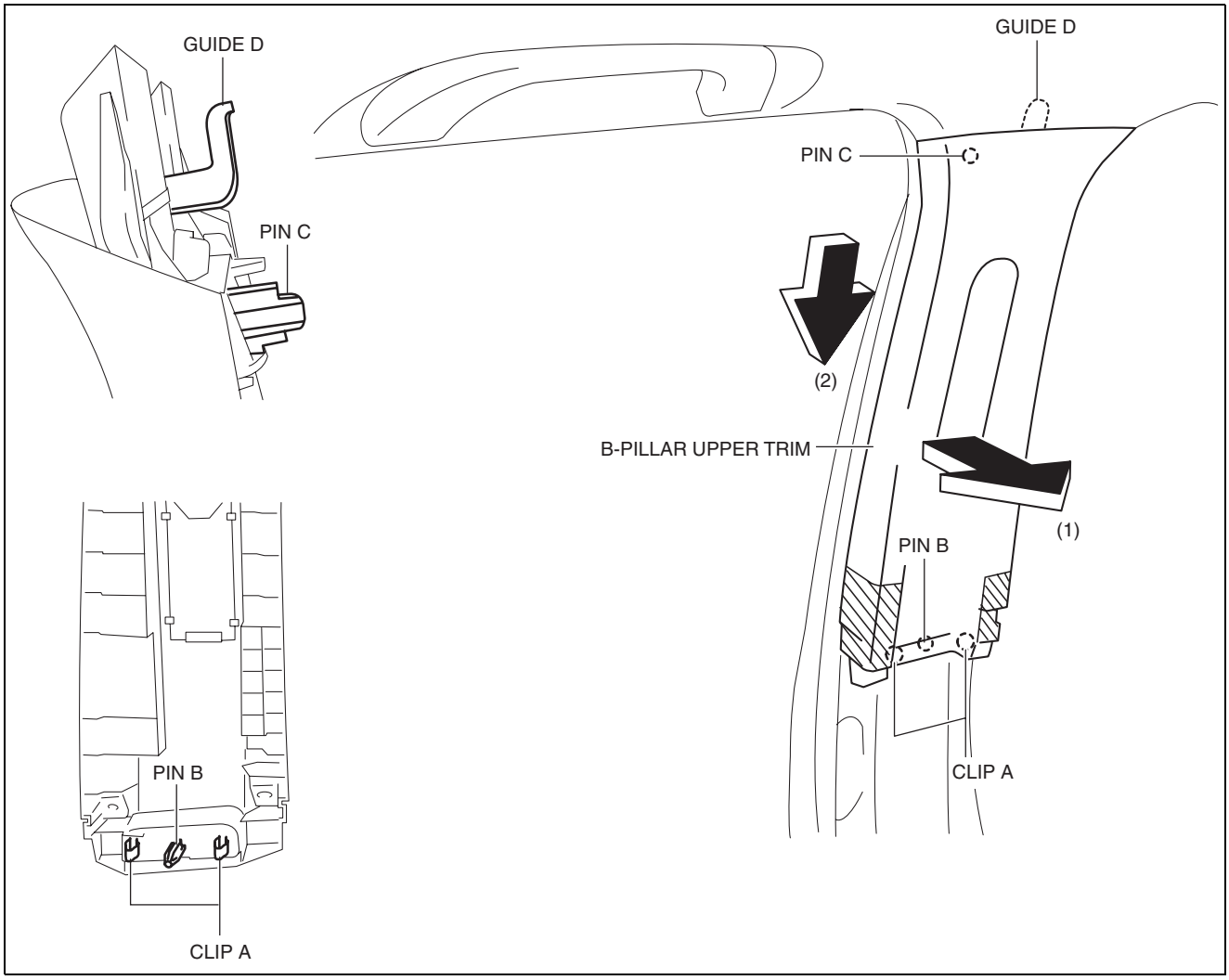

ac5uuw00001767

4. Remove the B-pillar upper trim in the direction of the arrow (2) shown in the figure while detaching the guide D.

Caution
- **If clips A, pin B and pin C is removed forcefully, guide D may be damaged. Carefully remove clips A, pin B and pin C so as not to damage guide D.**

5. Install in the reverse order of removal.

C-PILLAR TRIM REMOVAL/INSTALLATION

id091700802200

1. Disconnect the negative battery cable. (See 01-17A-11 NEGATIVE BATTERY CABLE DISCONNECTION/CONNECTION [SKYACTIV-G 2.0].) (See 01-17A-13 NEGATIVE BATTERY CABLE DISCONNECTION/CONNECTION [SKYACTIV-G 2.0 (WITHOUT i-stop)].) (See 01-17B-9 NEGATIVE BATTERY CABLE DISCONNECTION/CONNECTION [SKYACTIV-D 2.2].)
2. Remove the following parts:
   (1) Trunk board (See 09-17-85 TRUNK BOARD REMOVAL/INSTALLATION.)
   (2) Trunk end trim (See 09-17-78 TRUNK END TRIM REMOVAL/INSTALLATION.)
   (3) Rear scuff plate (See 09-17-63 REAR SCUFF PLATE REMOVAL/INSTALLATION.)
   (4) Trunk side trim (See 09-17-80 TRUNK SIDE TRIM REMOVAL/INSTALLATION.)
   (5) D-pillar trim (See 09-17-60 D-PILLAR TRIM REMOVAL/INSTALLATION.)
3. Partially peel back the seaming welt.

INTERIOR TRIM

4. Remove the fastener A.

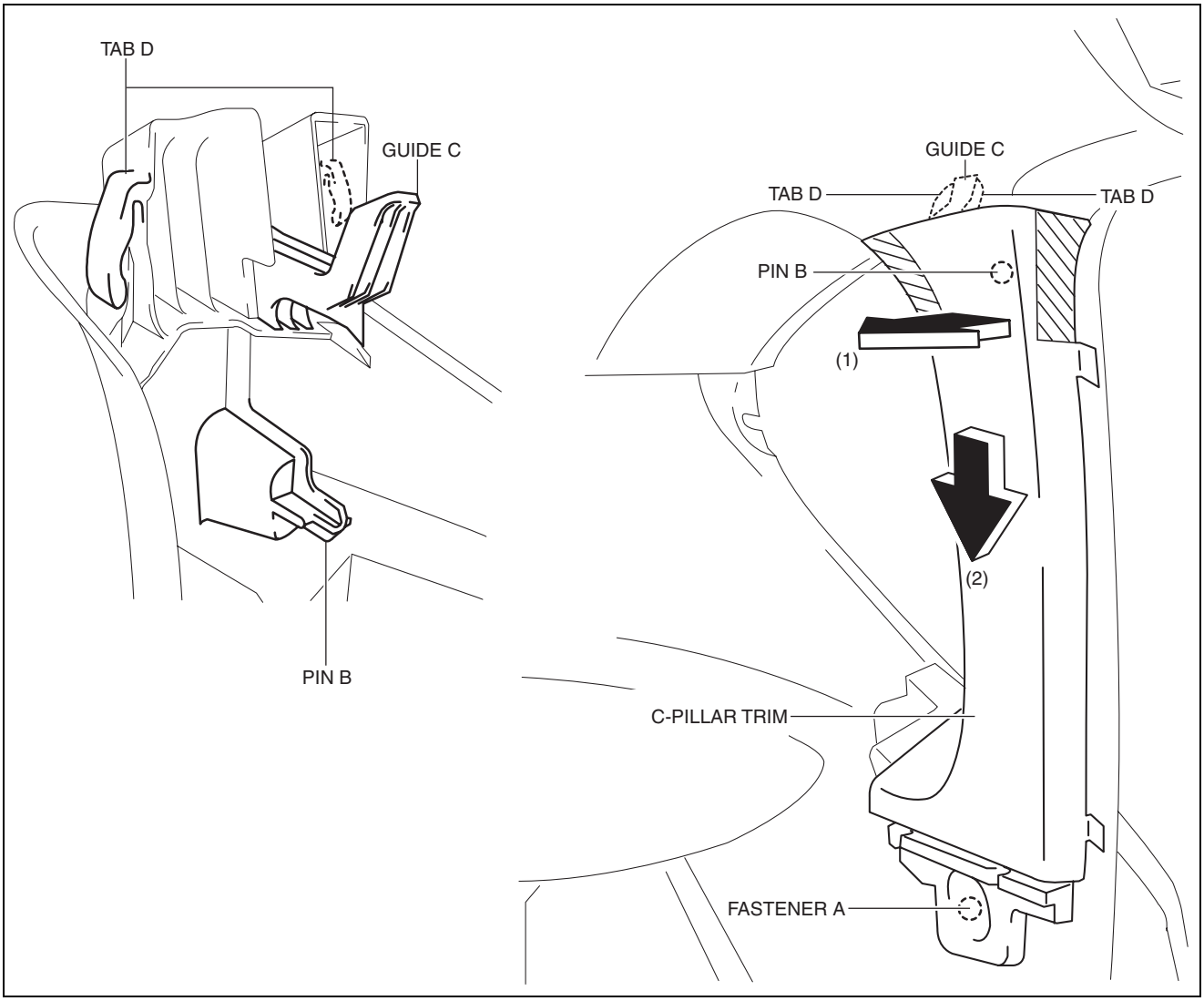

ac5uuw00001768

5. Take the shaded area shown in the figure, and pull the C-pillar trim in the direction of the arrow (1) while detaching the pin B.
6. Remove the C-pillar trim in the direction of the arrow (2) shown in the figure while detaching guide C, tabs D.

Caution
- **If the C-pillar trim is pulled in the direction of the arrow (1) forcefully, guide C may be damaged. Carefully pull the C-pillar trim so as not to damage guide C.**

7. Install in the reverse order of removal.

D-PILLAR TRIM REMOVAL/INSTALLATION

id091700459300

Disconnect the negative battery cable. (See 01-17A-11 NEGATIVE BATTERY CABLE DISCONNECTION/CONNECTION [SKYACTIV-G 2.0].) (See 01-17A-13 NEGATIVE BATTERY CABLE DISCONNECTION/CONNECTION [SKYACTIV-G 2.0 (WITHOUT i-stop)].) (See 01-17B-9 NEGATIVE BATTERY CABLE DISCONNECTION/CONNECTION [SKYACTIV-D 2.2].)

1. Remove the following parts:
   (1) Trunk board (See 09-17-85 TRUNK BOARD REMOVAL/INSTALLATION.)
   (2) Trunk end trim (See 09-17-78 TRUNK END TRIM REMOVAL/INSTALLATION.)
   (3) Rear scuff plate (See 09-17-63 REAR SCUFF PLATE REMOVAL/INSTALLATION.)
   (4) Trunk side trim (See 09-17-80 TRUNK SIDE TRIM REMOVAL/INSTALLATION.)

INTERIOR TRIM

2. Take the shaded area shown in the figure, and remove the D-pillar trim in the direction of the arrow in the order of (1), (2), (3) while detaching clips A, pins B.

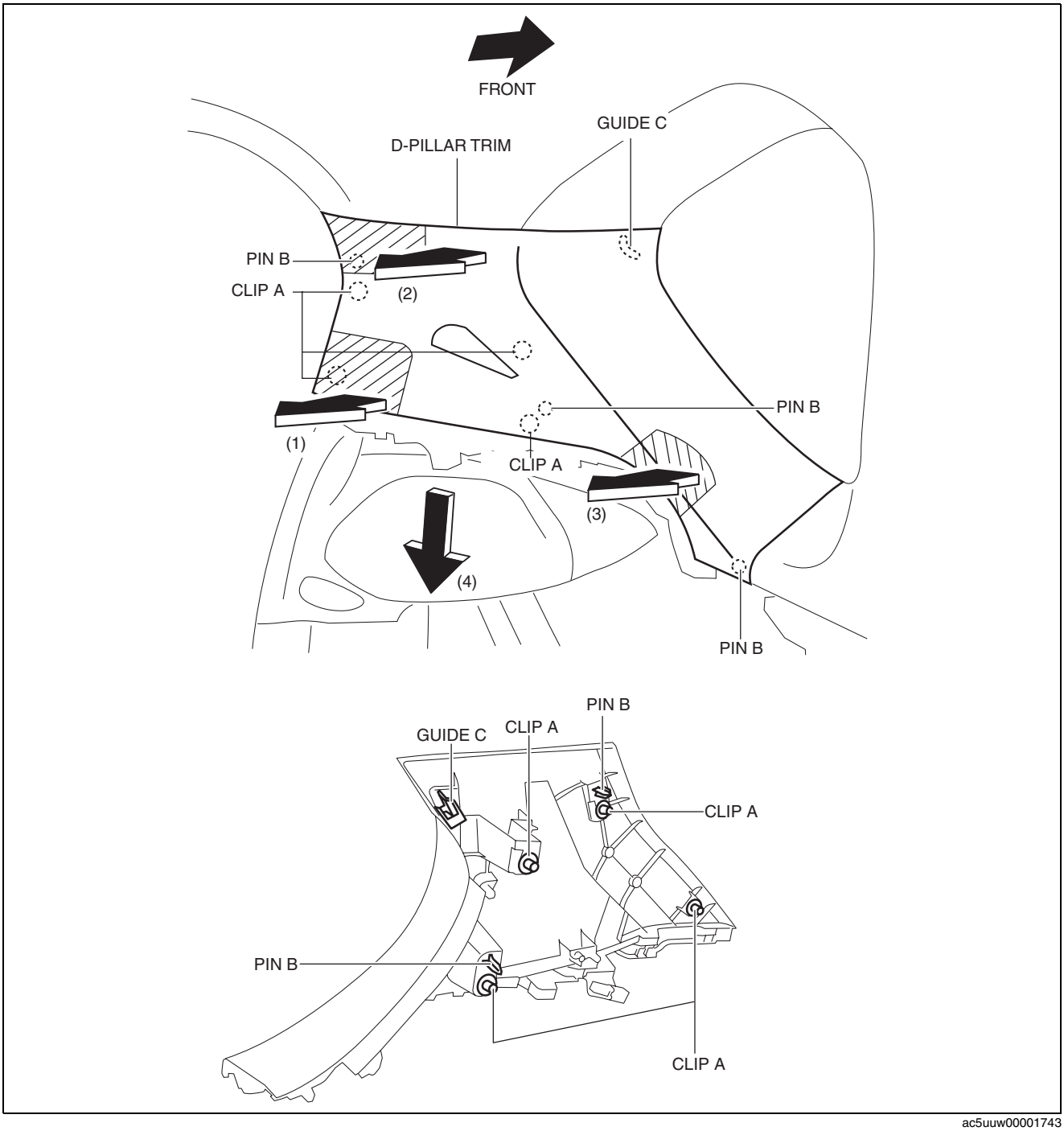

ac5uuw00001743

3. Pull the D-pillar trim in the direction of the arrow (4) and remove the D-pillar trim while detaching the guide C.
4. Install in the reverse order of removal.

FRONT SCUFF PLATE REMOVAL/INSTALLATION

id091700801400

1. Take the shaded area shown in the figure, detach tab A while pulling the front scuff plate in the direction of the arrow (1) shown in the figure, then detach the hook B, clip C, and pin D while pulling in the direction of the arrow (2).

INTERIOR TRIM

2. Take the shaded area shown in the figure, detach tab E while pulling the front scuff plate in the direction of the arrow (3) shown in the figure, then detach the hook F, clip G and pin H while pulling in the direction of the arrow (4).

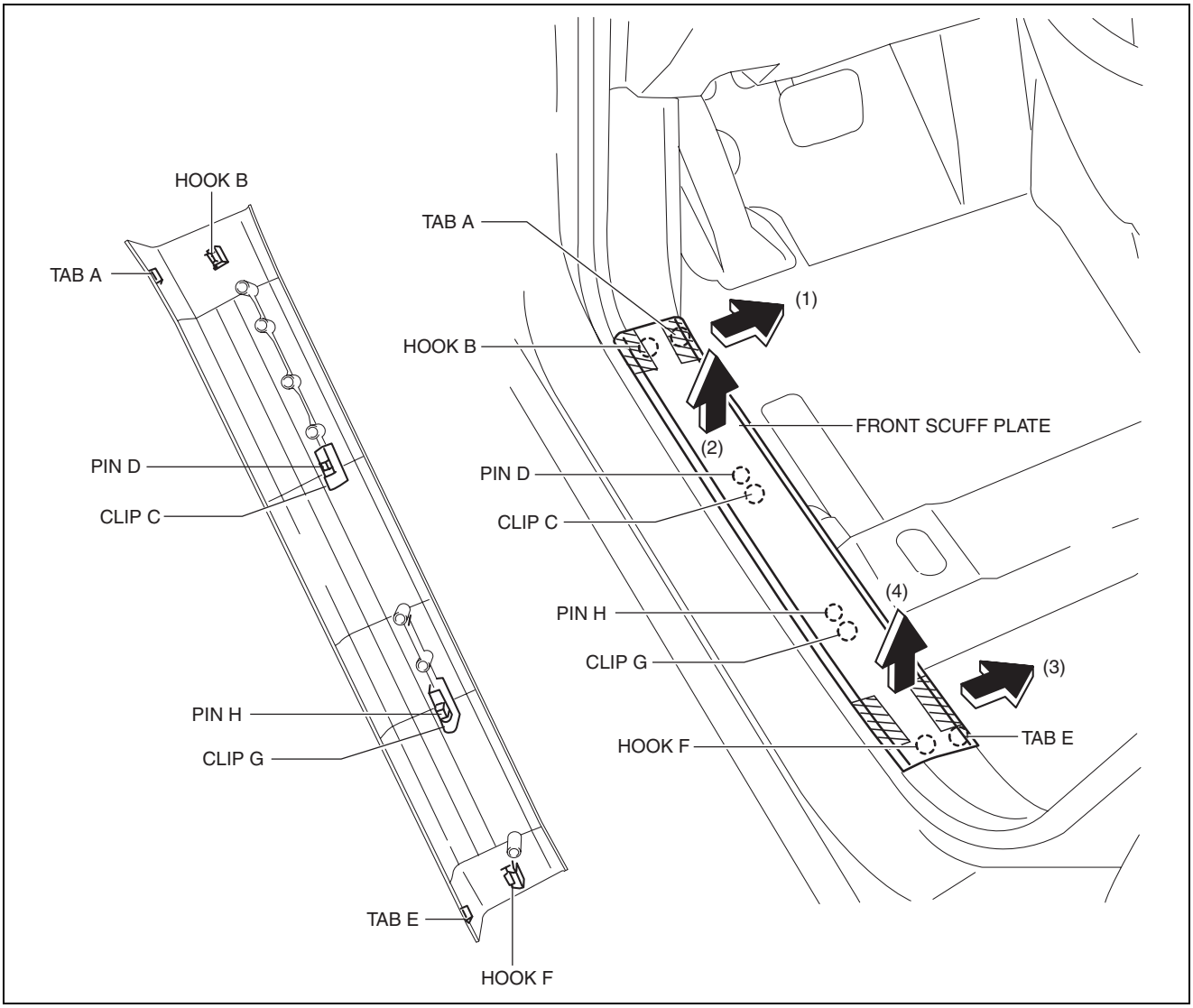

ac5uuw00001760

3. Install in the reverse order of removal.

FRONT SIDE TRIM REMOVAL/INSTALLATION

id091700802400

1. Remove the front scuff plate. (See 09-17-61 FRONT SCUFF PLATE REMOVAL/INSTALLATION.)
2. Partially peel back the seaming welt.

INTERIOR TRIM

3. Remove the cap nut.

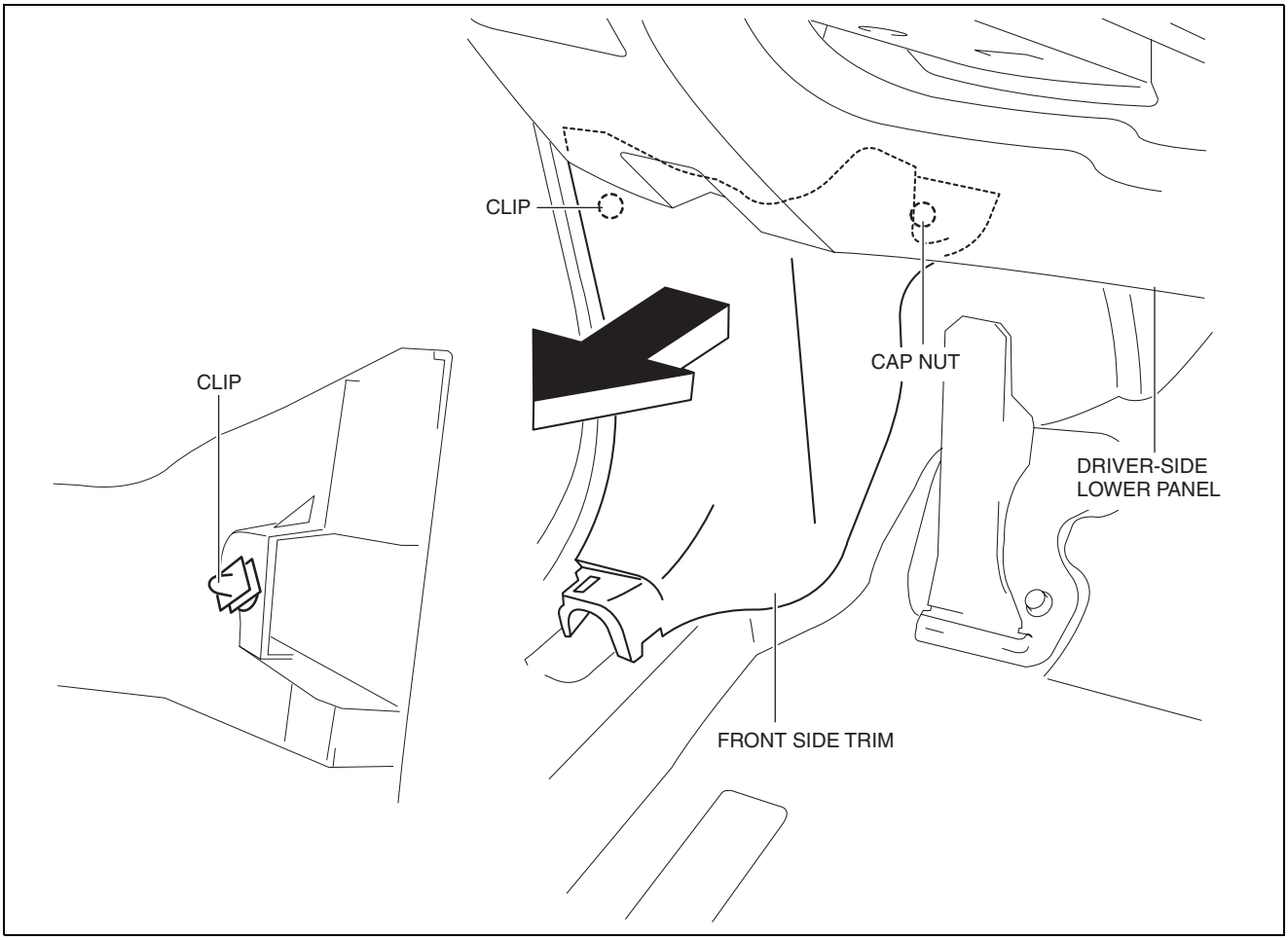

ac5wzw0000300

4. Pull the front side trim in the direction of the arrow shown in the figure and remove it while detaching the clip.
5. Install in the reverse order of removal.

REAR SCUFF PLATE REMOVAL/INSTALLATION

id091700801500

1. Take the shaded area shown in the figure, detach tab A while pulling the rear scuff plate in the direction of the arrow (1) shown in the figure, then detach hook B, clips C, pins D while pulling in the direction of the arrow (2).

INTERIOR TRIM

2. Take the shaded area shown in the figure, detach tab E while pulling the rear scuff plate in the direction of the arrow (3) shown in the figure, then detach the hook F while pulling in the direction of the arrow (4).

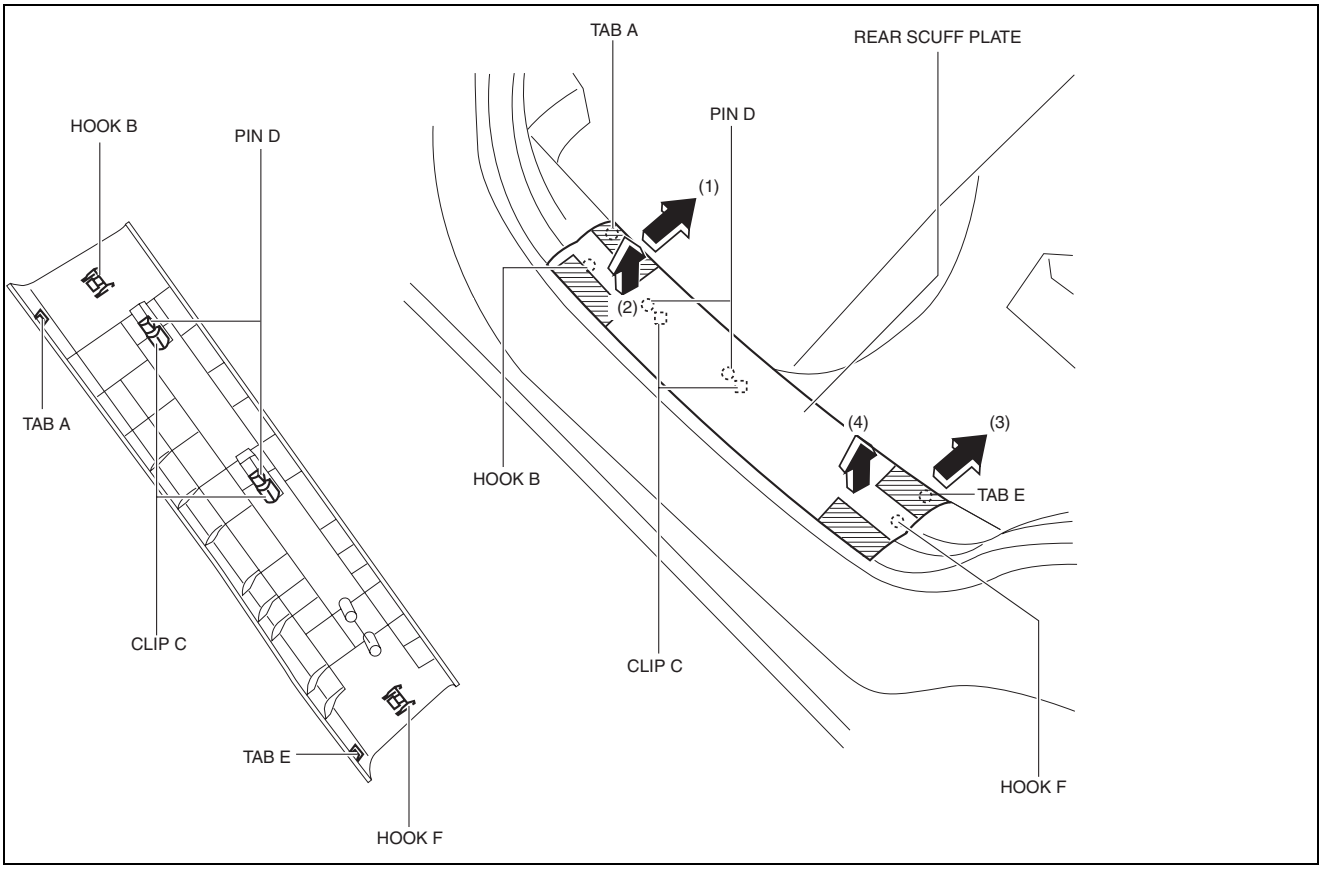

ac5uuw00001761

3. Install in the reverse order of removal.

INTERIOR TRIM

INNER GARNISH REMOVAL/INSTALLATION

id091700801000

1. Take the shaded area shown in the figure, and pull the inner garnish in the direction of the arrow (1) while detaching clips A.

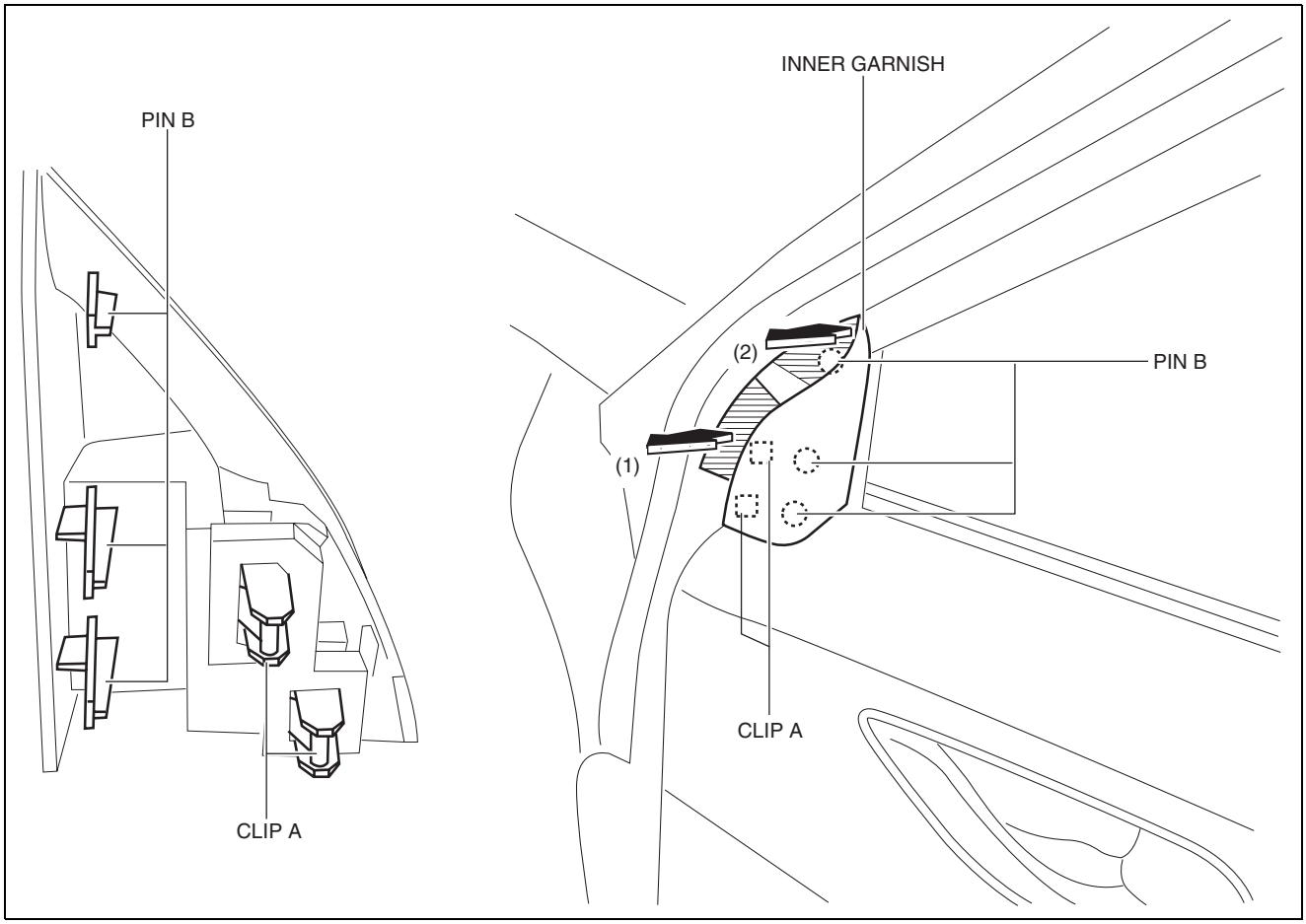

ac5uuw00001757

2. Take the shaded area shown in the figure, and remove the inner garnish in the direction of the arrow (2) while detaching pins B.
3. Install in the reverse order of removal.

FRONT DOOR TRIM REMOVAL/INSTALLATION

id091700802500

1. Disconnect the negative battery cable. (See 01-17A-11 NEGATIVE BATTERY CABLE DISCONNECTION/CONNECTION [SKYACTIV-G 2.0].) (See 01-17A-13 NEGATIVE BATTERY CABLE DISCONNECTION/CONNECTION [SKYACTIV-G 2.0 (WITHOUT i-stop)].) (See 01-17B-9 NEGATIVE BATTERY CABLE DISCONNECTION/CONNECTION [SKYACTIV-D 2.2].)
2. Remove the inner garnish. (See 09-17-65 INNER GARNISH REMOVAL/INSTALLATION.)

INTERIOR TRIM

3. Insert a tape-wrapped flathead screwdriver in the position indicated by the arrow (1) in the figure and remove the inner handle cover while detach tabs A, pin B.

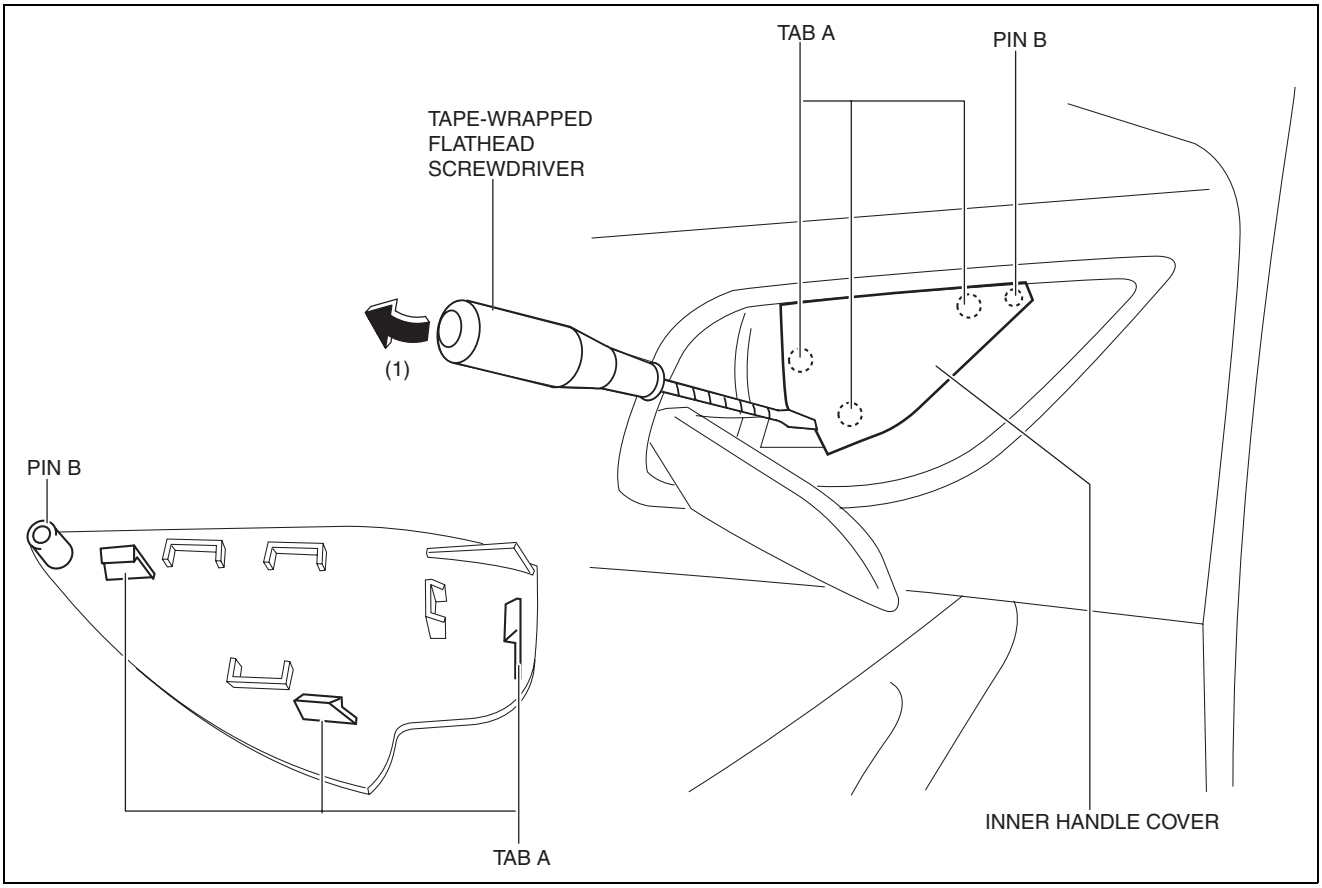

ac5uuw00001770

4. Remove the screw C.

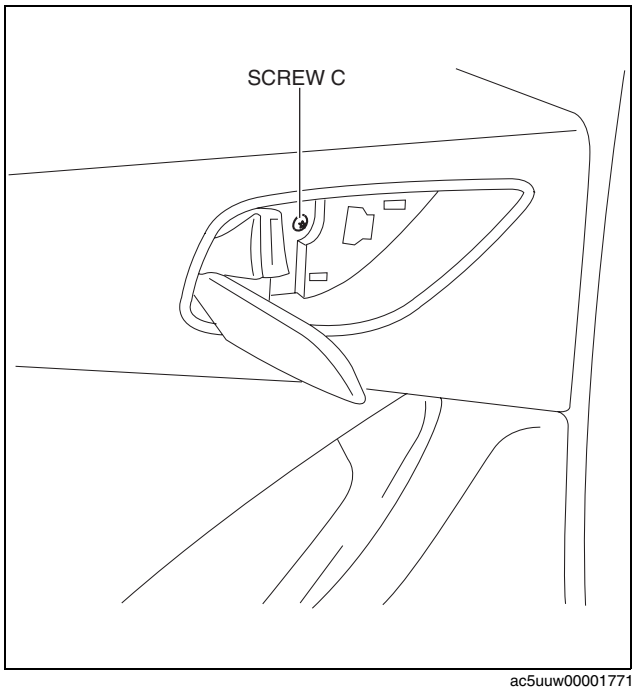

ac5uuw00001771

INTERIOR TRIM

5. Remove the cover D, then remove the screw E.
6. Take the shaded area shown in the figure, and pull the front door trim in the direction of the arrow in the order of (1), (2), (3), (4) while detaching clips F, hooks G and pin H.

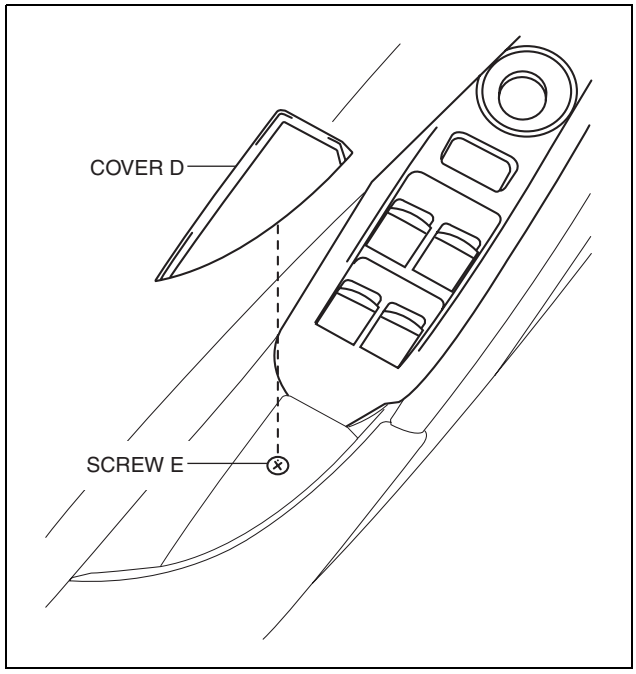

ac5uuw00001772

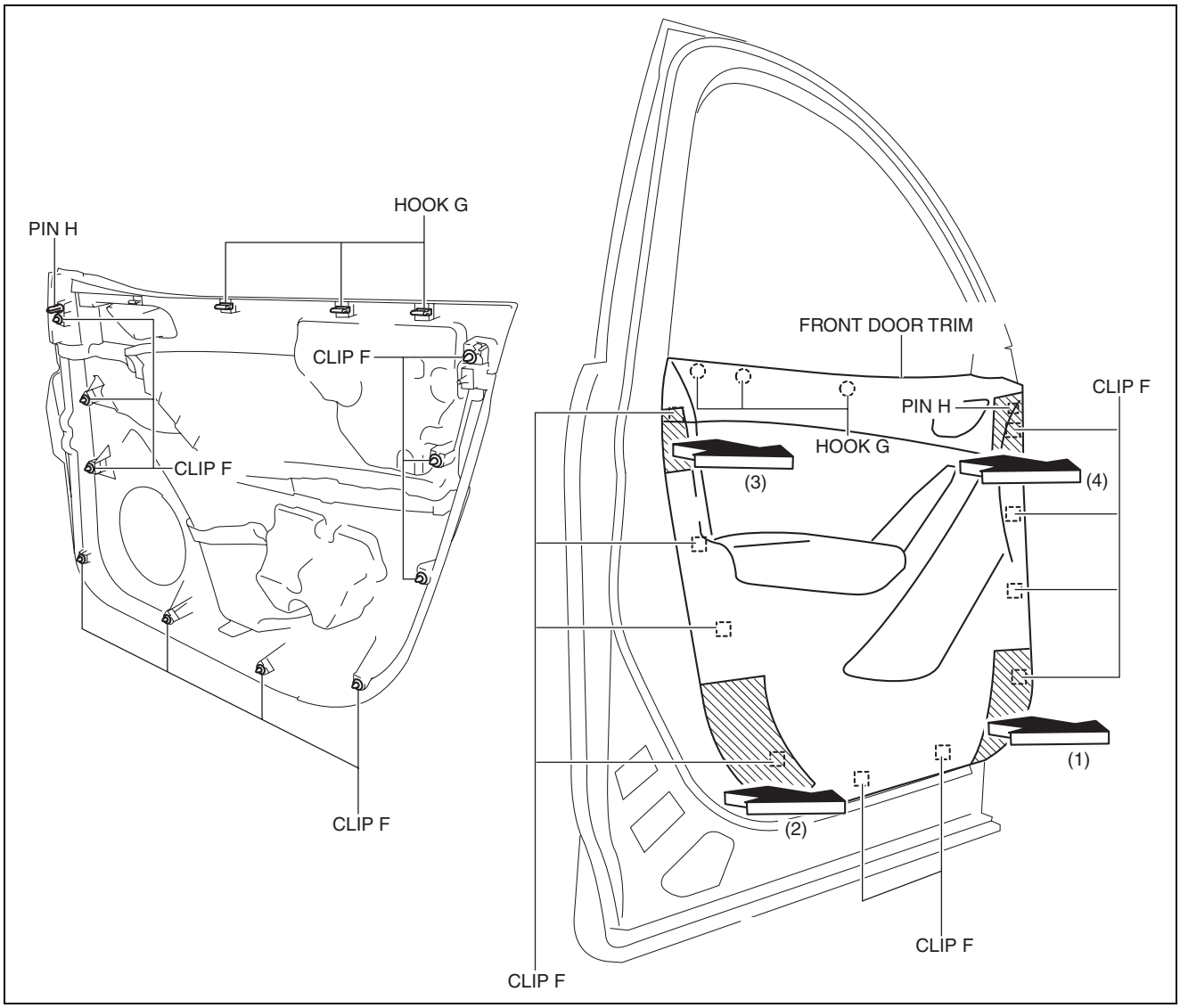

ac5uuw00001773

INTERIOR TRIM

7. Remove the tab I in the direction of the arrow (5) shown in the figure.

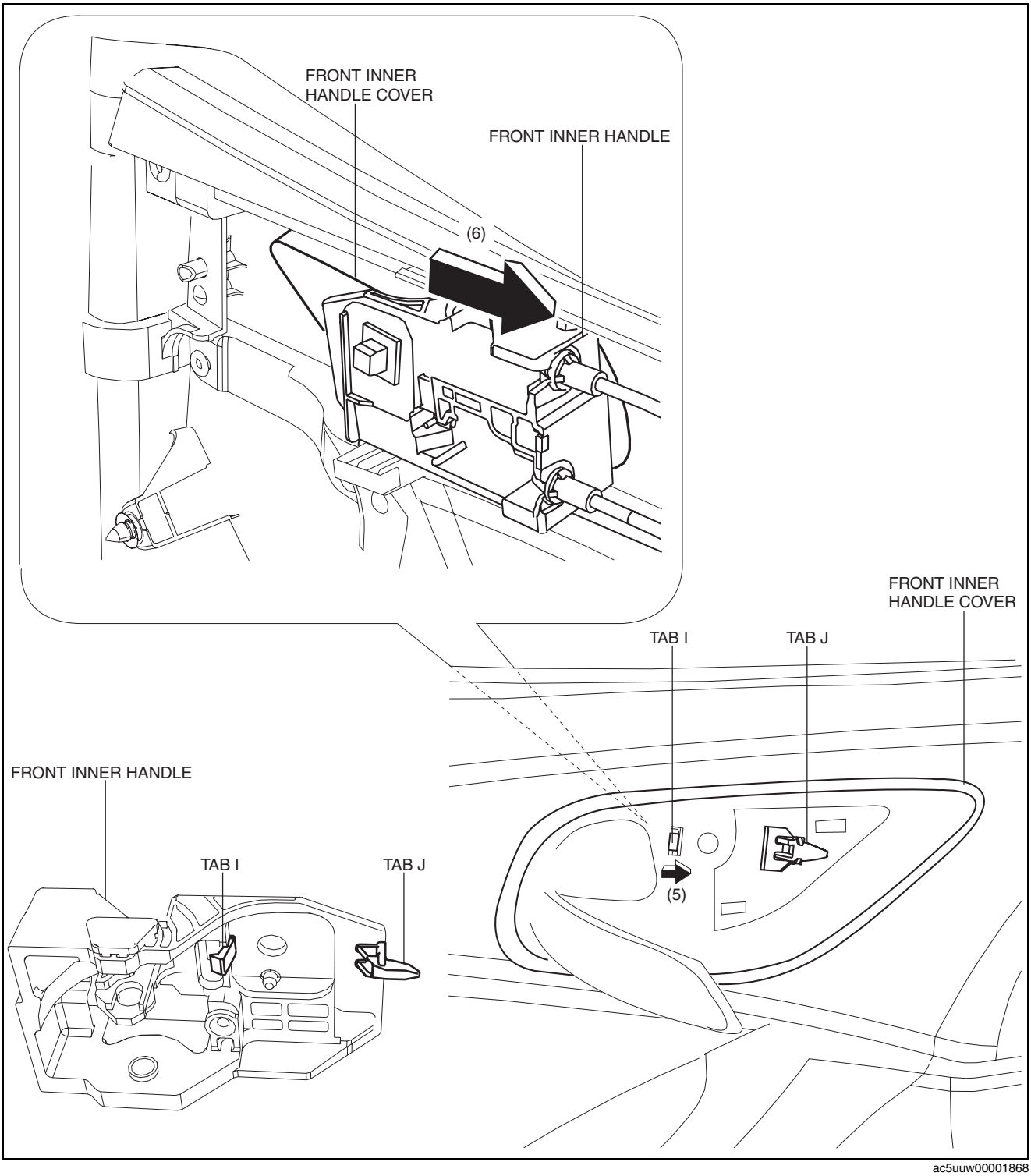

ac5uuw00001868

8. Remove the front inner handle in the direction of the arrow (6) shown in the figure while detaching the tab J.
9. Disconnect the power window main switch connector (driver-side) or power window subswitch connector (passenger-side).
10. Install in the reverse order of removal.

INTERIOR TRIM

FRONT DOOR TRIM DISASSEMBLY/ASSEMBLY

id091700804200

Driver-side

1. Disassemble in the order shown in the figure.

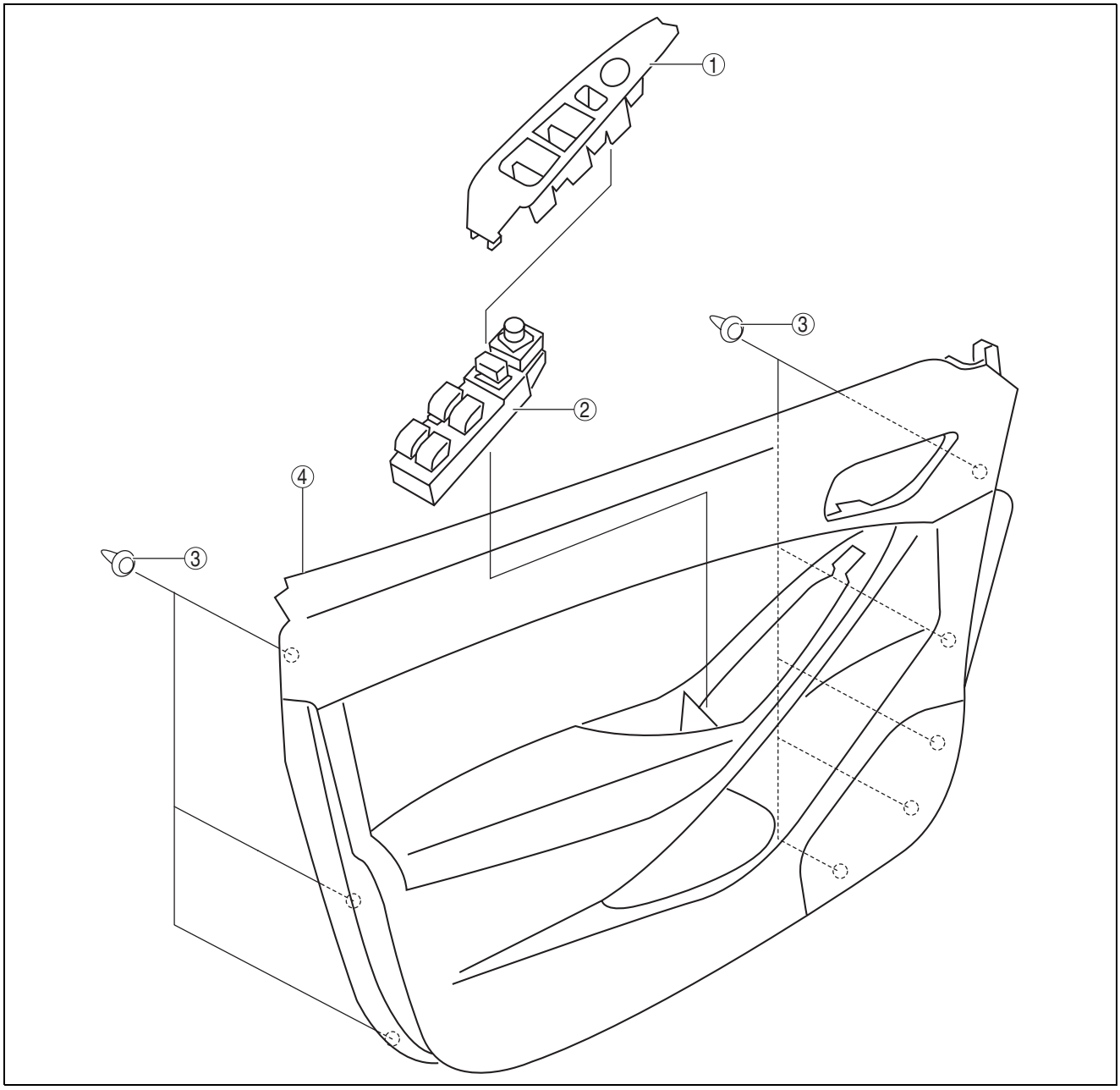

ac5wzw0000167

1	Switch panel cover
2	Power window main switch (See 09-17-70 Power Window Main Switch And Power Window Subswitch Removal Note.)

3	Fastener
4	Front door trim

2. Assemble in the reverse order of disassembly.

INTERIOR TRIM

Passenger-side

1. Disassemble in the order shown in the figure.

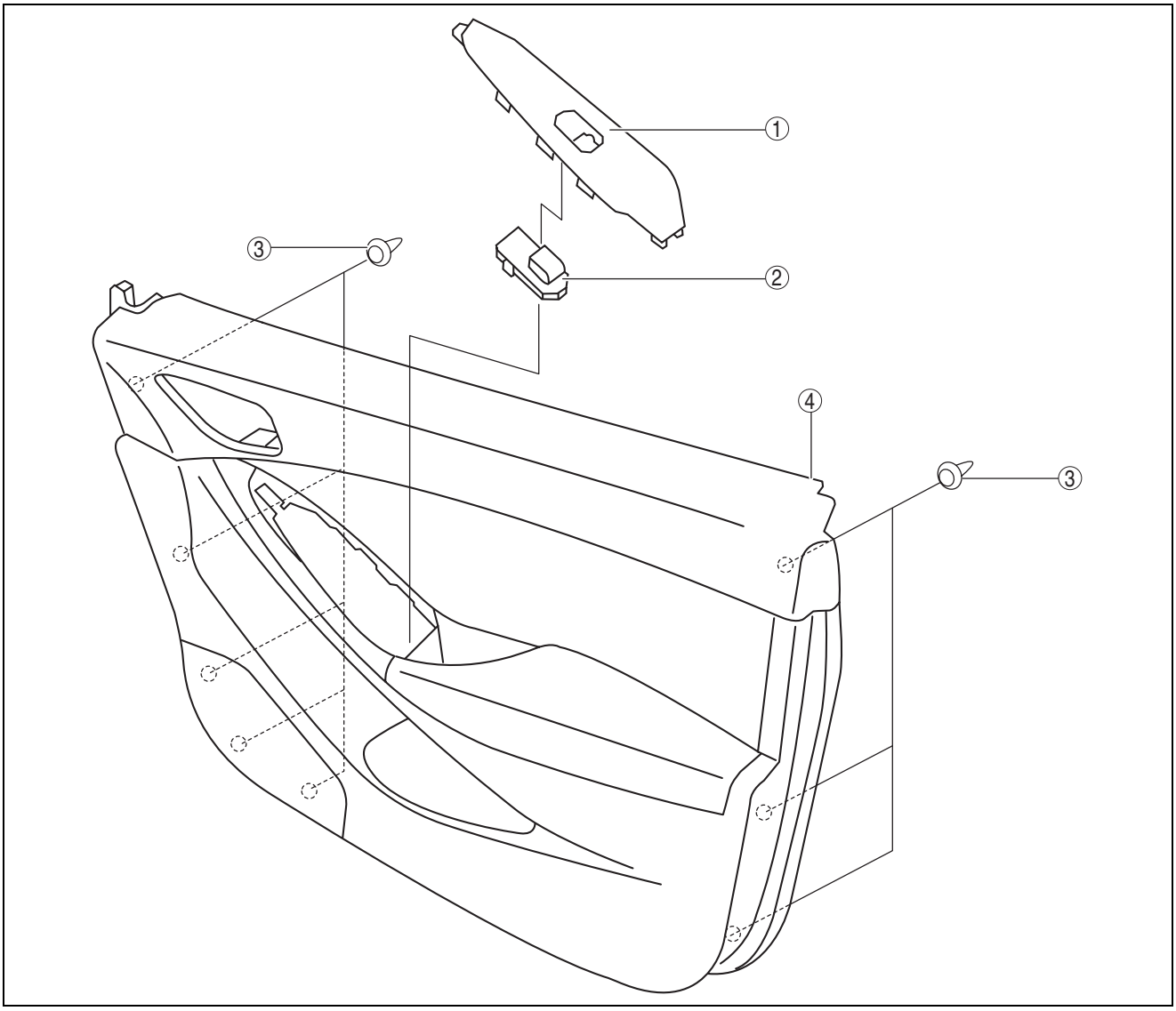

ac5wzw0000167

1	Switch panel cover
2	Power window main switch (See 09-17-70 Power Window Main Switch And Power Window Subswitch Removal Note.)

3	Fastener
4	Front door trim

2. Assemble in the reverse order of disassembly.

Power Window Main Switch And Power Window Subswitch Removal Note

1. Pull the edge of power window main switch cover in the direction of arrow (1) and detach the tab.

INTERIOR TRIM

Driver-side

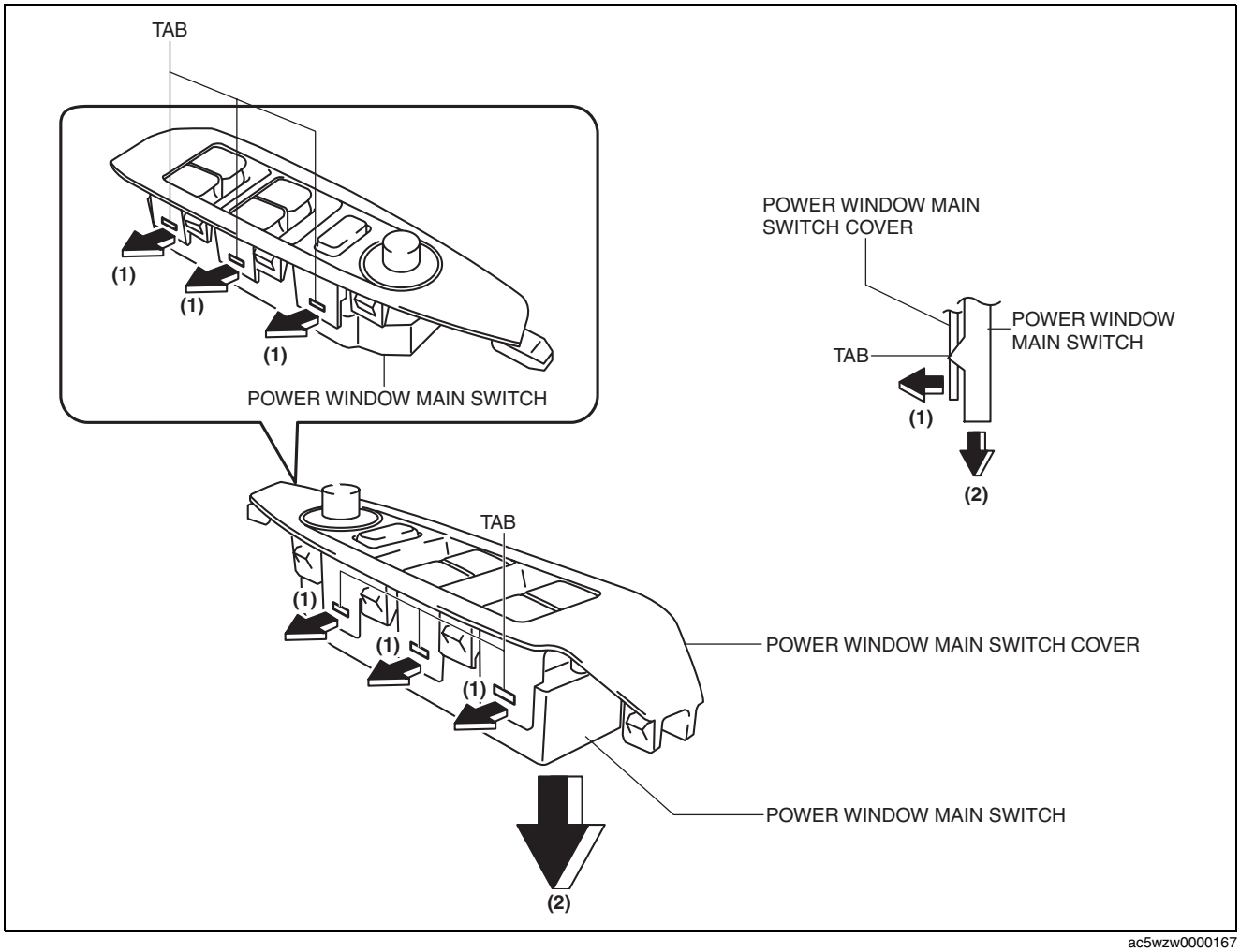

ac5wzw0000167

INTERIOR TRIM

Passenger-side

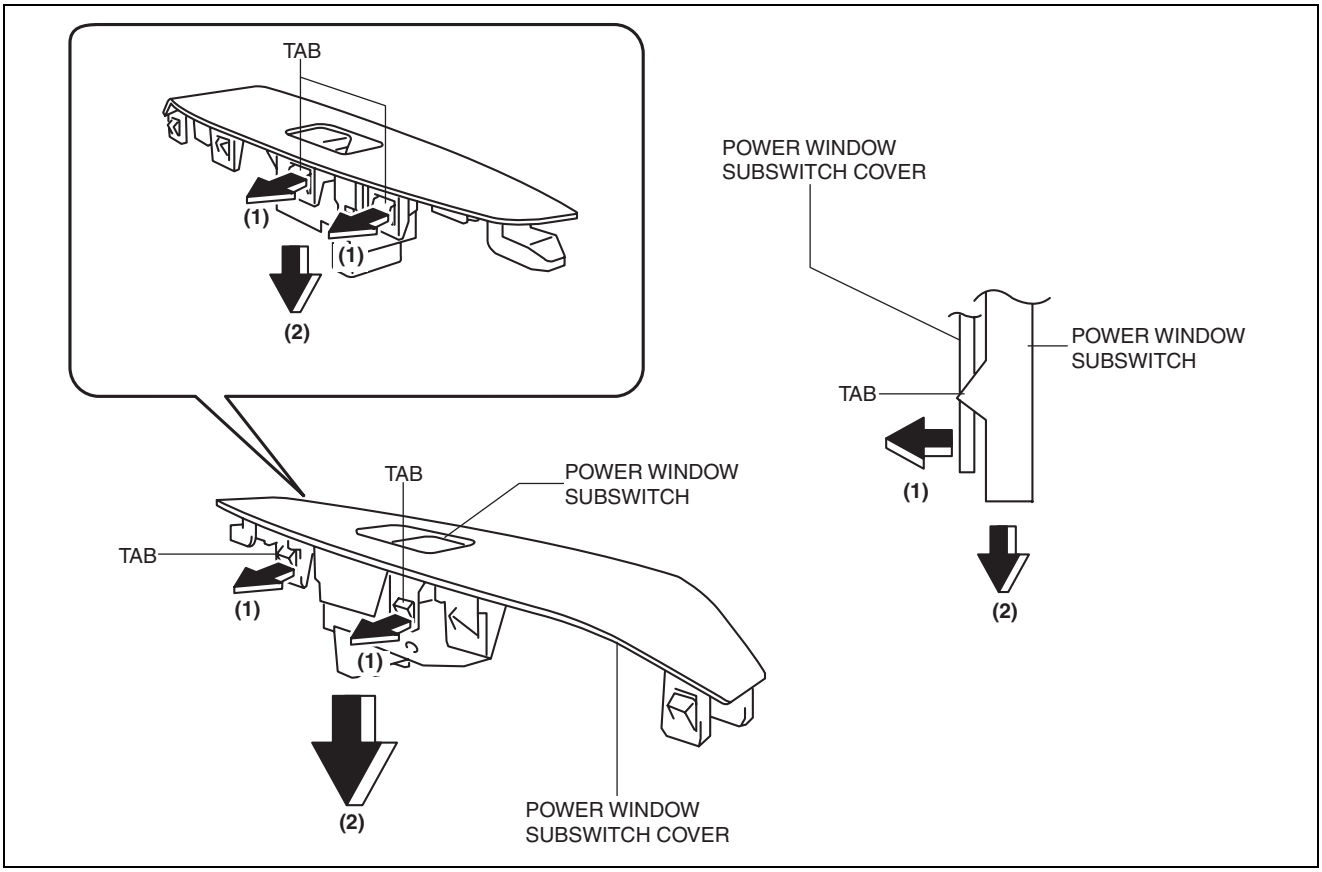

ac5wzw0000167

2. Remove the power window main switch in the direction of arrow (2) shown in the figure.

INTERIOR TRIM

REAR DOOR TRIM DISASSEMBLY/ASSEMBLY

id091700804300

1. Disassemble in the order shown in the figure.

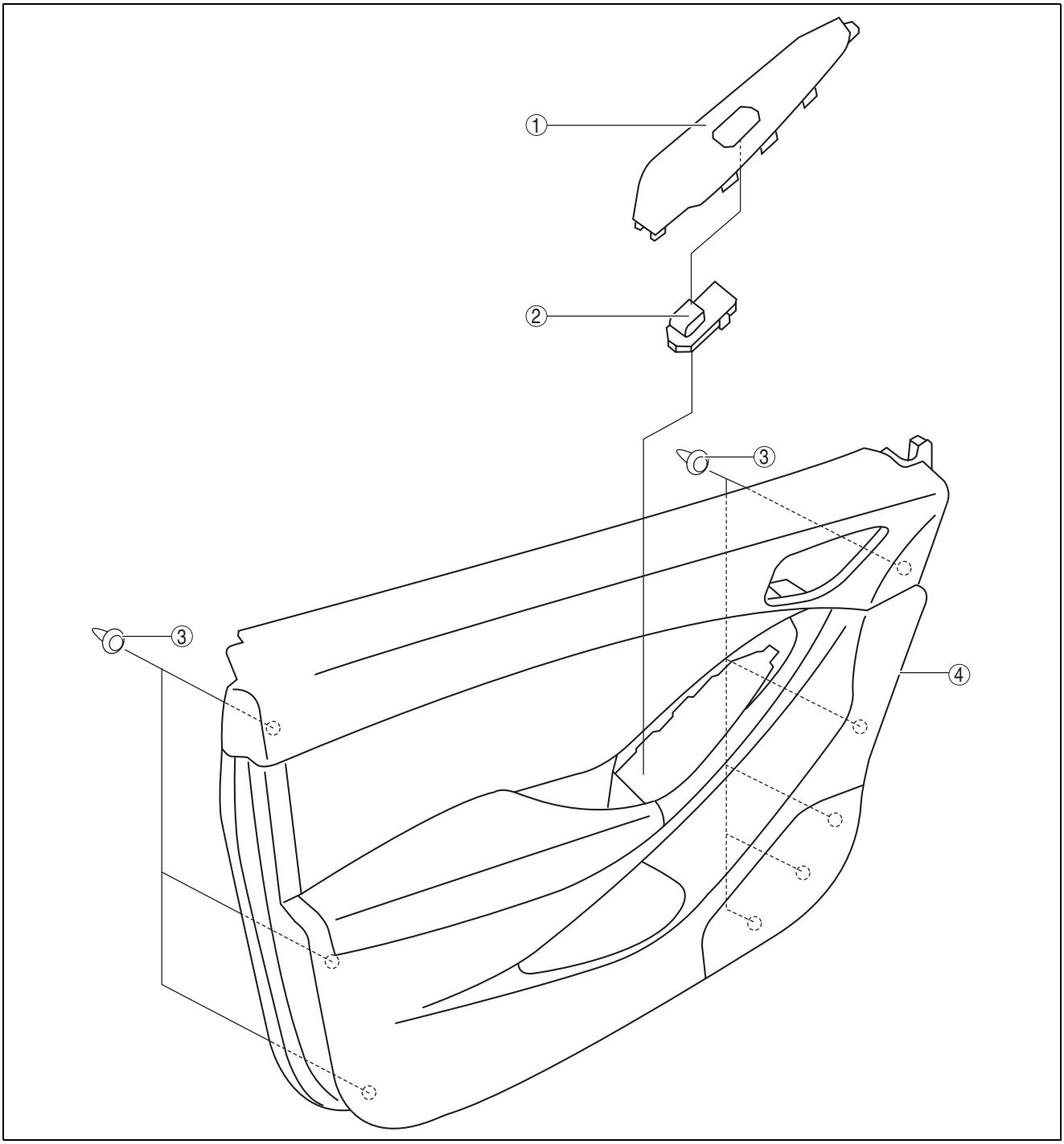

ac5wzw0000144

1	Switch panel cover
2	Power window subswitch (See 09-17-74 Power Window Subswitch Removal Note.)

3	Fastener
4	Rear door trim

2. Assemble in the reverse order of disassembly.

INTERIOR TRIM

Power Window Subswitch Removal Note

1. Pull the edge of power window subswitch cover in the direction of arrow (1) and detach the tab.

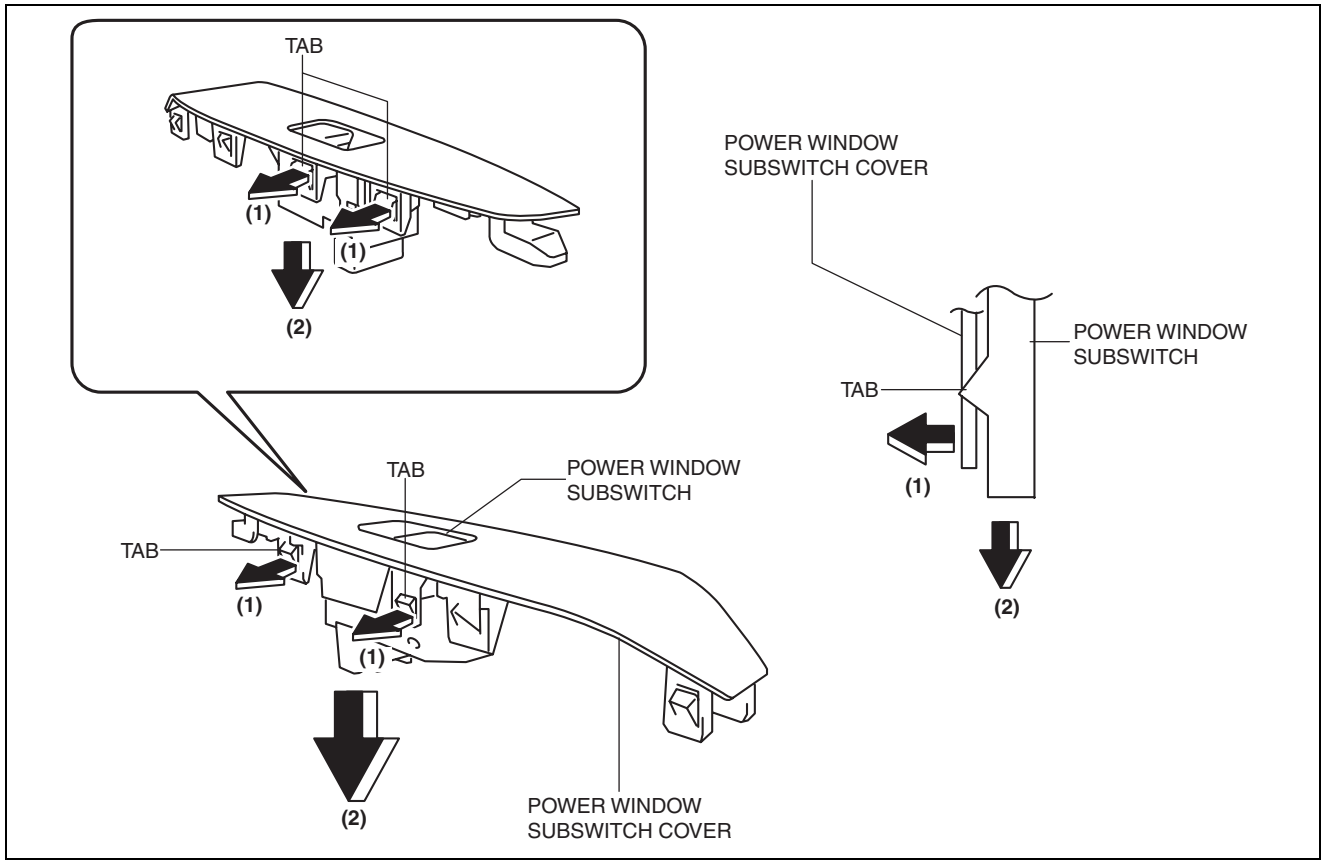

ac5wzw0000280

2. Remove the power window subswitch in the direction of arrow (2) shown in the figure.

REAR DOOR TRIM REMOVAL/INSTALLATION

id091700802600

1. Disconnect the negative battery cable. (See 01-17A-11 NEGATIVE BATTERY CABLE DISCONNECTION/CONNECTION [SKYACTIV-G 2.0].) (See 01-17A-13 NEGATIVE BATTERY CABLE DISCONNECTION/CONNECTION [SKYACTIV-G 2.0 (WITHOUT i-stop)].) (See 01-17B-9 NEGATIVE BATTERY CABLE DISCONNECTION/CONNECTION [SKYACTIV-D 2.2].)

INTERIOR TRIM

2. Insert a tape-wrapped flathead screwdriver in the position indicated by the arrow (1) in the figure and remove the inner handle cover while detach tabs A, pin B.

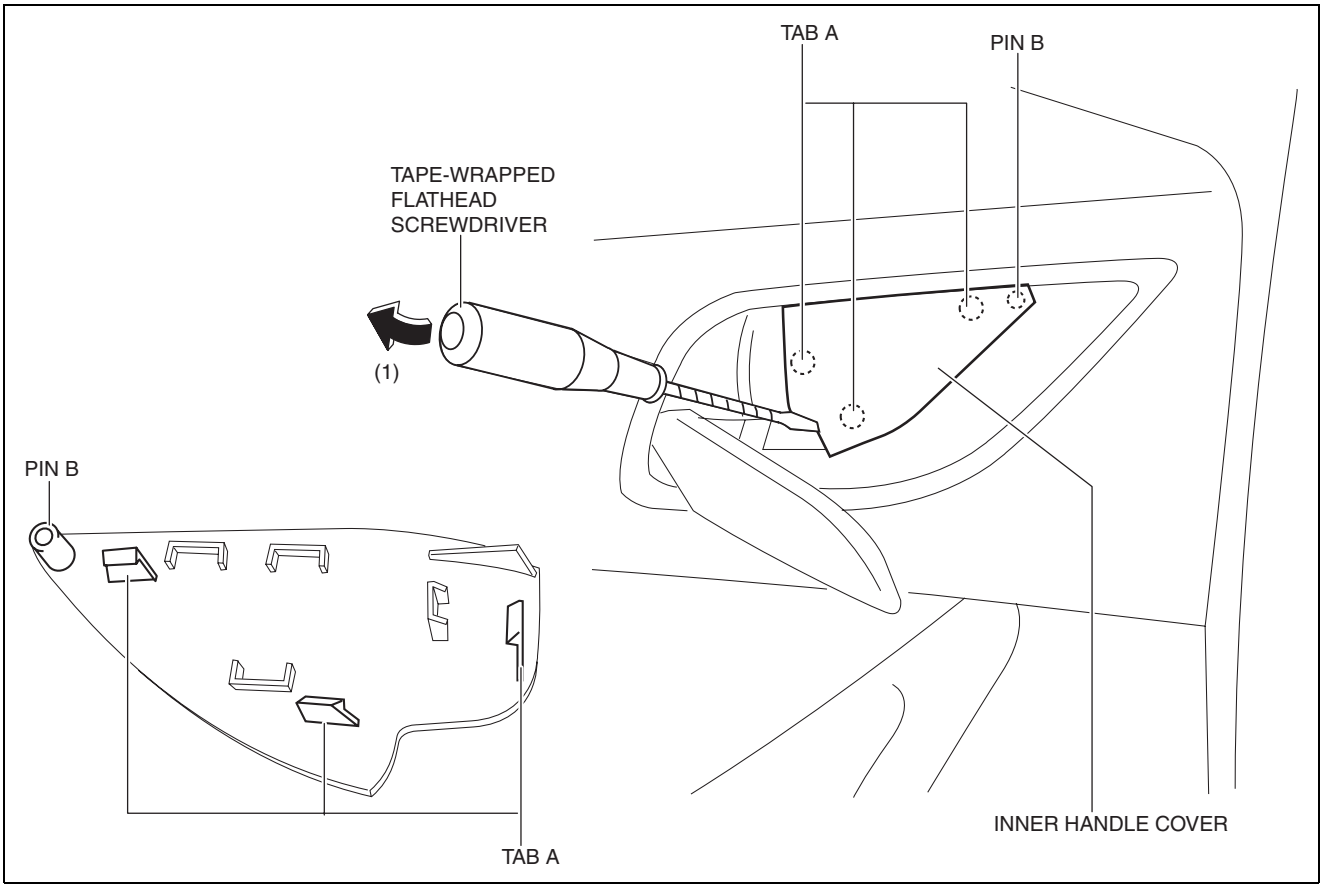

ac5uuw00001774

3. Remove the screw C.

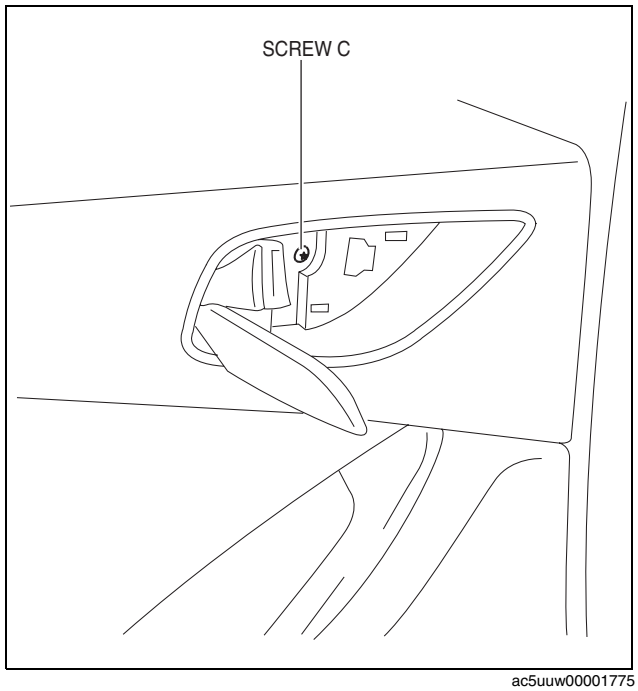

ac5uuw00001775

INTERIOR TRIM

4. Remove the cover D, then remove the screw E.
5. Take the shaded area shown in the figure, and pull the rear door trim in the direction of the arrow in the order of (1), (2), (3), (4) while detaching clips F, hooks G and pin H.

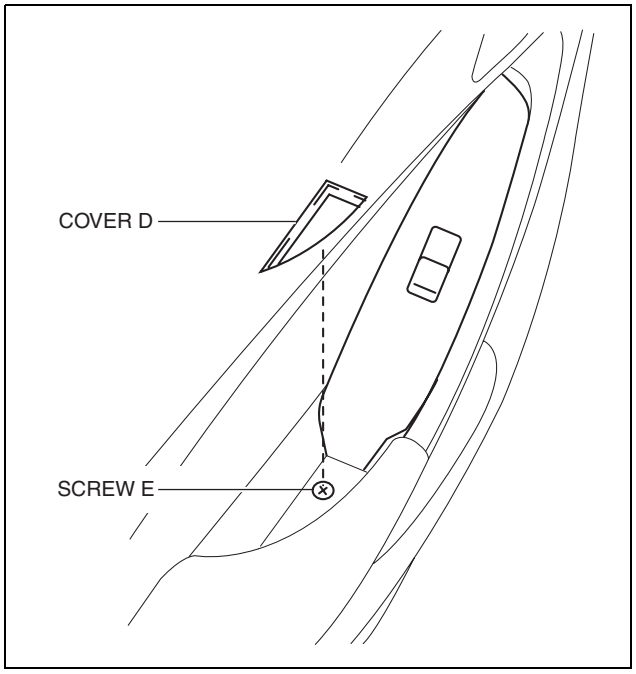

ac5uuw00001776

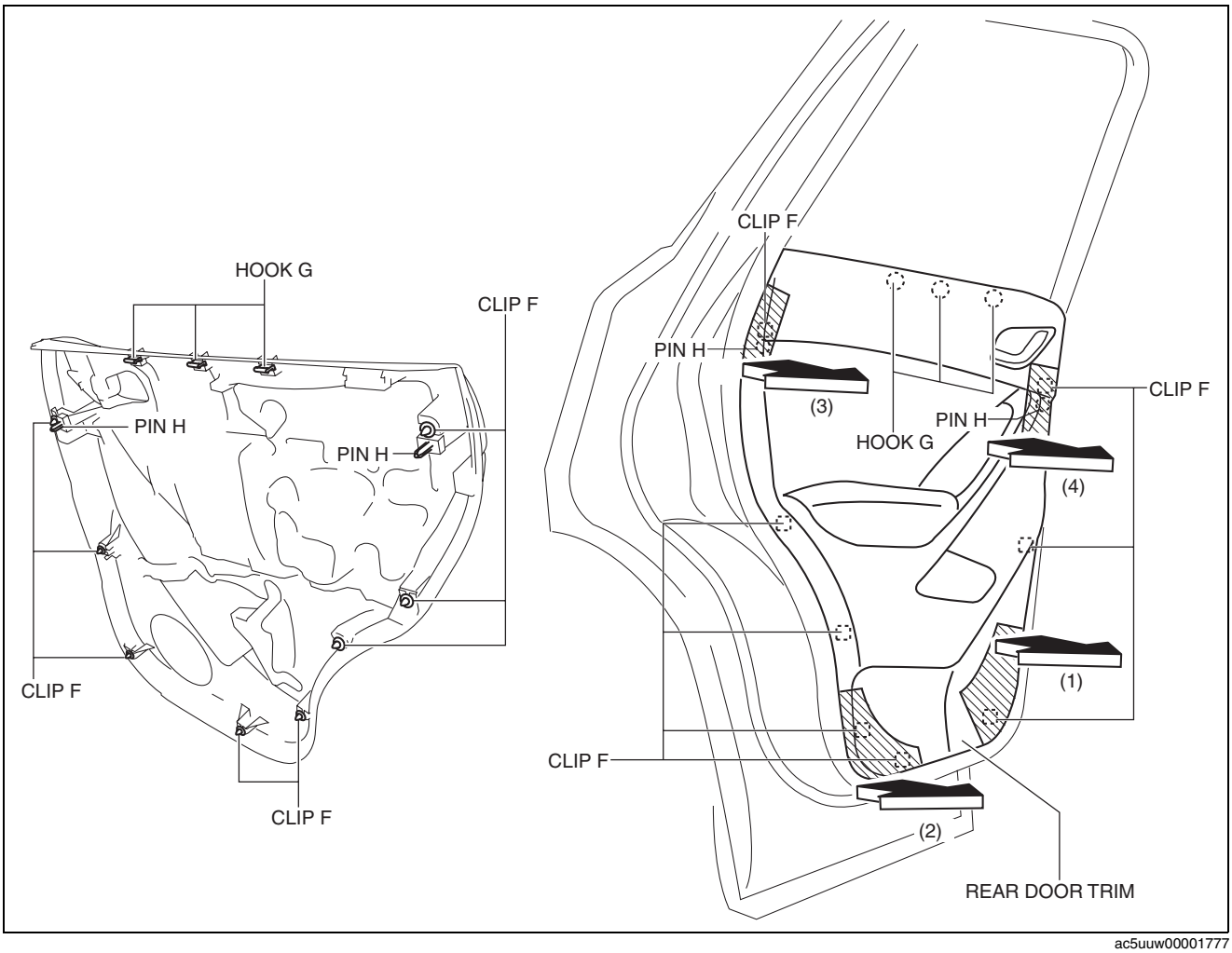

ac5uuw00001777

INTERIOR TRIM

6. Remove the tab I in the direction of the arrow (5) shown in the figure.

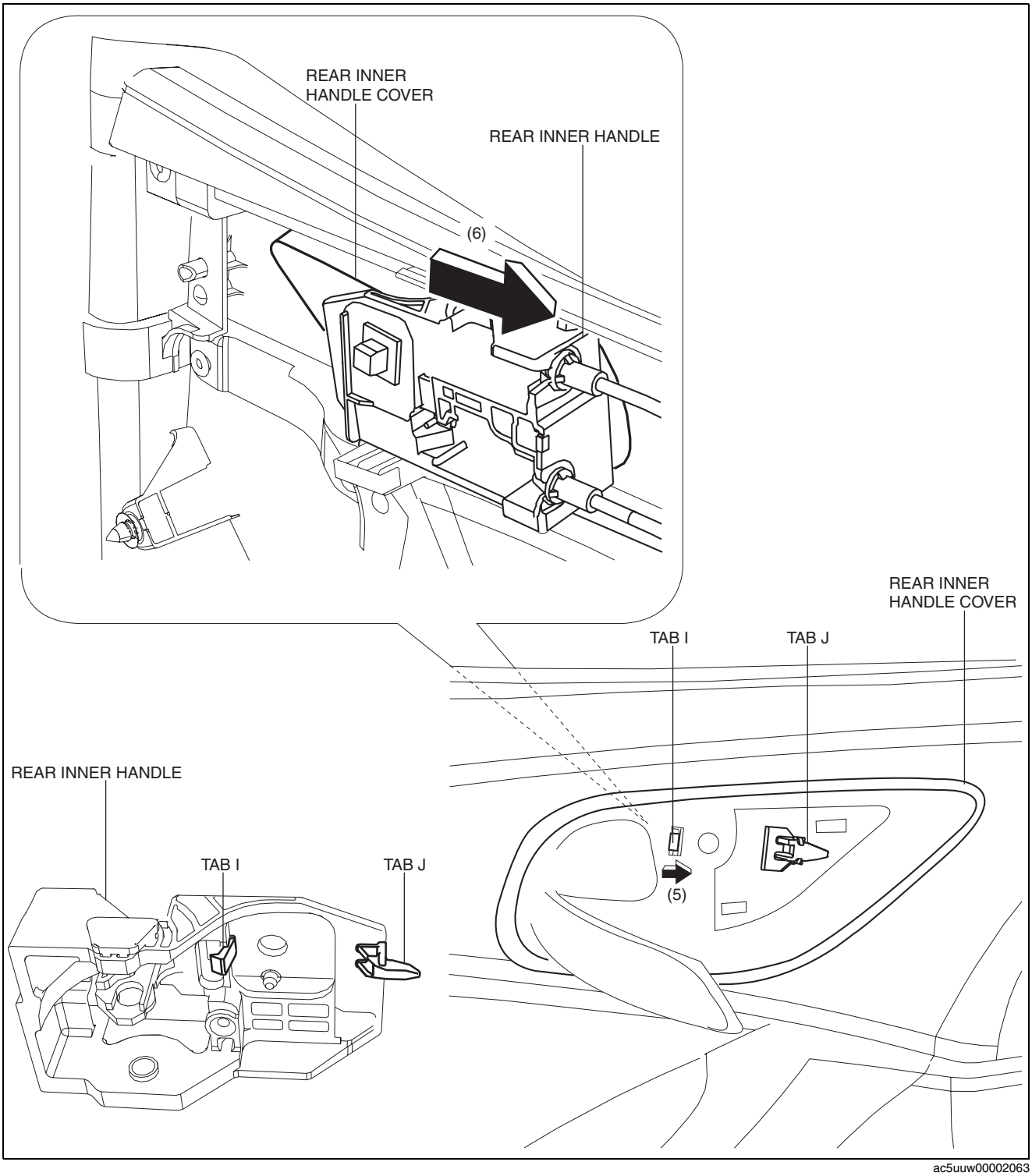

ac5uuw00002063

7. Remove the rear inner handle in the direction of the arrow (6) shown in the figure while detaching the tab J.
8. Disconnect the power window subswitch connector.
9. Install in the reverse order of removal.

INTERIOR TRIM

TRUNK COVERING REMOVAL/INSTALLATION

id091700462500

1. Remove fasteners.

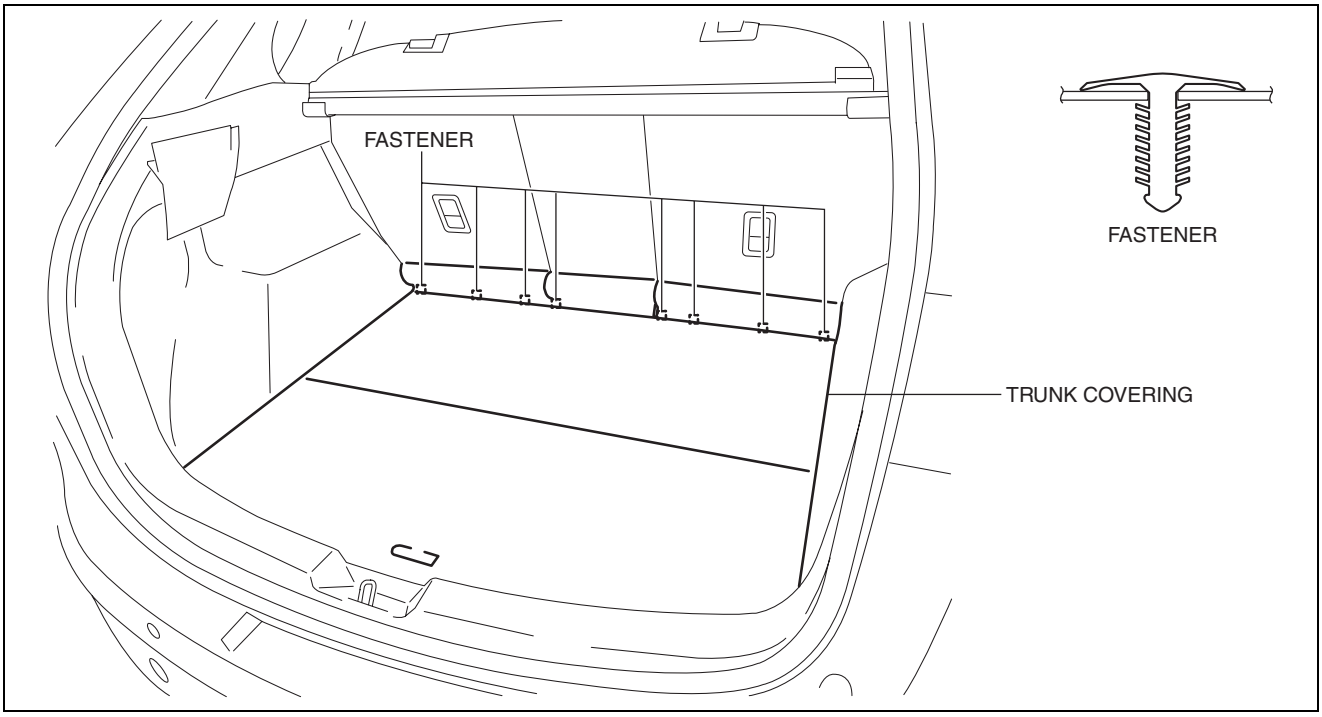

ac5wzw0000141

2. Remove the trunk covering.
3. Install in the reverse order of removal.

TRUNK END TRIM REMOVAL/INSTALLATION

id091700803400

1. Remove the trunk board. (See 09-17-85 TRUNK BOARD REMOVAL/INSTALLATION.)
2. Partially peel back the liftgate weather strip.

INTERIOR TRIM

3. Remove fasteners.

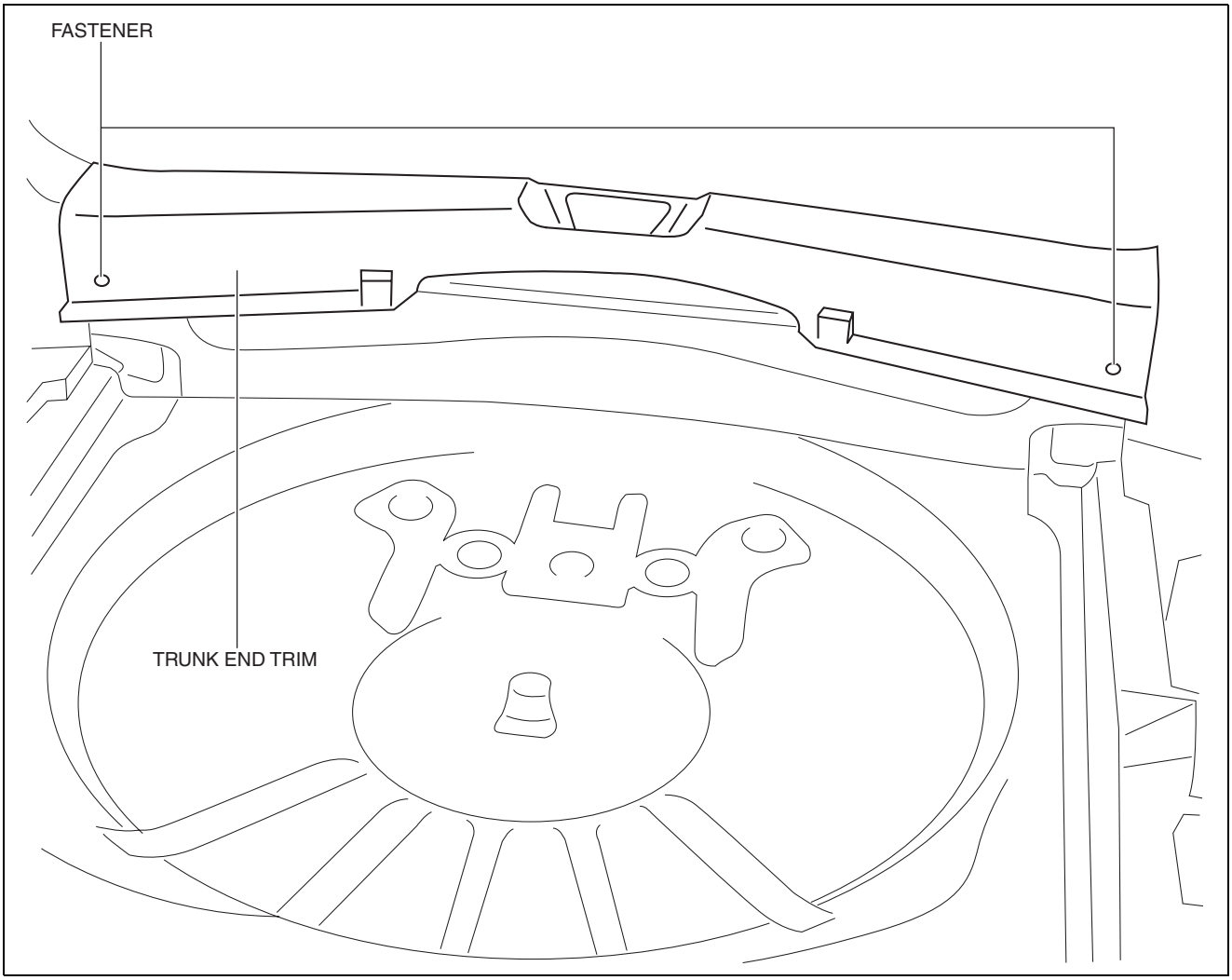

ac5wzw0000147

INTERIOR TRIM

4. Take the shaded area shown in the figure, detach tabs A while pulling the trunk end trim in the direction of the arrow (1) shown in the figure, then detach clips B, pins C while pulling in the direction of the arrow (2).

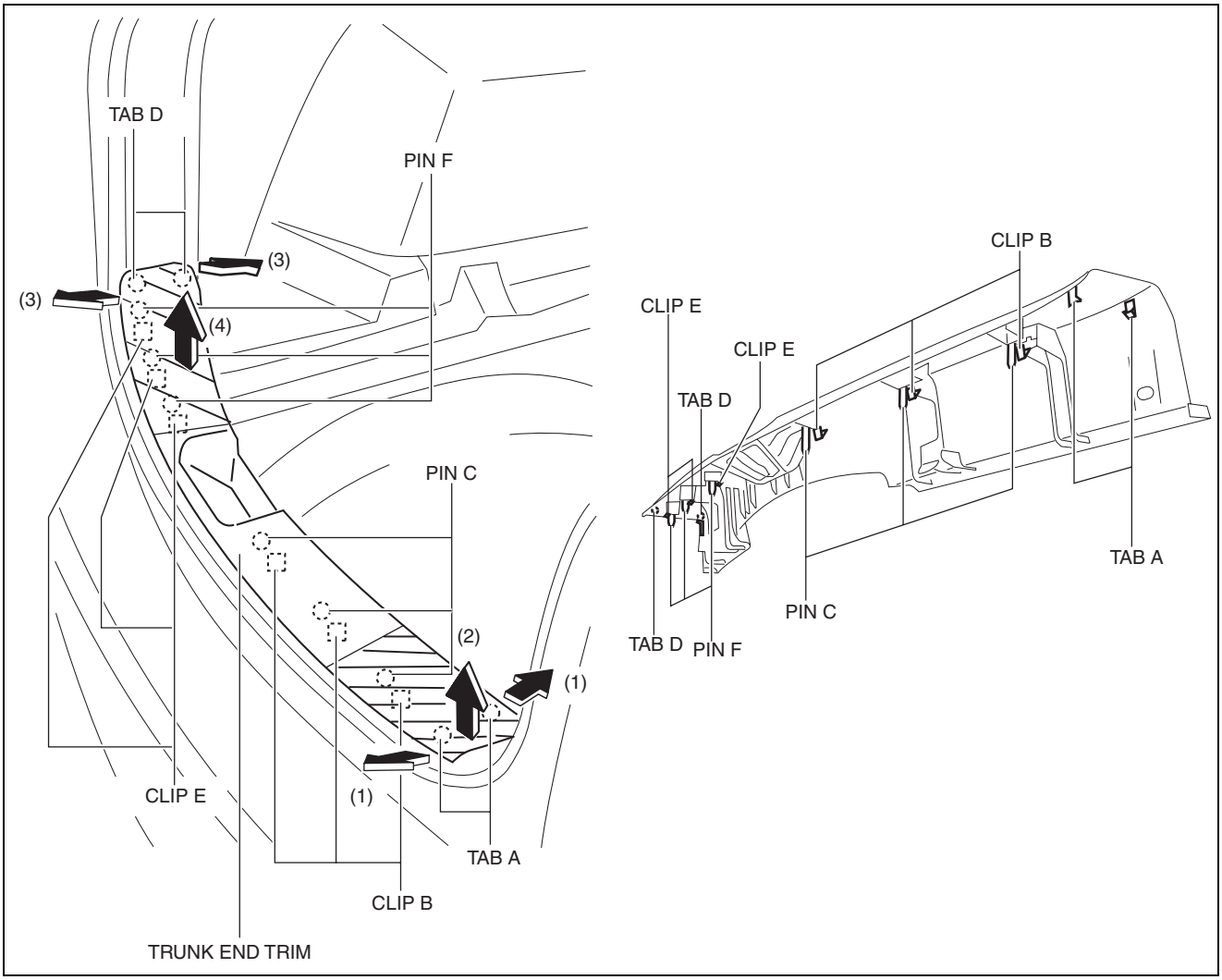

ac5wzw0000147

5. Take the shaded area shown in the figure, detach tabs D while pulling the trunk end trim in the direction of the arrow (3) shown in the figure, then detach clips E, pins F while pulling in the direction of the arrow (4).
6. Install in the reverse order of removal.

TRUNK SIDE TRIM REMOVAL/INSTALLATION

id091700803100

1. Disconnect the negative battery cable. (See 01-17A-11 NEGATIVE BATTERY CABLE DISCONNECTION/CONNECTION [SKYACTIV-G 2.0].) (See 01-17A-13 NEGATIVE BATTERY CABLE DISCONNECTION/CONNECTION [SKYACTIV-G 2.0 (WITHOUT i-stop)].) (See 01-17B-9 NEGATIVE BATTERY CABLE DISCONNECTION/CONNECTION [SKYACTIV-D 2.2].)
2. Remove the following parts:
   (1) Trunk board (See 09-17-85 TRUNK BOARD REMOVAL/INSTALLATION.)
   (2) Trunk end trim (See 09-17-78 TRUNK END TRIM REMOVAL/INSTALLATION.)
   (3) Rear scuff plate (See 09-17-63 REAR SCUFF PLATE REMOVAL/INSTALLATION.)
3. Pull up the cover A in the direction the of arrow (1) shown in the figure.

INTERIOR TRIM

4. Remove bolt B, then remove the cargo net hooks.

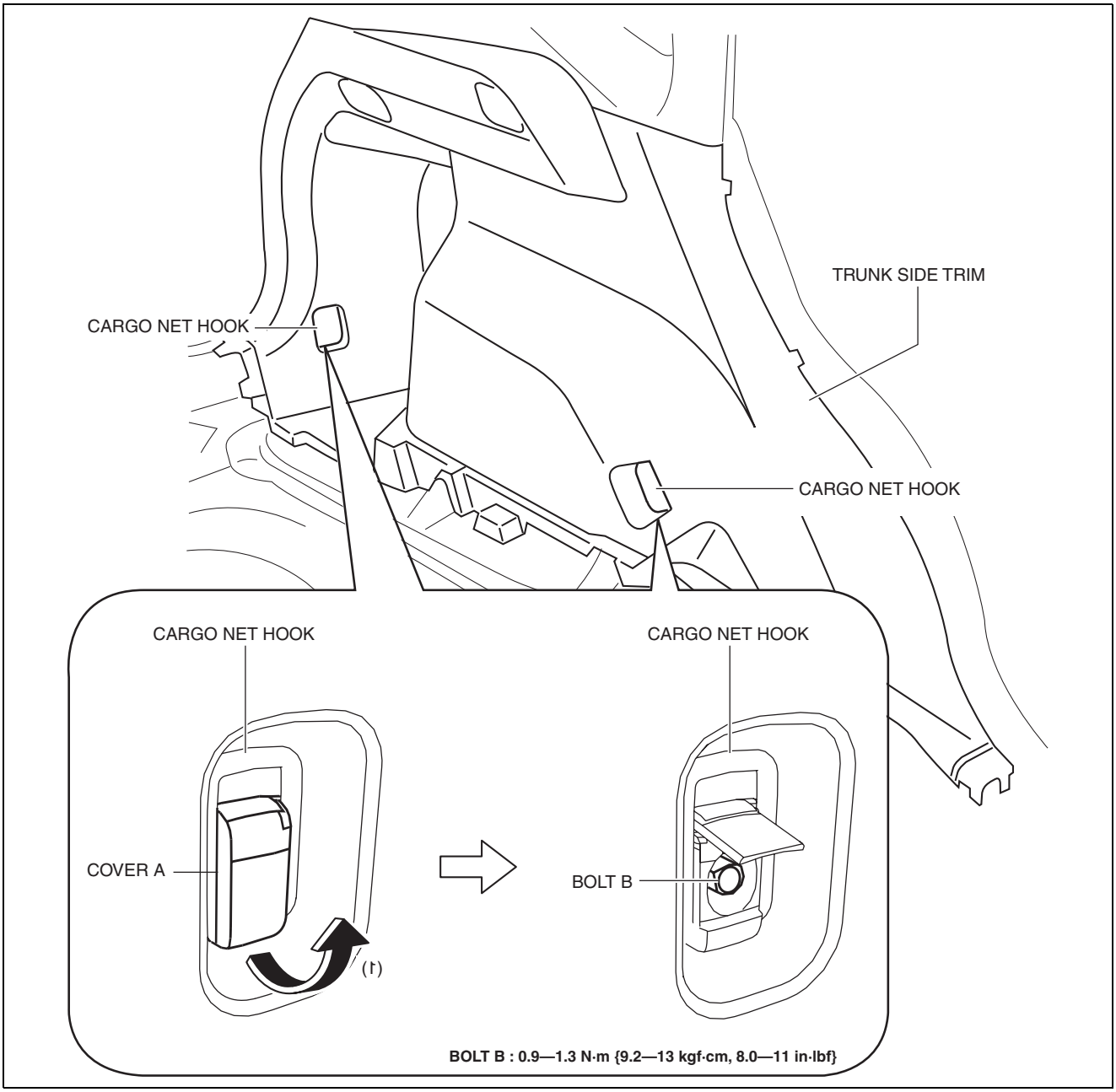

ac5wzw0000458

5. Move hooks C in the direction of arrow (2) shown in the figure using a tape-lapped flathead screwdriver.
6. Remove the cover D in the direction of arrow (3) shown in the figure.

INTERIOR TRIM

7. Remove the screw E.

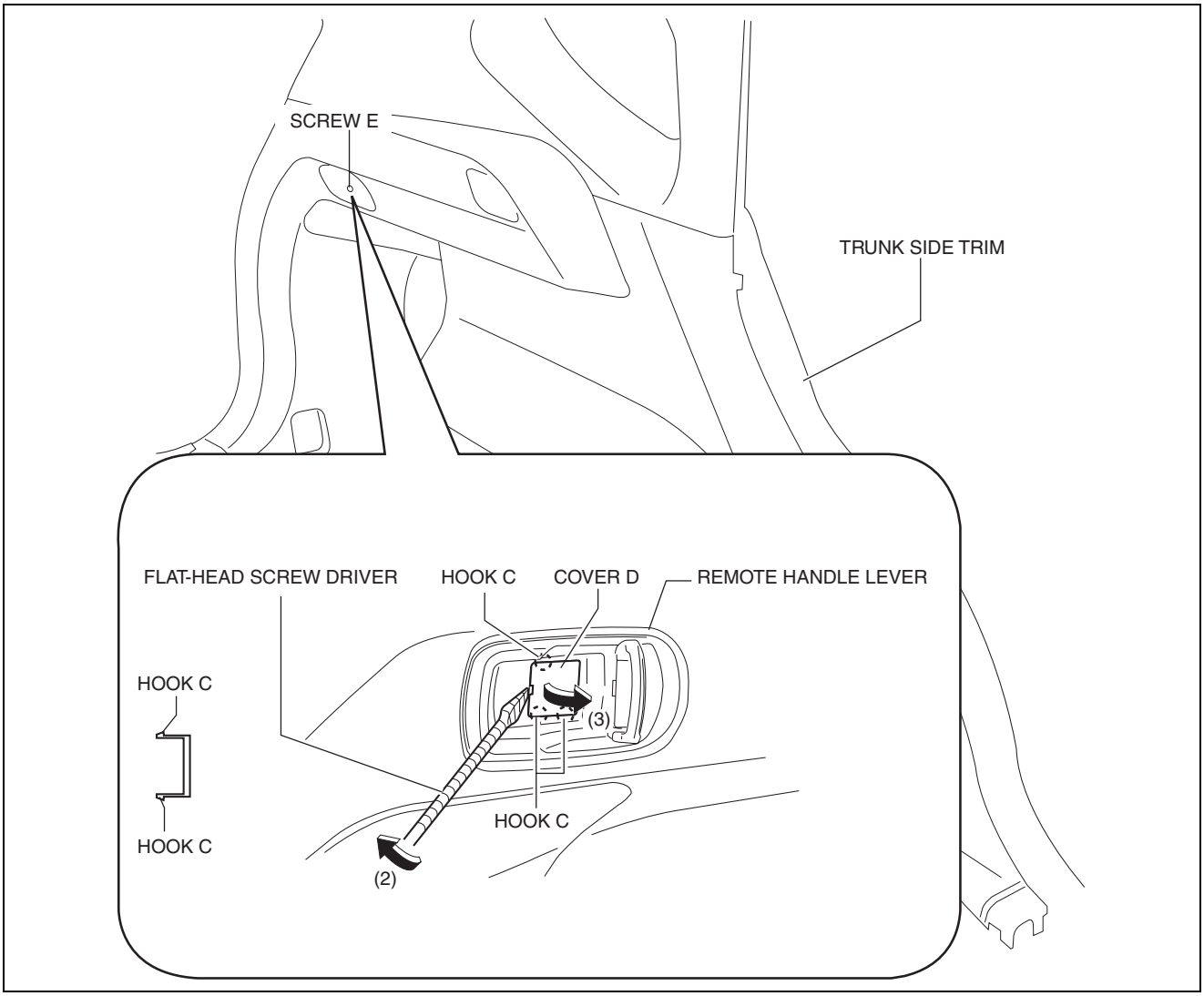

ac5wzw0000458

8. Remove the fastener F.

INTERIOR TRIM

9. Remove the cap, then remove the screw G. (4:2:4 split type)

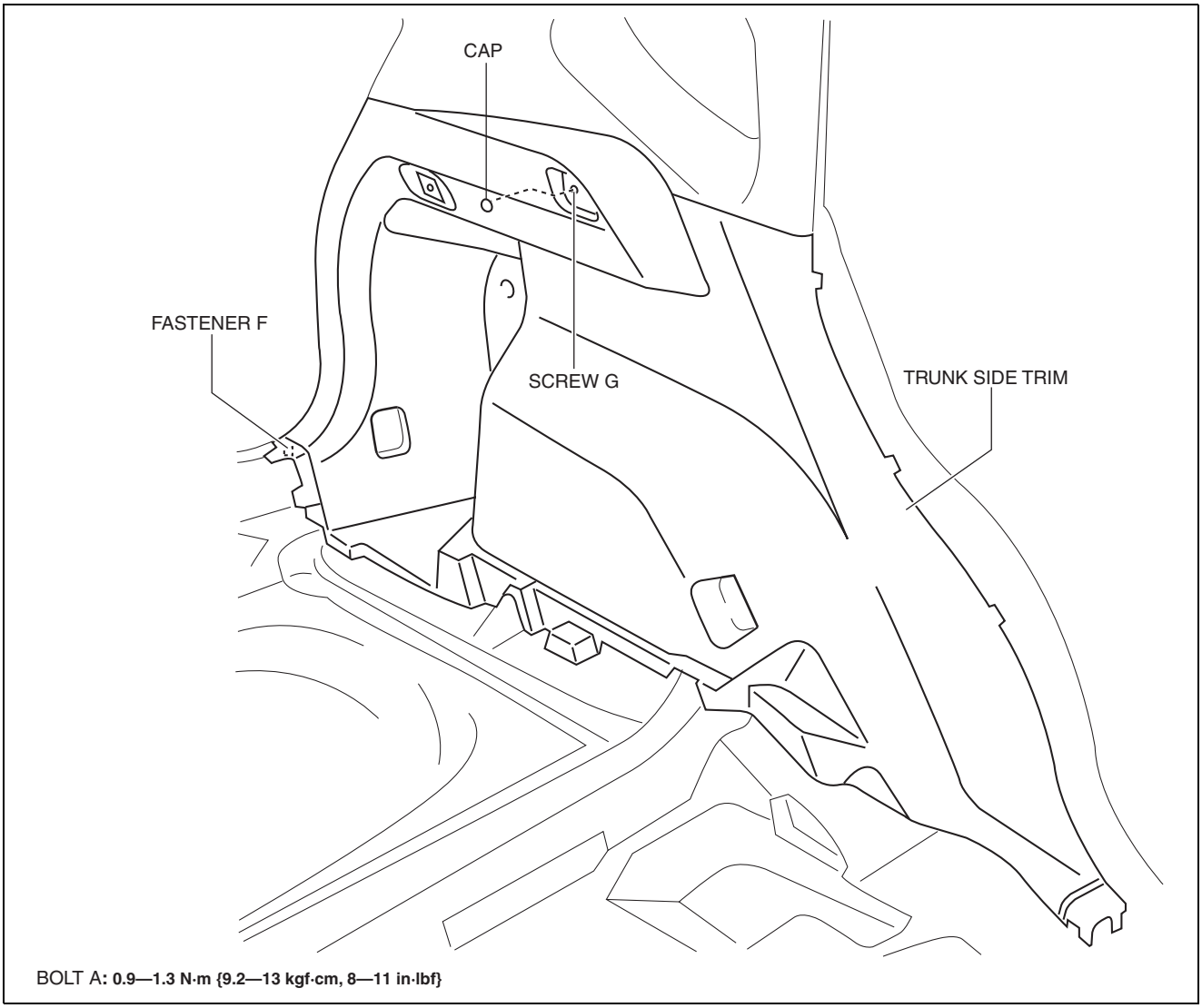

BOLT A: **0.9—1.3 N·m {9.2—13 kgf·cm, 8—11 in·lbf}**

ac5wzw0000458

INTERIOR TRIM

10. Hold D-pillar trim with your hands and pull the trunk side trim in the direction of the arrow (4), (5), (6), (7) and remove clips H, hooks I and pin J.

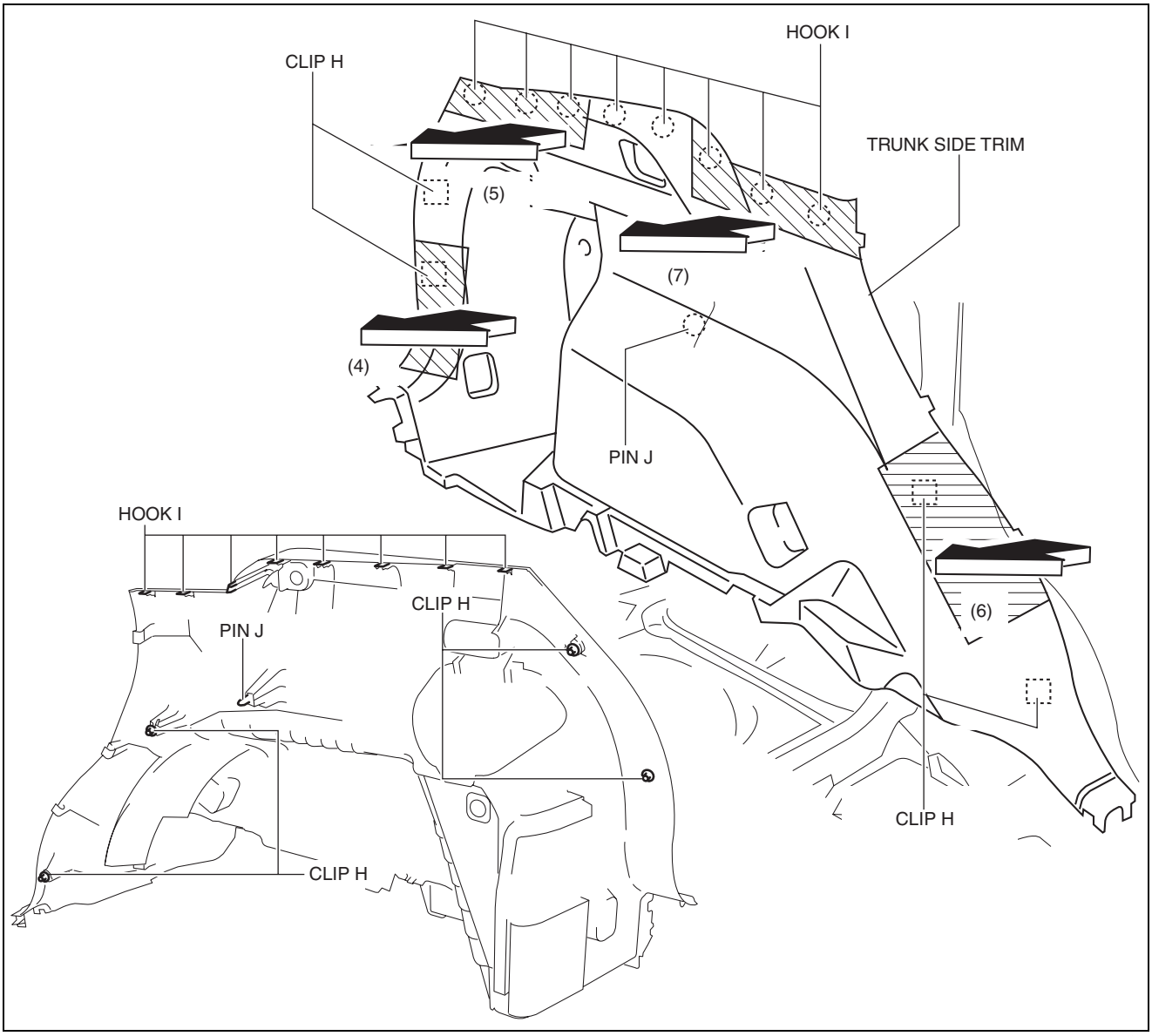

ac5wzw0000458

11. Set the remote handle lever out of the way. (4:2:4 split type)
12. Disconnect the connector. (cargo room light connector, rear accessory socket connector)
13. Install in the reverse order of removal.

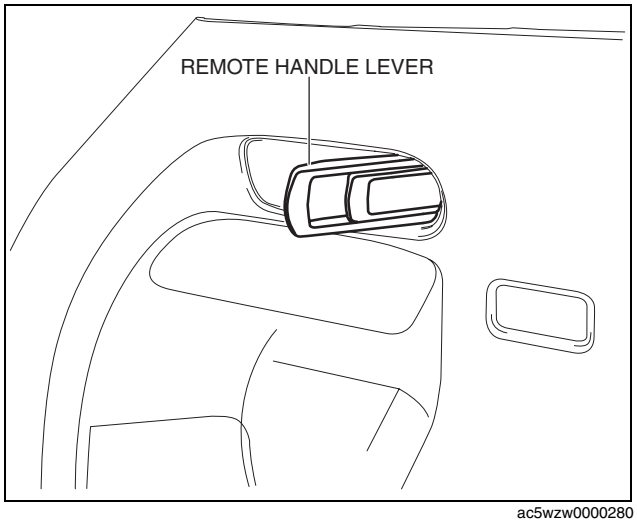

ac5wzw0000280

INTERIOR TRIM

TRUNK BOARD REMOVAL/INSTALLATION

id091700810000

1. Set the trunk covering aside.
2. Remove the trunk board No.1 in the direction of the arrow (1) shown in the figure.

With temporary spare tire

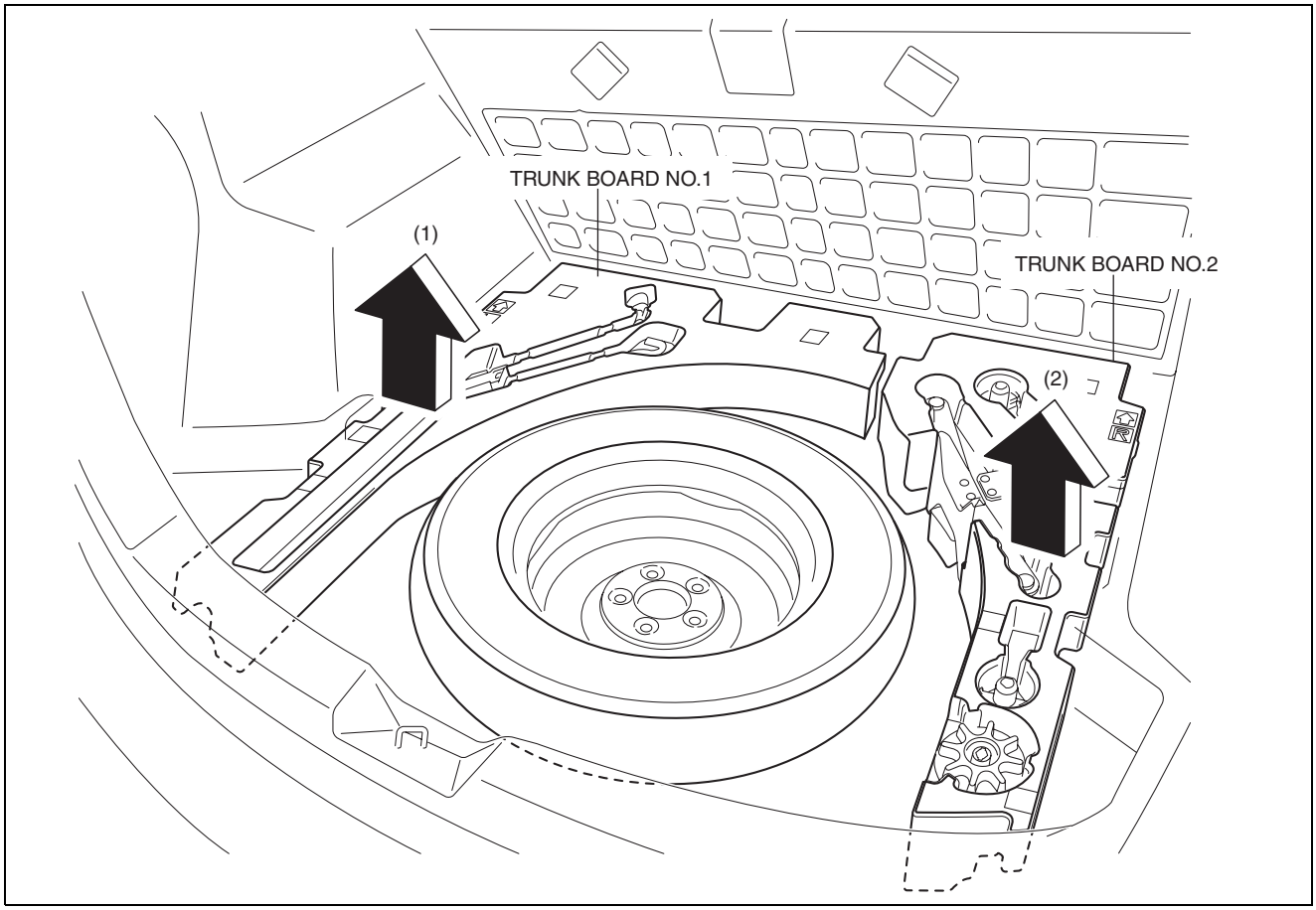

ac5uuw00002066

INTERIOR TRIM

Without temporary spare tire

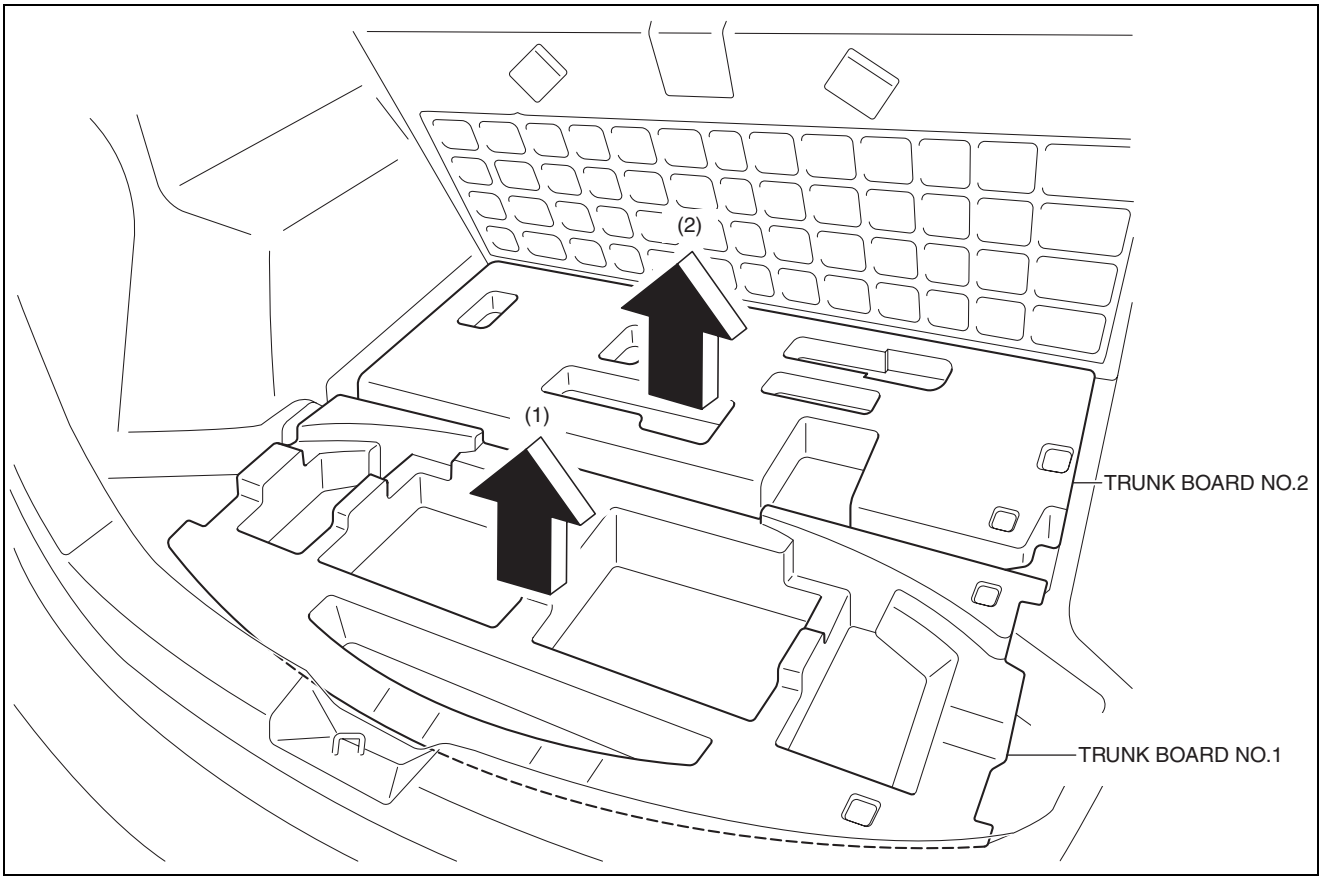

ac5uuw00002065

3. Remove the trunk board No.2 in the direction of the arrow (2) shown in the figure.
4. Install in the reverse order of removal.

INTERIOR TRIM

LIFTGATE UPPER TRIM REMOVAL/INSTALLATION

id091700803600

1. Take the shaded area shown in the figure, detach tab A while pulling the liftgate upper trim in the direction of the arrow (1) shown in the figure, then detach clips B, clip C and pin D while pulling in the direction of the arrow (2).

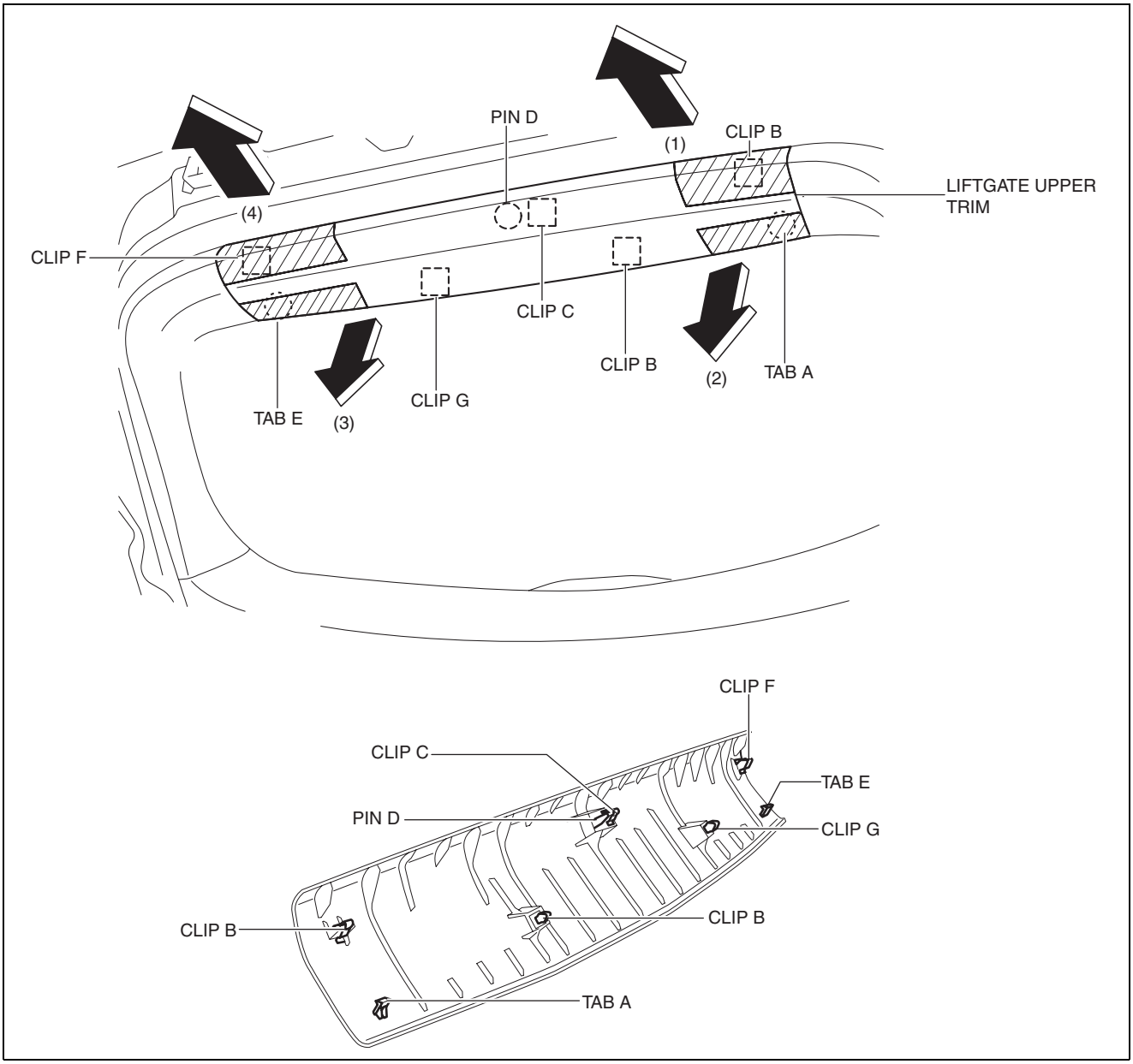

ac5uuw00001781

2. Take the shaded area shown in the figure, detach tab E while pulling the liftgate upper trim in the direction of the arrow (3) shown in the figure, then detach the clip F, clip G while pulling in the direction of the arrow (4).
3. Install in the reverse order of removal.

LIFTGATE SIDE TRIM REMOVAL/INSTALLATION

id091700803700

1. Remove the liftgate upper trim. (See 09-17-87 LIFTGATE UPPER TRIM REMOVAL/INSTALLATION.)
2. Remove the fastener A.

INTERIOR TRIM

3. Take the shaded area shown in the figure, and pull the liftgate side trim in the direction of the arrow (1) while detaching clips B.

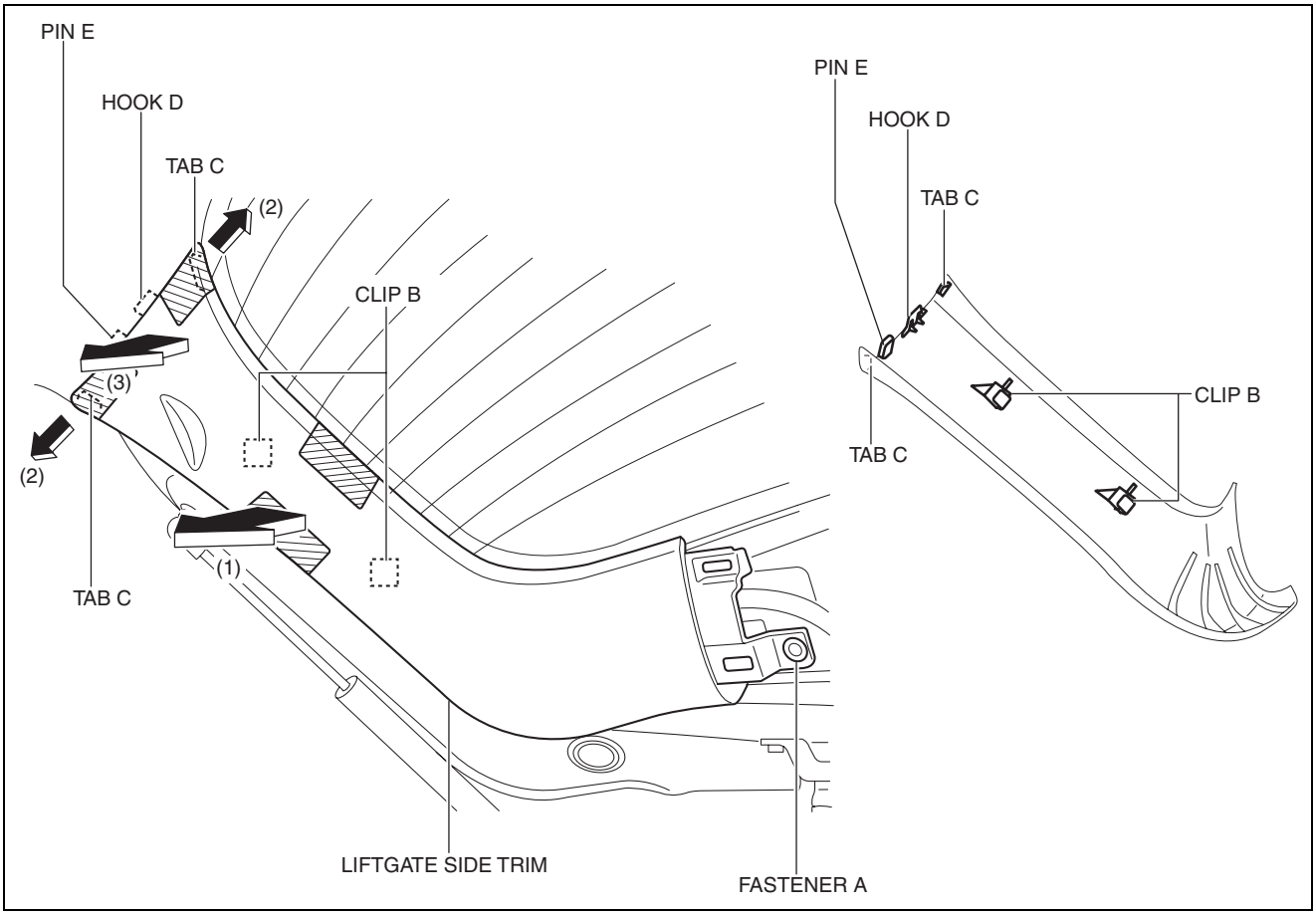

ac5uuw00001782

4. Take the shaded area shown in the figure, detach tabs C while pulling the liftgate side trim in the direction of the arrow (2) shown in the figure, then detach the hook D, pin E while pulling in the direction of the arrow (3).
5. Install in the reverse order of removal.

INTERIOR TRIM

LIFTGATE RECESS REMOVAL/INSTALLATION

id091700467500

1. Insert a tape-wrapped flathead screwdriver in the position indicated by the arrow in the figure and detach hooks A.

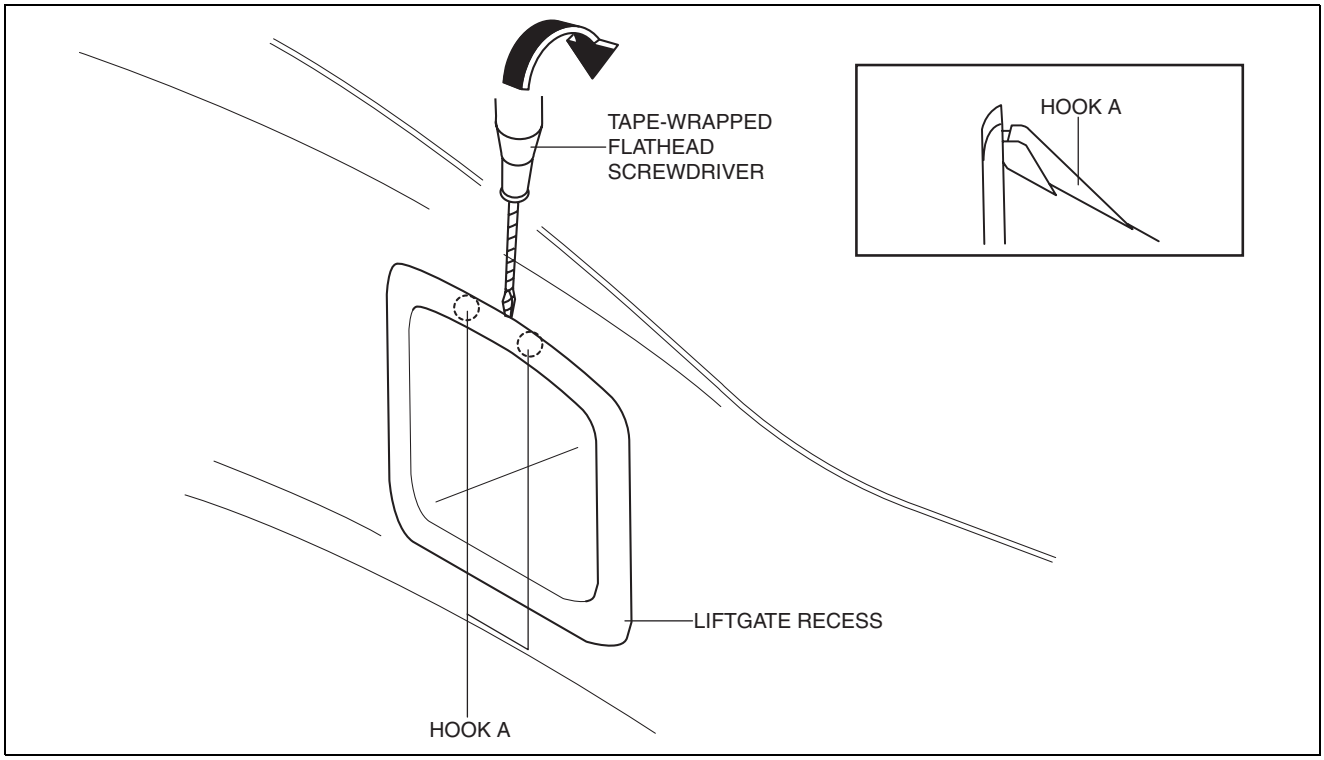

ac5wzw0000141

2. Remove the liftgate recess in the direction of the arrow shown in the figure avoiding hooks B.

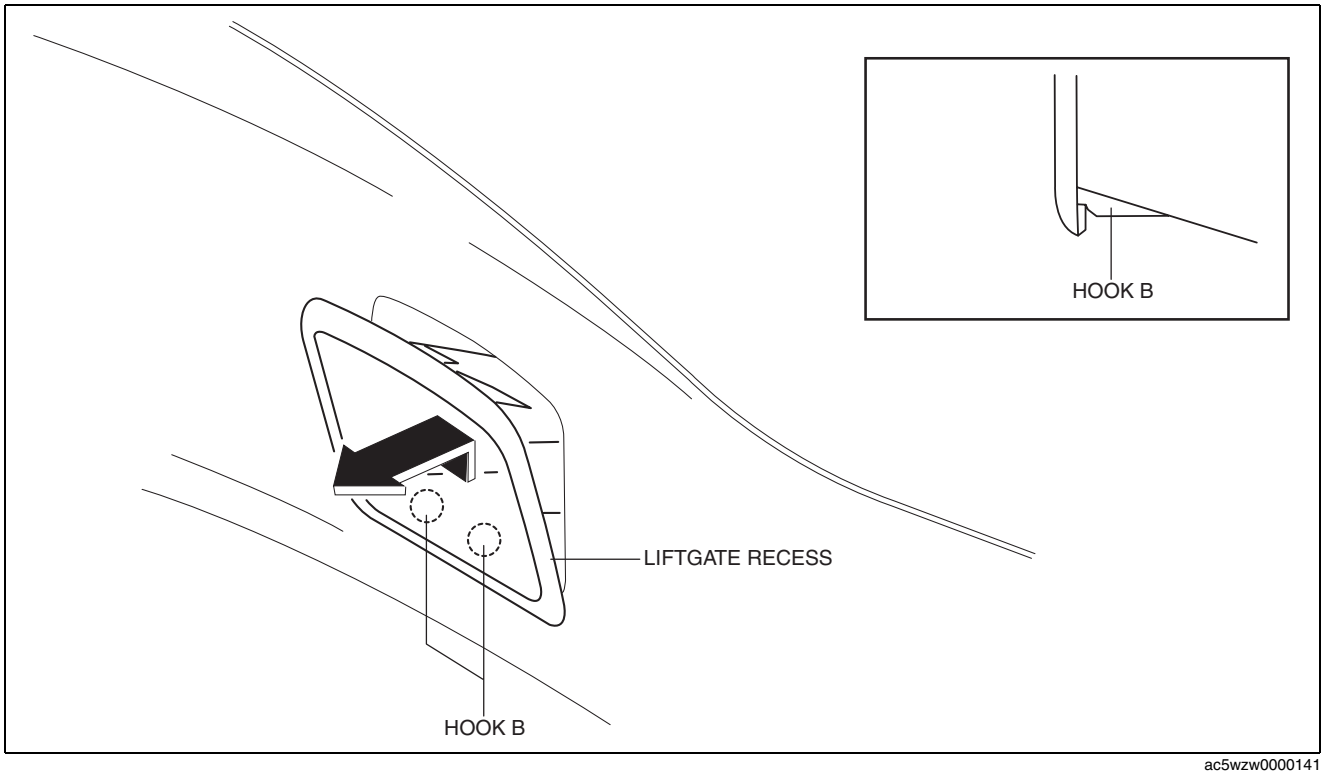

ac5wzw0000141

3. Install in the reverse order of removal.

LIFTGATE LOWER TRIM REMOVAL/INSTALLATION

id091700803800

1. Remove the following parts:
   (1) Liftgate upper trim (See 09-17-87 LIFTGATE UPPER TRIM REMOVAL/INSTALLATION.)

(2) Liftgate side trim (See 09-17-87 LIFTGATE SIDE TRIM REMOVAL/INSTALLATION.)
(3) Liftgate recess (See 09-17-89 LIFTGATE RECESS REMOVAL/INSTALLATION.)

2. Remove fasteners A.

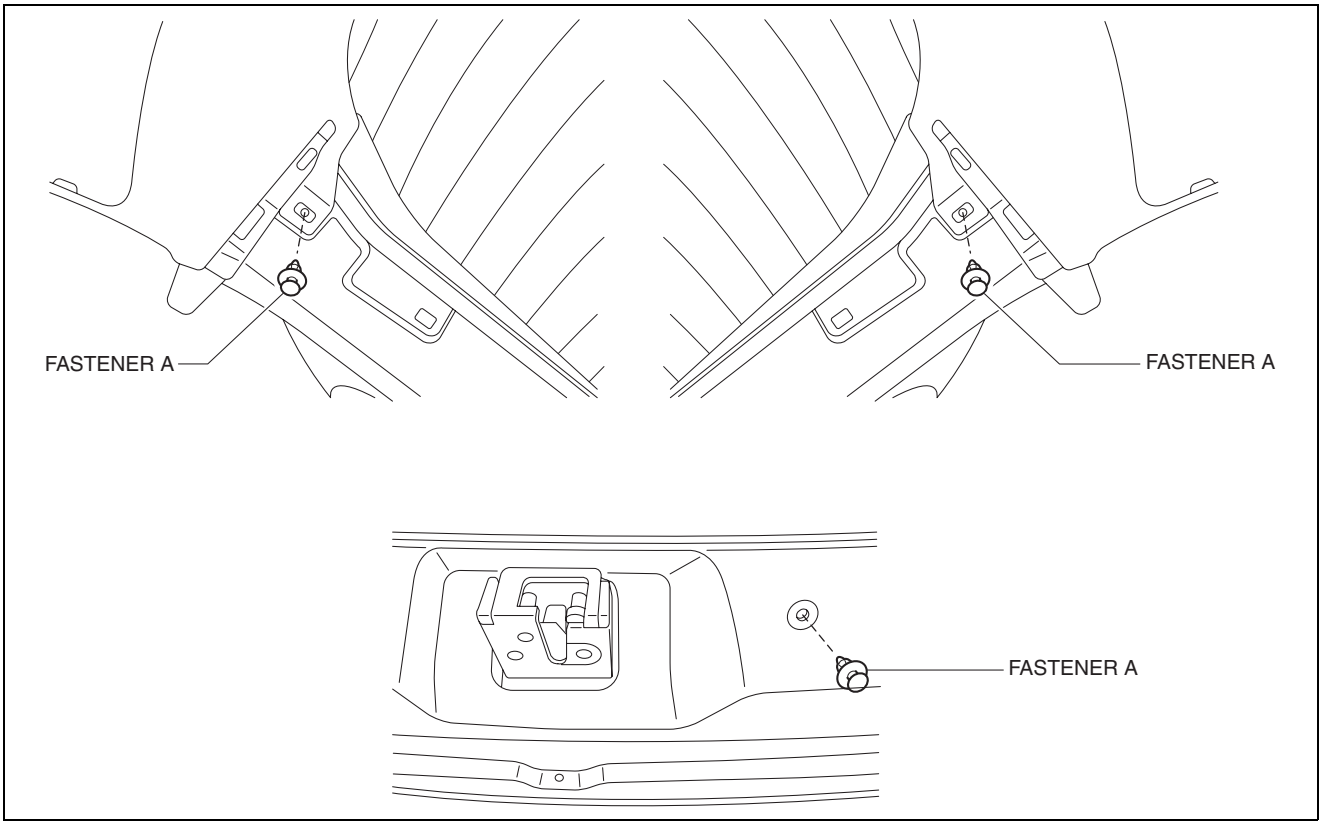

ac5wzw0000147

INTERIOR TRIM

3. Take the shaded area shown in the figure, and pull the liftgate lower trim in the direction of the arrow in the order of (1), (2), (3), (4) and remove it while detaching clips B, clips C and pins D.

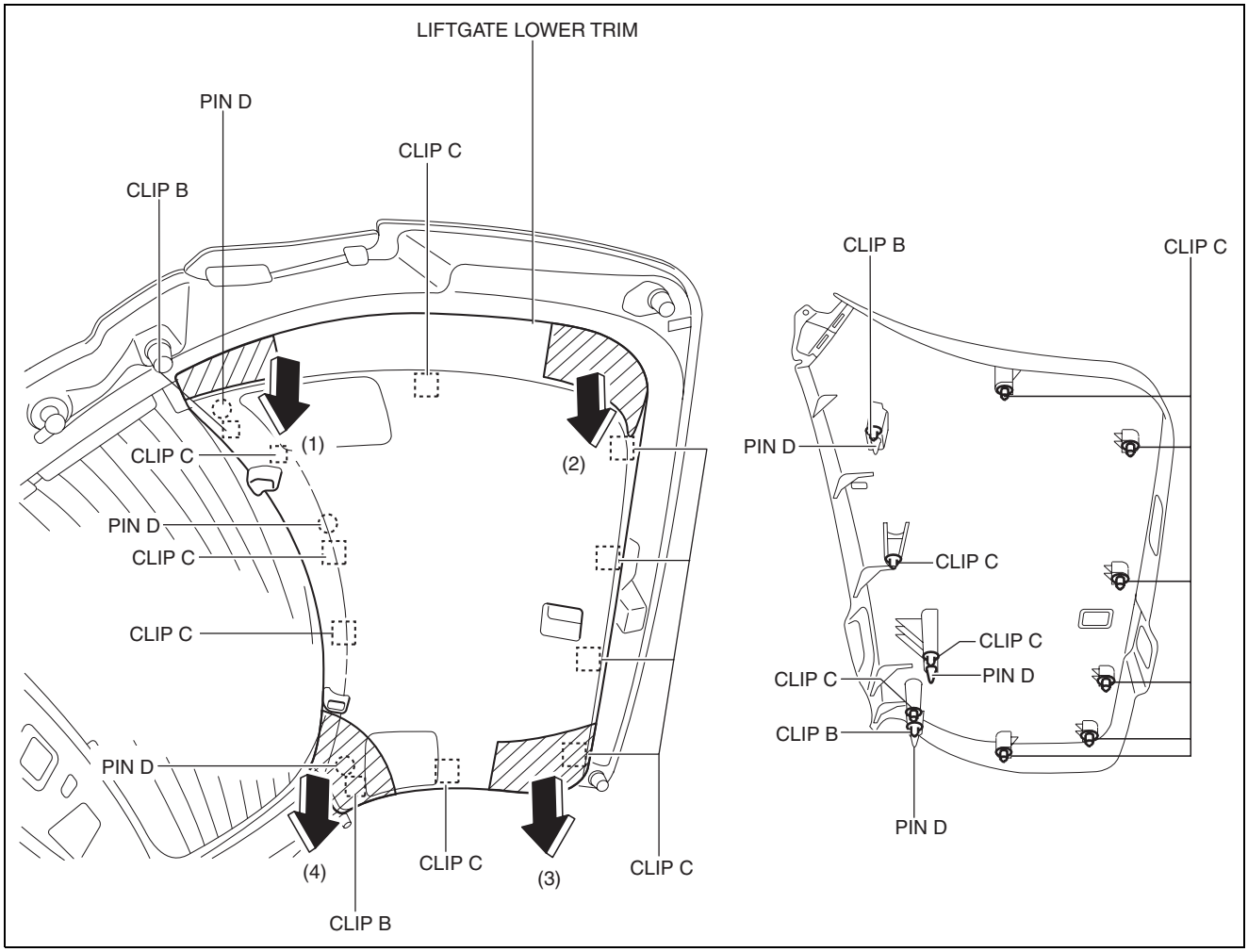

ac5uuw00001783

4. Install in the reverse order of removal.

ASSIST HANDLE REMOVAL/INSTALLATION

id091700801800

Removal

1. Insert a tape-wrapped flathead screwdriver into the service hole and remove the assist handle covers.

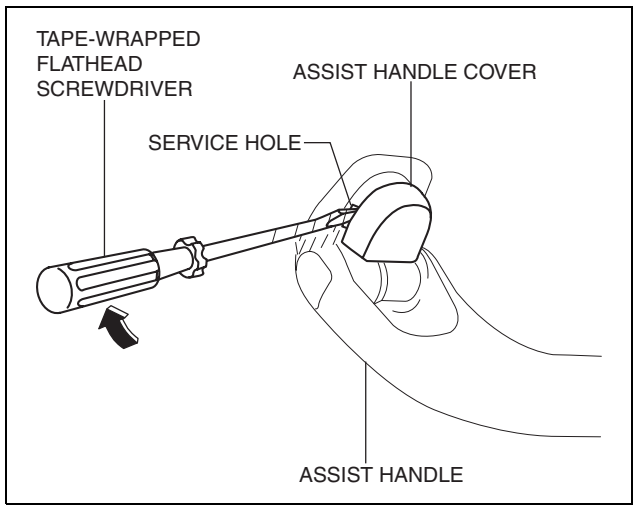

ac5wzw0000166

INTERIOR TRIM

2. Remove the assist handle in the direction of the arrow (1) and (2), while detach clips.

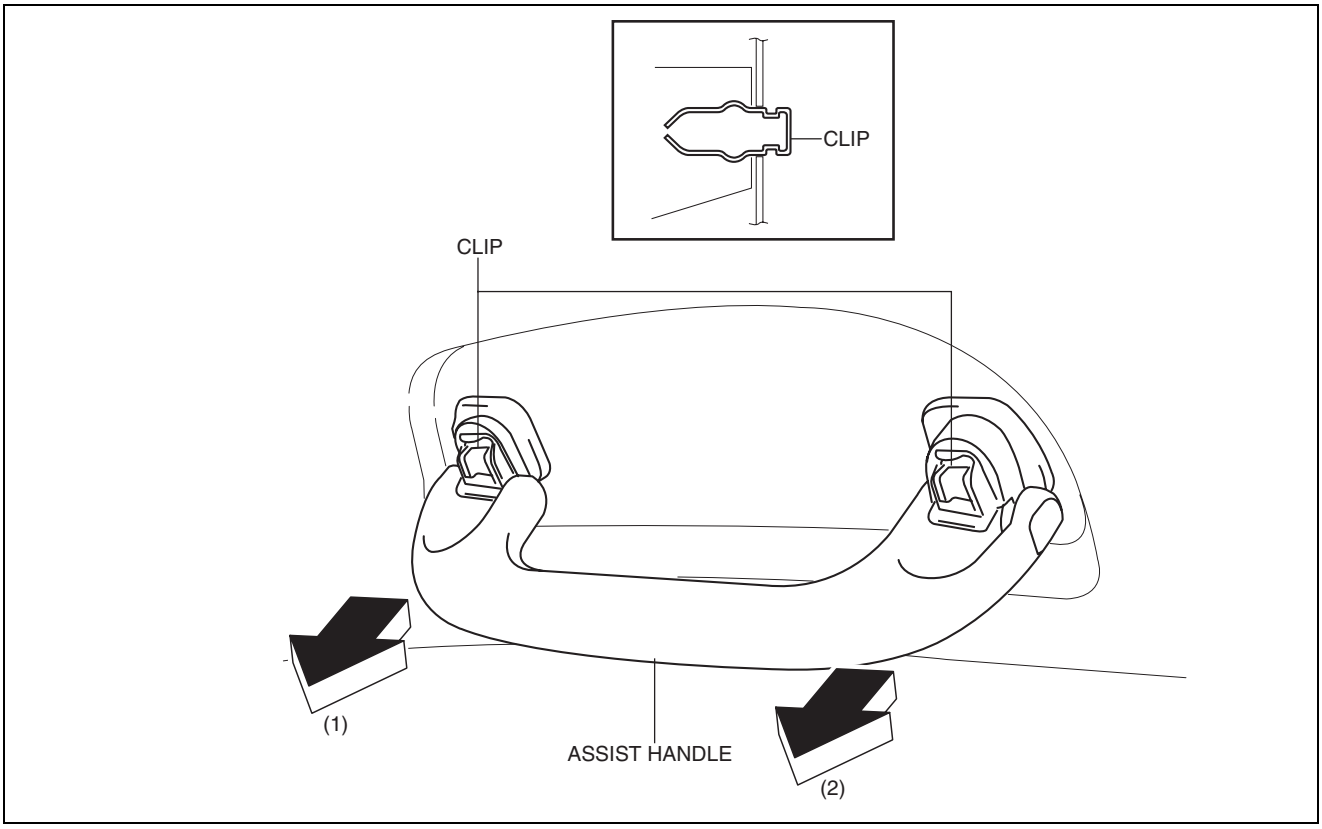

ac5wzw0000167

Note

- Remove the assist handle by shaking it up and down.

Installation

1. Push the assist handle in the direction of the arrow shown in the figure.

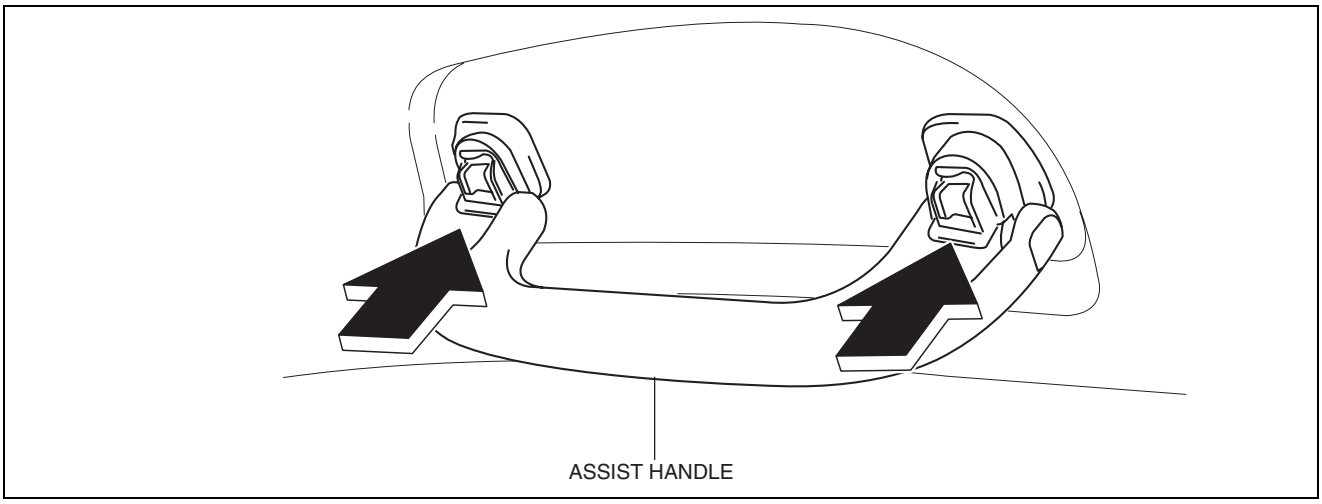

ac5wzw0000167

INTERIOR TRIM

2. Push the assist handle cover assembled to install the assist handle.

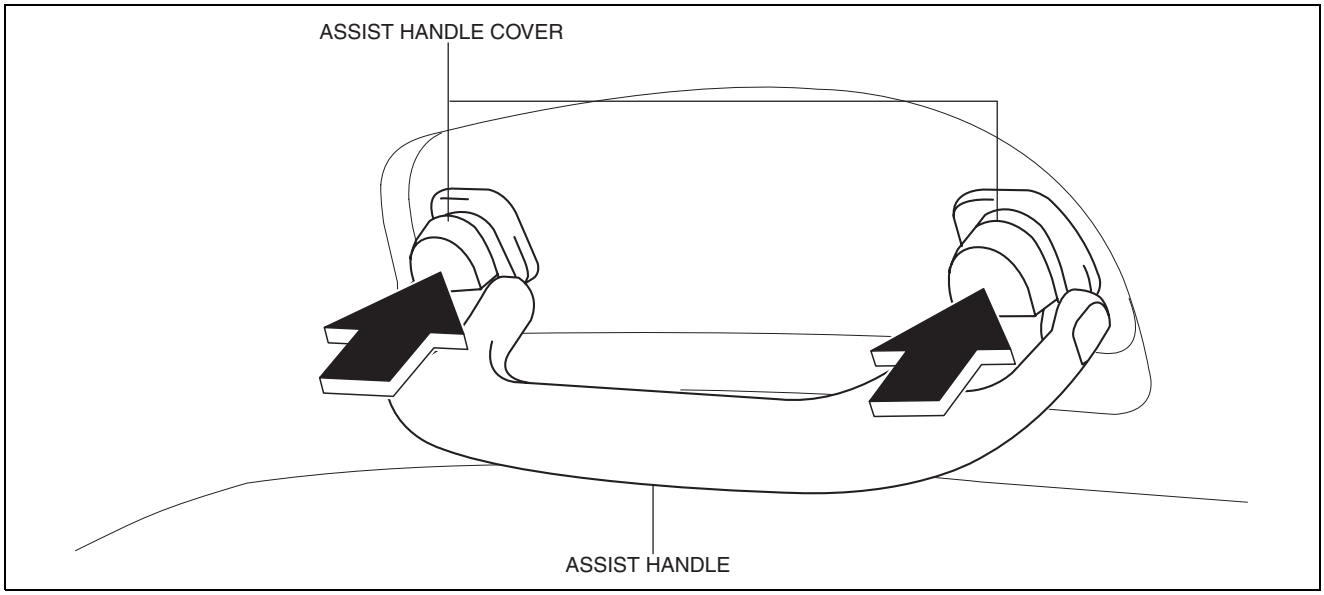

ac5wzw0000167

SUNVISOR REMOVAL/INSTALLATION

id091700801700

1. Disconnect the negative battery cable. (See 01-17A-11 NEGATIVE BATTERY CABLE DISCONNECTION/CONNECTION [SKYACTIV-G 2.0].) (See 01-17A-13 NEGATIVE BATTERY CABLE DISCONNECTION/CONNECTION [SKYACTIV-G 2.0 (WITHOUT i-stop)].) (See 01-17B-9 NEGATIVE BATTERY CABLE DISCONNECTION/CONNECTION [SKYACTIV-D 2.2].)
2. Remove the screw A.
3. Rotate the sunvisor in the direction of the arrow.

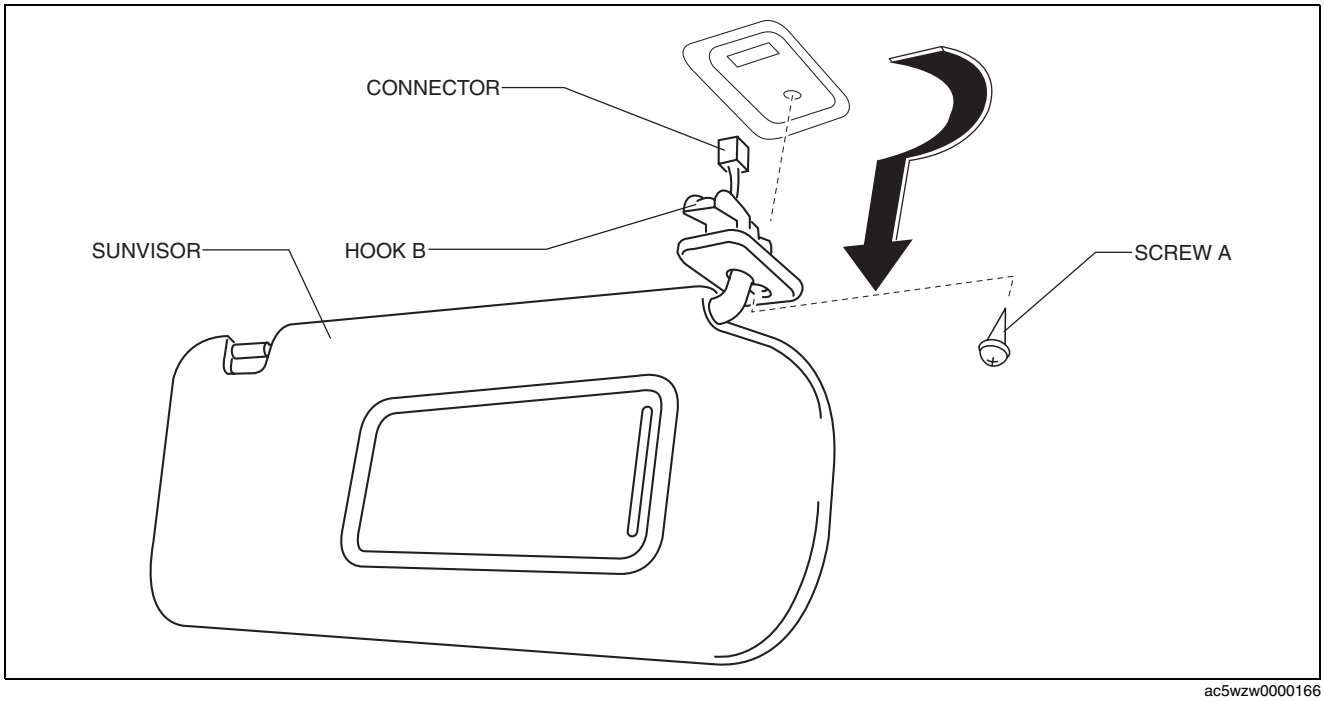

ac5wzw0000166

4. Unhook and remove the sunvisor.
5. Disconnect the vanity mirror illumination connector. (with vanity mirror illumination)

INTERIOR TRIM

6. Press the center adaptor tabs as shown in the figure using two tape-wrapped flathead screwdrivers, and remove the center adaptor.

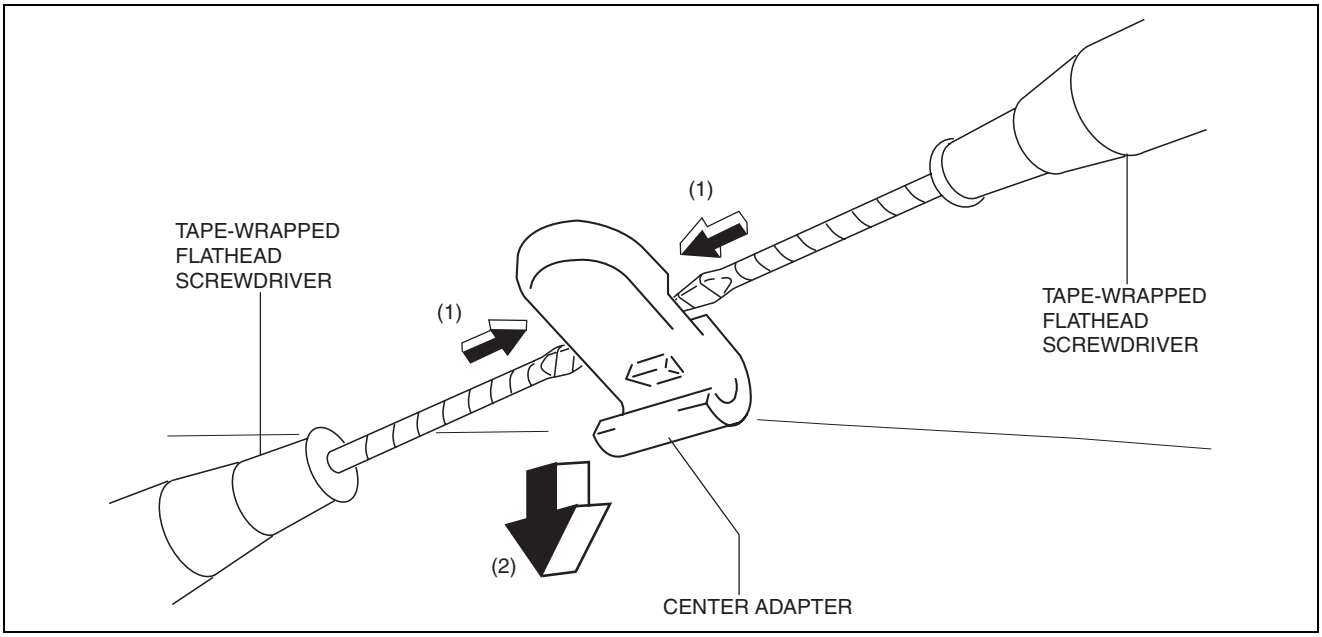

ac5uuw00002062

7. Install in the reverse order of removal.

HEADLINER REMOVAL/INSTALLATION

id091700801600

1. Disconnect the negative battery cable. (See 01-17A-11 NEGATIVE BATTERY CABLE DISCONNECTION/CONNECTION [SKYACTIV-G 2.0].) (See 01-17A-13 NEGATIVE BATTERY CABLE DISCONNECTION/CONNECTION [SKYACTIV-G 2.0 (WITHOUT i-stop)].) (See 01-17B-9 NEGATIVE BATTERY CABLE DISCONNECTION/CONNECTION [SKYACTIV-D 2.2].)
2. Remove the following parts:
   (1) Sunroof seaming welt (with sunroof system) (See 09-15-6 SUNROOF UNIT REMOVAL/INSTALLATION.)
   (2) A-pillar trim (See 09-17-53 A-PILLAR TRIM REMOVAL/INSTALLATION.)
   (3) Map light (See 09-18-95 MAP LIGHT REMOVAL/INSTALLATION.)
   (4) Sunvisor (See 09-17-93 SUNVISOR REMOVAL/INSTALLATION.)
   (5) Front scuff plate (See 09-17-61 FRONT SCUFF PLATE REMOVAL/INSTALLATION.)
   (6) Rear scuff plate (See 09-17-63 REAR SCUFF PLATE REMOVAL/INSTALLATION.)
   (7) B-pillar lower trim (See 09-17-57 B-PILLAR LOWER TRIM REMOVAL/INSTALLATION.)
   (8) Adjust anchor cover (See 08-11-2 FRONT SEAT BELT REMOVAL/INSTALLATION.)
   (9) Upper anchor installation bolt on the seat belt (See 08-11-2 FRONT SEAT BELT REMOVAL/INSTALLATION.)
   (10) B-pillar upper trim (See 09-17-58 B-PILLAR UPPER TRIM REMOVAL/INSTALLATION.)
   (11) Assist handle (See 09-17-91 ASSIST HANDLE REMOVAL/INSTALLATION.)
   (12) Trunk board (See 09-17-85 TRUNK BOARD REMOVAL/INSTALLATION.)
   (13) Trunk end trim (See 09-17-78 TRUNK END TRIM REMOVAL/INSTALLATION.)
   (14) Trunk side trim (See 09-17-80 TRUNK SIDE TRIM REMOVAL/INSTALLATION.)
   (15) D-pillar trim (See 09-17-60 D-PILLAR TRIM REMOVAL/INSTALLATION.)
   (16) C-pillar trim (See 09-17-59 C-PILLAR TRIM REMOVAL/INSTALLATION.)
3. Disconnect the roof wiring harness connector and remove the roof wiring harness connector clip from the body.
4. Disconnect the rear washer hose C. (with rear washer system) (See 09-19-40 REAR WASHER HOSE REMOVAL/INSTALLATION.)
5. Temporarily install the seaming welt shown in the figure to the headliner.

Caution

- **If fasteners are removed without temporarily installing the seaming welt, the headliner may fall off and the part may be damaged. Before removing fasteners, temporarily install the seaming welt to prevent the headliner from falling off.**

INTERIOR TRIM

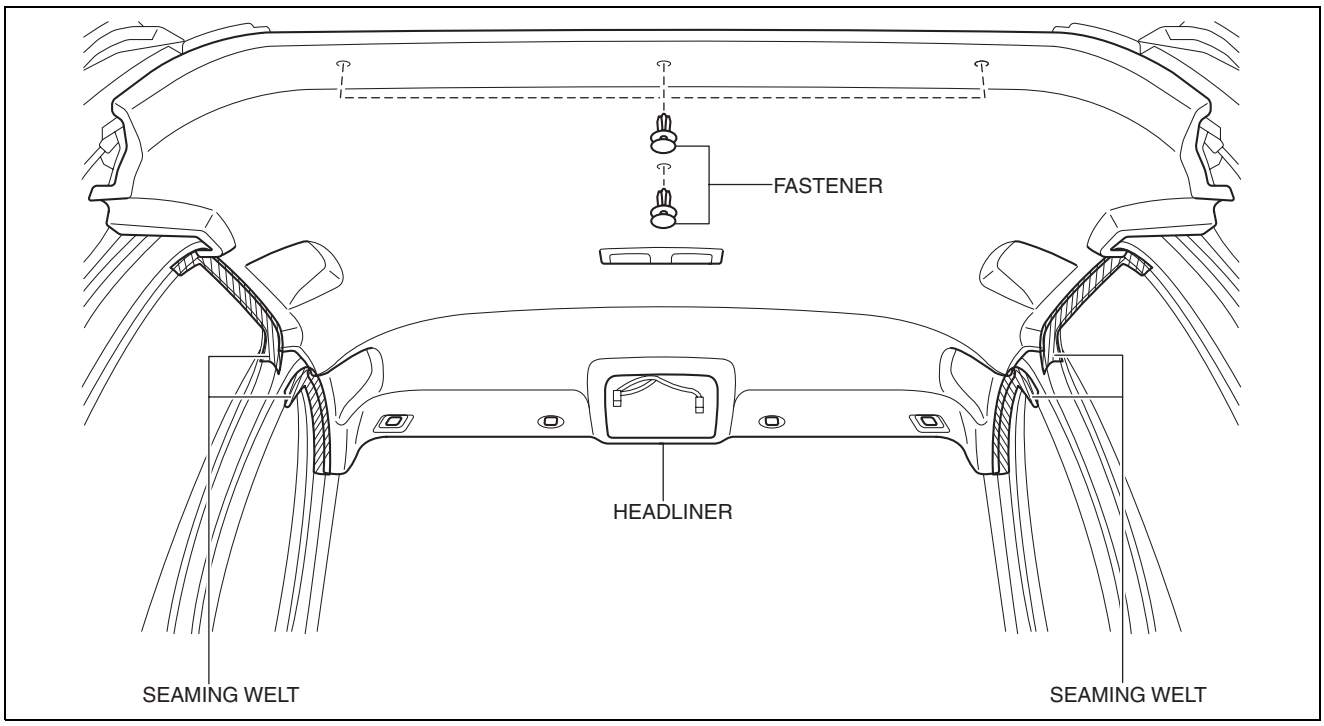

ac5wzw0000166

6. Remove fasteners.
7. Partially peel back the seaming welt. Take the headliner out from the opened liftgate.
8. Install in the reverse order of removal.

FLOOR INSULATOR REMOVAL/INSTALLATION

id091700889000

Driver-side

1. Disconnect the negative battery cable. (See 01-17A-11 NEGATIVE BATTERY CABLE DISCONNECTION/CONNECTION [SKYACTIV-G 2.0].) (See 01-17A-13 NEGATIVE BATTERY CABLE DISCONNECTION/CONNECTION [SKYACTIV-G 2.0 (WITHOUT i-stop)].) (See 01-17B-9 NEGATIVE BATTERY CABLE DISCONNECTION/CONNECTION [SKYACTIV-D 2.2].)
2. Remove the following parts:
   (1) Driver-side front scuff plate (See 09-17-61 FRONT SCUFF PLATE REMOVAL/INSTALLATION.)
   (2) Driver-side front side trim (See 09-17-62 FRONT SIDE TRIM REMOVAL/INSTALLATION.)
   (3) Decoration panel (See 09-17-33 DECORATION PANEL REMOVAL/INSTALLATION.)
   (4) Shift lever knob (MTX) (See 05-16A-1 MANUAL TRANSAXLE SHIFT MECHANISM REMOVAL/INSTALLATION [C66M-R, C66MX-R].) (See 05-16B-1 MANUAL TRANSAXLE SHIFT MECHANISM REMOVAL/INSTALLATION [D66M-R, D66MX-R].)
   (5) Front console box (See 09-17-40 FRONT CONSOLE BOX REMOVAL/INSTALLATION.)
   (6) Shift panel (See 09-17-42 SHIFT PANEL REMOVAL/INSTALLATION.)
   (7) Upper panel (See 09-17-44 UPPER PANEL REMOVAL/INSTALLATION.)
   (8) Rear console (See 09-17-45 REAR CONSOLE REMOVAL/INSTALLATION.)
   (9) Side wall (See 09-17-49 SIDE WALL REMOVAL/INSTALLATION.)
   (10) Front console (See 09-17-50 FRONT CONSOLE REMOVAL/INSTALLATION.)
   (11) Accelerator pedal (See 01-13A-14 ACCELERATOR PEDAL REMOVAL/INSTALLATION [SKYACTIV-G 2.0].)
3. Partially peel back the floor covering.

INTERIOR TRIM

4. Pull the floor insulator in the direction of the arrow and remove it.

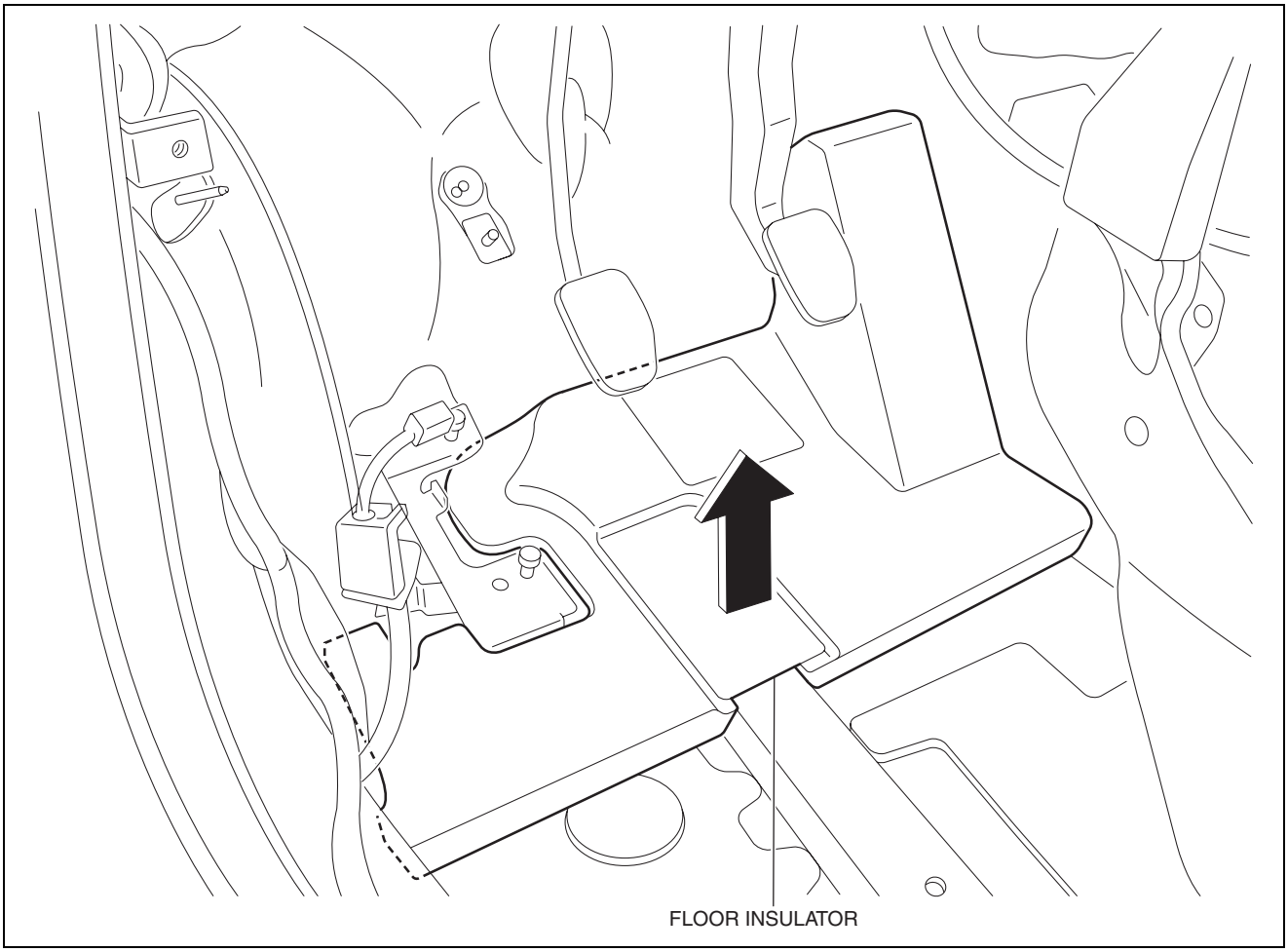

ac5uuw00001798

5. Install in the reverse order of removal.

Passenger-side

1. Disconnect the negative battery cable. (See 01-17A-11 NEGATIVE BATTERY CABLE DISCONNECTION/CONNECTION [SKYACTIV-G 2.0].) (See 01-17A-13 NEGATIVE BATTERY CABLE DISCONNECTION/CONNECTION [SKYACTIV-G 2.0 (WITHOUT i-stop)].) (See 01-17B-9 NEGATIVE BATTERY CABLE DISCONNECTION/CONNECTION [SKYACTIV-D 2.2].)
2. Remove the following parts:
   (1) Passenger-side front scuff plate (See 09-17-61 FRONT SCUFF PLATE REMOVAL/INSTALLATION.)
   (2) Passenger-side front side trim (See 09-17-62 FRONT SIDE TRIM REMOVAL/INSTALLATION.)
   (3) Grove compartment (See 09-17-30 GLOVE COMPARTMENT REMOVAL/INSTALLATION.)
   (4) Decoration panel (See 09-17-33 DECORATION PANEL REMOVAL/INSTALLATION.)
   (5) Shift lever knob (MTX) (See 05-16A-1 MANUAL TRANSAXLE SHIFT MECHANISM REMOVAL/INSTALLATION [C66M-R, C66MX-R].) (See 05-16B-1 MANUAL TRANSAXLE SHIFT MECHANISM REMOVAL/INSTALLATION [D66M-R, D66MX-R].)
   (6) Front console box (See 09-17-40 FRONT CONSOLE BOX REMOVAL/INSTALLATION.)
   (7) Shift panel (See 09-17-42 SHIFT PANEL REMOVAL/INSTALLATION.)
   (8) Upper panel (See 09-17-44 UPPER PANEL REMOVAL/INSTALLATION.)
   (9) Rear console (See 09-17-45 REAR CONSOLE REMOVAL/INSTALLATION.)
   (10) Side wall (See 09-17-49 SIDE WALL REMOVAL/INSTALLATION.)
   (11) Front console (See 09-17-50 FRONT CONSOLE REMOVAL/INSTALLATION.)
3. Partially peel back the floor covering.

INTERIOR TRIM

4. Remove the fastener.

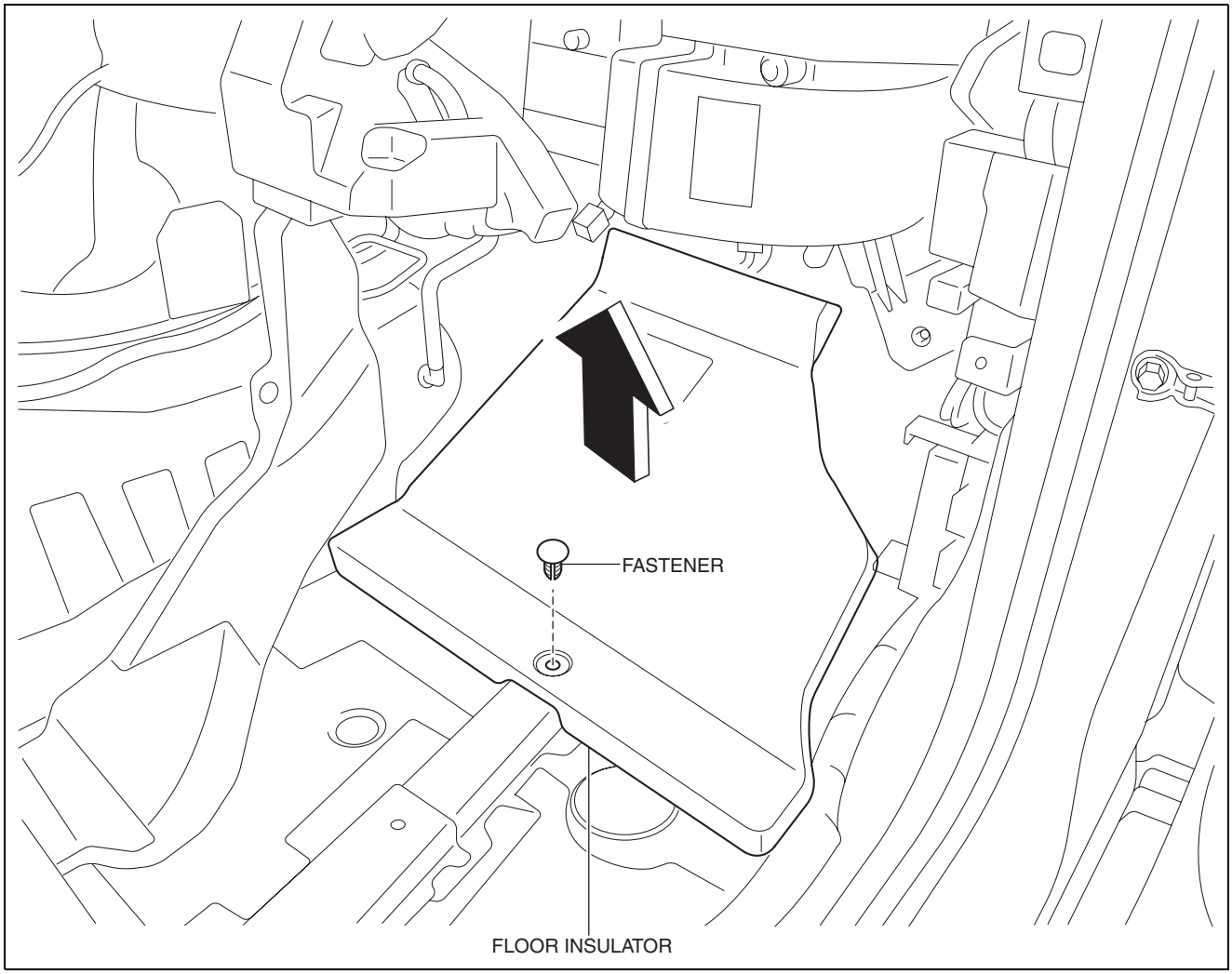

ac5uuw00001799

5. Pull the floor insulator in the direction of the arrow and remove it.
6. Install in the reverse order of removal.

FLOOR COVERING REMOVAL/INSTALLATION

id091700803000

1. Disconnect the negative battery cable. (See 01-17A-11 NEGATIVE BATTERY CABLE DISCONNECTION/CONNECTION [SKYACTIV-G 2.0].) (See 01-17A-13 NEGATIVE BATTERY CABLE DISCONNECTION/CONNECTION [SKYACTIV-G 2.0 (WITHOUT i-stop)].) (See 01-17B-9 NEGATIVE BATTERY CABLE DISCONNECTION/CONNECTION [SKYACTIV-D 2.2].)
2. Remove the following parts:
   (1) Front scuff plate (See 09-17-61 FRONT SCUFF PLATE REMOVAL/INSTALLATION.)
   (2) Front side trim (See 09-17-62 FRONT SIDE TRIM REMOVAL/INSTALLATION.)
   (3) Rear scuff plate (See 09-17-63 REAR SCUFF PLATE REMOVAL/INSTALLATION.)
   (4) B-pillar lower trim (See 09-17-57 B-PILLAR LOWER TRIM REMOVAL/INSTALLATION.)
   (5) Rear seat cushion (See 09-13-76 REAR SEAT CUSHION REMOVAL/INSTALLATION.)
   (6) Front seat (See 09-13-4 FRONT SEAT REMOVAL/INSTALLATION.)
   (7) Lower anchor of the front seat belt (without lap pre-tensioner seat belt) (See 08-11-2 FRONT SEAT BELT REMOVAL/INSTALLATION.)
   (8) Lap pre-tensioner seat belt (with lap pre-tensioner seat belt) (See 08-11-2 FRONT SEAT BELT REMOVAL/INSTALLATION.)
   (9) Shift lever knob (MTX) (See 05-16A-1 MANUAL TRANSAXLE SHIFT MECHANISM REMOVAL/INSTALLATION [C66M-R, C66MX-R].) (See 05-16B-1 MANUAL TRANSAXLE SHIFT MECHANISM REMOVAL/INSTALLATION [D66M-R, D66MX-R].)
   (10)Front console box (See 09-17-40 FRONT CONSOLE BOX REMOVAL/INSTALLATION.)
   (11)Shift panel (See 09-17-42 SHIFT PANEL REMOVAL/INSTALLATION.)
   (12)Upper panel (See 09-17-44 UPPER PANEL REMOVAL/INSTALLATION.)
   (13)Rear console (See 09-17-45 REAR CONSOLE REMOVAL/INSTALLATION.)

INTERIOR TRIM

(14)Side wall (See 09-17-49 SIDE WALL REMOVAL/INSTALLATION.)
(15)Front console (See 09-17-50 FRONT CONSOLE REMOVAL/INSTALLATION.)
(16)SAS control module (See 08-10-20 SAS CONTROL MODULE REMOVAL/INSTALLATION.)
(17)Parking lever (See 04-12-3 PARKING BRAKE LEVER REMOVAL/INSTALLATION.)
(18)Joint cover (See 06-13-4 STEERING WHEEL AND COLUMN REMOVAL/INSTALLATION.)

3. Remove fasteners.

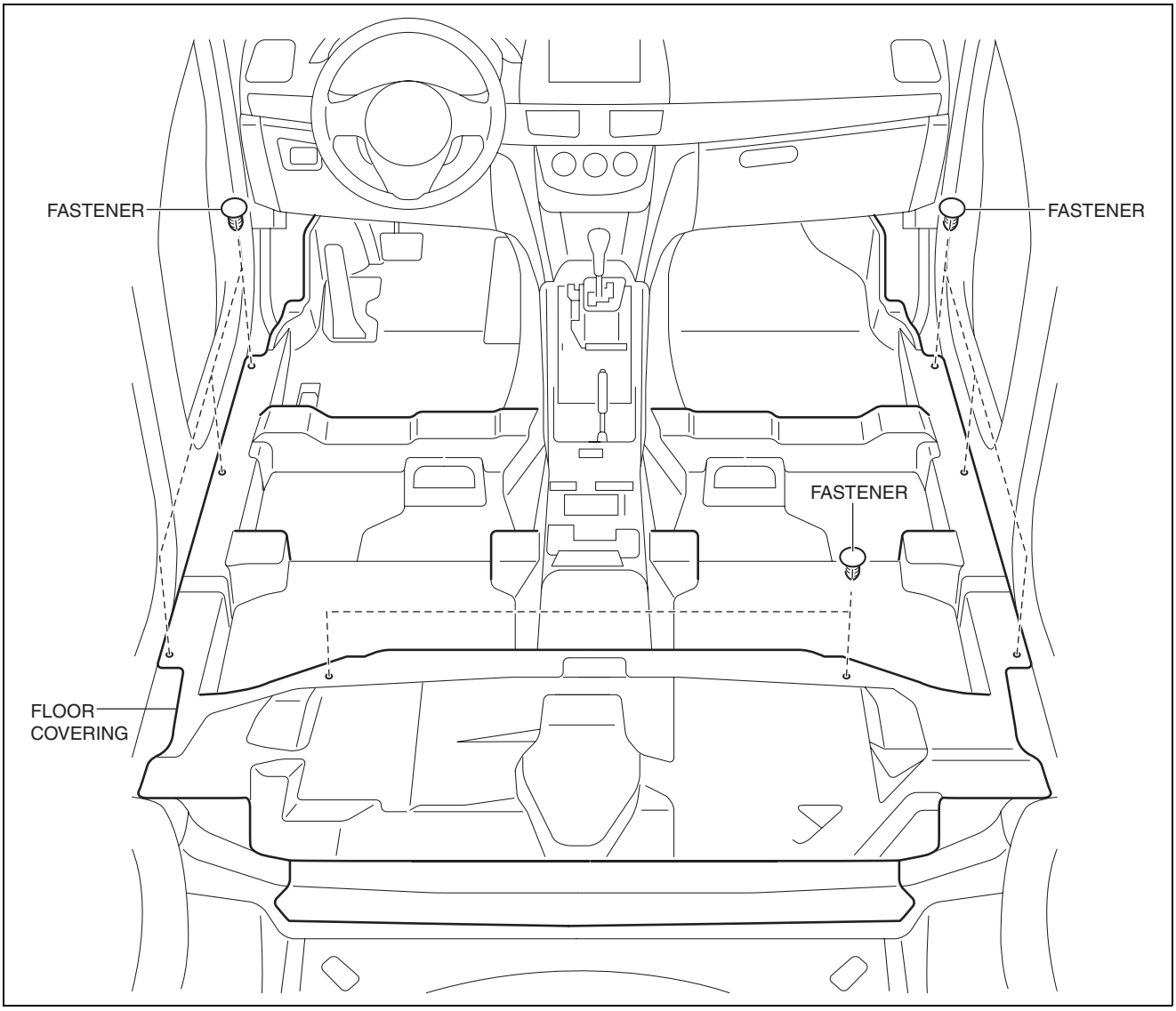

ac5wzw0000307

4. Take the floor covering out from the opened door.
5. Install in the reverse order of removal.

09-18 LIGHTING SYSTEMS

LIGHTING SYSTEMS
LOCATION INDEX. 09-18–3
Exterior. 09-18–3
Interior 09-18–5
DISCHARGE HEADLIGHT
SERVICE WARNINGS. 09-18–6
Discharge Headlight
Service Warnings. 09-18–6
Discharge Headlight Control Module
Servicing Warnings 09-18–6
Reusing Discharge Headlight
Control Module. 09-18–7
FRONT COMBINATION LIGHT
REMOVAL/INSTALLATION. 09-18–7
FRONT COMBINATION LIGHT
DISASSEMBLY/ASSEMBLY. 09-18–9
Short Cord Removal Note 09-18–11
Cover Installation Note. 09-18–12
HEADLIGHT BULB
REMOVAL/INSTALLATION. 09-18–12
Halogen Type. 09-18–12
Discharge Type 09-18–15
HEADLIGHT AIMING 09-18–18
RUNNING LIGHT BULB
REMOVAL/INSTALLATION. 09-18–20
DISCHARGE HEADLIGHT
CONTROL MODULE
REMOVAL/INSTALLATION. 09-18–21
DISCHARGE HEADLIGHT SYSTEM
INSPECTION. 09-18–23
IGNITER REMOVAL/INSTALLATION . . . 09-18–26
Igniter (LH). 09-18–26
Igniter (RH) 09-18–29
ADAPTIVE FRONT LIGHTING SYSTEM
(AFS) CONTROL MODULE
REMOVAL/INSTALLATION. 09-18–30
ADAPTIVE FRONT LIGHTING SYSTEM
(AFS) OFF SWITCH
REMOVAL/INSTALLATION. 09-18–32
ADAPTIVE FRONT LIGHTING SYSTEM
(AFS) OFF SWITCH INSPECTION. . . . 09-18–32
STEERING ANGLE SENSOR
REMOVAL/INSTALLATION. 09-18–33
STEERING ANGLE SENSOR
INSPECTION. 09-18–33
HEADLIGHT LEVELING ACTUATOR
INSPECTION. 09-18–34
PARKING LIGHT BULB
REMOVAL/INSTALLATION. 09-18–36
Halogen Type. 09-18–36
Discharge Type 09-18–36
FRONT TURN LIGHT BULB
REMOVAL/INSTALLATION. 09-18–39
Halogen Type. 09-18–39
Discharge Type 09-18–40
FRONT FOG LIGHT
REMOVAL/INSTALLATION. 09-18–43
FRONT FOG LIGHT BULB
REMOVAL/INSTALLATION. 09-18–47
FRONT FOG LIGHT AIMING 09-18–48
SIDE TURN LIGHT
REMOVAL/INSTALLATION. 09-18–52
SIDE TURN LIGHT INSPECTION. 09-18–52
REAR COMBINATION LIGHT
REMOVAL/INSTALLATION 09-18–54
REAR TURN LIGHT BULB
REMOVAL/INSTALLATION 09-18–57
BRAKE/TAILLIGHT BULB
REMOVAL/INSTALLATION 09-18–59
BACK-UP LIGHT BULB
REMOVAL/INSTALLATION 09-18–61
LIFTGATE LIGHT
REMOVAL/INSTALLATION 09-18–63
TAILLIGHT BULB
REMOVAL/INSTALLATION 09-18–71
REAR FOG LIGHT
REMOVAL/INSTALLATION 09-18–72
REAR FOG LIGHT BULB
REMOVAL/INSTALLATION 09-18–74
HIGH-MOUNT BRAKE LIGHT
REMOVAL/INSTALLATION 09-18–75
LICENSE PLATE LIGHT
REMOVAL/INSTALLATION 09-18–77
LICENSE PLATE LIGHT BULB
REMOVAL/INSTALLATION 09-18–78
AUTO LEVELING SENSOR
REMOVAL/INSTALLATION 09-18–79
AUTO LEVELING SENSOR
INSPECTION 09-18–80
HEADLIGHT AUTO LEVELING
SYSTEM INITIALIZATION 09-18–82
When using the M-MDS 09-18–82
When not using the M-MDS 09-18–83
BACK-UP LIGHT SWITCH
INSPECTION 09-18–84
LIGHT SWITCH
REMOVAL/INSTALLATION 09-18–84
LIGHT SWITCH INSPECTION 09-18–86
Light Switch. 09-18–86
Turn Switch 09-18–88
FRONT FOG LIGHT SWITCH
INSPECTION 09-18–89
REAR FOG LIGHT SWITCH
INSPECTION 09-18–90
HAZARD WARNING SWITCH
REMOVAL/INSTALLATION 09-18–90
HAZARD WARNING SWITCH
INSPECTION 09-18–91
HEADLIGHT LEVELING SWITCH
REMOVAL/INSTALLATION 09-18–92
HEADLIGHT LEVELING SWITCH
INSPECTION 09-18–92
AUTO LIGHT SENSOR
REMOVAL/INSTALLATION 09-18–93
LIGHTING SYSTEM
PERSONALIZATION FEATURES
SETTING PROCEDURE. 09-18–93
Turn Light System 09-18–93
Auto Light System. 09-18–93
Room light control system. 09-18–93
High Beam Control System. 09-18–94
FORWARD SENSING CAMERA (FSC)
REMOVAL/INSTALLATION 09-18–94
FORWARD SENSING CAMERA
(FSC) BRACKET
REMOVAL/INSTALLATION 09-18–94

LIGHTING SYSTEMS

FORWARD SENSING CAMERA (FSC) COVER REMOVAL/INSTALLATION 09-18–94
FORWARD SENSING CAMERA (FSC) SHORT-CORD REMOVAL/INSTALLATION 09-18–94
FORWARD SENSING CAMERA (FSC) SHORT-CORD INSPECTION . . . 09-18–94
FORWARD SENSING CAMERA (FSC) AIMING 09-18–94
FORWARD SENSING CAMERA (FSC) CONFIGURATION (USING READ/WRITE FUNCTION) . . . 09-18–94
FORWARD SENSING CAMERA (FSC) CONFIGURATION (USING AS-BUILT DATA) 09-18–95
MAP LIGHT REMOVAL/INSTALLATION 09-18–95
Front Map Light 09-18–95
Rear Map Light 09-18–97
MAP LIGHT BULB REMOVAL/INSTALLATION 09-18–98
Front Map Light 09-18–98
Rear Map Light 09-18–101
MAP LIGHT INSPECTION 09-18–103
Front Map Light 09-18–103
Rear Map Light 09-18–104
CARGO COMPARTMENT LIGHT REMOVAL/INSTALLATION 09-18–105
CARGO COMPARTMENT LIGHT BULB REMOVAL/INSTALLATION 09-18–106
CARGO COMPARTMENT LIGHT INSPECTION 09-18–108
GLOVE COMPARTMENT LIGHT BULB REMOVAL/INSTALLATION 09-18–108
VANITY MIRROR ILLUMINATION INSPECTION 09-18–109
VANITY MIRROR ILLUMINATION BULB REMOVAL/INSTALLATION 09-18–110

LIGHTING SYSTEMS

LIGHTING SYSTEMS LOCATION INDEX

id091800800100

Exterior

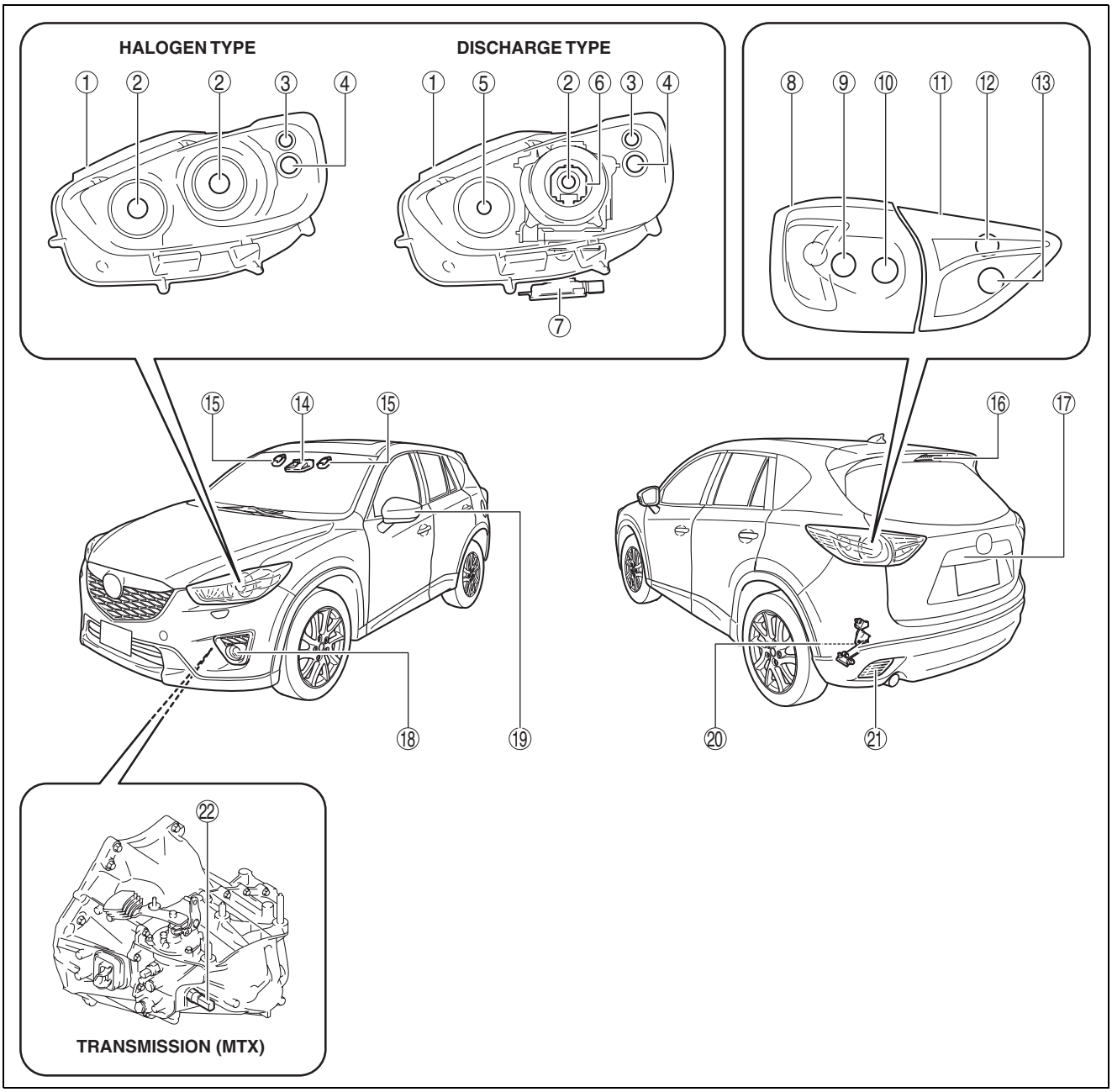

ac5wzw0000118

1	Front combination light (See 09-18-6 DISCHARGE HEADLIGHT SERVICE WARNINGS.) (See 09-18-7 FRONT COMBINATION LIGHT REMOVAL/INSTALLATION.) (See 09-18-9 FRONT COMBINATION LIGHT DISASSEMBLY/ASSEMBLY.)
2	Headlight (See 09-18-12 HEADLIGHT BULB REMOVAL/INSTALLATION.) (See 09-18-18 HEADLIGHT AIMING.) (See 09-18-23 DISCHARGE HEADLIGHT SYSTEM INSPECTION.) (See 09-18-34 HEADLIGHT LEVELING ACTUATOR INSPECTION.)

3	Parking light (See 09-18-36 PARKING LIGHT BULB REMOVAL/INSTALLATION.)
4	Front turn light (See 09-18-39 FRONT TURN LIGHT BULB REMOVAL/INSTALLATION.)
5	Running light (Vehicles with discharge headlight system) (See 09-18-20 RUNNING LIGHT BULB REMOVAL/INSTALLATION.)
6	Igniter (Vehicles with discharge headlight system) (See 09-18-26 IGNITER REMOVAL/INSTALLATION.)

LIGHTING SYSTEMS

7	Discharge headlight control module (Vehicles with discharge headlight system) (See 09-18-21 DISCHARGE HEADLIGHT CONTROL MODULE REMOVAL/INSTALLATION.) (See 09-18-23 DISCHARGE HEADLIGHT SYSTEM INSPECTION.)
8	Rear combination light (See 09-18-54 REAR COMBINATION LIGHT REMOVAL/INSTALLATION.)
9	Rear turn light (See 09-18-57 REAR TURN LIGHT BULB REMOVAL/INSTALLATION.)
10	Brake/Taillight (See 09-18-59 BRAKE/TAILLIGHT BULB REMOVAL/INSTALLATION.)
11	Liftgate light (See 09-18-63 LIFTGATE LIGHT REMOVAL/INSTALLATION.)
12	Taillight (See 09-18-71 TAILLIGHT BULB REMOVAL/INSTALLATION.)
13	Back-up light (See 09-18-61 BACK-UP LIGHT BULB REMOVAL/INSTALLATION.)
14	Forward sensing camera (FSC) (Vehicles with forward sensing camera (FSC)) (See 09-18-94 FORWARD SENSING CAMERA (FSC) REMOVAL/INSTALLATION.) (See 09-18-94 FORWARD SENSING CAMERA (FSC) BRACKET REMOVAL/INSTALLATION.) (See 09-18-94 FORWARD SENSING CAMERA (FSC) COVER REMOVAL/INSTALLATION.) (See 09-18-94 FORWARD SENSING CAMERA (FSC) SHORT-CORD REMOVAL/INSTALLATION.) (See 09-18-94 FORWARD SENSING CAMERA (FSC) SHORT-CORD INSPECTION.) (See 09-18-94 FORWARD SENSING CAMERA (FSC) AIMING.) (See 09-18-94 FORWARD SENSING CAMERA (FSC) CONFIGURATION (USING READ/WRITE FUNCTION).) (See 09-18-95 FORWARD SENSING CAMERA (FSC) CONFIGURATION (USING AS-BUILT DATA).) (See 09-18-93 LIGHTING SYSTEM PERSONALIZATION FEATURES SETTING PROCEDURE.)
15	Auto light sensor (Vehicles with auto light system) (See 09-18-93 LIGHTING SYSTEM PERSONALIZATION FEATURES SETTING PROCEDURE.) (See 09-18-93 AUTO LIGHT SENSOR REMOVAL/INSTALLATION.)
16	High-mount brake light (See 09-18-75 HIGH-MOUNT BRAKE LIGHT REMOVAL/INSTALLATION.)
17	License plate light (See 09-18-77 LICENSE PLATE LIGHT REMOVAL/INSTALLATION.) (See 09-18-78 LICENSE PLATE LIGHT BULB REMOVAL/INSTALLATION.)
18	Front fog light (Vehicles with front fog light) (See 09-18-43 FRONT FOG LIGHT REMOVAL/INSTALLATION.) (See 09-18-47 FRONT FOG LIGHT BULB REMOVAL/INSTALLATION.) (See 09-18-48 FRONT FOG LIGHT AIMING.)
19	Side turn light (See 09-18-52 SIDE TURN LIGHT REMOVAL/INSTALLATION.) (See 09-18-52 SIDE TURN LIGHT INSPECTION.)
20	Auto leveling sensor (Vehicles with headlight auto leveling system/AFS) (See 09-18-80 AUTO LEVELING SENSOR INSPECTION.) (See 09-18-79 AUTO LEVELING SENSOR REMOVAL/INSTALLATION.)
21	Rear fog light (See 09-18-72 REAR FOG LIGHT REMOVAL/INSTALLATION.) (See 09-18-74 REAR FOG LIGHT BULB REMOVAL/INSTALLATION.)
22	Back-up light switch (MTX) (See 09-18-84 BACK-UP LIGHT SWITCH INSPECTION.)

LIGHTING SYSTEMS

Interior

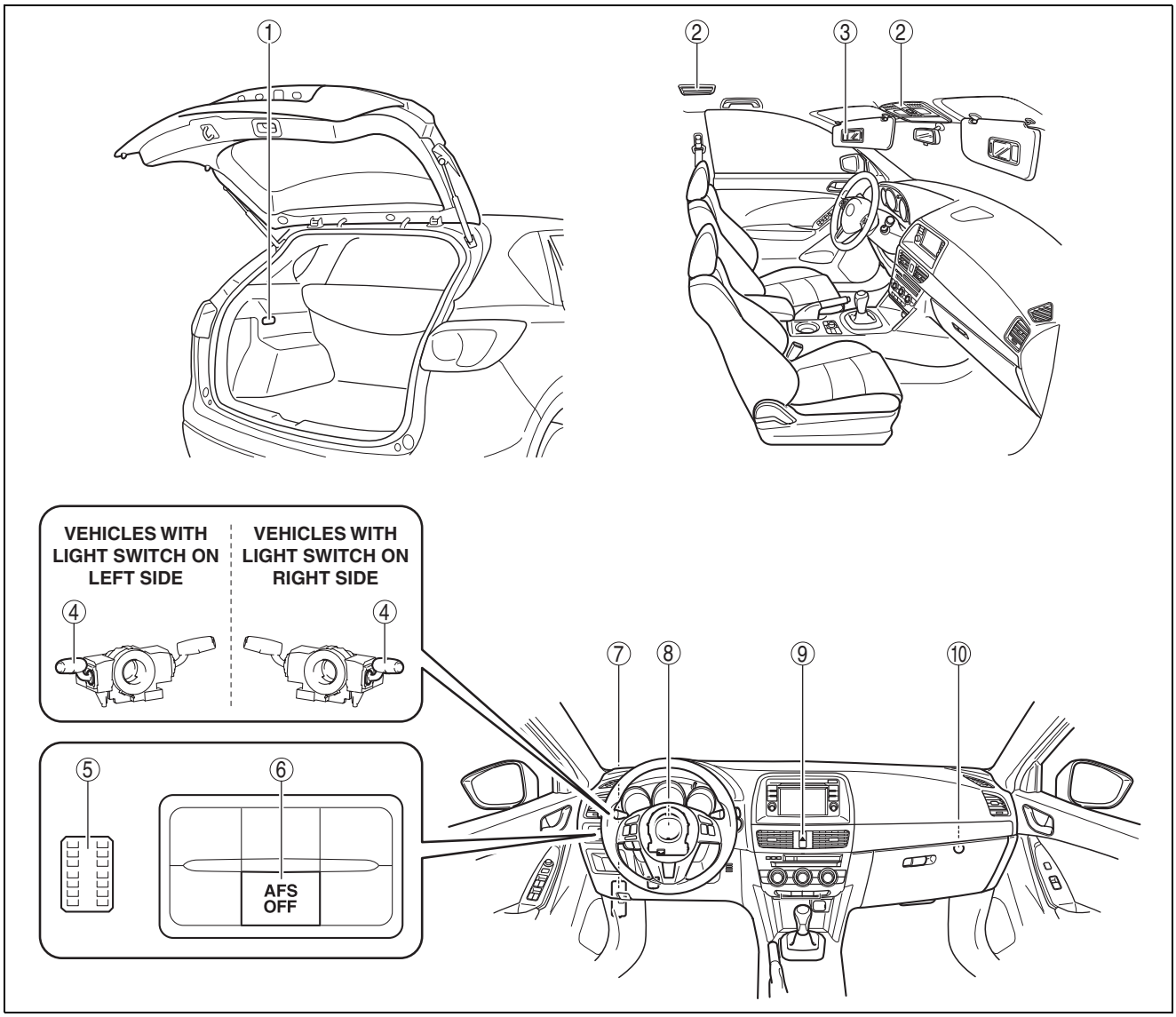

ac5wzw0000207

1	Cargo compartment light (See 09-18-105 CARGO COMPARTMENT LIGHT REMOVAL/INSTALLATION.) (See 09-18-106 CARGO COMPARTMENT LIGHT BULB REMOVAL/INSTALLATION.) (See 09-18-108 CARGO COMPARTMENT LIGHT INSPECTION.)
2	Map light (See 09-18-95 MAP LIGHT REMOVAL/INSTALLATION.) (See 09-18-98 MAP LIGHT BULB REMOVAL/INSTALLATION.) (See 09-18-103 MAP LIGHT INSPECTION.)
3	Vanity mirror illumination (Vehicles with vanity mirror illumination) (See 09-18-110 VANITY MIRROR ILLUMINATION BULB REMOVAL/INSTALLATION.) (See 09-18-109 VANITY MIRROR ILLUMINATION INSPECTION.)

4	Light switch/Front fog light switch (Vehicles with front fog light)/Rear fog light switch (See 09-18-84 LIGHT SWITCH REMOVAL/INSTALLATION.) (See 09-18-86 LIGHT SWITCH INSPECTION.) (See 09-18-89 FRONT FOG LIGHT SWITCH INSPECTION.) (See 09-18-90 REAR FOG LIGHT SWITCH INSPECTION.)
5	Headlight leveling switch (Vehicles with headlight manual leveling system) (See 09-18-92 HEADLIGHT LEVELING SWITCH REMOVAL/INSTALLATION.) (See 09-18-92 HEADLIGHT LEVELING SWITCH INSPECTION.)
6	AFS OFF switch (Vehicles with AFS) (See 09-18-32 ADAPTIVE FRONT LIGHTING SYSTEM (AFS) OFF SWITCH REMOVAL/INSTALLATION.) (See 09-18-32 ADAPTIVE FRONT LIGHTING SYSTEM (AFS) OFF SWITCH INSPECTION.)

LIGHTING SYSTEMS

7	AFS control module (Vehicles with AFS) (See 09-18-30 ADAPTIVE FRONT LIGHTING SYSTEM (AFS) CONTROL MODULE REMOVAL/INSTALLATION.) (See 09-18-82 HEADLIGHT AUTO LEVELING SYSTEM INITIALIZATION.)
8	Steering angle sensor (See 09-18-33 STEERING ANGLE SENSOR REMOVAL/INSTALLATION.) (See 09-18-33 STEERING ANGLE SENSOR INSPECTION.)
9	Hazard warning switch (See 09-18-90 HAZARD WARNING SWITCH REMOVAL/INSTALLATION.) (See 09-18-91 HAZARD WARNING SWITCH INSPECTION.)
10	Glove compartment light (Vehicles with glove compartment light) (See 09-18-108 GLOVE COMPARTMENT LIGHT BULB REMOVAL/INSTALLATION.)

DISCHARGE HEADLIGHT SERVICE WARNINGS

id091800804900

Discharge Headlight Service Warnings

- When replacing a discharge headlight bulb, performing the servicing with the negative battery cable connected or in a wet work area could result in electrocution. When replacing a discharge headlight bulb, perform the servicing under the following conditions:
  - — Switch the ignition to off and disconnect the negative battery cable.
  - — Perform the servicing out of the rain and in a dry work area.
  - — Thoroughly dry your hands.
- Because the discharge headlight bulb connector instantly produces **approx. 25,000 V** of high voltage, inserting a finger or a tester probe could result in electrocution. When turning the light switch on, do not insert a finger or tester probe into the discharge headlight bulb connector.
- If a discharge headlight bulb is illuminated before completely assembling the discharge headlight related parts to a front combination light, it could result in electrocution. Before illuminating the discharge headlights, completely assemble the discharge headlight related parts to the front combination lights and install the front combination lights to the vehicle.

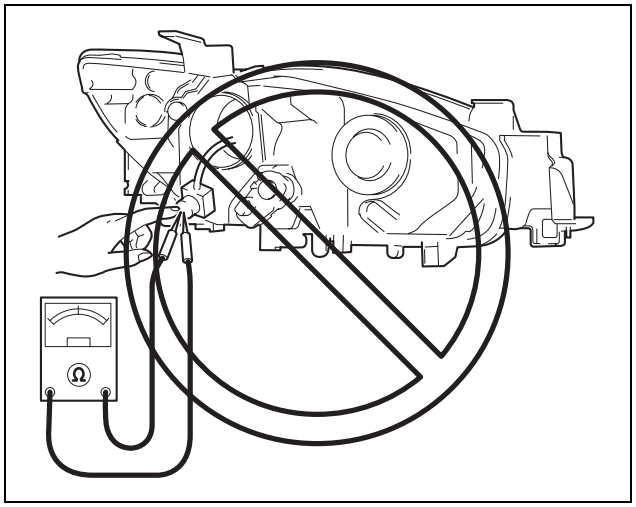

ac5wzw0000016

Discharge Headlight Control Module Servicing Warnings

- If the discharge headlight control module tester is used to do a part inspection or the discharge headlight control module is disassembled, electrocution could result from the high voltage around the module. Do not do a part inspection of or disassemble the discharge headlight control module.

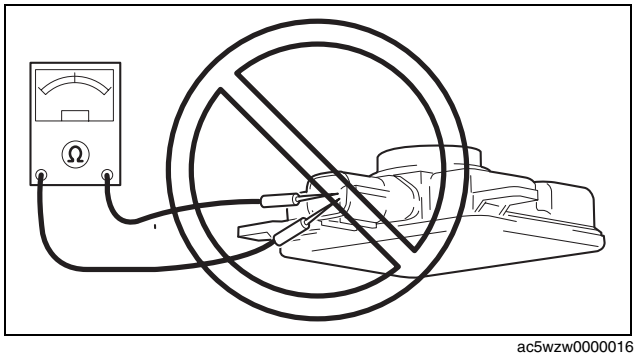

ac5wzw0000016

LIGHTING SYSTEMS

Reusing Discharge Headlight Control Module

- A discharge headlight control module damaged in an accident could leak high voltage around the module and cause electrocution. In addition, even if the discharge headlights are illuminated without any exterior damage to the module, an illumination malfunction could occur after a period of time has elapsed due to internal damage of a module. If a discharge headlight control module is reused, perform the following inspection and verify that the module is not malfunctioning.
  - — Perform the tests for the discharge headlight bulb several times under cold-bulb conditions (turn off the discharge headlight bulb for **approx. 10 min** or more, then turn it on) and under warm-bulb conditions (turn on the discharge headlight bulb for **approx. 15 min** or more, turn it off for **approx. 1 min**, then turn it on again), and verify that the discharge headlight bulb turns on normally.
  - — Inspect the discharge headlight bulb illumination until it illuminates evenly directly after cold-bulb illumination for **approx. 5 min**, and verify that the discharge headlight bulb illumination has no flicker or uneven brightness level.
  - — Equip with normal discharge headlight bulbs and turn them on for **approx. 30 min**, and verify that the illumination condition is stabilized with no difference in brightness level between left and right.

FRONT COMBINATION LIGHT REMOVAL/INSTALLATION

id091800800700

Warning

- **Incorrect servicing of the discharge headlights could result in electrical shock. Before servicing the discharge headlights, always refer to the service warnings. (See 09-18-6 DISCHARGE HEADLIGHT SERVICE WARNINGS.)**

Note

- Fogging or condensation on the inside of the front combination lights may occur due to a natural phenomenon occurring as a result of a temperature difference between the interior and exterior of the combination lights. However, it has no effect on the light performance because the temperature inside the front combination lights rises after illuminating the headlights or a period of time has elapsed.

1. Disconnect the negative battery cable. (See 01-17A-13 NEGATIVE BATTERY CABLE DISCONNECTION/CONNECTION [SKYACTIV-G 2.0 (WITHOUT i-stop)].) (See 01-17A-11 NEGATIVE BATTERY CABLE DISCONNECTION/CONNECTION [SKYACTIV-G 2.0].) (See 01-17B-9 NEGATIVE BATTERY CABLE DISCONNECTION/CONNECTION [SKYACTIV-D 2.2].)
2. Remove the front bumper. (See 09-10-10 FRONT BUMPER REMOVAL/INSTALLATION.)
3. Disconnect the connector.

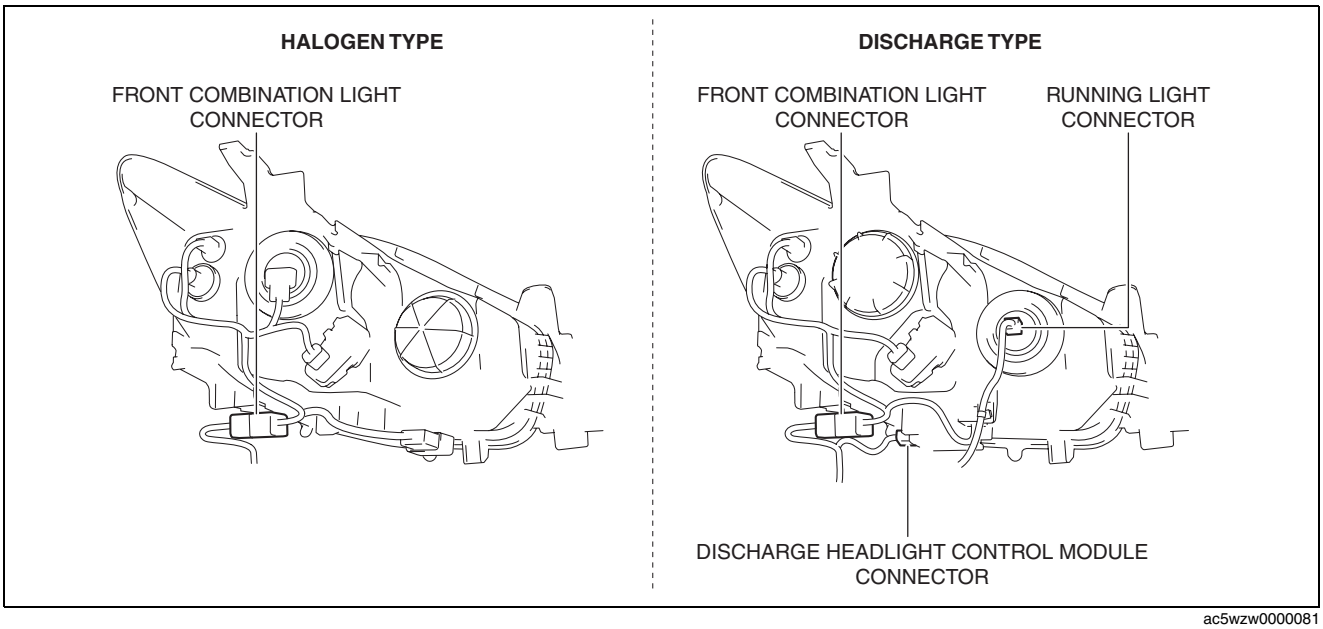

ac5wzw0000081

LIGHTING SYSTEMS

4. While pressing the clip tab in the direction of the arrows (1) shown in the figure, press the clip in the direction of the arrow (2) shown in the figure to detach the clip tab and front combination light (LH of discharge type).
5. Remove the clip (LH of discharge type).
6. To prevent scratches or damage, affix protective tape to the position shown in the figure.

Caution

- **When the front combination light is removed from the body, perform the procedure after affixing protective tape to the body. Otherwise, the body could interfere with the front combination light and cause scratching or damage to the body.**

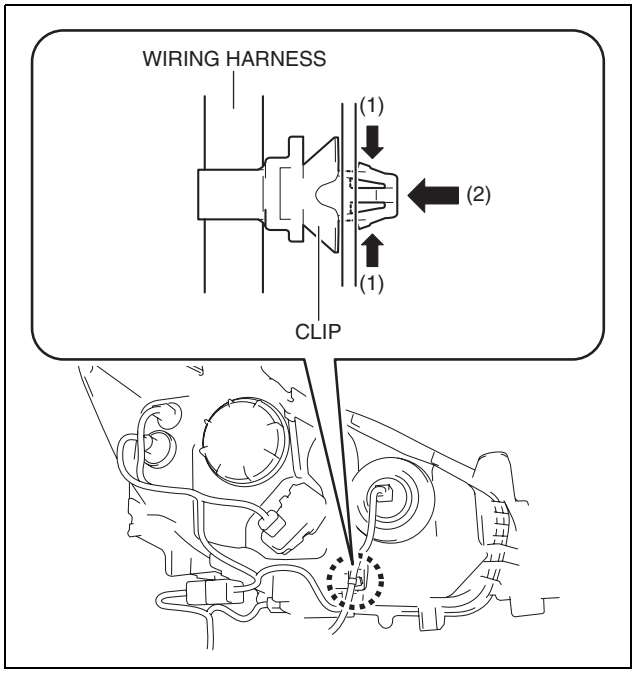

ac5wzw0000040

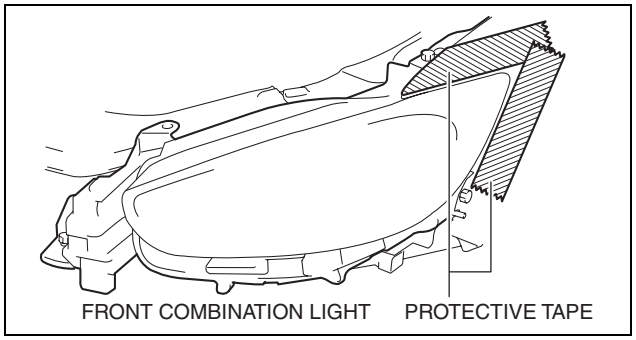

ac5wzw0000040

7. Remove the bolts.

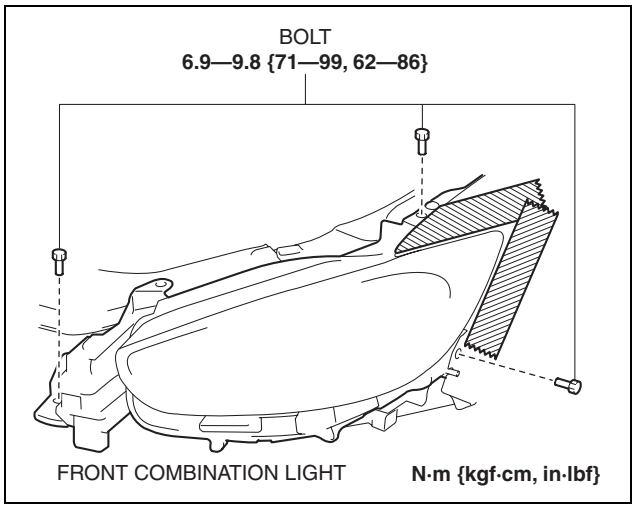

ac5wzw0000040

LIGHTING SYSTEMS

8. Remove the fastener.
9. Pull the front combination light in the direction of the arrow shown in the figure and pull out the front combination light pin from the body.

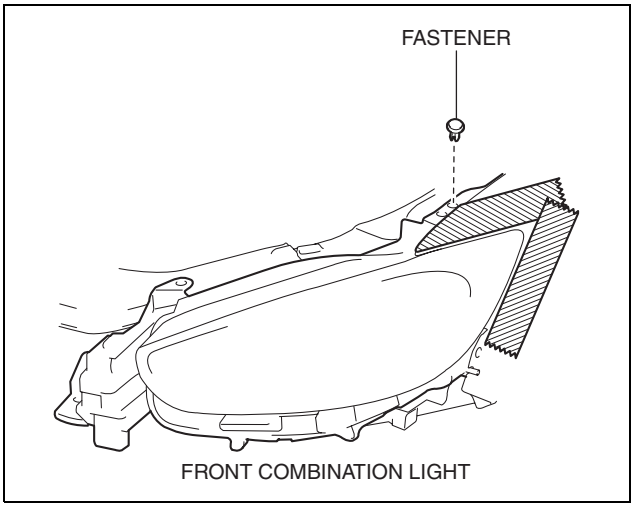

ac5wzw0000041

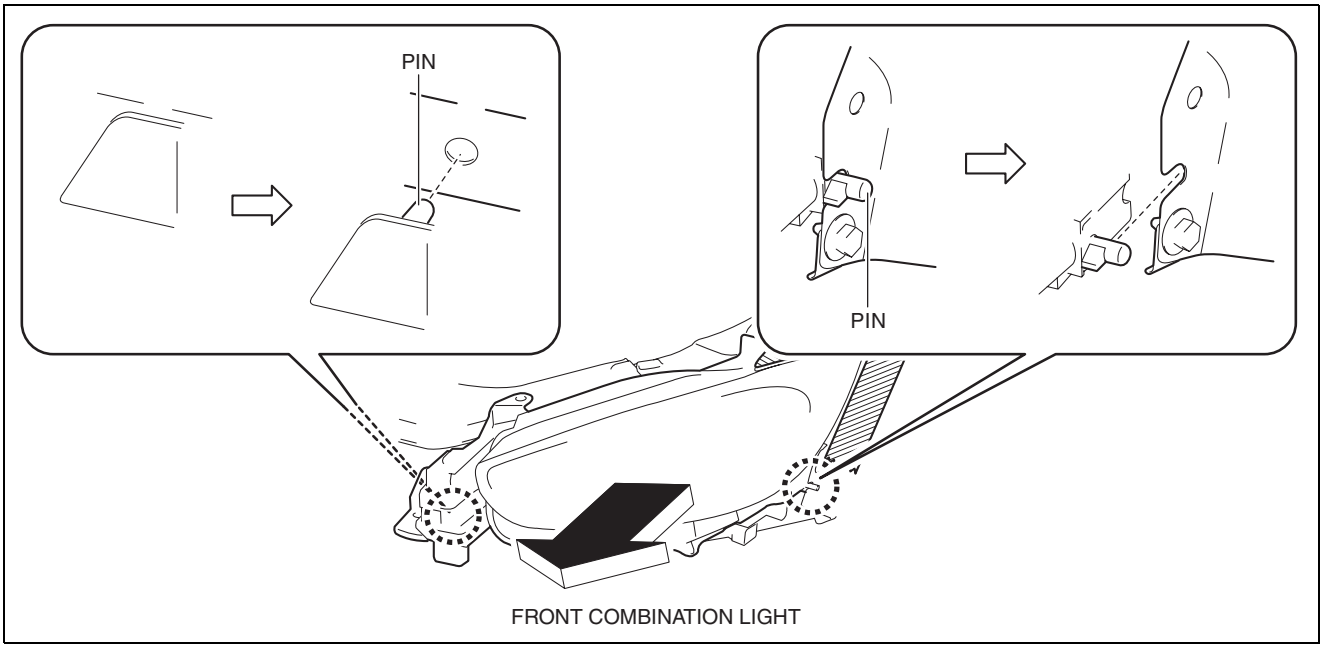

ac5wzw0000334

10. Remove the front combination light.
11. Install in the reverse order of removal.
12. Adjust the headlight aiming. (See 09-18-18 HEADLIGHT AIMING.)

FRONT COMBINATION LIGHT DISASSEMBLY/ASSEMBLY

id091800816000

1. Disassemble in the order shown in the figure.

LIGHTING SYSTEMS

Halogen type

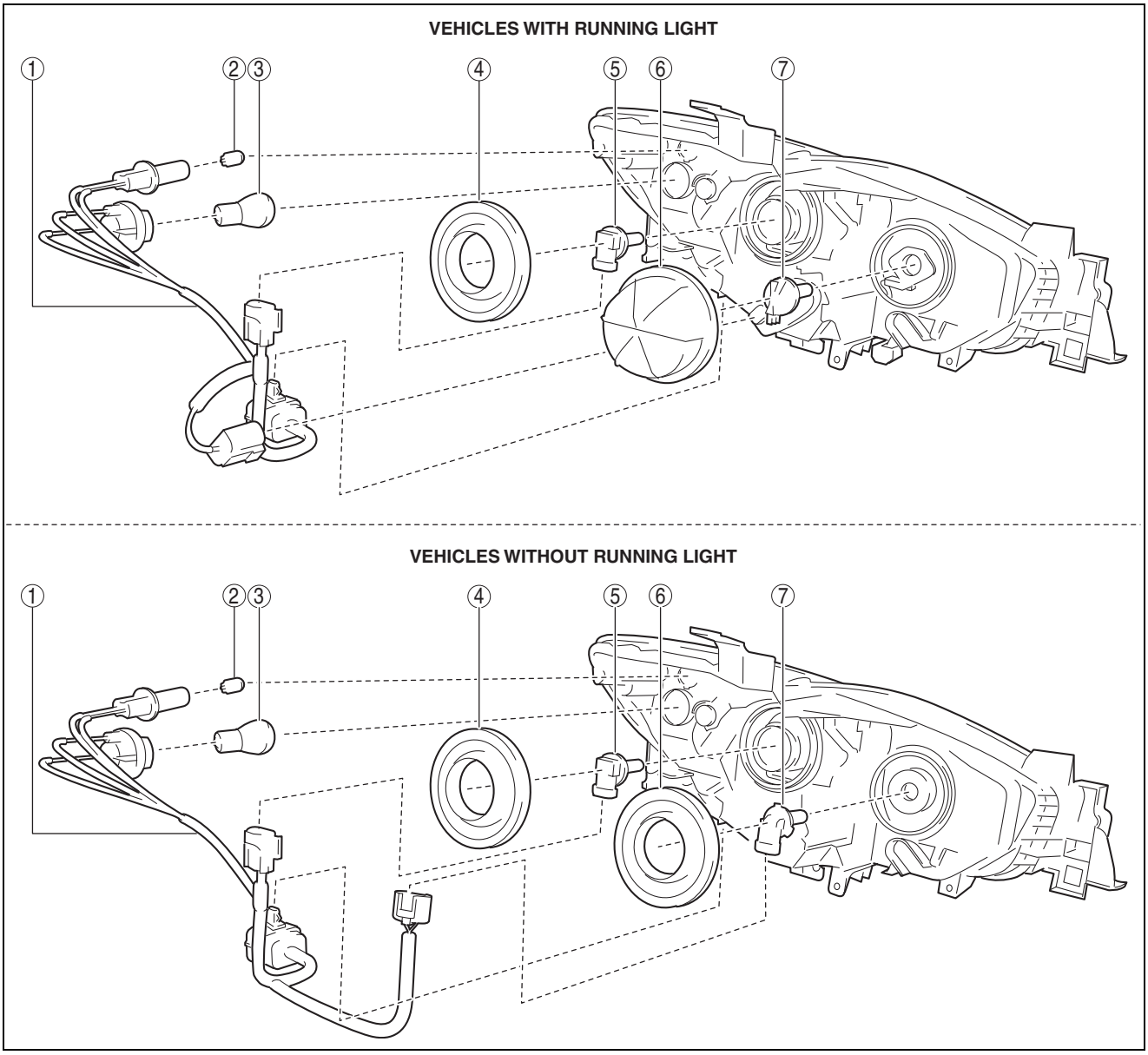

ac5wzw0000083

1	Short cord (See 09-18-11 Short Cord Removal Note.)
2	Parking light bulb (See 09-18-36 PARKING LIGHT BULB REMOVAL/INSTALLATION.)
3	Front turn light bulb (See 09-18-39 FRONT TURN LIGHT BULB REMOVAL/INSTALLATION.)
4	Cover No.1 (See 09-18-12 Cover Installation Note.)

5	Headlight LO bulb (See 09-18-12 HEADLIGHT BULB REMOVAL/INSTALLATION.)
6	Cover No.2 (See 09-18-12 Cover Installation Note.)
7	Headlight HI bulb (Running light bulb) (See 09-18-12 HEADLIGHT BULB REMOVAL/INSTALLATION.)

LIGHTING SYSTEMS

Discharge type

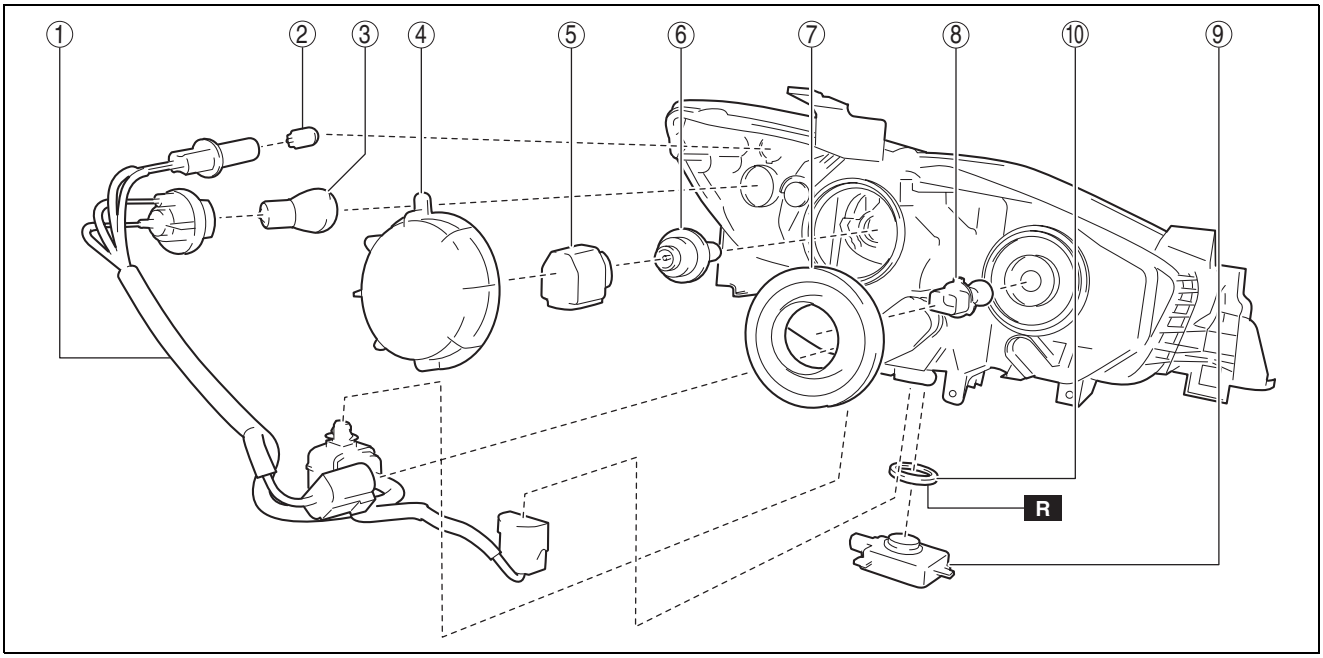

ac5wzw0000083

1	Short cord (See 09-18-11 Short Cord Removal Note.)
2	Parking light bulb (See 09-18-36 PARKING LIGHT BULB REMOVAL/INSTALLATION.)
3	Front turn light bulb (See 09-18-39 FRONT TURN LIGHT BULB REMOVAL/INSTALLATION.)
4	Cover No.1 (See 09-18-12 Cover Installation Note.)
5	Igniter (See 09-18-26 IGNITER REMOVAL/INSTALLATION.)

6	Headlight HI/LO bulb (See 09-18-12 HEADLIGHT BULB REMOVAL/INSTALLATION.)
7	Cover No.2 (See 09-18-12 Cover Installation Note.)
8	Running light bulb (See 09-18-20 RUNNING LIGHT BULB REMOVAL/INSTALLATION.)
9	Discharge headlight control module (See 09-18-21 DISCHARGE HEADLIGHT CONTROL MODULE REMOVAL/INSTALLATION.)
10	Seal

2. Assemble in the reverse order of disassembly.

Short Cord Removal Note

1. While pressing the clip tab in the direction of the arrows (1) shown in the figure, press the clip in the direction of the arrow (2) shown in the figure to detach the clip tab and front combination light.
2. Remove the short cord.

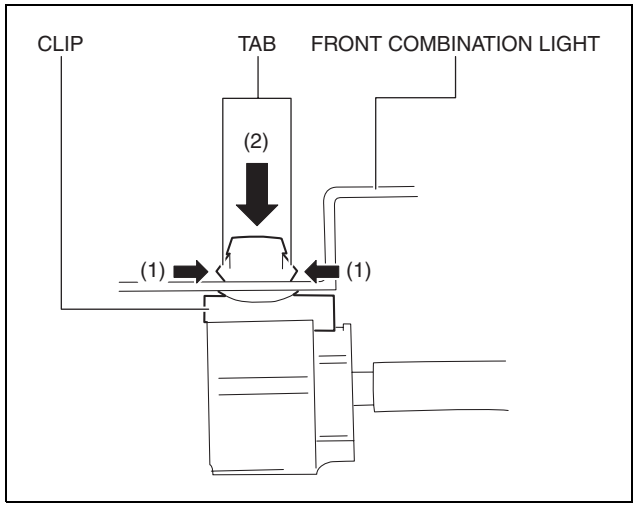

ac5wzw0000083

LIGHTING SYSTEMS

Cover Installation Note

1. Install the cover to the housing so that there is no clearance between the housing and the cover.

Caution

- **If there is a gap between the housing and the cover, water may penetrate from the gap causing a malfunction in the front combination light. Verify that there is no gap between the cover and the housing.**

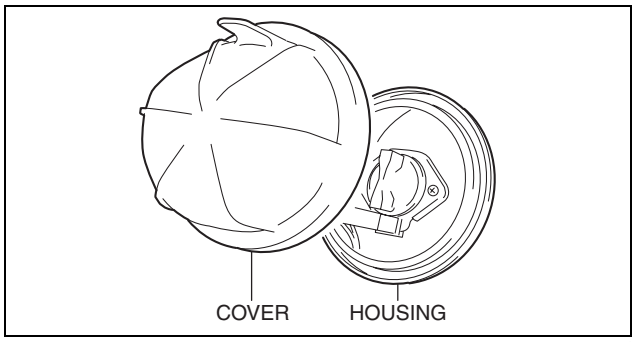

ac5wzw0000051

HEADLIGHT BULB REMOVAL/INSTALLATION

id091800800500

Halogen Type
Headlight LO bulb

1. Disconnect the negative battery cable. (See 01-17A-13 NEGATIVE BATTERY CABLE DISCONNECTION/CONNECTION [SKYACTIV-G 2.0 (WITHOUT i-stop)].) (See 01-17A-11 NEGATIVE BATTERY CABLE DISCONNECTION/CONNECTION [SKYACTIV-G 2.0].) (See 01-17B-9 NEGATIVE BATTERY CABLE DISCONNECTION/CONNECTION [SKYACTIV-D 2.2].)
2. Disconnect the connector.

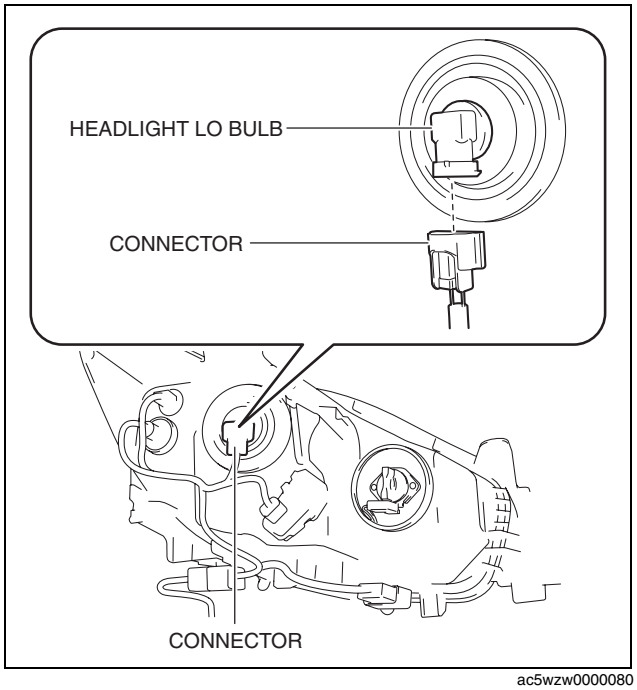

ac5wzw0000080

LIGHTING SYSTEMS

3. Rotate the headlight LO bulb in the direction of the arrow (1) shown in the figure to remove it in the direction of the arrow (2) shown in the figure.

Caution
- **A halogen bulb generates extremely high heat when it is illuminated. If the surface of the bulb is soiled, excessive heat will build up and the life of the bulb will be shortened. When replacing the bulb, hold the metal flange, not the glass.**

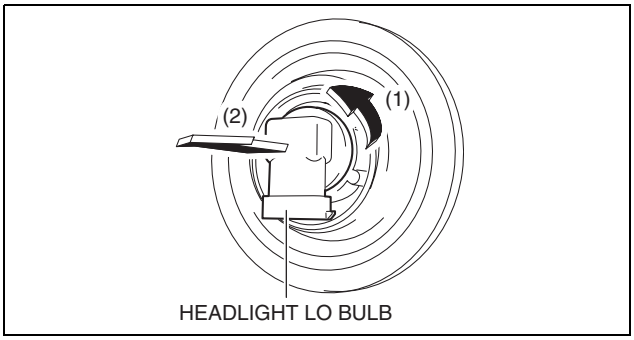

ac5wzw0000080

4. Install in the reverse order of removal.

Headlight HI bulb (Vehicles without running light system)

1. Disconnect the negative battery cable. (See 01-17A-13 NEGATIVE BATTERY CABLE DISCONNECTION/CONNECTION [SKYACTIV-G 2.0 (WITHOUT i-stop)].) (See 01-17A-11 NEGATIVE BATTERY CABLE DISCONNECTION/CONNECTION [SKYACTIV-G 2.0].) (See 01-17B-9 NEGATIVE BATTERY CABLE DISCONNECTION/CONNECTION [SKYACTIV-D 2.2].)
2. Disconnect the connector.

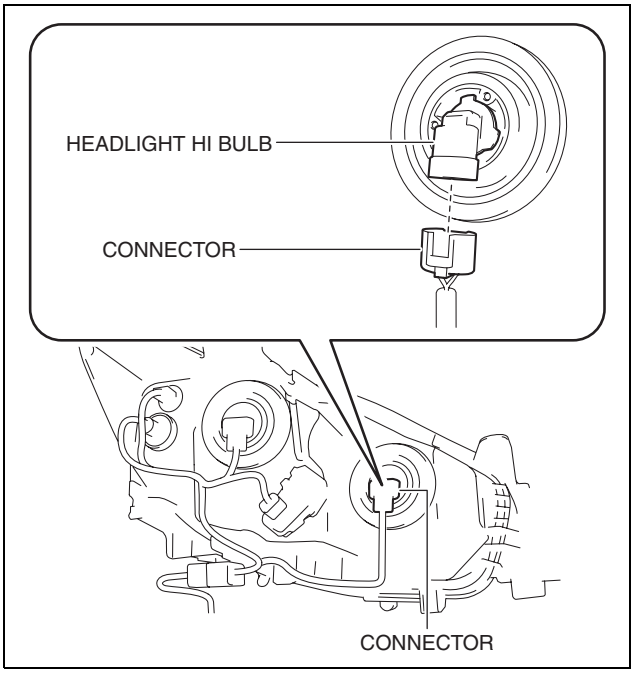

ac5wzw0000080

3. Rotate the headlight HI bulb in the direction of the arrow (1) shown in the figure and remove it in the direction of the arrow (2) shown in the figure.

Caution
- **A halogen bulb generates extremely high heat when it is illuminated. If the surface of the bulb is soiled, excessive heat will build up and the life of the bulb will be shortened. When replacing the bulb, hold the metal flange, not the glass.**

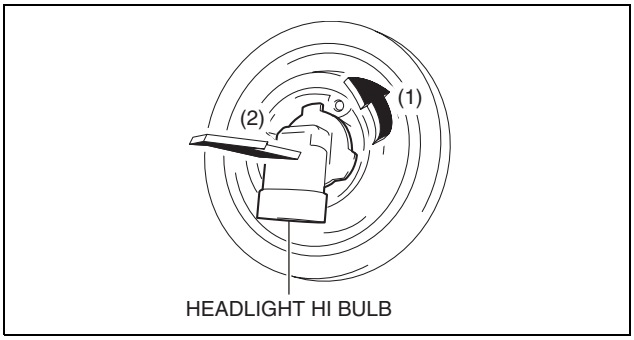

ac5wzw0000039

4. Install in the reverse order of removal.

Headlight HI bulb (Vehicles with running light system)

1. Disconnect the negative battery cable. (See 01-17A-13 NEGATIVE BATTERY CABLE DISCONNECTION/CONNECTION [SKYACTIV-G 2.0 (WITHOUT i-stop)].) (See 01-17A-11 NEGATIVE BATTERY CABLE DISCONNECTION/CONNECTION [SKYACTIV-G 2.0].) (See 01-17B-9 NEGATIVE BATTERY CABLE DISCONNECTION/CONNECTION [SKYACTIV-D 2.2].)

LIGHTING SYSTEMS

2. Remove the cover.

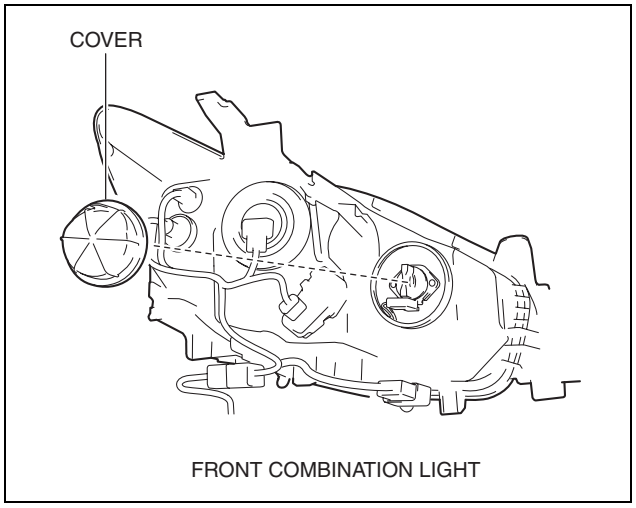

ac5wzw0000080

3. Rotate the headlight HI bulb in the direction of the arrow (1) shown in the figure to disconnect the connector.

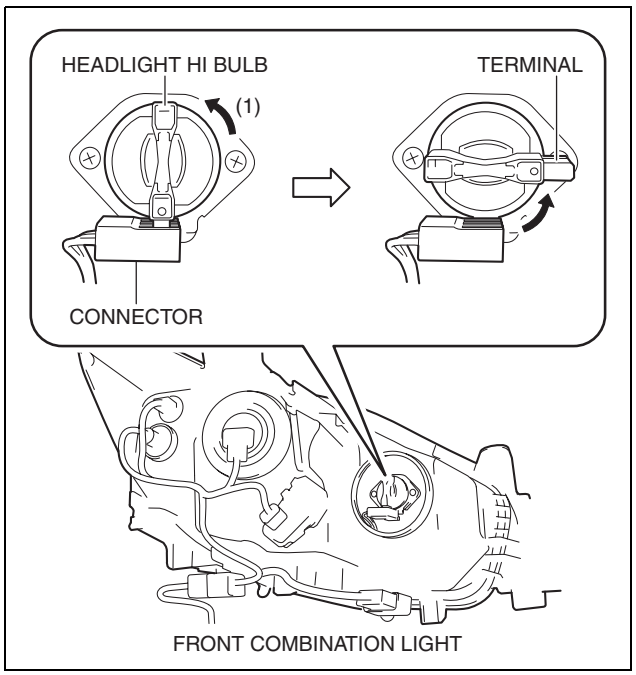

ac5wzw0000080

4. Remove the headlight HI bulb.

Caution

- **A halogen bulb generates extremely high heat when it is illuminated. If the surface of the bulb is soiled, excessive heat will build up and the life of the bulb will be shortened. When replacing the bulb, hold the metal flange, not the glass.**

5. Install in the reverse order of removal.

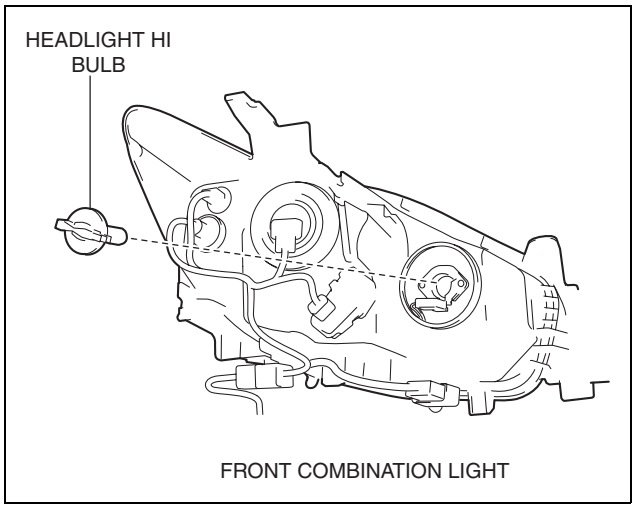

ac5wzw0000080

LIGHTING SYSTEMS

Discharge Type

Warning

- **Incorrect servicing of the discharge headlights could result in electrical shock. Before servicing the discharge headlights, always refer to the service warnings. (See 09-18-6 DISCHARGE HEADLIGHT SERVICE WARNINGS.)**

Headlight HI/LO bulb (LH)

1. Disconnect the negative battery cable. (See 01-17A-13 NEGATIVE BATTERY CABLE DISCONNECTION/CONNECTION [SKYACTIV-G 2.0 (WITHOUT i-stop)].) (See 01-17A-11 NEGATIVE BATTERY CABLE DISCONNECTION/CONNECTION [SKYACTIV-G 2.0].) (See 01-17B-9 NEGATIVE BATTERY CABLE DISCONNECTION/CONNECTION [SKYACTIV-D 2.2].)
2. Remove the air cleaner cover. (See 01-13A-6 INTAKE-AIR SYSTEM REMOVAL/INSTALLATION [SKYACTIV-G 2.0].) (See 01-13B-6 INTAKE-AIR SYSTEM REMOVAL/INSTALLATION [SKYACTIV-D 2.2].)
3. Remove the relay and fuse block upper cover. (See 09-21-3 RELAY AND FUSE BLOCK REMOVAL/INSTALLATION.)
4. Remove the nut and screw.

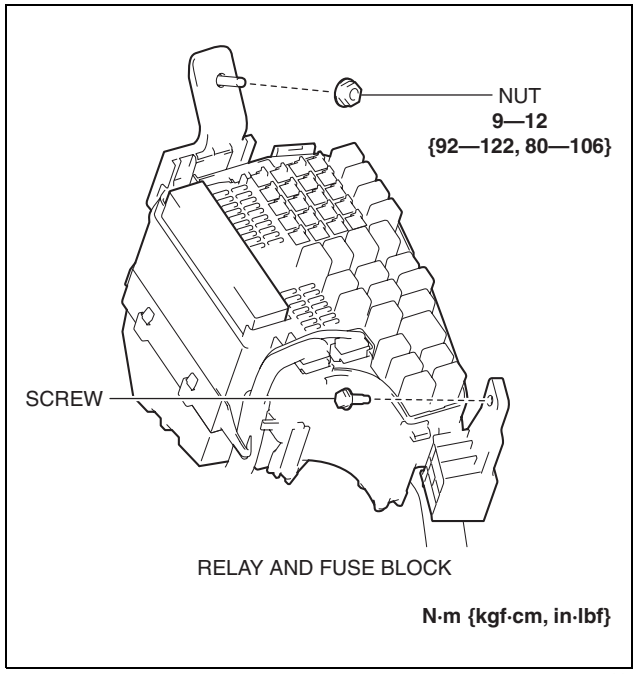

ac5wzw0000118

5. Insert a tape-wrapped flathead screwdriver into the service hole in the position shown in the figure.

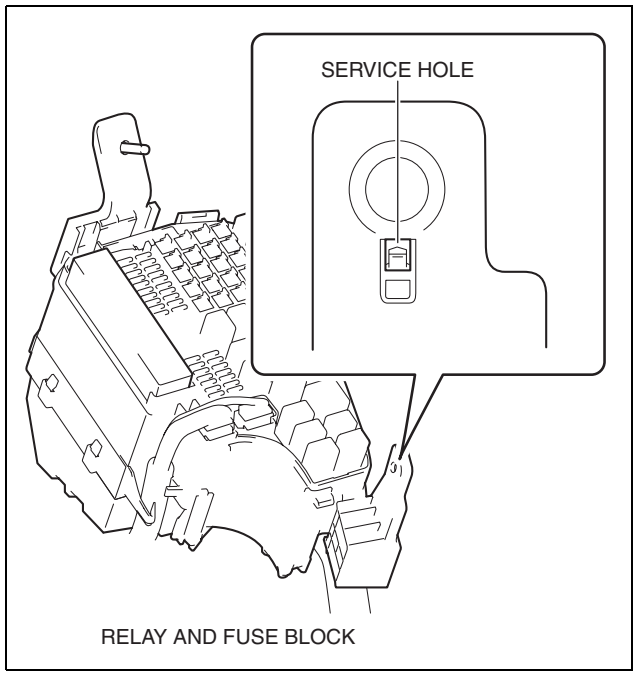

ac5wzw0000040

LIGHTING SYSTEMS

6. While pressing the pin tab in the direction of the arrow (1) shown in the figure using a flathead screwdriver, pull the pin in the direction of the arrow (2) shown in the figure to detach the pin tab and engine mount.

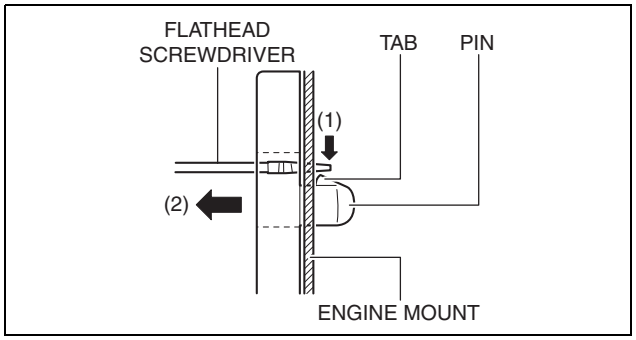

ac5wzw0000118

7. Pull out the relay and fuse block from the stud bolt and set it aside as shown in the figure.

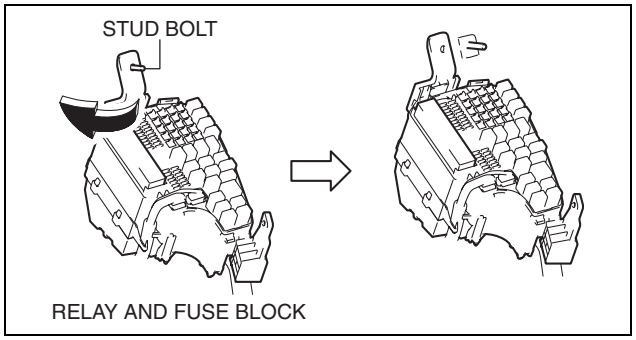

ac5wzw0000040

8. Rotate the cover in the direction of the arrow (3) shown in the figure and remove it from the front combination light in the direction of the arrow (4) shown in the figure.

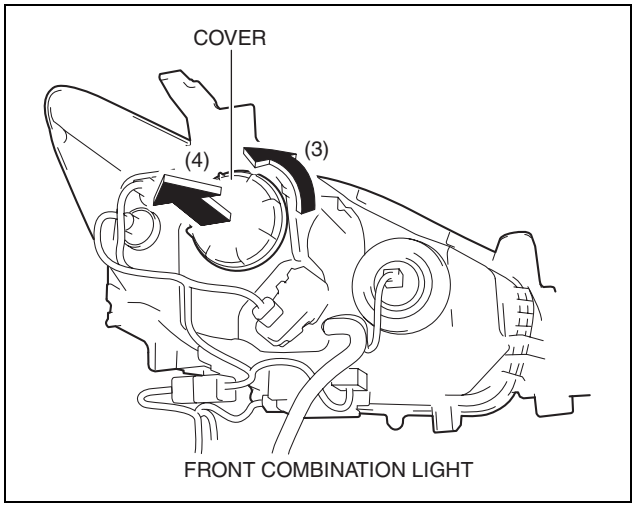

ac5wzw0000015

9. Rotate the igniter in the direction of the arrow (5) shown in the figure and remove it from the front combination light in the direction of the arrow (6) shown in the figure.

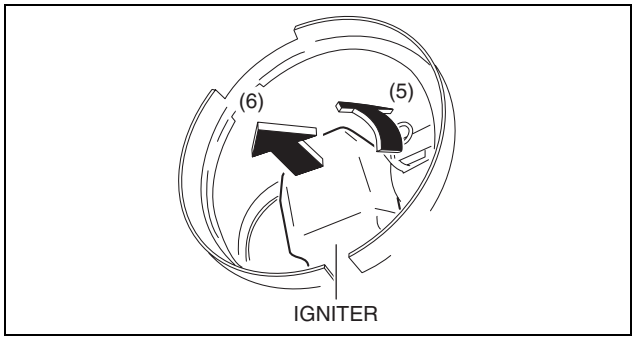

ac5wzw0000015

LIGHTING SYSTEMS

10. Move section A of the bulb retaining wire in the direction of the arrow (7) shown in the figure, pull it in the direction of the arrow (8) shown in the figure, and detach the bulb retaining wire and hook.

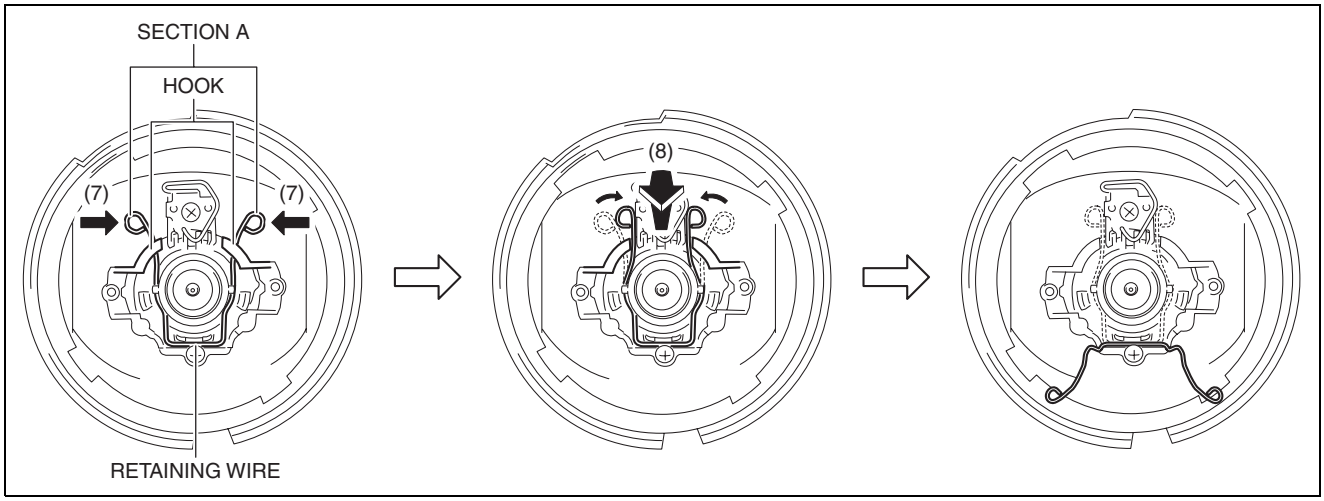

ac5wzw0000081

11. Remove the headlight HI/LO bulb.

Caution

- **A halogen bulb generates extremely high heat when it is illuminated. If the surface of the bulb is soiled, excessive heat will build up and the life of the bulb will be shortened. When replacing the bulb, hold the metal flange, not the glass.**

12. Install in the reverse order of removal.

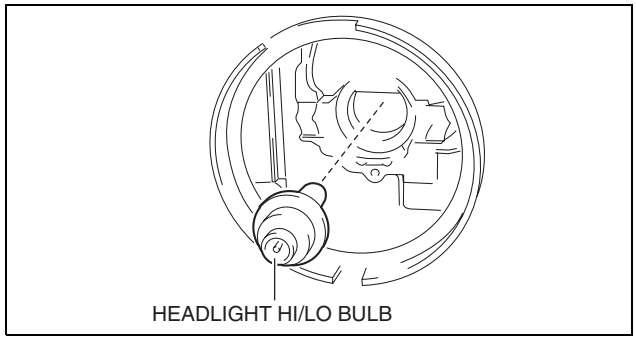

ac5wzw0000040

Headlight HI/LO bulb (RH)

1. Disconnect the negative battery cable. (See 01-17A-13 NEGATIVE BATTERY CABLE DISCONNECTION/CONNECTION [SKYACTIV-G 2.0 (WITHOUT i-stop)].) (See 01-17A-11 NEGATIVE BATTERY CABLE DISCONNECTION/CONNECTION [SKYACTIV-G 2.0].) (See 01-17B-9 NEGATIVE BATTERY CABLE DISCONNECTION/CONNECTION [SKYACTIV-D 2.2].)
2. Remove the PCM bracket. (SKYACTIV-D 2.2)
3. Remove the washer tank bracket. (See 09-19-16 WASHER TANK REMOVAL/INSTALLATION.)
4. Rotate the cover in the direction of the arrow (1) shown in the figure and remove it from the front combination light in the direction of the arrow (2) shown in the figure.

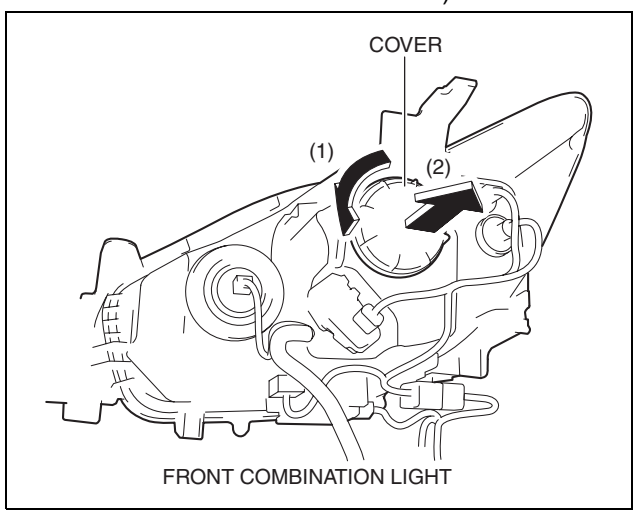

ac5wzw0000334

LIGHTING SYSTEMS

5. Rotate the igniter in the direction of the arrow (3) shown in the figure and remove it from the front combination light in the direction of the arrow (4) shown in the figure.
6. Move section A of the bulb retaining wire in the direction of the arrow (5) shown in the figure, pull it in the direction of the arrow (6) shown in the figure, and detach the bulb retaining wire and hook.

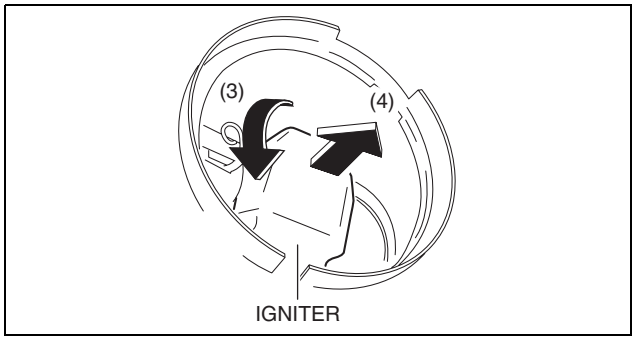

ac5wzw0000301

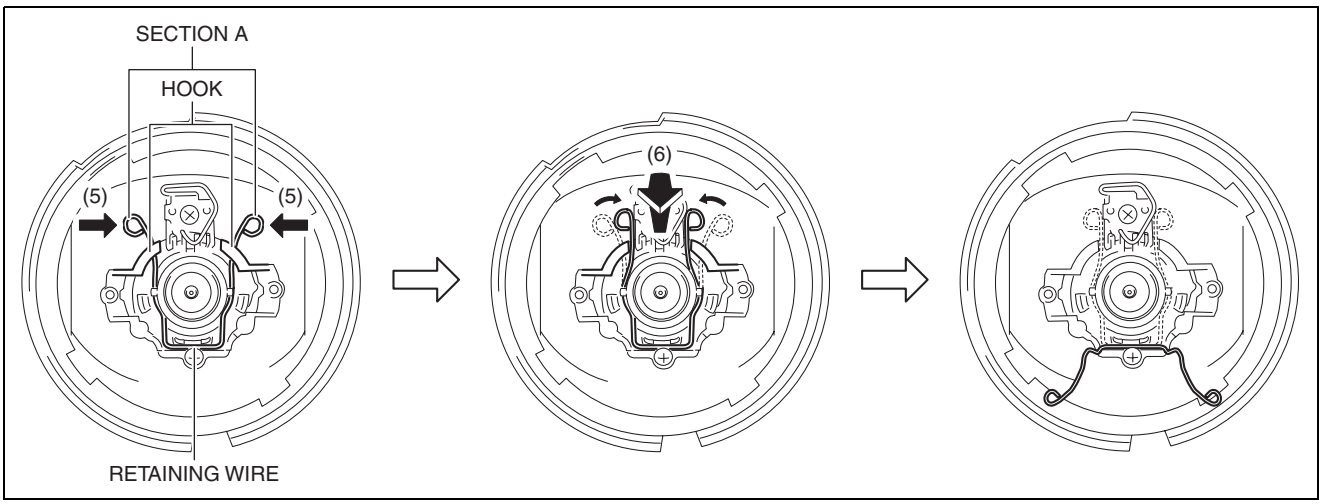

ac5wzw0000081

7. Remove the headlight HI/LO bulb.
8. Install in the reverse order of removal.

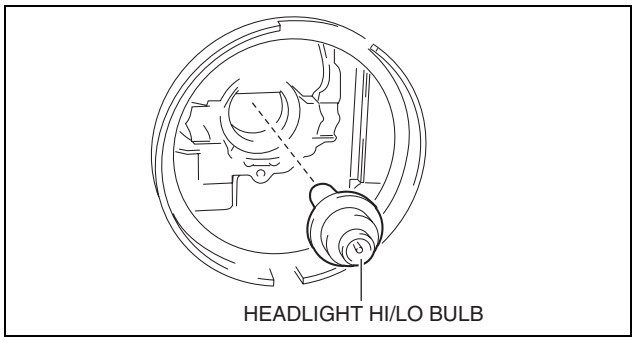

ac5wzw0000081

HEADLIGHT AIMING

id091800800400

Note

- Perform headlight aiming if any of the following work is performed.
  - — Front combination light replacement
  - — Work that can affect vehicle height such as suspension replacement or removal/installation.

1. Empty the vehicle by having all occupants leave the vehicle and remove all the cargo except for the spare tire, jack and tools equipped on the vehicle.
2. Adjust the air pressure of each tire to the specified value. (See 02-12-1 WHEEL AND TIRE SPECIFICATION.)
3. Move the vehicle to level ground.

LIGHTING SYSTEMS

4. Make a screen shown in the figure using double-weight, white paper.

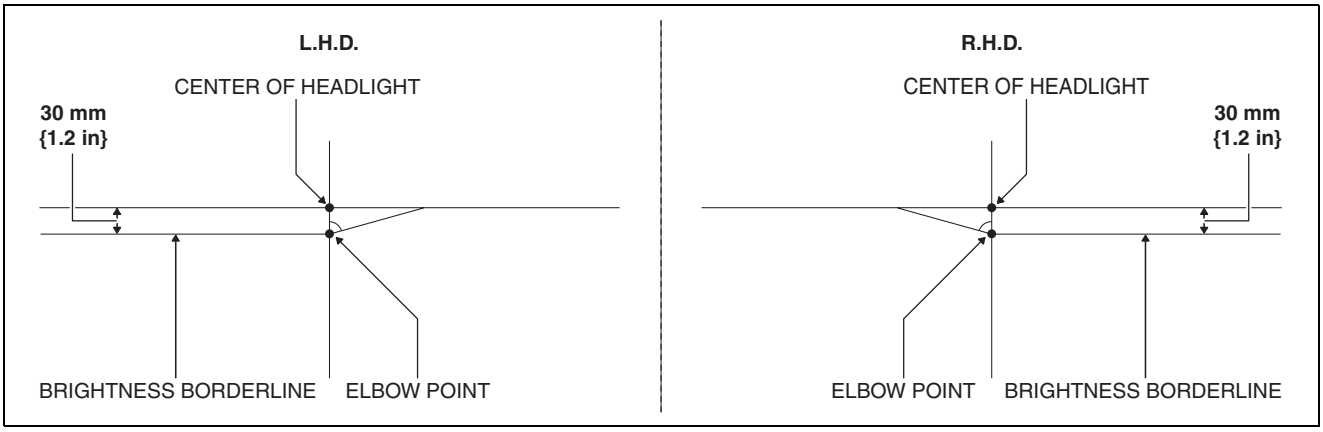

ac5wzw0000079

5. Line up the vehicle with the wall so that the distance to the headlights is **3 m {9.8 ft}** from the wall.

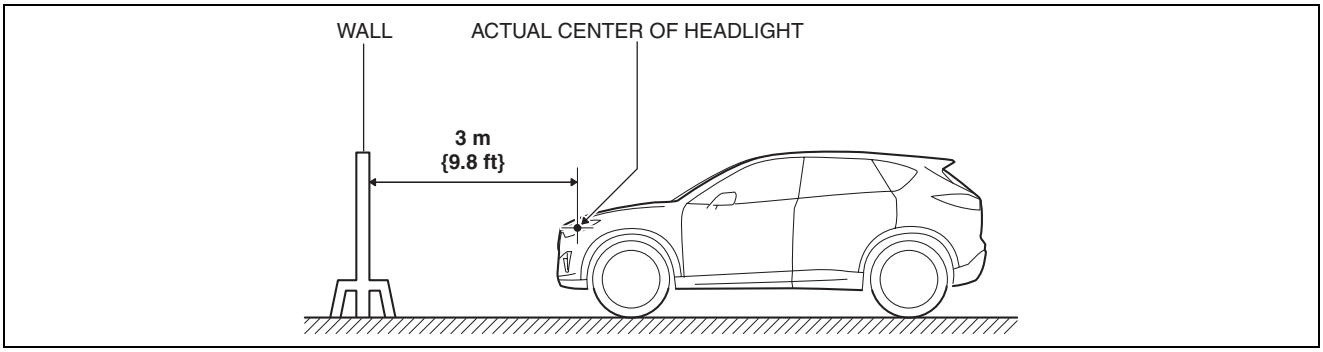

ac5wzw0000079

6. Measure the height at the center point of the headlight.

Note

- Measure the height at the center point of the headlight in which the aiming is being adjusted because the vehicle height differs depending on vehicle conditions.

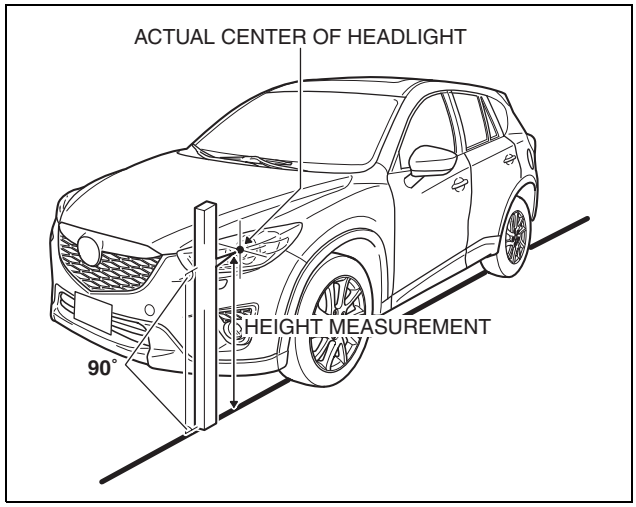

ac5wzw0000303

LIGHTING SYSTEMS

7. Align the center of the headlight with the center of the screen.

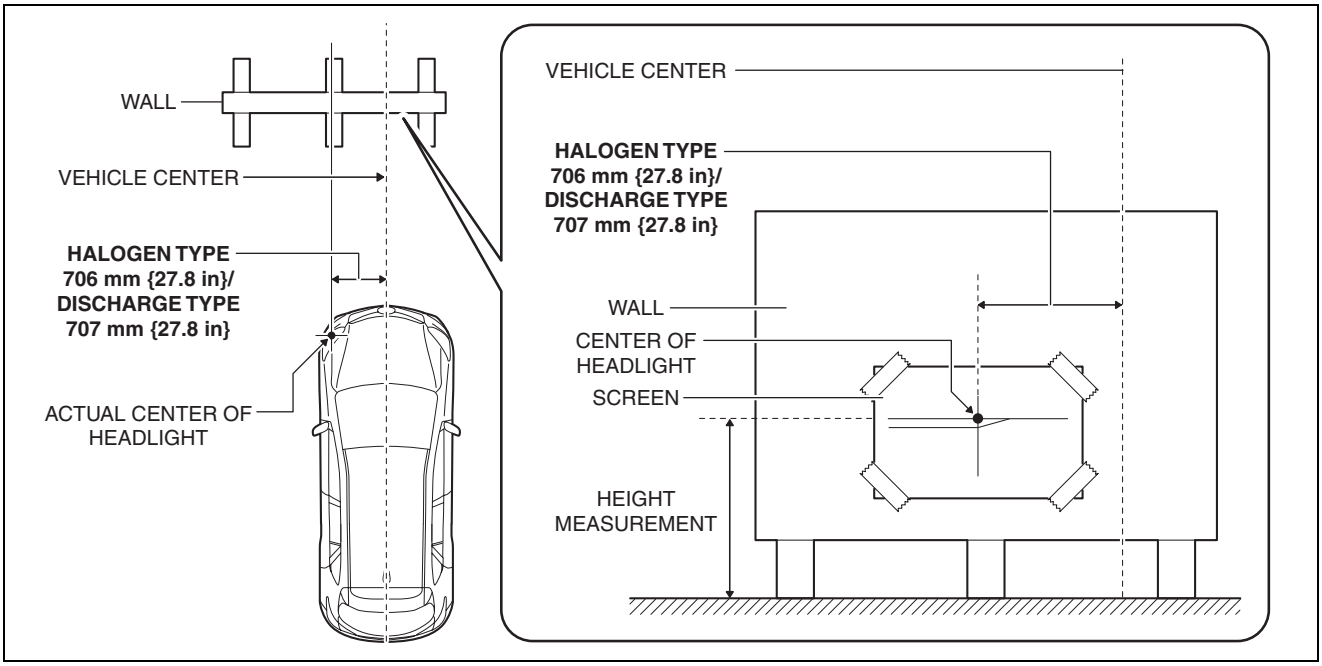

ac5wzw0000080

8. Set a partition in front of the headlight which is not being adjusted to block the light.
9. Start the engine and charge the battery.
10. Turn on the headlight low beams.
11. Set the headlight leveling switch to the [0] position. (With headlight manual leveling system)
12. Verify that the elbow point of the headlight is at the position indicated on the adjustment screen.
    - If the elbow point of the headlight is not at the position indicated on the adjustment screen, perform the following adjustment.
    (1) Rotate the adjustment screw to adjust the headlight.

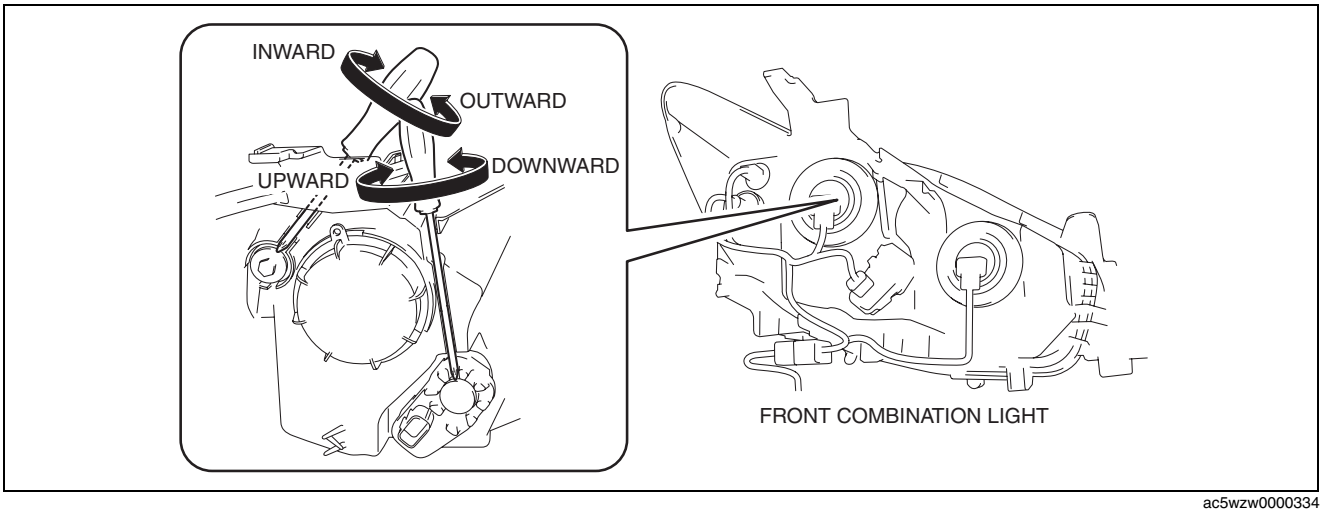

ac5wzw0000334

RUNNING LIGHT BULB REMOVAL/INSTALLATION

id091800450000

1. Disconnect the negative battery cable. (See 01-17A-13 NEGATIVE BATTERY CABLE DISCONNECTION/CONNECTION [SKYACTIV-G 2.0 (WITHOUT i-stop)].) (See 01-17A-11 NEGATIVE BATTERY CABLE DISCONNECTION/CONNECTION [SKYACTIV-G 2.0].) (See 01-17B-9 NEGATIVE BATTERY CABLE DISCONNECTION/CONNECTION [SKYACTIV-D 2.2].)

LIGHTING SYSTEMS

2. Disconnect the connector.

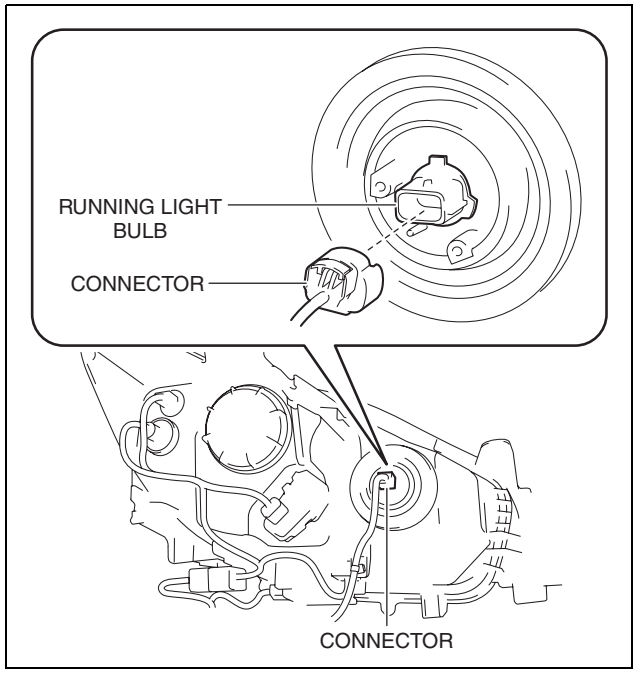

ac5wzw0000079

3. Rotate the running light bulb in the direction of the arrow (1) shown in the figure and remove it from the front combination light in the direction of the arrow (2) shown in the figure.

Caution
- **A halogen bulb generates extremely high heat when it is illuminated. If the surface of the bulb is soiled, excessive heat will build up and the life of the bulb will be shortened. When replacing the bulb, hold the metal flange, not the glass.**

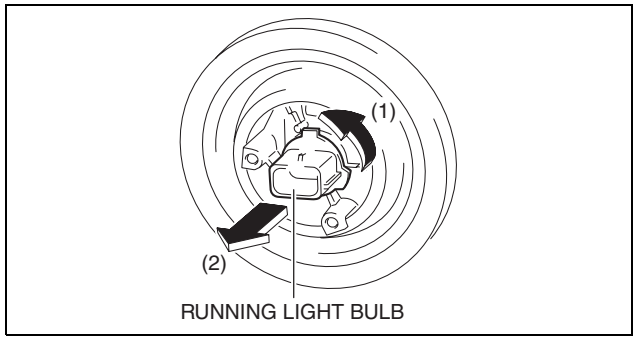

ac5wzw0000208

4. Install in the reverse order of removal.

DISCHARGE HEADLIGHT CONTROL MODULE REMOVAL/INSTALLATION

id091800805300

Warning
- **Incorrect servicing of the discharge headlights could result in electrical shock. Before servicing the discharge headlights, always refer to the service warnings. (See 09-18-6 DISCHARGE HEADLIGHT SERVICE WARNINGS.)**

1. Disconnect the negative battery cable. (See 01-17A-13 NEGATIVE BATTERY CABLE DISCONNECTION/CONNECTION [SKYACTIV-G 2.0 (WITHOUT i-stop)].) (See 01-17A-11 NEGATIVE BATTERY CABLE DISCONNECTION/CONNECTION [SKYACTIV-G 2.0].) (See 01-17B-9 NEGATIVE BATTERY CABLE DISCONNECTION/CONNECTION [SKYACTIV-D 2.2].)
2. Remove the front bumper. (See 09-10-10 FRONT BUMPER REMOVAL/INSTALLATION.)

LIGHTING SYSTEMS

3. Disconnect the connector.

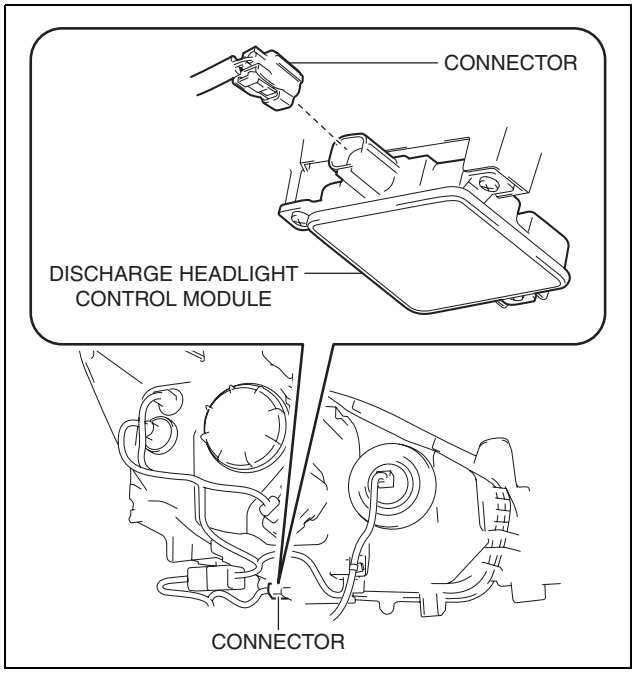

ac5wzw0000045

4. Remove the screws.

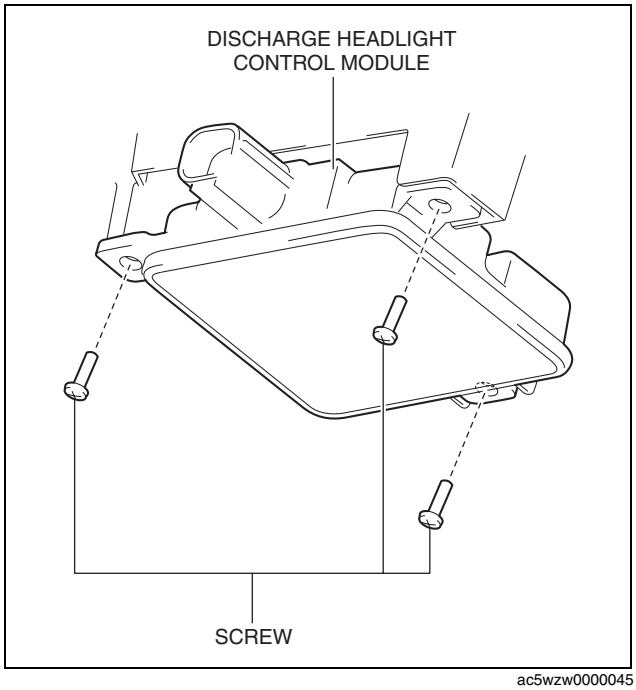

ac5wzw0000045

LIGHTING SYSTEMS

5. Insert a tape-wrapped flathead screwdriver into the clearance between the discharge headlight control module and connector shown in the figure.
6. Move the flathead screwdriver in the direction of the arrow (1) shown in the figure, lift up the connector, and disconnect it.

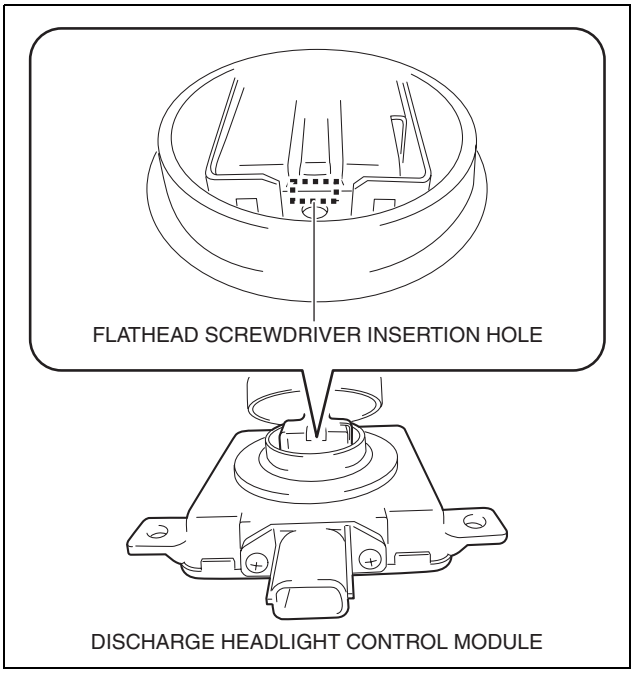

ac5wzw0000119

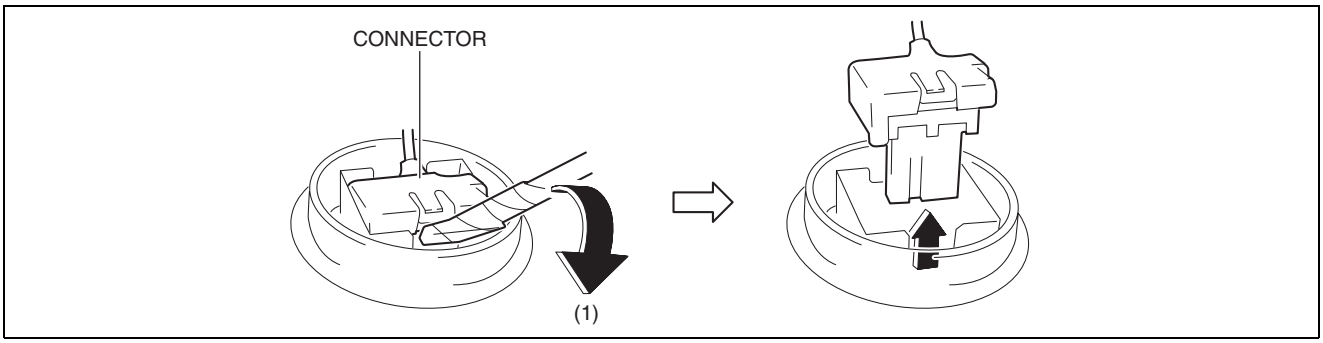

ac5wzw0000045

7. Remove the seal.
8. Remove the discharge headlight control module.
9. Install in the reverse order of removal.

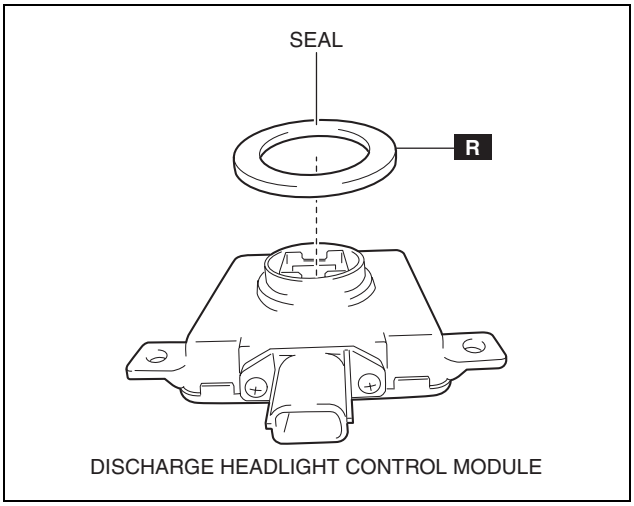

ac5wzw0000302

DISCHARGE HEADLIGHT SYSTEM INSPECTION

id091800805400

Warning

- **Incorrect servicing of the discharge headlights could result in electrical shock. Before servicing the discharge headlights, always refer to the service warnings. (See 09-18-6 DISCHARGE HEADLIGHT SERVICE WARNINGS.)**

LIGHTING SYSTEMS

Terminal layout

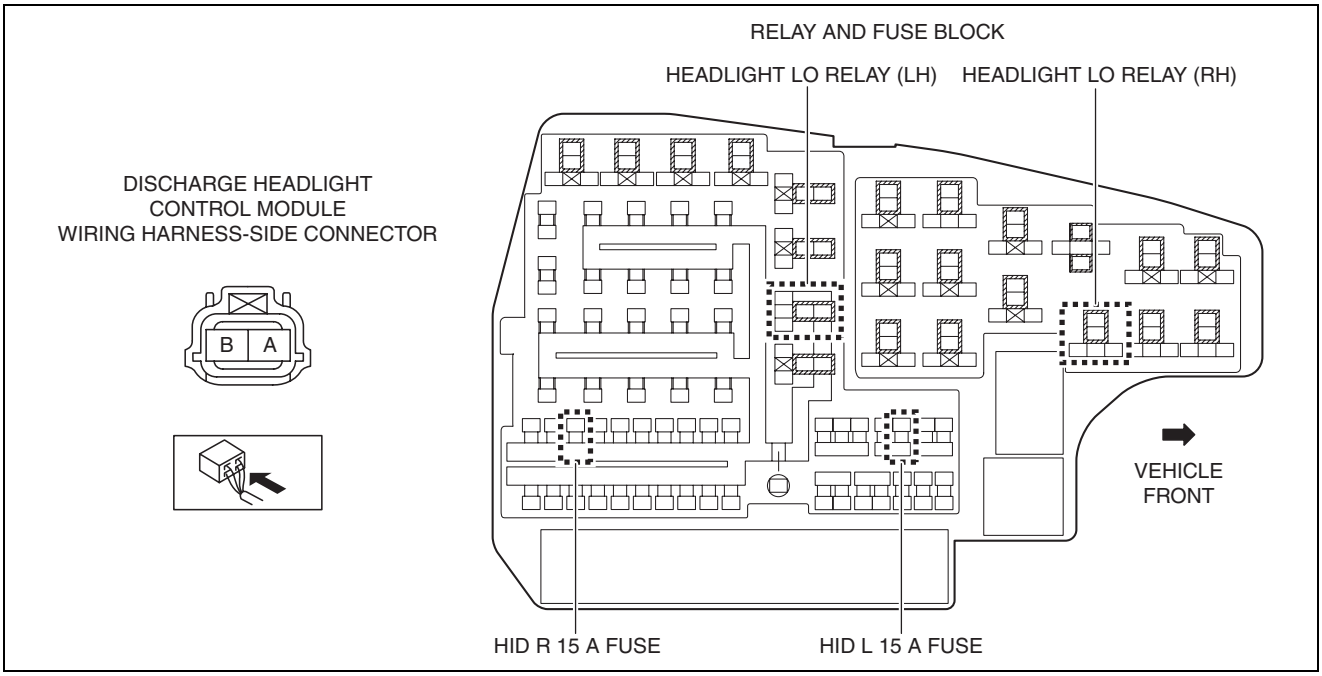

ac5wzw0000046

LIGHTING SYSTEMS

Inspection procedure

Step	Inspection		Action
1	**INSPECT RELAY** • Disconnect the negative battery cable. (See 01-17A-13 NEGATIVE BATTERY CABLE DISCONNECTION/CONNECTION [SKYACTIV-G 2.0 (WITHOUT i-stop)].) (See 01-17A-11 NEGATIVE BATTERY CABLE DISCONNECTION/CONNECTION [SKYACTIV-G 2.0].) (See 01-17B-9 NEGATIVE BATTERY CABLE DISCONNECTION/CONNECTION [SKYACTIV-D 2.2].) • Remove the following relays: (See 09-21-28 RELAY LOCATION.) — Headlight LO relay (LH) — Headlight LO relay (RH) • Inspect the relays. (See 09-21-29 RELAY INSPECTION.) • Are the relays normal?	Yes	Install the relays, then go to the next step. (See 09-21-28 RELAY LOCATION.)
		No	Replace the relay. (See 09-21-28 RELAY LOCATION.)
2	**INSPECT LIGHT SWITCH** • Inspect the light switch. (See 09-18-86 LIGHT SWITCH INSPECTION.) • Is the light switch normal?	Yes	Go to the next step.
		No	Replace the light switch. (See 09-18-84 LIGHT SWITCH REMOVAL/INSTALLATION.)
3	**INSPECT DISCHARGE HEADLIGHT CONTROL MODULE CONNECTOR** • Disconnect the discharge headlight control module connector. • Inspect the connector connection, connection condition or the terminal and verify that there is no damage, deformation, corrosion, or disconnection. • Is the connector normal?	Yes	Go to the next step.
		No	Repair or replace the connector.
4	**INSPECT DISCHARGE HEADLIGHT CONTROL MODULE FOR OPEN CIRCUIT TO GROUND CIRCUIT** • Verify that the discharge headlight control module is disconnected. • Inspect the wiring harness between discharge headlight control module B (wiring harness-side) and ground. • Is there continuity?	Yes	Go to the next step.
		No	Repair or replace the wiring harness for an open circuit.
5	**INSPECT DISCHARGE HEADLIGHT CONTROL MODULE POWER SUPPLY CIRCUIT** • Verify that the discharge headlight control module connector is disconnected. • Reconnect the negative battery cable. (See 01-17A-13 NEGATIVE BATTERY CABLE DISCONNECTION/CONNECTION [SKYACTIV-G 2.0 (WITHOUT i-stop)].) (See 01-17A-11 NEGATIVE BATTERY CABLE DISCONNECTION/CONNECTION [SKYACTIV-G 2.0].) (See 01-17B-9 NEGATIVE BATTERY CABLE DISCONNECTION/CONNECTION [SKYACTIV-D 2.2].) • Turn the light switch to the HEAD position. • Measure the voltage at discharge headlight control module terminal A (wiring harness-side). • Is the voltage B+?	Yes	Turn the light switch to the OFF position, then go to the next step.
		No	Inspect the HID L 15 A fuse and HID R 15 A fuse. • If a fuse is burnt out: — Repair or replace the wiring harness for a short to ground. — Replace the fuse. • If a fuse is burnt out: — Replace the fuse. • If the fuse is normal: — Repair or replace the wiring harness for an open circuit.

LIGHTING SYSTEMS

Step	Inspection		Action
6	**VERIFY IF HEADLIGHT HI/LO BULB IS BAD OR DISCHARGE HEADLIGHT CONTROL MODULE IS MALFUNCTIONING** • Disconnect the negative battery cable. (See 01-17A-13 NEGATIVE BATTERY CABLE DISCONNECTION/CONNECTION [SKYACTIV-G 2.0 (WITHOUT i-stop)].) (See 01-17A-11 NEGATIVE BATTERY CABLE DISCONNECTION/CONNECTION [SKYACTIV-G 2.0].) (See 01-17B-9 NEGATIVE BATTERY CABLE DISCONNECTION/CONNECTION [SKYACTIV-D 2.2].) • Install a normal headlight HI/LO bulb. (See 09-18-12 HEADLIGHT BULB REMOVAL/INSTALLATION.) • Make sure to reconnect the disconnected connectors. • Reconnect the negative battery cable. (See 01-17A-13 NEGATIVE BATTERY CABLE DISCONNECTION/CONNECTION [SKYACTIV-G 2.0 (WITHOUT i-stop)].) (See 01-17A-11 NEGATIVE BATTERY CABLE DISCONNECTION/CONNECTION [SKYACTIV-G 2.0].) (See 01-17B-9 NEGATIVE BATTERY CABLE DISCONNECTION/CONNECTION [SKYACTIV-D 2.2].) • Turn the light switch to the HEAD position. • Do the headlights LO illuminate?	Yes	Replace the headlight HI/LO bulb. (See 09-18-12 HEADLIGHT BULB REMOVAL/INSTALLATION.)
		No	Replace the discharge headlight control module. (See 09-18-21 DISCHARGE HEADLIGHT CONTROL MODULE REMOVAL/INSTALLATION.)

IGNITER REMOVAL/INSTALLATION

id091800814200

Warning

- **Incorrect servicing of the discharge headlights could result in electrical shock. Before servicing the discharge headlights, always refer to the service warnings. (See 09-18-6 DISCHARGE HEADLIGHT SERVICE WARNINGS.)**

Igniter (LH)

1. Disconnect the negative battery cable. (See 01-17A-13 NEGATIVE BATTERY CABLE DISCONNECTION/CONNECTION [SKYACTIV-G 2.0 (WITHOUT i-stop)].) (See 01-17A-11 NEGATIVE BATTERY CABLE DISCONNECTION/CONNECTION [SKYACTIV-G 2.0].) (See 01-17B-9 NEGATIVE BATTERY CABLE DISCONNECTION/CONNECTION [SKYACTIV-D 2.2].)
2. Remove the air cleaner cover. (See 01-13A-6 INTAKE-AIR SYSTEM REMOVAL/INSTALLATION [SKYACTIV-G 2.0].) (See 01-13B-6 INTAKE-AIR SYSTEM REMOVAL/INSTALLATION [SKYACTIV-D 2.2].)
3. Remove the relay and fuse block upper cover. (See 09-21-3 RELAY AND FUSE BLOCK REMOVAL/INSTALLATION.)

LIGHTING SYSTEMS

4. Remove the nut and screw.

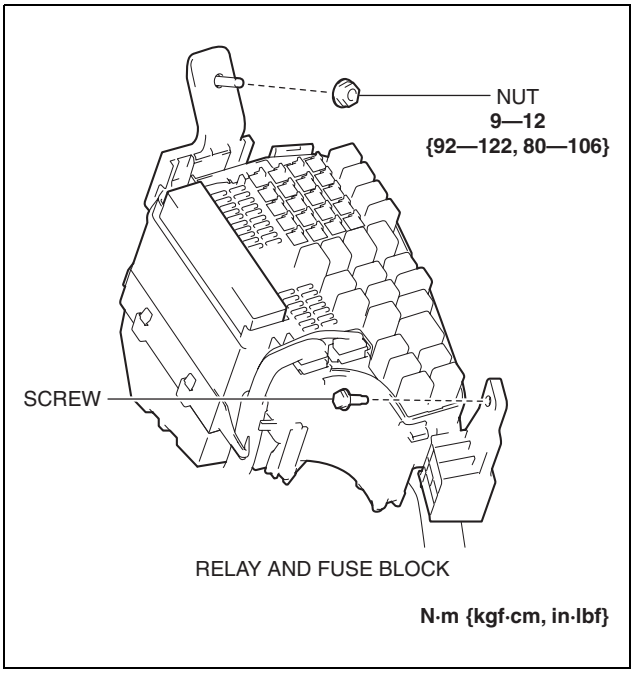

ac5wzw0000120

5. Insert a tape-wrapped flathead screwdriver into the service hole in the position shown in the figure.

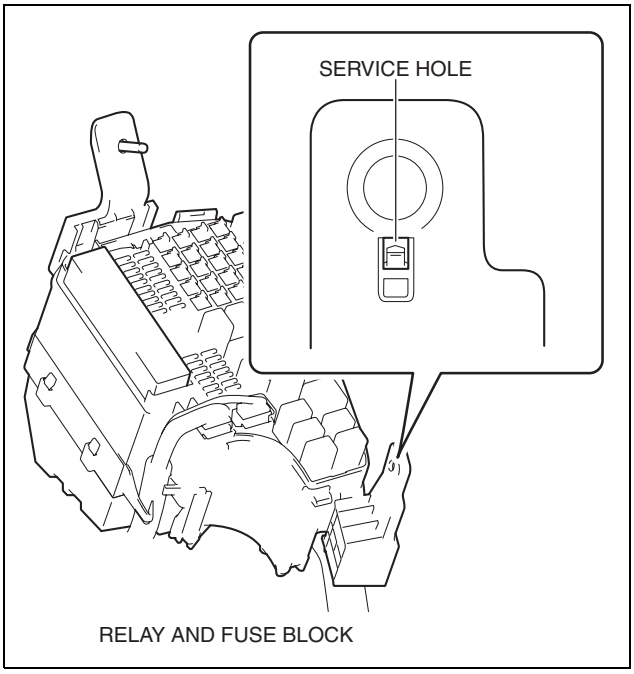

ac5wzw0000050

6. While pressing the pin tab in the direction of the arrow (1) shown in the figure using a flathead screwdriver, pull the pin in the direction of the arrow (2) shown in the figure to detach the pin tab and engine mount.

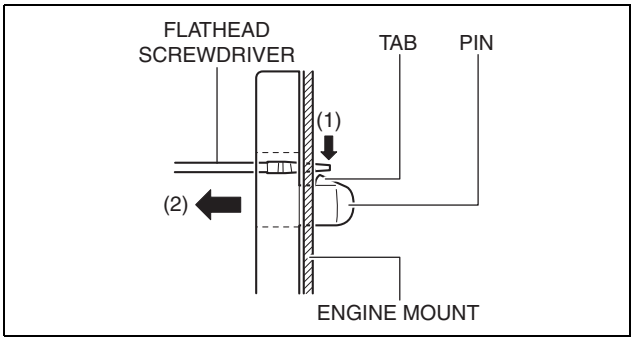

ac5wzw0000120

LIGHTING SYSTEMS

7. Pull out the relay and fuse block from the stud bolt and set it aside as shown in the figure.

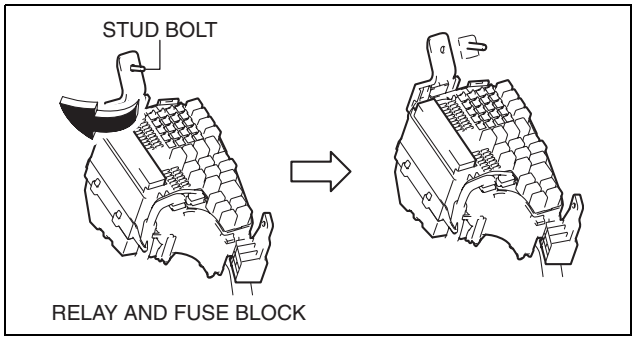

ac5wzw0000050

8. Rotate the cover in the direction of the arrow (3) shown in the figure and remove it from the front combination light in the direction of the arrow (4) shown in the figure.

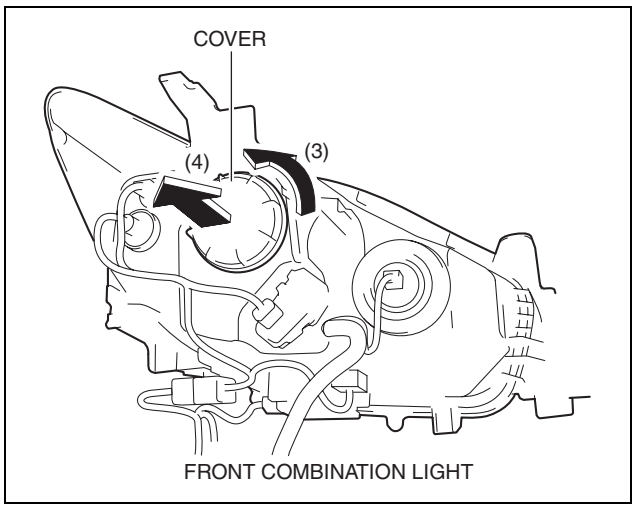

ac5wzw0000050

9. Rotate the igniter in the direction of the arrow (5) shown in the figure and remove it from the front combination light in the direction of the arrow (6) shown in the figure.

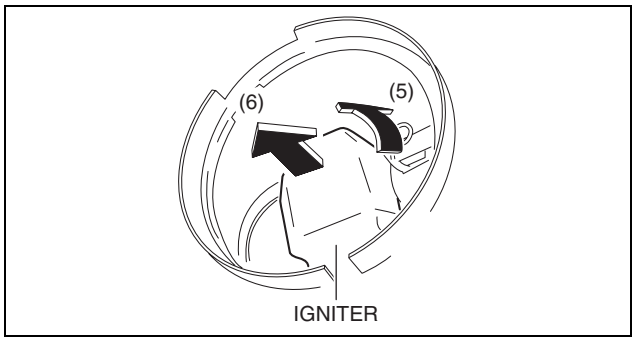

ac5wzw0000050

10. Insert the flathead screwdriver into the gap between the igniter and connector shown in the figure.

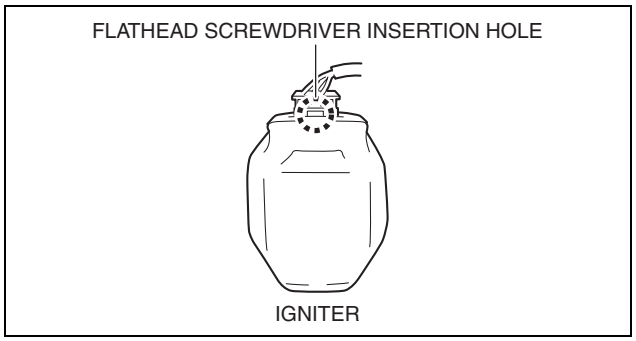

ac5wzw0000121

LIGHTING SYSTEMS

11. Move the flathead screwdriver in the direction of the arrow (7) shown in the figure, lift up the connector, and disconnect it.
12. Install in the reverse order of removal.

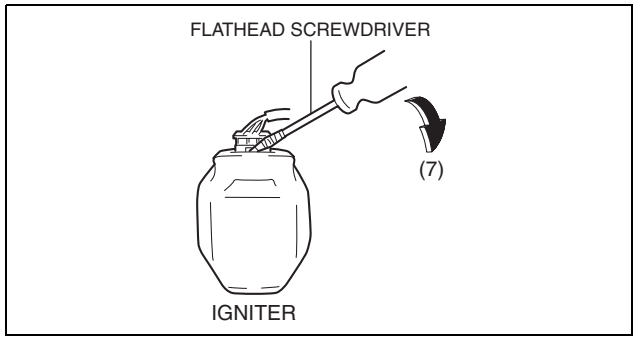

ac5wzw0000050

Igniter (RH)

1. Disconnect the negative battery cable. (See 01-17A-13 NEGATIVE BATTERY CABLE DISCONNECTION/CONNECTION [SKYACTIV-G 2.0 (WITHOUT i-stop)].) (See 01-17A-11 NEGATIVE BATTERY CABLE DISCONNECTION/CONNECTION [SKYACTIV-G 2.0].) (See 01-17B-9 NEGATIVE BATTERY CABLE DISCONNECTION/CONNECTION [SKYACTIV-D 2.2].)
2. Remove the PCM bracket. (SKYACTIV-D 2.2)
3. Remove the washer tank bracket. (See 09-19-16 WASHER TANK REMOVAL/INSTALLATION.)
4. Rotate the cover in the direction of the arrow (1) shown in the figure and remove it from the front combination light in the direction of the arrow (2) shown in the figure.

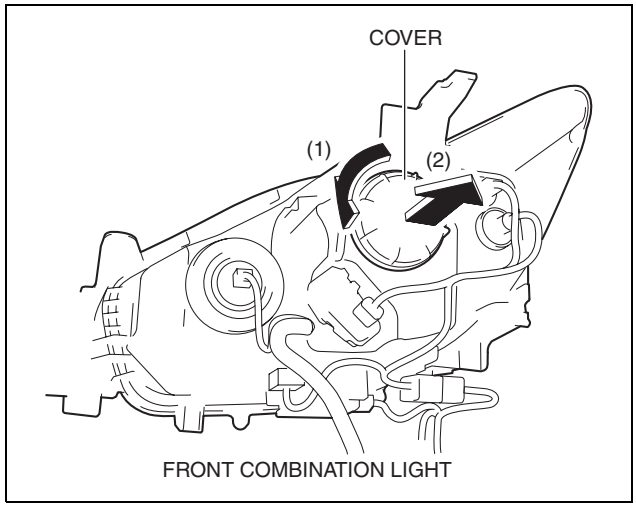

ac5wzw0000301

5. Rotate the igniter in the direction of the arrow (3) shown in the figure and remove it from the front combination light in the direction of the arrow (4) shown in the figure.

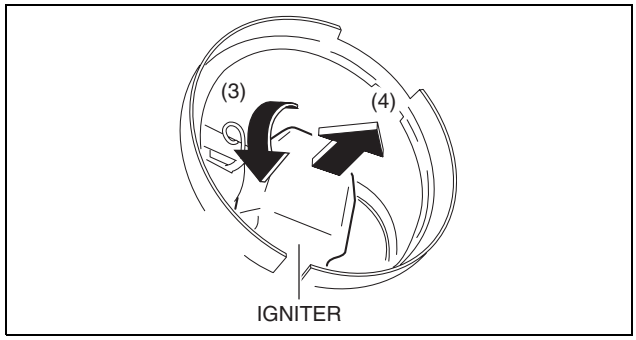

ac5wzw0000301

LIGHTING SYSTEMS

6. Insert the flathead screwdriver into the gap between the igniter and connector shown in the figure.

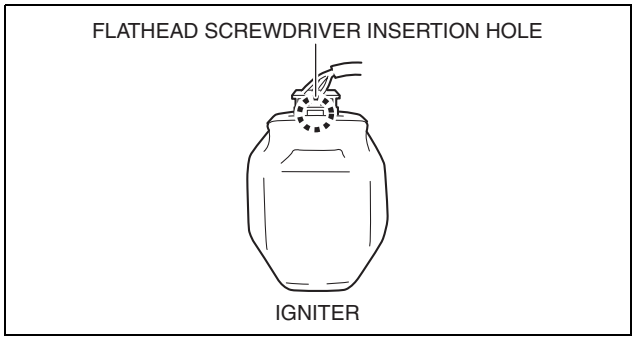

ac5wzw0000121

7. Move the flathead screwdriver in the direction of the arrow (5) shown in the figure, lift up the connector, and disconnect it.
8. Install in the reverse order of removal.

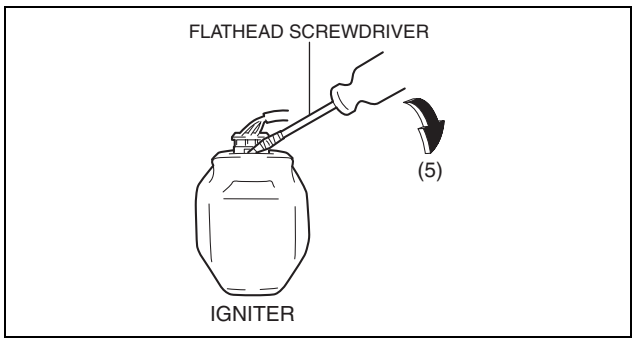

ac5wzw0000083

ADAPTIVE FRONT LIGHTING SYSTEM (AFS) CONTROL MODULE REMOVAL/INSTALLATION

id091800112300

Note
- The AFS control module prior to replacement stores the vehicle specification information.
- A new AFS control module does not store any vehicle specification information.
- When the ignition is switched ON after the AFS control module is replaced, the AFS control module reads the vehicle specification information sent via CAN transmission from the instrument cluster using the automatic configuration function, and stores it.
- The AFS control module records the vehicle height while it is unoccupied.
- The new AFS control module does not record the vehicle height while it is unoccupied.

1. Disconnect the negative battery cable. (See 01-17A-13 NEGATIVE BATTERY CABLE DISCONNECTION/CONNECTION [SKYACTIV-G 2.0 (WITHOUT i-stop)].) (See 01-17A-11 NEGATIVE BATTERY CABLE DISCONNECTION/CONNECTION [SKYACTIV-G 2.0].) (See 01-17B-9 NEGATIVE BATTERY CABLE DISCONNECTION/CONNECTION [SKYACTIV-D 2.2].)
2. Remove the front scuff plate (LH). (See 09-17-61 FRONT SCUFF PLATE REMOVAL/INSTALLATION.)
3. Remove the front side trim (LH). (See 09-17-62 FRONT SIDE TRIM REMOVAL/INSTALLATION.)
4. While pressing the clip tab in the direction of arrows (1) shown in the figure, press the clip in the direction of arrow (2) to detach the clip tab and the bracket.

Note
- Because the AFS control module cannot be removed with the clip installed to the bracket, remove the clip from the bracket to allow for a margin length in the wiring harness.

LIGHTING SYSTEMS

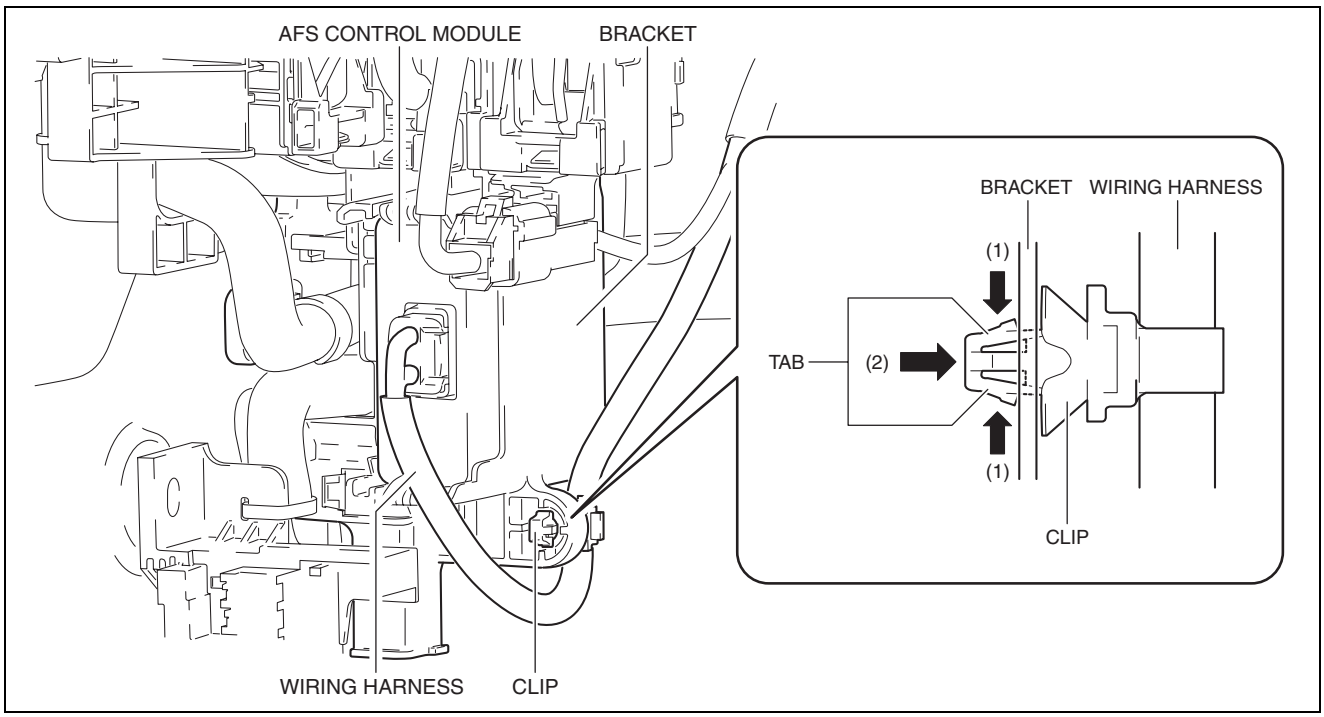

ac5wzw0000120

5. Remove the clip.
6. While pressing the bracket tab in the direction of the arrows (3) shown in the figure using a tape-wrapped flathead screwdriver, hold the connector, pull out the AFS control module in the direction of the arrow (4) shown in the figure to detach the bracket tab and AFS control module.

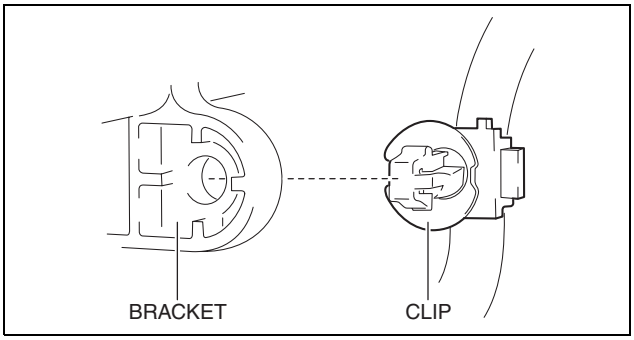

ac5wzw0000049

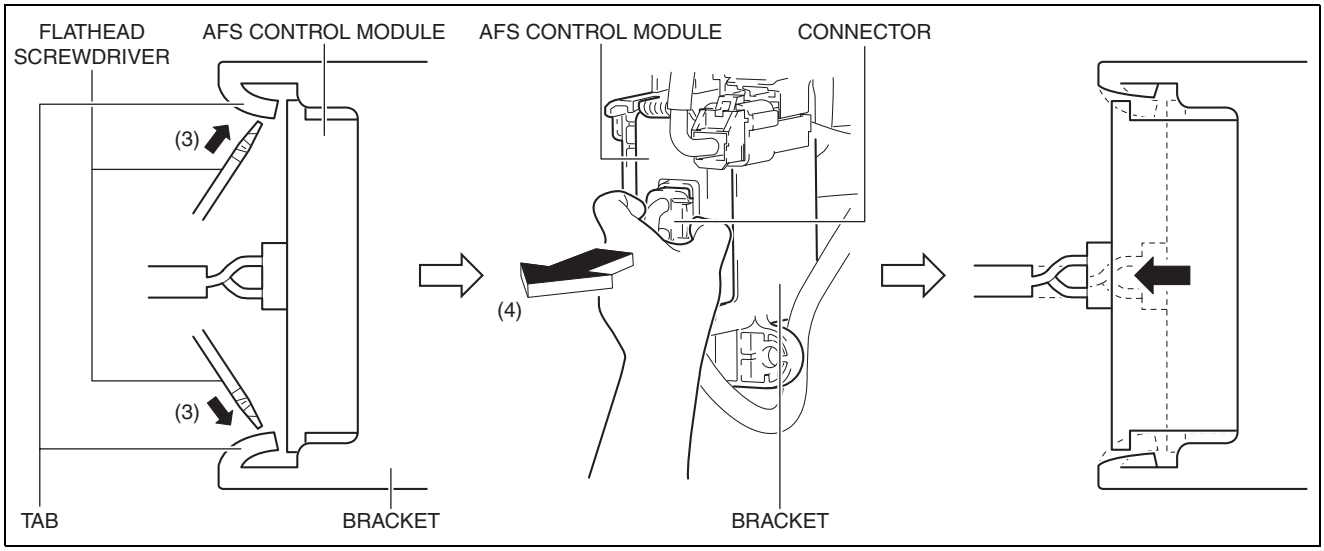

ac5wzw0000006

LIGHTING SYSTEMS

7. Remove the AFS control module.

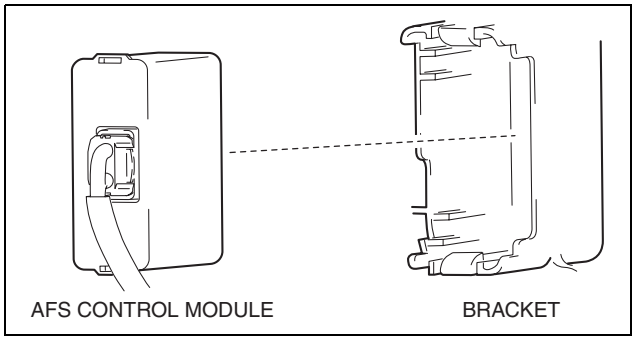

ac5wzw0000049

8. Disconnect the connector.
9. Install in the reverse order of removal.
10. Switch the ignition ON (engine off or on) and perform the AFS control module automatic configuration.
11. Clear the DTCs.
12. If the AFS control module is replaced with a new one, perform the auto leveling system initial setting. (See 09-18-82 HEADLIGHT AUTO LEVELING SYSTEM INITIALIZATION.)

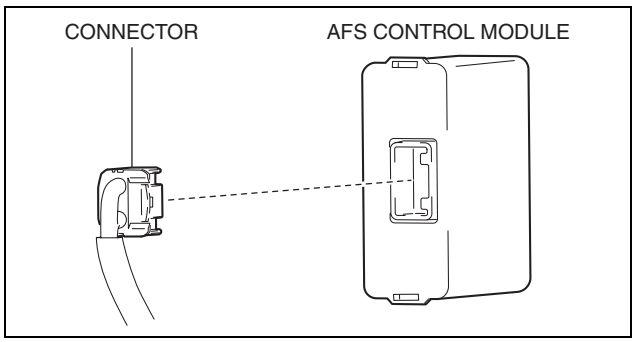

ac5wzw0000006

ADAPTIVE FRONT LIGHTING SYSTEM (AFS) OFF SWITCH REMOVAL/INSTALLATION

id091800112400

Note
- The AFS OFF switch is integrated with the cluster switch.
- For the cluster switch removal/installation, refer to “SWITCH PANEL REMOVAL/INSTALLATION” because the cluster switch is installed to the switch panel. (See 09-17-18 SWITCH PANEL REMOVAL/INSTALLATION.)

ADAPTIVE FRONT LIGHTING SYSTEM (AFS) OFF SWITCH INSPECTION

id091800112500

1. Disconnect the negative battery cable. (See 01-17A-13 NEGATIVE BATTERY CABLE DISCONNECTION/CONNECTION [SKYACTIV-G 2.0 (WITHOUT i-stop)].) (See 01-17A-11 NEGATIVE BATTERY CABLE DISCONNECTION/CONNECTION [SKYACTIV-G 2.0].) (See 01-17B-9 NEGATIVE BATTERY CABLE DISCONNECTION/CONNECTION [SKYACTIV-D 2.2].)
2. Remove the switch panel. (See 09-17-18 SWITCH PANEL REMOVAL/INSTALLATION.)
3. Verify that the resistance between AFS OFF switches B and C is as indicated in the table.

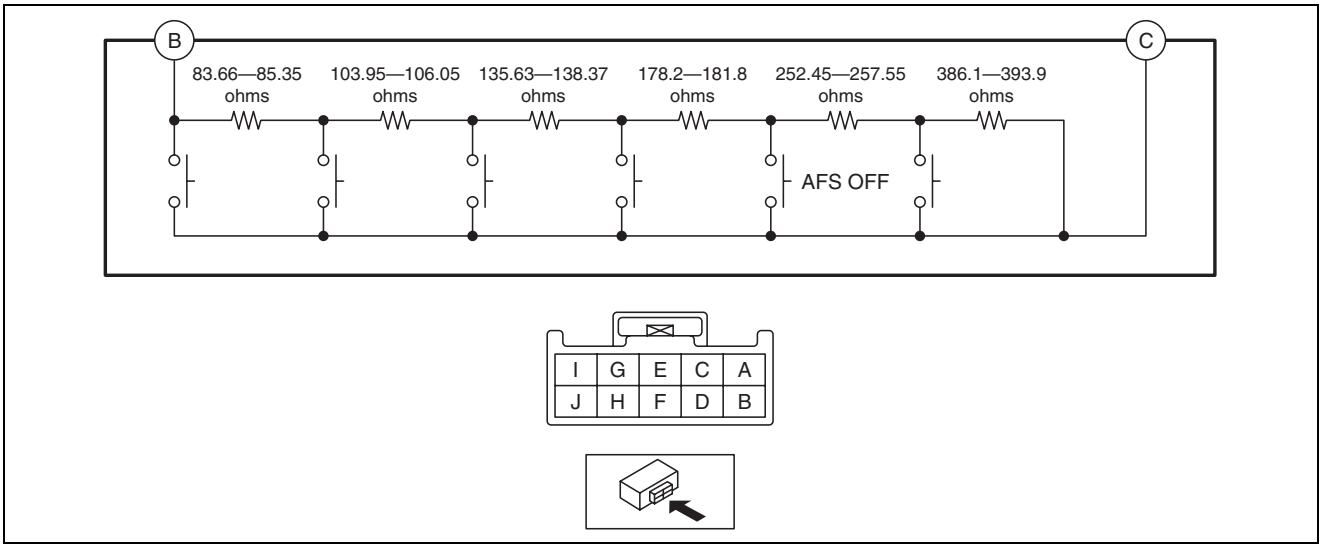

ac5wzw0000300

LIGHTING SYSTEMS

- If the resistance can be verified as indicated in the table, go to the next step.
- If not as indicated in the table, replace the cluster switch.

Test condition	Resistance (ohms)
AFS OFF switch pressed	501.44—511.57
All switches released	1,139.99—1,163.02

ac5wzw0000300

4. Apply battery positive voltage to AFS OFF switch terminal J, and connect terminal I to ground.
5. Verify that the LED illuminates.
   - If the LED does not illuminate, replace the cluster switch.

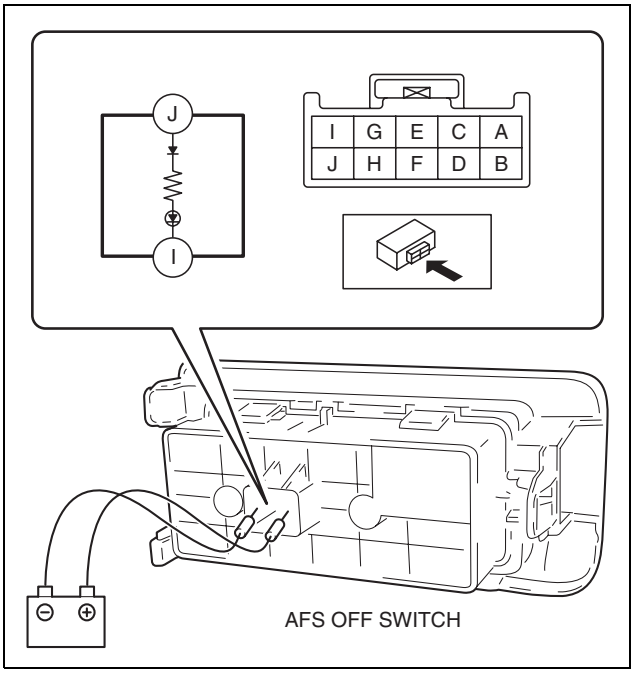

ac5wzw0000011

STEERING ANGLE SENSOR REMOVAL/INSTALLATION

id091800813600

Note

- If the steering angle sensor is removed from the clock spring, the steering angle sensor absolute angle could change, therefore, do not remove the steering angle sensor from the clock spring.
- If the steering angle sensor is replaced, replace it together with the clock spring. (See 08-10-24 CLOCK SPRING REMOVAL/INSTALLATION.)

STEERING ANGLE SENSOR INSPECTION

id091800813400

1. Remove the column cover. (See 09-17-25 COLUMN COVER REMOVAL/INSTALLATION.)
2. Connect a tester to steering angle sensor terminal A and B (ground).
3. Switch the ignition ON (engine off or on).
4. Turn the steering wheel to the left and right.

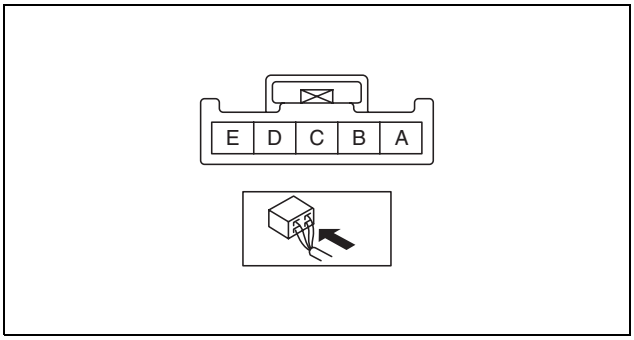

ac5wzw0000084

LIGHTING SYSTEMS

5. Verify that the voltage from steering angle sensor terminal A to B (ground) is as indicated in the table.

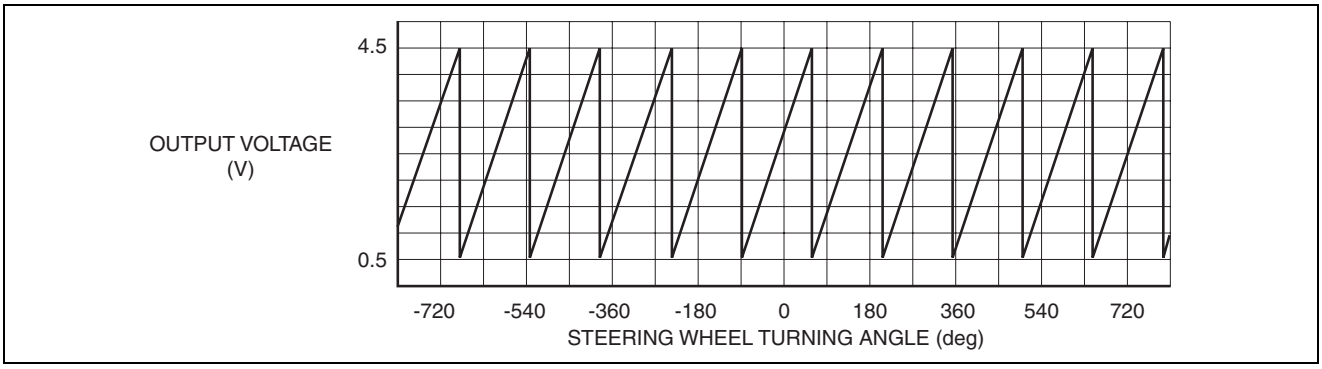

ac5wzw0000300

- If the voltage can be verified as indicated in the table, go to the next step.
- If the voltage is not as indicated in the table, replace the clock spring. (See 08-10-24 CLOCK SPRING REMOVAL/INSTALLATION.)

6. Switch the ignition to off.
7. Connect a tester to steering angle sensor terminal C and B (ground).
8. Switch the ignition ON (engine off or on).
9. Turn the steering wheel to the left and right.
10. Verify that the voltage from steering angle sensor terminal C to B (ground) is as indicated in the table.

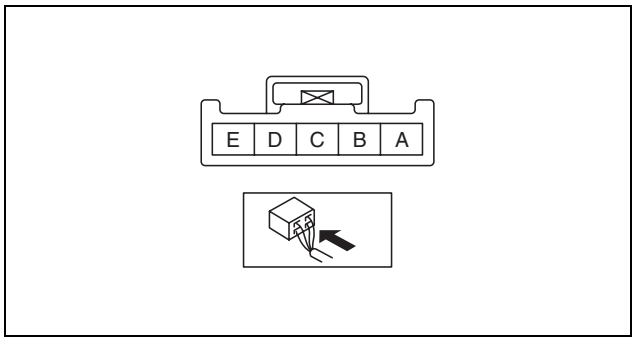

ac5wzw0000084

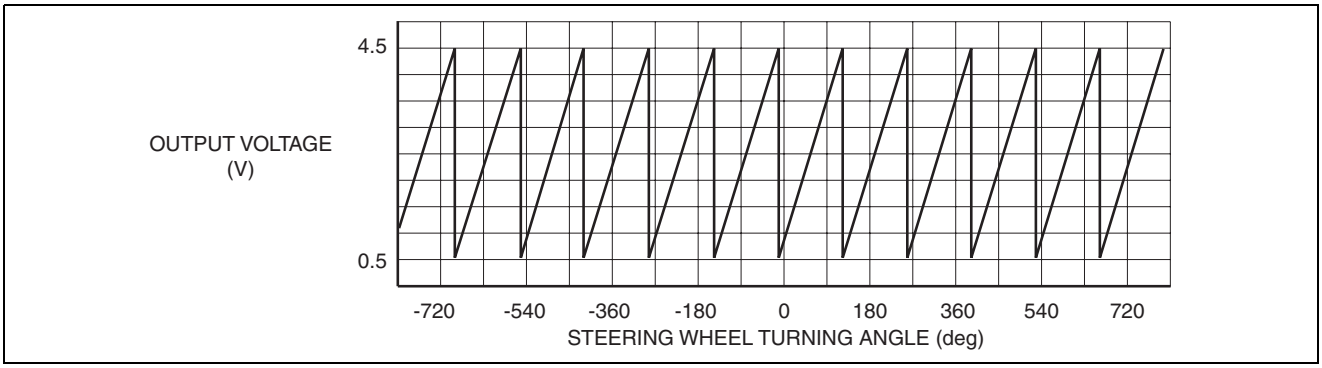

ac5wzw0000301

- If the voltage is not as indicated in the table, replace the clock spring. (See 08-10-24 CLOCK SPRING REMOVAL/INSTALLATION.)

HEADLIGHT LEVELING ACTUATOR INSPECTION

id091800809700

Note

- The headlight leveling actuator is integrated in the front combination light.
- For the actuator inspection of the headlight auto leveling system, perform the headlight leveling actuator operation check mode. (See 09-02D-41 HEADLIGHT LEVELING ACTUATOR OPERATION CHECK MODE [ADAPTIVE FRONT LIGHTING SYSTEM (AFS)].)

1. Verify that the voltages of each of the terminals are as indicated in the terminal voltage table.
   - If the voltage is not as indicated in the table, inspect the parts under Inspection item(s).
     - — If the system does not work normally even though the parts or related wiring harnesses do not have any malfunction, replace the front combination light. (See 09-18-7 FRONT COMBINATION LIGHT REMOVAL/INSTALLATION.)

LIGHTING SYSTEMS

Terminal Voltage List (Reference)

FRONT COMBINATION LIGHT
WIRING HARNESS-SIDE CONNECTOR

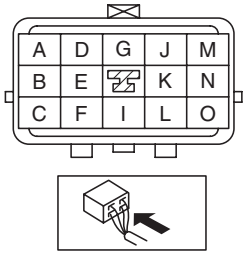

ac5wzw0000004

Terminal	Signal	Connection	Test condition		Voltage (V)	Inspection item (s)
F	Headlight leveling actuator signal	Headlight leveling switch	Light switch at HEAD position	Headlight leveling switch position 0	Approx. 10.1	• Headlight leveling switch (See 09-18-92 HEADLIGHT LEVELING SWITCH INSPECTION.) • Related wiring harness
				Headlight leveling switch position -	Approx. 9.4	
				Headlight leveling switch position 1	Approx. 8.7	
				Headlight leveling switch position -	Approx. 7.9	
				Headlight leveling switch position 2	Approx. 7.2	
				Headlight leveling switch position -	Approx. 6.5	
				Headlight leveling switch position 3	Approx. 5.8	
				Headlight leveling switch position -	Approx. 5.1	
				Headlight leveling switch position 4	Approx. 4.4	
				Headlight leveling switch position -	Approx. 3.6	
				Headlight leveling switch position 5	Approx. 2.9	
I	Headlight leveling actuator power supply	Headlight relay (LO)	Light switch at HEAD position		B+	• Headlight relay (LO) (See 09-21-29 RELAY INSPECTION.) • Related wiring harness
			Light switch at OFF position		1.0 or less	
L	Ground	• Headlight leveling switch • Body ground	Under any condition		1.0 or less	• Headlight leveling switch (See 09-18-92 HEADLIGHT LEVELING SWITCH INSPECTION.) • Related wiring harness

LIGHTING SYSTEMS

PARKING LIGHT BULB REMOVAL/INSTALLATION

id091800804200

Halogen Type

1. Disconnect the negative battery cable. (See 01-17A-13 NEGATIVE BATTERY CABLE DISCONNECTION/CONNECTION [SKYACTIV-G 2.0 (WITHOUT i-stop)].) (See 01-17A-11 NEGATIVE BATTERY CABLE DISCONNECTION/CONNECTION [SKYACTIV-G 2.0].) (See 01-17B-9 NEGATIVE BATTERY CABLE DISCONNECTION/CONNECTION [SKYACTIV-D 2.2].)
2. Rotate the socket in the direction of the arrow (1) shown in the figure and remove it from the front combination light in the direction of the arrow (2) shown in the figure.

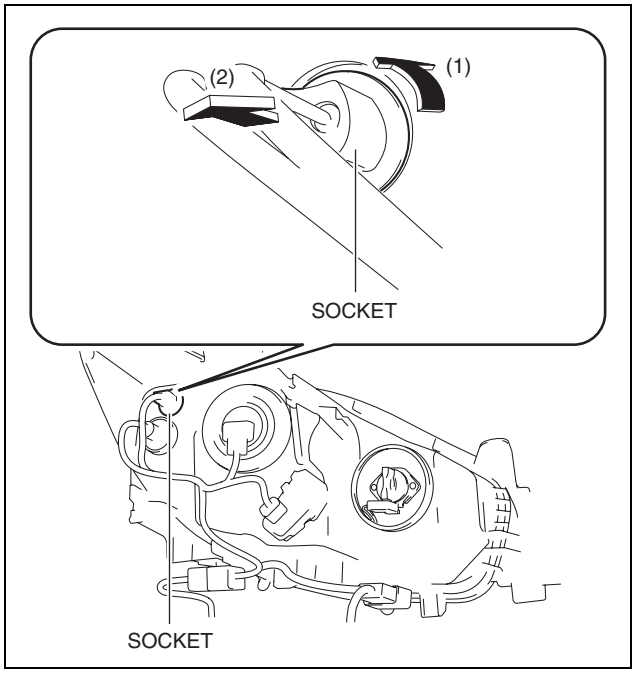

ac5wzw0000210

3. Remove the parking light bulb.
4. Install in the reverse order of removal.

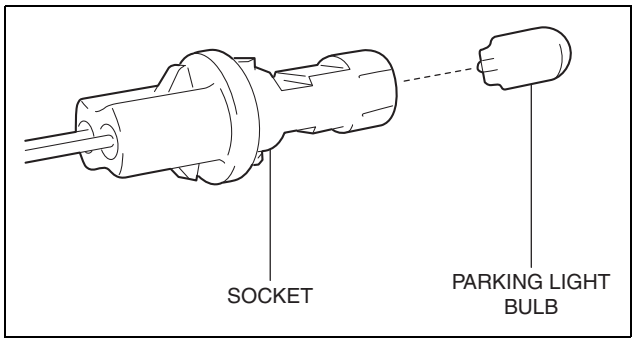

ac5wzw0000045

Discharge Type

Parking light bulb (LH)

1. Disconnect the negative battery cable. (See 01-17A-13 NEGATIVE BATTERY CABLE DISCONNECTION/CONNECTION [SKYACTIV-G 2.0 (WITHOUT i-stop)].) (See 01-17A-11 NEGATIVE BATTERY CABLE DISCONNECTION/CONNECTION [SKYACTIV-G 2.0].) (See 01-17B-9 NEGATIVE BATTERY CABLE DISCONNECTION/CONNECTION [SKYACTIV-D 2.2].)
2. Remove the air cleaner cover. (See 01-13A-6 INTAKE-AIR SYSTEM REMOVAL/INSTALLATION [SKYACTIV-G 2.0].) (See 01-13B-6 INTAKE-AIR SYSTEM REMOVAL/INSTALLATION [SKYACTIV-D 2.2].)
3. Remove the relay and fuse block upper cover. (See 09-21-3 RELAY AND FUSE BLOCK REMOVAL/INSTALLATION.)

LIGHTING SYSTEMS

4. Remove the nut and screw.

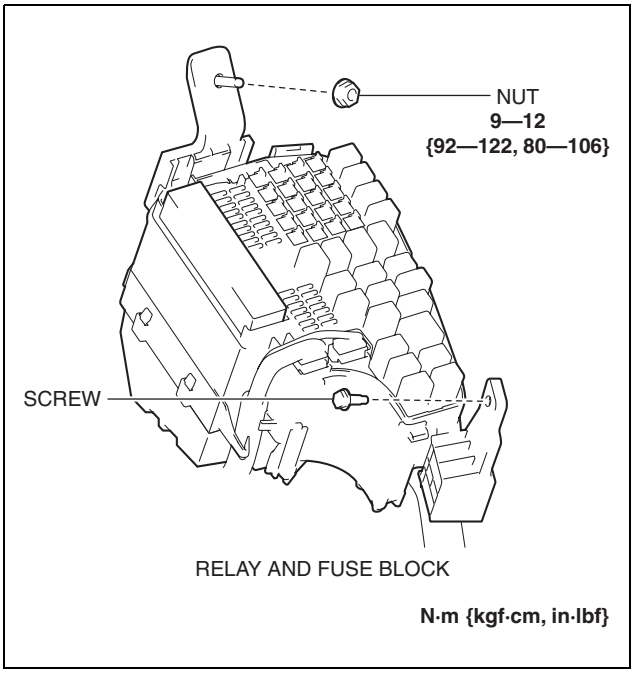

ac5wzw0000118

5. Insert a tape-wrapped flathead screwdriver into the service hole in the position shown in the figure.

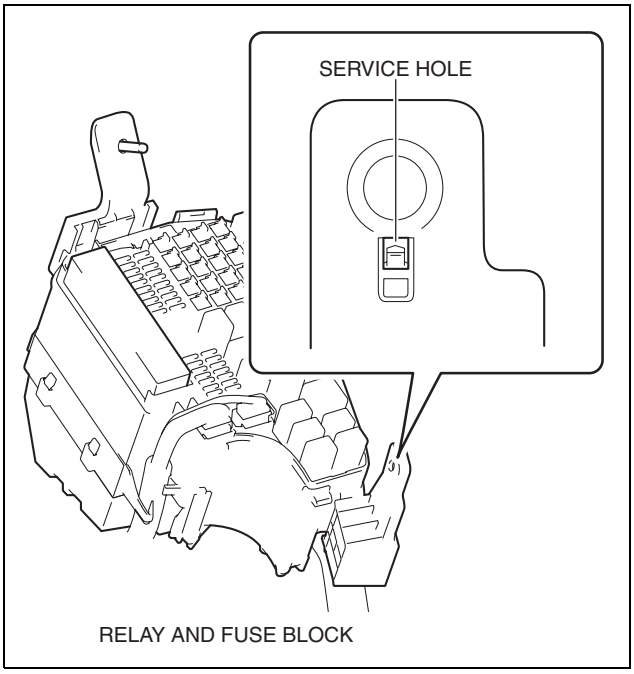

ac5wzw0000040

6. While pressing the pin tab in the direction of the arrow (1) shown in the figure using a flathead screwdriver, pull the pin in the direction of the arrow (2) shown in the figure to detach the pin tab and engine mount.

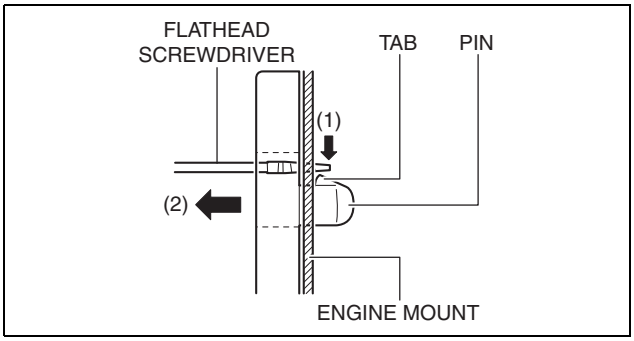

ac5wzw0000118

LIGHTING SYSTEMS

7. Pull out the relay and fuse block from the stud bolt and set it aside as shown in the figure.

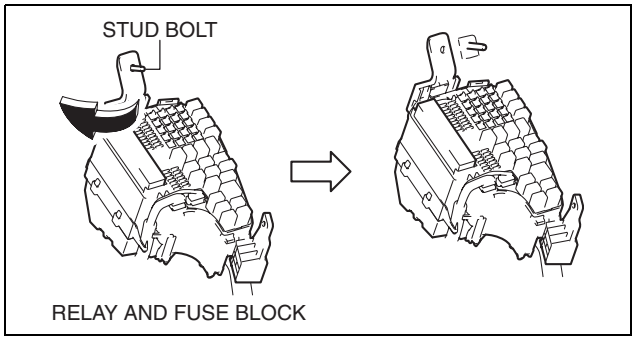

ac5wzw0000040

8. Rotate the socket in the direction of the arrow (3) shown in the figure and remove it from the front combination light in the direction of the arrow (4) shown in the figure.

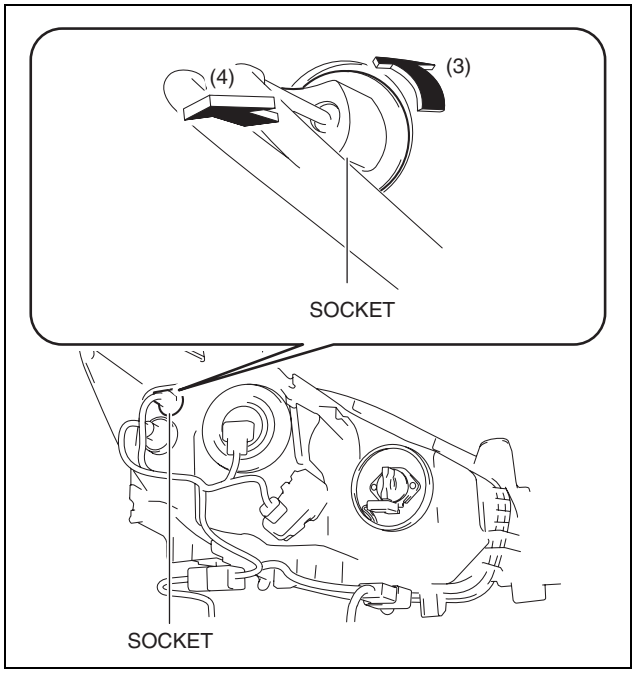

ac5wzw0000171

9. Remove the parking light bulb.
10. Install in the reverse order of removal.

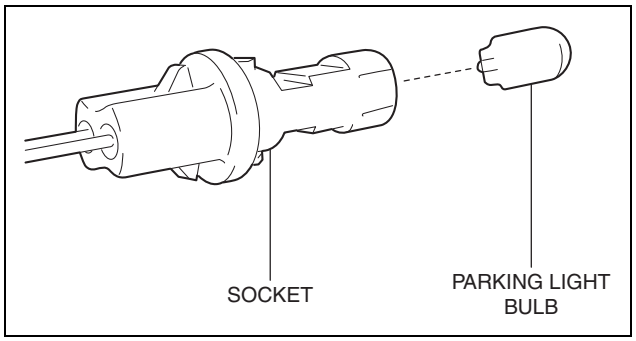

ac5wzw0000045

Parking light bulb (RH)

1. Disconnect the negative battery cable. (See 01-17A-13 NEGATIVE BATTERY CABLE DISCONNECTION/CONNECTION [SKYACTIV-G 2.0 (WITHOUT i-stop)].) (See 01-17A-11 NEGATIVE BATTERY CABLE DISCONNECTION/CONNECTION [SKYACTIV-G 2.0].) (See 01-17B-9 NEGATIVE BATTERY CABLE DISCONNECTION/CONNECTION [SKYACTIV-D 2.2].)
2. Remove the PCM bracket. (SKYACTIV-D 2.2)
3. Remove the washer tank bracket. (See 09-19-16 WASHER TANK REMOVAL/INSTALLATION.)

4. Rotate the socket in the direction of the arrow (1) shown in the figure and remove it from the front combination light in the direction of the arrow (2) shown in the figure.

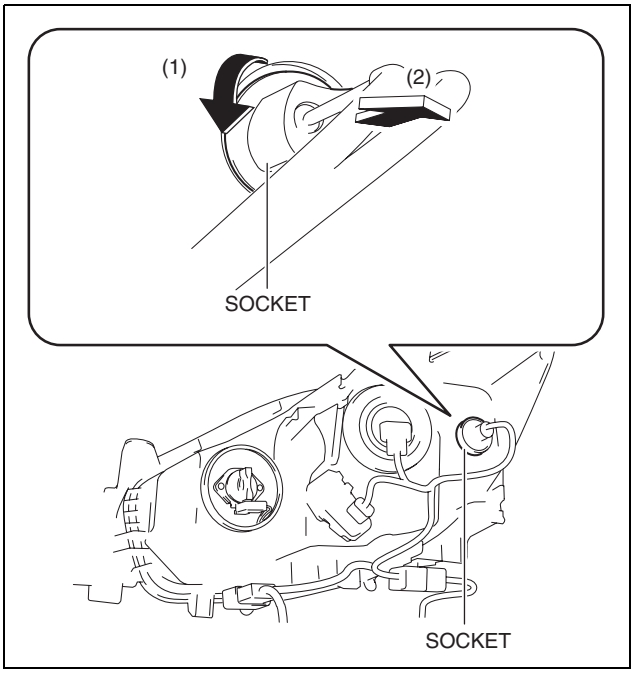

ac5wzw0000211

5. Remove the parking light bulb.
6. Install in the reverse order of removal.

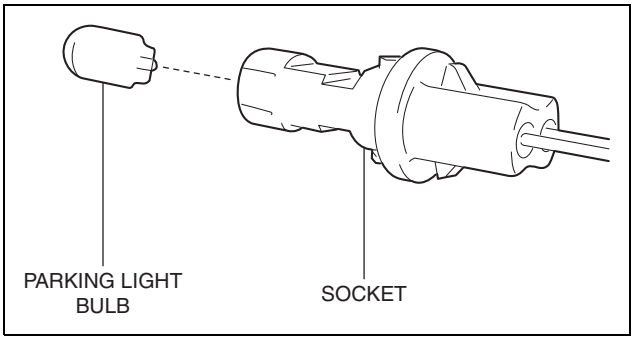

ac5wzw0000171

FRONT TURN LIGHT BULB REMOVAL/INSTALLATION

id091800805000

Halogen Type

1. Disconnect the negative battery cable. (See 01-17A-13 NEGATIVE BATTERY CABLE DISCONNECTION/CONNECTION [SKYACTIV-G 2.0 (WITHOUT i-stop)].) (See 01-17A-11 NEGATIVE BATTERY CABLE DISCONNECTION/CONNECTION [SKYACTIV-G 2.0].) (See 01-17B-9 NEGATIVE BATTERY CABLE DISCONNECTION/CONNECTION [SKYACTIV-D 2.2].)

LIGHTING SYSTEMS

2. Rotate the socket in the direction of the arrow (1) shown in the figure and remove it from the front combination light in the direction of the arrow (2) shown in the figure.

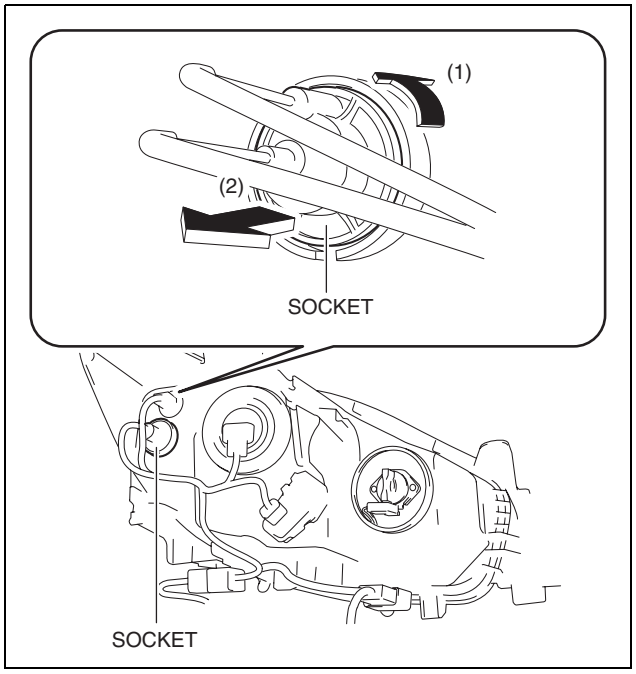

ac5wzw0000211

3. Remove the front turn light bulb.

Caution
- **A halogen bulb generates extremely high heat when it is illuminated. If the surface of the bulb is soiled, excessive heat will build up and the life of the bulb will be shortened. When replacing the bulb, hold the metal flange, not the glass.**

4. Install in the reverse order of removal.

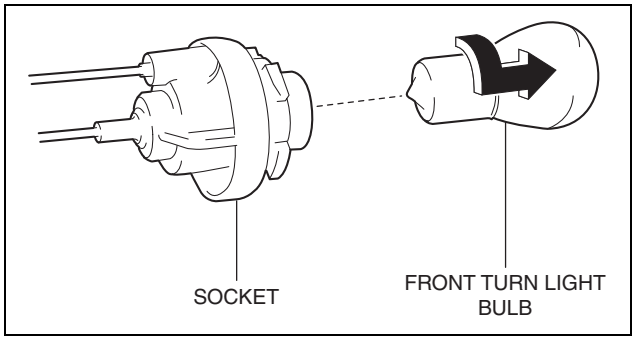

ac5wzw0000302

Discharge Type
Front turn light bulb (LH)

1. Disconnect the negative battery cable. (See 01-17A-13 NEGATIVE BATTERY CABLE DISCONNECTION/CONNECTION [SKYACTIV-G 2.0 (WITHOUT i-stop)].) (See 01-17A-11 NEGATIVE BATTERY CABLE DISCONNECTION/CONNECTION [SKYACTIV-G 2.0].) (See 01-17B-9 NEGATIVE BATTERY CABLE DISCONNECTION/CONNECTION [SKYACTIV-D 2.2].)
2. Remove the air cleaner cover. (See 01-13A-6 INTAKE-AIR SYSTEM REMOVAL/INSTALLATION [SKYACTIV-G 2.0].) (See 01-13B-6 INTAKE-AIR SYSTEM REMOVAL/INSTALLATION [SKYACTIV-D 2.2].)
3. Remove the relay and fuse block upper cover. (See 09-21-3 RELAY AND FUSE BLOCK REMOVAL/INSTALLATION.)

LIGHTING SYSTEMS

4. Remove the nut and screw.

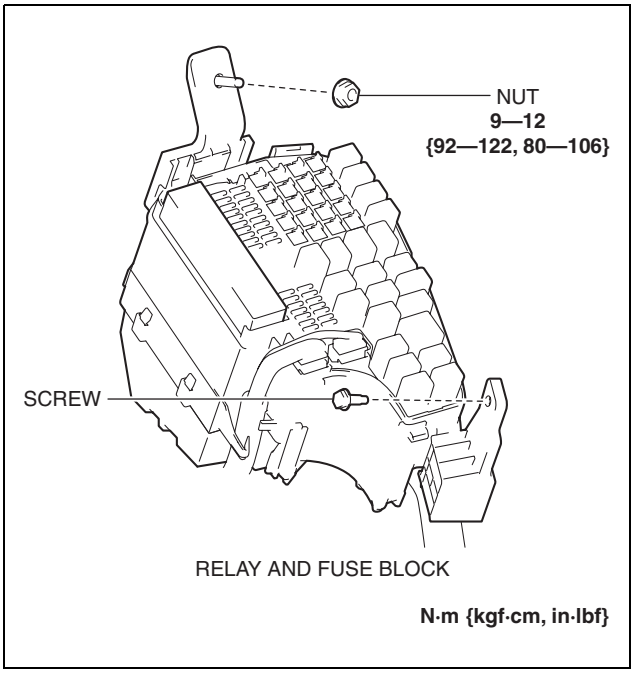

ac5wzw0000118

5. Insert a tape-wrapped flathead screwdriver into the service hole in the position shown in the figure.

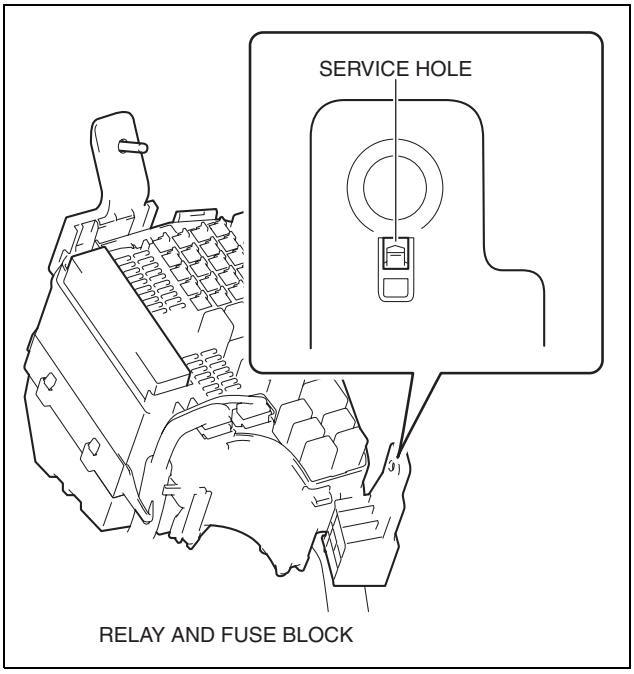

ac5wzw0000040

6. While pressing the pin tab in the direction of the arrow (1) shown in the figure using a flathead screwdriver, pull the pin in the direction of the arrow (2) shown in the figure to detach the pin tab and engine mount.

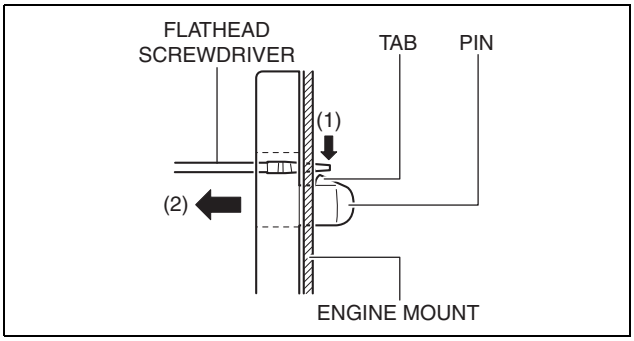

ac5wzw0000118

LIGHTING SYSTEMS

7. Pull out the relay and fuse block from the stud bolt and set it aside as shown in the figure.

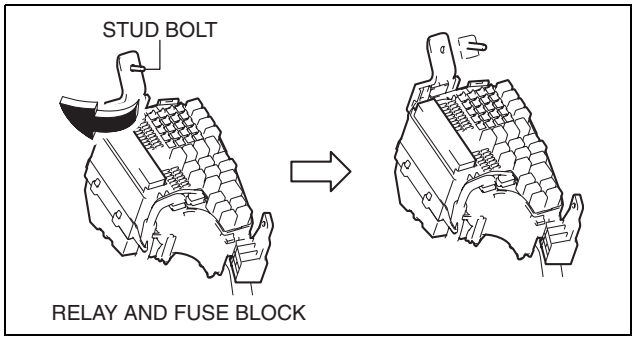

ac5wzw0000040

8. Rotate the socket in the direction of the arrow (3) shown in the figure and remove it from the front combination light in the direction of the arrow (4) shown in the figure.

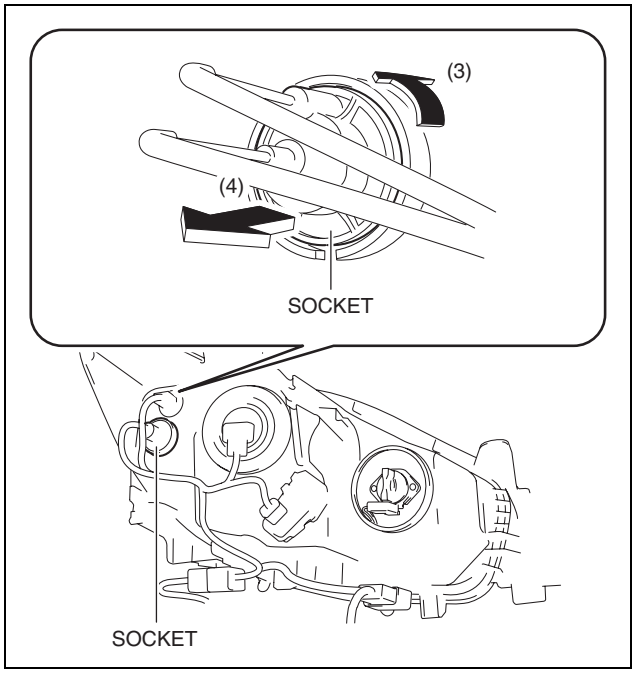

ac5wzw0000171

9. Remove the front turn light bulb.

Caution
- **A halogen bulb generates extremely high heat when it is illuminated. If the surface of the bulb is soiled, excessive heat will build up and the life of the bulb will be shortened. When replacing the bulb, hold the metal flange, not the glass.**

10. Install in the reverse order of removal.

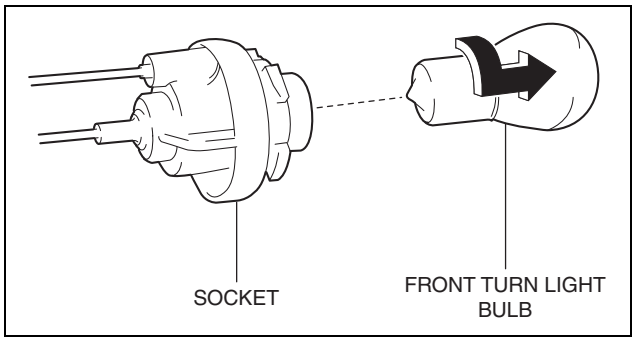

ac5wzw0000302

Front turn light bulb (RH)
1. Disconnect the negative battery cable. (See 01-17A-13 NEGATIVE BATTERY CABLE DISCONNECTION/CONNECTION [SKYACTIV-G 2.0 (WITHOUT i-stop)].) (See 01-17A-11 NEGATIVE BATTERY CABLE DISCONNECTION/CONNECTION [SKYACTIV-G 2.0].) (See 01-17B-9 NEGATIVE BATTERY CABLE DISCONNECTION/CONNECTION [SKYACTIV-D 2.2].)
2. Remove the PCM bracket. (SKYACTIV-D 2.2)
3. Remove the washer tank bracket. (See 09-19-16 WASHER TANK REMOVAL/INSTALLATION.)

4. Rotate the socket in the direction of the arrow (1) shown in the figure and remove it from the front combination light in the direction of the arrow (2) shown in the figure.

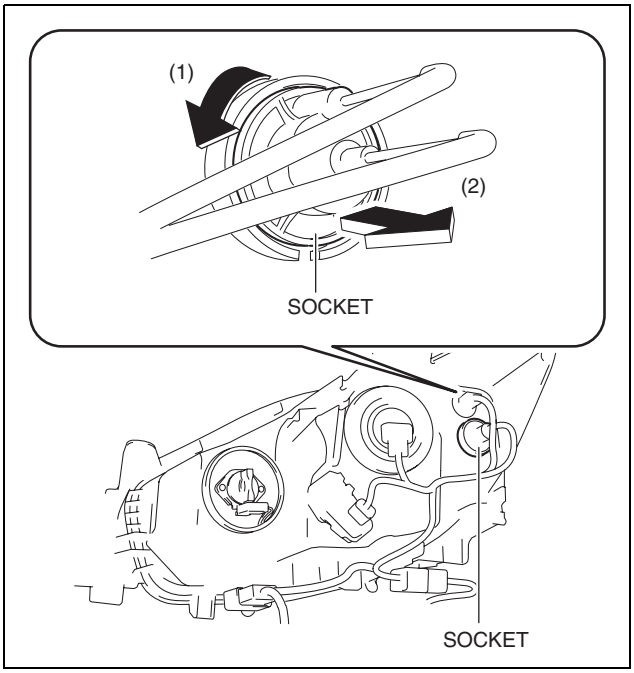

ac5wzw0000211

5. Remove the front turn light bulb.

Caution

- **A halogen bulb generates extremely high heat when it is illuminated. If the surface of the bulb is soiled, excessive heat will build up and the life of the bulb will be shortened. When replacing the bulb, hold the metal flange, not the glass.**

6. Install in the reverse order of removal.

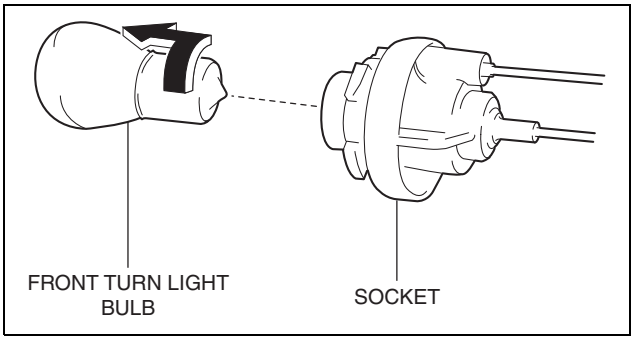

ac5wzw0000171

FRONT FOG LIGHT REMOVAL/INSTALLATION

id091800802100

1. Disconnect the negative battery cable. (See 01-17A-13 NEGATIVE BATTERY CABLE DISCONNECTION/CONNECTION [SKYACTIV-G 2.0 (WITHOUT i-stop)].) (See 01-17A-11 NEGATIVE BATTERY CABLE DISCONNECTION/CONNECTION [SKYACTIV-G 2.0].) (See 01-17B-9 NEGATIVE BATTERY CABLE DISCONNECTION/CONNECTION [SKYACTIV-D 2.2].)

LIGHTING SYSTEMS

2. Remove the screws and bolt.

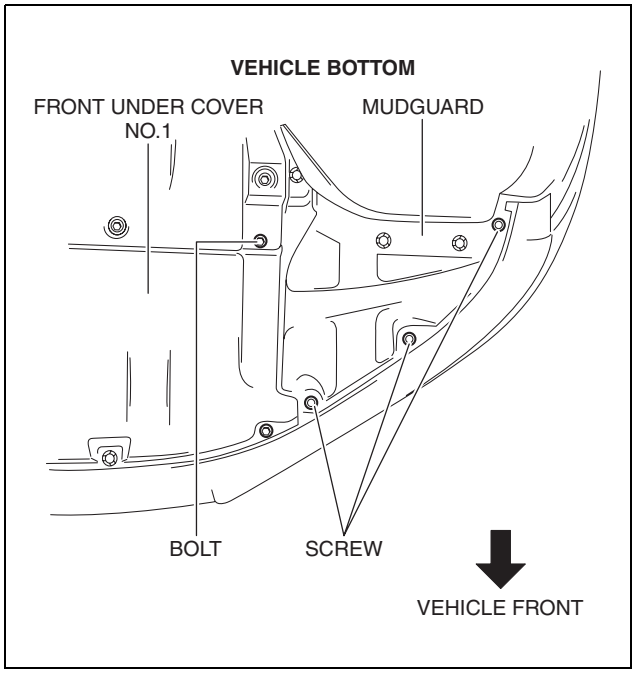

ac5wzw0000119

3. Pull up the front under cover No.1 and remove the mudguard screw shown in the figure.

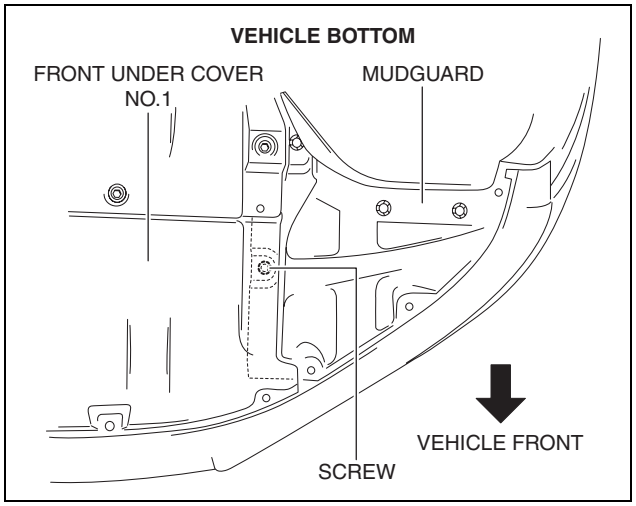

ac5wzw0000119

4. Disconnect the connector.

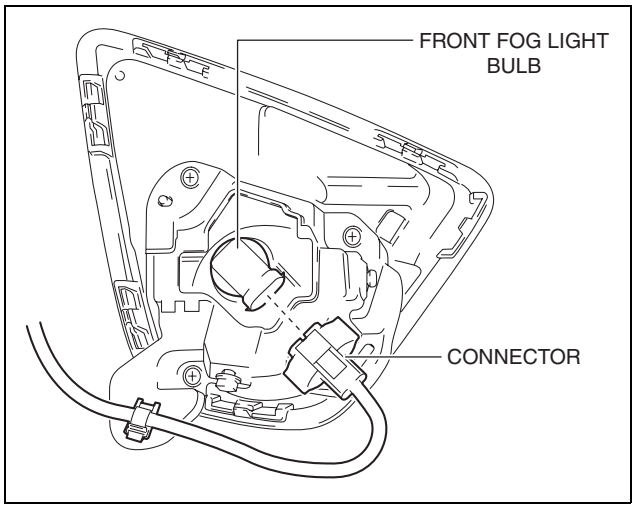

ac5wzw0000043

LIGHTING SYSTEMS

5. While pressing the clip tab in the direction of the arrow (1) shown in the figure, press the clip in the direction of the arrow (2) shown in the figure to detach the clip tab and bracket (vehicles without parking sensor system on LH side).

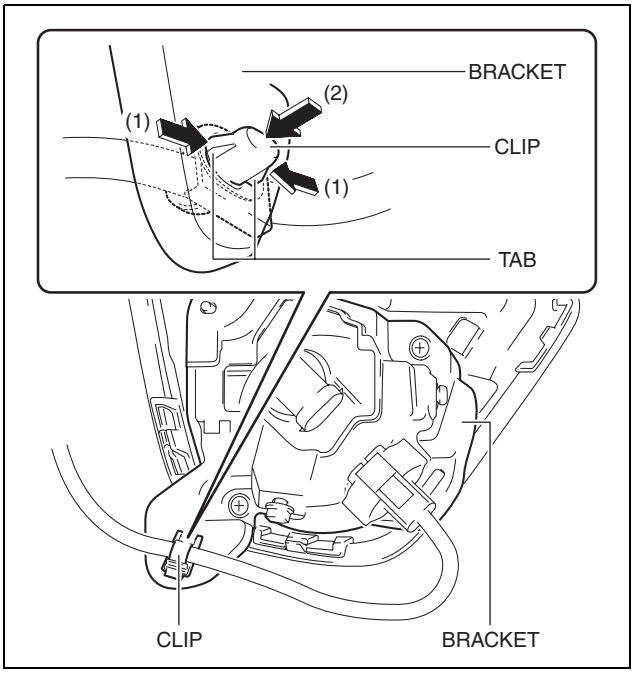

ac5wzw0000081

6. Remove the clip.

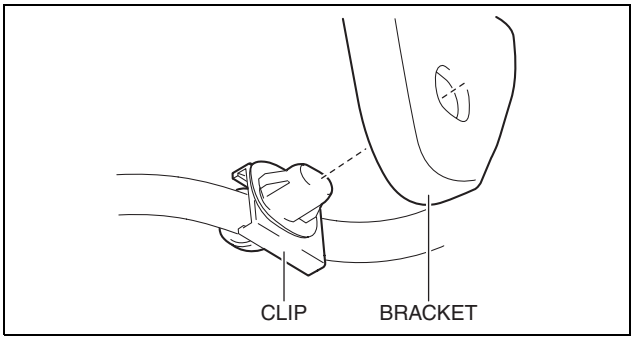

ac5wzw0000043

7. Remove the screws.

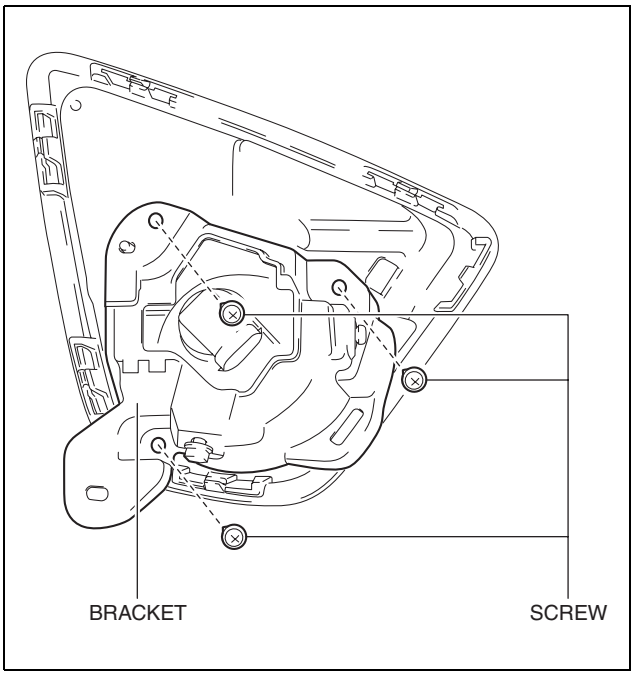

ac5wzw0000016

LIGHTING SYSTEMS

8. Remove the front fog light and bracket.

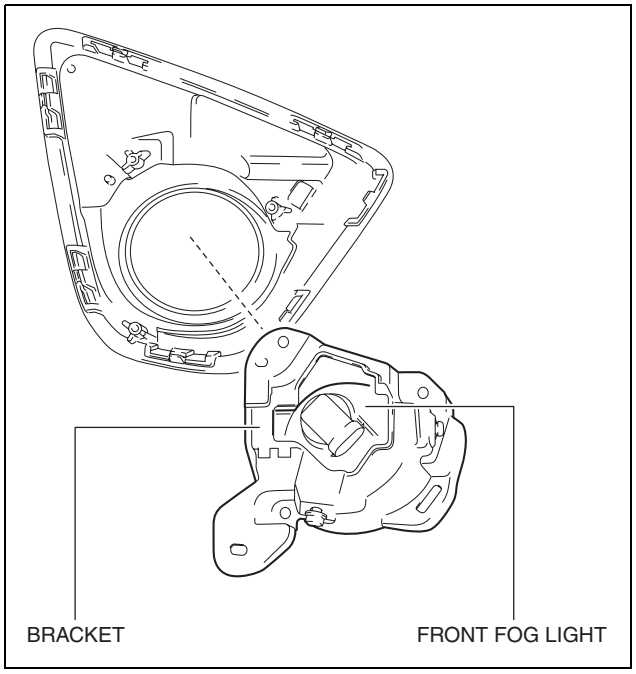

ac5wzw0000043

9. Remove the bolt and screw.

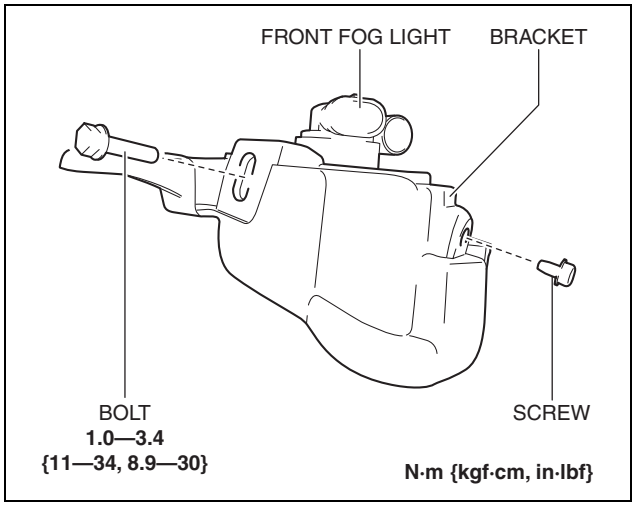

ac5wzw0000119

LIGHTING SYSTEMS

10. Remove the front fog light.

Caution
- **A halogen bulb generates extremely high heat when it is illuminated. If the surface of the bulb is soiled, excessive heat will build up and the life of the bulb will be shortened. When replacing the bulb, hold the metal flange, not the glass.**

11. Install in the reverse order of removal.
12. Adjust the front fog light aiming. (See 09-18-48 FRONT FOG LIGHT AIMING.)

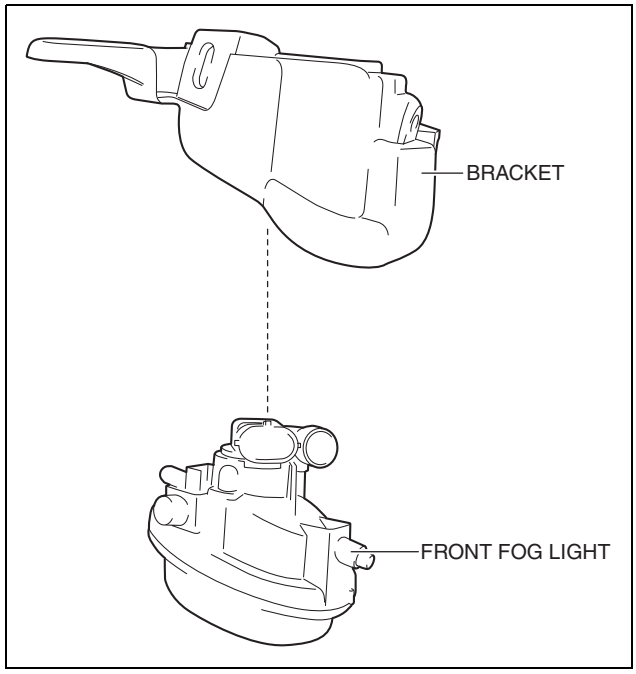

ac5wzw0000043

FRONT FOG LIGHT BULB REMOVAL/INSTALLATION

id091800802300

1. Disconnect the negative battery cable. (See 01-17A-13 NEGATIVE BATTERY CABLE DISCONNECTION/CONNECTION [SKYACTIV-G 2.0 (WITHOUT i-stop)].) (See 01-17A-11 NEGATIVE BATTERY CABLE DISCONNECTION/CONNECTION [SKYACTIV-G 2.0].) (See 01-17B-9 NEGATIVE BATTERY CABLE DISCONNECTION/CONNECTION [SKYACTIV-D 2.2].)
2. Remove the mudguard screws.

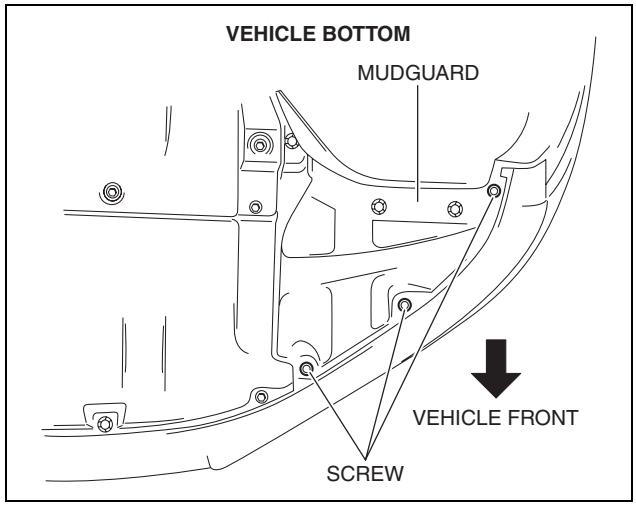

ac5wzw0000043

LIGHTING SYSTEMS

3. Disconnect the connector.

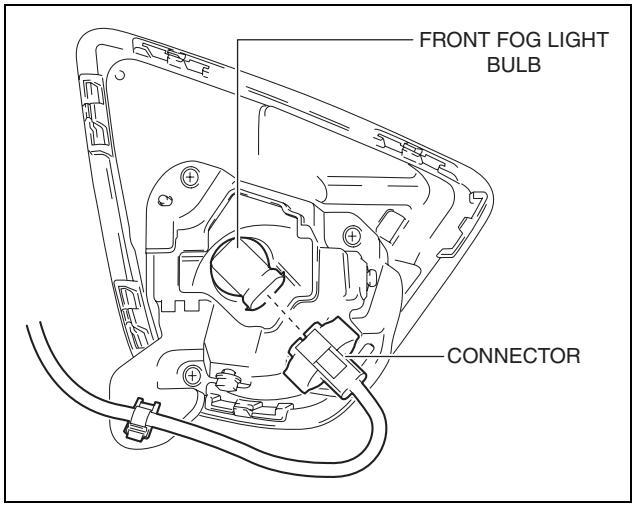

ac5wzw0000043

4. Rotate the front fog light bulb in the direction of the arrow (1) shown in the figure and remove it from the front fog light in the direction of the arrow (2) shown in the figure.

Caution
- **A halogen bulb generates extremely high heat when it is illuminated. If the surface of the bulb is soiled, excessive heat will build up and the life of the bulb will be shortened. When replacing the bulb, hold the metal flange, not the glass.**

5. Install in the reverse order of removal.

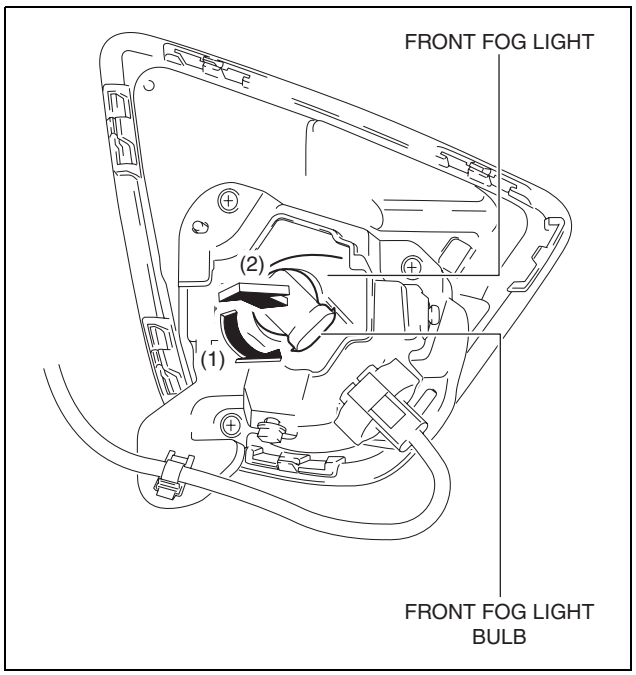

ac5wzw0000016

FRONT FOG LIGHT AIMING

id091800802200

Note
- Perform front fog light aiming if any of the following work is performed.
  - — Front fog light replacement
  - — Work that can affect vehicle height such as suspension replacement or removal/installation.

1. Empty the vehicle by having all occupants leave the vehicle and remove all the cargo except for the spare tire, jack and tools equipped on the vehicle.
2. Adjust the air pressure of each tire to the specified value. (See 02-12-1 WHEEL AND TIRE SPECIFICATION.)
3. Move the vehicle to level ground.

LIGHTING SYSTEMS

4. Make a screen shown in the figure using double-weight, white paper. (Common for right and left)
5. Line up the vehicle with the wall so that the distance to the front fog lights is **3 m {9.8 ft}** from the wall.

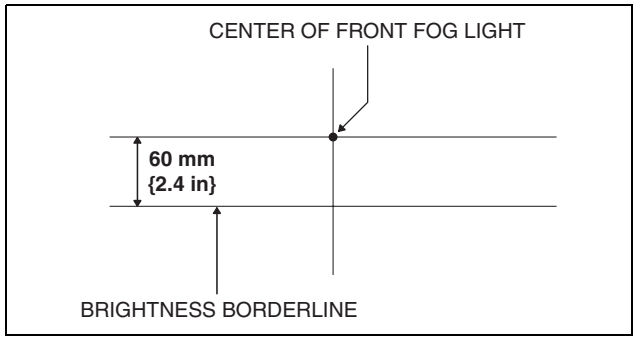

ac5wzw0000083

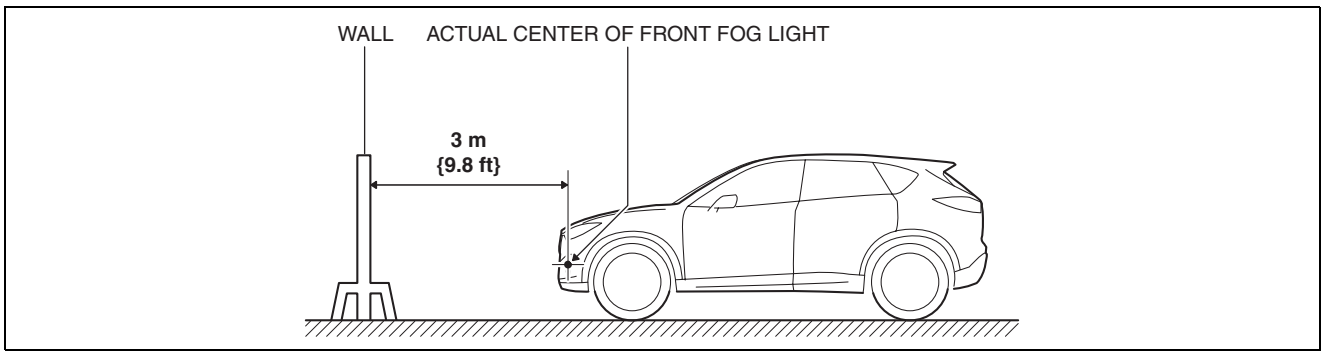

ac5wzw0000083

6. Measure the height at the center point of the front fog light.

Note

- Measure the height at the center point of the front fog light in which the aiming is being adjusted because the vehicle height differs depending on vehicle conditions.

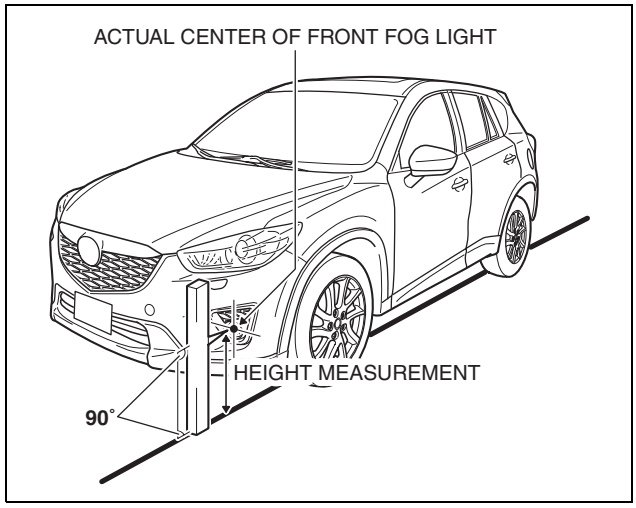

ac5wzw0000303

LIGHTING SYSTEMS

7. Align the center point of the front fog light with the center of the screen.

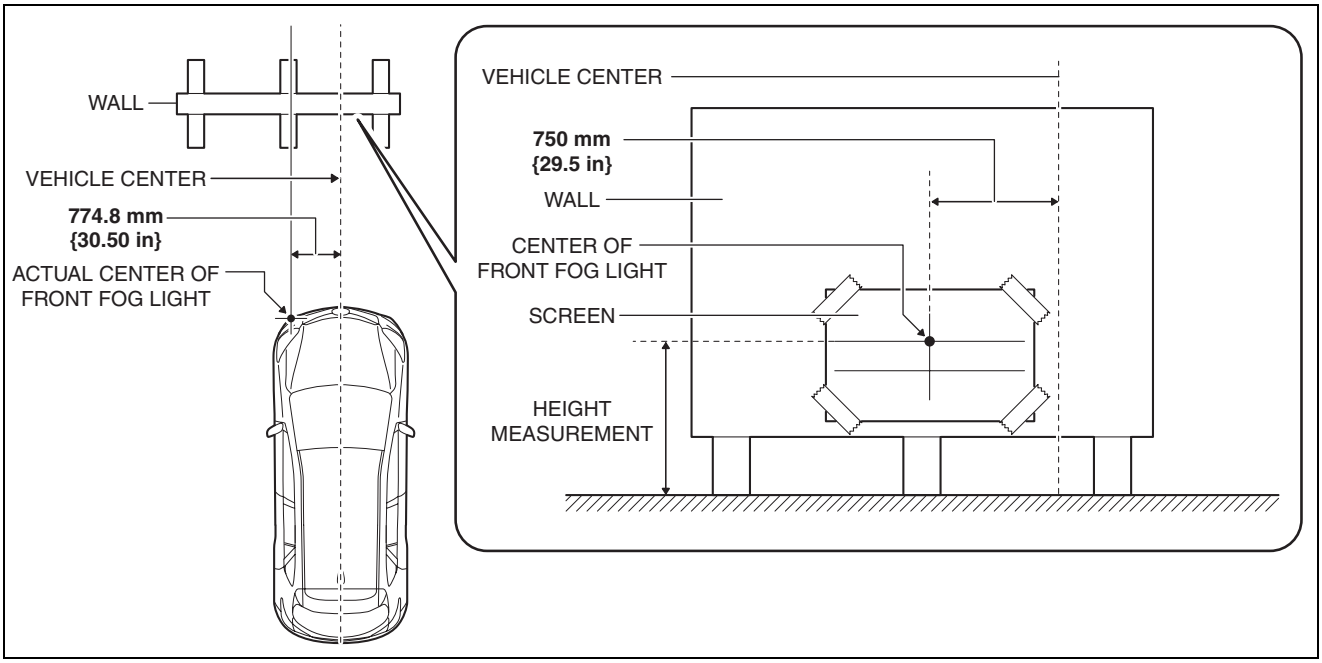

ac5wzw0000084

8. Set a partition in front of the front fog light which is not being adjusted to block the light.
9. Start the engine and charge the battery.
10. Turn on the front fog lights.
11. Verify that the brightness border line of the front fog light is at the position indicated on the adjustment screen.
    - If the brightness border line is not at the position indicated on the adjustment screen, perform the following adjustment.
    (1) Loosen the bolt and screw of the front fog light. (See 09-18-43 FRONT FOG LIGHT REMOVAL/INSTALLATION.)

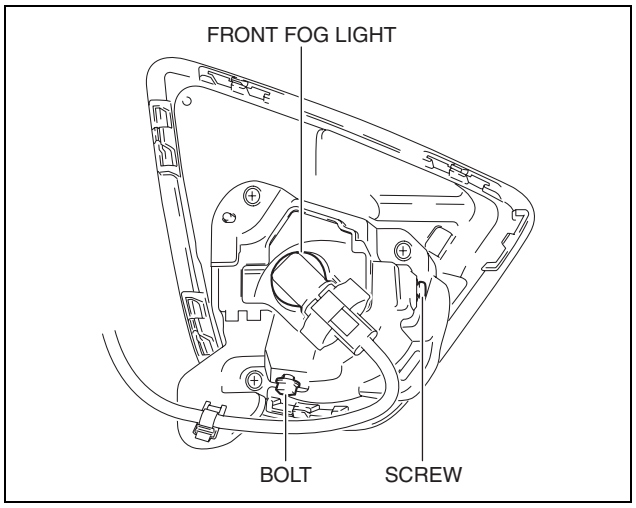

ac5wzw0000084

LIGHTING SYSTEMS

(2) Move the front fog light in the direction of the arrow shown in the figure to adjust the brightness border line to the position indicated on the adjustment screen.

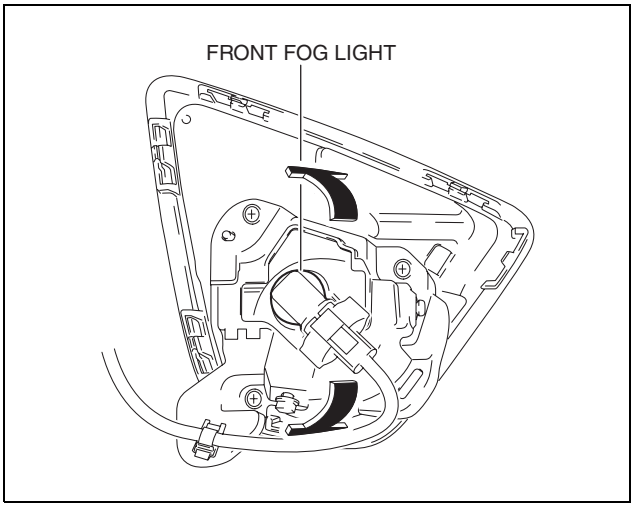

ac5wzw0000084

(3) Tighten the bolt.

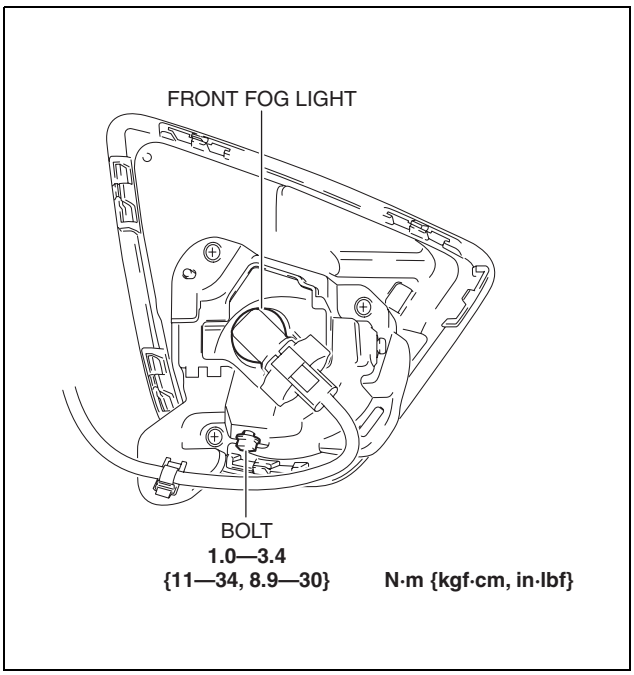

ac5wzw0000084

(4) Tighten the screw.

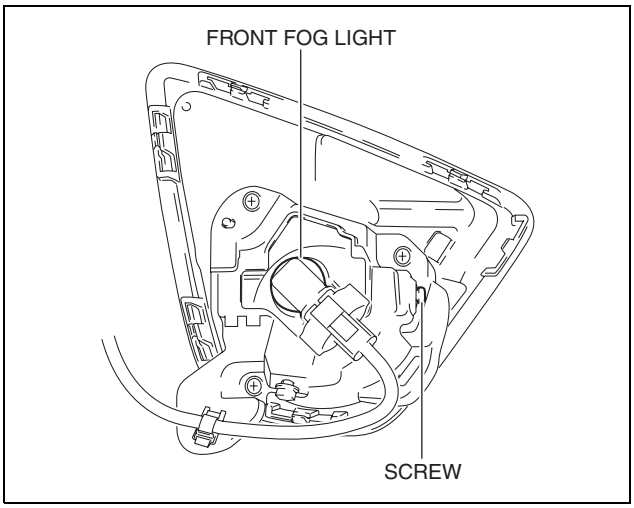

ac5wzw0000084

LIGHTING SYSTEMS

SIDE TURN LIGHT REMOVAL/INSTALLATION

id091800811500

1. Disconnect the negative battery cable. (See 01-17A-13 NEGATIVE BATTERY CABLE DISCONNECTION/CONNECTION [SKYACTIV-G 2.0 (WITHOUT i-stop)].) (See 01-17A-11 NEGATIVE BATTERY CABLE DISCONNECTION/CONNECTION [SKYACTIV-G 2.0].) (See 01-17B-9 NEGATIVE BATTERY CABLE DISCONNECTION/CONNECTION [SKYACTIV-D 2.2].)
2. Remove the following parts:
   (1) Outer mirror glass (See 09-12-73 OUTER MIRROR GLASS REMOVAL.)
   (2) Outer mirror garnish (upper side) (See 09-12-84 OUTER MIRROR GARNISH REMOVAL/INSTALLATION.)
3. Remove the screws.

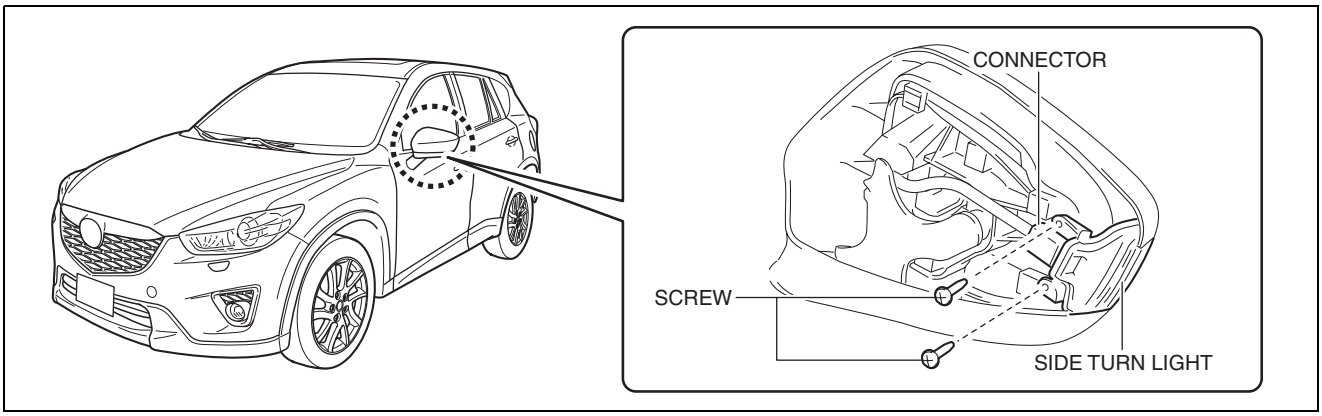

ac5wzw0000303

4. Disconnect the connector.
5. Remove the side turn light.
6. Install in the reverse order of removal.

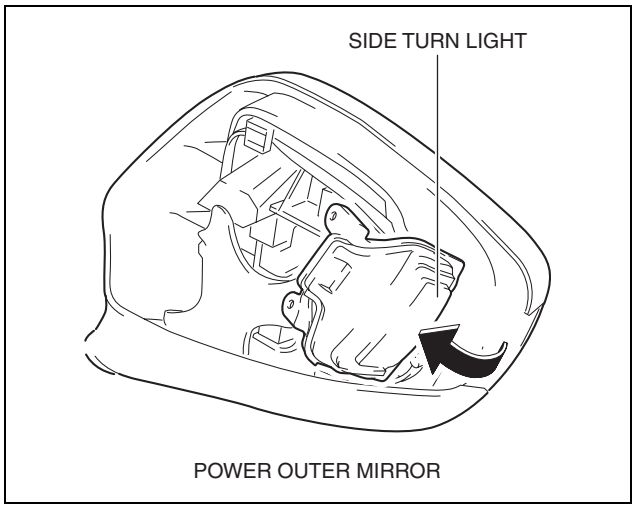

ac5wzw0000303

SIDE TURN LIGHT INSPECTION

id091800811600

1. Disconnect the negative battery cable. (See 01-17A-13 NEGATIVE BATTERY CABLE DISCONNECTION/CONNECTION [SKYACTIV-G 2.0 (WITHOUT i-stop)].) (See 01-17A-11 NEGATIVE BATTERY CABLE DISCONNECTION/CONNECTION [SKYACTIV-G 2.0].) (See 01-17B-9 NEGATIVE BATTERY CABLE DISCONNECTION/CONNECTION [SKYACTIV-D 2.2].)
2. Remove the following parts:
   (1) Outer mirror glass (See 09-12-73 OUTER MIRROR GLASS REMOVAL.)
   (2) Outer mirror garnish (upper side) (See 09-12-84 OUTER MIRROR GARNISH REMOVAL/INSTALLATION.)
   (3) Side turn light (See 09-18-52 SIDE TURN LIGHT REMOVAL/INSTALLATION.)

LIGHTING SYSTEMS

3. Apply battery voltage to side turn light terminal A, and connect terminal B to ground.

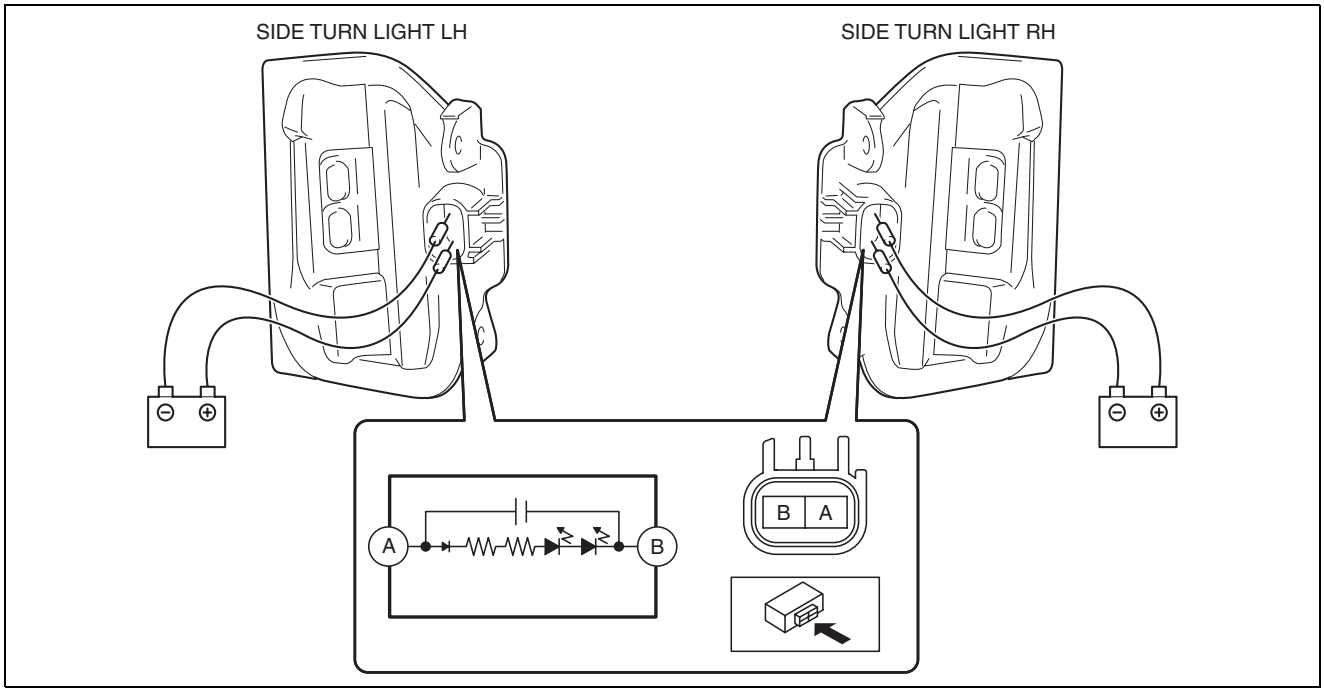

ac5uuw00002725

4. Verify that the LED illuminates.
   - If the LED illuminates, go to the next step.
   - If the LED does not illuminate, replace the side turn light. (See 09-18-52 SIDE TURN LIGHT REMOVAL/INSTALLATION.)
5. Remove the following parts:
   (1) Inner garnish (See 09-17-65 INNER GARNISH REMOVAL/INSTALLATION.)
   (2) Front door trim (See 09-17-65 FRONT DOOR TRIM REMOVAL/INSTALLATION.)
   (3) Power outer mirror connector (See 09-12-67 POWER OUTER MIRROR REMOVAL/INSTALLATION.)
6. Verify that the continuity between the side turn light terminals from the power outer mirror is as indicated in the table.

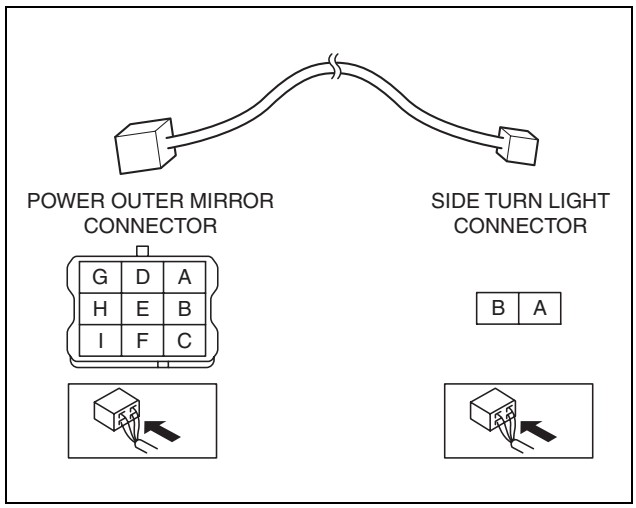

ac5wzw0000010

LIGHTING SYSTEMS

- If not as indicated in the table, replace the power outer mirror. (See 09-12-67 POWER OUTER MIRROR REMOVAL/ INSTALLATION.)

○——○ : Continuity

Test condition	Power outer mirror terminal		Side turn light terminal	
	E	G	A	B
Under any condition	○		○	
		○		○

ac5wzw0000047

REAR COMBINATION LIGHT REMOVAL/INSTALLATION

id091800801000

Note

- Fogging or condensation on the inside of the rear combination lights may occur due to a natural phenomenon occurring as a result of a temperature difference between the interior and exterior of the combination lights. However, it has no effect on the light performance because the temperature inside the rear combination lights rises after illuminating the brake/taillight bulbs or a period of time has elapsed.

1. Disconnect the negative battery cable. (See 01-17A-13 NEGATIVE BATTERY CABLE DISCONNECTION/ CONNECTION [SKYACTIV-G 2.0 (WITHOUT i-stop)].) (See 01-17A-11 NEGATIVE BATTERY CABLE DISCONNECTION/CONNECTION [SKYACTIV-G 2.0].) (See 01-17B-9 NEGATIVE BATTERY CABLE DISCONNECTION/CONNECTION [SKYACTIV-D 2.2].)
2. Insert a tape-wrapped flathead screwdriver into the service hole in the position shown in the figure.

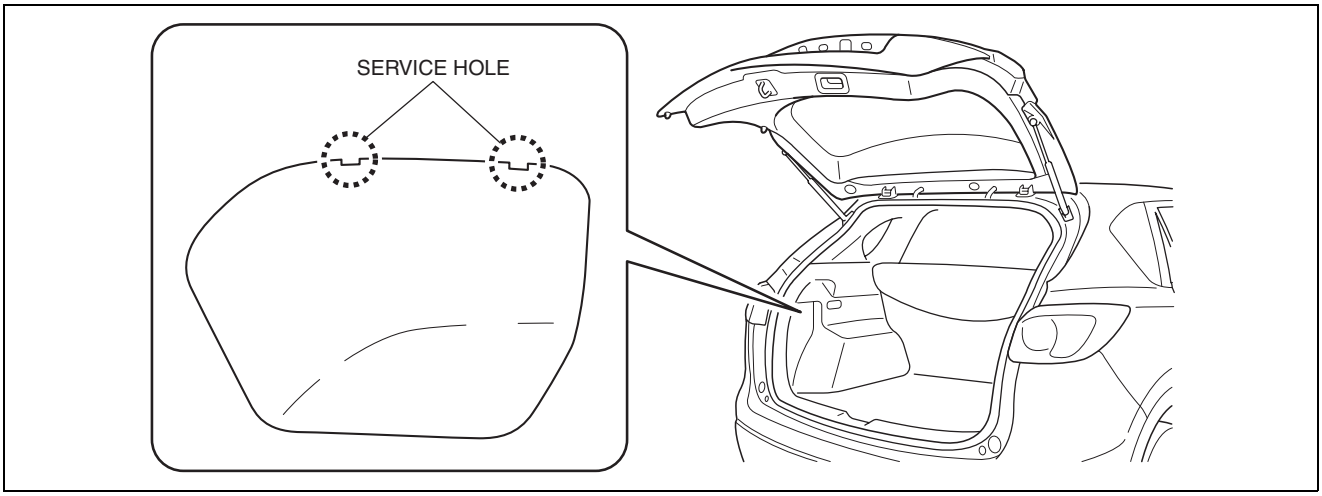

ac5wzw0000041

LIGHTING SYSTEMS

3. Move the flathead screwdriver in the direction of the arrow (1) shown in the figure, pull out the service hole cover, and detach the service hole cover tab and trunk side trim.

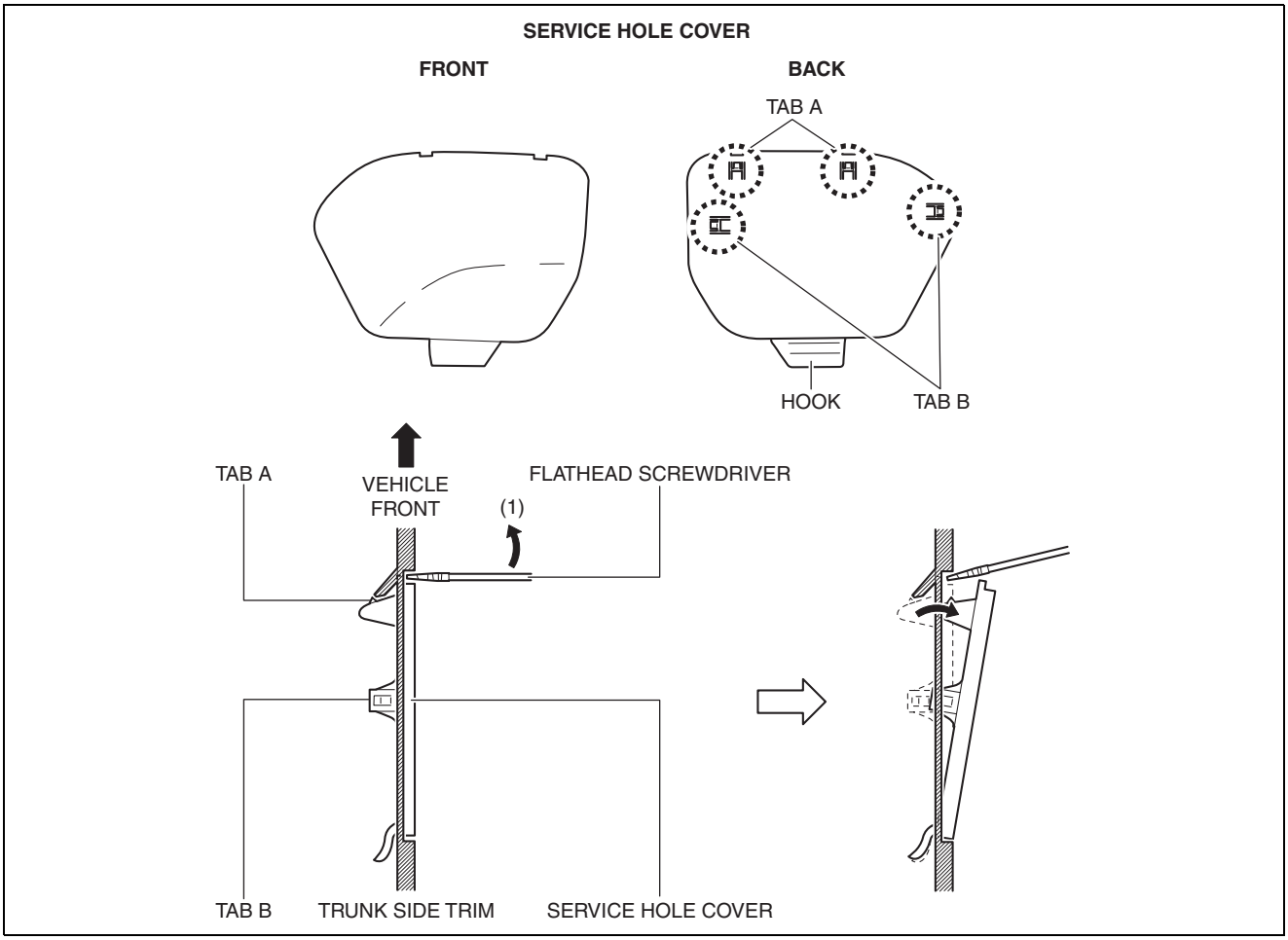

ac5wzw0000301

4. Pull out the service hole cover in the direction of the arrow (2) shown in the figure and pull out the service hole cover hook from the trunk side trim.
5. Remove the service hole cover.

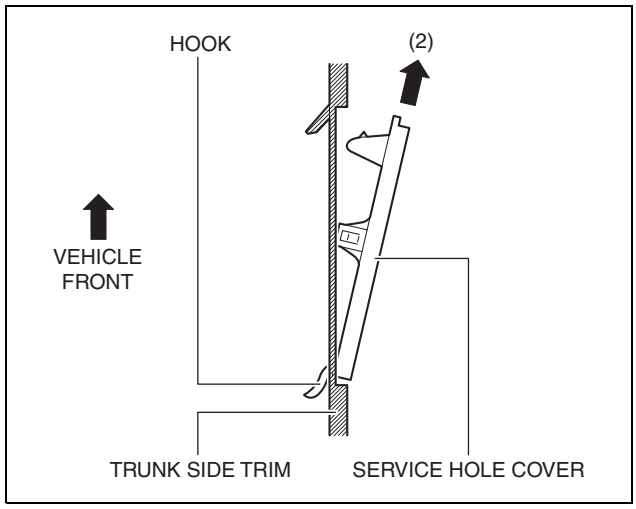

ac5wzw0000302

LIGHTING SYSTEMS

6. Disconnect the connectors.

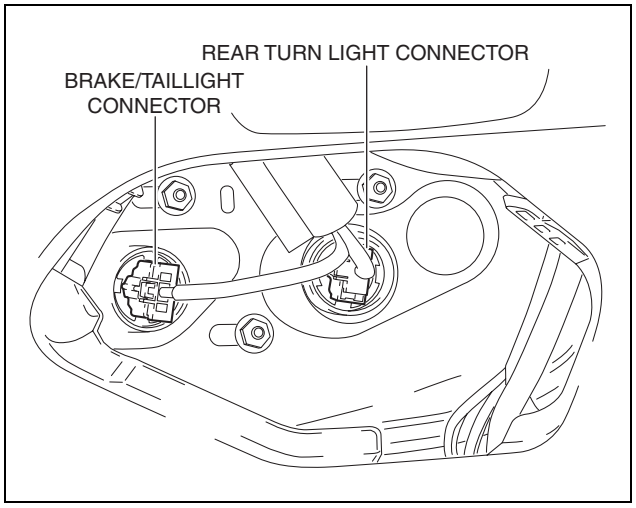

ac5wzw0000334

7. Remove the nuts.
8. To prevent scratches or damage, affix protective tape to the position shown in the figure.

Caution

- **When the rear combination light is removed from the body, perform the procedure after affixing protective tape to the body. Otherwise, the body could interfere with the rear combination light and cause scratching or damage to the body.**

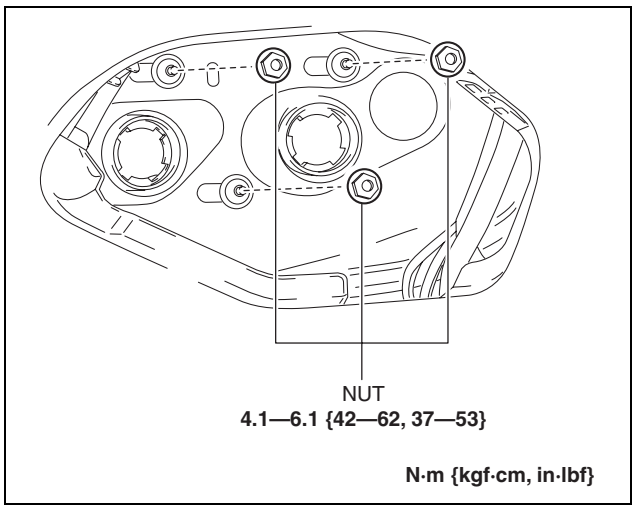

ac5wzw0000000

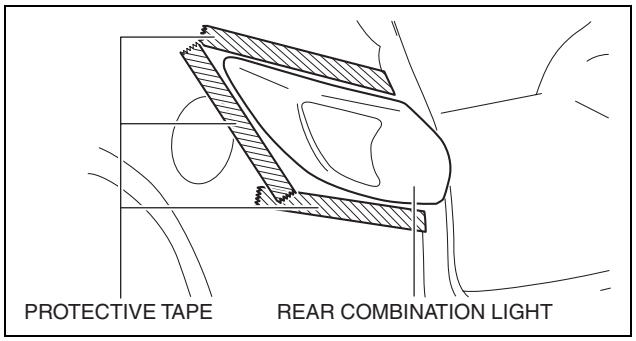

ac5wzw0000001

LIGHTING SYSTEMS

9. Pull the rear combination light in the direction of the arrow (5) shown in the figure and remove the rear combination light hook from the clip.

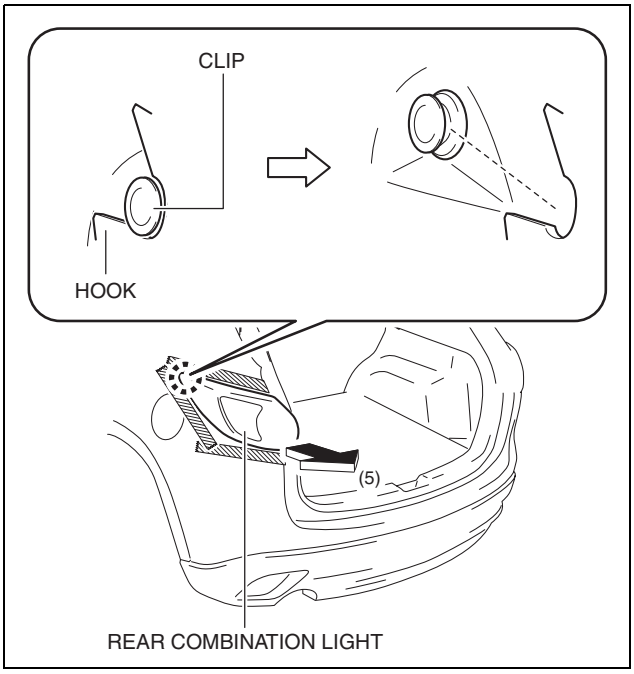

ac5wzw0000001

10. Pull out the rear combination light pin.
11. Remove the rear combination light.
12. Install in the reverse order of removal.

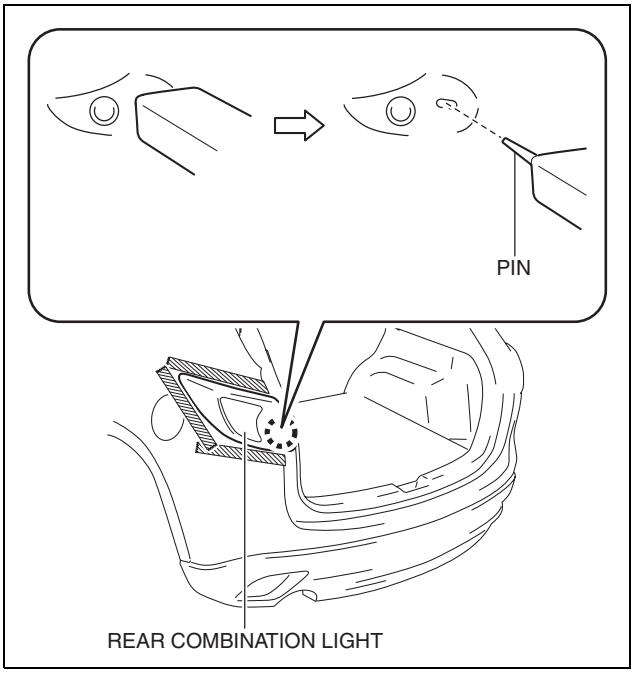

ac5wzw0000041

REAR TURN LIGHT BULB REMOVAL/INSTALLATION

id091800813800

1. Disconnect the negative battery cable. (See 01-17A-13 NEGATIVE BATTERY CABLE DISCONNECTION/CONNECTION [SKYACTIV-G 2.0 (WITHOUT i-stop)].) (See 01-17A-11 NEGATIVE BATTERY CABLE DISCONNECTION/CONNECTION [SKYACTIV-G 2.0].) (See 01-17B-9 NEGATIVE BATTERY CABLE DISCONNECTION/CONNECTION [SKYACTIV-D 2.2].)

LIGHTING SYSTEMS

2. Insert a tape-wrapped flathead screwdriver into the service hole in the position shown in the figure.

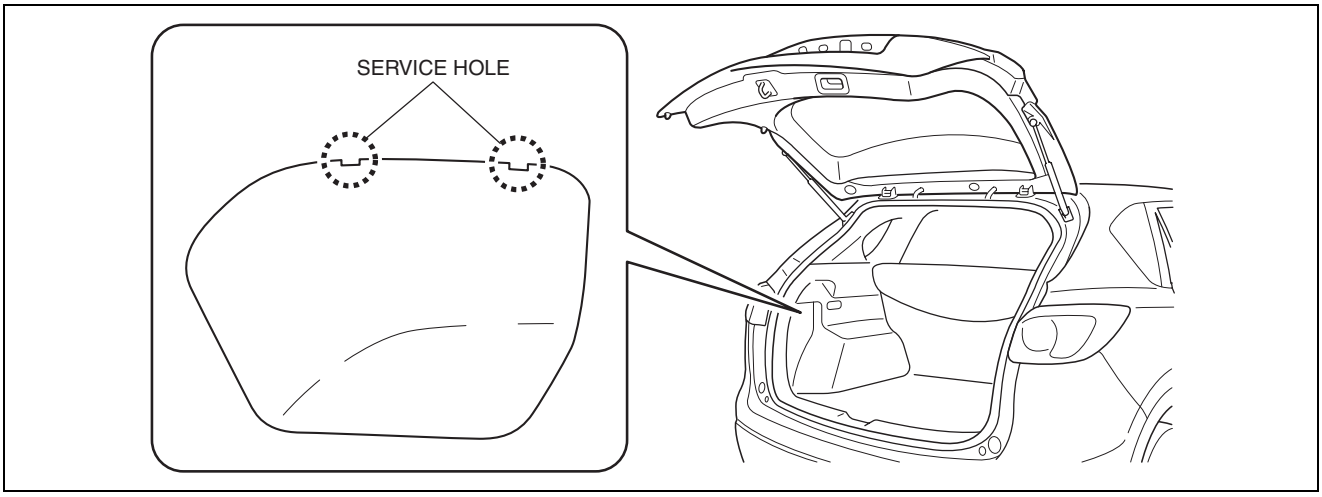

ac5wzw0000049

3. Move the flathead screwdriver in the direction of the arrow (1) shown in the figure, pull out the service hole cover, and detach the service hole cover tab and trunk side trim.

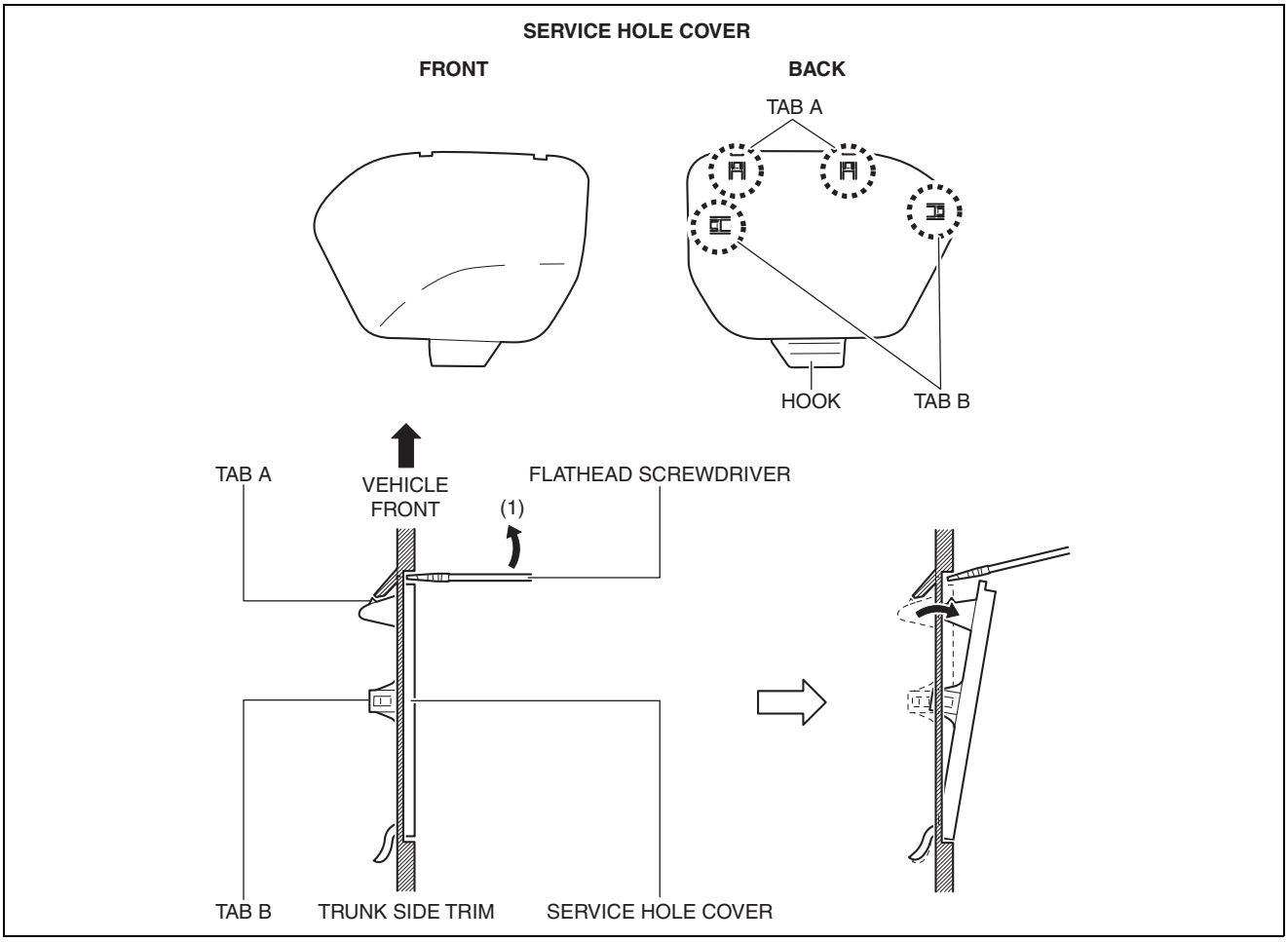

ac5wzw0000301

LIGHTING SYSTEMS

4. Pull out the service hole cover in the direction of the arrow (2) shown in the figure and pull out the service hole cover hook from the trunk side trim.
5. Remove the service hole cover.

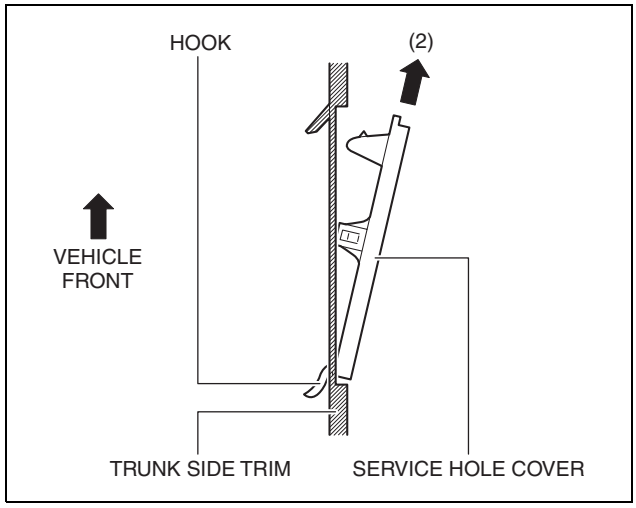

ac5wzw0000301

6. Rotate the socket in the direction of the arrow (3) shown in the figure and remove it from the rear combination light in the direction of the arrow (4) shown in the figure.

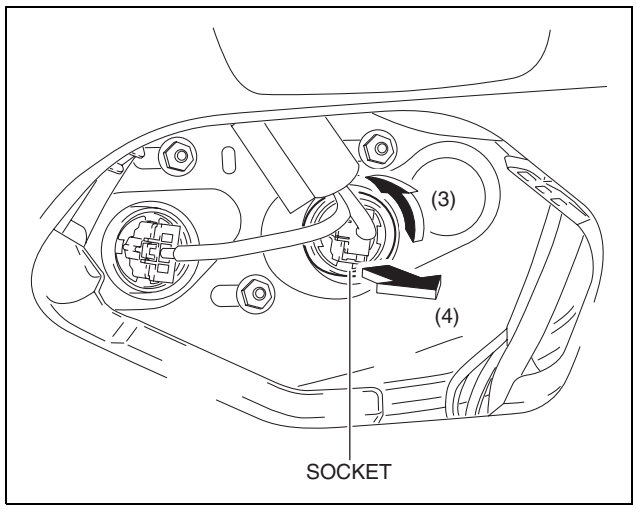

ac5wzw0000006

7. Remove the rear turn light bulb.
8. Install in the reverse order of removal.

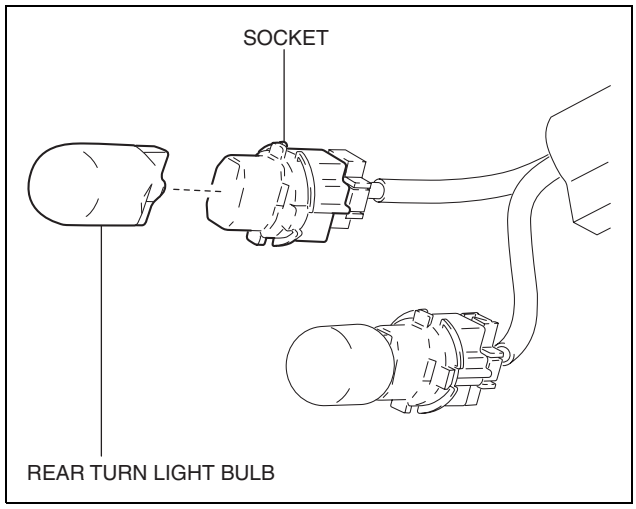

ac5wzw0000006

BRAKE/TAILLIGHT BULB REMOVAL/INSTALLATION

id091800813900

1. Disconnect the negative battery cable. (See 01-17A-13 NEGATIVE BATTERY CABLE DISCONNECTION/CONNECTION [SKYACTIV-G 2.0 (WITHOUT i-stop)].) (See 01-17A-11 NEGATIVE BATTERY CABLE DISCONNECTION/CONNECTION [SKYACTIV-G 2.0].) (See 01-17B-9 NEGATIVE BATTERY CABLE DISCONNECTION/CONNECTION [SKYACTIV-D 2.2].)

LIGHTING SYSTEMS

2. Insert a tape-wrapped flathead screwdriver into the service hole in the position shown in the figure.

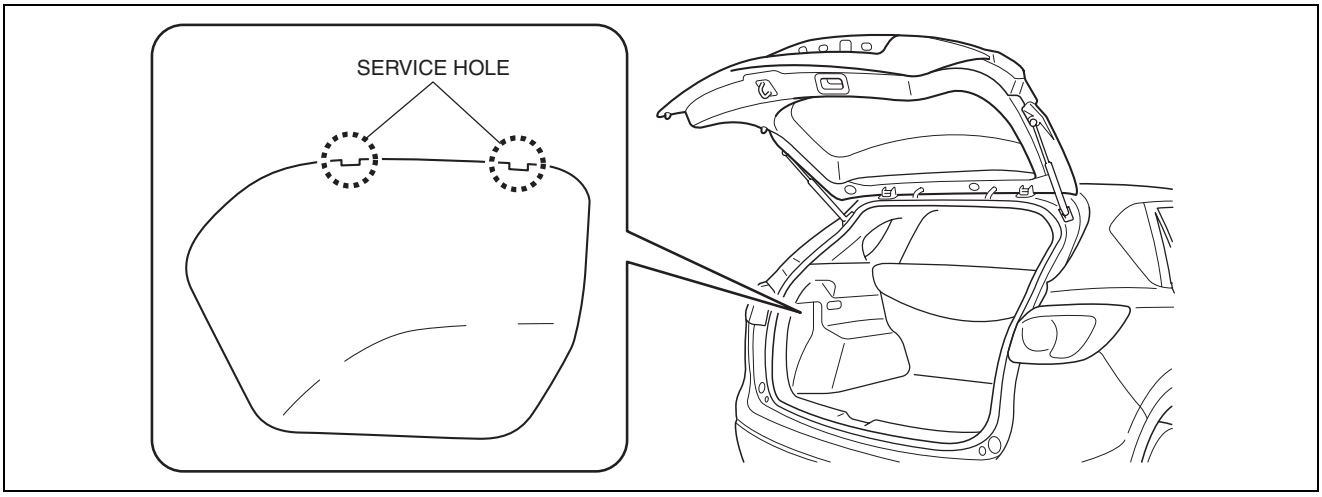

ac5wzw0000049

3. Move the flathead screwdriver in the direction of the arrow (1) shown in the figure, pull out the service hole cover, and detach the service hole cover tab and trunk side trim.

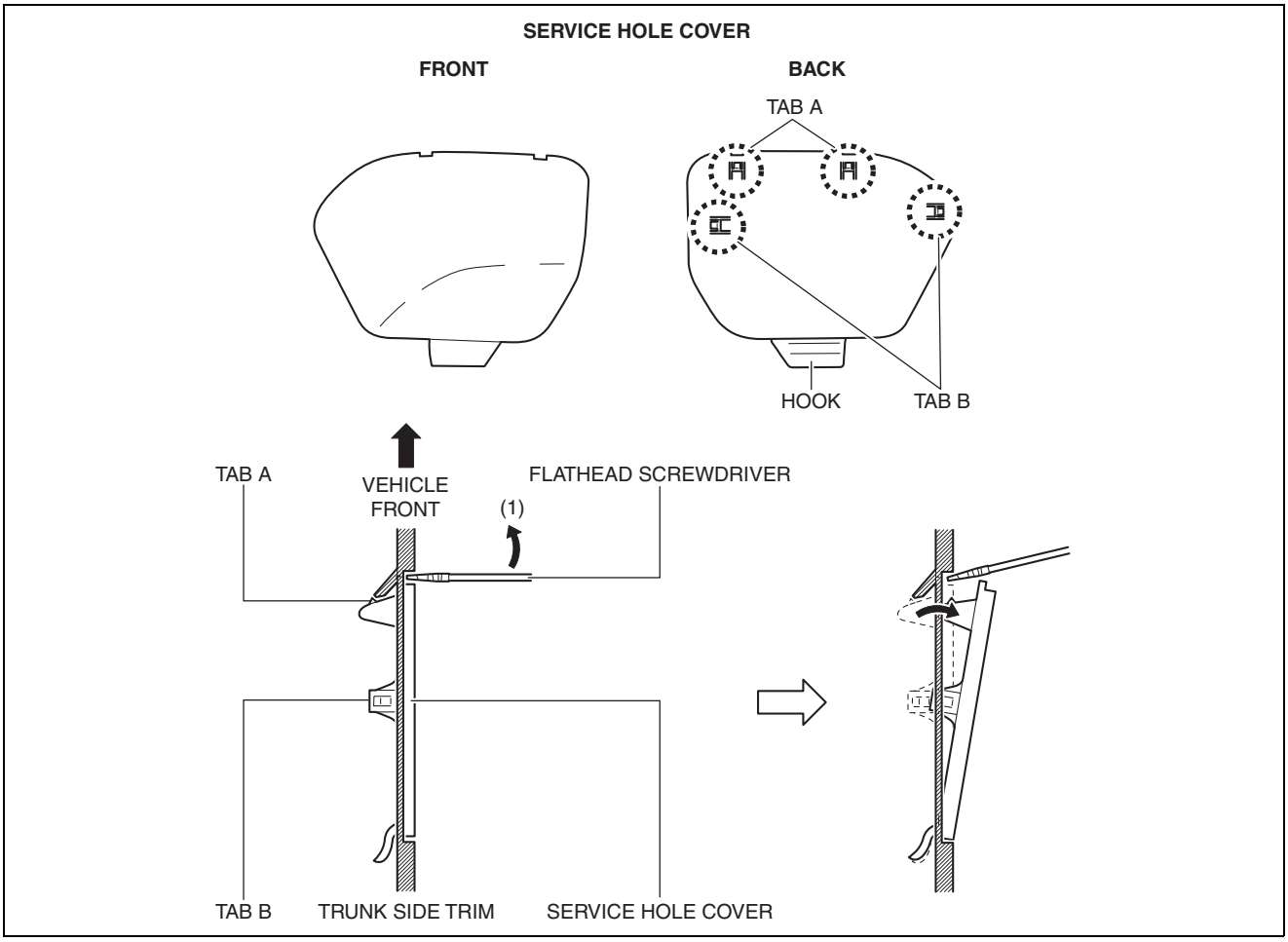

ac5wzw0000301

LIGHTING SYSTEMS

4. Pull out the service hole cover in the direction of the arrow (2) shown in the figure and pull out the service hole cover hook from the trunk side trim.
5. Remove the service hole cover.

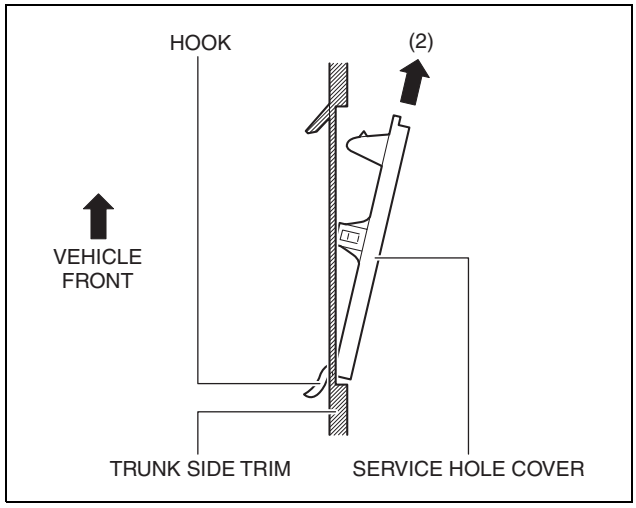

ac5wzw0000301

6. Rotate the socket in the direction of the arrow (3) shown in the figure and remove it from the rear combination light in the direction of the arrow (4) shown in the figure.

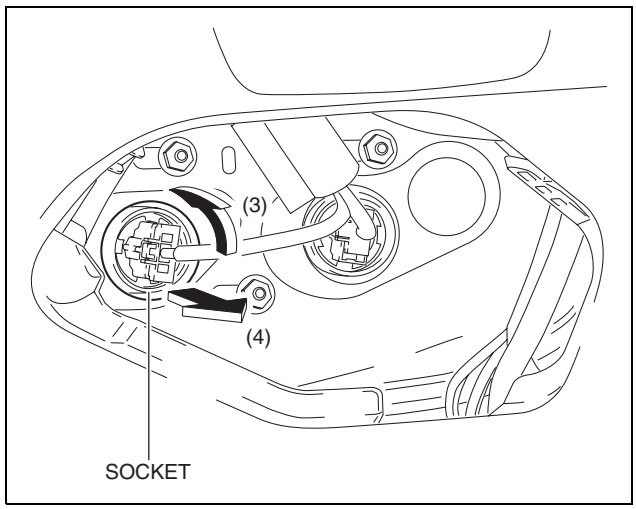

ac5wzw0000006

7. Remove the brake/taillight bulb.
8. Install in the reverse order of removal.

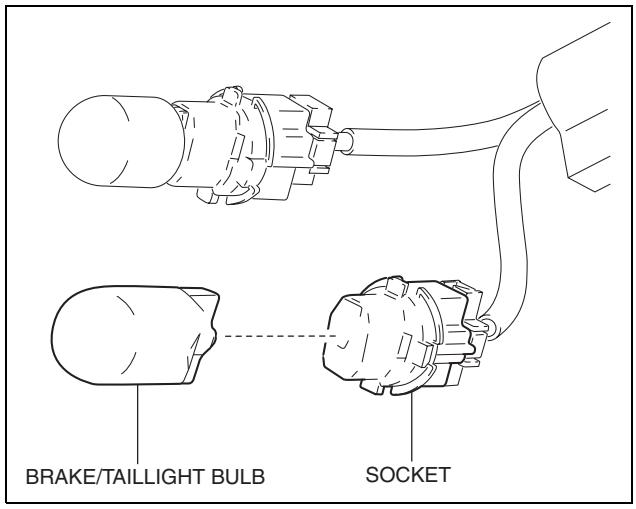

ac5wzw0000006

BACK-UP LIGHT BULB REMOVAL/INSTALLATION

id091800810000

1. Disconnect the negative battery cable. (See 01-17A-13 NEGATIVE BATTERY CABLE DISCONNECTION/CONNECTION [SKYACTIV-G 2.0 (WITHOUT i-stop)].) (See 01-17A-11 NEGATIVE BATTERY CABLE DISCONNECTION/CONNECTION [SKYACTIV-G 2.0].) (See 01-17B-9 NEGATIVE BATTERY CABLE DISCONNECTION/CONNECTION [SKYACTIV-D 2.2].)

LIGHTING SYSTEMS

2. Insert a tape-wrapped flathead screwdriver into the service hole in the position shown in the figure.
3. Move the flathead screwdriver in the direction of the arrow (1) shown in the figure, pull out the service hole cover from the liftgate, and detach the service hole cover tabs and liftgate connections.

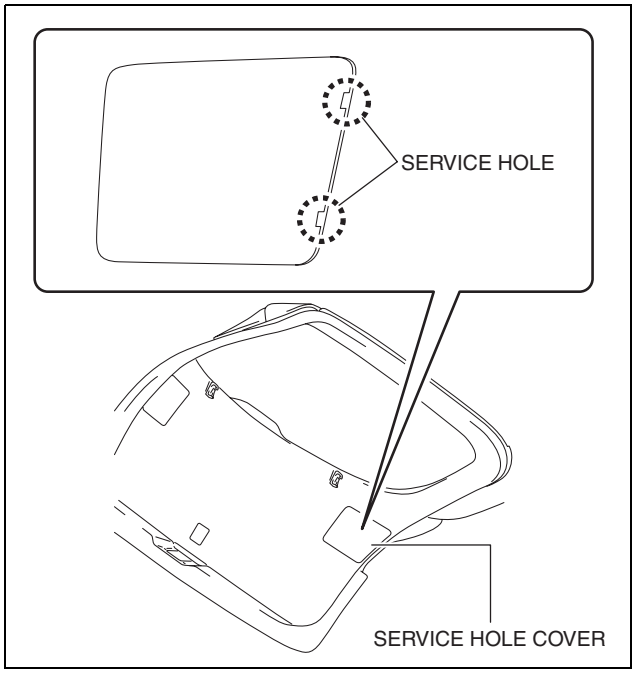

ac5wzw0000046

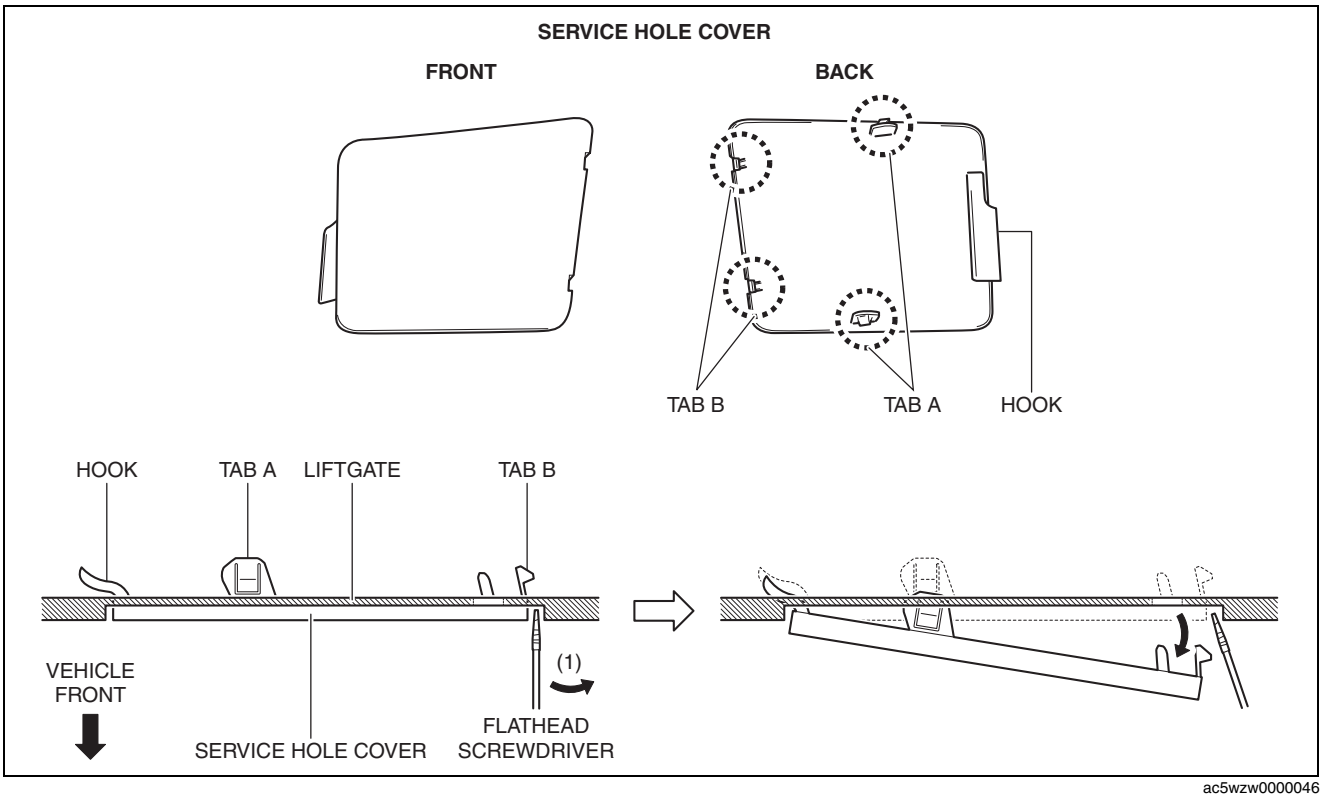

ac5wzw0000046

LIGHTING SYSTEMS

4. Pull out the service hole cover in the direction of the arrow (2) shown in the figure and pull out the service hole cover hook from the liftgate.
5. Remove the service hole cover.

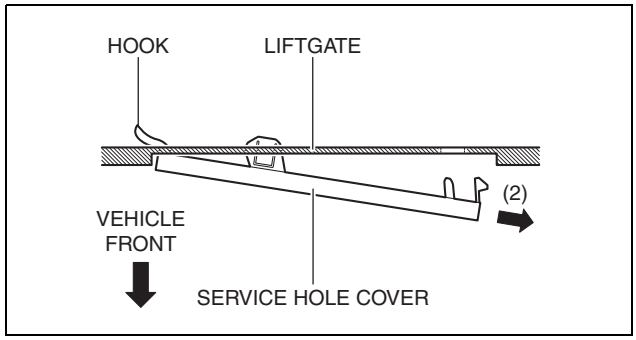

ac5wzw0000047

6. Rotate the socket in the direction of the arrow (3) shown in the figure and remove it from the liftgate light in the direction of the arrow (4) shown in the figure.

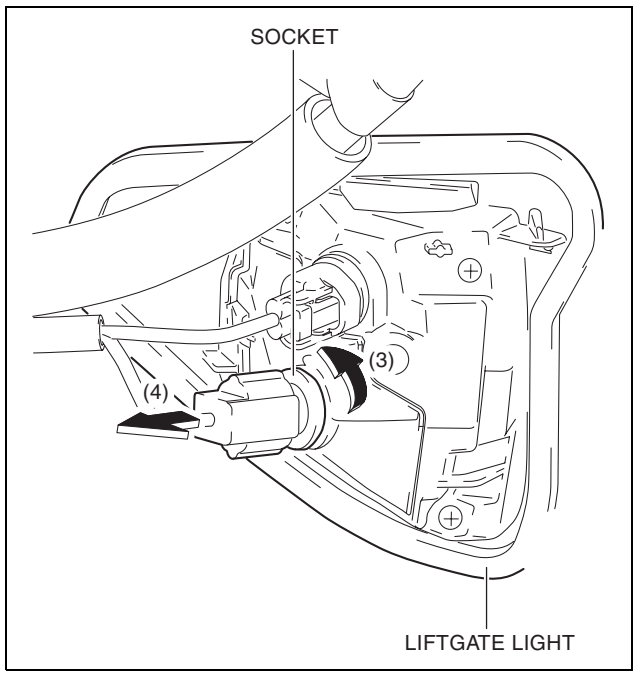

ac5wzw0000004

7. Remove the back-up light bulb.
8. Install in the reverse order of removal.

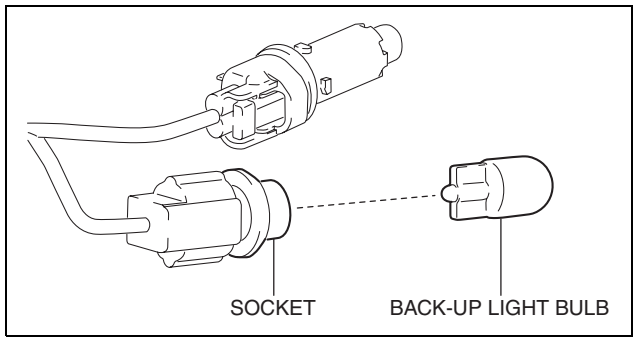

ac5wzw0000004

LIFTGATE LIGHT REMOVAL/INSTALLATION

id091800812600

Note

- Fogging or condensation on the inside of the liftgate light may occur, however, it is a natural phenomenon occurring as a result of a temperature difference between the interior and exterior of the liftgate lights and has no effect on the light performance. Fogging or condensation will dissipate when the temperature inside the liftgate lights rises after illuminating the back-up lights and a period of time has elapsed.

1. Disconnect the negative battery cable. (See 01-17A-13 NEGATIVE BATTERY CABLE DISCONNECTION/CONNECTION [SKYACTIV-G 2.0 (WITHOUT i-stop)].) (See 01-17A-11 NEGATIVE BATTERY CABLE DISCONNECTION/CONNECTION [SKYACTIV-G 2.0].) (See 01-17B-9 NEGATIVE BATTERY CABLE DISCONNECTION/CONNECTION [SKYACTIV-D 2.2].)

LIGHTING SYSTEMS

2. Insert a tape-wrapped flathead screwdriver into the service hole in the position shown in the figure.
3. Move the flathead screwdriver in the direction of the arrow (1) shown in the figure, pull out the service hole cover from the liftgate, and detach the service hole cover tab and liftgate.

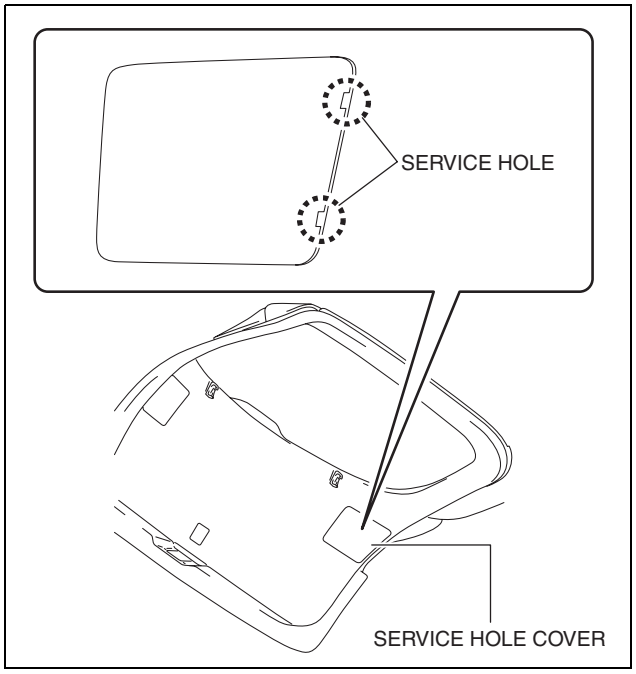

ac5wzw0000048

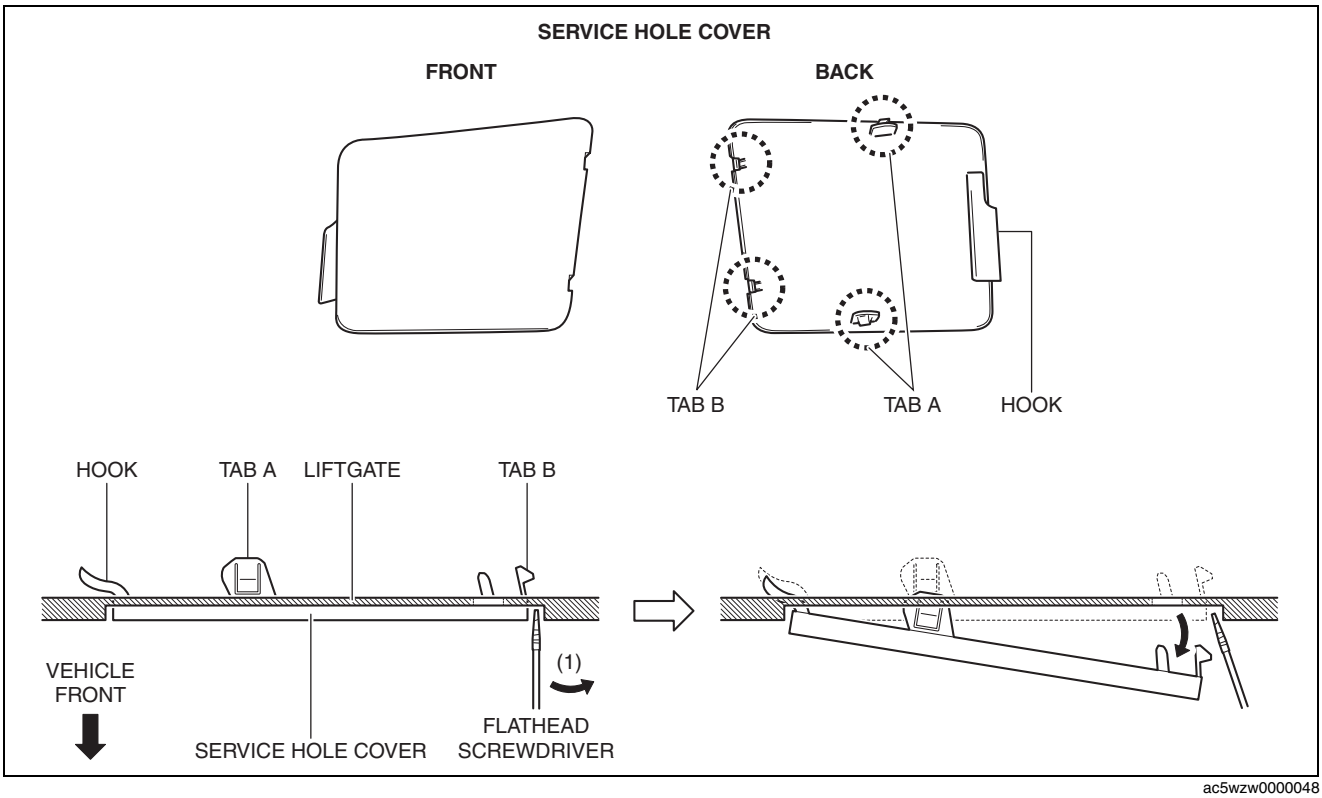

ac5wzw0000048

LIGHTING SYSTEMS

4. Pull out the service hole cover in the direction of the arrow (2) shown in the figure and pull out the service hole cover hook from the liftgate.
5. Remove the service hole cover.

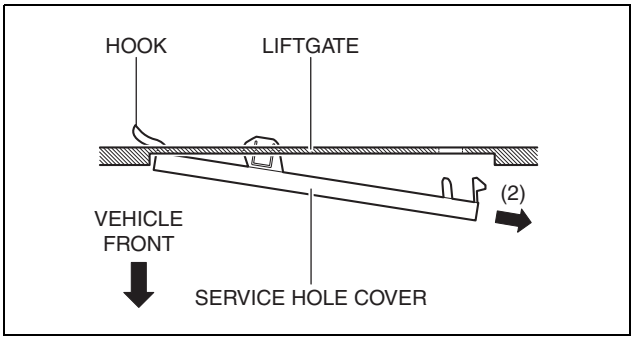

ac5wzw0000048

6. Insert a flathead screwdriver into the service hole in the position shown in the figure.

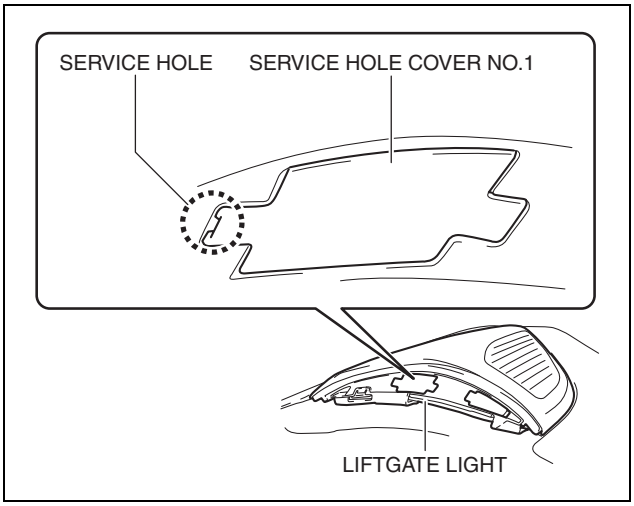

ac5wzw0000120

7. Move the flathead screwdriver in the direction of the arrow (3) shown in the figure, pull out the service hole cover No.1, and detach the service hole cover No.1 tab from the bracket.

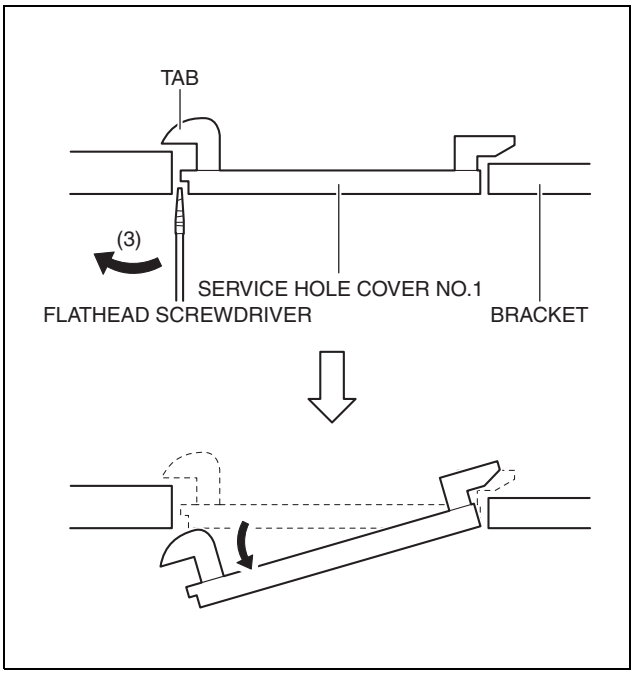

ac5wzw0000017

LIGHTING SYSTEMS

8. Remove the service hole cover No.1.

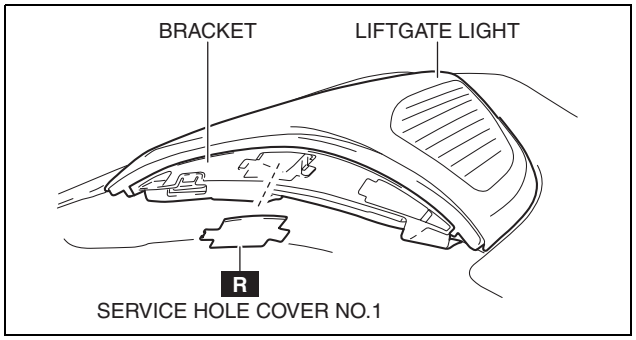

ac5wzw0000120

9. Insert a flathead screwdriver into the service hole in the position shown in the figure.

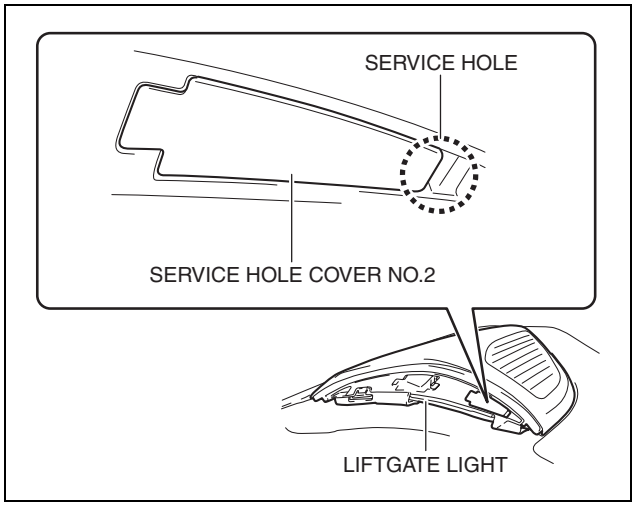

ac5wzw0000017

10. Move the flathead screwdriver in the direction of the arrow (4) shown in the figure, pull out the service hole cover No.2, and detach the service hole cover No.2 tab from the bracket.

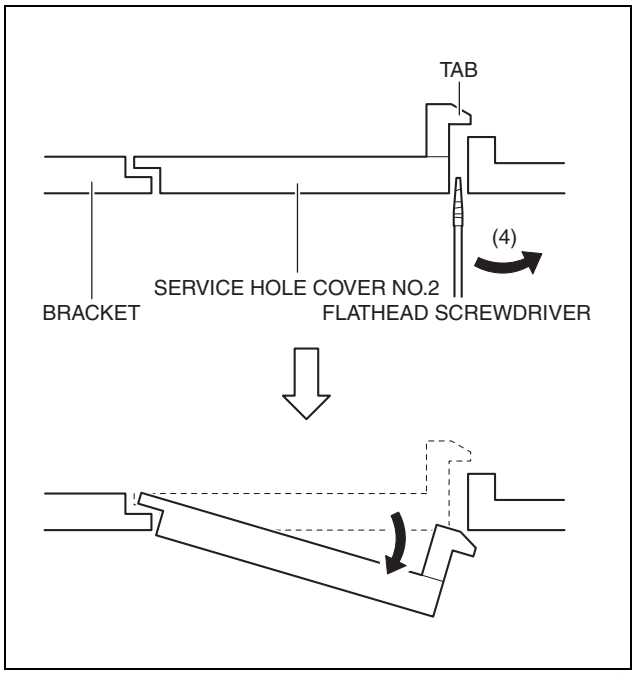

ac5wzw0000017

LIGHTING SYSTEMS

11. Remove the service hole cover No.2.

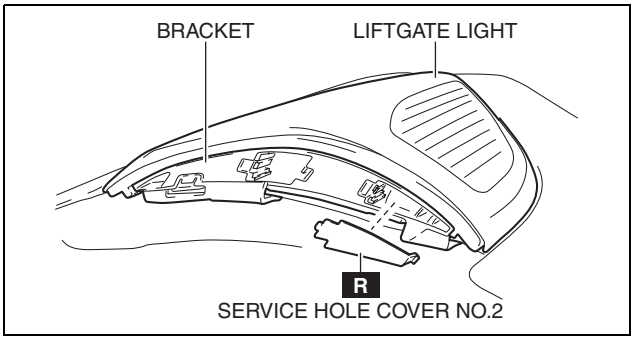

ac5wzw0000120

12. Insert the flathead screwdriver into the clearance between the bracket tab and the liftgate light shown in the figure.

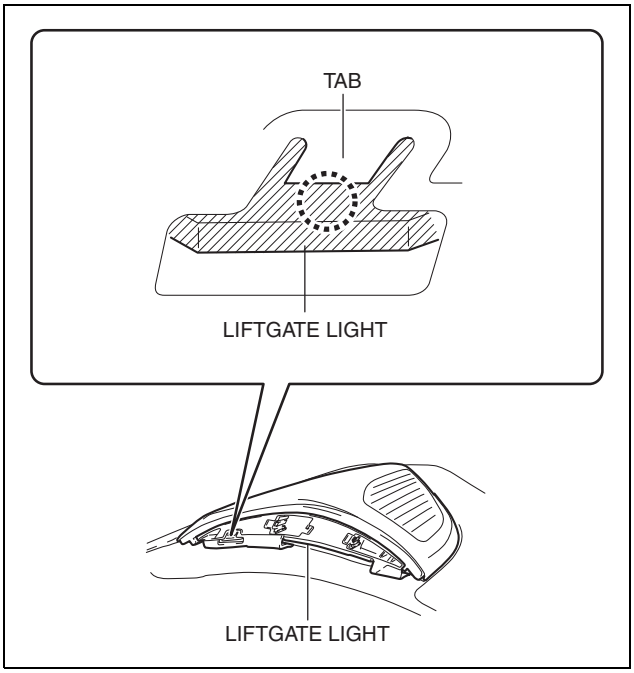

ac5wzw0000082

13. Move the flathead screwdriver in the direction of the arrow (5) shown in the figure, pull out the bracket in the direction of the arrow (6) shown in the figure while pressing the bracket tab, and detach the bracket tab and liftgate light.

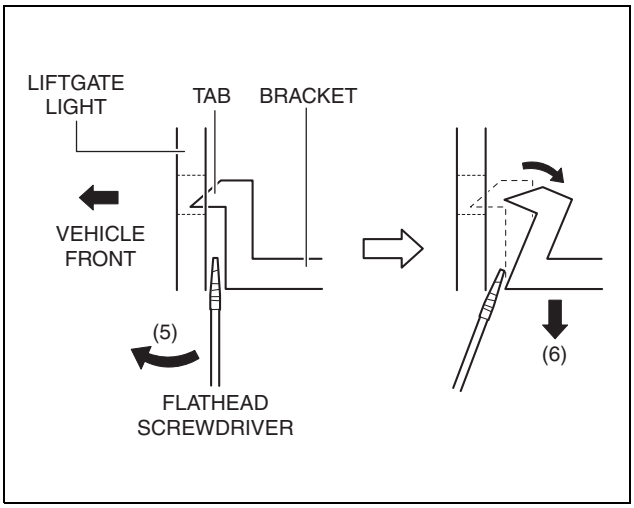

ac5wzw0000082

LIGHTING SYSTEMS

14. Insert the flathead screwdriver into the clearance between the bracket tab and the liftgate light shown in the figure.

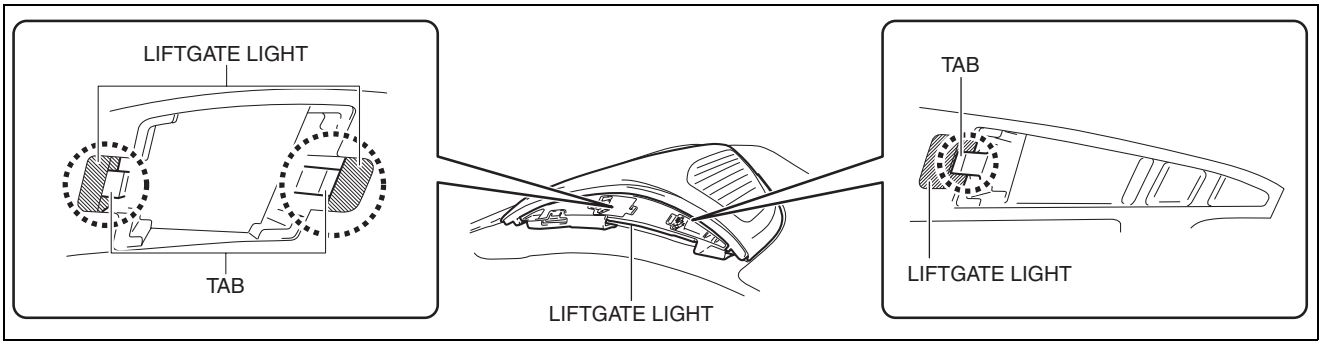

ac5wzw0000082

15. Move the flathead screwdriver in the direction of the arrow (7) shown in the figure, pull the bracket in the direction of the arrow (8) shown in the figure, and detach the bracket tab and liftgate light.

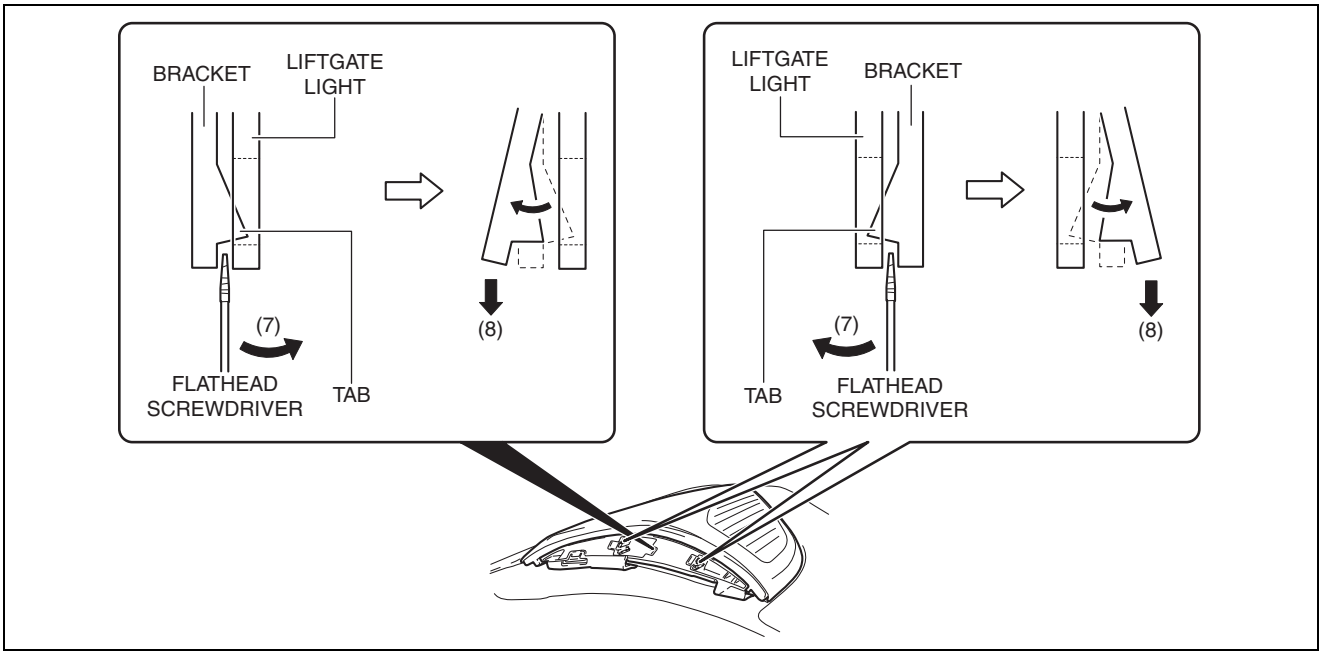

ac5wzw0000082

LIGHTING SYSTEMS

16. Detach all the bracket tab and liftgate light and pull out the bracket hook from the liftgate light in the direction of the arrow (9) shown in the figure.

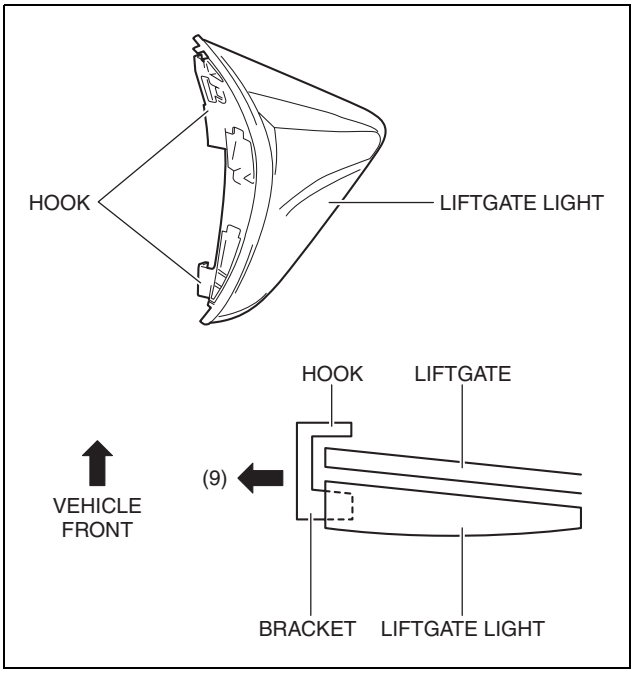

ac5wzw0000082

17. Remove the bracket.

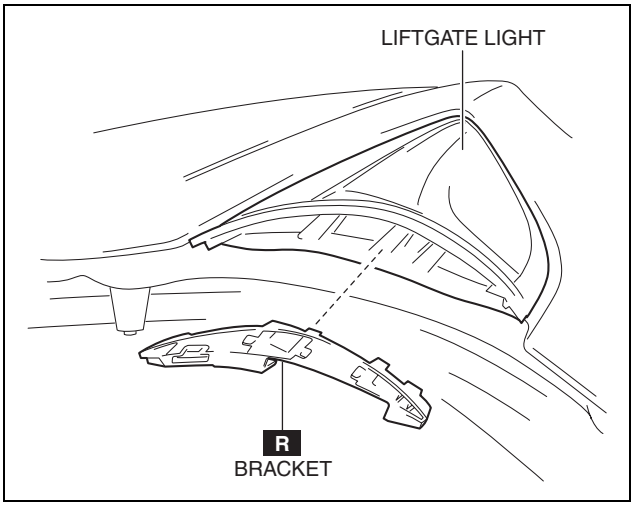

ac5wzw0000120

LIGHTING SYSTEMS

18. Rotate the socket in the direction of the arrow (10) shown in the figure and remove it from the liftgate light in the direction of the arrow (11) shown in the figure.

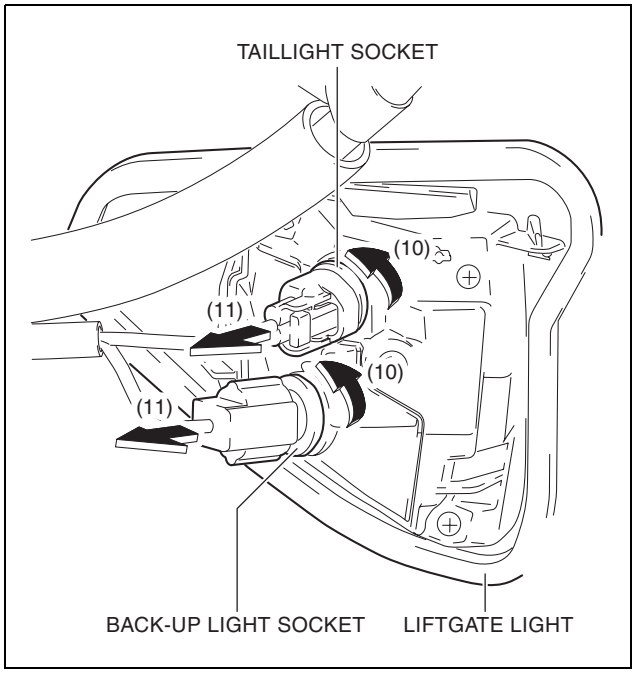

ac5wzw0000082

19. Remove the cap nut.

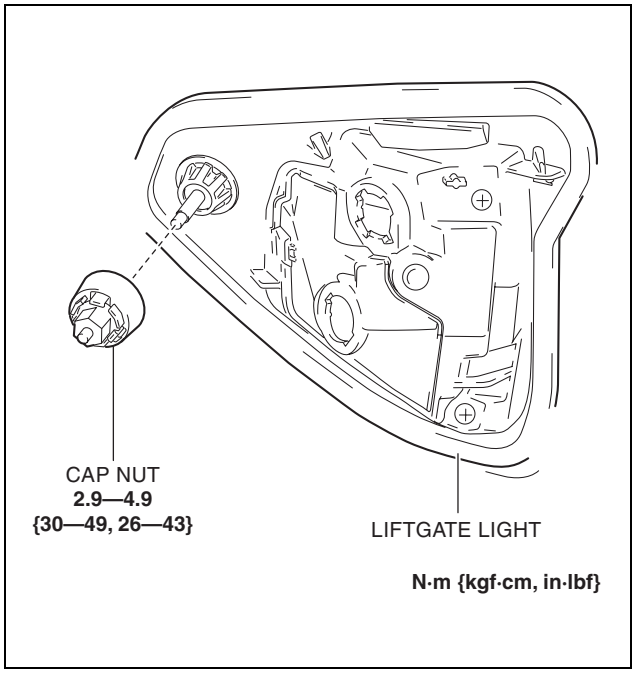

ac5wzw0000005

20. Push out the liftgate light in the direction of the arrow (12) shown in the figure and remove it from the liftgate.

Caution

- **If the liftgate light is removed from the liftgate, the liftgate light may fall off and be damaged. When removing the liftgate light from the liftgate, hold the liftgate light on the lens side with a hand during the servicing.**

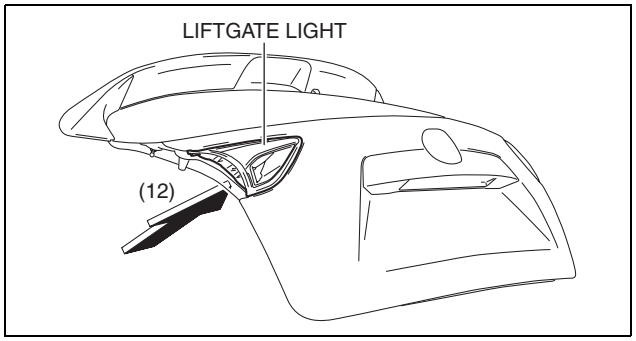

ac5wzw0000082

21. Install in the reverse order of removal.

LIGHTING SYSTEMS

TAILLIGHT BULB REMOVAL/INSTALLATION

id091800300000

1. Disconnect the negative battery cable. (See 01-17A-13 NEGATIVE BATTERY CABLE DISCONNECTION/CONNECTION [SKYACTIV-G 2.0 (WITHOUT i-stop)].) (See 01-17A-11 NEGATIVE BATTERY CABLE DISCONNECTION/CONNECTION [SKYACTIV-G 2.0].) (See 01-17B-9 NEGATIVE BATTERY CABLE DISCONNECTION/CONNECTION [SKYACTIV-D 2.2].)
2. Insert a tape-wrapped flathead screwdriver into the service hole in the position shown in the figure.
3. Move the flathead screwdriver in the direction of the arrow (1) shown in the figure, pull out the service hole cover from the liftgate, and detach the service hole cover tab and liftgate.

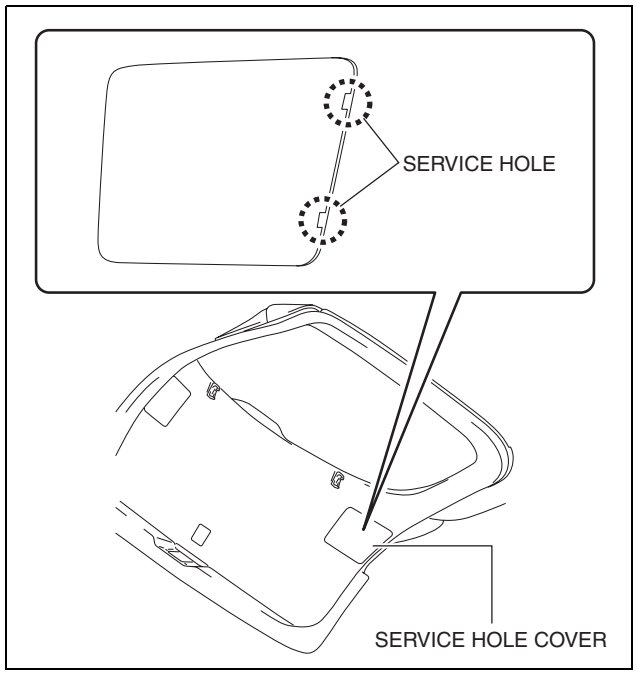

ac5wzw0000039

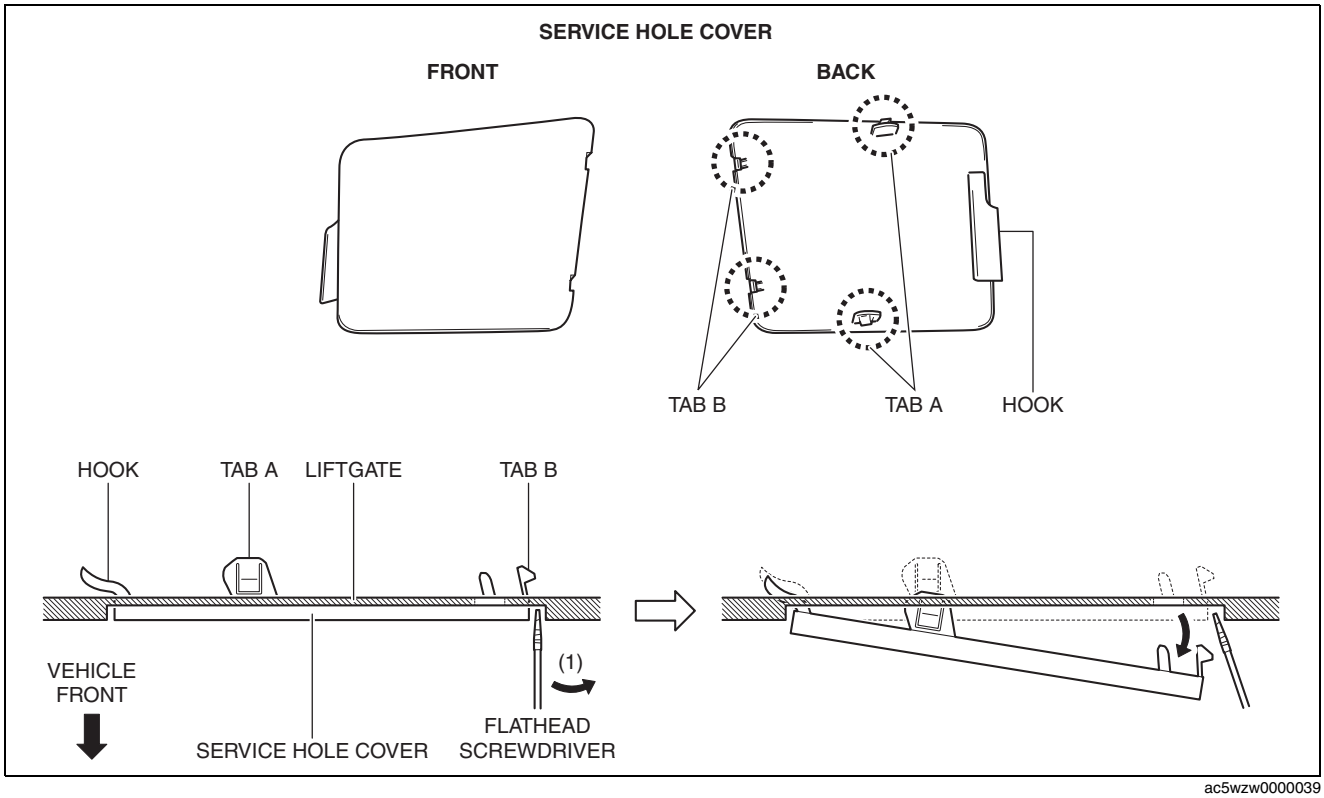

ac5wzw0000039

LIGHTING SYSTEMS

4. Pull out the service hole cover in the direction of the arrow (2) shown in the figure and pull out the service hole cover hook from the liftgate.
5. Remove the service hole cover.

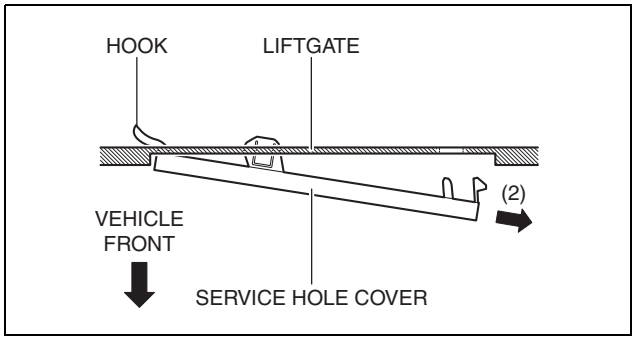

ac5wzw0000039

6. Rotate the socket in the direction of the arrow (3) shown in the figure and remove it from the liftgate light in the direction of the arrow (4) shown in the figure.

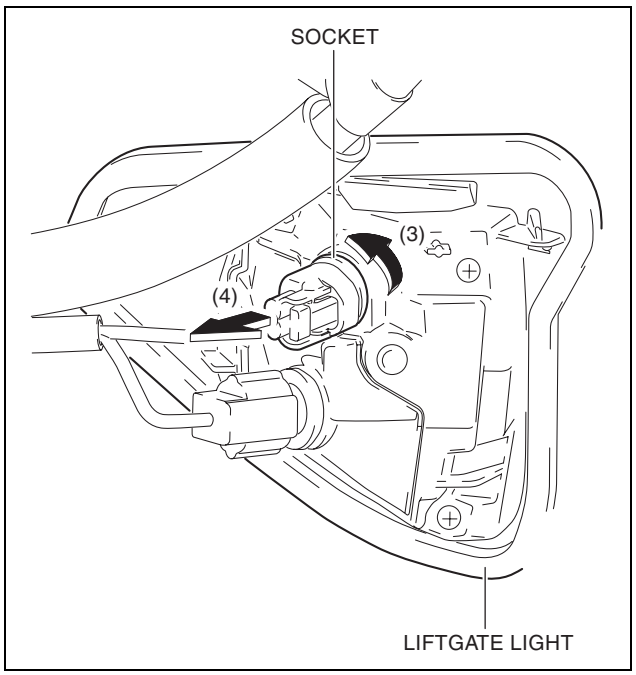

ac5wzw0000009

7. Remove the taillight bulb.
8. Install in the reverse order of removal.

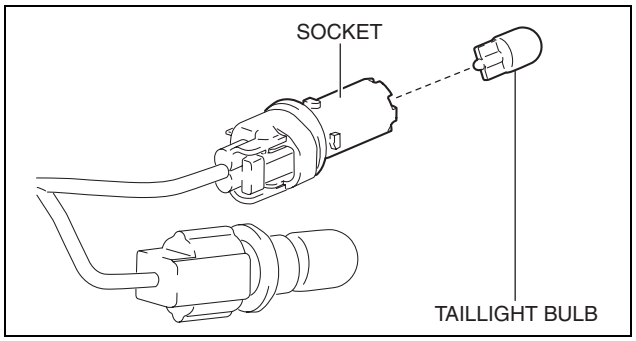

ac5wzw0000009

REAR FOG LIGHT REMOVAL/INSTALLATION

id091800805100

1. Disconnect the negative battery cable. (See 01-17A-13 NEGATIVE BATTERY CABLE DISCONNECTION/CONNECTION [SKYACTIV-G 2.0 (WITHOUT i-stop)].) (See 01-17A-11 NEGATIVE BATTERY CABLE DISCONNECTION/CONNECTION [SKYACTIV-G 2.0].) (See 01-17B-9 NEGATIVE BATTERY CABLE DISCONNECTION/CONNECTION [SKYACTIV-D 2.2].)
2. Remove the rear splash shield. (See 09-16-49 SPLASH SHIELD REMOVAL/INSTALLATION.)

LIGHTING SYSTEMS

3. Disconnect the connector.

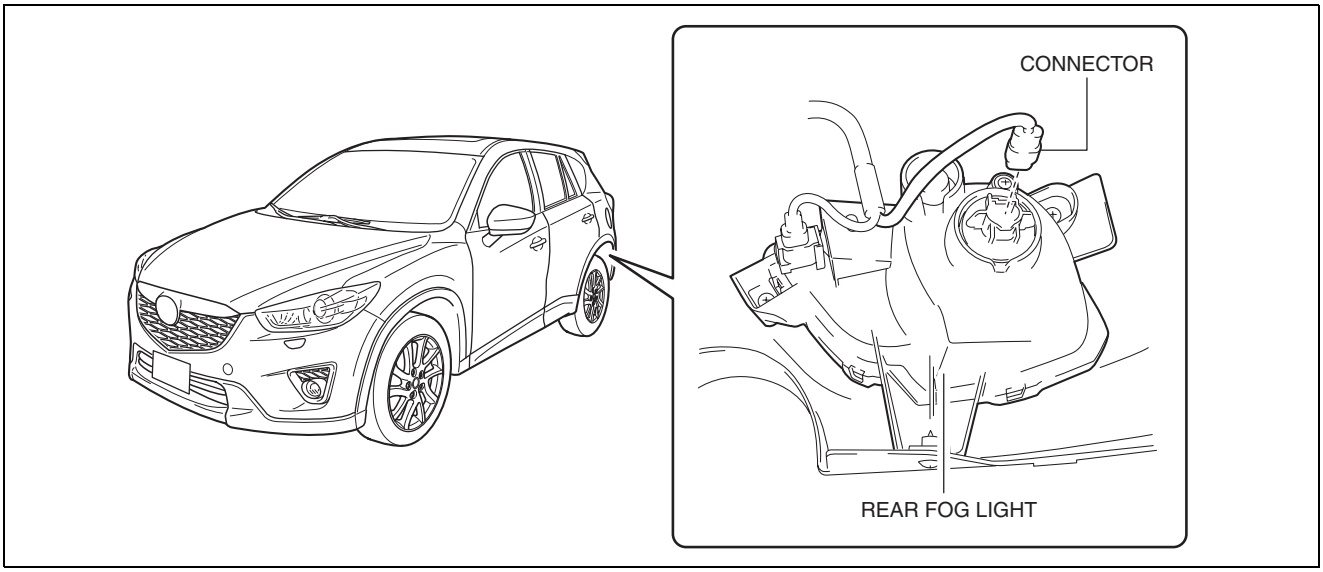

ac5wzw0000053

4. While pressing the tabs of the clip in the direction of the arrow (1) shown in the figure, press the clip in the direction of the arrow (2) to detach the tabs of the clip and rear fog light (with parking sensor system).

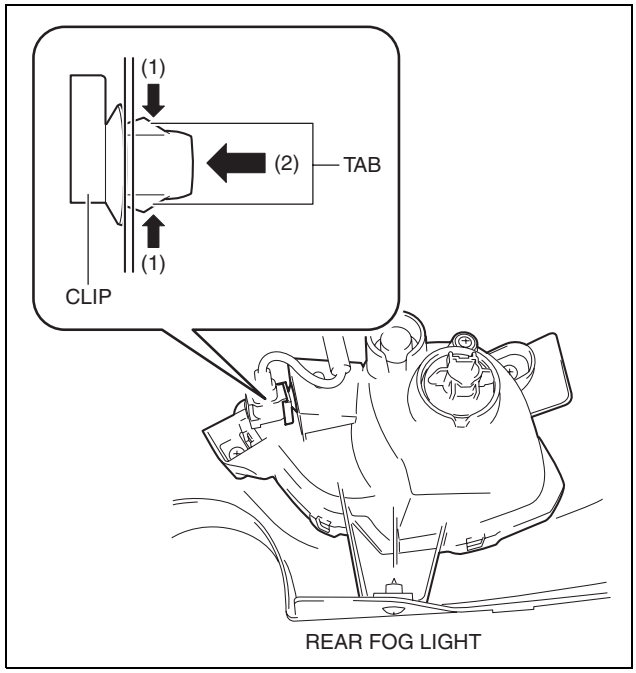

ac5wzw0000119

5. Remove the clip (with parking sensor system).

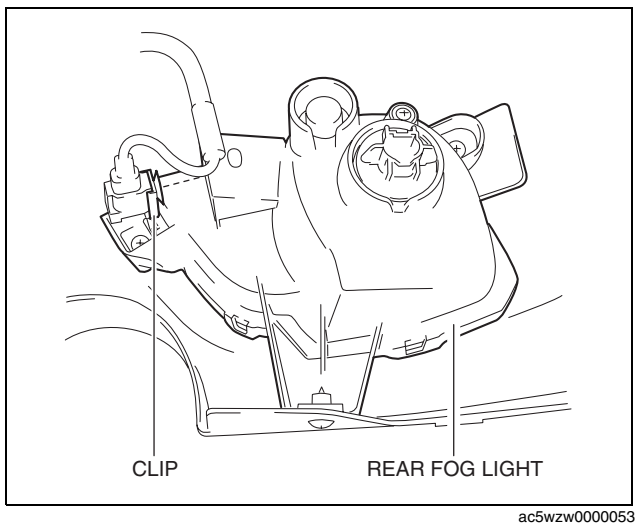

ac5wzw0000053

LIGHTING SYSTEMS

6. Remove the screws.

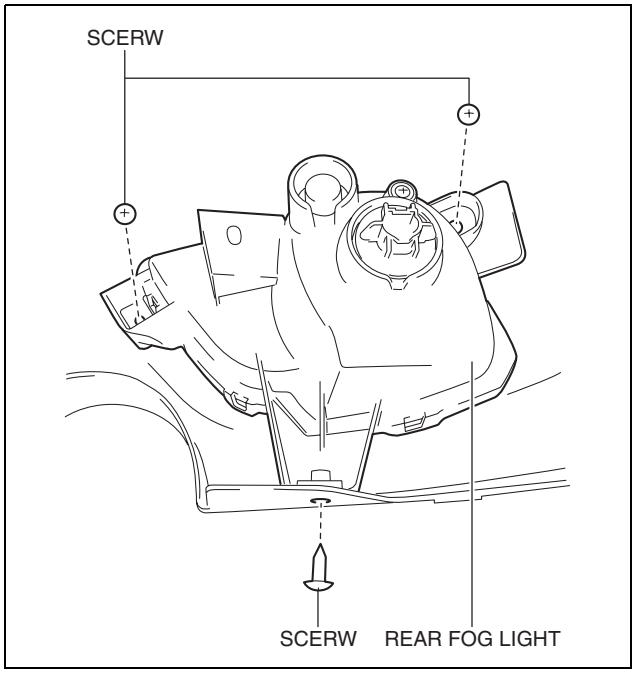

ac5wzw0000053

7. Remove the rear fog light.
8. Install in the reverse order of removal.

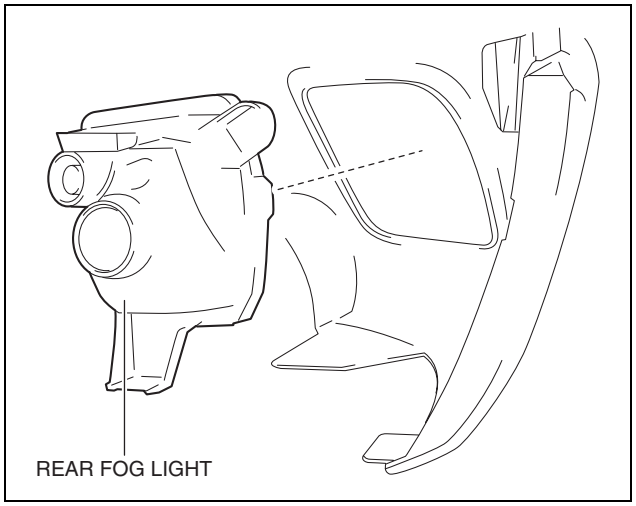

ac5wzw0000053

REAR FOG LIGHT BULB REMOVAL/INSTALLATION

id091800851300

1. Disconnect the negative battery cable. (See 01-17A-13 NEGATIVE BATTERY CABLE DISCONNECTION/CONNECTION [SKYACTIV-G 2.0 (WITHOUT i-stop)].) (See 01-17A-11 NEGATIVE BATTERY CABLE DISCONNECTION/CONNECTION [SKYACTIV-G 2.0].) (See 01-17B-9 NEGATIVE BATTERY CABLE DISCONNECTION/CONNECTION [SKYACTIV-D 2.2].)
2. Remove the fastener.

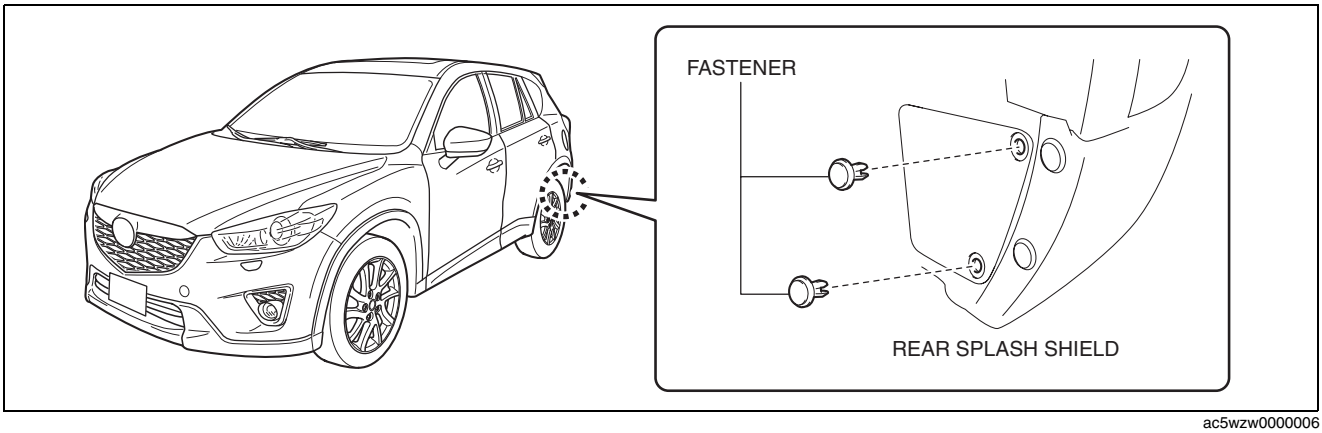

ac5wzw0000006

LIGHTING SYSTEMS

3. Remove the service hole cover.

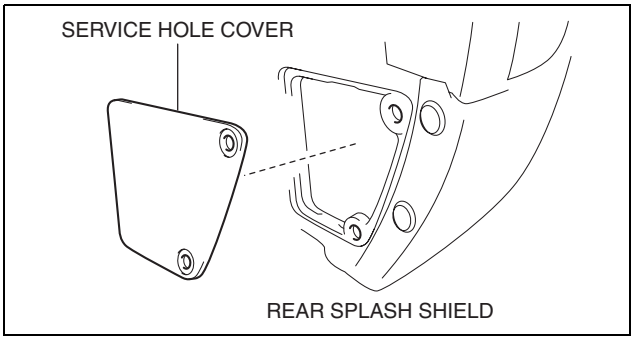

ac5wzw0000007

4. Rotate the socket in the direction of the arrow (1) shown in the figure and remove it from the rear fog light in the direction of the arrow (2) shown in the figure.

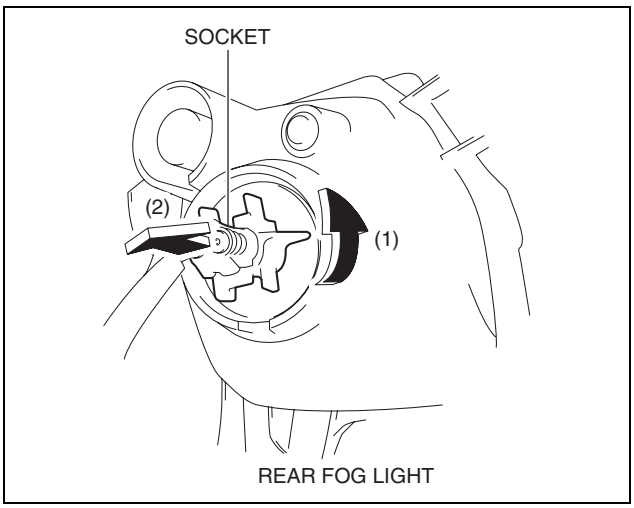

ac5wzw0000007

5. Remove the rear fog light bulb.
6. Install in the reverse order of removal.

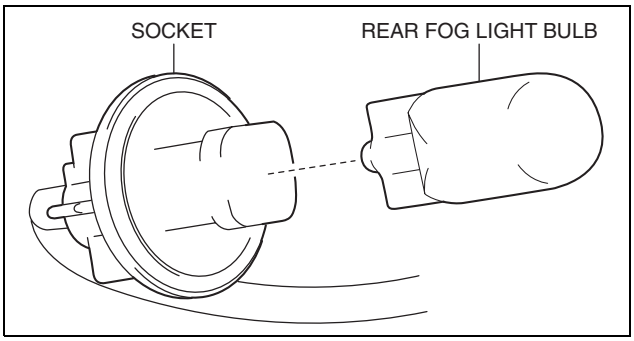

ac5wzw0000007

HIGH-MOUNT BRAKE LIGHT REMOVAL/INSTALLATION

id091800802000

1. Disconnect the negative battery cable. (See 01-17A-13 NEGATIVE BATTERY CABLE DISCONNECTION/CONNECTION [SKYACTIV-G 2.0 (WITHOUT i-stop)].) (See 01-17A-11 NEGATIVE BATTERY CABLE DISCONNECTION/CONNECTION [SKYACTIV-G 2.0].) (See 01-17B-9 NEGATIVE BATTERY CABLE DISCONNECTION/CONNECTION [SKYACTIV-D 2.2].)
2. Remove the liftgate upper trim. (See 09-17-87 LIFTGATE UPPER TRIM REMOVAL/INSTALLATION.)
3. Remove the rear spoiler. (See 09-16-33 REAR SPOILER REMOVAL/INSTALLATION.)

LIGHTING SYSTEMS

4. Disconnect the connector.

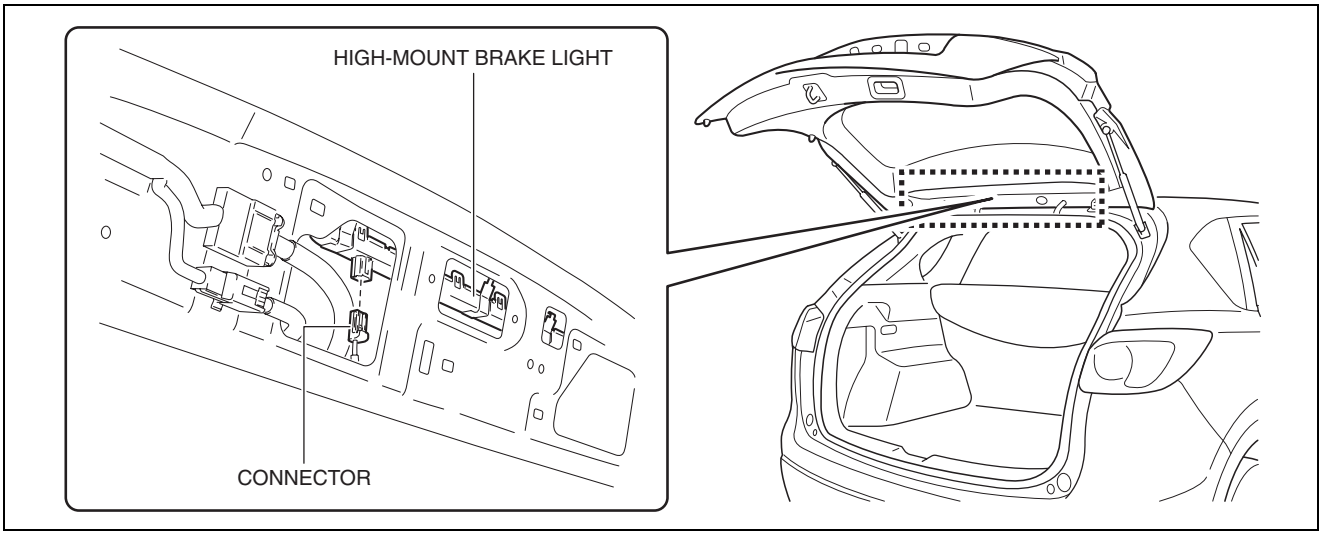

ac5wzw0000011

5. While pressing the high-mount brake light tab in the direction of arrow (1) shown in the figure, press the high-mount brake light in the direction of arrow (2) to detach the high-mount brake light and liftgate.

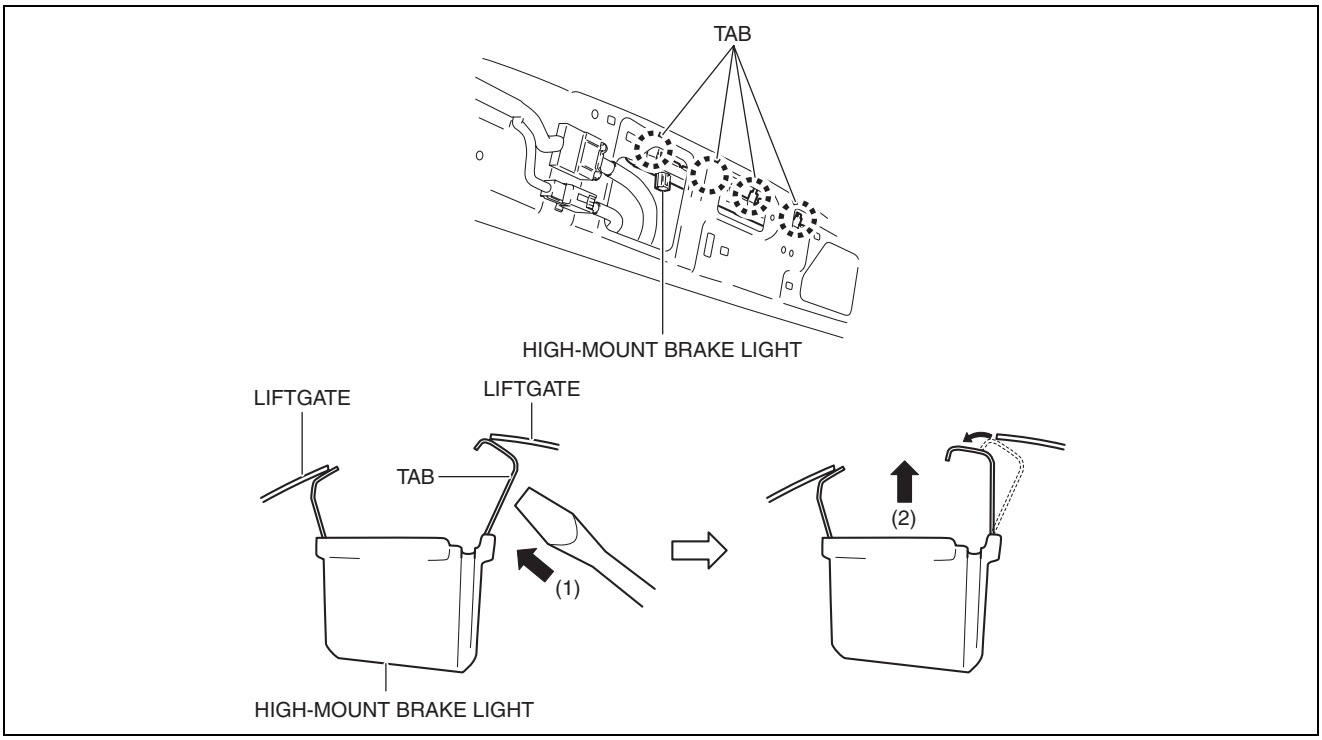

ac5wzw0000334

6. Detach all the high-mount brake light tabs and liftgate and remove the high-mount brake light from the liftgate.

Caution

- **If the high-mount brake light is removed from the liftgate, the high-mount brake light may fall off and be damaged. When removing the high-mount brake light from the liftgate, hold the high-mount brake light on the lens side with a hand during servicing.**

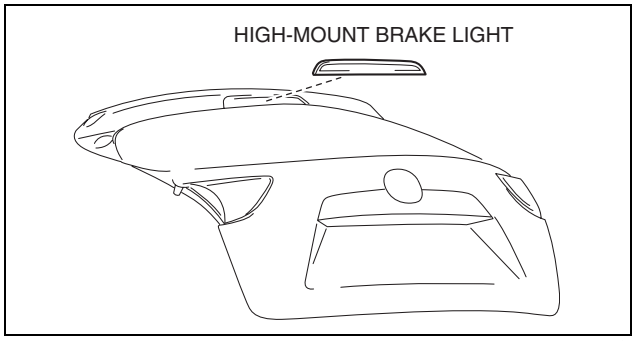

ac5wzw0000042

7. Install in the reverse order of removal.

LIGHTING SYSTEMS

LICENSE PLATE LIGHT REMOVAL/INSTALLATION

id091800801100

1. Disconnect the negative battery cable. (See 01-17A-13 NEGATIVE BATTERY CABLE DISCONNECTION/CONNECTION [SKYACTIV-G 2.0 (WITHOUT i-stop)].) (See 01-17A-11 NEGATIVE BATTERY CABLE DISCONNECTION/CONNECTION [SKYACTIV-G 2.0].) (See 01-17B-9 NEGATIVE BATTERY CABLE DISCONNECTION/CONNECTION [SKYACTIV-D 2.2].)
2. Remove the following parts:
   (1) Liftgate upper trim (See 09-17-87 LIFTGATE UPPER TRIM REMOVAL/INSTALLATION.)
   (2) Liftgate side trim (See 09-17-87 LIFTGATE SIDE TRIM REMOVAL/INSTALLATION.)
   (3) Liftgate lower trim (See 09-17-89 LIFTGATE LOWER TRIM REMOVAL/INSTALLATION.)
3. Disconnect the connector.

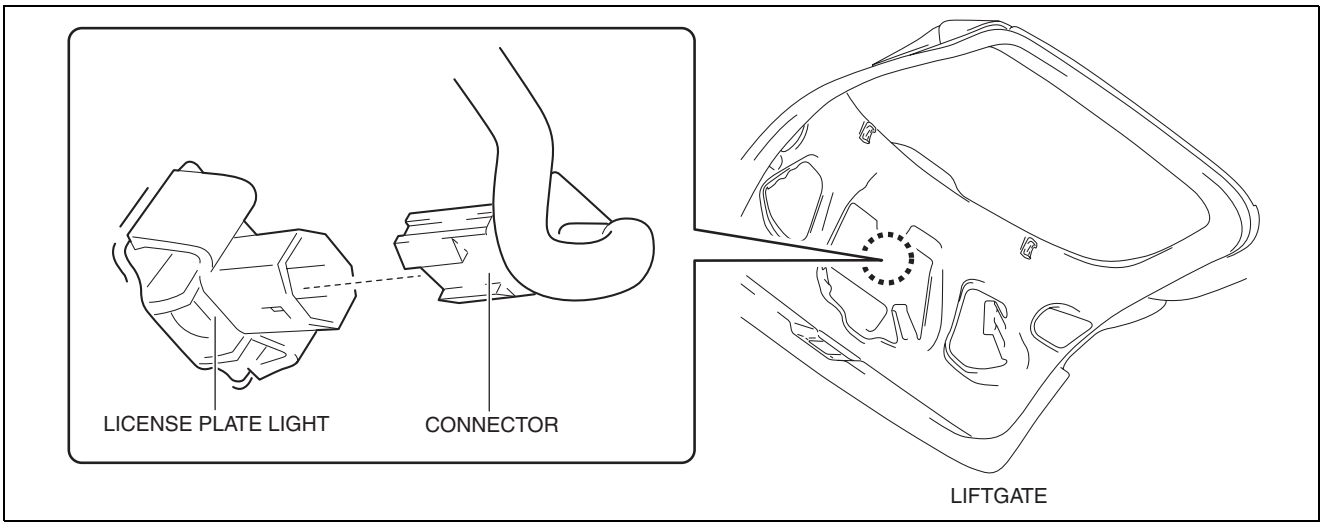

ac5wzw0000001

4. While pressing the license plate light tab in the direction of arrow (1) shown in the figure, press the license plate light in the direction of arrow (2) to detach the license plate light tab and liftgate.

Caution

- **If the license plate light is removed from the liftgate, the license plate light may fall off and be damaged. When removing the license plate light from the liftgate, hold the license plate light on lens side with a hand during servicing.**

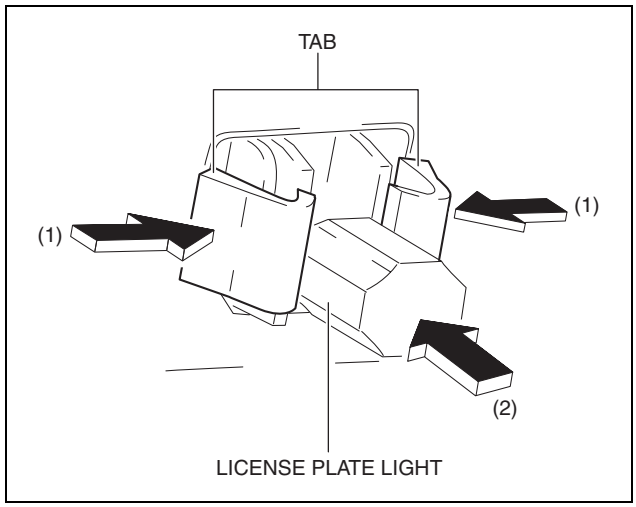

ac5wzw0000001

LIGHTING SYSTEMS

5. Remove the license plate light.
6. Install in the reverse order of removal.

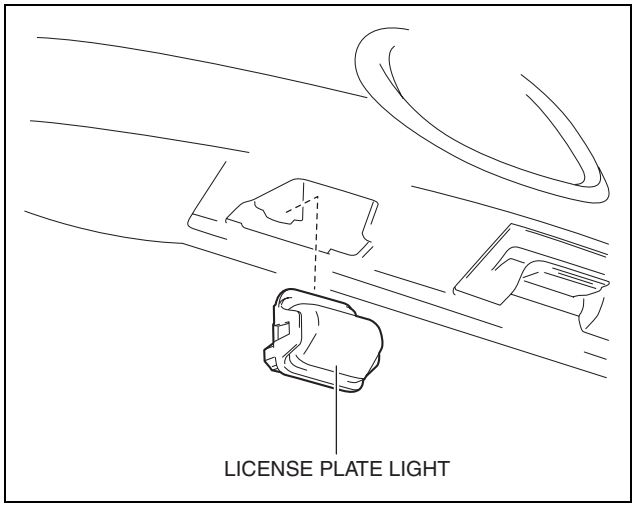

ac5wzw0000041

LICENSE PLATE LIGHT BULB REMOVAL/INSTALLATION

id091800857800

1. Disconnect the negative battery cable. (See 01-17A-13 NEGATIVE BATTERY CABLE DISCONNECTION/CONNECTION [SKYACTIV-G 2.0 (WITHOUT i-stop)].) (See 01-17A-11 NEGATIVE BATTERY CABLE DISCONNECTION/CONNECTION [SKYACTIV-G 2.0].) (See 01-17B-9 NEGATIVE BATTERY CABLE DISCONNECTION/CONNECTION [SKYACTIV-D 2.2].)
2. Insert a tape-wrapped flathead screwdriver into the clearance between the lens and license plate light shown in the figure.

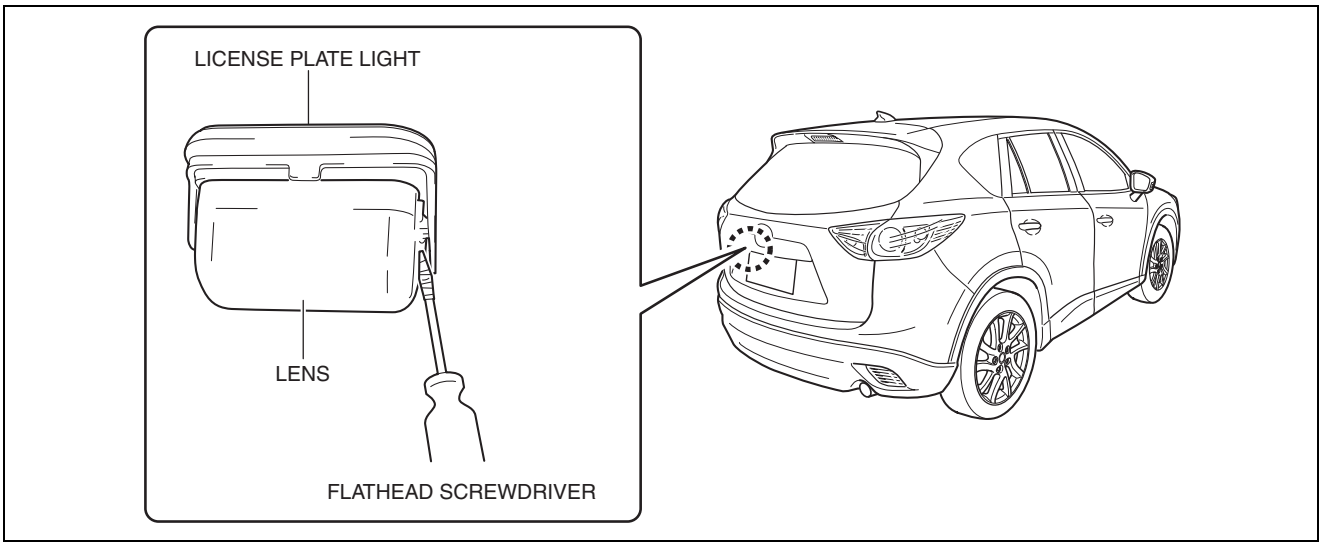

ac5wzw0000465

3. Move the flathead screwdriver in the direction of the arrow shown in the figure, pull out the lens from the license plate light, and detach the lens tab and license plate light.

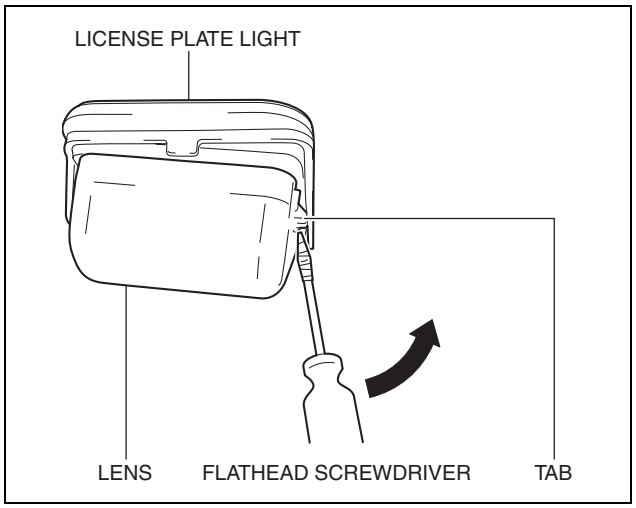

ac5wzw0000121

LIGHTING SYSTEMS

4. Remove the lens.

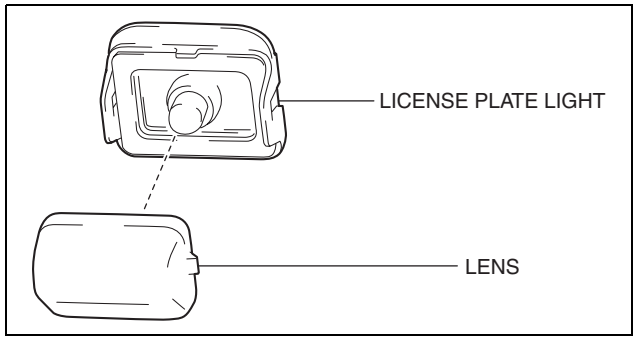

ac5wzw0000051

5. Remove the license plate light bulb.
6. Install in the reverse order of removal.

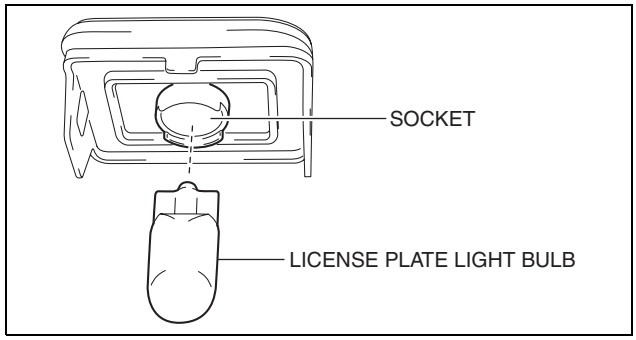

ac5wzw0000007

AUTO LEVELING SENSOR REMOVAL/INSTALLATION

id091800805700

1. Disconnect the negative battery cable. (See 01-17A-13 NEGATIVE BATTERY CABLE DISCONNECTION/CONNECTION [SKYACTIV-G 2.0 (WITHOUT i-stop)].) (See 01-17A-11 NEGATIVE BATTERY CABLE DISCONNECTION/CONNECTION [SKYACTIV-G 2.0].) (See 01-17B-9 NEGATIVE BATTERY CABLE DISCONNECTION/CONNECTION [SKYACTIV-D 2.2].)
2. Disconnect the connector.

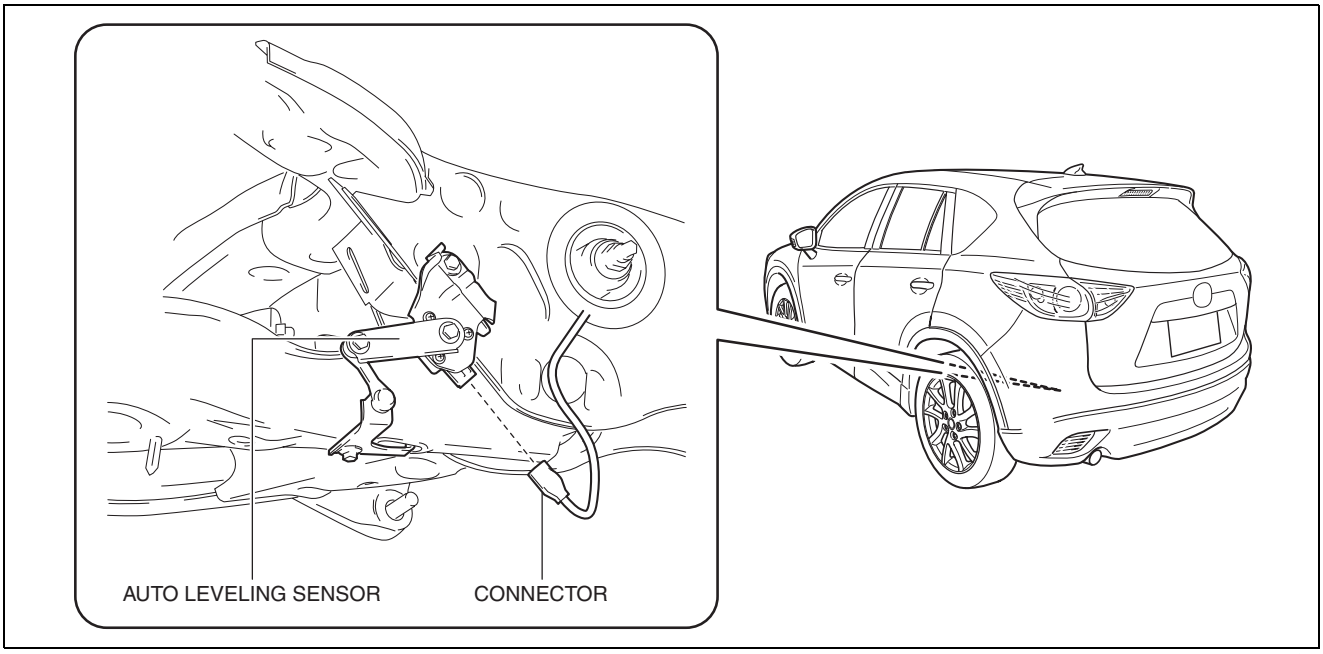

ac5wzw0000465

3. Remove the bolts.

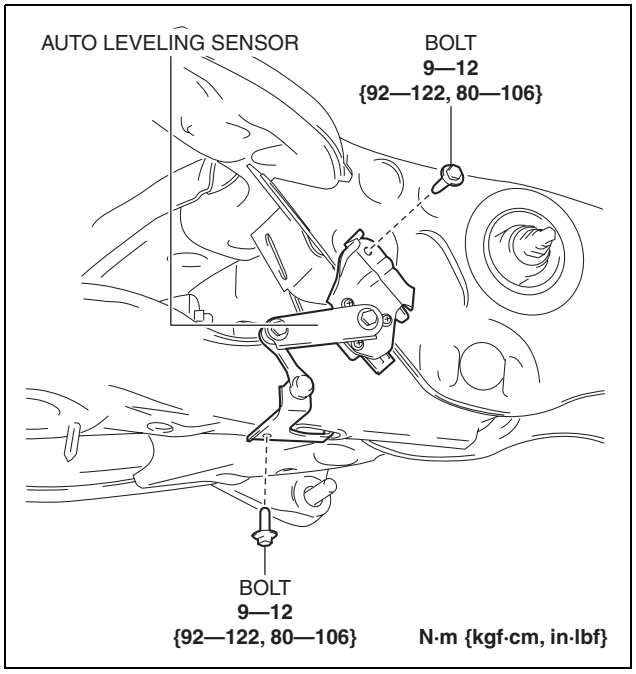

ac5wzw0000046

4. Remove the auto leveling sensor.
5. Install in the reverse order of removal.
6. Perform the auto leveling system initial setting. (See 09-18-82 HEADLIGHT AUTO LEVELING SYSTEM INITIALIZATION.)

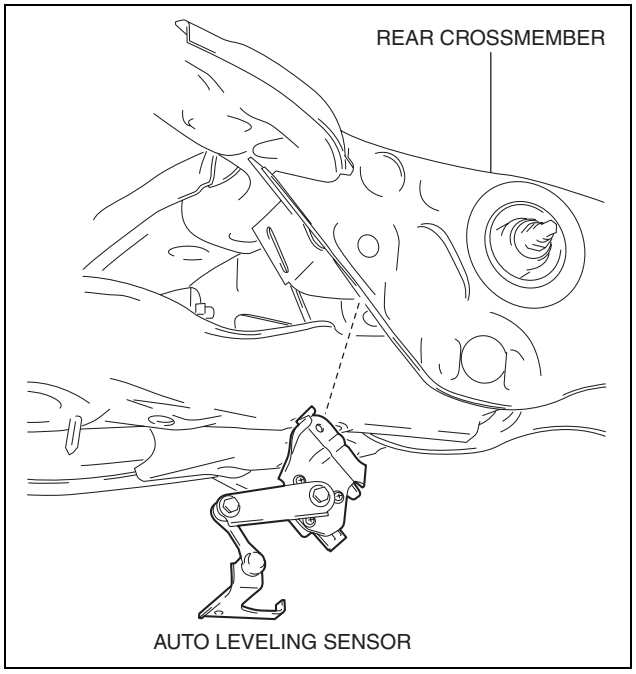

ac5wzw0000046

AUTO LEVELING SENSOR INSPECTION

id091800805600

1. Remove the auto leveling sensor. (See 09-18-79 AUTO LEVELING SENSOR REMOVAL/INSTALLATION.)
2. Prepare three dry cell batteries (1.5 V).

LIGHTING SYSTEMS

3. Connect the three dry cell batteries in a series.

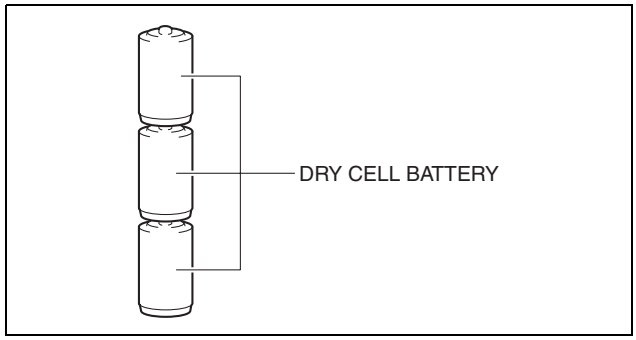

ac5wzw0000012

4. Connect the positive pole of the dry cell battery to auto leveling sensor terminal C, and the negative pole to terminal A.

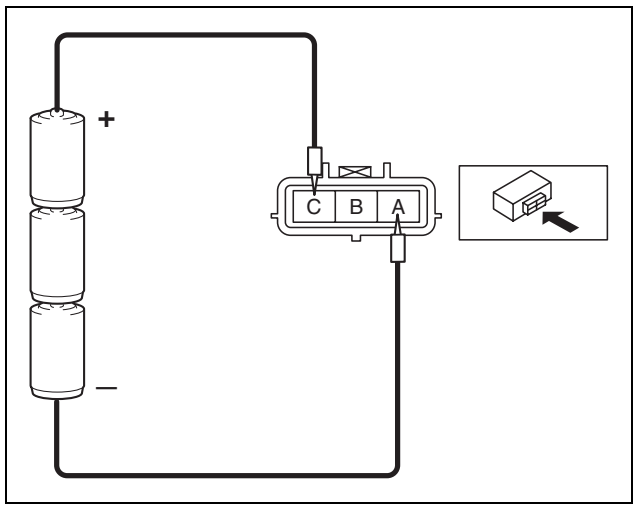

ac5wzw0000012

5. Connect the tester as shown in the figure with **approx. 4.5 V** of voltage applied between auto leveling sensor terminals A and C, and measure the voltage at auto leveling sensor terminal B.

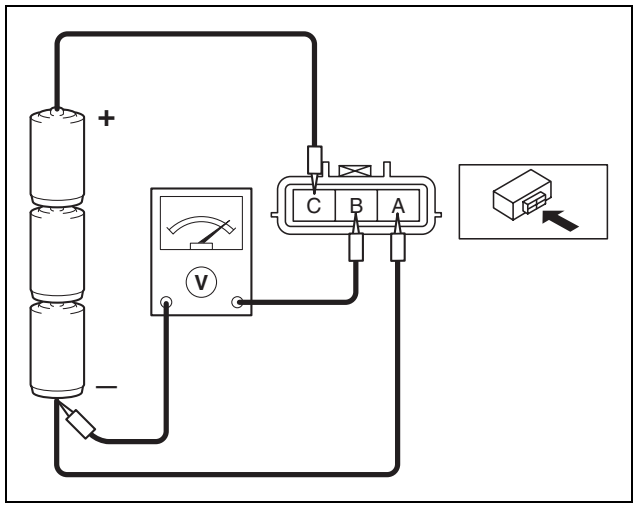

ac5wzw0000012

LIGHTING SYSTEMS

6. When slowly moving the auto leveling sensor link up and down, verify that the voltage fluctuates linearly between 0**.5—4.5 V** as shown in the figure.

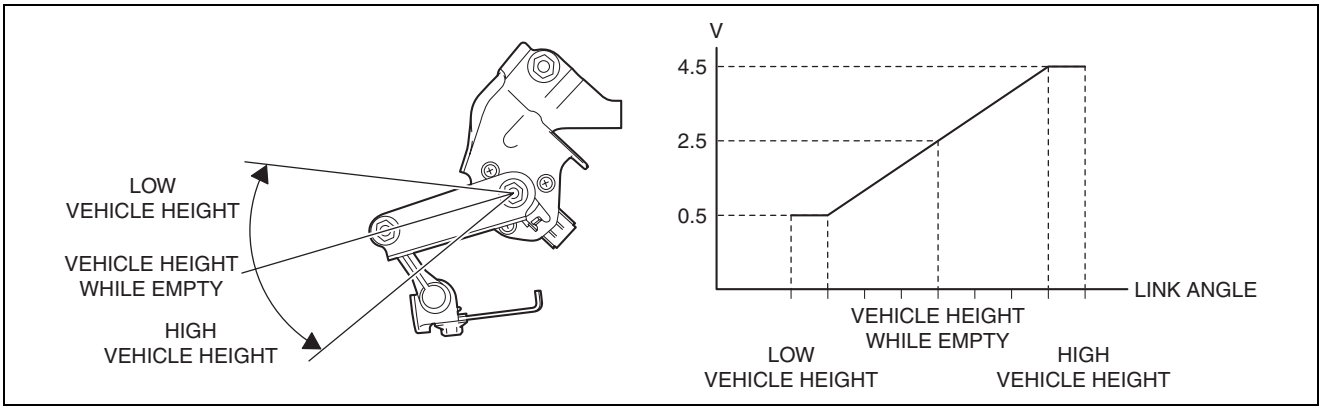

ac5wzw0000171

- If the voltage cannot be verified as indicated in the graph, replace the auto leveling sensor. (See 09-18-79 AUTO LEVELING SENSOR REMOVAL/INSTALLATION.)

HEADLIGHT AUTO LEVELING SYSTEM INITIALIZATION

id091800812200

Note

- The AFS control module records the vehicle height while it is unoccupied by performing the headlight auto leveling system initial setting.
- Perform headlight auto leveling system initial setting if any of the following work is performed.
  - — AFS control module replacement
  - — Auto leveling sensor replacement, removal/installation
  - — Work that can affect vehicle height such as suspension replacement or removal/installation.
- There are two types of procedures for headlight auto leveling system initial setting, one which uses the M-MDS and the other which does not use it.

When using the M-MDS

1. Empty the vehicle by having all occupants leave the vehicle and remove all the cargo except for the spare tire, jack and tools equipped on the vehicle.
2. Adjust the air pressure of each tire to the specified value. (See 02-12-1 WHEEL AND TIRE SPECIFICATION.)
3. Move the vehicle to level ground.
4. Connect the M-MDS to the DLC-2.
5. After vehicle identification, select in the following order from the M-MDS initial screen.

Note

- The AFS OFF indicator light continues flashing during the first initial setting, however, continue the work because it does not indicate an improper procedure.

(1) "Electrical"
(2) "ExteriorLighting"
(3) "Headlamp"
(4) "Auto Leveling Sensor"
(5) "Auto Leveling Sensors Calibration"

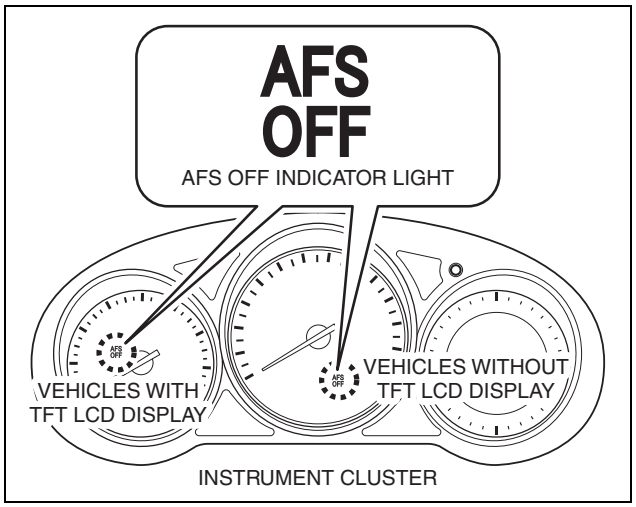

ac5wzw0000121

LIGHTING SYSTEMS

6. Verify that the AFS OFF indicator light flashes three times at **0.25 s** intervals and turns off as shown in the figure.
7. Adjust the headlight aiming. (See 09-18-18 HEADLIGHT AIMING.)

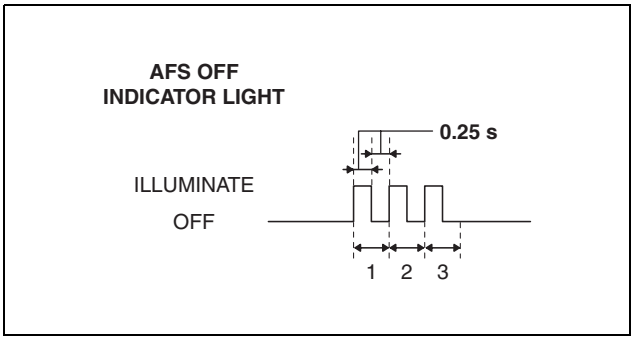

ac5wzw0000304

When not using the M-MDS

Caution
- **Perform Steps 3-4 within 30 s.**

1. Empty the vehicle by having all occupants leave the vehicle and remove all the cargo except for the spare tire, jack and tools equipped on the vehicle.
2. Adjust the air pressure of each tire to the specified value. (See 02-12-1 WHEEL AND TIRE SPECIFICATION.)
3. Switch the ignition ON (engine off or on).

Note
- The AFS OFF indicator light continues flashing during the first initial setting, however, continue the work because it does not indicate an improper procedure.

4. Using a jumper wire, connect DLC-2 terminals B and J (ground) three times at **0.5 to 1.5 s** intervals as shown in the figure.

Caution

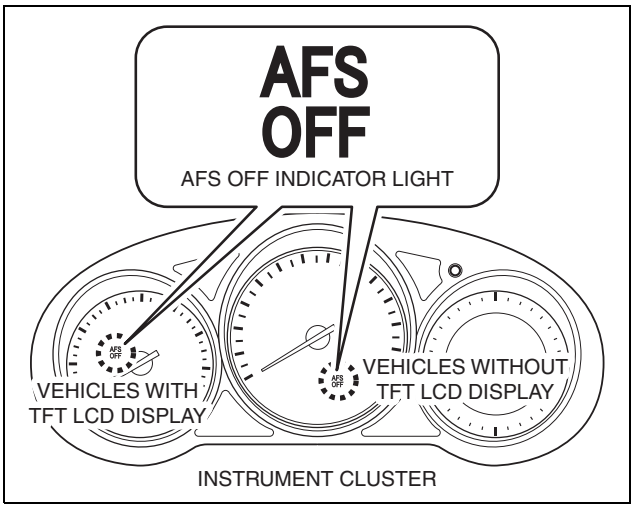

ac5wzw0000121

- **If the terminals are mistakenly connected, vehicle damage or fire could occur. When connecting with the jumper wire, thoroughly verify what terminals are being connected to prevent a miss-connection.**

5. Verify the AFS OFF indicator light.

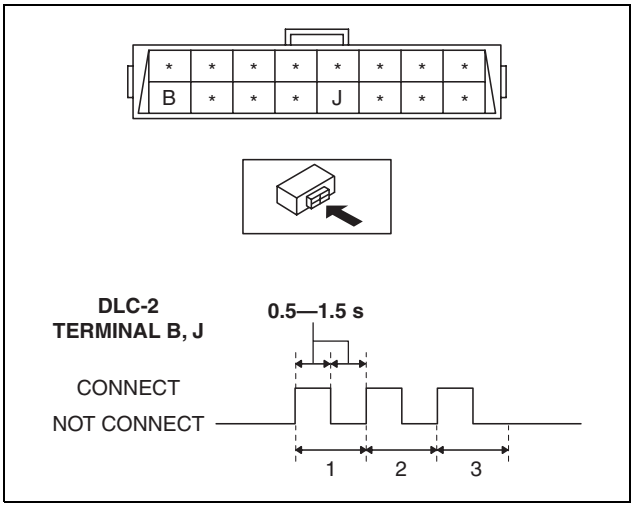

ac5wzw0000121

LIGHTING SYSTEMS

- If the AFS OFF indicator light flashes three times at **0.25 s** intervals and turns off as shown in the figure, the initial setting is completed. Go to the next step.
- If the AFS OFF indicator light continues flashing, the procedure may be performed incorrectly. Repeat the procedure from Step 3.
- If the AFS OFF indicator light is illuminated, the headlight auto leveling system may have a malfunction. Perform the DTC inspection. (See 09-02D-5 DTC INSPECTION [ADAPTIVE FRONT LIGHTING SYSTEM (AFS)].)
  - — Repair or replace the malfunctioning area, then repeat the procedure from Step 3.

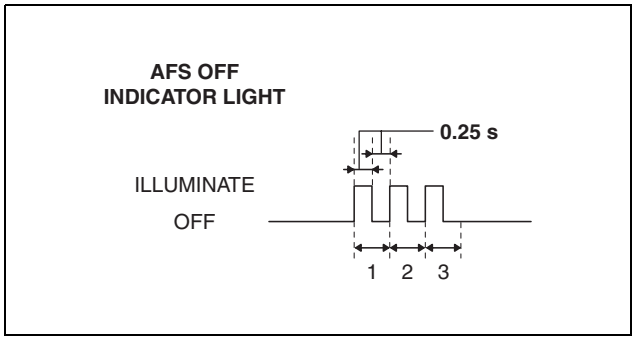

ac5wzw0000304

6. Adjust the headlight aiming. (See 09-18-18 HEADLIGHT AIMING.)

BACK-UP LIGHT SWITCH INSPECTION

id091800800300

1. Remove the back-up light switch. (See 05-15A-3 BACK-UP LIGHT SWITCH REMOVAL/INSTALLATION [C66M-R, C66MX-R].) (See 05-15B-3 BACK-UP LIGHT SWITCH REMOVAL/INSTALLATION [D66M-R, D66MX-R].)
2. Verify that the continuity between the back-up light switch terminals is as indicated in the table.

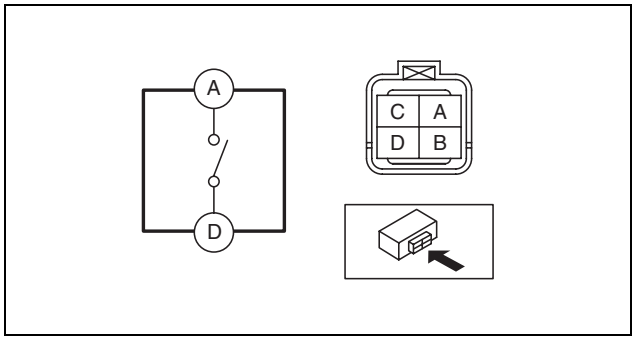

ac5wzw0000000

- If not as indicated in the table, replace the back-up light switch. (See 05-15A-3 BACK-UP LIGHT SWITCH REMOVAL/INSTALLATION [C66M-R, C66MX-R].) (See 05-15B-3 BACK-UP LIGHT SWITCH REMOVAL/INSTALLATION [D66M-R, D66MX-R].)

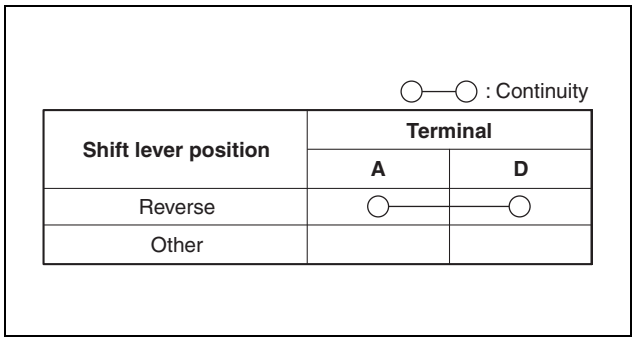

Shift lever position	Terminal	
	A	D
Reverse	○	○
Other		

ac5wzw0000039

LIGHT SWITCH REMOVAL/INSTALLATION

id091800802800

Note

- When removing the light switch, it is necessary to rotate the steering wheel. If the ignition is switched off from ON (engine on) with the driver's door closed, the steering wheel is locked. Therefore, perform the procedure in Steps 1 to 3 so that the steering wheel is not locked.

1. Switch the ignition ON (engine on).
2. Open the driver's door.
3. Switch the ignition to off.
4. Disconnect the negative battery cable. (See 01-17A-13 NEGATIVE BATTERY CABLE DISCONNECTION/CONNECTION [SKYACTIV-G 2.0 (WITHOUT i-stop)].) (See 01-17A-11 NEGATIVE BATTERY CABLE DISCONNECTION/CONNECTION [SKYACTIV-G 2.0].) (See 01-17B-9 NEGATIVE BATTERY CABLE DISCONNECTION/CONNECTION [SKYACTIV-D 2.2].)
5. Remove the column cover. (See 09-17-25 COLUMN COVER REMOVAL/INSTALLATION.)

LIGHTING SYSTEMS

6. Rotate the steering wheel until the service hole in the position shown in the figure is visible.

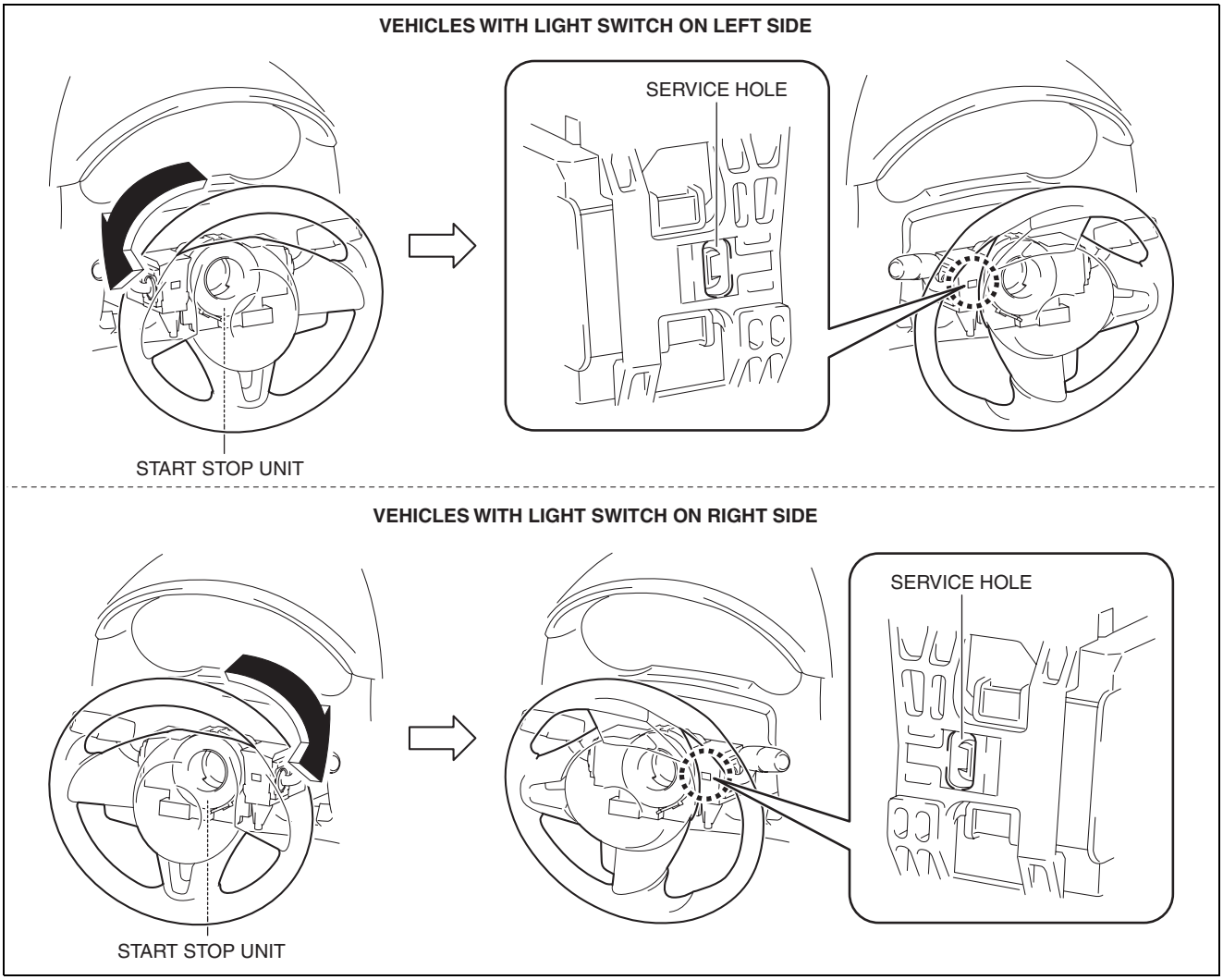

ac5wzw0000016

7. Insert a tape-wrapped flathead screwdriver into the service hole in the position shown in the figure.

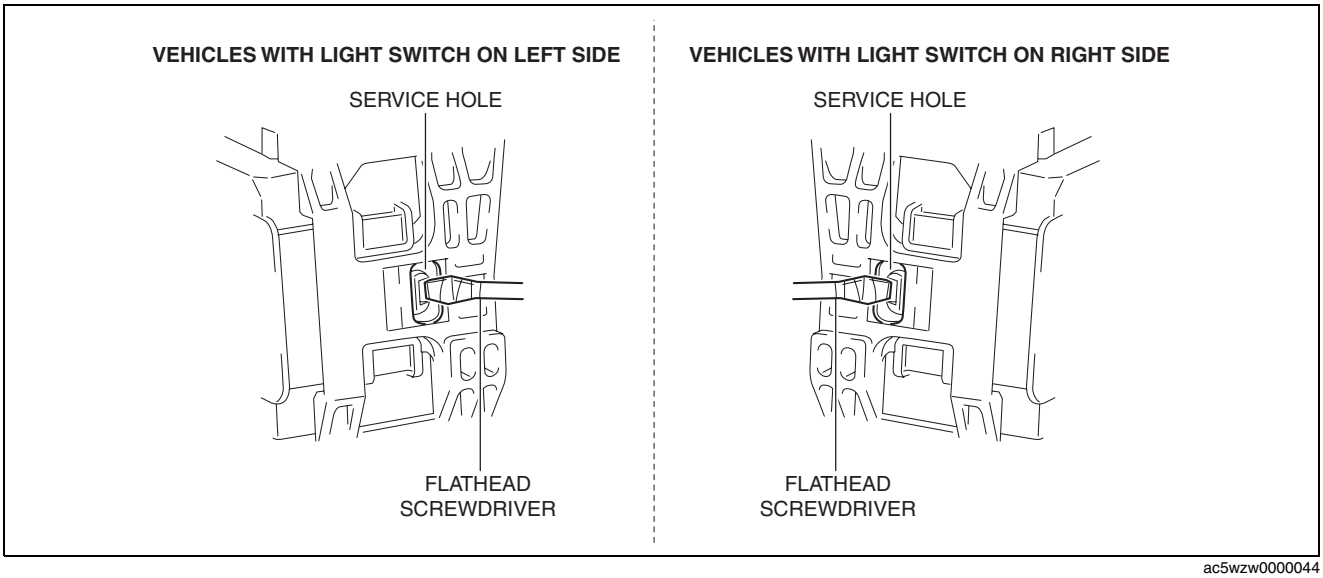

ac5wzw0000044

LIGHTING SYSTEMS

8. While pressing the light switch tab in the direction of the arrow (1) shown in the figure using a flathead screwdriver, pull out the light switch in the direction of the arrow (2) shown in the figure to detach the light switch tab and the start stop unit.

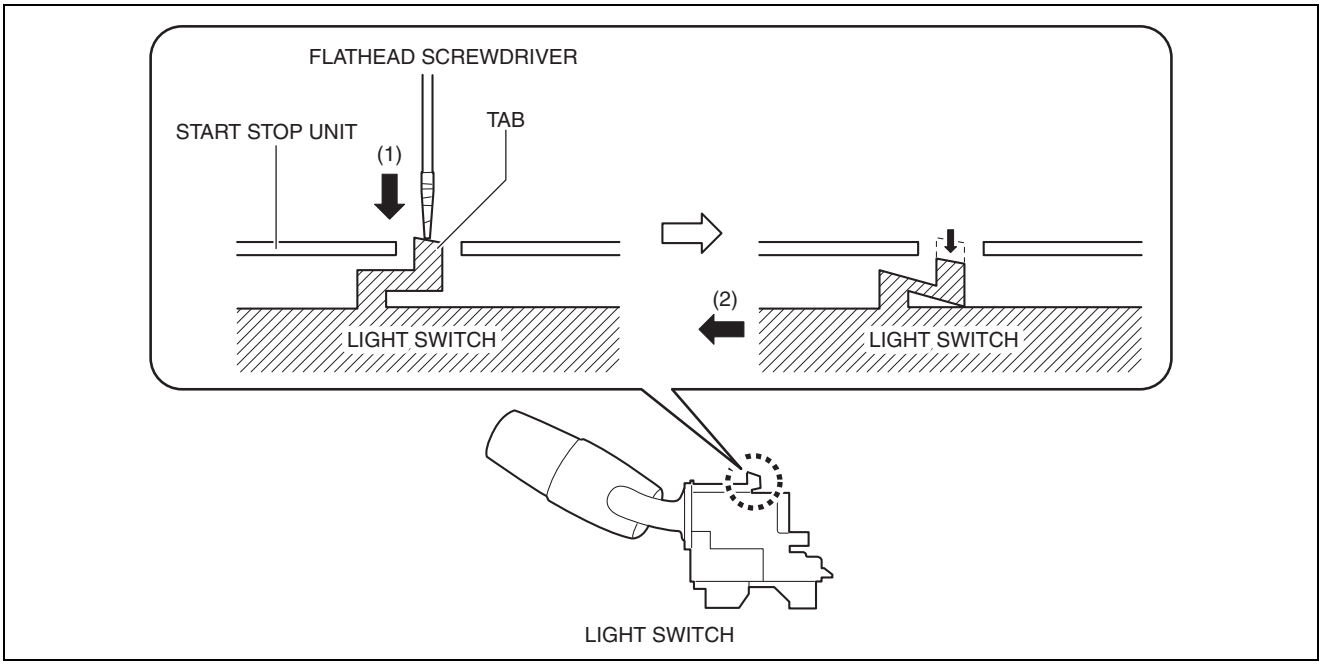

ac5wzw0000081

9. Remove the light switch.

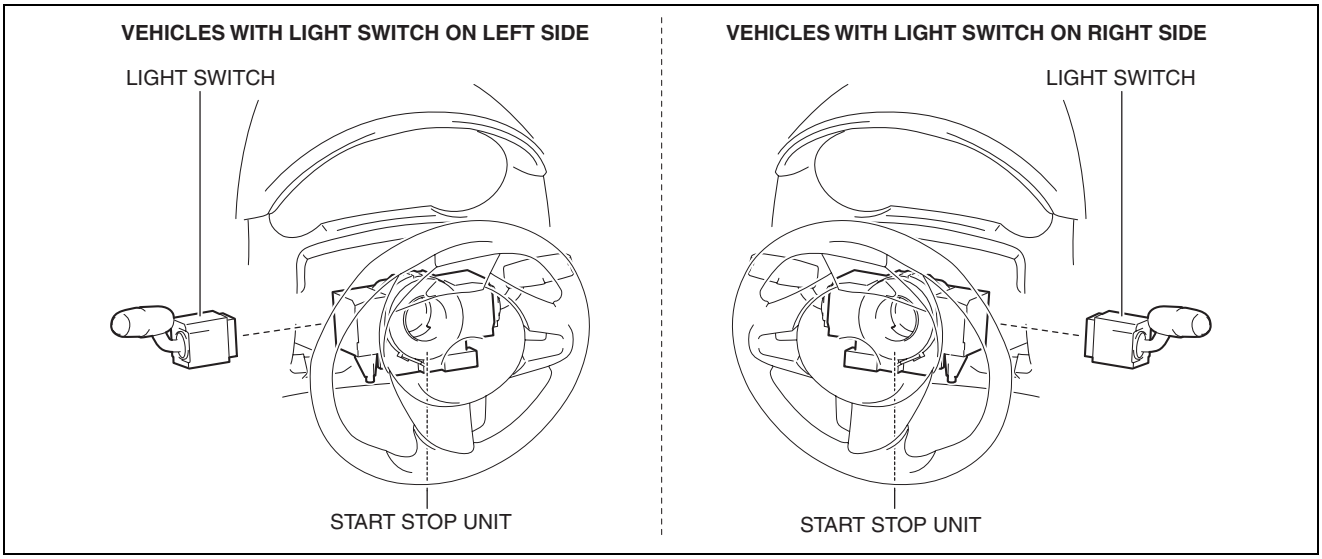

ac5wzw0000044

10. Install in the reverse order of removal.

LIGHT SWITCH INSPECTION

id091800802900

Light Switch

1. Remove the light switch. (See 09-18-84 LIGHT SWITCH REMOVAL/INSTALLATION.)
2. Verify that the continuity between the light switch terminals is as indicated in the table.

LIGHTING SYSTEMS

Vehicles without auto light system

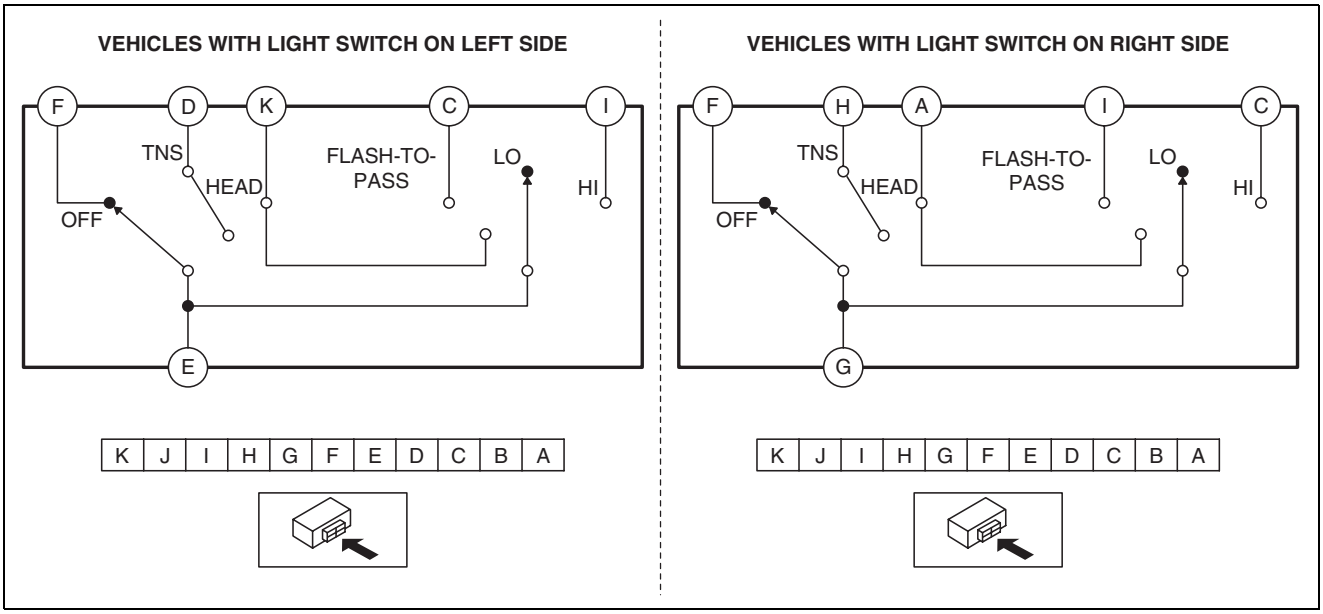

ac5wzw0000003

Vehicles with light switch on left side

○—○ : Continuity

Switch position			Terminal					
Light	Dimmer	FLASH-TO-PASS	C	D	E	F	I	K
OFF	—	Off			○—○			
		On	○		○	○		○
TNS	—	Off		○	○			
		On	○	○	○			○
HEAD	LO	Off		○	○			○
		On	○	○	○			○
	HI	—		○	○		○	○

Vehicles with light switch on right side

○—○ : Continuity

Switch position			Terminal					
Light	Dimmer	FLASH-TO-PASS	A	C	F	G	H	I
OFF	—	Off			○—○			
		On	○		○	○		○
TNS	—	Off				○	○	
		On	○			○	○	○
HEAD	LO	Off	○			○	○	
		On	○			○	○	○
	HI	—	○	○		○	○	

ac5wzw0000303

LIGHTING SYSTEMS

Vehicles with auto light system

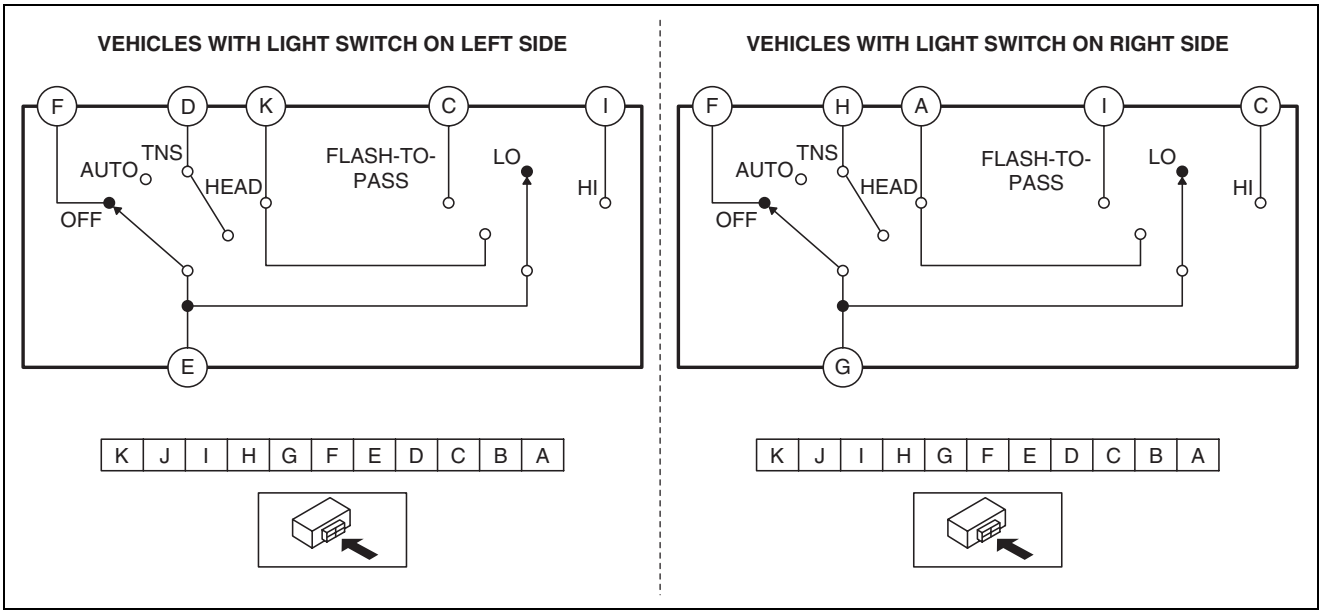

ac5wzw0000003

Vehicles with light switch on left side

○—○ : Continuity

Switch position			Terminal					
Light	Dimmer	FLASH-TO-PASS	C	D	E	F	I	K
OFF	—	Off			○	○		
		On	○		○	○		○
AUTO	LO	Off						
		On	○		○			○
TNS	—	Off		○	○			
		On	○	○	○			○
HEAD	LO	Off		○	○			○
		On	○	○	○			○
	HI	—		○	○		○	○

Vehicles with light switch on right side

○—○ : Continuity

Switch position			Terminal					
Light	Dimmer	FLASH-TO-PASS	A	C	F	G	H	I
OFF	—	Off			○	○		
		On	○		○	○		○
AUTO	LO	Off						
		On	○			○		○
TNS	—	Off				○	○	
		On	○			○	○	○
HEAD	LO	Off	○			○	○	
		On	○			○	○	○
	HI	—	○	○		○	○	

ac5wzw0000304

- If not as indicated in the table, replace the light switch. (See 09-18-84 LIGHT SWITCH REMOVAL/INSTALLATION.)

Turn Switch

1. Remove the light switch. (See 09-18-84 LIGHT SWITCH REMOVAL/INSTALLATION.)

LIGHTING SYSTEMS

2. Verify that the continuity between the light switch terminals is as indicated in the table.

VEHICLES WITH LIGHT SWITCH ON LEFT SIDE

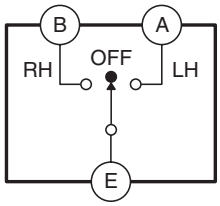

K	J	I	H	G	F	E	D	C	B	A

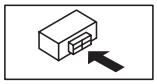

VEHICLES WITH LIGHT SWITCH ON RIGHT SIDE

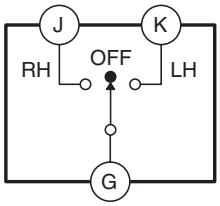

K	J	I	H	G	F	E	D	C	B	A

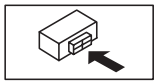

ac5wzw0000003

Vehicles with light switch on left side

○—○ : Continuity

Switch position	Terminal		
	A	B	E
RH		○	○
OFF			
LH	○		○

Vehicles with light switch on right side

○—○ : Continuity

Switch position	Terminal		
	G	J	K
RH	○	○	
OFF			
LH	○		○

ac5wzw0000044

- If not as indicated in the table, replace the light switch. (See 09-18-84 LIGHT SWITCH REMOVAL/INSTALLATION.)

FRONT FOG LIGHT SWITCH INSPECTION

id091800803200

1. Remove the light switch. (See 09-18-84 LIGHT SWITCH REMOVAL/INSTALLATION.)
2. Verify that the continuity between the light switch terminals is as indicated in the table.

VEHICLES WITH LIGHT SWITCH ON LEFT SIDE

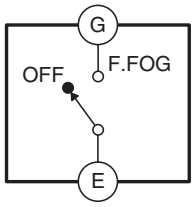

K	J	I	H	G	F	E	D	C	B	A

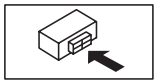

VEHICLES WITH LIGHT SWITCH ON RIGHT SIDE

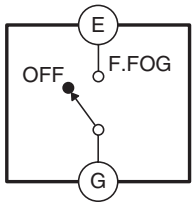

K	J	I	H	G	F	E	D	C	B	A

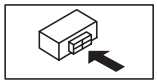

ac5wzw0000003

LIGHTING SYSTEMS

- If not as indicated in the table, replace the light switch. (See 09-18-84 LIGHT SWITCH REMOVAL/INSTALLATION.)

○—○ : Continuity

Switch position	Terminal	
	E	G
F.FOG	○—○	
OFF		

ac5wzw0000044

REAR FOG LIGHT SWITCH INSPECTION

id091800804700

1. Remove the light switch. (See 09-18-84 LIGHT SWITCH REMOVAL/INSTALLATION.)
2. Verify that the continuity between the rear fog light switch terminals is as indicated in the table.

VEHICLES WITH LIGHT SWITCH ON LEFT SIDE

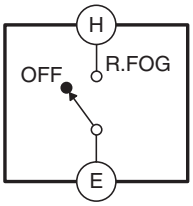

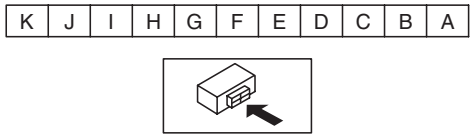

VEHICLES WITH LIGHT SWITCH ON RIGHT SIDE

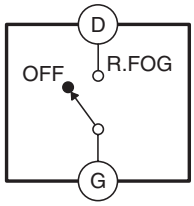

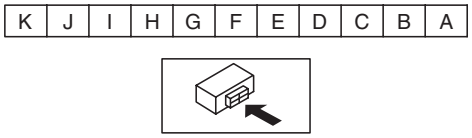

ac5wzw0000003

- If not as indicated in the table, replace the light switch. (See 09-18-84 LIGHT SWITCH REMOVAL/INSTALLATION.)

Vehicles with light switch on left side

○—○ : Continuity

Switch position	Terminal	
	E	H
R.FOG	○—○	
OFF		

Vehicles with light switch on right side

○—○ : Continuity

Switch position	Terminal	
	D	G
R.FOG	○—○	
OFF		

ac5wzw0000045

HAZARD WARNING SWITCH REMOVAL/INSTALLATION

id091800803000

1. Disconnect the negative battery cable. (See 01-17A-13 NEGATIVE BATTERY CABLE DISCONNECTION/CONNECTION [SKYACTIV-G 2.0 (WITHOUT i-stop)].) (See 01-17A-11 NEGATIVE BATTERY CABLE DISCONNECTION/CONNECTION [SKYACTIV-G 2.0].) (See 01-17B-9 NEGATIVE BATTERY CABLE DISCONNECTION/CONNECTION [SKYACTIV-D 2.2].)

LIGHTING SYSTEMS

2. Remove the decoration panel. (See 09-17-33 DECORATION PANEL REMOVAL/INSTALLATION.)
3. While pressing the hazard warning switch tab in the direction of the arrow (1) shown in the figure, press the hazard warning switch in the direction of the arrow (2) shown in the figure to detach the hazard warning switch tabs from the decoration panel.

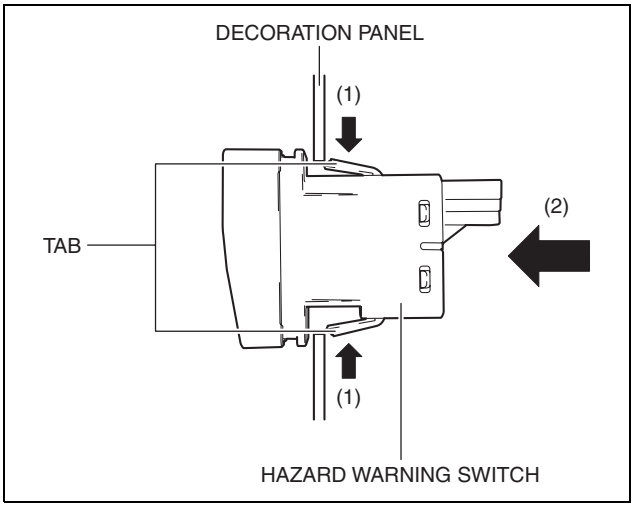

ac5wzw0000119

4. Remove the hazard warning switch.
5. Install in the reverse order of removal.

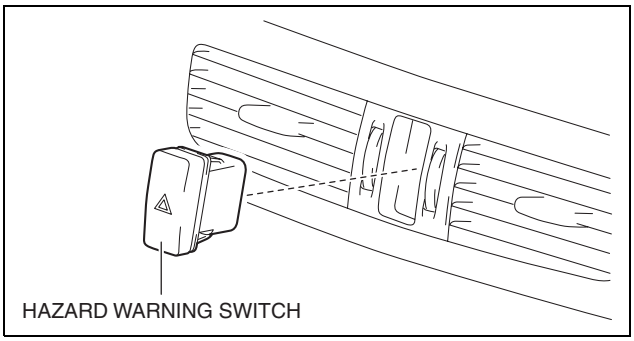

ac5wzw0000044

HAZARD WARNING SWITCH INSPECTION

id091800803100

1. Disconnect the negative battery cable. (See 01-17A-13 NEGATIVE BATTERY CABLE DISCONNECTION/CONNECTION [SKYACTIV-G 2.0 (WITHOUT i-stop)].) (See 01-17A-11 NEGATIVE BATTERY CABLE DISCONNECTION/CONNECTION [SKYACTIV-G 2.0].) (See 01-17B-9 NEGATIVE BATTERY CABLE DISCONNECTION/CONNECTION [SKYACTIV-D 2.2].)
2. Remove the decoration panel. (See 09-17-33 DECORATION PANEL REMOVAL/INSTALLATION.)
3. Verify that the continuity between the hazard warning switch terminals is as indicated in the table.

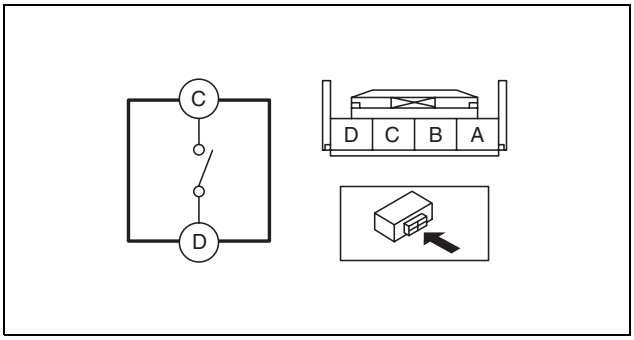

ac5wzw0000003

- If the continuity is as indicated in the table, go to the next step.
- If not as indicated in the table, replace the hazard warning switch. (See 09-18-90 HAZARD WARNING SWITCH REMOVAL/INSTALLATION.)

○—○ : Continuity

Switch position	Terminal	
	C	D
On	○	○
Off		

ac5wzw0000044

LIGHTING SYSTEMS

4. Apply battery voltage to hazard warning switch terminal A, and connect terminal B to ground.

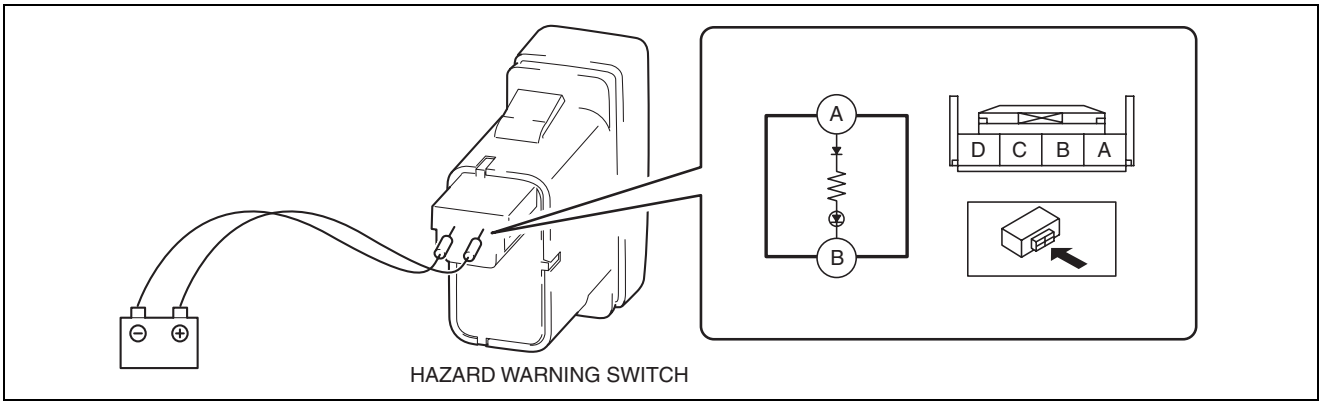

HAZARD WARNING SWITCH

ac5wzw0000010

5. Verify that the LED illuminates.
   - If the LED does not illuminate, replace the hazard warning switch. (See 09-18-90 HAZARD WARNING SWITCH REMOVAL/INSTALLATION.)

HEADLIGHT LEVELING SWITCH REMOVAL/INSTALLATION

id091800803600

Note
- The headlight leveling switch is integrated with the cluster switch.
- For the cluster switch removal/installation, refer to "SWITCH PANEL REMOVAL/INSTALLATION" because the cluster switch is 09-17-18 SWITCH PANEL REMOVAL/INSTALLATION (See 09-17-18 SWITCH PANEL REMOVAL/INSTALLATION.)

HEADLIGHT LEVELING SWITCH INSPECTION

id091800803700

1. Remove the switch panel. (See 09-17-18 SWITCH PANEL REMOVAL/INSTALLATION.)
2. Verify that the resistance between the headlight leveling switch terminals is as indicated in the table.

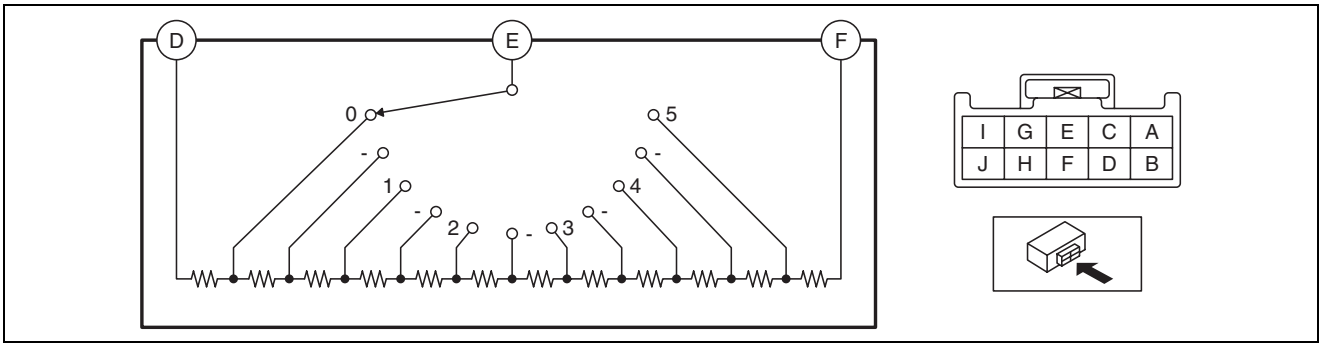

ac5wzw0000003

LIGHTING SYSTEMS

: Resistance

Switch position	Terminal			Resistance (ohms)
	D	E	F	
0				470.25—480.75
-				648.45—662.55
1				826.65—844.35
-				1,004.85—1,026.15
2				1,183.05—1,207.95
-				1,361.25—1,389.75
3				1,539.45—1,571.55
-				1,717.65—1,753.35
4				1,895.85—1,935.15
-				2,074.05—2,116.95
5				2,252.25—2,298.75
All positions				2,976.93—3,038.07

ac5wzw0000304

- If not as indicated in the table, replace the cluster switch. (See 09-17-18 SWITCH PANEL REMOVAL/INSTALLATION.)

AUTO LIGHT SENSOR REMOVAL/INSTALLATION

id091800807200

Note
- The auto light sensor is integrated with the rain sensor as a single unit.
- Refer to "RAIN SENSOR REMOVAL/INSTALLATION" to remove the auto light sensor. (See 09-18-93 AUTO LIGHT SENSOR REMOVAL/INSTALLATION.)

LIGHTING SYSTEM PERSONALIZATION FEATURES SETTING PROCEDURE

id091800112900

Turn Light System
- There are two methods for personalizing the turn light system: One using the M-MDS and the other using the audio unit (with color LCD). Refer to the following and perform the setting.
  Method using M-MDS
  — 09-40-16 CONTROL SYSTEM PERSONALIZATION FEATURES SETTING PROCEDURE
  Using audio unit (with color LCD)
  — 09-20-9 AUDIO UNIT PERSONALIZATION FEATURES SETTING PROCEDURE

Auto Light System
- There are two methods for personalizing the auto light system: One using the M-MDS and the other using the audio unit (with color LCD). Refer to the following and perform the setting.
  Method using M-MDS
  — 09-40-16 CONTROL SYSTEM PERSONALIZATION FEATURES SETTING PROCEDURE
  Using audio unit (with color LCD)
  — 09-20-9 AUDIO UNIT PERSONALIZATION FEATURES SETTING PROCEDURE

Room light control system
- There are two methods for personalizing the interior light control system: One using the M-MDS and the other using the audio unit (with color LCD). Refer to the following and perform the setting.
  Method using M-MDS
  — 09-40-16 CONTROL SYSTEM PERSONALIZATION FEATURES SETTING PROCEDURE
  Using audio unit (with color LCD)
  — 09-20-9 AUDIO UNIT PERSONALIZATION FEATURES SETTING PROCEDURE

LIGHTING SYSTEMS

High Beam Control System

- There are two methods for personalizing the high beam control system: One using the M-MDS and the other using the audio unit (with color LCD). Refer to the following and perform the setting.
  Method using M-MDS
  — 09-22-21 FORWARD SENSING CAMERA (FSC) PERSONALIZATION FEATURES SETTING PROCEDURE
  Using audio unit (with color LCD)
  — 09-20-9 AUDIO UNIT PERSONALIZATION FEATURES SETTING PROCEDURE

FORWARD SENSING CAMERA (FSC) REMOVAL/INSTALLATION

id091800005300

Note

- Refer to "09-22 INSTRUMENTATION/DRIVER INFO. FORWARD SENSING CAMERA (FSC) REMOVAL/INSTALLATION" to remove the forward sensing camera (FSC). (See 09-22-98 FORWARD SENSING CAMERA (FSC) REMOVAL/INSTALLATION.)

FORWARD SENSING CAMERA (FSC) BRACKET REMOVAL/INSTALLATION

id091800005700

Note

- Refer to "09-22 INSTRUMENTATION/DRIVER INFO. FORWARD SENSING CAMERA (FSC) BRACKET REMOVAL/INSTALLATION" to remove the forward sensing camera (FSC) bracket. (See 09-22-101 FORWARD SENSING CAMERA (FSC) BRACKET REMOVAL/INSTALLATION.)

FORWARD SENSING CAMERA (FSC) COVER REMOVAL/INSTALLATION

id091800006000

Note

- Refer to "09-22 INSTRUMENTATION/DRIVER INFO. FORWARD SENSING CAMERA (FSC) COVER REMOVAL/INSTALLATION" to remove the forward sensing camera (FSC) cover. (See 09-22-105 FORWARD SENSING CAMERA (FSC) COVER REMOVAL/INSTALLATION.)

FORWARD SENSING CAMERA (FSC) SHORT-CORD REMOVAL/INSTALLATION

id091800005800

Note

- Refer to "09-22 INSTRUMENTATION/DRIVER INFO. FORWARD SENSING CAMERA (FSC) SHORT-CORD REMOVAL/INSTALLATION" to remove the forward sensing camera (FSC) short-cord. (See 09-22-105 FORWARD SENSING CAMERA (FSC) SHORT-CORD REMOVAL/INSTALLATION.)

FORWARD SENSING CAMERA (FSC) SHORT-CORD INSPECTION

id091800005900

Note

- Refer to "09-22 INSTRUMENTATION/DRIVER INFO. FORWARD SENSING CAMERA (FSC) SHORT-CORD INSPECTION" to inspect the forward sensing camera (FSC) short-cord. (See 09-22-106 FORWARD SENSING CAMERA (FSC) SHORT-CORD INSPECTION.)

FORWARD SENSING CAMERA (FSC) AIMING

id091800005500

Note

- Refer to "09-22 INSTRUMENTATION/DRIVER INFO. FORWARD SENSING CAMERA (FSC) AIMING" to perform the forward sensing camera (FSC) aiming. (See 09-22-106 FORWARD SENSING CAMERA (FSC) AIMING.)

FORWARD SENSING CAMERA (FSC) CONFIGURATION (USING READ/WRITE FUNCTION)

id091800006100

LIGHTING SYSTEMS

Note

- Refer to "09-22 INSTRUMENTATION/DRIVER INFO. FORWARD SENSING CAMERA (FSC) CONFIGURATION (USING READ/WRITE FUNCTION)" to perform the forward sensing camera (FSC) configuration (using read/write function). (See 09-22-117 FORWARD SENSING CAMERA (FSC) CONFIGURATION (USING READ/WRITE FUNCTION).)

FORWARD SENSING CAMERA (FSC) CONFIGURATION (USING AS-BUILT DATA)

id091800006200

Note

- Refer to "09-22 INSTRUMENTATION/DRIVER INFO. FORWARD SENSING CAMERA (FSC) CONFIGURATION (USING AS-BUILT DATA)" to perform the forward sensing camera (FSC) configuration (using as-built data). (See 09-22-118 FORWARD SENSING CAMERA (FSC) CONFIGURATION (USING AS-BUILT DATA).)

MAP LIGHT REMOVAL/INSTALLATION

id091800801200

Front Map Light

1. Disconnect the negative battery cable. (See 01-17A-13 NEGATIVE BATTERY CABLE DISCONNECTION/CONNECTION [SKYACTIV-G 2.0 (WITHOUT i-stop)].) (See 01-17A-11 NEGATIVE BATTERY CABLE DISCONNECTION/CONNECTION [SKYACTIV-G 2.0].) (See 01-17B-9 NEGATIVE BATTERY CABLE DISCONNECTION/CONNECTION [SKYACTIV-D 2.2].)
2. Open the sunglasses holder.
3. Remove the screws from the front map light.

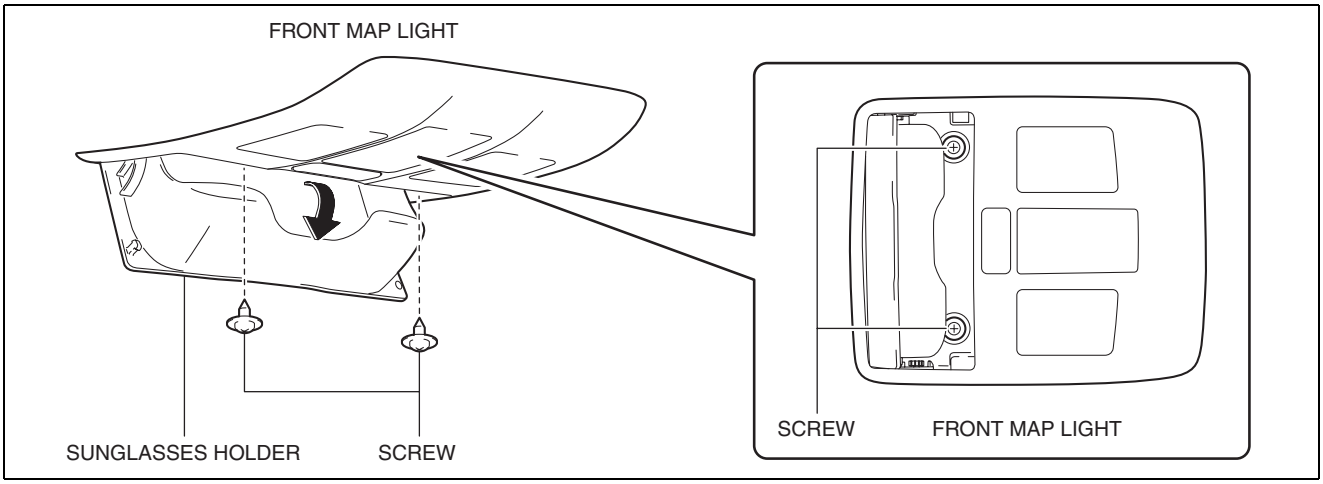

ac5wzw0000081

4. Move the front map light in the direction of the arrow (1) shown in the figure and pull out the pin from the bracket.

Caution

- **Be careful not to pull the connector out strongly when removing the front map light. Otherwise, the contact surface of the wiring harness secured to the headliner will come off and the wiring harness could be pulled out. If the front map light is installed with the wiring harness pulled out, the wiring harness could get caught between the headliner and front map light bracket resulting in an open or short circuit in the wiring harness.**

LIGHTING SYSTEMS

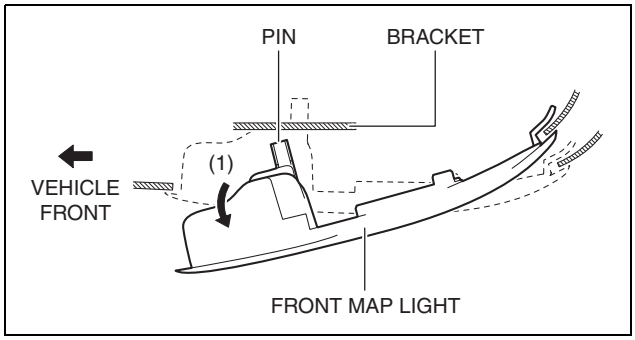

ac5wzw0000001

5. Move the front map light in the direction of the arrow (2) shown in the figure and pull out the front map light from the headliner.
6. Disconnect the connector.

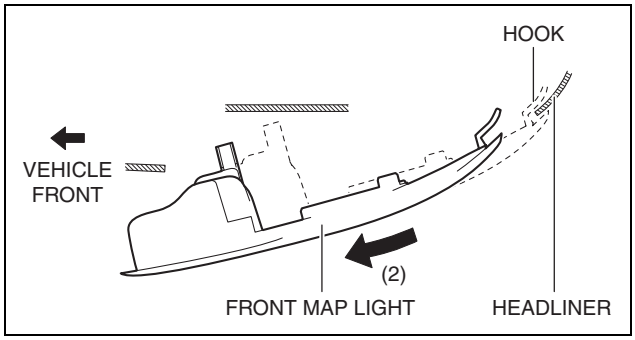

ac5wzw0000001

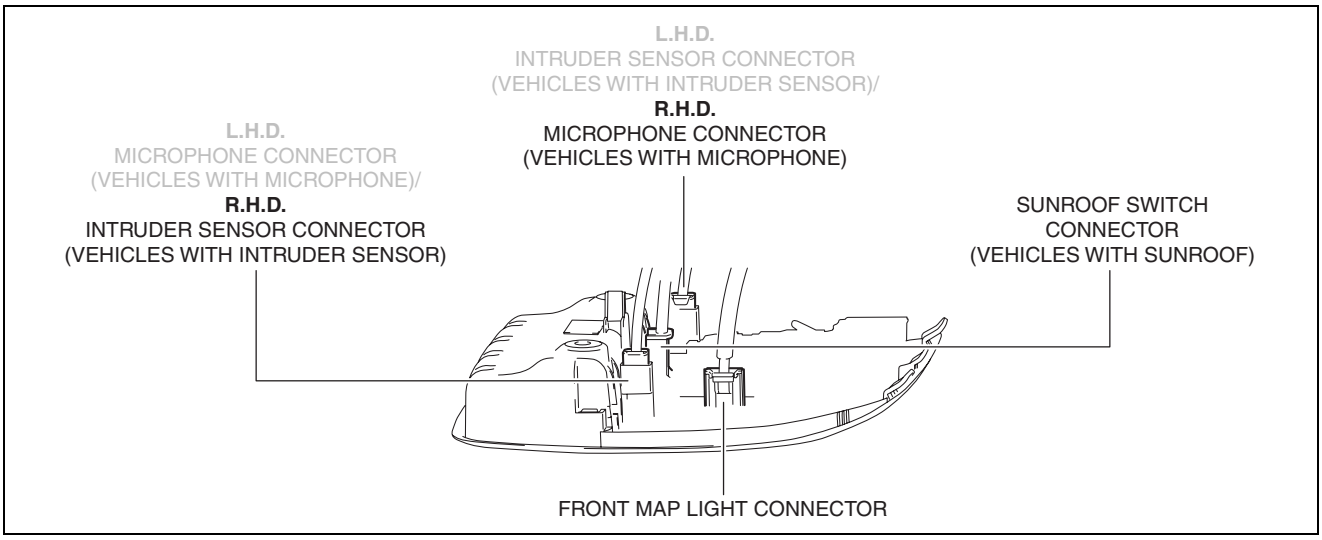

ac5wzw0000001

7. Remove the front map light.
8. Install in the reverse order of removal.

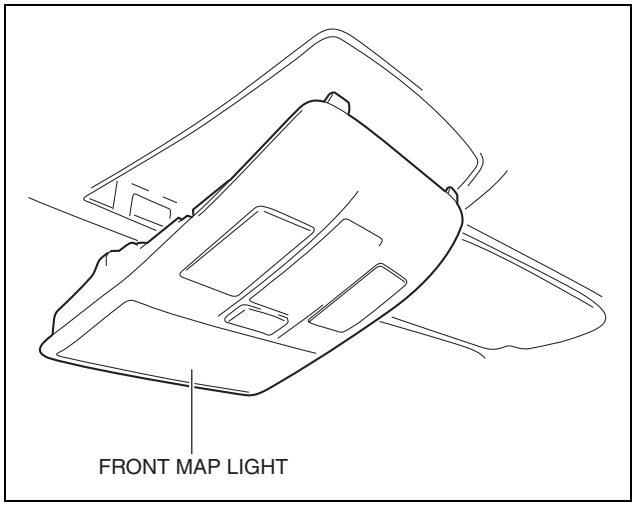

ac5wzw0000041

LIGHTING SYSTEMS

Rear Map Light

1. Disconnect the negative battery cable. (See 01-17A-13 NEGATIVE BATTERY CABLE DISCONNECTION/CONNECTION [SKYACTIV-G 2.0 (WITHOUT i-stop)].) (See 01-17A-11 NEGATIVE BATTERY CABLE DISCONNECTION/CONNECTION [SKYACTIV-G 2.0].) (See 01-17B-9 NEGATIVE BATTERY CABLE DISCONNECTION/CONNECTION [SKYACTIV-D 2.2].)
2. Remove the following parts:
   (1) Sunroof seaming welt (vehicels with sunroof) (See 09-15-6 SUNROOF UNIT REMOVAL/INSTALLATION.)
   (2) A-pillar trim (See 09-17-53 A-PILLAR TRIM REMOVAL/INSTALLATION.)
   (3) Sunvisor (See 09-17-93 SUNVISOR REMOVAL/INSTALLATION.)
   (4) Front scuff plate (See 09-17-61 FRONT SCUFF PLATE REMOVAL/INSTALLATION.)
   (5) Rear scuff plate (See 09-17-63 REAR SCUFF PLATE REMOVAL/INSTALLATION.)
   (6) B-pillar lower trim (See 09-17-57 B-PILLAR LOWER TRIM REMOVAL/INSTALLATION.)
   (7) Adjust anchor cover (See 08-11-2 FRONT SEAT BELT REMOVAL/INSTALLATION.)
   (8) Upper anchor installation bolt on the seat belt (See 08-11-2 FRONT SEAT BELT REMOVAL/INSTALLATION.)
   (9) B-pillar upper trim (See 09-17-58 B-PILLAR UPPER TRIM REMOVAL/INSTALLATION.)
   (10)Assist handle (See 09-17-91 ASSIST HANDLE REMOVAL/INSTALLATION.)
   (11)Trunk board (See 09-17-85 TRUNK BOARD REMOVAL/INSTALLATION.)
   (12)Trunk end trim (See 09-17-78 TRUNK END TRIM REMOVAL/INSTALLATION.)
   (13)Trunk side trim (See 09-17-80 TRUNK SIDE TRIM REMOVAL/INSTALLATION.)
   (14)D-pillar trim (See 09-17-60 D-PILLAR TRIM REMOVAL/INSTALLATION.)
   (15)C-pillar trim (See 09-17-59 C-PILLAR TRIM REMOVAL/INSTALLATION.)
   (16)Headliner (See 09-17-94 HEADLINER REMOVAL/INSTALLATION.)
3. Disconnect the connector.

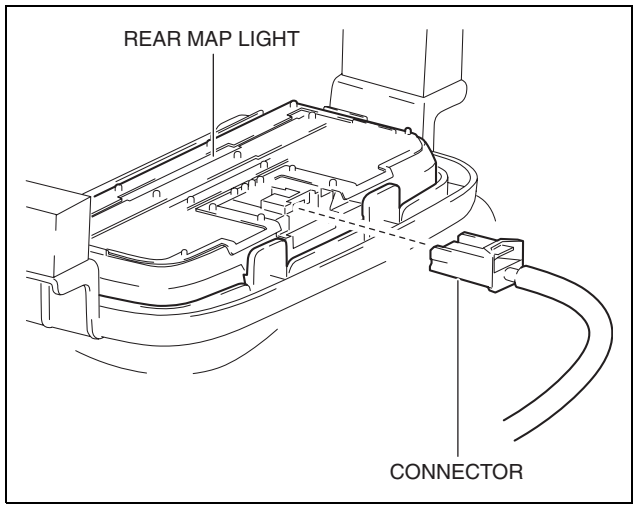

ac5wzw0000041

LIGHTING SYSTEMS

4. Move the bracket in the direction of the arrow (1) shown in the figure, press the rear map light in the direction of the arrow (2) shown in the figure, and detach the rear map light tab and bracket.

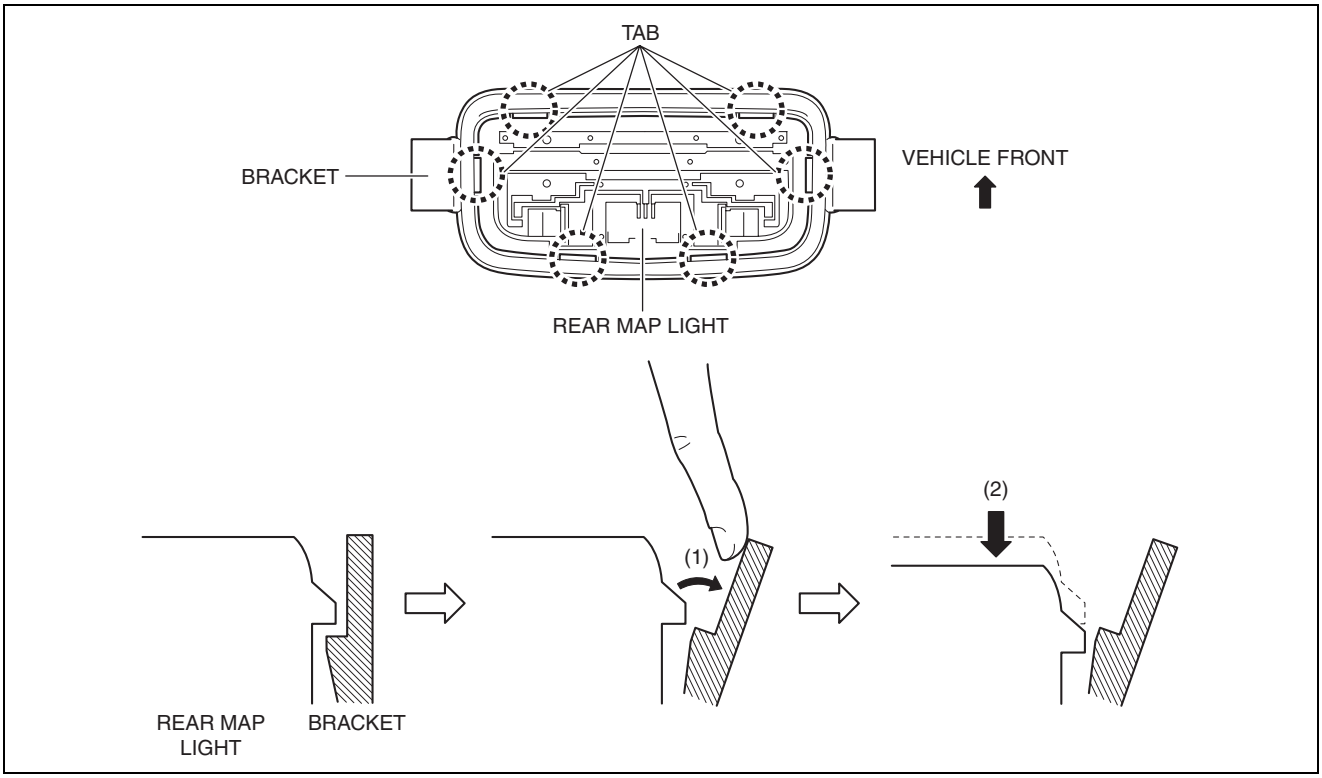

ac5wzw0000041

5. Detach all the rear map light tabs and bracket and remove the rear map light from the bracket.

Caution

- **If the rear map light is removed from the bracket, the rear map light may fall off and be damaged. When removing the rear map light from the bracket, hold the rear map light on the lens side with a hand during servicing.**

6. Install in the reverse order of removal.

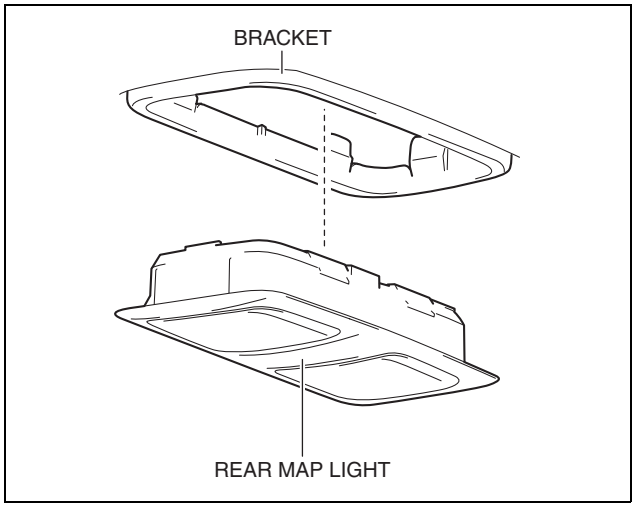

ac5wzw0000042

MAP LIGHT BULB REMOVAL/INSTALLATION

id091800812500

Front Map Light

1. Disconnect the negative battery cable. (See 01-17A-13 NEGATIVE BATTERY CABLE DISCONNECTION/CONNECTION [SKYACTIV-G 2.0 (WITHOUT i-stop)].) (See 01-17A-11 NEGATIVE BATTERY CABLE DISCONNECTION/CONNECTION [SKYACTIV-G 2.0].) (See 01-17B-9 NEGATIVE BATTERY CABLE DISCONNECTION/CONNECTION [SKYACTIV-D 2.2].)
2. To prevent scratches or damage, affix protective tape to the position shown in the figure.

Caution

- **If a flathead screwdriver is inserted into the gap between the front map light and lens, the front map light could interfere with the flathead screwdriver resulting in damage to the front map light. When removing the lens from the front map light, perform the procedure after affixing protective tape to the front map light.**

LIGHTING SYSTEMS

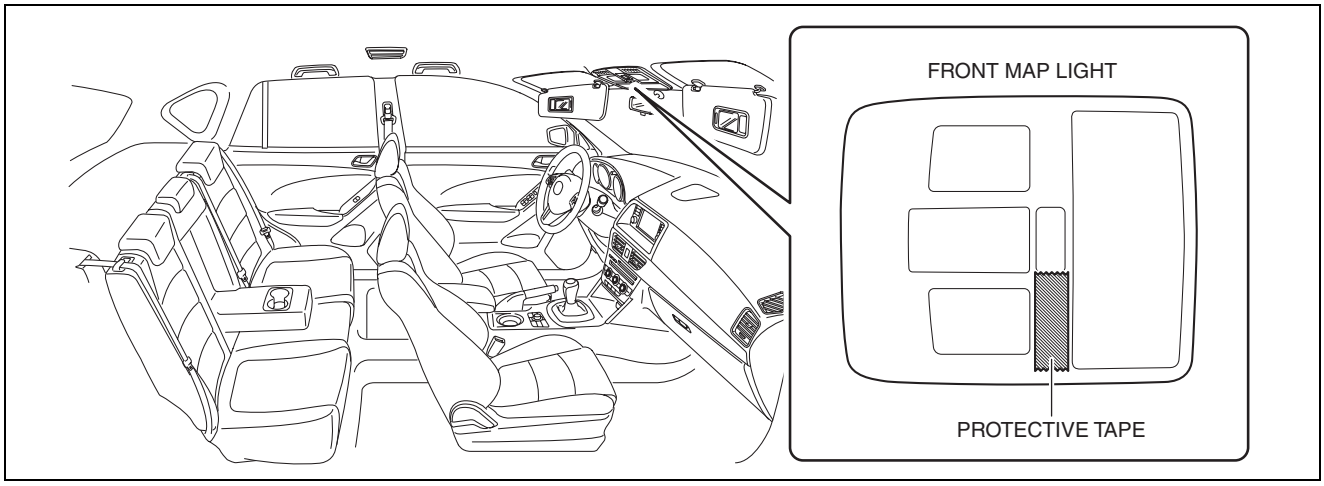

ac5wzw0000047

3. Press the lens to secure a sufficient space for inserting a flathead screwdriver.

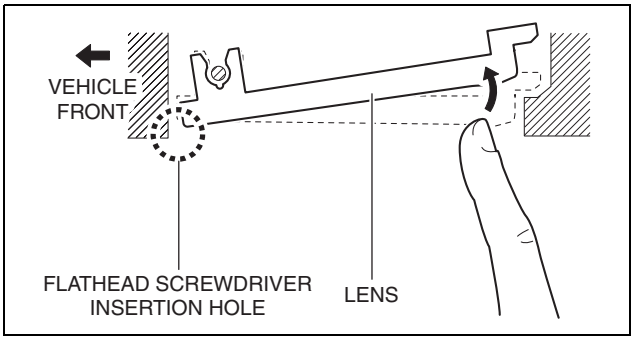

ac5wzw0000119

4. Insert a tape-wrapped flathead screwdriver into the gap between the lens and front map light shown in the figure.

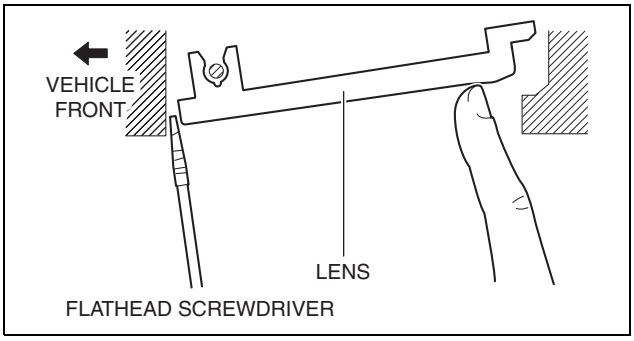

ac5wzw0000005

LIGHTING SYSTEMS

5. Move the flathead screwdriver in the direction of the arrow (1) shown in the figure, pull out the lens from the front map light, and detach the front map light pin and lens.

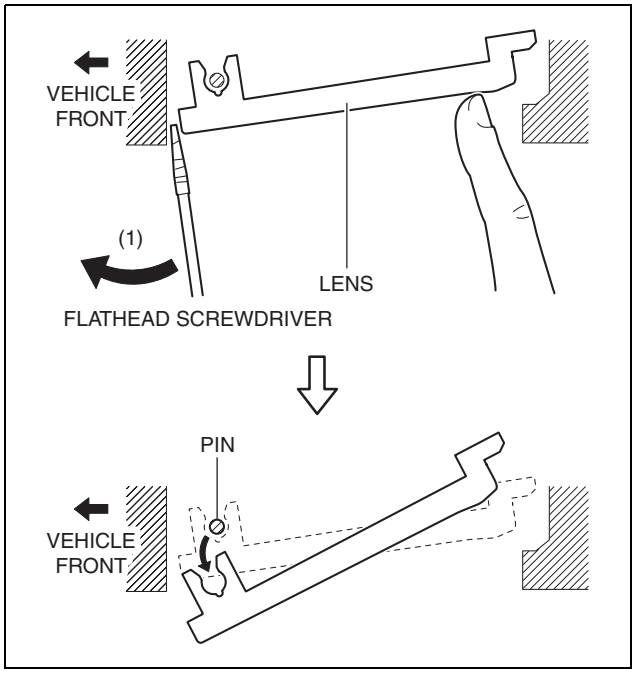

ac5wzw0000005

6. Remove the lens.

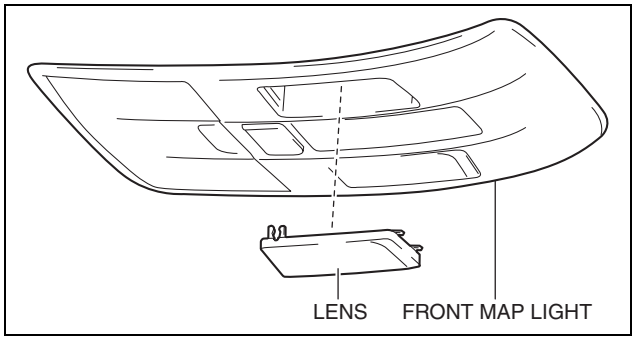

ac5wzw0000047

7. Press the front map light spring in the direction of the arrow (2) shown in the figure and detach the front map light spring and front map light bulb.

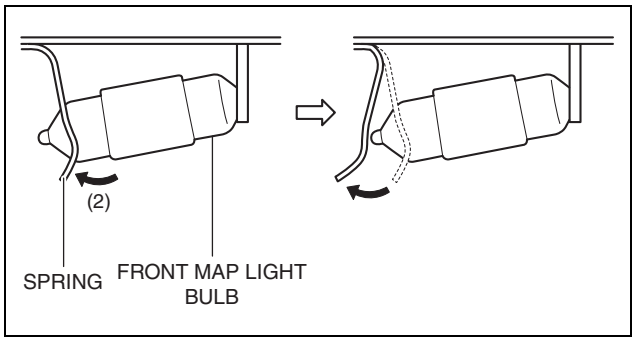

ac5wzw0000119

LIGHTING SYSTEMS

8. Remove the front map light bulb.
9. Install in the reverse order of removal.

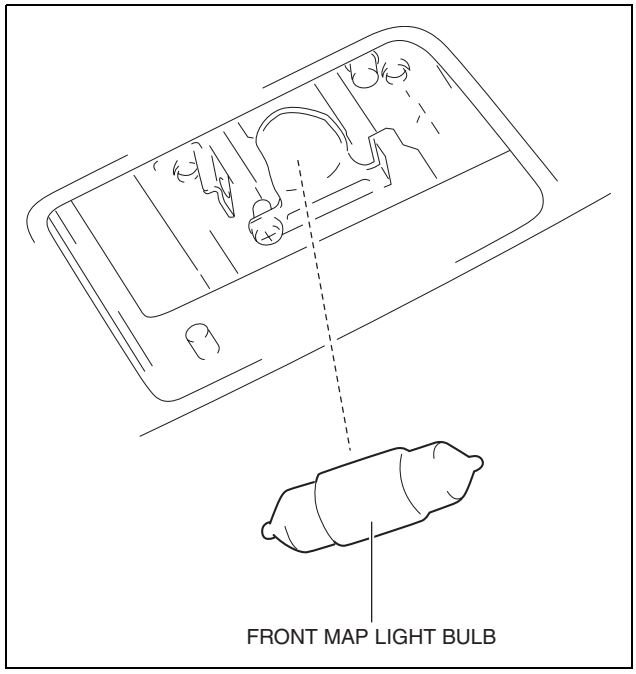

ac5wzw0000005

Rear Map Light

1. Disconnect the negative battery cable. (See 01-17A-13 NEGATIVE BATTERY CABLE DISCONNECTION/CONNECTION [SKYACTIV-G 2.0 (WITHOUT i-stop)].) (See 01-17A-11 NEGATIVE BATTERY CABLE DISCONNECTION/CONNECTION [SKYACTIV-G 2.0].) (See 01-17B-9 NEGATIVE BATTERY CABLE DISCONNECTION/CONNECTION [SKYACTIV-D 2.2].)
2. To prevent scratches or damage, affix protective tape to the position shown in the figure.

Caution

- **If a flathead screwdriver is inserted into the gap between the rear map light and lens, the rear map light could interfere with the flathead screwdriver resulting in damage to the rear map light. When removing the lens from the rear map light, perform the procedure after affixing protective tape to the rear map light.**

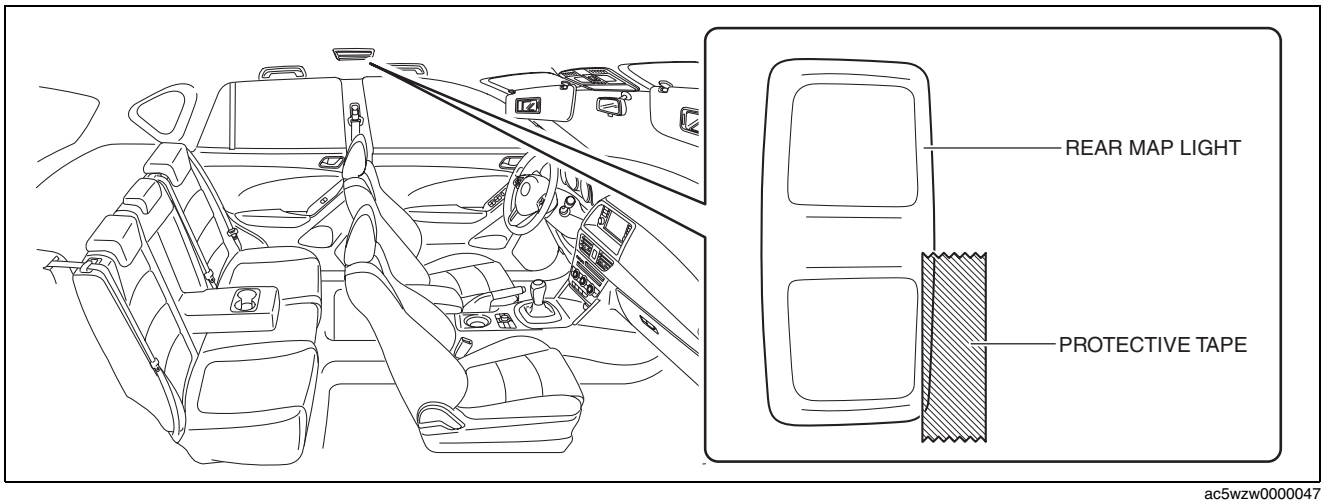

ac5wzw0000047

LIGHTING SYSTEMS

3. Press the lens to secure a sufficient space for inserting a flathead screwdriver.

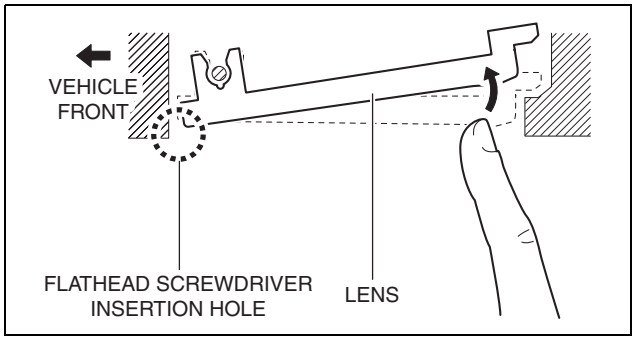

ac5wzw0000119

4. Insert a tape-wrapped flathead screwdriver into the gap between the lens and rear map light shown in the figure.

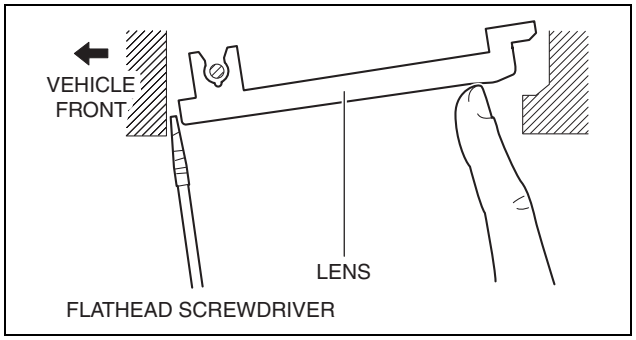

ac5wzw0000047

5. Move the flathead screwdriver in the direction of the arrow (1) shown in the figure, pull out the lens from the rear map light, and detach the rear map light pin and lens.

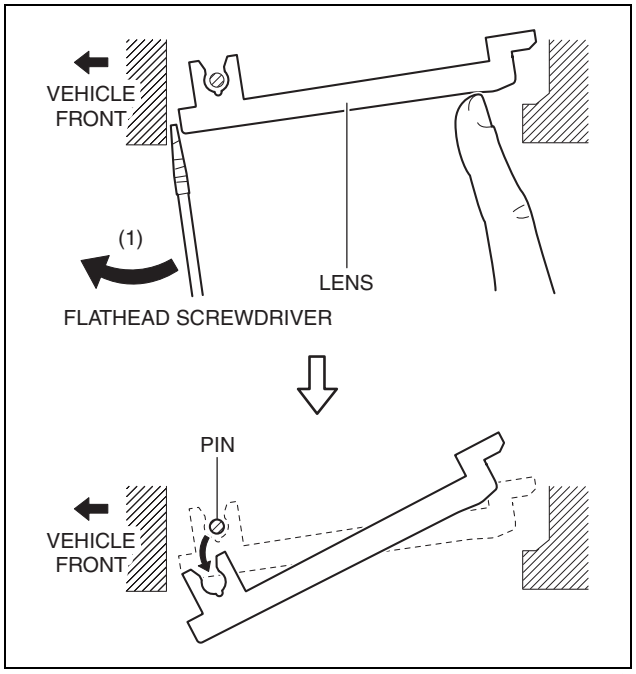

ac5wzw0000047

6. Remove the lens.

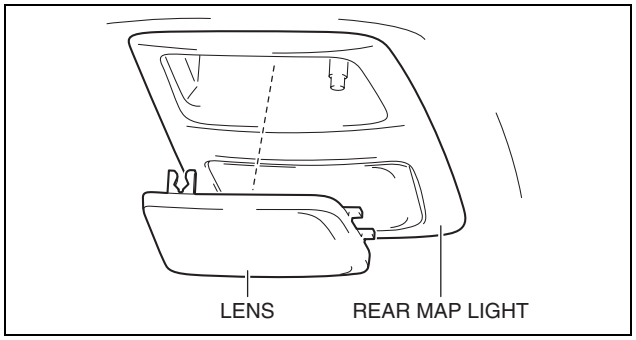

ac5wzw0000047

LIGHTING SYSTEMS

7. Move the rear map light spring in the direction of the arrow (2) shown in the figure and detach the rear map light spring and rear map light bulb.

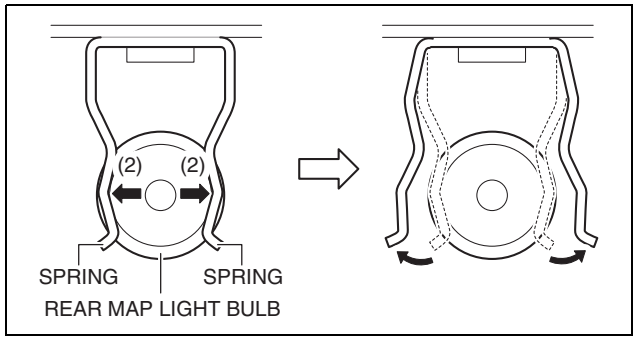

ac5wzw0000120

8. Remove the rear map light bulb.
9. Install in the reverse order of removal.

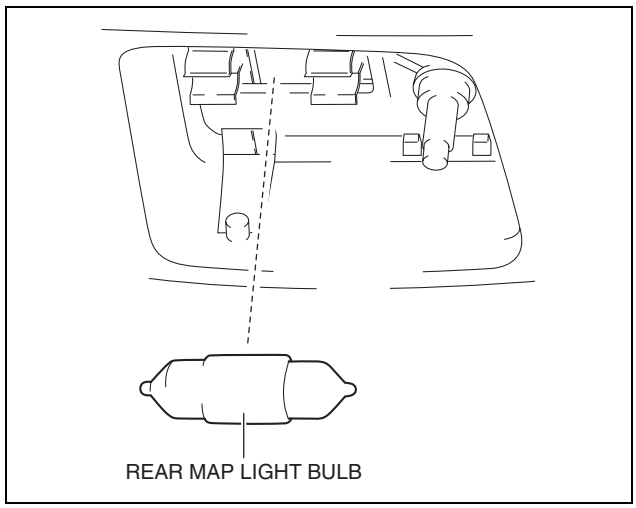

ac5wzw0000048

MAP LIGHT INSPECTION

id091800801300

Front Map Light

1. Remove the front map light. (See 09-18-95 MAP LIGHT REMOVAL/INSTALLATION.)
2. Verify that the continuity between the front map light terminals is as indicated in the table.

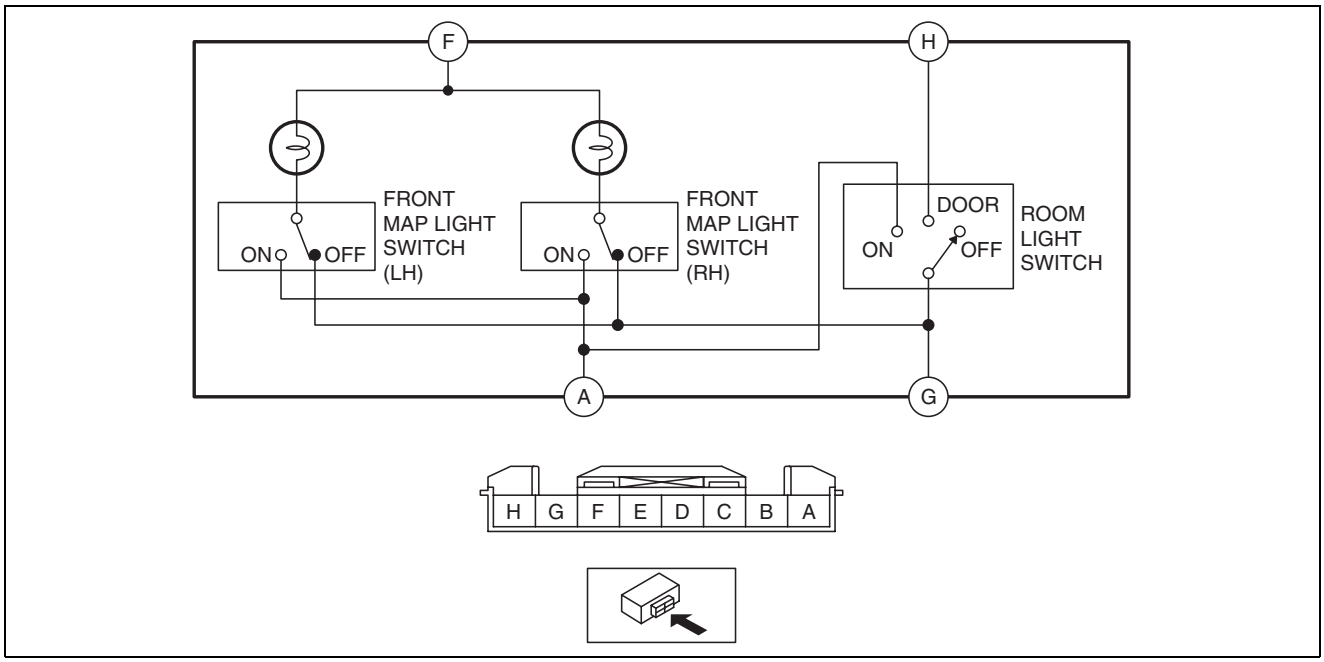

ac5wzw0000001

LIGHTING SYSTEMS

: Bulb : Continuity

Switch position			Terminal			
Front map light switch (LH)	Front map light switch (RH)	Room light switch	A	F	G	H
OFF	OFF	OFF				
ON	OFF	OFF				
OFF	ON	OFF				
—	—	ON				
—	—	DOOR				

ac5wzw0000302

- If not as indicated in the table, replace the front map light or front map light bulb. (See 09-18-95 MAP LIGHT REMOVAL/INSTALLATION.) (See 09-18-98 MAP LIGHT BULB REMOVAL/INSTALLATION.)

Rear Map Light

1. Remove the rear map light. (See 09-18-95 MAP LIGHT REMOVAL/INSTALLATION.)
2. Verify that the continuity between the rear map light terminals is as indicated in the table.

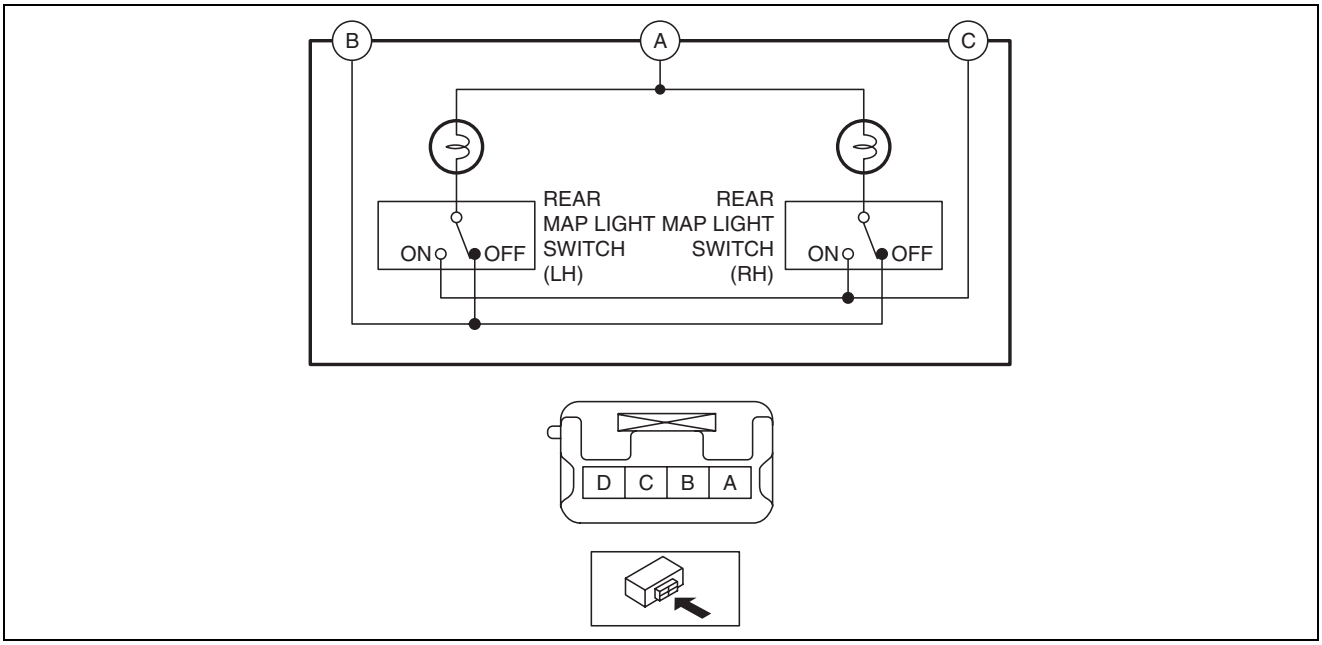

ac5wzw0000042

- If not as indicated in the table, replace the rear map light. (See 09-18-95 MAP LIGHT REMOVAL/INSTALLATION.)

: Bulb

Switch position		Terminal		
Rear map light switch (LH)	Rear map light switch (RH)	A	B	C
ON	OFF			
OFF	ON			

ac5wzw0000042

LIGHTING SYSTEMS

CARGO COMPARTMENT LIGHT REMOVAL/INSTALLATION

id091800801700

1. Disconnect the negative battery cable. (See 01-17A-13 NEGATIVE BATTERY CABLE DISCONNECTION/CONNECTION [SKYACTIV-G 2.0 (WITHOUT i-stop)].) (See 01-17A-11 NEGATIVE BATTERY CABLE DISCONNECTION/CONNECTION [SKYACTIV-G 2.0].) (See 01-17B-9 NEGATIVE BATTERY CABLE DISCONNECTION/CONNECTION [SKYACTIV-D 2.2].)
2. To prevent scratches or damage, affix protective tape to the position shown in the figure.

Caution

- **If a flathead screwdriver is inserted into the gap between the cargo compartment light and trunk side trim, the trunk side trim could interfere with the flathead screwdriver and be damaged. When removing the cargo compartment light from the trunk side trim, perform the procedure after affixing protective tape to the trunk side trim.**

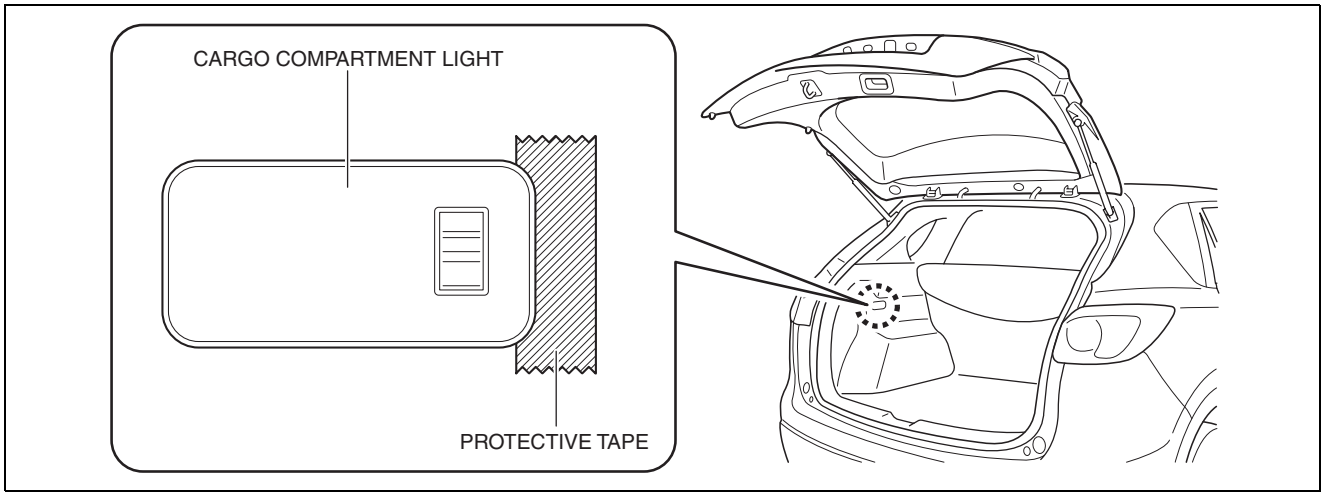

ac5wzw0000002

3. Insert a tape-wrapped flathead screwdriver into the gap between the cargo compartment light and trunk side trim shown in the figure.
4. Move the flathead screwdriver in the direction of the arrow (1) shown in the figure, pull out the cargo compartment light from the trunk side trim, and detach the cargo compartment light tab and trunk side trim.

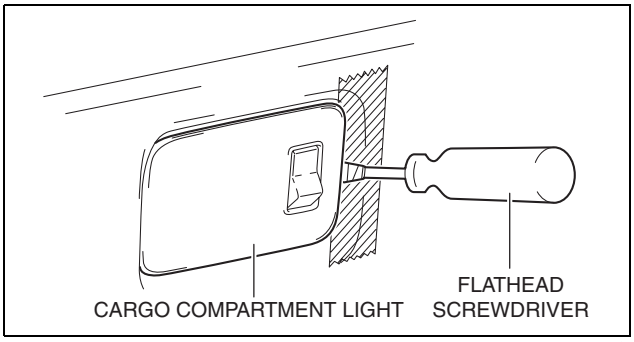

ac5wzw0000042

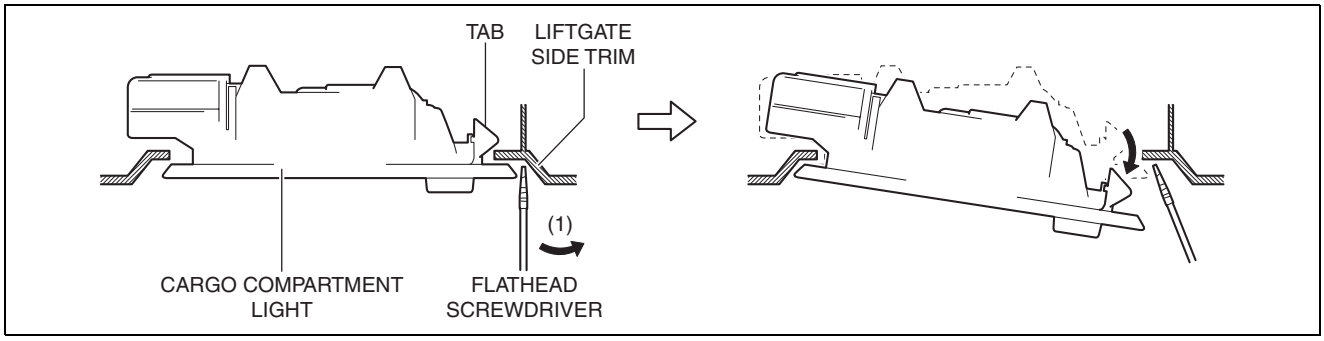

ac5wzw0000042

LIGHTING SYSTEMS

5. Remove the cargo compartment light.

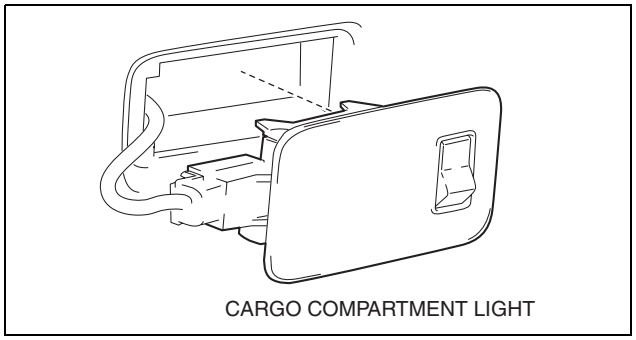

ac5wzw0000042

6. Disconnect the connector.
7. Install in the reverse order of removal.

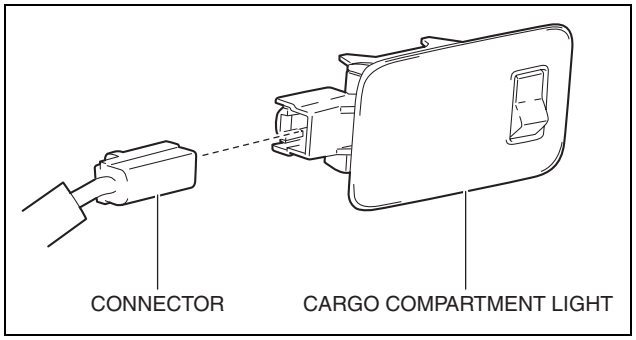

ac5wzw0000002

CARGO COMPARTMENT LIGHT BULB REMOVAL/INSTALLATION

id091800807800

1. Disconnect the negative battery cable. (See 01-17A-13 NEGATIVE BATTERY CABLE DISCONNECTION/CONNECTION [SKYACTIV-G 2.0 (WITHOUT i-stop)].) (See 01-17A-11 NEGATIVE BATTERY CABLE DISCONNECTION/CONNECTION [SKYACTIV-G 2.0].) (See 01-17B-9 NEGATIVE BATTERY CABLE DISCONNECTION/CONNECTION [SKYACTIV-D 2.2].)
2. To prevent scratches or damage, affix protective tape to the position shown in the figure.

Caution

- **If a flathead screwdriver is inserted into the gap between the cargo compartment light and trunk side trim, the trunk side trim could interfere with the flathead screwdriver and be damaged. When removing the cargo compartment light from the trunk side trim, perform the procedure after affixing protective tape to the trunk side trim.**

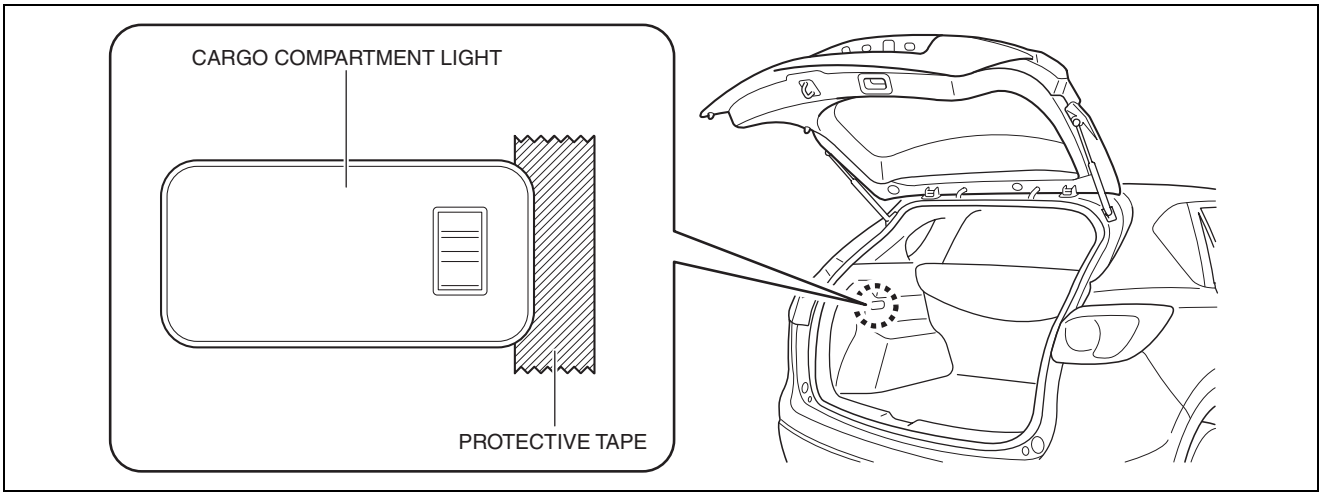

ac5wzw0000003

LIGHTING SYSTEMS

3. Insert a tape-wrapped flathead screwdriver into the gap between the cargo compartment light and trunk side trim shown in the figure.
4. Move the flathead screwdriver in the direction of the arrow (1) shown in the figure, pull out the cargo compartment light from the trunk side trim, and detach the cargo compartment light tab and trunk side trim.

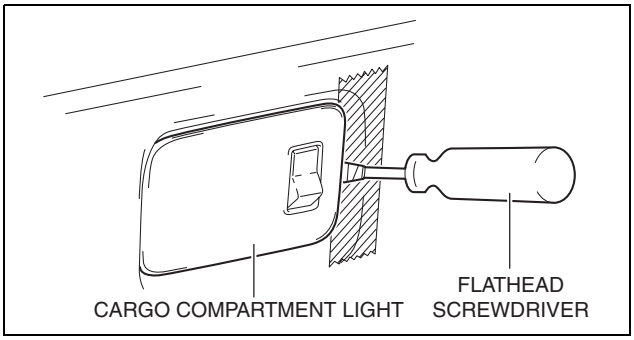

ac5wzw0000004

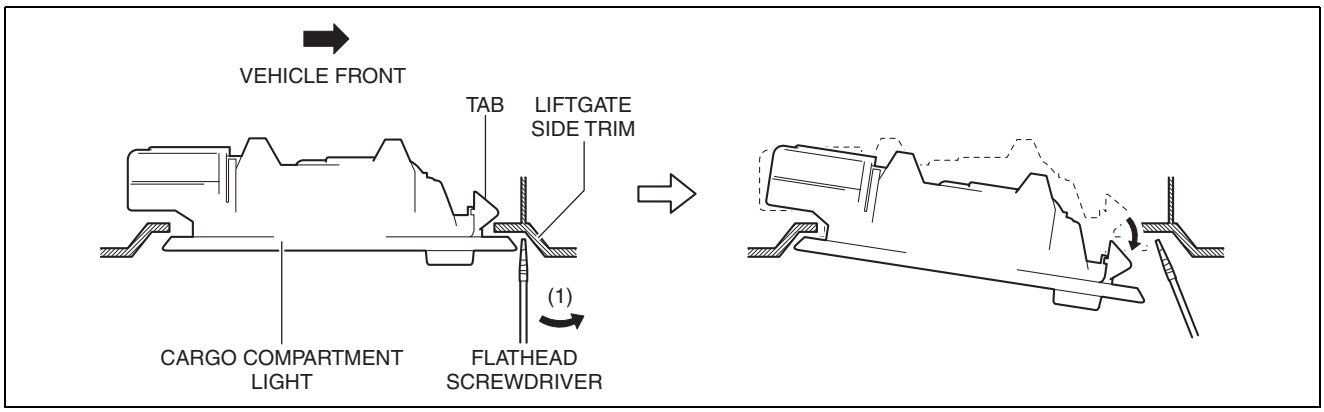

ac5wzw0000004

5. Remove the cargo compartment light.

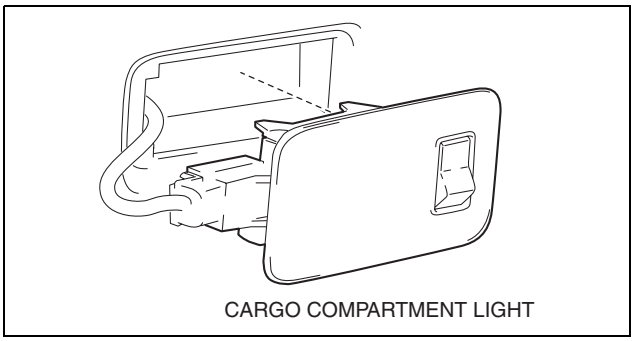

ac5wzw0000046

6. Press the cargo compartment light spring in the direction of the arrow (2) shown in the figure and detach it and the cargo compartment light bulb.

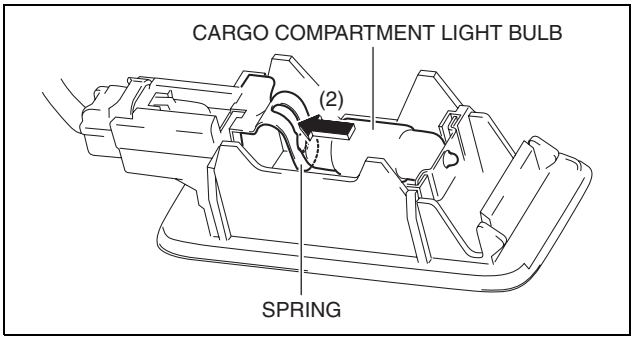

ac5wzw0000119

LIGHTING SYSTEMS

7. Remove the cargo compartment light bulb.
8. Install in the reverse order of removal.

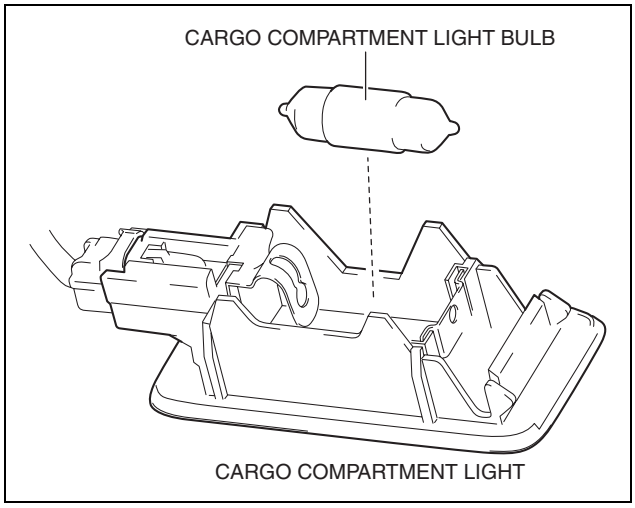

ac5wzw0000004

CARGO COMPARTMENT LIGHT INSPECTION

id091800801800

1. Remove the cargo compartment light. (See 09-18-105 CARGO COMPARTMENT LIGHT REMOVAL/INSTALLATION.)
2. Verify that the continuity between the cargo compartment light terminals is as indicated in the table.

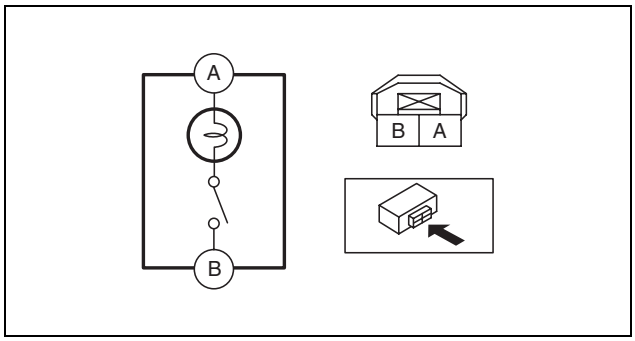

ac5wzw0000002

- If not as indicated in the table, replace the cargo compartment light. (See 09-18-105 CARGO COMPARTMENT LIGHT REMOVAL/INSTALLATION.)

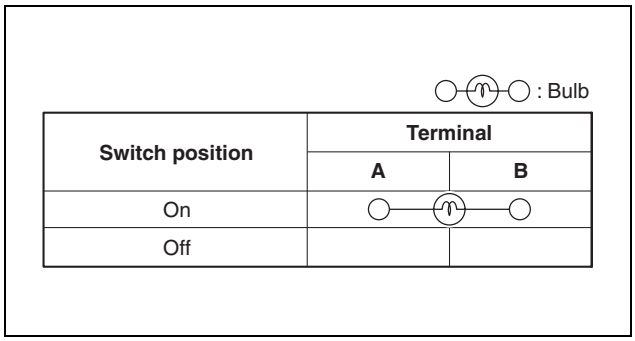

ac5wzw0000042

GLOVE COMPARTMENT LIGHT BULB REMOVAL/INSTALLATION

id091800801900

1. Disconnect the negative battery cable. (See 01-17A-13 NEGATIVE BATTERY CABLE DISCONNECTION/CONNECTION [SKYACTIV-G 2.0 (WITHOUT i-stop)].) (See 01-17A-11 NEGATIVE BATTERY CABLE DISCONNECTION/CONNECTION [SKYACTIV-G 2.0].) (See 01-17B-9 NEGATIVE BATTERY CABLE DISCONNECTION/CONNECTION [SKYACTIV-D 2.2].)
2. Open the glove compartment.

LIGHTING SYSTEMS

3. While pressing the glove compartment light tab in the direction of the arrow (1) shown in the figure, pull out the glove compartment light in the direction of the arrow (2) shown in the figure to detach the glove compartment light tab and lower panel.

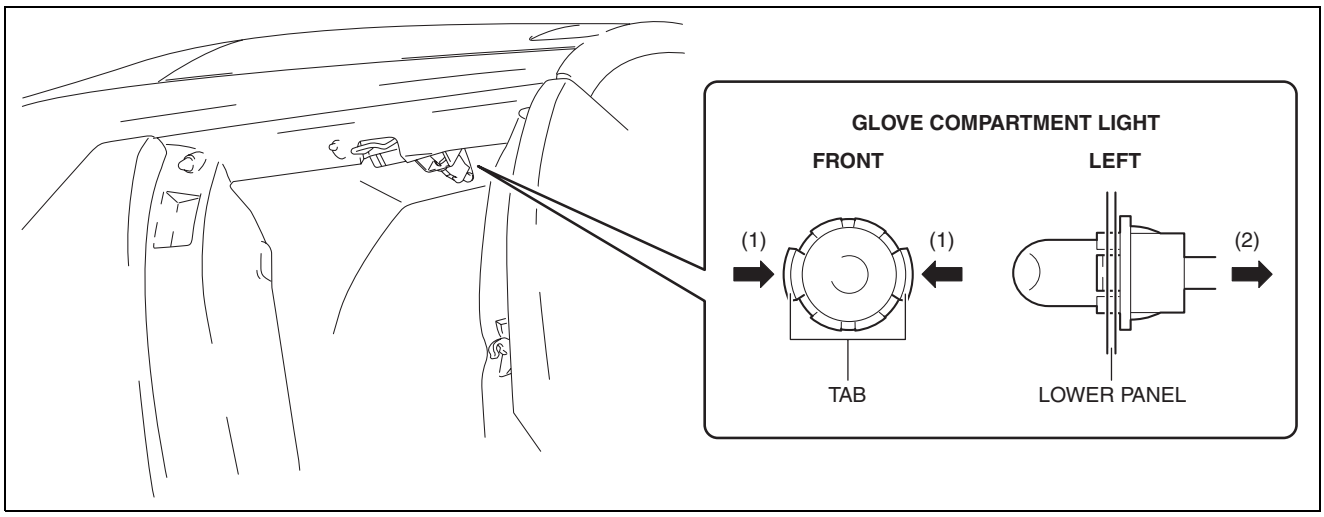

ac5wzw0000002

4. Remove the glove compartment light.

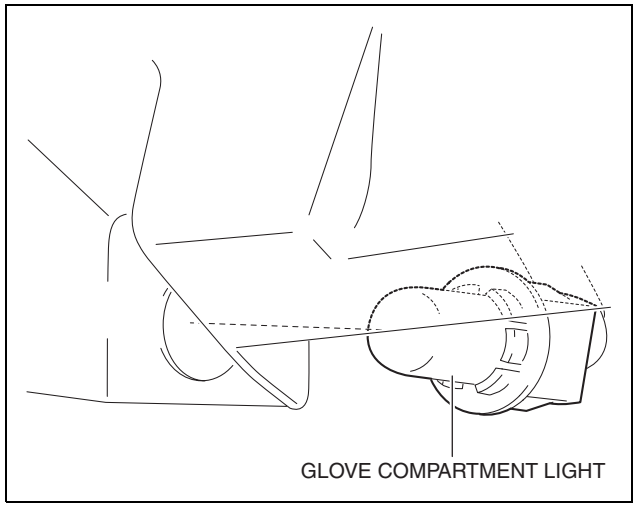

ac5wzw0000042

5. Remove the glove compartment light bulb.
6. Install in the reverse order of removal.

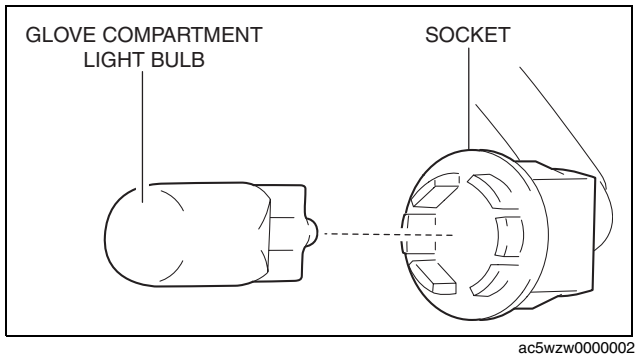

ac5wzw0000002

VANITY MIRROR ILLUMINATION INSPECTION

id091800808500

1. Disconnect the negative battery cable. (See 01-17A-13 NEGATIVE BATTERY CABLE DISCONNECTION/CONNECTION [SKYACTIV-G 2.0 (WITHOUT i-stop)].) (See 01-17A-11 NEGATIVE BATTERY CABLE DISCONNECTION/CONNECTION [SKYACTIV-G 2.0].) (See 01-17B-9 NEGATIVE BATTERY CABLE DISCONNECTION/CONNECTION [SKYACTIV-D 2.2].)
2. Remove the sunvisor. (See 09-17-93 SUNVISOR REMOVAL/INSTALLATION.)

LIGHTING SYSTEMS

3. Verify that the continuity between the vanity mirror illumination terminals is as indicated in the table.

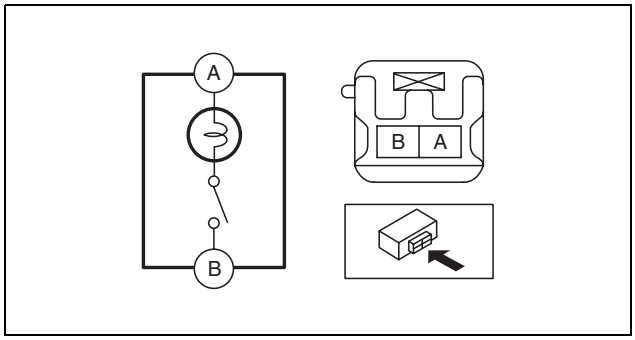

ac5wzw0000004

- If not as indicated in the table, replace the sunvisor. (See 09-17-93 SUNVISOR REMOVAL/INSTALLATION.)

: Bulb

Vanity mirror cover condition	Terminal	
	A	B
Open		
Close		

ac5wzw0000046

VANITY MIRROR ILLUMINATION BULB REMOVAL/INSTALLATION

id091800808200

1. Disconnect the negative battery cable. (See 01-17A-13 NEGATIVE BATTERY CABLE DISCONNECTION/CONNECTION [SKYACTIV-G 2.0 (WITHOUT i-stop)].) (See 01-17A-11 NEGATIVE BATTERY CABLE DISCONNECTION/CONNECTION [SKYACTIV-G 2.0].) (See 01-17B-9 NEGATIVE BATTERY CABLE DISCONNECTION/CONNECTION [SKYACTIV-D 2.2].)
2. Insert a tape-wrapped flathead screwdriver into the service hole in the position shown in the figure.

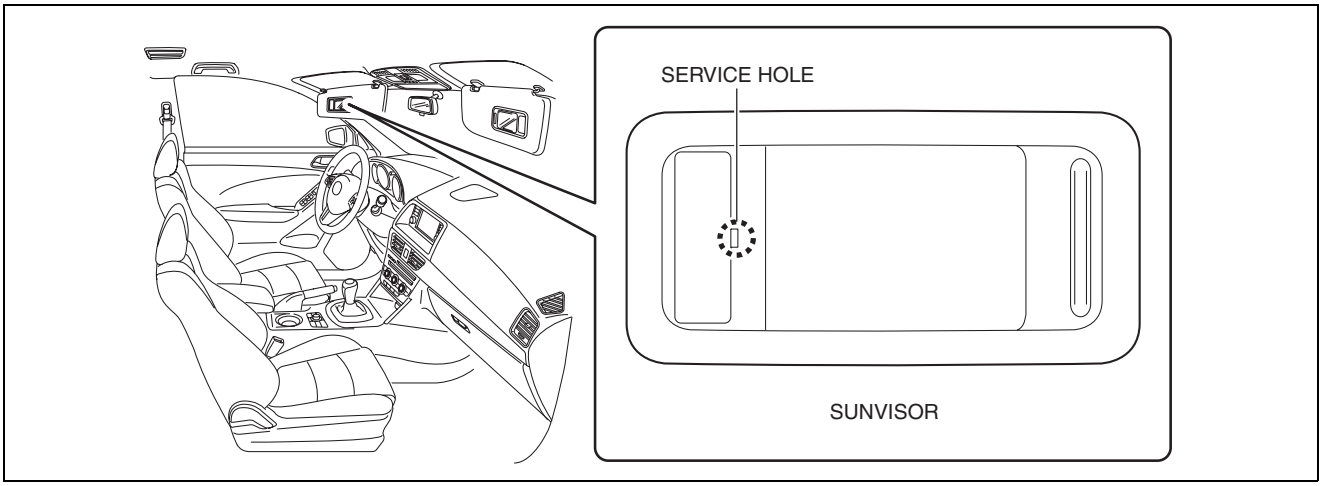

ac5wzw0000012

LIGHTING SYSTEMS

3. Move a flathead screwdriver in the direction of the arrow (1) shown in the figure and detach the lens tab and sunvisor.

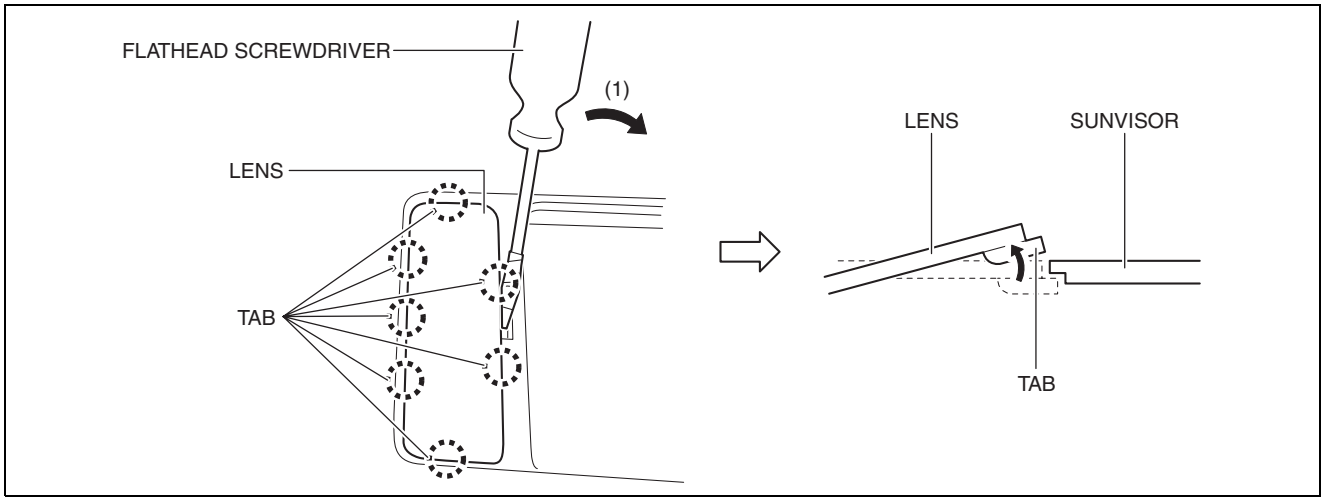

ac5wzw0000012

4. Detach all the lens tab and sunvisor and remove the lens from the sunvisor.

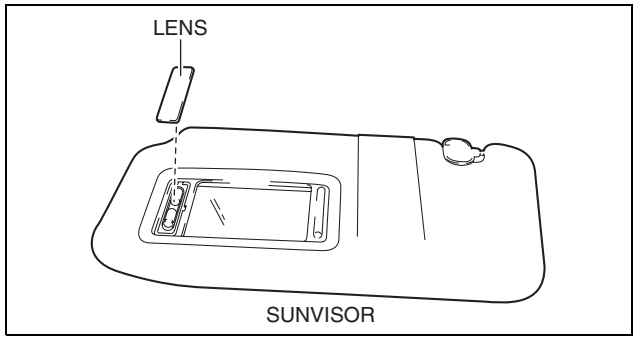

ac5wzw0000046

5. Remove the vanity mirror illumination bulb.
6. Install in the reverse order of removal.

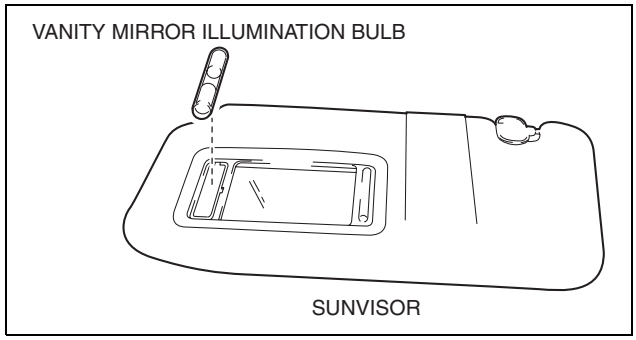

ac5wzw0000012

09-19 WIPER/WASHER SYSTEM

WIPER/WASHER SYSTEM LOCATION INDEX 09-19–2
WINDSHIELD WIPER ARM AND BLADE REMOVAL/INSTALLATION 09-19–3
Windshield wiper arm 09-19–3
Windshield wiper blade 09-19–6
WINDSHIELD WIPER ARM AND BLADE ADJUSTMENT 09-19–7
WINDSHIELD WIPER MOTOR AND LINK REMOVAL/INSTALLATION 09-19–9
Ball Joint Assembly Note 09-19–13
WINDSHIELD WIPER MOTOR INSPECTION 09-19–14
L.H.D. 09-19–14
R.H.D. 09-19–15
WASHER TANK REMOVAL/INSTALLATION 09-19–16
With Washer Fluid-level Sensor 09-19–16
Without Washer Fluid-level Sensor . . . 09-19–19
WASHER MOTOR REMOVAL/INSTALLATION 09-19–22
WASHER MOTOR INSPECTION 09-19–23
WINDSHIELD WASHER NOZZLE REMOVAL/INSTALLATION 09-19–24
WINDSHIELD WASHER NOZZLE ADJUSTMENT 09-19–25
WASHER FLUID-LEVEL SENSOR INSPECTION 09-19–26
WINDSHIELD WASHER HOSE REMOVAL/INSTALLATION 09-19–27
WASHER FLUID-LEVEL SENSOR REMOVAL/INSTALLATION 09-19–31
REAR WIPER ARM AND BLADE REMOVAL/INSTALLATION 09-19–32
Rear Wiper Arm 09-19–32
Rear Wiper Blade 09-19–34
REAR WIPER ARM AND BLADE ADJUSTMENT 09-19–34
REAR WIPER MOTOR REMOVAL/INSTALLATION 09-19–35
REAR WIPER MOTOR INSPECTION 09-19–37
Rear Wiper Motor Operation Inspection 09-19–37
Auto-stop Operation Inspection 09-19–38
REAR WASHER NOZZLE REMOVAL/INSTALLATION 09-19–38
REAR WASHER NOZZLE ADJUSTMENT 09-19–39
REAR WASHER HOSE REMOVAL/INSTALLATION 09-19–40
WIPER AND WASHER SWITCH REMOVAL/INSTALLATION 09-19–45
WINDSHIELD WIPER AND WASHER SWITCH INSPECTION 09-19–47
REAR WIPER AND WASHER SWITCH INSPECTION 09-19–49
HEADLIGHT CLEANER MOTOR REMOVAL/INSTALLATION 09-19–51
HEADLIGHT CLEANER MOTOR INSPECTION 09-19–52
HEADLIGHT CLEANER ACTUATOR REMOVAL/INSTALLATION 09-19–52
HEADLIGHT CLEANER COVER REMOVAL/INSTALLATION 09-19–55
HEADLIGHT CLEANER HOSE REMOVAL/INSTALLATION 09-19–57
RAIN SENSOR REMOVAL/INSTALLATION 09-19–58
With Forward Sensing Camera (FSC) Or Smart City Brake Support (SCBS) 09-19–58
Without FSC Or SCBS 09-19–60
Rain Sensor Installation Note 09-19–62
RAIN SENSOR INITIALIZATION SETTING 09-19–64
WIPER/WASHER SYSTEM PERSONALIZATION FEATURES SETTING PROCEDURE 09-19–65
Using M-MDS 09-19–65
Using audio unit (with color LCD) 09-19–65

WIPER/WASHER SYSTEM

WIPER/WASHER SYSTEM LOCATION INDEX

id091900800100

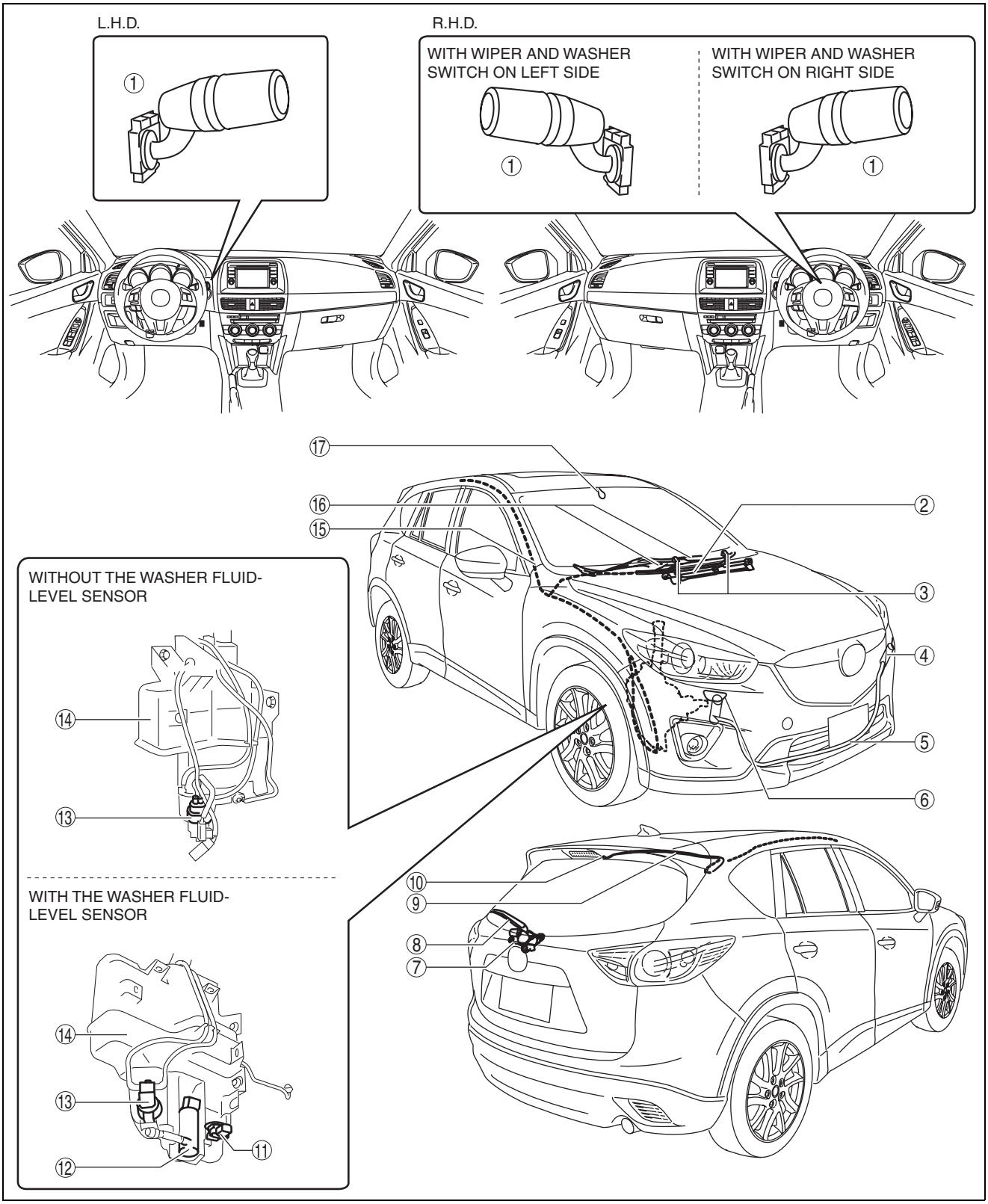

ac5wzw0000168

WIPER/WASHER SYSTEM

1	Wiper and washer switch (See 09-19-45 WIPER AND WASHER SWITCH REMOVAL/INSTALLATION.) (See 09-19-47 WINDSHIELD WIPER AND WASHER SWITCH INSPECTION.) (See 09-19-49 REAR WIPER AND WASHER SWITCH INSPECTION.)
2	Windshield wiper motor (See 09-19-9 WINDSHIELD WIPER MOTOR AND LINK REMOVAL/INSTALLATION.) (See 09-19-14 WINDSHIELD WIPER MOTOR INSPECTION.)
3	Windshield washer nozzle (See 09-19-24 WINDSHIELD WASHER NOZZLE REMOVAL/INSTALLATION.) (See 09-19-25 WINDSHIELD WASHER NOZZLE ADJUSTMENT.)
4	Headlight cleaner actuator (with headlight cleaner system) (See 09-19-52 HEADLIGHT CLEANER ACTUATOR REMOVAL/INSTALLATION.)
5	Headlight cleaner hose (with headlight cleaner system) (See 09-19-57 HEADLIGHT CLEANER HOSE REMOVAL/INSTALLATION.)
6	Headlight cleaner cover (with headlight cleaner system) (See 09-19-55 HEADLIGHT CLEANER COVER REMOVAL/INSTALLATION.)
7	Rear wiper motor (with rear wiper system) (See 09-19-35 REAR WIPER MOTOR REMOVAL/INSTALLATION.) (See 09-19-37 REAR WIPER MOTOR INSPECTION.)
8	Rear wiper arm and blade (with rear wiper system) (See 09-19-32 REAR WIPER ARM AND BLADE REMOVAL/INSTALLATION.) (See 09-19-34 REAR WIPER ARM AND BLADE ADJUSTMENT.)
9	Rear washer hose (with rear wiper system) (See 09-19-40 REAR WASHER HOSE REMOVAL/INSTALLATION.)
10	Rear washer nozzle (with rear wiper system) (See 09-19-38 REAR WASHER NOZZLE REMOVAL/INSTALLATION.) (See 09-19-39 REAR WASHER NOZZLE ADJUSTMENT.)
11	Washer fluid-level sensor (with washer fluid-level sensor) (See 09-19-31 WASHER FLUID-LEVEL SENSOR REMOVAL/INSTALLATION.) (See 09-19-26 WASHER FLUID-LEVEL SENSOR INSPECTION.)
12	Headlight cleaner motor (with headlight cleaner system) (See 09-19-51 HEADLIGHT CLEANER MOTOR REMOVAL/INSTALLATION.) (See 09-19-52 HEADLIGHT CLEANER MOTOR INSPECTION.)
13	Washer motor (See 09-19-22 WASHER MOTOR REMOVAL/INSTALLATION.) (See 09-19-23 WASHER MOTOR INSPECTION.)
14	Washer tank (See 09-19-16 WASHER TANK REMOVAL/INSTALLATION.)
15	Windshield washer hose (See 09-19-27 WINDSHIELD WASHER HOSE REMOVAL/INSTALLATION.)
16	Windshield wiper arm and blade (See 09-19-3 WINDSHIELD WIPER ARM AND BLADE REMOVAL/INSTALLATION.) (See 09-19-7 WINDSHIELD WIPER ARM AND BLADE ADJUSTMENT.)
17	Rain sensor (with auto wiper system) (See 09-19-58 RAIN SENSOR REMOVAL/INSTALLATION.) (See 09-19-64 RAIN SENSOR INITIALIZATION SETTING.) (See 09-19-65 WIPER/WASHER SYSTEM PERSONALIZATION FEATURES SETTING PROCEDURE.)

WINDSHIELD WIPER ARM AND BLADE REMOVAL/INSTALLATION

id091900800700

Windshield wiper arm

1. Open the bonnet.

Caution

- **If excessive force is applied when removing the cap, tabs could break. Carefully remove the cap.**

2. Insert a tape-wrapped precision flathead screwdriver into the gap between the windshield wiper arm and cap, and slightly raise the cap.

WIPER/WASHER SYSTEM

3. Detach cap tabs from the windshield wiper arm while slightly moving the cap in the direction of the arrows (1) shown in the figure, carefully pull it up in the direction of the arrow (2), and remove it.

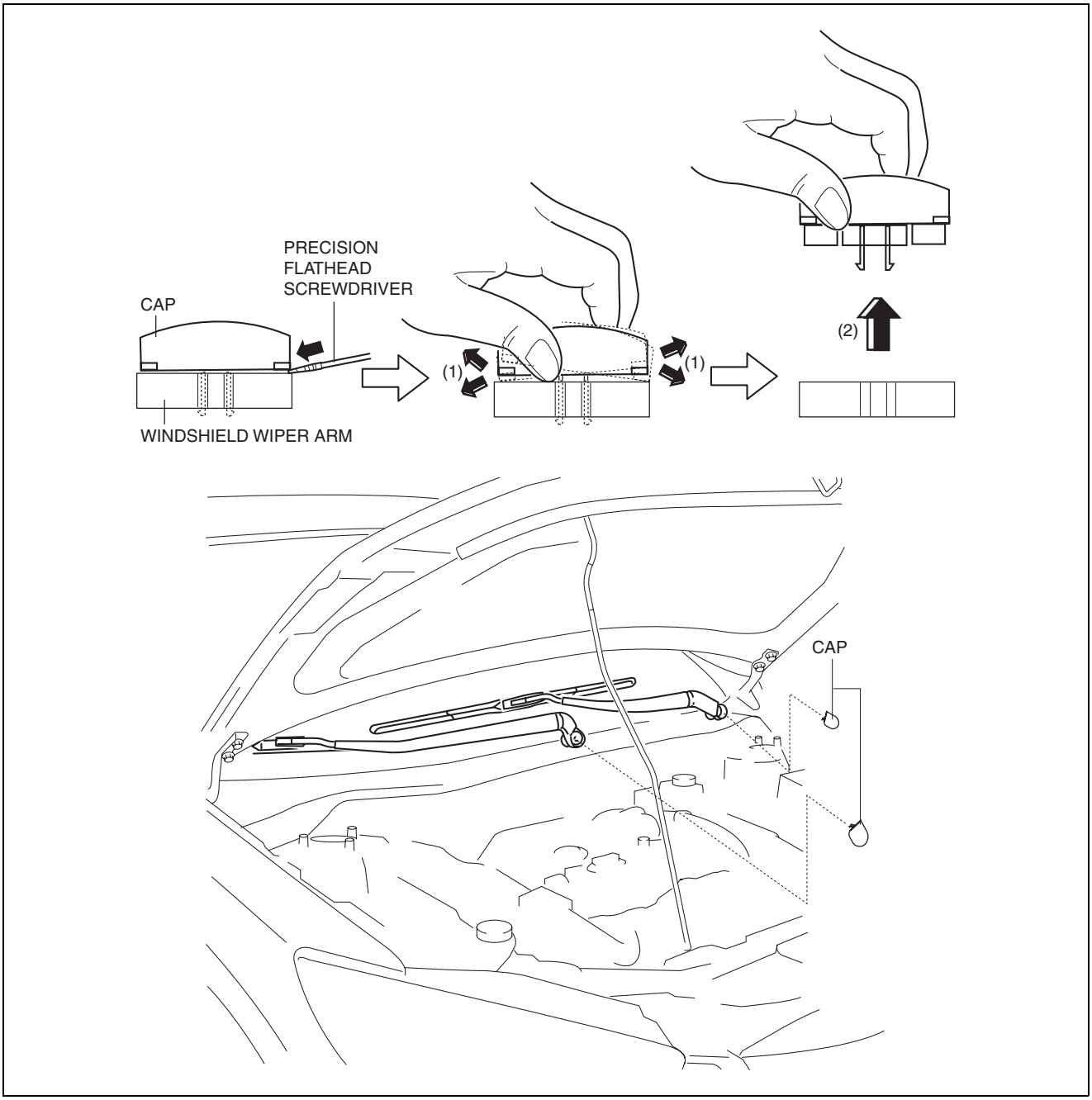

ac5wzw0000296

4. Loosen nuts until it is jointed temporarily with the windshield wiper arm pressed as shown in the figure.
5. Close the bonnet.

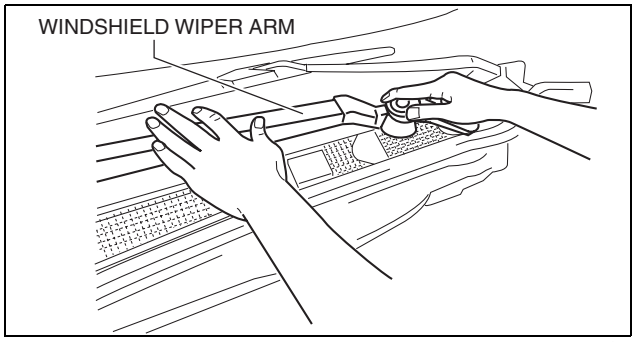

ac5wzw0000160

WIPER/WASHER SYSTEM

6. Raise the windshield wiper arm as shown in the figure and pull it up until the temporary joint nut points outward in the direction of the arrow (1) from the serrated connecting part.

Caution
- **Always temporarily tighten the temporary joint nut when removing the windshield wiper arm. If it is removed from the serrated connecting part without temporarily tightening the nut, the windshield wiper arm could contact the bonnet.**

7. Remove the nut.
8. Remove the windshield wiper arm. (See 09-19-5 Windshield Wiper Arm Installation Note.)

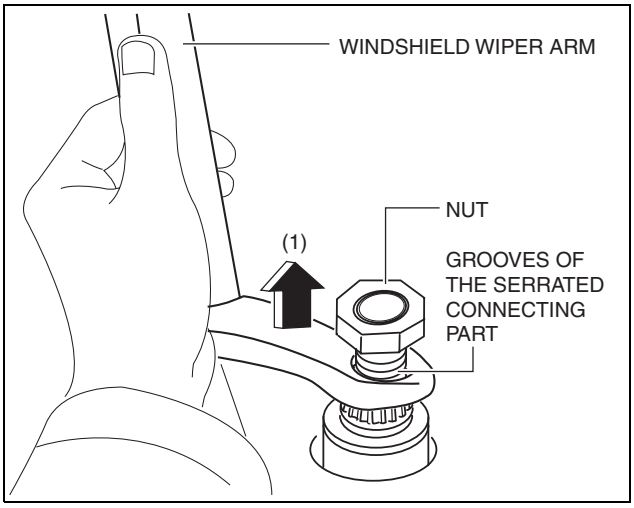

ac5wzw0000160

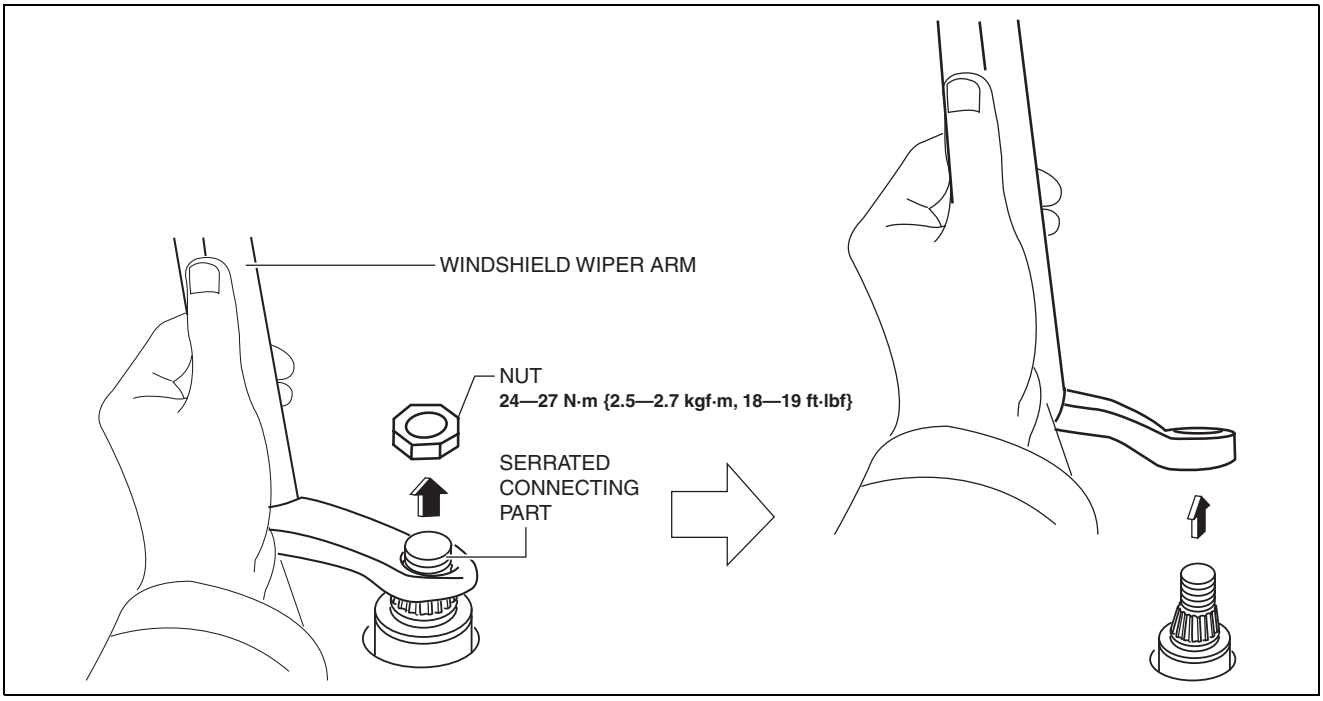

ac5wzw0000219

9. Install in the reverse order of removal.
10. Adjust the windshield wiper arm and blade. (See 09-19-7 WINDSHIELD WIPER ARM AND BLADE ADJUSTMENT.)

Windshield Wiper Arm Installation Note

1. Clean the serrated connecting part with a wire brush before installing the windshield wiper arm.

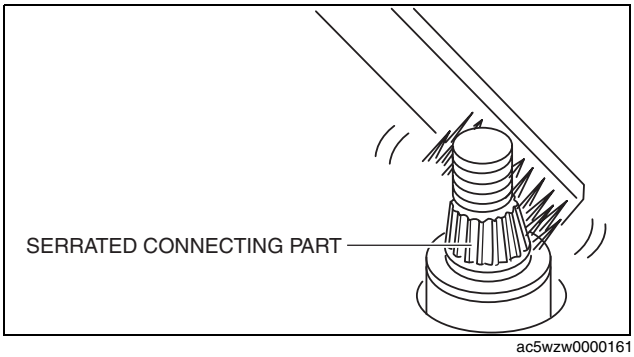

ac5wzw0000161

WIPER/WASHER SYSTEM

Windshield wiper blade

Caution

- **If the windshield wiper arm end is placed directly on the windshield after removing the windshield wiper blade, it could scratch the windshield. If the windshield wiper arm end is placed on the windshield, place it on a rag to protect the windshield.**

1. Pull the windshield wiper blade tab up in the direction of the arrow (1).
2. Press the windshield wiper blade end in the direction of the arrow (3) while tilting it in the direction of the arrow (2).

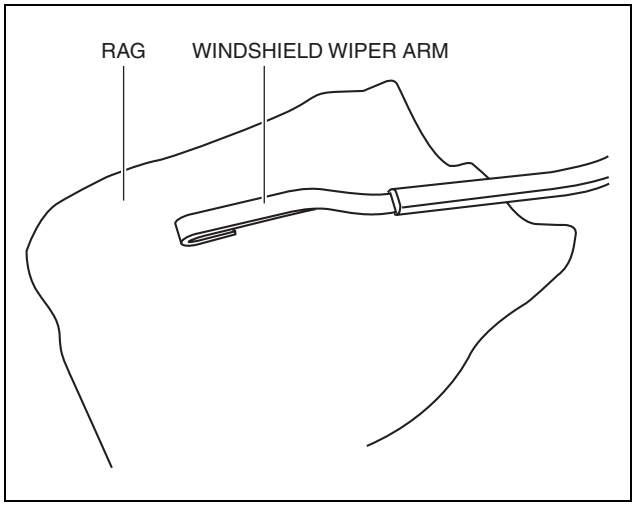

ac5wzw0000161

WIPER/WASHER SYSTEM

3. Remove the windshield wiper blade in the direction of the arrow (4) from the windshield wiper arm.

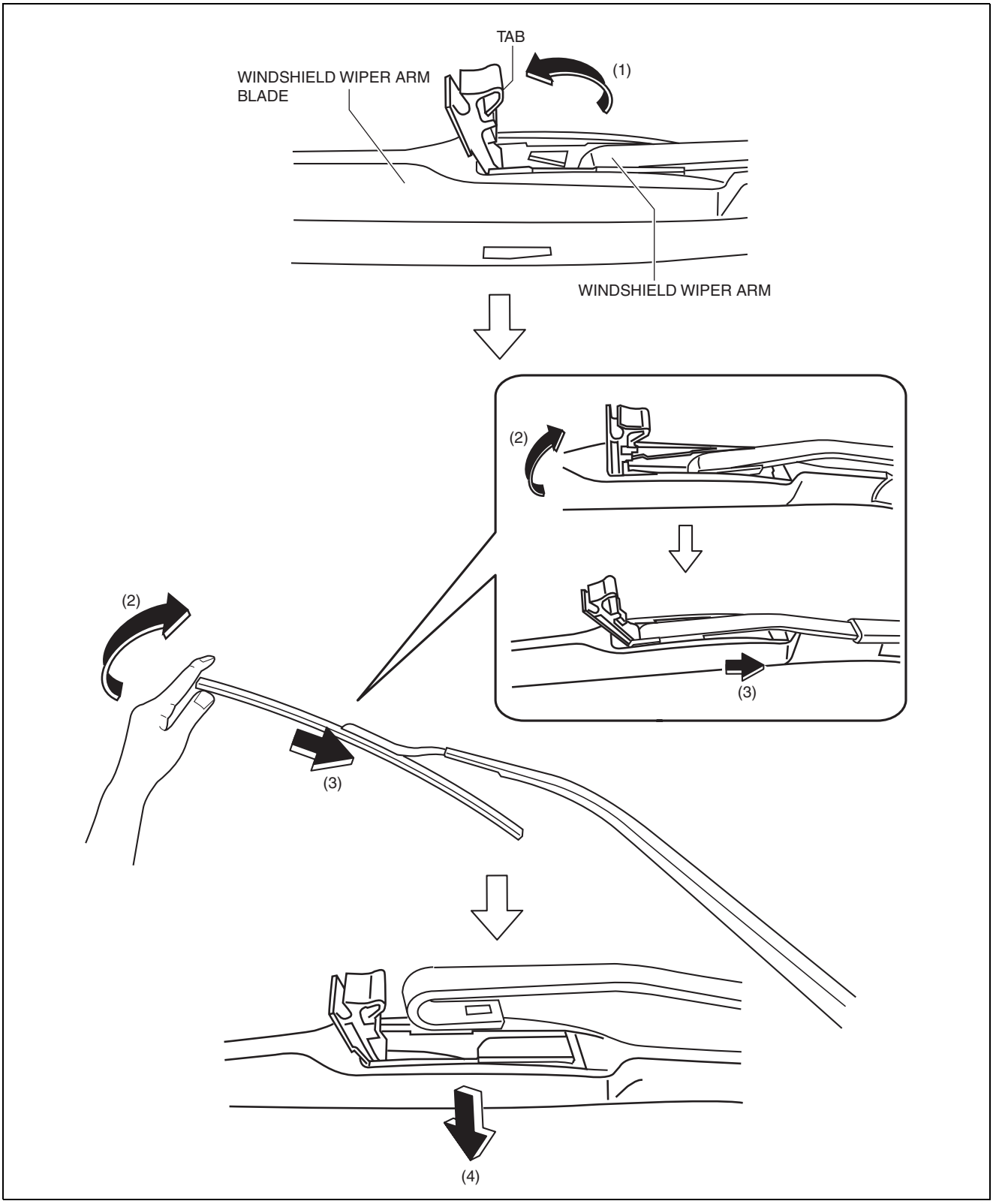

ac5wzw0000248

4. Install in the reverse order of removal.

WINDSHIELD WIPER ARM AND BLADE ADJUSTMENT

id091900800800

1. Switch the ignition ON (engine off or on).
2. Operate the windshield wiper at low speed.
3. Verify that the windshield wiper operates at low speed and stop the windshield wiper.
4. Verify that the windshield wiper stops at the auto-stop position.

WIPER/WASHER SYSTEM

5. Remove the windshield wiper arm and blade. (See 09-19-3 WINDSHIELD WIPER ARM AND BLADE REMOVAL/INSTALLATION.)
6. Install the windshield wiper arm to the serrated connecting part, adjust the windshield wiper blade so that its end is aligned with the hollowed mark in the ceramic coating while sliding the windshield wiper arm onto the grooves of the serrated connecting part one by one, and temporarily tighten the nut.

R.H.D.

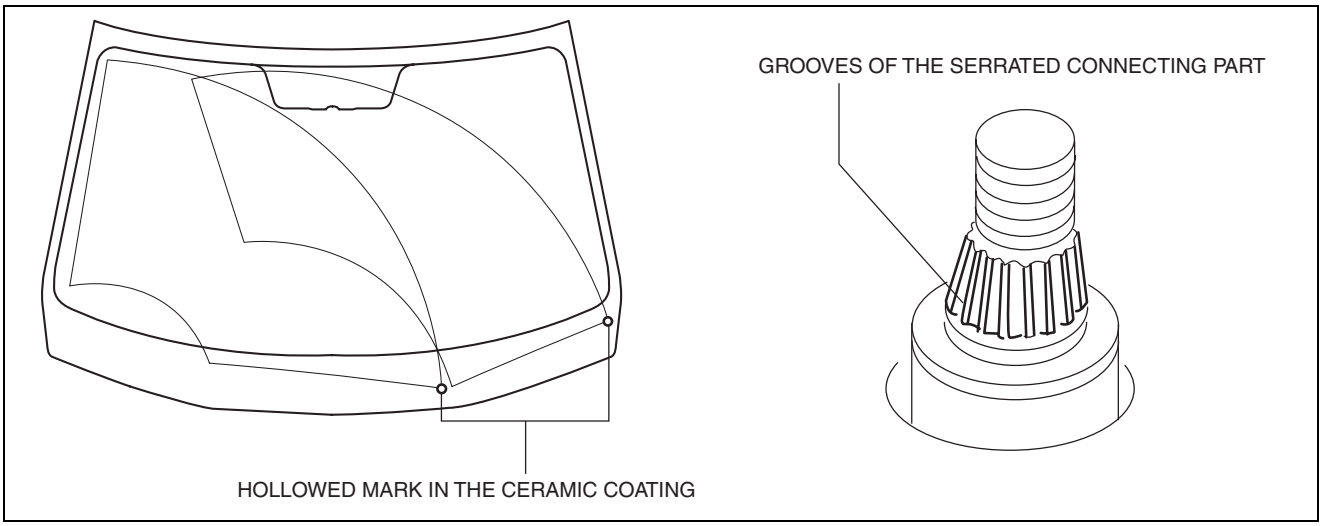

ac5wzw0000248

7. If the hollowed mark in the ceramic coating cannot be located, adjust the windshield wiper blade end to the area shown in the figure.

Note
- If the windshield wiper arm and blade is not installed to the position shown in the figure, repeat the adjustment procedure.

R.H.D.

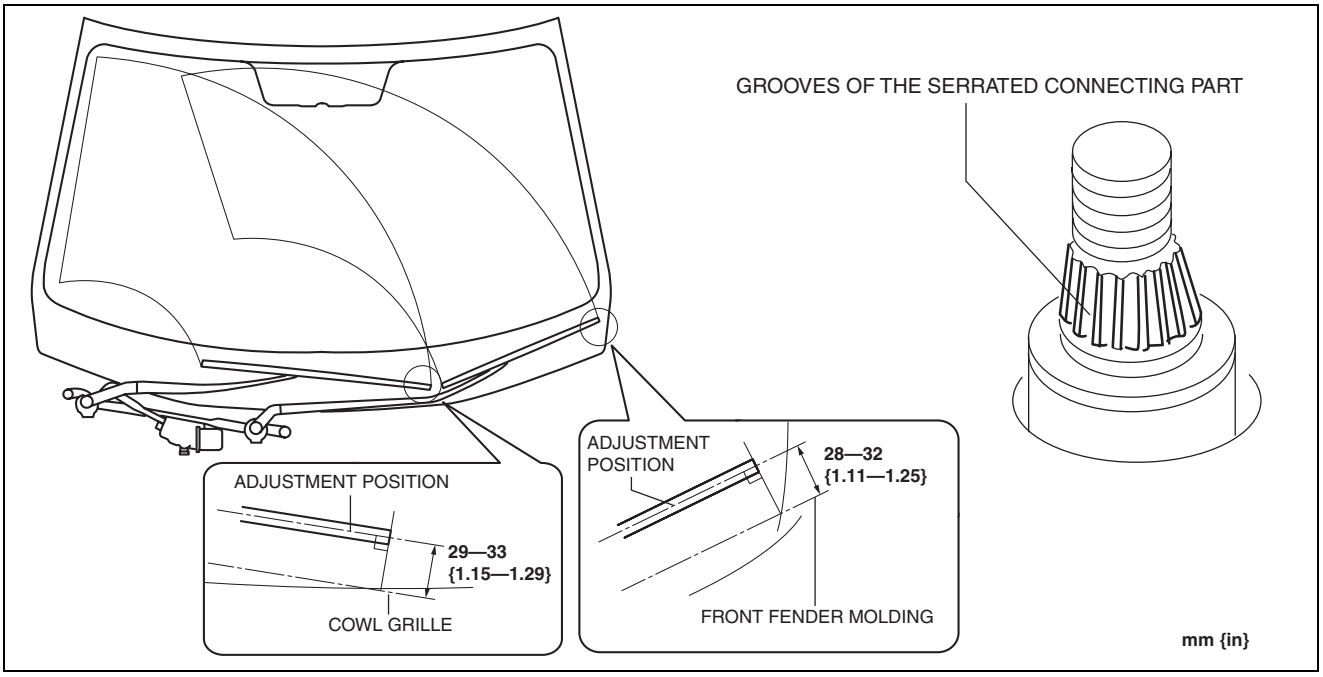

ac5wzw0000161

8. After adjusting the windshield wiper arm and blade, tighten the nut completely. (See 09-19-3 WINDSHIELD WIPER ARM AND BLADE REMOVAL/INSTALLATION.)

WIPER/WASHER SYSTEM

WINDSHIELD WIPER MOTOR AND LINK REMOVAL/INSTALLATION

id091900001200

1. Disconnect the negative battery cable. (See 01-17A-13 NEGATIVE BATTERY CABLE DISCONNECTION/CONNECTION [SKYACTIV-G 2.0 (WITHOUT i-stop)].) (See 01-17A-11 NEGATIVE BATTERY CABLE DISCONNECTION/CONNECTION [SKYACTIV-G 2.0].) (See 01-17B-9 NEGATIVE BATTERY CABLE DISCONNECTION/CONNECTION [SKYACTIV-D 2.2].)
2. Remove the following parts:
   (1) Windshield wiper arm and blade (See 09-19-3 WINDSHIELD WIPER ARM AND BLADE REMOVAL/INSTALLATION.)
   (2) Cowl grille (See 09-16-3 COWL GRILLE REMOVAL/INSTALLATION.)

Caution
- **Always affix protective tape to the windshield end. If the windshield wiper motor and link contacts the windshield, it could damage the windshield.**

3. Affix protective tape to the area where the windshield end interferes with the windshield motor and link as shown in the figure.

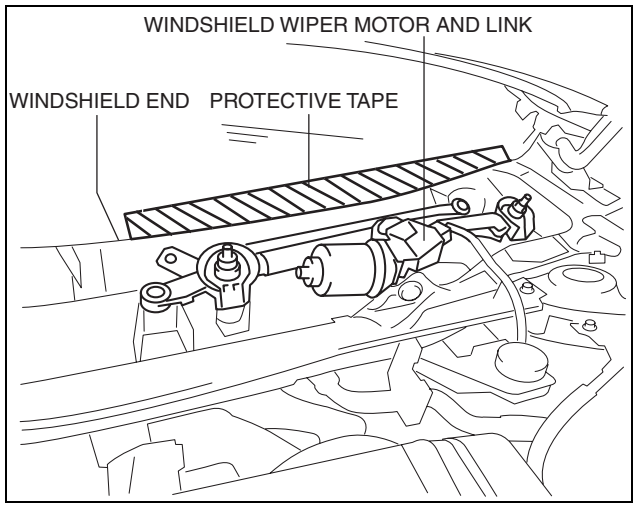

ac5uuw00001105

4. Disconnect the windshield wiper motor connector.

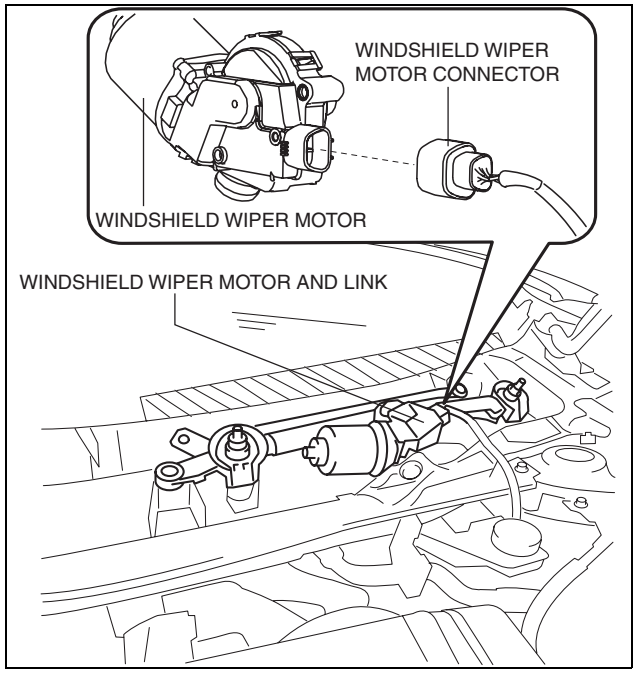

ac5wzw0000296

WIPER/WASHER SYSTEM

5. Remove bolts.

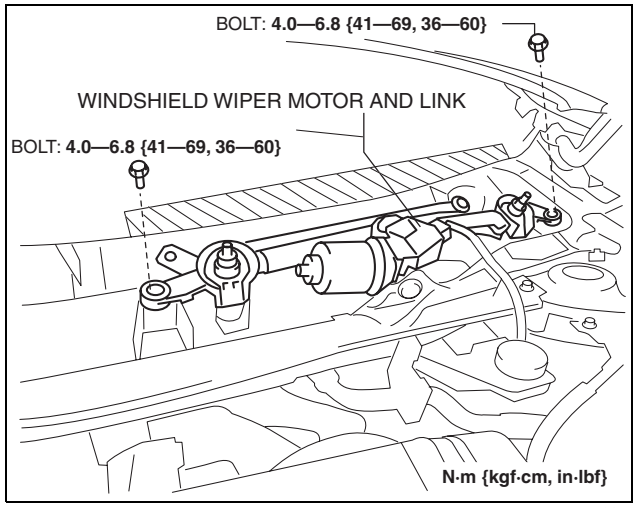

ac5uuw00001107

6. Move the windshield wiper motor and link in the order of the arrows (1) and (2) to remove the securing rubber from the vehicle.

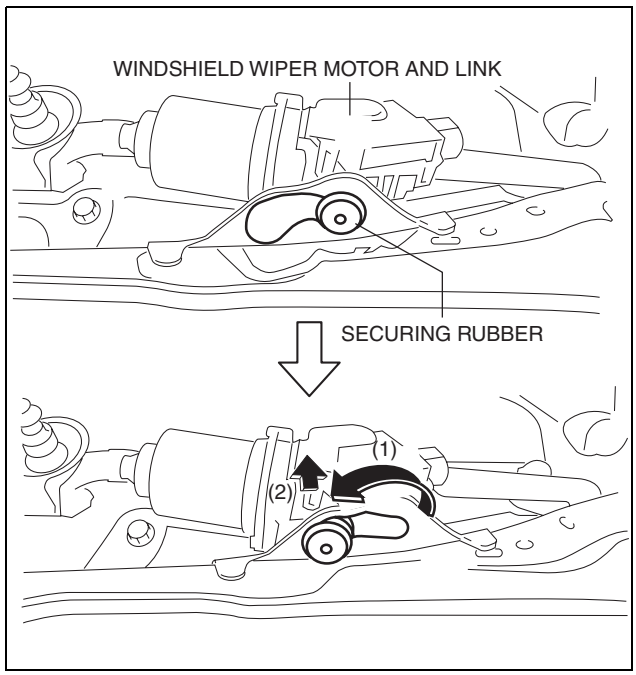

ac5uuw00001108

7. Remove the windshield wiper motor and link from the vehicle in the direction of the arrow (3) while being careful not to allow the windshield wiper end to interfere with the windshield wiper motor and link.

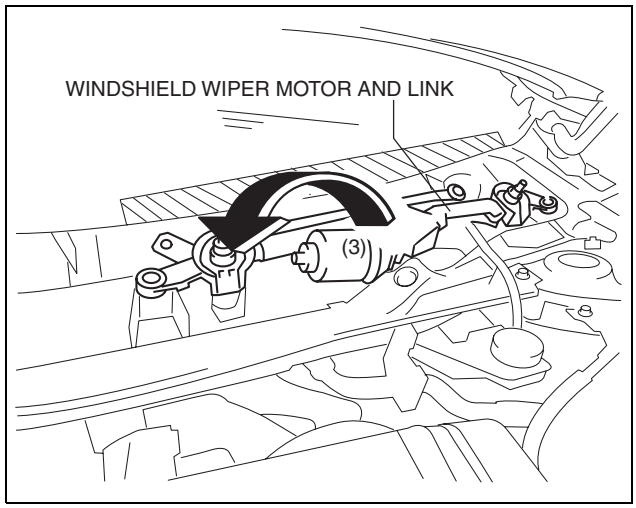

ac5uuw00001109

WIPER/WASHER SYSTEM

8. Fix the position of the windshield wiper link shown in the figure with a vise.

Caution

- **If the vise is tightened with excessive force, it could deform or damage the windshield wiper link. When securing the windshield wiper link in the vise, be careful not to deform or damage the windshield wiper link.**
- **Protect the windshield wiper link by placing a rag in the vise when securing it in the vise. Otherwise, it could damage the vise securing position.**

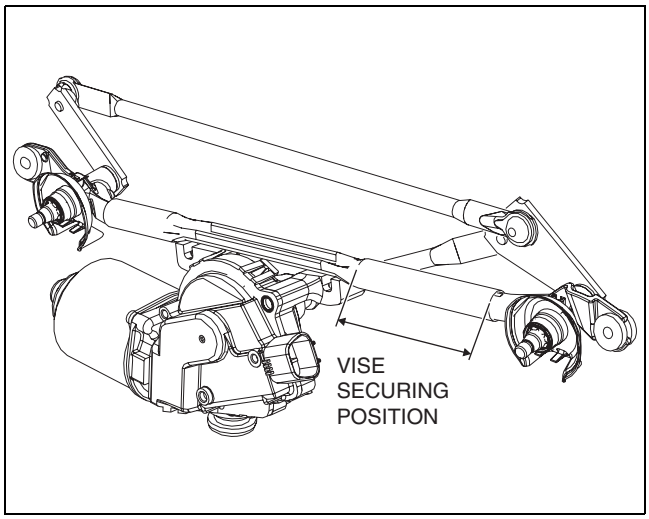

ac5uuw00001110

9. Insert a tape-wrapped flathead screwdriver into the (1) position, move the flathead screwdriver in the direction of the arrow (2), and remove the windshield wiper motor and ball joint for the windshield wiper link.

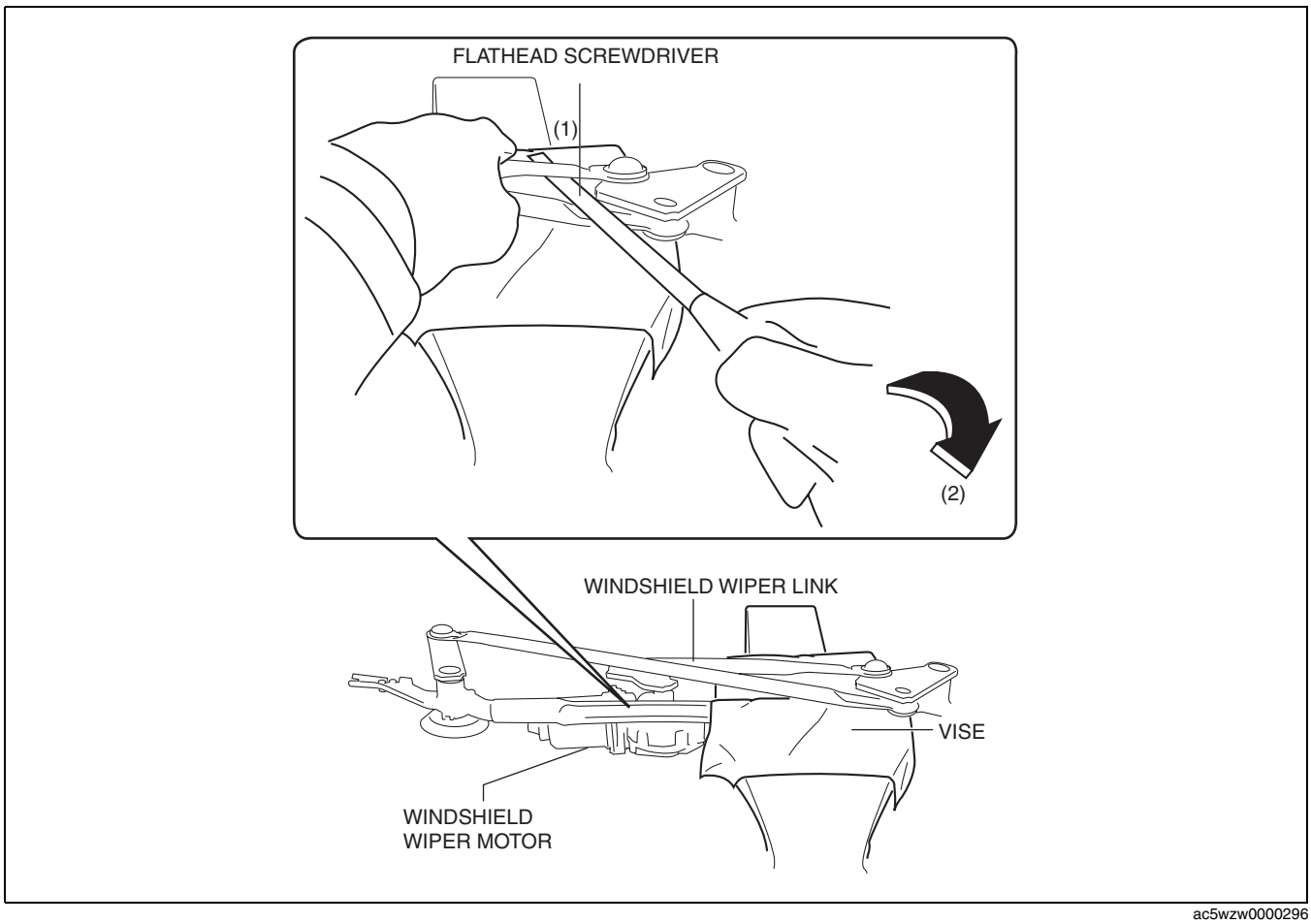

ac5wzw0000296

WIPER/WASHER SYSTEM

10. Remove bolts securing the windshield wiper motor and windshield wiper link, and remove nuts from windshield wiper motor.

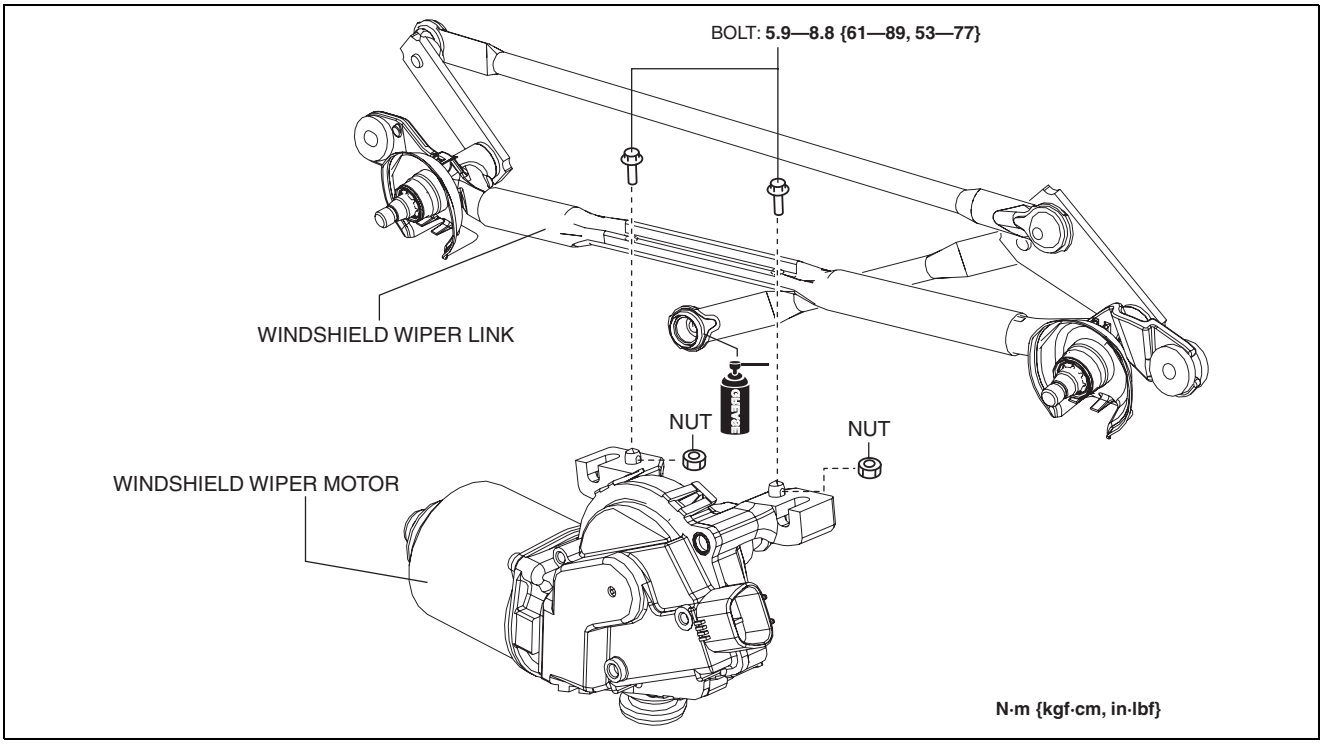

ac5uuw00001112

11. Remove the windshield wiper motor from the windshield wiper link.
12. Install in the reverse order of removal. (See 09-19-13 Ball Joint Assembly Note.)

Ball Joint Assembly Note

1. When assembling the ball joint, use a clean rag to protect the link and squeeze using a pair of protective tape-wrapped pliers.

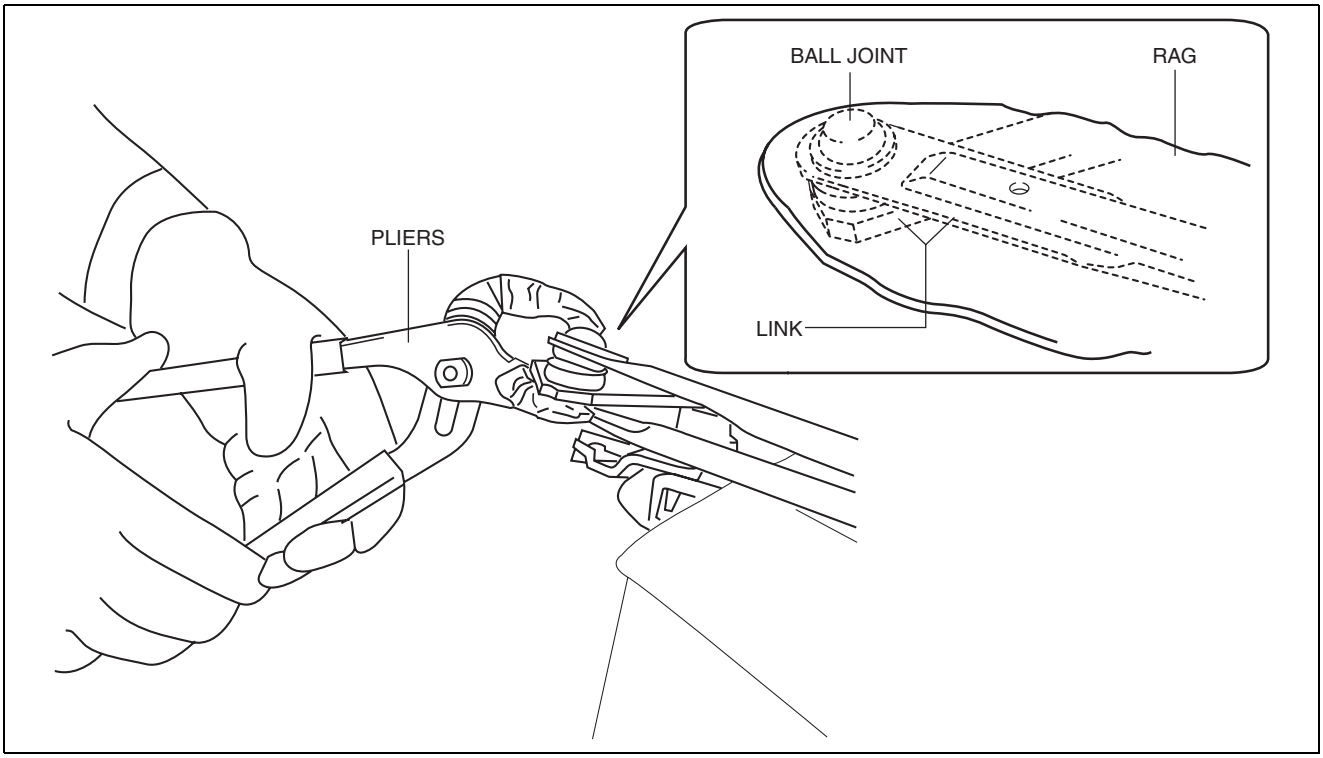

ac5uuw00001113

WIPER/WASHER SYSTEM

WINDSHIELD WIPER MOTOR INSPECTION

id091900801100

R.H.D.

1. Disconnect the negative battery cable. (See 01-17A-13 NEGATIVE BATTERY CABLE DISCONNECTION/CONNECTION [SKYACTIV-G 2.0 (WITHOUT i-stop)].) (See 01-17A-11 NEGATIVE BATTERY CABLE DISCONNECTION/CONNECTION [SKYACTIV-G 2.0].) (See 01-17B-9 NEGATIVE BATTERY CABLE DISCONNECTION/CONNECTION [SKYACTIV-D 2.2].)
2. Remove the following parts:
   (1) Windshield wiper arm and blade (See 09-19-3 WINDSHIELD WIPER ARM AND BLADE REMOVAL/INSTALLATION.)
   (2) Cowl grille (See 09-16-3 COWL GRILLE REMOVAL/INSTALLATION.)

Windshield Wiper Motor Inspection

1. Apply battery positive voltage and connect the ground to the windshield wiper motor terminals as indicated in the table below and verify the operation condition.

B+	Ground	Windshield wiper motor operation status
D	B	LO
E	B	HI

- If not as indicated in the table, replace the windshield wiper motor. (See 09-19-9 WINDSHIELD WIPER MOTOR AND LINK REMOVAL/INSTALLATION.)

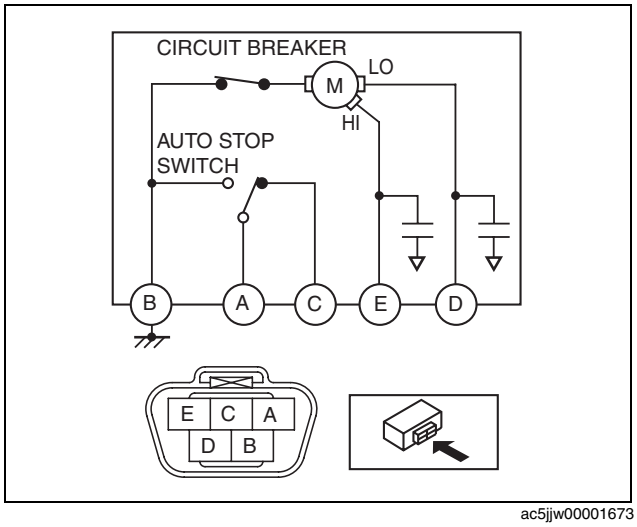

ac5jjw00001673

Auto-stop Operation Inspection

1. Connect the battery voltage to windshield wiper motor terminal D, connect the ground to motor terminal B, and operate the windshield wiper motor at low speed.
2. Disconnect the battery voltage from terminal D during windshield wiper LO operation, and stop the windshield wiper motor halfway.

WIPER/WASHER SYSTEM

3. Connect windshield wiper motor terminals D and A using a jumper wire.
4. Connect the battery positive voltage to windshield wiper motor terminal C.

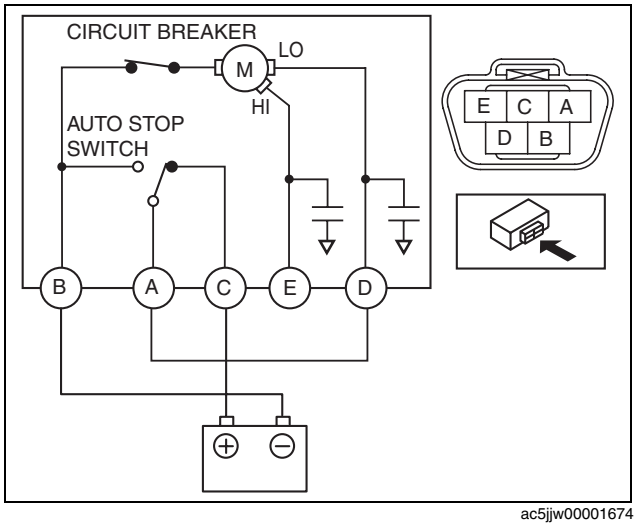

ac5jjw00001674

5. After the windshield wiper motor auto-stop operation, verify that it stops at the park position.
   - If there is any malfunction, replace the windshield wiper motor. (See 09-19-9 WINDSHIELD WIPER MOTOR AND LINK REMOVAL/INSTALLATION.)

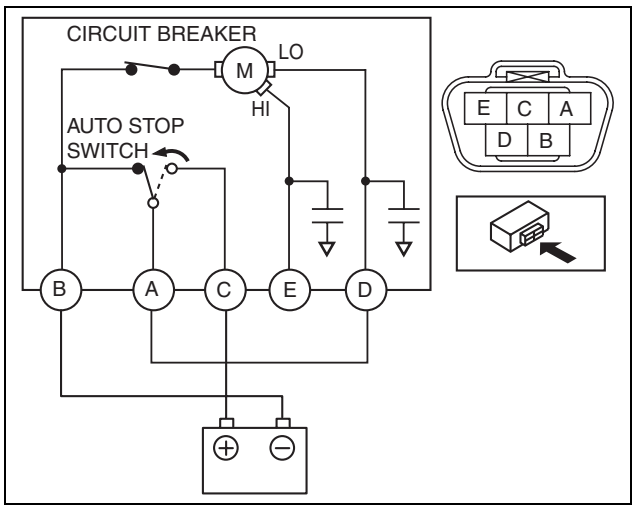

ac5wzw0000297

WASHER TANK REMOVAL/INSTALLATION

id091900801700

With Washer Fluid-level Sensor

1. Disconnect the negative battery cable. (See 01-17A-13 NEGATIVE BATTERY CABLE DISCONNECTION/CONNECTION [SKYACTIV-G 2.0 (WITHOUT i-stop)].) (See 01-17A-11 NEGATIVE BATTERY CABLE DISCONNECTION/CONNECTION [SKYACTIV-G 2.0].) (See 01-17B-9 NEGATIVE BATTERY CABLE DISCONNECTION/CONNECTION [SKYACTIV-D 2.2].)
2. Partially peel back the front over fender. (See 09-10-31 FRONT OVER FENDER REMOVAL/INSTALLATION.)
3. Set the mudguard (RH) aside. (See 09-16-47 MUDGUARD REMOVAL/INSTALLATION.)
4. Remove the front bumper. (See 09-10-10 FRONT BUMPER REMOVAL/INSTALLATION.)
5. Remove the bracket.
6. Disconnect the washer motor connector.
7. Disconnect the headlight cleaner motor connector.
8. Disconnect the washer fluid-level sensor connector.
9. Disconnect the windshield washer hose.
10. Disconnect the rear washer hose.

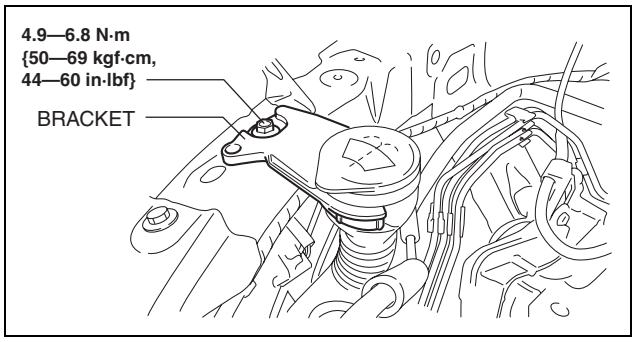

ac5wzw0000022

WIPER/WASHER SYSTEM

11. While pressing tabs of clips in the direction of the arrows (1) shown in the figure, remove it in the direction of the arrow (2).

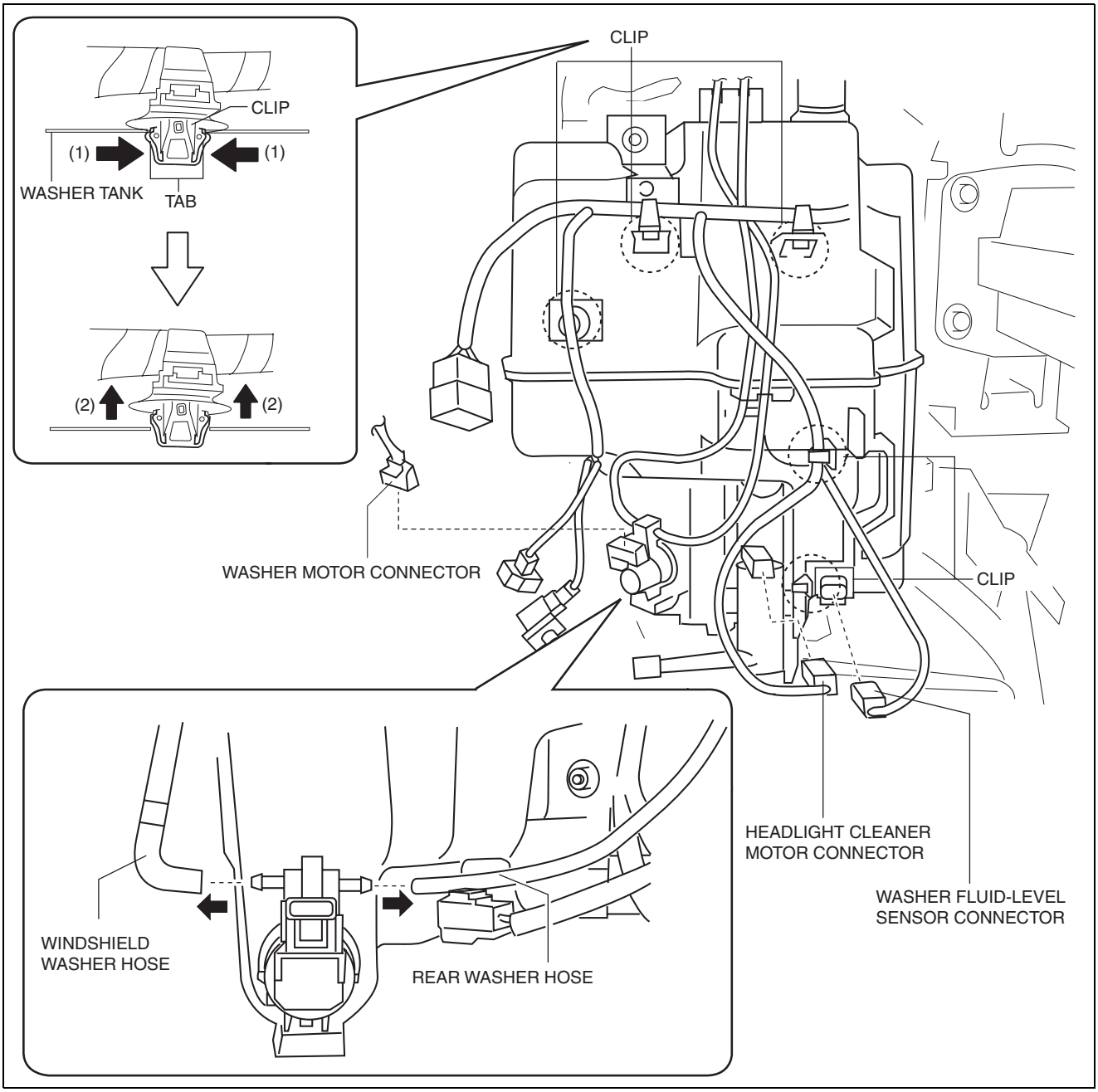

ac5wzw0000163

12. Remove the windshield washer hose from the hooks.
13. Remove the rear washer hose from the hooks.

WIPER/WASHER SYSTEM

14. Remove bolts.

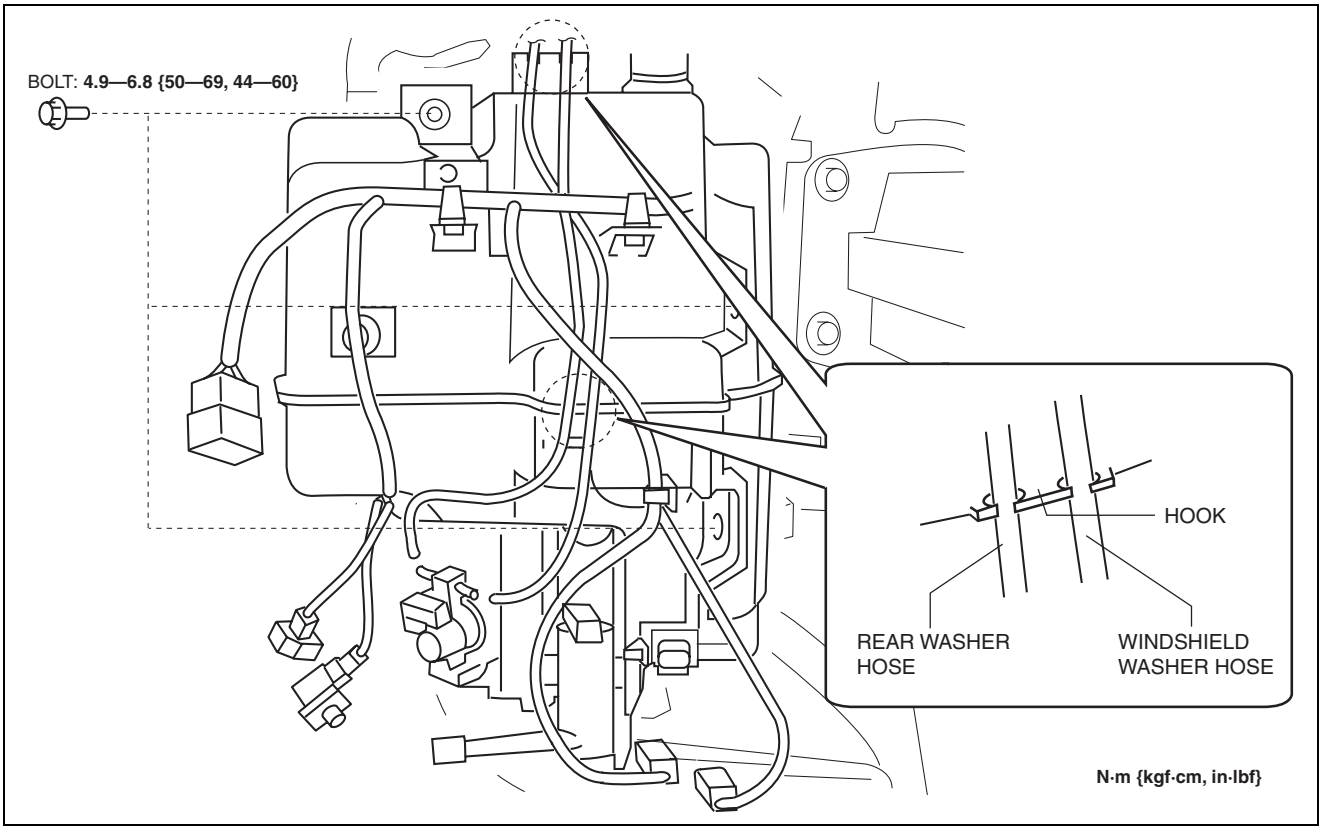

ac5wzw0000219

WIPER/WASHER SYSTEM

15. Remove the washer tank positioning hook and notch from the vehicle and remove the washer tank.

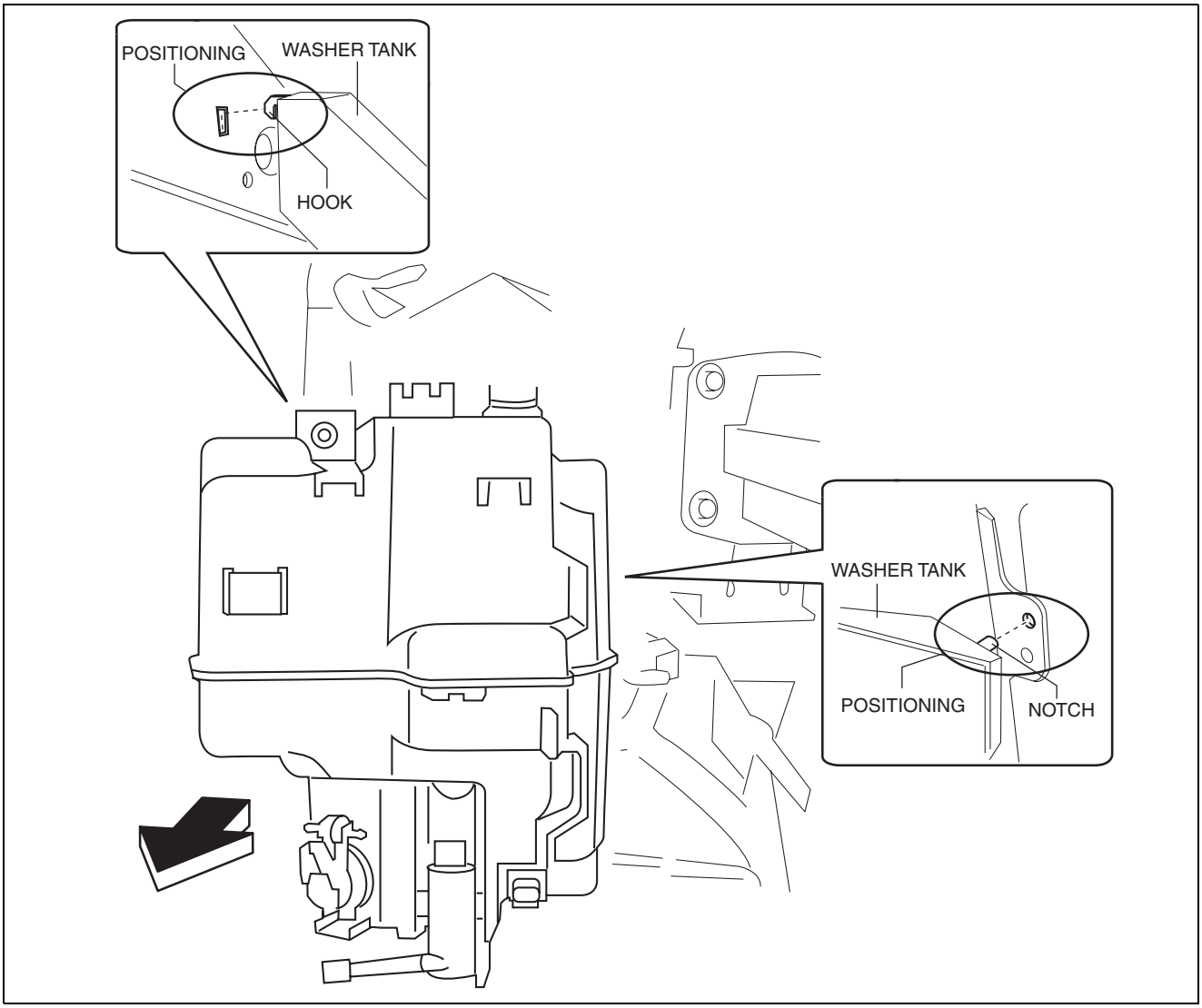

ac5wzw0000219

16. Install in the reverse order of removal.

Without Washer Fluid-level Sensor

1. Disconnect the negative battery cable. (See 01-17A-13 NEGATIVE BATTERY CABLE DISCONNECTION/CONNECTION [SKYACTIV-G 2.0 (WITHOUT i-stop)].) (See 01-17A-11 NEGATIVE BATTERY CABLE DISCONNECTION/CONNECTION [SKYACTIV-G 2.0].) (See 01-17B-9 NEGATIVE BATTERY CABLE DISCONNECTION/CONNECTION [SKYACTIV-D 2.2].)
2. Partially peel back the front over fender. (See 09-10-31 FRONT OVER FENDER REMOVAL/INSTALLATION.)
3. Set the mudguard (RH) aside. (See 09-16-47 MUDGUARD REMOVAL/INSTALLATION.)
4. Remove the front bumper. (See 09-10-10 FRONT BUMPER REMOVAL/INSTALLATION.)
5. Remove the bracket.
6. Disconnect the washer motor connector.
7. Disconnect the windshield washer hose.
8. Disconnect the rear washer hose.

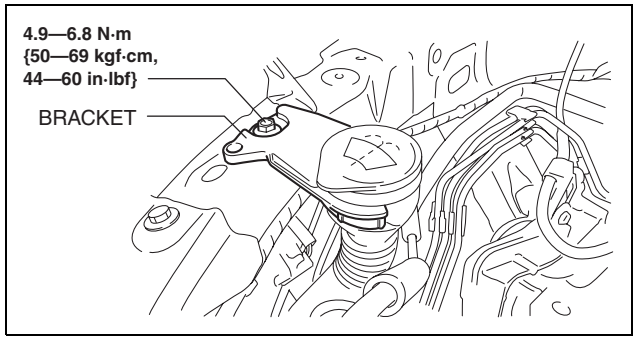

ac5wzw0000022

WIPER/WASHER SYSTEM

9. While pressing tabs of clips in the direction of the arrows (1) shown in the figure, remove it in the direction of the arrow (2).

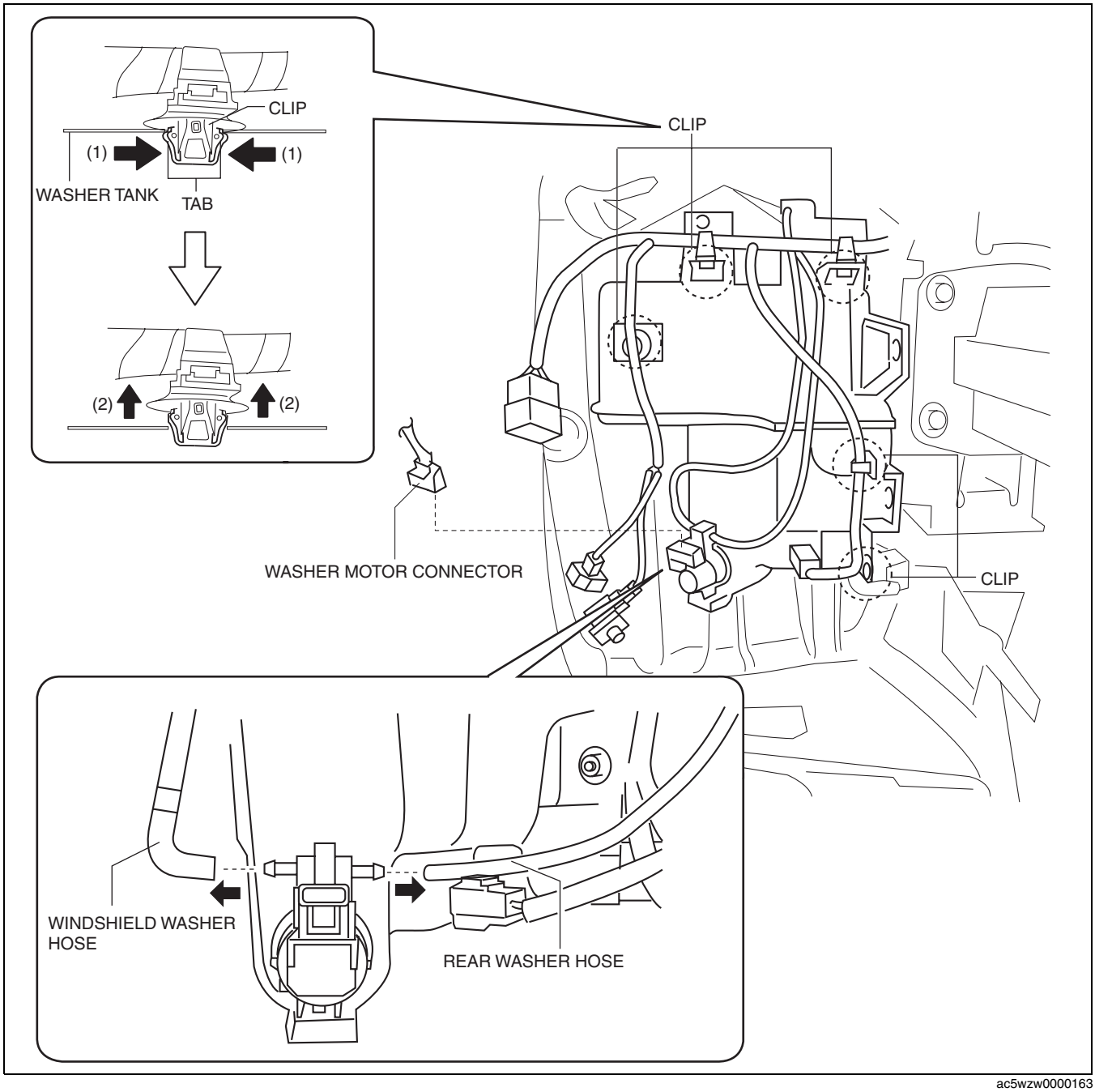

ac5wzw0000163

10. Remove the windshield washer hose from the hooks.
11. Remove the rear washer hose from the hooks.

WIPER/WASHER SYSTEM

12. Remove bolts.

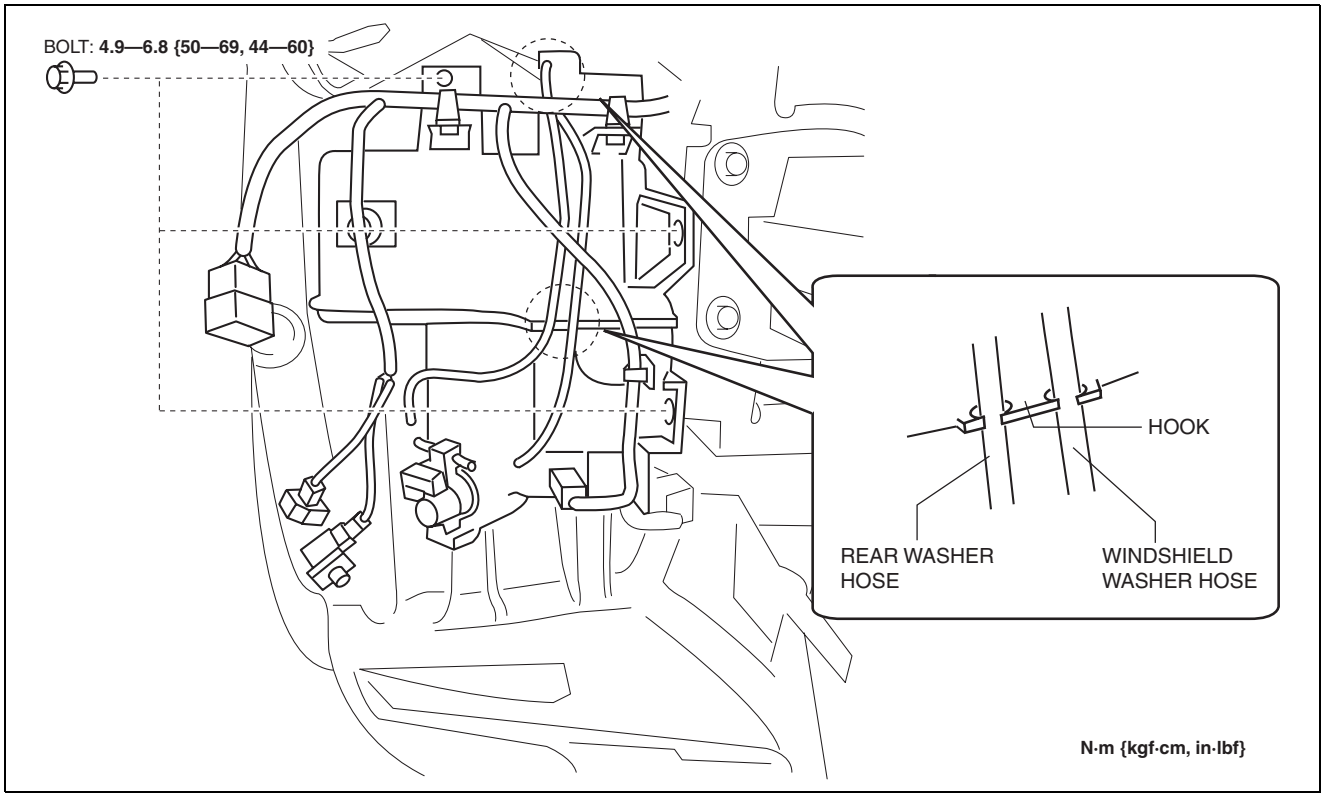

ac5wzw0000163

WIPER/WASHER SYSTEM

13. Remove the washer tank positioning hook and notch from the vehicle and remove the washer tank.

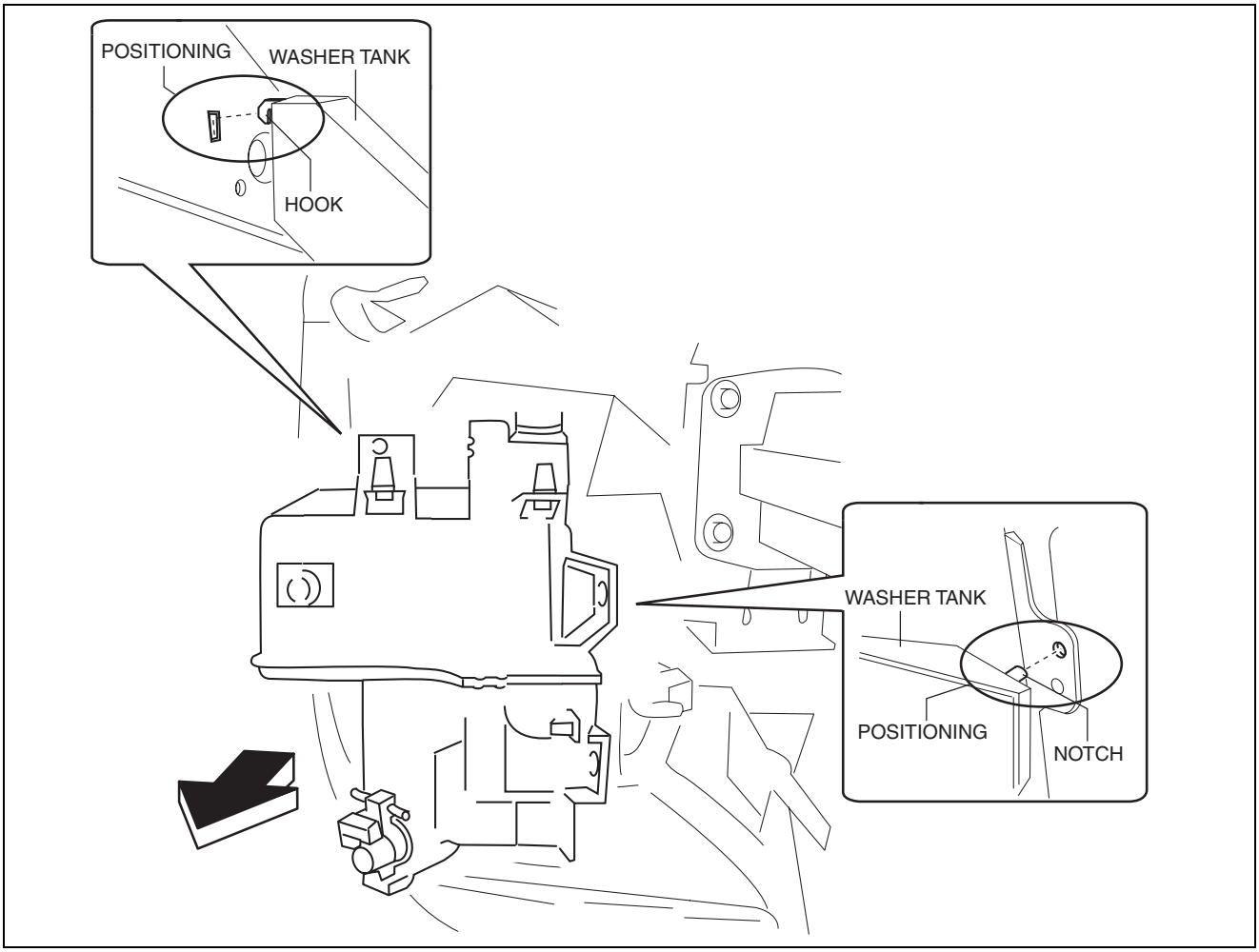

ac5wzw0000297

14. Install in the reverse order of removal.

WASHER MOTOR REMOVAL/INSTALLATION

id091900805000

1. Disconnect the negative battery cable. (See 01-17A-13 NEGATIVE BATTERY CABLE DISCONNECTION/CONNECTION [SKYACTIV-G 2.0 (WITHOUT i-stop)].) (See 01-17A-11 NEGATIVE BATTERY CABLE DISCONNECTION/CONNECTION [SKYACTIV-G 2.0].) (See 01-17B-9 NEGATIVE BATTERY CABLE DISCONNECTION/CONNECTION [SKYACTIV-D 2.2].)
2. Partially peel back the front over fender. (See 09-10-31 FRONT OVER FENDER REMOVAL/INSTALLATION.)
3. Set the mudguard (RH) aside. (See 09-16-47 MUDGUARD REMOVAL/INSTALLATION.)
4. Remove the front bumper. (See 09-10-10 FRONT BUMPER REMOVAL/INSTALLATION.)
5. Disconnect the washer motor connector from the washer motor.
6. Disconnect the windshield washer hose from the washer motor.
7. Disconnect the rear washer hose from the washer motor.

Note

- If the washer motor is removed with washer fluid in the washer tank, the washer fluid may leak out. When removing the washer motor from the washer tank, place a container under the washer tank to collect washer fluid, and perform the procedure.

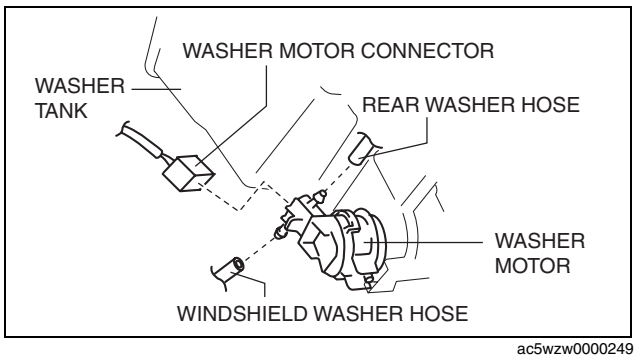

ac5wzw0000249

WIPER/WASHER SYSTEM

8. Rotate the washer motor counterclockwise/clockwise rotation repeatedly in the direction of the arrows (1) and (2) shown in the figure, and then remove it in the direction of the arrow (3).

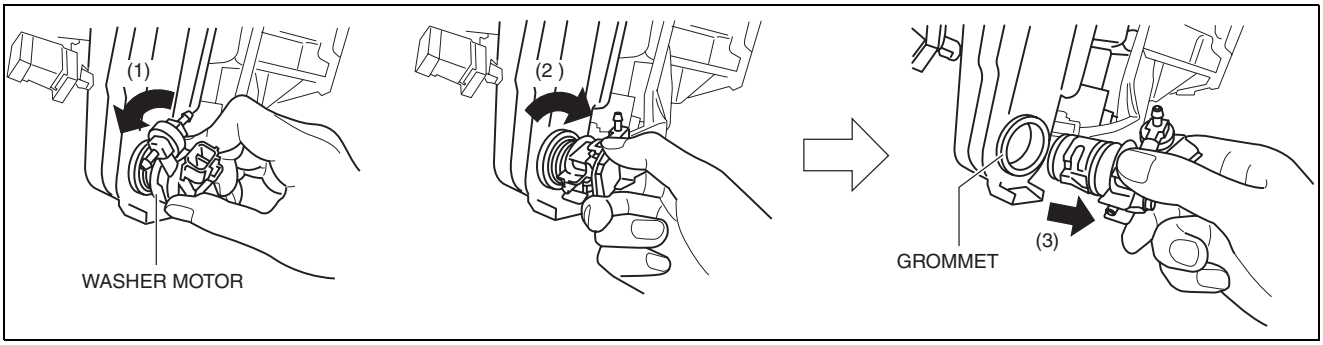

ac5uuw00000825

9. Remove the grommet.
10. Install in the reverse order of removal.

WASHER MOTOR INSPECTION

id091900805100

1. Disconnect the negative battery cable. (See 01-17A-13 NEGATIVE BATTERY CABLE DISCONNECTION/CONNECTION [SKYACTIV-G 2.0 (WITHOUT i-stop)].) (See 01-17A-11 NEGATIVE BATTERY CABLE DISCONNECTION/CONNECTION [SKYACTIV-G 2.0].) (See 01-17B-9 NEGATIVE BATTERY CABLE DISCONNECTION/CONNECTION [SKYACTIV-D 2.2].)
2. Partially peel back the front over fender. (See 09-10-31 FRONT OVER FENDER REMOVAL/INSTALLATION.)
3. Set the mudguard (RH) aside. (See 09-16-47 MUDGUARD REMOVAL/INSTALLATION.)
4. Remove the front bumper. (See 09-10-10 FRONT BUMPER REMOVAL/INSTALLATION.)
5. Disconnect the washer motor connector from the washer motor.
6. Disconnect the windshield washer hose from the washer motor.
7. Disconnect the rear washer hose from the washer motor.

Warning

- **Water sprayed on the battery and ground could cause electrocution. When performing the washer motor inspection, prepare a container to collect washer fluid and be careful not to spray washer fluid.**

8. After connecting washer motor terminal A to the positive battery terminal, and terminal B to ground, verify that washer fluid sprays from the front side of the washer motor.

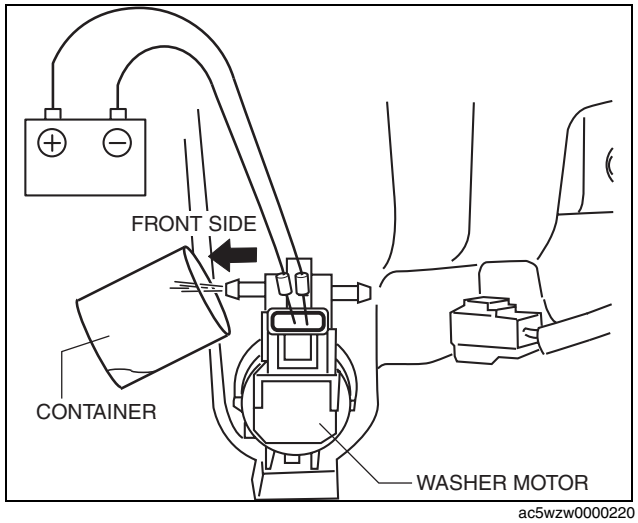

ac5wzw0000220

WIPER/WASHER SYSTEM

- If there is any malfunction, replace the washer motor. (See 09-19-22 WASHER MOTOR REMOVAL/INSTALLATION.)

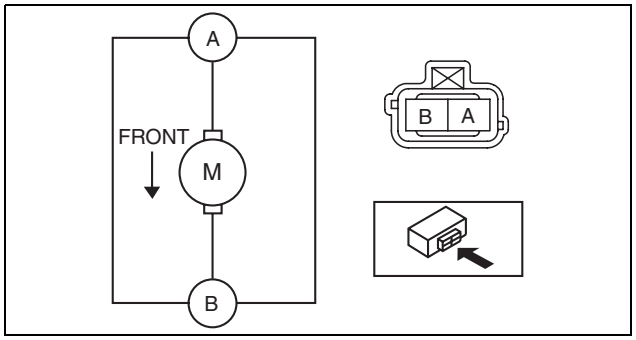

ac5uuw00000827

9. After connecting washer motor terminal B to the positive battery terminal, and washer motor terminal A to ground, verify that washer fluid sprays from the rear side of the washer motor.

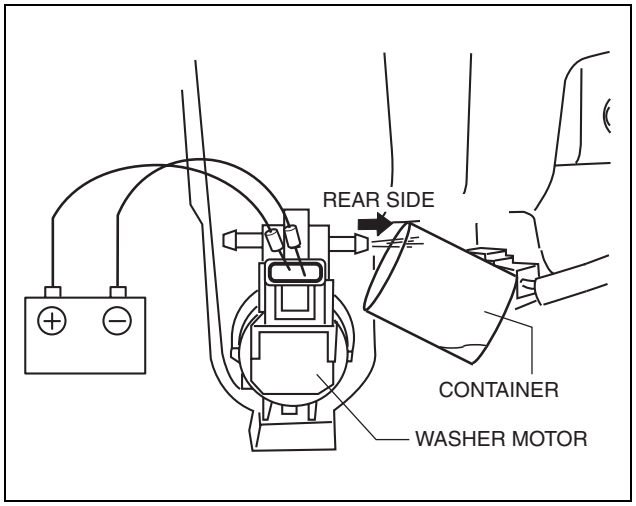

ac5wzw0000220

- If there is any malfunction, replace the washer motor. (See 09-19-22 WASHER MOTOR REMOVAL/INSTALLATION.)

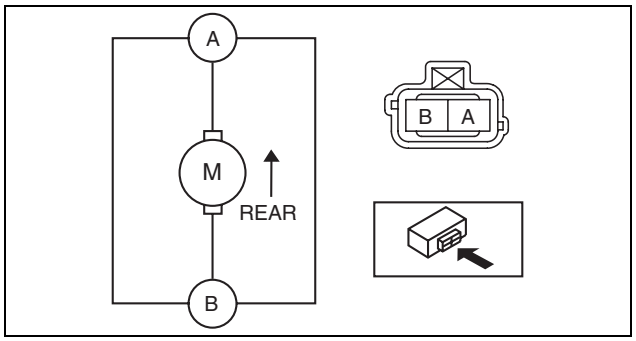

ac5uuw00000829

WINDSHIELD WASHER NOZZLE REMOVAL/INSTALLATION

id091900802000

1. Remove the following parts:
   (1) Windshield wiper arm and blade (See 09-19-3 WINDSHIELD WIPER ARM AND BLADE REMOVAL/INSTALLATION.)
   (2) Cowl grille (See 09-16-3 COWL GRILLE REMOVAL/INSTALLATION.)
2. Disconnect the windshield washer hose from the windshield washer nozzle. (See 09-19-27 WINDSHIELD WASHER HOSE REMOVAL/INSTALLATION.)

WIPER/WASHER SYSTEM

3. While pressing windshield washer nozzle tabs in the direction of the arrow (1) shown in the figure, pull the windshield washer nozzle in the direction of the arrow (2) to remove it from the cowl grille.

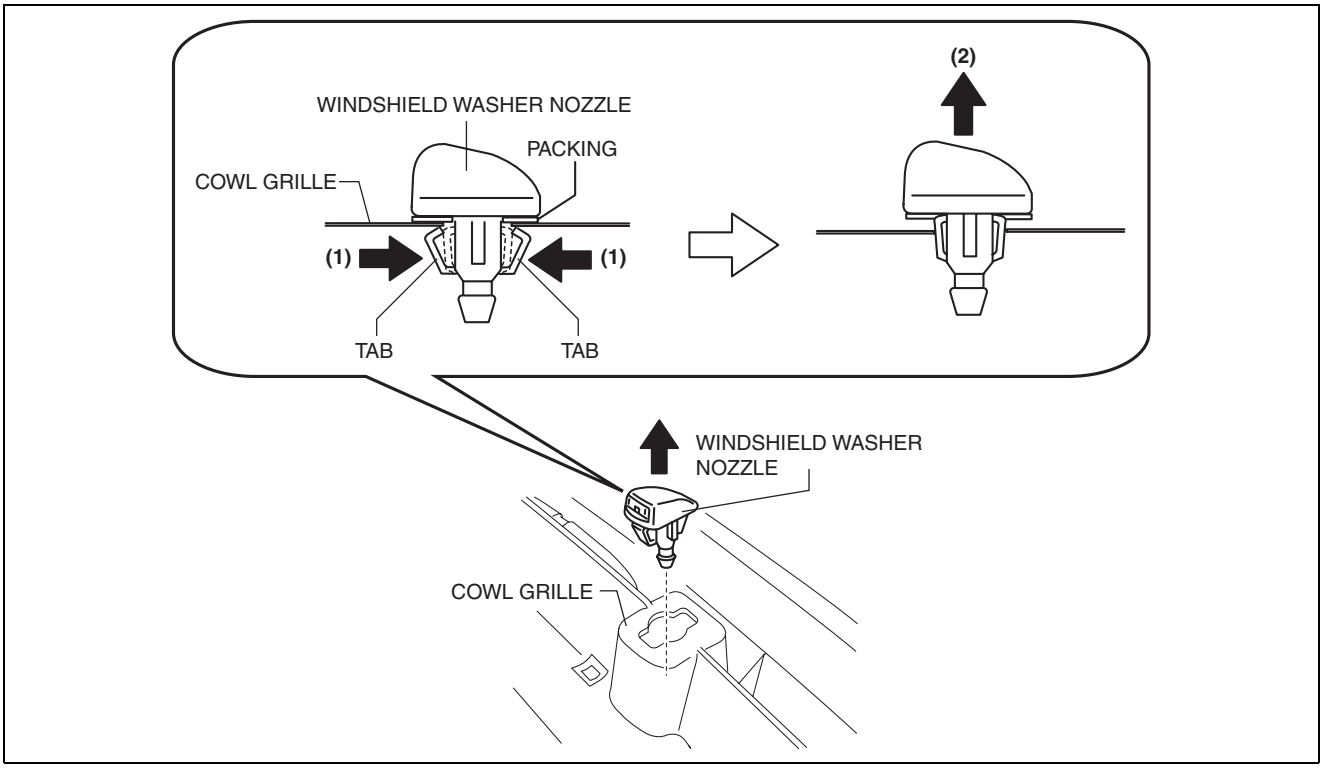

ac5wzw0000248

4. Install in the reverse order of removal.
5. Adjust the windshield washer nozzle. (See 09-19-25 WINDSHIELD WASHER NOZZLE ADJUSTMENT.)

WINDSHIELD WASHER NOZZLE ADJUSTMENT

id091900476400

Caution

- **If the nozzle is adjusted by inserting a stick-like object into the nozzle, it could deform the injection nozzle and the washer fluid may not spray normally. When adjusting the nozzle, do not insert objects into the injection nozzle.**

1. Insert a tape-wrapped precision flathead screwdriver into the adjustment hole of the windshield washer nozzle and adjust it to the area where washer fluid is sprayed as shown in the figure.

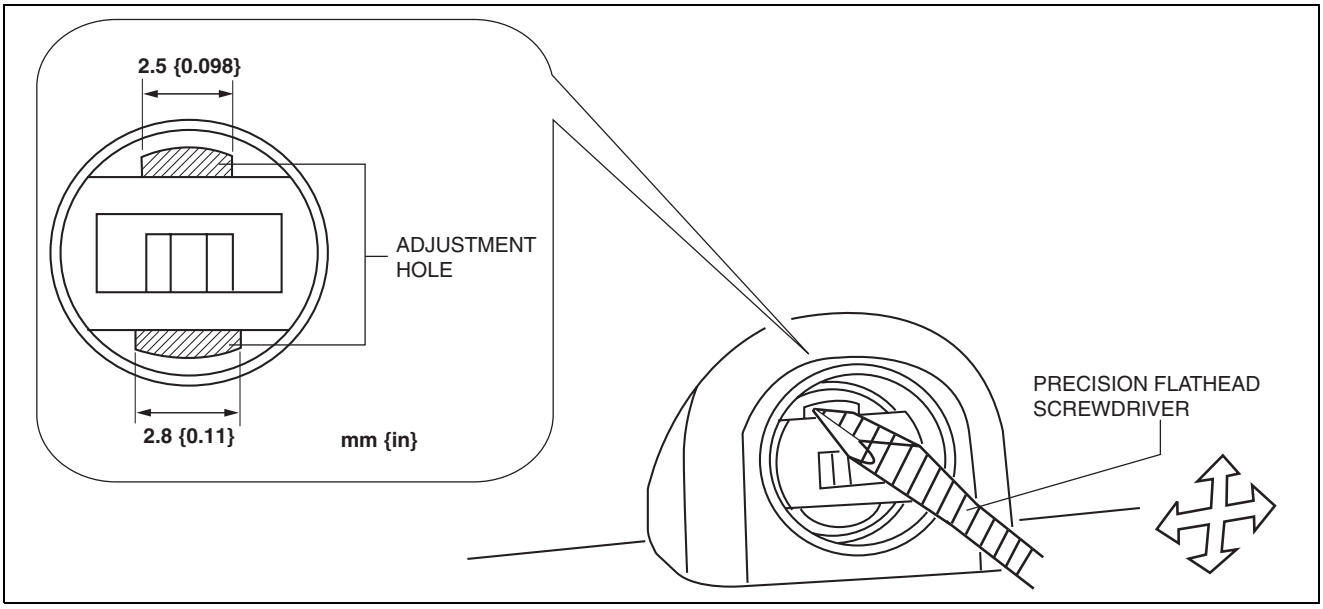

ac5wzw0000158

WIPER/WASHER SYSTEM

ac5wzw0000296

R.H.D.

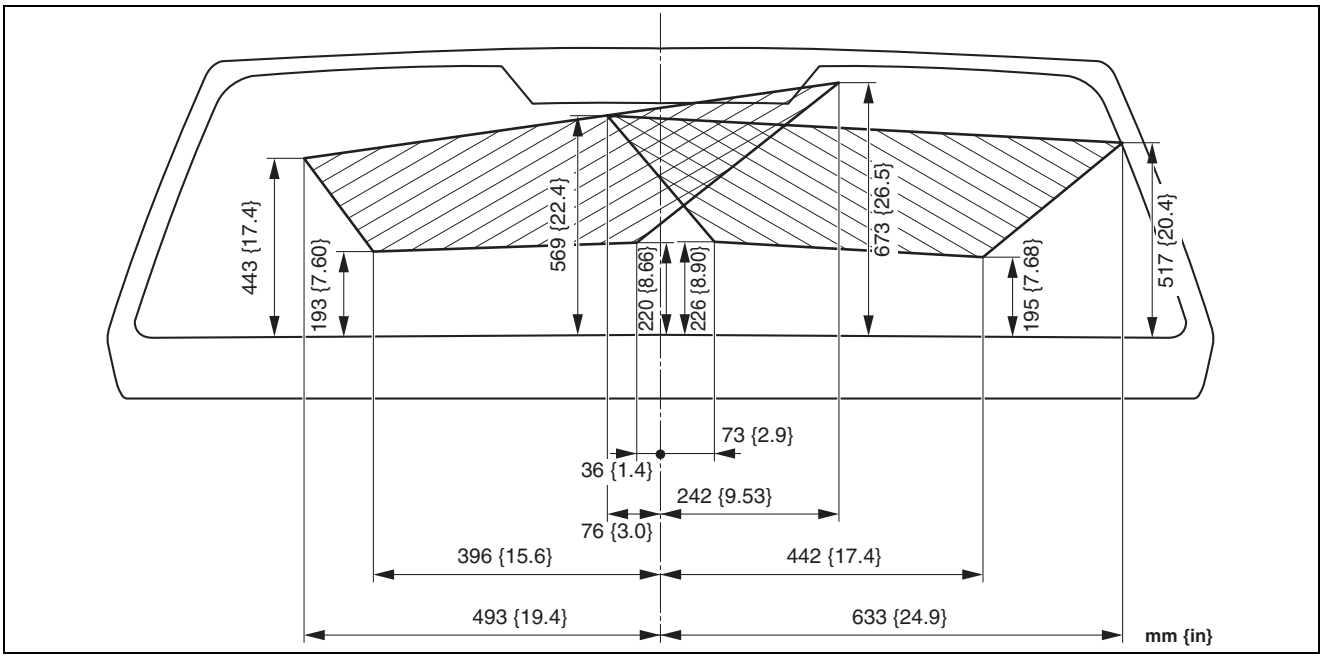

ac5wzw0000218

WASHER FLUID-LEVEL SENSOR INSPECTION

id091900801900

1. Disconnect the negative battery cable. (See 01-17A-13 NEGATIVE BATTERY CABLE DISCONNECTION/CONNECTION [SKYACTIV-G 2.0 (WITHOUT i-stop)].) (See 01-17A-11 NEGATIVE BATTERY CABLE DISCONNECTION/CONNECTION [SKYACTIV-G 2.0].) (See 01-17B-9 NEGATIVE BATTERY CABLE DISCONNECTION/CONNECTION [SKYACTIV-D 2.2].)
2. Partially peel back the front over fender. (See 09-10-31 FRONT OVER FENDER REMOVAL/INSTALLATION.)
3. Set the mudguard (RH) aside. (See 09-16-47 MUDGUARD REMOVAL/INSTALLATION.)
4. Remove the front bumper. (See 09-10-10 FRONT BUMPER REMOVAL/INSTALLATION.)
5. Inspect for continuity according to washer fluid level between the washer fluid-level sensor terminals.

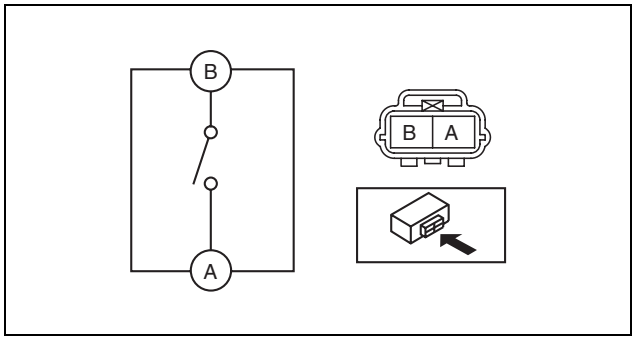

ac5jjw00000678

- If not as indicated in the table, replace the washer fluid-level sensor. (See 09-19-31 WASHER FLUID-LEVEL SENSOR REMOVAL/INSTALLATION.)

○—○ : Continuity

Fluid level	Terminal	
	A	B
Above low		
Below low	○	○

am3zzw0001165

WIPER/WASHER SYSTEM

WINDSHIELD WASHER HOSE REMOVAL/INSTALLATION

id091900802100

1. Disconnect the negative battery cable. (See 01-17A-13 NEGATIVE BATTERY CABLE DISCONNECTION/CONNECTION [SKYACTIV-G 2.0 (WITHOUT i-stop)].) (See 01-17A-11 NEGATIVE BATTERY CABLE DISCONNECTION/CONNECTION [SKYACTIV-G 2.0].) (See 01-17B-9 NEGATIVE BATTERY CABLE DISCONNECTION/CONNECTION [SKYACTIV-D 2.2].)
2. Remove the front over fender. (See 09-10-31 FRONT OVER FENDER REMOVAL/INSTALLATION.)
3. Remove the mudguard (RH). (See 09-16-47 MUDGUARD REMOVAL/INSTALLATION.)
4. Remove the windshield wiper arm and blade. (See 09-19-3 WINDSHIELD WIPER ARM AND BLADE REMOVAL/INSTALLATION.)
5. Disconnect the windshield washer hose A from the washer motor.
6. Remove the windshield washer hose A from the washer tank hook.
7. Remove the windshield washer hose A from clips A.

WIPER/WASHER SYSTEM

8. Disconnect the windshield washer hose A from the joint pipe A and remove it.

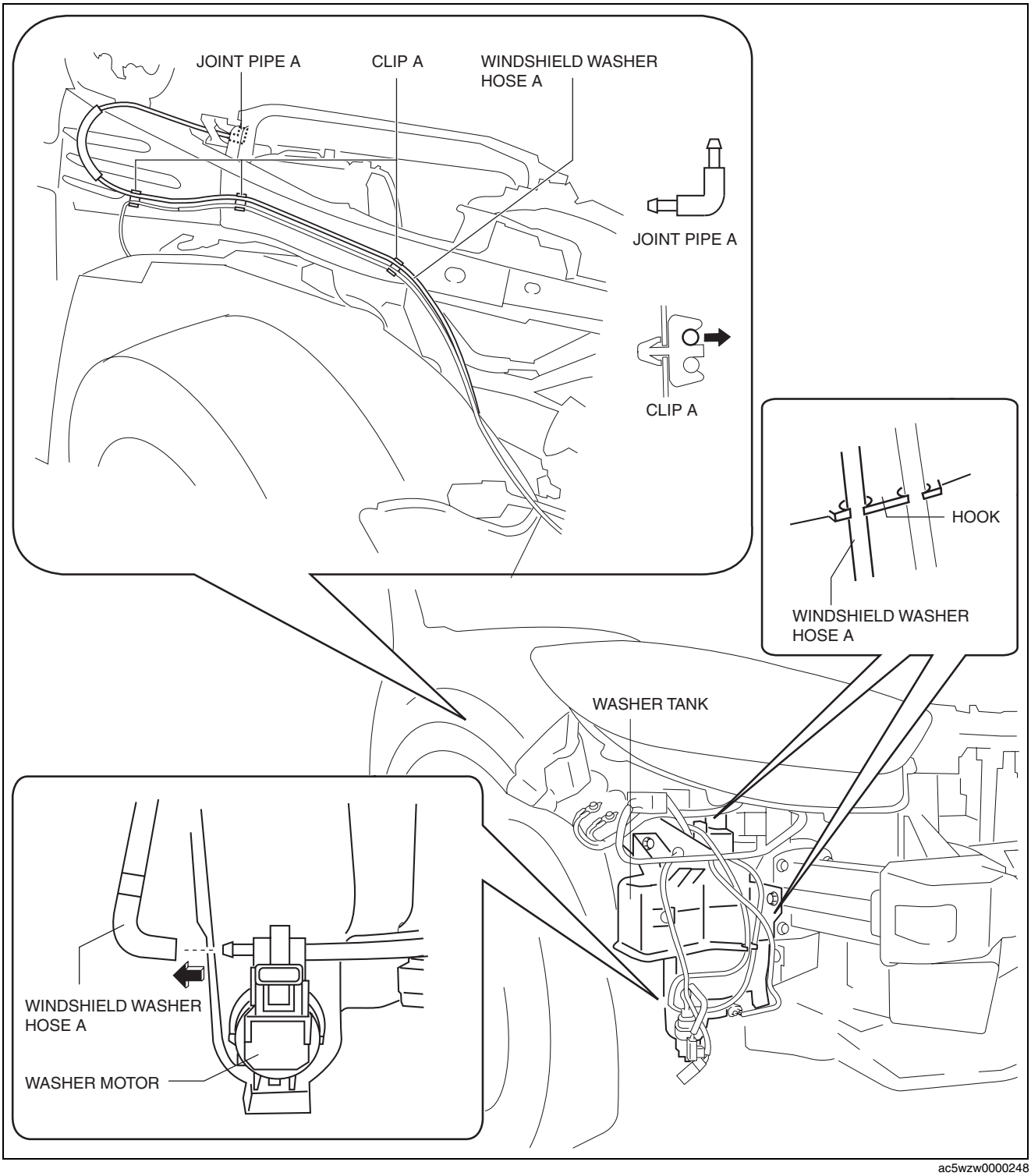

ac5wzw0000248

9. Remove the cowl grille. (See 09-16-3 COWL GRILLE REMOVAL/INSTALLATION.)
10. For L.H.D., perform the following procedure:
    (1) Disconnect the windshield washer hose B from the joint pipe A.
    (2) Disconnect the windshield washer hose B from the joint pipe B and remove it.
    (3) Disconnect the windshield washer hose C from the windshield washer nozzle A.
    (4) Disconnect the windshield washer hose C from the joint pipe B and remove it.
    (5) Disconnect the windshield washer hose D from the joint pipe B.
    (6) Disconnect the windshield washer hose D from the joint pipe C and remove it.
    (7) Disconnect the windshield washer hose E from the windshield washer nozzle B.

WIPER/WASHER SYSTEM

(8) Disconnect the windshield washer hose E from the joint pipe C and remove it.

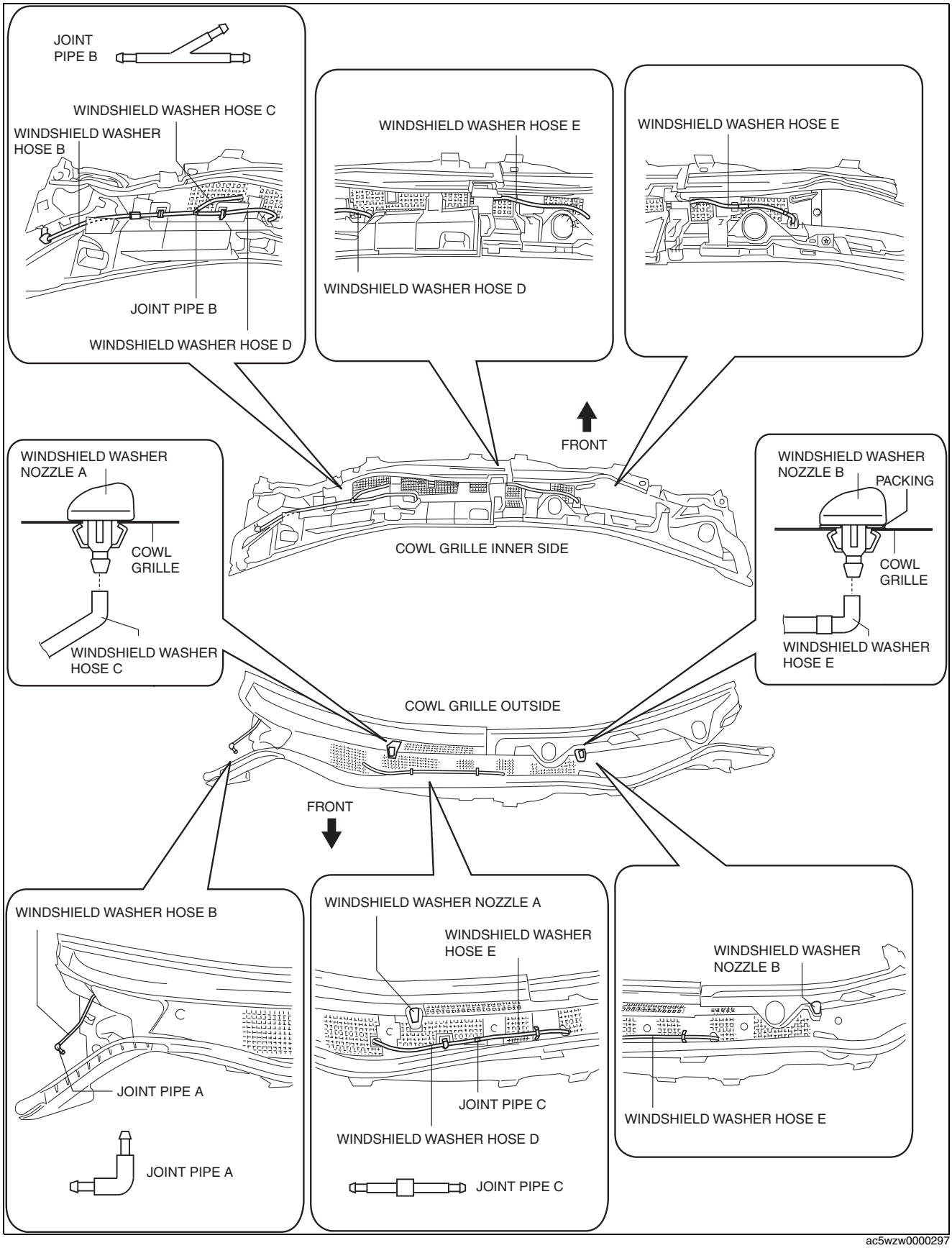

ac5wzw0000297

11. For R.H.D., perform the following procedure:
    (1) Disconnect the windshield washer hose B from the joint pipe A.
    (2) Disconnect the windshield washer hose B from the joint pipe B and remove it.

WIPER/WASHER SYSTEM

(3) Disconnect the windshield washer hose C from the joint pipe B.
(4) Disconnect the windshield washer hose C from the joint pipe C and remove it.
(5) Disconnect the windshield washer hose D from the joint pipe C.
(6) Disconnect the windshield washer hose D from the joint pipe D and remove it.
(7) Disconnect the windshield washer hose E from the joint pipe D.
(8) Disconnect the windshield washer hose E from the joint pipe E and remove it.
(9) Disconnect the windshield washer hose F from the windshield washer nozzle A.
(10) Disconnect the windshield washer hose F from the joint pipe E and remove it.
(11) Disconnect the windshield washer hose G from the windshield washer nozzle B.
(12) Disconnect the windshield washer hose G from the joint pipe C and remove it.

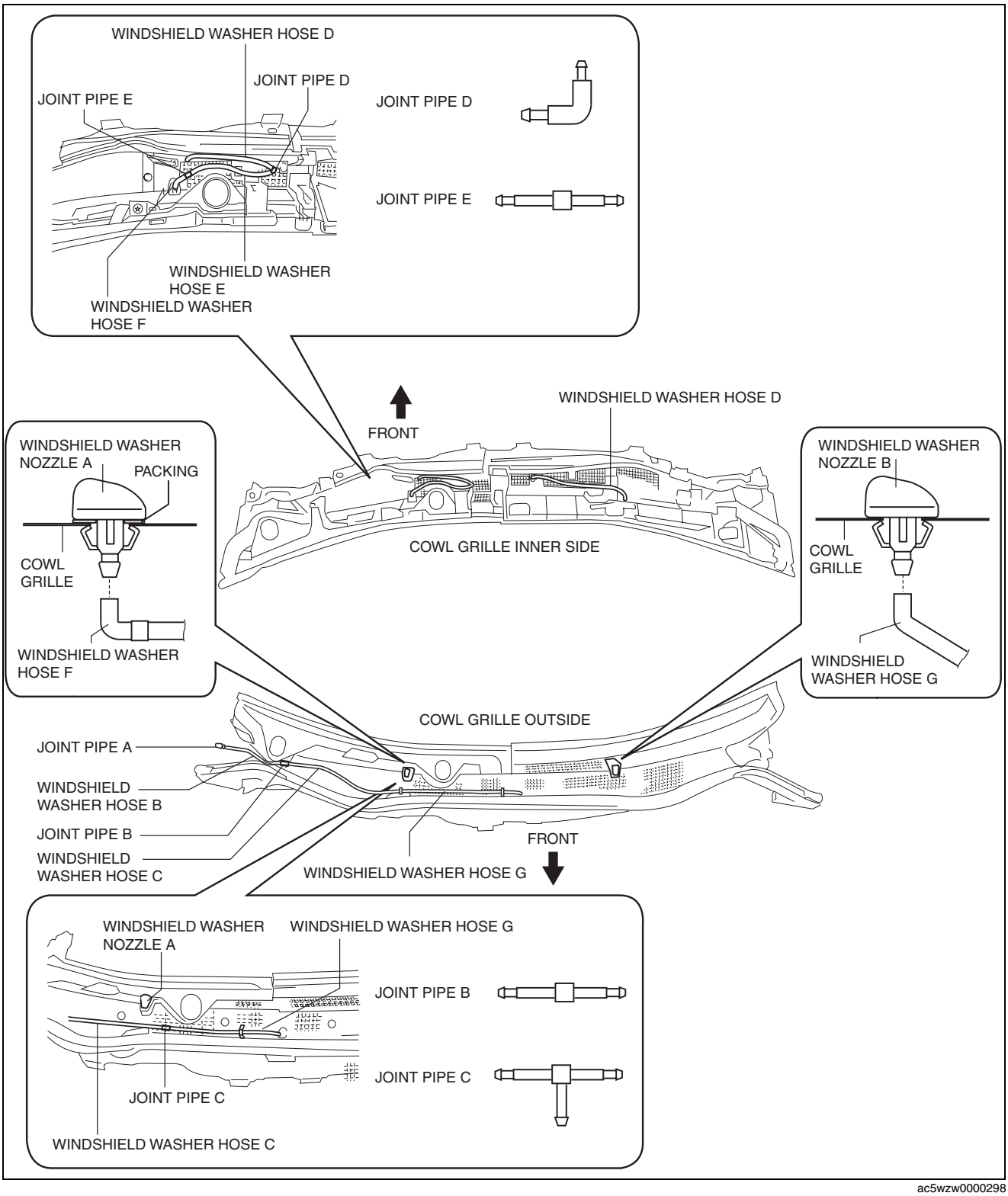

ac5wzw0000298

WIPER/WASHER SYSTEM

12. Install in the reverse order of removal.

WASHER FLUID-LEVEL SENSOR REMOVAL/INSTALLATION

id091900801800

1. Disconnect the negative battery cable. (See 01-17A-13 NEGATIVE BATTERY CABLE DISCONNECTION/CONNECTION [SKYACTIV-G 2.0 (WITHOUT i-stop)].) (See 01-17A-11 NEGATIVE BATTERY CABLE DISCONNECTION/CONNECTION [SKYACTIV-G 2.0].) (See 01-17B-9 NEGATIVE BATTERY CABLE DISCONNECTION/CONNECTION [SKYACTIV-D 2.2].)
2. Partially peel back the front over fender. (See 09-10-31 FRONT OVER FENDER REMOVAL/INSTALLATION.)
3. Set the mudguard (RH) aside. (See 09-16-47 MUDGUARD REMOVAL/INSTALLATION.)
4. Remove the front bumper. (See 09-10-10 FRONT BUMPER REMOVAL/INSTALLATION.)
5. Disconnect the washer fluid-level sensor connector.
6. Remove the washer fluid-level sensor.

Note

- If the washer fluid-level sensor is removed with washer fluid in the washer tank, the washer fluid may leak out. When removing the washer fluid-level sensor from the washer tank, place a container under the washer tank to collect washer fluid, and perform the procedure.

7. Remove the grommet.
8. Install in the reverse order of removal.

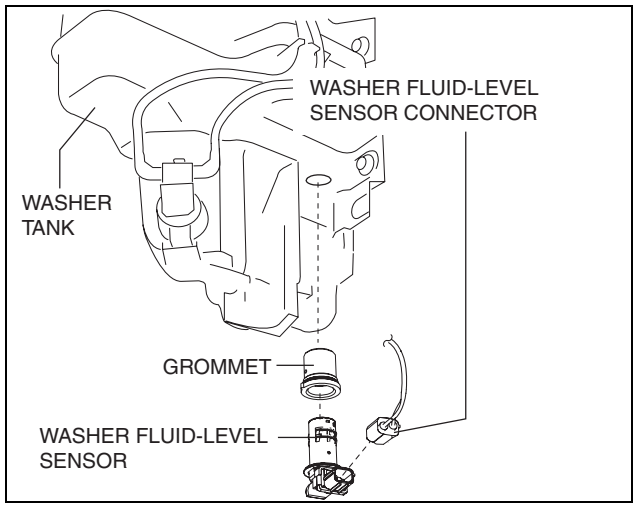

ac5uuw00000814

WIPER/WASHER SYSTEM

REAR WIPER ARM AND BLADE REMOVAL/INSTALLATION

id091900801200

Rear Wiper Arm

1. Pull the cap in the direction of the arrows (1) shown in the figure and remove it in the direction of the arrow (2) with tabs A, B released.

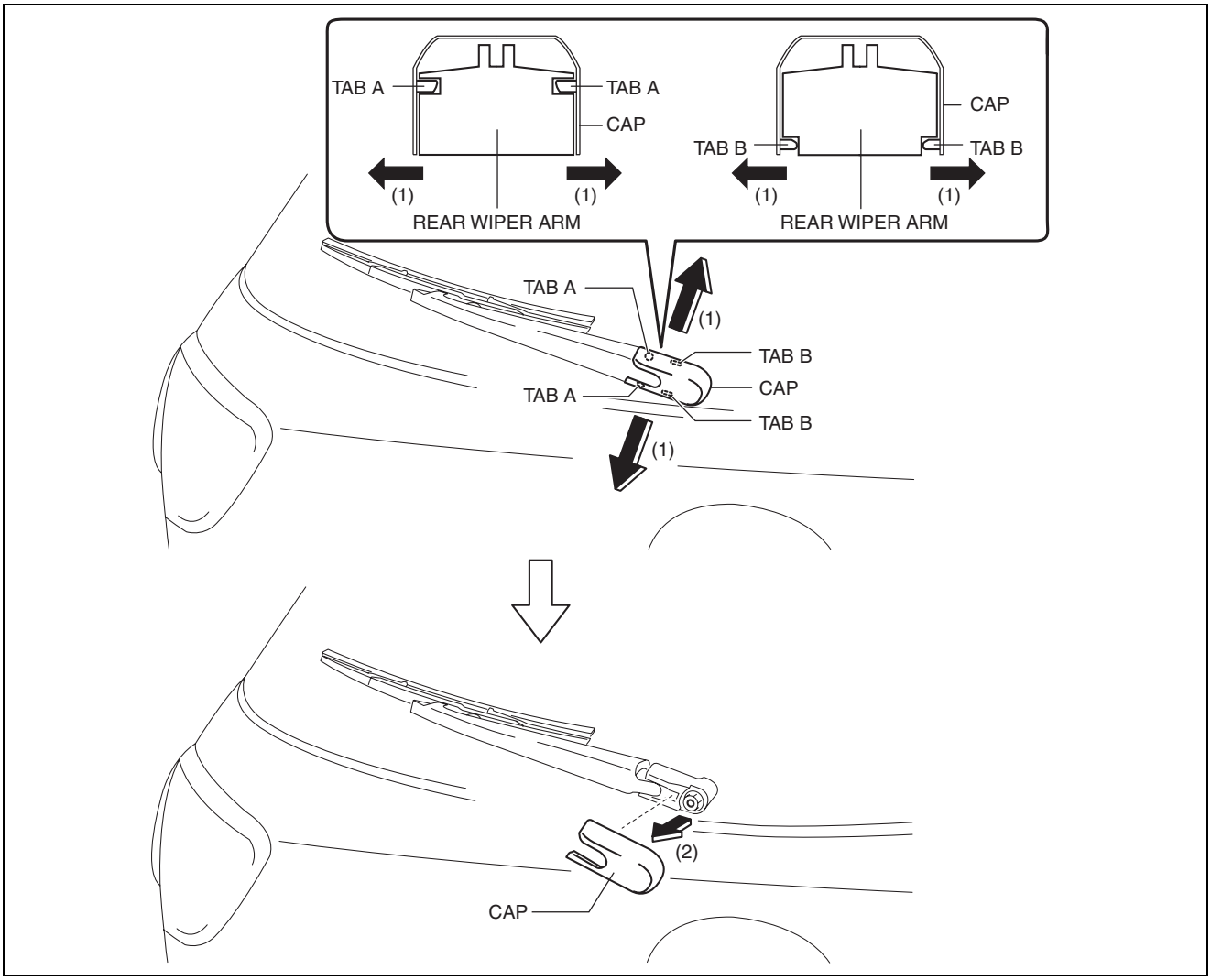

ac5wzw0000463

WIPER/WASHER SYSTEM

2. Remove the nut with the rear wiper arm and blade pressed.

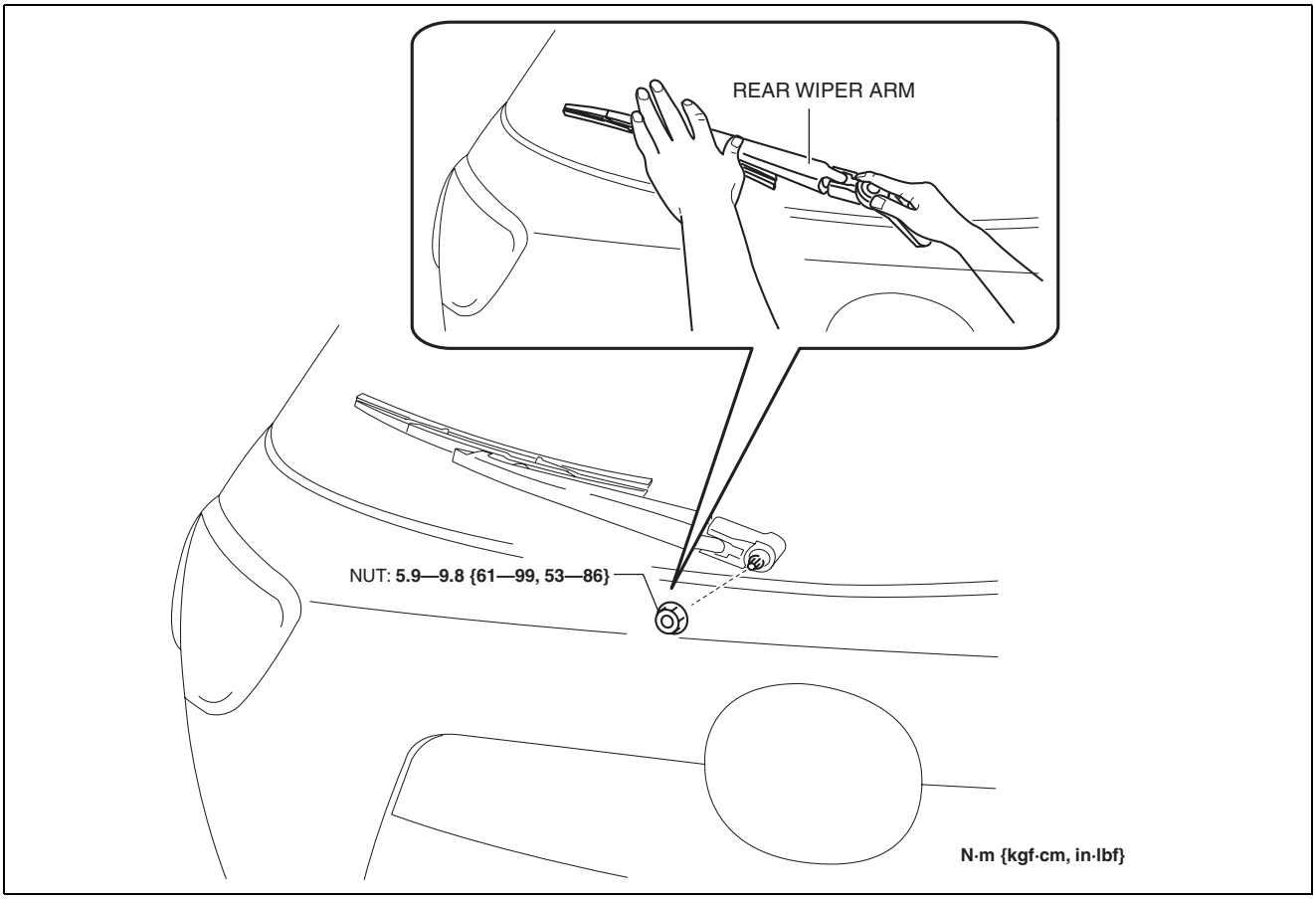

ac5wzw0000328

3. Raise the rear wiper arm and detach it from the serrated connecting part in the direction of the arrow (1) shown in the figure.
4. Install in the reverse order of removal.
5. Adjust the rear wiper arm and blade. (See 09-19-34 REAR WIPER ARM AND BLADE ADJUSTMENT.)

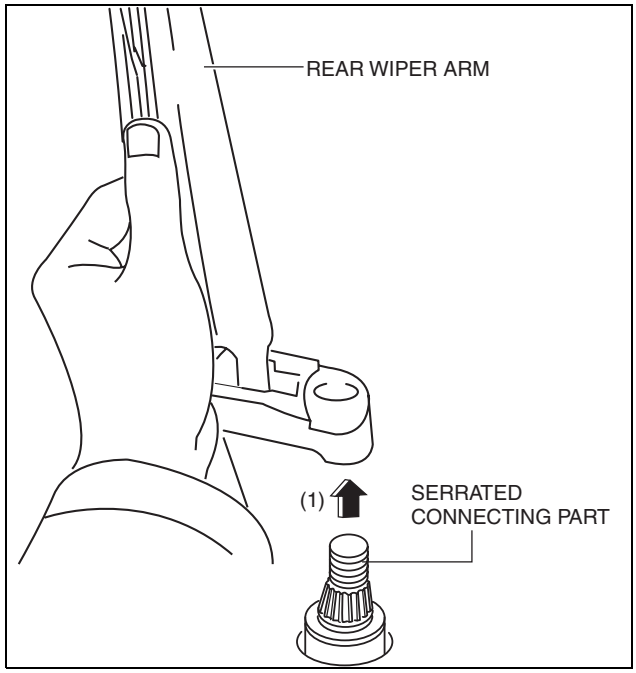

ac5wzw0000328

WIPER/WASHER SYSTEM

Rear Wiper Arm Installation Note

1. Clean the serrated connecting part with a wire brush before installing the rear wiper arm.

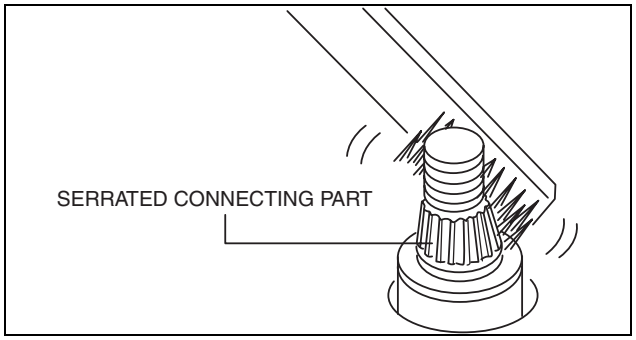

ac5wzw0000161

Rear Wiper Blade

1. Move the rear wiper blade in the direction of the arrow (1) shown in the figure to detach the rear wiper blade from the rear wiper arm.
2. Move the rear wiper blade in the direction of the arrow (2) and remove it from the rear wiper arm in the direction of the arrow (3).

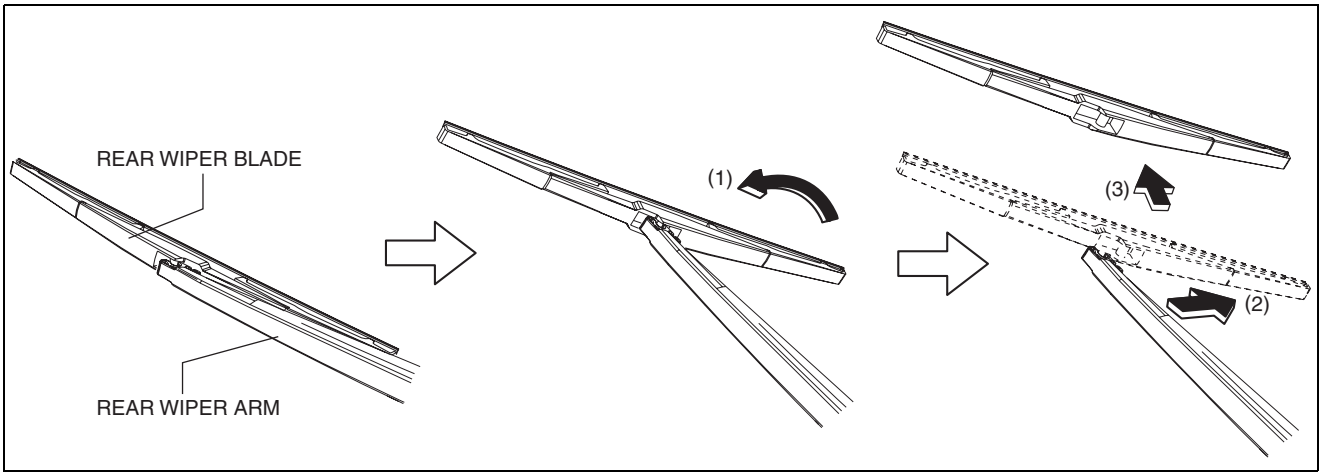

ac5wzw0000161

3. Install in the reverse order of removal.

REAR WIPER ARM AND BLADE ADJUSTMENT

id091900801300

1. Switch the ignition ON (engine off or on).
2. Operate the rear wiper.
3. Verify that the rear wiper is operating and stop the rear wiper.
4. Verify that the rear wiper is stopped at the auto-stop position.
5. Remove the rear wiper arm and blade. (See 09-19-32 REAR WIPER ARM AND BLADE REMOVAL/INSTALLATION.)
6. Install the rear wiper arm to the serrated connecting part, adjust the rear wiper blade end to the area shown in the figure while sliding the rear wiper arm onto the grooves of the serrated connecting part one by one, and temporarily tighten the nut.

Note

- If the rear wiper arm and blade is not installed to the position shown in the figure, repeat the adjustment procedure.

WIPER/WASHER SYSTEM

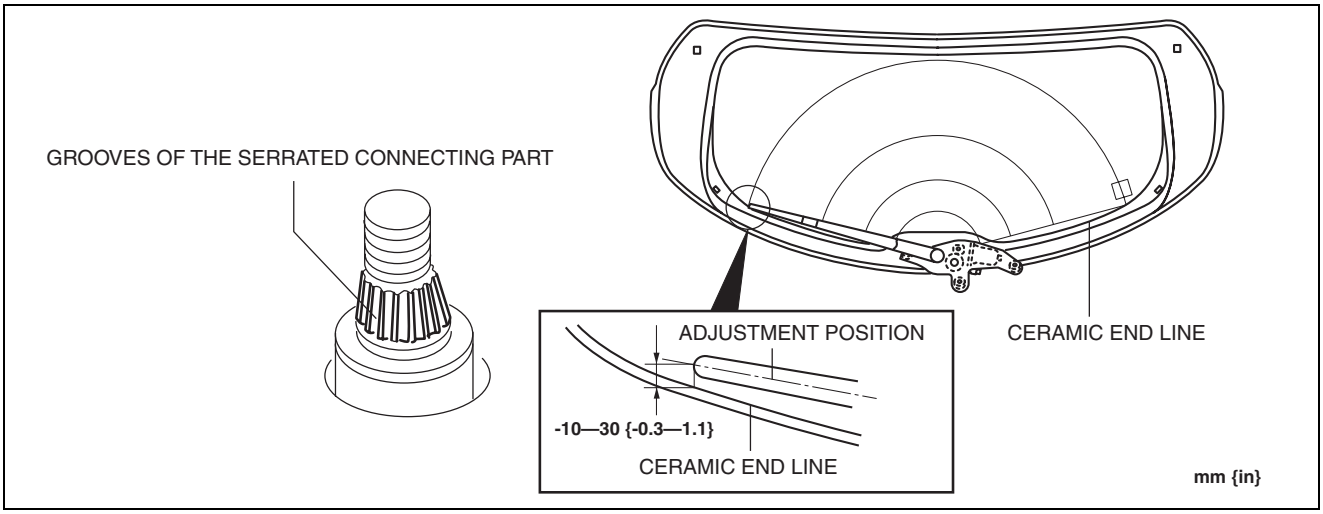

ac5wzw0000162

7. After adjusting the rear wiper arm and blade, tighten the nut completely. (See 09-19-32 REAR WIPER ARM AND BLADE REMOVAL/INSTALLATION.)

REAR WIPER MOTOR REMOVAL/INSTALLATION

id091900801400

1. Disconnect the negative battery cable. (See 01-17A-13 NEGATIVE BATTERY CABLE DISCONNECTION/CONNECTION [SKYACTIV-G 2.0 (WITHOUT i-stop)].) (See 01-17A-11 NEGATIVE BATTERY CABLE DISCONNECTION/CONNECTION [SKYACTIV-G 2.0].) (See 01-17B-9 NEGATIVE BATTERY CABLE DISCONNECTION/CONNECTION [SKYACTIV-D 2.2].)
2. Remove the following parts:
   (1) Rear wiper arm and blade (See 09-19-32 REAR WIPER ARM AND BLADE REMOVAL/INSTALLATION.)
   (2) Liftgate upper trim (See 09-17-87 LIFTGATE UPPER TRIM REMOVAL/INSTALLATION.)
   (3) Liftgate side trim (See 09-17-87 LIFTGATE SIDE TRIM REMOVAL/INSTALLATION.)
   (4) Liftgate recess (See 09-17-89 LIFTGATE RECESS REMOVAL/INSTALLATION.)
   (5) Liftgate lower trim (See 09-17-89 LIFTGATE LOWER TRIM REMOVAL/INSTALLATION.)
3. Remove the rear wiper motor connector.

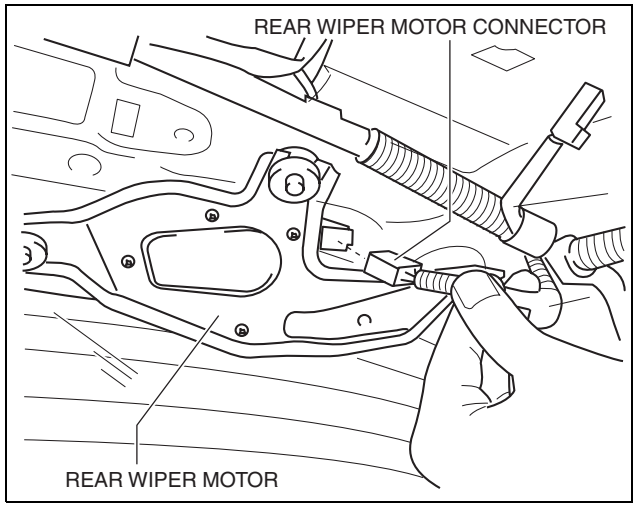

ac5uuw00000809

WIPER/WASHER SYSTEM

4. Remove bolts shown in the figure.

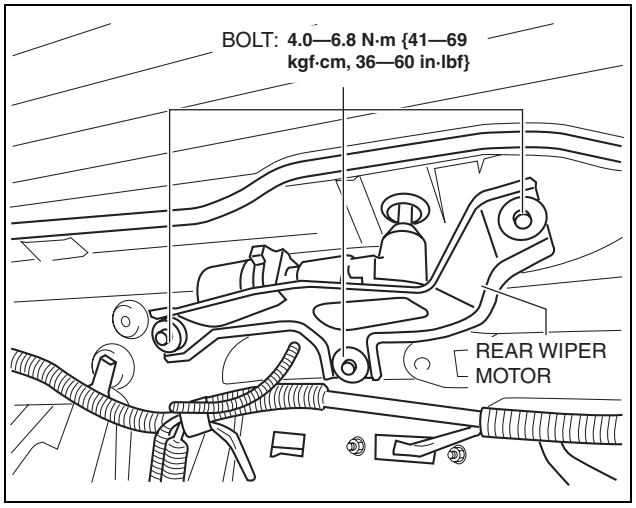

ac5wzw0000118

5. Pull out the rear wiper motor from the outer bushing hole and remove it.

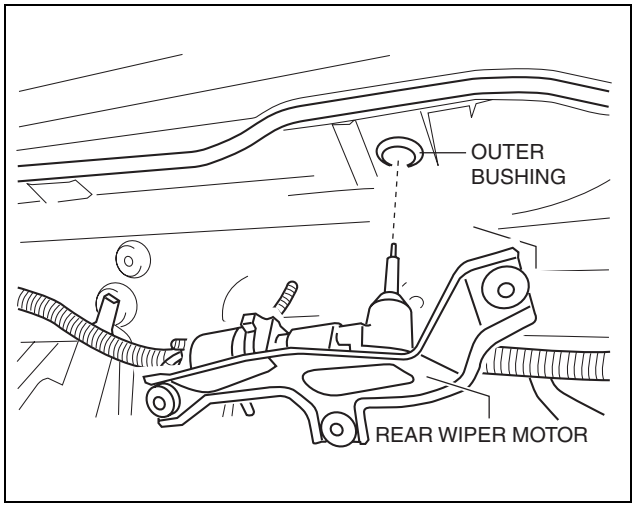

ac5wzw0000248

6. Press in the outer bushing from the outside of the liftgate in the direction of the arrow (1) shown in the figure.

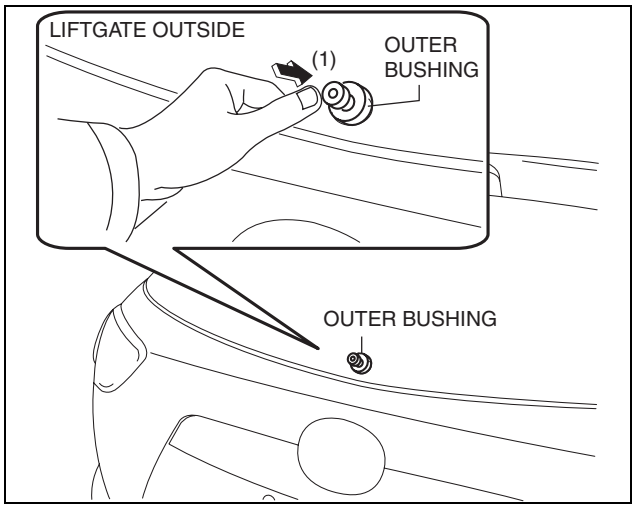

ac5wzw0000248

WIPER/WASHER SYSTEM

7. Detach the liftgate and outer bushing while pressing the outer bushing in the direction of the arrows shown in the figure, pull the outer bushing from the inside of the liftgate in the direction of the arrow (2), and remove it.
8. Install in the reverse order of removal.

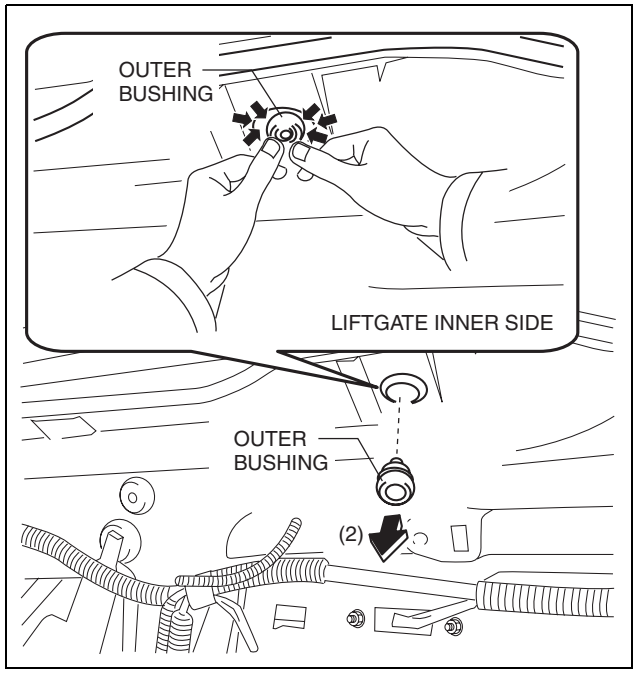

ac5wzw0000248

REAR WIPER MOTOR INSPECTION

id091900801500

1. Disconnect the negative battery cable. (See 01-17A-13 NEGATIVE BATTERY CABLE DISCONNECTION/CONNECTION [SKYACTIV-G 2.0 (WITHOUT i-stop)].) (See 01-17A-11 NEGATIVE BATTERY CABLE DISCONNECTION/CONNECTION [SKYACTIV-G 2.0].) (See 01-17B-9 NEGATIVE BATTERY CABLE DISCONNECTION/CONNECTION [SKYACTIV-D 2.2].)
2. Open the liftgate.
3. Remove the following parts:
   (1) Rear wiper arm and blade (See 09-19-32 REAR WIPER ARM AND BLADE REMOVAL/INSTALLATION.)
   (2) Liftgate upper trim (See 09-17-87 LIFTGATE UPPER TRIM REMOVAL/INSTALLATION.)
   (3) Liftgate side trim (See 09-17-87 LIFTGATE SIDE TRIM REMOVAL/INSTALLATION.)
   (4) Liftgate recess (See 09-17-89 LIFTGATE RECESS REMOVAL/INSTALLATION.)
   (5) Liftgate lower trim (See 09-17-89 LIFTGATE LOWER TRIM REMOVAL/INSTALLATION.)
4. Remove the rear wiper motor connector.

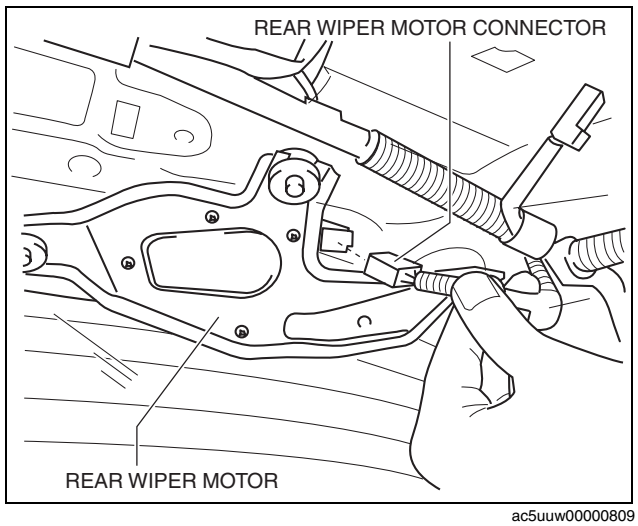

ac5uuw00000809

Rear Wiper Motor Operation Inspection

1. Apply battery positive voltage to rear wiper motor connector terminal B, and connect terminal A to the ground.

WIPER/WASHER SYSTEM

2. Verify that the rear wiper motor operates normally.
   - If there is any malfunction, replace the rear wiper motor. (See 09-19-35 REAR WIPER MOTOR REMOVAL/INSTALLATION.)

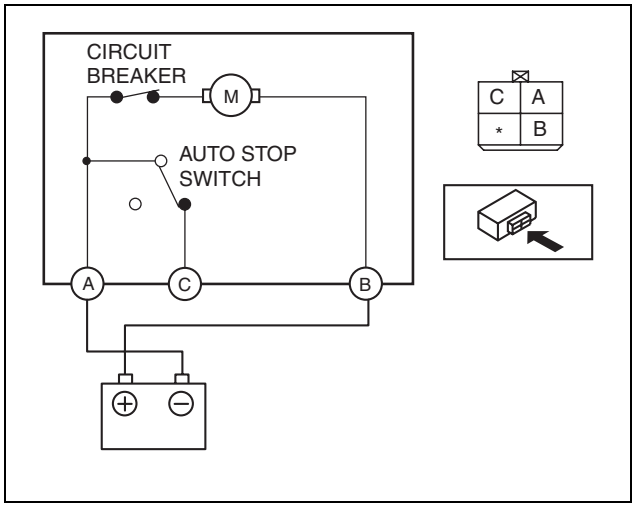

ac5wzw0000297

Auto-stop Operation Inspection

1. Apply battery positive voltage to rear wiper motor connector terminal B, and connect terminals A and C to the ground.
2. Disconnect the ground from rear wiper motor connector terminal A while the rear wiper is operating.

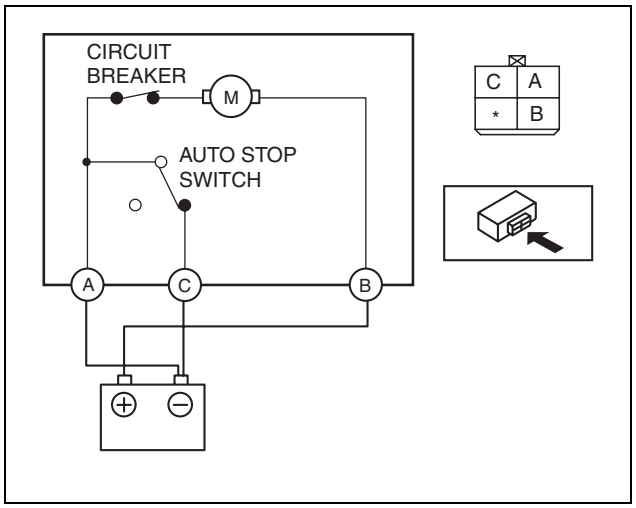

ac5wzw0000297

3. After the windshield wiper motor auto-stop operation, verify that it stops at the park position.
   - If there is any malfunction, replace the rear wiper motor. (See 09-19-35 REAR WIPER MOTOR REMOVAL/INSTALLATION.)

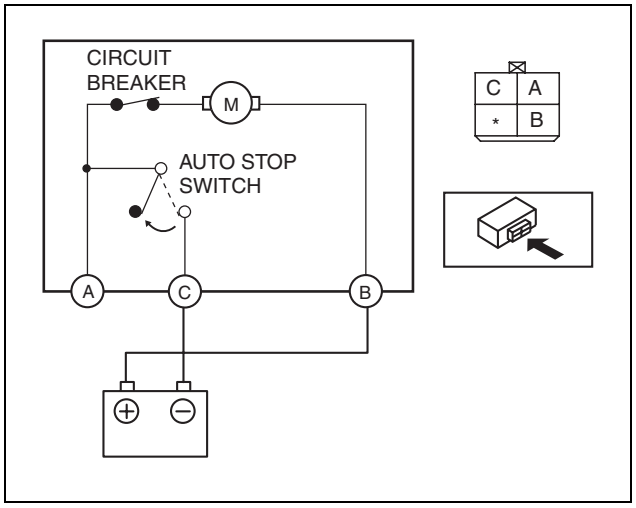

ac5wzw0000297

REAR WASHER NOZZLE REMOVAL/INSTALLATION

id091900802200

1. Disconnect the negative battery cable. (See 01-17A-13 NEGATIVE BATTERY CABLE DISCONNECTION/CONNECTION [SKYACTIV-G 2.0 (WITHOUT i-stop)].) (See 01-17A-11 NEGATIVE BATTERY CABLE DISCONNECTION/CONNECTION [SKYACTIV-G 2.0].) (See 01-17B-9 NEGATIVE BATTERY CABLE DISCONNECTION/CONNECTION [SKYACTIV-D 2.2].)
2. Remove the liftgate upper trim. (See 09-17-87 LIFTGATE UPPER TRIM REMOVAL/INSTALLATION.)

WIPER/WASHER SYSTEM

3. Remove the rear spoiler. (See 09-16-33 REAR SPOILER REMOVAL/INSTALLATION.)
4. Disconnect the rear washer hose from the rear washer nozzle. (See 09-19-40 REAR WASHER HOSE REMOVAL/INSTALLATION.)
5. While pressing tabs of the rear washer nozzle in the direction of the arrows (1) shown in the figure, pull the rear washer nozzle in the direction of the arrow (2) to remove it from the liftgate.

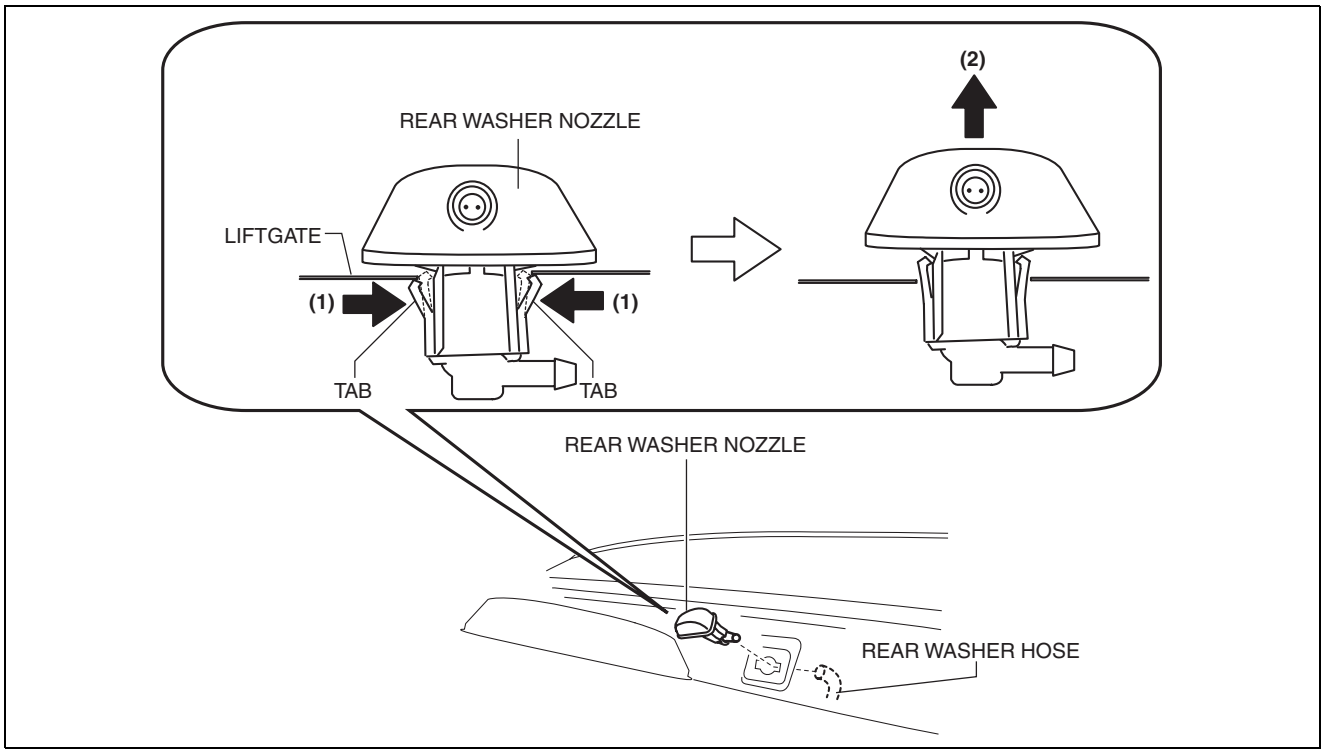

ac5wzw0000249

6. Install in the reverse order of removal.
7. Adjust the rear washer nozzle. (See 09-19-39 REAR WASHER NOZZLE ADJUSTMENT.)

REAR WASHER NOZZLE ADJUSTMENT

id091900802300

Caution

- **If the nozzle angle is adjusted with excessive force by strongly inserting a needle or similar thin tool into the injection nozzle of rear washer nozzle, it could damage the nozzle internally. When adjusting the nozzle, be careful not to apply excessive force.**

1. Insert a needle or similar thin tool into the injection nozzle of the rear washer nozzle and adjust the area where washer fluid injected from the rear washer nozzle is sprayed as shown in the figure.

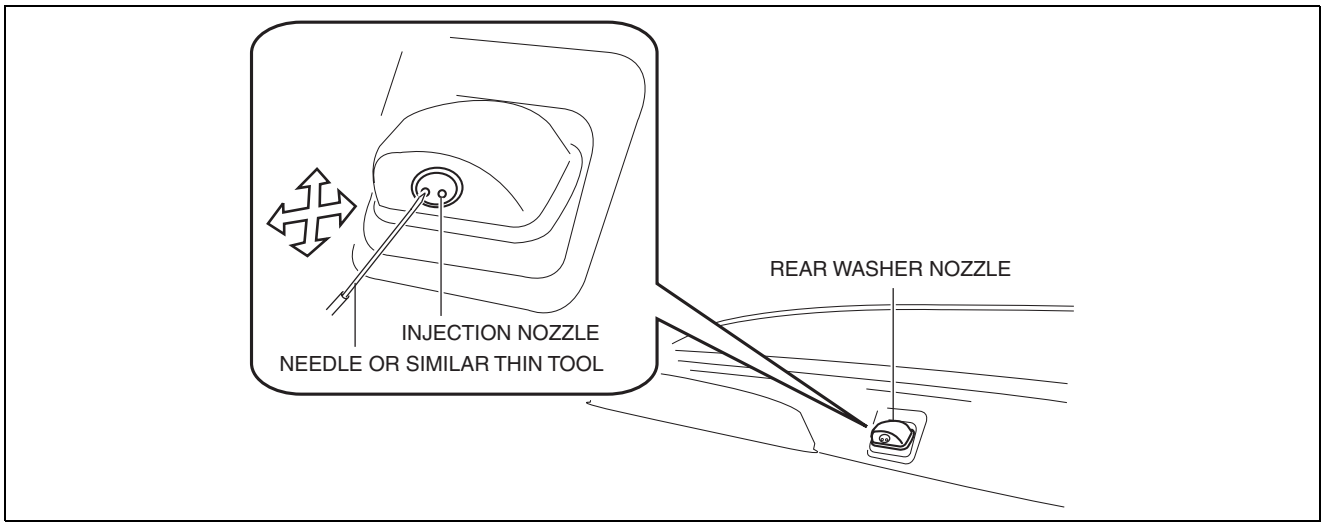

ac5wzw0000164

WIPER/WASHER SYSTEM

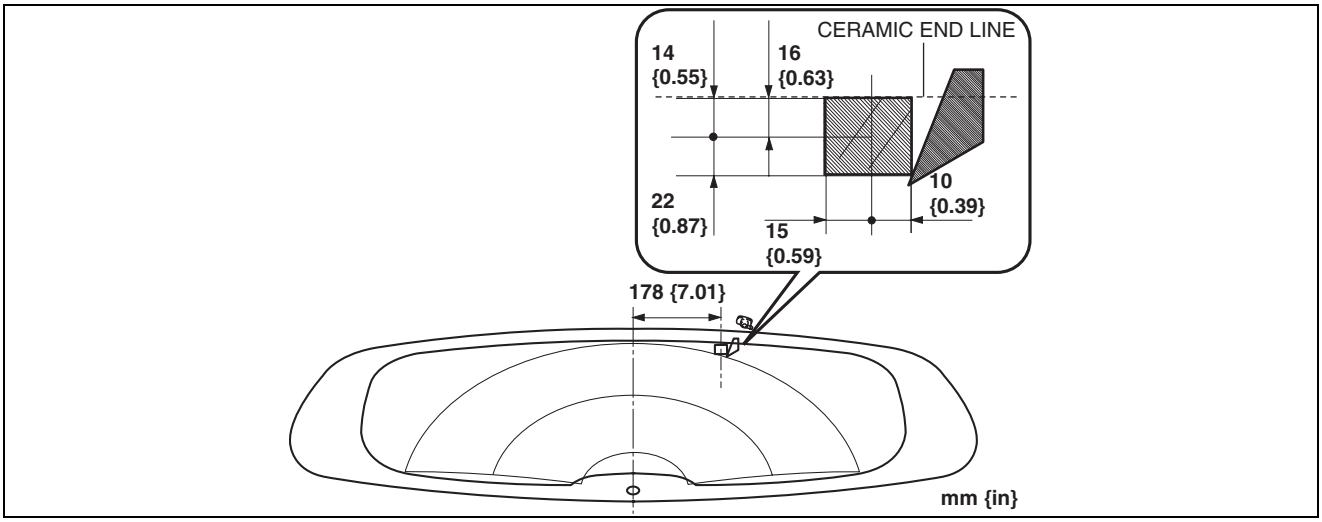

ac5wzw0000298

REAR WASHER HOSE REMOVAL/INSTALLATION

id091900801600

1. Disconnect the negative battery cable. (See 01-17A-13 NEGATIVE BATTERY CABLE DISCONNECTION/CONNECTION [SKYACTIV-G 2.0 (WITHOUT i-stop)].) (See 01-17A-11 NEGATIVE BATTERY CABLE DISCONNECTION/CONNECTION [SKYACTIV-G 2.0].) (See 01-17B-9 NEGATIVE BATTERY CABLE DISCONNECTION/CONNECTION [SKYACTIV-D 2.2].)
2. Remove the front over fender. (See 09-10-31 FRONT OVER FENDER REMOVAL/INSTALLATION.)
3. Remove the mudguard (RH). (See 09-16-47 MUDGUARD REMOVAL/INSTALLATION.)
4. Disconnect the rear washer hose A from the washer motor.
5. Remove the rear washer hose A from the washer tank hook.
6. Remove the rear washer hose A from clips A and B.
7. Disconnect the rear washer hose A from the joint pipe A and remove it.

WIPER/WASHER SYSTEM

8. Disconnect the rear washer hose B from the joint pipe A.

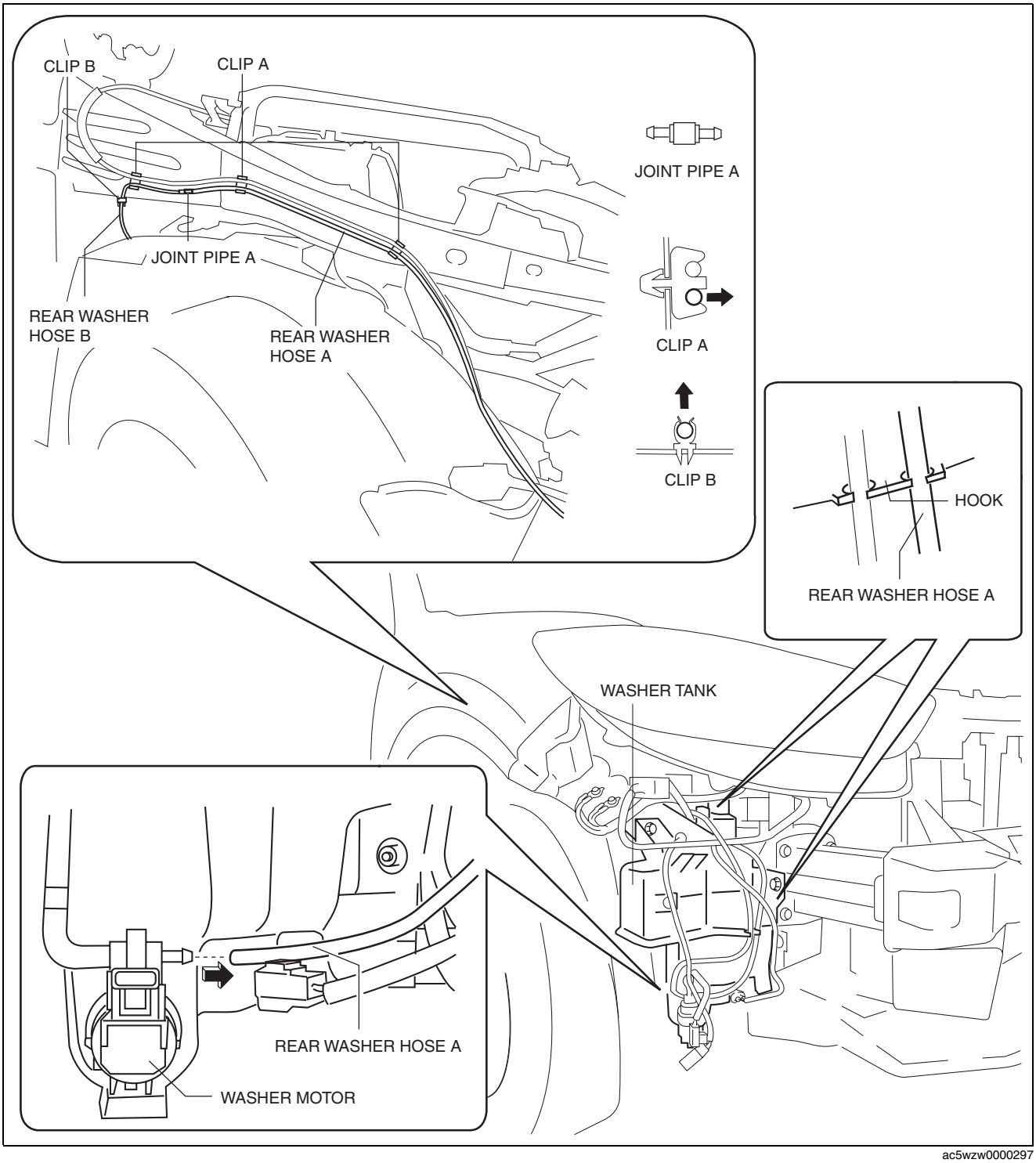

ac5wzw0000297

9. Remove the sunroof seaming welt. (with sunroof) (See 09-15-6 SUNROOF UNIT REMOVAL/INSTALLATION.)
10. Remove the A pillar trim. (See 09-17-53 A-PILLAR TRIM REMOVAL/INSTALLATION.)
11. Disconnect the rear washer hose B from the joint pipe B and remove it.

WIPER/WASHER SYSTEM

12. Disconnect the rear washer hose C from the joint pipe B.
13. Remove the following parts:
    (1) Front map light (See 09-18-95 MAP LIGHT REMOVAL/INSTALLATION.)
    (2) Sunvisor (See 09-17-93 SUNVISOR REMOVAL/INSTALLATION.)
    (3) Front scuff plate (See 09-17-61 FRONT SCUFF PLATE REMOVAL/INSTALLATION.)
    (4) Rear scuff plate (See 09-17-63 REAR SCUFF PLATE REMOVAL/INSTALLATION.)
    (5) B-pillar lower trim (See 09-17-57 B-PILLAR LOWER TRIM REMOVAL/INSTALLATION.)
    (6) Front seat belt adjusting cover (See 08-11-2 FRONT SEAT BELT REMOVAL/ INSTALLATION.)
    (7) Front seat belt upper anchor installation bolt (See 08-11-2 FRONT SEAT BELT REMOVAL/ INSTALLATION.)
    (8) B-pillar upper trim (See 09-17-58 B-PILLAR UPPER TRIM REMOVAL/INSTALLATION.)
    (9) Assist handle (See 09-17-91 ASSIST HANDLE REMOVAL/INSTALLATION.)
    (10)Trunk board (See 09-17-85 TRUNK BOARD REMOVAL/INSTALLATION.)
    (11)Trunk end trim (See 09-17-78 TRUNK END TRIM REMOVAL/INSTALLATION.)
    (12)Trunk side trim (See 09-17-80 TRUNK SIDE TRIM REMOVAL/INSTALLATION.)
    (13)D-pillar trim (See 09-17-60 D-PILLAR TRIM REMOVAL/INSTALLATION.)
    (14)C-pillar trim (See 09-17-59 C-PILLAR TRIM REMOVAL/INSTALLATION.)
    (15)Headliner (See 09-17-94 HEADLINER REMOVAL/INSTALLATION.)
14. Remove the tape and clips shown in the figure.

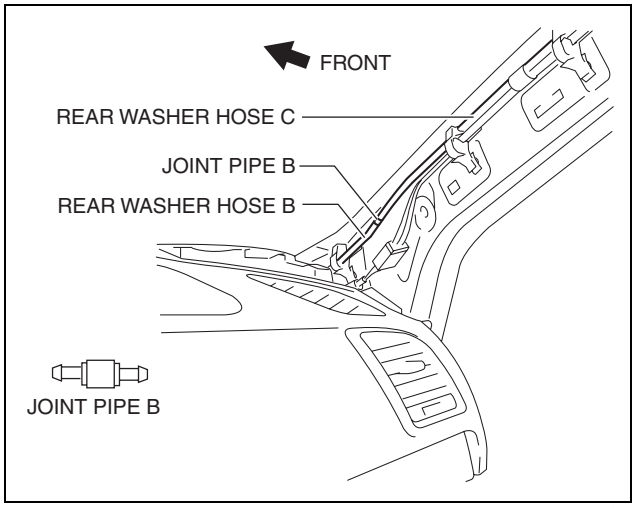

ac5wzw0000162

Without sunroof

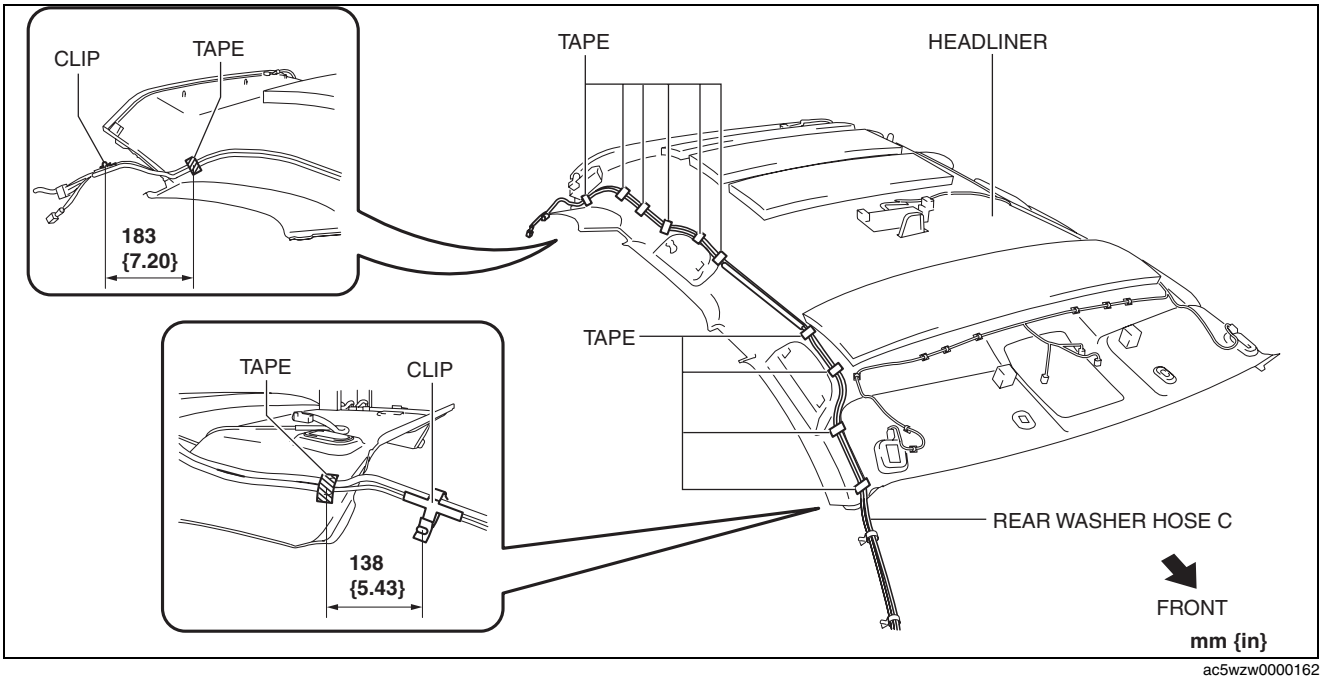

ac5wzw0000162

WIPER/WASHER SYSTEM

With sunroof

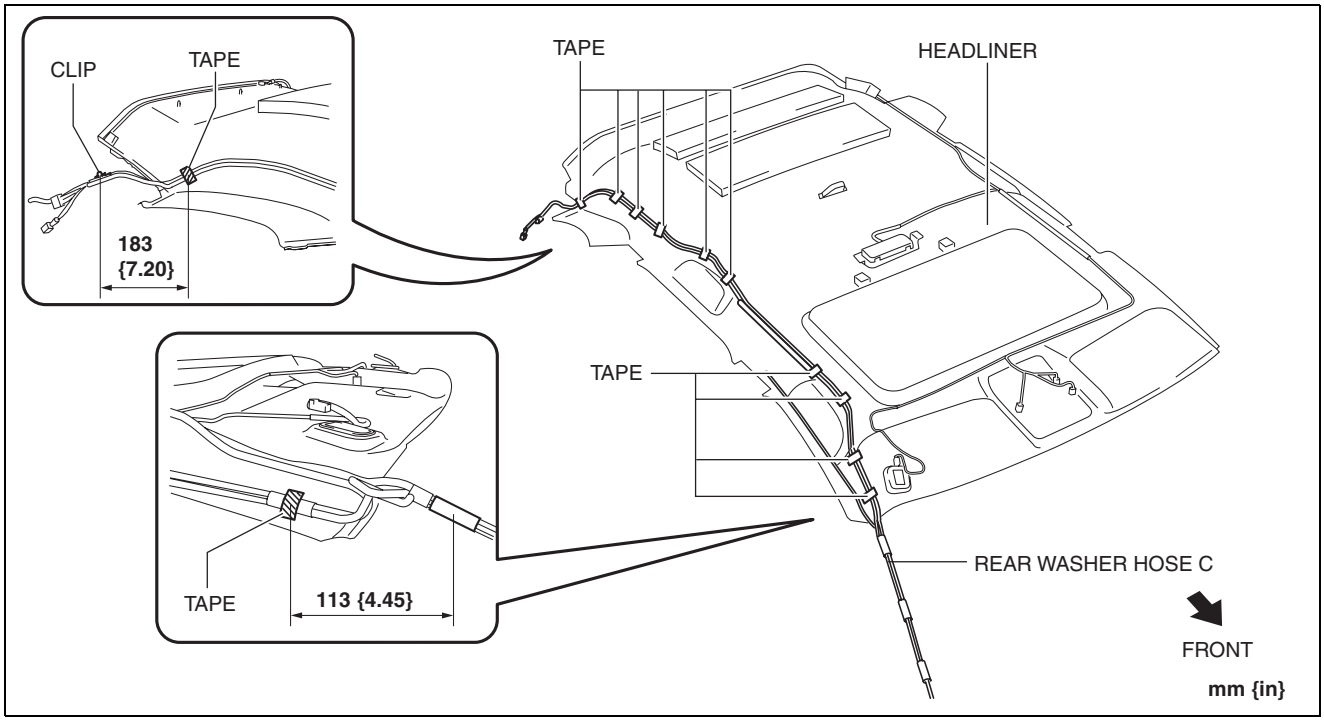

ac5wzw0000162

15. Disconnect the rear washer hose C from the joint pipe C and remove it.
16. Disconnect the rear washer hose D from the joint pipe C.
17. Remove the liftgate upper trim. (See 09-17-87 LIFTGATE UPPER TRIM REMOVAL/ INSTALLATION.)

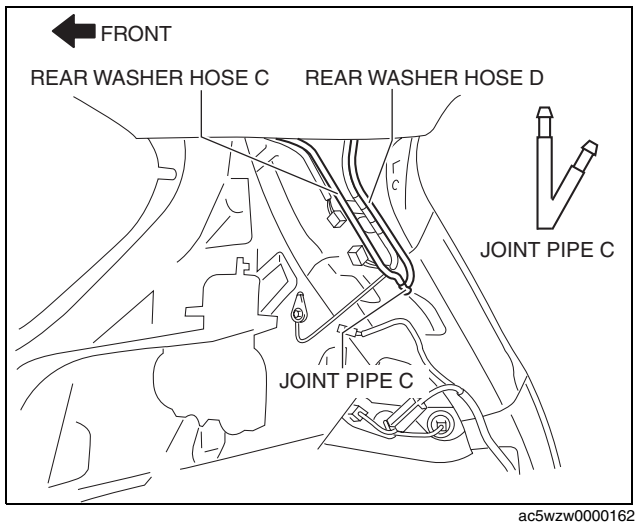

ac5wzw0000162

WIPER/WASHER SYSTEM

18. Partially peel the liftgate grommet in the direction of arrow (1) shown in the figure, and remove the liftgate grommet from the liftgate grommet inner.

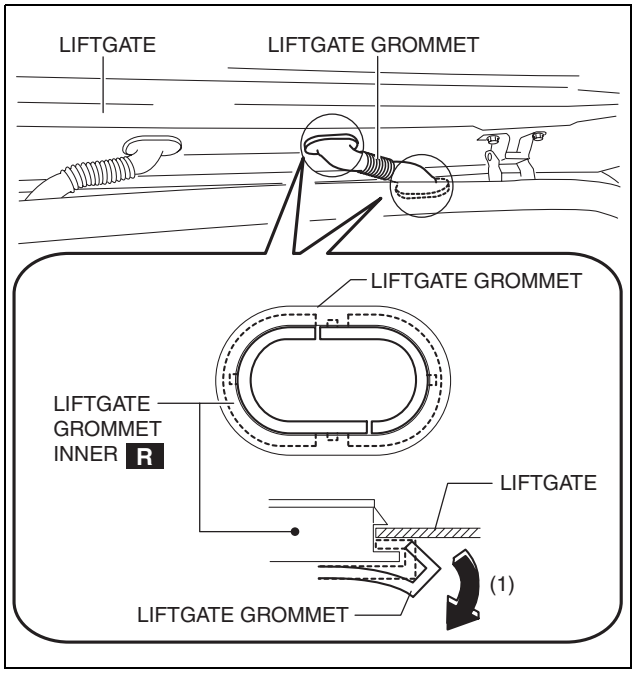

ac5wzw0000463

19. Using a tape-wrapped precision flathead screwdriver, press the liftgate grommet inner tabs in the directions of arrows (2) and (3) shown in the figure and remove each liftgate grommet inner from the liftgate and vehicle side in the direction of arrow (4).

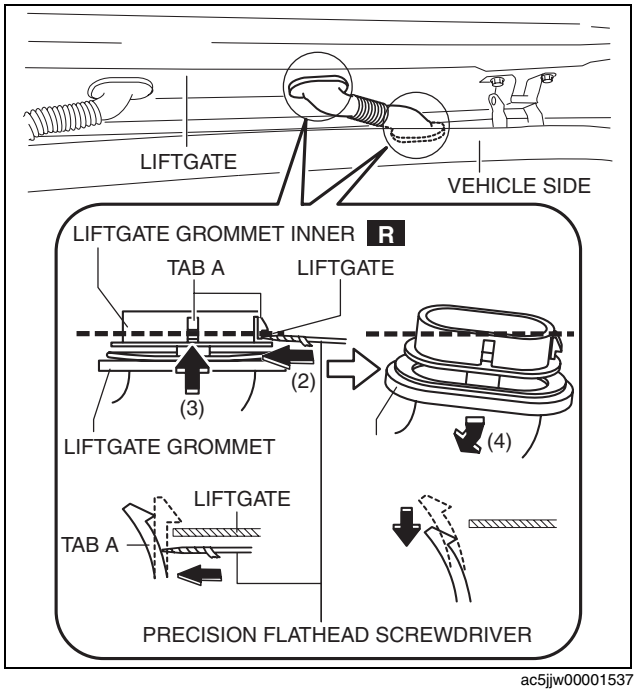

ac5jjw00001537

WIPER/WASHER SYSTEM

20. Disconnect the rear washer hose D from the rear washer nozzle and remove it.
21. Install in the reverse order of removal.

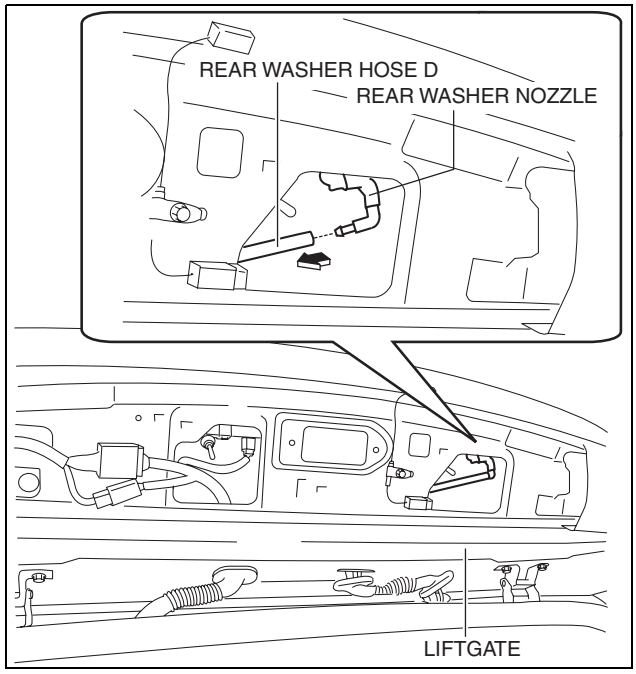

ac5wzw0000163

WIPER AND WASHER SWITCH REMOVAL/INSTALLATION

id091900800200

Note
- If the ignition has been switched OFF (LOCK) with the driver's door closed, the wiper and washer switch cannot be removed because the steering will be locked and the service hole cannot be accessed.

1. Switch the ignition ON (engine off or on).
2. Open the driver's door.
3. Switch the ignition OFF (LOCK).
4. Disconnect the negative battery cable. (See 01-17A-13 NEGATIVE BATTERY CABLE DISCONNECTION/CONNECTION [SKYACTIV-G 2.0 (WITHOUT i-stop)].) (See 01-17A-11 NEGATIVE BATTERY CABLE DISCONNECTION/CONNECTION [SKYACTIV-G 2.0].) (See 01-17B-9 NEGATIVE BATTERY CABLE DISCONNECTION/CONNECTION [SKYACTIV-D 2.2].)
5. Remove the column cover. (See 09-17-25 COLUMN COVER REMOVAL/INSTALLATION.)

WIPER/WASHER SYSTEM

6. Rotate the steering wheel in the direction of the arrow shown in the figure to the angle where the service hole is visible.

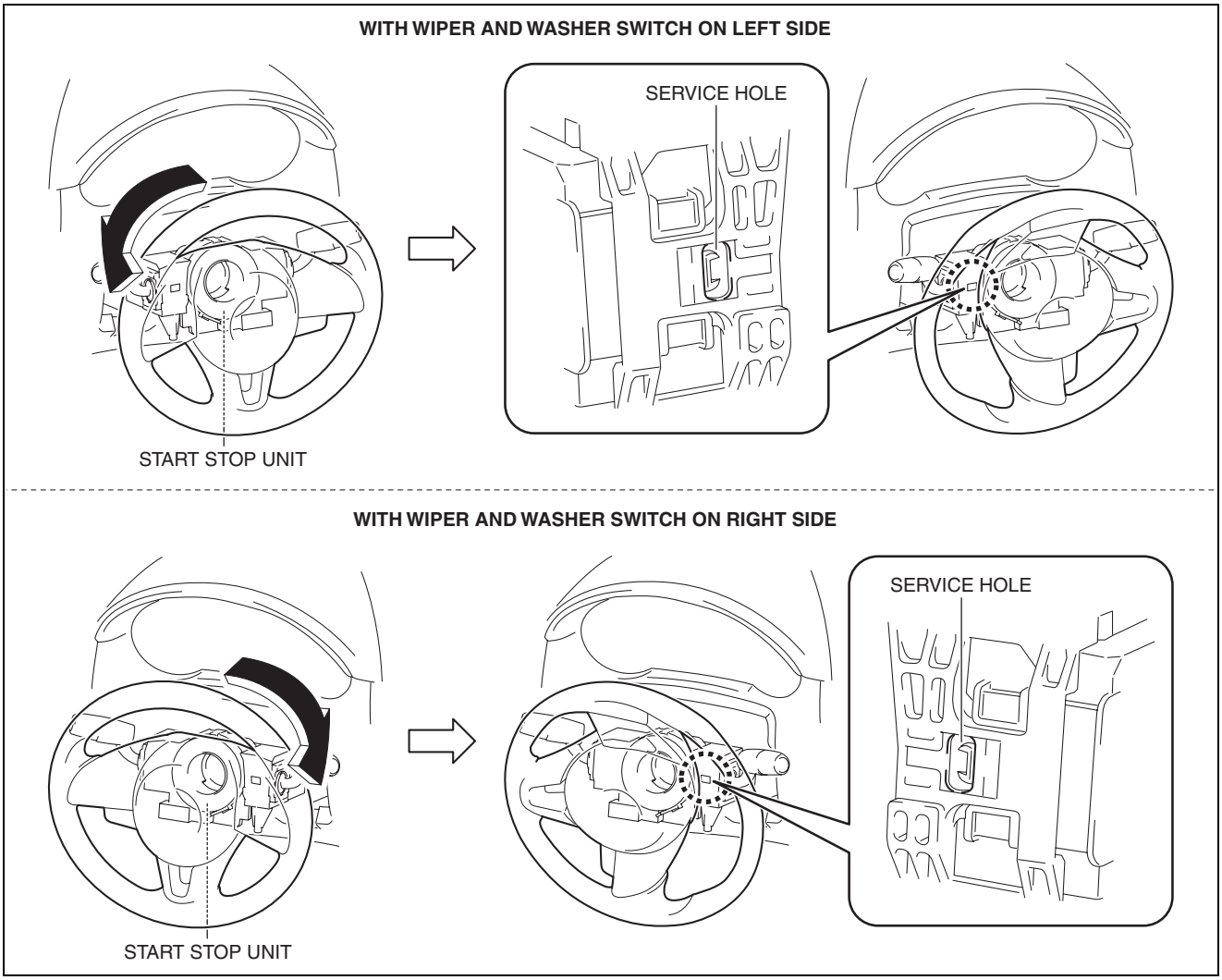

ac5wzw0000168

7. Insert a tape-wrapped flathead screwdriver into the service hole in the position shown in the figure.

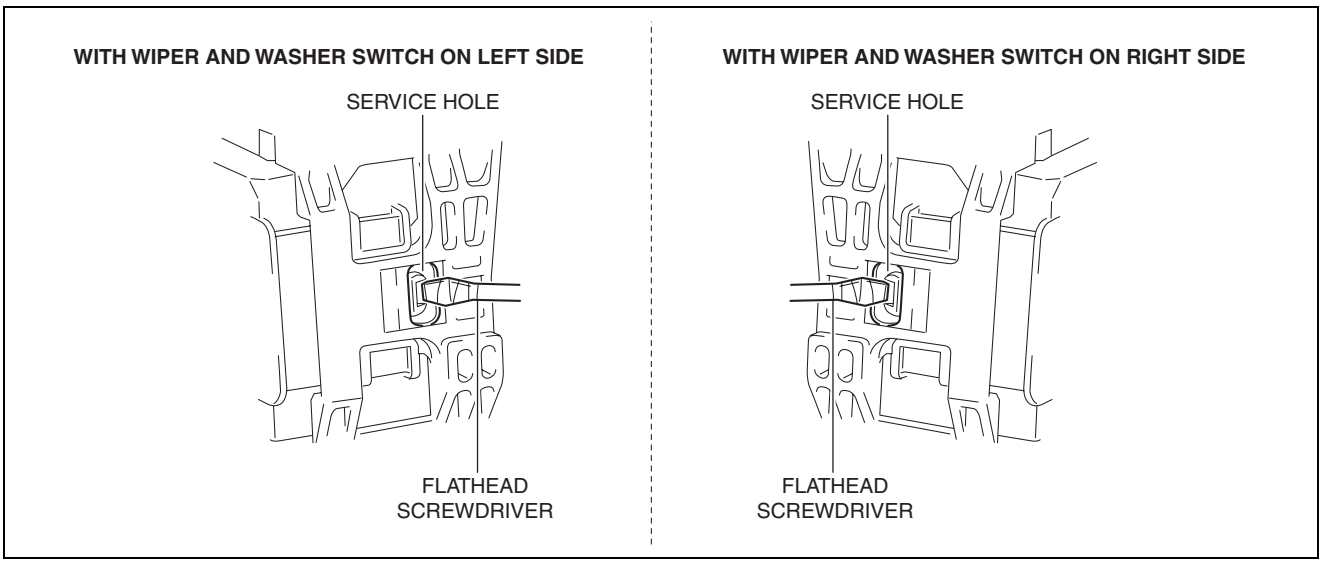

ac5wzw0000164

WIPER/WASHER SYSTEM

8. While pressing the wiper and washer switch tab in the direction of the arrow (1) shown in the figure using a flathead screwdriver, pull out the wiper and washer switch in the direction of the arrow (2) shown in the figure to detach the wiper and washer switch tab and the start stop unit.

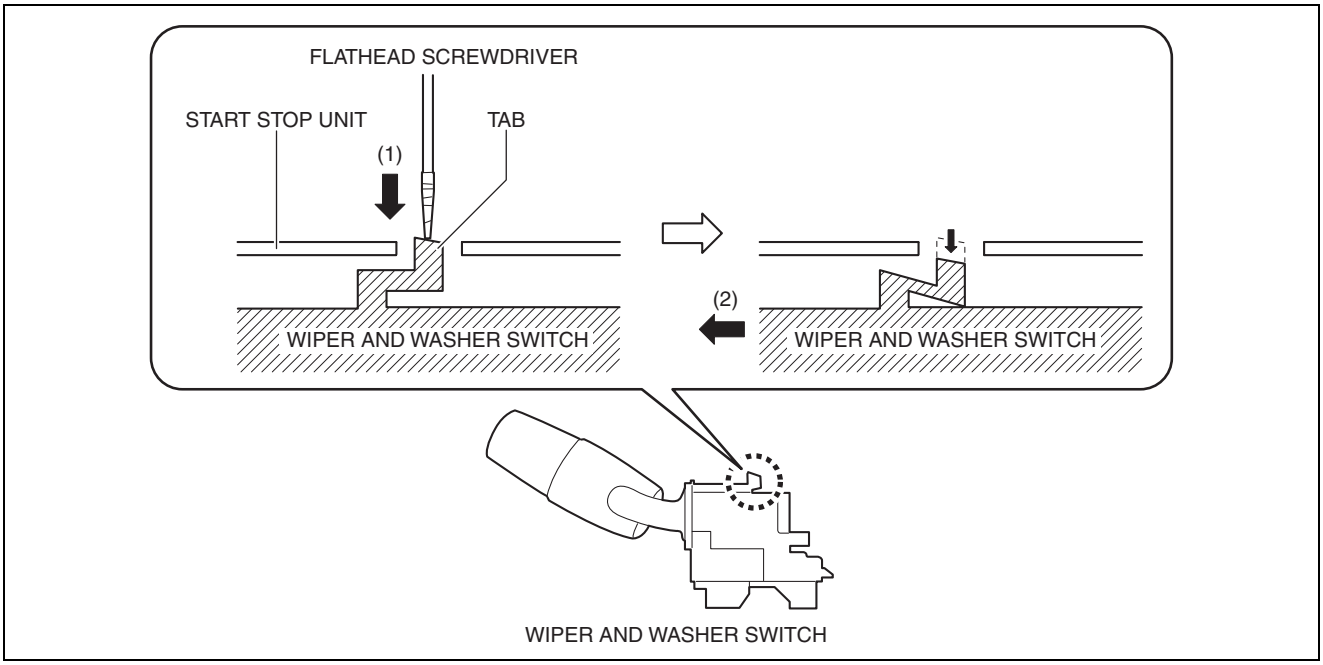

ac5wzw0000168

9. Remove the wiper and washer switch from the start stop unit.

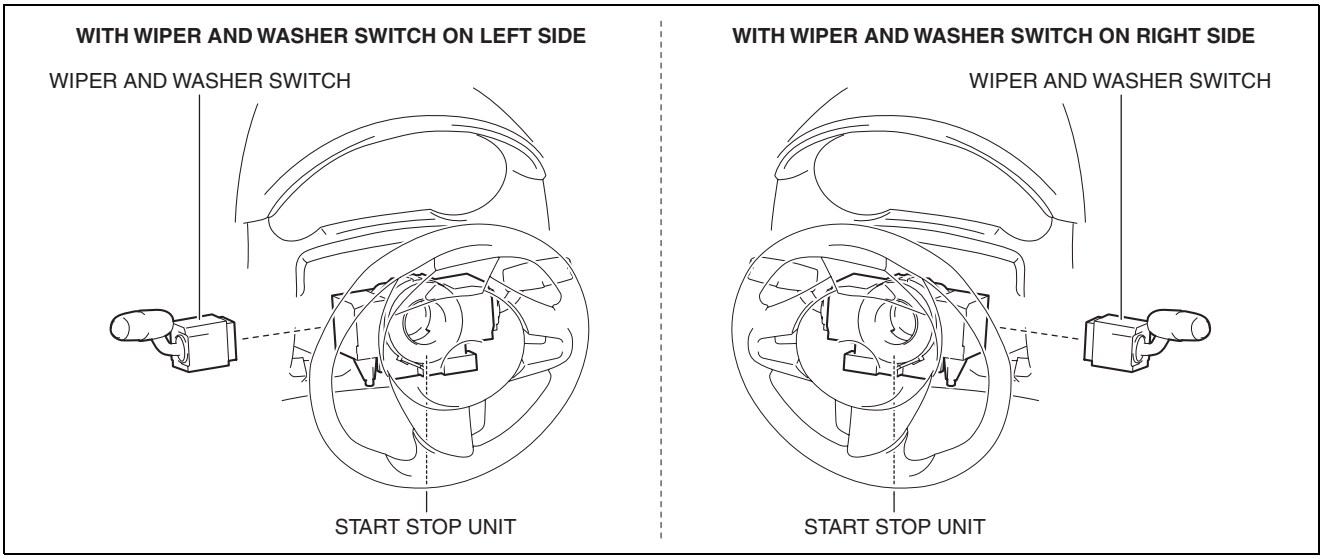

ac5wzw0000168

10. Install in the reverse order of removal.

WINDSHIELD WIPER AND WASHER SWITCH INSPECTION

id091900800300

1. Disconnect the negative battery cable. (See 01-17A-13 NEGATIVE BATTERY CABLE DISCONNECTION/CONNECTION [SKYACTIV-G 2.0 (WITHOUT i-stop)].) (See 01-17A-11 NEGATIVE BATTERY CABLE DISCONNECTION/CONNECTION [SKYACTIV-G 2.0].) (See 01-17B-9 NEGATIVE BATTERY CABLE DISCONNECTION/CONNECTION [SKYACTIV-D 2.2].)
2. Remove the following parts:
   (1) Column cover (See 09-17-25 COLUMN COVER REMOVAL/INSTALLATION.)
   (2) Wiper and washer switch (See 09-19-45 WIPER AND WASHER SWITCH REMOVAL/INSTALLATION.)
3. Verify that the continuity between the windshield wiper and washer switch terminals is as indicated in the table.
   - If the continuity is not as indicated in the table, replace the windshield wiper and washer switch. (See 09-19-45 WIPER AND WASHER SWITCH REMOVAL/INSTALLATION.)

WIPER/WASHER SYSTEM

With wiper and washer switch on right side

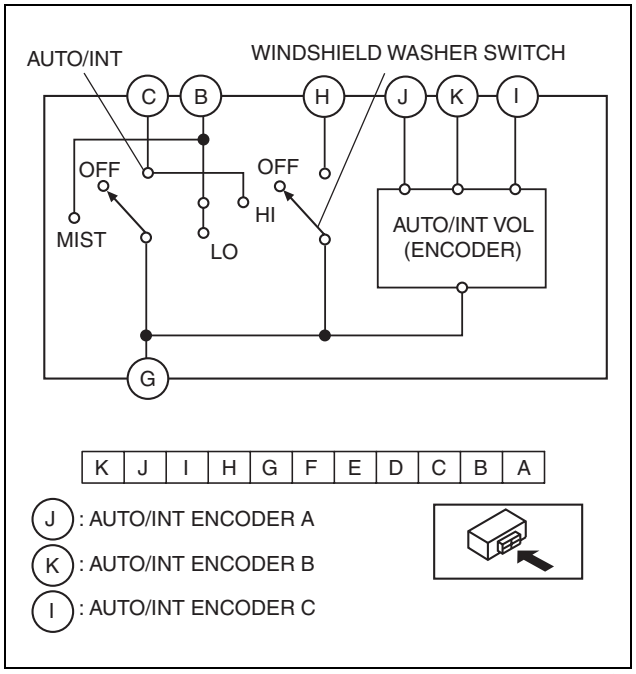

ac5wzw0000463

○—○ : Continuity

Switch position		Terminal						
		B	C	G	H	I	J	K
WINDSHIELD WIPER SWITCH	MIST	○		○				
	OFF							
	AUTO/INT		○	○				
	LO	○		○				
	HI	○	○	○				
AUTO/INT VOL	-2 (SLOW)			○		○	○	○
	-1			○		○		○
	0			○				○
	+1			○			○	○
	+2 (FAST)			○			○	
WINDSHIELD WASHER SWITCH	ON			○	○			

ac5wzw0000463

WIPER/WASHER SYSTEM

With wiper and washer switch on left side

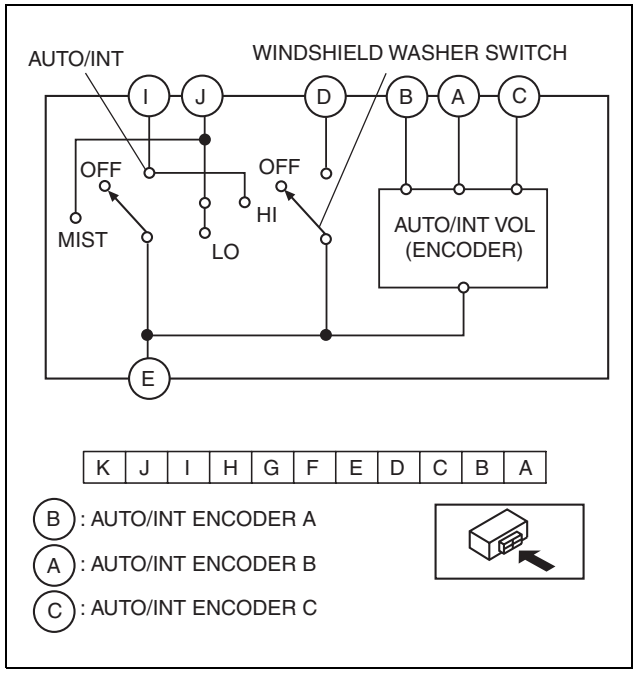

ac5wzw0000168

○—○ : Continuity

Switch position		Terminal						
		J	I	E	D	B	A	C
WINDSHIELD WIPER SWITCH	MIST	○		○				
	OFF							
	AUTO/INT		○	○				
	LO	○		○				
	HI	○	○	○				
AUTO/INT VOL	-2 (SLOW)			○		○	○	○
	-1			○		○		○
	0			○				○
	+1			○			○	○
	+2 (FAST)			○			○	
WINDSHIELD WASHER SWITCH	ON			○	○			

ac5wzw0000164

REAR WIPER AND WASHER SWITCH INSPECTION

id091900800400

1. Disconnect the negative battery cable. (See 01-17A-13 NEGATIVE BATTERY CABLE DISCONNECTION/CONNECTION [SKYACTIV-G 2.0 (WITHOUT i-stop)].) (See 01-17A-11 NEGATIVE BATTERY CABLE DISCONNECTION/CONNECTION [SKYACTIV-G 2.0].) (See 01-17B-9 NEGATIVE BATTERY CABLE DISCONNECTION/CONNECTION [SKYACTIV-D 2.2].)
2. Remove the following parts:
   (1) Column cover (See 09-17-25 COLUMN COVER REMOVAL/INSTALLATION.)
   (2) Wiper and washer switch (See 09-19-45 WIPER AND WASHER SWITCH REMOVAL/INSTALLATION.)
3. Verify that the continuity between the rear wiper and washer switch terminals is as indicated in the table.
   - If the continuity is not as indicated in the table, replace the wiper and washer switch. (See 09-19-45 WIPER AND WASHER SWITCH REMOVAL/INSTALLATION.)

WIPER/WASHER SYSTEM

With wiper and washer switch on right side

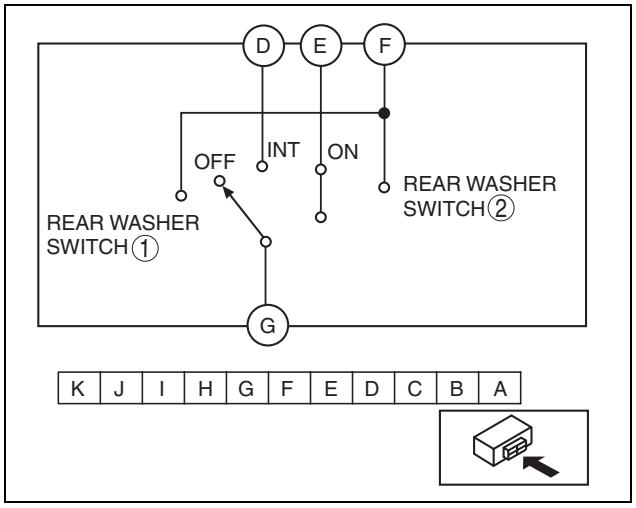

ac5wzw0000296

○—○: Continuity

Switch position		Terminal			
		G	F	E	D
Rear washer ①	ON	○	○		
Rear washer switch	OFF				
	INT	○			○
	ON	○		○	
Rear washer ②	ON	○	○	○	

ac5wzw0000463

With wiper and washer switch on left side

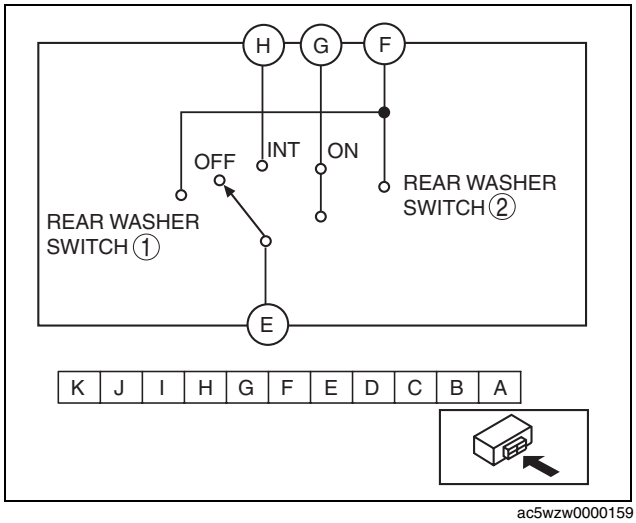

ac5wzw0000159

WIPER/WASHER SYSTEM

○—○: Continuity

Switch position		Terminal			
		E	F	G	H
Rear washer①	ON	○	○		
Rear washer switch	OFF				
	INT	○			○
	ON	○		○	
Rear washer②	ON	○	○	○	

ac5wzw0000159

HEADLIGHT CLEANER MOTOR REMOVAL/INSTALLATION

id091900803300

1. Disconnect the negative battery cable. (See 01-17A-13 NEGATIVE BATTERY CABLE DISCONNECTION/CONNECTION [SKYACTIV-G 2.0 (WITHOUT i-stop)].) (See 01-17A-11 NEGATIVE BATTERY CABLE DISCONNECTION/CONNECTION [SKYACTIV-G 2.0].) (See 01-17B-9 NEGATIVE BATTERY CABLE DISCONNECTION/CONNECTION [SKYACTIV-D 2.2].)
2. Partially peel back the front over fender. (See 09-10-31 FRONT OVER FENDER REMOVAL/INSTALLATION.)
3. Set the mudguard (RH) aside. (See 09-16-47 MUDGUARD REMOVAL/INSTALLATION.)
4. Remove the front bumper. (See 09-10-10 FRONT BUMPER REMOVAL/INSTALLATION.)
5. Disconnect the headlight cleaner motor connector.
6. Disconnect the headlight cleaner hose from the headlight cleaner motor.
7. Tilt the upper part of the headlight cleaner motor in the direction of the arrow (1) shown in the figure and remove the headlight cleaner motor from the washer tank in the direction of the arrow (2).
8. Remove the grommets from the washer tank.

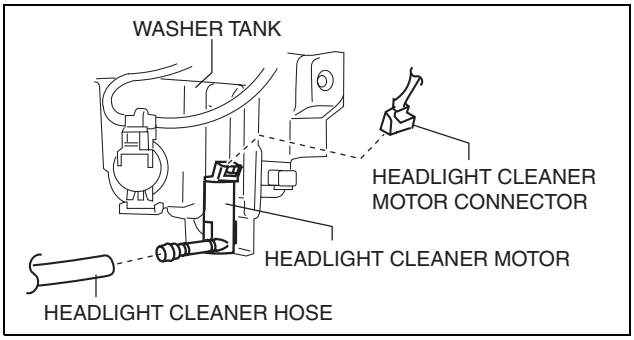

ac5uuw00000822

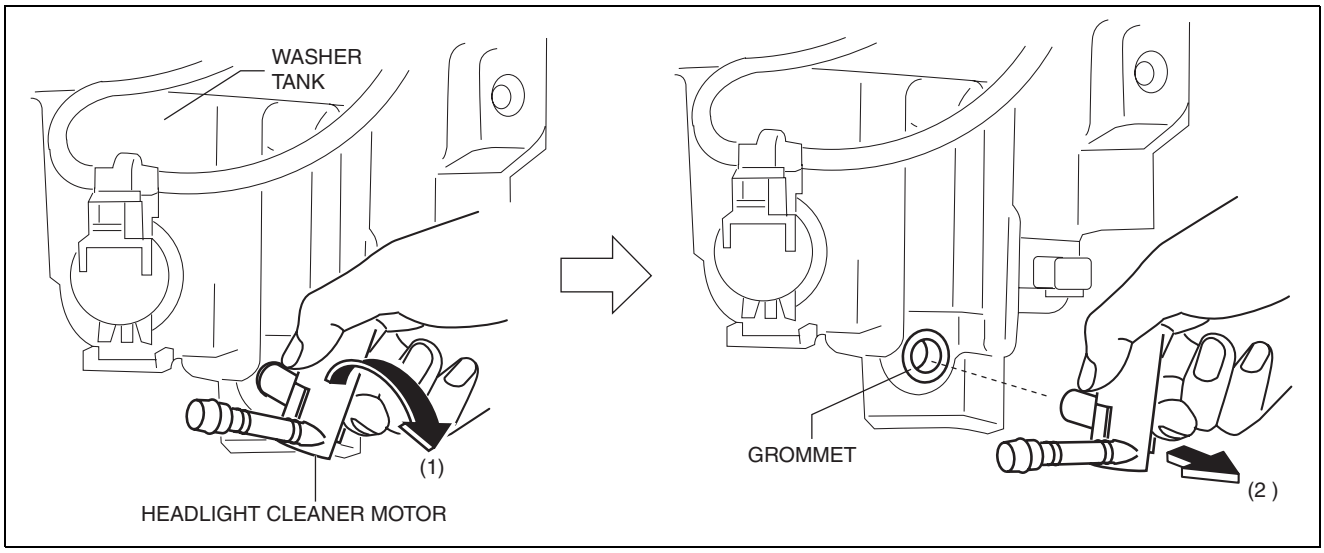

ac5uuw00000823

9. Install in the reverse order of removal.

WIPER/WASHER SYSTEM

HEADLIGHT CLEANER MOTOR INSPECTION

id091900803200

1. Disconnect the negative battery cable. (See 01-17A-13 NEGATIVE BATTERY CABLE DISCONNECTION/CONNECTION [SKYACTIV-G 2.0 (WITHOUT i-stop)].) (See 01-17A-11 NEGATIVE BATTERY CABLE DISCONNECTION/CONNECTION [SKYACTIV-G 2.0].) (See 01-17B-9 NEGATIVE BATTERY CABLE DISCONNECTION/CONNECTION [SKYACTIV-D 2.2].)
2. Set the mudguard (RH) aside. (See 09-16-47 MUDGUARD REMOVAL/INSTALLATION.)
3. Remove the front bumper. (See 09-10-10 FRONT BUMPER REMOVAL/INSTALLATION.)
4. Disconnect the headlight cleaner motor connector from the headlight cleaner motor. (See 09-19-51 HEADLIGHT CLEANER MOTOR REMOVAL/INSTALLATION.)
5. Disconnect the headlight cleaner hose from the headlight cleaner motor. (See 09-19-51 HEADLIGHT CLEANER MOTOR REMOVAL/INSTALLATION.)

Warning

- **Water sprayed on the battery and ground could cause electrocution. When performing the headlight cleaner motor inspection, prepare a container to collect washer fluid and be careful not to spray washer fluid.**

6. After connecting headlight cleaner motor terminal B to the positive battery terminal, and terminal A to the ground, verify that washer fluid sprays from the front of the headlight cleaner motor.

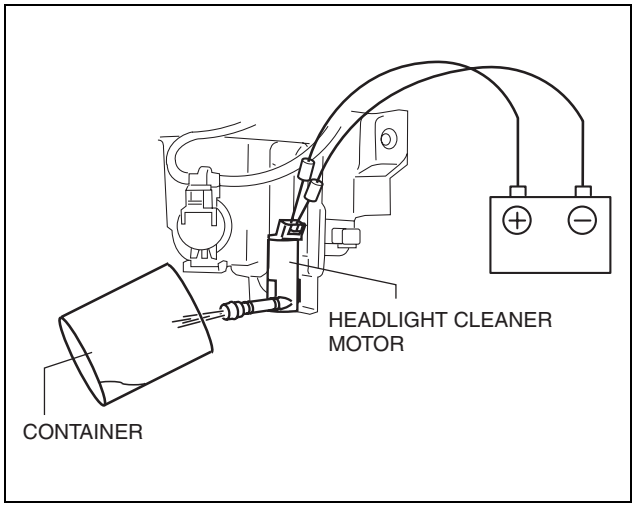

ac5wzw0000220

- If there is any malfunction, replace the headlight cleaner motor. (See 09-19-51 HEADLIGHT CLEANER MOTOR REMOVAL/INSTALLATION.)

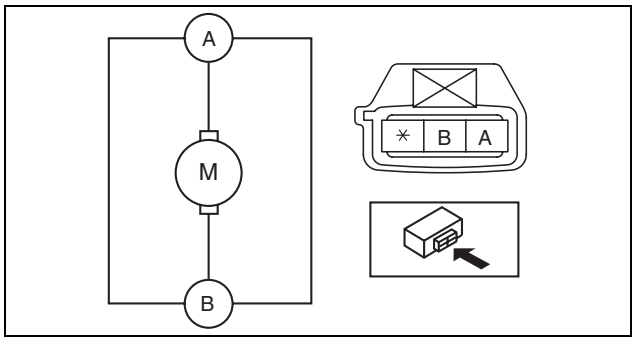

ac5jjw00000443

HEADLIGHT CLEANER ACTUATOR REMOVAL/INSTALLATION

id091900803000

1. Disconnect the negative battery cable. (See 01-17A-13 NEGATIVE BATTERY CABLE DISCONNECTION/CONNECTION [SKYACTIV-G 2.0 (WITHOUT i-stop)].) (See 01-17A-11 NEGATIVE BATTERY CABLE DISCONNECTION/CONNECTION [SKYACTIV-G 2.0].) (See 01-17B-9 NEGATIVE BATTERY CABLE DISCONNECTION/CONNECTION [SKYACTIV-D 2.2].)
2. Partially peel back the front over fender. (See 09-10-31 FRONT OVER FENDER REMOVAL/INSTALLATION.)
3. Set the mudguard (RH) aside. (See 09-16-47 MUDGUARD REMOVAL/INSTALLATION.)
4. Remove the front bumper. (See 09-10-10 FRONT BUMPER REMOVAL/INSTALLATION.)
5. Remove the headlight cleaner cover. (See 09-19-55 HEADLIGHT CLEANER COVER REMOVAL/INSTALLATION.)

WIPER/WASHER SYSTEM

6. While pressing tabs in the direction of the arrows (1) shown in the figure, pull up the headlight cleaner hose in the direction of the arrow (2) to remove it from the headlight cleaner actuator.

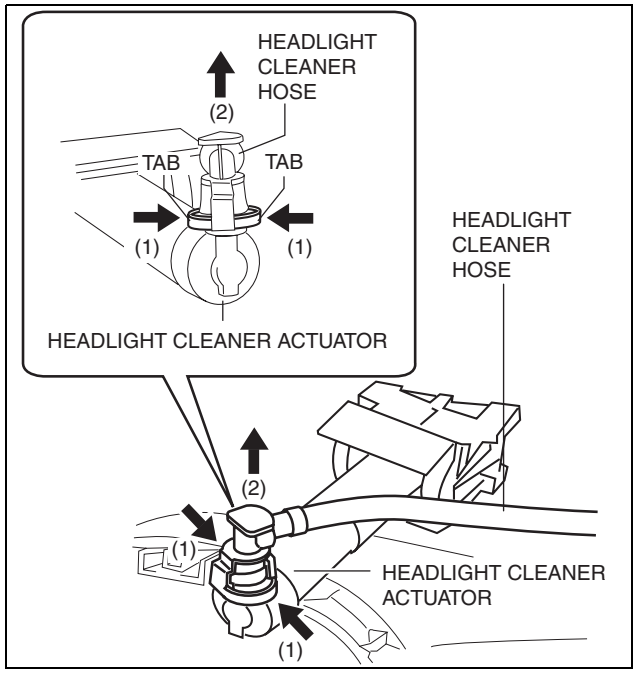

ac5uuw00000818

7. Avoid the projection by pushing the bracket in the direction of arrow (1) shown in the figure.
8. Move the bracket in the direction of the arrow (2) to remove it from the headlight cleaner actuator.

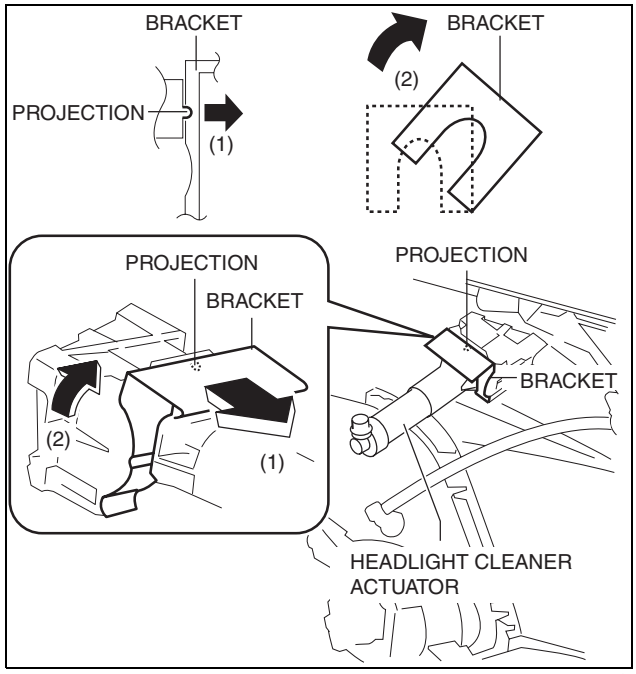

ac5uuw00000819

WIPER/WASHER SYSTEM

9. Remove the cover in the direction of the arrow (1) shown in the figure.

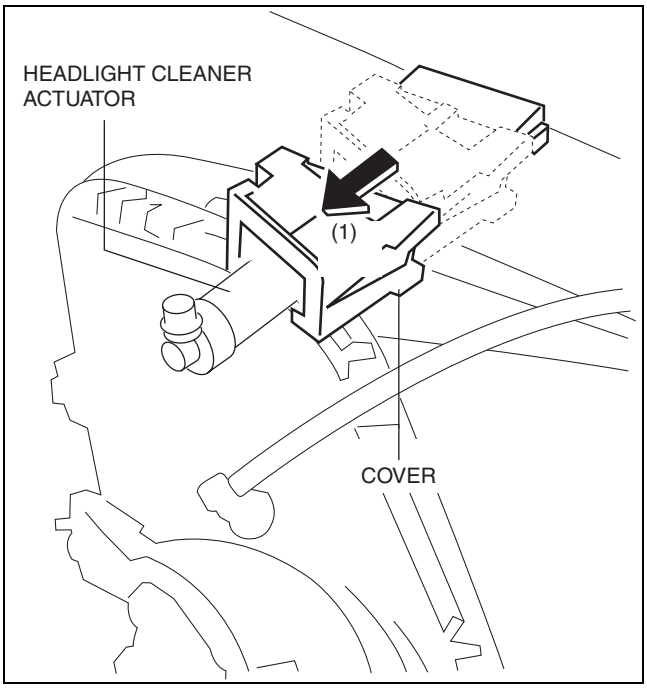

ac5uuw00000820

10. Press tab A of the headlight cleaner actuator in the direction of the arrow (1) shown in the figure and remove the headlight actuator from the front bumper in the direction of the arrow (2) while detaching the engagement of tabs B.
11. Install in the reverse order of removal.

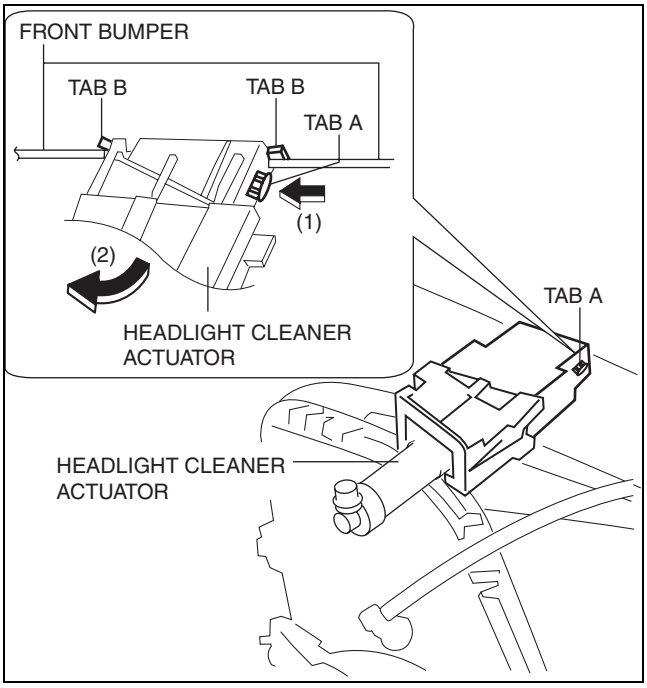

ac5uuw00000821

WIPER/WASHER SYSTEM

HEADLIGHT CLEANER COVER REMOVAL/INSTALLATION

id091900814100

Caution
- **Before removing the headlight cleaner cover, affix protective tape to the positions shown in the figure. Otherwise, it could damage the front bumper.**

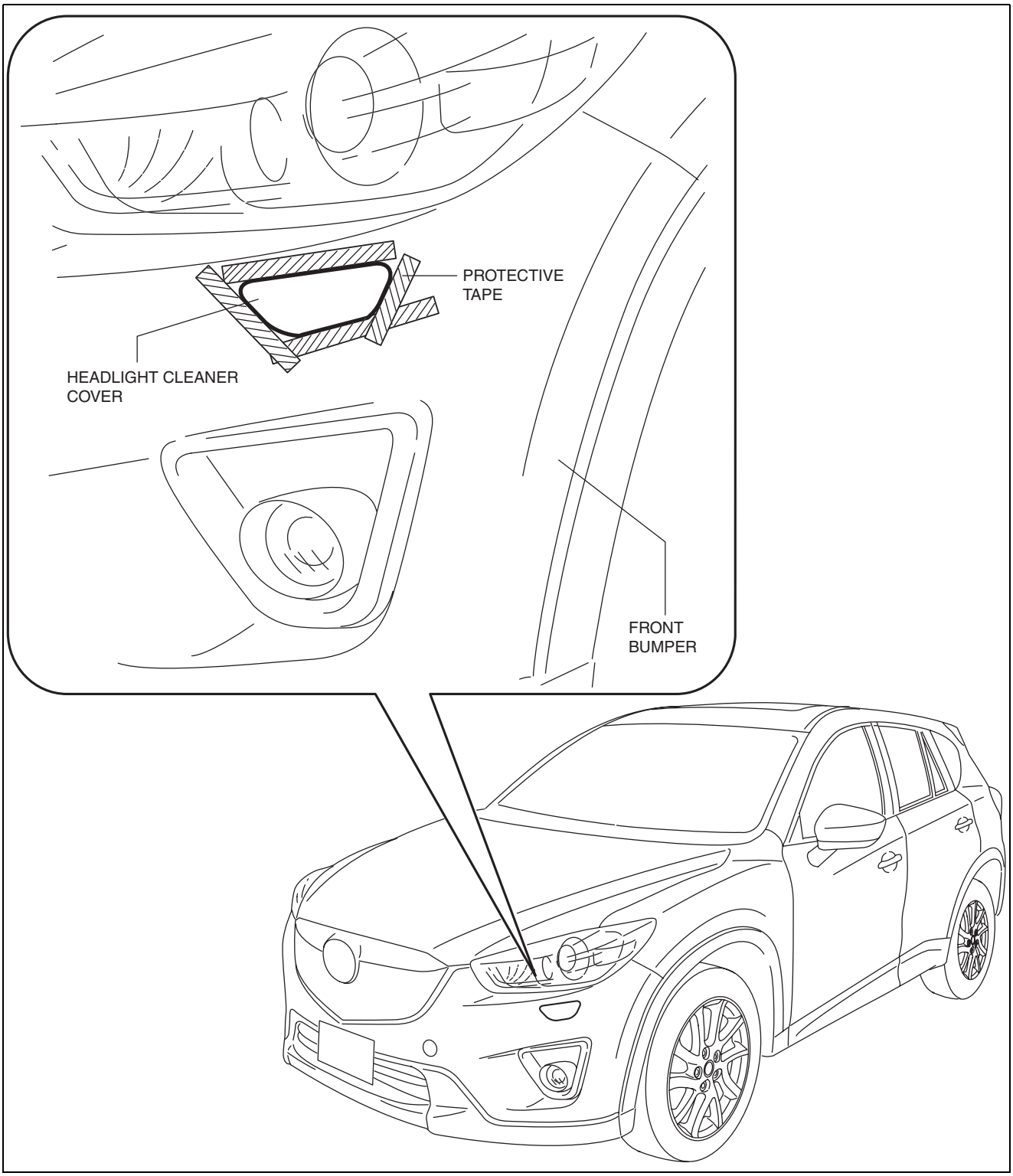

ac5uuw00000830

Caution
- **Forcefully pulling the headlight cleaner cover could damage it. Be careful when pulling the headlight cleaner cover.**

WIPER/WASHER SYSTEM

1. Pull out the headlight cleaner cover in the direction of the arrow (1) shown in the figure.

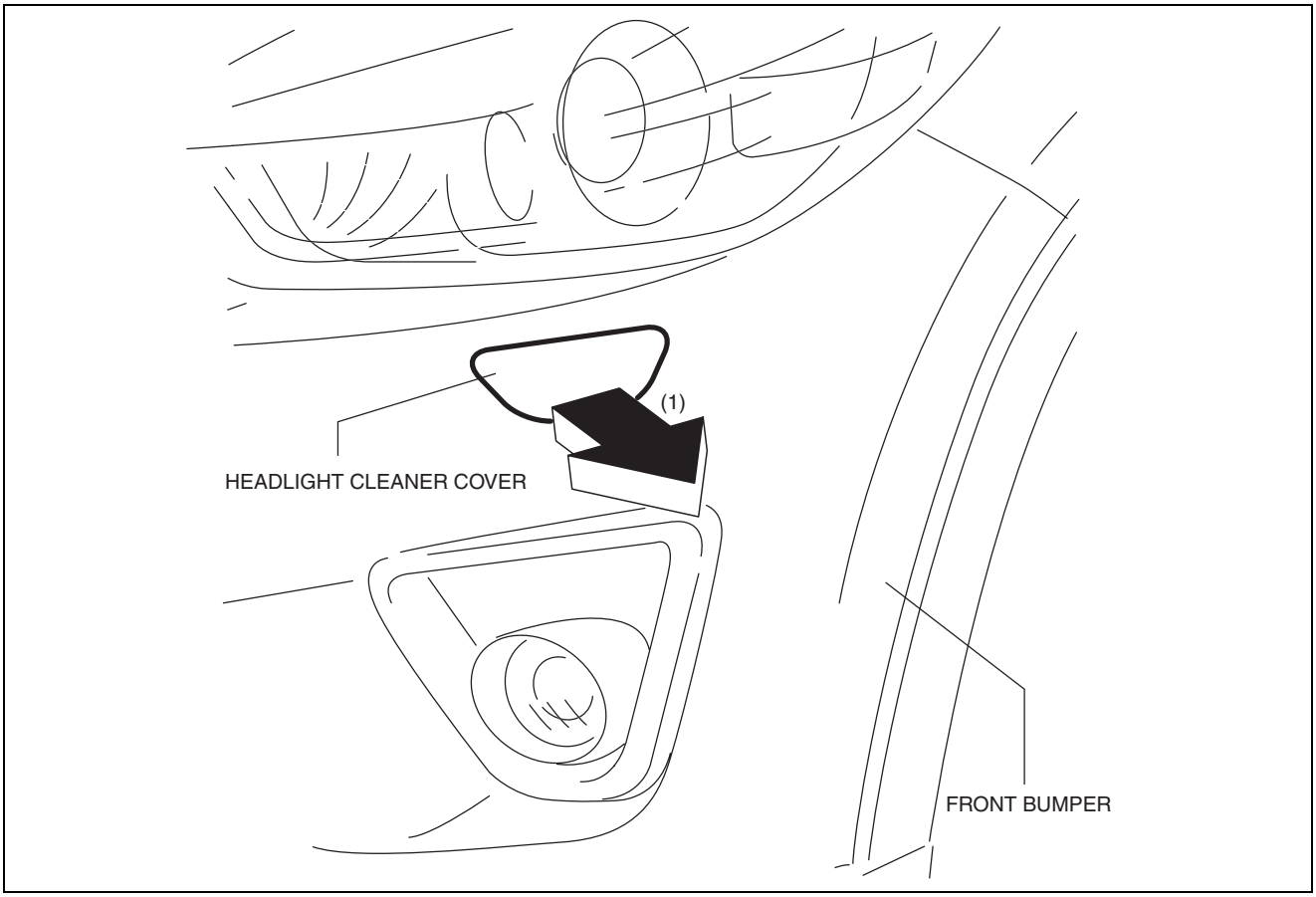

ac5uuw00000831

2. While the headlight cleaner cover is pulled out, disengage tabs in the direction of the arrow (2) and remove them.

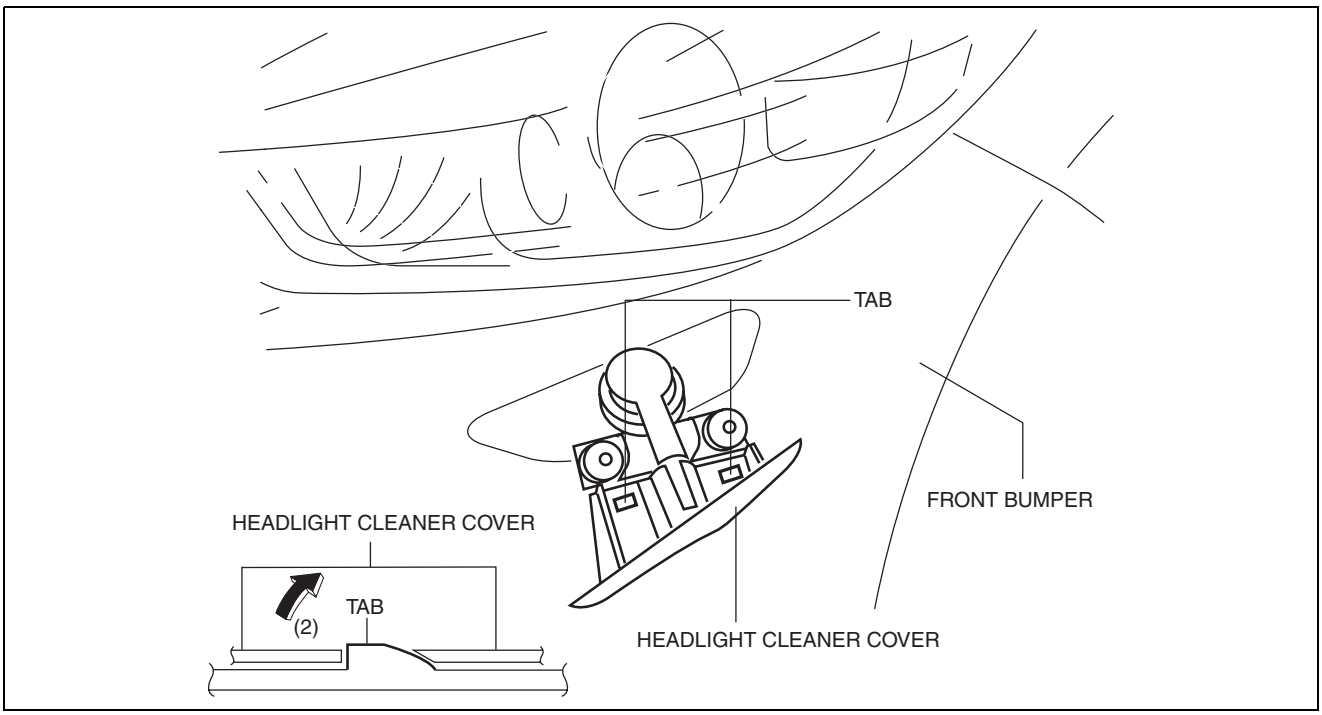

ac5uuw00000832

3. Install in the reverse order of removal.

WIPER/WASHER SYSTEM

HEADLIGHT CLEANER HOSE REMOVAL/INSTALLATION

id091900803100

1. Disconnect the negative battery cable. (See 01-17A-13 NEGATIVE BATTERY CABLE DISCONNECTION/CONNECTION [SKYACTIV-G 2.0 (WITHOUT i-stop)].) (See 01-17A-11 NEGATIVE BATTERY CABLE DISCONNECTION/CONNECTION [SKYACTIV-G 2.0].) (See 01-17B-9 NEGATIVE BATTERY CABLE DISCONNECTION/CONNECTION [SKYACTIV-D 2.2].)
2. Partially peel back the front over fender. (See 09-10-31 FRONT OVER FENDER REMOVAL/INSTALLATION.)
3. Set the mudguard aside. (See 09-16-47 MUDGUARD REMOVAL/INSTALLATION.)
4. Remove the front bumper. (See 09-10-10 FRONT BUMPER REMOVAL/INSTALLATION.)
5. Remove the headlight cleaner hose from hooks.
6. Remove clips and headlight cleaner hose as a single unit from the front bumper.

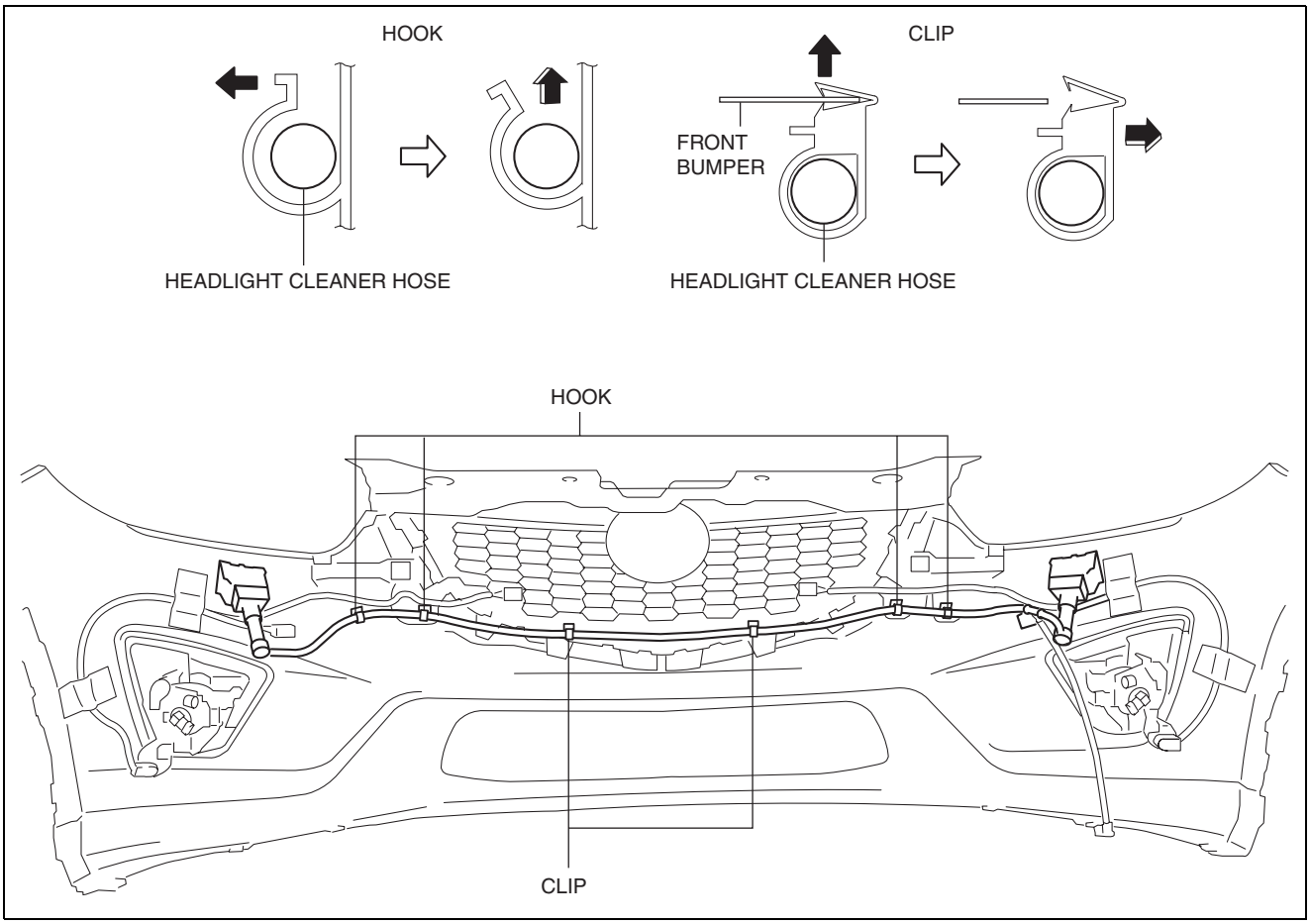

ac5wzw0000164

WIPER/WASHER SYSTEM

7. While pressing tabs in the direction of the arrows (1) shown in the figure, pull up the headlight cleaner hose in the direction of the arrow (2) to remove it from the headlight cleaner actuator.
8. Install in the reverse order of removal.

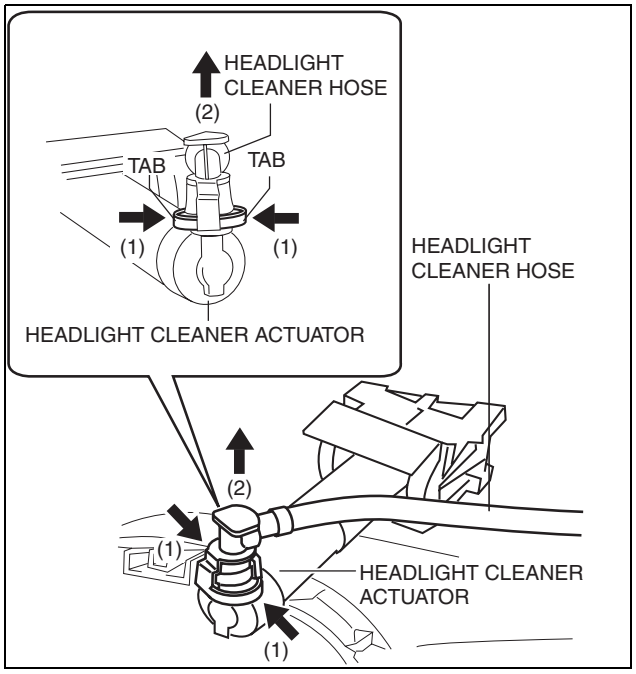

ac5wzw0000164

RAIN SENSOR REMOVAL/INSTALLATION

id091900800500

With Forward Sensing Camera (FSC) Or Smart City Brake Support (SCBS)

1. Disconnect the negative battery cable. (See 01-17A-13 NEGATIVE BATTERY CABLE DISCONNECTION/CONNECTION [SKYACTIV-G 2.0 (WITHOUT i-stop)].) (See 01-17A-11 NEGATIVE BATTERY CABLE DISCONNECTION/CONNECTION [SKYACTIV-G 2.0].) (See 01-17B-9 NEGATIVE BATTERY CABLE DISCONNECTION/CONNECTION [SKYACTIV-D 2.2].)
2. Remove the cover. (See 09-18-94 FORWARD SENSING CAMERA (FSC) REMOVAL/INSTALLATION.)
3. Disconnect the rain sensor connector in the direction of the arrow (1).

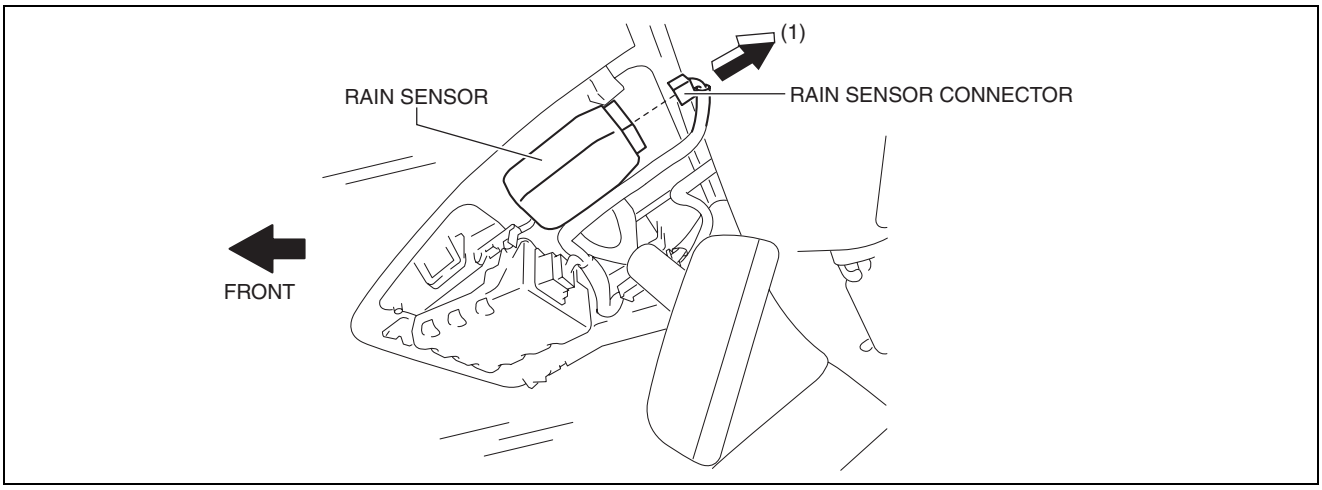

ac5wzw0000159

WIPER/WASHER SYSTEM

4. Slide rain sensor tabs B in the direction of the arrow (2) shown in the figure, detach the engagement, and pull tab B in the direction of the arrow (3).

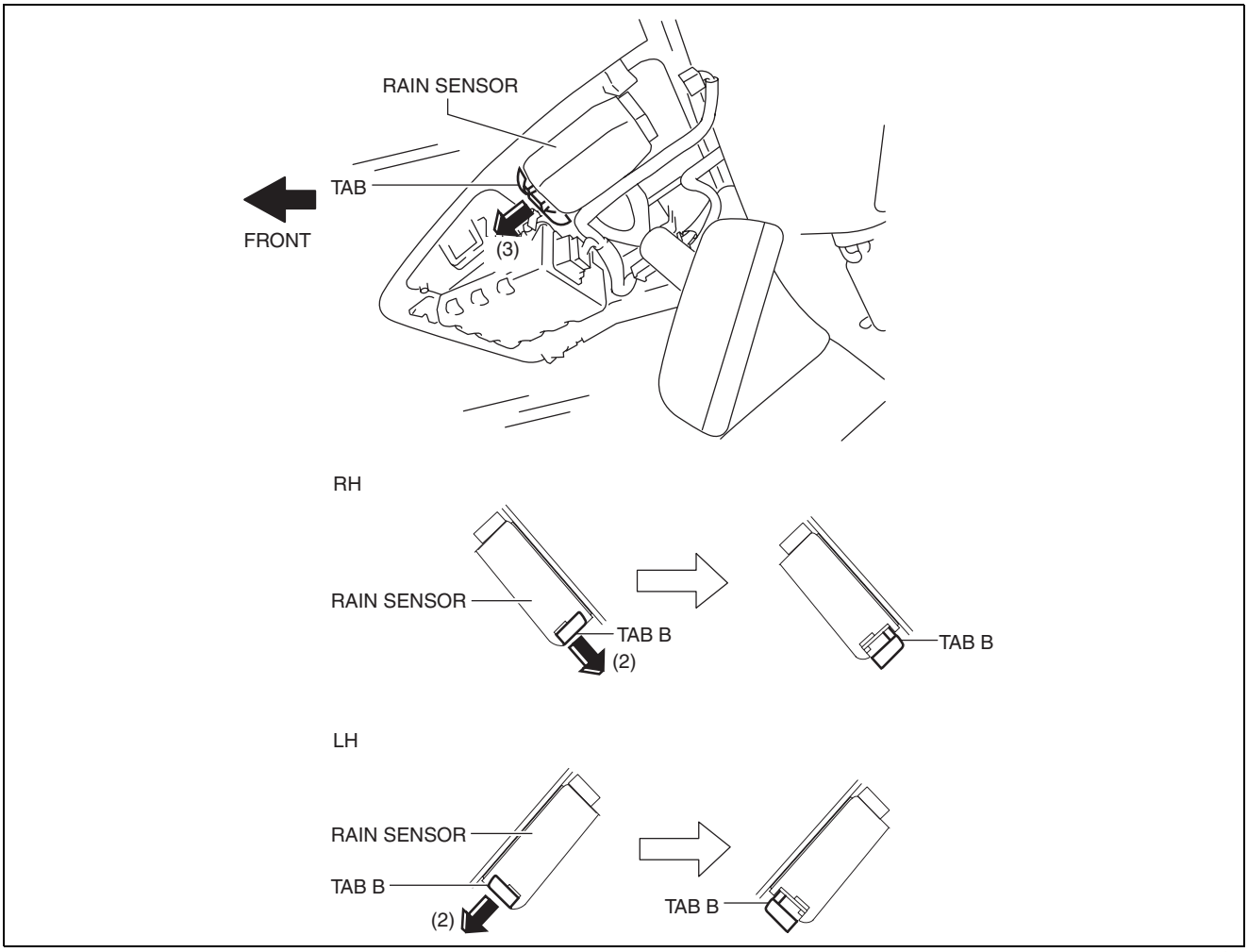

ac5wzw0000159

5. Remove the rain sensor in the direction of the arrow (4) shown in the figure.

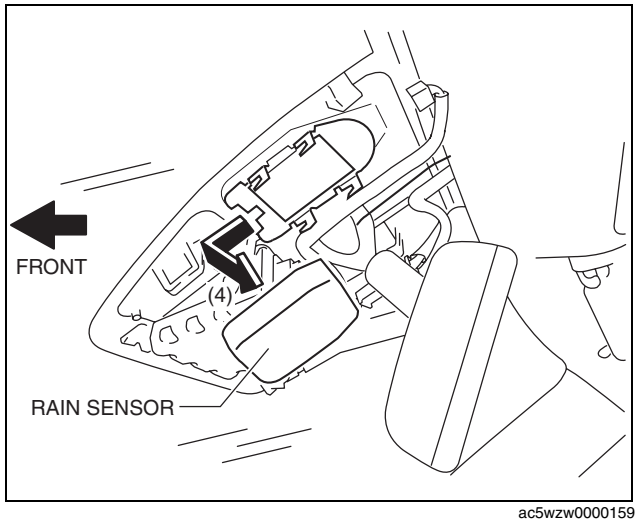

ac5wzw0000159

WIPER/WASHER SYSTEM

6. Peel off the rain sensor protective sheet from the rain sensor.
7. Install in the reverse order of removal. (See 09-19-62 Rain Sensor Installation Note.)
8. Perform headlight auto light setting. (See 09-18-93 LIGHTING SYSTEM PERSONALIZATION FEATURES SETTING PROCEDURE.)

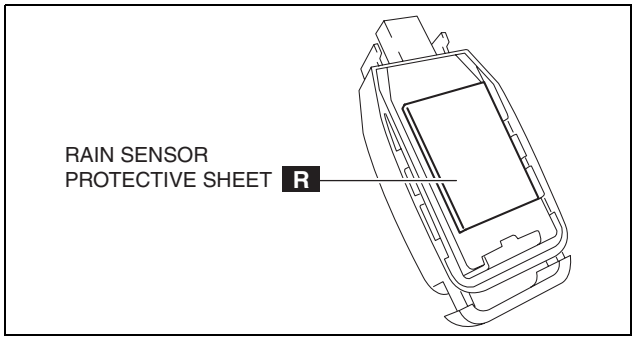

ac5wzw0000169

Caution

- **If the rain sensor is replaced, the auto light system may not operate normally because the auto light sensitivity setting is initialized. If the rain sensor is replaced, perform the auto light sensitivity setting.**
- **If the auto light sensitivity setting before replacing the rain sensor was "Medium", and the following sensitivity setting procedure is not performed, the sensor will be unable to detect the illumination level correctly and the auto light system will not operate normally. If the rain sensor is replaced, perform the following sensitivity setting procedure.**
  1. **Except for "Medium" sensitivity setting.**
  2. **Re-setting to "Medium".**

Without FSC Or SCBS

1. Disconnect the negative battery cable. (See 01-17A-11 NEGATIVE BATTERY CABLE DISCONNECTION/CONNECTION [SKYACTIV-G 2.0].) (See 01-17A-13 NEGATIVE BATTERY CABLE DISCONNECTION/CONNECTION [SKYACTIV-G 2.0 (WITHOUT i-stop)].) (See 01-17B-9 NEGATIVE BATTERY CABLE DISCONNECTION/CONNECTION [SKYACTIV-D 2.2].)
2. Spread open the rain sensor cover in the direction of the arrows (1) and disengage tabs A to remove it.

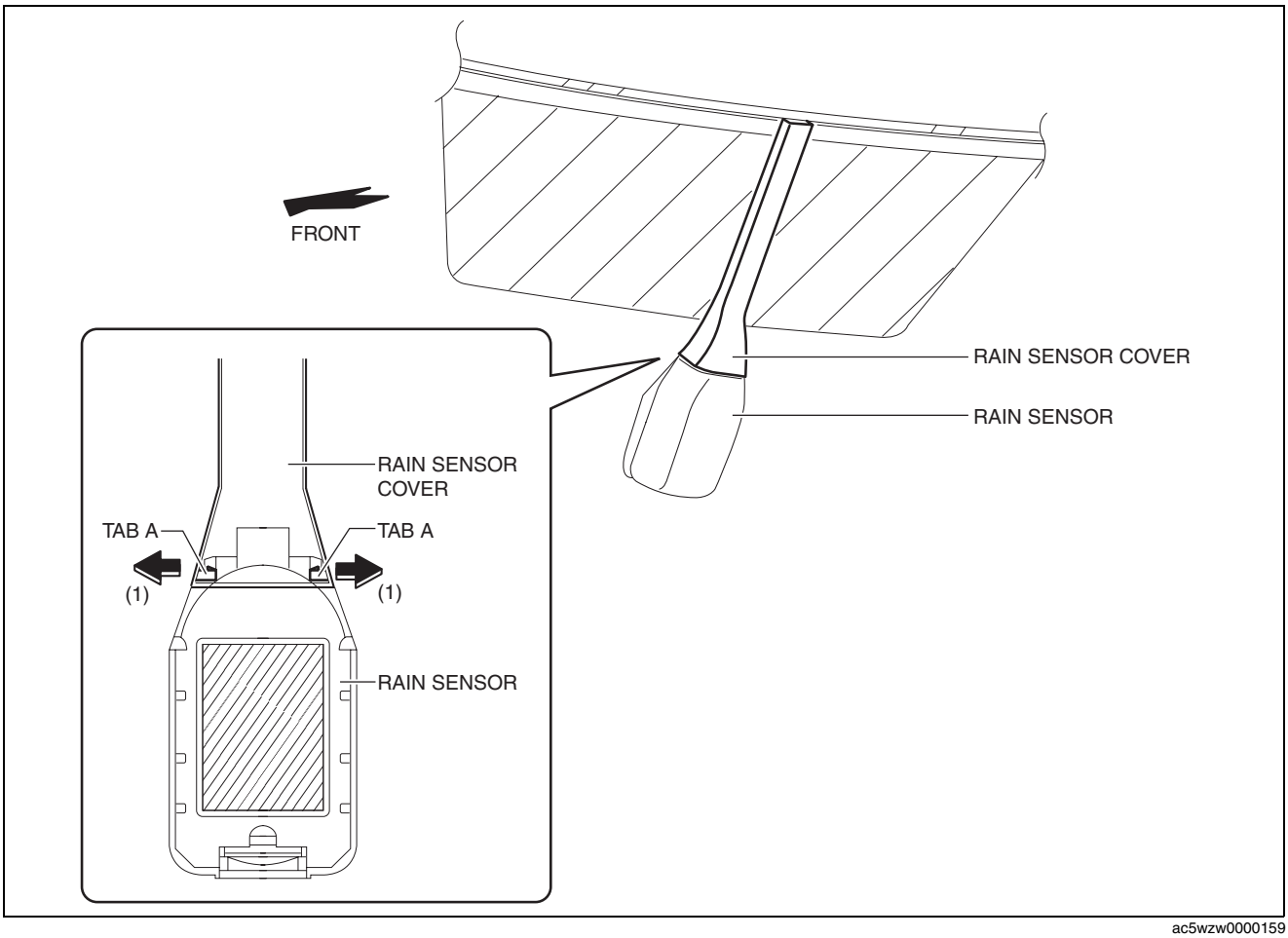

ac5wzw0000159

WIPER/WASHER SYSTEM

3. Disconnect the rain sensor connector in the direction of the arrow (2).

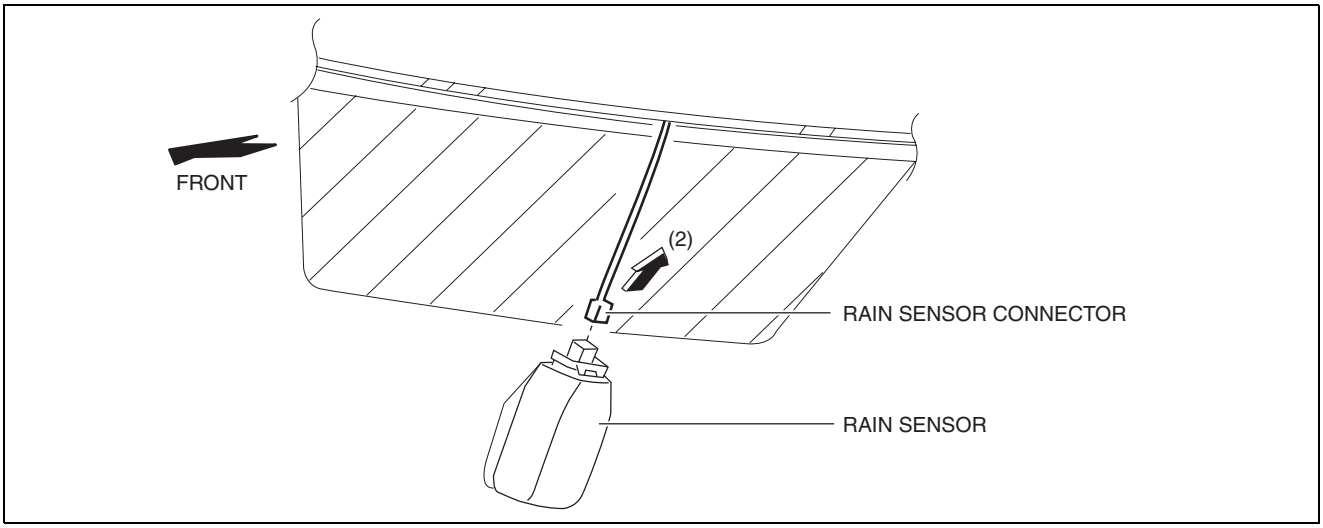

ac5wzw0000159

4. Slide rain sensor tabs B in the direction of the arrow (3) shown in the figure, detach the engagement, and pull tab B in the direction of the arrow (4).

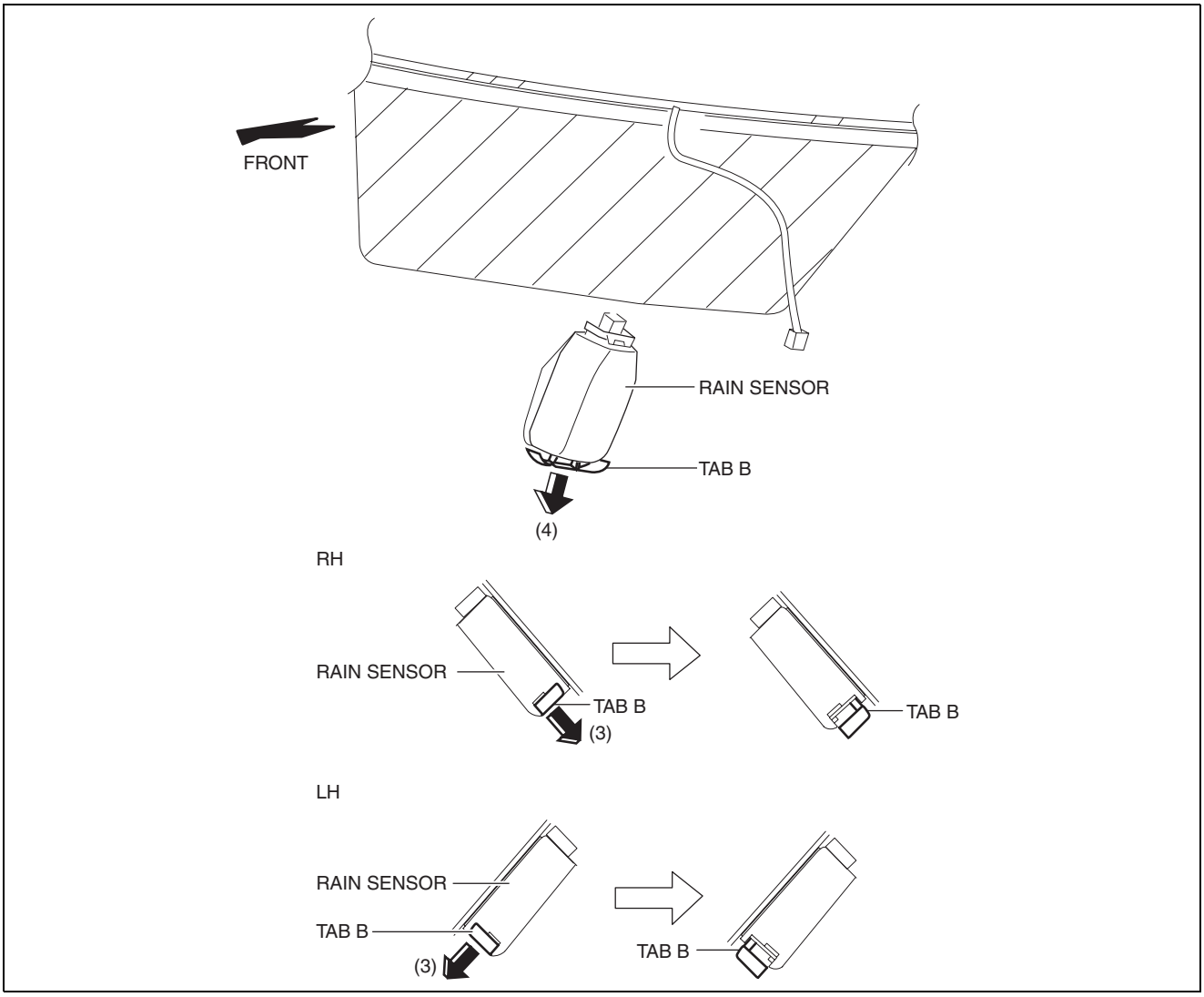

ac5wzw0000219

WIPER/WASHER SYSTEM

5. Remove the rain sensor in the direction of the arrow (5) shown in the figure.

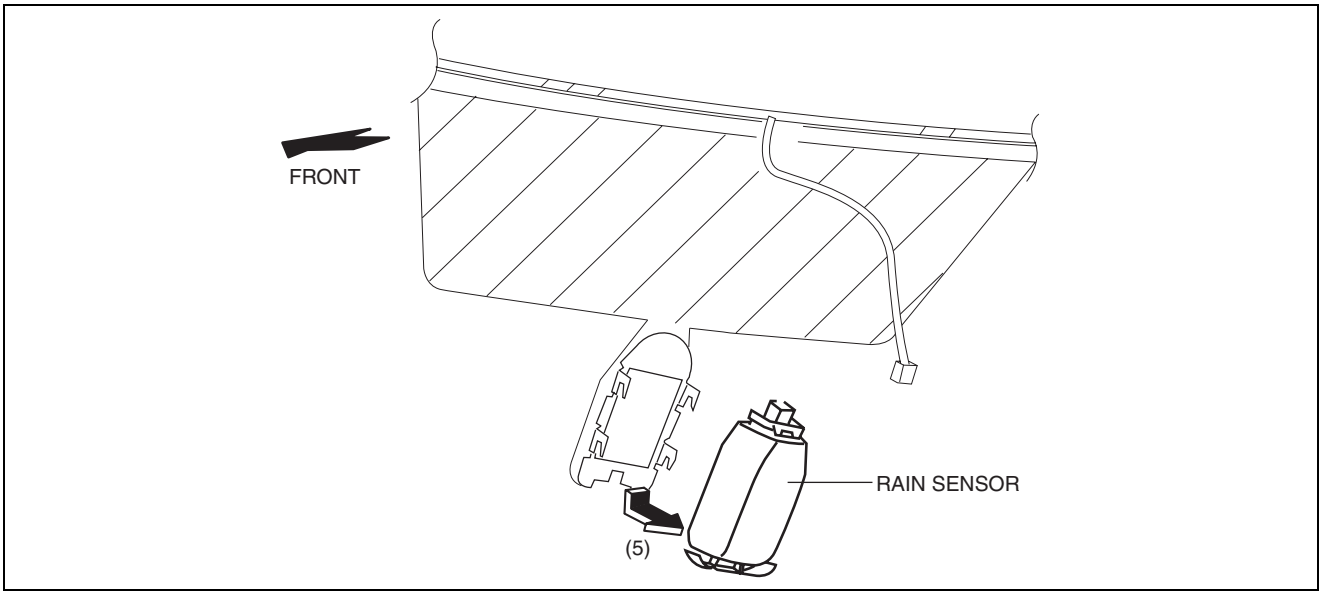

ac5wzw0000159

6. Peel off the rain sensor protective sheet from the rain sensor.
7. Install in the reverse order of removal. (See 09-19-62 Rain Sensor Installation Note.)
8. Perform headlight auto light setting. (See 09-18-93 LIGHTING SYSTEM PERSONALIZATION FEATURES SETTING PROCEDURE.)

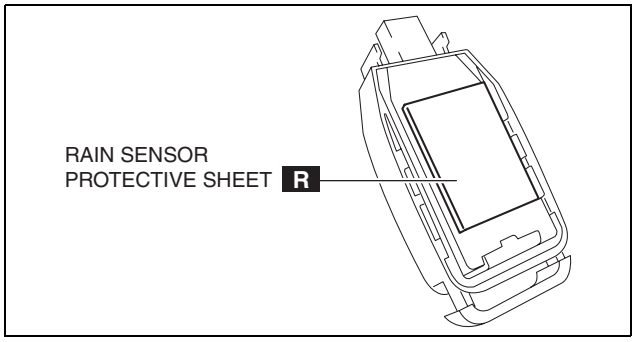

ac5wzw0000169

Caution

- **If the rain sensor is replaced, the auto light system may not operate normally because the auto light sensitivity setting is initialized. If the rain sensor is replaced, perform the auto light sensitivity setting.**
- **If the auto light sensitivity setting before replacing the rain sensor was "Medium", and the following sensitivity setting procedure is not performed, the sensor will be unable to detect the illumination level correctly and the auto light system will not operate normally. If the rain sensor is replaced, perform the following sensitivity setting procedure.**
  1. **Except for "Medium" sensitivity setting.**
  2. **Re-setting to "Medium".**

Rain Sensor Installation Note

Caution

- **If the rate at which the rain sensor reflects or transmits infrared light between the rain sensor and the windshield, or through the protective sheet is changed, the rain sensor will determine that there is a malfunction in the rain detection function and stop auto wiper system control. Be careful of the following when installing the rain sensor:**
  - **— Do not reuse the rain sensor protective sheet**
  - **— Do not touch the rain sensor lens, rain sensor protective sheet, and sensor installation area on windshield with your fingers**
  - **— Verify that there is no air bubble after installing the rain sensor**

WIPER/WASHER SYSTEM

1. Wipe off any oil or dirt from the rain sensor lens and the windshield using a clean rag.

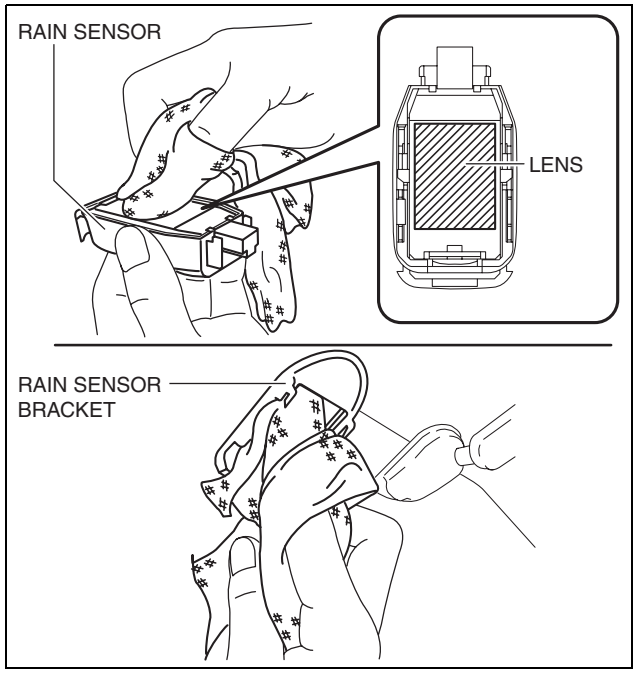

ac5wzw0000160

2. Peel off backing of double-sided adhesive tape A from the rain sensor protective sheet.

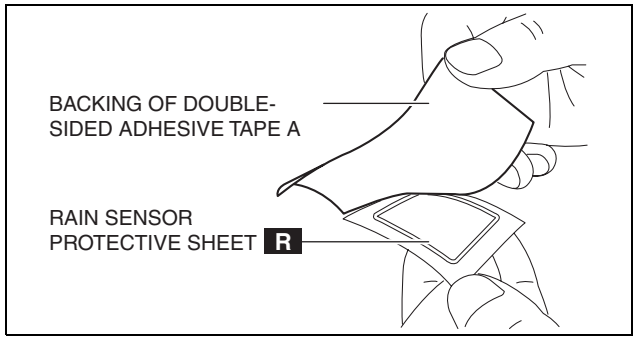

ac5wzw0000160

3. Adhere the rain sensor protective sheet to the rain sensor lens.

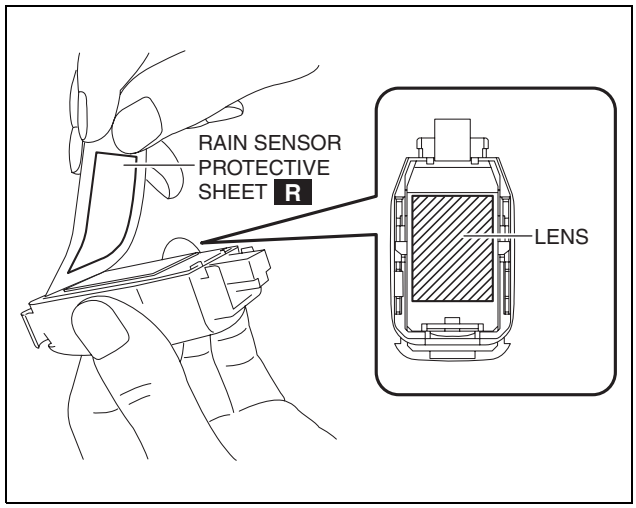

ac5wzw0000160

WIPER/WASHER SYSTEM

4. Peel off backing of double-sided adhesive tape B from the rain sensor protective sheet.
5. Install the rain sensor in the direction of the arrow (1).

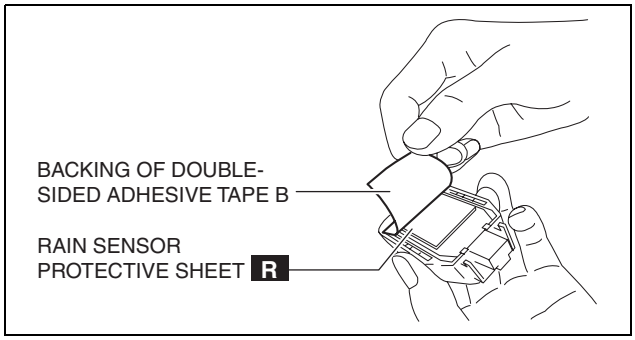

ac5wzw0000160

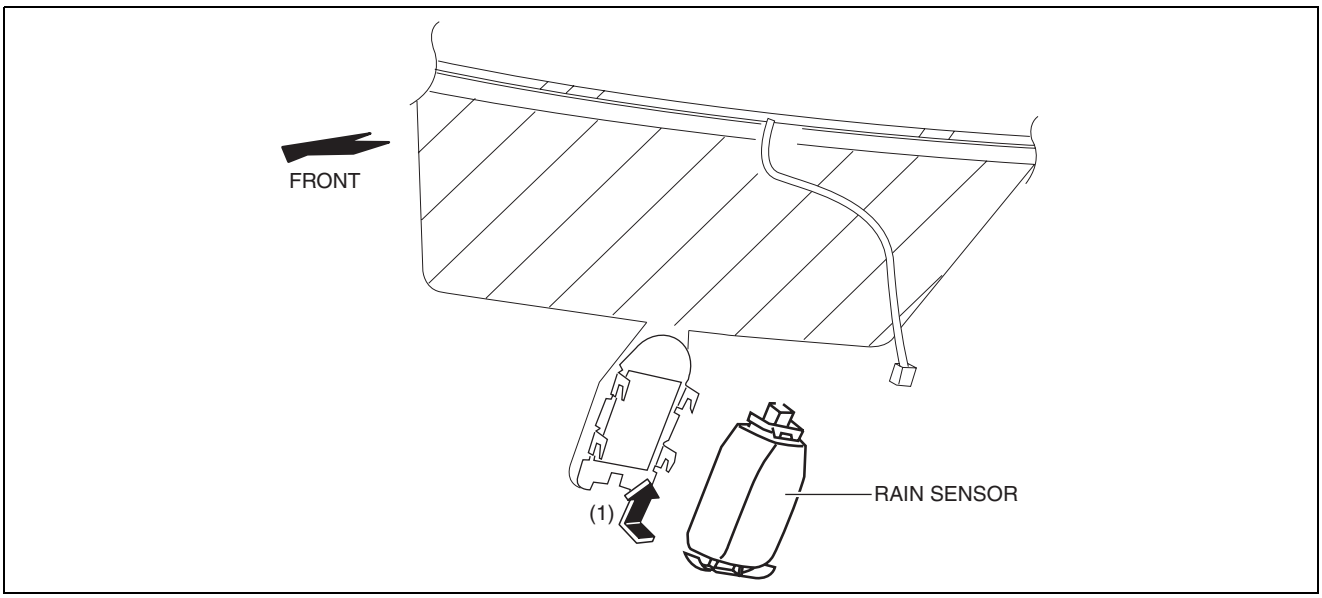

ac5wzw0000160

6. Press the rain sensor in the direction (direction of arrow (2)) of the windshield and press out any air bubbles.

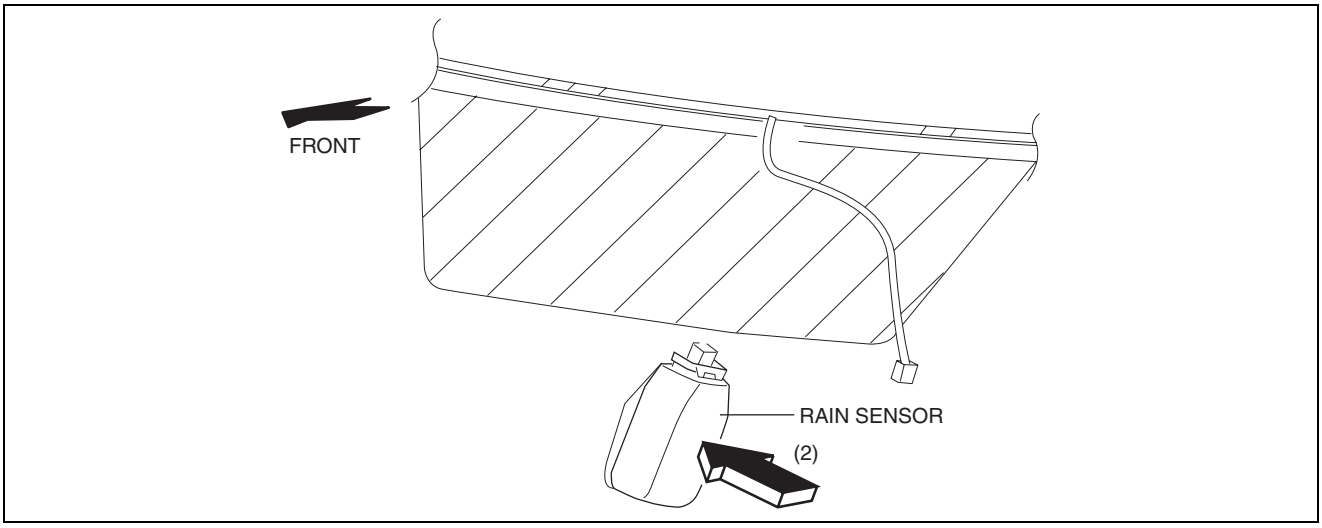

ac5wzw0000160

7. Verify that there is no air bubble between the rain sensor and the windshield.

RAIN SENSOR INITIALIZATION SETTING

id091900810100

Note

- When the ignition is switched ON (engine off or on), the rain sensor detects the condition of the windshield surface, and performs initialization automatically.

WIPER/WASHER SYSTEM

WIPER/WASHER SYSTEM PERSONALIZATION FEATURES SETTING PROCEDURE

id091900804100

Using M-MDS

- The auto wiper function can be enabled or disabled using the M-MDS. Refer to the control system personalization features setting. (See 09-40-16 CONTROL SYSTEM PERSONALIZATION FEATURES SETTING PROCEDURE.)

Using audio unit (with color LCD)

- The user can enable or disable the auto wiper function by operating the audio unit display. Refer to the entertainment system personalization features setting. (See 09-20-9 AUDIO UNIT PERSONALIZATION FEATURES SETTING PROCEDURE.)

09-20 ENTERTAINMENT

ENTERTAINMENT LOCATION INDEX 09-20–3
AUDIO UNIT REMOVAL/INSTALLATION 09-20–4
Removal 09-20–4
Installation 09-20–7
AUDIO UNIT PERSONALIZATION FEATURES SETTING PROCEDURE 09-20–9
Door Locks Systems 09-20–9
Lighting Systems 09-20–10
Wiper Systems 09-20–10
CAR-NAVIGATION UNIT REMOVAL/INSTALLATION 09-20–11
Installation Note 09-20–12
AUDIO AMPLIFIER REMOVAL/INSTALLATION 09-20–12
L.H.D. 09-20–12
R.H.D. 09-20–14
FRONT DOOR SPEAKER REMOVAL/INSTALLATION 09-20–15
Without Bose® 09-20–15
With Bose® 09-20–16
FRONT DOOR SPEAKER INSPECTION 09-20–18
REAR DOOR SPEAKER REMOVAL/INSTALLATION 09-20–19
Without Bose® 09-20–19
With Bose® 09-20–20
REAR DOOR SPEAKER INSPECTION 09-20–21
FRONT CENTER SPEAKER REMOVAL/INSTALLATION 09-20–22
FRONT CENTER SPEAKER INSPECTION 09-20–22
TWEETER REMOVAL/INSTALLATION 09-20–23
TWEETER INSPECTION 09-20–24
D-PILLAR SPEAKER REMOVAL/INSTALLATION 09-20–25
D-PILLAR SPEAKER INSPECTION 09-20–26
D-pillar speaker 09-20–26
Short-cord 09-20–26
AudioPilot®2 MICROPHONE REMOVAL/INSTALLATION 09-20–27
CENTER ROOF ANTENNA REMOVAL/INSTALLATION 09-20–28
CENTER ROOF ANTENNA INSPECTION 09-20–29
Antenna amplifier inspection 09-20–29
Feeder line inspection 09-20–30
GLASS ANTENNA INSPECTION 09-20–31
CONDENSER REMOVAL/INSTALLATION 09-20–32
Condenser Installation Note 09-20–33
ANTENNA FEEDER LOCATION 09-20–34
ANTENNA FEEDER NO.1 REMOVAL/INSTALLATION 09-20–34
L.H.D. (With Audio System) 09-20–34
L.H.D. (With Car-navigation System) 09-20–35
R.H.D. (With Audio System) 09-20–37
R.H.D. (With Car-navigation System) 09-20–37
ANTENNA FEEDER NO.1 INSPECTION 09-20–38
L.H.D. (With audio system) 09-20–38
L.H.D. (with car-navigation system) 09-20–39
R.H.D. (with audio system) 09-20–41
R.H.D. (with car-navigation system) . . . 09-20–41
ANTENNA FEEDER NO.2 REMOVAL/INSTALLATION 09-20–43
Removal 09-20–43
Installation 09-20–44
ANTENNA FEEDER NO.2 INSPECTION 09-20–45
ANTENNA FEEDER NO.3 REMOVAL/INSTALLATION 09-20–47
ANTENNA FEEDER NO.3 INSPECTION 09-20–52
GLOBAL POSITIONING SYSTEM (GPS) ANTENNA REMOVAL/INSTALLATION 09-20–54
STEERING SWITCH REMOVAL/INSTALLATION 09-20–54
STEERING SWITCH INSPECTION 09-20–57
Without Bluetooth system 09-20–57
With Bluetooth system 09-20–59
COMMANDER SWITCH REMOVAL/INSTALLATION 09-20–61
COMMANDER SWITCH INSPECTION 09-20–62
Switch panel 09-20–62
Commander knob (forward, back, left, right) 09-20–63
Commander knob (rotation) 09-20–64
MICROPHONE REMOVAL/INSTALLATION 09-20–65
Bluetooth UNIT REMOVAL/INSTALLATION 09-20–67
REAR MOUNT CAMERA REMOVAL/INSTALLATION 09-20–68
REAR MOUNT CAMERA INSPECTION 09-20–69
European (L.H.D. U.K.) specs. 09-20–69
Except European (L.H.D. U.K.) specs. 09-20–69
PARKING ASSIST SYSTEM INITIALIZATION SETTING (CALIBRATION) 09-20–70
Initialization setting (calibration) mode launching procedure 09-20–71
Initialization setting (calibration) procedure 09-20–72
Guide line setting change procedure 09-20–75
Predicted vehicle path line operation verification procedure 09-20–76
Signal connection verification 09-20–76
AUXILIARY JACK/USB PORT REMOVAL/INSTALLATION 09-20–77
AUXILIARY JACK/USB PORT INSPECTION 09-20–77
Auxiliary jack inspection 09-20–77
USB port inspection 09-20–78

ENTERTAINMENT

CIGARETTE LIGHTER
REMOVAL/INSTALLATION 09-20–79
CIGARETTE LIGHTER INSPECTION . . . 09-20–81

ENTERTAINMENT

ENTERTAINMENT LOCATION INDEX

id092000800100

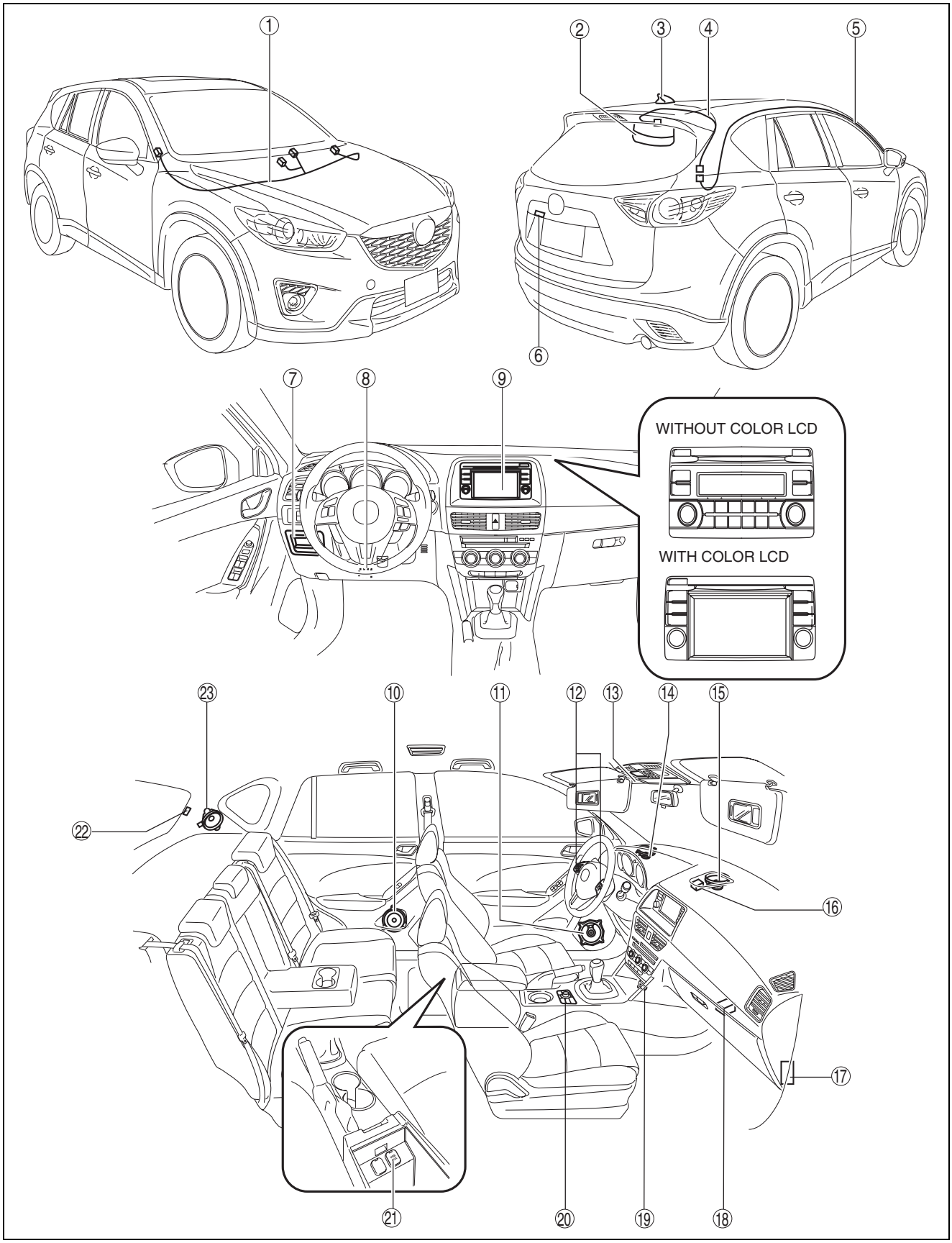

ac5wzw0000311

ENTERTAINMENT

1	Antenna feeder No.1 (See 09-20-34 ANTENNA FEEDER LOCATION.) (See 09-20-34 ANTENNA FEEDER NO.1 REMOVAL/INSTALLATION.) (See 09-20-38 ANTENNA FEEDER NO.1 INSPECTION.)
2	Glass antenna (with RDS (radio data system)) (See 09-20-31 GLASS ANTENNA INSPECTION.)
3	Center roof antenna (See 09-20-28 CENTER ROOF ANTENNA REMOVAL/INSTALLATION.) (See 09-20-29 CENTER ROOF ANTENNA INSPECTION.)
4	Antenna feeder No.3 (See 09-20-34 ANTENNA FEEDER LOCATION.) (See 09-20-47 ANTENNA FEEDER NO.3 REMOVAL/INSTALLATION.) (See 09-20-52 ANTENNA FEEDER NO.3 INSPECTION.)
5	Antenna feeder No.2 (See 09-20-34 ANTENNA FEEDER LOCATION.) (See 09-20-43 ANTENNA FEEDER NO.2 REMOVAL/INSTALLATION.) (See 09-20-45 ANTENNA FEEDER NO.2 INSPECTION.)
6	Rear mount camera (with park assist system) (See 09-20-68 REAR MOUNT CAMERA REMOVAL/INSTALLATION.) (See 09-20-69 REAR MOUNT CAMERA INSPECTION.)
7	Car-navigation unit (with car-navigation system) (See 09-20-11 CAR-NAVIGATION UNIT REMOVAL/INSTALLATION.)
8	AudioPilot ®2 microphone (with Bose®) (See 09-20-27 AudioPilot®2 MICROPHONE REMOVAL/INSTALLATION.)
9	Audio unit (with audio system) (See 09-20-4 AUDIO UNIT REMOVAL/INSTALLATION.) (See 09-20-9 AUDIO UNIT PERSONALIZATION FEATURES SETTING PROCEDURE.)
10	Rear door speaker (See 09-20-19 REAR DOOR SPEAKER REMOVAL/INSTALLATION.) (See 09-20-21 REAR DOOR SPEAKER INSPECTION.)
11	Front door speaker (See 09-20-15 FRONT DOOR SPEAKER REMOVAL/INSTALLATION.) (See 09-20-18 FRONT DOOR SPEAKER INSPECTION.)
12	Steering switch (See 09-20-54 STEERING SWITCH REMOVAL/INSTALLATION.) (See 09-20-57 STEERING SWITCH INSPECTION.)
13	Microphone (with Bluetooth system) (See 09-20-65 MICROPHONE REMOVAL/INSTALLATION.)
14	Tweeter (6 speaker type, with Bose®) (See 09-20-23 TWEETER REMOVAL/INSTALLATION.) (See 09-20-24 TWEETER INSPECTION.)
15	Front center speaker (With Bose®) (See 09-20-22 FRONT CENTER SPEAKER REMOVAL/INSTALLATION.) (See 09-20-22 FRONT CENTER SPEAKER INSPECTION.)
16	GPS antenna (with car-navigation system) (See 09-20-54 GLOBAL POSITIONING SYSTEM (GPS) ANTENNA REMOVAL/INSTALLATION.)
17	Audio amplifier (with Bose®) (See 09-20-12 AUDIO AMPLIFIER REMOVAL/INSTALLATION.)
18	Bluetooth unit (with Bluetooth system) (See 09-20-67 Bluetooth UNIT REMOVAL/INSTALLATION.)
19	Cigarette lighter (See 09-20-79 CIGARETTE LIGHTER REMOVAL/INSTALLATION.) (See 09-20-81 CIGARETTE LIGHTER INSPECTION.)
20	Commander switch (with commander switch) (See 09-20-61 COMMANDER SWITCH REMOVAL/INSTALLATION.) (See 09-20-62 COMMANDER SWITCH INSPECTION.)
21	Auxiliary jack/USB port (See 09-20-77 AUXILIARY JACK/USB PORT REMOVAL/INSTALLATION.) (See 09-20-77 AUXILIARY JACK/USB PORT INSPECTION.)
22	Condenser (See 09-20-32 CONDENSER REMOVAL/INSTALLATION.)
23	D-pillar speaker (with Bose®) (See 09-20-25 D-PILLAR SPEAKER REMOVAL/INSTALLATION.) (See 09-20-26 D-PILLAR SPEAKER INSPECTION.)

AUDIO UNIT REMOVAL/INSTALLATION

id092000805500

Removal

1. Disconnect the negative battery cable.
2. Remove the decoration panel. (See 09-17-33 DECORATION PANEL REMOVAL/INSTALLATION.)

ENTERTAINMENT

3. Remove the bolt.
4. Remove the screws.

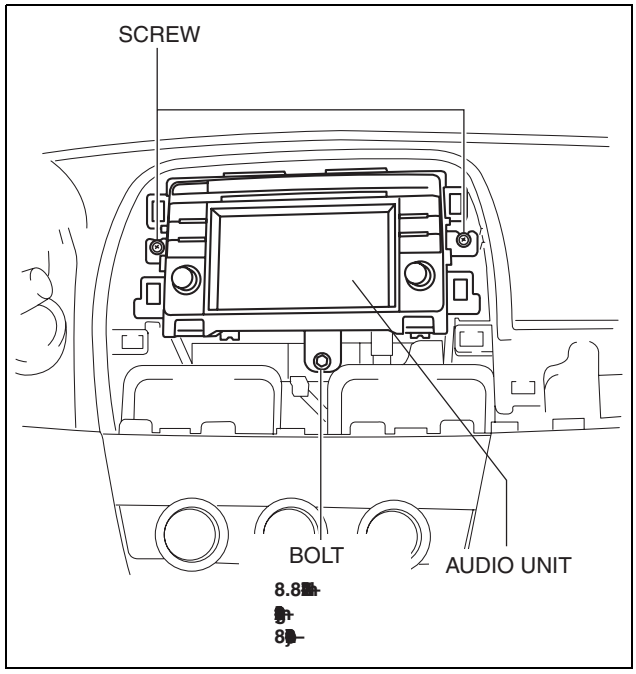

ac5uuw00002265

Note

- When removing the audio unit, the audio unit could interfere with the climate control unit and scratch the climate control unit. Perform the servicing by spreading a cloth in the position indicated in the figure.

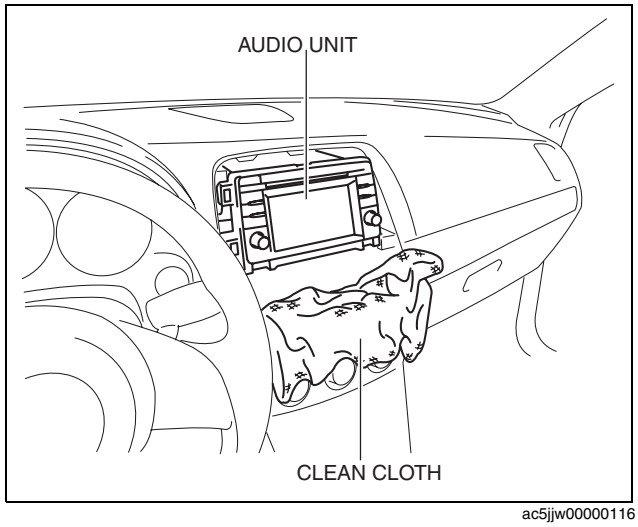

ac5jjw00000116

ENTERTAINMENT

5. Hold the audio unit in the position shown in the figure and pull it outward to disengage clips A, B, C, and D from the instrument panel.

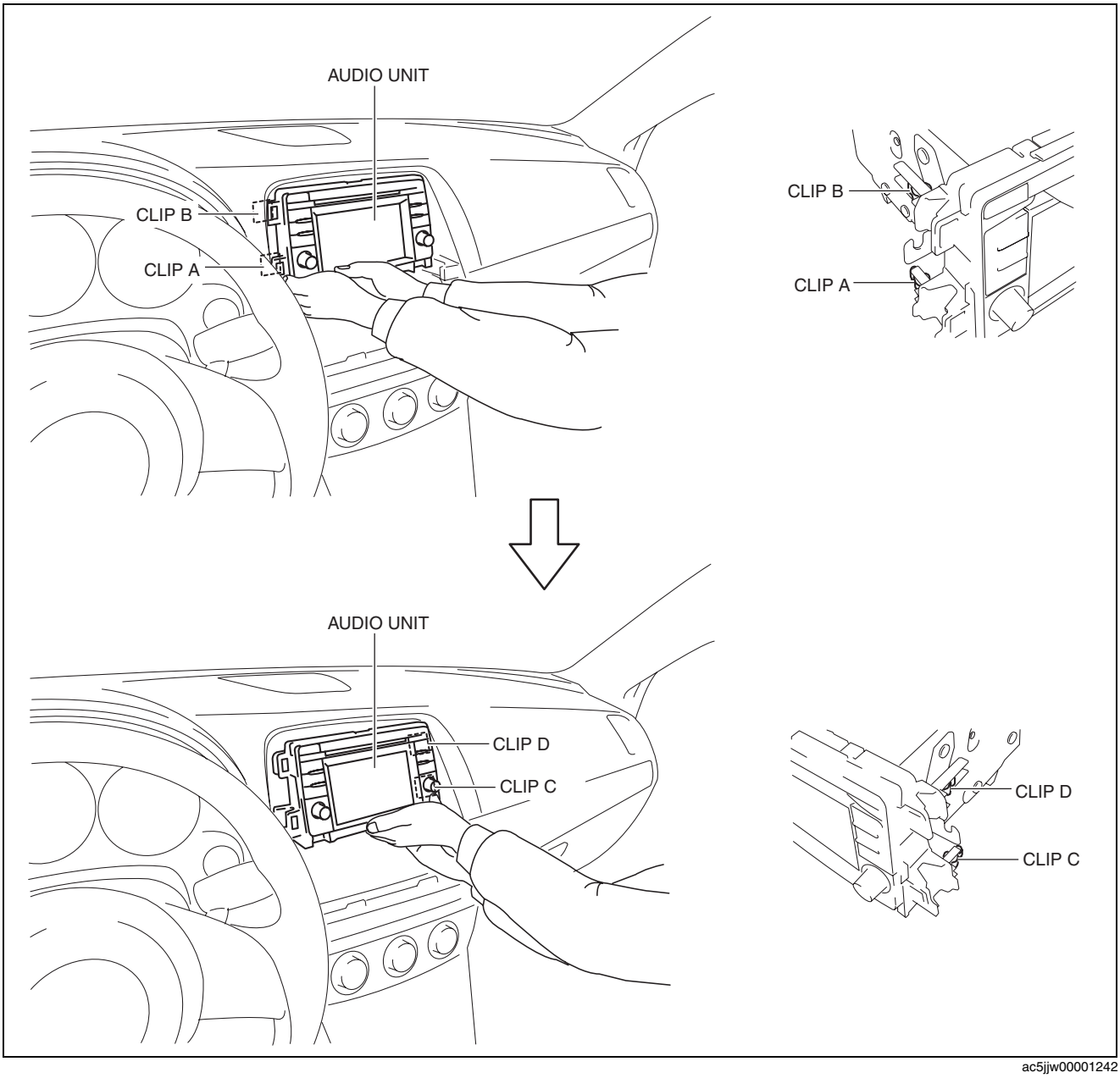

ac5jjw00001242

6. Disconnect the connectors.
7. Remove the audio unit.

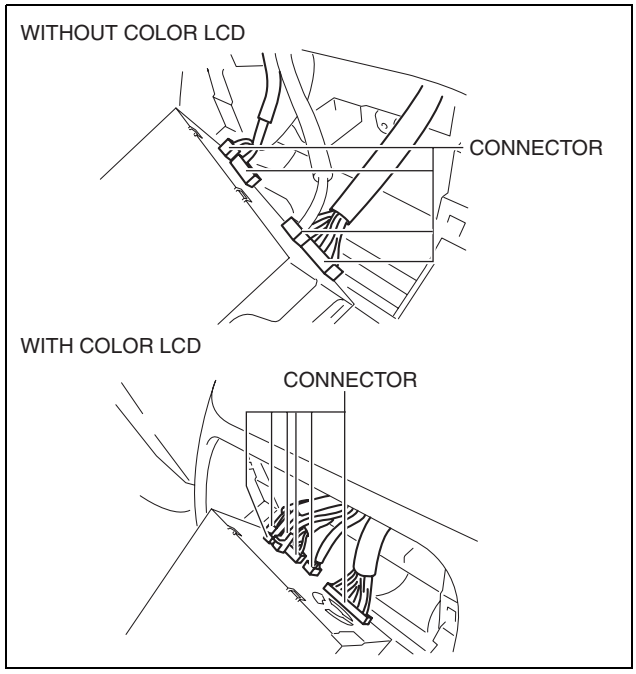

ac5jjw00001241

Installation

Note

- When installing the audio unit, the audio unit could interfere with the climate control unit and scratch the climate control unit. Perform the servicing by spreading a cloth in the position indicated in the figure.

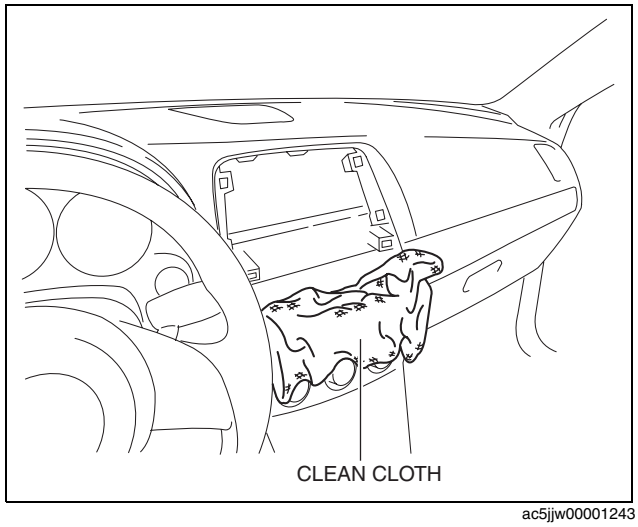

ac5jjw00001243

ENTERTAINMENT

1. Connect all the connectors.
2. Temporarily position the audio unit on the ribs and align the hole positions of the instrument panel with clips.

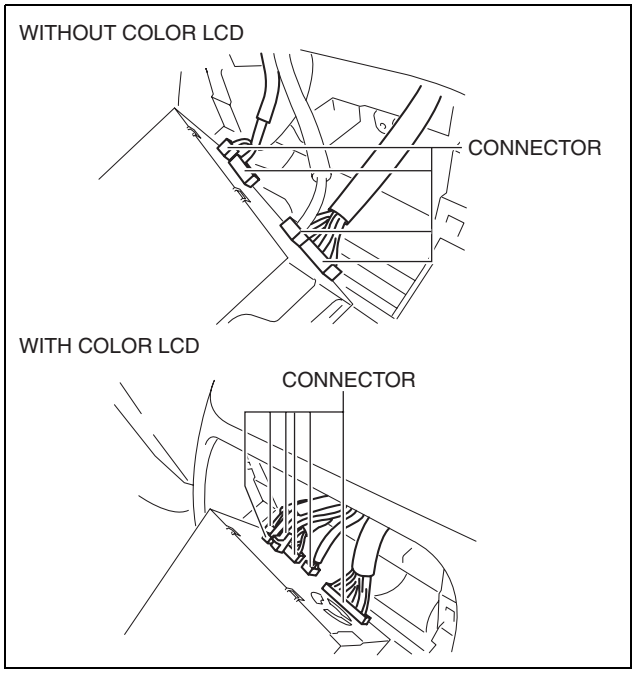

ac5jjw00001241

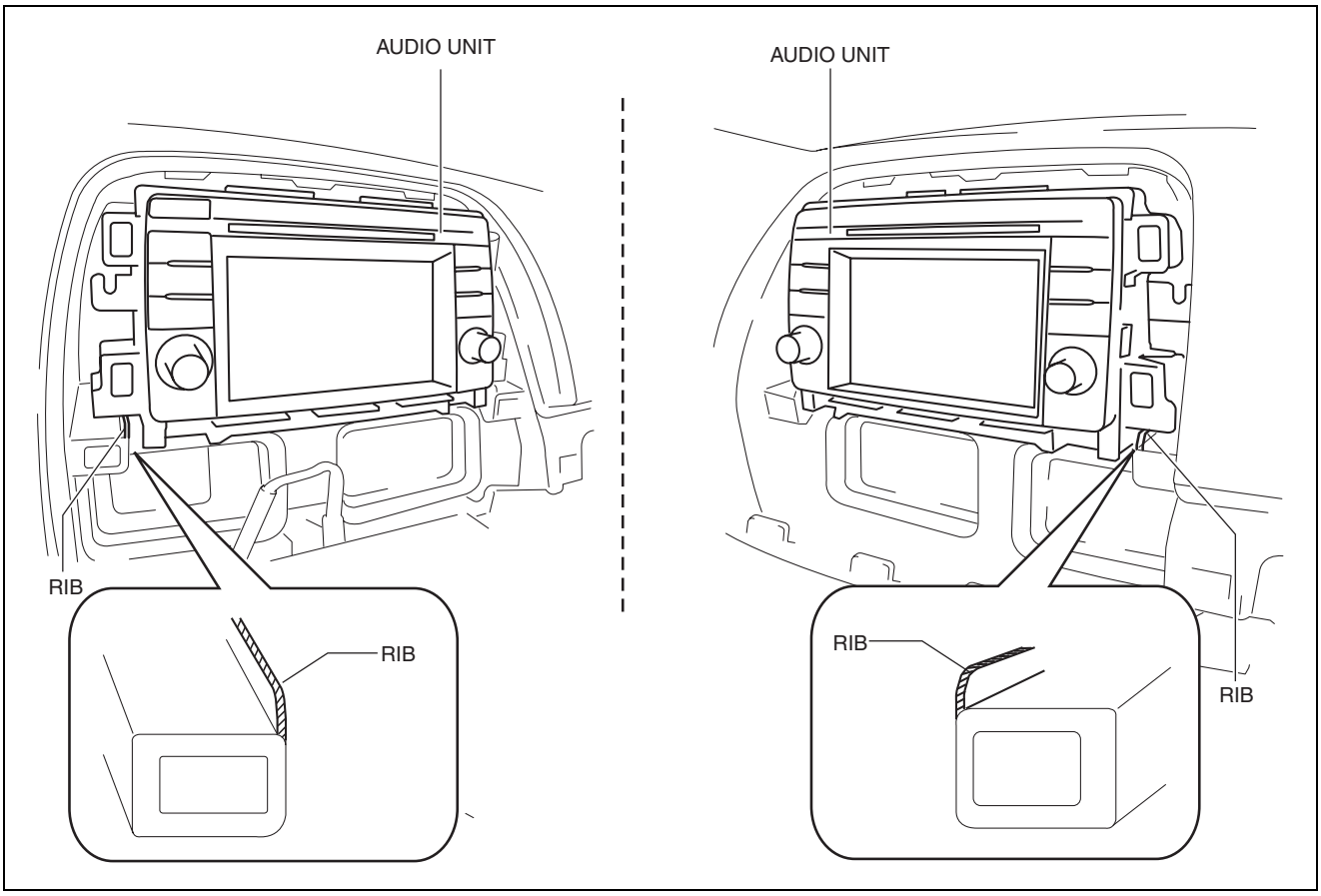

ac5wzw0000236

ENTERTAINMENT

3. Press the audio unit in the position shown in the figure and engage clips to the instrument panel.

Caution
- **If the audio unit switch area and screen are pressed it could cause a malfunction.**

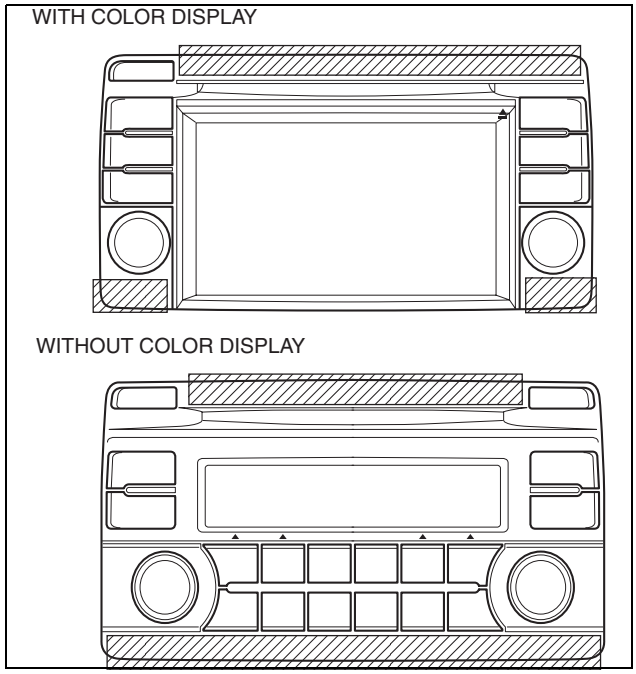

ac5jjw00001096

4. Install the screws.
5. Install the bolt.
6. Install the Decoration panel. (See 09-17-33 DECORATION PANEL REMOVAL/ INSTALLATION.)
7. Connect the negative battery cable. (See 01-17A-11 NEGATIVE BATTERY CABLE DISCONNECTION/CONNECTION [SKYACTIV-G 2.0].) (See 01-17A-13 NEGATIVE BATTERY CABLE DISCONNECTION/CONNECTION [SKYACTIV-G 2.0 (WITHOUT i-stop)].) (See 01-17B-9 NEGATIVE BATTERY CABLE DISCONNECTION/CONNECTION [SKYACTIV-D 2.2].)

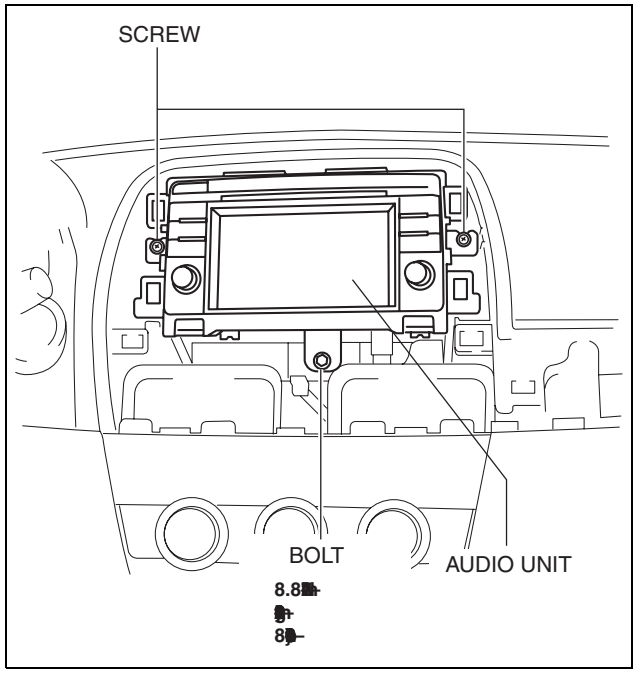

ac5uuw00002265

AUDIO UNIT PERSONALIZATION FEATURES SETTING PROCEDURE

id092000000200

Door Locks Systems

1. Switch the ignition ON (engine off or on).
2. Turn the audio unit power on.
3. Select the following from the audio unit screen.
   (1) “Setup”
   (2) “Vehicle”
   (3) “Door Locks“
4. Select the following items and change the setting.

Advanced keyless entry system

Audio unit display	Function	Initial setting	Settings	Control module
Auto Re-lock Time	The operation start time of the auto re-lock function can be changed.	30 seconds	30 seconds / 60 seconds / 90 seconds	Start stop unit

ENTERTAINMENT

Audio unit display	Function	Initial setting	Settings	Control module
Lock Beep Volume	The keyless beeper volume can be adjusted.	Medium	Off / Low / Medium / High	Start stop unit
Walk Away Lock	The out-of-area (reception area) type auto lock function can be set.	OFF	OFF / ON	Start stop unit

Keyless entry system

Audio unit display	Function	Initial setting	Settings	Control module
Auto Re-lock Time	The operation start time of the auto re-lock function can be changed.	30 seconds	30 seconds / 60 seconds / 90 seconds	Start stop unit

Lighting Systems

1. Switch the ignition ON (engine off or on).
2. Turn the audio unit power on.
3. Select the following from the audio unit screen.
   (1) “Setup”
   (2) “Vehicle”
   (3) “Lighting“
4. Select the following items and change the setting.

High beam control (HBC) system

Audio unit display	Function	Initial setting	Settings	Control module
High Beam Control	The high beam control (HBC) system can be switched between operable and inoperable.	On	On / Off	FSC

Turn light system

Audio unit display	Function	Initial setting	Settings	Control module
3-Flash Turn Signal	The turn light system can be switched between operable and inoperable.	On	On / Off	Rear body control module (RBCM)

Auto light system

Audio unit display	Function	Initial setting	Settings	Control module
Auto-headlight On	Auto light sensor sensitivity can be changed.	Medium	Light / Medium Light / Medium / Medium Dark / Dark	Rear body control module (RBCM)

Note

- If the mode is set to “Light” and “Medium Light”, the illumination level for illuminating the TNS and headlight increases. Therefore, the TNS and headlights illuminate when the ambient light is brighter than when the level is set to “Medium”. In addition, if the mode is set to “Medium Dark” and “Dark”, the illumination level for illuminating the TNS and headlights decreases. Therefore, the TNS and headlights illuminate when the ambient light is lower than when the level is set to “Medium”.

Room light control system

Audio unit display	Function	Initial setting	Settings	Control module
Interior Light Timeout - Door Open	The front/rear map light illumination time after any door is open can be changed.	30 minutes	60 minutes / 30 minutes / 10 minutes	Rear body control module (RBCM)
Interior Light Timeout - Door Closed	The front/rear map light illumination time after any door is closed can be changed.	15 seconds	60 seconds / 30 seconds / 15 seconds / 7.5 seconds	Rear body control module (RBCM)

Wiper Systems

1. Switch the ignition ON (engine off or on).
2. Turn the audio unit power on.
3. Select the following from the audio unit screen.
   (1) “Setup”
   (2) “Vehicle”
4. Select the following items and change the setting.

ENTERTAINMENT

Auto wiper system

Audio unit display	Function	Initial setting	Settings	Control module
Wipers	Auto wiper system can be set to operable or inoperable.	On (Rain Sensing)	On (Rain Sensing) / Off (Intermittent)	Rear body control module (RBCM)

CAR-NAVIGATION UNIT REMOVAL/INSTALLATION

id092000801000

Caution

- **The audio unit communicates with the car-navigation unit and records the presence/non-presence of the car-navigation unit when the ignition is switched to ACC or ON (engine off or on) after connecting the negative battery cable.**
- **If the commander switch is installed with the negative battery cable connected when the audio unit records that there is no car-navigation unit, the car-navigation unit does not operate.**
- **For the car-navigation unit installation/removal, disconnect the negative battery cable, switch the ignition to ACC or ON (engine off or on) after the servicing is completed, and the audio unit records the presence/non-presence of the car-navigation unit.**

1. Disconnect the negative battery cable. (See 01-17A-11 NEGATIVE BATTERY CABLE DISCONNECTION/CONNECTION [SKYACTIV-G 2.0].) (See 01-17A-13 NEGATIVE BATTERY CABLE DISCONNECTION/CONNECTION [SKYACTIV-G 2.0 (WITHOUT i-stop)].) (See 01-17B-9 NEGATIVE BATTERY CABLE DISCONNECTION/CONNECTION [SKYACTIV-D 2.2].)
2. Affix protective tape to the gaps between the car-navigation and lower panel as shown in the figure.

Caution

- **Before inserting a flathead screwdriver into the gap between the car-navigation and lower panel, affix protective tape to prevent damage. Otherwise, the lower panel could be damaged by the flathead screwdriver.**

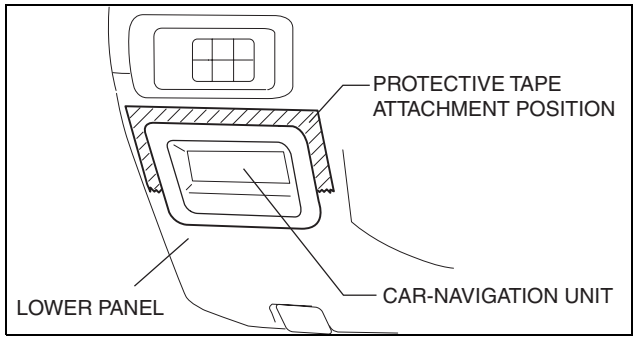

ac5wzw0000341

3. Insert your hand from the lower side of the lower panel and press the car-navigation unit so that there is a gap on the upper side of the car-navigation unit.

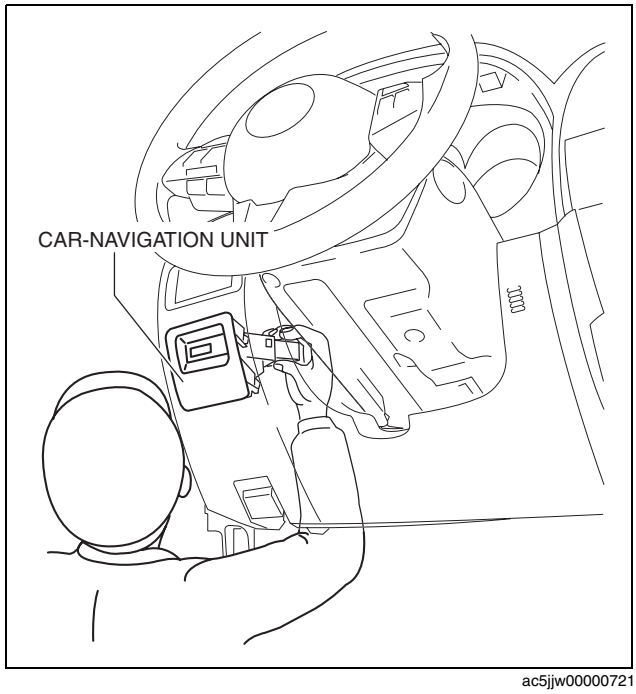

ac5jjw00000721

4. Insert a tape-wrapped fastener remover into the gap between the lower panel and car-navigation unit.
5. Move the fastener remover to the position of the arrow shown in the figure and detach the car-navigation unit clip from the lower panel.

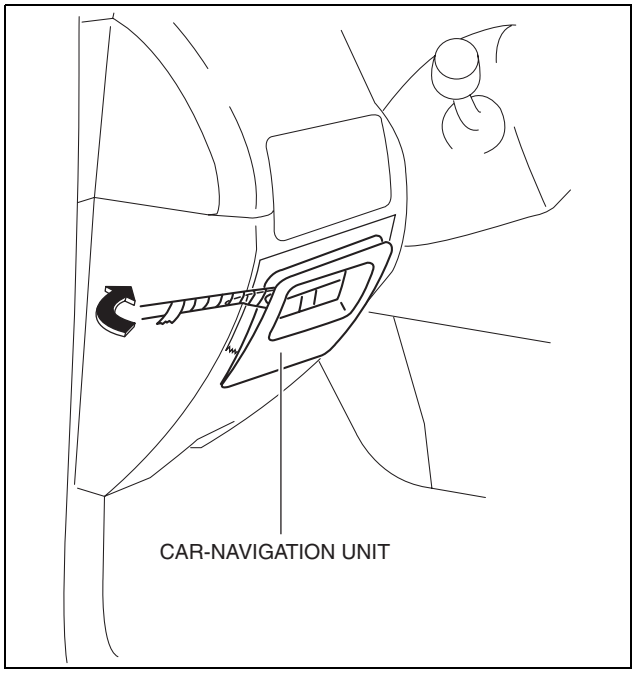

ac5jjw00000119

6. Pull out the car-navigation unit and disconnect the connectors.
7. While pressing the tabs of the clip in the direction of arrows (1) shown in the figure, press the clip in the direction of arrow (2) to detach it from the car-navigation unit.
8. Remove the clip.
9. Remove the car-navigation unit.
10. Install in the reverse order of removal. (See 09-20-12 Installation Note.)

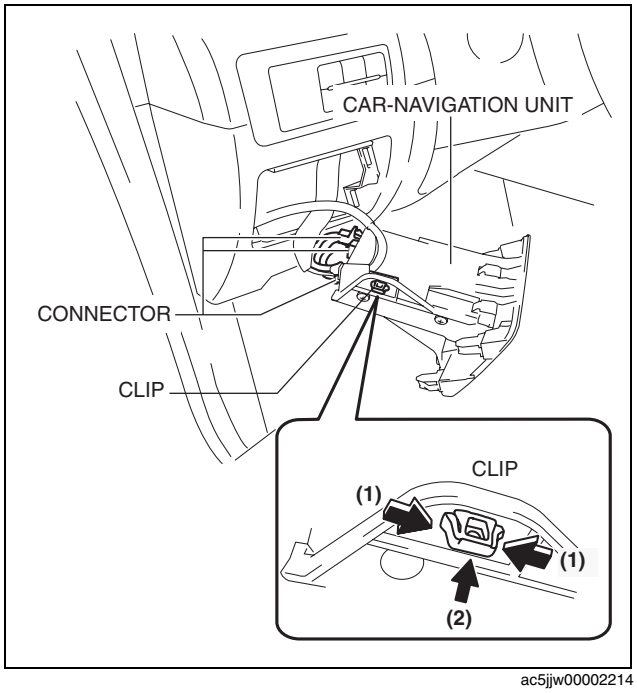

ac5jjw00002214

Installation Note

- Pressing the car-navigation unit when installing it could result in a malfunction. Therefore, press the panel area to install the car-navigation unit.

AUDIO AMPLIFIER REMOVAL/INSTALLATION

id092000801100

R.H.D.

1. Disconnect the negative battery cable. (See 01-17A-11 NEGATIVE BATTERY CABLE DISCONNECTION/CONNECTION [SKYACTIV-G 2.0].) (See 01-17A-13 NEGATIVE BATTERY CABLE DISCONNECTION/CONNECTION [SKYACTIV-G 2.0 (WITHOUT i-stop)].) (See 01-17B-9 NEGATIVE BATTERY CABLE DISCONNECTION/CONNECTION [SKYACTIV-D 2.2].)
2. Remove the front scuff plate (RH). (See 09-17-61 FRONT SCUFF PLATE REMOVAL/INSTALLATION.)

ENTERTAINMENT

3. Remove the bolts.

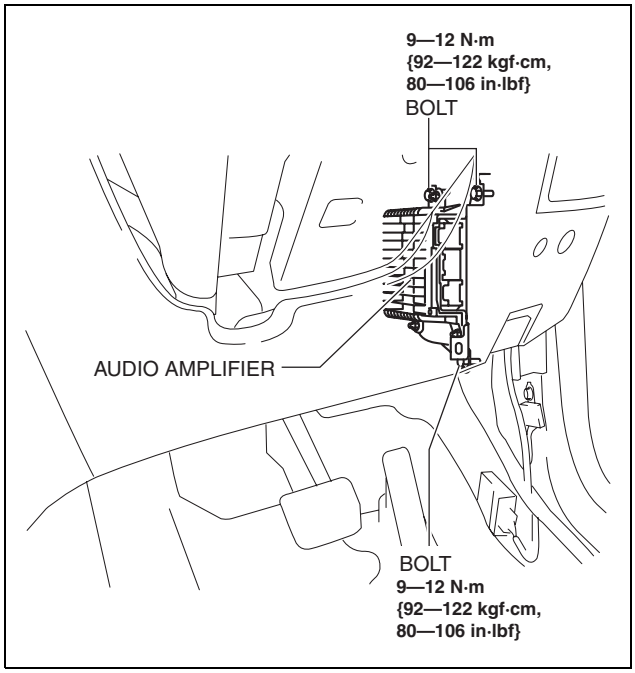

ac5jjw00000887

4. Lift up the audio amplifier in the direction of the arrow (1) shown in the figure, pull it in the direction of the arrow (2) shown in the figure, and pull out the audio amplifier hook from the body.

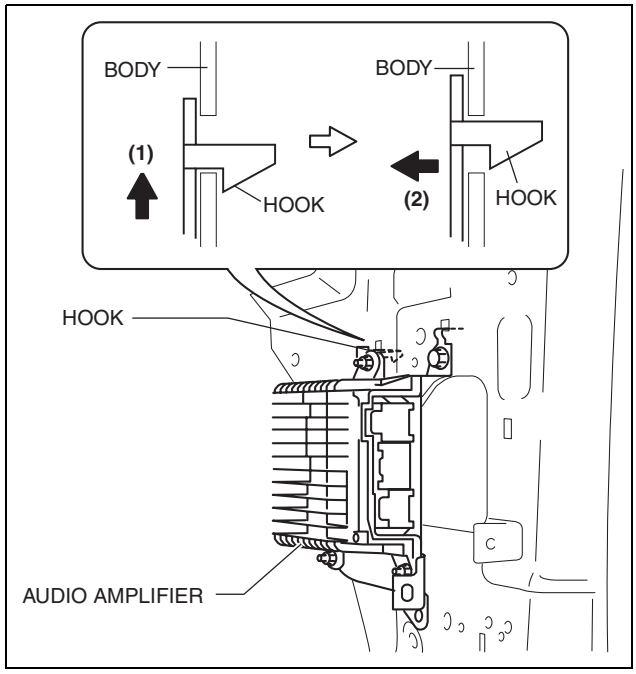

ac5wzw0000147

5. Disconnect the connectors.
6. While pressing the clip tabs in the direction of the arrows (1) shown in the figure, press the clip in the direction of the arrow (2) to detach the clip tabs from the audio amplifier.
7. Detach the clip.
8. Remove the audio amplifier.

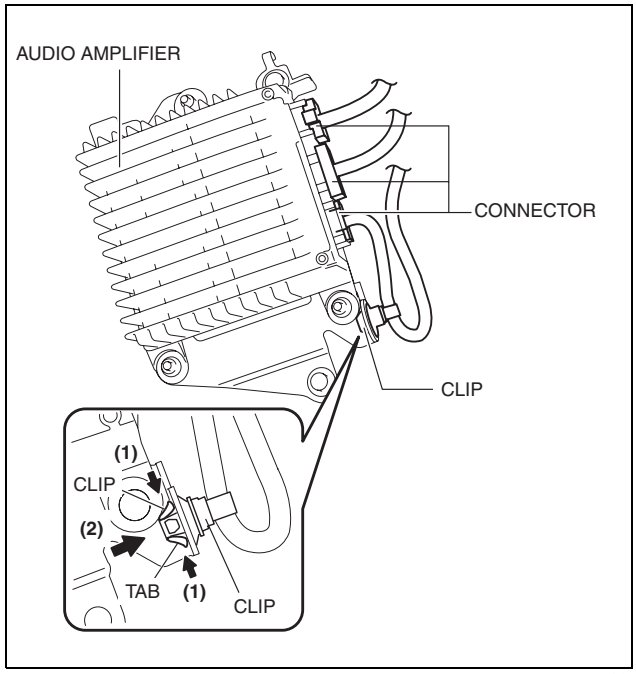

ac5wzw0000147

FRONT DOOR SPEAKER REMOVAL/INSTALLATION

id092000802200

Without Bose®

Note
- If the procedure is performed while holding the front door speaker cone, it could deform the cone causing a malfunction. Therefore, perform the procedure while holding any part other than the cone.

1. Disconnect the negative battery cable. (See 01-17A-11 NEGATIVE BATTERY CABLE DISCONNECTION/CONNECTION [SKYACTIV-G 2.0].) (See 01-17A-13 NEGATIVE BATTERY CABLE DISCONNECTION/CONNECTION [SKYACTIV-G 2.0 (WITHOUT i-stop)].) (See 01-17B-9 NEGATIVE BATTERY CABLE DISCONNECTION/CONNECTION [SKYACTIV-D 2.2].)
2. Remove the following parts:
   (1) Inner garnish (See 09-17-65 INNER GARNISH REMOVAL/INSTALLATION.)
   (2) Front door trim (See 09-17-65 FRONT DOOR TRIM REMOVAL/INSTALLATION.)

ENTERTAINMENT

3. Disconnect the connector.

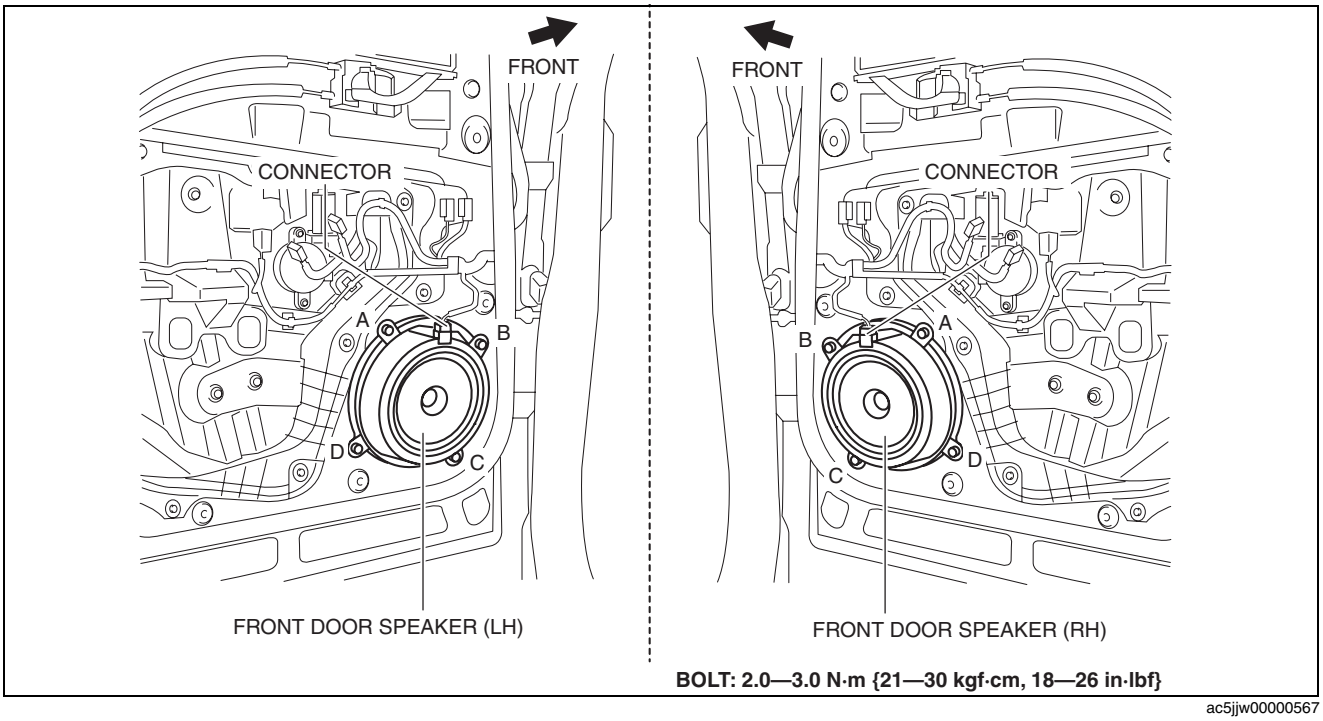

BOLT: 2.0—3.0 N·m {21—30 kgf·cm, 18—26 in·lbf}

ac5jjw00000567

4. Remove the bolts in alphabetical order.
5. Pull the front door speaker in the direction of the arrow shown in the figure and remove it while detaching the pins.
6. Install in the reverse order of removal.

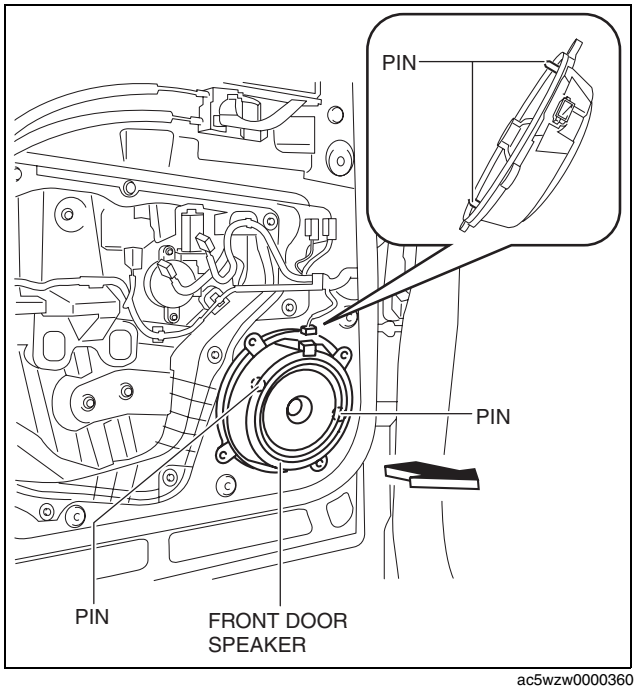

ac5wzw0000360

With Bose®

1. Disconnect the negative battery cable. (See 01-17A-11 NEGATIVE BATTERY CABLE DISCONNECTION/CONNECTION [SKYACTIV-G 2.0].) (See 01-17A-13 NEGATIVE BATTERY CABLE DISCONNECTION/CONNECTION [SKYACTIV-G 2.0 (WITHOUT i-stop)].) (See 01-17B-9 NEGATIVE BATTERY CABLE DISCONNECTION/CONNECTION [SKYACTIV-D 2.2].)
2. Remove the following parts:
   (1) Inner garnish (See 09-17-65 INNER GARNISH REMOVAL/INSTALLATION.)
   (2) Front door trim (See 09-17-65 FRONT DOOR TRIM REMOVAL/INSTALLATION.)

ENTERTAINMENT

3. Disconnect the connector.

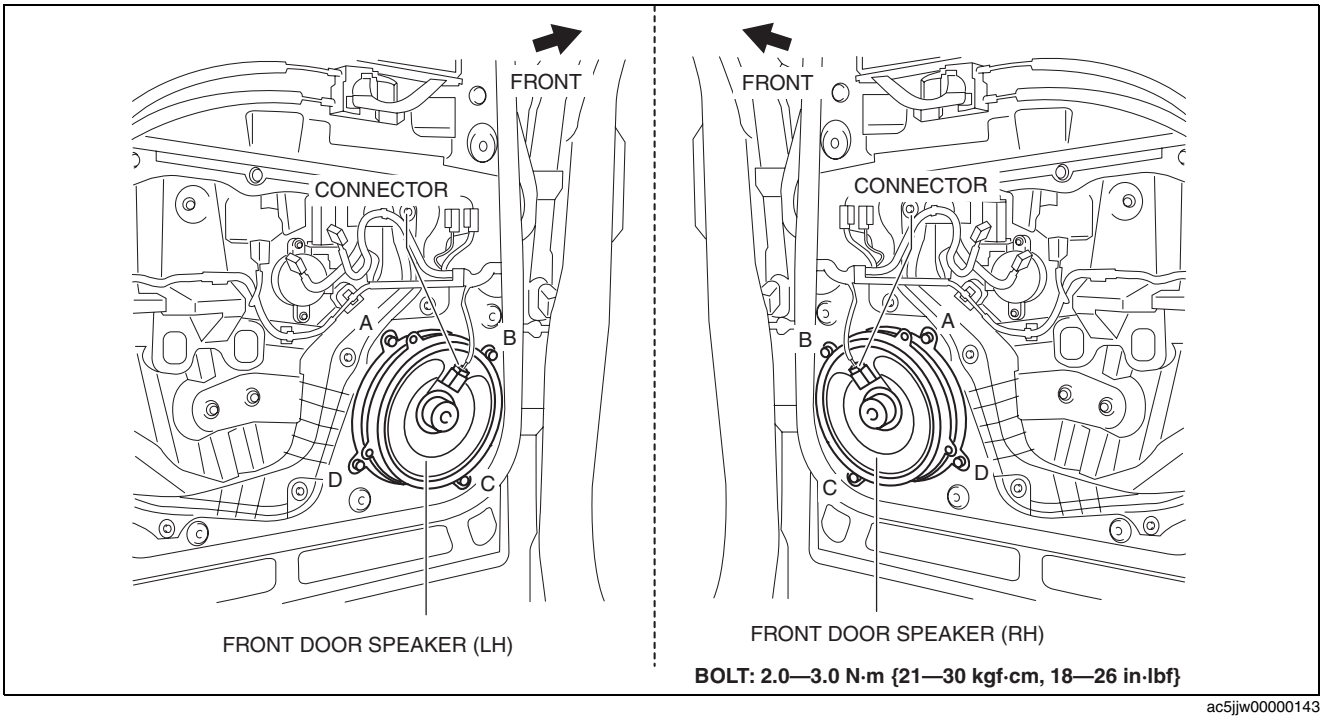

ac5jjw00000143

4. Remove the bolts in alphabetical order.
5. Pull the front door speaker in the direction of the arrow shown in the figure and remove it while detaching the pins.

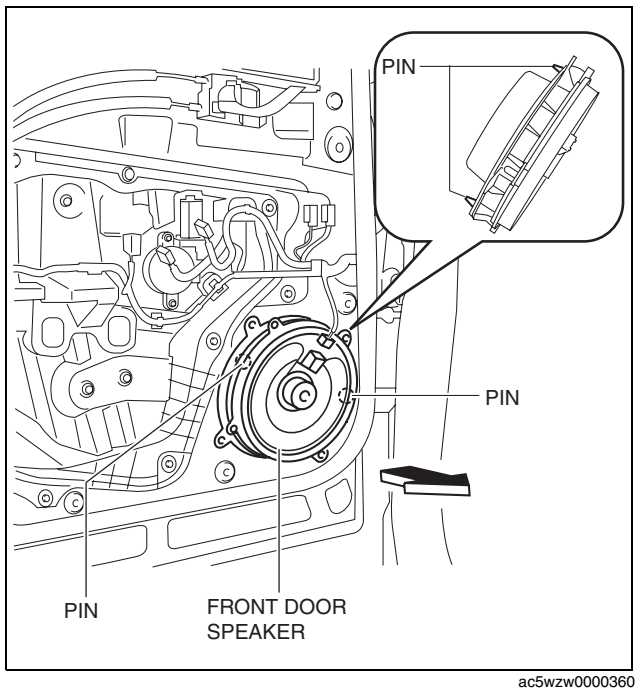

ac5wzw0000360

ENTERTAINMENT

6. Remove the screws.
7. Remove the front door speaker from the bracket.
8. Install in the reverse order of removal.

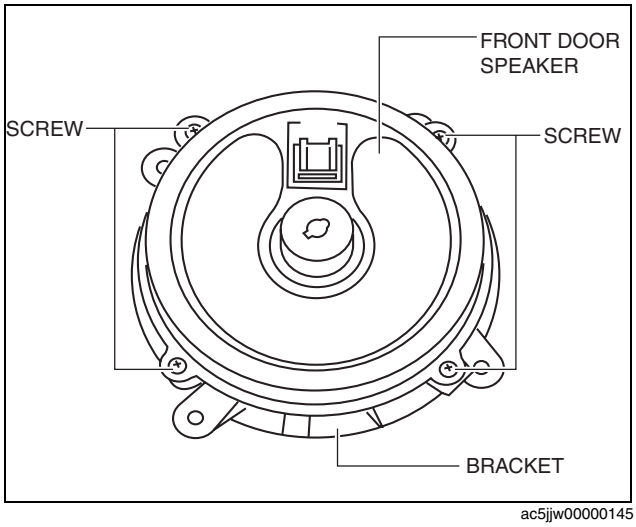

ac5jjw00000145

FRONT DOOR SPEAKER INSPECTION

id092000802300

1. Disconnect the negative battery cable. (See 01-17A-11 NEGATIVE BATTERY CABLE DISCONNECTION/CONNECTION [SKYACTIV-G 2.0].) (See 01-17A-13 NEGATIVE BATTERY CABLE DISCONNECTION/CONNECTION [SKYACTIV-G 2.0 (WITHOUT i-stop)].) (See 01-17B-9 NEGATIVE BATTERY CABLE DISCONNECTION/CONNECTION [SKYACTIV-D 2.2].)
2. Remove the following parts:
   (1) Inner garnish (See 09-17-65 INNER GARNISH REMOVAL/INSTALLATION)
   (2) Front door trim (See 09-17-65 FRONT DOOR TRIM REMOVAL/INSTALLATION.)
3. Disconnect the front door speaker connector. (See 09-20-15 FRONT DOOR SPEAKER REMOVAL/INSTALLATION.)
4. Verify that the resistance and continuity between the front door speaker terminals is as indicated in the table.
   - If not as indicated in the table, replace the front door speaker.

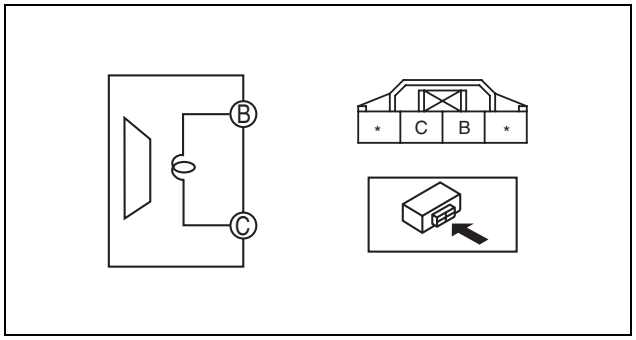

adejjw00001161

Without Bose®

: Resistance

Test condition	Terminal		Resistance (ohm)
	A	B	
Under any condition	○—W—○		3.4—4.6

am5ezw0000671

ENTERTAINMENT

With Bose®

: Resistance

Test condition	Terminal		Resistance (ohm)
	A	B	
Under any condition			1.25

ac5uuw00002871

REAR DOOR SPEAKER REMOVAL/INSTALLATION

id092000805000

Without Bose®

Note
- If the procedure is performed while holding the front door speaker cone, it could deform the cone causing a malfunction. Therefore, perform the procedure while holding any part other than the cone.

1. Disconnect the negative battery cable. (See 01-17A-11 NEGATIVE BATTERY CABLE DISCONNECTION/CONNECTION [SKYACTIV-G 2.0].) (See 01-17A-13 NEGATIVE BATTERY CABLE DISCONNECTION/CONNECTION [SKYACTIV-G 2.0 (WITHOUT i-stop)].) (See 01-17B-9 NEGATIVE BATTERY CABLE DISCONNECTION/CONNECTION [SKYACTIV-D 2.2].)
2. Remove the rear door trim. (See 09-17-74 REAR DOOR TRIM REMOVAL/INSTALLATION.)
3. Disconnect the connector.

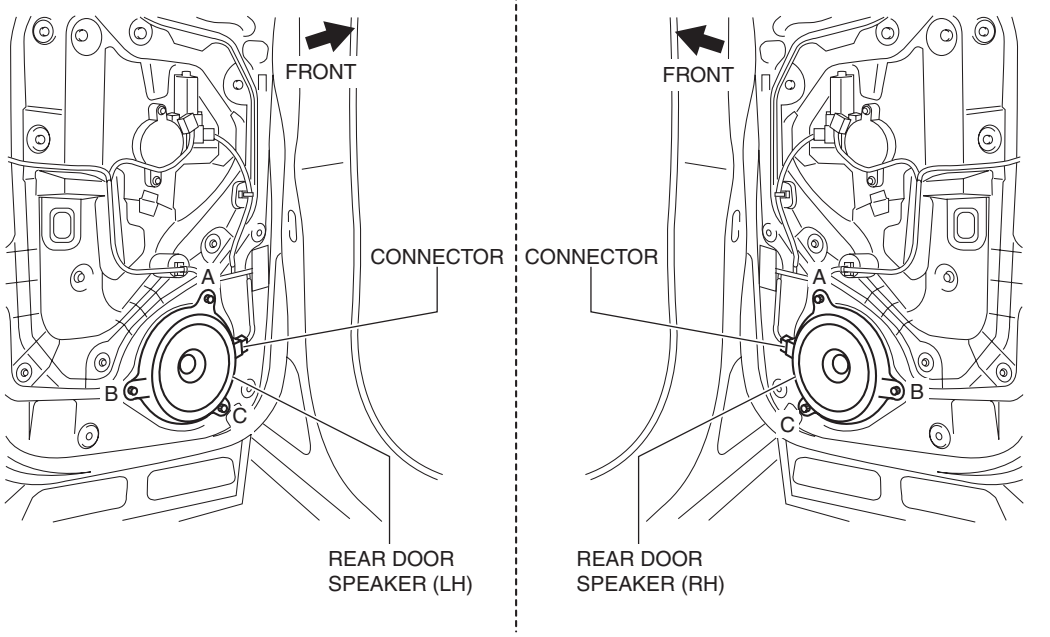

BOLT: 2.0—3.0 N·m {21—30 kgf·cm, 18—26 in·lbf}

ac5jjw00000151

4. Remove the bolts in alphabetical order.

ENTERTAINMENT

5. Pull the rear door speaker in the direction of the arrow shown in the figure and remove it while detaching the pins.
6. Install in the reverse order of removal.

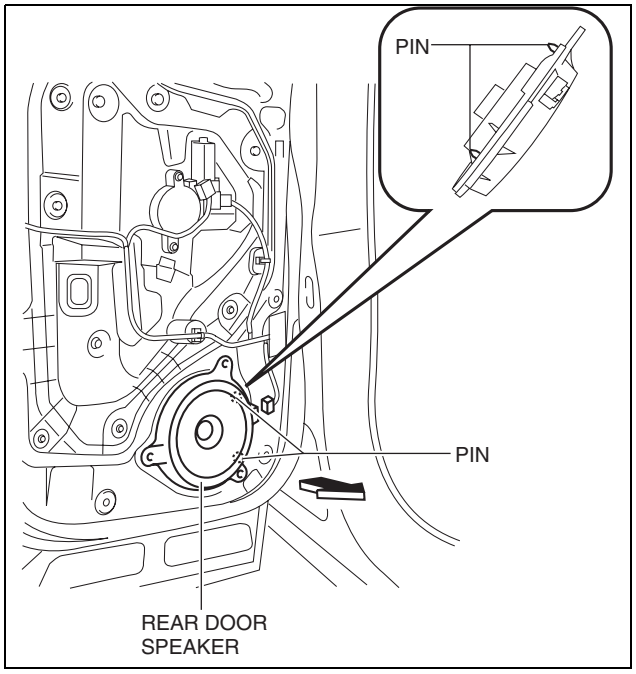

ac5wzw0000360

With Bose®

1. Disconnect the negative battery cable. (See 01-17A-11 NEGATIVE BATTERY CABLE DISCONNECTION/CONNECTION [SKYACTIV-G 2.0].) (See 01-17A-13 NEGATIVE BATTERY CABLE DISCONNECTION/CONNECTION [SKYACTIV-G 2.0 (WITHOUT i-stop)].) (See 01-17B-9 NEGATIVE BATTERY CABLE DISCONNECTION/CONNECTION [SKYACTIV-D 2.2].)
2. Remove the rear door trim. (See 09-17-74 REAR DOOR TRIM REMOVAL/INSTALLATION.)
3. Disconnect the connector.

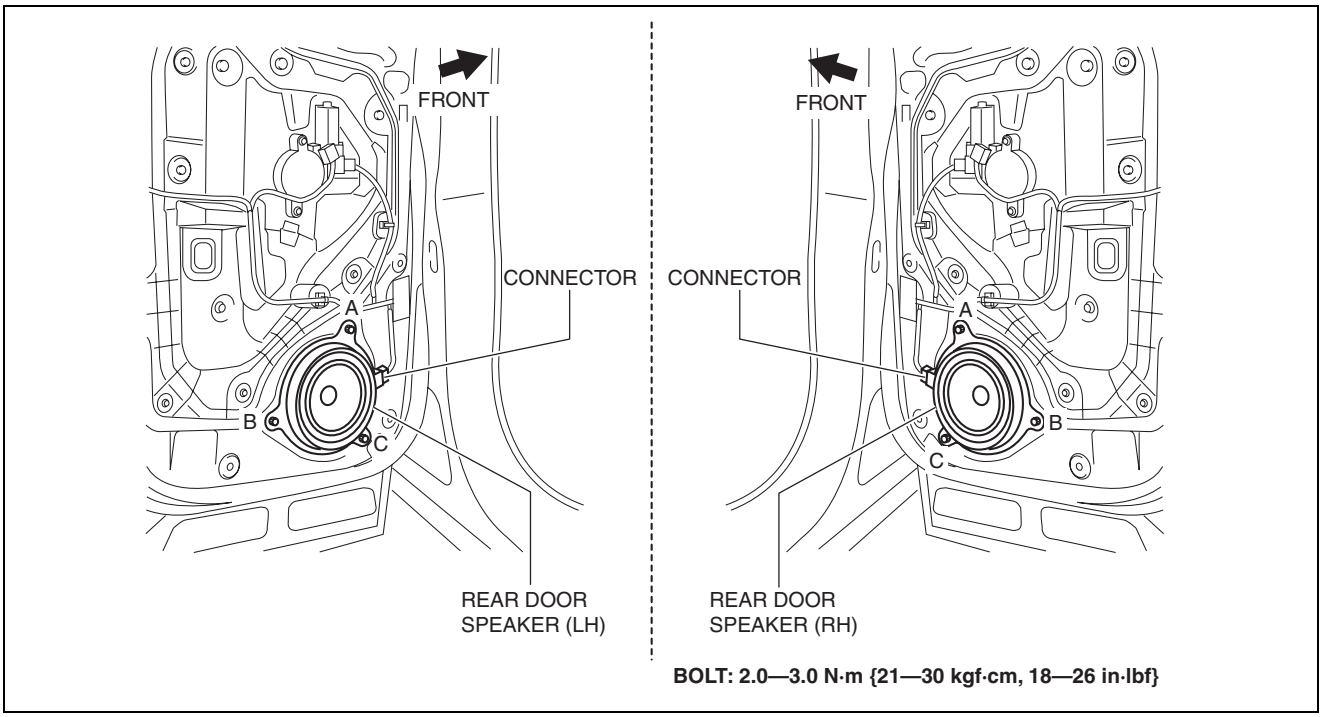

ac5jjw00000152

4. Remove the bolts in alphabetical order.

ENTERTAINMENT

5. Pull the rear door speaker in the direction of the arrow shown in the figure and remove it while detaching the pins.
6. Install in the reverse order of removal.

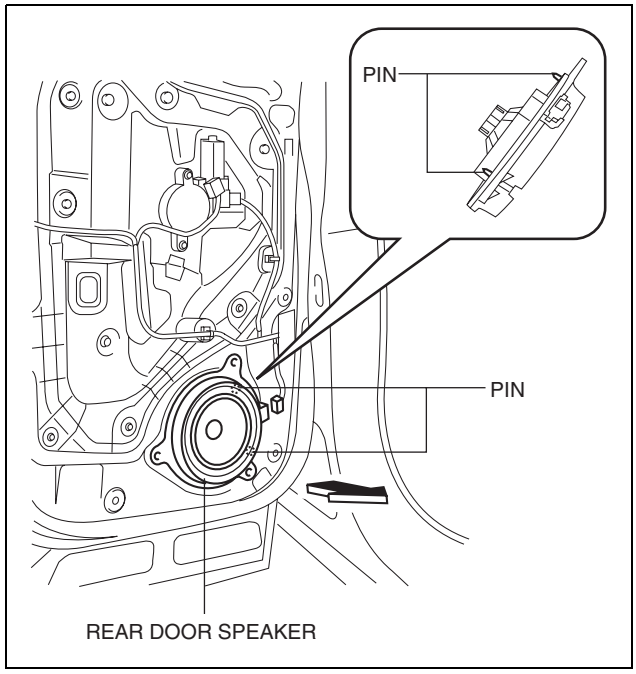

ac5jjw00000154

REAR DOOR SPEAKER INSPECTION

id092000804900

1. Disconnect the negative battery cable. (See 01-17A-11 NEGATIVE BATTERY CABLE DISCONNECTION/CONNECTION [SKYACTIV-G 2.0].) (See 01-17A-13 NEGATIVE BATTERY CABLE DISCONNECTION/CONNECTION [SKYACTIV-G 2.0 (WITHOUT i-stop)].) (See 01-17B-9 NEGATIVE BATTERY CABLE DISCONNECTION/CONNECTION [SKYACTIV-D 2.2].)
2. Remove the rear door trim. (See 09-17-74 REAR DOOR TRIM REMOVAL/INSTALLATION.)
3. Disconnect the rear door speaker connector. (See 09-20-19 REAR DOOR SPEAKER REMOVAL/INSTALLATION.)
4. Verify that the resistance between the rear door speaker terminals is as indicated in the table.
   - If not as indicated in the table, replace the rear door speaker.

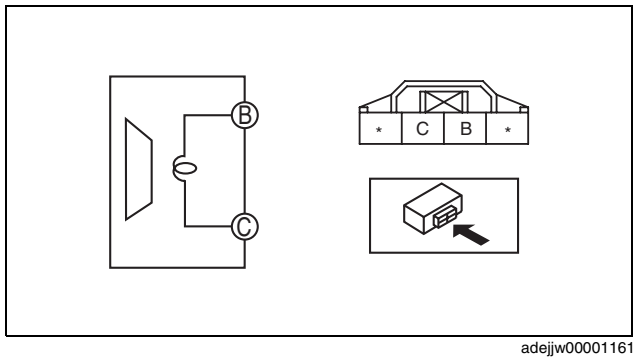

adejjw00001161

Without Bose®

: Resistance

Test condition	Terminal		Resistance (ohm)
	A	B	
Under any condition	○—WW—○		3.4—4.6

ac5uuw00002873

ENTERTAINMENT

With Bose®

: Resistance

Test condition	Terminal		Resistance (ohm)
	A	B	
Under any condition			3.7

ac5uuw00002872

FRONT CENTER SPEAKER REMOVAL/INSTALLATION

id092000866600

1. Disconnect the negative battery cable. (See 01-17A-11 NEGATIVE BATTERY CABLE DISCONNECTION/CONNECTION [SKYACTIV-G 2.0].) (See 01-17A-13 NEGATIVE BATTERY CABLE DISCONNECTION/CONNECTION [SKYACTIV-G 2.0 (WITHOUT i-stop)].) (See 01-17B-9 NEGATIVE BATTERY CABLE DISCONNECTION/CONNECTION [SKYACTIV-D 2.2].)
2. Remove the center speaker grille. (See 09-17-15 SPEAKER GRILLE REMOVAL/INSTALLATION.)
3. Remove the screws.
4. Remove the front center speaker.

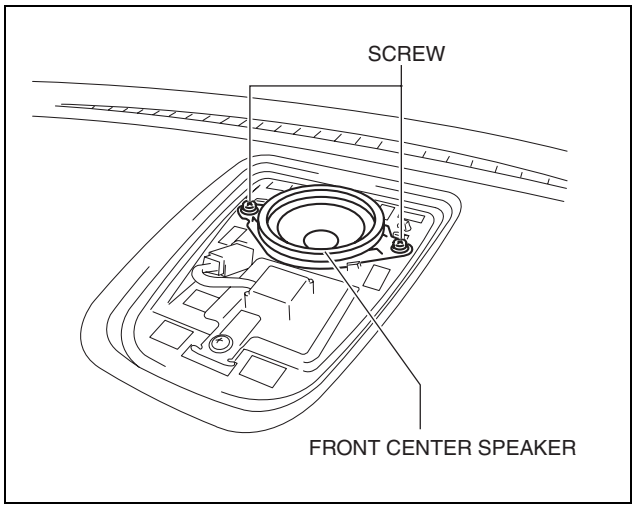

ac5jjw00000157

5. Disconnect the connector.
6. Install in the reverse order of removal.

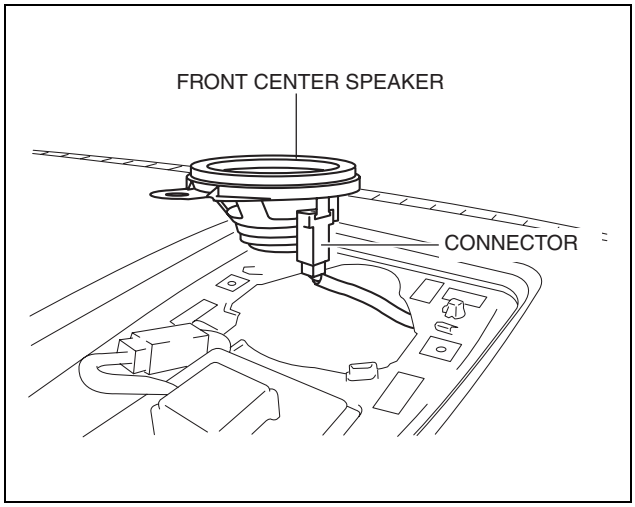

ac5jjw00000158

FRONT CENTER SPEAKER INSPECTION

id092000866700

1. Disconnect the negative battery cable. (See 01-17A-11 NEGATIVE BATTERY CABLE DISCONNECTION/CONNECTION [SKYACTIV-G 2.0].) (See 01-17A-13 NEGATIVE BATTERY CABLE DISCONNECTION/CONNECTION [SKYACTIV-G 2.0 (WITHOUT i-stop)].) (See 01-17B-9 NEGATIVE BATTERY CABLE DISCONNECTION/CONNECTION [SKYACTIV-D 2.2].)
2. Remove the center speaker grille. (See 09-17-15 SPEAKER GRILLE REMOVAL/INSTALLATION.)

ENTERTAINMENT

3. Remove the front center speaker. (See 09-20-22 FRONT CENTER SPEAKER REMOVAL/INSTALLATION.)
4. Verify that the resistance between the front center speaker terminals is as indicated in the table.

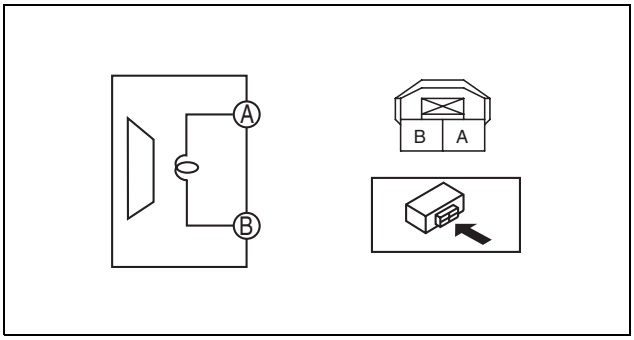

am6zzw0000161

- If not as indicated in the table, replace the front center speaker.

: Resistance

Test condition	Terminal		Resistance (ohm)
	A	B	
Under any condition			3.24—3.96

ac5uuw00002875

TWEETER REMOVAL/INSTALLATION

id092000808000

1. Disconnect the negative battery cable. (See 01-17A-11 NEGATIVE BATTERY CABLE DISCONNECTION/CONNECTION [SKYACTIV-G 2.0].) (See 01-17A-13 NEGATIVE BATTERY CABLE DISCONNECTION/CONNECTION [SKYACTIV-G 2.0 (WITHOUT i-stop)].) (See 01-17B-9 NEGATIVE BATTERY CABLE DISCONNECTION/CONNECTION [SKYACTIV-D 2.2].)
2. Remove the side speaker grille. (See 09-17-15 SPEAKER GRILLE REMOVAL/INSTALLATION.)
3. Remove the screws.

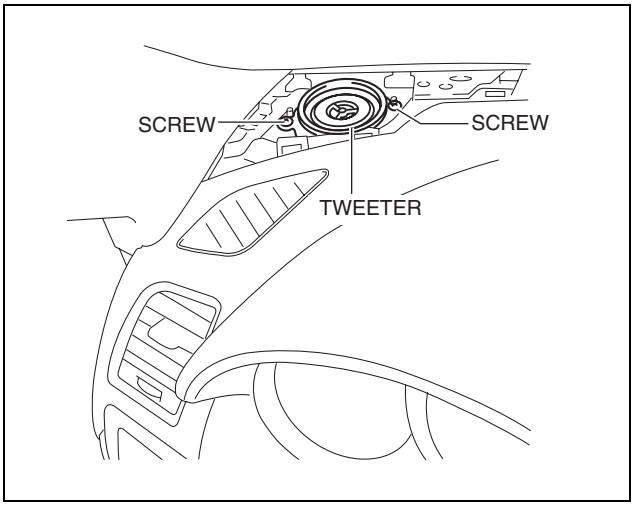

ac5jjw00000159

ENTERTAINMENT

4. Pull out the tweeter and disconnect the connector.
5. Install in the reverse order of removal.

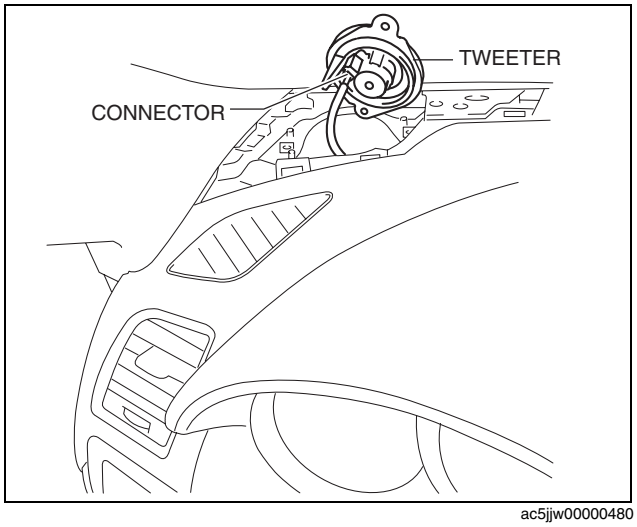

ac5jjw00000480

TWEETER INSPECTION

id092000808100

1. Disconnect the negative battery cable. (See 01-17A-11 NEGATIVE BATTERY CABLE DISCONNECTION/CONNECTION [SKYACTIV-G 2.0].) (See 01-17A-13 NEGATIVE BATTERY CABLE DISCONNECTION/CONNECTION [SKYACTIV-G 2.0 (WITHOUT i-stop)].) (See 01-17B-9 NEGATIVE BATTERY CABLE DISCONNECTION/CONNECTION [SKYACTIV-D 2.2].)
2. Remove the side speaker grille. (See 09-17-15 SPEAKER GRILLE REMOVAL/INSTALLATION.)
3. Remove the tweeter. (See 09-20-23 TWEETER REMOVAL/INSTALLATION.)
4. Verify that the resistance between the tweeter terminals is as indicated in the table.
   - If not as indicated in the table, replace the tweeter.

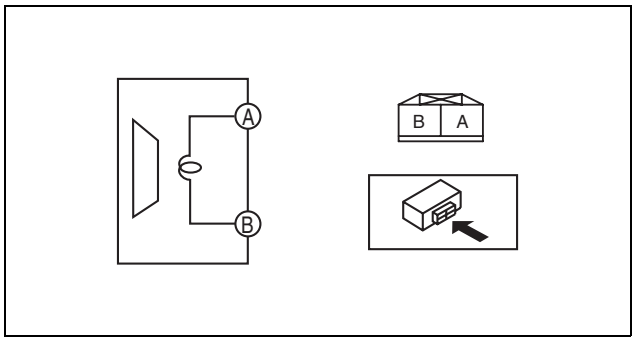

am6zzw0000204

Without Bose®

: Resistance

Test condition	Terminal		Resistance (ohm)
	A	B	
Under any condition			3.4—4.6

am5ezw0000671

ENTERTAINMENT

With Bose®

: Resistance

Test condition	Terminal		Resistance (ohm)
	A	B	
Under any condition	○—W—○		3.24—3.96

ac5uuw00002876

D-PILLAR SPEAKER REMOVAL/INSTALLATION

id092000811000

1. Disconnect the negative battery cable. (See 01-17A-11 NEGATIVE BATTERY CABLE DISCONNECTION/CONNECTION [SKYACTIV-G 2.0].) (See 01-17A-13 NEGATIVE BATTERY CABLE DISCONNECTION/CONNECTION [SKYACTIV-G 2.0 (WITHOUT i-stop)].) (See 01-17B-9 NEGATIVE BATTERY CABLE DISCONNECTION/CONNECTION [SKYACTIV-D 2.2].)
2. Remove the following parts:
   (1) Trunk board (See 09-17-85 TRUNK BOARD REMOVAL/INSTALLATION.)
   (2) Trunk end trim (See 09-17-78 TRUNK END TRIM REMOVAL/INSTALLATION.)
   (3) Rear scuff plate (See 09-17-63 REAR SCUFF PLATE REMOVAL/INSTALLATION.)
   (4) Trunk side trim (See 09-17-80 TRUNK SIDE TRIM REMOVAL/INSTALLATION.)
   (5) D-pillar trim (See 09-17-60 D-PILLAR TRIM REMOVAL/INSTALLATION.)
3. Disconnect the connector.
4. Remove the screws.
5. Remove the D-pillar speaker.

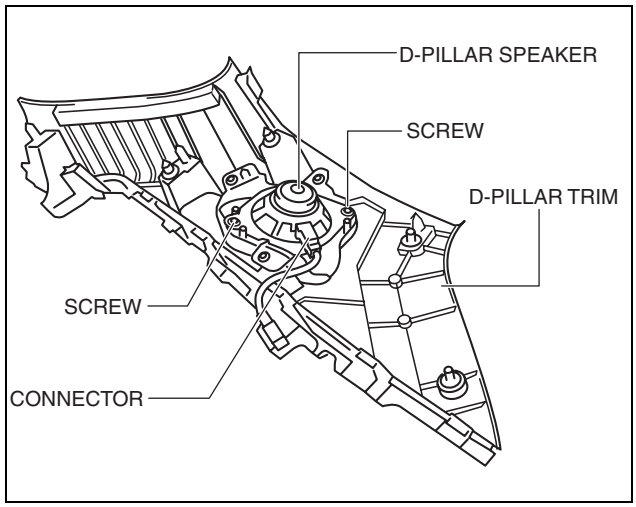

ac5jjw00000164

6. While pressing the tabs of the clip in the direction of the arrow (1) shown in the figure, press it in the direction of the arrow (2) to detach the short-cord clip from the D-pillar trim.
7. Remove the short cord.
8. Install in the reverse order of removal.

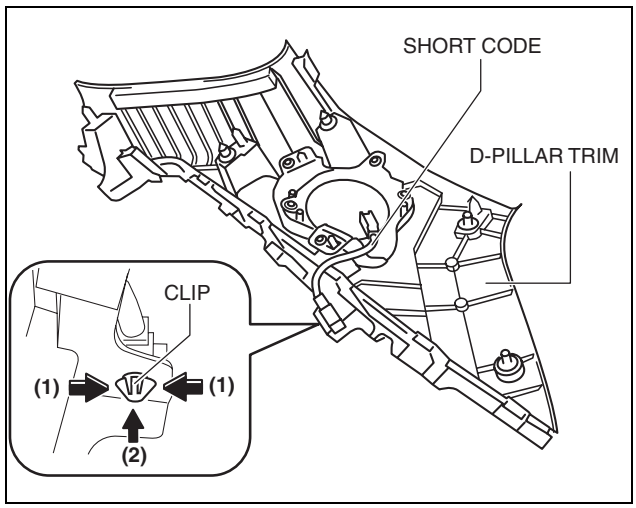

ac5wzw0000515

ENTERTAINMENT

D-PILLAR SPEAKER INSPECTION

id092000811200

D-pillar speaker

1. Disconnect the negative battery cable. (See 01-17A-11 NEGATIVE BATTERY CABLE DISCONNECTION/CONNECTION [SKYACTIV-G 2.0].) (See 01-17A-13 NEGATIVE BATTERY CABLE DISCONNECTION/CONNECTION [SKYACTIV-G 2.0 (WITHOUT i-stop)].) (See 01-17B-9 NEGATIVE BATTERY CABLE DISCONNECTION/CONNECTION [SKYACTIV-D 2.2].)
2. Remove the following parts:
   (1) Trunk board (See 09-17-85 TRUNK BOARD REMOVAL/INSTALLATION.)
   (2) Trunk end trim (See 09-17-78 TRUNK END TRIM REMOVAL/INSTALLATION.)
   (3) Rear scuff plate (See 09-17-63 REAR SCUFF PLATE REMOVAL/INSTALLATION.)
   (4) Trunk side trim (See 09-17-80 TRUNK SIDE TRIM REMOVAL/INSTALLATION.)
   (5) D-pillar trim (See 09-17-60 D-PILLAR TRIM REMOVAL/INSTALLATION.)
3. Disconnect the D-pillar speaker connector. (See 09-20-25 D-PILLAR SPEAKER REMOVAL/INSTALLATION.)
4. Verify that the resistance between the D-pillar speaker terminals is as indicated in the table.

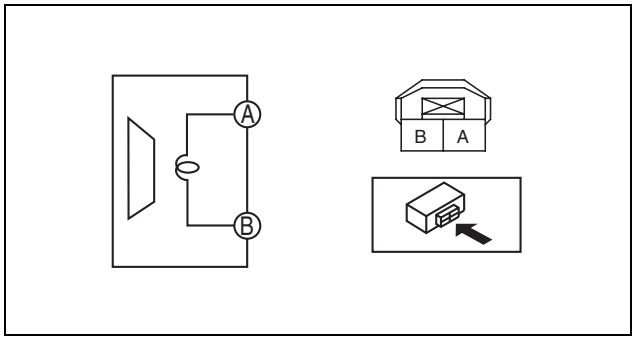

am6zzw0000161

- If not as indicated in the table, replace the D-pillar speaker.

Test condition	Terminal		Resistance (ohm)
	A	B	
Under any condition	○	○	3.24—3.96

ac5uuw00002877

Short-cord

1. Disconnect the negative battery cable. (See 01-17A-11 NEGATIVE BATTERY CABLE DISCONNECTION/CONNECTION [SKYACTIV-G 2.0].) (See 01-17A-13 NEGATIVE BATTERY CABLE DISCONNECTION/CONNECTION [SKYACTIV-G 2.0 (WITHOUT i-stop)].) (See 01-17B-9 NEGATIVE BATTERY CABLE DISCONNECTION/CONNECTION [SKYACTIV-D 2.2].)
2. Remove the following parts:
   (1) Trunk board (See 09-17-85 TRUNK BOARD REMOVAL/INSTALLATION.)
   (2) Trunk end trim (See 09-17-78 TRUNK END TRIM REMOVAL/INSTALLATION.)
   (3) Rear scuff plate (See 09-17-63 REAR SCUFF PLATE REMOVAL/INSTALLATION.)
   (4) Trunk side trim (See 09-17-80 TRUNK SIDE TRIM REMOVAL/INSTALLATION.)
   (5) D-pillar trim (See 09-17-60 D-PILLAR TRIM REMOVAL/INSTALLATION.)
3. Disconnect the D-pillar speaker connector. (See 09-20-25 D-PILLAR SPEAKER REMOVAL/INSTALLATION.)
4. Verify that the continuity between the short-cord terminals is as indicated in the table.

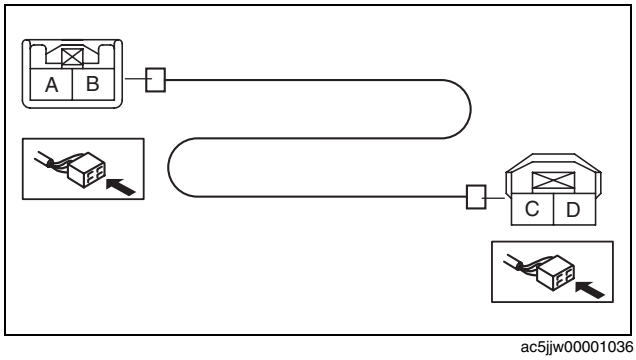

ac5jjw00001036

ENTERTAINMENT

- If not as indicated in the table, replace the short-cord.

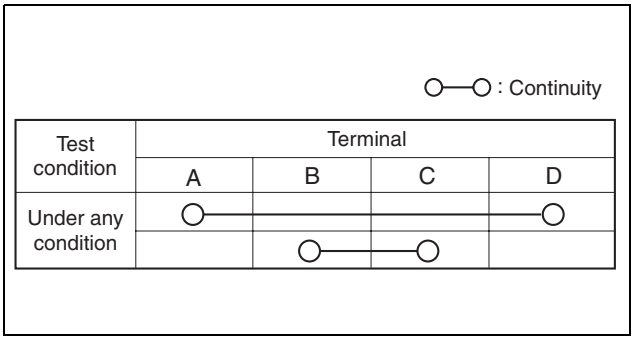

ac5wzw0000515

AudioPilot®2 MICROPHONE REMOVAL/INSTALLATION

id092000866300

Note

- AudioPilot®2 is a registered trademark of Bose® Corporation.

1. Disconnect the negative battery cable. (See 01-17A-11 NEGATIVE BATTERY CABLE DISCONNECTION/CONNECTION [SKYACTIV-G 2.0].) (See 01-17A-13 NEGATIVE BATTERY CABLE DISCONNECTION/CONNECTION [SKYACTIV-G 2.0 (WITHOUT i-stop)].) (See 01-17B-9 NEGATIVE BATTERY CABLE DISCONNECTION/CONNECTION [SKYACTIV-D 2.2].)
2. Remove the following parts:
   (1) Driver-side front scuff plate (See 09-17-61 FRONT SCUFF PLATE REMOVAL/INSTALLATION.)
   (2) Driver-side front side trim (See 09-17-62 FRONT SIDE TRIM REMOVAL/INSTALLATION.)
   (3) Switch panel (See 09-17-18 SWITCH PANEL REMOVAL/INSTALLATION.)
   (4) Decoration panel (See 09-17-33 DECORATION PANEL REMOVAL/INSTALLATION.)
   (5) Shift lever knob (MTX) (See 05-16A-1 MANUAL TRANSAXLE SHIFT MECHANISM REMOVAL/INSTALLATION [C66M-R, C66MX-R].)
   (6) Front console box (See 09-17-40 FRONT CONSOLE BOX REMOVAL/INSTALLATION.)
   (7) Shift panel (See 09-17-42 SHIFT PANEL REMOVAL/INSTALLATION.)
   (8) Upper panel (See 09-17-44 UPPER PANEL REMOVAL/INSTALLATION.)
   (9) Rear console (See 09-17-45 REAR CONSOLE REMOVAL/INSTALLATION.)
   (10) Side wall (See 09-17-49 SIDE WALL REMOVAL/INSTALLATION.)
   (11) Front console (See 09-17-50 FRONT CONSOLE REMOVAL/INSTALLATION.)
   (12) Bonnet release lever (See 09-14-17 BONNET LATCH AND RELEASE LEVER REMOVAL/INSTALLATION.)
   (13) Driver-side lower panel (See 09-17-35 LOWER PANEL REMOVAL/INSTALLATION.)
3. Disconnect the connector.
4. Remove the nut.
5. Remove the AudioPilot®2 microphone.
6. Install in the reverse order of removal.

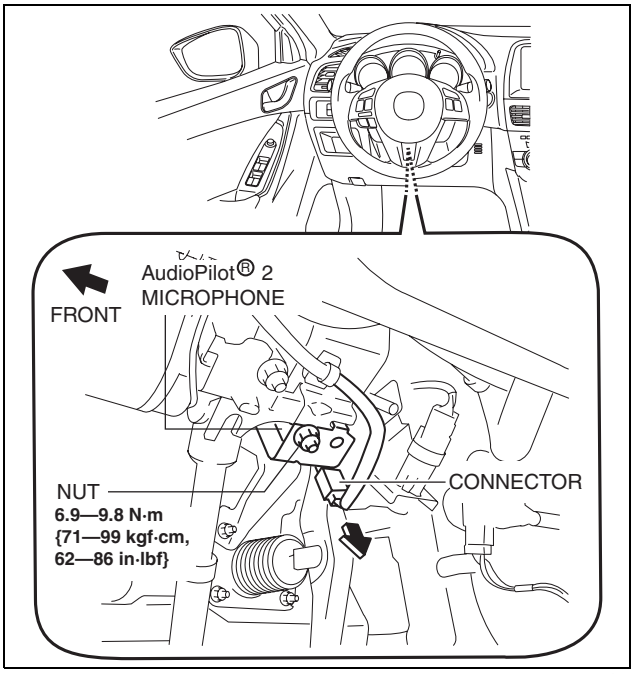

ac5wzw0000439

ENTERTAINMENT

CENTER ROOF ANTENNA REMOVAL/INSTALLATION

id092000801600

1. Disconnect the negative battery cable. (See 01-17A-11 NEGATIVE BATTERY CABLE DISCONNECTION/CONNECTION [SKYACTIV-G 2.0].) (See 01-17A-13 NEGATIVE BATTERY CABLE DISCONNECTION/CONNECTION [SKYACTIV-G 2.0 (WITHOUT i-stop)].) (See 01-17B-9 NEGATIVE BATTERY CABLE DISCONNECTION/CONNECTION [SKYACTIV-D 2.2].)
2. Remove the following parts:
   (1) Front scuff plate (See 09-17-61 FRONT SCUFF PLATE REMOVAL/INSTALLATION.)
   (2) Rear scuff plate (See 09-17-63 REAR SCUFF PLATE REMOVAL/INSTALLATION.)
   (3) B-pillar lower trim (See 09-17-57 B-PILLAR LOWER TRIM REMOVAL/INSTALLATION.)
   (4) Front seat belt adjusting cover (See 08-11-2 FRONT SEAT BELT REMOVAL/INSTALLATION.)
   (5) Front seat belt upper anchor installation bolt (See 08-11-2 FRONT SEAT BELT REMOVAL/INSTALLATION.)
   (6) B-pillar upper trim (See 09-17-58 B-PILLAR UPPER TRIM REMOVAL/INSTALLATION.)
   (7) Trunk board (See 09-17-85 TRUNK BOARD REMOVAL/INSTALLATION.)
   (8) Trunk end trim (See 09-17-78 TRUNK END TRIM REMOVAL/INSTALLATION.)
   (9) Trunk side trim (See 09-17-80 TRUNK SIDE TRIM REMOVAL/INSTALLATION.)
   (10) D-pillar trim (See 09-17-60 D-PILLAR TRIM REMOVAL/INSTALLATION.)
   (11) C-pillar trim (See 09-17-59 C-PILLAR TRIM REMOVAL/INSTALLATION.)
3. Remove the rear passenger's assist handle. (See 09-17-91 ASSIST HANDLE REMOVAL/INSTALLATION.)
4. Partially peel back the headliner.

Caution
- **Be careful not to peel back the headliner excessively. Otherwise it could create a fold-seam in the headliner.**

5. Disconnect the connector. (other than zero-option vehicles)
6. Remove the nut.
7. While pressing the center roof antenna tabs in the direction of arrows (1) shown in the figure, press the center roof antenna in the direction of arrow (2) to detach the center roof antenna tabs from the body.

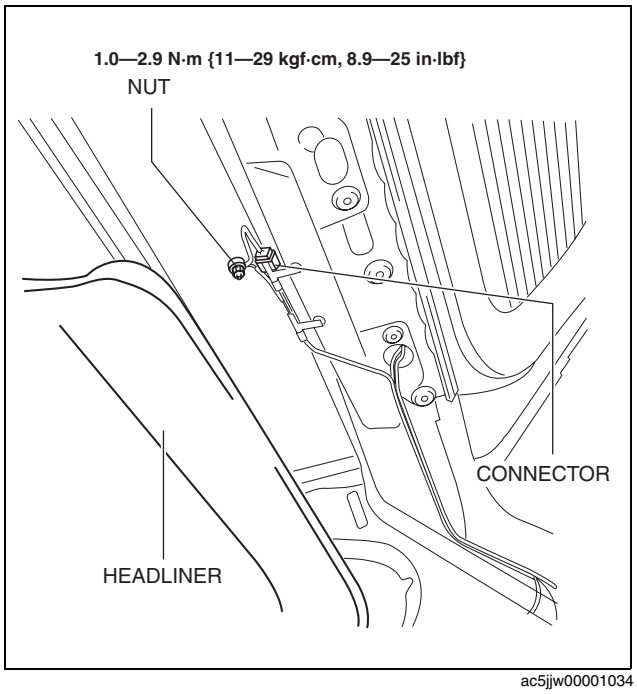

ac5jjw00001034

ENTERTAINMENT

With audio unit

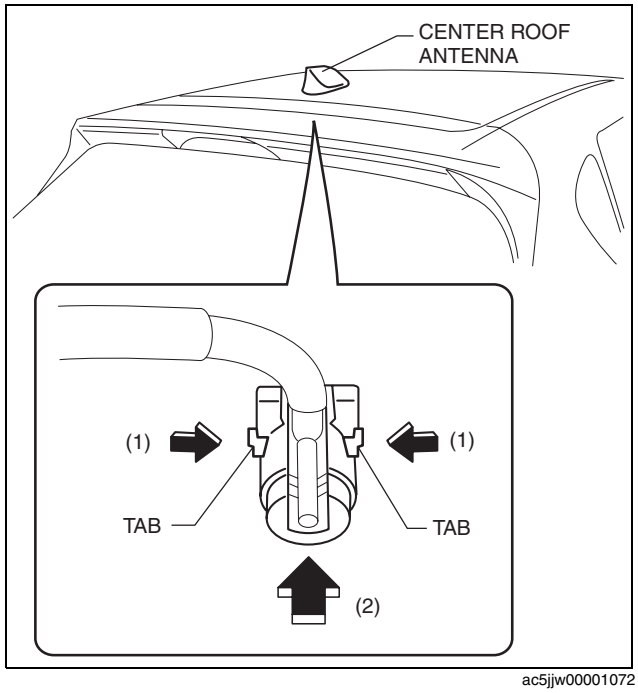

ac5jjw00001072

Without audio unit

8. Remove the center roof antenna.
9. Install in the reverse order of removal.

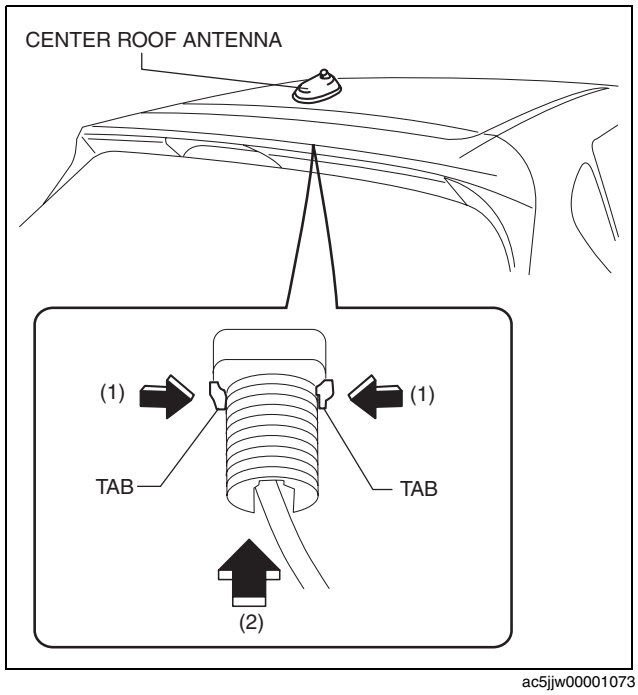

ac5jjw00001073

CENTER ROOF ANTENNA INSPECTION

id092000801700

Note
- The center roof antenna is integrated with the antenna amplifier.

Antenna amplifier inspection

1. Disconnect the negative battery cable. (See 01-17A-11 NEGATIVE BATTERY CABLE DISCONNECTION/CONNECTION [SKYACTIV-G 2.0].) (See 01-17A-13 NEGATIVE BATTERY CABLE DISCONNECTION/CONNECTION [SKYACTIV-G 2.0 (WITHOUT i-stop)].) (See 01-17B-9 NEGATIVE BATTERY CABLE DISCONNECTION/CONNECTION [SKYACTIV-D 2.2].)
2. Remove the following parts:
   (1) Front scuff plate (See 09-17-61 FRONT SCUFF PLATE REMOVAL/INSTALLATION.)
   (2) Rear scuff plate (See 09-17-63 REAR SCUFF PLATE REMOVAL/INSTALLATION.)
   (3) B-pillar lower trim (See 09-17-57 B-PILLAR LOWER TRIM REMOVAL/INSTALLATION.)

ENTERTAINMENT

(4) Front seat belt adjusting cover (See 08-11-2 FRONT SEAT BELT REMOVAL/INSTALLATION.)
(5) Front seat belt upper anchor installation bolt (See 08-11-2 FRONT SEAT BELT REMOVAL/INSTALLATION.)
(6) B-pillar upper trim (See 09-17-58 B-PILLAR UPPER TRIM REMOVAL/INSTALLATION.)
(7) Trunk board (See 09-17-85 TRUNK BOARD REMOVAL/INSTALLATION.)
(8) Trunk end trim (See 09-17-78 TRUNK END TRIM REMOVAL/INSTALLATION.)
(9) Trunk side trim (See 09-17-80 TRUNK SIDE TRIM REMOVAL/INSTALLATION.)
(10) D-pillar trim (See 09-17-60 D-PILLAR TRIM REMOVAL/INSTALLATION.)
(11) C-pillar trim (See 09-17-59 C-PILLAR TRIM REMOVAL/INSTALLATION.)

3. Remove the rear passenger's assist handle. (See 09-17-91 ASSIST HANDLE REMOVAL/INSTALLATION.)
4. Partially peel back the headliner.

Note
- Be careful not to peel back the headliner excessively. Otherwise it could create a fold-seam in the headliner.

5. Connect the negative battery cable. (See 01-17A-11 NEGATIVE BATTERY CABLE DISCONNECTION/CONNECTION [SKYACTIV-G 2.0].) (See 01-17A-13 NEGATIVE BATTERY CABLE DISCONNECTION/CONNECTION [SKYACTIV-G 2.0 (WITHOUT i-stop)].) (See 01-17B-9 NEGATIVE BATTERY CABLE DISCONNECTION/CONNECTION [SKYACTIV-D 2.2].)
6. Switch the ignition ON (engine off).
7. Turn the audio unit power on.
8. Tune in the radio.
9. Verify that the battery voltage is supplied to antenna amplifier terminal A.

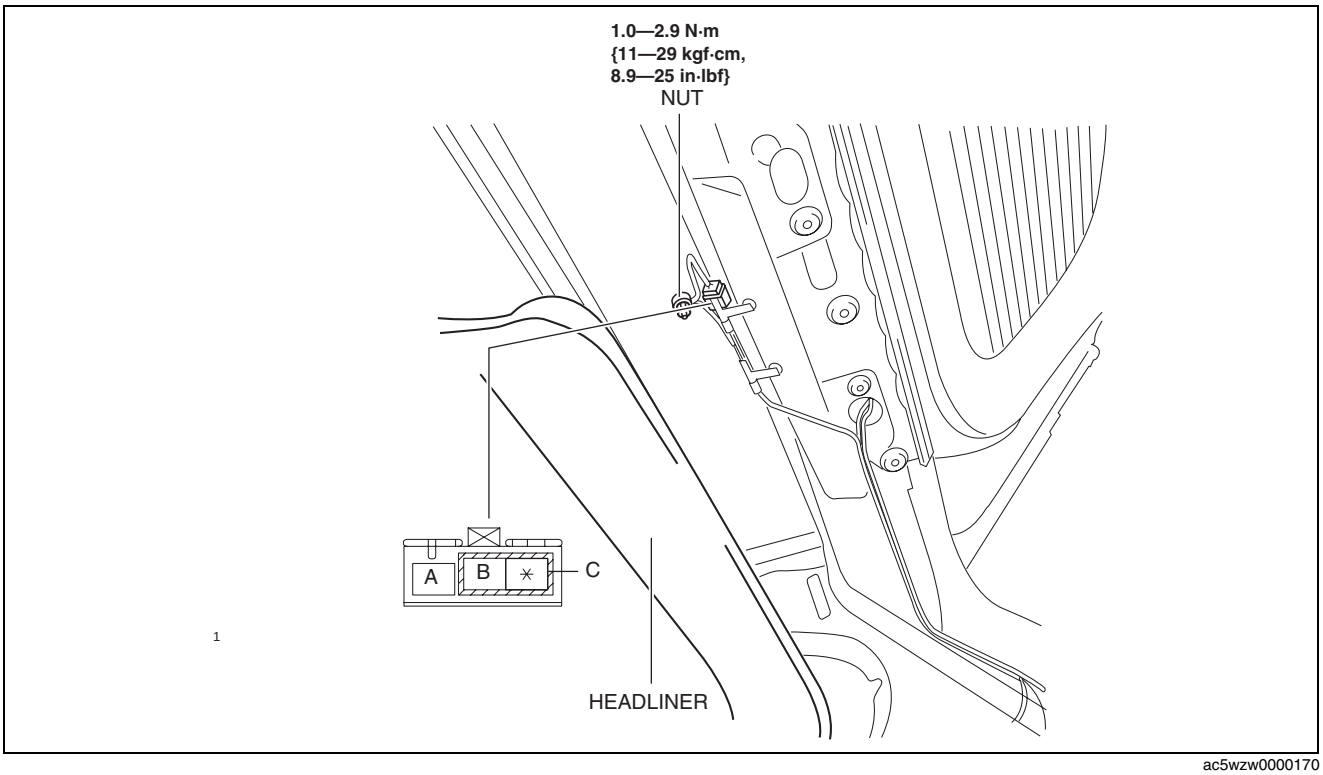

ac5wzw0000170

- If the battery voltage cannot be verified, inspect the audio unit (optional)/car-navigation unit (optional) and antenna feeder.
- If the battery voltage can be verified, go to the feeder line inspection.

Feeder line inspection

1. Disconnect the negative battery cable. (See 01-17A-11 NEGATIVE BATTERY CABLE DISCONNECTION/CONNECTION [SKYACTIV-G 2.0]) (See 01-17A-13 NEGATIVE BATTERY CABLE DISCONNECTION/CONNECTION [SKYACTIV-G 2.0 (WITHOUT i-stop)].) (See 01-17B-9 NEGATIVE BATTERY CABLE DISCONNECTION/CONNECTION [SKYACTIV-D 2.2].)
2. Remove the center roof antenna.

3. Verify that there is no continuity between center roof antenna sections A' and B.
   - If there is continuity, replace the center roof antenna.
4. Install the center roof antenna.

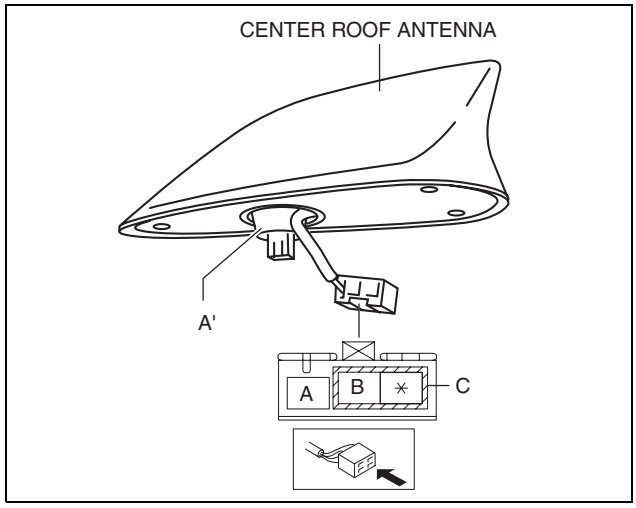

ac5wzw0000170

5. Verify that the continuity between the center roof antenna terminals is as indicated in the table.

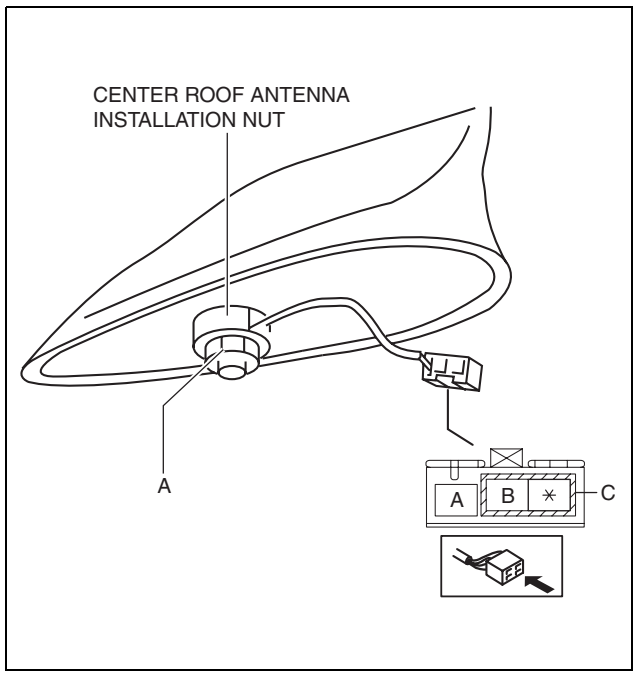

ac5wzw0000293

- If the continuity is not as indicated in the table, verify the installation condition of the center roof antenna installation nut.
- If the installation condition of the center roof antenna installation nut is normal, replace the center roof antenna.

:Continuity

Test condition	Terminal				BODY GND
	A'	A	B	C	
Under any condition	○			○	○

ac5wzw0000293

GLASS ANTENNA INSPECTION

id092000806200

1. Disconnect the negative battery cable. (See 01-17A-11 NEGATIVE BATTERY CABLE DISCONNECTION/CONNECTION [SKYACTIV-G 2.0].) (See 01-17A-13 NEGATIVE BATTERY CABLE DISCONNECTION/CONNECTION [SKYACTIV-G 2.0 (WITHOUT i-stop)].) (See 01-17B-9 NEGATIVE BATTERY CABLE DISCONNECTION/CONNECTION [SKYACTIV-D 2.2].)
2. Partially peel back the seaming welt.
3. Remove the liftgate upper trim. (See 09-17-87 LIFTGATE UPPER TRIM REMOVAL/INSTALLATION.)
4. Disconnect antenna feeder connector. (See 09-20-47 ANTENNA FEEDER NO.3 REMOVAL/INSTALLATION.)

5. Visually inspect the glass antenna for damage.
6. Verify that the continuity between the glass antenna terminals is as indicated in the table.

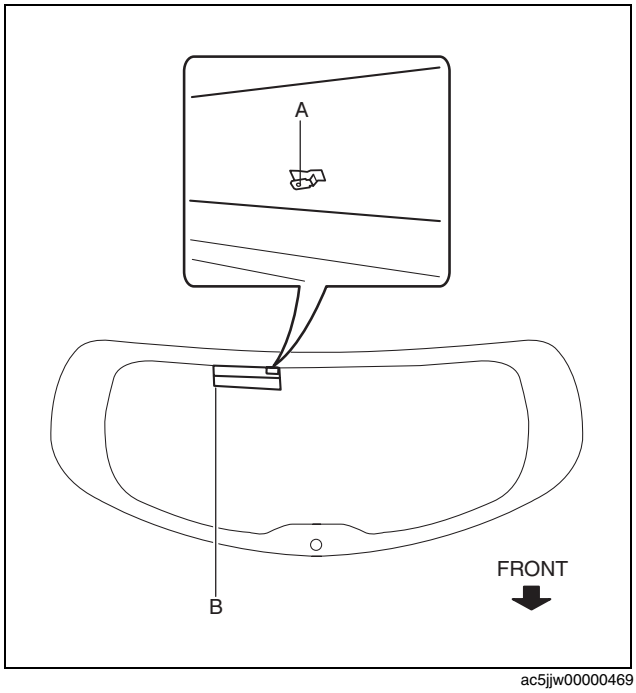

ac5jjw00000469

- If not as indicated in the table, repair the glass antenna. (See 09-12-38 FILAMENT INSPECTION.)

: Continuity

Test condition	Terminal	
	A	B
Under any condition	○	○

am3zzw0000985

CONDENSER REMOVAL/INSTALLATION

id092000803000

1. Disconnect the negative battery cable. (See 01-17A-11 NEGATIVE BATTERY CABLE DISCONNECTION/CONNECTION [SKYACTIV-G 2.0].) (See 01-17A-13 NEGATIVE BATTERY CABLE DISCONNECTION/CONNECTION [SKYACTIV-G 2.0 (WITHOUT i-stop)].) (See 01-17B-9 NEGATIVE BATTERY CABLE DISCONNECTION/CONNECTION [SKYACTIV-D 2.2].)
2. Remove the following parts:
   (1) Trunk board (See 09-17-85 TRUNK BOARD REMOVAL/INSTALLATION.)
   (2) Trunk end trim (LH) (See 09-17-78 TRUNK END TRIM REMOVAL/INSTALLATION.)
   (3) Rear scuff plate (LH) (See 09-17-63 REAR SCUFF PLATE REMOVAL/INSTALLATION.)
   (4) Trunk side trim (LH) (See 09-17-80 TRUNK SIDE TRIM REMOVAL/INSTALLATION.)
   (5) D-pillar trim (LH) (See 09-17-60 D-PILLAR TRIM REMOVAL/INSTALLATION.)

ENTERTAINMENT

3. Disconnect the connector.

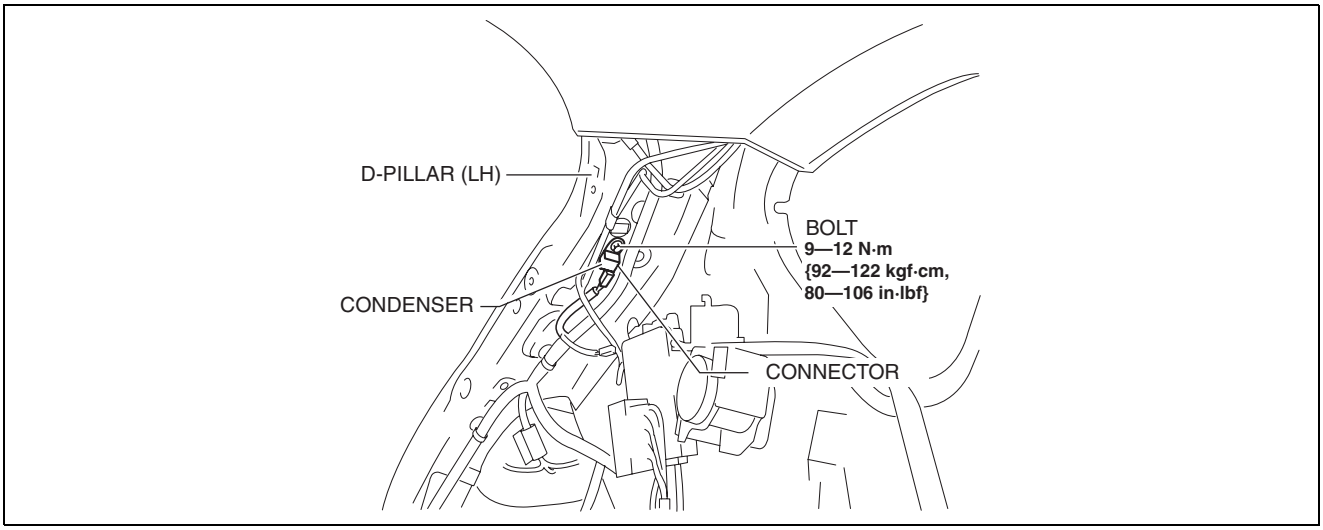

ac5jjw00000172

4. Remove the bolts.
5. Remove the condenser.
6. Install in the reverse order of removal. (See 09-20-33 Condenser Installation Note.)

Condenser Installation Note

- Align with the D-pillar position and install the condenser.

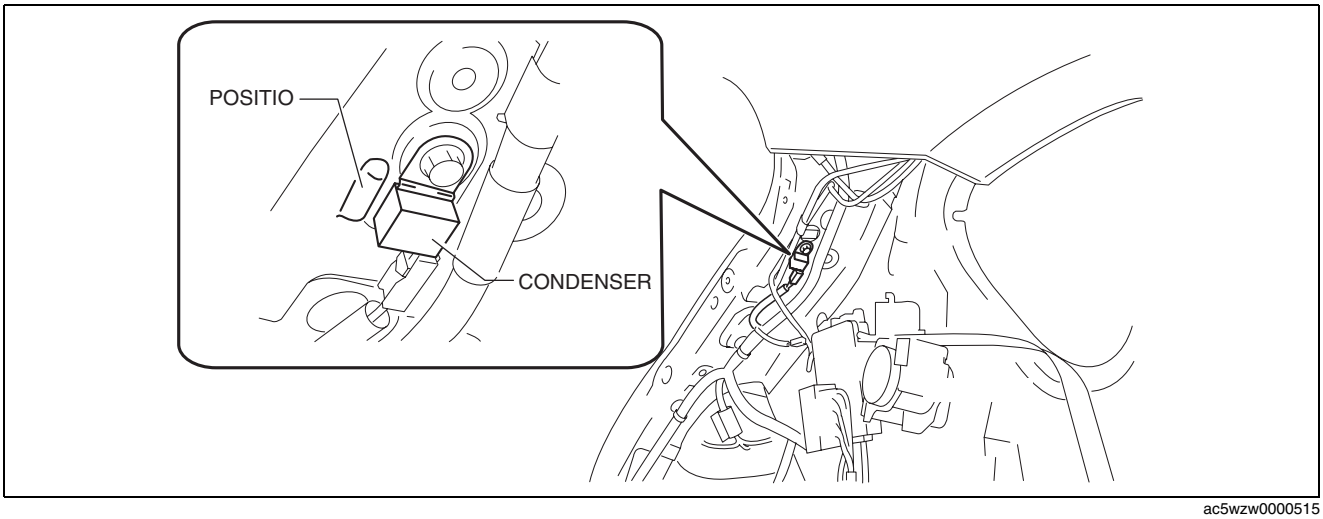

ac5wzw0000515

ENTERTAINMENT

ANTENNA FEEDER LOCATION

id092000801800

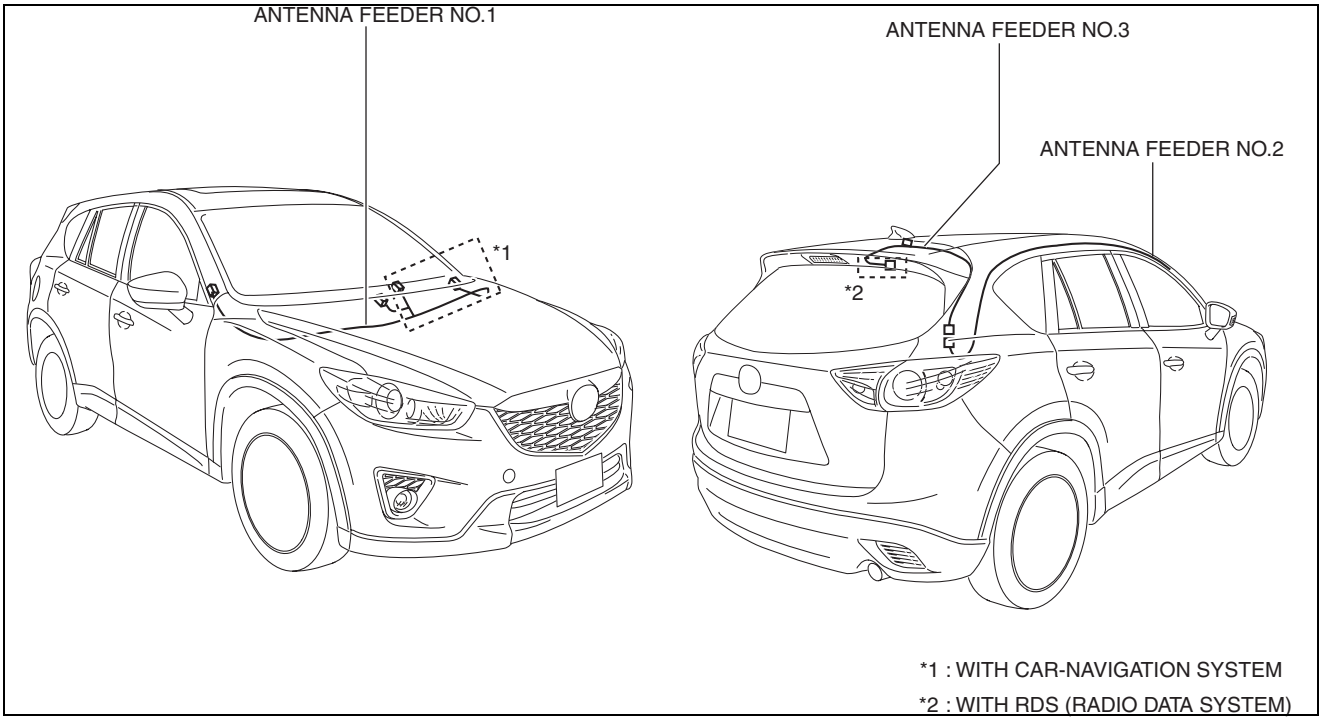

ac5wzw0000360

ANTENNA FEEDER NO.1 REMOVAL/INSTALLATION

id092000812200

R.H.D. (With Audio System)

1. Disconnect the negative battery cable. (See 01-17A-11 NEGATIVE BATTERY CABLE DISCONNECTION/CONNECTION [SKYACTIV-G 2.0].) (See 01-17A-13 NEGATIVE BATTERY CABLE DISCONNECTION/CONNECTION [SKYACTIV-G 2.0 (WITHOUT i-stop)].) (See 01-17B-9 NEGATIVE BATTERY CABLE DISCONNECTION/CONNECTION [SKYACTIV-D 2.2].)
2. Remove the following parts:
   (1) Side speaker grille (RH) (See 09-17-15 SPEAKER GRILLE REMOVAL/INSTALLATION.)
   (2) Tweeter (RH) (See 09-20-23 TWEETER REMOVAL/INSTALLATION)
   (3) A-pillar trim (RH) (See 09-17-53 A-PILLAR TRIM REMOVAL/INSTALLATION)
   (4) Decoration panel (See 09-17-33 DECORATION PANEL REMOVAL/INSTALLATION.)
   (5) Audio unit (See 09-20-4 AUDIO UNIT REMOVAL/INSTALLATION.)
   (6) Column upper cover (See 09-17-25 COLUMN COVER REMOVAL/INSTALLATION.)
   (7) Meter hood (See 09-17-20 METER HOOD REMOVAL/INSTALLATION.)
   (8) Instrument cluster (See 09-22-6 INSTRUMENT CLUSTER REMOVAL/INSTALLATION.)

3. Remove clips A, B, C, D, E, F, and G.

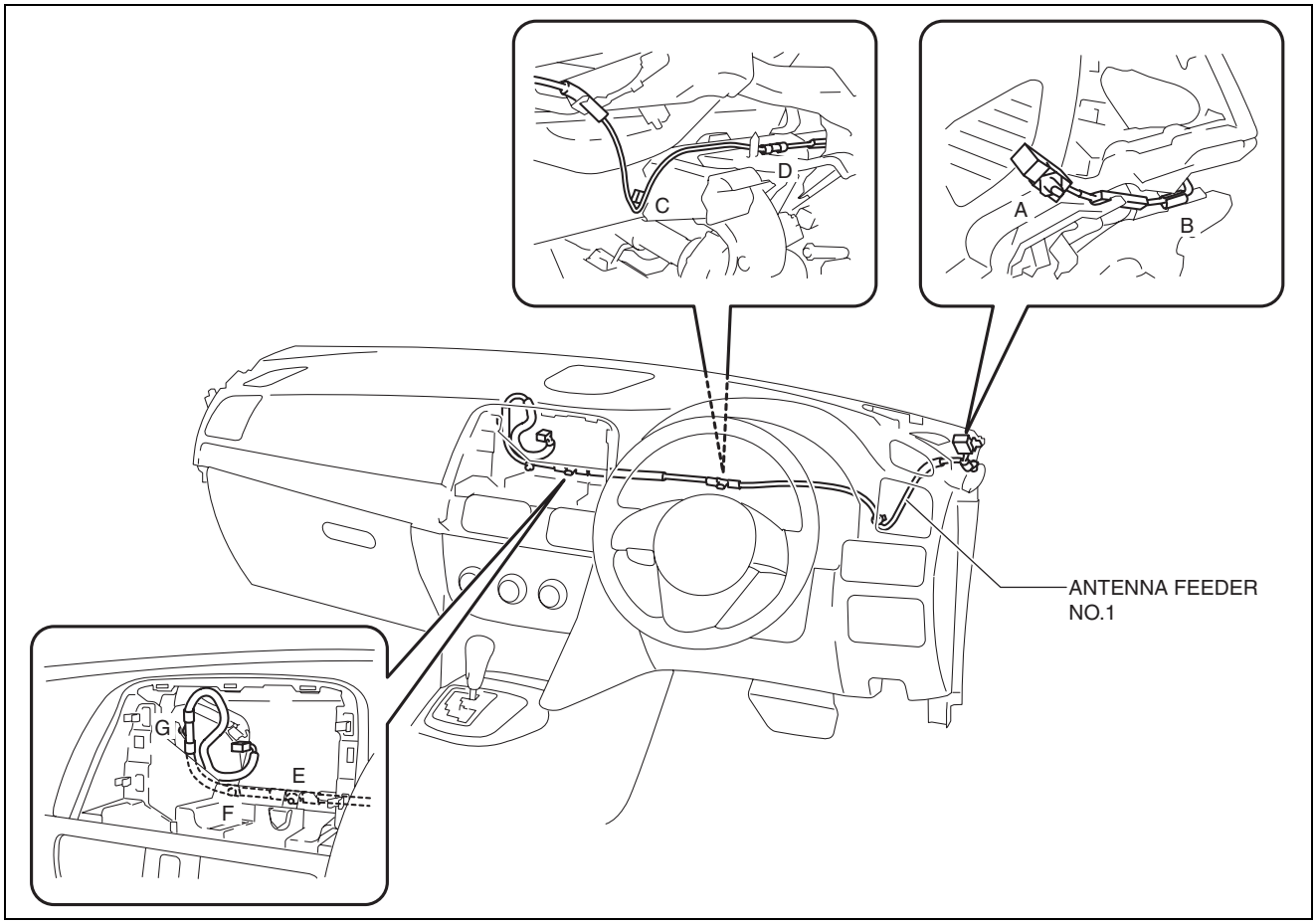

ac5wzw0000279

4. Remove antenna feeder No.1.
5. Install in the reverse order of removal.

R.H.D. (With Car-navigation System)

1. Disconnect the negative battery cable. (See 01-17A-11 NEGATIVE BATTERY CABLE DISCONNECTION/CONNECTION [SKYACTIV-G 2.0].) (See 01-17A-13 NEGATIVE BATTERY CABLE DISCONNECTION/CONNECTION [SKYACTIV-G 2.0 (WITHOUT i-stop)].) (See 01-17B-9 NEGATIVE BATTERY CABLE DISCONNECTION/CONNECTION [SKYACTIV-D 2.2].)
2. Remove the following parts:
   (1) Center speaker grille (See 09-17-15 SPEAKER GRILLE REMOVAL/INSTALLATION.)
   (2) Front center speaker (with Bose®)/front center speaker dummy (without Bose®) (See 09-20-22 FRONT CENTER SPEAKER REMOVAL/INSTALLATION.)
   (3) GPS antenna (See 09-20-54 GLOBAL POSITIONING SYSTEM (GPS) ANTENNA REMOVAL/INSTALLATION.)
   (4) Side speaker grille (RH) (See 09-17-15 SPEAKER GRILLE REMOVAL/INSTALLATION.)
   (5) Tweeter (RH) (See 09-20-23 TWEETER REMOVAL/INSTALLATION)

(6) A-pillar trim (RH) (See 09-17-53 A-PILLAR TRIM REMOVAL/INSTALLATION)
(7) Decoration panel (See 09-17-33 DECORATION PANEL REMOVAL/INSTALLATION.)
(8) Audio unit (See 09-20-4 AUDIO UNIT REMOVAL/INSTALLATION.)
(9) Car-navigation unit (See 09-20-11 CAR-NAVIGATION UNIT REMOVAL/INSTALLATION.)
(10)Column upper cover (See 09-17-25 COLUMN COVER REMOVAL/INSTALLATION.)
(11)Meter hood (See 09-17-20 METER HOOD REMOVAL/INSTALLATION.)
(12)Instrument cluster (See 09-22-6 INSTRUMENT CLUSTER REMOVAL/INSTALLATION.)

3. Remove clips A, B, C, D, E, F, G, H, I, and J.

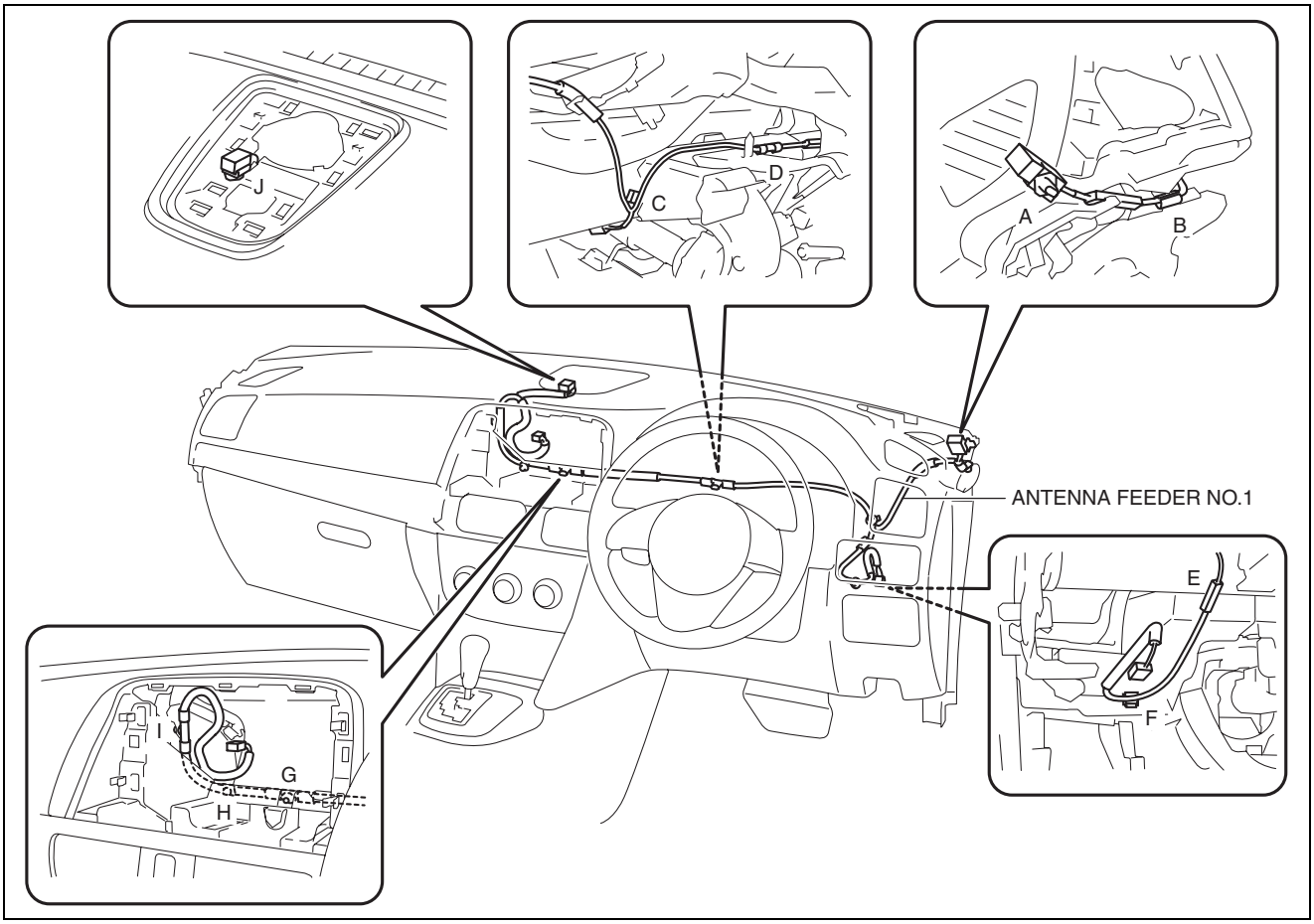

ac5wzw0000279

4. Remove antenna feeder No.1.
5. Install in the reverse order of removal.

id092000812400

ENTERTAINMENT

ANTENNA FEEDER NO.1 INSPECTION

R.H.D. (with audio system)

1. Disconnect the negative battery cable. (See 01-17A-11 NEGATIVE BATTERY CABLE DISCONNECTION/CONNECTION [SKYACTIV-G 2.0].) (See 01-17A-13 NEGATIVE BATTERY CABLE DISCONNECTION/CONNECTION [SKYACTIV-G 2.0 (WITHOUT i-stop)].) (See 01-17B-9 NEGATIVE BATTERY CABLE DISCONNECTION/CONNECTION [SKYACTIV-D 2.2].)
2. Remove the following parts:
   (1) A-pillar trim (RH) (See 09-17-53 A-PILLAR TRIM REMOVAL/INSTALLATION.)
   (2) Decoration panel (See 09-17-33 DECORATION PANEL REMOVAL/INSTALLATION.)
   (3) Audio unit (See 09-20-4 AUDIO UNIT REMOVAL/INSTALLATION.)
3. Disconnect antenna feeder No.2.

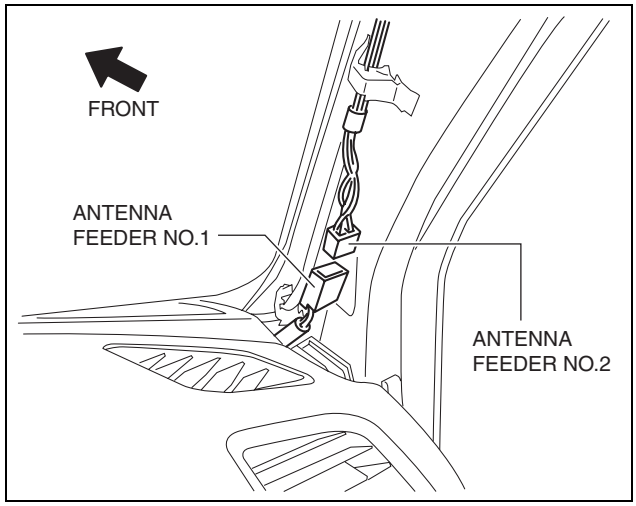

ac5wzw0000293

4. Verify that the continuity between antenna feeder No.1 terminals is as indicated in the table.
   - If not as indicated in the table, replace antenna feeder No.1.

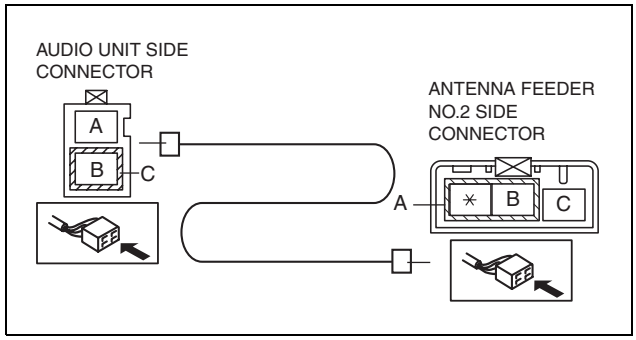

ac5wzw0000293

: Continuity

Test condition	Terminal					
	AUDIO UNIT SIDE CONNECTOR			ANTENNA FEEDER NO.2 SIDE CONNECTOR		
	A	B	C	A	B	C
Under any condition	○					○
		○			○	
			○	○		

ac5wzw0000293

R.H.D. (with car-navigation system)

1. Disconnect the negative battery cable. (See 01-17A-11 NEGATIVE BATTERY CABLE DISCONNECTION/CONNECTION [SKYACTIV-G 2.0].) (See 01-17A-13 NEGATIVE BATTERY CABLE DISCONNECTION/CONNECTION [SKYACTIV-G 2.0 (WITHOUT i-stop)].) (See 01-17B-9 NEGATIVE BATTERY CABLE DISCONNECTION/CONNECTION [SKYACTIV-D 2.2].)
2. Remove the following parts:
   (1) A-pillar trim (RH) (See 09-17-53 A-PILLAR TRIM REMOVAL/INSTALLATION.)
   (2) Decoration panel (See 09-17-33 DECORATION PANEL REMOVAL/INSTALLATION.)
   (3) Audio unit (See 09-20-4 AUDIO UNIT REMOVAL/INSTALLATION.)
   (4) Center speaker grille (See 09-17-15 SPEAKER GRILLE REMOVAL/INSTALLATION.)

ENTERTAINMENT

(5) Front center speaker (with Bose®)/front center speaker (without Bose®) (See 09-20-22 FRONT CENTER SPEAKER REMOVAL/INSTALLATION.)
(6) Car-navigation unit (See 09-20-11 CAR-NAVIGATION UNIT REMOVAL/INSTALLATION.)

3. Disconnect the GPS antenna connector.
4. Disconnect antenna feeder No.2.

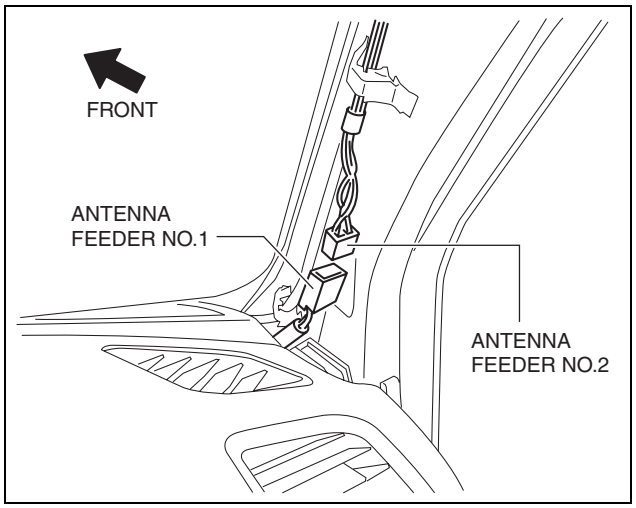

ac5wzw0000293

5. Verify that the continuity between antenna feeder No.1 terminals is as indicated in the table.
   - If not as indicated in the table, replace antenna feeder No.1.

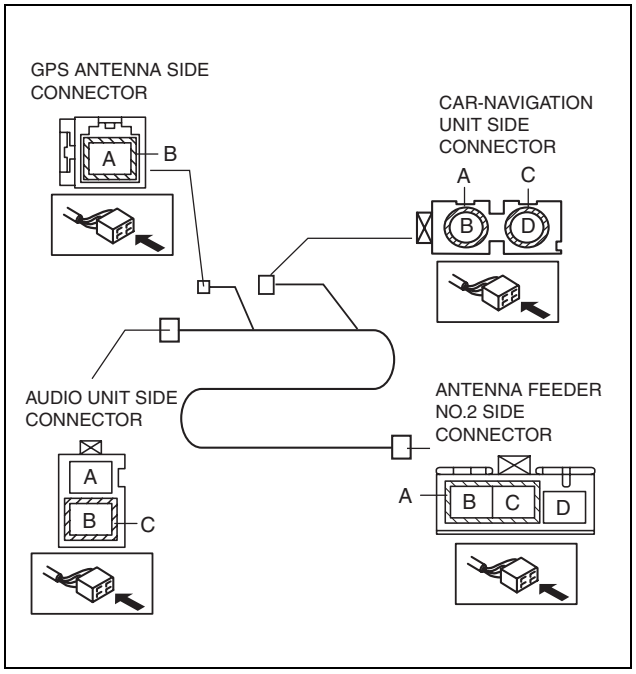

ac5wzw0000294

○—○ : Continuity

Test condition	Terminal												
	AUDIO UNIT SIDE CONNECTOR			GPS ANTENNA SIDE CONNECTOR		CAR-NAVIGATION UNIT SIDE CONNECTOR				ANTENNA FEEDER NO.2 SIDE CONNECTOR			
	A	B	C	A	B	A	B	C	D	A	B	C	D
Under any condition	○												○
		○										○	
			○							○			
				○					○				
					○								○
						○				○			
							○				○		

ac5jjw00002386

ENTERTAINMENT

ANTENNA FEEDER NO.2 REMOVAL/INSTALLATION

id092000812300

Removal

1. Disconnect the negative battery cable. (See 01-17A-11 NEGATIVE BATTERY CABLE DISCONNECTION/CONNECTION [SKYACTIV-G 2.0].) (See 01-17A-13 NEGATIVE BATTERY CABLE DISCONNECTION/CONNECTION [SKYACTIV-G 2.0 (WITHOUT i-stop)].) (See 01-17B-9 NEGATIVE BATTERY CABLE DISCONNECTION/CONNECTION [SKYACTIV-D 2.2].)
2. Remove the following parts:
   (1) Sunroof seaming welt (with sunroof system) (See 09-15-6 SUNROOF UNIT REMOVAL/INSTALLATION.)
   (2) A-pillar trim (See 09-17-53 A-PILLAR TRIM REMOVAL/INSTALLATION.)
   (3) Front map light (See 09-18-95 MAP LIGHT REMOVAL/INSTALLATION.)
   (4) Sunvisor (See 09-17-93 SUNVISOR REMOVAL/INSTALLATION.)
   (5) Front scuff plate (See 09-17-61 FRONT SCUFF PLATE REMOVAL/INSTALLATION.)
   (6) Rear scuff plate (See 09-17-63 REAR SCUFF PLATE REMOVAL/INSTALLATION.)
   (7) B-pillar lower trim (See 09-17-57 B-PILLAR LOWER TRIM REMOVAL/INSTALLATION.)
   (8) Adjust anchor cover (See 08-11-2 FRONT SEAT BELT REMOVAL/INSTALLATION.)
   (9) Upper anchor installation bolt on the seat belt (See 08-11-2 FRONT SEAT BELT REMOVAL/INSTALLATION.)
   (10) B-pillar upper trim (See 09-17-58 B-PILLAR UPPER TRIM REMOVAL/INSTALLATION.)
   (11) Assist handle (See 09-17-91 ASSIST HANDLE REMOVAL/INSTALLATION.)
   (12) Trunk board (See 09-17-85 TRUNK BOARD REMOVAL/INSTALLATION.)
   (13) Trunk end trim (See 09-17-78 TRUNK END TRIM REMOVAL/INSTALLATION.)
   (14) Trunk side trim (See 09-17-80 TRUNK SIDE TRIM REMOVAL/INSTALLATION.)
   (15) D-pillar trim (See 09-17-60 D-PILLAR TRIM REMOVAL/INSTALLATION.)
   (16) C-pillar trim (See 09-17-59 C-PILLAR TRIM REMOVAL/INSTALLATION.)
   (17) Headliner (See 09-17-94 HEADLINER REMOVAL/INSTALLATION.)
3. Peel off the tape shown in the figure and remove antenna feeder No.2.

Without sunroof

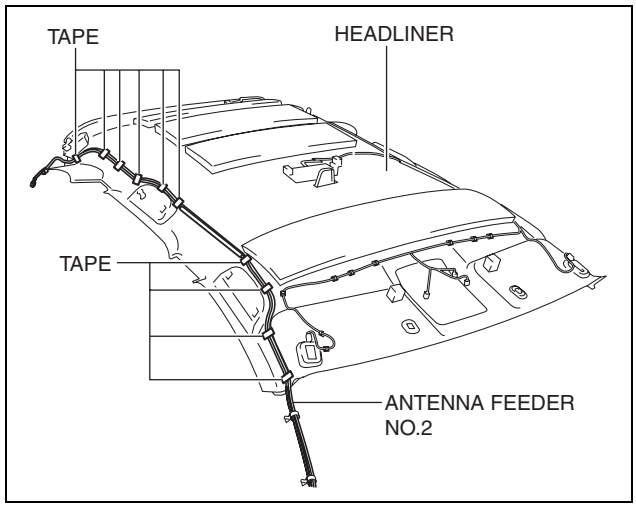

ac5jjw00000854

ENTERTAINMENT

With sunroof

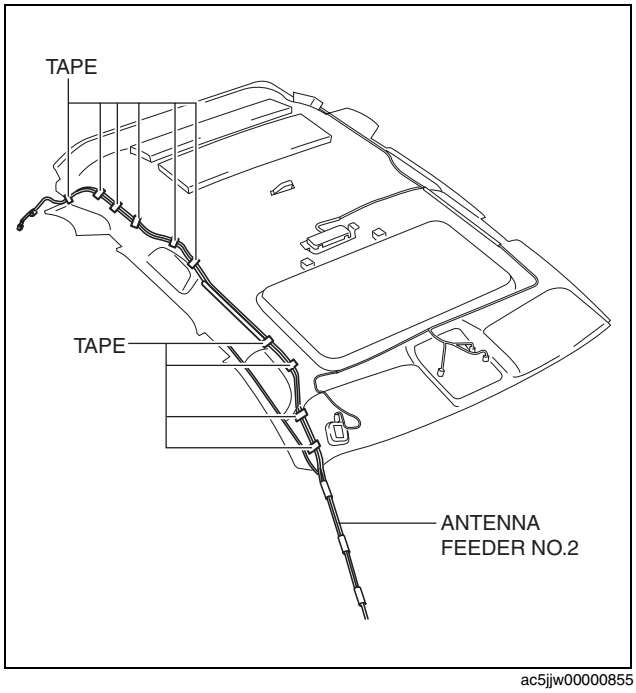

ac5jjw00000855

Installation

1. Affix tape shown in the figure and install antenna feeder No.2.

Without sunroof

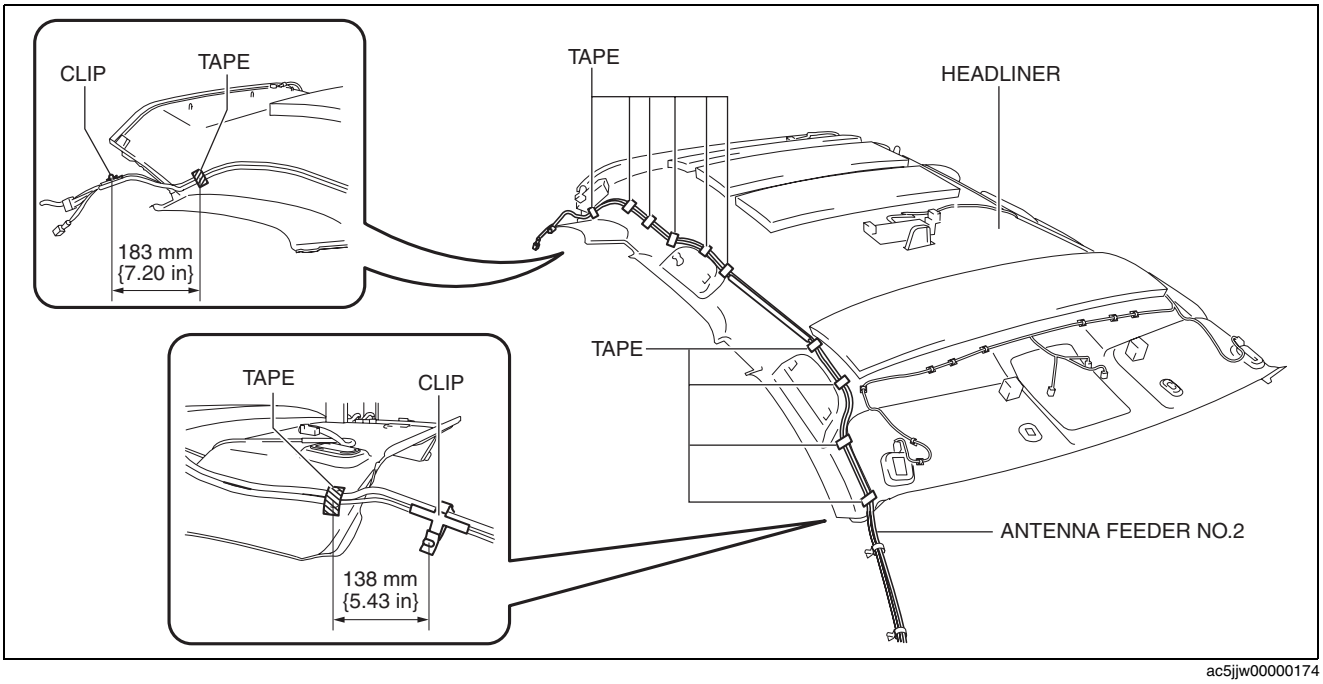

ac5jjw00000174

ENTERTAINMENT

With sunroof

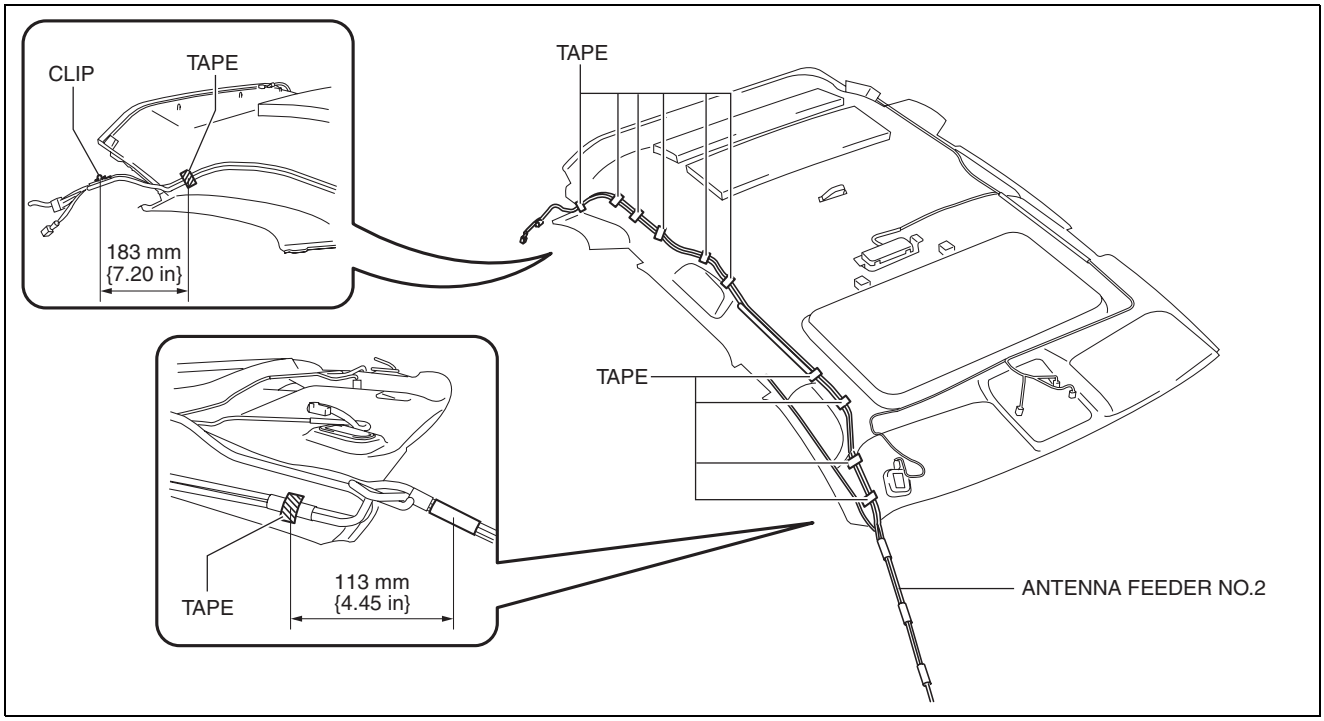

ac5jjw00000470

2. Install the following parts:
   (1) C-pillar trim (See 09-17-59 C-PILLAR TRIM REMOVAL/INSTALLATION.)
   (2) D-pillar trim (See 09-17-60 D-PILLAR TRIM REMOVAL/INSTALLATION.)
   (3) Trunk side trim (See 09-17-80 TRUNK SIDE TRIM REMOVAL/INSTALLATION.)
   (4) Trunk end trim (See 09-17-78 TRUNK END TRIM REMOVAL/INSTALLATION.)
   (5) Trunk board (See 09-17-85 TRUNK BOARD REMOVAL/INSTALLATION.)
   (6) Assist handle (See 09-17-91 ASSIST HANDLE REMOVAL/INSTALLATION.)
   (7) B-pillar upper trim (See 09-17-58 B-PILLAR UPPER TRIM REMOVAL/INSTALLATION.)
   (8) Upper anchor installation bolt on the seat belt (See 08-11-2 FRONT SEAT BELT REMOVAL/INSTALLATION.)
   (9) Adjust anchor cover (See 08-11-2 FRONT SEAT BELT REMOVAL/INSTALLATION.)
   (10)B-pillar lower trim (See 09-17-57 B-PILLAR LOWER TRIM REMOVAL/INSTALLATION.)
   (11)Rear scuff plate (See 09-17-63 REAR SCUFF PLATE REMOVAL/INSTALLATION.)
   (12)Front scuff plate (See 09-17-61 FRONT SCUFF PLATE REMOVAL/INSTALLATION.)
   (13)Sunvisor (See 09-17-93 SUNVISOR REMOVAL/INSTALLATION.)
   (14)Front map light (See 09-18-95 MAP LIGHT REMOVAL/INSTALLATION.)
   (15)A-pillar trim (See 09-17-53 A-PILLAR TRIM REMOVAL/INSTALLATION.)
   (16)Sunroof seaming welt (with sunroof system) (See 09-15-6 SUNROOF UNIT REMOVAL/INSTALLATION.)
3. Connect the negative battery cable. (See 01-17A-11 NEGATIVE BATTERY CABLE DISCONNECTION/CONNECTION [SKYACTIV-G 2.0].) (See 01-17A-13 NEGATIVE BATTERY CABLE DISCONNECTION/CONNECTION [SKYACTIV-G 2.0 (WITHOUT i-stop)].) (See 01-17B-9 NEGATIVE BATTERY CABLE DISCONNECTION/CONNECTION [SKYACTIV-D 2.2].)

ANTENNA FEEDER NO.2 INSPECTION

id092000812500

1. Disconnect the negative battery cable. (See 01-17A-11 NEGATIVE BATTERY CABLE DISCONNECTION/CONNECTION [SKYACTIV-G 2.0].) (See 01-17A-13 NEGATIVE BATTERY CABLE DISCONNECTION/CONNECTION [SKYACTIV-G 2.0 (WITHOUT i-stop)].) (See 01-17B-9 NEGATIVE BATTERY CABLE DISCONNECTION/CONNECTION [SKYACTIV-D 2.2].)
2. Remove the following parts:
   (1) A-pillar trim (RH) (See 09-17-53 A-PILLAR TRIM REMOVAL/INSTALLATION.)
   (2) Trunk board (See 09-17-85 TRUNK BOARD REMOVAL/INSTALLATION.)
   (3) Trunk end trim (RH) (See 09-17-78 TRUNK END TRIM REMOVAL/INSTALLATION.)
   (4) Rear scuff plate (RH) (See 09-17-63 REAR SCUFF PLATE REMOVAL/INSTALLATION.)
   (5) Trunk side trim (RH) (See 09-17-80 TRUNK SIDE TRIM REMOVAL/INSTALLATION.)
   (6) D-pillar trim (RH) (See 09-17-60 D-PILLAR TRIM REMOVAL/INSTALLATION.)

ENTERTAINMENT

3. Disconnect antenna feeder No.1.

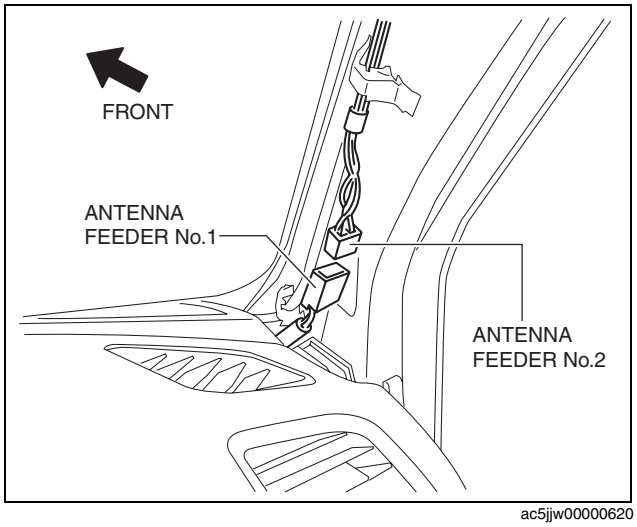

ac5jjw00000620

4. Disconnect antenna feeder No.3.
5. Verify that the continuity between antenna feeder No.2 terminals is as indicated in the table.

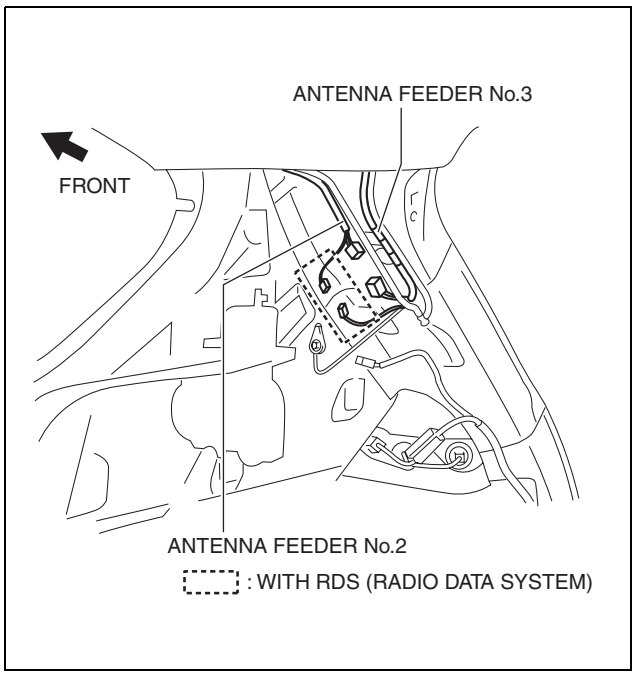

ac5jjw00001696

Without RDS (radio data system)

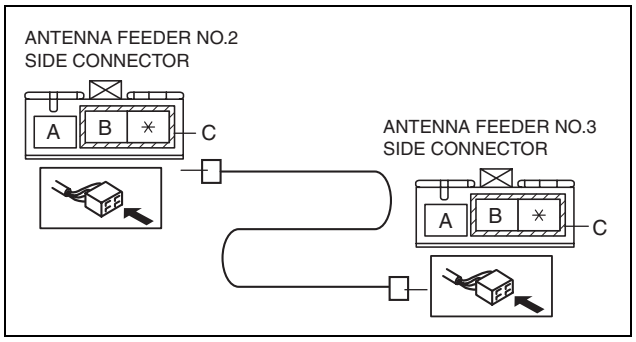

ac5wzw0000294

ENTERTAINMENT

With RDS (radio data system)

- If not as indicated in the table, replace antenna feeder No.2.

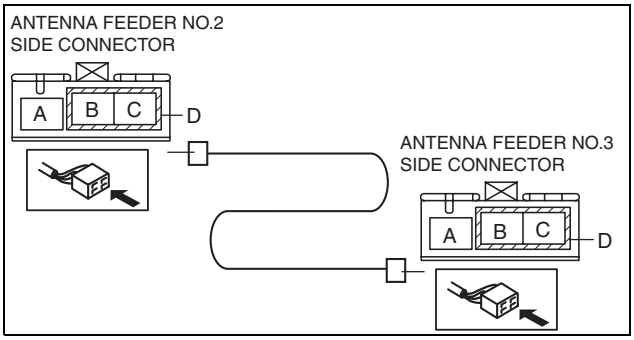

ac5wzw0000294

Without RDS (radio data system)

○—○ : Continuity

Test condition	Terminal					
	ANTENNA FEEDER NO.2 SIDE CONNECTOR			ANTENNA FEEDER NO.3 SIDE CONNECTOR		
	A	B	C	A	B	C
Under any condition	○			○		
		○			○	
			○			○

ac5jjw00002363

With RDS (radio data system)

○—○ : Continuity

Test condition	Terminal							
	ANTENNA FEEDER NO.2 SIDE CONNECTOR				ANTENNA FEEDER NO.3 SIDE CONNECTOR			
	A	B	C	D	A	B	C	D
Under any condition	○				○			
		○				○		
			○				○	
				○				○

ac5jjw00002364

ANTENNA FEEDER NO.3 REMOVAL/INSTALLATION

id092000812900

1. Disconnect the negative battery cable. (See 01-17A-11 NEGATIVE BATTERY CABLE DISCONNECTION/CONNECTION [SKYACTIV-G 2.0].) (See 01-17A-13 NEGATIVE BATTERY CABLE DISCONNECTION/CONNECTION [SKYACTIV-G 2.0 (WITHOUT i-stop)].) (See 01-17B-9 NEGATIVE BATTERY CABLE DISCONNECTION/CONNECTION [SKYACTIV-D 2.2].)
2. Remove the following parts:
   (1) Front scuff plate (See 09-17-61 FRONT SCUFF PLATE REMOVAL/INSTALLATION.)
   (2) Rear scuff plate (See 09-17-63 REAR SCUFF PLATE REMOVAL/INSTALLATION.)
   (3) B-pillar lower trim (See 09-17-57 B-PILLAR LOWER TRIM REMOVAL/INSTALLATION.)
   (4) Front seat belt adjusting cover (See 08-11-2 FRONT SEAT BELT REMOVAL/INSTALLATION.)
   (5) Front seat belt upper anchor installation bolt (See 08-11-2 FRONT SEAT BELT REMOVAL/INSTALLATION.)
   (6) B-pillar upper trim (See 09-17-58 B-PILLAR UPPER TRIM REMOVAL/INSTALLATION.)
   (7) Trunk board (See 09-17-85 TRUNK BOARD REMOVAL/INSTALLATION.)
   (8) Trunk end trim (See 09-17-78 TRUNK END TRIM REMOVAL/INSTALLATION.)
   (9) Trunk side trim (See 09-17-80 TRUNK SIDE TRIM REMOVAL/INSTALLATION.)
   (10) D-pillar trim (See 09-17-60 D-PILLAR TRIM REMOVAL/INSTALLATION.)
   (11) C-pillar trim (See 09-17-59 C-PILLAR TRIM REMOVAL/INSTALLATION.)
   (12) Liftgate upper trim (with RDS (radio data system)) (See 09-17-87 LIFTGATE UPPER TRIM REMOVAL/INSTALLATION.)
3. Remove the rear passenger's assist handle. (See 09-17-91 ASSIST HANDLE REMOVAL/INSTALLATION.)

ENTERTAINMENT

4. Partially peel back the headliner.

Note
- If the headliner is peeled back excessively, the headliner could become creased. Be careful not to peel back the headliner excessively.

5. Disconnect antenna feeder No.2.

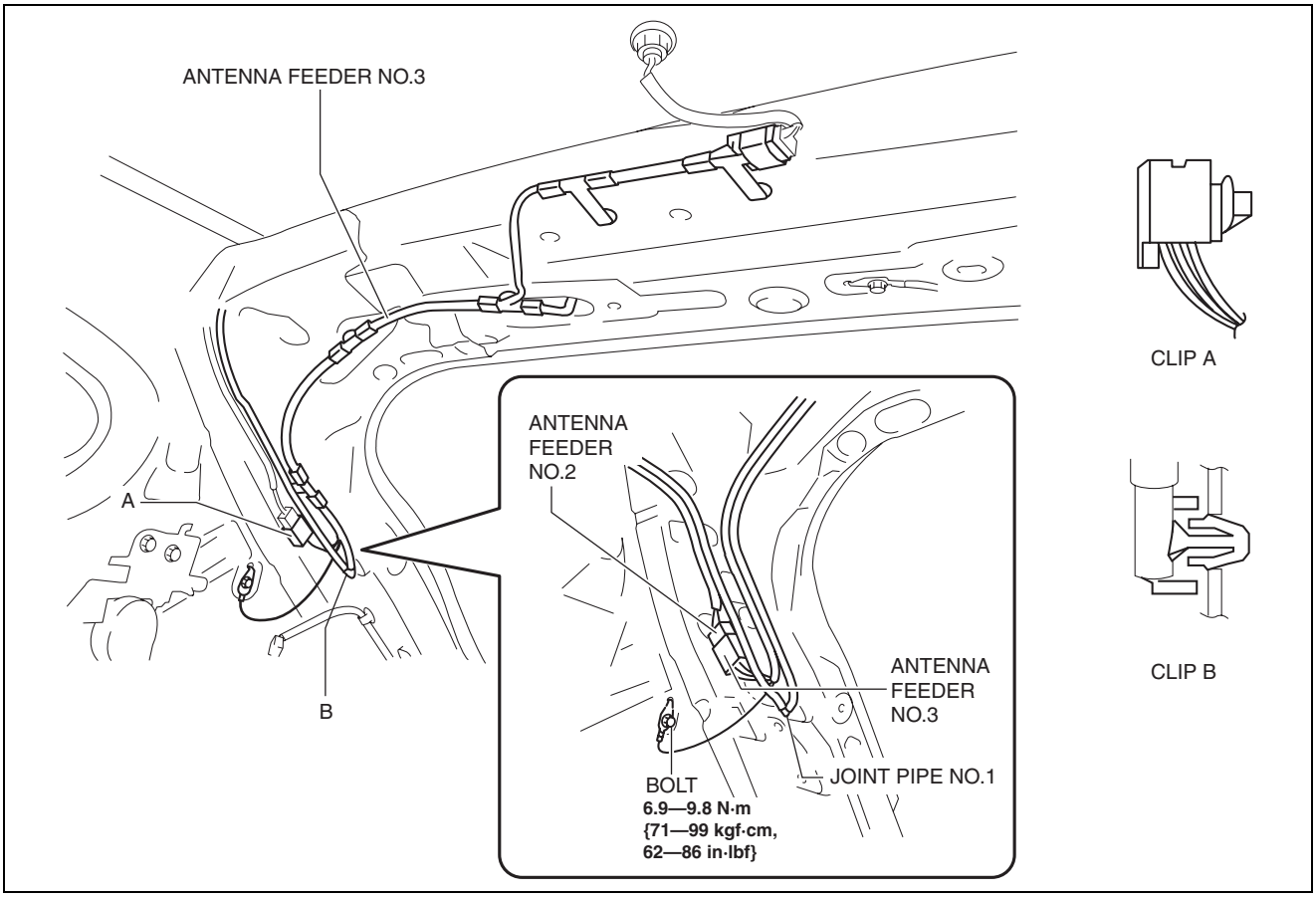

ac5jjw00002355

6. Remove the bolt.
7. Detach clip A.
8. Remove the joint pipe No.1 clip B.

ENTERTAINMENT

9. Remove clips C and D.

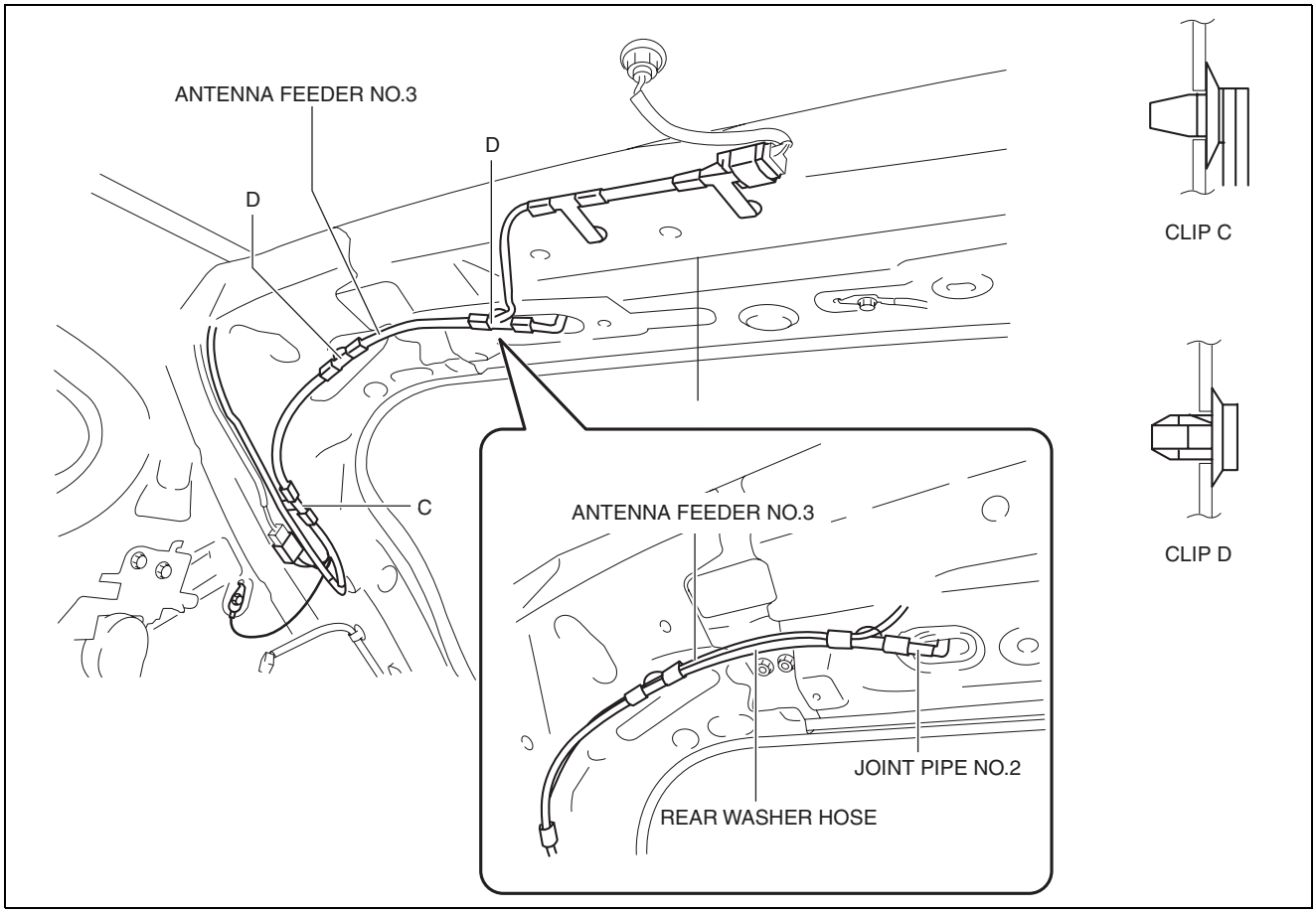

ac5jjw00002356

10. Disconnect joint pipe No.2.
11. Remove clips E and F.
12. Disconnect the center roof antenna.

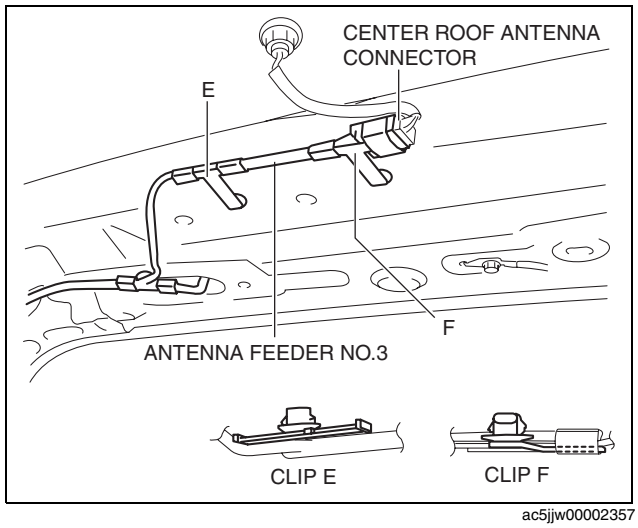

ac5jjw00002357

ENTERTAINMENT

13. Using a screwdriver wrapped in protective tape, pull the connector in the direction of the arrow (2) shown in the figure while pressing glass antenna terminal in the direction of the arrow (1) shown in the figure, and disengage the glass antenna terminal from the connector. (with RDS (radio data system))
14. Disconnect the connector. (with RDS (radio data system))

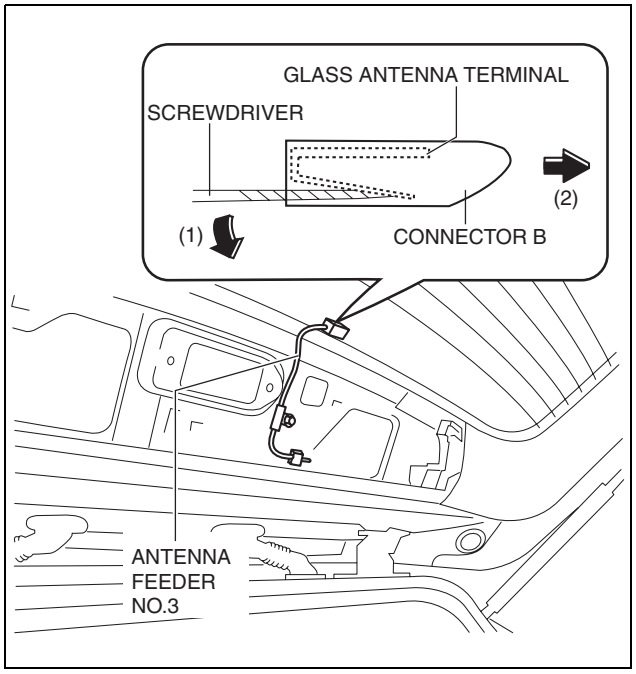

ac5jjw00002337

15. Remove the bolts. (with RDS (radio data system))
16. Remove the clip. (with RDS (radio data system))

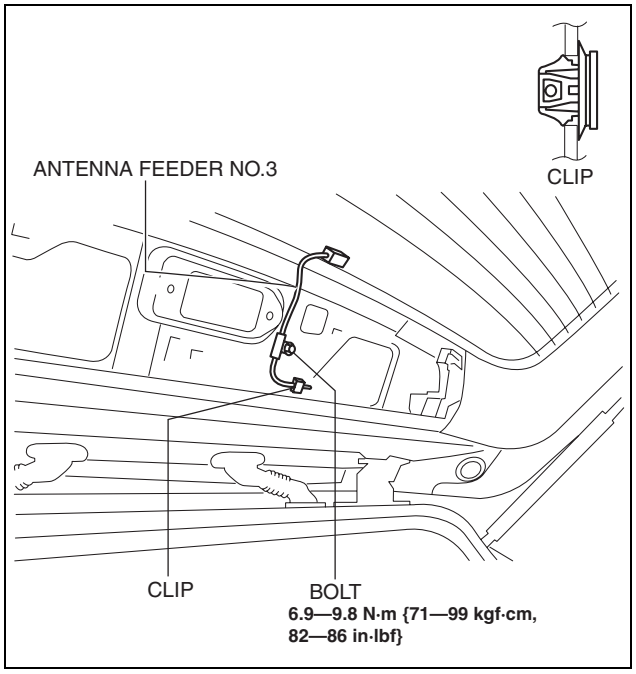

ac5wzw0000377

ENTERTAINMENT

17. Partially peel the liftgate grommet in the direction of arrow (1) shown in the figure, and remove the liftgate grommet from the liftgate grommet inner. (with RDS (radio data system))

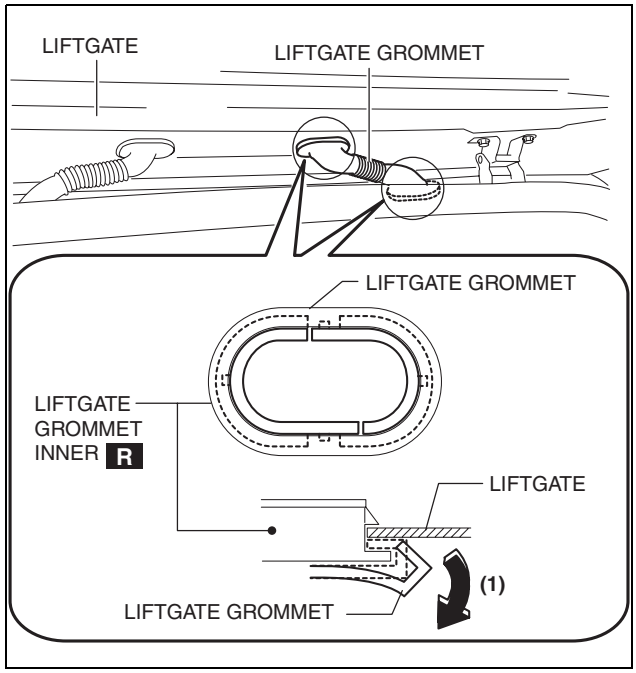

ac5jjw00001165

18. Using a screwdriver wrapped in protective tape, pull the liftgate grommet in the direction of the arrow (2) shown in the figure while pressing the liftgate grommet inner tab in the direction of the arrow (1) shown in the figure, and disengage the liftgate from the liftgate grommet. (with RDS (radio data system))

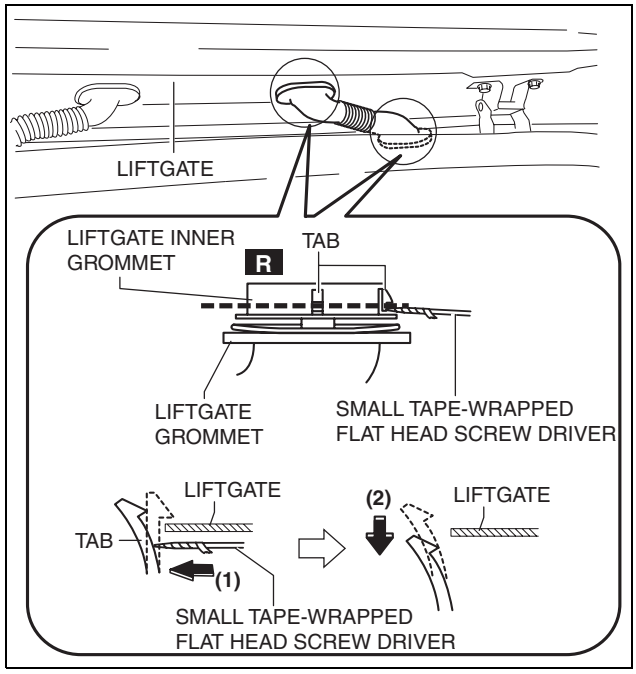

ac5wzw0000534

19. Pull the liftgate grommet in the direction of the arrow (1) shown in the figure and remove it.
20. Pull out the disconnected connectors on the liftgate side and vehicle interior side and antenna feeder No.3. (with RDS (radio data system))
21. Remove antenna feeder No.3.
22. Install in the reverse order of removal.

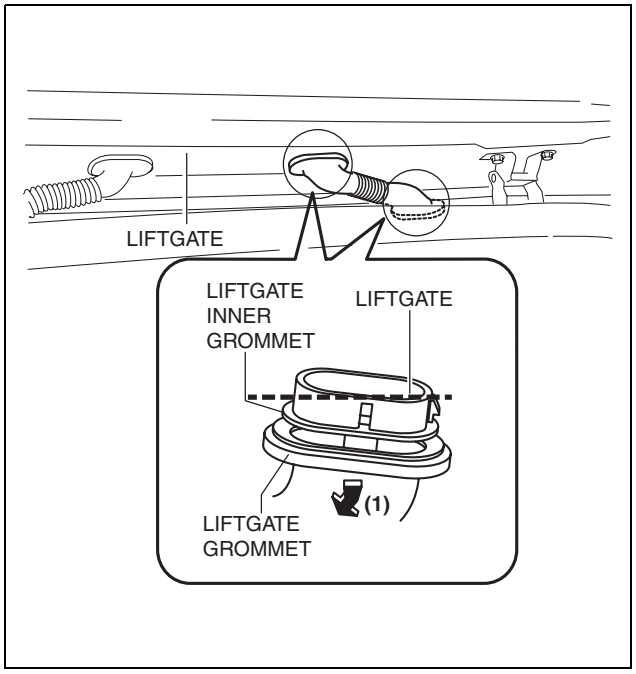

ac5jjw00002358

ANTENNA FEEDER NO.3 INSPECTION

id092000813000

1. Disconnect the negative battery cable. (See 01-17A-11 NEGATIVE BATTERY CABLE DISCONNECTION/CONNECTION [SKYACTIV-G 2.0].) (See 01-17A-13 NEGATIVE BATTERY CABLE DISCONNECTION/CONNECTION [SKYACTIV-G 2.0 (WITHOUT i-stop)].) (See 01-17B-9 NEGATIVE BATTERY CABLE DISCONNECTION/CONNECTION [SKYACTIV-D 2.2].)
2. Remove the following parts:
   (1) Front scuff plate (See 09-17-61 FRONT SCUFF PLATE REMOVAL/INSTALLATION.)
   (2) Rear scuff plate (See 09-17-63 REAR SCUFF PLATE REMOVAL/INSTALLATION.)
   (3) B-pillar lower trim (See 09-17-57 B-PILLAR LOWER TRIM REMOVAL/INSTALLATION.)
   (4) Front seat belt adjusting cover (See 08-11-2 FRONT SEAT BELT REMOVAL/INSTALLATION.)
   (5) Front seat belt upper anchor installation bolt (See 08-11-2 FRONT SEAT BELT REMOVAL/INSTALLATION.)
   (6) B-pillar upper trim (See 09-17-58 B-PILLAR UPPER TRIM REMOVAL/INSTALLATION.)
   (7) Trunk board (See 09-17-85 TRUNK BOARD REMOVAL/INSTALLATION.)
   (8) Trunk end trim (See 09-17-78 TRUNK END TRIM REMOVAL/INSTALLATION.)
   (9) Trunk side trim (See 09-17-80 TRUNK SIDE TRIM REMOVAL/INSTALLATION.)
   (10) C-pillar trim (See 09-17-59 C-PILLAR TRIM REMOVAL/INSTALLATION.)
   (11) Liftgate upper trim (with RDS (radio data system)) (See 09-17-87 LIFTGATE UPPER TRIM REMOVAL/INSTALLATION.)
3. Remove the rear passenger's assist handle. (See 09-17-91 ASSIST HANDLE REMOVAL/INSTALLATION.)
4. Partially peel back the headliner.

Note
- If the headliner is peeled back excessively, the headliner could become creased. Be careful not to peel back the headliner excessively.

5. Disconnect antenna feeder No.2.
6. Disconnect the roof antenna connector.
7. Disconnect the glass antenna. (With RDS (radio data system))
8. Verify that the continuity between antenna feeder No.3 terminals is as indicated in the table.

ENTERTAINMENT

Without RDS (radio data system)

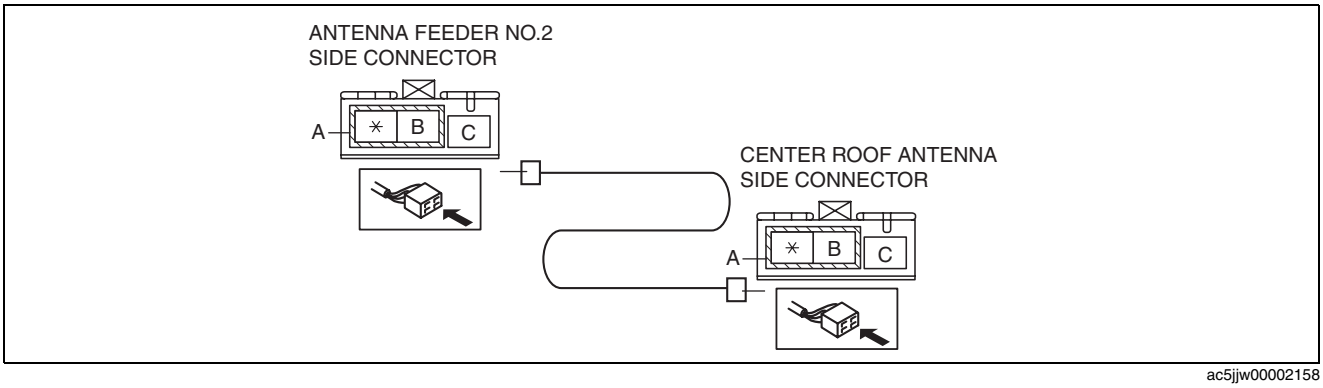

ac5jjw00002158

With RDS (radio data system)

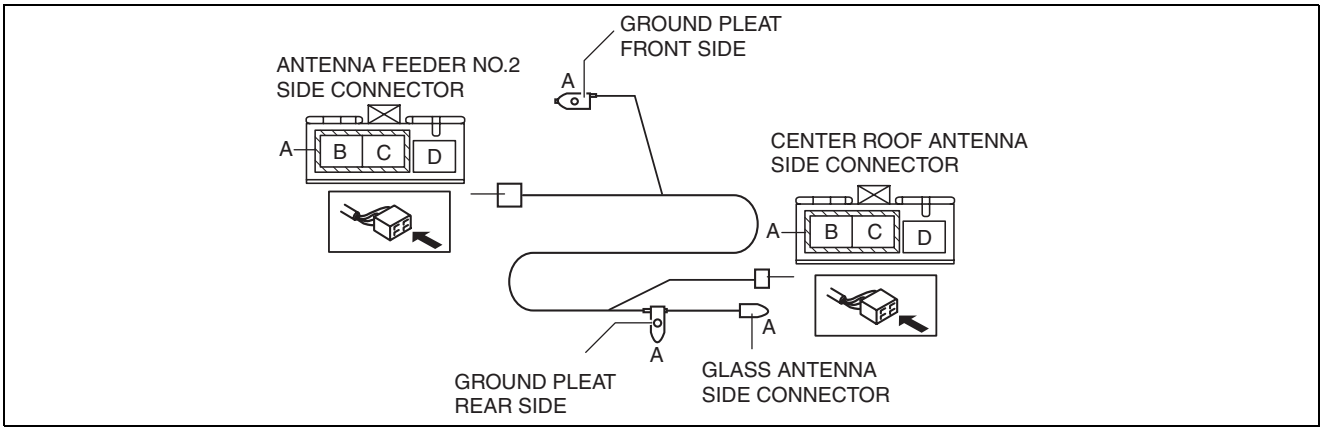

ac5wzw0000341

- If not as indicated in the table, replace antenna feeder No.3.

Without RDS (radio data system)

: Continuity

Test condition	Terminal					
	ANTENNA FEEDER NO.2 SIDE CONNECTOR			CENTER ROOF ANTENNA SIDE CONNECTOR		
	A	B	C	A	B	C
Under any condition	○					○
		○			○	
			○	○		

ac5jjw00002159

With RDS (radio data system)

: Continuity

Test condition	Terminal									
	ANTENNA FEEDER NO.2 SIDE CONNECTOR				GROUND PLEAT FRONT SIDE	GROUND PLEAT REAR SIDE	GLASS ANTENNA SIDE CONNECTOR	CENTER ROOF ANTENNA SIDE CONNECTOR		
	A	B	C	D	A	A	A	A	B	C
Under any condition	○							○		
		○					○			
			○						○	
				○						○
					○	○				

ac5wzw0000243

ENTERTAINMENT

GLOBAL POSITIONING SYSTEM (GPS) ANTENNA REMOVAL/INSTALLATION

id092000801500

1. Disconnect the negative battery cable. (See 01-17A-11 NEGATIVE BATTERY CABLE DISCONNECTION/CONNECTION [SKYACTIV-G 2.0].) (See 01-17A-13 NEGATIVE BATTERY CABLE DISCONNECTION/CONNECTION [SKYACTIV-G 2.0 (WITHOUT i-stop)].) (See 01-17B-9 NEGATIVE BATTERY CABLE DISCONNECTION/CONNECTION [SKYACTIV-D 2.2].)
2. Remove the center speaker grille. (see 09-17-15 SPEAKER GRILLE REMOVAL/INSTALLATION.)
3. Disconnect the connector.
4. Remove the screw.
5. Remove the GPS antenna.
6. Install in the reverse order of removal.

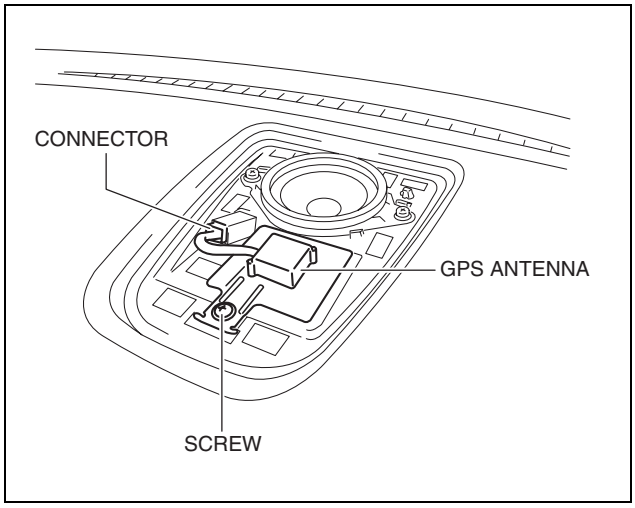

ac5wzw0000071

STEERING SWITCH REMOVAL/INSTALLATION

id092000822500

Warning

- **Handling the driver-side air bag module improperly can accidentally operate (deploy) the air bag module, which may seriously injure you. Read the service warnings and cautions before handling the air bag module. (See 08-10-3 AIR BAG SYSTEM SERVICE WARNINGS.) (See 08-10-5 AIR BAG SYSTEM SERVICE CAUTIONS.)**

1. Switch the ignition OFF (LOCK).
2. Disconnect the negative battery cable and wait for **1 min or more**. (See 01-17A-11 NEGATIVE BATTERY CABLE DISCONNECTION/CONNECTION [SKYACTIV-G 2.0].) (See 01-17A-13 NEGATIVE BATTERY CABLE DISCONNECTION/CONNECTION [SKYACTIV-G 2.0 (WITHOUT i-stop)].) (See 01-17B-9 NEGATIVE BATTERY CABLE DISCONNECTION/CONNECTION [SKYACTIV-D 2.2].)
3. Remove the driver-side air bag module. (See 08-10-6 DRIVER-SIDE AIR BAG MODULE REMOVAL/INSTALLATION.)
4. Remove the steering wheel. (See 06-13-4 STEERING WHEEL AND COLUMN REMOVAL/INSTALLATION.)
5. Affix protective tape to the gaps between the steering wheel and cover as shown in the figure.
6. Remove the screws.

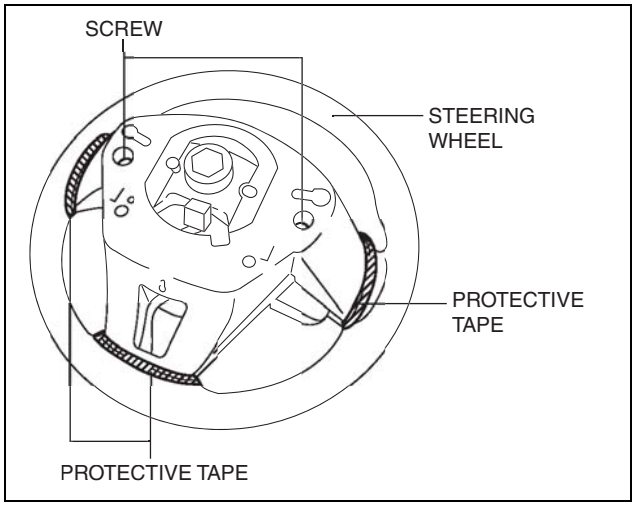

ac5jjw00000932

ENTERTAINMENT

7. Using a tape-wrapped flathead screwdriver, press the cover tabs in the direction of the arrows shown in the figure to detach the cover tabs from the steering wheel.

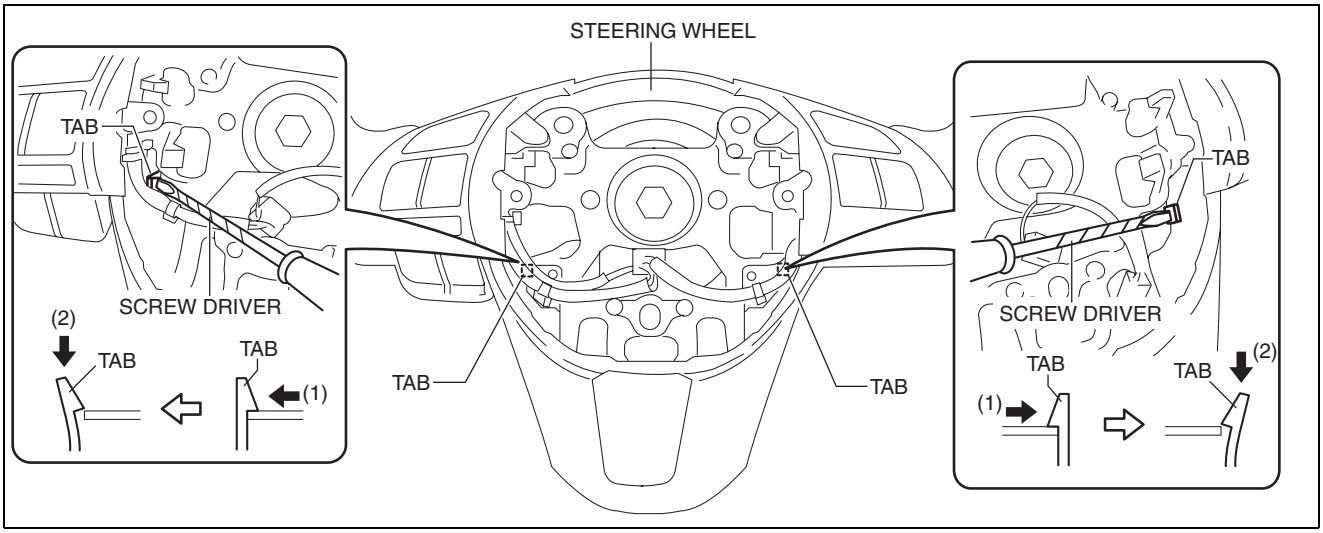

ac5jjw00000933

8. Insert the fastener remover into the clearance between the steering wheel and cover as shown in the figure.
9. Move the fastener remover in the direction of the arrow shown in the figure and detach cover tab from the steering wheel.

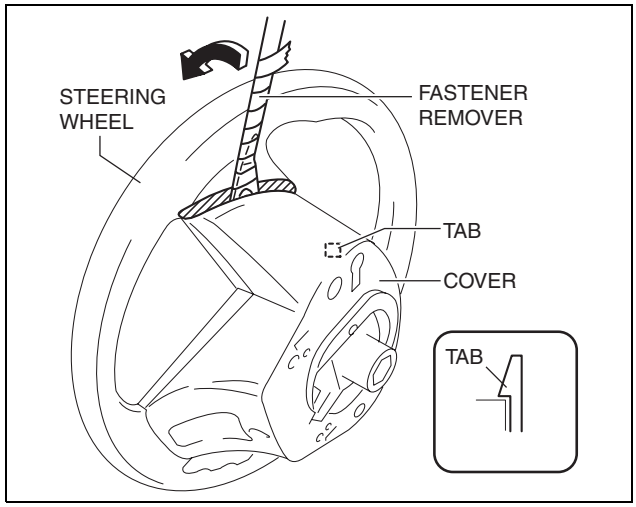

ac5jjw00000934

10. Remove the cover while detaching the pins from the steering wheel.

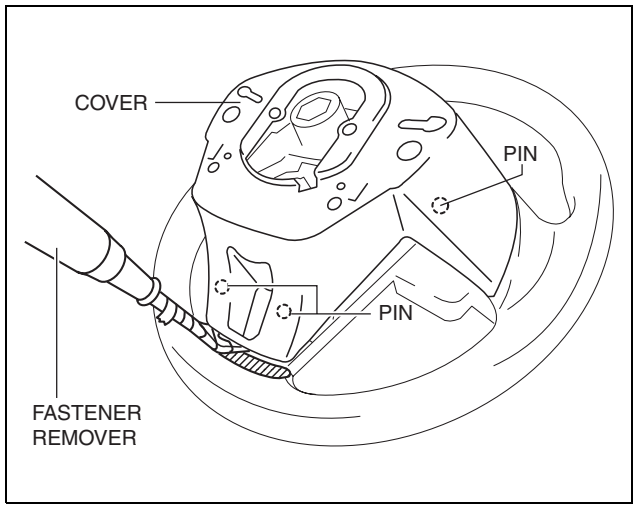

ac5jjw00000943

ENTERTAINMENT

11. While pressing the clip tabs in the direction of the arrows (1) shown in the figure, press the clip in the direction of the arrow (2) to detach the clip tabs from the steering wheel.
12. Detach the clip.
13. While pressing the tabs of the steering switch in the direction of the arrows (1) shown in the figure, press the steering switch in the direction of the arrow (2) to detach the tabs of the steering switch from the steering wheel.

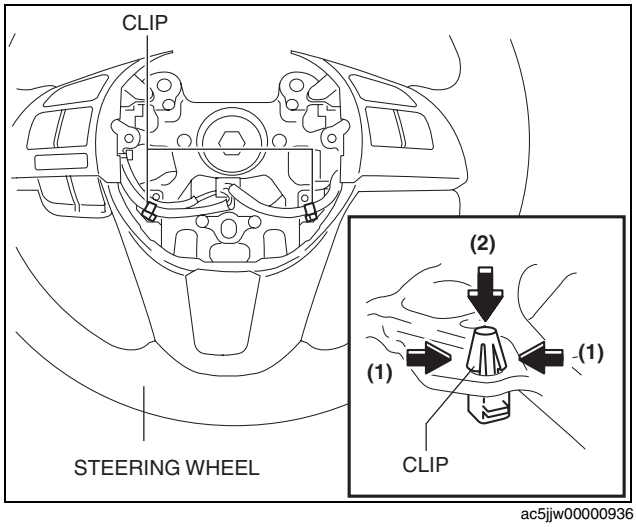

ac5jjw00000936

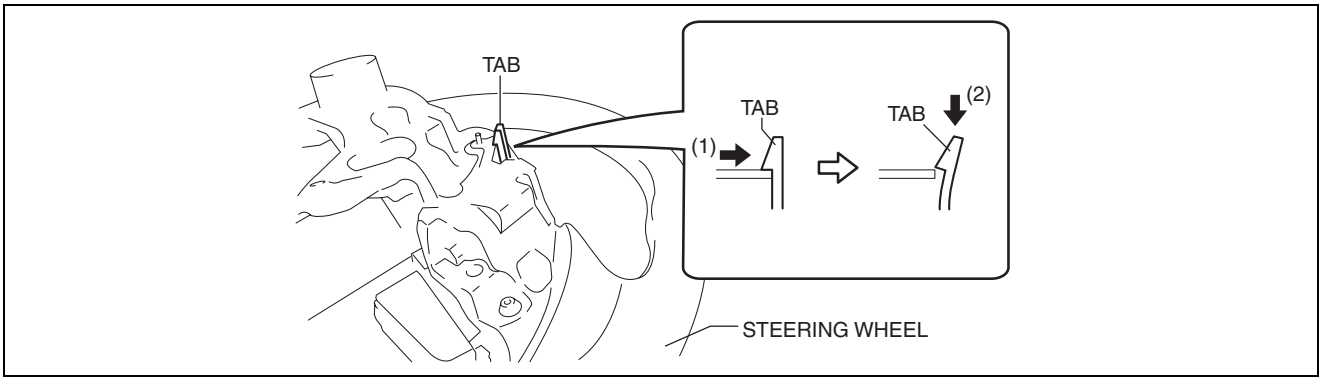

ac5uuw00002651

14. Insert a fastener remover into the position shown in the figure.

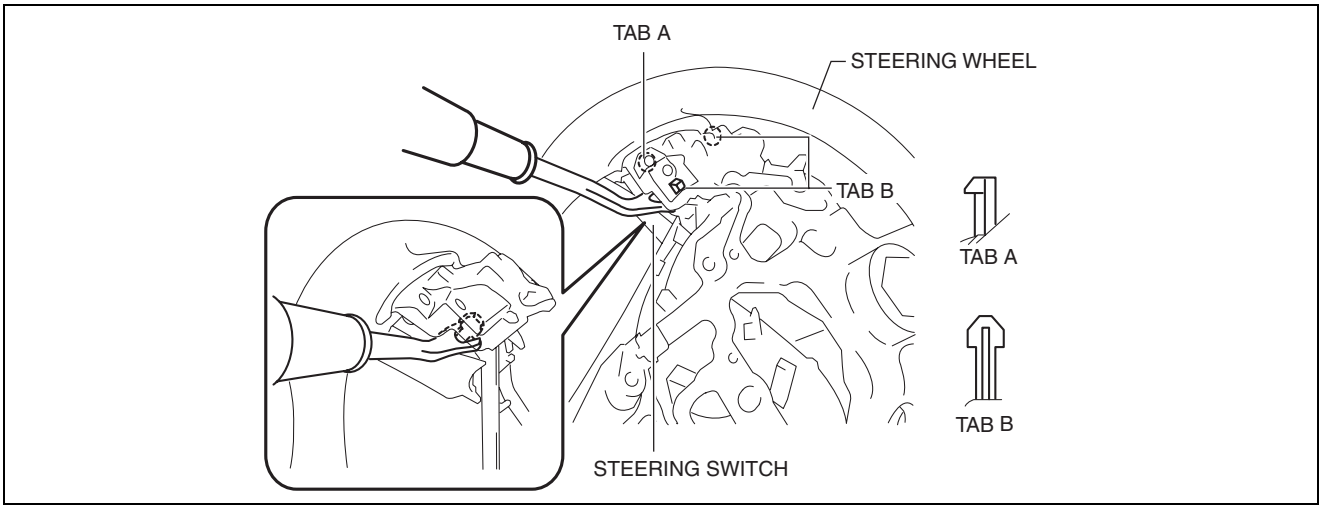

ac5uuw00002652

15. Move the fastener remover straight in the direction shown in the figure and remove the tabs of the steering switch from the steering wheel.

Caution
- **When removing the pins of the steering switch, pull them out straight. If the fastener remover is moved at an angle, the pins could be damaged.**

Note
- Because the pins of the steering switch are installed to the hard plastic area of the steering wheel, the engagement is strong.

ENTERTAINMENT

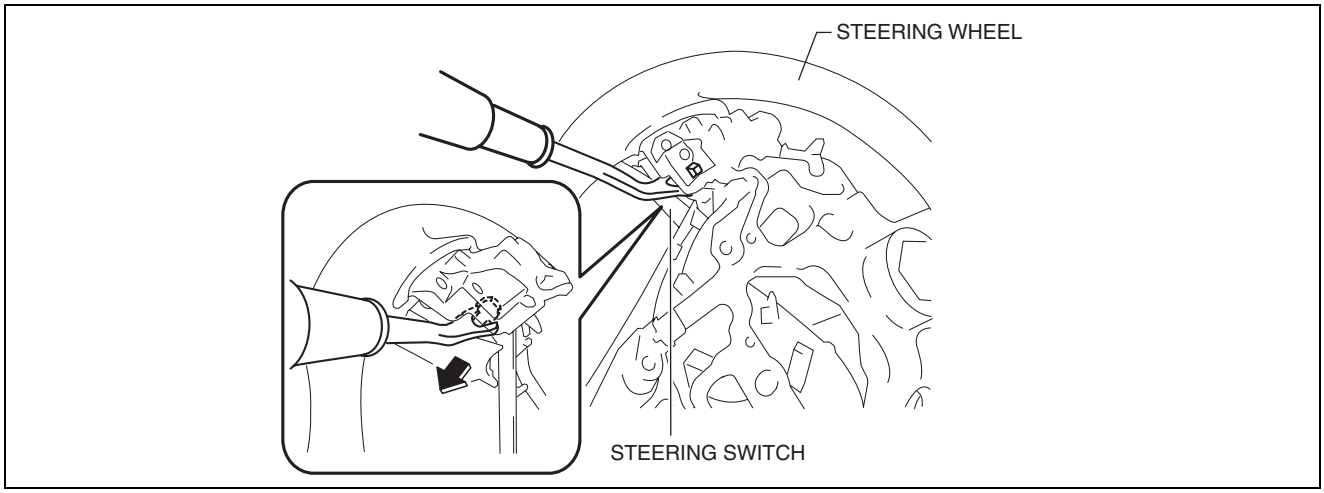

ac5uuw00002653

16. Remove the steering switch while detaching the pin and tabs of the steering wheel.
17. Install in the reverse order of removal.

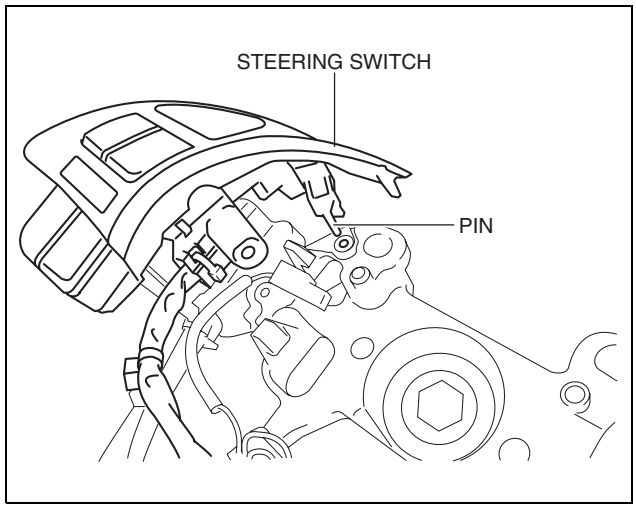

ac5jjw00000944

STEERING SWITCH INSPECTION

id092000822600

Without Bluetooth system

Warning

- **Handling the driver-side air bag module improperly can accidentally operate (deploy) the air bag module, which may seriously injure you. Read the service warnings and cautions before handling the air bag module. (See 08-10-3 AIR BAG SYSTEM SERVICE WARNINGS.) (See 08-10-5 AIR BAG SYSTEM SERVICE CAUTIONS.)**

1. Switch the ignition OFF (LOCK).
2. Disconnect the negative battery cable and wait for **1 min or more**. (See 01-17A-11 NEGATIVE BATTERY CABLE DISCONNECTION/CONNECTION [SKYACTIV-G 2.0].) (See 01-17A-13 NEGATIVE BATTERY CABLE DISCONNECTION/CONNECTION [SKYACTIV-G 2.0 (WITHOUT i-stop)].) (See 01-17B-9 NEGATIVE BATTERY CABLE DISCONNECTION/CONNECTION [SKYACTIV-D 2.2].)
3. Remove the driver-side air bag module. (See 08-10-6 DRIVER-SIDE AIR BAG MODULE REMOVAL/INSTALLATION.)
4. Remove the steering wheel. (See 06-13-4 STEERING WHEEL AND COLUMN REMOVAL/INSTALLATION.)

ENTERTAINMENT

5. Verify that the resistance and continuity between the steering switch terminals is as indicated in the table.

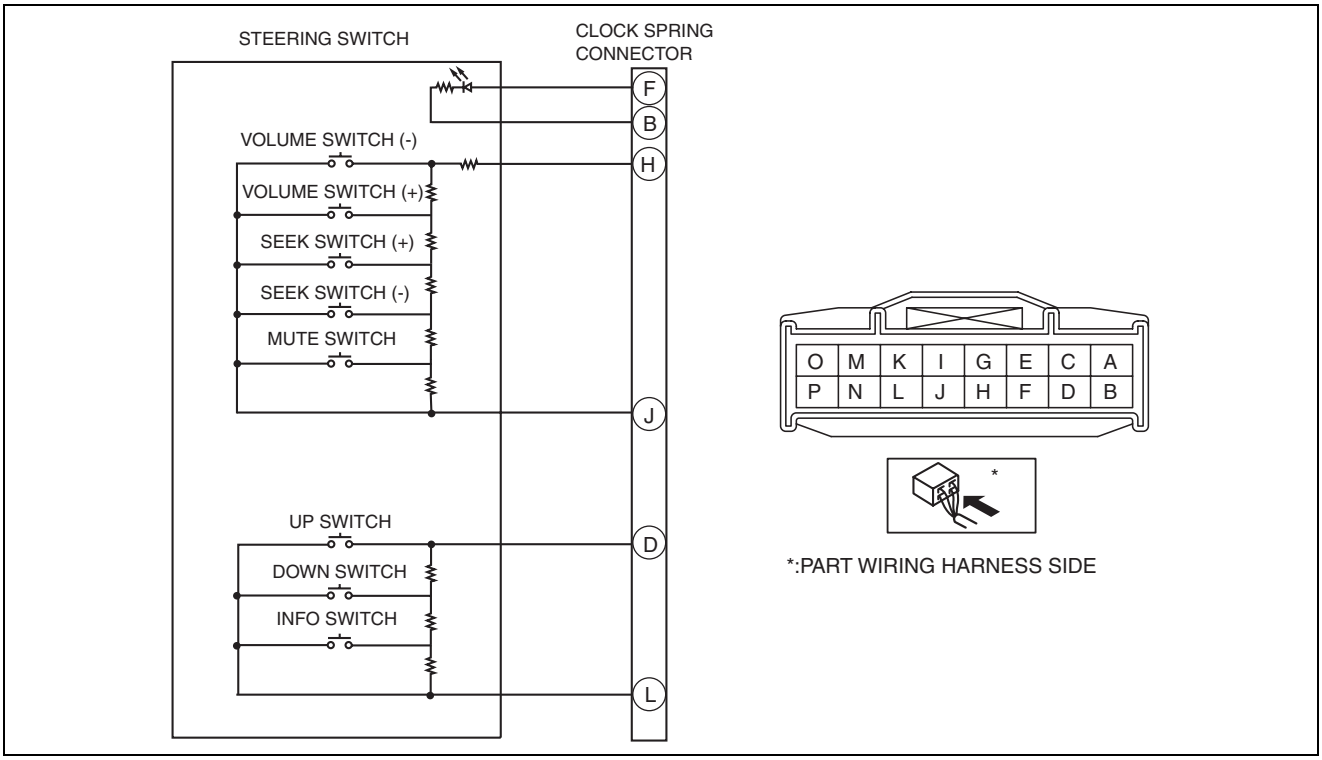

ac5uuw00002646

- If not as indicated in the table, replace the steering switch. (See 09-20-54 STEERING SWITCH REMOVAL/INSTALLATION.)

○-WW-○ : Resistance

Switch Position	Terminal		Resistance (ohm)
	H	J	
Volume Switch (-) ON	○-WW-○		53.064—54.136
Volume Switch (+) ON	○-WW-○		145.233—148.167
Seek Switch (+) ON	○-WW-○		297.693—303.707
Seek Switch (-) ON	○-WW-○		556.083—567.317
Mute Switch ON	○-WW-○		2,011.383—2,052.017
OFF	○-WW-○		4,813.083—4,910.317

ac5uuw00002647

○-WW-○ : Resistance

Switch Position	Terminal		Resistance (ohm)
	D	L	
DOWN Switch ON	○-WW-○		386.1—393.9
INFO Switch ON	○-WW-○		999.9—1,020.1
OFF	○-WW-○		2,524.5—2,575.5

ac5jjw00000312

ENTERTAINMENT

○—○ : Continuity ○-/\/\-○ : Resistance

Switch Position	Terminal	
	D	L
UP switch ON	○	○
OFF	○ R ○	

R: 2,524.5—2,575.5 ohms

ac5uuw00002837

6. Apply battery positive voltage to steering switch terminal F, and connect terminal B to ground.
7. Verify that the LED illuminates.
   - If the LED does not illuminate, replace the steering switch. (See 09-20-54 STEERING SWITCH REMOVAL/INSTALLATION.)

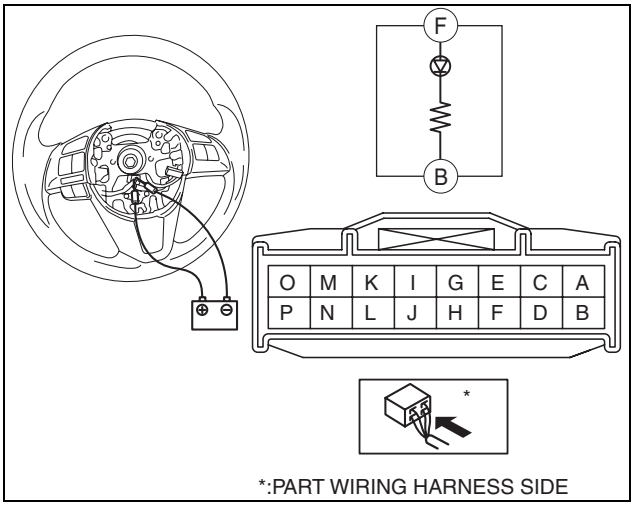

ac5uuw00002648

With Bluetooth system

Warning

- **Handling the driver-side air bag module improperly can accidentally operate (deploy) the air bag module, which may seriously injure you. Read the service warnings and cautions before handling the air bag module. (See 08-10-3 AIR BAG SYSTEM SERVICE WARNINGS.) (See 08-10-5 AIR BAG SYSTEM SERVICE CAUTIONS.)**

1. Switch the ignition OFF (LOCK).
2. Disconnect the negative battery cable and wait for **1 min or more**. (See 01-17A-11 NEGATIVE BATTERY CABLE DISCONNECTION/CONNECTION [SKYACTIV-G 2.0].) (See 01-17A-13 NEGATIVE BATTERY CABLE DISCONNECTION/CONNECTION [SKYACTIV-G 2.0 (WITHOUT i-stop)].) (See 01-17B-9 NEGATIVE BATTERY CABLE DISCONNECTION/CONNECTION [SKYACTIV-D 2.2].)
3. Remove the driver-side air bag module. (See 08-10-6 DRIVER-SIDE AIR BAG MODULE REMOVAL/INSTALLATION.)
4. Remove the steering wheel. (See 06-13-4 STEERING WHEEL AND COLUMN REMOVAL/INSTALLATION.)

ENTERTAINMENT

5. Verify that the resistance and continuity between the steering switch terminals is as indicated in the table.

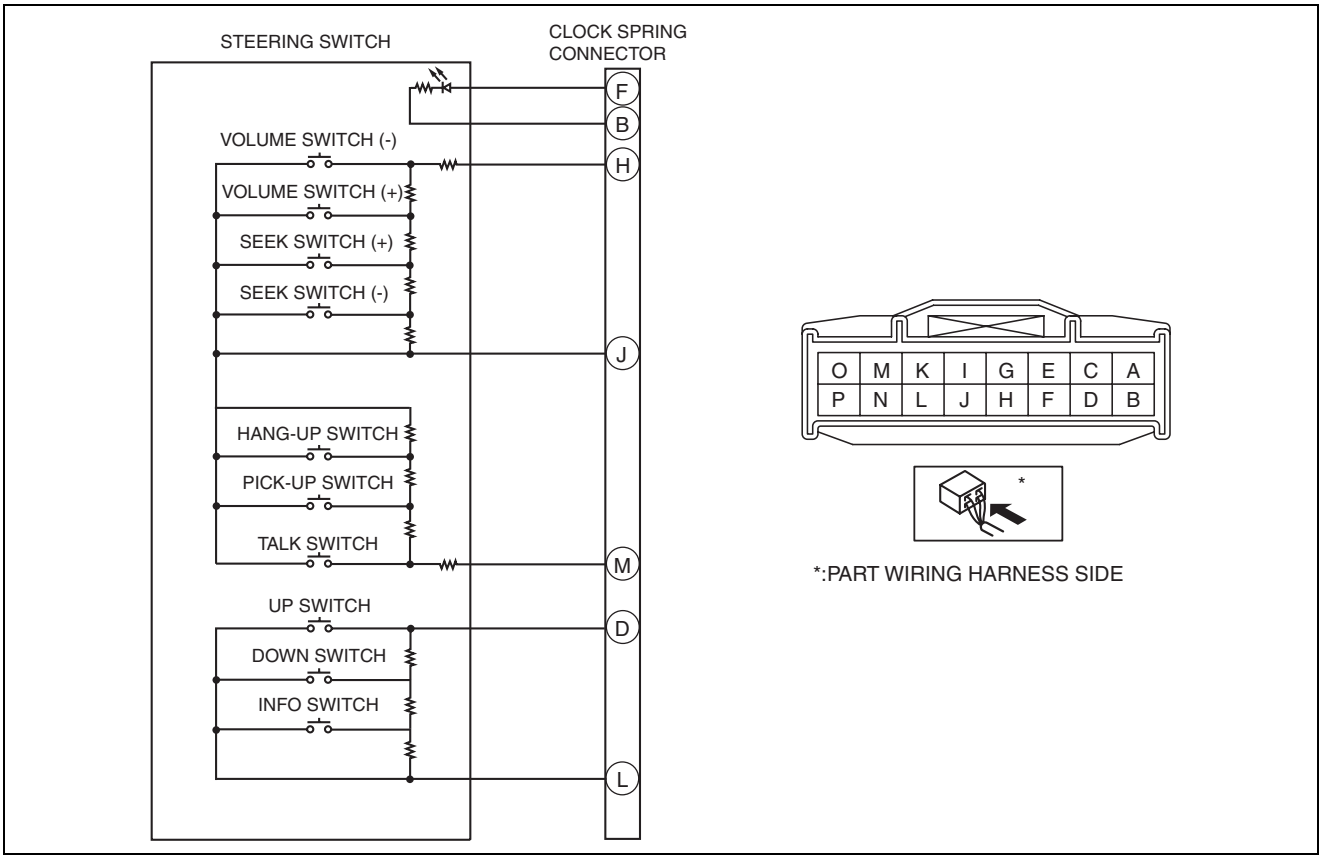

ac5jjw00000374

- If not as indicated in the table, replace the steering switch. (See 09-20-54 STEERING SWITCH REMOVAL/INSTALLATION.)

○-WW-○ : Resistance

Switch Position	Terminal H	Terminal J	Resistance (ohm)
Volume Switch (-) ON	○-WW-○		53.064—54.136
Volume Switch (+) ON	○-WW-○		145.233—148.167
Seek Switch (+) ON	○-WW-○		297.693—303.707
Seek Switch (-) ON	○-WW-○		556.083—567.317
OFF	○-WW-○		4,813.083—4,910.317

ac5uuw00002649

○-WW-○ : Resistance

Switch Position	Terminal M	Terminal J	Resistance (ohm)
Talk Switch ON	○-WW-○		103.95—106.05
Pick-up Switch ON	○-WW-○		271.26—276.74
Hang-up Switch ON	○-WW-○		657.36—670.64
OFF	○-WW-○		3,330.36—3,397.64

ac5jjw00000375

ENTERTAINMENT

: Resistance

Switch Position	Terminal		Resistance (ohm)
	D	L	
DOWN Switch ON	○-WW-○		386.1—393.9
INFO Switch ON	○-WW-○		999.9—1,020.1
OFF	○-WW-○		2,524.5—2,575.5

ac5jjw00000312

: Continuity : Resistance

Switch Position	Terminal	
	D	L
UP switch ON	○	○
OFF	○	R ○

R: 2,524.5—2,575.5 ohms

ac5uuw00002837

6. Apply battery positive voltage to steering switch terminal F, and connect terminal B to ground.
7. Verify that the LED illuminates.
   - If the LED does not illuminate, replace the steering switch. (See 09-20-54 STEERING SWITCH REMOVAL/INSTALLATION.)

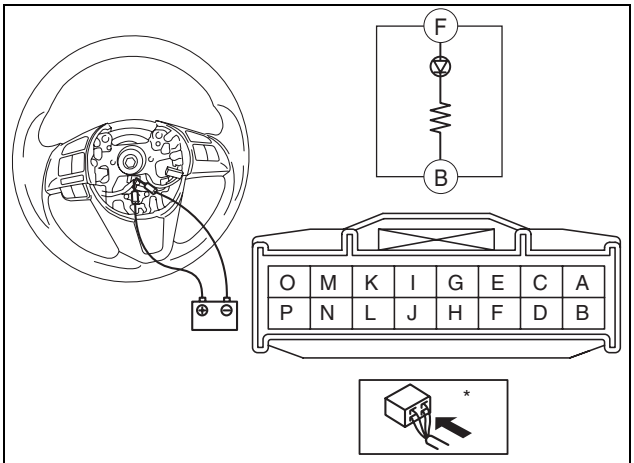

ac5uuw00002648

COMMANDER SWITCH REMOVAL/INSTALLATION

id092000811300

Caution

- **The audio unit communicates with the commander switch and records the presence/non-presence of the commander switch when the ignition is switched to ACC or ON (engine off or on) after connecting the negative battery cable.**
- **If the commander switch is installed with the negative battery cable connected when the audio unit records that there is no commander switch, the commander switch does not operate.**
- **For the commander switch installation/removal, disconnect the negative battery cable, switch the ignition to ACC or ON (engine off or on) after the servicing is completed, and the audio unit records the presence/non-presence of the commander switch.**

1. Disconnect the negative battery cable. (See 01-17A-11 NEGATIVE BATTERY CABLE DISCONNECTION/CONNECTION [SKYACTIV-G 2.0].) (See 01-17A-13 NEGATIVE BATTERY CABLE DISCONNECTION/CONNECTION [SKYACTIV-G 2.0 (WITHOUT i-stop)].) (See 01-17B-9 NEGATIVE BATTERY CABLE DISCONNECTION/CONNECTION [SKYACTIV-D 2.2].)
2. Remove the following parts:
   (1) Front console box (See 09-17-40 FRONT CONSOLE BOX REMOVAL/INSTALLATION.)

ENTERTAINMENT

(2) Shift lever knob (MTX) (See 05-16A-1 MANUAL TRANSAXLE SHIFT MECHANISM REMOVAL/INSTALLATION [C66M-R, C66MX-R].)(See 05-16B-1 MANUAL TRANSAXLE SHIFT MECHANISM REMOVAL/INSTALLATION [D66M-R, D66MX-R].)
(3) Shift panel (See 09-17-42 SHIFT PANEL REMOVAL/INSTALLATION.)
(4) Upper panel (See 09-17-44 UPPER PANEL REMOVAL/INSTALLATION.)

3. Disconnect the connector.

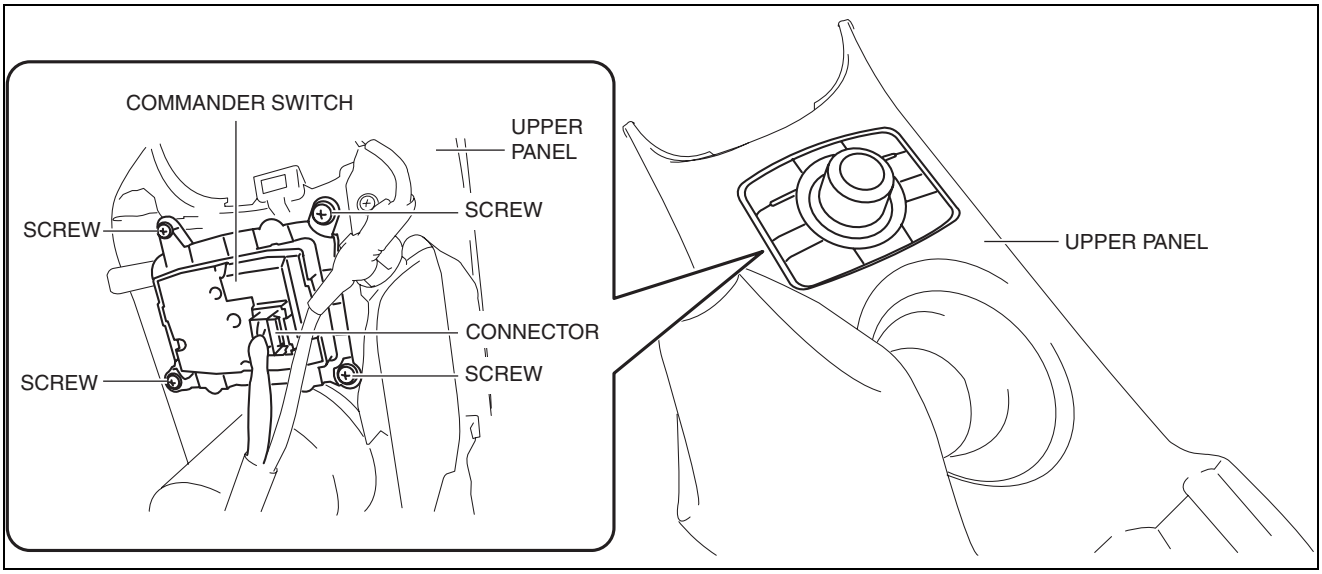

ac5wzw0000036

4. Remove the screws.
5. Remove the commander switch component from the upper panel.
6. Remove the commander switch screws.

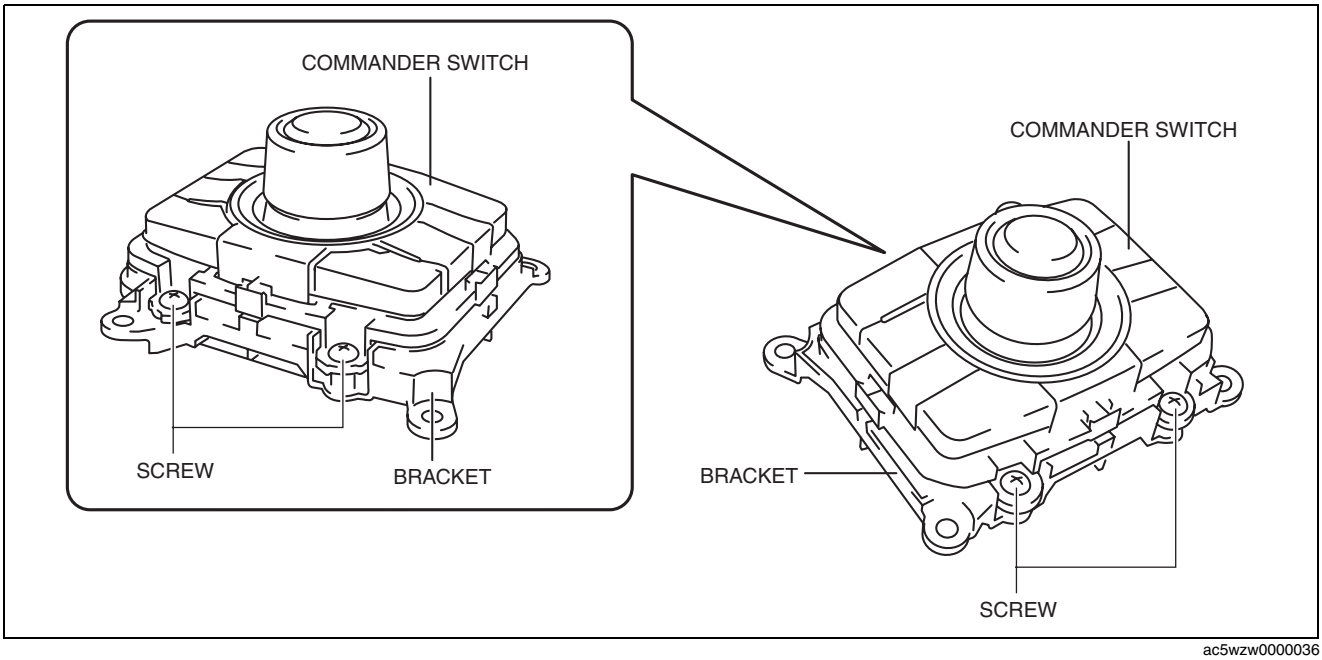

ac5wzw0000036

7. Remove the commander switch from the bracket.
8. Install in the reverse order of removal.

COMMANDER SWITCH INSPECTION

id092000811400

Switch panel

1. Disconnect the negative battery cable. (See 01-17A-11 NEGATIVE BATTERY CABLE DISCONNECTION/CONNECTION [SKYACTIV-G 2.0].) (See 01-17A-13 NEGATIVE BATTERY CABLE DISCONNECTION/CONNECTION [SKYACTIV-G 2.0 (WITHOUT i-stop)].) (See 01-17B-9 NEGATIVE BATTERY CABLE DISCONNECTION/CONNECTION [SKYACTIV-D 2.2].)
2. Remove the following parts:
   (1) Front console box (See 09-17-40 FRONT CONSOLE BOX REMOVAL/INSTALLATION.)

ENTERTAINMENT

(2) Shift lever knob (MTX) (See 05-16A-1 MANUAL TRANSAXLE SHIFT MECHANISM REMOVAL/INSTALLATION [C66M-R, C66MX-R].)(See 05-16B-1 MANUAL TRANSAXLE SHIFT MECHANISM REMOVAL/INSTALLATION [D66M-R, D66MX-R].)
(3) Shift panel (See 09-17-42 SHIFT PANEL REMOVAL/INSTALLATION.)
(4) Upper panel (See 09-17-44 UPPER PANEL REMOVAL/INSTALLATION.)
(5) Commander switch (See 09-20-61 COMMANDER SWITCH REMOVAL/INSTALLATION.)

3. Verify that the resistance between the commander switch terminals is as indicated in the table.

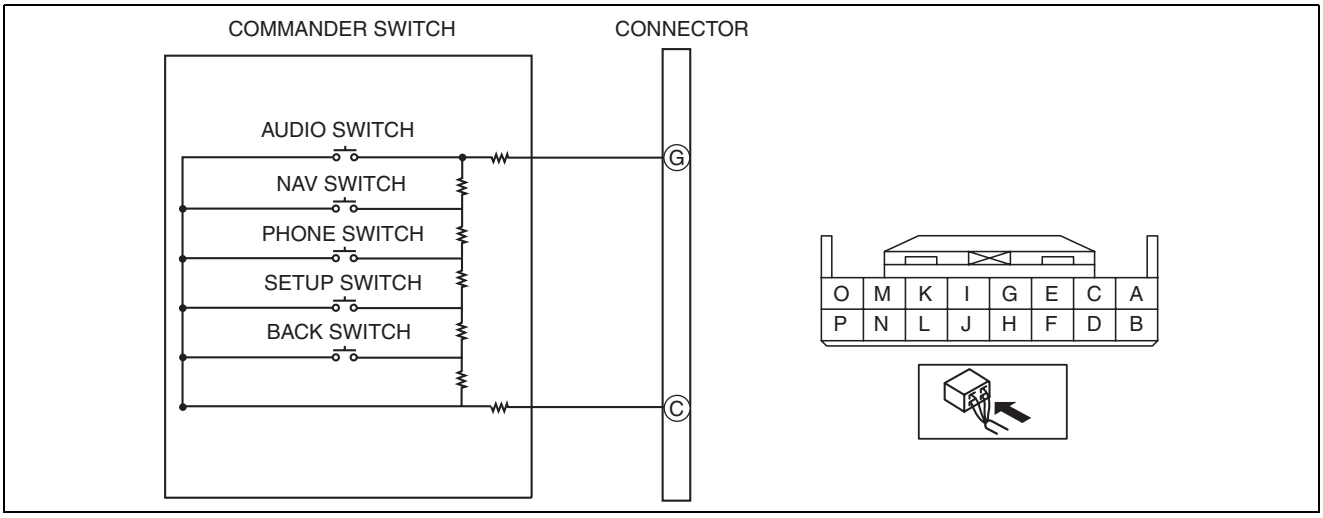

ac5wzw0000331

- If not as indicated in the table, replace the commander switch.

: Resistance

Switch Position	Terminal G	Terminal C	Resistance (ohm)
AUDIO Switch ON	○-WW-○		53.064—56.136
NAV Switch ON	○-WW-○		145.233—150.167
PHONE Switch ON	○-WW-○		297.693—305.707
SETUP Switch ON	○-WW-○		556.083—569.317
BACK Switch ON	○-WW-○		1,026.333—1,049.067
OFF	○-WW-○		4,967.233—5,099.167

ac5wzw0000331

Commander knob (forward, back, left, right)

1. Disconnect the negative battery cable. (See 01-17A-11 NEGATIVE BATTERY CABLE DISCONNECTION/CONNECTION [SKYACTIV-G 2.0].) (See 01-17A-13 NEGATIVE BATTERY CABLE DISCONNECTION/CONNECTION [SKYACTIV-G 2.0 (WITHOUT i-stop)].) (See 01-17B-9 NEGATIVE BATTERY CABLE DISCONNECTION/CONNECTION [SKYACTIV-D 2.2].)
2. Remove the following parts:
   (1) Front console box (See 09-17-40 FRONT CONSOLE BOX REMOVAL/INSTALLATION.)
   (2) Shift lever knob (MTX) (See 05-16A-1 MANUAL TRANSAXLE SHIFT MECHANISM REMOVAL/INSTALLATION [C66M-R, C66MX-R].)(See 05-16B-1 MANUAL TRANSAXLE SHIFT MECHANISM REMOVAL/INSTALLATION [D66M-R, D66MX-R].)
   (3) Shift panel (See 09-17-42 SHIFT PANEL REMOVAL/INSTALLATION.)
   (4) Upper panel (See 09-17-44 UPPER PANEL REMOVAL/INSTALLATION.)
   (5) Commander switch (See 09-20-61 COMMANDER SWITCH REMOVAL/INSTALLATION.)

ENTERTAINMENT

3. Verify that the resistance between the commander switch terminals is as indicated in the table.

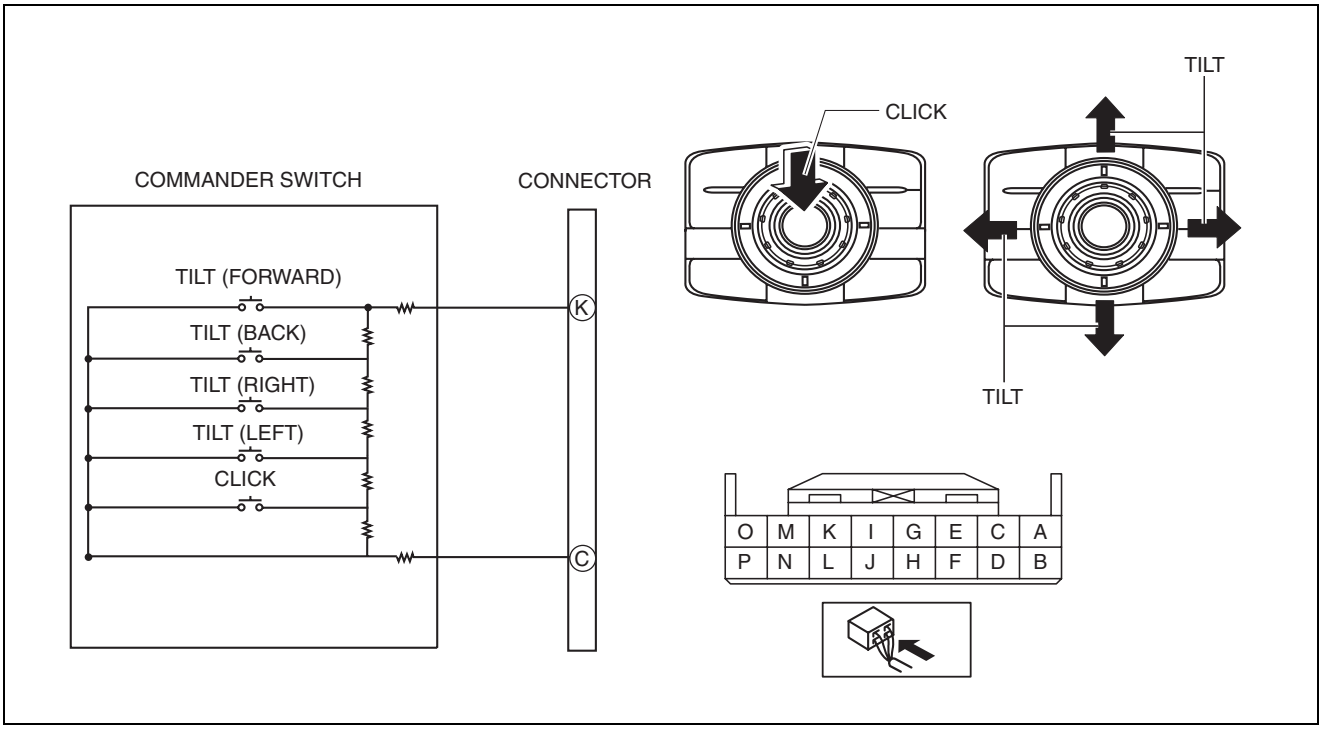

ac5wzw0000331

- If not as indicated in the table, replace the commander switch.

: Resistance

Switch Position	Terminal		Resistance (ohm)
	K	C	
TILT (FORWARD)	○-WW-○		53.064—56.136
TILT (BACK)	○-WW-○		145.233—150.167
TILT (RIGHT)	○-WW-○		297.693—305.707
TILT (LEFT)	○-WW-○		556.083—569.317
CLICK	○-WW-○		2,016.333—2,059.067
OFF	○-WW-○		4,996.333—5,099.167

ac5wzw0000331

Commander knob (rotation)

1. Connect the commander switch connector.
2. Connect the negative battery cable. (See 01-17A-11 NEGATIVE BATTERY CABLE DISCONNECTION/CONNECTION [SKYACTIV-G 2.0].) (See 01-17A-13 NEGATIVE BATTERY CABLE DISCONNECTION/CONNECTION [SKYACTIV-G 2.0 (WITHOUT i-stop)].) (See 01-17B-9 NEGATIVE BATTERY CABLE DISCONNECTION/CONNECTION [SKYACTIV-D 2.2].)
3. The ignition is switched to ACC or ON (engine off).
4. When the commander knob is rotated once step at a time, verify that the voltage between terminals and the waveforms are as indicated in the table.

ENTERTAINMENT

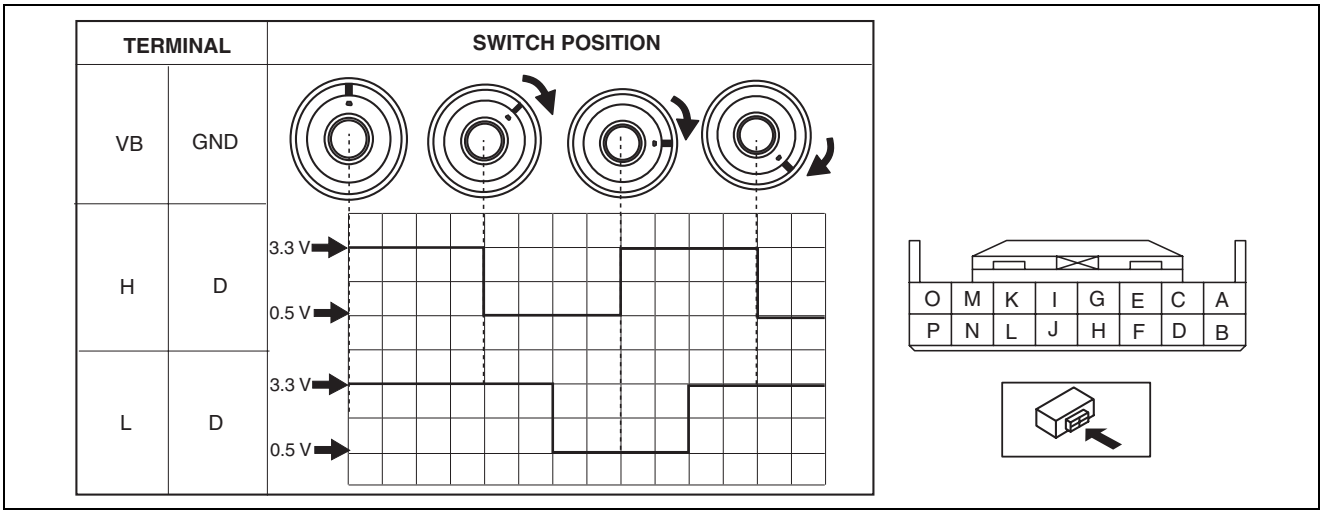

ac5wzw0000331

- If the voltage is not as indicated in the table, verify the related wiring harness.
- If the related wiring harness is normal, replace the commander switch.

MICROPHONE REMOVAL/INSTALLATION

id092000801400

1. Disconnect the negative battery cable. (See 01-17A-11 NEGATIVE BATTERY CABLE DISCONNECTION/CONNECTION [SKYACTIV-G 2.0].) (See 01-17A-13 NEGATIVE BATTERY CABLE DISCONNECTION/CONNECTION [SKYACTIV-G 2.0 (WITHOUT i-stop)].) (See 01-17B-9 NEGATIVE BATTERY CABLE DISCONNECTION/CONNECTION [SKYACTIV-D 2.2].)
2. Remove the front map light. (See 09-18-95 MAP LIGHT REMOVAL/INSTALLATION.)
3. While pressing tabs A of the voice recognition microphone in the direction of the arrows (1) shown in the figure using a tape-wrapped flathead screwdriver, pull the voice recognition microphone in the direction of the arrow (2) shown in the figure to detach tabs A of the voice recognition microphone from the front map light.

R.H.D.

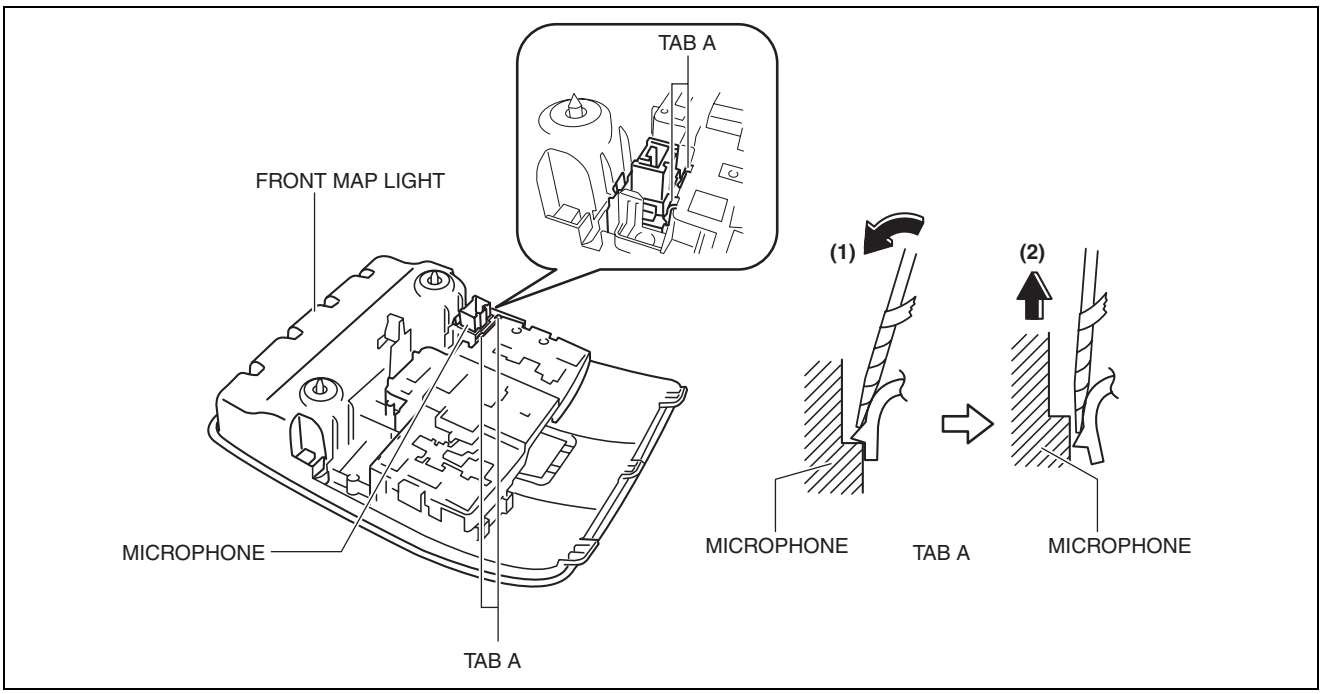

ac5wzw0000377

4. While pulling tab B of the voice recognition microphone in the direction of the arrow (1) shown in the figure, pull the voice recognition microphone in the direction of the arrow (2) shown in the figure to detach tab B of the voice recognition microphone from the front map light.

ENTERTAINMENT

R.H.D.

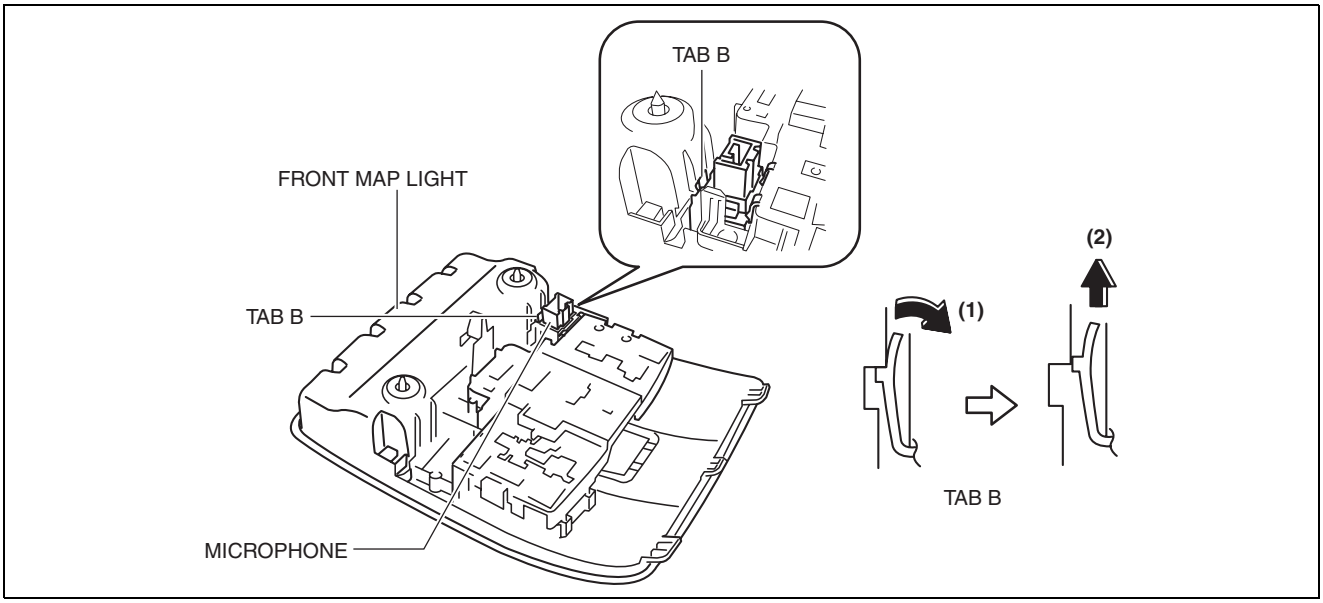

ac5wzw0000377

5. Remove the voice recognition microphone.
6. Install in the reverse order of removal.

Bluetooth UNIT REMOVAL/INSTALLATION

id092000833300

Caution

- **The audio unit communicates with the Bluetooth unit and records the presence/non-presence of the Bluetooth unit when the ignition is switched to ACC or ON (engine off or on) after connecting the negative battery cable.**
- **If the commander switch is installed with the negative battery cable connected when the audio unit records that there is no Bluetooth unit, the Bluetooth unit does not operate.**
- **For the Bluetooth unit installation/removal, disconnect the negative battery cable, switch the ignition to ACC or ON (engine off or on) after the servicing is completed, and the audio unit records the presence/non-presence of the Bluetooth unit.**

1. Disconnect the negative battery cable. (See 01-17A-11 NEGATIVE BATTERY CABLE DISCONNECTION/CONNECTION [SKYACTIV-G 2.0].) (See 01-17A-13 NEGATIVE BATTERY CABLE DISCONNECTION/CONNECTION [SKYACTIV-G 2.0 (WITHOUT i-stop)].) (See 01-17B-9 NEGATIVE BATTERY CABLE DISCONNECTION/CONNECTION [SKYACTIV-D 2.2].)
2. Remove the glove compartment. (See 09-17-30 GLOVE COMPARTMENT REMOVAL/INSTALLATION.)

ENTERTAINMENT

3. Remove the nuts.

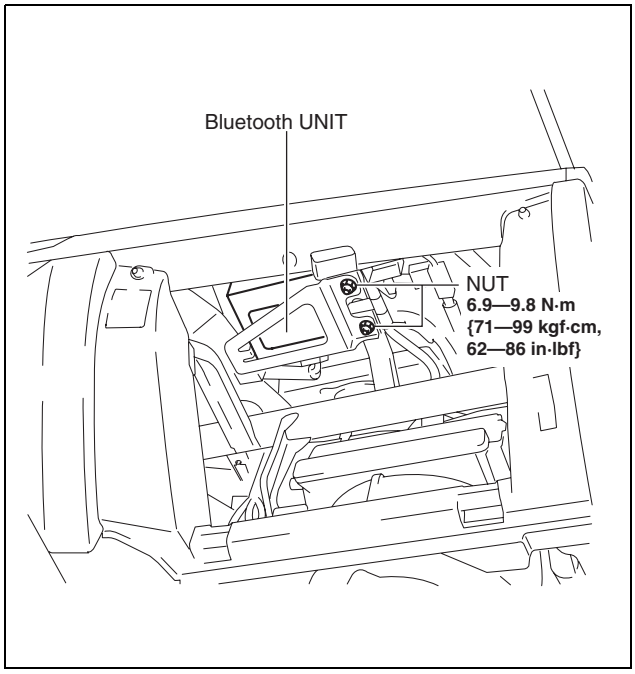

ac5jw00000475

4. While pressing the tabs of the clip in the direction of the arrows (1) shown in the figure, press the clip in the direction of the arrow (2) to detach it from the Bluetooth unit.
5. Detach the clip.
6. Disconnect the connector.
7. Remove the Bluetooth unit.
8. Install in the reverse order of removal.

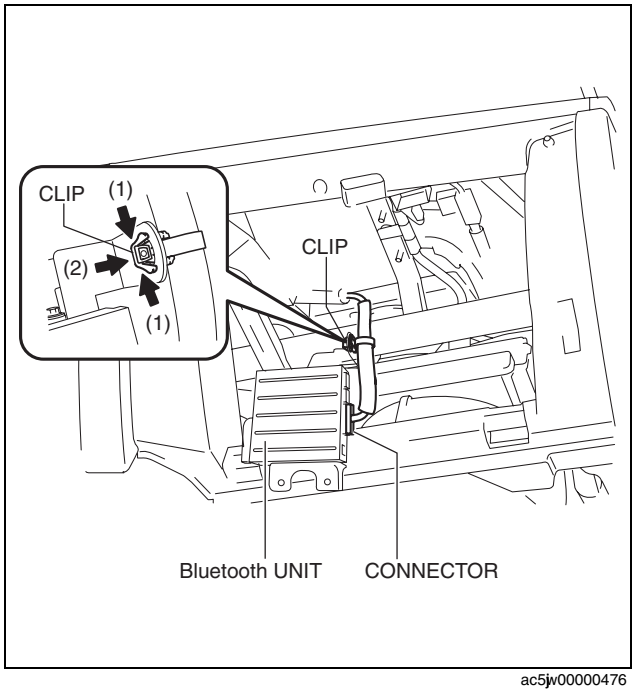

ac5jw00000476

REAR MOUNT CAMERA REMOVAL/INSTALLATION

id092000814900

Caution

- **The audio unit communicates with the rear mount camera and records the presence/non-presence of the rear mount camera when the ignition is switched to ACC or ON (engine off or on) after connecting the negative battery cable.**
- **If the commander switch is installed with the negative battery cable connected when the audio unit records that there is no rear mount camera, the rear mount camera does not operate.**
- **For the rear mount camera installation/removal, disconnect the negative battery cable, switch the ignition to ACC or ON (engine off or on) after the servicing is completed, and the audio unit records the presence/non-presence of the rear mount camera.**

1. Disconnect the negative battery cable. (See 01-17A-11 NEGATIVE BATTERY CABLE DISCONNECTION/CONNECTION [SKYACTIV-G 2.0].) (See 01-17A-13 NEGATIVE BATTERY CABLE DISCONNECTION/CONNECTION [SKYACTIV-G 2.0 (WITHOUT i-stop)].) (See 01-17B-9 NEGATIVE BATTERY CABLE DISCONNECTION/CONNECTION [SKYACTIV-D 2.2].)

ENTERTAINMENT

2. Remove the following parts:
   (1) Liftgate upper trim (See 09-17-87 LIFTGATE UPPER TRIM REMOVAL/INSTALLATION.)
   (2) Liftgate side trim (See 09-17-87 LIFTGATE SIDE TRIM REMOVAL/INSTALLATION.)
   (3) Liftgate lower trim (See 09-17-89 LIFTGATE LOWER TRIM REMOVAL/INSTALLATION.)
   (4) Liftgate garnish (See 09-17-65 INNER GARNISH REMOVAL/INSTALLATION.)
3. Press the rear mount camera tabs in the direction of the arrows (1) shown in the figure, pull the rear mount camera in the direction of the arrow (2) shown in the figure, and disengage the rear mount camera tabs from the liftgate garnish.
4. Remove the rear mount camera.
5. Install in the reverse order of removal.

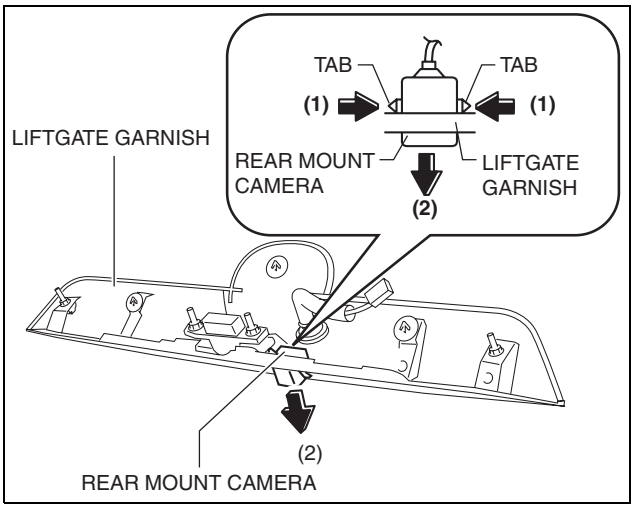

ac5jw00001090

REAR MOUNT CAMERA INSPECTION

id092000815000

European (L.H.D. U.K.) specs.

Note
- The rear mount camera cannot be inspected as an individual unit. If the rear mount camera does not display images normally, refer to the symptom troubleshooting. (See 09-03F-32 DISPLAY DOES NOT CHANGE TO THE REAR MOUNT CAMERA IMAGE. [ENTIRE AUDIO SYSTEM].)

Except European (L.H.D. U.K.) specs.

1. Disconnect the negative battery cable. (See 01-17A-11 NEGATIVE BATTERY CABLE DISCONNECTION/CONNECTION [SKYACTIV-G 2.0].) (See 01-17A-13 NEGATIVE BATTERY CABLE DISCONNECTION/CONNECTION [SKYACTIV-G 2.0 (WITHOUT i-stop)].) (See 01-17B-9 NEGATIVE BATTERY CABLE DISCONNECTION/CONNECTION [SKYACTIV-D 2.2].)
2. Remove the following parts:
   (1) Liftgate upper trim (See 09-17-87 LIFTGATE UPPER TRIM REMOVAL/INSTALLATION.)
   (2) Liftgate side trim (See 09-17-87 LIFTGATE SIDE TRIM REMOVAL/INSTALLATION.)
   (3) Liftgate lower trim (See 09-17-89 LIFTGATE LOWER TRIM REMOVAL/INSTALLATION.)
   (4) Liftgate garnish (See 09-17-65 INNER GARNISH REMOVAL/INSTALLATION.)
   (5) Rear mount camera (See 09-20-68 REAR MOUNT CAMERA REMOVAL/INSTALLATION.)
3. Prepare four dry cell batteries (1.5 V)
4. Connect the four dry cell batteries in a series.

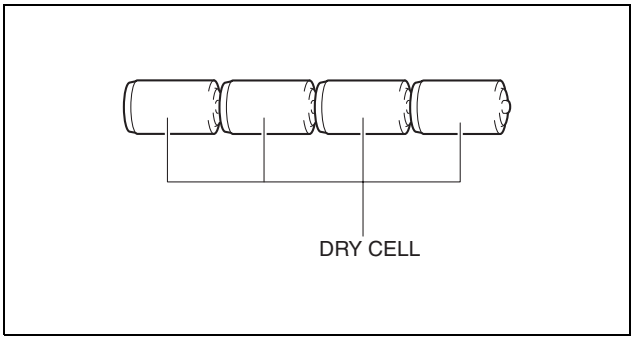

ac5wzw0000510

ENTERTAINMENT

5. Connect the positive pole of the dry cell battery to rear mount camera terminal A, and the negative pole to terminal E.
6. With the cell batteries being connected, measure the waveform between rear mount camera terminal C and terminal B.

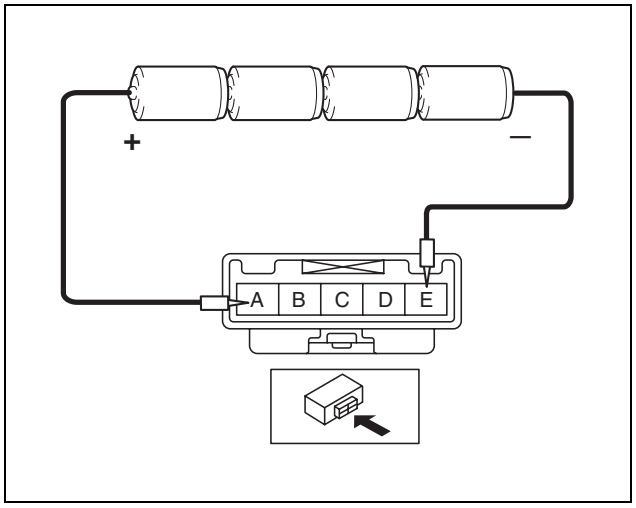

ac5wzw0000464

7. Verify that the waveform is displayed as shown in the figure.
8. If the voltage is not as shown in the figure, replace the rear mount camera.

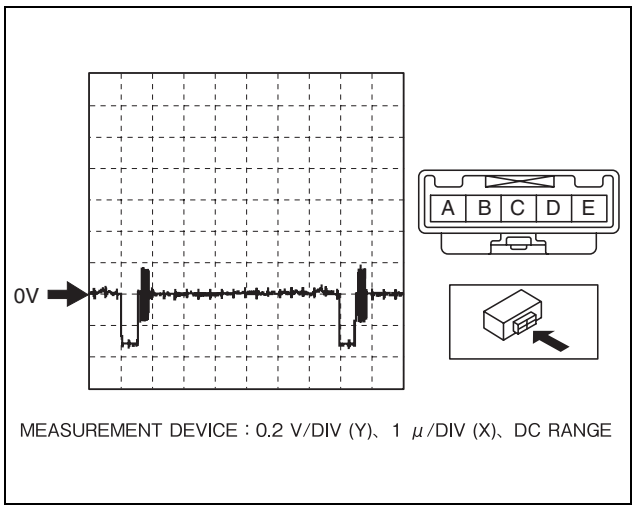

ac5wzw0000464

PARKING ASSIST SYSTEM INITIALIZATION SETTING (CALIBRATION)

id092000841000

Note

- The guide line settings can be changed as follows.
  - — Line display contiguous to steering angle (SET1)
  - — Fixed line display (SET2)
  - — No guide line display (SET3)

- The parking assist unit initialization (calibration) has the following items.

Item	Content/function
Factory adjustment	Performs back camera optical axis adjustment
Back camera optical axis adjustment	
Steering angle adjustment*	Acquires steering angle sensor information.
Signal connection verification	Performs verification of connection condition for parking assist system-related parts

* : Performs steering angle adjustment only if the guide line display setting is SET2. (If other than SET2, cannot select.))

- If for the following, perform 09-20-71 Initialization setting (calibration) launching procedure.
  - — If back camera, liftgate replaced
  - — Part replacement having large effect on vehicle height such as tires, suspension, and wheels
  - — “Not Initialized” is displayed
- If the communication status of the parking assist status input signal is to be verified, perform signal connection verification.

ENTERTAINMENT

Initialization setting (calibration) mode launching procedure
Cursor operation method

- The operation method of the screen cursor, operates the light switch as follows.

Switch position	Operation content
Right turn	Move cursor clockwise.
Left turn	Move cursor counterclockwise.
Passing	Selects (decides).

Preparation

1. Adjust the wheel alignment, tire pressure. (See 02-12-1 WHEEL AND TIRE SPECIFICATION.)
2. Prepare two target bars for adjustment as shown in the figure.

   Note
   - Prepare target bars for adjustment which are easily recognized.

3. Attach the target bars for adjustment to the position (floor surface) shown in the figure.

   Caution
   - **The margin of error in the installation position of the adjustment target bar is within +/- 5 mm {0.2 in}.**

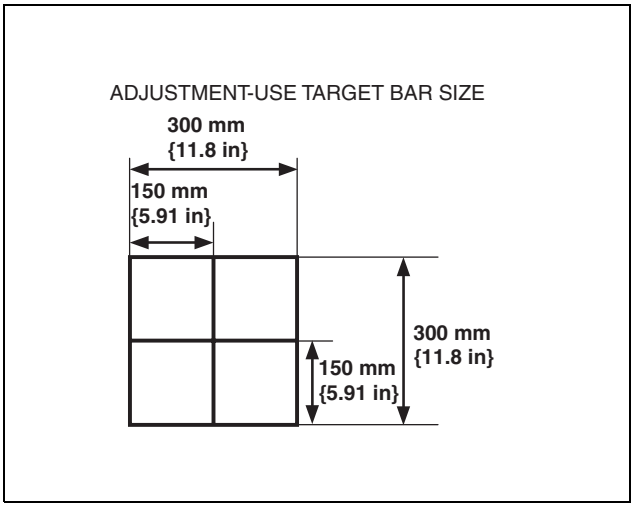

ac5wzw0000292

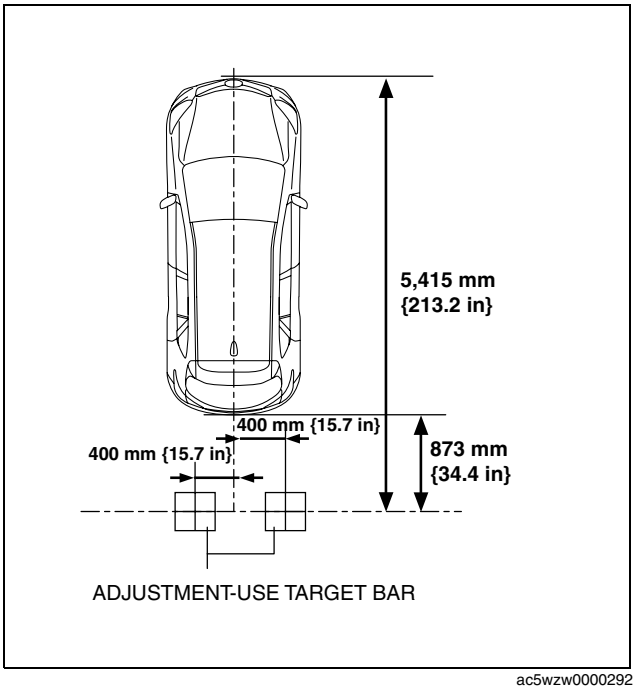

ac5wzw0000292

Initialization setting (calibration) launching procedure

1. Launch the initialization setting (calibration) mode using the following procedure.

   Note
   - If the parking assist system initialization is not implemented (such as after back camera is replaced), the initialization setting adjustment mode is force-launched when the ignition is switched ON, and the No.1 screen is displayed, therefore, the procedure shown in the figure is not required.

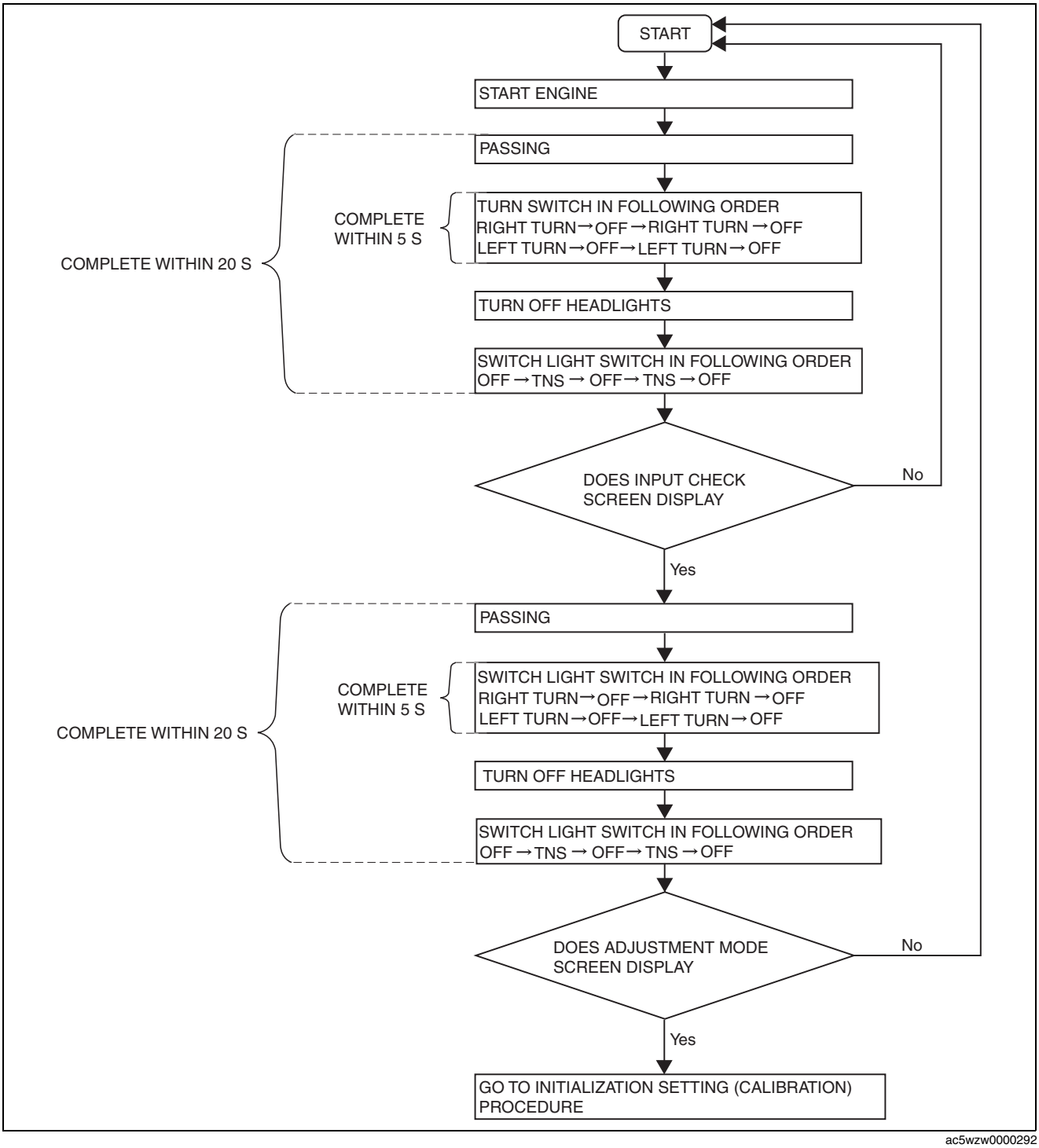

ac5wzw0000292

2. Start the engine. (Only if initialization setting is not implemented)

Initialization setting (calibration) procedure
Procedure

Caution
- **If the initialization setting is performed on a sloping surface or if there is cargo loaded which largely changes the vehicle posture, the camera optical axis may not set to the correct position. When performing the initialization setting, park the vehicle on a flat surface and remove any cargo.**

1. Launch the initialization setting (calibration) mode. (See 09-20-71 Initialization setting (calibration) mode launching procedure.)

ENTERTAINMENT

2. Select the adjustment mode No.1 screen MANU.

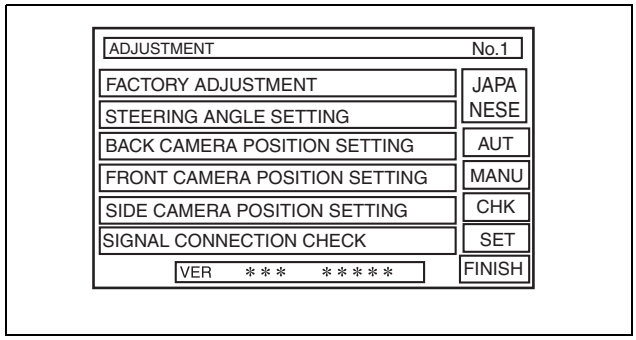

ac5wzw0000325

Note
- If it does not change to the adjustment mode No.1 screen and the the screen turns black, a malfunction in the back camera can be considered. Verify the connection status of the back camera.

3. Select the adjustment mode No.1 screen FACTORY ADJUSTMENT.

Note
- If the guide line display mode is SET1 or SET3, either FACTORY ADJUSTMENT or BACK CAMERA can be selected because the content for the factory adjustment and the back camera adjustment is the same.

4. Operate switch A, B and the up/down switch of the back camera optical axis adjustment screen and center the target bar for adjustment in the adjustment frame.

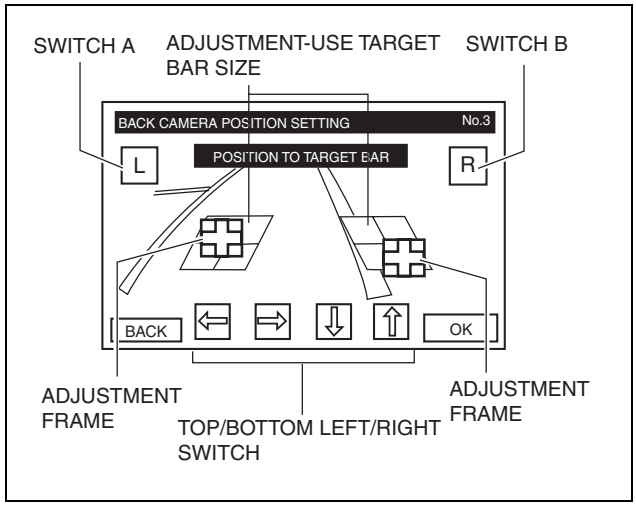

ac5wzw0000292

Note
- If it does not move in back camera optical axis adjustment screen, a back camera malfunction can be considered. Verify the connection status of the back camera.

5. Select the back camera optical axis adjustment No.3 screen OK.

Note
- The camera image (image at vehicle rear) is displayed while the adjustment value is stored.

6. Verify that the adjustment mode No.1 screen is displayed.
   - If it does not display, repeat procedure from Step 1.
   - If the adjustment mode No.1 screen is not displayed even if the procedure is repeated from Step 1, a back camera malfunction can be considered. Replace the back camera and perform the initialization setting again (calibration).
7. Prepare target bar for inspection as shown in the figure.
8. Attach the target bars for inspection to the position (floor surface) shown in the figure.

ac5wzw0000376

Caution
- **The margin of error in the installation position of the adjustment target bar is within +/- 5 mm.**

ENTERTAINMENT

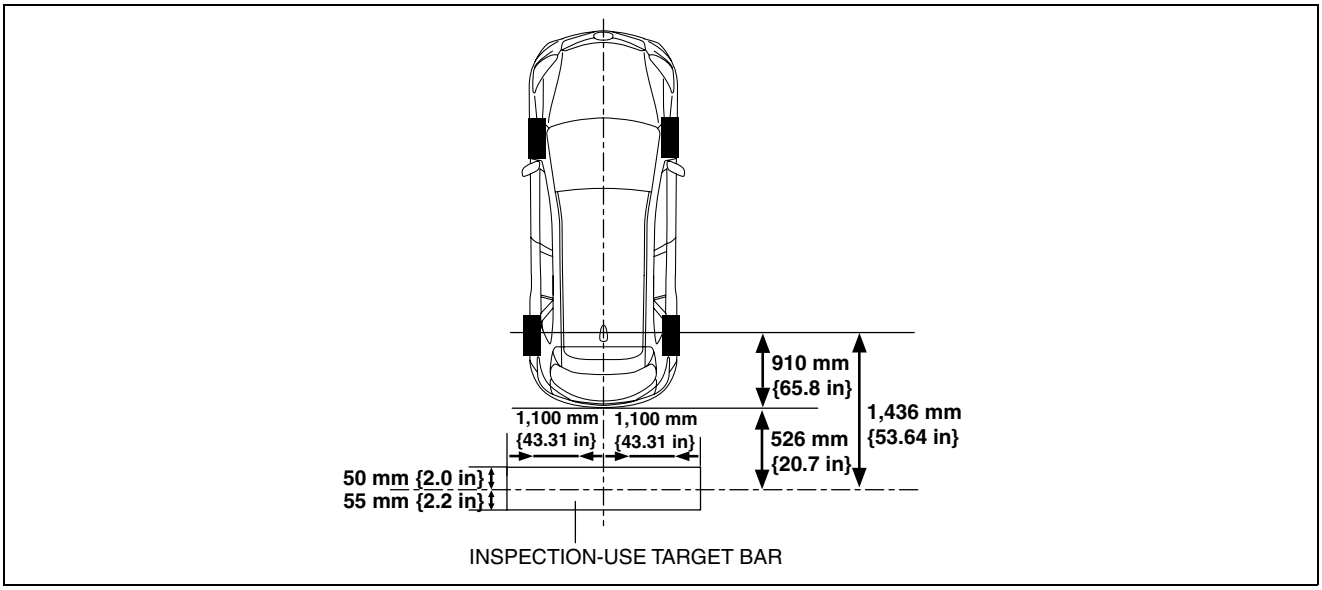

ac5wzw0000380

9. Select the adjustment mode No.1 screen CHK.
10. Input the inspection password.
    - Switch the light switch in the following order while the selector lever is shifted to the R position (ATX)/put in reverse (MTX).

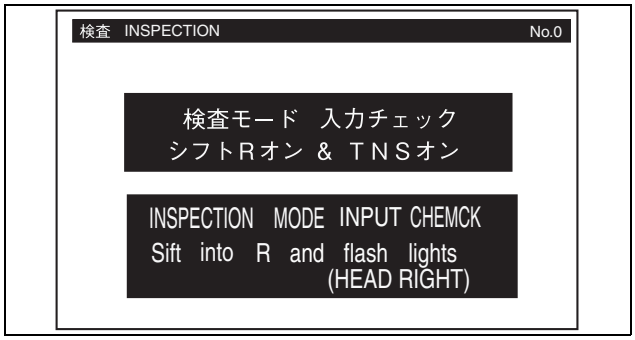

ac5wzw0000331

11. Verify that the distance reference line for the inspection is above the inspection-use target marker, and select OK.
    - If it is not above the inspection-use target marker, select NG and perform the initialization again.
12. Switch the ignition OFF (LOCK).
13. Launch the initialization setting (calibration) mode. (See 09-20-71 Initialization setting (calibration) mode launching procedure.)

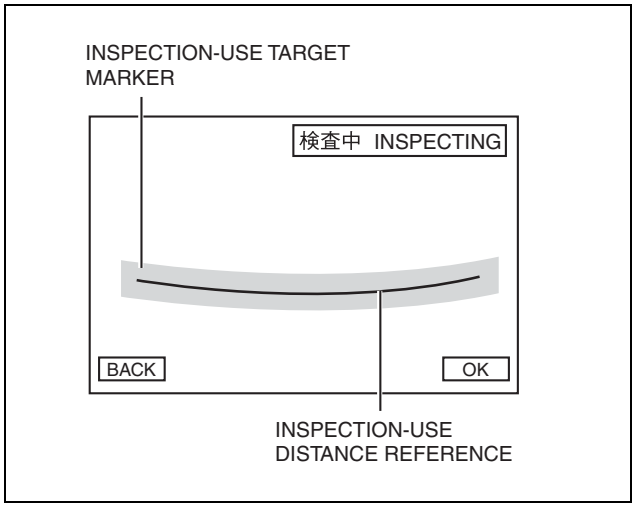

ac5wzw0000292

ENTERTAINMENT

14. Verify that the adjustment No.1 screen FACTORY ADJUSTMENT item is not displayed in black.

Note
- Adjustment items that have been completed are displayed in black on the screen. If the steering angle adjustment item is not displayed in green, perform the procedure from Step 1 again because the adjustment has not been completed.

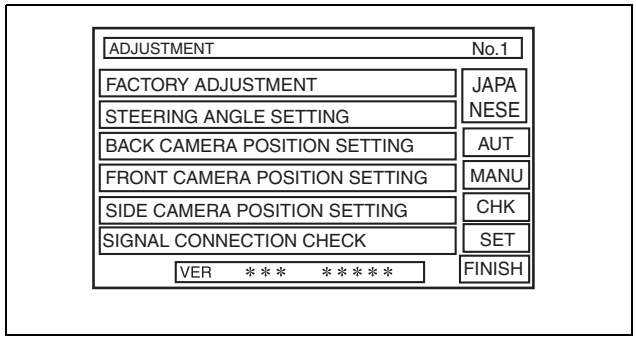

ac5wzw0000325

15. Verify the operation of the predicted vehicle path lines. (See 09-20-76 Predicted vehicle path line operation verification procedure.)

Guide line setting change procedure

Note
- The guide line setting can only be changed if the initialization (calibration) has been completed.

Changing to fixed line display

1. Launch the initialization setting (calibration) mode. (See 09-20-71 Initialization setting (calibration) mode launching procedure.)
2. Select the adjustment mode No.1 screen SET.

Note
- If it does not change to the adjustment mode No.1 screen and the the screen turns black, a malfunction in the back camera can be considered. Verify the connection status of the back camera.

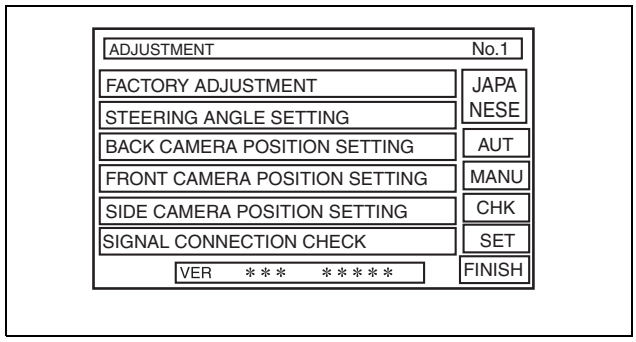

ac5wzw0000325

3. Select setting screen SET2.
4. Select setting screen OK.

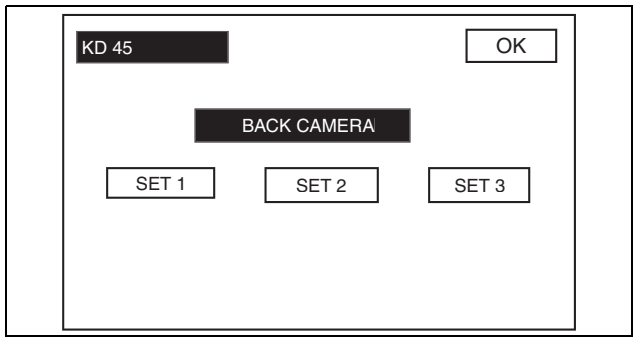

ac5jjw00002679

5. Turn the steering wheel left/right until it locks.

Note
- The steering wheel can be turned first to the left or right.
- If the steering wheel is turned in the opposite direction before it locks, the correct steering angle will not be stored in memory.

6. Select steering angle adjustment screen MAX STEERING ANGLE MEMORIZATION.
7. Select the adjustment mode No.1 screen FINISH.

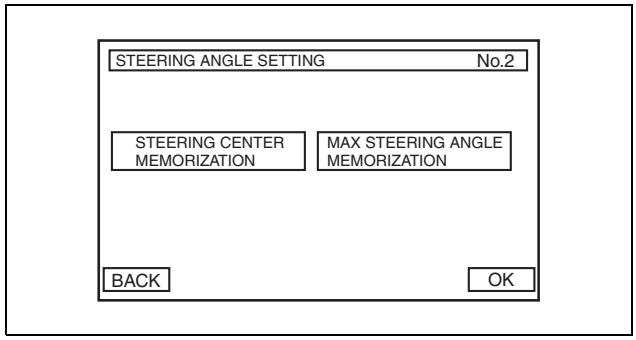

ac5wzw0000325

ENTERTAINMENT

Guide lines not displayed

1. Launch the initialization setting (calibration) mode. (See 09-20-71 Initialization setting (calibration) mode launching procedure.)
2. Select the adjustment mode No.1 screen SET.

Note
- If it does not change to the adjustment mode No.1 screen and the the screen turns black, a malfunction in the back camera can be considered. Verify the connection status of the back camera.

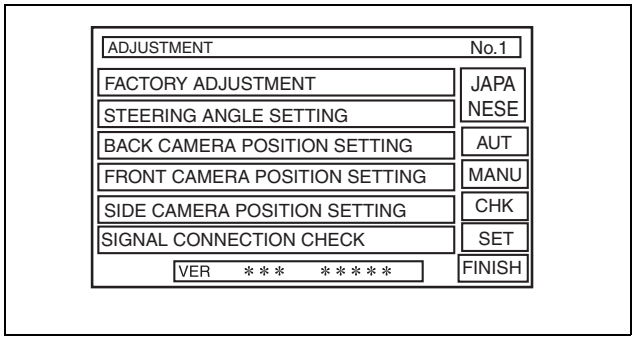

ac5wzw0000325

3. Select setting screen SET3.
4. Select setting screen OK.
5. Select the adjustment mode No.1 screen FINISH.

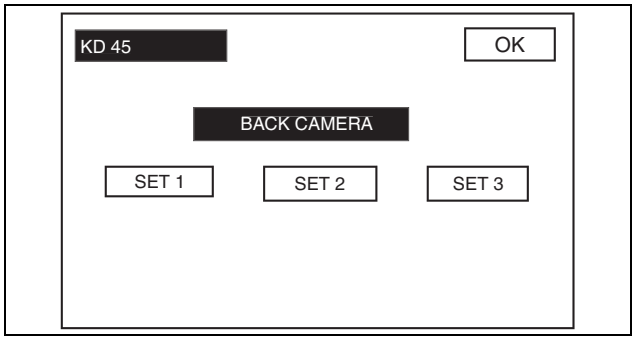

ac5jjw00002679

Predicted vehicle path line operation verification procedure

Caution
- **When performing this procedure, keep the brake pedal depressed so that the vehicle does not unexpectedly move and cause an accident.**

1. Verify that the parking brake is applied correctly.
2. Start the engine.
3. Shift the selector lever to the R position (ATX)/put in reverse (MTX).
4. Turn the steering wheel left and right until it locks, and verify that the predicted vehicle path line movement is synchronized to the operation..
   - If the predicted vehicle path lines do not link, or they do not move prior to locking the steering wheel, the steering angle signal will not be received correctly, therefore, perform signal connection verification.

Signal connection verification

1. Launch the initialization setting (calibration) mode. (See 09-20-71 Initialization setting (calibration) mode launching procedure.)
2. Select the adjustment mode No.1 screen SIGNAL CONNECTION CHECK.

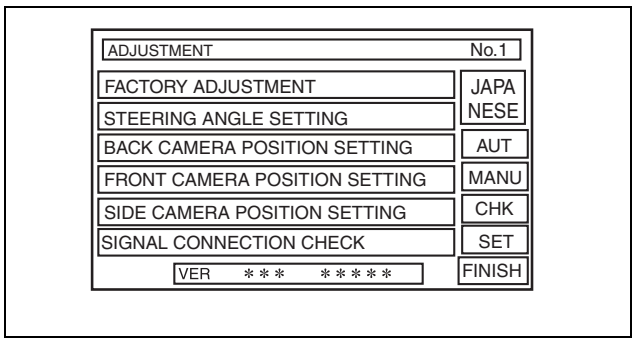

ac5wzw0000325

ENTERTAINMENT

3. Verify the input signal status displayed on the screen.

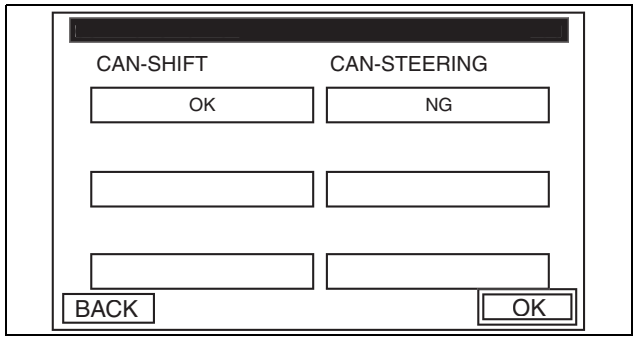

ac5jjw00001710

Item	OPERATION
CAN shift signal	The signal connection verification is performed automatically.
CAN Steering angle	The signal connection verification is performed automatically.

- Items displaying OK: Signal input normal
- Items not displaying OK: Verify connection status of vehicle wiring harnesses, parts and the CAN signal communication status.

AUXILIARY JACK/USB PORT REMOVAL/INSTALLATION

id092000811500

1. Disconnect the negative battery cable. (See 01-17A-11 NEGATIVE BATTERY CABLE DISCONNECTION/CONNECTION [SKYACTIV-G 2.0].) (See 01-17A-13 NEGATIVE BATTERY CABLE DISCONNECTION/CONNECTION [SKYACTIV-G 2.0 (WITHOUT i-stop)].) (See 01-17B-9 NEGATIVE BATTERY CABLE DISCONNECTION/CONNECTION [SKYACTIV-D 2.2].)
2. Remove the upper console. (See 09-17-47 REAR CONSOLE DISASSEMBLY/ASSEMBLY.)
3. While pressing the auxiliary jack/USB port tabs in the direction of the arrows (1) shown in the figure, press the auxiliary jack/USB port in the direction of the arrow (2) to detach the auxiliary jack/USB port tabs from the upper console.

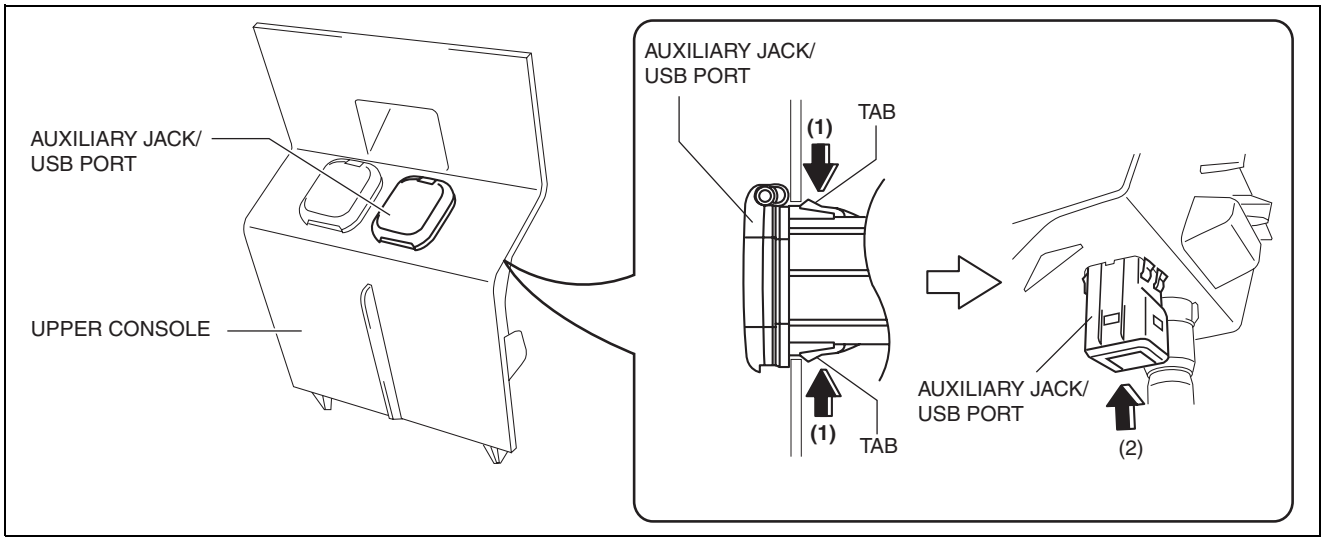

ac5wzw0000229

4. Remove the auxiliary jack/USB port.
5. Install in the reverse order of removal.

AUXILIARY JACK/USB PORT INSPECTION

id092000811600

Auxiliary jack inspection

1. Disconnect the negative battery cable. (See 01-17A-11 NEGATIVE BATTERY CABLE DISCONNECTION/CONNECTION [SKYACTIV-G 2.0].) (See 01-17A-13 NEGATIVE BATTERY CABLE DISCONNECTION/CONNECTION [SKYACTIV-G 2.0 (WITHOUT i-stop)].) (See 01-17B-9 NEGATIVE BATTERY CABLE DISCONNECTION/CONNECTION [SKYACTIV-D 2.2].)
2. Remove the following parts:
   (1) Upper console (See 09-17-47 REAR CONSOLE DISASSEMBLY/ASSEMBLY.)
   (2) Auxiliary jack/USB port (See 09-20-77 AUXILIARY JACK/USB PORT REMOVAL/INSTALLATION.)

ENTERTAINMENT

3. Connect a commercially-available plug to the external input unit.

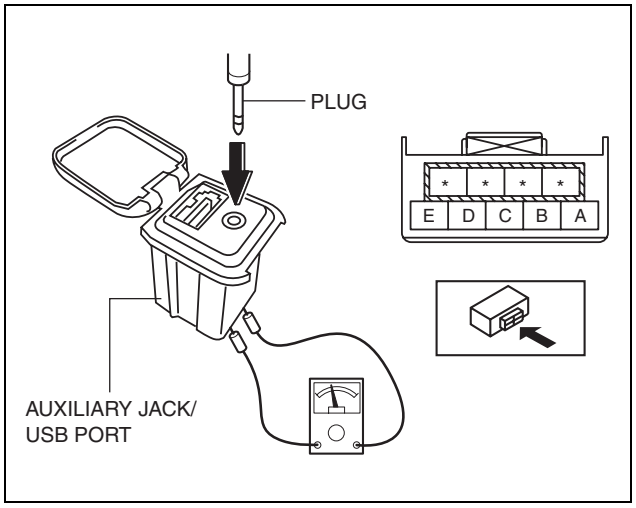

ac5uuw00002842

4. Verify that the continuity between the external input unit terminals is as indicated in the table.
   - If not as indicated in the table, replace the external input unit.

○—○ : Continuity

Test condition	Terminal				
	A	B	C	D	E
Plug is connected	○				○
Plug is not connected					

ac5wxw0000148

USB port inspection

1. Disconnect the negative battery cable. (See 01-17A-11 NEGATIVE BATTERY CABLE DISCONNECTION/CONNECTION [SKYACTIV-G 2.0].) (See 01-17A-13 NEGATIVE BATTERY CABLE DISCONNECTION/CONNECTION [SKYACTIV-G 2.0 (WITHOUT i-stop)].) (See 01-17B-9 NEGATIVE BATTERY CABLE DISCONNECTION/CONNECTION [SKYACTIV-D 2.2].)
2. Remove the following parts:
   (1) Upper console (See 09-17-47 REAR CONSOLE DISASSEMBLY/ASSEMBLY.)
   (2) Auxiliary jack/USB port (See 09-20-77 AUXILIARY JACK/USB PORT REMOVAL/INSTALLATION.)
3. Insert the pins to positions UA', UB', UC', and UD' shown in the figure from the side of the USB device insertion area for the external input unit, and verify the continuity at the insertion side and terminal side of the USB device.
4. Verify that the continuity at the insertion side and terminal side of the USB device is as indicated in the table.

Note
- When inspecting the USB device insertion side, touch it with a paper clip or similar thin pin without directly inserting a tester into the terminals.

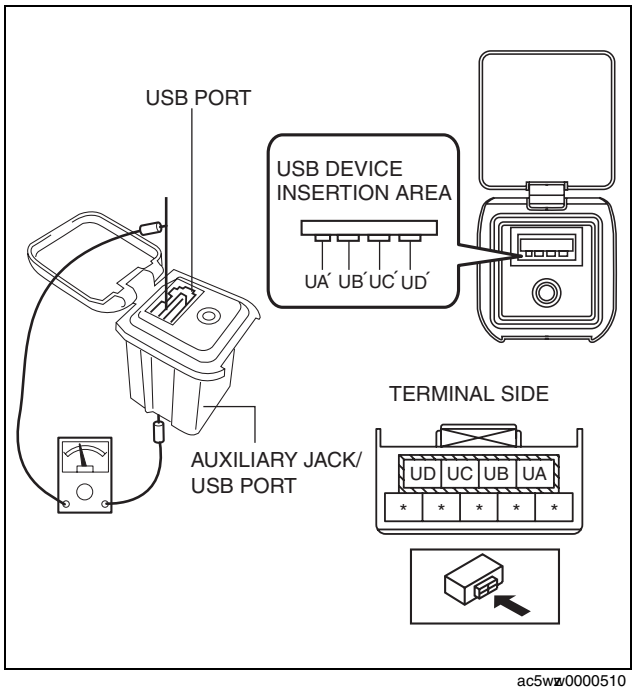

ac5wxw0000510

ENTERTAINMENT

- If not as indicated in the table, replace the external input unit.

○—○: Continuity

Test condition	Terminal							
	Terminal side				USB devise insertion area			
	UA	UB	UC	UD	UA'	UB'	UC'	UD'
Under any condition	○				○			
		○				○		
			○				○	
				○				○

ac5wxw0000510

CIGARETTE LIGHTER REMOVAL/INSTALLATION

id092000803100

1. Disconnect the negative battery cable. (See 01-17A-13 NEGATIVE BATTERY CABLE DISCONNECTION/CONNECTION [SKYACTIV-G 2.0 (WITHOUT i-stop)].) (See 01-17A-11 NEGATIVE BATTERY CABLE DISCONNECTION/CONNECTION [SKYACTIV-G 2.0].) (See 01-17B-9 NEGATIVE BATTERY CABLE DISCONNECTION/CONNECTION [SKYACTIV-D 2.2].)
2. Remove the following parts:
   (1) Decoration panel (See 09-17-33 DECORATION PANEL REMOVAL/INSTALLATION.)
   (2) Front console box (See 09-17-40 FRONT CONSOLE BOX REMOVAL/INSTALLATION.)
   (3) Shift panel (See 09-17-42 SHIFT PANEL REMOVAL/INSTALLATION.)
   (4) Upper panel (See 09-17-44 UPPER PANEL REMOVAL/INSTALLATION.)
   (5) Rear console (See 09-17-45 REAR CONSOLE REMOVAL/INSTALLATION.)
   (6) Side wall (See 09-17-49 SIDE WALL REMOVAL/INSTALLATION.)
   (7) Front console (See 09-17-50 FRONT CONSOLE REMOVAL/INSTALLATION.)
3. Insert a tape-wrapped flathead screwdriver into the gap between the ring tab and socket.

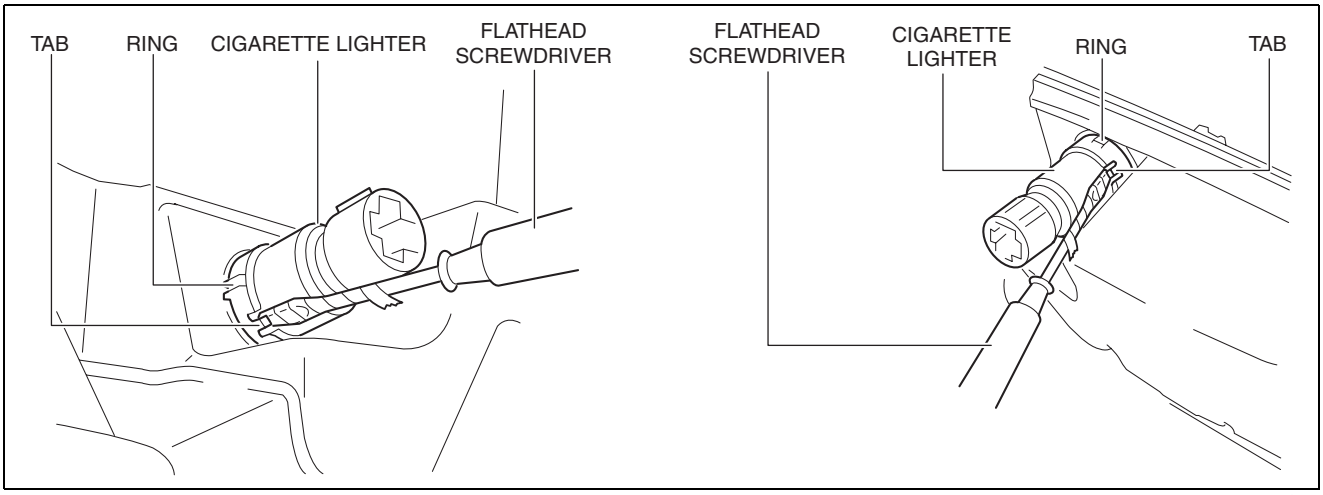

ac5wxw0000460

ENTERTAINMENT

4. Move the flathead screwdriver in the direction of the arrow (1) shown in the figure, press the cigarette lighter in the direction of the arrow (2) shown in the figure, and detach the ring tab from the socket.

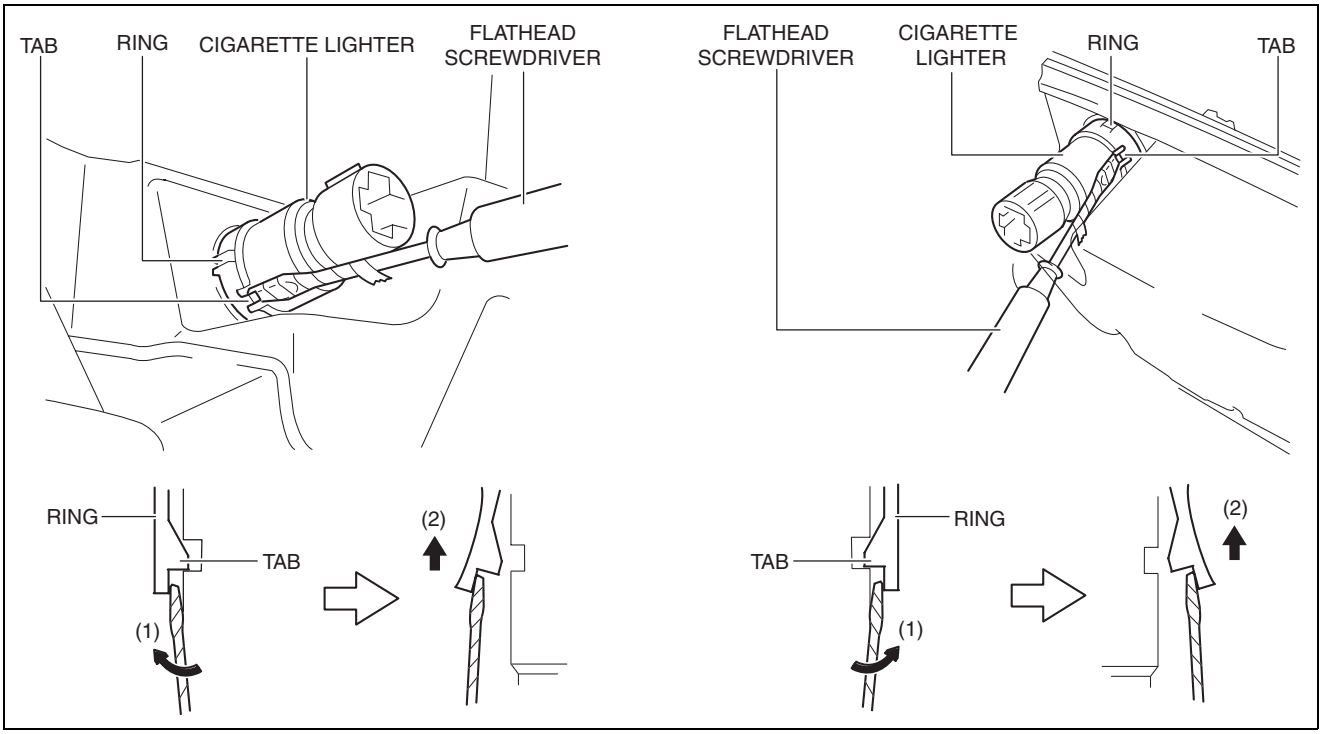

ac5wzw0000460

5. Pull the cigarette lighter in the direction of the arrow shown in the figure and remove it.

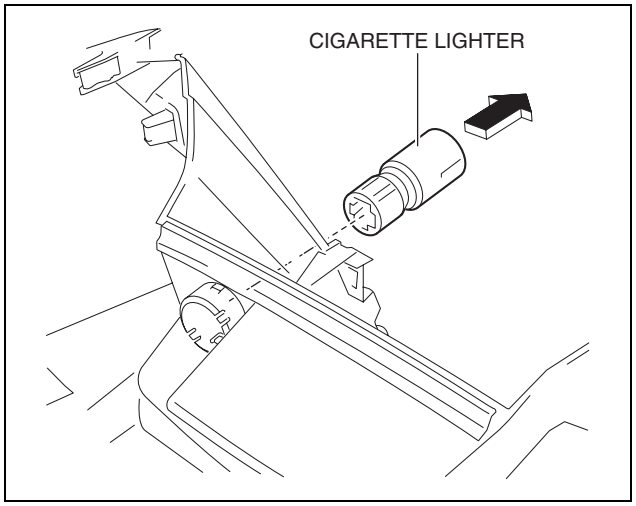

ac5wzw0000461

ENTERTAINMENT

6. While pressing the ring tabs in the direction of arrows (3) shown in the figure, press the ring in the direction of arrow (4) to detach the ring tabs from the front console.

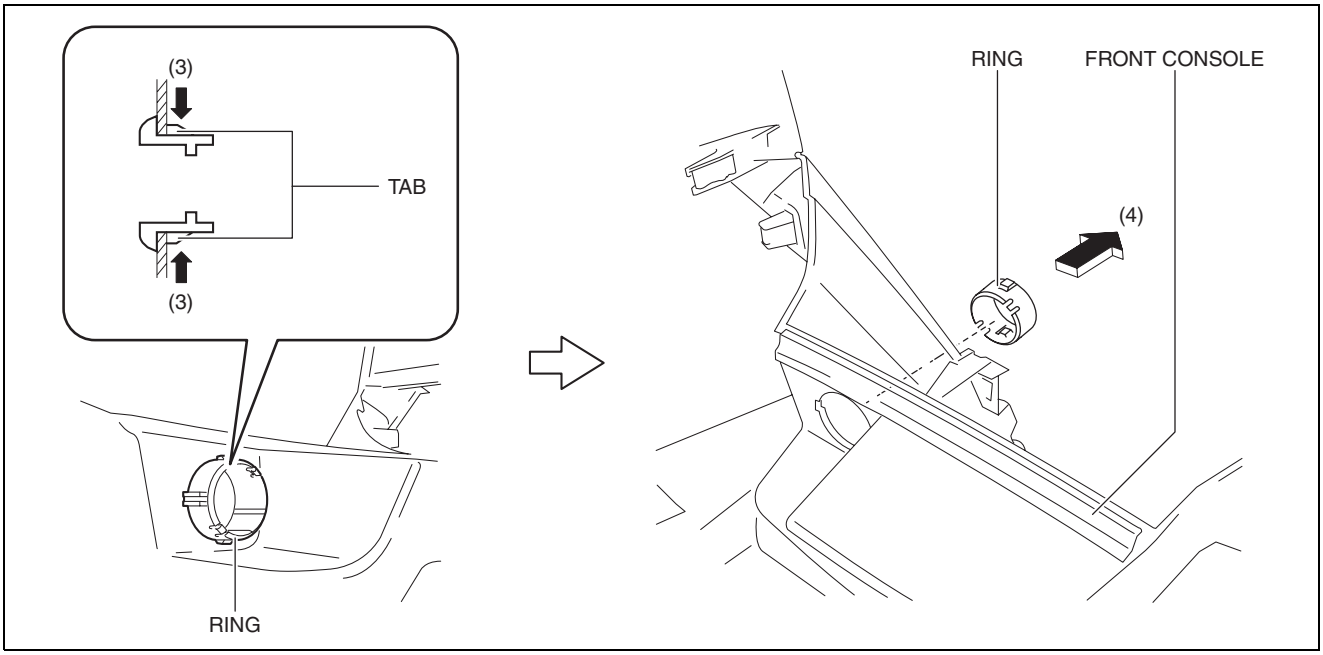

ac5wzw0000461

7. Remove the ring.
8. Install in the reverse order of removal.

CIGARETTE LIGHTER INSPECTION

id092000803200

1. Switch the ignition to ACC.
2. Press the cigarette lighter into the socket and verify that it returns to its original position in **10—20 s**.

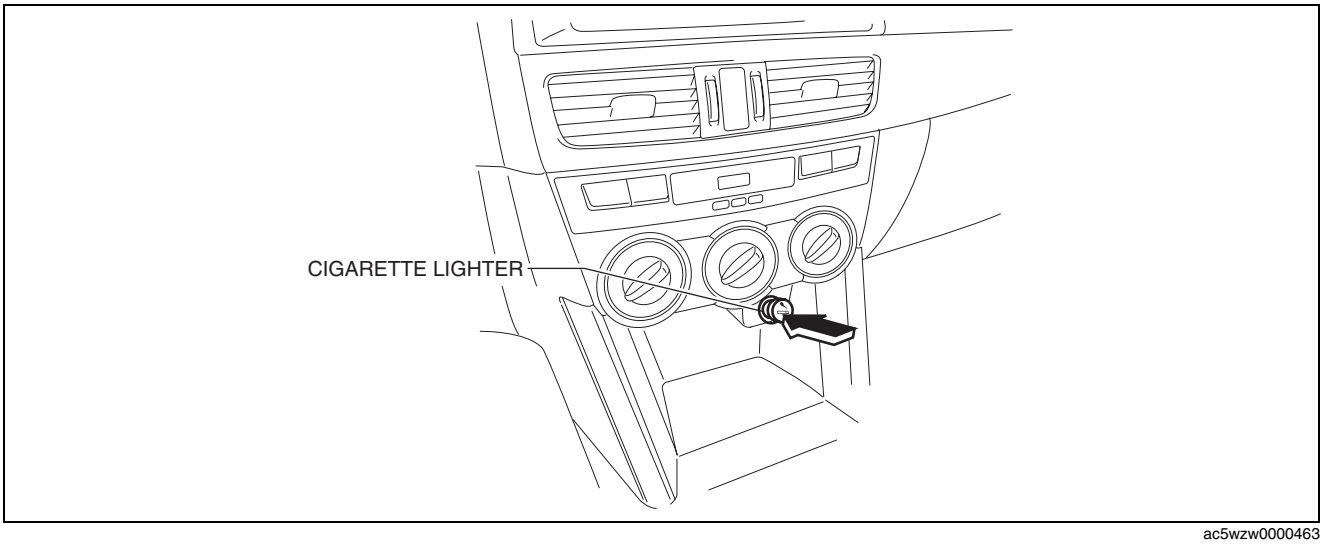

ac5wzw0000463

- If the cigarette lighter does not operate normally, replace the cigarette lighter and the socket.

09-21 POWER SYSTEMS

POWER SYSTEM LOCATION INDEX 09-21–2
RELAY AND FUSE BLOCK REMOVAL/INSTALLATION 09-21–3
Relay and Fuse Block Lower Cover Installation Note 09-21–12
Verify Relay and Fuse Block Replacement 09-21–13
RELAY AND FUSE BLOCK DISASSEMBLY/ASSEMBLY 09-21–13
RELAY AND FUSE BLOCK MIDDLE COVER DISASSEMBLY/ASSEMBLY 09-21–14
FRONT WIRING HARNESS PROTECTOR REMOVAL/INSTALLATION 09-21–15
Front Wiring Harness Protector No.1 09-21–15
Front Wiring Harness Protector No.2 09-21–18
FUSE SERVICE CAUTIONS 09-21–21
MAIN FUSE REMOVAL/INSTALLATION 09-21–21
SKYACTIV-G 2.0 09-21–21
SKYACTIV-D 2.2 09-21–23
PUSH BUTTON START REMOVAL/INSTALLATION 09-21–24
PUSH BUTTON START INSPECTION 09-21–25
FORCED IGNITION ON 09-21–27
RELAY LOCATION 09-21–28
RELAY INSPECTION 09-21–29
Relay Type 09-21–29
Type A 09-21–30
Type B 09-21–30
Type C 09-21–30
Type D 09-21–30
Type E 09-21–31
FRONT ACCESSORY SOCKET REMOVAL/INSTALLATION 09-21–31
FRONT ACCESSORY SOCKET INSPECTION 09-21–33
CENTER ACCESSORY SOCKET REMOVAL/INSTALLATION 09-21–33
CENTER ACCESSORY SOCKET INSPECTION 09-21–35
REAR ACCESSORY SOCKET REMOVAL/INSTALLATION 09-21–36
REAR ACCESSORY SOCKET INSPECTION 09-21–40

POWER SYSTEMS

POWER SYSTEM LOCATION INDEX

id092100491000

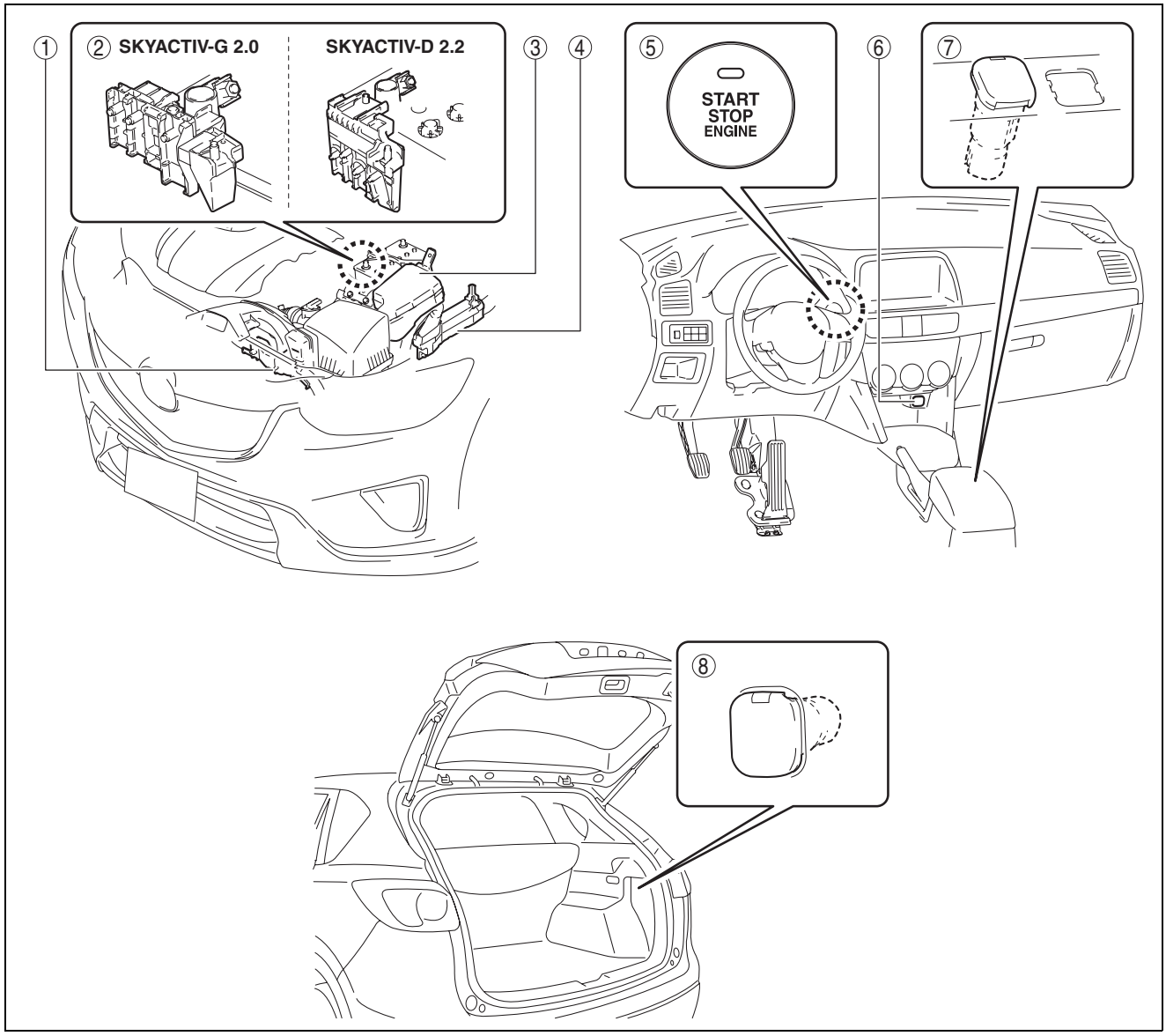

ac5wzw0000287

1	Front wiring harness protector No.1 (See 09-21-15 FRONT WIRING HARNESS PROTECTOR REMOVAL/INSTALLATION.)
2	Main fuse (See 09-21-21 MAIN FUSE REMOVAL/INSTALLATION.)
3	Relay and fuse block (See 09-21-3 RELAY AND FUSE BLOCK REMOVAL/INSTALLATION.) (See 09-21-13 RELAY AND FUSE BLOCK DISASSEMBLY/ASSEMBLY.) (See 09-21-14 RELAY AND FUSE BLOCK MIDDLE COVER DISASSEMBLY/ASSEMBLY.) (See 09-21-21 FUSE SERVICE CAUTIONS.) (See 09-21-28 RELAY LOCATION.) (See 09-21-29 RELAY INSPECTION.)
4	Front wiring harness protector No.2 (See 09-21-15 FRONT WIRING HARNESS PROTECTOR REMOVAL/INSTALLATION.)

5	Push button start (See 09-21-24 PUSH BUTTON START REMOVAL/INSTALLATION.) (See 09-21-25 PUSH BUTTON START INSPECTION.) (See 09-21-27 FORCED IGNITION ON.)
6	Front accessory socket (See 09-21-31 FRONT ACCESSORY SOCKET REMOVAL/INSTALLATION.) (See 09-21-33 FRONT ACCESSORY SOCKET INSPECTION.)
7	Center accessory socket (See 09-21-33 CENTER ACCESSORY SOCKET REMOVAL/INSTALLATION.) (See 09-21-35 CENTER ACCESSORY SOCKET INSPECTION.)
8	Rear accessory socket (See 09-21-36 REAR ACCESSORY SOCKET REMOVAL/INSTALLATION.) (See 09-21-40 REAR ACCESSORY SOCKET INSPECTION.)

POWER SYSTEMS

RELAY AND FUSE BLOCK REMOVAL/INSTALLATION

id092100498600

1. Remove the battery tray. (See 01-17A-3 BATTERY REMOVAL/INSTALLATION [SKYACTIV-G 2.0].) (See 01-17B-3 BATTERY REMOVAL/INSTALLATION [SKYACTIV-D 2.2].)
2. Remove the air cleaner case. (See 01-13A-6 INTAKE-AIR SYSTEM REMOVAL/INSTALLATION [SKYACTIV-G 2.0].) (See 01-13B-6 INTAKE-AIR SYSTEM REMOVAL/INSTALLATION [SKYACTIV-D 2.2].)
3. While pressing the relay and fuse block upper cover tab in the direction of the arrow (1) shown in the figure, lift up the relay and fuse block upper cover in the direction of the arrow (2) to detach the relay and fuse block upper cover tab from the relay and fuse block middle cover.

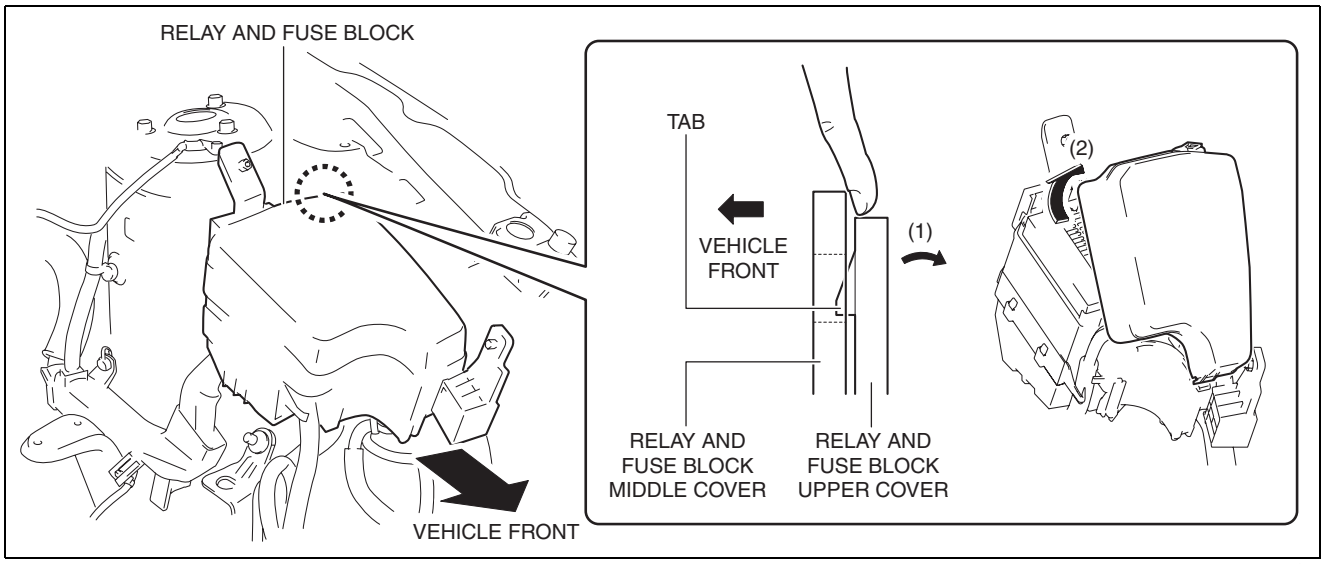

ac5wzw0000108

4. Remove the relay and fuse block upper cover.
5. Remove all the relays and fuses.

Caution

- **If the relay and fuse block is removed with the relays and fuses installed, the area around the relay and fuse block may contact the relays or fuses and damage the them. Before removing the relay and fuse block, remove all the relays and fuses.**

6. Remove the front body control module (FBCM). (See 09-40-2 FRONT BODY CONTROL MODULE (FBCM) REMOVAL/INSTALLATION.)
7. Disconnect the front body control module (FBCM) connector. (See 09-40-2 FRONT BODY CONTROL MODULE (FBCM) REMOVAL/INSTALLATION.)
8. While pressing the relay and fuse block hook in the direction of the arrow (3) shown in the figure, set the emission wiring harness away from the relay and fuse block hook.

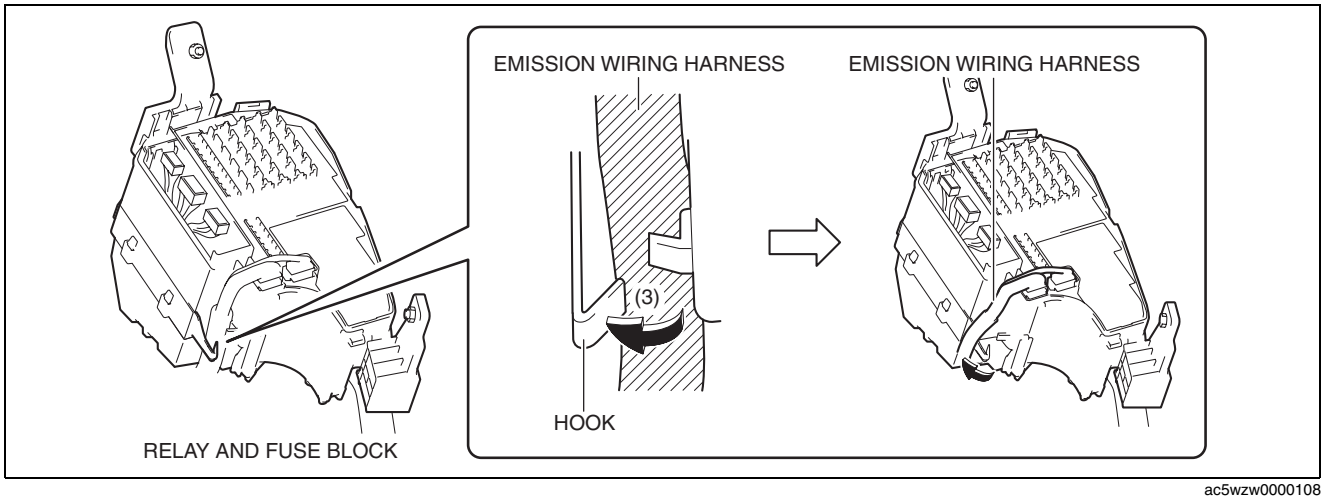

ac5wzw0000108

POWER SYSTEMS

9. Disconnect the emission wiring harness connectors.

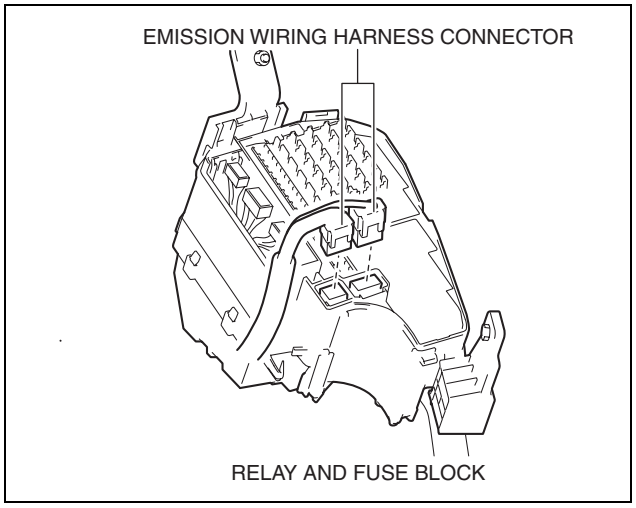

ac5wzw0000013

10. Remove the nut and screw.

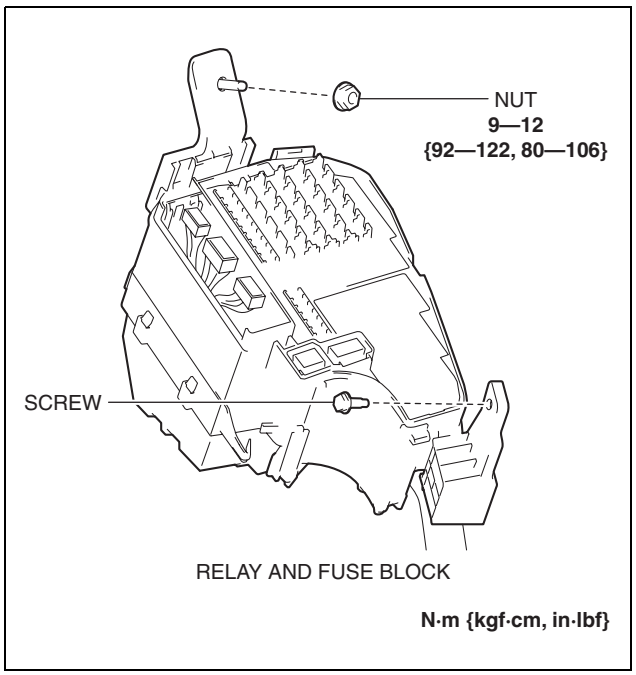

ac5wzw0000110

POWER SYSTEMS

11. Insert a tape-wrapped flathead screwdriver into the service hole in the position shown in the figure.

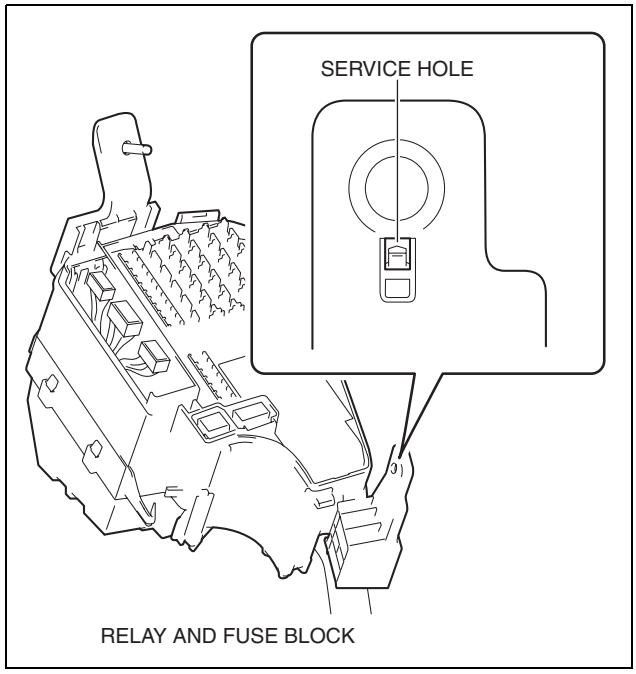

ac5wzw0000013

12. While pressing the clip tab of the relay and fuse block in the direction of the arrow (4) shown in the figure, pull the clip in the direction of the arrow (5) to detach the clip tab from the engine mount.

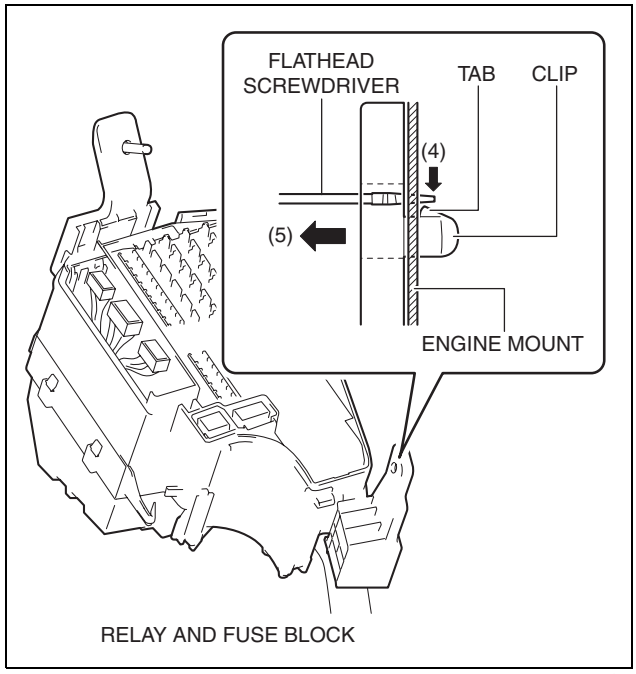

ac5wzw0000108

13. Pull out the relay and fuse block from the stud bolt and set it aside as shown in the figure.

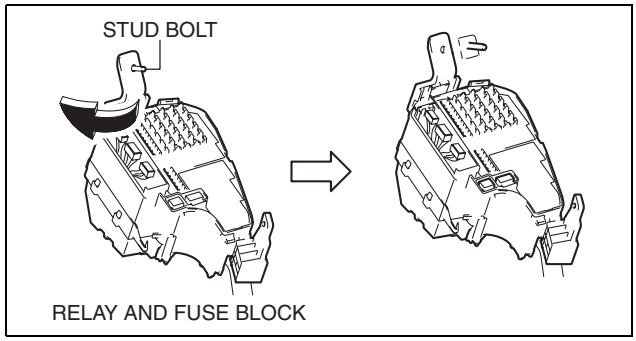

ac5wzw0000051

POWER SYSTEMS

14. While pressing the clip tabs of front wiring harness protector No.2 in the direction of the arrows (6) shown in the figure, pull the clip in the direction of the arrow (7) shown in the figure to detach the clip tabs from the engine mount.

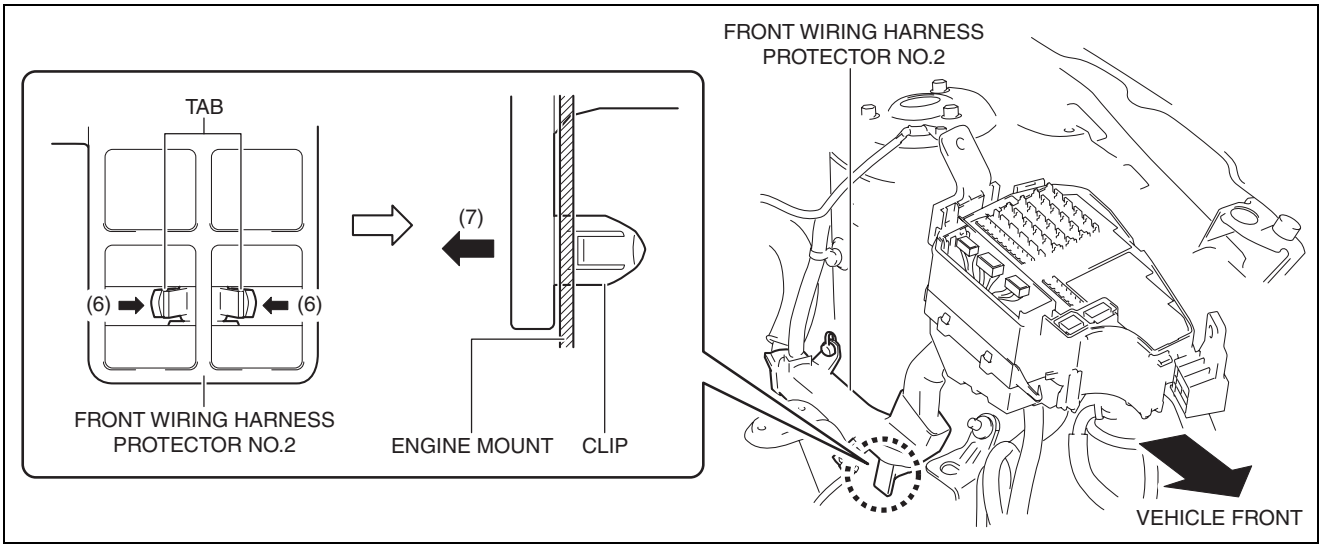

ac5wzw0000108

15. Remove the front wiring harness protector No.2 clip.
16. Lift up the front wiring harness protector No.2 cap in the direction of the arrow (8) shown in the figure.

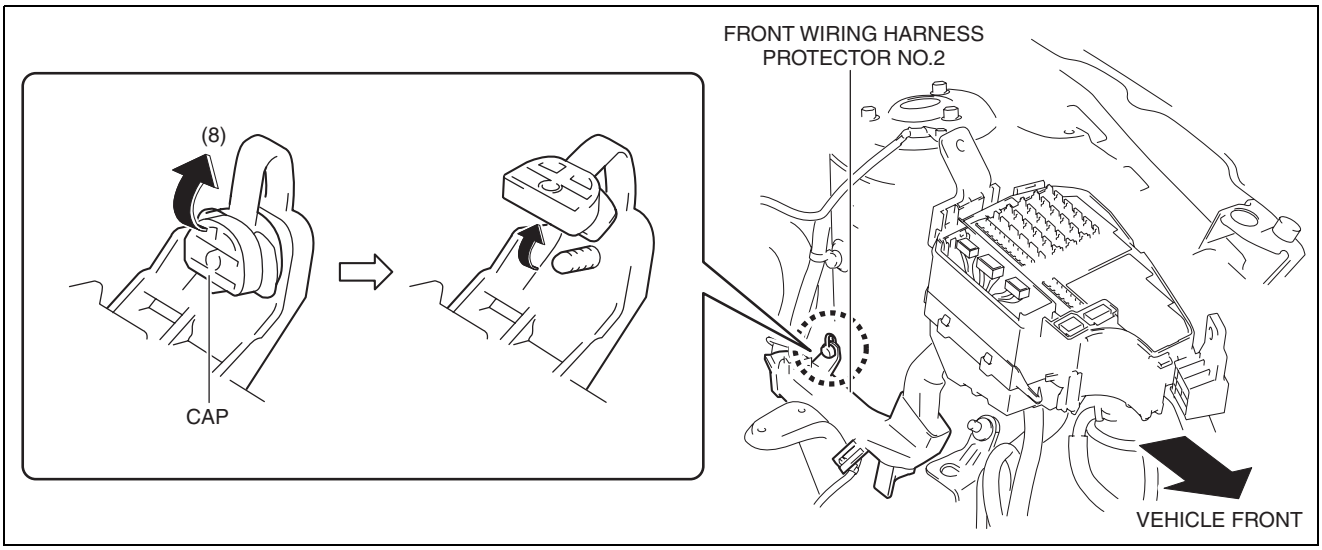

ac5wzw0000108

17. Pull out front wiring harness protector No.2 from the stud bolt and set it aside as shown in the figure.

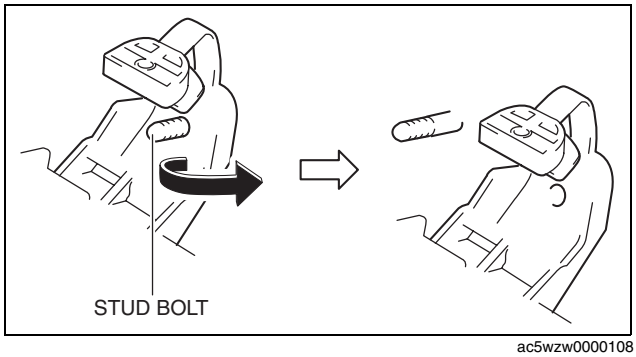

ac5wzw0000108

POWER SYSTEMS

18. Cut the band shown in the figure.

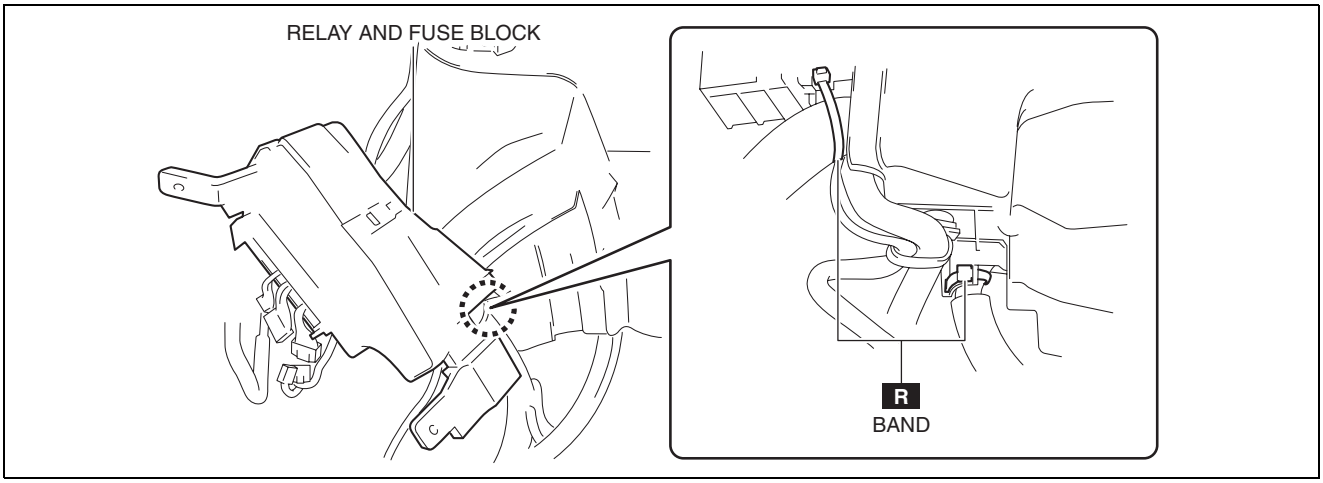

ac5wzw0000014

19. Insert a flathead screwdriver into the gap between the relay and fuse block middle cover tabs and the relay and fuse block lower cover as shown in the figure.

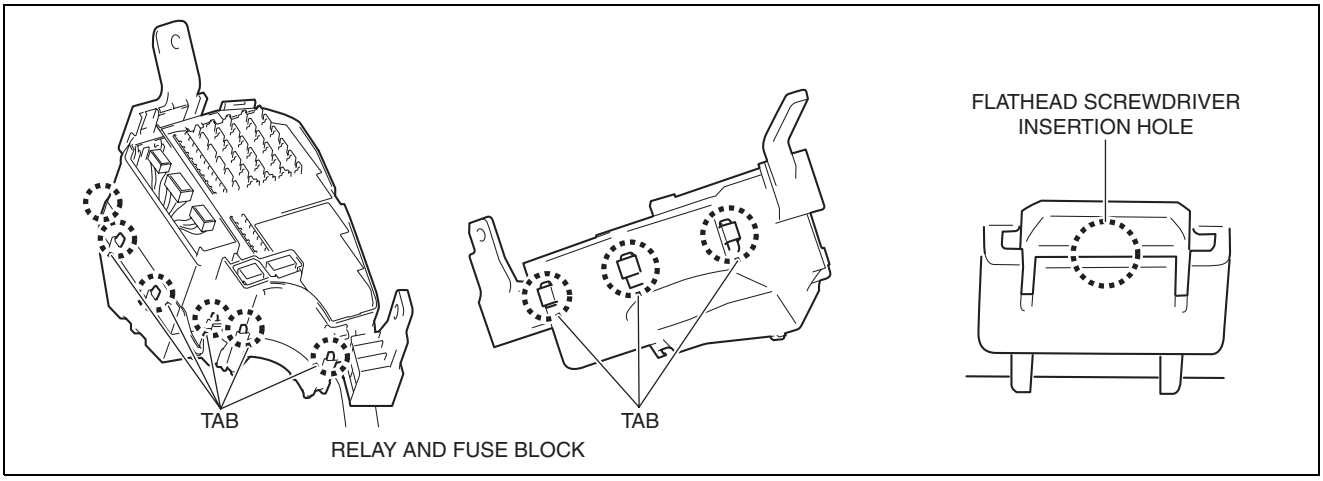

ac5wzw0000108

POWER SYSTEMS

20. Move the flathead screwdriver in the direction of the arrow (9) shown in the figure, pull down the relay and fuse block lower cover in the direction of the arrow (10) shown in the figure, and detach the relay and fuse block middle cover tabs from the relay and fuse block lower cover.

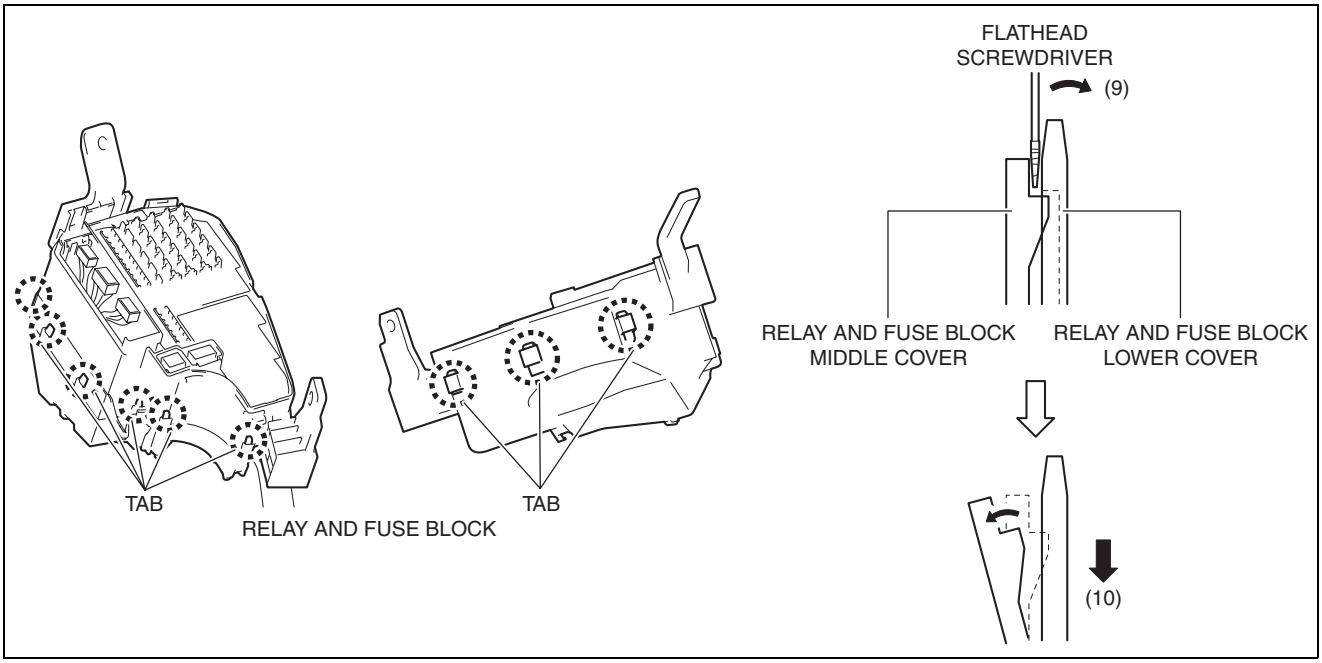

ac5wzw0000109

21. Detach all the relay and fuse block middle cover tabs from the relay and fuse block lower cover, and remove the relay and fuse block lower cover from the relay and fuse block middle cover. (See 09-21-12 Relay and Fuse Block Lower Cover Installation Note.)
22. While pressing the wiring harness clip tabs in the direction of the arrows (11) shown in the figure, push out the clip in the direction of the arrow (12) shown in the figure to detach the clip tabs from the relay and fuse block.

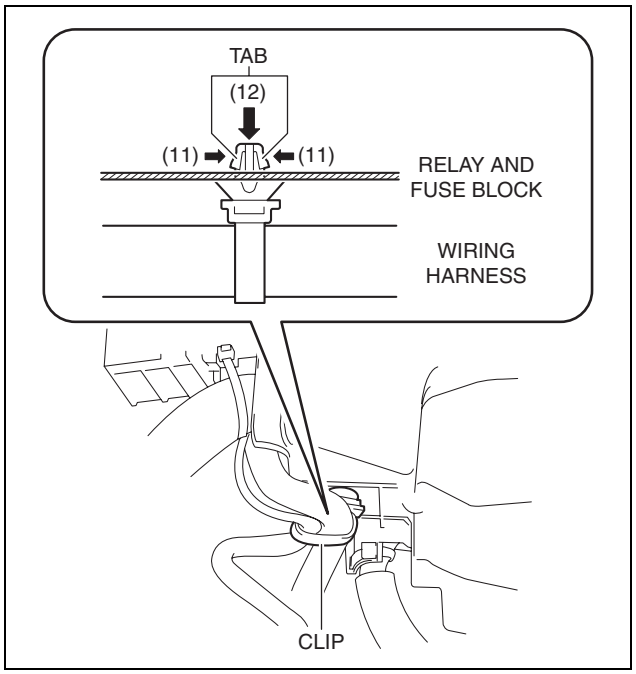

ac5wzw0000109

POWER SYSTEMS

23. Insert a flathead screwdriver into the service hole in the position shown in the figure.
24. Move the flathead screwdriver in the direction of the arrow (13) shown in the figure, lift up the front wiring harness connectors in the direction of the arrow (14) shown in the figure, and detach the connector tabs from the relay and fuse block middle cover.

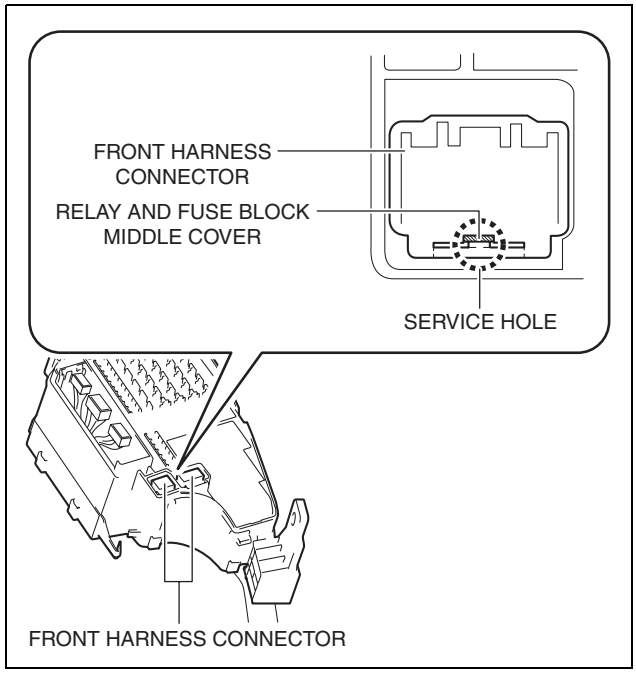

ac5wzw0000052

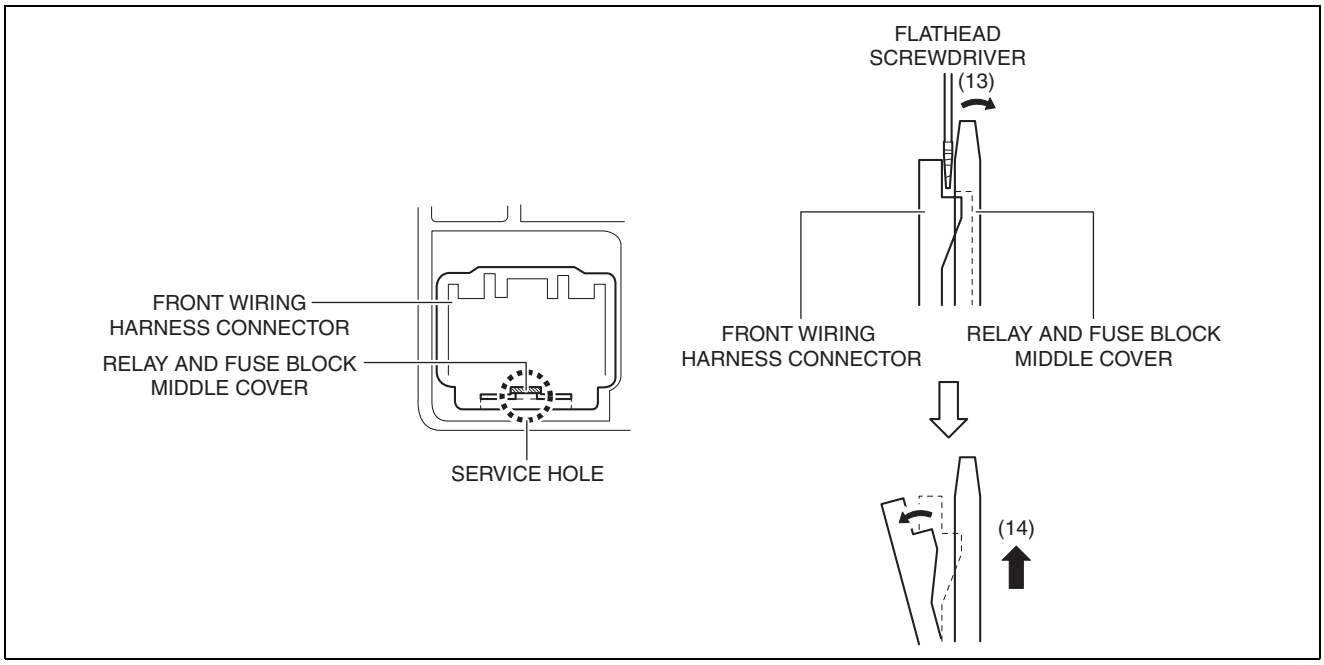

ac5wzw0000109

25. Move the front wiring harness connector in the direction of the arrow (15) shown in the figure, release the hook, and pull it out from the relay and fuse block middle cover.

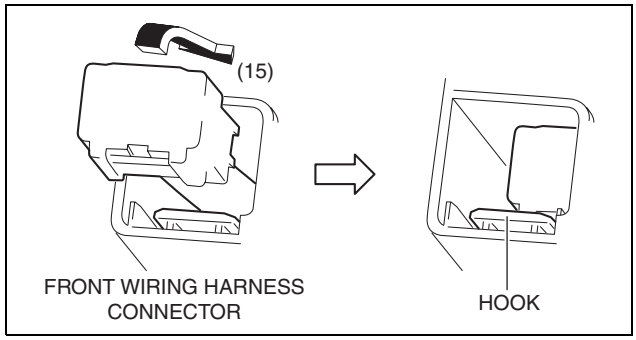

ac5wzw0000109

POWER SYSTEMS

26. Insert the flathead screwdriver into the gap between the relay and fuse block middle cover and the relay and fuse block shown in the figure.
27. Move the flathead screwdriver in the direction of the arrow (16) shown in the figure, pull up the relay and fuse block middle cover in the direction of the arrow (17) shown in the figure, and detach the relay and fuse block tabs from the relay and fuse block middle cover.

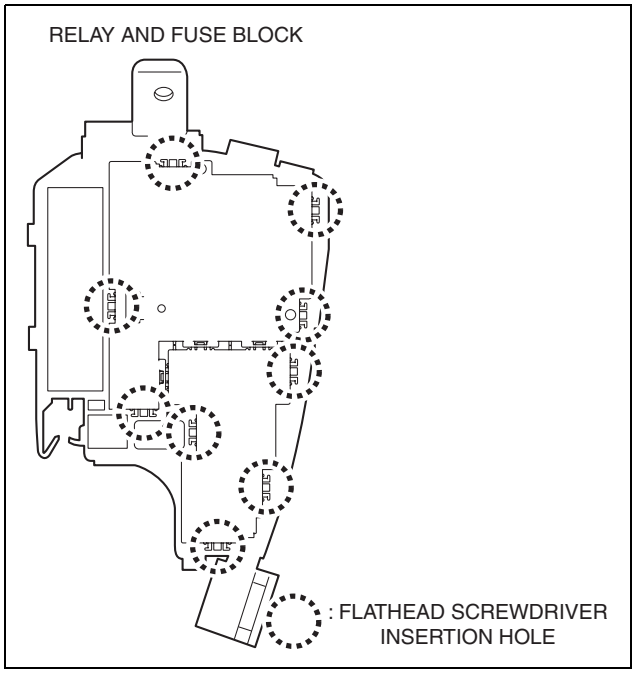

ac5wzw0000109

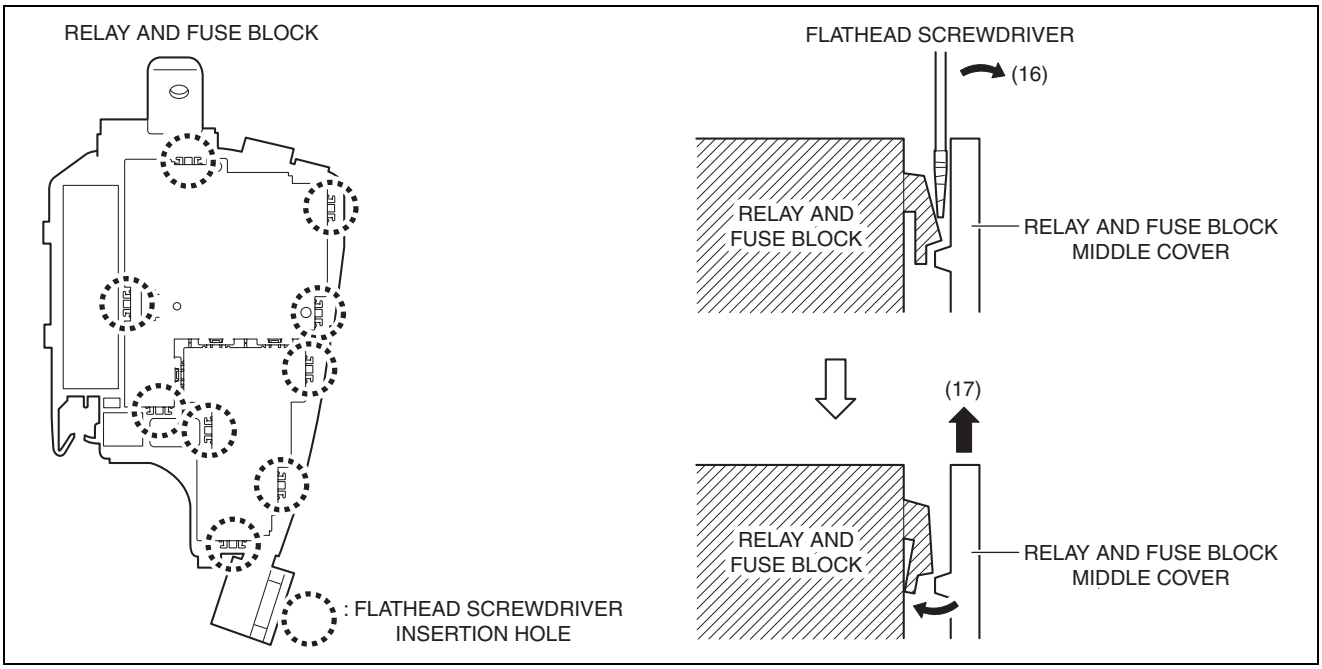

ac5wzw0000109

POWER SYSTEMS

28. Remove the bolt.
29. Remove the ground.

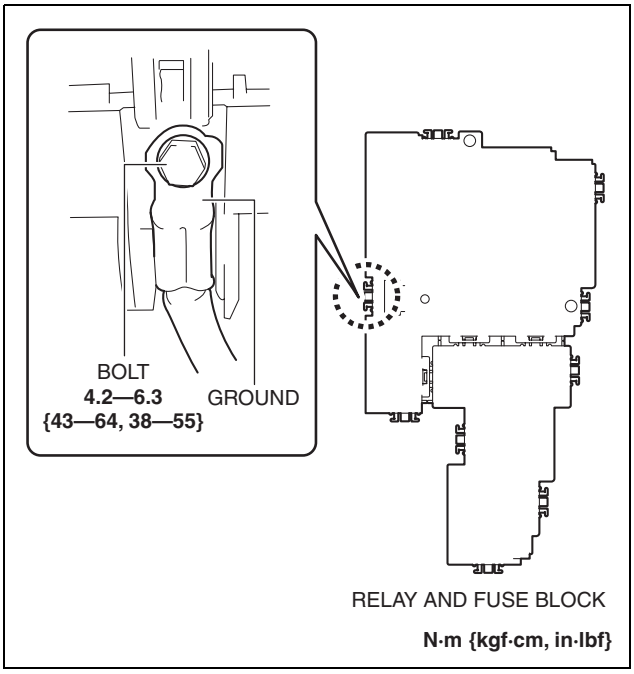

ac5wzw0000109

30. Move the flathead screwdriver in the direction of the arrow (18) shown in the figure, pull the wiring harness in the direction of the arrow (19) while pressing the stopper, and detach the relay or fuse terminal from the stopper.
31. Remove the relay or fuse terminal.

Caution

- **A terminal disconnection could cause electronic components and the system to not operate normally due to poor contact. After terminal relocation, lightly pull the wiring harnesses to verify that they cannot be pulled out.**

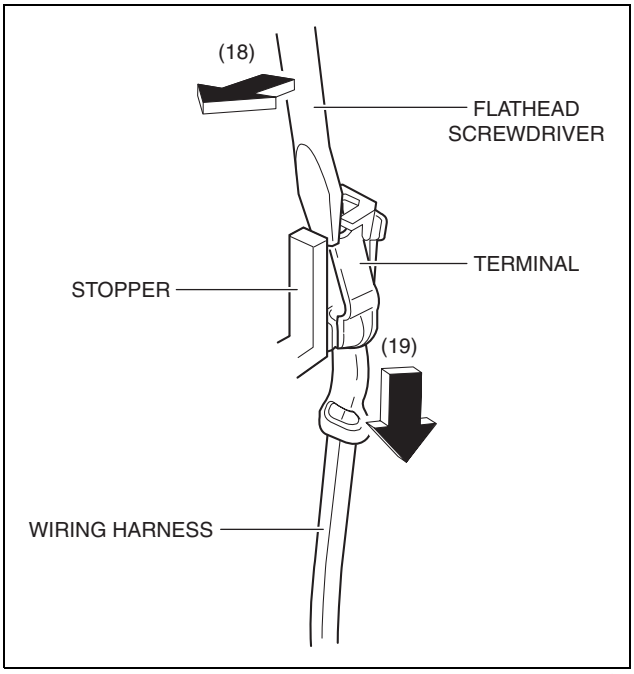

ac5wzw0000109

Note
- For terminal relocation, line up the relays and fuse blocks of the old and news parts and always verify each of the wiring harnesses in the wiring diagram.

32. Install in the reverse order of removal.
33. Perform verify relay and fuse block replacement. (See 09-21-13 Verify Relay and Fuse Block Replacement.)

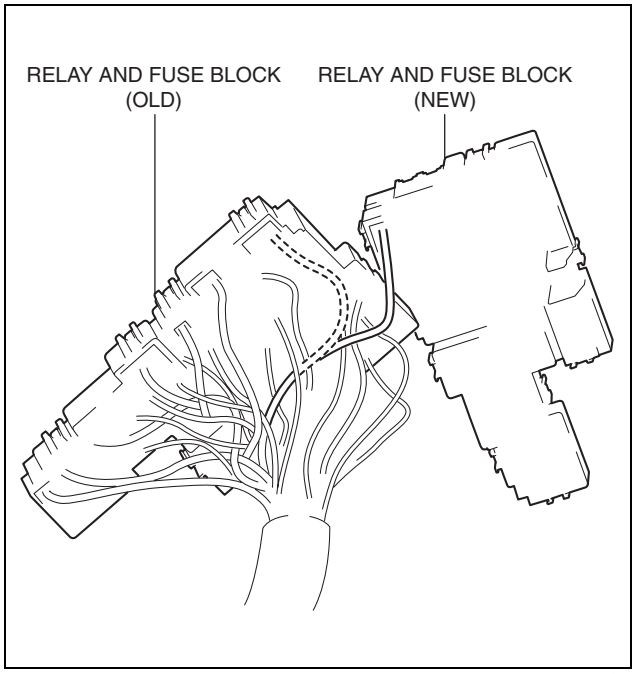

ac5wzw0000109

Relay and Fuse Block Lower Cover Installation Note

Note
- When installing the relay and fuse block lower cover to the relay and fuse block middle cover, the wiring harness could get caught between the relay and fuse block middle cover and the relay and fuse block lower cover resulting in open or short circuit in the wiring harness. When installing the relay and fuse block lower cover, disassemble the relay and fuse block lower cover and install one at a time.

1. Insert a flathead screwdriver into the gap between relay and fuse block lower covers No.1 and 2 shown in the figure.

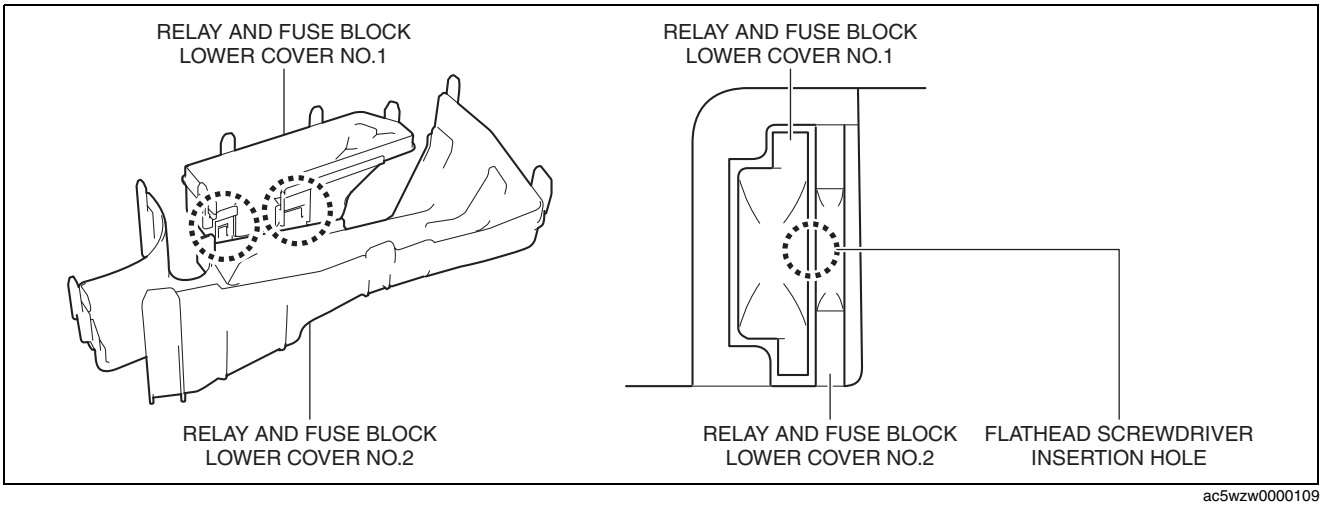

ac5wzw0000109

POWER SYSTEMS

2. Move the flathead screwdriver in the direction of the arrow (1) shown in the figure, pull up relay and fuse block lower cover No.1 in the direction of the arrow (2) shown in the figure, and detach the relay and fuse block lower cover No.1 tab from relay and fuse block lower cover No.2.
3. Detach all the relay and fuse block lower cover No.1 tabs from relay and fuse block lower cover No.2, and remove relay and fuse block lower cover No.1 from relay and fuse block lower cover No.2.
4. Install relay and fuse block lower covers No.1 and 2.

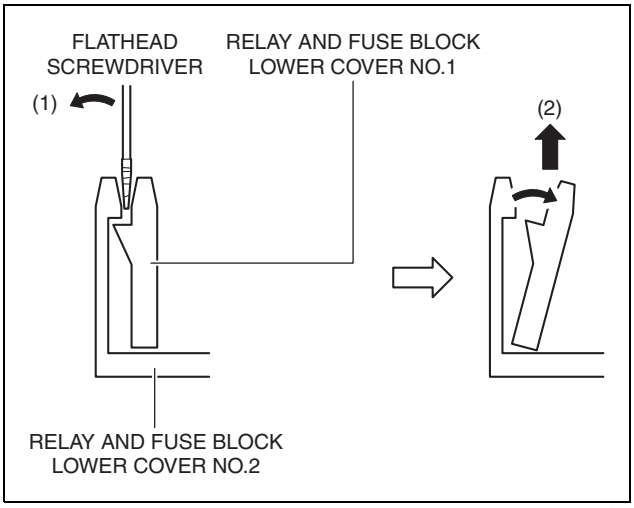

ac5wzw0000110

Verify Relay and Fuse Block Replacement

1. Temporarily connect the negative battery cable to verify that the related wiring harness is not heated.
2. Switch the ignition ON (engine off).
3. Verify that the fuse is not burnt out and the related wiring harness is not heated.
4. Perform the initial settings for the following systems:
   - — Power window system (See 09-12-66 POWER WINDOW SYSTEM INITIALIZATION PROCEDURE.)
   - — Clock and audio
   - — i-stop system
   - — Tire pressure monitoring system (TPMS) (See 02-12-4 TIRE PRESSURE MONITORING SYSTEM INITIALIZATION PROCEDURE.)
5. Verify DTCs using the M-MDS.
   - If a DTC is displayed, repair the malfunctioning part according to the corresponding DTC inspection.
     - — After completion of repairs, clear all DTCs stored in the module.
6. If there is no malfunction in Step 1, 3, and 5, start the engine and maintain the idle status.
7. Operate all the switches of the interior/exterior lights of the vehicle and verify that all the light bulbs illuminate and flash.
8. Operate the audio, climate control, wiper switch, and selector lever and verify that they operate correctly.
9. Shift the selector lever to the P position, race the engine at **approx. 3,000 rpm** from engine idling, and verify that there is no malfunction.
10. Perform a road test and verify that low speed, acceleration, shift-up, and shift-down conditions are normal.

RELAY AND FUSE BLOCK DISASSEMBLY/ASSEMBLY

id092100900000

1. Insert a tape-wrapped flathead screwdriver into the service hole in the position shown in the figure.

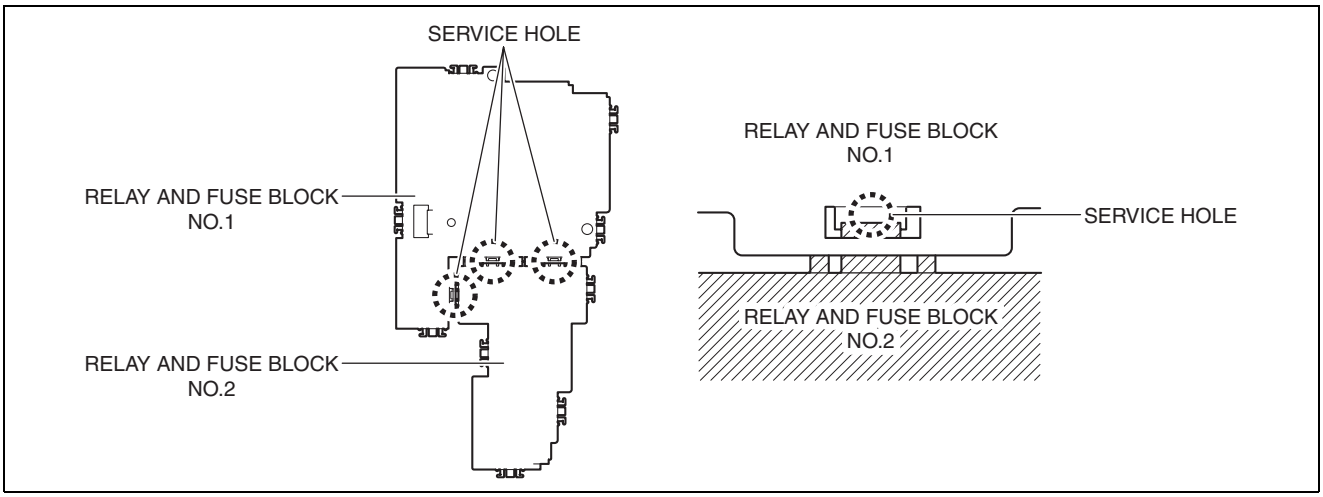

ac5wzw0000053

POWER SYSTEMS

2. Move the flathead screwdriver in the direction of the arrow (1) shown in the figure, pull up relay and fuse block No.1 in the direction of the arrow (2) shown in the figure, and detach the relay and fuse block No.2 tab from relay and fuse block No.1.
3. Detach all the relay and fuse block No.2 tabs from relay and fuse block No.1, and remove relay and fuse block No.1 from relay and fuse block No.2.
4. Assemble in the reverse order of disassembly.

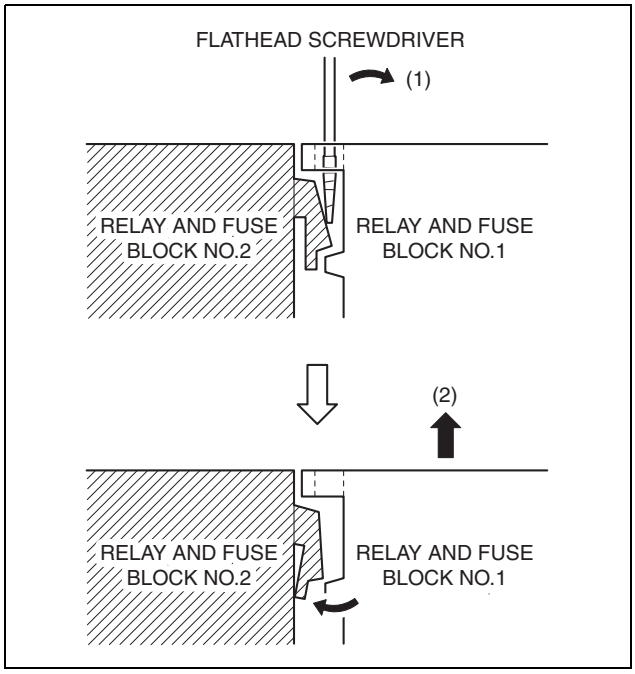

ac5wzw0000053

RELAY AND FUSE BLOCK MIDDLE COVER DISASSEMBLY/ASSEMBLY

id092100900100

1. Insert a tape-wrapped flathead screwdriver into the service hole in the position shown in the figure.

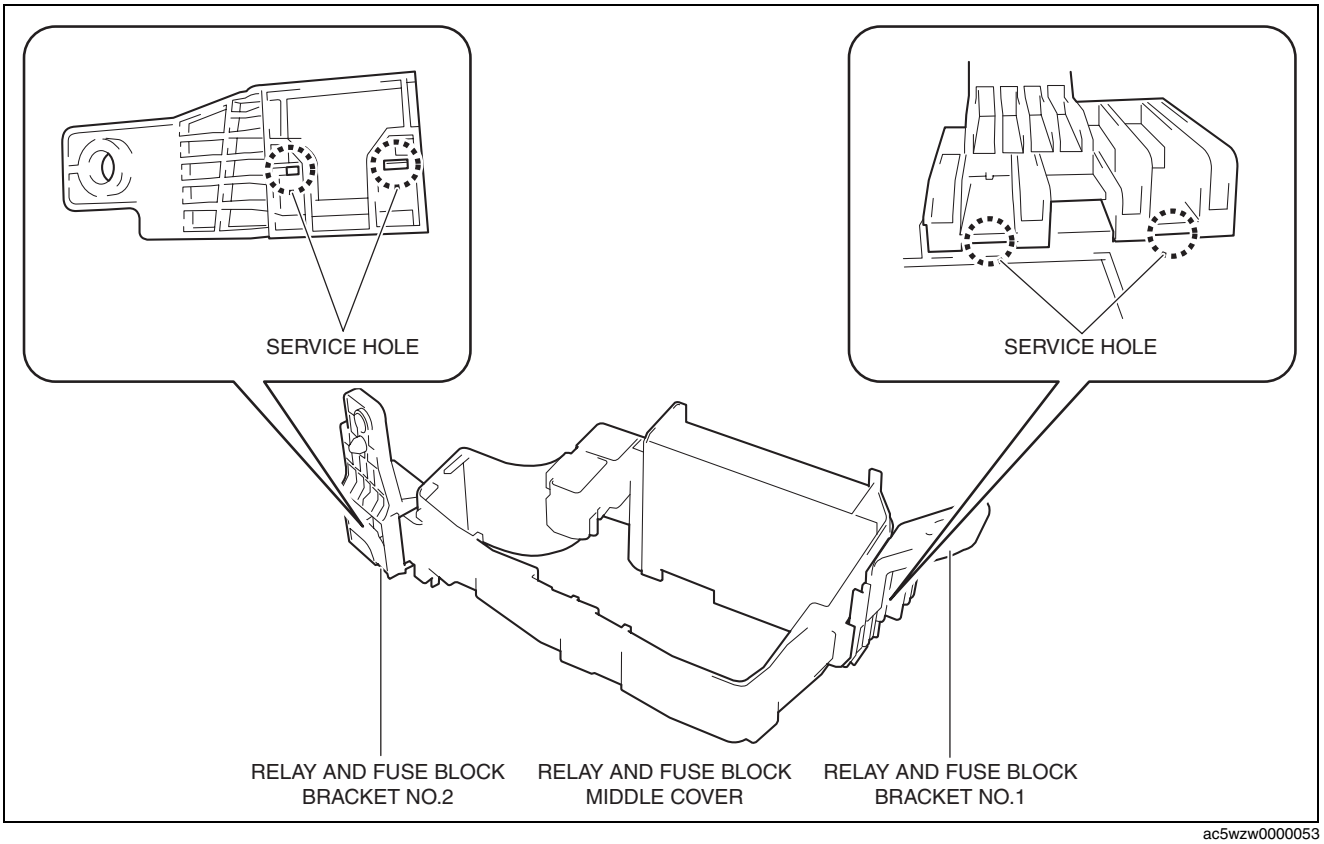

ac5wzw0000053

POWER SYSTEMS

2. While pressing the relay and fuse block middle cover tab in the direction of arrow (1) shown in the figure, pull out the bracket in the direction of arrow (2) to detach the relay and fuse block middle cover tab from the bracket.

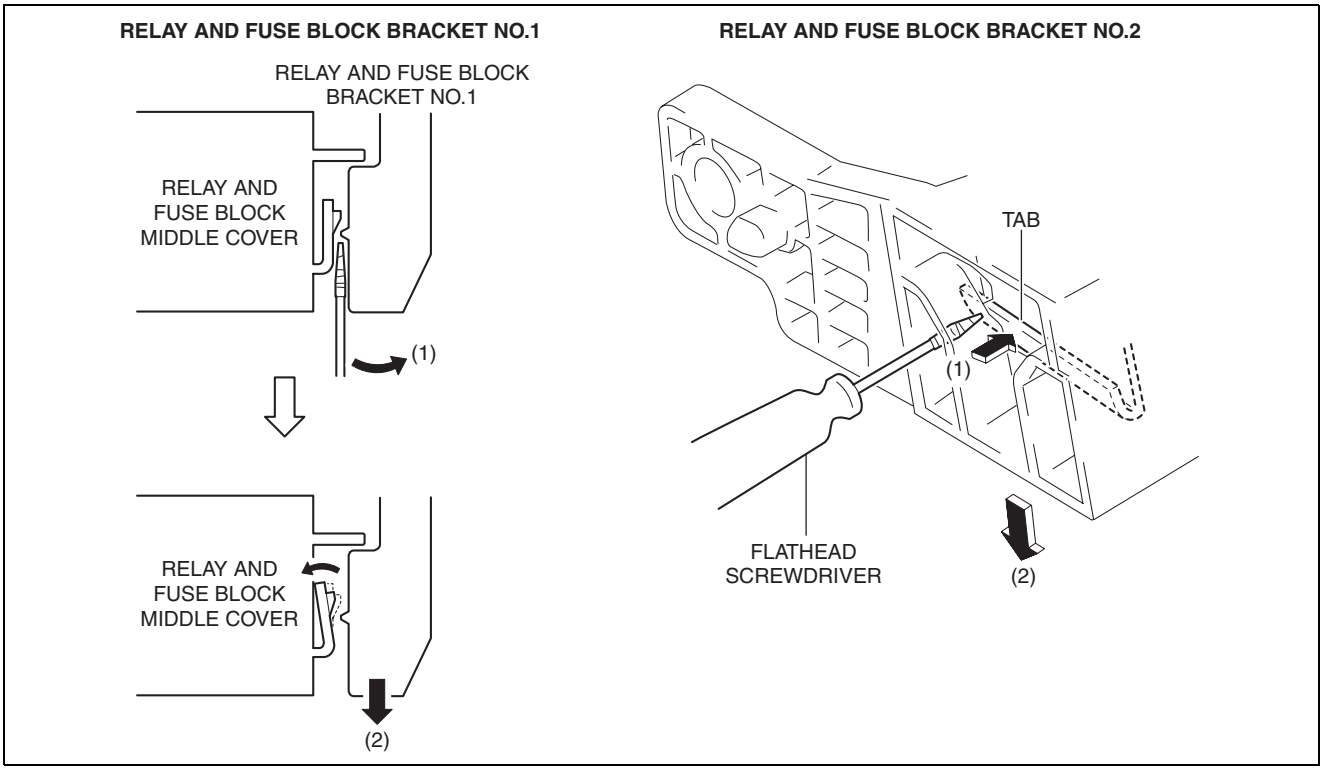

ac5wzw0000287

3. Detach all the relay and fuse block middle cover tabs from the bracket and remove the bracket from the relay and fuse block middle cover.
4. Assemble in the reverse order of disassembly.

FRONT WIRING HARNESS PROTECTOR REMOVAL/INSTALLATION

id092100000300

Front Wiring Harness Protector No.1

1. Disconnect the negative battery cable. (See 01-17A-13 NEGATIVE BATTERY CABLE DISCONNECTION/CONNECTION [SKYACTIV-G 2.0 (WITHOUT i-stop)].) (See 01-17A-11 NEGATIVE BATTERY CABLE DISCONNECTION/CONNECTION [SKYACTIV-G 2.0].) (See 01-17B-9 NEGATIVE BATTERY CABLE DISCONNECTION/CONNECTION [SKYACTIV-D 2.2].)
2. Remove the air cleaner case. (See 01-13A-6 INTAKE-AIR SYSTEM REMOVAL/INSTALLATION [SKYACTIV-G 2.0].) (See 01-13B-6 INTAKE-AIR SYSTEM REMOVAL/INSTALLATION [SKYACTIV-D 2.2].)

POWER SYSTEMS

3. While pressing the tabs of clip A in the direction of the arrows (1) shown in the figure, pull clip A in the direction of the arrow (2) shown in the figure to detach the tab of clip A from the radiator.

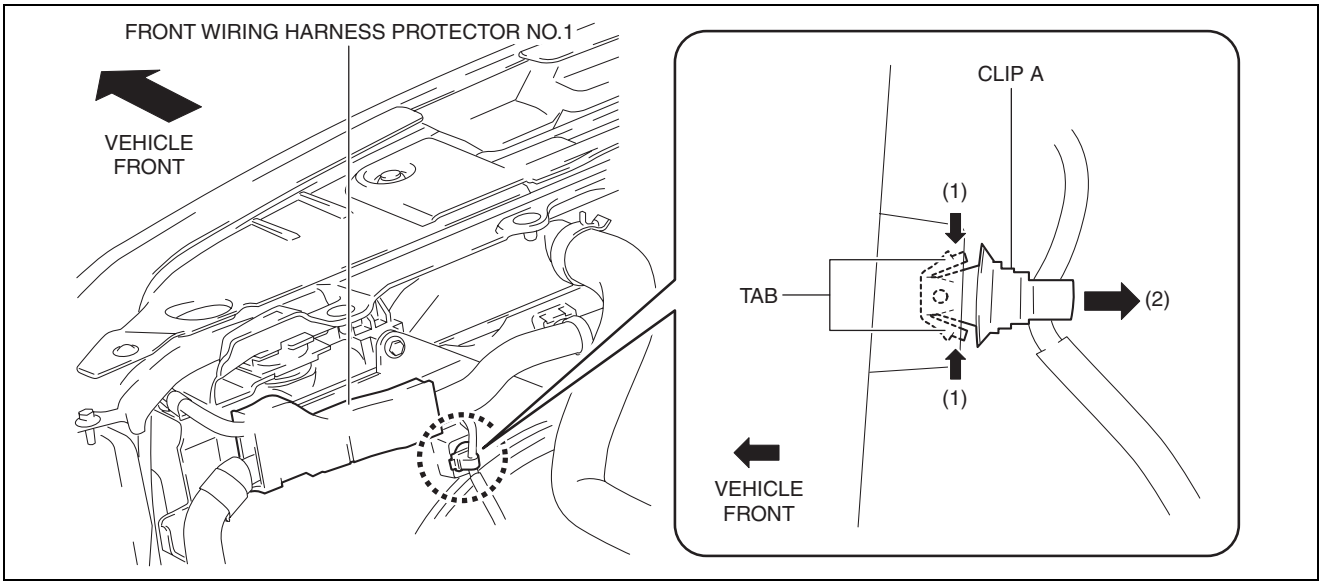

ac5wzw0000107

4. Detach clips A.
5. Insert a tape-wrapped flathead screwdriver into the service hole in the position shown in the figure.

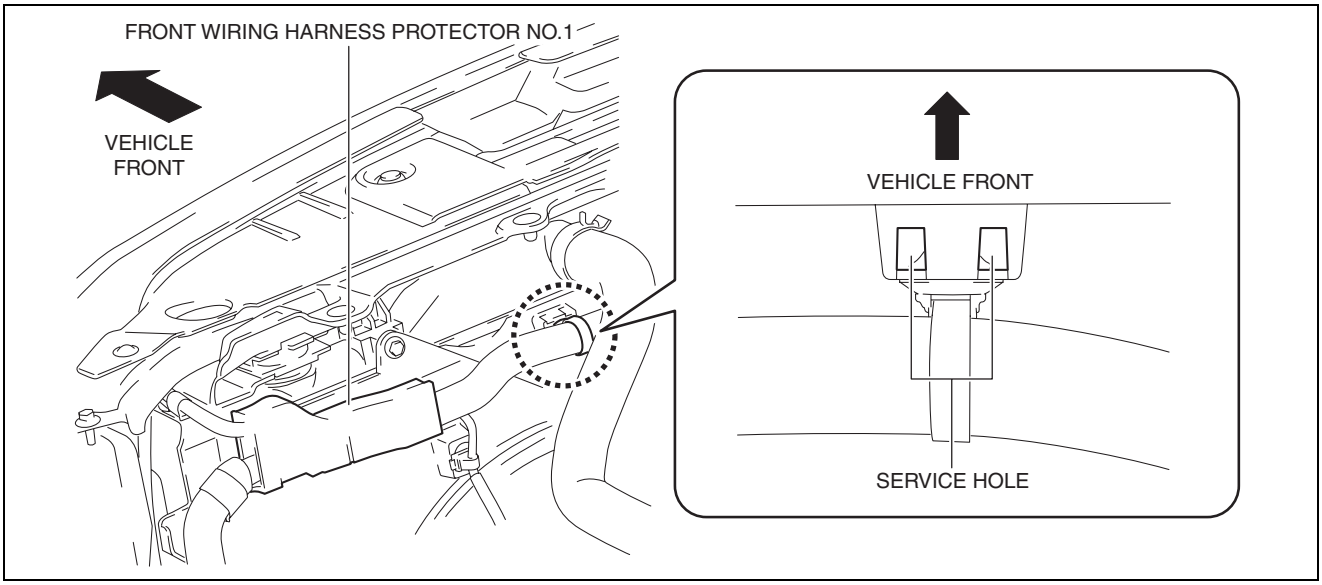

ac5wzw0000107

POWER SYSTEMS

6. While pressing the tabs of clip B in the direction of the arrows (3) shown in the figure, pull clip B in the direction of the arrow (4) shown in the figure to detach the tab of clip B from the radiator.
7. Detach clip B.
8. While pressing the tabs of clip C in the direction of the arrows (5) shown in the figure, pull clip C in the direction of the arrow (6) shown in the figure to detach the tab of clip C from the front bumper.

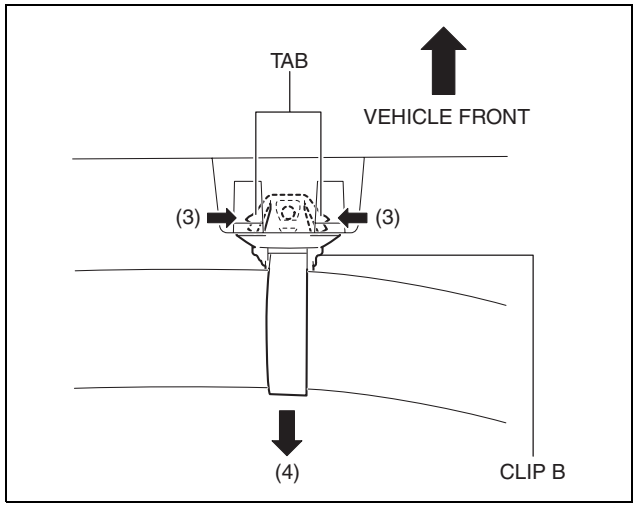

ac5wzw0000107

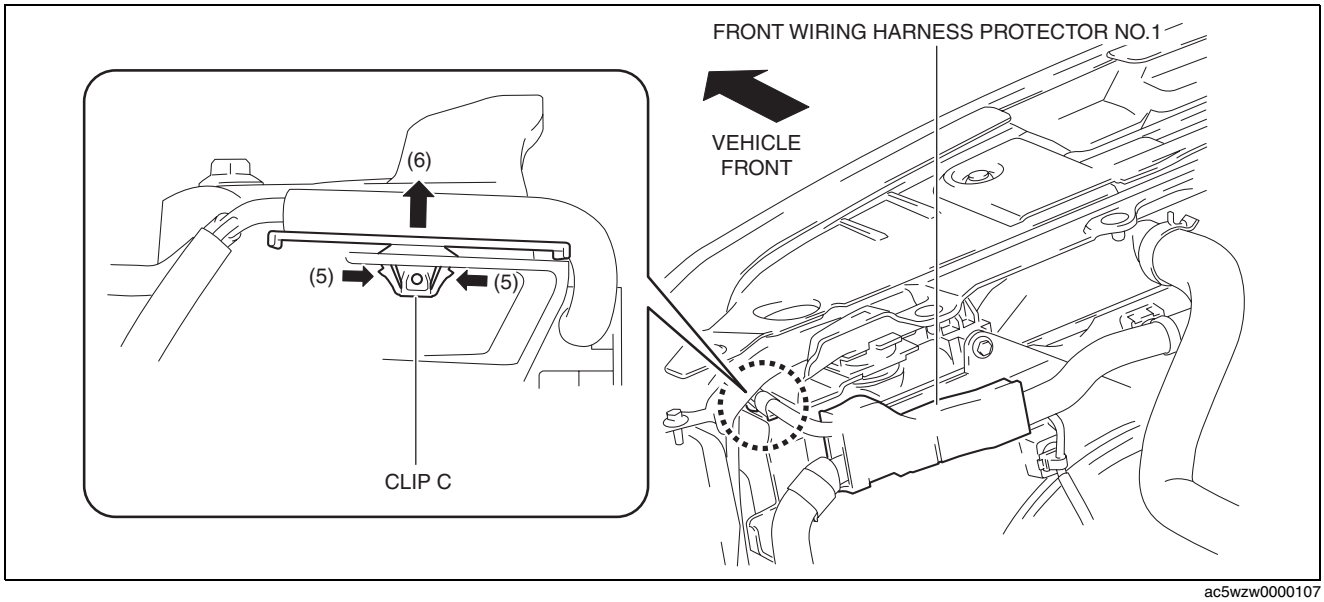

ac5wzw0000107

9. Remove clip C.
10. While pressing the clip tabs in the direction of the arrows (7) shown in the figure, pull the clip in the direction of the arrow (8) to detach the clip tabs from the radiator.

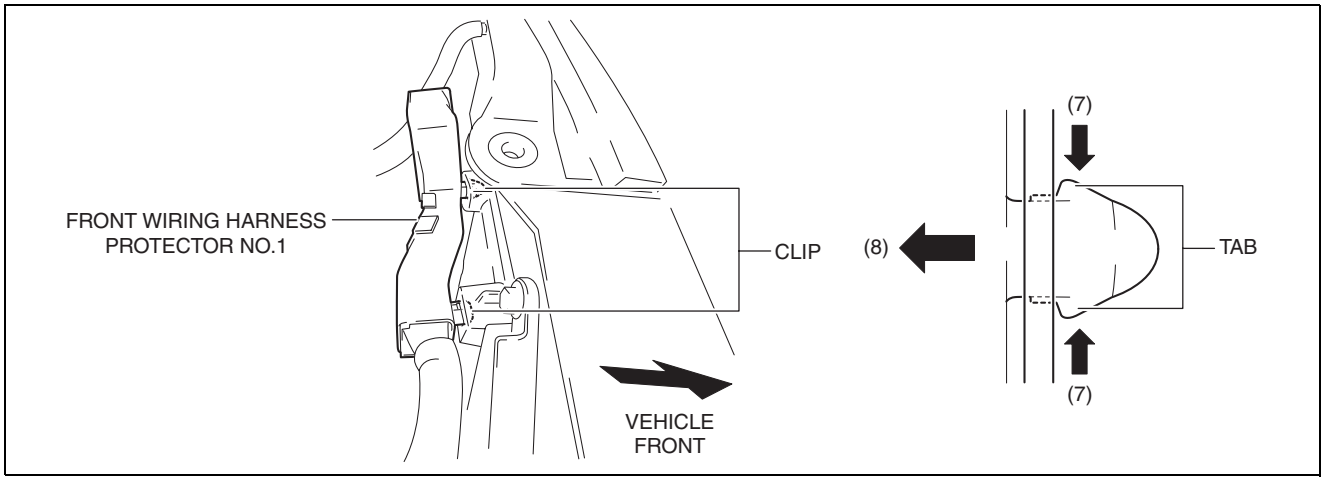

ac5wzw0000107

11. Detach all the clip tabs and remove the clip.

POWER SYSTEMS

12. Insert a flathead screwdriver into the position shown in the figure.

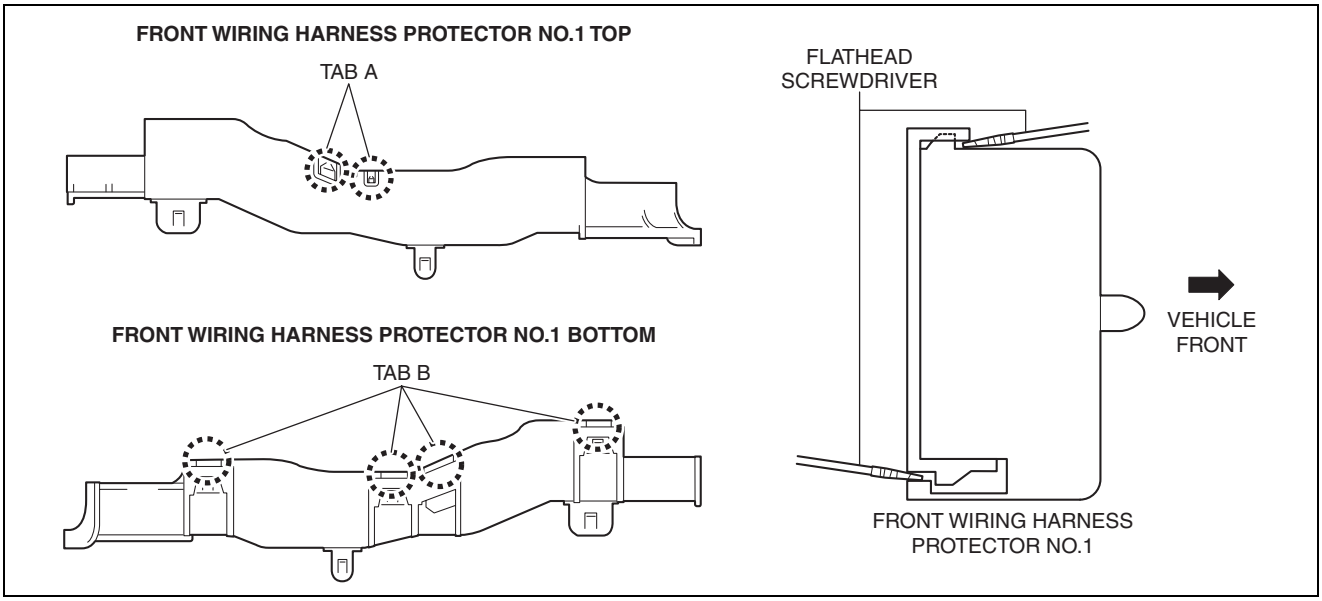

ac5wzw0000107

13. While lifting up the hooks in the direction of the arrows (9) shown in the figure using a flathead screwdriver, pull the hooks in the direction of the arrows (10) shown in the figure to detach the tabs from the hooks.
14. Detach all the tabs and hooks and remove front wiring harness protector No.1.
15. Install in the reverse order of removal.

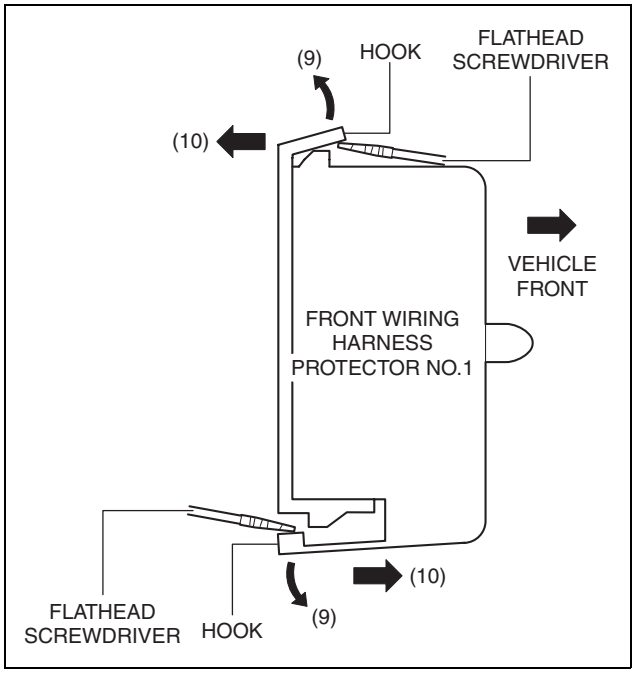

ac5wzw0000107

Front Wiring Harness Protector No.2

1. Remove the battery tray. (See 01-17A-3 BATTERY REMOVAL/INSTALLATION [SKYACTIV-G 2.0].) (See 01-17B-3 BATTERY REMOVAL/INSTALLATION [SKYACTIV-D 2.2].)

POWER SYSTEMS

2. While pressing the clip tabs in the direction of arrows (1) shown in the figure, pull the clip in the direction of arrow (2) to detach it from the engine mount.

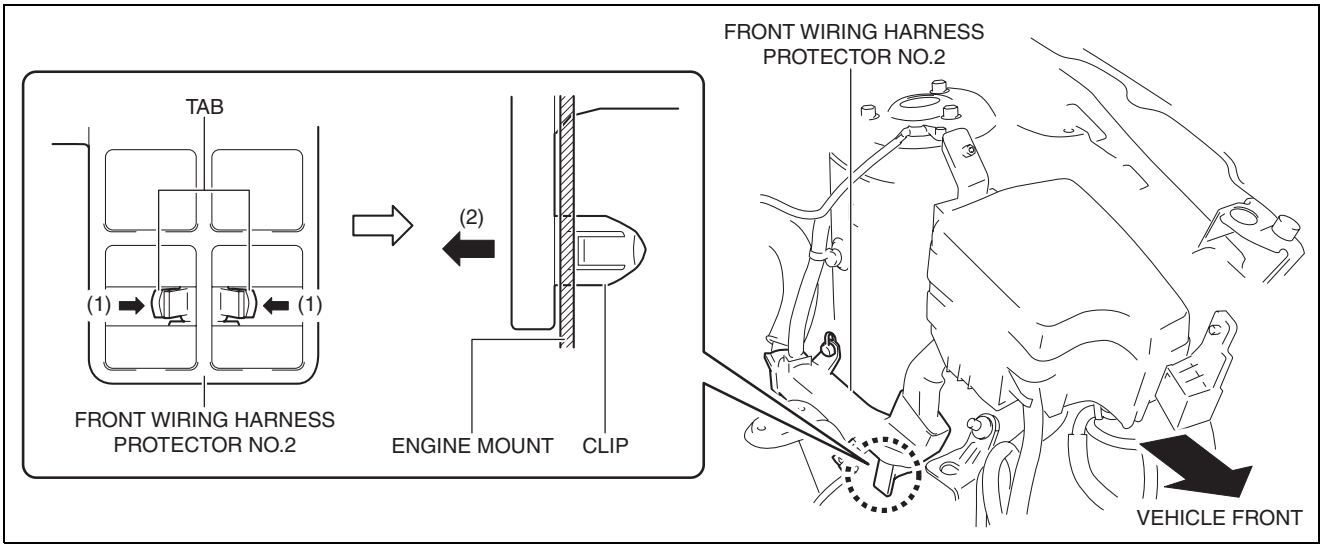

ac5wzw0000107

3. Remove the clip.
4. Remove the cap in the direction of the arrow (3) shown in the figure.

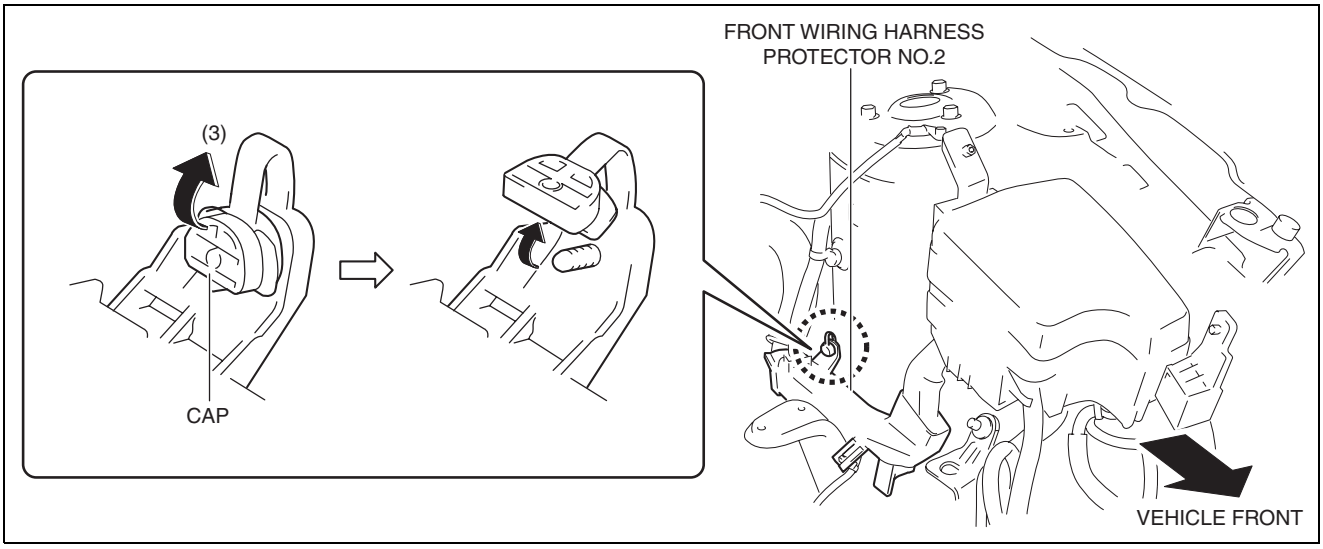

ac5wzw0000011

5. Pull out front wiring harness protector No.2 from the stud bolt and set it aside as shown in the figure.

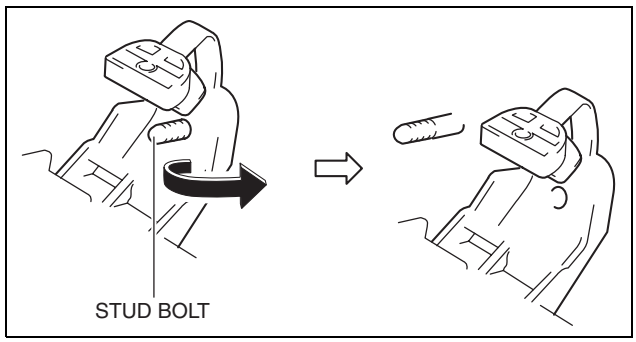

ac5wzw0000288

POWER SYSTEMS

6. While pressing the clip tabs in the direction of the arrows (4) shown in the figure, push out the clip in the direction of the arrow (5) shown in the figure to detach the clip tabs from front wiring harness protector No.2.

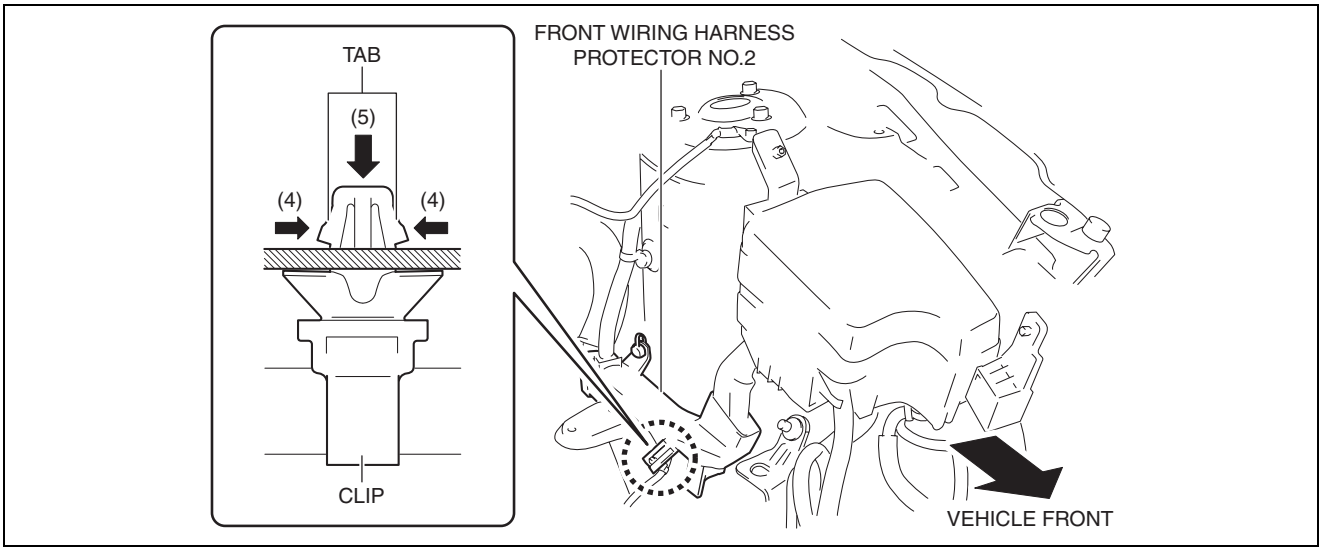

ac5wzw0000108

7. Remove the clip.
8. Insert a tape-wrapped flathead screwdriver into the gap between front wiring harness protector No.2 and the tabs shown in the figure.

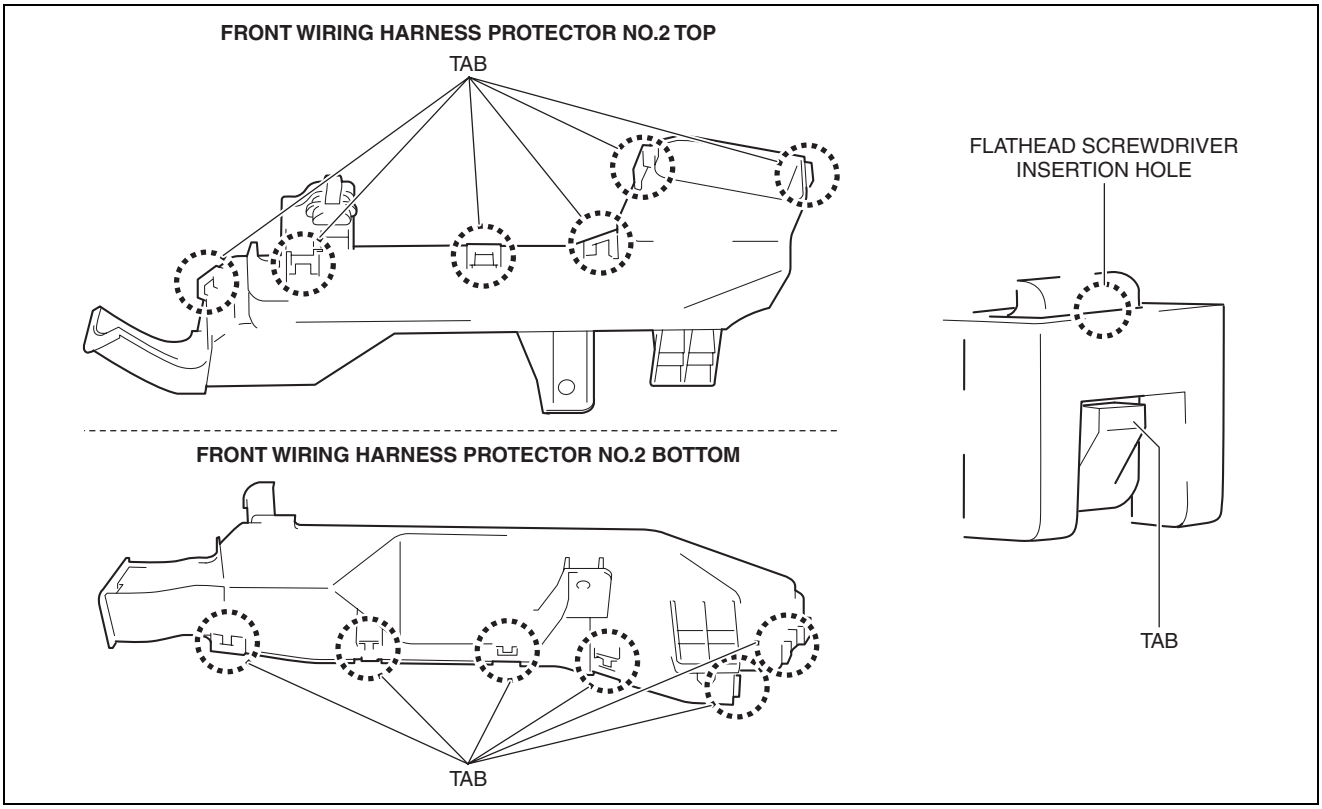

ac5wzw0000108

POWER SYSTEMS

9. Move the flathead screwdriver in the direction of the arrow (6) shown in the figure, lift up the front wiring harness protector No.2 tab to detach the tab from front wiring harness protector No.2.
10. Detach all the tabs and front wiring harness protector No.2 and remove front wiring harness protector No.2.
11. Install in the reverse order of removal.

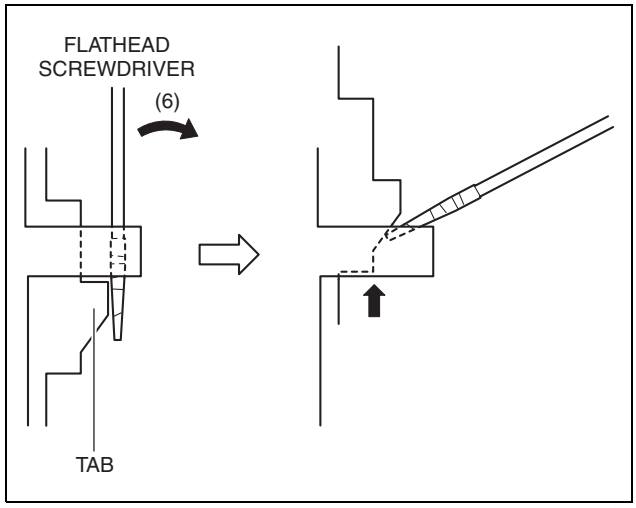

ac5wzw0000108

FUSE SERVICE CAUTIONS

id092100800400

Caution

- **If a fuse is burnt out, inspect the cause and repair the malfunctioning part, and always replace a fuse with one of the specified value. If the fuse is replaced before repairing a malfunction, it may burn out again.**

MAIN FUSE REMOVAL/INSTALLATION

id092100801500

SKYACTIV-G 2.0

1. Disconnect the negative battery cable. (See 01-17A-13 NEGATIVE BATTERY CABLE DISCONNECTION/CONNECTION [SKYACTIV-G 2.0 (WITHOUT i-stop)].) (See 01-17A-11 NEGATIVE BATTERY CABLE DISCONNECTION/CONNECTION [SKYACTIV-G 2.0].)
2. Insert a tape-wrapped flathead screwdriver into the service hole in the position shown in the figure.

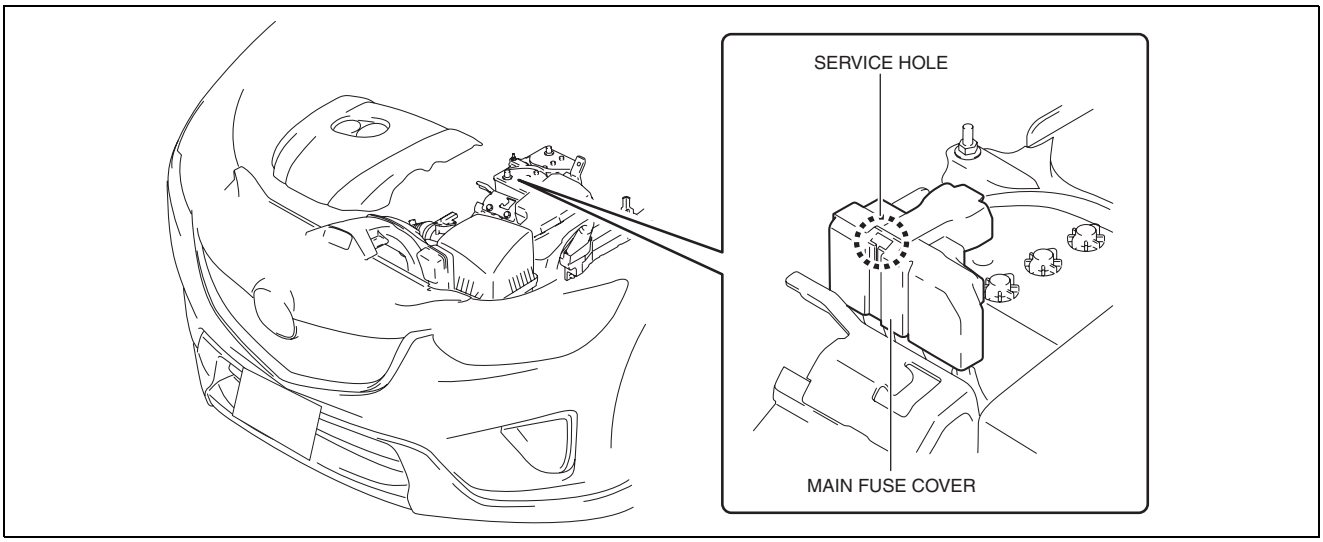

ac5wzw0000379

POWER SYSTEMS

3. Move the flathead screwdriver in the direction of the arrow (1) shown in the figure, pull up the main fuse cover in the direction of the arrow (2) shown in the figure, and detach the main fuse cover tab from the main fuse.

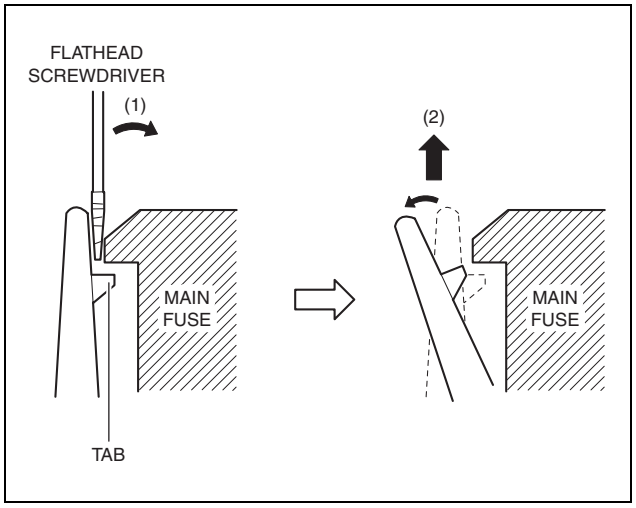

ac5wzw0000376

4. Remove the main fuse cover.
5. Remove the nuts.

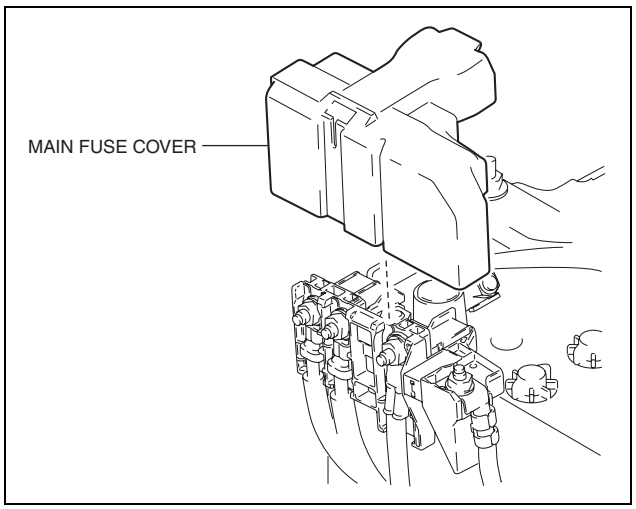

ac5wzw0000052

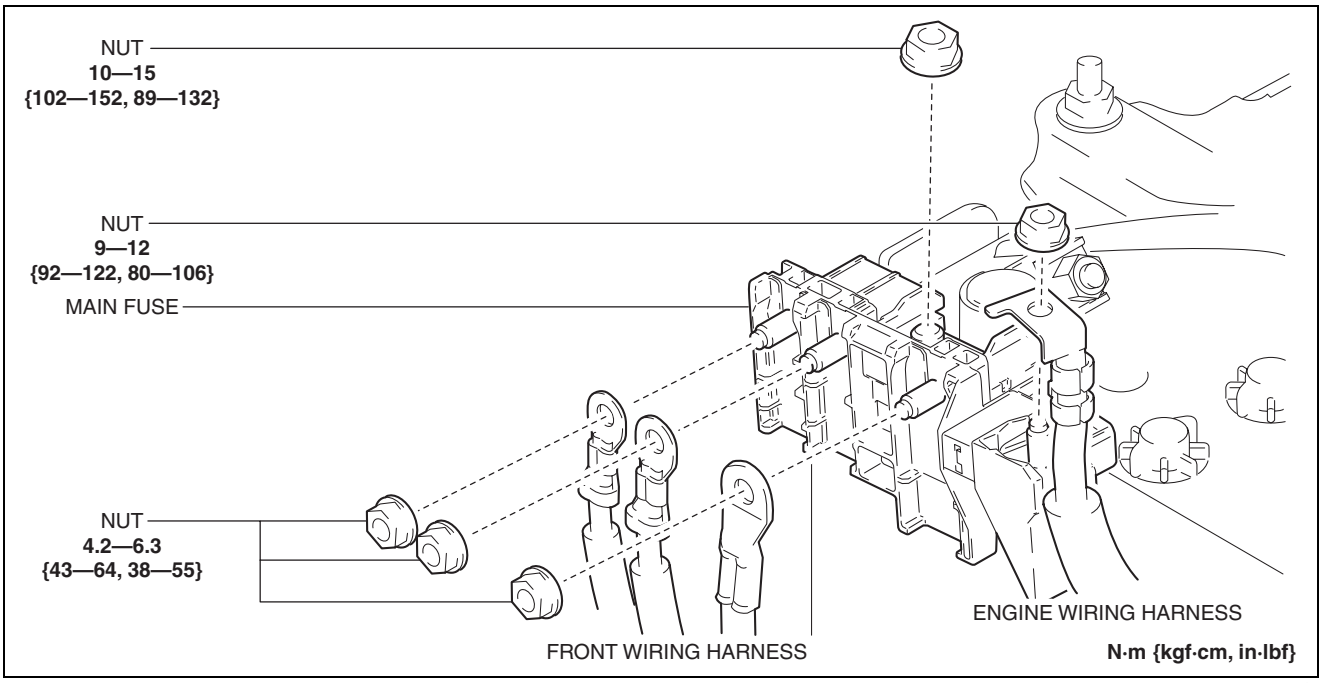

ac5wzw0000015

6. Remove the main fuse.
7. Install in the reverse order of removal.

POWER SYSTEMS

SKYACTIV-D 2.2

1. Disconnect the negative battery cable. (See 01-17B-9 NEGATIVE BATTERY CABLE DISCONNECTION/ CONNECTION [SKYACTIV-D 2.2].)
2. Insert a tape-wrapped flathead screwdriver into the service hole in the position shown in the figure.

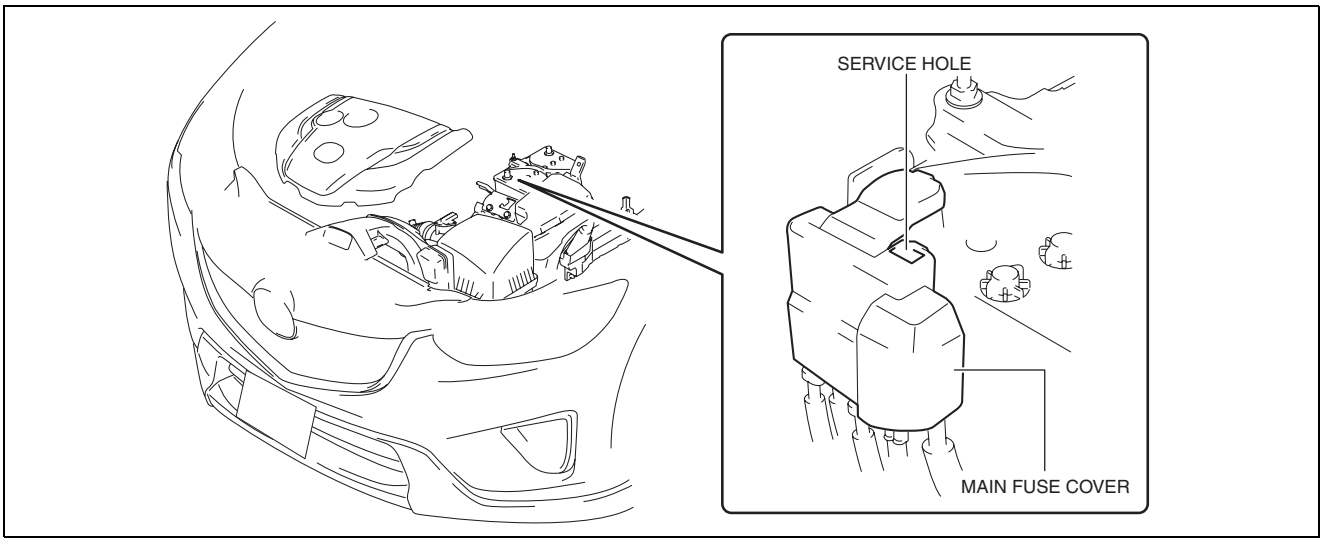

ac5wzw0000287

3. Move the flathead screwdriver in the direction of the arrow (1) shown in the figure, pull up the main fuse cover in the direction of the arrow (2) shown in the figure, and detach the main fuse cover tab from the main fuse.

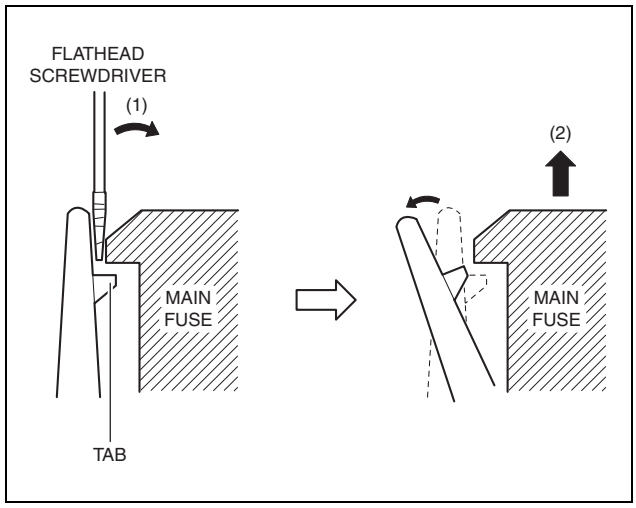

ac5wzw0000287

4. Remove the main fuse cover.

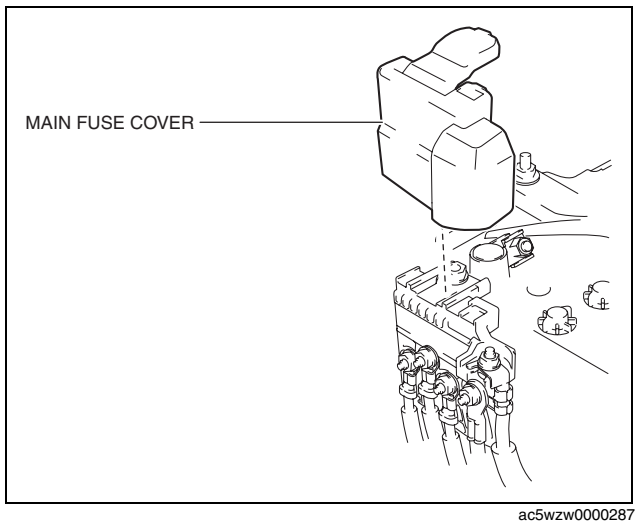

ac5wzw0000287

5. Remove the nuts.

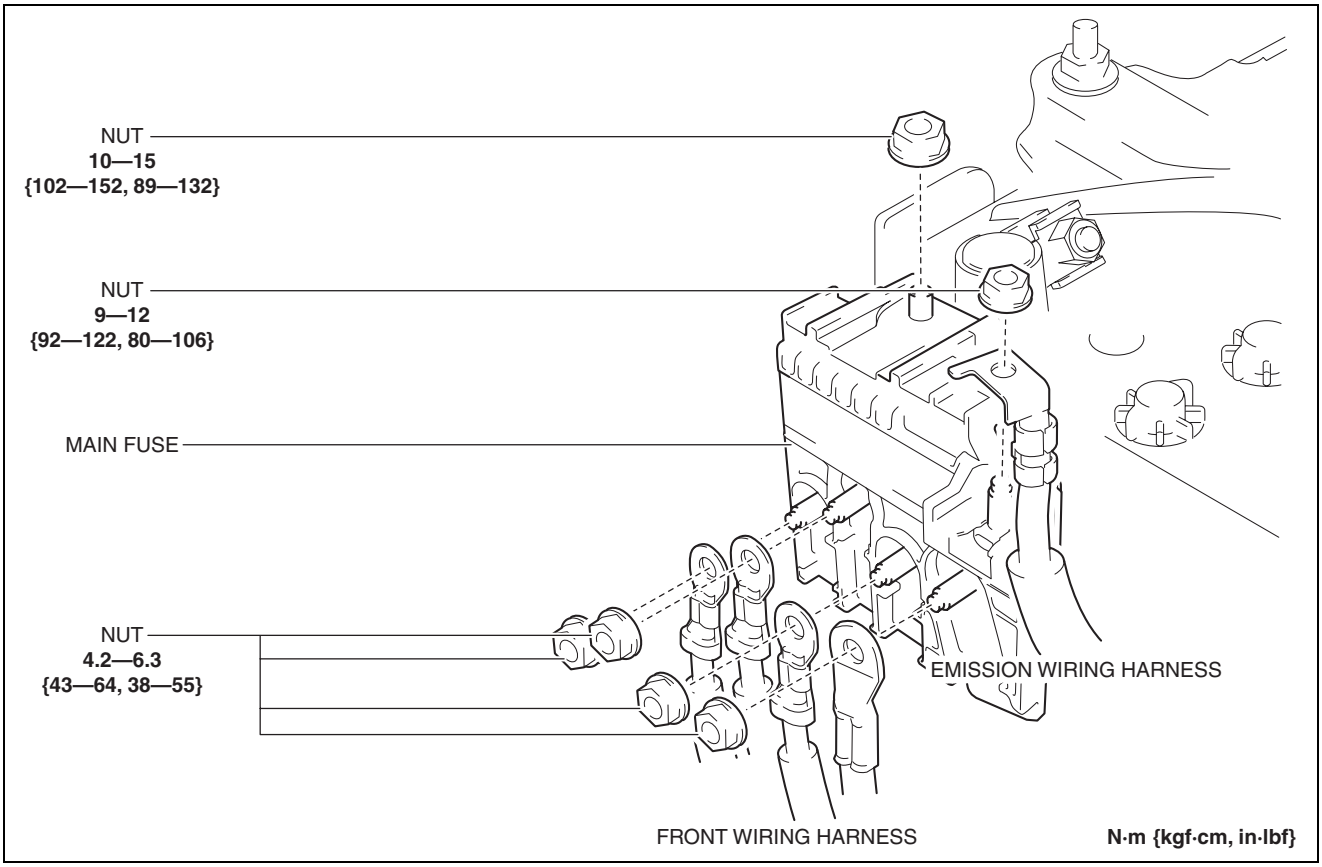

ac5wzw0000287

6. Remove the main fuse.
7. Install in the reverse order of removal.

PUSH BUTTON START REMOVAL/INSTALLATION

id092100802200

1. Disconnect the negative battery cable. (See 01-17A-13 NEGATIVE BATTERY CABLE DISCONNECTION/CONNECTION [SKYACTIV-G 2.0 (WITHOUT i-stop)].) (See 01-17A-11 NEGATIVE BATTERY CABLE DISCONNECTION/CONNECTION [SKYACTIV-G 2.0].) (See 01-17B-9 NEGATIVE BATTERY CABLE DISCONNECTION/CONNECTION [SKYACTIV-D 2.2].)
2. Remove the meter hood. (See 09-17-20 METER HOOD REMOVAL/INSTALLATION.)

POWER SYSTEMS

3. While pressing the push button start tab in the direction of the arrow (1) shown in the figure, push out the push button start in the direction of the arrow (2) shown in the figure to detach the push button start tab from the meter hood.

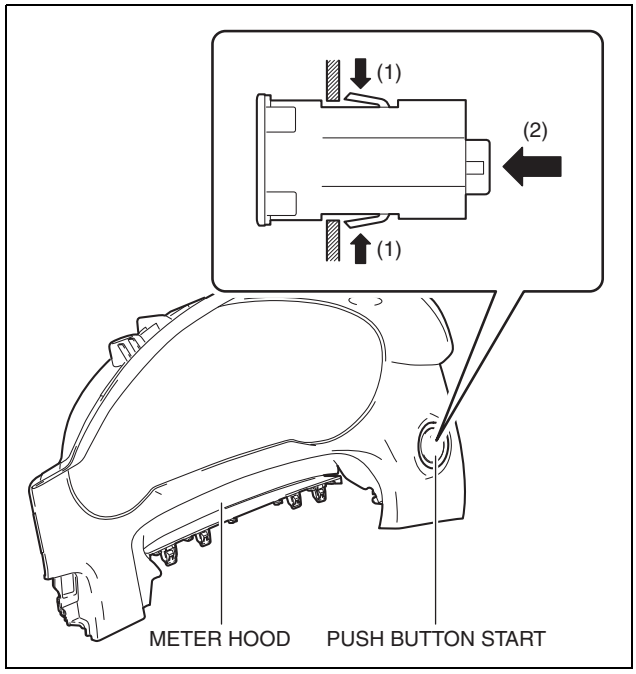

ac5wzw0000008

4. Remove the push button start.
5. Install in the reverse order of removal.

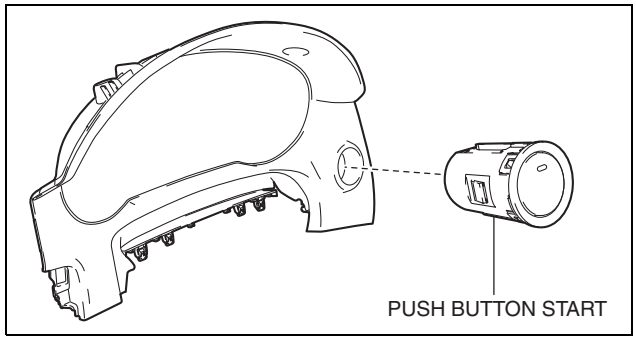

ac5wzw0000052

PUSH BUTTON START INSPECTION

id092100802300

1. Remove the push button start. (See 09-21-24 PUSH BUTTON START REMOVAL/INSTALLATION.)
2. Verify that the continuity between the push button start terminals is as indicated in the table.

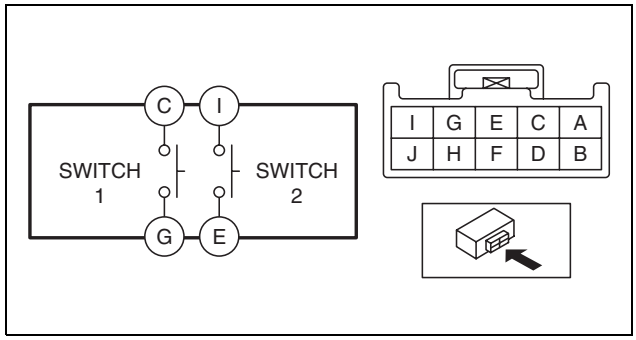

ac5wzw0000009

POWER SYSTEMS

- If the continuity can be verified as indicated in the table, go to the next step.
- If not as indicated in the table, replace the push button start. (See 09-21-24 PUSH BUTTON START REMOVAL/INSTALLATION.)

3. Apply battery positive voltage and connect the ground to the push button start terminals and verify that the LED illuminates as indicated in the table.

○—○ : Continuity

Test condition	Terminal			
	C	E	G	I
Button pressed	○		○	
		○		○
Button released				

ac5wzw0000052

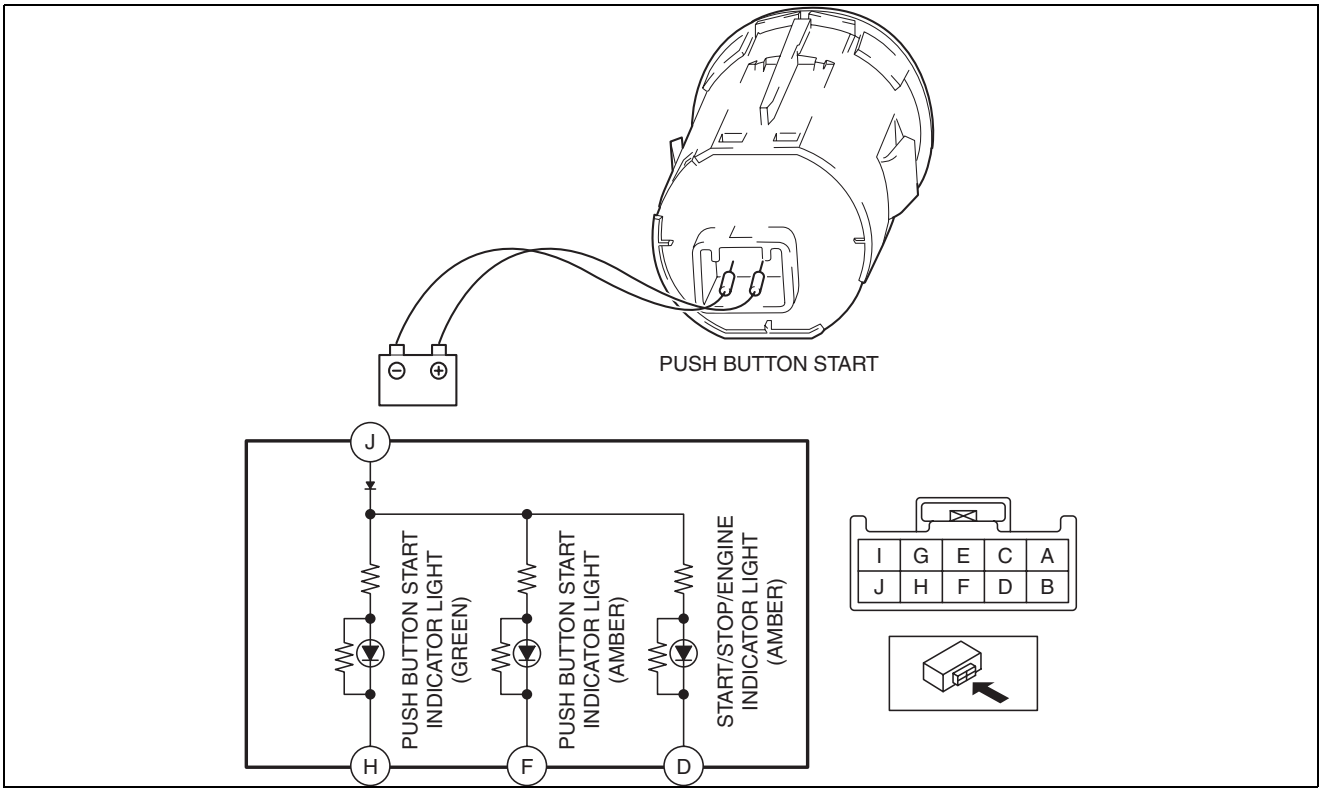

ac5wzw0000463

- If the LED does not illuminate as indicated in the table, replace the push button start. (See 09-21-24 PUSH BUTTON START REMOVAL/INSTALLATION.)

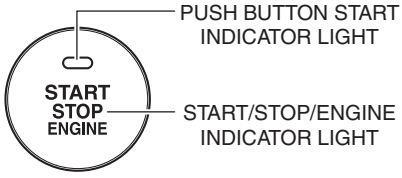

Terminal		Illumination positions (Color)
B+	Ground	
J	D	START/STOP/ENGINE indicator light (Amber)
	F	Push button start indicator light (Amber)
	H	Push button start indicator light (Green)

ac5wzw0000110

POWER SYSTEMS

FORCED IGNITION ON

id092100802500

Note

- In order to perform a forced ignition ON, the M-MDS is necessary. If the servicing is being done outside of an Authorized Mazda dealership, contact an Authorized Mazda dealership for instructions.
- The forced ignition ON procedure forces a power supply to each part when no power is available even after the ignition switch has been operated. However, the engine cannot be started and the steering cannot be unlocked.
- When performing a forced ignition ON procedure, remove all remote transmitters from the vehicle. If a remote transmitter is left in the vehicle, the forced ignition ON procedure cannot be done.

1. Verify that there are no remote transmitters in the vehicle.
2. Get PCM part number from As-built site.
3. Connect the M-MDS to the DLC-2.
4. Manual vehicle identification.
    1. Select “Manual Vehicle Entry”.
5. Select the “All other” from Vehicle list.
6. Input the PCM part number on the following screen.
7. After the vehicle is identified, select the following items from the initialization screen of the M-MDS.
    1. Select “Body”.
    2. Select “Special Ignition ON”.
8. Perform the procedure according to the directions on the screen.
9. Delete the session, but keep the ignition ON.
10. Normal vehicle identification.

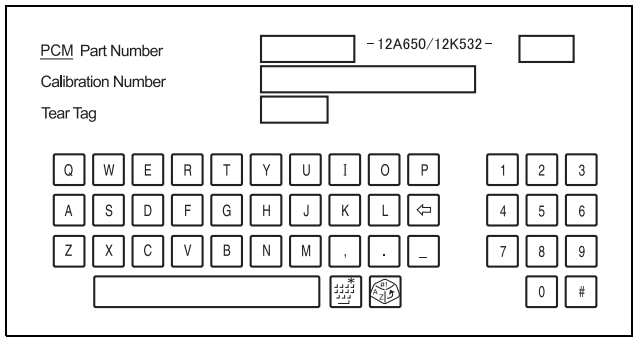

am6xuw0000002

POWER SYSTEMS

RELAY LOCATION

id092100800600

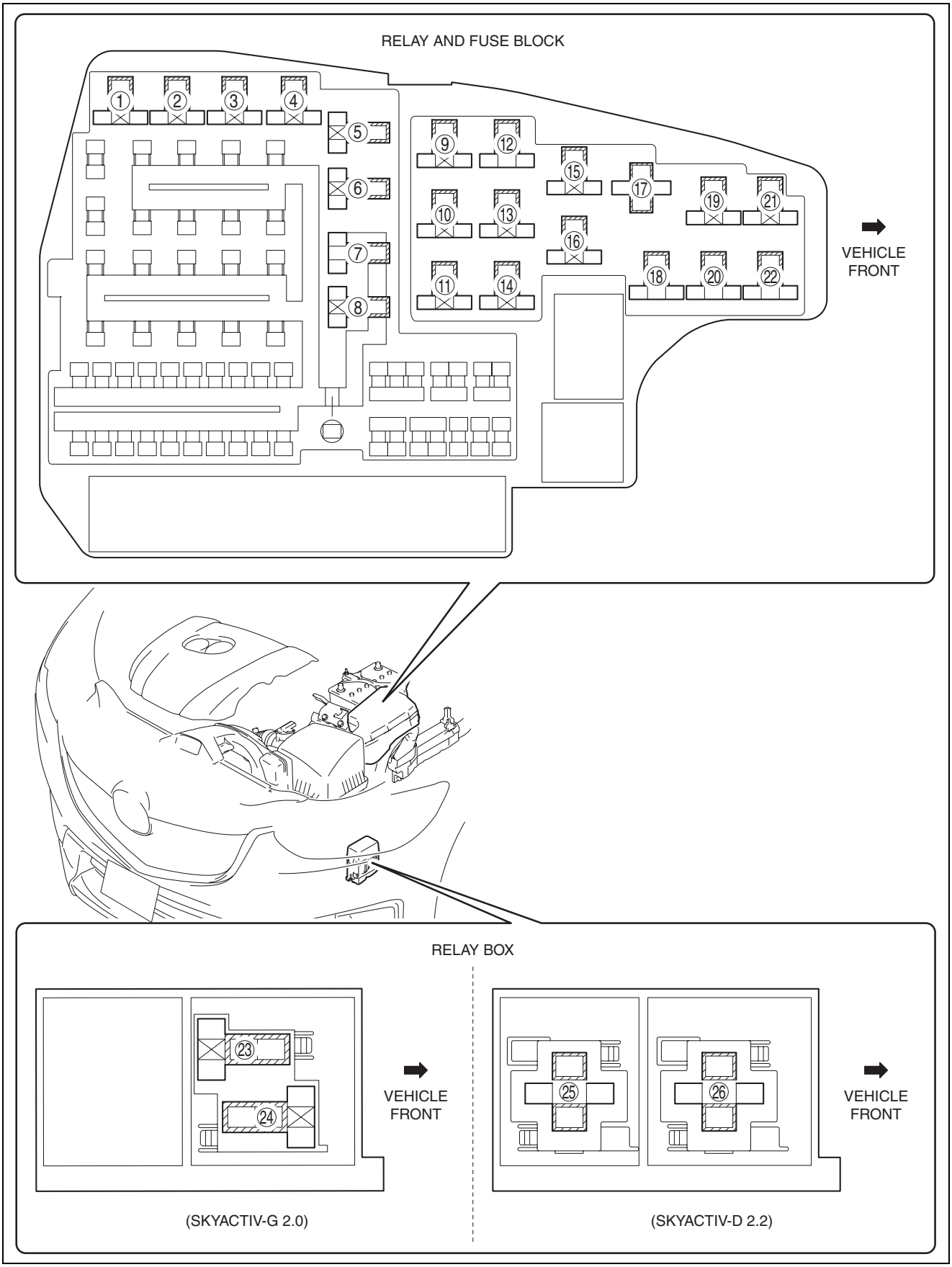

ac5wzw0000288

1	TNS relay
2	Electric AT oil pump relay

3	A/C relay
4	Headlight HI relay
5	Fuel injector relay
6	Fuel pump relay
7	Halogen type: • Headlight LO relay Discharge type: • Headlight LO relay (LH)
8	IG1 relay
9	Starter relay
10	Outlet relay
11	Horn relay
12	Brake light relay
13	ACC relay
14	Cooling fan relay No.1
15	SKYACTIV-G 2.0: • Electric variable valve timing relay SKYACTIV-D 2.2: • Blow-by heater relay
16	SKYACTIV-G 2.0: • Cooling fan relay No.2 SKYACTIV-D 2.2: • Ignition relay (ACC_STAB)
17	Blower relay
18	Headlight LO relay (RH)
19	Rear window defroster relay
20	SKYACTIV-G 2.0: • Cooling fan relay No.3 SKYACTIV-D 2.2: • Ignition relay (IG1_STAB)
21	Front fog light relay
22	Main relay
23	Ignition relay (ACC_STAB)
24	Ignition relay (IG1_STAB)
25	Cooling fan relay No.2
26	Cooling fan relay No.1

RELAY INSPECTION

id092100800300

Relay Type

Connector type	Part name
Type A	• TNS relay • Electric AT oil pump relay • A/C relay • Headlight HI relay • Headlight LO relay • Headlight LO relay (LH) • Outlet relay • Horn relay • ACC relay • Cooling fan relay No.1 (SKYACTIV-G 2.0) • Cooling fan relay No.2 (SKYACTIV-G 2.0) • Headlight LO relay (RH) • Rear window defroster relay • Front fog light relay • Ignition relay (ACC_STAB) • Ignition relay (IG1_STAB)
Type B	• Brake light relay • Cooling fan relay No.3 (SKYACTIV-G 2.0)
Type C	• Blower relay • Cooling fan relay No.2 (SKYACTIV-D 2.2) • Cooling fan relay No.1 (SKYACTIV-D 2.2)

POWER SYSTEMS

Connector type	Part name
Type D	• Fuel injector relay • Fuel pump relay • IG1 relay • Electric variable valve timing relay • Blow-by heater relay • Main relay
Type E	Starter relay

Type A

1. Remove the relay. (See 09-21-28 RELAY LOCATION.)
2. Verify the continuity between relay terminals E and A.
   - If it can be verified, go to the next step.
   - If it cannot be verified, replace the relay. (See 09-21-28 RELAY LOCATION.)
3. Apply battery voltage to relay terminal E, and connect terminal A to ground.
4. Verify the continuity between relay terminals C and D.
   - If it cannot be verified, replace the relay. (See 09-21-28 RELAY LOCATION.)

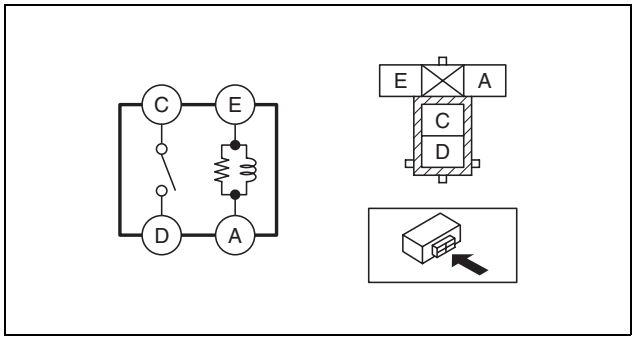

ac5wzw0000008

Type B

1. Remove the relay. (See 09-21-28 RELAY LOCATION.)
2. Verify the continuity between relay terminals E and A.
   - If it can be verified, go to the next step.
   - If it cannot be verified, replace the relay. (See 09-21-28 RELAY LOCATION.)
3. Verify the continuity between the relay terminals B and D.
   - If it can be verified, go to the next step.
   - If it cannot be verified, replace the relay. (See 09-21-28 RELAY LOCATION.)
4. Apply battery voltage to relay terminal E, and connect terminal A to ground.
5. Verify the continuity between relay terminals C and D.
   - If it cannot be verified, replace the relay. (See 09-21-28 RELAY LOCATION.)

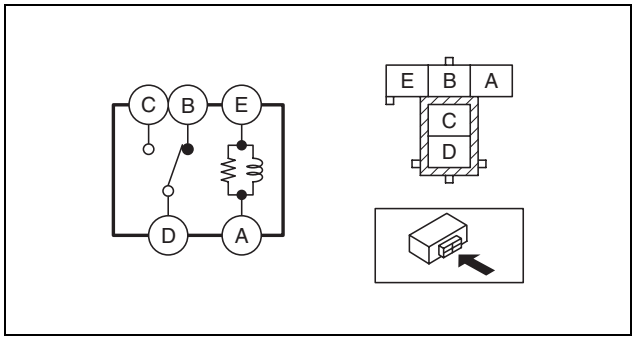

ac5wzw0000008

Type C

1. Remove the relay. (See 09-21-28 RELAY LOCATION.)
2. Verify the continuity between the relay terminals D and B.
   - If it can be verified, go to the next step.
   - If it cannot be verified, replace the relay. (See 09-21-28 RELAY LOCATION.)
3. Apply battery voltage to relay terminal D, and connect terminal B to ground.
4. Verify the continuity between relay terminals C and A.
   - If it cannot be verified, replace the relay. (See 09-21-28 RELAY LOCATION.)

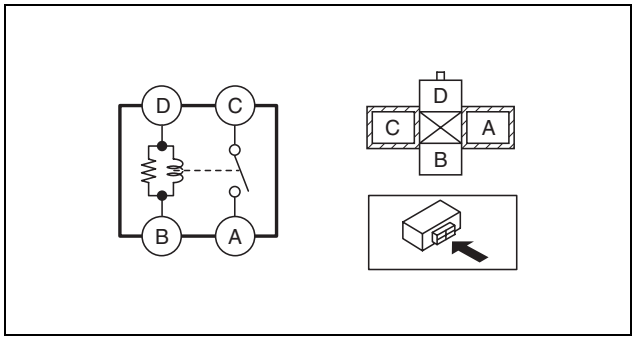

ac5wzw0000008

Type D

1. Remove the relay. (See 09-21-28 RELAY LOCATION.)

POWER SYSTEMS

2. Verify the continuity between relay terminals A and E.
   - If it can be verified, go to the next step.
   - If it cannot be verified, replace the relay. (See 09-21-28 RELAY LOCATION.)
3. Apply battery voltage to relay terminal A, and connect terminal E to ground.
4. Verify the continuity between relay terminals D and C.
   - If it cannot be verified, replace the relay. (See 09-21-28 RELAY LOCATION.)

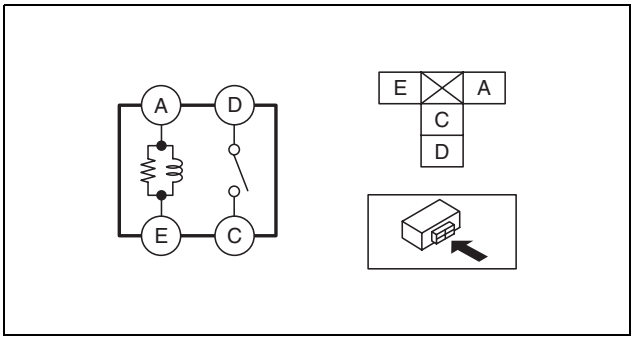

ac5wzw0000008

Type E

1. Remove the relay. (See 09-21-28 RELAY LOCATION.)
2. Verify the continuity between relay terminals A and E.
   - If it can be verified, go to the next step.
   - If it cannot be verified, replace the relay. (See 09-21-28 RELAY LOCATION.)
3. Apply battery voltage to relay terminal A, and connect terminal E to ground.
4. Verify the continuity between relay terminals C and D.
   - If it cannot be verified, replace the relay. (See 09-21-28 RELAY LOCATION.)

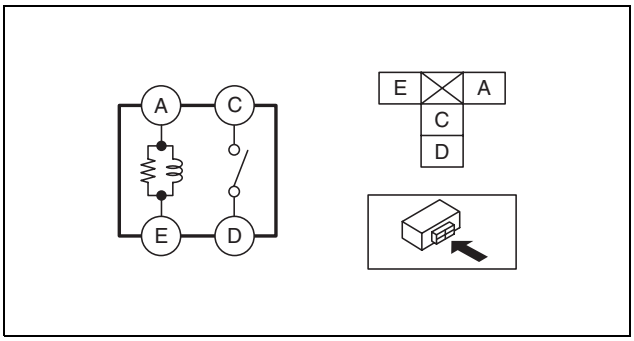

ac5wzw0000008

FRONT ACCESSORY SOCKET REMOVAL/INSTALLATION

id092100900500

1. Disconnect the negative battery cable. (See 01-17A-13 NEGATIVE BATTERY CABLE DISCONNECTION/CONNECTION [SKYACTIV-G 2.0 (WITHOUT i-stop)].) (See 01-17A-11 NEGATIVE BATTERY CABLE DISCONNECTION/CONNECTION [SKYACTIV-G 2.0].) (See 01-17B-9 NEGATIVE BATTERY CABLE DISCONNECTION/CONNECTION [SKYACTIV-D 2.2].)
2. Remove the following parts:
   (1) Decoration panel (See 09-17-33 DECORATION PANEL REMOVAL/INSTALLATION.)
   (2) Front console box (See 09-17-40 FRONT CONSOLE BOX REMOVAL/INSTALLATION.)
   (3) Shift panel (See 09-17-42 SHIFT PANEL REMOVAL/INSTALLATION.)
   (4) Upper panel (See 09-17-44 UPPER PANEL REMOVAL/INSTALLATION.)
   (5) Rear console (See 09-17-45 REAR CONSOLE REMOVAL/INSTALLATION.)
   (6) Side wall (See 09-17-49 SIDE WALL REMOVAL/INSTALLATION.)
   (7) Front console (See 09-17-50 FRONT CONSOLE REMOVAL/INSTALLATION.)
3. Insert a tape-wrapped flathead screwdriver into the gap between the cap tab and socket.

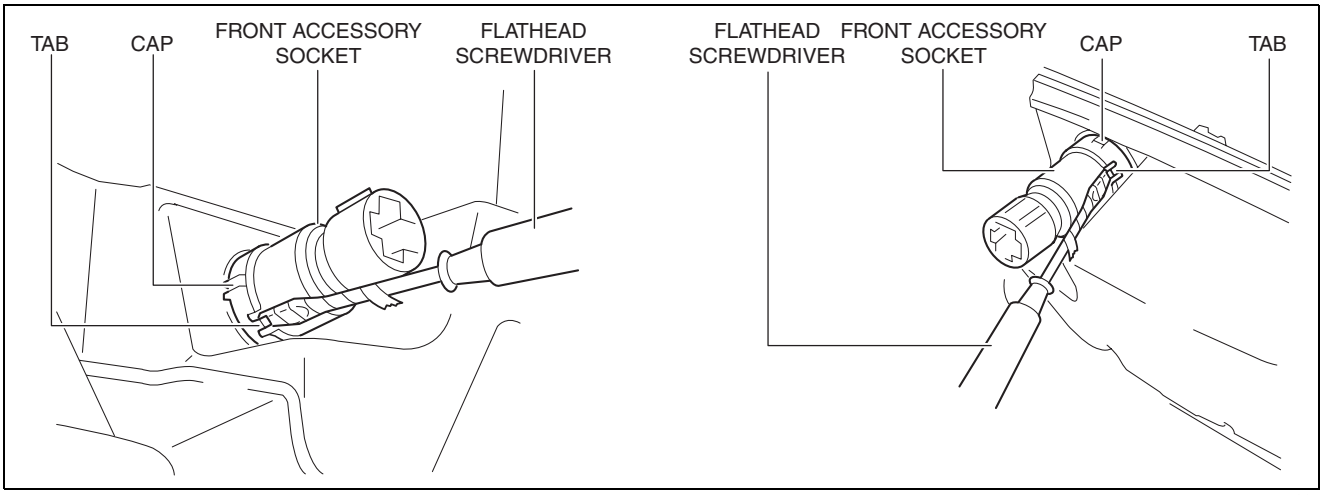

ac5wzw0000110

POWER SYSTEMS

4. Move the flathead screwdriver in the direction of the arrow (1) shown in the figure, press the front accessory socket in the direction of the arrow (2) shown in the figure, and detach the cap tab from the socket.

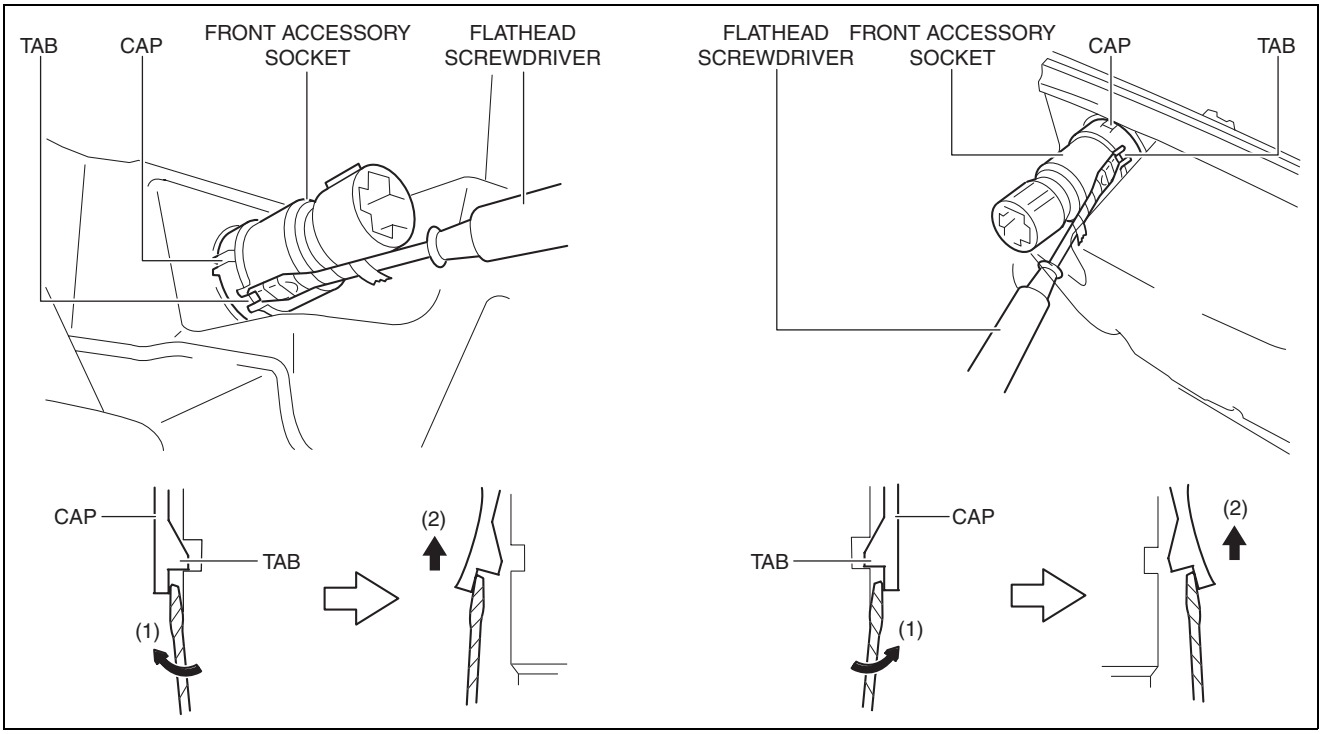

ac5wzw0000110

5. Pull the front accessory socket in the direction of the arrow shown in the figure and remove it.

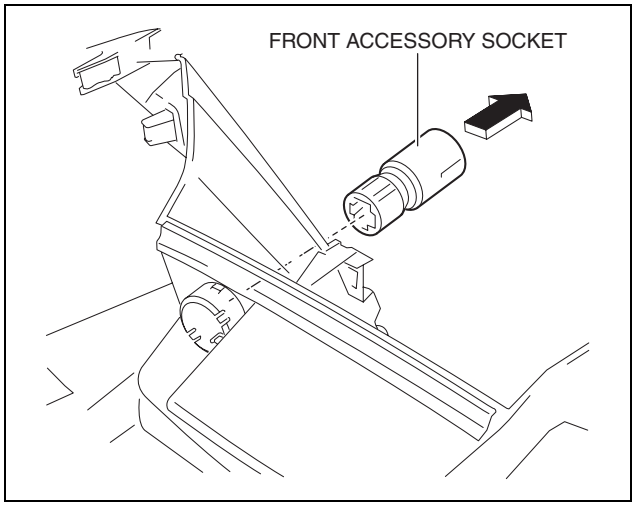

ac5wzw0000110

POWER SYSTEMS

6. While pressing the cap tabs in the direction of arrows (3) shown in the figure, press the cap in the direction of arrow (4) to detach the cap tabs from the front console.

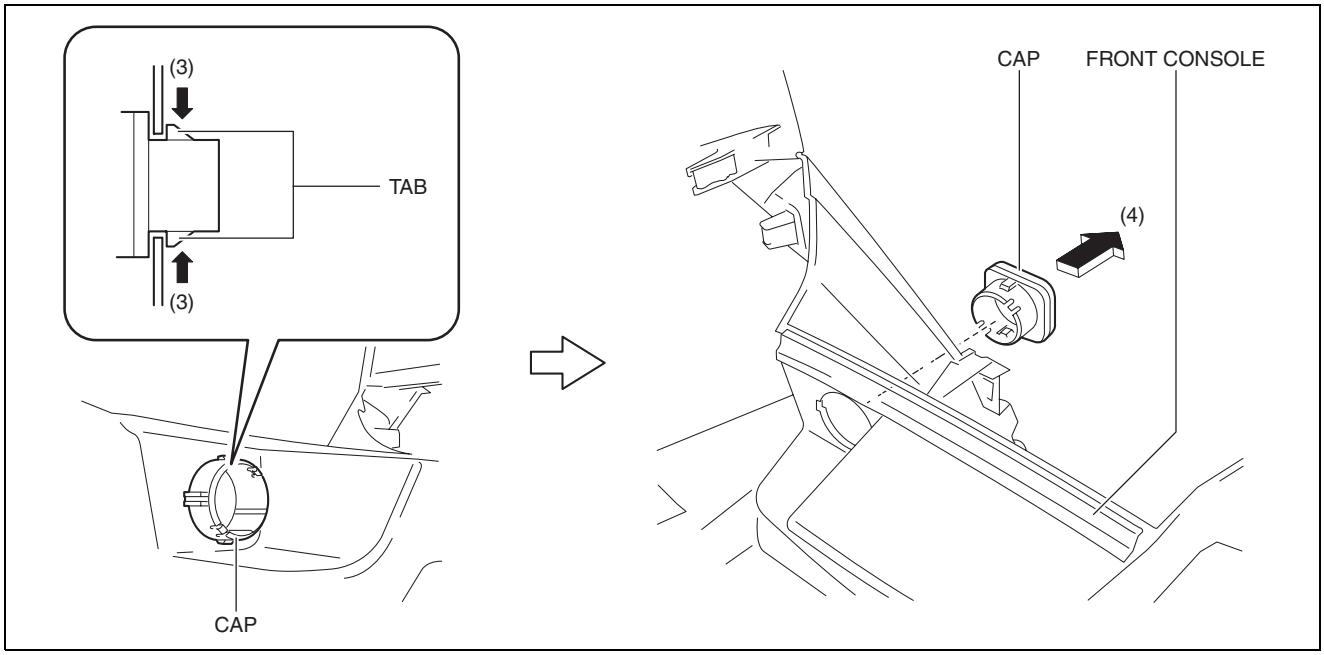

ac5wzw0000110

7. Remove the cap.
8. Install in the reverse order of removal.

FRONT ACCESSORY SOCKET INSPECTION

id092100900800

1. Remove the front accessory socket. (See 09-21-31 FRONT ACCESSORY SOCKET REMOVAL/INSTALLATION.)
2. Connect the tester probe to the position shown in the figure and verify that there is continuity.
   - If it cannot be verified, replace the front accessory socket. (See 09-21-31 FRONT ACCESSORY SOCKET REMOVAL/INSTALLATION.)

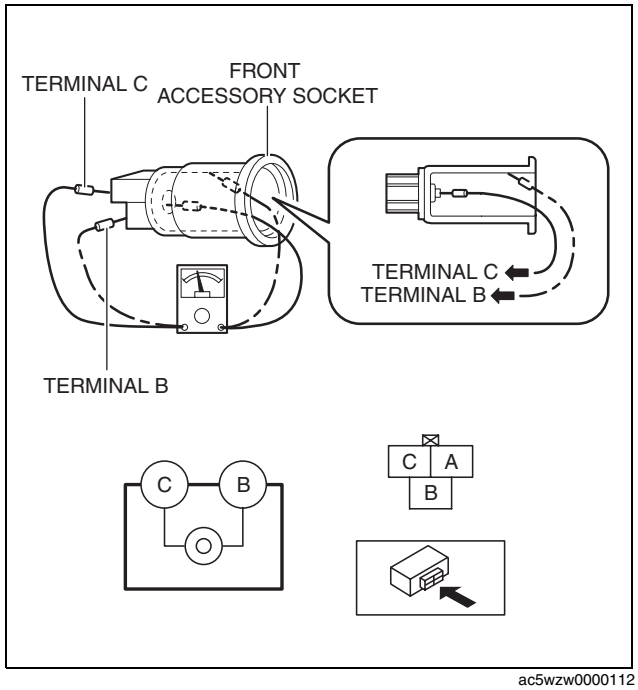

ac5wzw0000112

CENTER ACCESSORY SOCKET REMOVAL/INSTALLATION

id092100900600

1. Disconnect the negative battery cable. (See 01-17A-13 NEGATIVE BATTERY CABLE DISCONNECTION/CONNECTION [SKYACTIV-G 2.0 (WITHOUT i-stop)].) (See 01-17A-11 NEGATIVE BATTERY CABLE DISCONNECTION/CONNECTION [SKYACTIV-G 2.0].) (See 01-17B-9 NEGATIVE BATTERY CABLE DISCONNECTION/CONNECTION [SKYACTIV-D 2.2].)
2. Remove the upper console. (See 09-17-47 REAR CONSOLE DISASSEMBLY/ASSEMBLY.)

POWER SYSTEMS

3. Insert a tape-wrapped flathead screwdriver into the gap between the cap tab and socket.

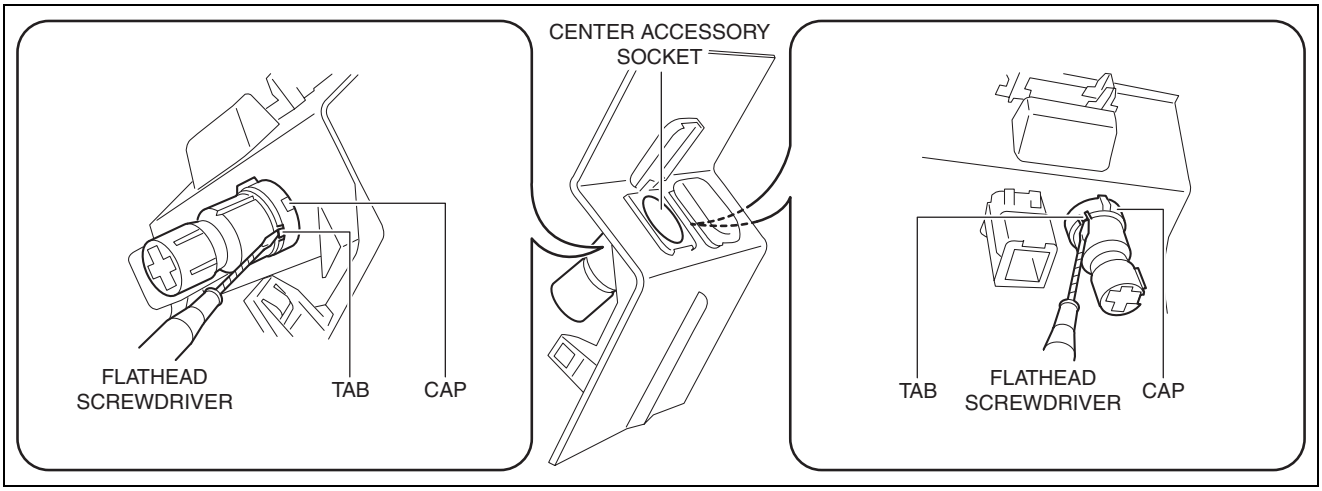

ac5wzw0000111

4. Move the flathead screwdriver in the direction of the arrow (1) shown in the figure, press the center accessory socket in the direction of the arrow (2) shown in the figure, and detach the cap tab from the socket.

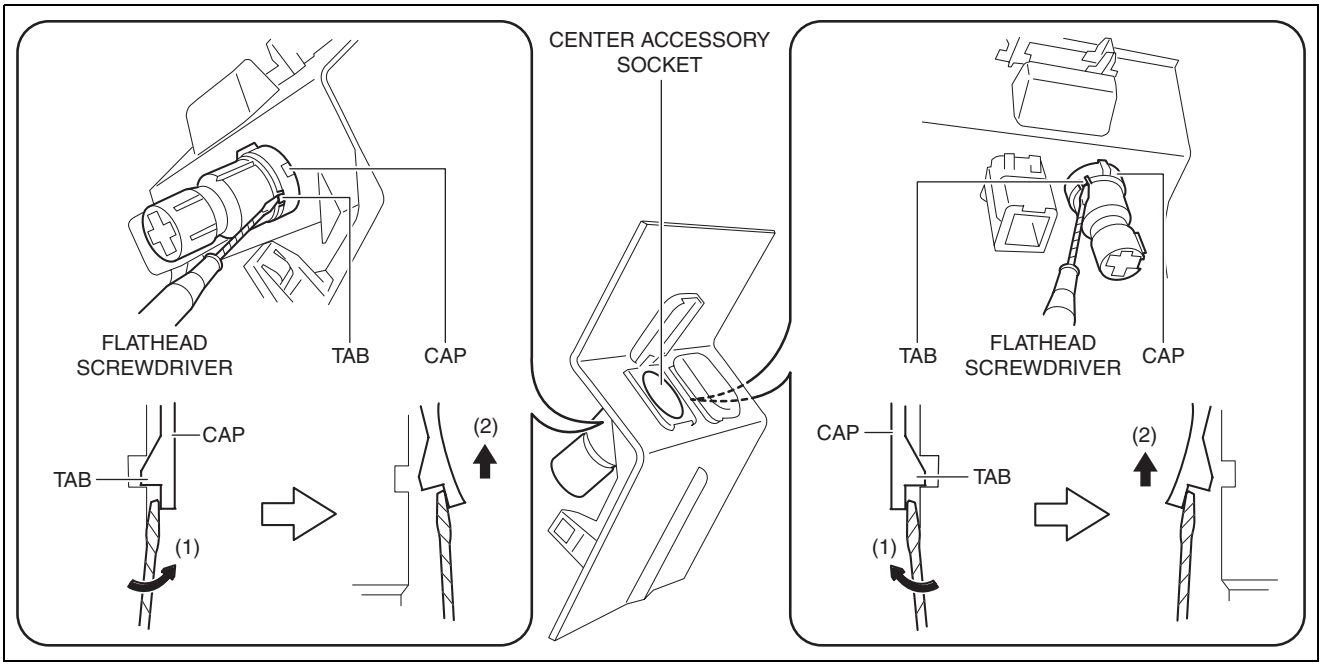

ac5wzw0000111

POWER SYSTEMS

5. Pull the center accessory socket in the direction of the arrow shown in the figure and remove it.
6. While pressing the clip tabs in the direction of arrows (3) shown in the figure, press the cap in the direction of arrow (4) to detach the cap tabs from the upper console.

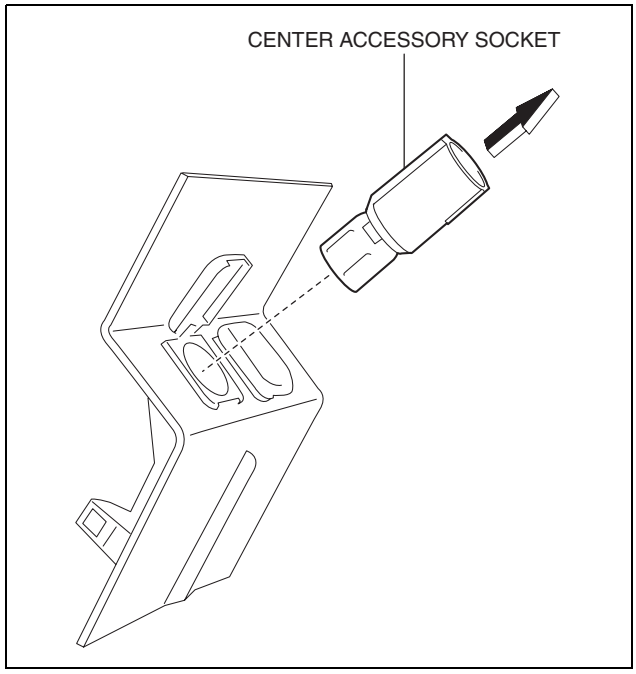

ac5wzw0000111

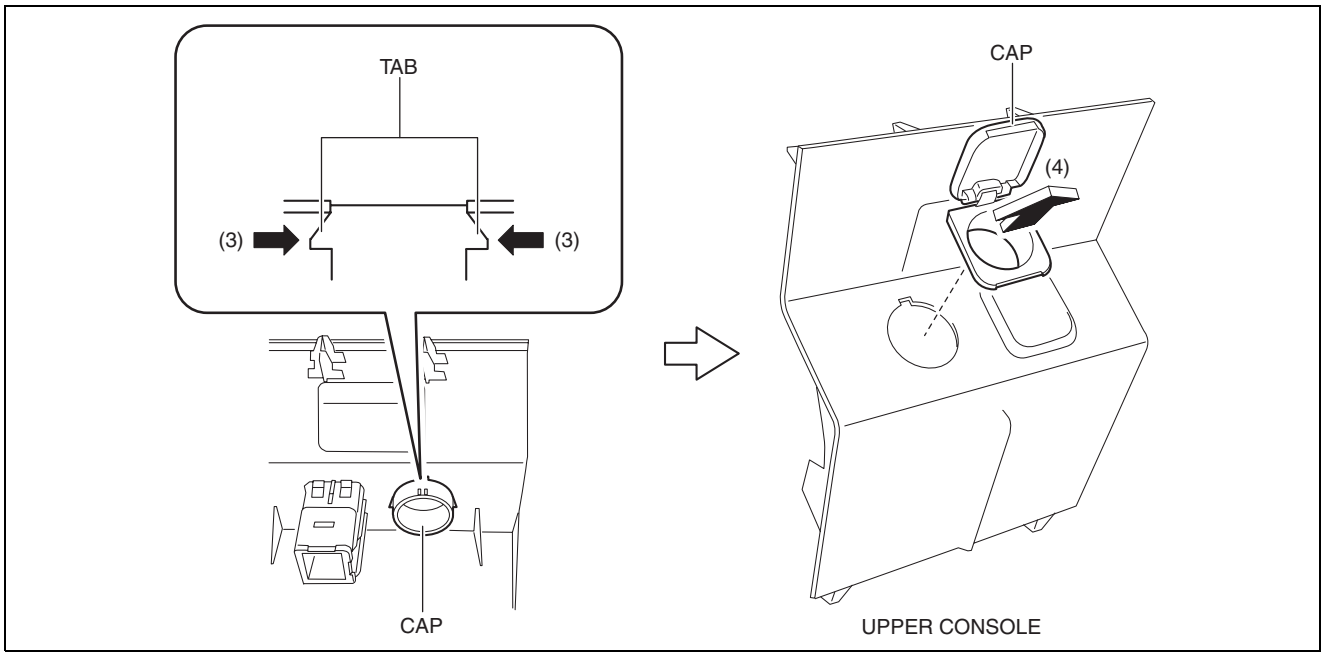

ac5wzw0000111

7. Remove the cap.
8. Install in the reverse order of removal.

CENTER ACCESSORY SOCKET INSPECTION

id092100900900

1. Remove the center accessory socket. (See 09-21-33 CENTER ACCESSORY SOCKET REMOVAL/INSTALLATION.)

2. Connect the tester probe to the position shown in the figure and verify that there is continuity.
   - If it cannot be verified, replace the center accessory socket. (See 09-21-33 CENTER ACCESSORY SOCKET REMOVAL/INSTALLATION.)

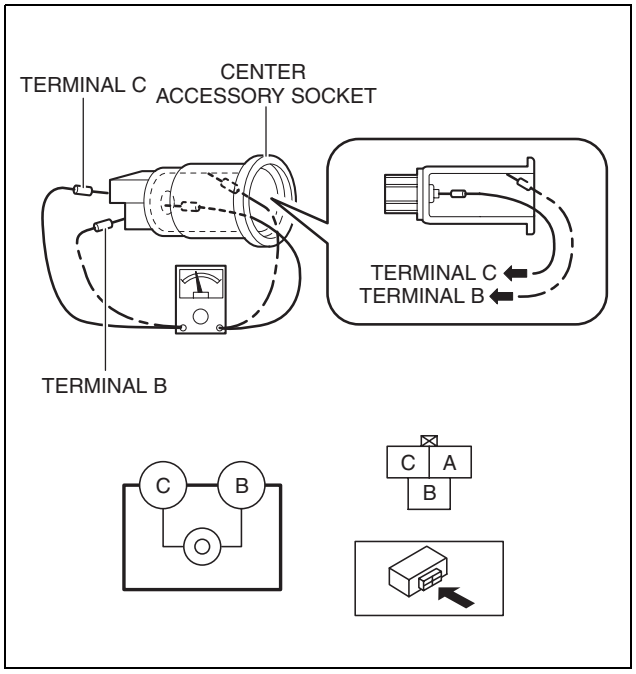

ac5wzw0000112

REAR ACCESSORY SOCKET REMOVAL/INSTALLATION

id092100900700

1. Disconnect the negative battery cable. (See 01-17A-13 NEGATIVE BATTERY CABLE DISCONNECTION/CONNECTION [SKYACTIV-G 2.0 (WITHOUT i-stop)].) (See 01-17A-11 NEGATIVE BATTERY CABLE DISCONNECTION/CONNECTION [SKYACTIV-G 2.0].) (See 01-17B-9 NEGATIVE BATTERY CABLE DISCONNECTION/CONNECTION [SKYACTIV-D 2.2].)
2. Insert a tape-wrapped flathead screwdriver into the service hole in the position shown in the figure.

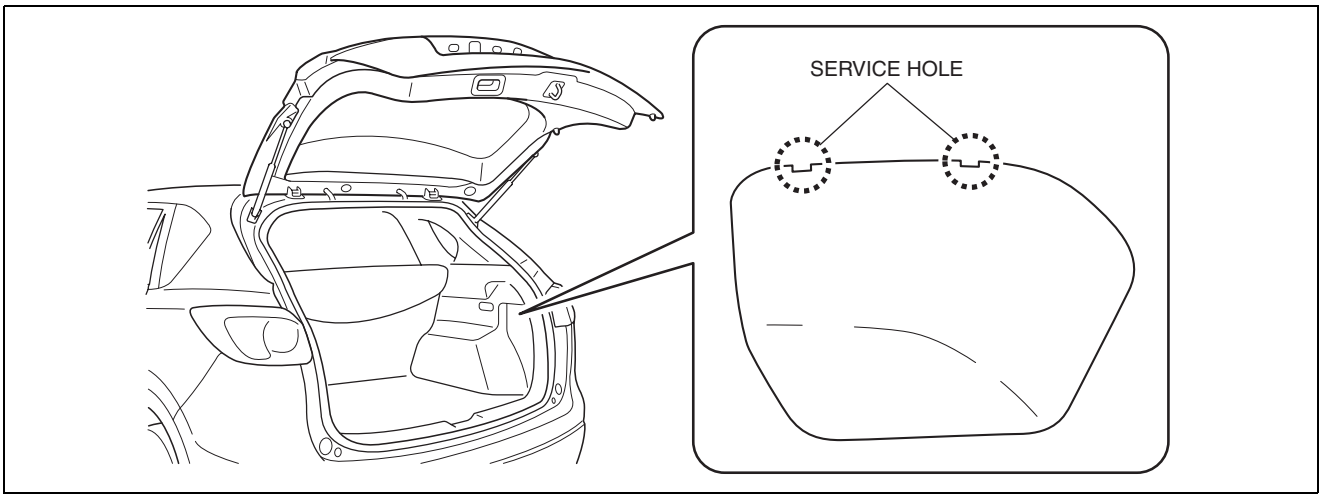

ac5wzw0000111

POWER SYSTEMS

3. Move the flathead screwdriver in the direction of the arrow (1) shown in the figure, pull out the service hole cover, and detach the service hole cover tab and trunk side trim.

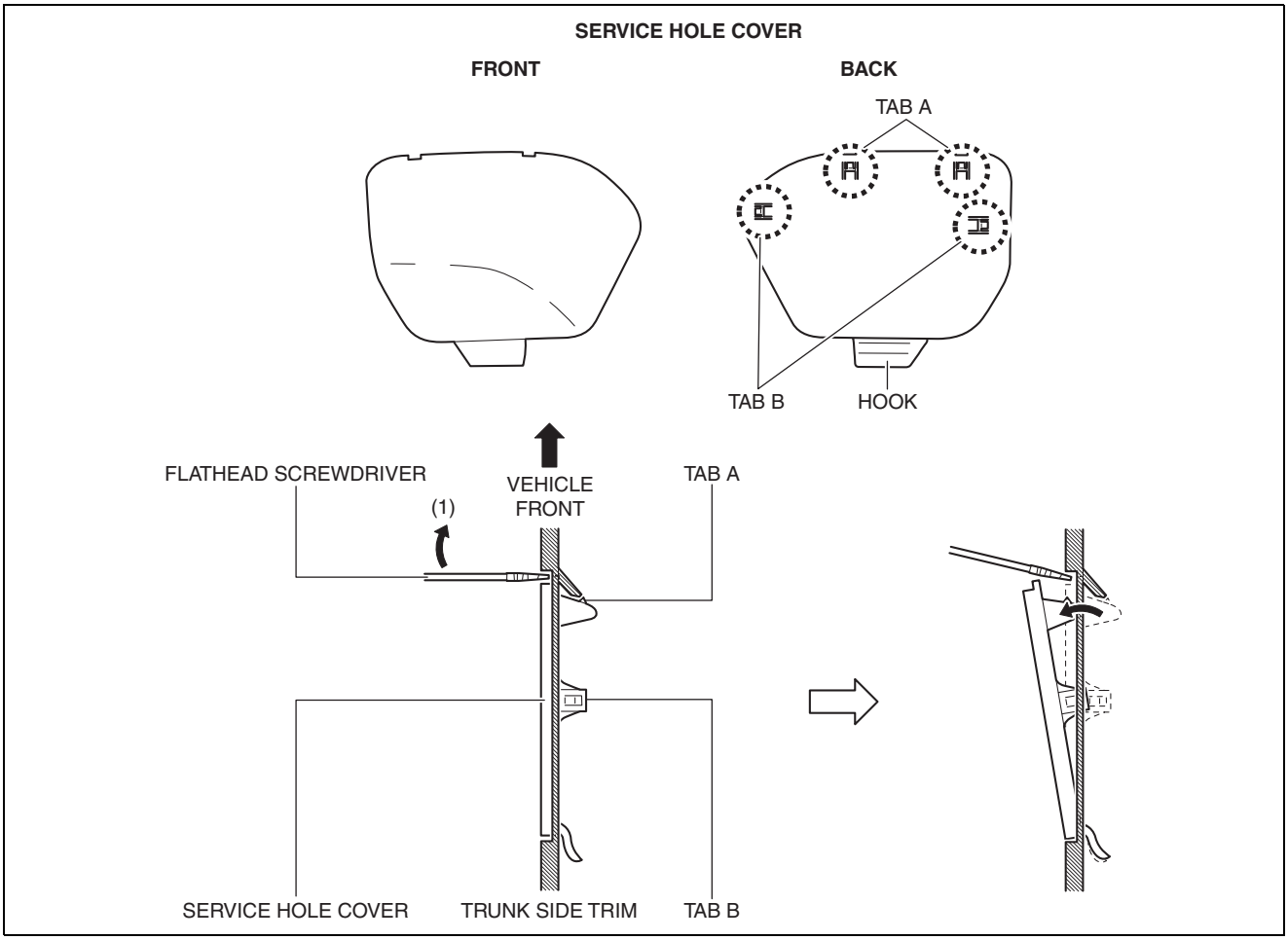

ac5wzw0000287

4. Pull out the service hole cover in the direction of the arrow (2) shown in the figure and pull out the service hole cover hook from the trunk side trim.
5. Remove the service hole cover.

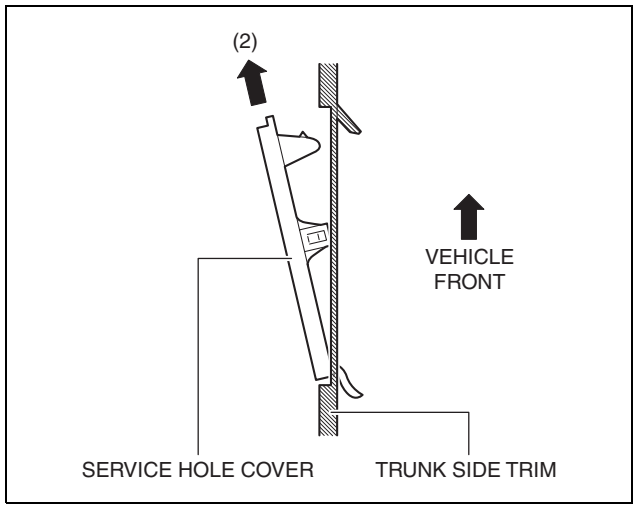

ac5wzw0000287

POWER SYSTEMS

6. Disconnect the connector.

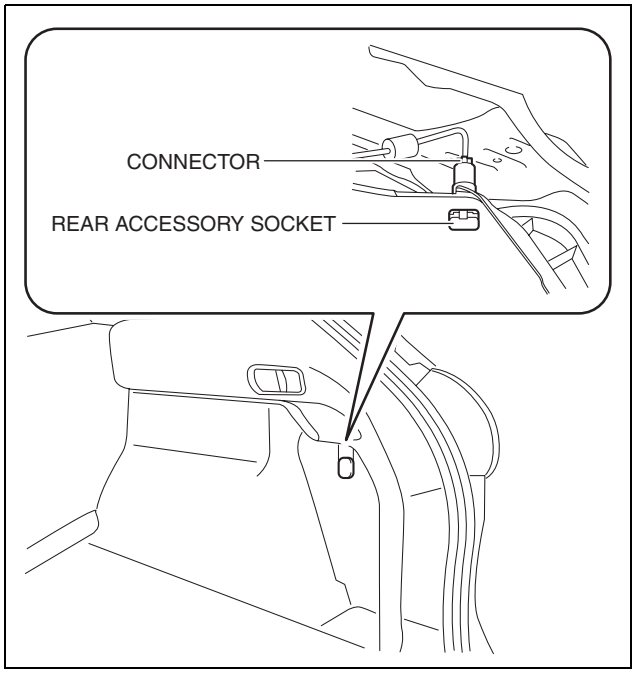

ac5wzw0000111

7. Insert a tape-wrapped flathead screwdriver into the service hole in the position shown in the figure.

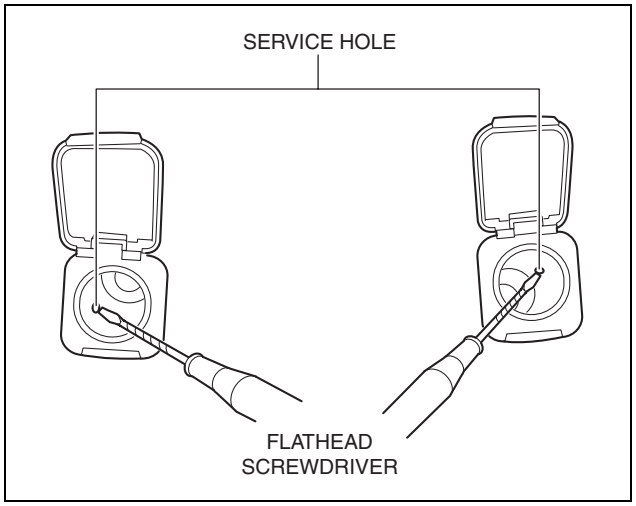

ac5wzw0000111

POWER SYSTEMS

8. While pressing the cap tab in the direction of arrow (3) shown in the figure, push out the rear accessory socket in the direction of arrow (4) to detach the cap tab from the socket.

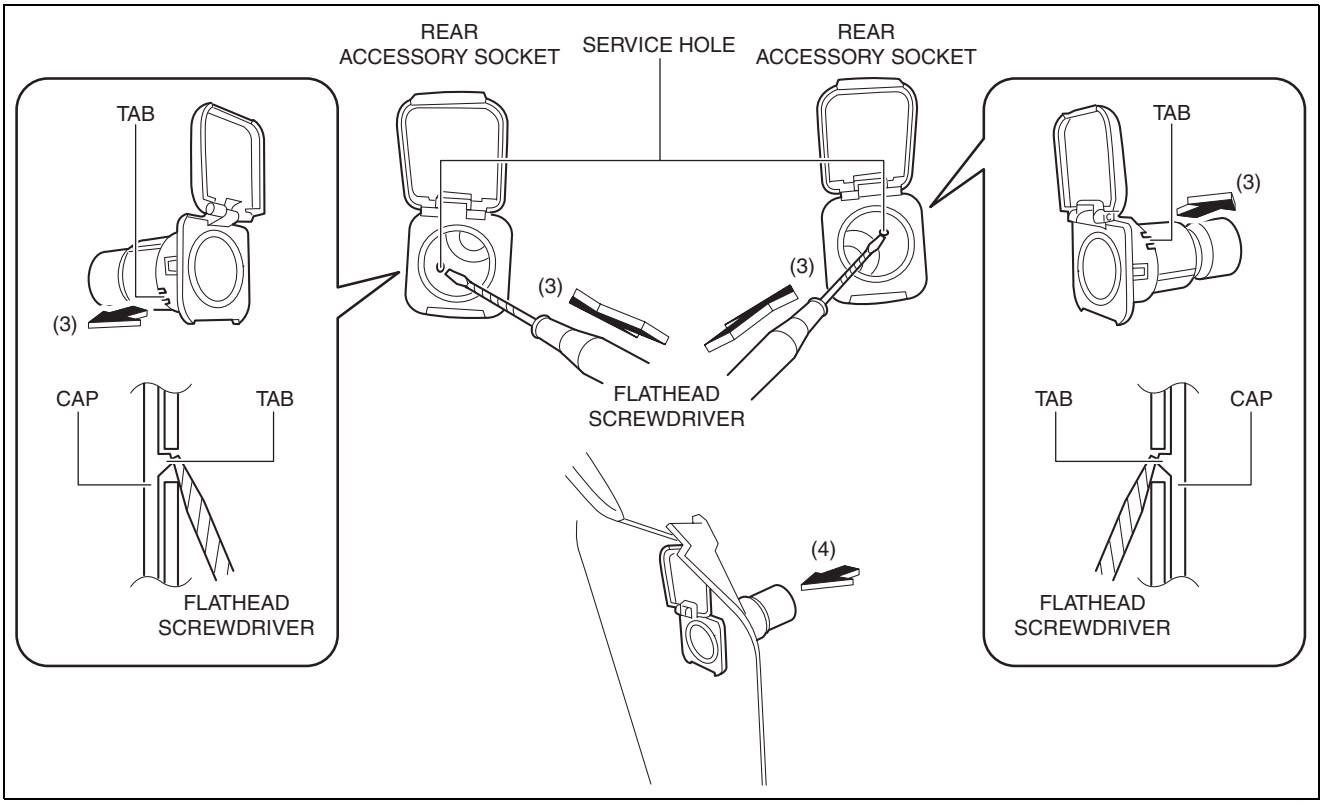

ac5wzw0000111

9. Pull the rear accessory socket in the direction of the arrow shown in the figure and remove it.

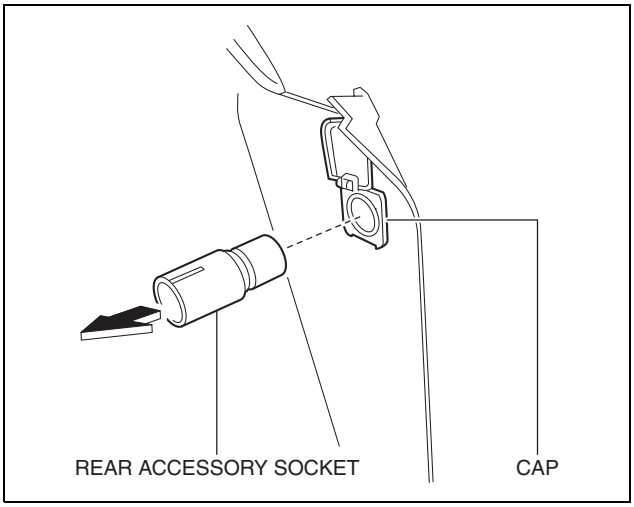

ac5wzw0000112

10. While pressing the cap tab in the direction of the arrow (5) shown in the figure, push out the cap in the direction of the arrow (6) shown in the figure to detach the cap tab from the trunk side trim.
11. Remove the cap.
12. Install in the reverse order of removal.

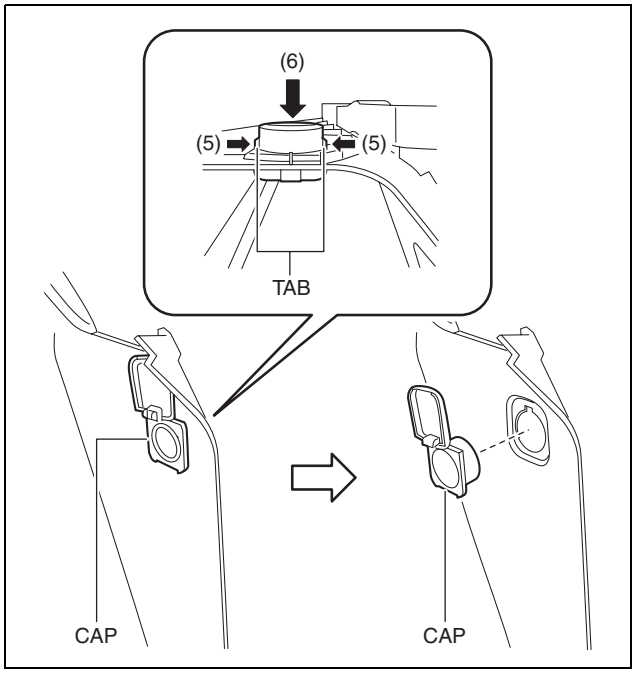

ac5wzw0000112

REAR ACCESSORY SOCKET INSPECTION

id092100901000

1. Remove the rear accessory socket. (See 09-21-36 REAR ACCESSORY SOCKET REMOVAL/INSTALLATION.)
2. Connect the tester probe to the position shown in the figure and verify that there is continuity.
   - If it cannot be verified, replace the rear accessory socket. (See 09-21-36 REAR ACCESSORY SOCKET REMOVAL/INSTALLATION.)

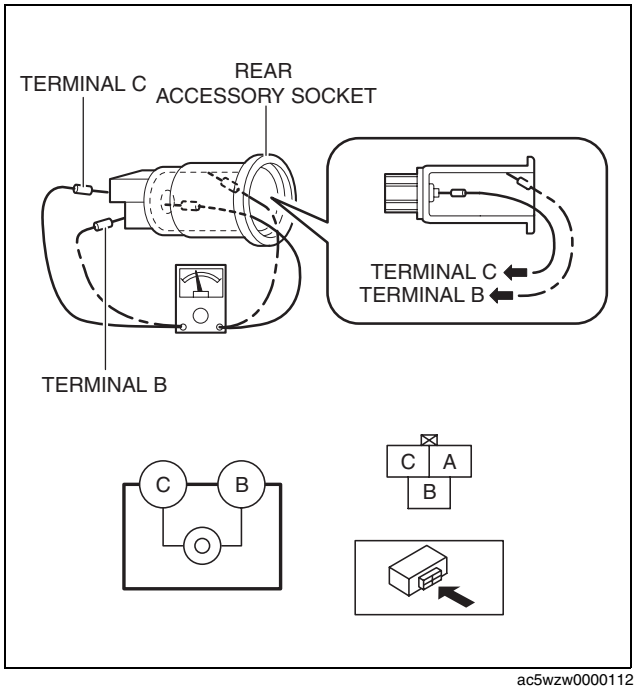

ac5wzw0000112

09-22 INSTRUMENTATION/DRIVER INFO.

INSTRUMENTATION/DRIVER INFO.
LOCATION INDEX **09-22–3**
Interior **09-22–3**
Exterior **09-22–5**
INSTRUMENT CLUSTER REMOVAL/INSTALLATION **09-22–6**
INSTRUMENT CLUSTER DISASSEMBLY/ASSEMBLY **09-22–10**
INSTRUMENT CLUSTER INSPECTION **09-22–11**
Speedometer inspection **09-22–11**
Tachometer inspection **09-22–13**
Fuel Gauge/LCD Inspection **09-22–14**
Warning/Indicator Light Illumination Inspection **09-22–15**
Alarm Inspection **09-22–19**
INSTRUMENT CLUSTER CONFIGURATION (USING READ/WRITE FUNCTION) . . . **09-22–19**
INSTRUMENT CLUSTER CONFIGURATION (USING AS-BUILT DATA) **09-22–19**
INSTRUMENT CLUSTER OPERATION RECORD **09-22–20**
INSTRUMENT CLUSTER PERSONALIZATION FEATURES SETTING PROCEDURE **09-22–20**
Using M-MDS **09-22–20**
Using Instrument Cluster (with TFT LCD display) **09-22–21**
FORWARD SENSING CAMERA (FSC) PERSONALIZATION FEATURES SETTING PROCEDURE **09-22–21**
High Beam Control (HBC) System **09-22–22**
Lane Departure Warning System (LDWS) **09-22–22**
INSTRUMENT CLUSTER DATA RESET PROCEDURE **09-22–22**
FUEL GAUGE SENDER UNIT REMOVAL/INSTALLATION [2WD] **09-22–23**
SKYACTIV-G 2.0 . . . . . **09-22–24**
SKYACTIV-D 2.2 . . . . . **09-22–24**
FUEL GAUGE SENDER UNIT REMOVAL/INSTALLATION [4WD] **09-22–27**
SKYACTIV-G 2.0 . . . . . **09-22–27**
SKYACTIV-D 2.2 . . . . . **09-22–29**
FUEL GAUGE SENDER UNIT INSPECTION [2WD] **09-22–34**
SKYACTIV-G 2.0 . . . . . **09-22–34**
SKYACTIV-D 2.2 . . . . . **09-22–35**
FUEL GAUGE SENDER UNIT INSPECTION [4WD] **09-22–36**
SKYACTIV-G 2.0 . . . . . **09-22–36**
SKYACTIV-D 2.2 . . . . . **09-22–38**
OIL PRESSURE SWITCH REMOVAL/INSTALLATION **09-22–40**
OIL PRESSURE SWITCH INSPECTION **09-22–40**
HORN REMOVAL/INSTALLATION **09-22–41**
HORN INSPECTION **09-22–41**
FRONT ULTRASONIC SENSOR REMOVAL/INSTALLATION **09-22–42**
Front Ultrasonic Sensor **09-22–42**
Front Corner Ultrasonic Sensor **09-22–44**
REAR ULTRASONIC SENSOR REMOVAL/INSTALLATION **09-22–46**
Rear Ultrasonic Sensor **09-22–46**
Rear Corner Ultrasonic Sensor **09-22–48**
FRONT ULTRASONIC SENSOR SHORT-CORD REMOVAL/INSTALLATION **09-22–50**
Front Ultrasonic Sensor Short Cord Installation Note **09-22–53**
FRONT ULTRASONIC SENSOR SHORT-CORD INSPECTION **09-22–53**
REAR ULTRASONIC SENSOR SHORT-CORD REMOVAL/INSTALLATION **09-22–54**
Rear Ultrasonic Sensor Short-cord Installation Note **09-22–56**
REAR ULTRASONIC SENSOR SHORT-CORD INSPECTION **09-22–56**
PARKING SENSOR CONTROL MODULE REMOVAL/INSTALLATION **09-22–57**
PARKING SENSOR CONTROL MODULE INSPECTION **09-22–59**
Generated Pulse (reference) **09-22–61**
PARKING SENSOR SWITCH/INDICATOR REMOVAL/INSTALLATION **09-22–62**
PARKING SENSOR SWITCH/INDICATOR INSPECTION **09-22–62**
FRONT PARKING SENSOR BUZZER REMOVAL/INSTALLATION **09-22–62**
FRONT PARKING SENSOR BUZZER INSPECTION **09-22–63**
REAR PARKING SENSOR BUZZER REMOVAL/INSTALLATION **09-22–64**
REAR PARKING SENSOR BUZZER INSPECTION **09-22–64**
BEEP SOUND ADJUSTMENT **09-22–65**
Front Parking Sensor Buzzer **09-22–66**
Rear Parking Sensor Buzzer **09-22–67**
BLIND SPOT MONITORING (BSM) CONTROL MODULE REMOVAL/INSTALLATION **09-22–67**
BLIND SPOT MONITORING (BSM) CONTROL MODULE INSPECTION **09-22–68**
Terminal Voltage Table (Reference) . . . **09-22–68**
BLIND SPOT MONITORING (BSM) BRACKET REMOVAL/INSTALLATION **09-22–69**
BLIND SPOT MONITORING (BSM) RADAR TEST **09-22–71**
Radar test procedure **09-22–71**
BLIND SPOT MONITORING (BSM) OFF SWITCH REMOVAL/INSTALLATION . . . **09-22–76**
BLIND SPOT MONITORING (BSM) OFF SWITCH INSPECTION **09-22–76**
BLIND SPOT MONITORING (BSM) INDICATOR LIGHT REMOVAL/INSTALLATION **09-22–77**
BLIND SPOT MONITORING (BSM) INDICATOR LIGHT INSPECTION **09-22–77**

INSTRUMENTATION/DRIVER INFO.

REAR VEHICLE MONITORING CONTROL MODULE REMOVAL/INSTALLATION 09-22–77
REAR VEHICLE MONITORING CONTROL MODULE INSPECTION . . . 09-22–79
Terminal Voltage Table (Reference) . . . **09-22–79**
Inspection Using an Oscilloscope (Reference) **09-22–81**
REAR VEHICLE MONITORING BRACKET REMOVAL/INSTALLATION 09-22–81
REAR VEHICLE MONITORING CONTROL MODULE CONFIGURATION (USING READ/WRITE FUNCTION) . . . 09-22–82
REAR VEHICLE MONITORING CONTROL MODULE CONFIGURATION (USING AS-BUILT DATA) 09-22–83
REAR VEHICLE MONITORING RADAR AIMING 09-22–83
Radar aiming procedure. **09-22–83**
RVM SWITCH REMOVAL/INSTALLATION 09-22–91
RVM SWITCH INSPECTION 09-22–91
RVM WARNING INDICATOR LIGHT REMOVAL/INSTALLATION 09-22–92
RVM WARNING INDICATOR LIGHT INSPECTION 09-22–92
CLOCK REMOVAL/INSTALLATION 09-22–92
CLOCK INSPECTION 09-22–95
Terminal Voltage Table (Reference) . . . **09-22–95**
CLOCK INPUT/OUTPUT CHECK MODE 09-22–96
Activation procedure **09-22–96**
Inspection **09-22–96**
FORWARD SENSING CAMERA (FSC) REMOVAL/INSTALLATION 09-22–98
FORWARD SENSING CAMERA (FSC) BRACKET REMOVAL/INSTALLATION .09-22–101
FSC bracket A **09-22–101**
FSC bracket B **09-22–103**
FORWARD SENSING CAMERA (FSC) COVER REMOVAL/INSTALLATION. . . .09-22–105
FORWARD SENSING CAMERA (FSC) SHORT-CORD REMOVAL/INSTALLATION 09-22–105
FORWARD SENSING CAMERA (FSC) SHORT-CORD INSPECTION 09-22–106
FORWARD SENSING CAMERA (FSC) AIMING 09-22–106
Aiming procedure **09-22–107**
Wheel house height measurement procedure **09-22–117**
FORWARD SENSING CAMERA (FSC) CONFIGURATION (USING READ/WRITE FUNCTION) 09-22–117
FORWARD SENSING CAMERA (FSC) CONFIGURATION (USING AS-BUILT DATA) 09-22–118
LDWS SWITCH REMOVAL/INSTALLATION 09-22–118
LDWS SWITCH INSPECTION 09-22–118

INSTRUMENTATION/DRIVER INFO.

INSTRUMENTATION/DRIVER INFO. LOCATION INDEX

id092200010200

Interior

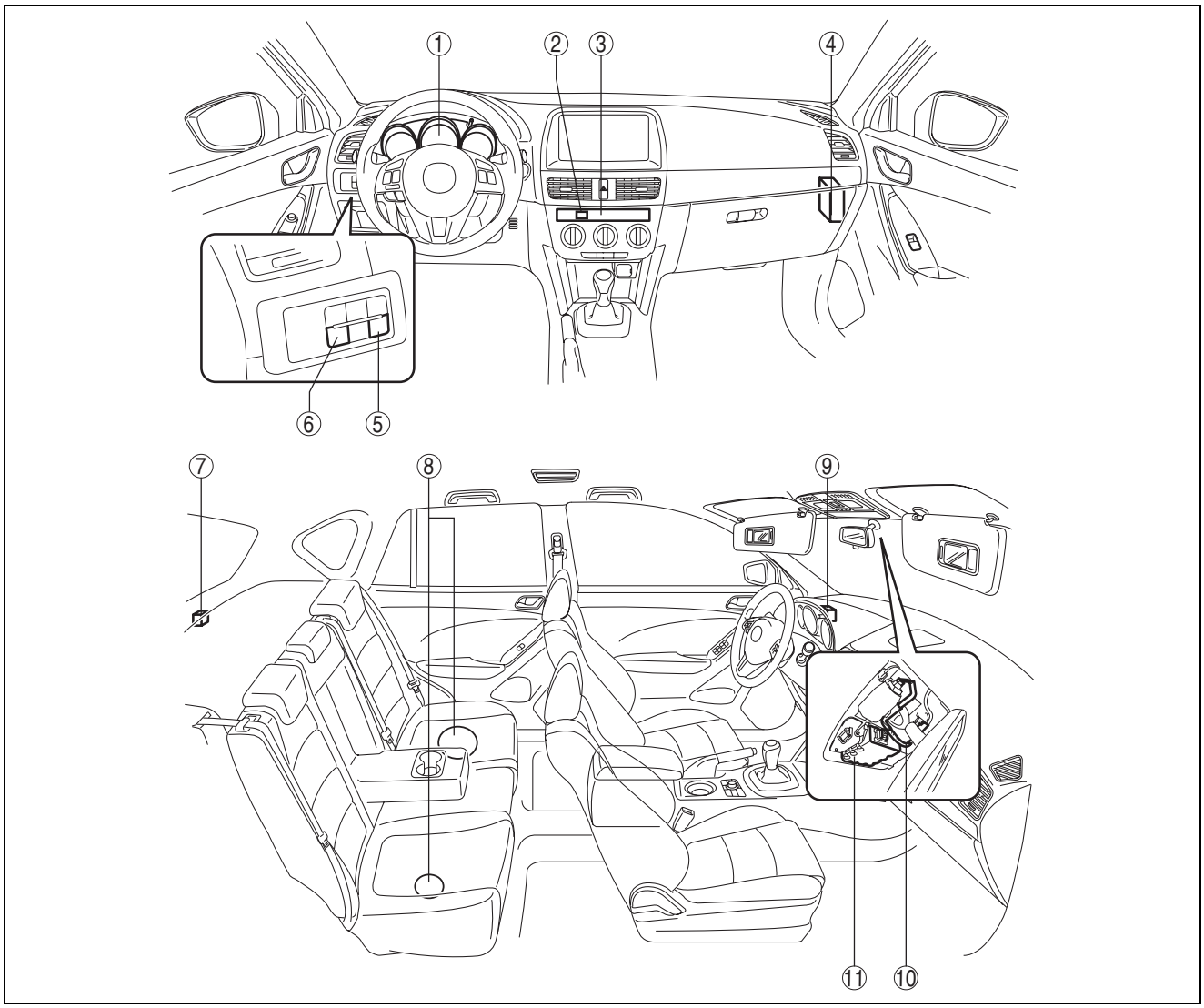

ac5wzw0000136

1	Instrument cluster (See 09-22-6 INSTRUMENT CLUSTER REMOVAL/INSTALLATION.) (See 09-22-10 INSTRUMENT CLUSTER DISASSEMBLY/ASSEMBLY.) (See 09-22-11 INSTRUMENT CLUSTER INSPECTION.) (See 09-22-19 INSTRUMENT CLUSTER CONFIGURATION (USING READ/WRITE FUNCTION).) (See 09-22-19 INSTRUMENT CLUSTER CONFIGURATION (USING AS-BUILT DATA).) (See 09-22-20 INSTRUMENT CLUSTER PERSONALIZATION FEATURES SETTING PROCEDURE.) (See 09-22-22 INSTRUMENT CLUSTER DATA RESET PROCEDURE.)
2	Parking sensor switch/indicator (with parking sensor system) (See 09-22-62 PARKING SENSOR SWITCH/INDICATOR REMOVAL/INSTALLATION.) (See 09-22-62 PARKING SENSOR SWITCH/INDICATOR INSPECTION.)
3	Clock (See 09-22-92 CLOCK REMOVAL/INSTALLATION.) (See 09-22-95 CLOCK INSPECTION.) (See 09-22-96 CLOCK INPUT/OUTPUT CHECK MODE.)
4	Parking sensor control module (with parking sensor system) (See 09-22-57 PARKING SENSOR CONTROL MODULE REMOVAL/INSTALLATION.) (See 09-22-59 PARKING SENSOR CONTROL MODULE INSPECTION.)
5	LDWS switch (with lane departure warning system (LDWS)) (See 09-22-118 LDWS SWITCH REMOVAL/INSTALLATION.) (See 09-22-118 LDWS SWITCH INSPECTION.)

INSTRUMENTATION/DRIVER INFO.

6	RVM switch (with rear vehicle monitoring (RVM) system) (See 09-22-91 RVM SWITCH REMOVAL/INSTALLATION.) (See 09-22-91 RVM SWITCH INSPECTION.)
	BSM OFF switch (with blind spot monitoring (BSM) system) (See 09-22-76 BLIND SPOT MONITORING (BSM) OFF SWITCH REMOVAL/INSTALLATION.) (See 09-22-76 BLIND SPOT MONITORING (BSM) OFF SWITCH INSPECTION.)
7	Rear parking sensor buzzer (with parking sensor system) (See 09-22-64 REAR PARKING SENSOR BUZZER REMOVAL/INSTALLATION.) (See 09-22-64 REAR PARKING SENSOR BUZZER INSPECTION.)
8	Fuel gauge sender unit (See 09-22-23 FUEL GAUGE SENDER UNIT REMOVAL/INSTALLATION [2WD].) (See 09-22-27 FUEL GAUGE SENDER UNIT REMOVAL/INSTALLATION [4WD].) (See 09-22-34 FUEL GAUGE SENDER UNIT INSPECTION [2WD].) (See 09-22-36 FUEL GAUGE SENDER UNIT INSPECTION [4WD].)
9	Front parking sensor buzzer (with parking sensor system) (See 09-22-62 FRONT PARKING SENSOR BUZZER REMOVAL/INSTALLATION.) (See 09-22-64 REAR PARKING SENSOR BUZZER INSPECTION.)
10	Forward sensing camera (FSC) short-cord (with lane departure warning system (LDWS)) (See 09-22-105 FORWARD SENSING CAMERA (FSC) SHORT-CORD REMOVAL/INSTALLATION.) (See 09-22-106 FORWARD SENSING CAMERA (FSC) SHORT-CORD INSPECTION.)
11	Forward sensing camera (FSC) (with lane departure warning system (LDWS)) (See 09-22-98 FORWARD SENSING CAMERA (FSC) REMOVAL/INSTALLATION.) (See 09-22-101 FORWARD SENSING CAMERA (FSC) BRACKET REMOVAL/INSTALLATION.) (See 09-22-105 FORWARD SENSING CAMERA (FSC) COVER REMOVAL/INSTALLATION.) (See 09-22-106 FORWARD SENSING CAMERA (FSC) AIMING.) (See 09-22-117 FORWARD SENSING CAMERA (FSC) CONFIGURATION (USING READ/WRITE FUNCTION).) (See 09-22-118 FORWARD SENSING CAMERA (FSC) CONFIGURATION (USING AS-BUILT DATA).) (See 09-22-21 FORWARD SENSING CAMERA (FSC) PERSONALIZATION FEATURES SETTING PROCEDURE.)

INSTRUMENTATION/DRIVER INFO.

Exterior

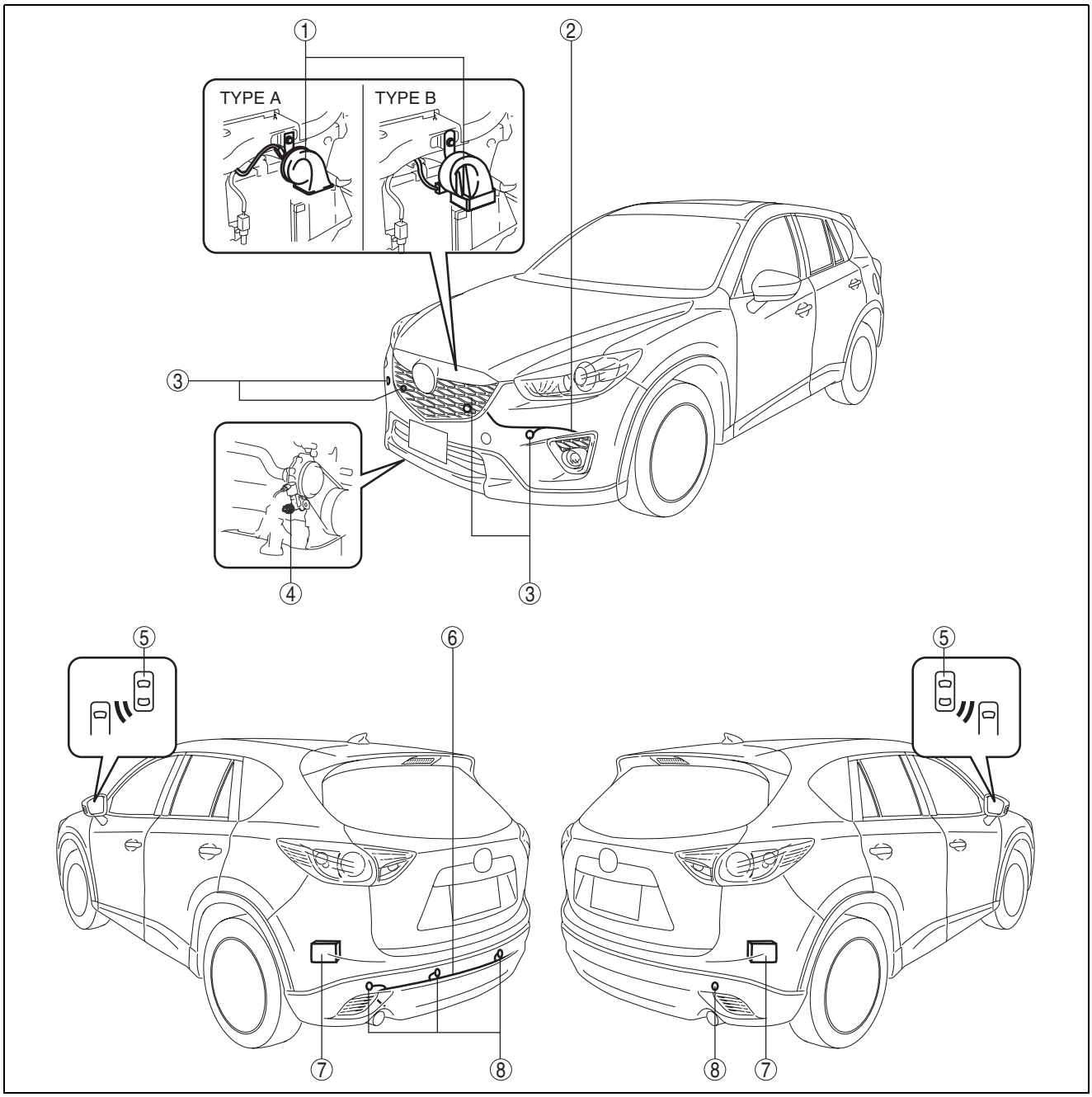

ac5wzw0000136

1	Horn (See 09-22-41 HORN REMOVAL/INSTALLATION.) (See 09-22-41 HORN INSPECTION.)
2	Front ultrasonic sensor short-cord (with parking sensor system) (See 09-22-50 FRONT ULTRASONIC SENSOR SHORT-CORD REMOVAL/INSTALLATION.) (See 09-22-53 FRONT ULTRASONIC SENSOR SHORT-CORD INSPECTION.)
3	Front ultrasonic sensor (with parking sensor system) (See 09-22-42 FRONT ULTRASONIC SENSOR REMOVAL/INSTALLATION.)
4	Oil pressure switch (See 09-22-40 OIL PRESSURE SWITCH REMOVAL/INSTALLATION.) (See 09-22-40 OIL PRESSURE SWITCH INSPECTION.)

5	Rear vehicle monitoring (RVM) warning indicator light (with rear vehicle monitoring (RVM) system) (See 09-22-92 RVM WARNING INDICATOR LIGHT REMOVAL/INSTALLATION.) (See 09-22-92 RVM WARNING INDICATOR LIGHT INSPECTION.)
	Blind spot monitoring (BSM) warning indicator light (with blind spot monitoring (BSM) system) (See 09-22-77 BLIND SPOT MONITORING (BSM) INDICATOR LIGHT REMOVAL/INSTALLATION.) (See 09-22-77 BLIND SPOT MONITORING (BSM) INDICATOR LIGHT INSPECTION.)

6	Rear ultrasonic sensor short-cord (with parking sensor system) (See 09-22-54 REAR ULTRASONIC SENSOR SHORT-CORD REMOVAL/INSTALLATION.) (See 09-22-56 REAR ULTRASONIC SENSOR SHORT-CORD INSPECTION.)
7	Rear vehicle monitoring (RVM) control module (with rear vehicle monitoring (RVM) system) (See 09-22-77 REAR VEHICLE MONITORING CONTROL MODULE REMOVAL/INSTALLATION.) (See 09-22-79 REAR VEHICLE MONITORING CONTROL MODULE INSPECTION.) (See 09-22-81 REAR VEHICLE MONITORING BRACKET REMOVAL/INSTALLATION.) (See 09-22-82 REAR VEHICLE MONITORING CONTROL MODULE CONFIGURATION (USING READ/WRITE FUNCTION).) (See 09-22-83 REAR VEHICLE MONITORING CONTROL MODULE CONFIGURATION (USING AS-BUILT DATA).) (See 09-22-83 REAR VEHICLE MONITORING RADAR AIMING.)
	Blind spot monitoring (BSM) control module (with blind spot monitoring (BSM) system) (See 09-22-67 BLIND SPOT MONITORING (BSM) CONTROL MODULE REMOVAL/INSTALLATION.) (See 09-22-68 BLIND SPOT MONITORING (BSM) CONTROL MODULE INSPECTION.) (See 09-22-69 BLIND SPOT MONITORING (BSM) BRACKET REMOVAL/INSTALLATION.) (See 09-22-71 BLIND SPOT MONITORING (BSM) RADAR TEST.)
8	Rear ultrasonic sensor (with parking sensor system) (See 09-22-46 REAR ULTRASONIC SENSOR REMOVAL/INSTALLATION.)

INSTRUMENT CLUSTER REMOVAL/INSTALLATION

id092200010300

Caution

- **If configuration is not performed when the instrument cluster is replaced with a new one, the vehicle specification information is not stored in the instrument cluster and the system will not operate normally.**
- **When performing configuration, it is necessary to read the vehicle specification information from the instrument cluster before replacing it. Connect the M-MDS to the vehicle and perform vehicle identification before removing the instrument cluster. The vehicle specification information is temporarily stored in the M-MDS.**

Note

- The instrument cluster prior to replacement stores the vehicle specification information.
- A new instrument cluster does not store any vehicle specification information.
- If the vehicle specification information from the instrument cluster prior to replacement cannot be read, perform the configuration using As-Built data.

1. When replacing the instrument cluster, perform the configuration. (See 09-22-19 INSTRUMENT CLUSTER CONFIGURATION (USING READ/WRITE FUNCTION).)
2. Disconnect the negative battery cable. (See 01-17A-11 NEGATIVE BATTERY CABLE DISCONNECTION/CONNECTION [SKYACTIV-G 2.0].)(See 01-17A-13 NEGATIVE BATTERY CABLE DISCONNECTION/CONNECTION [SKYACTIV-G 2.0 (WITHOUT i-stop)].)(See 01-17B-9 NEGATIVE BATTERY CABLE DISCONNECTION/CONNECTION [SKYACTIV-D 2.2].)
3. Remove the upper column cover. (See 09-17-25 COLUMN COVER REMOVAL/INSTALLATION.)
4. Remove the meter hood. (See 09-17-20 METER HOOD REMOVAL/INSTALLATION.)

5. Remove the screws.

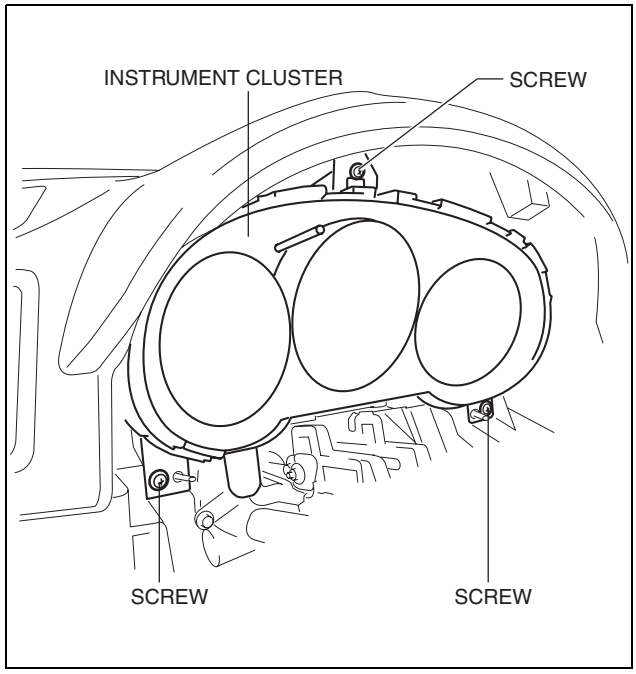

ac5wzw0000274

6. Cover the light switch, wiper switch, and start stop unit using a rag to prevent scratches.

Caution

- **When removing the instrument cluster, the instrument cluster may contact the light switch, wiper switch, or the start stop unit and the instrument cluster may be scratched. When removing the instrument cluster, cover the light switch, wiper switch, and start stop unit using a rag.**

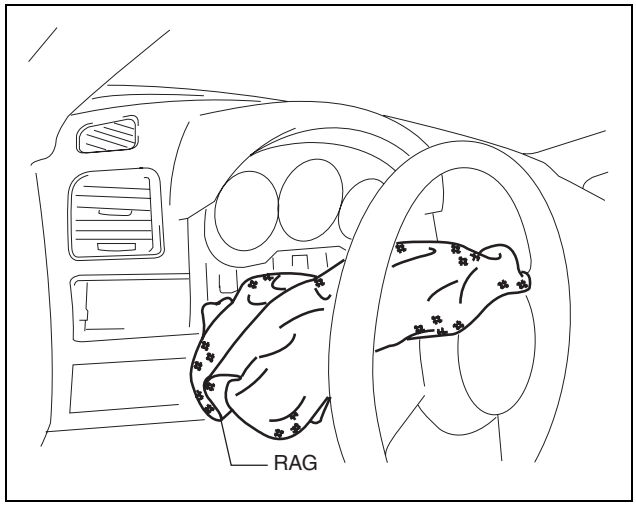

ac5wzw0000274

INSTRUMENTATION/DRIVER INFO.

7. Pull the instrument cluster outward to detach it from the instrument panel pins.
8. Rotate the instrument cluster in the direction of the arrow shown in the figure.

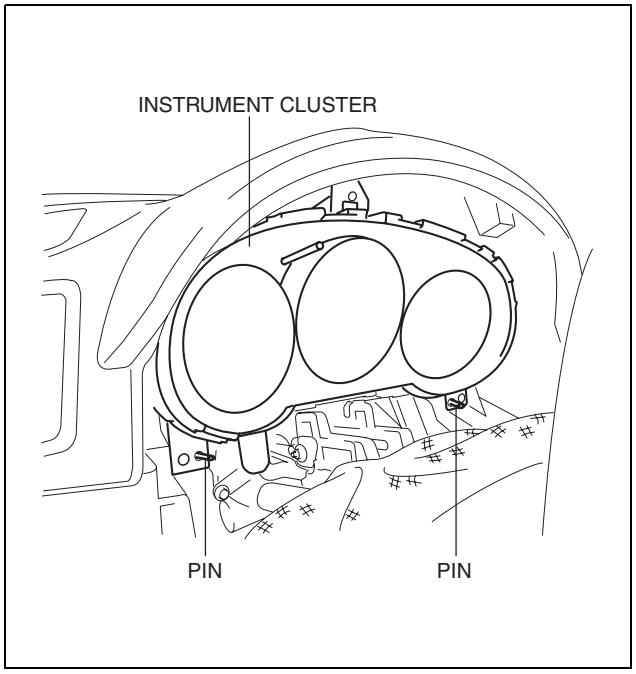

ac5wzw0000274

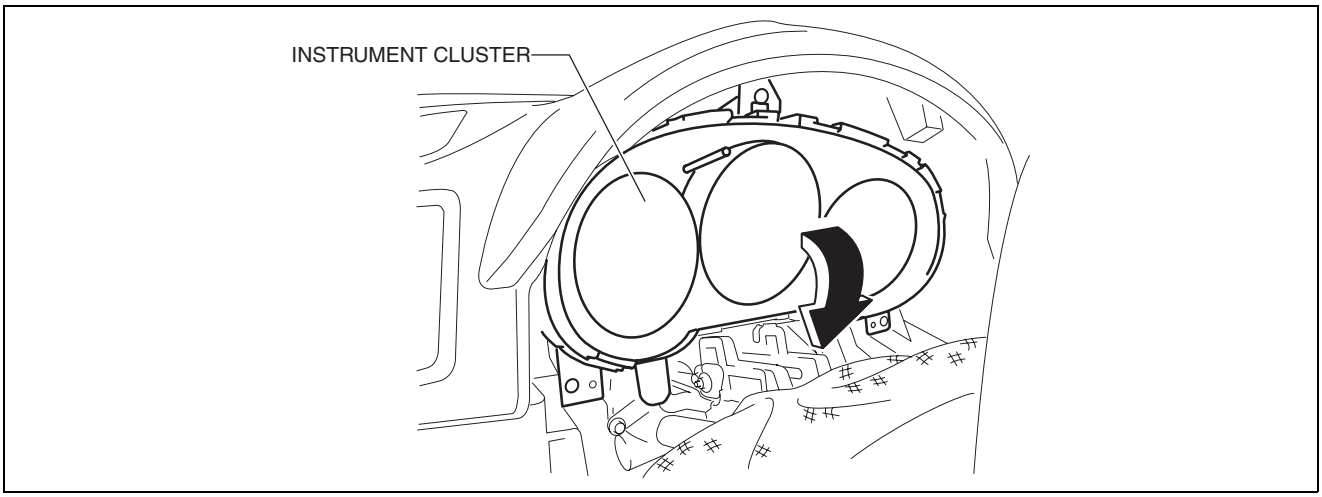

ac5wzw0000274

INSTRUMENTATION/DRIVER INFO.

9. Disconnect the connector.

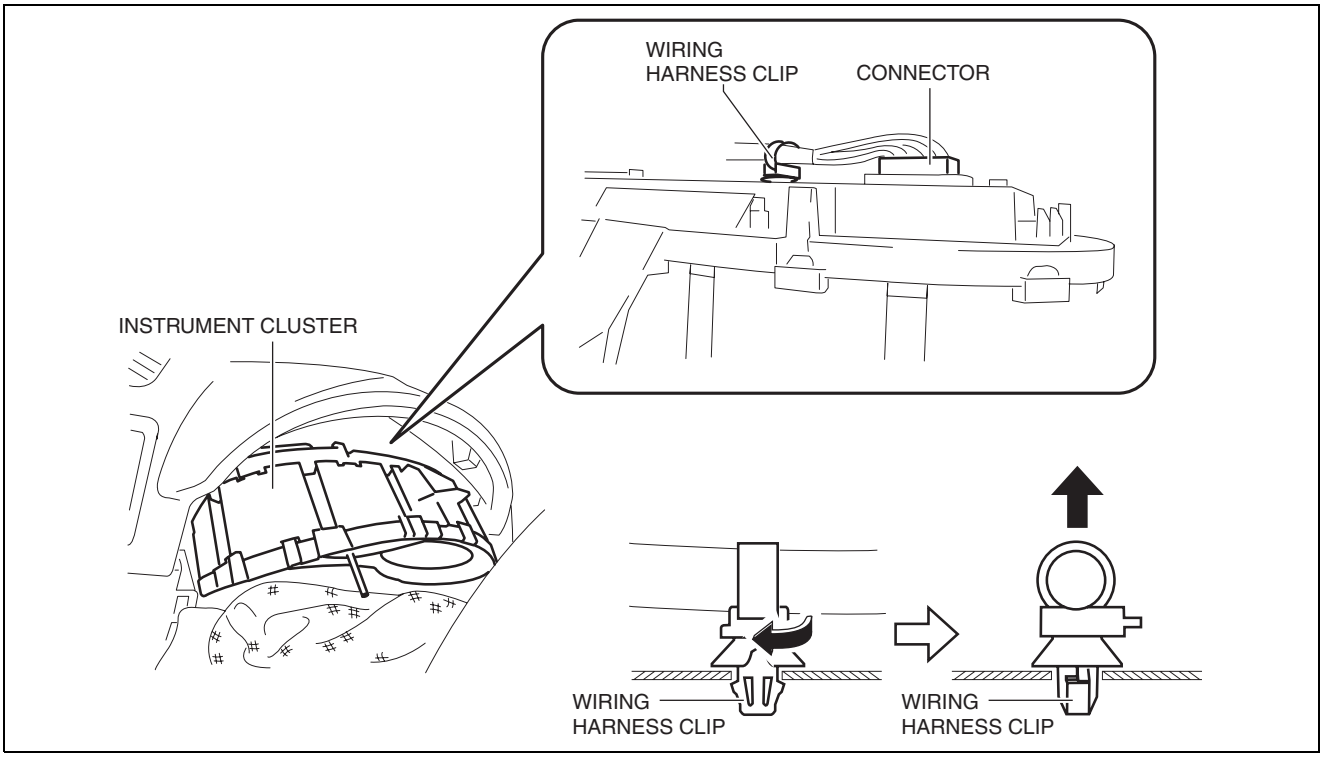

ac5wzw0000263

10. Rotate the wiring harness clip approx. 90 degrees, pull it in the direction shown by the arrow in the figure, and disengage the wiring harness clip tab from the instrument cluster.
11. Remove the instrument cluster by sliding it between the instrument panel and the steering.
12. Install in the reverse order of removal.

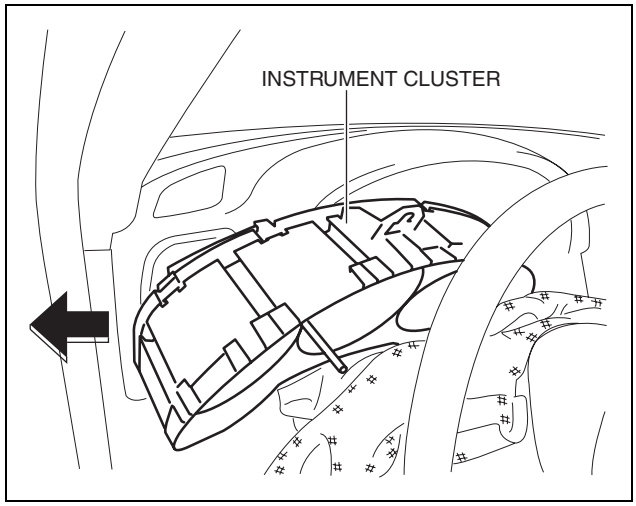

ac5wzw0000274

INSTRUMENTATION/DRIVER INFO.

Caution

- **If the instrument cluster is left for a long time with its screen facing down, grease applied to the needles may spill and the needles may not operate smoothly. When storing the instrument cluster, store it with its screen facing upward.**

Note

- If configuration cannot be performed by reading/writing of the vehicle specification information, perform the configuration using As-Built information after replacing the instrument cluster. (See 09-22-19 INSTRUMENT CLUSTER CONFIGURATION (USING AS-BUILT DATA).)

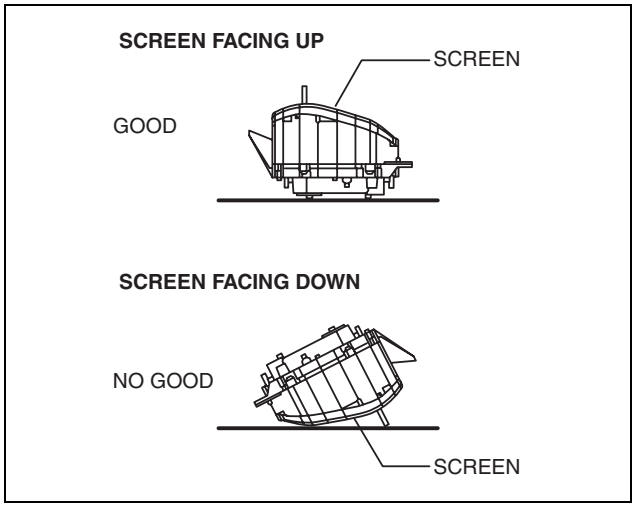

ac5wzw0000294

INSTRUMENT CLUSTER DISASSEMBLY/ASSEMBLY

id092200010500

Caution

- **If the instrument cluster is hit forcefully during disassembly such as by being dropped, it could get damaged and the system may not operate normally. When disassembling the instrument cluster, perform the procedure on a workbench on clean clothes being careful not to drop it.**

INSTRUMENTATION/DRIVER INFO.

1. Move a tape-wrapped flathead screwdriver in the direction of the arrow shown in the figure, lift up the cover while pressing the cover tab, and disengage the cover tab from the instrument cluster.

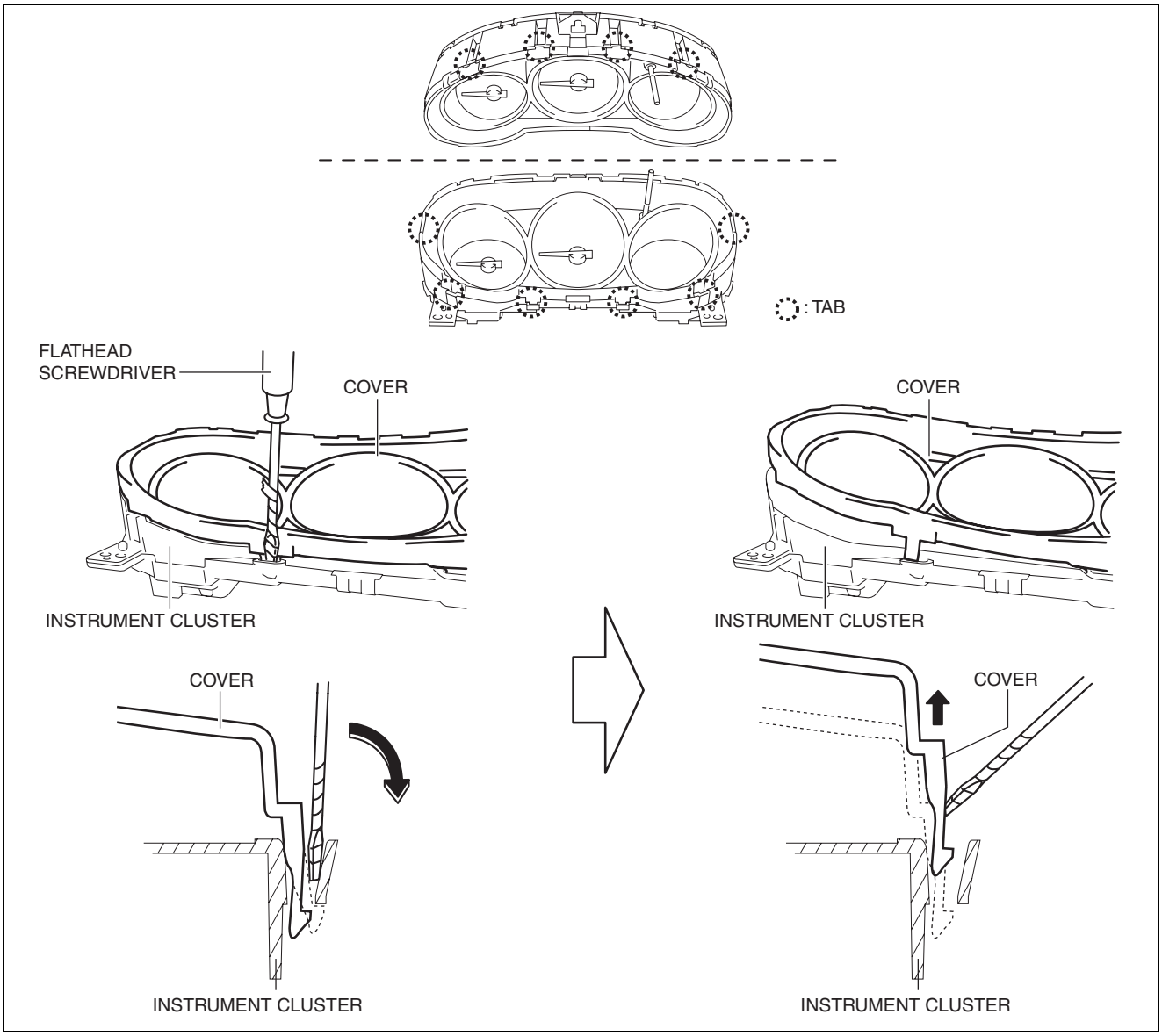

ac5wzw0000010

2. Disengage all the cover tabs from the instrument cluster and remove the cover.
3. Assemble in the reverse order of disassembly.

INSTRUMENT CLUSTER INSPECTION

id092200010600

Speedometer inspection
Using a speedometer tester

1. Adjust the tire pressure to the specification.
2. Using a speedometer tester, verify that the tester reading is as indicated in the following table.

INSTRUMENTATION/DRIVER INFO.

European (L.H.D. U.K.), General (L.H.D. R.H.D.) specs., Australian specs.

Speedometer tester indication (km/h)	Allowable range (km/h)
20	20—25
40	40—45
60	61—66
80	81—86
100	102—107
120	122—129
140	142—150
160	163—170
180	183—181
200	204—211
220	224—232
240	244—253

U.K. specs.

Speedometer tester indication (mph)	Allowable range (mph)
10	10—13
20	20—23
30	30—33
40	40—43
50	51—54
60	61—64
70	71—75
80	81—86
90	91—96
100	102—106
110	112—116
120	122—127
130	132—137
140	142—148
150	153—158

General (L.H.D. R.H.D.) specs.,

Speedometer tester indication (km/h)	Allowable range (km/h)
20	18—22
40	38—42
60	58—62
80	78—82
100	98—102
120	117—123
140	137—143
160	157—163
180	177—183
200	197—203
220	216—224
240	236—244

3. Verify that the speedometer reading is within the range indicated in the table.
   - If the speedometer does not operate or the indication is not within the allowable range, inspect the DTC inspection for the following control module and the related wiring harnesses.
     — PCM
     — TCM (ATX)
     — DSC HU/CM
   - If the PCM, TCM (ATX), DSC HU/CM, and related wiring harnesses are normal, replace the instrument cluster.

INSTRUMENTATION/DRIVER INFO.

Using the M-MDS

1. Connect the M-MDS to the DLC-2.
2. After vehicle identification, select the following from the M-MDS initialization screen.
   (1) “Data logger”
   (2) “Module”
   (3) “IC”
3. Using “SPDMTR”, verify that the displayed information is as indicated in the table.

European (L.H.D. U.K.), General (L.H.D. R.H.D.) specs., Australian specs.

M-MDS display	Instrument cluster display
60 km/h	Speedometer needle moves to approx. 61—66 km/h {38—41 mph}.
120 km/h	Speedometer needle moves to approx. 122—129 km/h {75.9—80.1 mph}.
Off	Speedometer needle moves to the bottommost position.

General (L.H.D. R.H.D.) specs.,

M-MDS display	Instrument cluster display
60 km/h	Speedometer needle moves to approx. 58—62 km/h {36—39 mph}.
120 km/h	Speedometer needle moves to approx. 117—123 km/h {72.8—76.4 mph}.
Off	Speedometer needle moves to the bottommost position.

- If the speedometer does not operate or the indication is not within the allowable range, inspect the DTC inspection for the following control module and the related wiring harnesses.
  — PCM
  — TCM (ATX)
  — DSC HU/CM
- If the PCM, TCM (ATX), DSC HU/CM, and related wiring harnesses are normal, replace the instrument cluster.

Tachometer inspection

Caution

- **If the engine speed exceeds the allowable range, the engine could be damaged. Therefore, when inspecting the tachometer, do not allow the engine speed to exceed the allowable range indicated on the tachometer.**

1. Connect the M-MDS to the DLC-2.
2. After vehicle identification, select the following from the M-MDS initialization screen.
   (1) “Data logger”
   (2) “Module”
   (3) “IC”
3. Using “TACHOMTR”, verify that the displayed information is as indicated in the table.

M-MDS display	Instrument cluster display
3000 RPM	Tachometer needle moves to approx. 3,050 rpm.
6000 RPM	Tachometer needle moves to approx. 6,100 rpm.
Off	Tachometer needle moves to bottommost position.

- If the tachometer does not operate or the indication is not within the allowable range, inspect the DTC inspection for the following control module and the related wiring harnesses.
  — PCM
- If the PCM and related wiring harnesses are normal, replace the instrument cluster.

INSTRUMENTATION/DRIVER INFO.

Fuel Gauge/LCD Inspection
Without TFT LCD display

1. Connect the M-MDS to the DLC-2.
2. After vehicle identification, select the following from the M-MDS initialization screen.
   (1) “Data logger”
   (2) “Module”
   (3) “IC”
3. Using “LCD_SEG”, verify that the LCD is illuminated.
   - If there are any non-illuminated area, replace the instrument cluster.

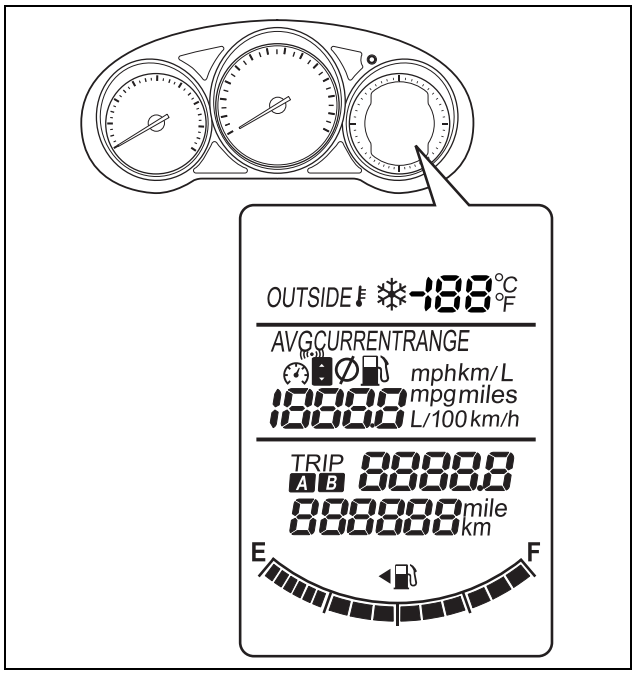

ac5wzw0000378

With TFT LCD display

1. Connect the M-MDS to the DLC-2.
2. After vehicle identification, select the following from the M-MDS initialization screen.
   (1) “Data logger”
   (2) “Module”
   (3) “IC”

3. Using “LCD_SEG”, verify that the LCD is illuminated.

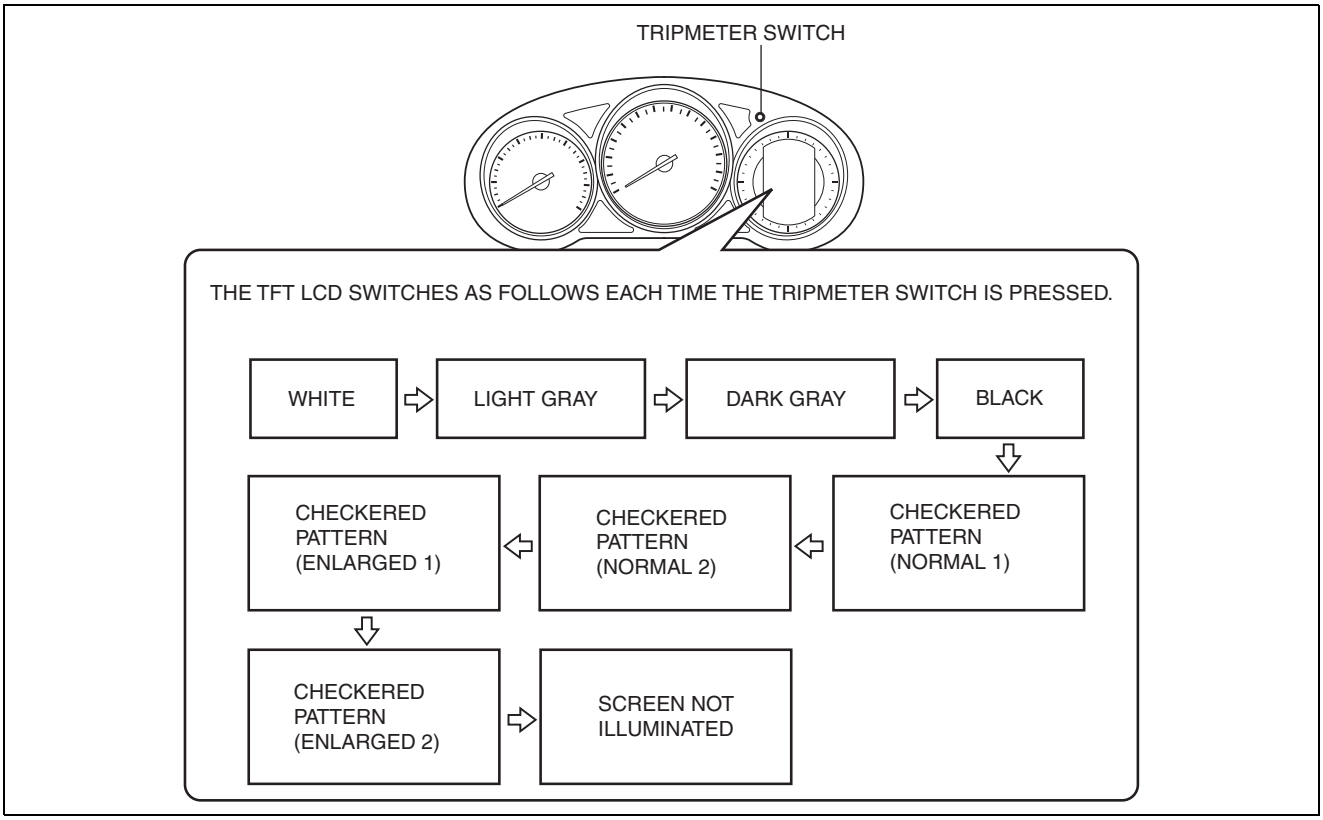

ac5wzw0000291

- If there are any non-illuminated area, replace the instrument cluster.

Warning/Indicator Light Illumination Inspection

1. Connect the M-MDS to the DLC-2.
2. After vehicle identification, select the following from the M-MDS initialization screen.
   (1) “Data logger”
   (2) “Module”
   (3) “IC”
3. Using “WL+IL”, verify that the warning/indicator lights in the following table are illuminated.
   - If any of the warning/indicator lights are not displayed, replace the instrument cluster.

INSTRUMENTATION/DRIVER INFO.

Without TFT LCD display

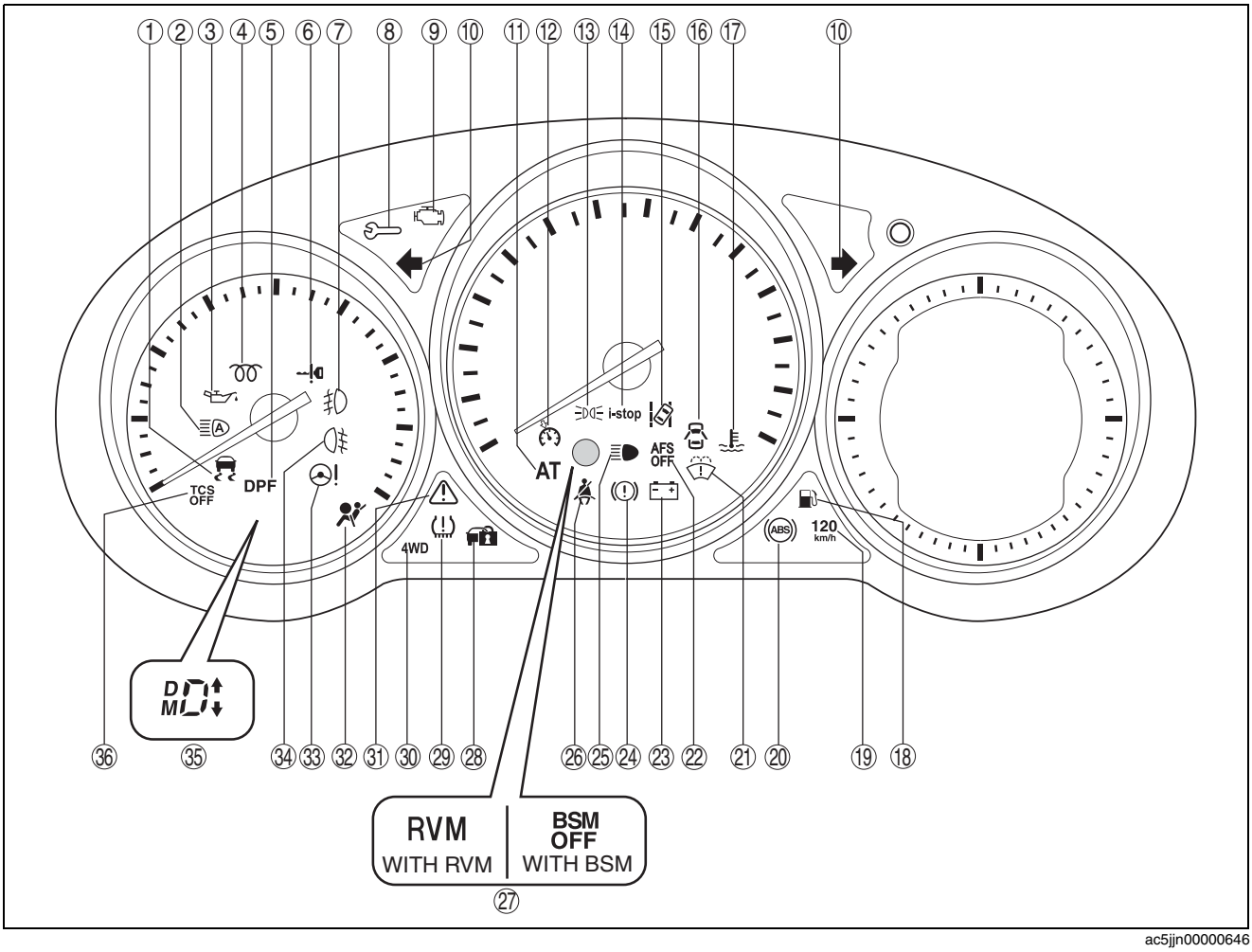

ac5jjn00000646

No.	Warning/ Indicator lights	Name	Comment
1		TCS/DSC indicator light	—
2		High beam control (HBC) system indicator light (green)/high beam control system (HBC) warning light (amber)	With HBC System
3		Engine oil pressure warning light	—
4		Glow indicator light	SKYACTIV-D 2.2
5	DPF	Diesel particulate filter indicator light	SKYACTIV-D 2.2
6		KEY warning light (red)/indicator light (green)	—
7		Front fog light indicator light	With front fog light
8		Wrench indicator light	SKYACTIV-D 2.2
9		Check engine light	—
10		Turn signal/hazard warning indicator lights	—
11	AT	Automatic transaxle warning light	ATX
12		Cruise main indicator light (amber)/cruise set indicatorlight (green)	With cruise control system
13		Lights-on indicator light	—
14	i-stop	i-stop warning light (amber)/indicator light (green)	With i-stop system
15		Lane departure warning system (LDWS) indicator light (green)/ lane departure warning system (LDWS) warning light (amber)	With LDWS
16		Door-ajar warning light	—

INSTRUMENTATION/DRIVER INFO.

No.	Warning/ Indicator lights	Name	Comment
17		High engine coolant temperature warning light (red)/low engine coolant temperature indicator light (blue)	—
18		Low fuel warning light	—
19		120 km/h warning light	With 120 km/h warning light
20		ABS warning light	—
21		Low washer fluid level warning light	—
22		AFS OFF indicator light	With AFS
23		Charging system warning light	—
24		Brake system warning light	—
25		Headlight high-beam indicator light	—
26		Seat belt warning light	—
27		Rear vehicle monitoring (RVM) system warning light (amber)/ Indicator light (green)	With rear vehicle monitoring system
		BSM OFF indicator light	With BSM
28		Security indicator light	With immobilizer system
29		Tire pressure monitoring system warning light	With TPMS
30		4WD warning light	4WD
31		Master warning light	—
32		Air bag/front seat belt pretensioner system warning light	—
33		Power steering malfunction indicator light	—
34		Rear fog light indicator light	With rear fog light
35		Shift position indicator/gear position indicator	ATX
		Gear shift indicator	MTX (with gear shift indicator)
36		TCS OFF indicator light	—

INSTRUMENTATION/DRIVER INFO.

With TFT LCD display

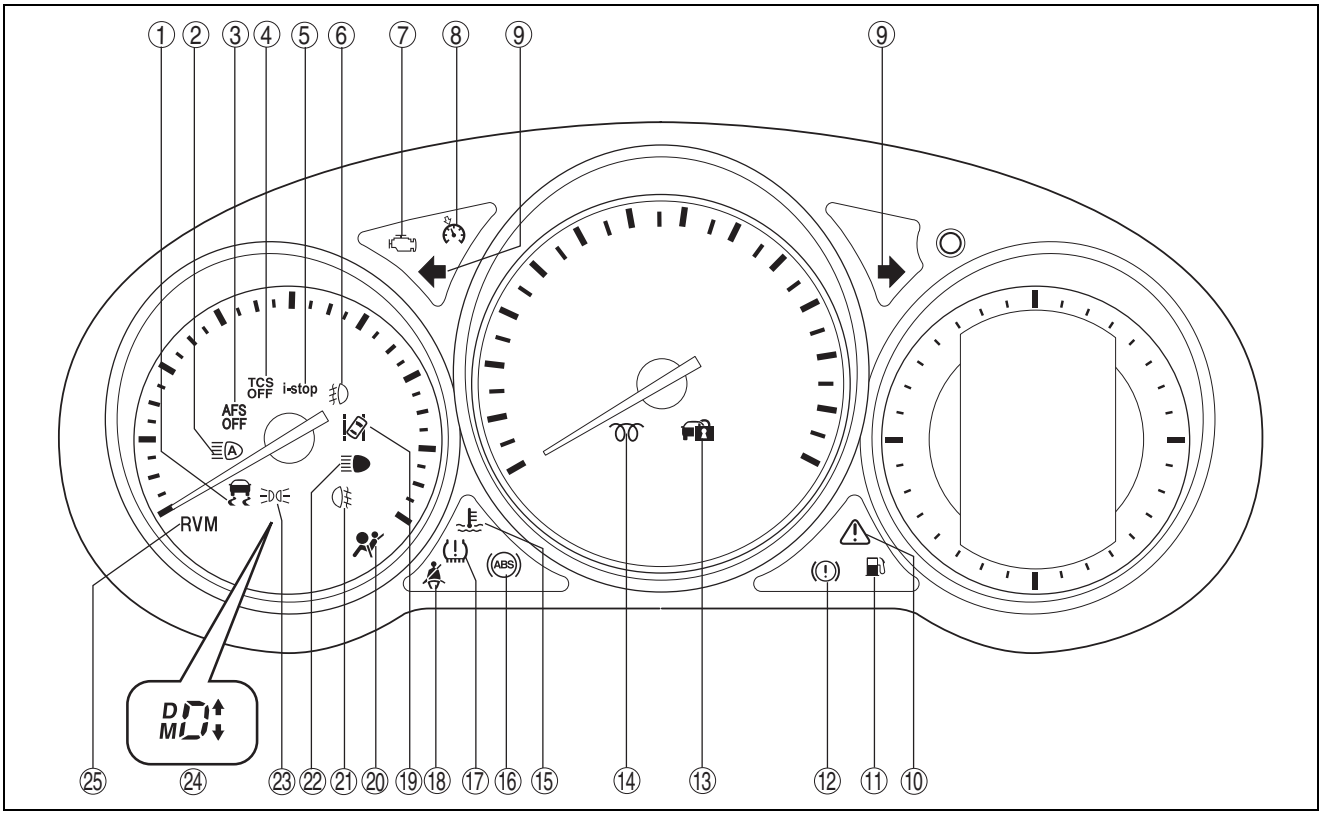

ac5wzn00000947

No	Warning/ Indicator lights	Name	Comment
1		TCS/DSC indicator light	—
2		High beam control system (HBC) indicator light (green)/high beam control (HBC) system warning light (amber)	With HBC System
3	AFS OFF	AFS OFF indicator light	With AFS
4	TCS OFF	TCS OFF indicator light	—
5	i-stop	i-stop warning light (amber)/indicator light (green)	With i-stop system
6		Front fog light indicator light	With front fog light
7		Check engine light	—
8		Cruise main indicator light (amber)/cruise set indicator light (green)	With cruise control system
9		Turn signal/hazard warning indicator lights	—
10		Master warning light	—
11		Low fuel warning light	—
12		Brake system warning light	—
13		Security indicator light	—
14		Glow indicator light	SKYACTIV-D 2.2
15		High engine coolant temperature warning light (red)/low engine coolant temperature indicator light (blue)	—
16	ABS	ABS warning light	—
17		Tire pressure monitoring system warning light	With TPMS
18		Seat belt warning light	—

INSTRUMENTATION/DRIVER INFO.

No	Warning/ Indicator lights	Name	Comment
19		Lane departure warning system (LDWS) indicator light (green)/ warning light (amber)	With LDWS
20		Air bag/front seat belt pretensioner system warning light	—
21		Rear fog light indicator light	With rear fog light
22		Headlight high-beam indicator light	—
23		Lights-on indicator light	—
24		Shift position indicator/gear position indicator	ATX
		Gear shift indicator	MTX (with gear shift indicator)
25	RVM	Rear vehicle monitoring (RVM) system warning light (amber)/ indicator light (green)	With rear vehicle monitoring system

Alarm Inspection

1. Connect the M-MDS to the DLC-2.
2. After vehicle identification, select the following from the M-MDS initialization screen.
   (1) “Data logger”
   (2) “Module”
   (3) “IC”
3. Using “ALARM”, verify that the buzzer sounds.
   - If the buzzer does not sound, replace the instrument cluster.

INSTRUMENT CLUSTER CONFIGURATION (USING READ/WRITE FUNCTION)

id092200033300

Note

- When performing configuration, it is necessary to read the vehicle specification information from the instrument cluster before replacing it. Connect the M-MDS to the vehicle and perform vehicle identification before removing the instrument cluster. The vehicle specification information is temporarily stored in the M-MDS.

1. Connect the M-MDS to the DLC-2.
2. After vehicle identification, select the following from the M-MDS initialization screen.
   1. “Module programming”
3. Then, select the following from the screen menu.
   1. “Programmable Module Installation”
   2. “IC”
4. Perform the configuration following the instructions on the screen.

Caution

- **When the configuration is performed, CAN communication between the instrument cluster and control module connected to the CAN line is cut temporarily, and communication error DTCs may be detected. After performing the configuration, verify the DTCs for the control module connected to the CAN line and clear it if any DTC is detected.**

5. Verify the DTCs for all of the control modules connected to the CAN line.
   - If any DTC is stored, clear it.
   - If the DTC is cleared, finish the procedure because the configuration has been completed normally.
   - If the DTC remains, perform troubleshooting according to the DTC.

INSTRUMENT CLUSTER CONFIGURATION (USING AS-BUILT DATA)

id092200032100

Note

- If the configuration is performed using As-Built data, the set value of the personalization function is reset to the initial value (condition when shipped from factory). Verify the set value with the customer and perform the personalization function setting after performing the configuration using As-Built data.

1. Connect the M-MDS to the DLC-2.
2. After vehicle identification, select the following from the M-MDS initialization screen.
   1. “Module programming”
3. Then, select the following from the screen menu.
   1. “As-Built”

INSTRUMENTATION/DRIVER INFO.

2. “IC”

4. Perform As-Built following the instructions on the screen.

Caution

- **When the configuration is performed, CAN communication between the instrument cluster and control module connected to the CAN line is cut temporarily, and communication error DTCs may be detected. After performing the configuration, verify the DTCs for the control module connected to the CAN line and clear it if any DTC is detected.**

5. Verify the DTCs for all of the control modules connected to the CAN line.
   - If any DTC is stored, clear it.
   - If the DTC is cleared, finish the procedure because the configuration has been completed normally.
   - If the DTC remains, perform troubleshooting according to the DTC.

INSTRUMENT CLUSTER OPERATION RECORD

id092200033200

1. Connect the M-MDS to the DLC-2.
2. After vehicle identification, select the following from the M-MDS initial screen.
   1. “Operational Record”
3. Then, select the following from the screen menu.
   1. “Meter Warning System”
4. Display the instrument cluster operation history according to the screen instructions.

INSTRUMENT CLUSTER PERSONALIZATION FEATURES SETTING PROCEDURE

id092200033600

Using M-MDS

1. Connect the M-MDS to the DLC-2.
2. After vehicle identification, select the following from the M-MDS initialization screen.
   (1) “Module programming”
   (2) “Programmable Parameters”
3. Select menu in the “IC”.
4. Select an item name, and than select option.

Instrument cluster

Mazda Modular Diagnostic System (M-MDS) display	Function	Initial setting	Setting contents	Control unit
Lights-on Reminder Volume.	The volume for the lights-on reminder warning alarm can be changed.	High	Not Adopted. / OFF / Low / High	Instrument cluster
Turn Signal Volume.	The volume of the turn and hazard indicator alarm can be changed.	High	Not Adopted. / Low / High	Instrument cluster

Rear vehicle monitoring (RVM) system

Mazda Modular Diagnostic System (M-MDS) display	Function	Initial setting	Setting contents	Control unit
RVM Volume.	The volume of the rear vehicle monitoring (RVM) warning alarm can be changed.	High	Not Adopted. / OFF / Low / High	Instrument cluster

Blind spot monitoring (BSM) system

Mazda Modular Diagnostic System (M-MDS) display	Function	Initial setting	Setting contents	Control unit
BSM Volume.	The volume of the blind spot monitoring (BSM) warning alarm can be changed.	High	Not Adopted. / OFF / Low / High	Instrument cluster

INSTRUMENTATION/DRIVER INFO.

Lane departure warning system (LDWS)

Mazda Modular Diagnostic System (M-MDS) display	Function	Initial setting	Setting contents	Control unit
LDWS Sound.	The type of the LDWS warning alarm can be changed.	Rumble	Beep / Rumble	Instrument cluster
LDWS Volume.	The volume of the LDWS warning alarm can be changed.	Volume 3	Not Adopted. / Volume 1 / Volume 2 / Volume 3	Instrument cluster

Using Instrument Cluster (with TFT LCD display)
Instrument cluster

1. Switch the ignition ON (engine off or on).
2. Select "Setting" by operating the upper/lower switch for the steering switch.
3. Select "Volumes" by operating the upper/lower switch for the steering switch.
4. Select the following items and change the setting.

TFT LCD display	Function	Initial setting	Setting contents	Control unit
Turn Signal	The volume of the turn and hazard indicator alarm can be changed.	High	High / Low	Instrument cluster
Light-on	The volume for the lights-on reminder warning alarm can be changed.	High	High / Low / OFF	Instrument cluster

Rear vehicle monitoring (RVM) system

1. Switch the ignition ON (engine off or on).
2. Select "Setting" by operating the upper/lower switch for the steering switch.
3. Select "RVM" by operating the upper/lower switch for the steering switch.
4. Select the following items and change the setting.

TFT LCD display	Function	Initial setting	Setting contents	Control unit
Volume	The volume of the rear vehicle monitoring (RVM) warning alarm can be changed.	High	High / Low / OFF	Instrument cluster

Lane departure warning system (LDWS)

1. Switch the ignition ON (engine off or on).
2. Select "Setting" by operating the upper/lower switch for the steering switch.
3. Select "LDWS" by operating the upper/lower switch for the steering switch.
4. Select the following items and change the setting.

TFT LCD display	Function	Initial setting	Setting contents	Control unit
Timing	The warning operation timing of the lane departure warning system (LDWS) can be changed.	Adaptive	Early / Medium / Late / Adaptive	Instrument cluster
Warning	The warning operation sensitivity of the lane departure warning system (LDWS) can be changed.	Medium	Often / Medium / Rare	Instrument cluster
Sound	The type of LDWS warning alarm can be changed.	Rumble	Rumble / Beep	Instrument cluster
Volume	The volume of the LDWS warning alarm can be changed.	High	High / Medium / Low	Instrument cluster
Volume	The high and low range of the LDWS warning alarm can be changed.	High	High / Low	Instrument cluster

FORWARD SENSING CAMERA (FSC) PERSONALIZATION FEATURES SETTING PROCEDURE

id092200033700

1. Connect the M-MDS to the DLC-2.
2. After vehicle identification, select the following from the M-MDS initialization screen.

(1) “Module programming“
(2) “Programmable Parameters”
3. Select menu in the “FSC”.
4. Select an item name, and than select option.

High Beam Control (HBC) System

Mazda Modular Diagnostic System (M-MDS) display	Function	Initial setting	Setting contents	Control unit
High Beam Control.	The high beam control (HBC) system can be disabled.	ON	Not Adopted. / OFF / ON	FSC

Lane Departure Warning System (LDWS)

Mazda Modular Diagnostic System (M-MDS) display	Function	Initial setting	Setting contents	Control unit
LDWS Timing.	The warning operation timing of the lane departure warning system (LDWS) can be changed.	Adaptive	Not Adopted / Adaptive / Early / Medium / Late	FSC
LDWS Warning.	The warning operation sensitivity of the lane departure warning system (LDWS) can be changed.	Medium	Not Adopted. / Often / Medium / Rare	FSC

INSTRUMENT CLUSTER DATA RESET PROCEDURE

id092200034400

Caution
- **Explain the reset items to the customer for their understanding, and then perform the data reset.**

- Related information can be reset collectively using the following procedure:
  i-stop-related information
  — i-stop total time
  — i-stop time
  Trip computer-related information
  — Average fuel economy
  — Average vehicle speed
  — TRIP value

INSTRUMENTATION/DRIVER INFO.

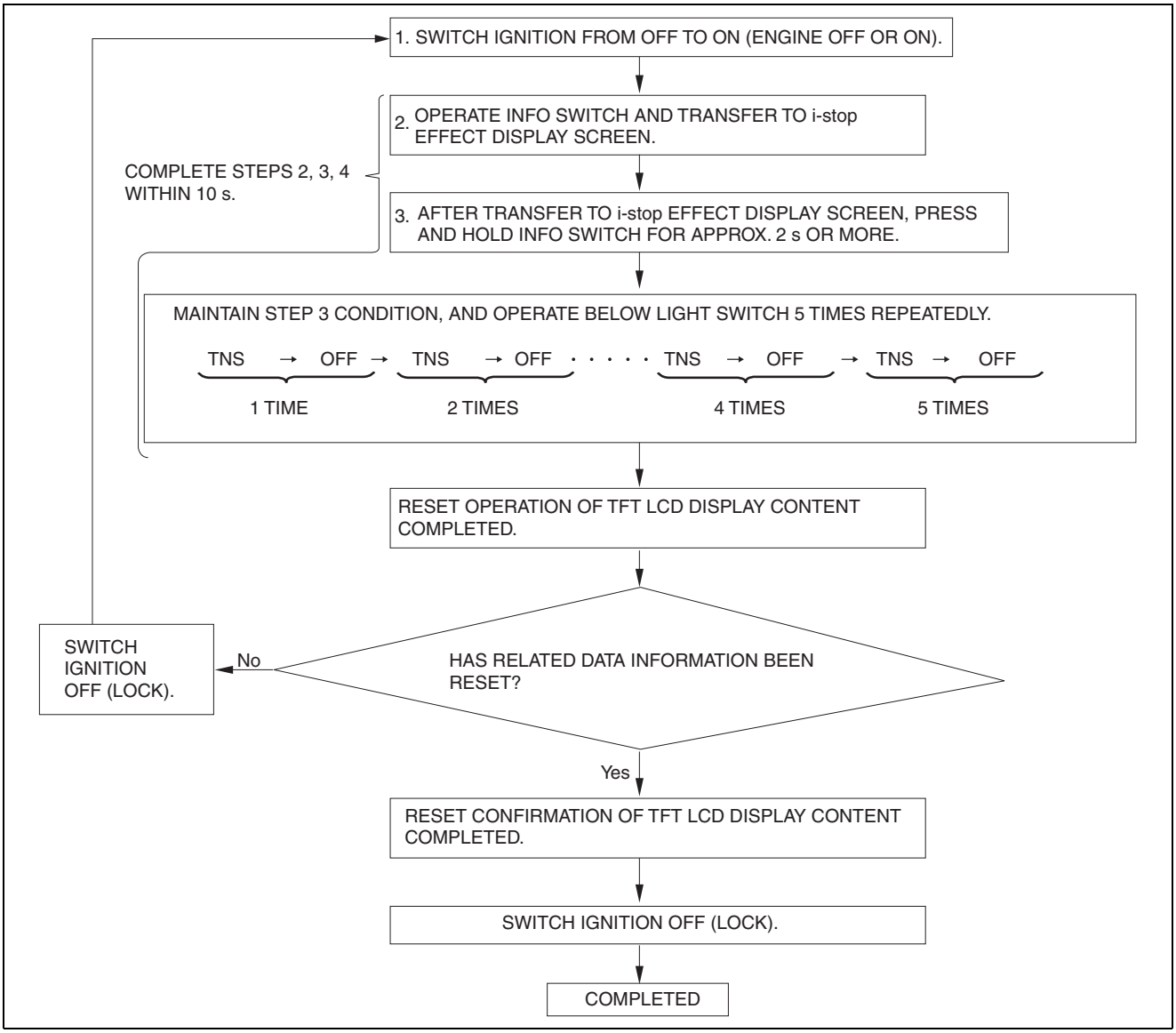

ac5wzw0000383

FUEL GAUGE SENDER UNIT REMOVAL/INSTALLATION [2WD]

id092200012001

Warning

- **Always keep sparks and flames away from fuel when servicing the fuel system. Fuel can be easily ignited which could cause serious injury or death, and damage to equipment.**
- **Fuel line spills and leakage from the pressurized fuel system are dangerous. Fuel can ignite and cause serious injury or death and damage. Fuel can also irritate skin and eyes. To prevent this, always complete the Fuel Line Safety Procedure, while referring to the BEFORE SERVICE PRECAUTION.**
- **A person charged with static electricity could cause a fire or explosion, resulting in death or serious injury. Before draining fuel, make sure to discharge static electricity by touching a vehicle.**

Caution

- **If the fuel gauge level indicates 3/4 or more, the fuel surface is higher than the fuel pump unit and fuel gauge sender unit installation surface. If servicing is performed under this condition, fuel leakage could result. Always drain the fuel before performing the operation and keep the fuel in the fuel tank at less than half.**

INSTRUMENTATION/DRIVER INFO.

SKYACTIV-G 2.0

Note
- For the fuel gauge sender unit removal/installation, refer to the fuel pump removal/installation because the fuel gauge sender unit is integrated with the fuel pump. (See 01-14A-38 FUEL PUMP UNIT REMOVAL/INSTALLATION [SKYACTIV-G 2.0].)

SKYACTIV-D 2.2

1. Perform the "Fuel Line Safety Procedure" referring to the "BEFORE REPAIR PROCEDURE". (See 01-14B-6 BEFORE SERVICE PRECAUTION [SKYACTIV-D 2.2].)
2. If the fuel gauge level indicates 3/4 or more, refer to the "FUEL DRAINING PROCEDURE" and drain the fuel. (See 01-14B-9 FUEL DRAINING PROCEDURE [SKYACTIV-D 2.2].)
3. Disconnect the negative battery cable. (See 01-17A-11 NEGATIVE BATTERY CABLE DISCONNECTION/CONNECTION [SKYACTIV-G 2.0].)(See 01-17A-13 NEGATIVE BATTERY CABLE DISCONNECTION/CONNECTION [SKYACTIV-G 2.0 (WITHOUT i-stop)].)(See 01-17B-9 NEGATIVE BATTERY CABLE DISCONNECTION/CONNECTION [SKYACTIV-D 2.2].)
4. Remove the following parts:
   (1) Rear seat cushion (6:4 split-type seat) (See 09-13-76 REAR SEAT CUSHION REMOVAL/INSTALLATION.)
   (2) Rear seat under installation bolt (4:2:4 split-type seat) (See 09-13-56 REAR SEAT REMOVAL/INSTALLATION.)
   (3) Rear scuff plate (See 09-17-63 REAR SCUFF PLATE REMOVAL/INSTALLATION.)
5. Partially peel back the floor covering.

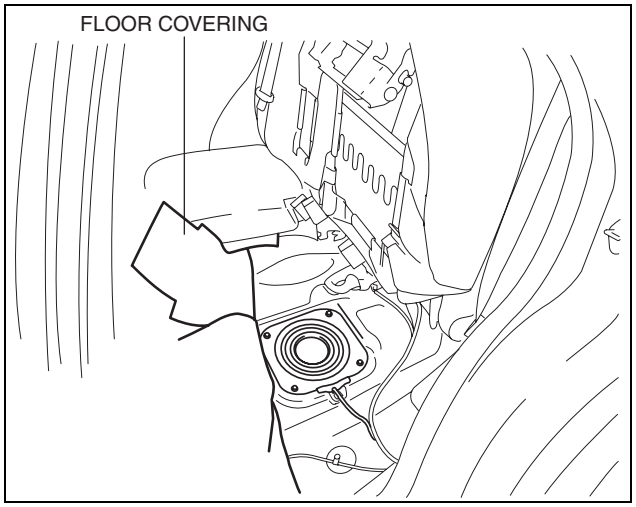

ac5wzw0000230

6. Remove the screws.
7. Remove the service hole cover.

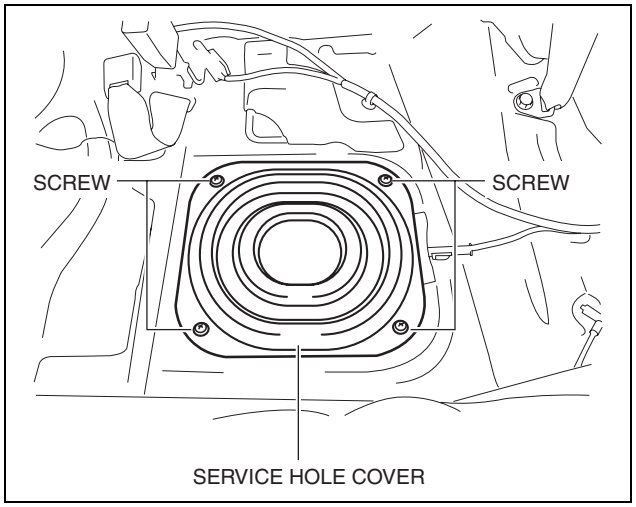

ac5wzw0000230

8. While pressing the tabs of clip A in the direction of arrows (1) shown in the figure, pull clip A in the direction of arrow (2) to detach the tabs of clip A from the fuel gauge sender unit (main).
9. Detach clip A.

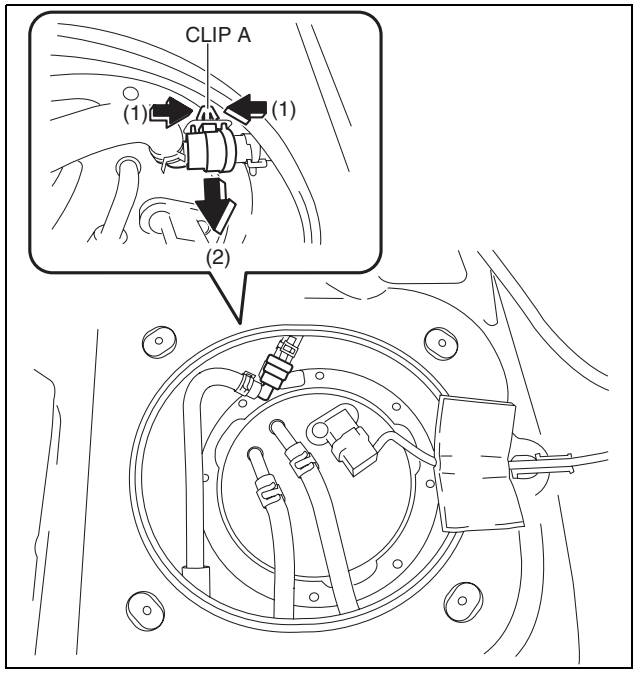

ac5wzw0000230

10. Disconnect the connector.
11. Disconnect the hose from the fuel gauge sender unit (main) while pressing the tabs of clips B in the direction of the arrows shown in the figure.

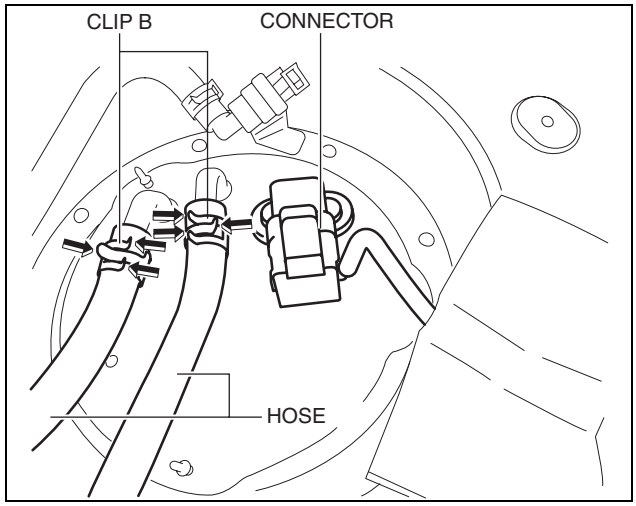

ac5wzw0000231

INSTRUMENTATION/DRIVER INFO.

12. Remove the screws.

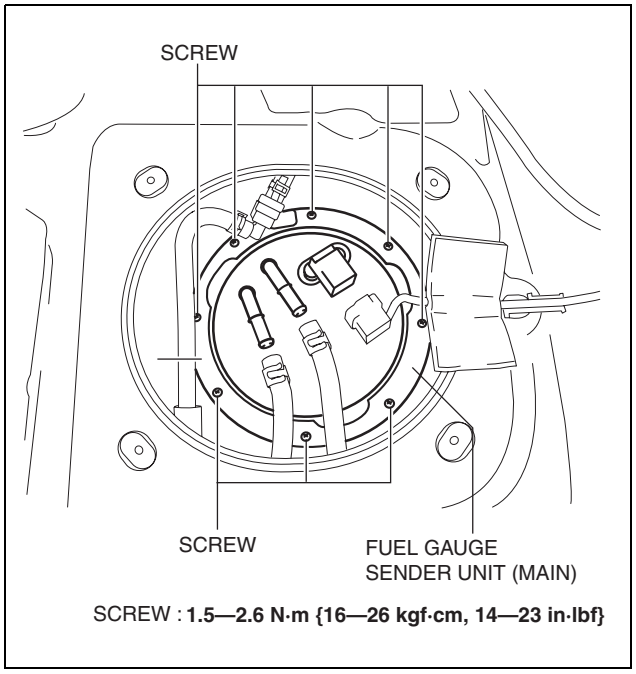

ac5wzw0000326

13. Insert a tape-wrapped flathead screwdriver into the gap between clip C and the hose shown in the figure.
14. Move the flathead screwdriver in the direction of the arrow shown in the figure to detach clip C from the hose.
15. Disconnect the hose.
16. Remove the fuel gauge sender unit (main).

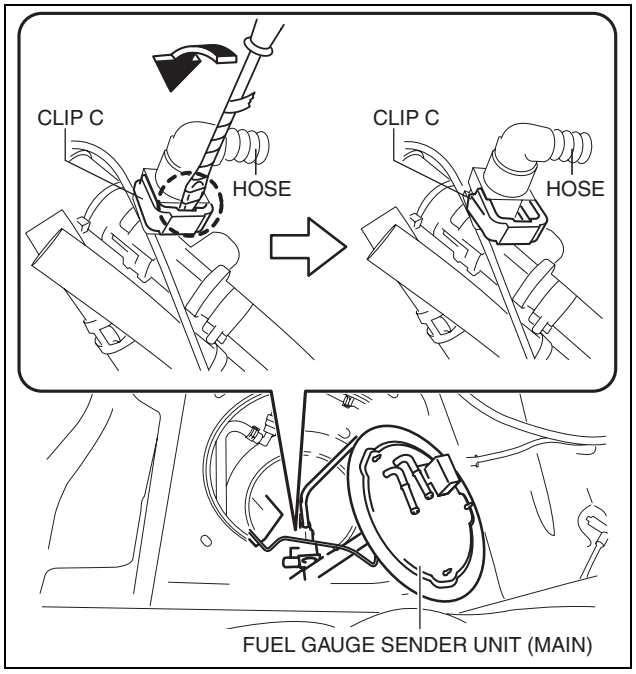

ac5wzw0000231

17. Remove the O-ring.
18. Install in the reverse order of removal.
19. Perform the fuel leakage inspection referring to “AFTER SERVICE PRECAUTION”. (See 01-14B-7 AFTER SERVICE PRECAUTION [SKYACTIV-D 2.2].)

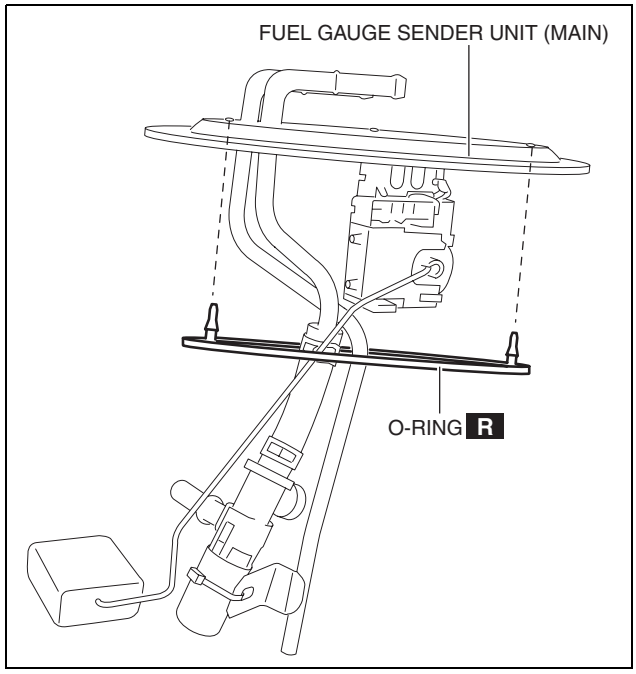

ac5wzw0000231

FUEL GAUGE SENDER UNIT REMOVAL/INSTALLATION [4WD]

id092200012002

Warning

- **Always keep sparks and flames away from fuel when servicing the fuel system. Fuel can be easily ignited which could cause serious injury or death, and damage to equipment.**
- **Fuel line spills and leakage from the pressurized fuel system are dangerous. Fuel can ignite and cause serious injury or death and damage. Fuel can also irritate skin and eyes. To prevent this, always complete the Fuel Line Safety Procedure, while referring to the BEFORE SERVICE PRECAUTION.**
- **A person charged with static electricity could cause a fire or explosion, resulting in death or serious injury. Before draining fuel, make sure to discharge static electricity by touching a vehicle.**

Caution

- **If the fuel gauge level indicates 3/4 or more, the fuel surface is higher than the fuel pump unit and fuel gauge sender unit installation surface. If servicing is performed under this condition, fuel leakage could result. Always drain the fuel before performing the operation and keep the fuel in the fuel tank at less than half.**

SKYACTIV-G 2.0
Fuel gauge sender unit (main)

Note

- For the fuel gauge sender unit removal/installation, refer to the fuel pump removal/installation because the fuel gauge sender unit is integrated with the fuel pump. (See 01-14A-38 FUEL PUMP UNIT REMOVAL/INSTALLATION [SKYACTIV-G 2.0].)

Fuel gauge sender unit (sub)

1. Perform the "Fuel Line Safety Procedure" referring to the "BEFORE REPAIR PROCEDURE". (See 01-14A-6 BEFORE SERVICE PRECAUTION [SKYACTIV-G 2.0].)
2. If the fuel gauge level indicates 3/4 or more, refer to the "FUEL DRAINING PROCEDURE" and drain the fuel. (See 01-14A-11 FUEL DRAINING PROCEDURE [SKYACTIV-G 2.0].)
3. Disconnect the negative battery cable. (See 01-17A-11 NEGATIVE BATTERY CABLE DISCONNECTION/CONNECTION [SKYACTIV-G 2.0].)(See 01-17A-13 NEGATIVE BATTERY CABLE DISCONNECTION/CONNECTION [SKYACTIV-G 2.0 (WITHOUT i-stop)].)(See 01-17B-9 NEGATIVE BATTERY CABLE DISCONNECTION/CONNECTION [SKYACTIV-D 2.2].)
4. Remove the following parts:
   (1) Rear seat cushion (6:4 split type) (See 09-13-76 REAR SEAT CUSHION REMOVAL/INSTALLATION.)
   (2) Rear seat under installation bolt (4:2:4 split type) (See 09-13-56 REAR SEAT REMOVAL/INSTALLATION.)
   (3) Rear scuff plate (See 09-17-63 REAR SCUFF PLATE REMOVAL/INSTALLATION.)

INSTRUMENTATION/DRIVER INFO.

5. Partially peel back the floor covering.

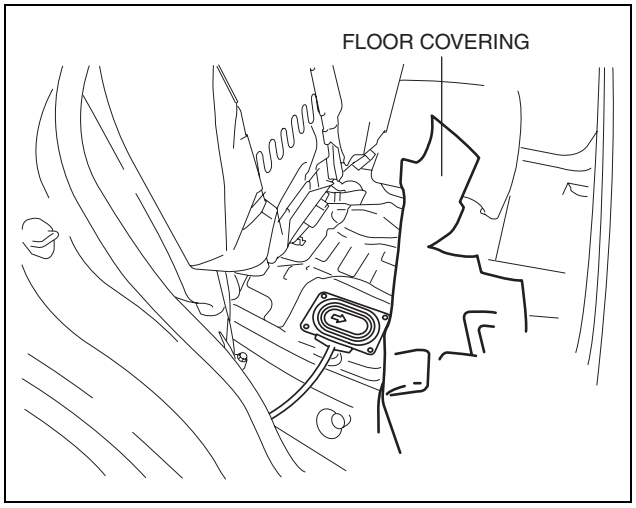

ac5wzw0000230

6. Remove the screws.
7. Remove the service hole cover.

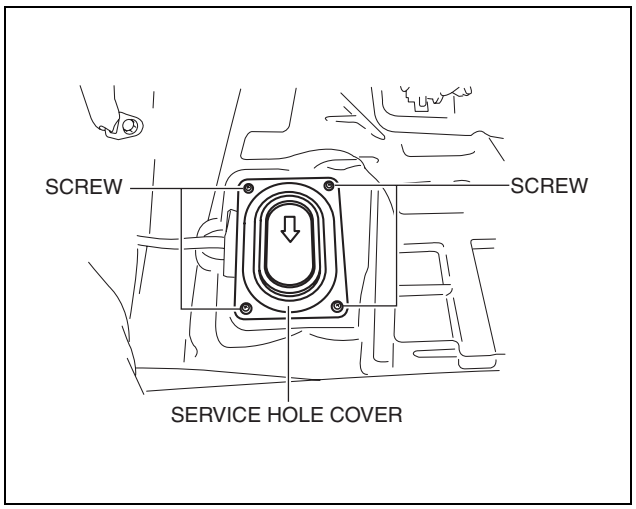

ac5wzw0000230

8. Disconnect the connector.

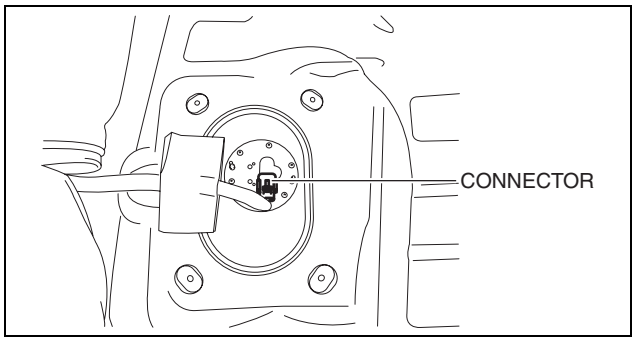

ac5wzw0000230

9. Remove the screws.

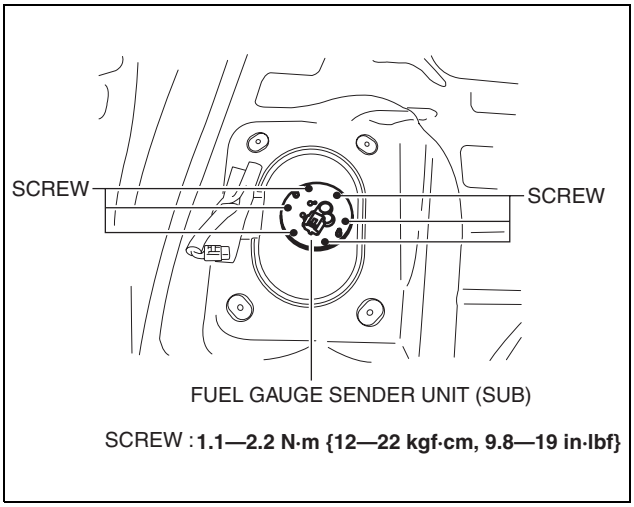

ac5wzw0000230

10. Remove the fuel gauge sender unit (sub).
11. Install in the reverse order of removal.
12. Perform the fuel leakage inspection referring to “AFTER SERVICE PRECAUTION”. (See 01-14A-7 AFTER SERVICE PRECAUTION [SKYACTIV-G 2.0].)

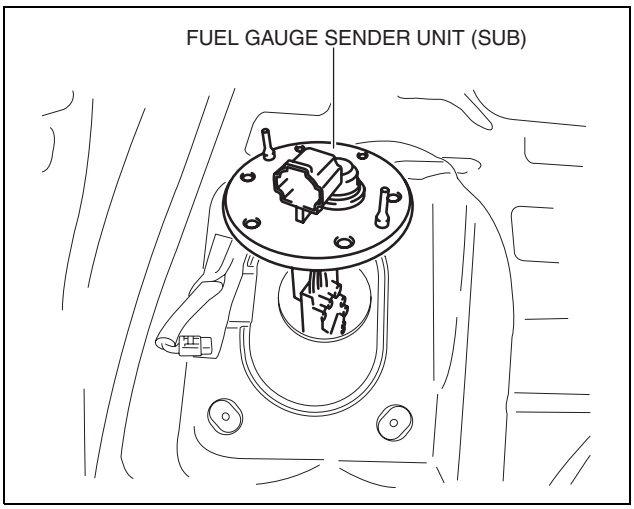

ac5wzw0000230

SKYACTIV-D 2.2
Fuel gauge sender unit (main)

1. Perform the "Fuel Line Safety Procedure" referring to the "BEFORE REPAIR PROCEDURE". (See 01-14B-6 BEFORE SERVICE PRECAUTION [SKYACTIV-D 2.2].)
2. If the fuel gauge level indicates 3/4 or more, refer to the "FUEL DRAINING PROCEDURE" and drain the fuel. (See 01-14B-9 FUEL DRAINING PROCEDURE [SKYACTIV-D 2.2].)
3. Disconnect the negative battery cable. (See 01-17A-11 NEGATIVE BATTERY CABLE DISCONNECTION/CONNECTION [SKYACTIV-G 2.0].)(See 01-17A-13 NEGATIVE BATTERY CABLE DISCONNECTION/CONNECTION [SKYACTIV-G 2.0 (WITHOUT i-stop)].)(See 01-17B-9 NEGATIVE BATTERY CABLE DISCONNECTION/CONNECTION [SKYACTIV-D 2.2].)
4. Remove the following parts:
   (1) Rear seat cushion (6:4 split-type seat) (See 09-13-76 REAR SEAT CUSHION REMOVAL/INSTALLATION.)
   (2) Rear seat under installation bolt (4:2:4 split-type seat) (See 09-13-56 REAR SEAT REMOVAL/INSTALLATION.)
   (3) Rear scuff plate (See 09-17-63 REAR SCUFF PLATE REMOVAL/INSTALLATION.)

INSTRUMENTATION/DRIVER INFO.

5. Partially peel back the floor covering.

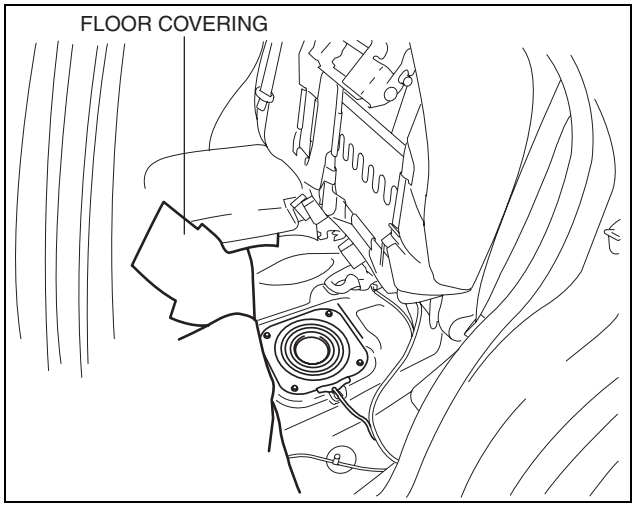

ac5wzw0000230

6. Remove the screws.
7. Remove the service hole cover.

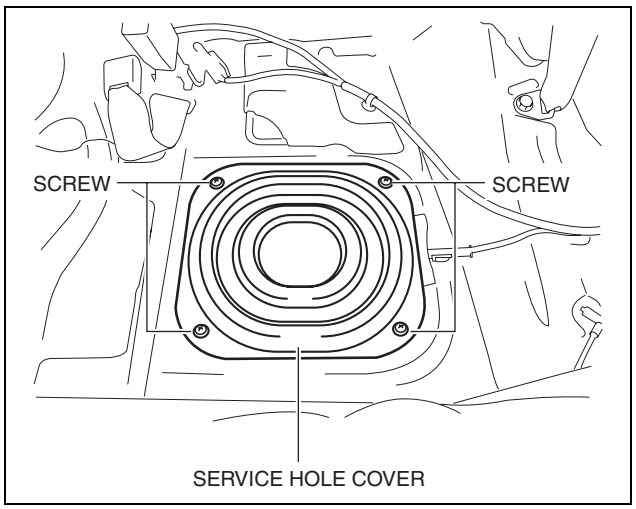

ac5wzw0000230

8. While pressing the tabs of clip A in the direction of arrows (1) shown in the figure, pull clip A in the direction of arrow (2) to detach the tabs of clip A from the fuel gauge sender unit (main).
9. Detach clip A.

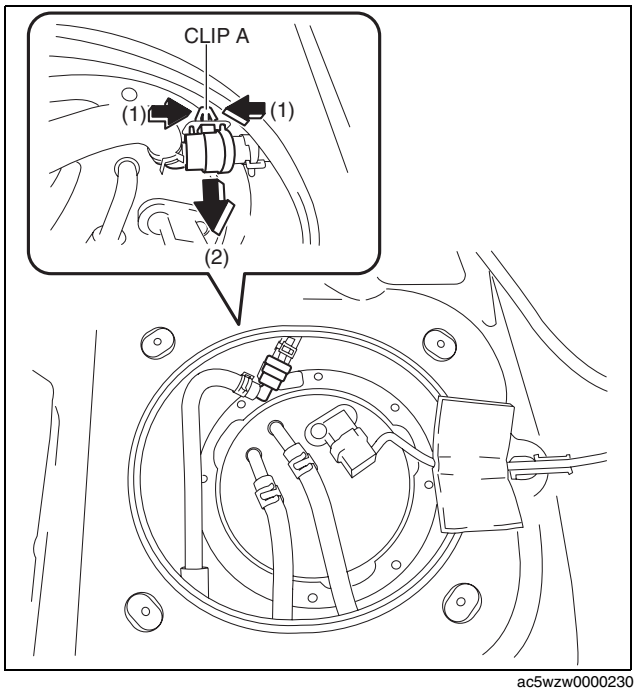

ac5wzw0000230

INSTRUMENTATION/DRIVER INFO.

10. Disconnect the connector.
11. Disconnect the hose from the fuel gauge sender unit (main) while pressing the tabs of clips B in the direction of the arrows shown in the figure.

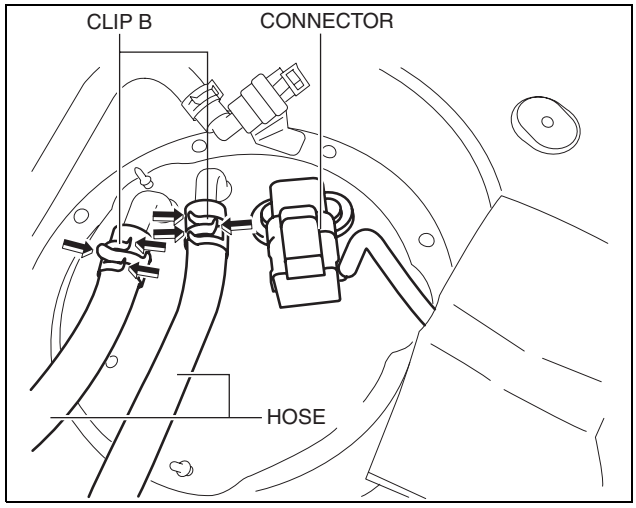

ac5wzw0000231

12. Remove the screws.

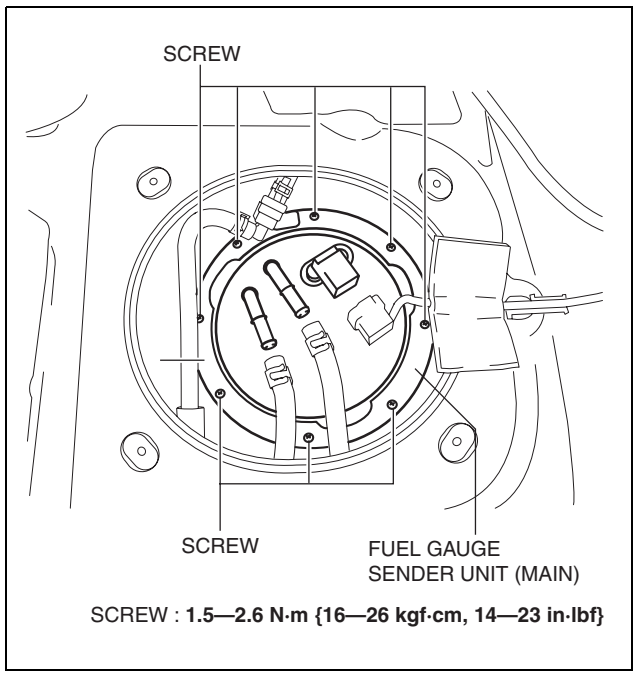

ac5wzw0000326

INSTRUMENTATION/DRIVER INFO.

13. Insert a tape-wrapped flathead screwdriver into the gap between clip C and the hose shown in the figure.
14. Move the flathead screwdriver in the direction of the arrow shown in the figure to detach clip C from the hose.
15. Disconnect the hose.
16. Remove the fuel gauge sender unit (main).

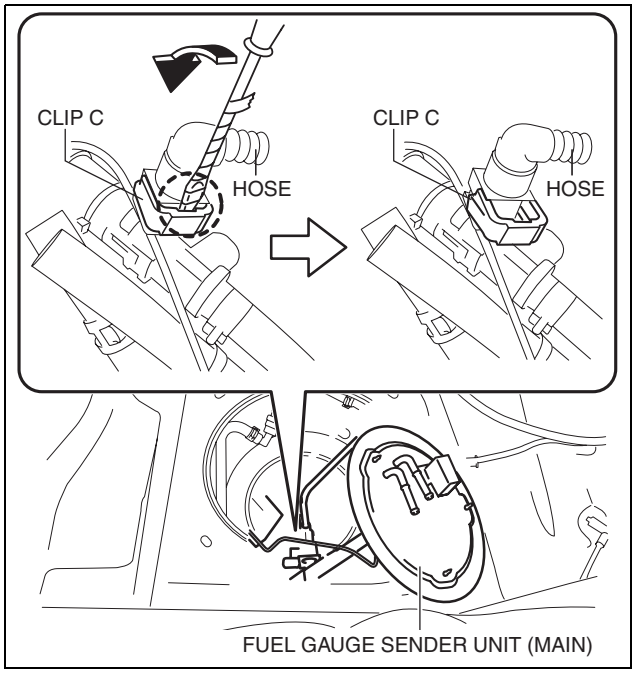

ac5wzw0000231

17. Remove the O-ring.
18. Install in the reverse order of removal.
19. Perform the fuel leakage inspection referring to “AFTER SERVICE PRECAUTION”. (See 01-14B-7 AFTER SERVICE PRECAUTION [SKYACTIV-D 2.2].)

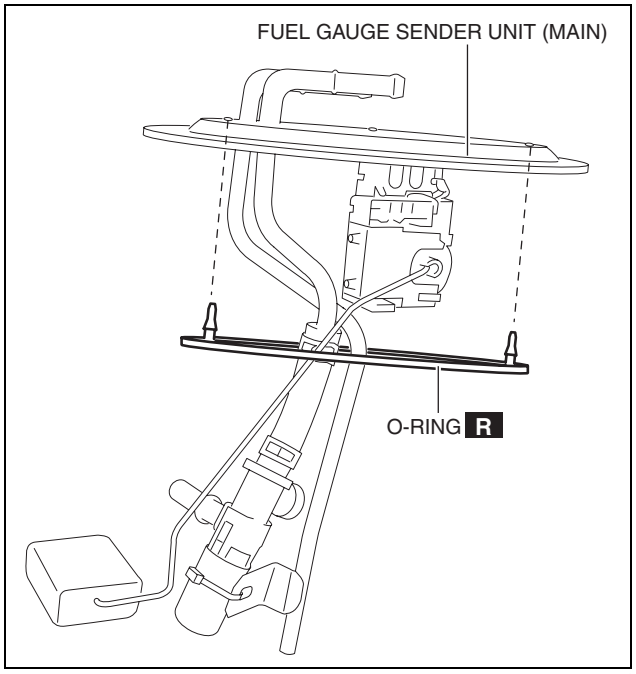

ac5wzw0000231

Fuel gauge sender unit (sub)

1. Perform the "Fuel Line Safety Procedure" referring to the "BEFORE REPAIR PROCEDURE". (See 01-14B-6 BEFORE SERVICE PRECAUTION [SKYACTIV-D 2.2].)
2. If the fuel gauge level indicates 3/4 or more, refer to the "FUEL DRAINING PROCEDURE" and drain the fuel. (See 01-14B-9 FUEL DRAINING PROCEDURE [SKYACTIV-D 2.2].)
3. Disconnect the negative battery cable. (See 01-17A-11 NEGATIVE BATTERY CABLE DISCONNECTION/CONNECTION [SKYACTIV-G 2.0].)(See 01-17A-13 NEGATIVE BATTERY CABLE DISCONNECTION/CONNECTION [SKYACTIV-G 2.0 (WITHOUT i-stop)].)(See 01-17B-9 NEGATIVE BATTERY CABLE DISCONNECTION/CONNECTION [SKYACTIV-D 2.2].)
4. Remove the following parts:
   (1) Rear seat cushion (6:4 split-type seat) (See 09-13-76 REAR SEAT CUSHION REMOVAL/INSTALLATION.)
   (2) Rear seat under installation bolt (4:2:4 split-type seat) (See 09-13-56 REAR SEAT REMOVAL/INSTALLATION.)
   (3) Rear scuff plate (See 09-17-63 REAR SCUFF PLATE REMOVAL/INSTALLATION.)

INSTRUMENTATION/DRIVER INFO.

5. Partially peel back the floor covering.

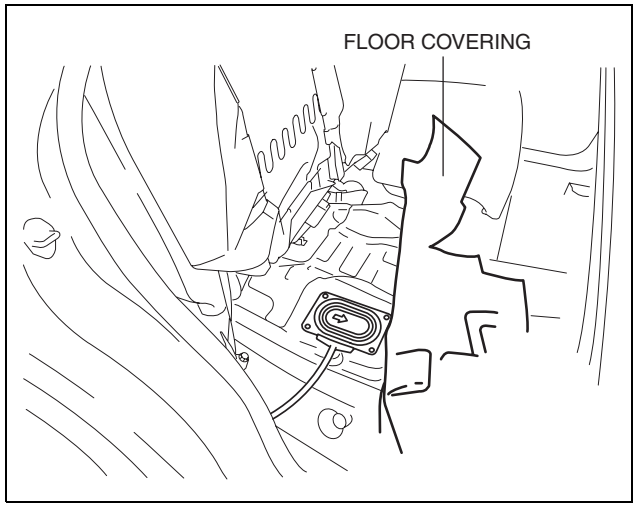

ac5wzw0000230

6. Remove the screws.
7. Remove the service hole cover.

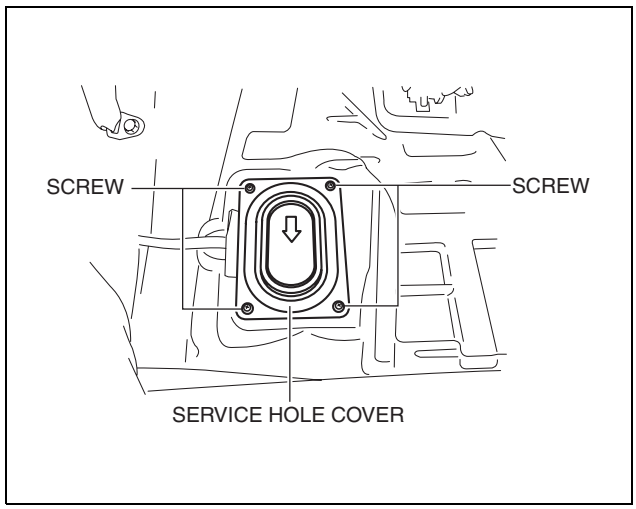

ac5wzw0000230

8. Disconnect the connector.

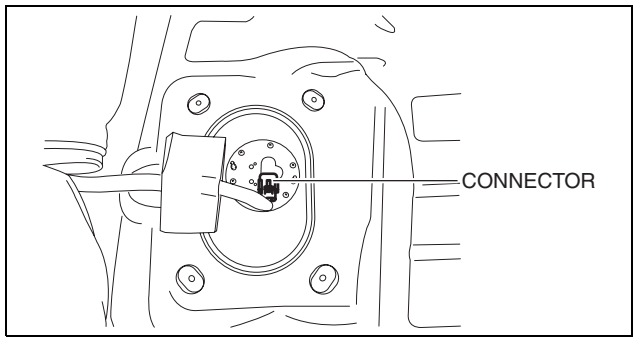

ac5wzw0000230

9. Remove the screws.

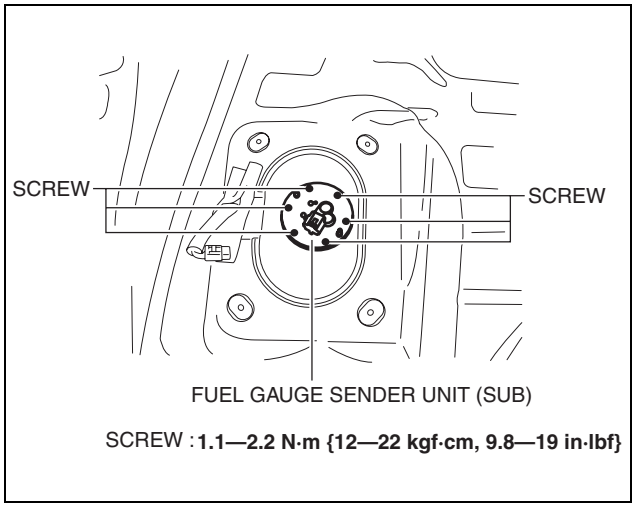

ac5wzw0000230

10. Remove the fuel gauge sender unit (sub).
11. Install in the reverse order of removal.
12. Perform the fuel leakage inspection referring to “AFTER SERVICE PRECAUTION”. (See 01-14B-7 AFTER SERVICE PRECAUTION [SKYACTIV-D 2.2].)

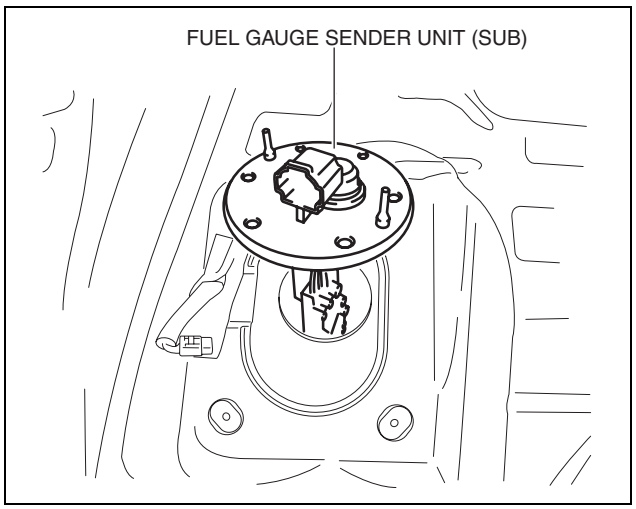

ac5wzw0000230

FUEL GAUGE SENDER UNIT INSPECTION [2WD]

id092200012101

SKYACTIV-G 2.0

Note

- For the fuel gauge sender unit removal/installation, refer to the fuel pump removal/installation because the fuel gauge sender unit is integrated with the fuel pump. (See 01-14A-38 FUEL PUMP UNIT REMOVAL/INSTALLATION [SKYACTIV-G 2.0].)

INSTRUMENTATION/DRIVER INFO.

1. Verify that the resistance at fuel gauge sender unit terminals D and C is as indicated in the table according to the height of the float.

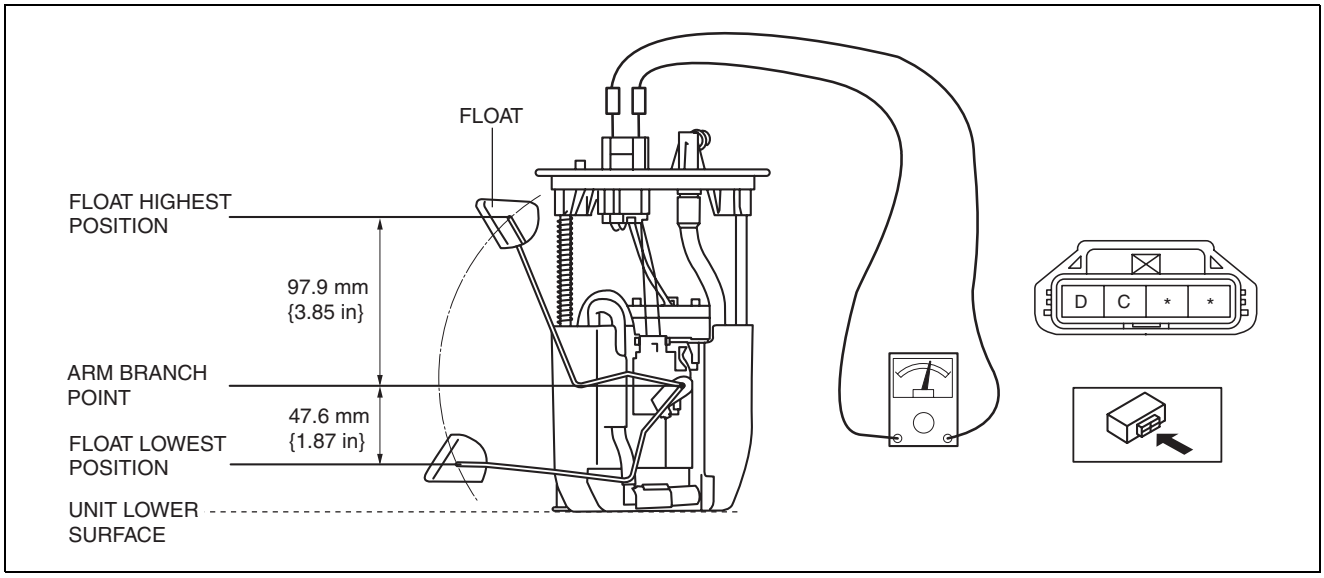

ac5wzw0000377

- If not as indicated in the table, replace the fuel gauge sender unit.

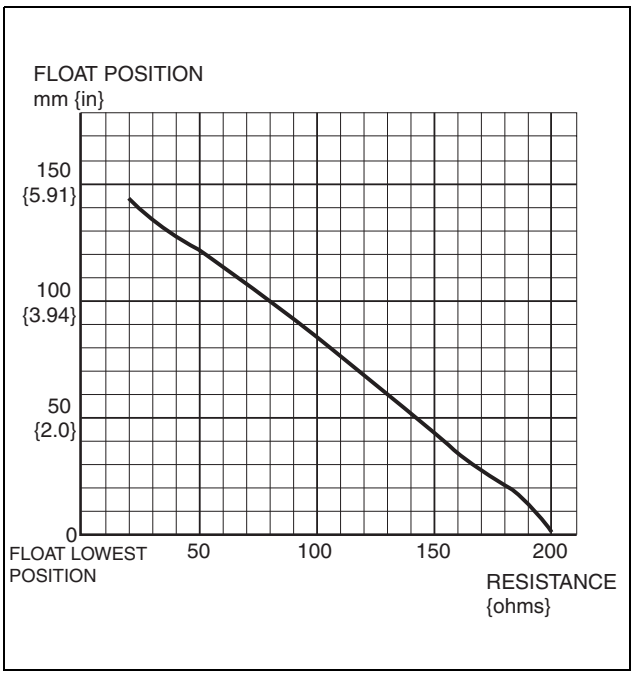

ac5wzw0000377

SKYACTIV-D 2.2

1. Disconnect the negative battery cable. (See 01-17A-11 NEGATIVE BATTERY CABLE DISCONNECTION/CONNECTION [SKYACTIV-G 2.0].)(See 01-17A-13 NEGATIVE BATTERY CABLE DISCONNECTION/CONNECTION [SKYACTIV-G 2.0 (WITHOUT i-stop)].)(See 01-17B-9 NEGATIVE BATTERY CABLE DISCONNECTION/CONNECTION [SKYACTIV-D 2.2].)
2. Remove the following parts:
   (1) Rear seat cushion (6:4 split-type seat) (See 09-13-76 REAR SEAT CUSHION REMOVAL/INSTALLATION.)
   (2) Rear seat under installation bolt (4:2:4 split-type seat) (See 09-13-56 REAR SEAT REMOVAL/INSTALLATION.)
   (3) Rear scuff plate (See 09-17-63 REAR SCUFF PLATE REMOVAL/INSTALLATION.)
   (4) Fuel gauge sender unit (See 09-22-23 FUEL GAUGE SENDER UNIT REMOVAL/INSTALLATION [2WD].)

INSTRUMENTATION/DRIVER INFO.

3. Verify that the resistance at fuel gauge sender unit terminals A and C is as indicated in the table according to the height of the float.

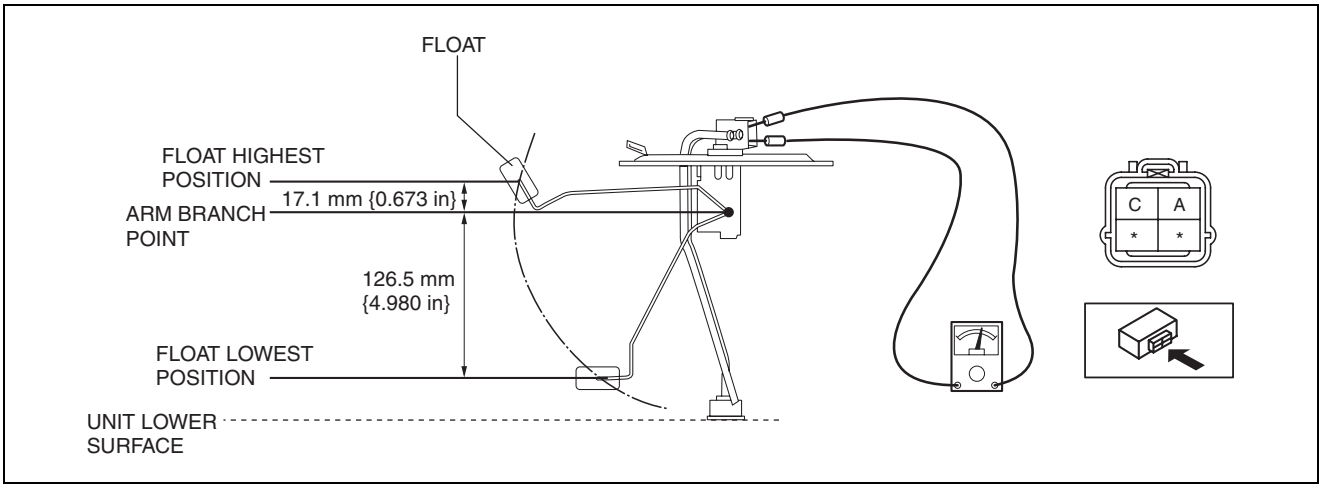

ac5wzw0000326

- If not as indicated in the table, replace the fuel gauge sender unit.

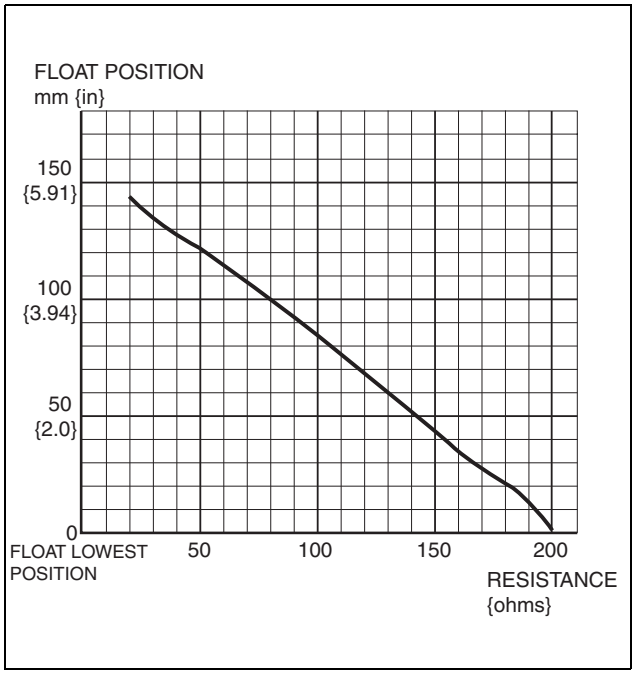

ac5wzw0000377

FUEL GAUGE SENDER UNIT INSPECTION [4WD]

id092200012102

SKYACTIV-G 2.0
Fuel gauge sender unit (main)

Note
- For the fuel gauge sender unit removal/installation, refer to the fuel pump removal/installation because the fuel gauge sender unit is integrated with the fuel pump. (See 01-14A-38 FUEL PUMP UNIT REMOVAL/INSTALLATION [SKYACTIV-G 2.0].)

INSTRUMENTATION/DRIVER INFO.

1. Verify that the resistance at fuel gauge sender unit (main) terminals D and C is as indicated in the table according to the height of the float.

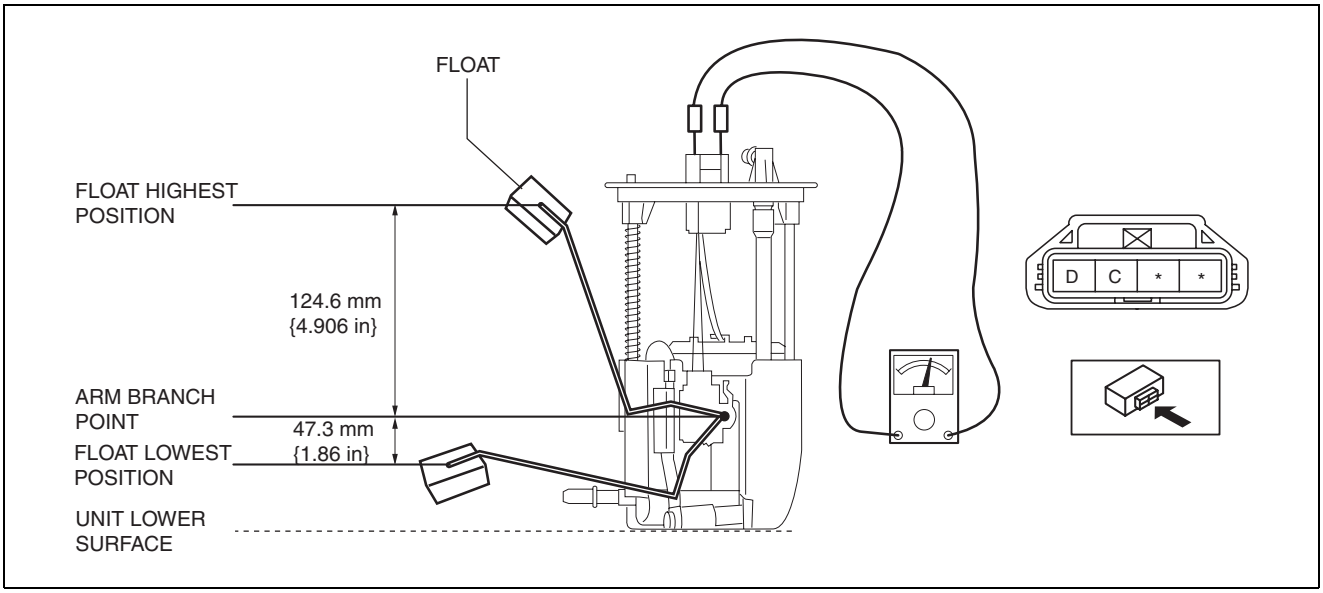

ac5wzw0000377

- If not as indicated in the table, replace the fuel gauge sender unit (main).

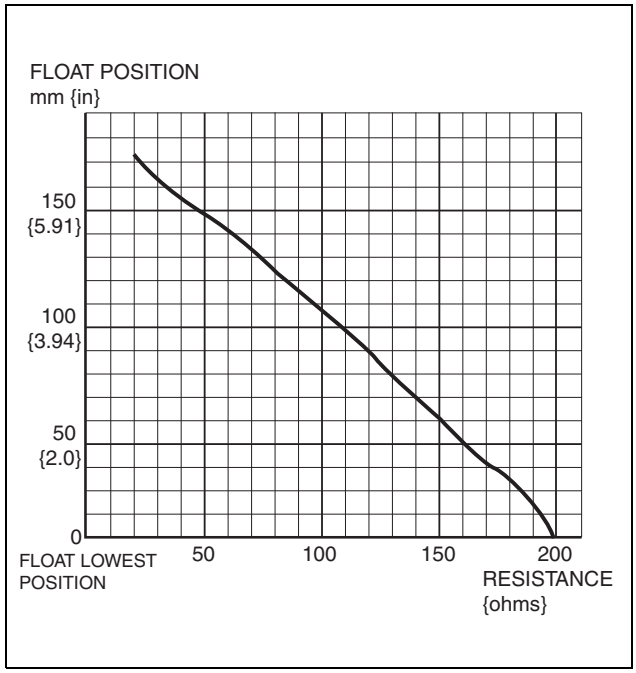

ac5wzw0000377

Fuel gauge sender unit (sub)

1. Disconnect the negative battery cable. (See 01-17A-11 NEGATIVE BATTERY CABLE DISCONNECTION/CONNECTION [SKYACTIV-G 2.0].)(See 01-17A-13 NEGATIVE BATTERY CABLE DISCONNECTION/CONNECTION [SKYACTIV-G 2.0 (WITHOUT i-stop)].)(See 01-17B-9 NEGATIVE BATTERY CABLE DISCONNECTION/CONNECTION [SKYACTIV-D 2.2].)
2. Remove the following parts:
   (1) Rear seat cushion (6:4 split-type seat) (See 09-13-76 REAR SEAT CUSHION REMOVAL/INSTALLATION.)
   (2) Rear seat under installation bolt (4:2:4 split-type seat) (See 09-13-56 REAR SEAT REMOVAL/INSTALLATION.)
   (3) Rear scuff plate (See 09-17-63 REAR SCUFF PLATE REMOVAL/INSTALLATION.)
   (4) Fuel gauge sender unit (sub). (See 09-22-27 FUEL GAUGE SENDER UNIT REMOVAL/INSTALLATION [4WD].)

INSTRUMENTATION/DRIVER INFO.

3. Verify that the resistance at fuel gauge sender unit (sub) terminals B and A is as indicated in the table according to the height of the float.

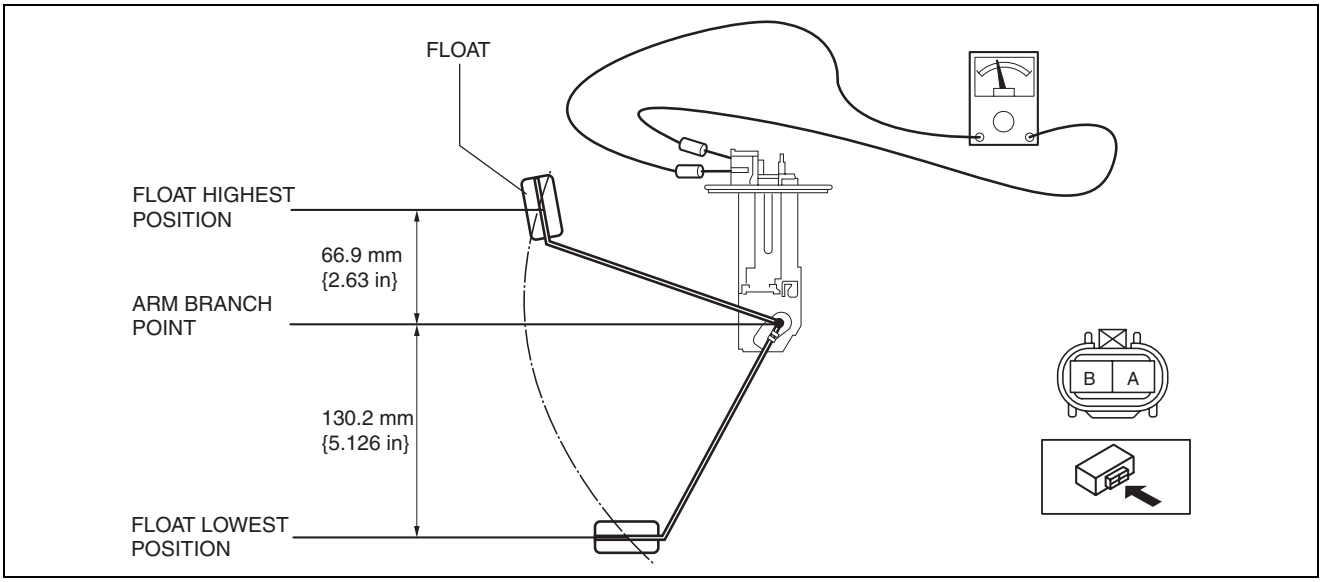

ac5wzw0000377

- If not as indicated in the table, replace the fuel gauge sender unit (sub).

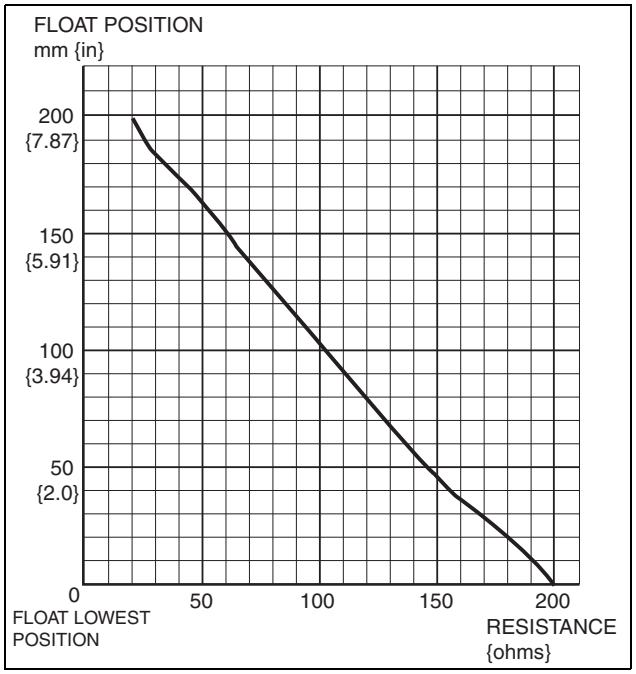

ac5wzw0000378

SKYACTIV-D 2.2
Fuel gauge sender unit (main)

1. Disconnect the negative battery cable. (See 01-17A-11 NEGATIVE BATTERY CABLE DISCONNECTION/CONNECTION [SKYACTIV-G 2.0].)(See 01-17A-13 NEGATIVE BATTERY CABLE DISCONNECTION/CONNECTION [SKYACTIV-G 2.0 (WITHOUT i-stop)].)(See 01-17B-9 NEGATIVE BATTERY CABLE DISCONNECTION/CONNECTION [SKYACTIV-D 2.2].)
2. Remove the following parts:
   (1) Rear seat cushion (6:4 split-type seat) (See 09-13-76 REAR SEAT CUSHION REMOVAL/INSTALLATION.)
   (2) Rear seat under installation bolt (4:2:4 split-type seat) (See 09-13-56 REAR SEAT REMOVAL/INSTALLATION.)
   (3) Rear scuff plate (See 09-17-63 REAR SCUFF PLATE REMOVAL/INSTALLATION.)
   (4) Fuel gauge sender unit (main). (See 09-22-27 FUEL GAUGE SENDER UNIT REMOVAL/INSTALLATION [4WD].)

INSTRUMENTATION/DRIVER INFO.

3. Verify that the resistance at fuel gauge sender unit (main) terminals A and C is as indicated in the table according to the height of the float.

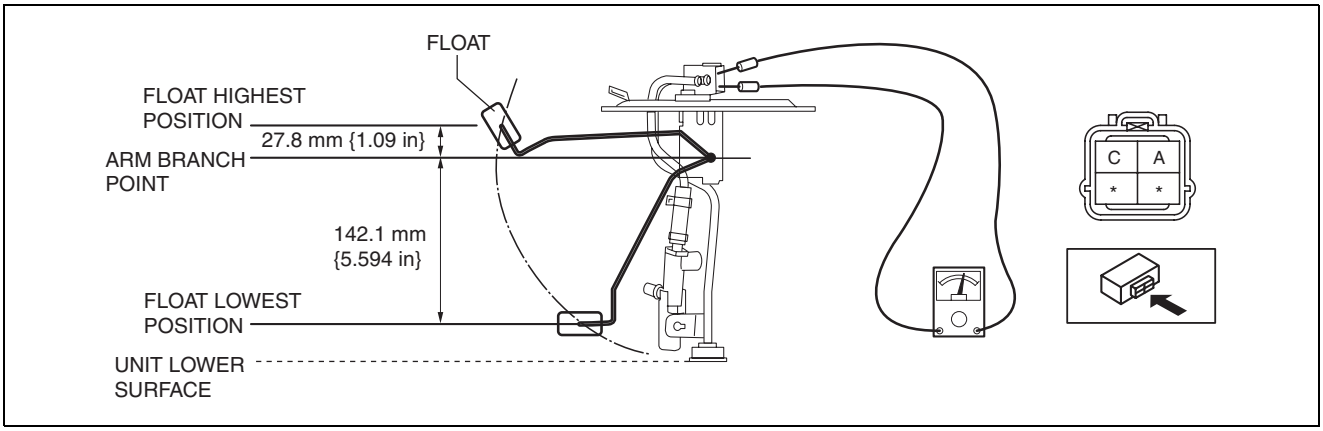

ac5wzw0000326

- If not as indicated in the table, replace the fuel gauge sender unit (main).

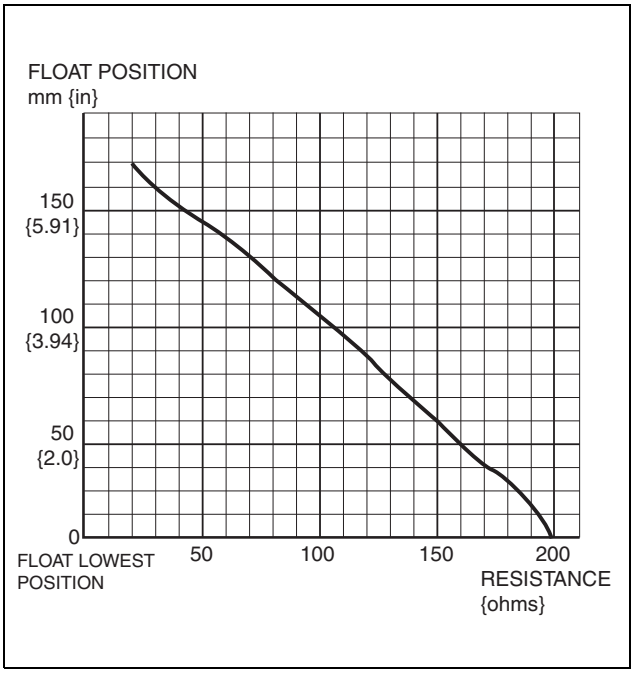

ac5wzw0000378

Fuel gauge sender unit (sub)

1. Disconnect the negative battery cable. (See 01-17A-11 NEGATIVE BATTERY CABLE DISCONNECTION/CONNECTION [SKYACTIV-G 2.0].)(See 01-17A-13 NEGATIVE BATTERY CABLE DISCONNECTION/CONNECTION [SKYACTIV-G 2.0 (WITHOUT i-stop)].)(See 01-17B-9 NEGATIVE BATTERY CABLE DISCONNECTION/CONNECTION [SKYACTIV-D 2.2].)
2. Remove the following parts:
   (1) Rear seat cushion (6:4 split-type seat) (See 09-13-76 REAR SEAT CUSHION REMOVAL/INSTALLATION.)
   (2) Rear seat under installation bolt (4:2:4 split-type seat) (See 09-13-56 REAR SEAT REMOVAL/INSTALLATION.)
   (3) Rear scuff plate (See 09-17-63 REAR SCUFF PLATE REMOVAL/INSTALLATION.)
   (4) Fuel gauge sender unit (sub). (See 09-22-27 FUEL GAUGE SENDER UNIT REMOVAL/INSTALLATION [4WD].)

INSTRUMENTATION/DRIVER INFO.

3. Verify that the resistance at fuel gauge sender unit (sub) terminals B and A is as indicated in the table according to the height of the float.

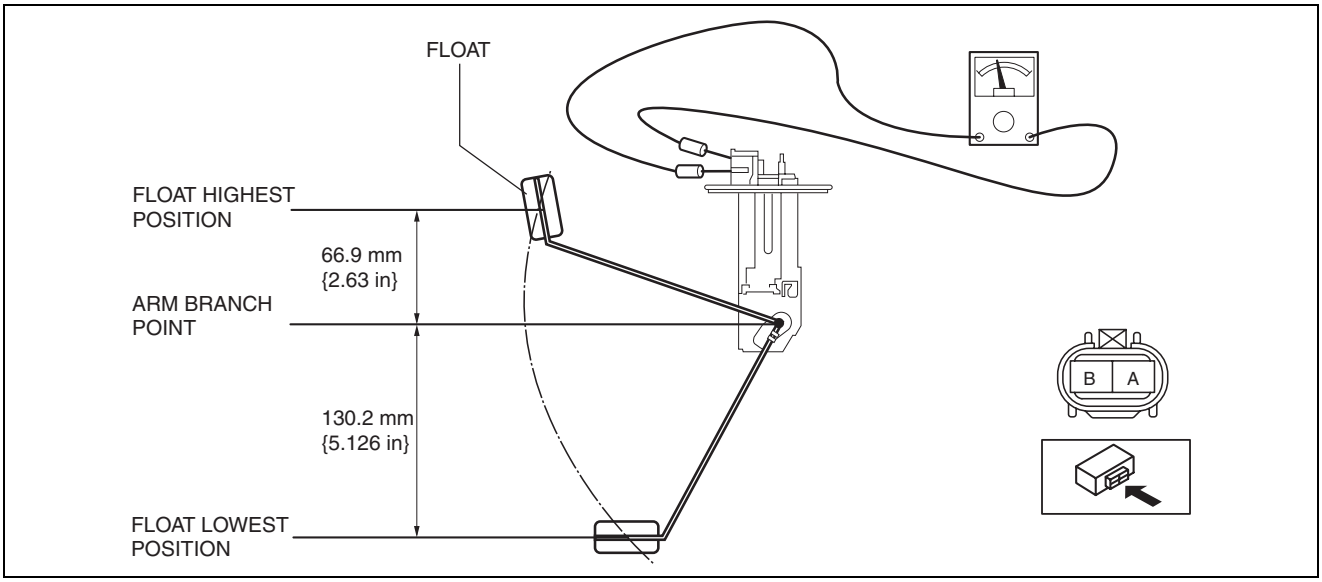

ac5wzw0000377

- If not as indicated in the table, replace the fuel gauge sender unit (sub).

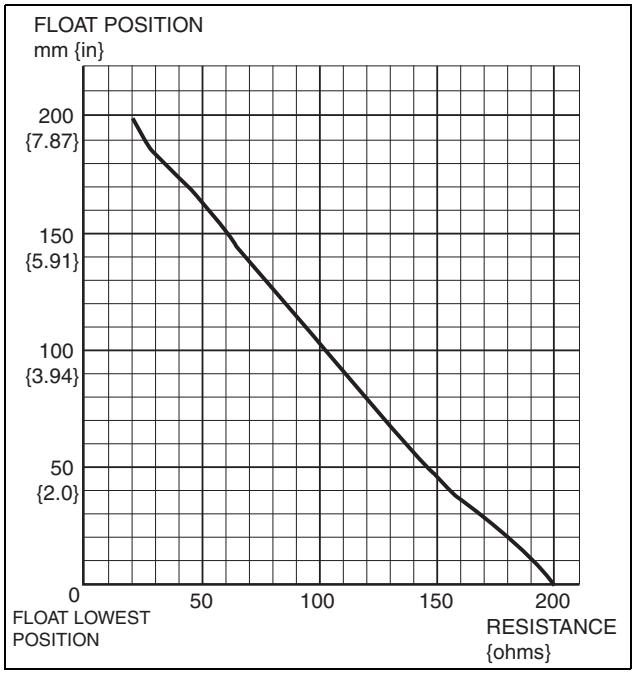

ac5wzw0000378

OIL PRESSURE SWITCH REMOVAL/INSTALLATION

id092200029100

Note

- For the oil pressure switch removal/installation, refer to the engine oil solenoid valve removal installation because the oil pressure switch is installed to the engine oil solenoid valve. (See 01-11A-10 ENGINE OIL SOLENOID VALVE REMOVAL/INSTALLATION [SKYACTIV-G 2.0].)

OIL PRESSURE SWITCH INSPECTION

id092200012500

1. Switch the ignition ON (engine off) and verify that the oil pressure warning light is illuminated.
2. Start the engine and verify that the oil pressure warning light turns off.
   - If the oil pressure warning light is not illuminated or remains illuminated, inspect the wiring harness between the oil pressure switch and the PCM and CAN line between the PCM and the instrument cluster.
     — If the related wiring harnesses are not malfunctioning, inspect the oil pressure. (See 01-11A-10 ENGINE OIL SOLENOID VALVE REMOVAL/INSTALLATION [SKYACTIV-G 2.0].)
       - If the oil pressure is normal, replace the oil pressure switch.

INSTRUMENTATION/DRIVER INFO.

HORN REMOVAL/INSTALLATION

id092200012600

1. Disconnect the negative battery cable. (See 01-17A-11 NEGATIVE BATTERY CABLE DISCONNECTION/CONNECTION [SKYACTIV-G 2.0].)(See 01-17A-13 NEGATIVE BATTERY CABLE DISCONNECTION/CONNECTION [SKYACTIV-G 2.0 (WITHOUT i-stop)].)(See 01-17B-9 NEGATIVE BATTERY CABLE DISCONNECTION/CONNECTION [SKYACTIV-D 2.2].
2. Remove the front bumper. (See 09-10-10 FRONT BUMPER REMOVAL/INSTALLATION.)
3. Disconnect the connector.

TYPE A

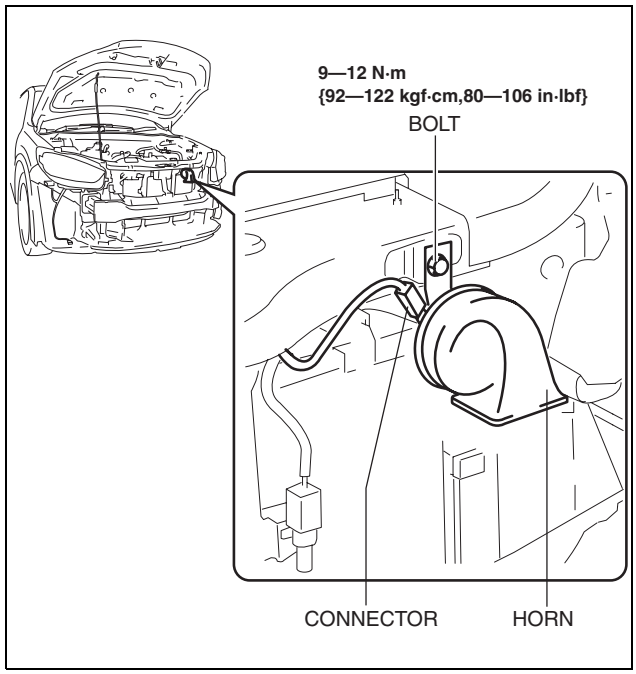

ac5wzw0000010

TYPE B

4. Remove the bolt.
5. Remove the horn.
6. Install in the reverse order of removal.

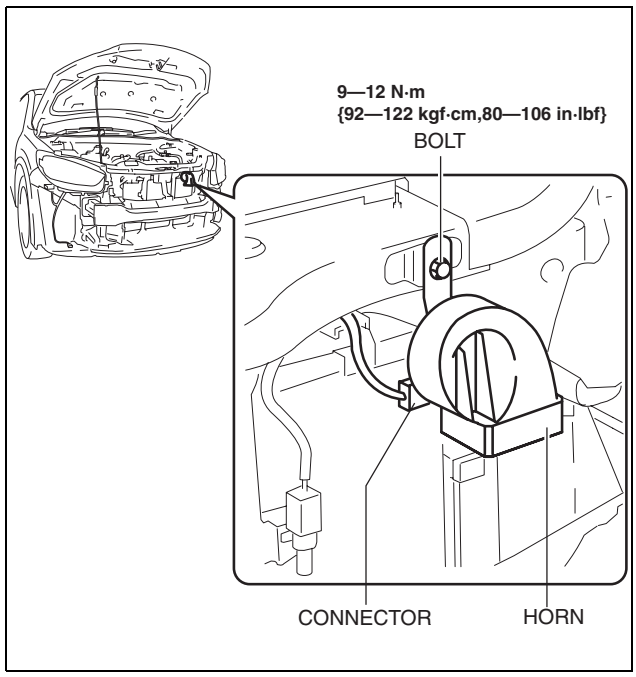

ac5wzw0000010

HORN INSPECTION

id092200012700

1. Disconnect the negative battery cable. (See 01-17A-11 NEGATIVE BATTERY CABLE DISCONNECTION/CONNECTION [SKYACTIV-G 2.0].)(See 01-17A-13 NEGATIVE BATTERY CABLE DISCONNECTION/CONNECTION [SKYACTIV-G 2.0 (WITHOUT i-stop)].)(See 01-17B-9 NEGATIVE BATTERY CABLE DISCONNECTION/CONNECTION [SKYACTIV-D 2.2].)

INSTRUMENTATION/DRIVER INFO.

2. Remove the front bumper. (See 09-10-10 FRONT BUMPER REMOVAL/INSTALLATION.)
3. Remove the horn. (See 09-22-41 HORN INSPECTION.)
4. Apply battery positive voltage to horn terminal A, and connect the horn retaining bolt to ground as shown in the figure, and then verify that the horn sounds.

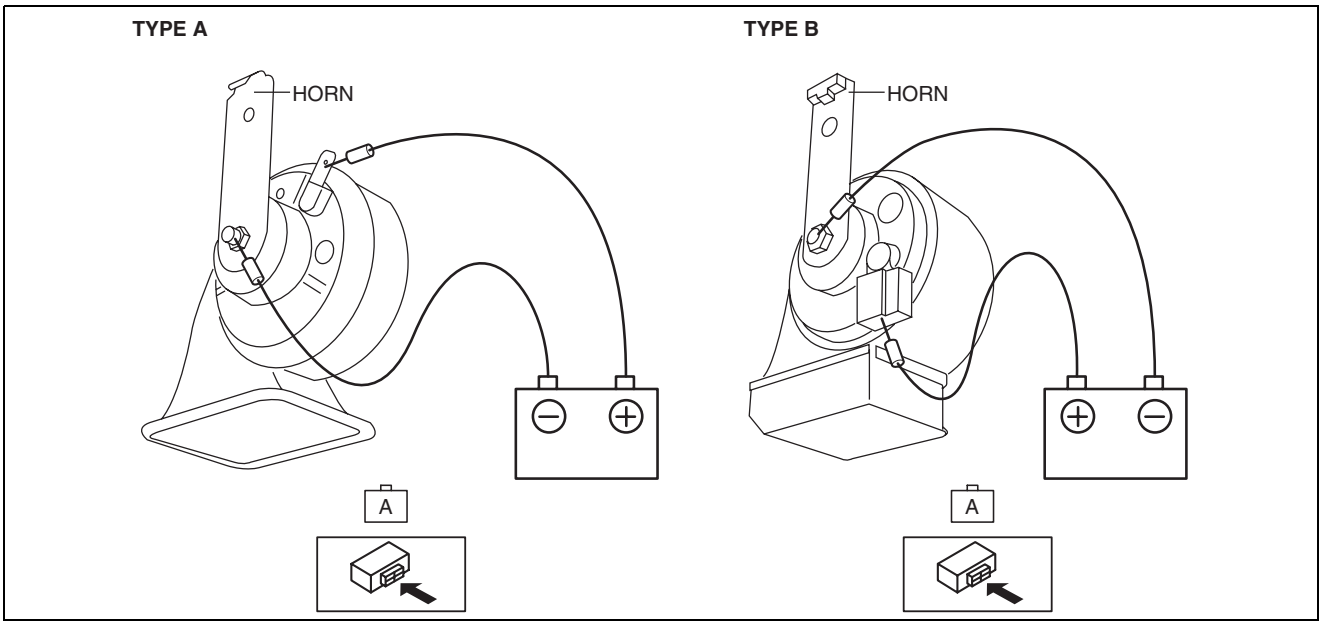

ac5jjw00000655

- If the horn does not sound, replace the horn.

FRONT ULTRASONIC SENSOR REMOVAL/INSTALLATION

id092200030800

Front Ultrasonic Sensor

1. Disconnect the negative battery cable. (See 01-17A-11 NEGATIVE BATTERY CABLE DISCONNECTION/CONNECTION [SKYACTIV-G 2.0].)(See 01-17A-13 NEGATIVE BATTERY CABLE DISCONNECTION/CONNECTION [SKYACTIV-G 2.0 (WITHOUT i-stop)].)(See 01-17B-9 NEGATIVE BATTERY CABLE DISCONNECTION/CONNECTION [SKYACTIV-D 2.2].)
2. Remove the front bumper. (See 09-10-10 FRONT BUMPER REMOVAL/INSTALLATION.)
3. Disconnect the connector.

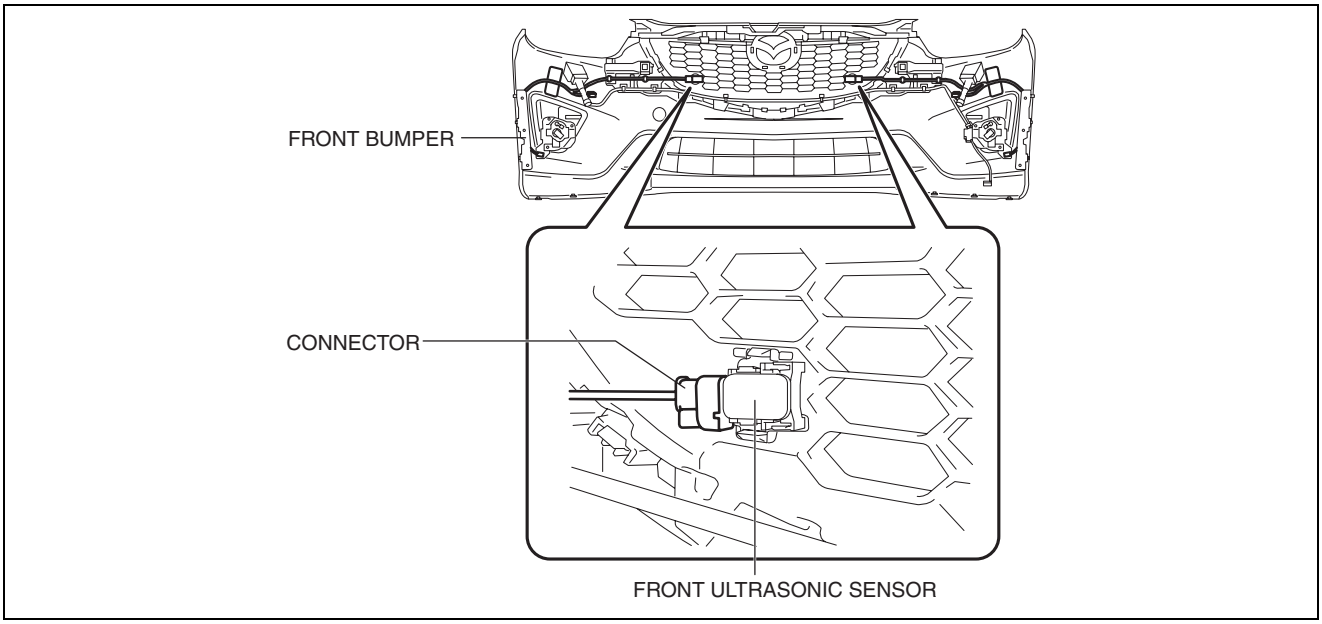

ac5jjw00000485

INSTRUMENTATION/DRIVER INFO.

4. Pull the front ultrasonic sensor in the direction of the arrow (2) shown in the figure while pressing the front ultrasonic sensor tab in the direction of the arrow (1) shown in the figure, detach the front ultrasonic sensor tab and bracket, and remove the front ultrasonic sensor from the front bumper.

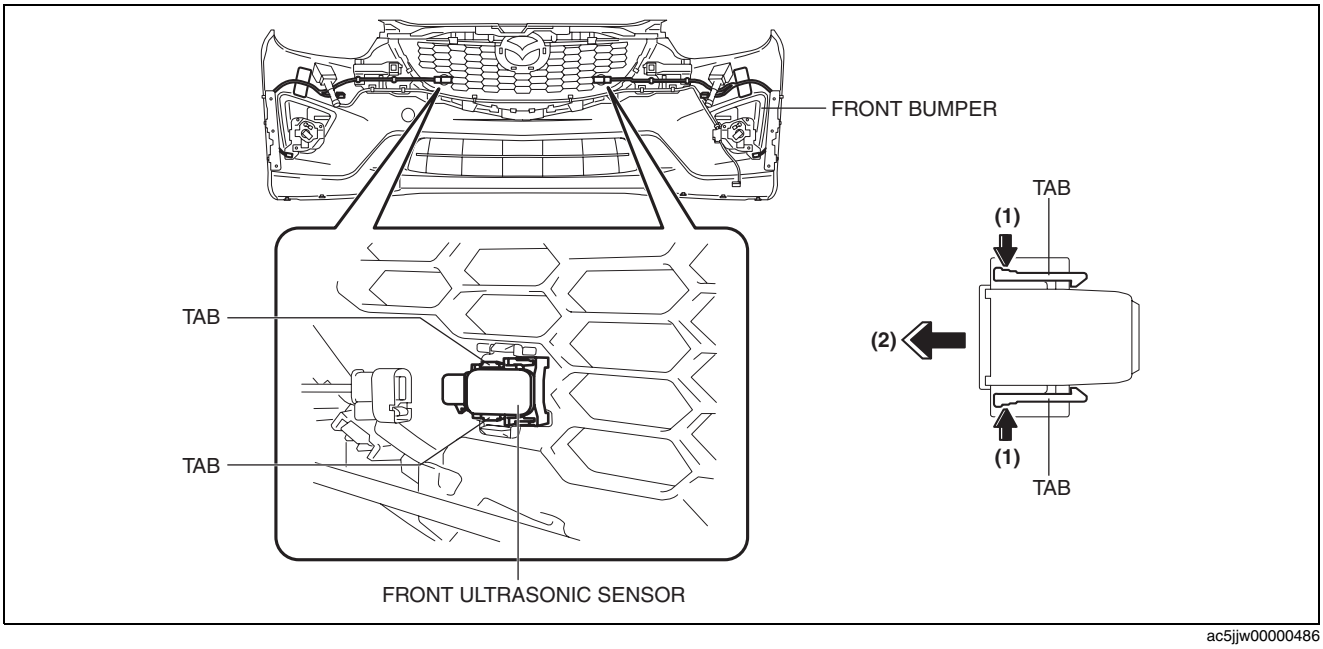

ac5jjw00000486

INSTRUMENTATION/DRIVER INFO.

5. Pull the bracket in the direction of the arrow (2) shown in the figure while pressing the bracket tab in the direction of the arrow (1) shown in the figure, detach the bracket tab and front bumper, and remove the bracket from the front bumper.

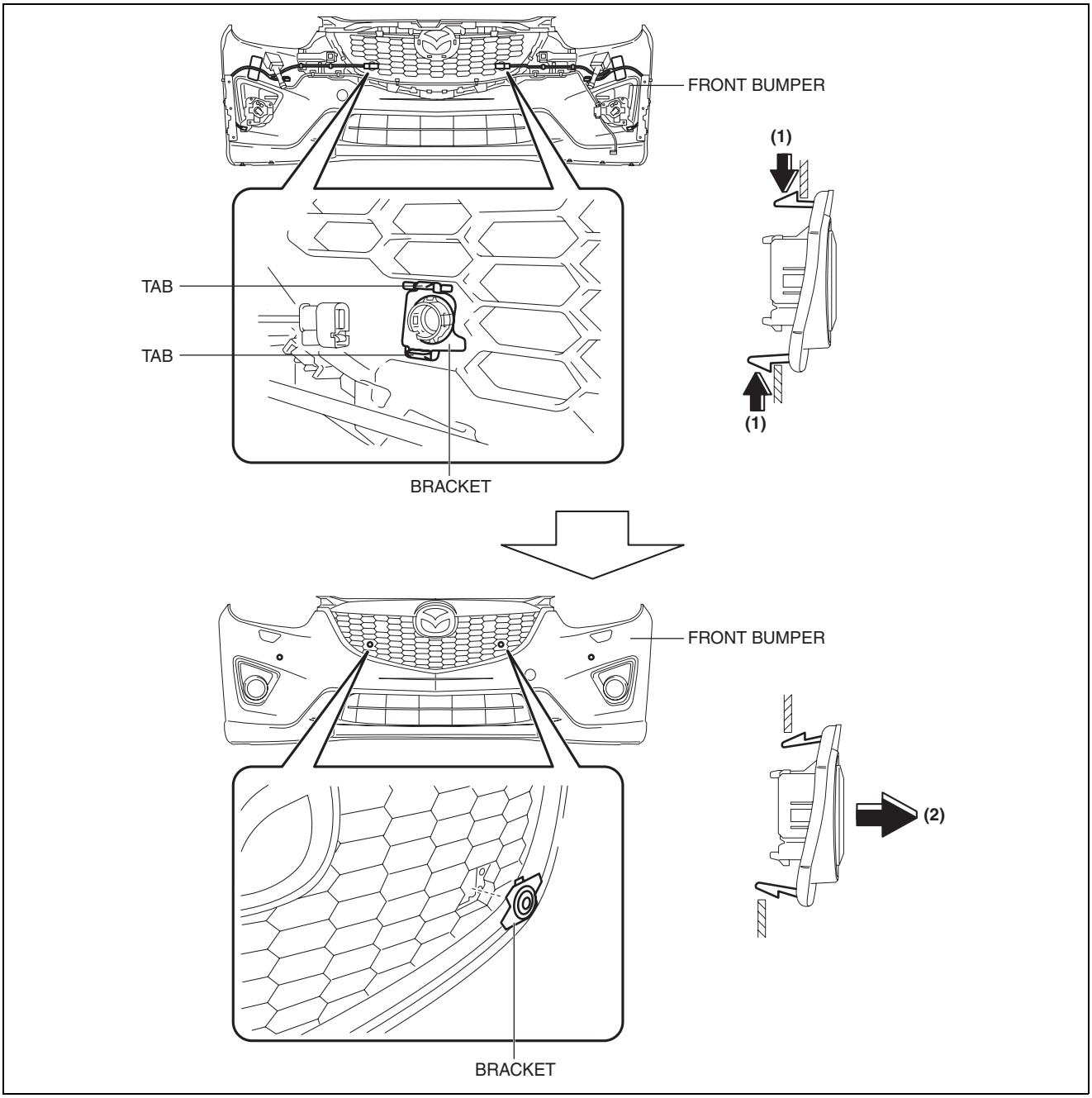

ac5jjw00000487

6. Install in the reverse order of removal.

Front Corner Ultrasonic Sensor

1. Disconnect the negative battery cable. (See 01-17A-11 NEGATIVE BATTERY CABLE DISCONNECTION/CONNECTION [SKYACTIV-G 2.0].)(See 01-17A-13 NEGATIVE BATTERY CABLE DISCONNECTION/CONNECTION [SKYACTIV-G 2.0 (WITHOUT i-stop)].)(See 01-17B-9 NEGATIVE BATTERY CABLE DISCONNECTION/CONNECTION [SKYACTIV-D 2.2].)
2. Remove the front bumper. (See 09-10-10 FRONT BUMPER REMOVAL/INSTALLATION.)

3. Disconnect the connector.

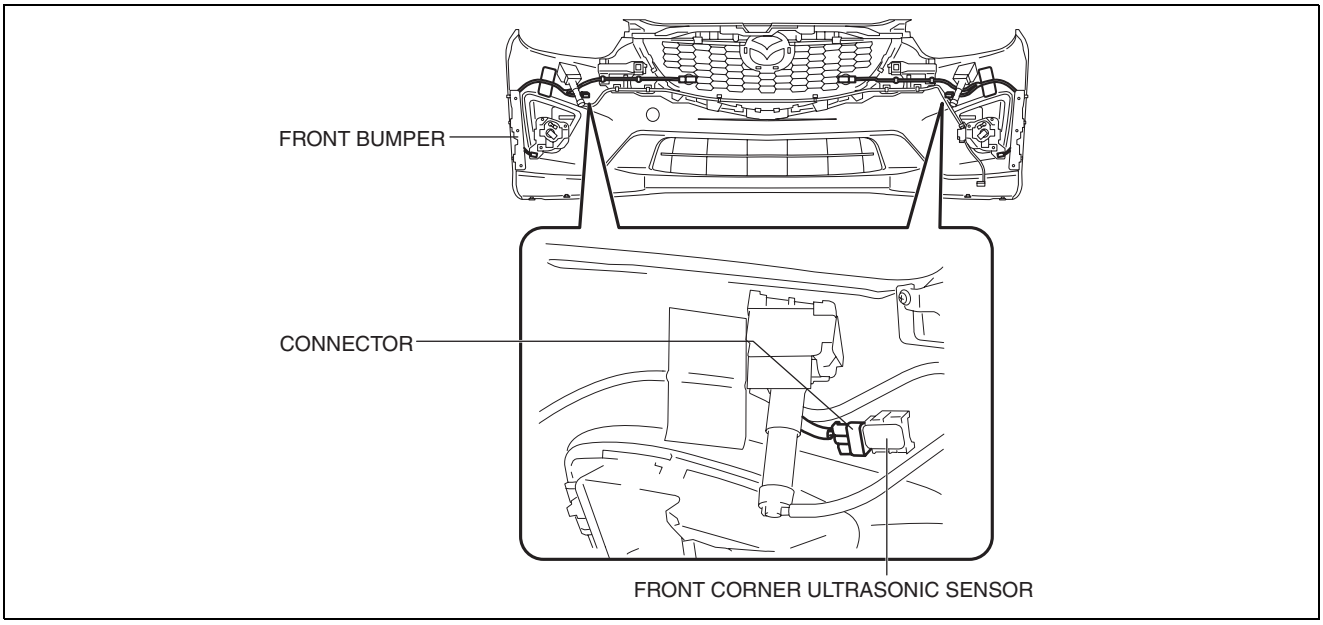

ac5wzw0000326

4. Pull the front corner ultrasonic sensor in the direction of the arrow (2) shown in the figure while pressing the front corner ultrasonic sensor tab in the direction of the arrow (1) shown in the figure, detach the front corner ultrasonic sensor tab and bracket, and remove the front corner ultrasonic sensor from the front bumper.

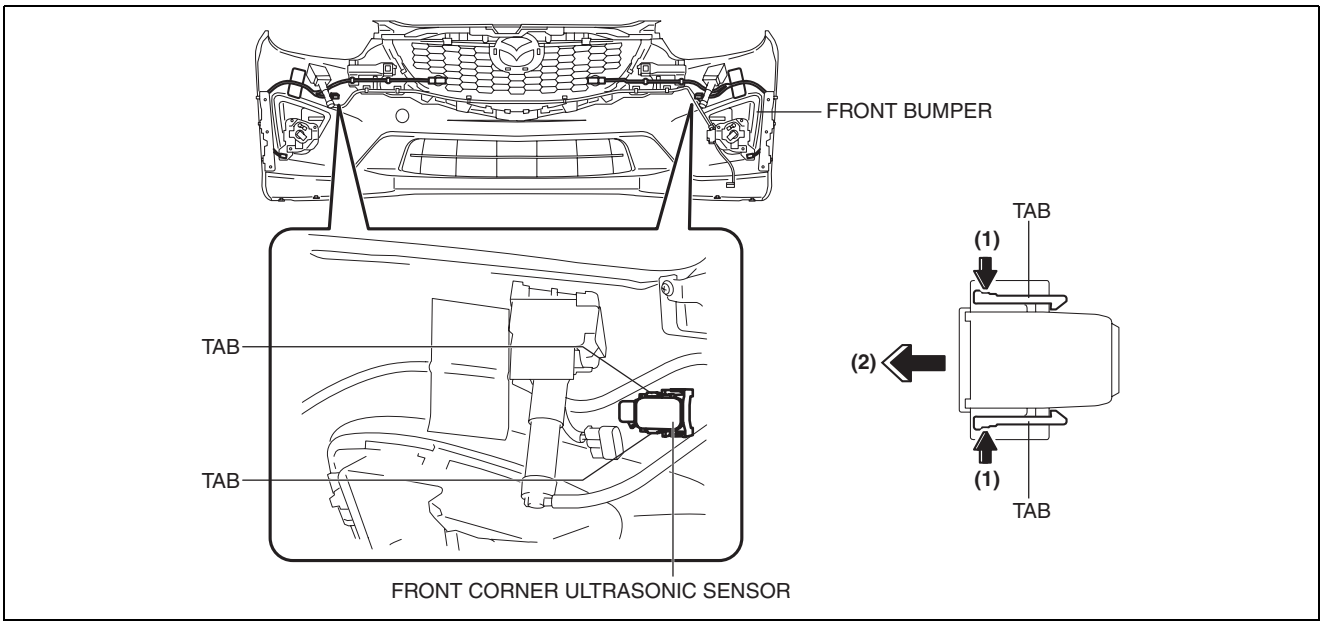

ac5wzw0000326

INSTRUMENTATION/DRIVER INFO.

5. Pull the bracket in the direction of the arrow (2) shown in the figure while pressing the bracket tab in the direction of the arrow (1) shown in the figure, detach the bracket tab and front bumper, and remove the bracket from the front bumper.

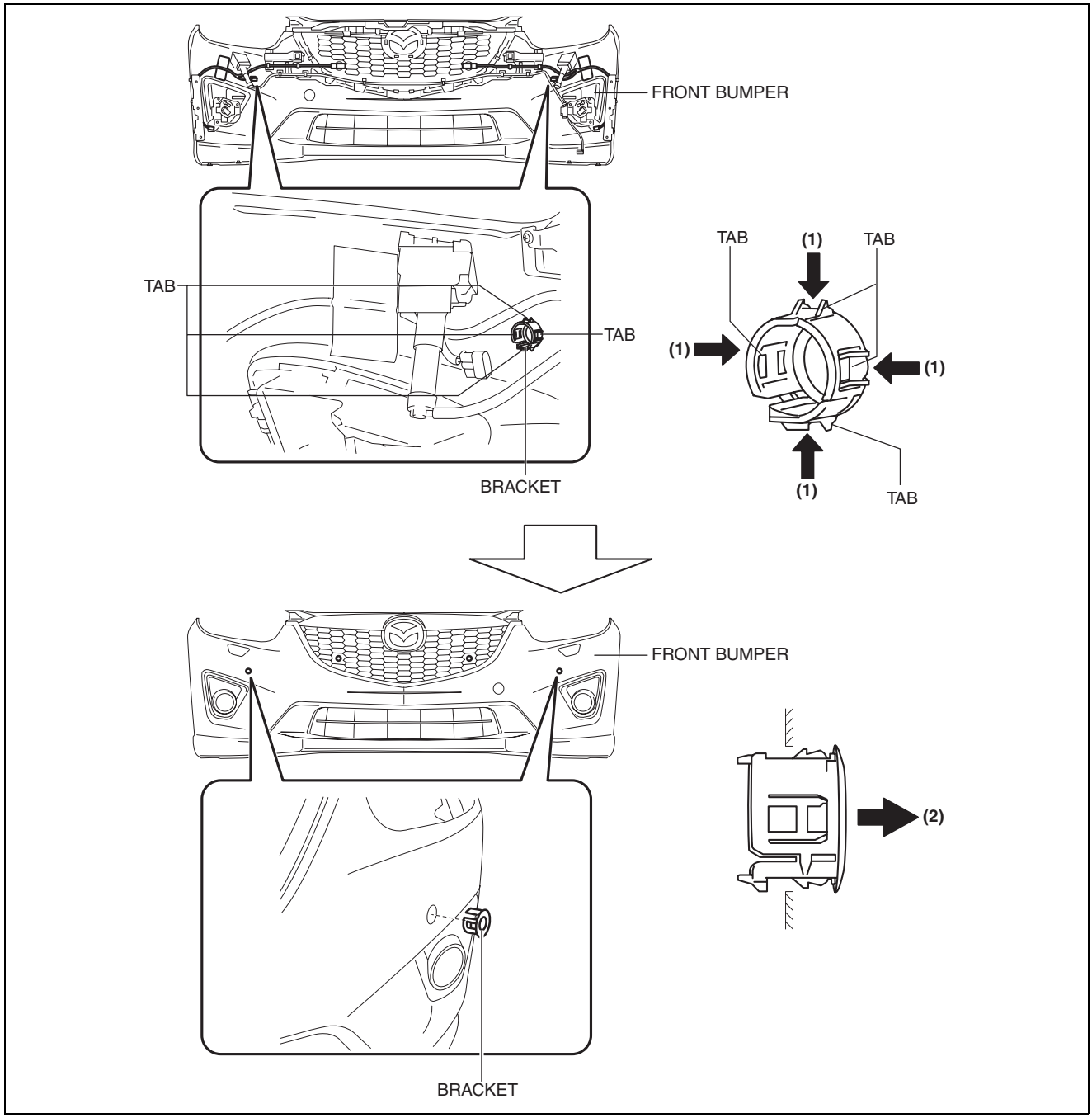

ac5jjw00000644

6. Install in the reverse order of removal.

REAR ULTRASONIC SENSOR REMOVAL/INSTALLATION

id092200030900

Rear Ultrasonic Sensor

1. Disconnect the negative battery cable. (See 01-17A-11 NEGATIVE BATTERY CABLE DISCONNECTION/CONNECTION [SKYACTIV-G 2.0].)(See 01-17A-13 NEGATIVE BATTERY CABLE DISCONNECTION/CONNECTION [SKYACTIV-G 2.0 (WITHOUT i-stop)].)(See 01-17B-9 NEGATIVE BATTERY CABLE DISCONNECTION/CONNECTION [SKYACTIV-D 2.2].)
2. Remove the rear combination light. (See 09-18-54 REAR COMBINATION LIGHT REMOVAL/INSTALLATION.)
3. Remove the rear bumper. (See 09-10-24 REAR BUMPER REMOVAL/INSTALLATION.)

INSTRUMENTATION/DRIVER INFO.

4. Disconnect the connector.

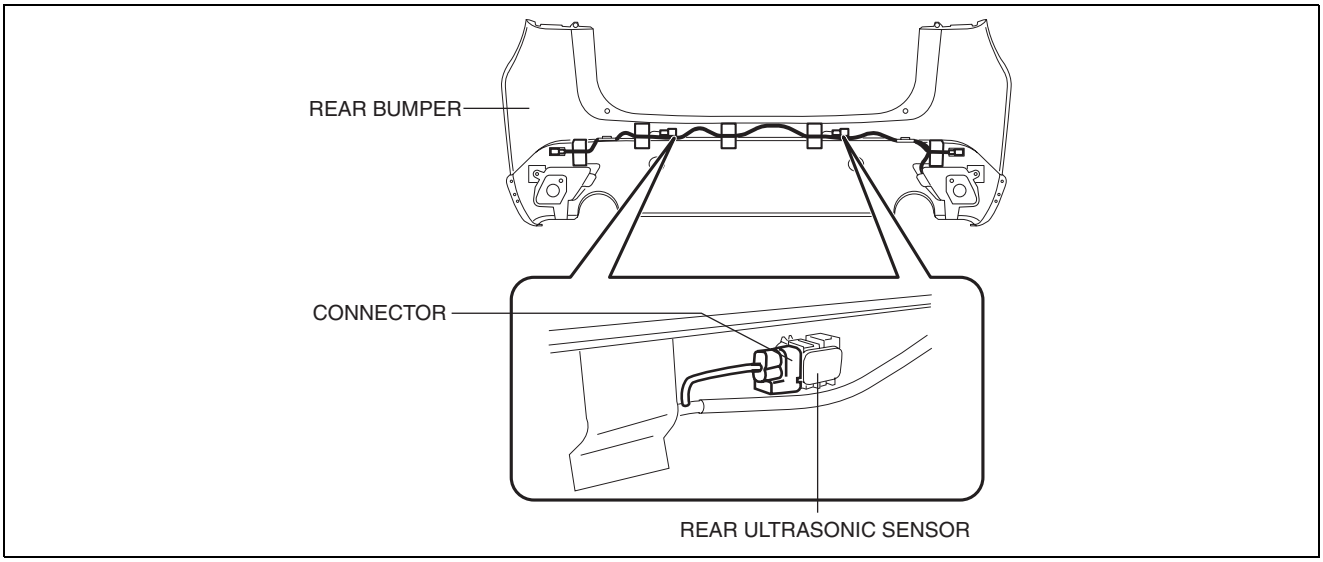

ac5jjw00000513

5. Pull the rear ultrasonic sensor in the direction of the arrow (2) shown in the figure while pressing the rear ultrasonic sensor tab in the direction of the arrow (1) shown in the figure, detach the rear ultrasonic sensor tab and bracket, and then remove the rear ultrasonic sensor from the rear bumper.

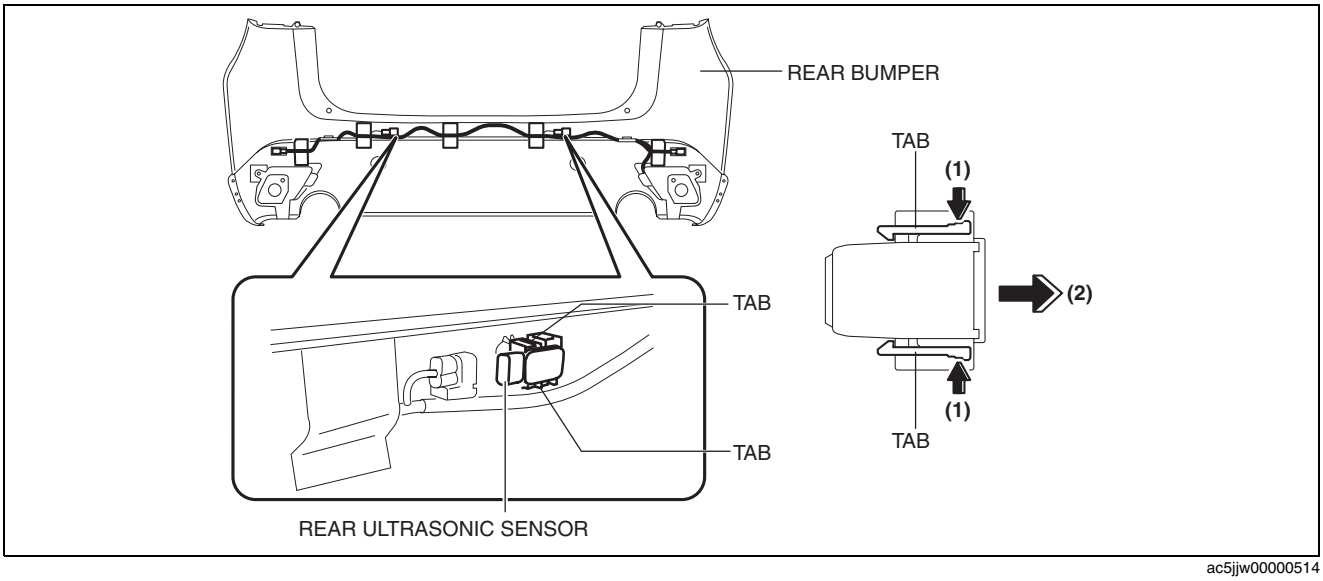

ac5jjw00000514

6. Pull the bracket in the direction of the arrow (2) shown in the figure while pressing the bracket tab in the direction of the arrow (1) shown in the figure, detach the bracket tab and rear bumper, and then remove the bracket from the rear bumper.

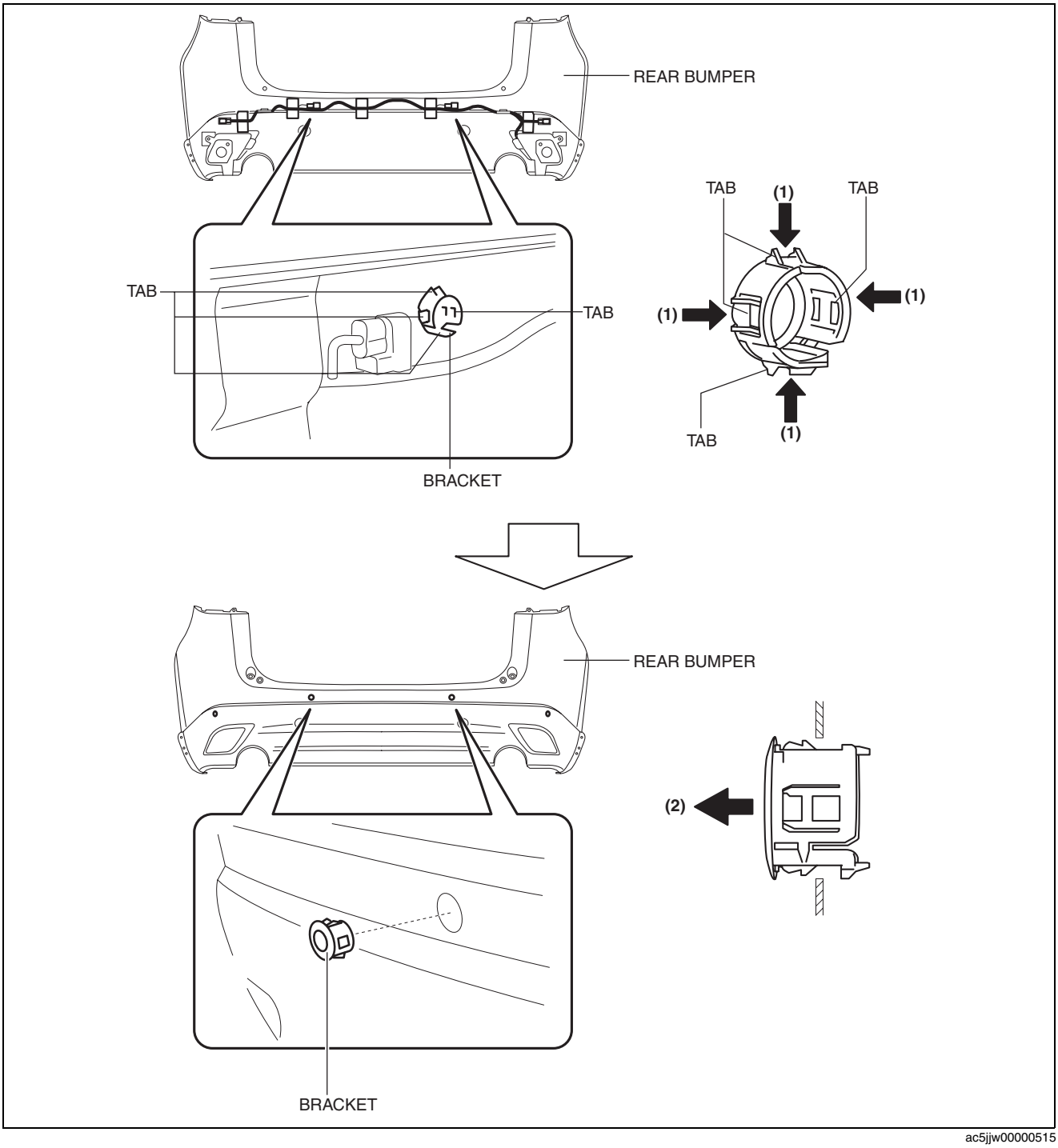

ac5jjw00000515

7. Install in the reverse order of removal.

Rear Corner Ultrasonic Sensor

1. Disconnect the negative battery cable. (See 01-17A-11 NEGATIVE BATTERY CABLE DISCONNECTION/CONNECTION [SKYACTIV-G 2.0].)(See 01-17A-13 NEGATIVE BATTERY CABLE DISCONNECTION/CONNECTION [SKYACTIV-G 2.0 (WITHOUT i-stop)].)(See 01-17B-9 NEGATIVE BATTERY CABLE DISCONNECTION/CONNECTION [SKYACTIV-D 2.2].)
2. Remove the rear combination light. (See 09-18-54 REAR COMBINATION LIGHT REMOVAL/INSTALLATION.)
3. Remove the rear bumper. (See 09-10-24 REAR BUMPER REMOVAL/INSTALLATION.)

INSTRUMENTATION/DRIVER INFO.

4. Disconnect the connector.

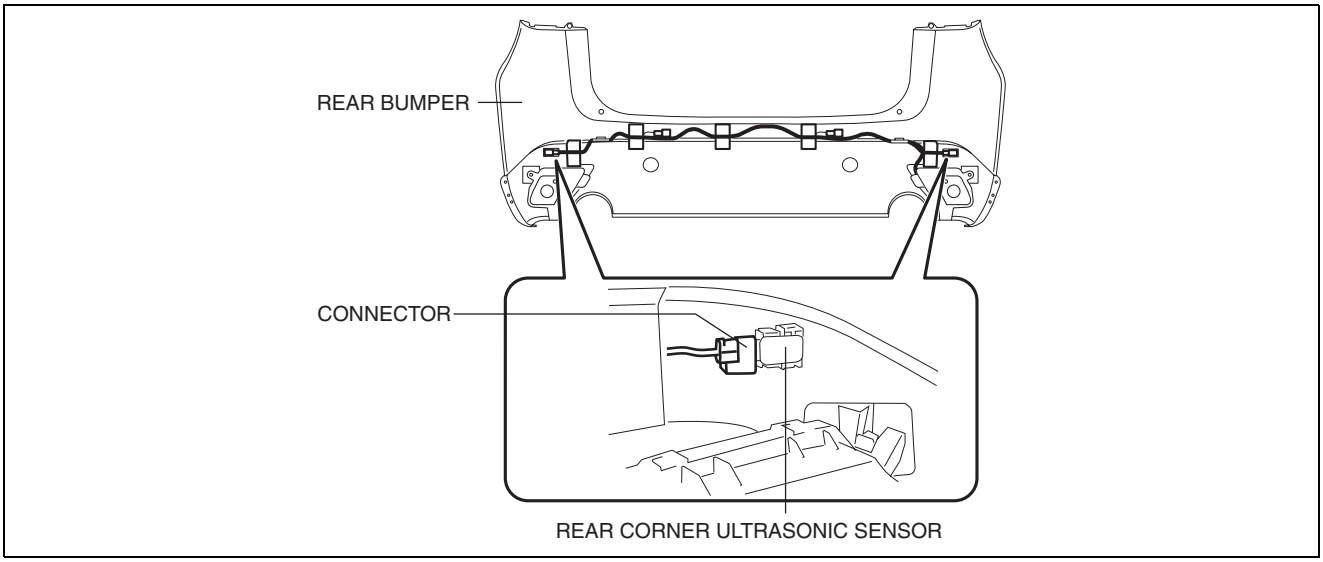

ac5jjw00000516

5. Pull the rear corner ultrasonic sensor in the direction of the arrow (2) shown in the figure while pressing the rear corner ultrasonic sensor tab in the direction of the arrow (1) shown in the figure, detach the rear corner ultrasonic sensor tab and bracket, and then remove the rear corner ultrasonic sensor from the rear bumper.

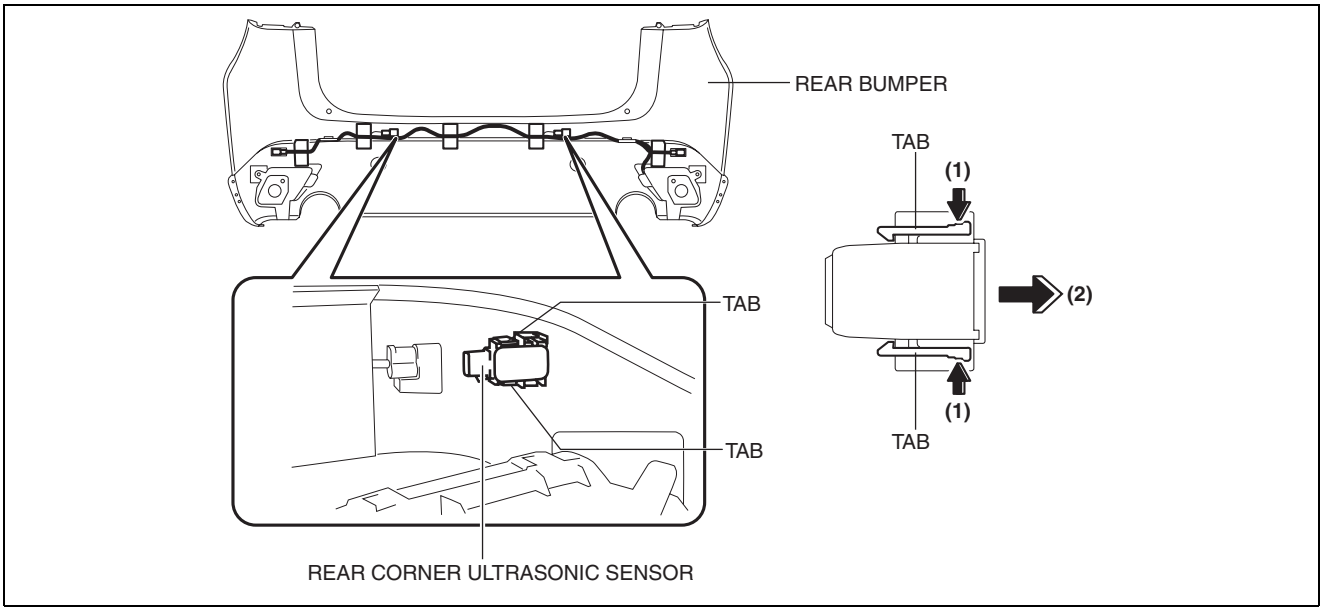

ac5jjw00000517

INSTRUMENTATION/DRIVER INFO.

6. Pull the bracket in the direction of the arrow (2) shown in the figure while pressing the bracket tab in the direction of the arrow (1) shown in the figure, detach the bracket tab and rear bumper, and then remove the bracket from the rear bumper.

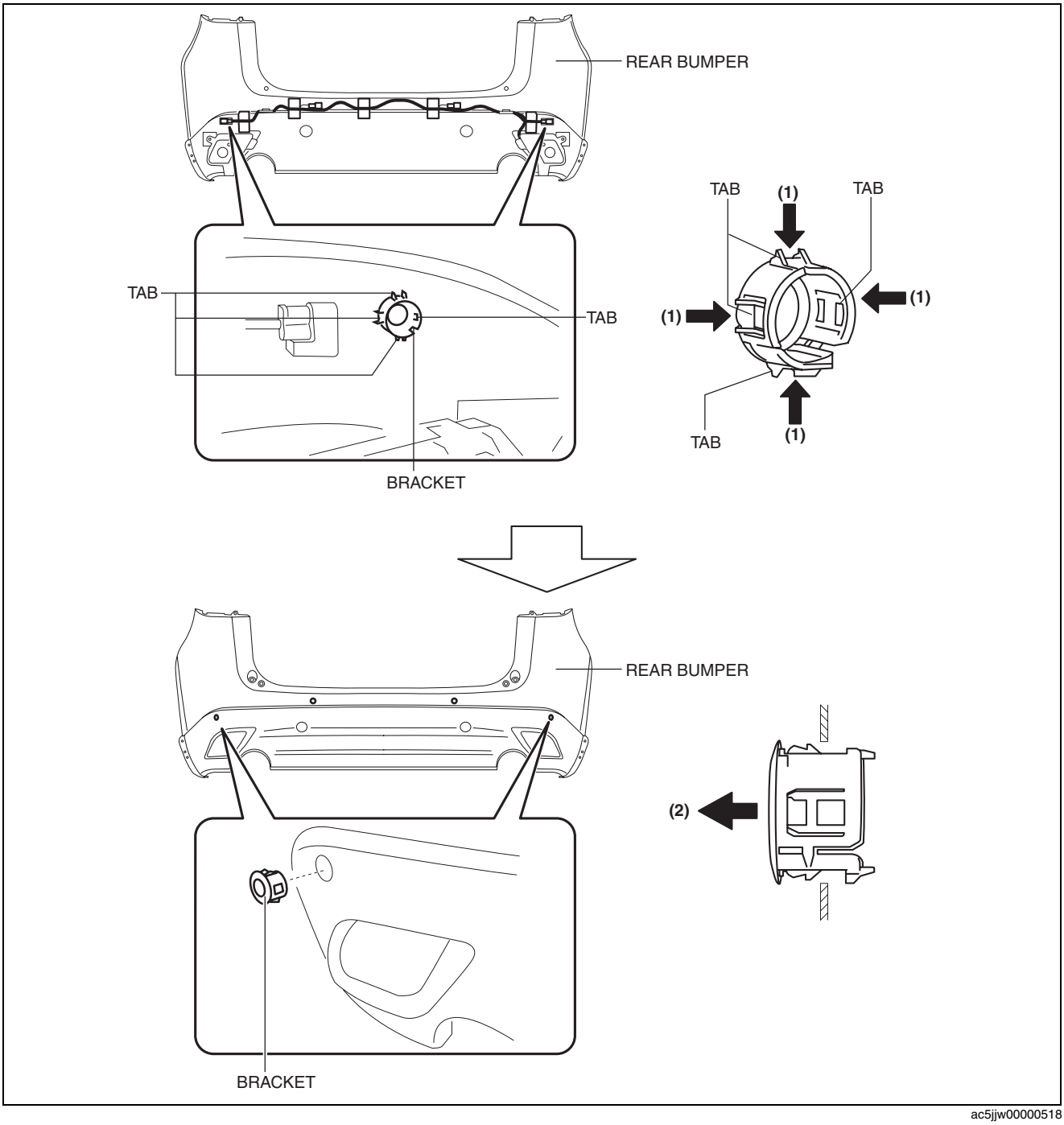

ac5jjw00000518

7. Install in the reverse order of removal.

FRONT ULTRASONIC SENSOR SHORT-CORD REMOVAL/INSTALLATION

id092200031000

1. Disconnect the negative battery cable. (See 01-17A-11 NEGATIVE BATTERY CABLE DISCONNECTION/CONNECTION [SKYACTIV-G 2.0].)(See 01-17A-13 NEGATIVE BATTERY CABLE DISCONNECTION/CONNECTION [SKYACTIV-G 2.0 (WITHOUT i-stop)].)(See 01-17B-9 NEGATIVE BATTERY CABLE DISCONNECTION/CONNECTION [SKYACTIV-D 2.2].)
2. Remove the front bumper. (See 09-10-10 FRONT BUMPER REMOVAL/INSTALLATION.)

INSTRUMENTATION/DRIVER INFO.

3. Peel off the tape securing the front ultrasonic sensor short-cord from the front bumper.

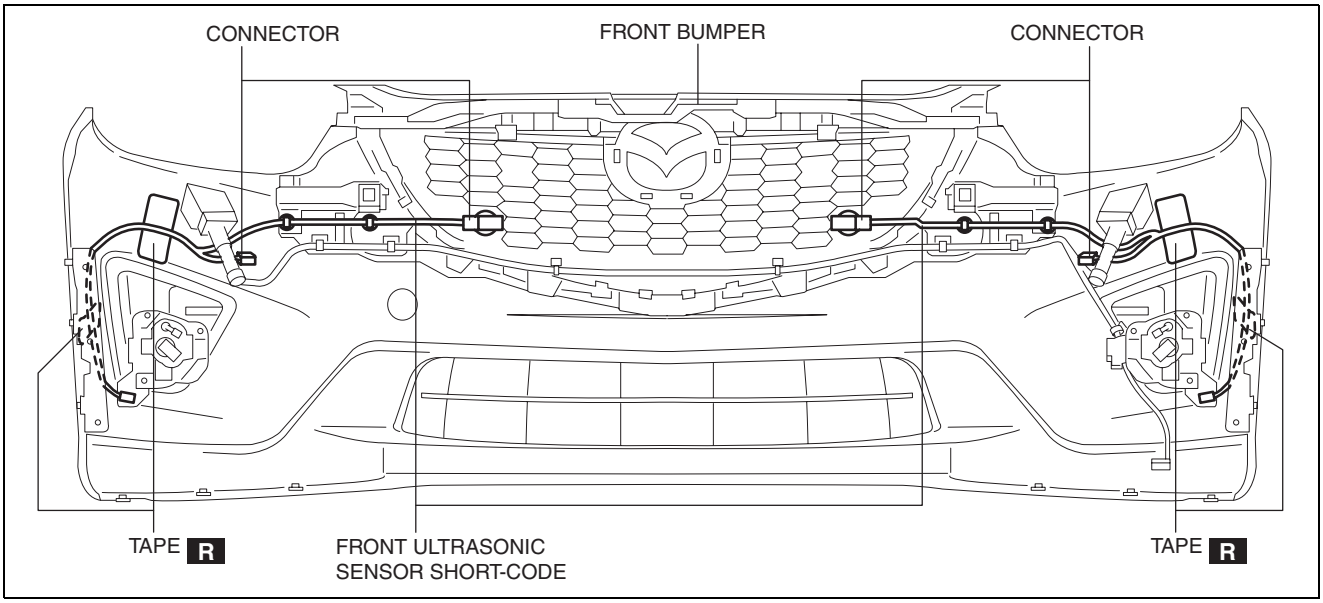

ac5jjw00000519

4. Disconnect the connector from the front ultrasonic sensor.
5. Pull clip A in the direction of the arrow (2) shown in the figure while pressing the tab of clip A in the direction of the arrow (1) shown in the figure, and detach the tab of clip A and front bumper.

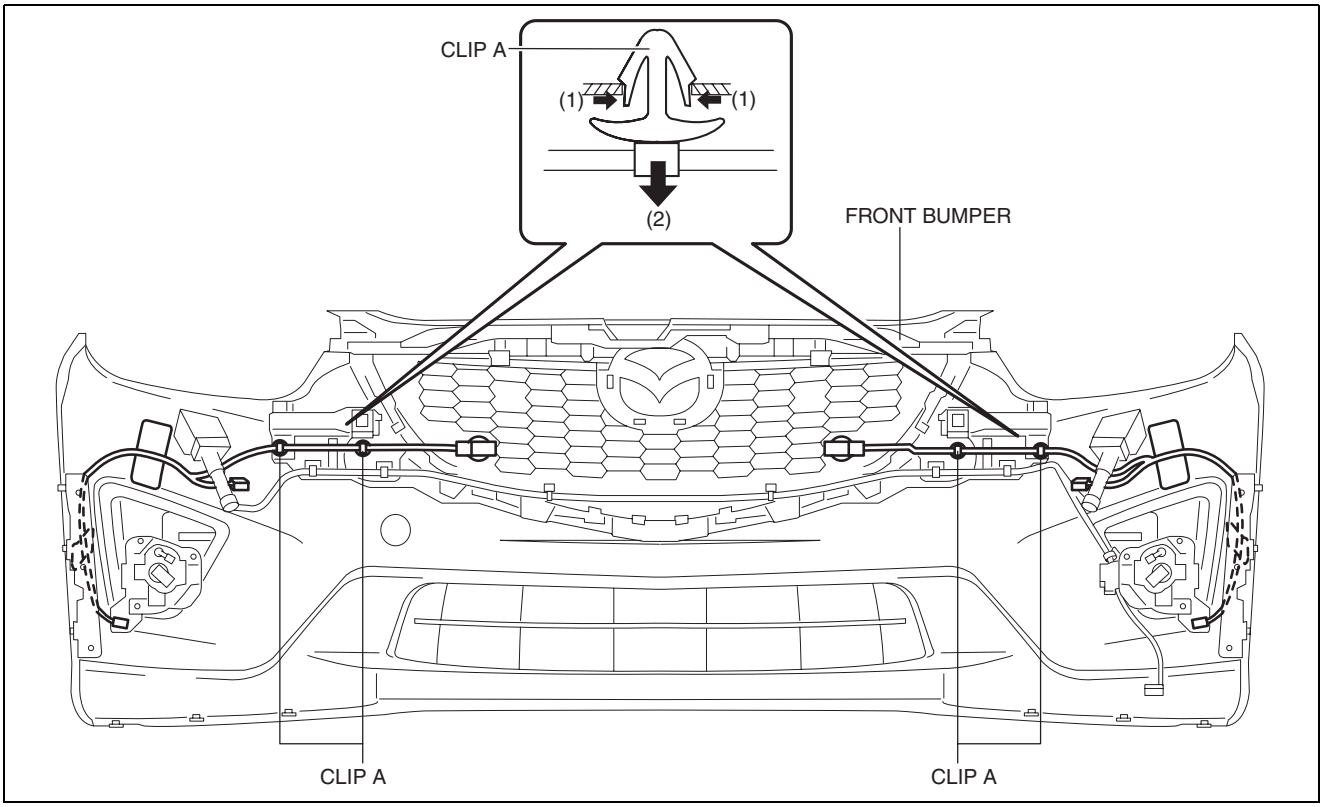

ac5jjw00000660

INSTRUMENTATION/DRIVER INFO.

6. Pull clip B in the direction of the arrow (4) shown in the figure while pressing the tab of clip B in the direction of the arrow (3) shown in the figure, detach the tab of clip B and front bumper, and remove the front ultrasonic sensor short-cord.

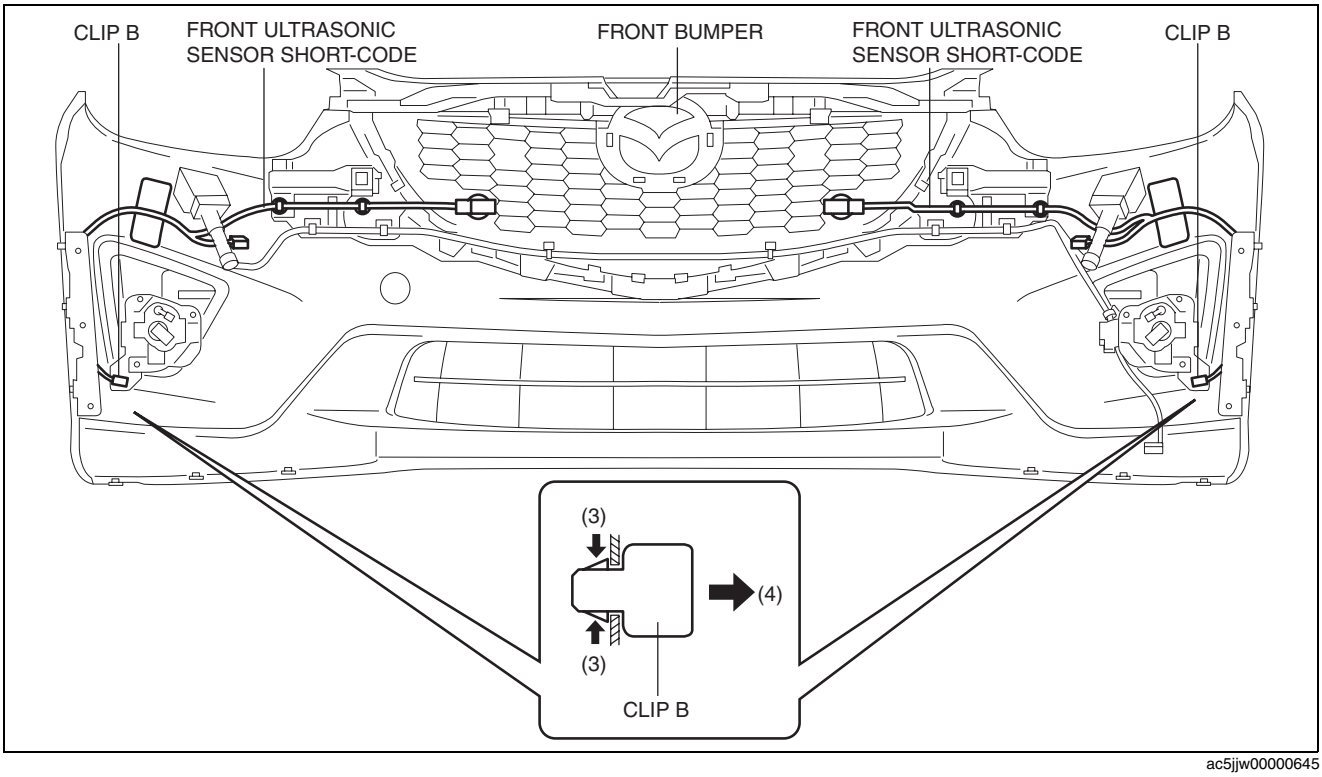

ac5jjw00000645

7. Install in the reverse order of removal. (See 09-22-53 Front Ultrasonic Sensor Short Cord Installation Note.)

INSTRUMENTATION/DRIVER INFO.

Front Ultrasonic Sensor Short Cord Installation Note

1. Align the height of the front ultrasonic sensor short-cord with the center of the tape adhering position marking on the front bumper.

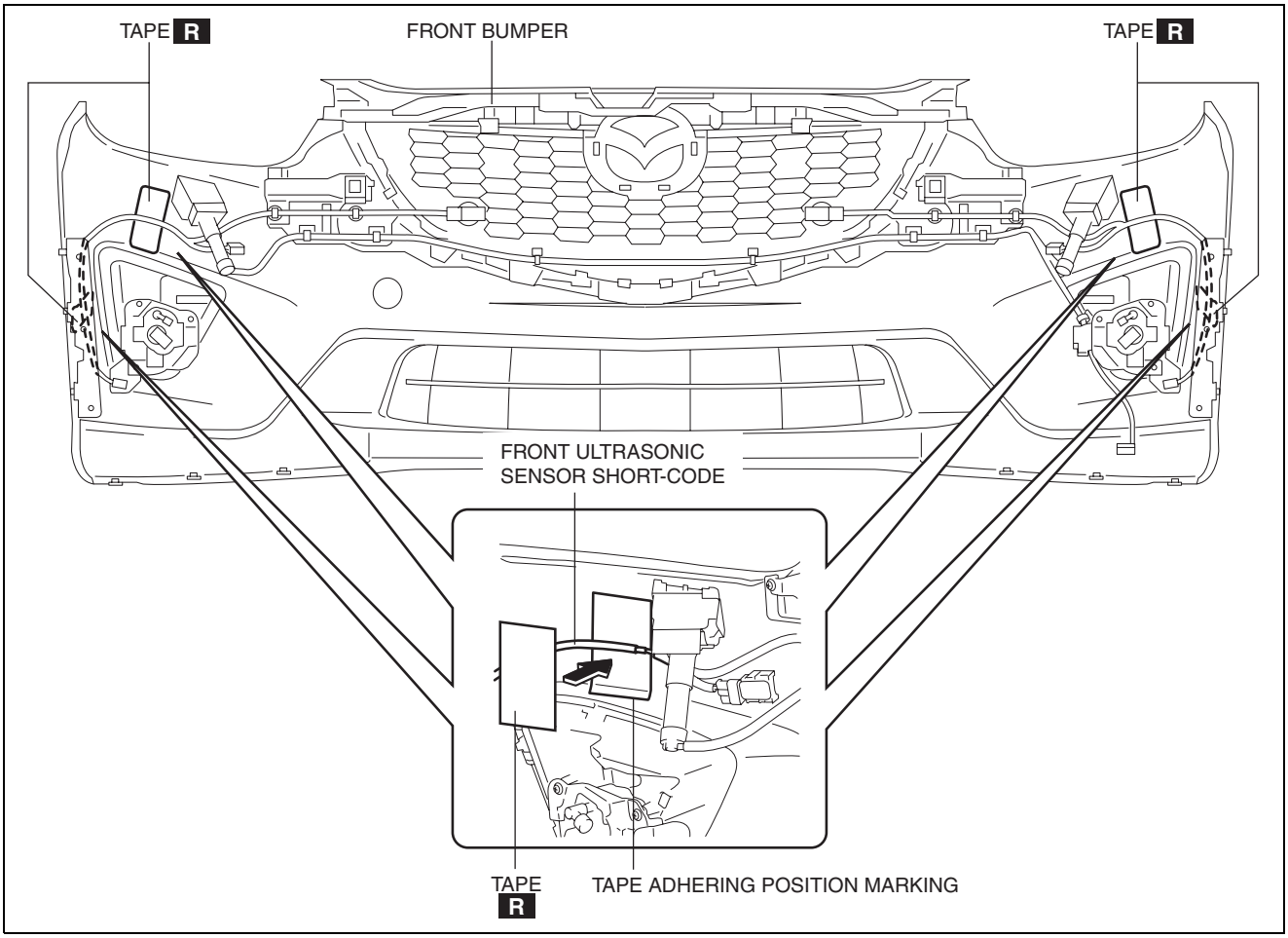

ac5wzw0000088

2. Align the tape with the tape adhering position marking and adhere the front ultrasonic sensor short-cord and front bumper.

FRONT ULTRASONIC SENSOR SHORT-CORD INSPECTION

id092200031800

1. Disconnect the negative battery cable. (See 01-17A-11 NEGATIVE BATTERY CABLE DISCONNECTION/CONNECTION [SKYACTIV-G 2.0].)(See 01-17A-13 NEGATIVE BATTERY CABLE DISCONNECTION/CONNECTION [SKYACTIV-G 2.0 (WITHOUT i-stop)].)(See 01-17B-9 NEGATIVE BATTERY CABLE DISCONNECTION/CONNECTION [SKYACTIV-D 2.2].)
2. Remove the front bumper. (See 09-10-10 FRONT BUMPER REMOVAL/INSTALLATION.)
3. Remove the front ultrasonic sensor short-cord. (See 09-22-50 FRONT ULTRASONIC SENSOR SHORT-CORD REMOVAL/INSTALLATION.)
4. Verify that the continuity between the front ultrasonic sensor short-cord terminals is as indicated in the table.

○—○ : Continuity

Test condition	Terminal							
	Vehicle wiring harness (C06 (LH)/C07 (RH)) side connector				Front ultrasonic sensor side connector		Front corner ultrasonic sensor side connector	
	A	B	D	E	A	B	A	B
Under any condition	○							○
		○					○	
			○		○			
				○		○		

ac5wzw0000326

INSTRUMENTATION/DRIVER INFO.

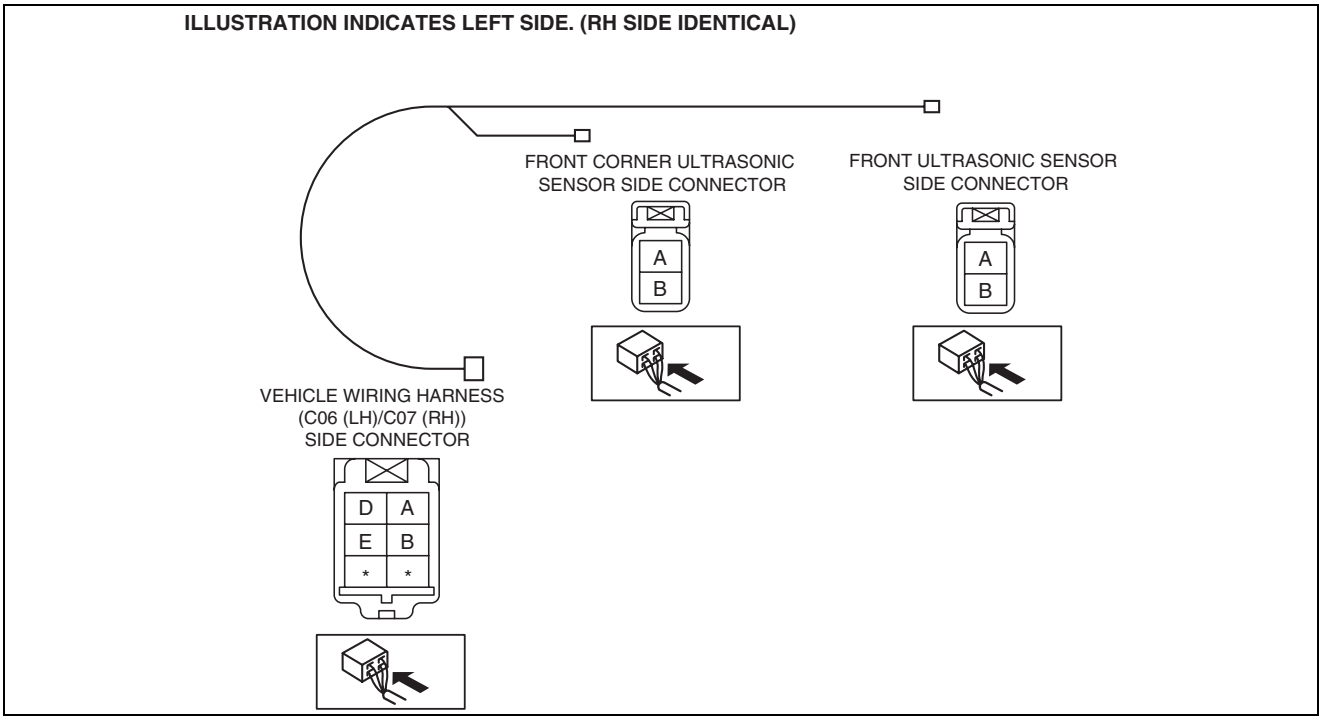

ac5jjw00001273

- If not as indicated in the table, replace the front ultrasonic sensor short-cord.

REAR ULTRASONIC SENSOR SHORT-CORD REMOVAL/INSTALLATION

id092200031100

1. Disconnect the negative battery cable. (See 01-17A-11 NEGATIVE BATTERY CABLE DISCONNECTION/CONNECTION [SKYACTIV-G 2.0].)(See 01-17A-13 NEGATIVE BATTERY CABLE DISCONNECTION/CONNECTION [SKYACTIV-G 2.0 (WITHOUT i-stop)].)(See 01-17B-9 NEGATIVE BATTERY CABLE DISCONNECTION/CONNECTION [SKYACTIV-D 2.2].)
2. Remove the rear combination light. (See 09-18-54 REAR COMBINATION LIGHT REMOVAL/INSTALLATION.)
3. Remove the rear bumper. (See 09-10-24 REAR BUMPER REMOVAL/INSTALLATION.)

INSTRUMENTATION/DRIVER INFO.

4. Peel off the tape securing the rear ultrasonic sensor short-cord from the rear bumper.

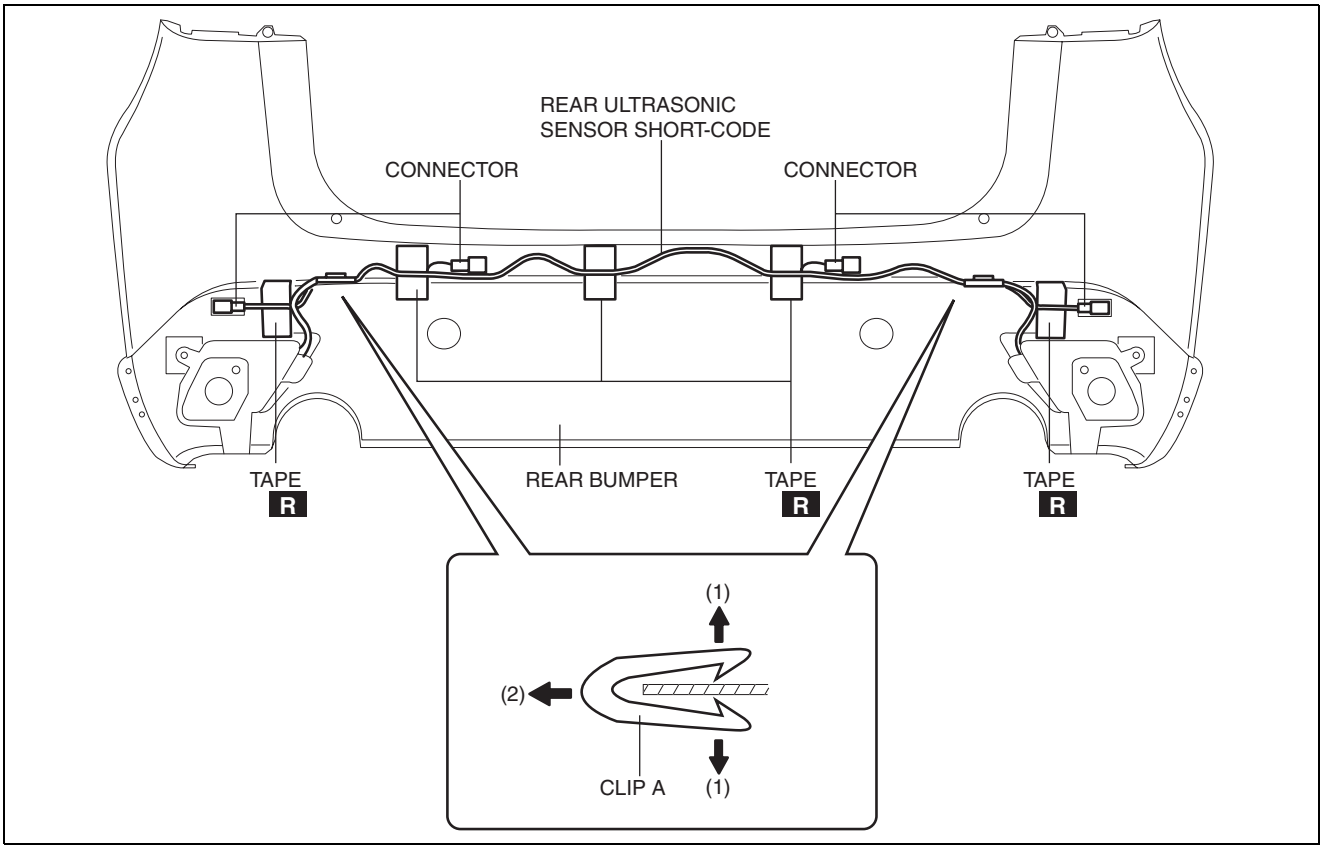

ac5jjw00000649

5. Disconnect the connector from the rear ultrasonic sensor.
6. Pull clip A in the direction of the arrow (2) shown in the figure while pressing the tab of clip A in the direction of the arrow (1) shown in the figure, and detach the tab of clip A and rear bumper.
7. Pull clip B in the direction of the arrow (4) shown in the figure while pressing the tab of clip B in the direction of the arrow (3) shown in the figure, detach the tab of clip B and front bumper, and remove the rear ultrasonic sensor short-cord.

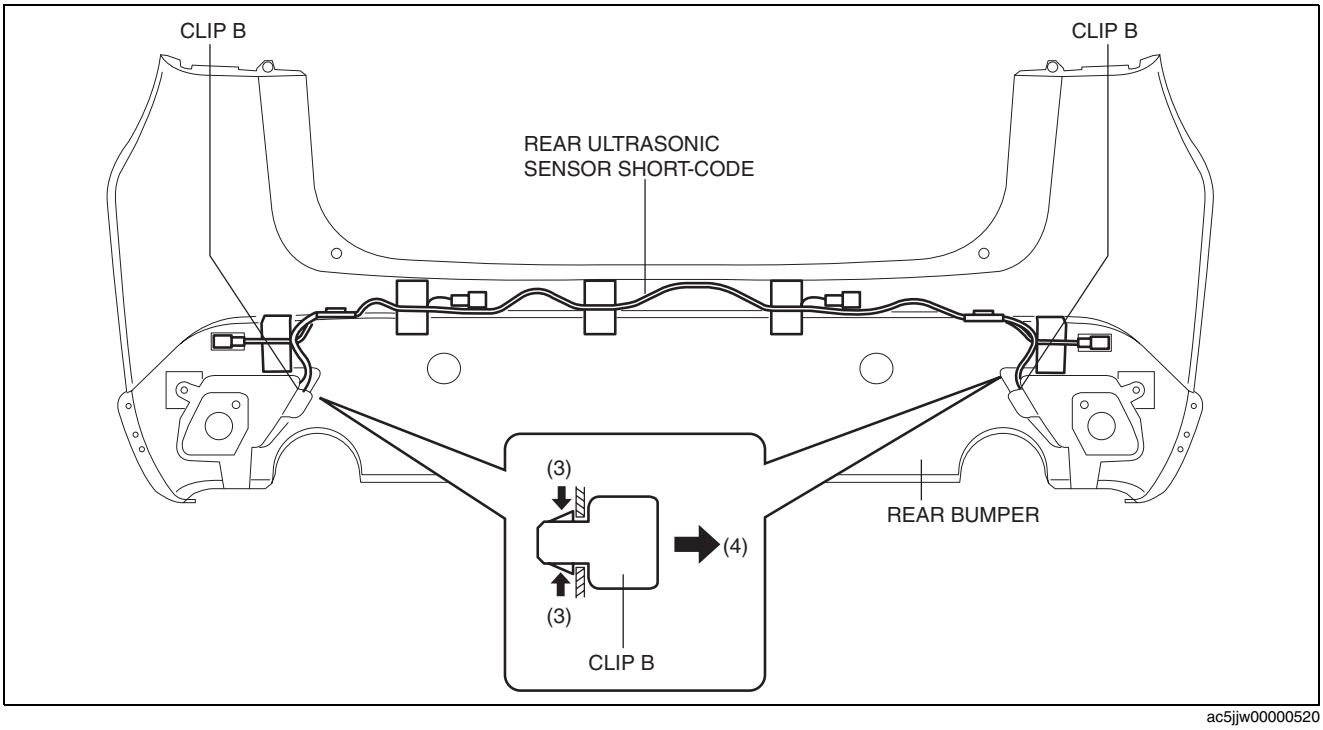

ac5jjw00000520

8. Install in the reverse order of removal. (See 09-22-56 Rear Ultrasonic Sensor Short-cord Installation Note.)

INSTRUMENTATION/DRIVER INFO.

Rear Ultrasonic Sensor Short-cord Installation Note

1. Align the height of the rear ultrasonic sensor short-cord with the center of the tape adhering position marking on the rear bumper.

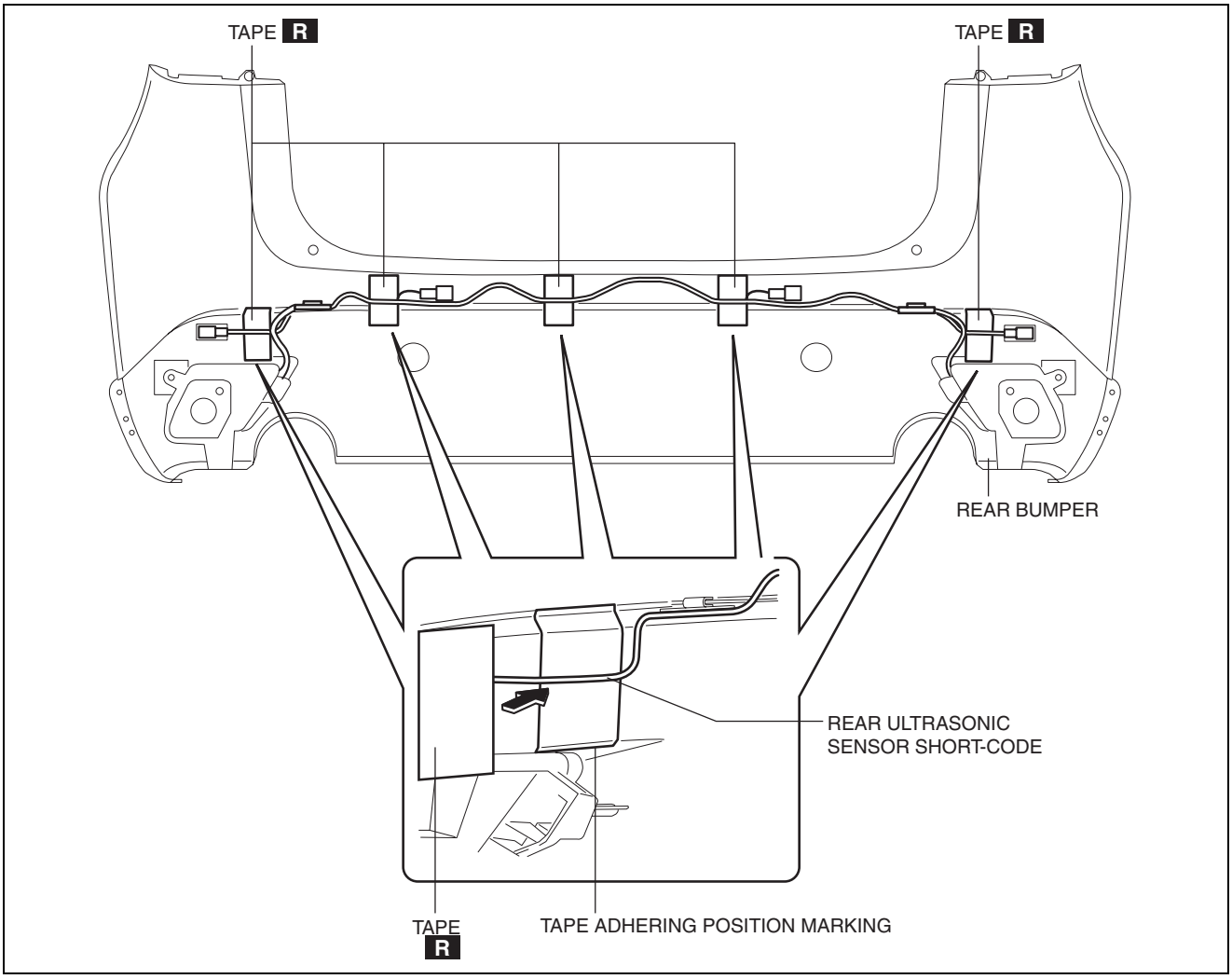

ac5wzw0000089

2. Align the tape with the mark of the tape adhering position marking and adhere the rear ultrasonic sensor short-cord and rear bumper.

REAR ULTRASONIC SENSOR SHORT-CORD INSPECTION

id092200031900

1. Disconnect the negative battery cable. (See 01-17A-11 NEGATIVE BATTERY CABLE DISCONNECTION/CONNECTION [SKYACTIV-G 2.0].)(See 01-17A-13 NEGATIVE BATTERY CABLE DISCONNECTION/CONNECTION [SKYACTIV-G 2.0 (WITHOUT i-stop)].)(See 01-17B-9 NEGATIVE BATTERY CABLE DISCONNECTION/CONNECTION [SKYACTIV-D 2.2].)
2. Remove the following parts:
   (1) Rear combination light (See 09-18-54 REAR COMBINATION LIGHT REMOVAL/INSTALLATION.)
   (2) Rear bumper (See 09-10-24 REAR BUMPER REMOVAL/INSTALLATION.)
   (3) Rear ultrasonic sensor short-cord (See 09-22-54 REAR ULTRASONIC SENSOR SHORT-CORD REMOVAL/INSTALLATION.)

INSTRUMENTATION/DRIVER INFO.

3. Verify that the continuity between the rear ultrasonic sensor short-cord terminals is as indicated in the table.

○—○ : Continuity

Test condition	Terminal												
	Vehicle wiring harness (C28) side connector					Rear corner ultrasonic sensor (LH) side connector		Rear ultrasonic sensor (LH) side connector		Rear ultrasonic sensor (RH) side connector		Rear corner ultrasonic sensor (LH) side connector	
	A	B	C	D	E	A	B	A	B	A	B	A	B
Under any condition	○												○
		○									○		
			○						○				
				○			○						
					○	○		○		○		○	

ac5jjw00001277

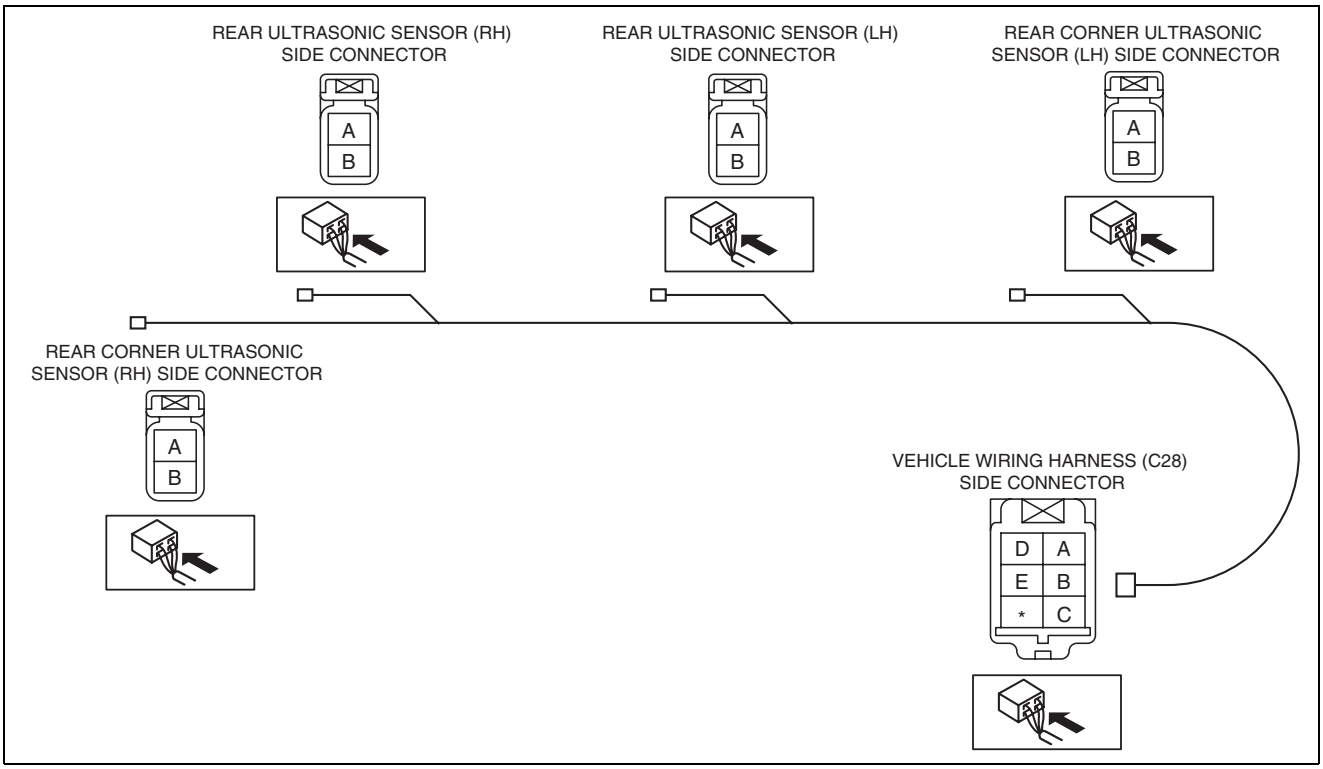

ac5jjw00001278

- If not as indicated in the table, replace the rear ultrasonic sensor short-cord.

PARKING SENSOR CONTROL MODULE REMOVAL/INSTALLATION

id092200023500

1. Disconnect the negative battery cable. (See 01-17A-11 NEGATIVE BATTERY CABLE DISCONNECTION/CONNECTION [SKYACTIV-G 2.0].)(See 01-17A-13 NEGATIVE BATTERY CABLE DISCONNECTION/CONNECTION [SKYACTIV-G 2.0 (WITHOUT i-stop)].)(See 01-17B-9 NEGATIVE BATTERY CABLE DISCONNECTION/CONNECTION [SKYACTIV-D 2.2].)
2. Remove the following parts:
   (1) Passenger-side front scuff plate (See 09-17-61 FRONT SCUFF PLATE REMOVAL/INSTALLATION.)
   (2) Passenger-side front side trim (See 09-17-62 FRONT SIDE TRIM REMOVAL/INSTALLATION.)
   (3) Glove compartment (See 09-17-30 GLOVE COMPARTMENT REMOVAL/INSTALLATION.)
   (4) Decoration panel (See 09-17-33 DECORATION PANEL REMOVAL/INSTALLATION.)
   (5) Passenger-side lower panel (See 09-17-35 LOWER PANEL REMOVAL/INSTALLATION.)

INSTRUMENTATION/DRIVER INFO.

3. Spread the clip tabs using snap ring pliers and pull out the clip from the stud bolt.

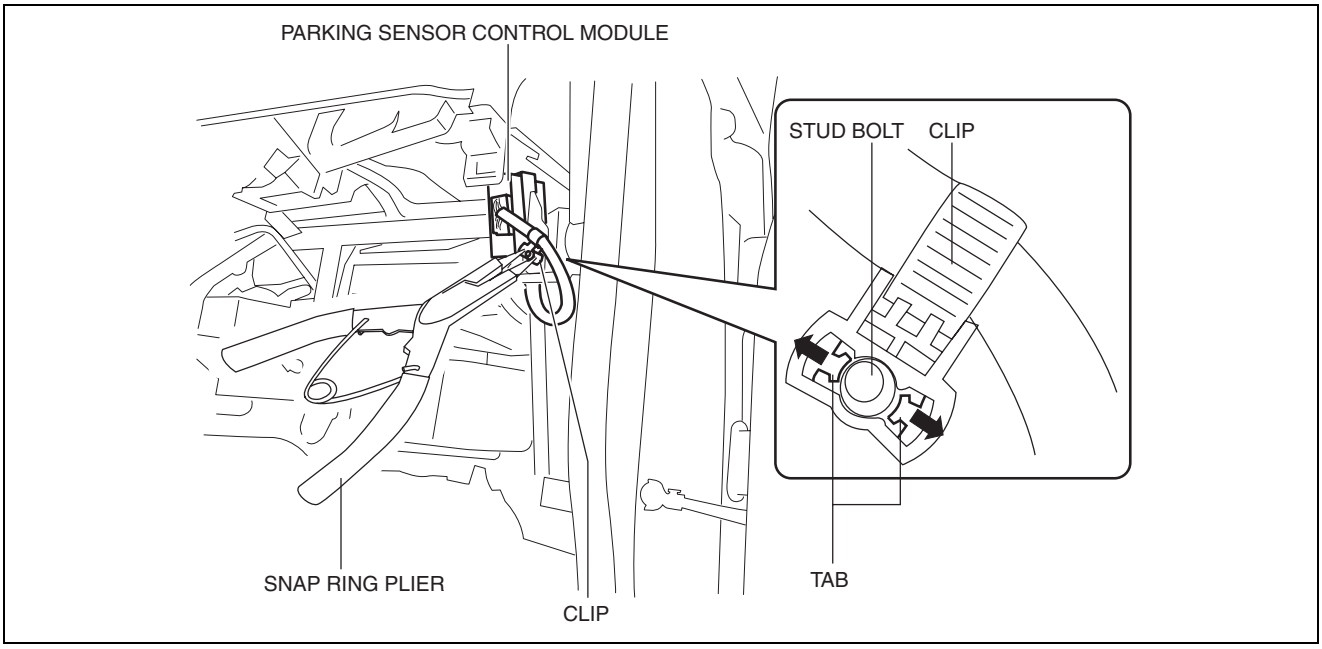

ac5wzw0000106

4. Disconnect the connector.
5. Remove the nut.

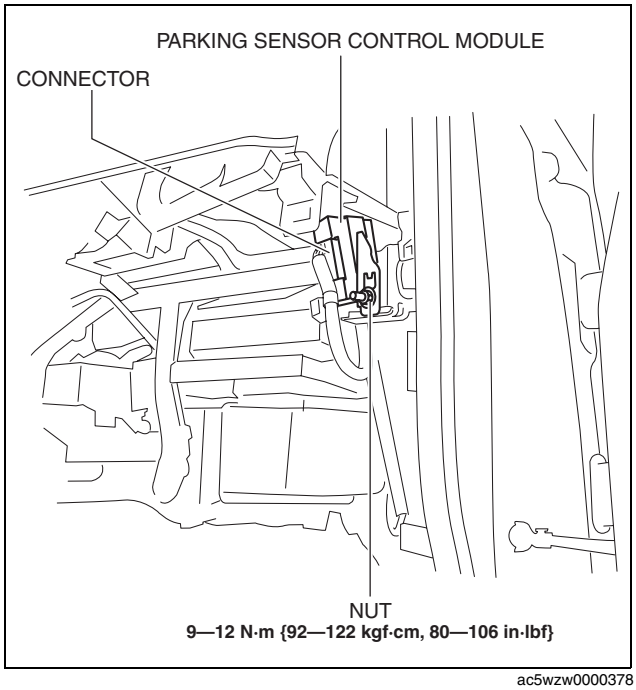

ac5wzw0000378

INSTRUMENTATION/DRIVER INFO.

6. Lift up the parking sensor control module in the direction of the arrow (1) shown in the figure to detach the hook from the dashboard.

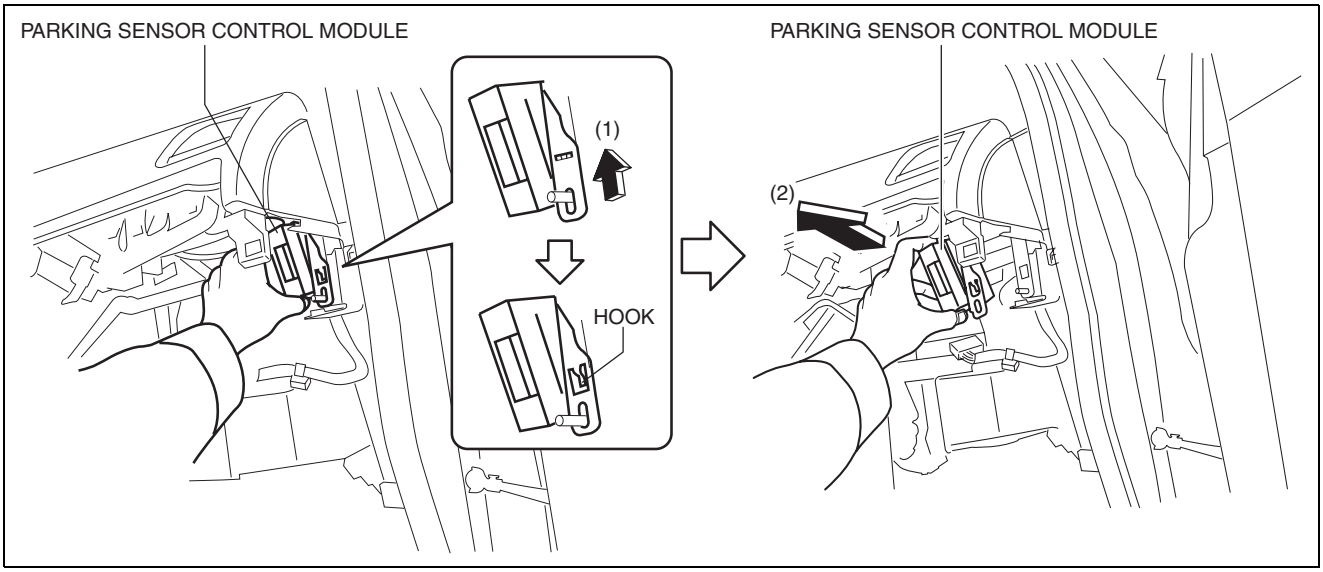

ac5jjw00000261

7. Remove the parking sensor control module in the direction of the arrow (2) shown in the figure.
8. Install in the reverse order of removal.

PARKING SENSOR CONTROL MODULE INSPECTION

id092200023600

1. Disconnect the negative battery cable. (See 01-17A-11 NEGATIVE BATTERY CABLE DISCONNECTION/CONNECTION [SKYACTIV-G 2.0].)(See 01-17A-13 NEGATIVE BATTERY CABLE DISCONNECTION/CONNECTION [SKYACTIV-G 2.0 (WITHOUT i-stop)].)(See 01-17B-9 NEGATIVE BATTERY CABLE DISCONNECTION/CONNECTION [SKYACTIV-D 2.2].)
2. Remove the following parts:
   (1) Passenger-side front scuff plate (See 09-17-61 FRONT SCUFF PLATE REMOVAL/INSTALLATION.)
   (2) Passenger-side front side trim (See 09-17-62 FRONT SIDE TRIM REMOVAL/INSTALLATION.)
   (3) Glove compartment (See 09-17-30 GLOVE COMPARTMENT REMOVAL/INSTALLATION.)
   (4) Decoration panel (See 09-17-33 DECORATION PANEL REMOVAL/INSTALLATION.)
   (5) Passenger-side lower panel (See 09-17-35 LOWER PANEL REMOVAL/INSTALLATION.)
3. Connect the negative battery cable. (See 01-17A-11 NEGATIVE BATTERY CABLE DISCONNECTION/CONNECTION [SKYACTIV-G 2.0].)(See 01-17A-13 NEGATIVE BATTERY CABLE DISCONNECTION/CONNECTION [SKYACTIV-G 2.0 (WITHOUT i-stop)].)(See 01-17B-9 NEGATIVE BATTERY CABLE DISCONNECTION/CONNECTION [SKYACTIV-D 2.2].)
4. Verify that the voltages of each of the terminals are as indicated in the terminal voltage table (reference).
   - If the voltage is not as specified in the terminal voltage table (reference), inspect the parts under Inspection item(s).
     — If the system does not operate normally even though the inspection items are normal, replace the parking sensor control module.

Terminal Voltage Table (Reference)

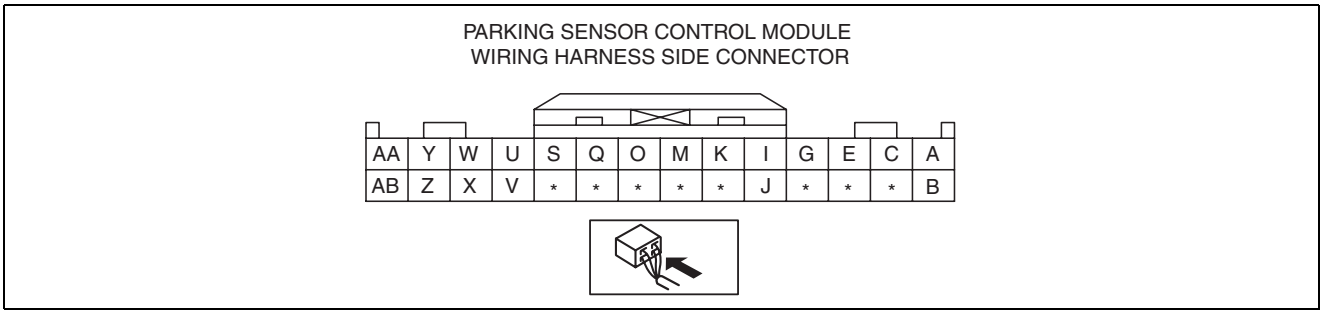

ac5wzw0000243

INSTRUMENTATION/DRIVER INFO.

Terminal	Signal name	Connected to	Measured item	Test condition	Voltage (V)	Inspection item
A	Ultrasonic sensor	Rear ultrasonic sensor (LH)	Wave profile	(See 09-22-61 Generated Pulse (reference).)		• Rear ultrasonic sensor (LH) • Related wiring harnesses
B	Ultrasonic sensor GND	Rear ultrasonic sensor	Voltage	Under any condition	1.0 or less	• Rear ultrasonic sensor • Related wiring harnesses
C	Ultrasonic sensor	Rear ultrasonic sensor (RH)	Wave profile	(See 09-22-61 Generated Pulse (reference).)		• Rear ultrasonic sensor (RH) • Related wiring harnesses
D	—	—	—	—	—	—
E	Ultrasonic sensor	Rear corner ultrasonic sensor (LH)	Wave profile	(See 09-22-61 Generated Pulse (reference).)		• Rear corner ultrasonic sensor (LH) • Related wiring harnesses
F	—	—	—	—	—	—
G	Ultrasonic sensor	Rear corner ultrasonic sensor (RH)	Wave profile	(See 09-22-61 Generated Pulse (reference).)		• Rear corner ultrasonic sensor (RH) • Related wiring harnesses
H	—	—	—	—	—	—
I	Ultrasonic sensor	Front corner ultrasonic sensor (LH)	Wave profile	(See 09-22-61 Generated Pulse (reference).)		• Front corner ultrasonic sensor (LH) • Related wiring harnesses
J	Ultrasonic sensor GND	Front ultrasonic sensor	Voltage	Under any condition	1.0 or less	• Front ultrasonic sensor • Related wiring harnesses
K	Ultrasonic sensor	Front ultrasonic sensor (LH)	Wave profile	(See 09-22-61 Generated Pulse (reference).)		• Front ultrasonic sensor (LH) • Related wiring harnesses
L	—	—	—	—	—	—
M	Ultrasonic sensor	Front ultrasonic sensor (RH)	Wave profile	(See 09-22-61 Generated Pulse (reference).)		• Front ultrasonic sensor (RH) • Related wiring harnesses
N	—	—	—	—	—	—
O	Ultrasonic sensor	Front corner ultrasonic sensor (RH)	Wave profile	(See 09-22-61 Generated Pulse (reference).)		• Front corner ultrasonic sensor (RH) • Related wiring harnesses
P	—	—	—	—	—	—
Q	GND	Body ground	Voltage	Under any condition	1.0 or less	Related wiring harnesses
R	—	—	—	—	—	—
S	Indicator	Parking sensor switch	Voltage	Ignition switched ON (engine off or on) — Parking sensor switch ON (indicator on)	1.0 or less	• Parking sensor switch • Climate control unit (with auto A/C) • Clock (with manual A/C) • Related wiring harnesses
				Ignition switched ON (engine off or on) — Parking sensor switch OFF (indicator off)	B+	
T	—	—	—	—	—	—
U	IG1	Ignition relay	Voltage	Ignition switched ON (engine off or on)	B+	• Ignition relay • METER2 7.5A fuse • Related wiring harnesses
				Ignition switched off (LOCK)	1.0 or less	

INSTRUMENTATION/DRIVER INFO.

Terminal	Signal name	Connected to	Measured item	Test condition		Voltage (V)	Inspection item
V	Parking sensor switch	Parking sensor switch	Voltage	Ignition switched ON (engine off or on)	Parking sensor switch ON (indicator on)	1.0 or less	• Parking sensor switch • Climate control unit (with auto A/C) • Clock (with manual A/C) • Related wiring harnesses
					Parking sensor switch OFF (indicator off)	B+	
W	Rear parking sensor buzzer	Rear parking sensor buzzer	Voltage	Ignition switched ON (engine off or on)		B+	• Rear parking sensor buzzer • Related wiring harnesses
				Ignition switched off (LOCK) or ACC		1.0 or less	
X	Rear parking sensor buzzer GND	Rear parking sensor buzzer	Voltage	Ignition switched ON (engine off or on) and parking sensor switch ON	Buzzer sounding	1.0 or less	• Rear parking sensor buzzer • Related wiring harnesses
					Buzzer stopped	B+	
Y	Front parking sensor buzzer	Front parking sensor buzzer	Voltage	Ignition switched ON (engine off or on)		B+	• Front parking sensor buzzer • Related wiring harnesses
				Ignition switched off (LOCK) or ACC		1.0 or less	
Z	Front parking sensor buzzer GND	Rear parking sensor buzzer	Voltage	Ignition switched ON (engine off or on) and parking sensor switch ON	Buzzer sounding	1.0 or less	• Front parking sensor buzzer • Related wiring harnesses
					Buzzer stopped	B+	
AA	CAN_H	CAN system related module	Voltage	Terminal used for communication therefore determination based on terminal voltage is not possible.			
AB	CAN_L	CAN system related module	Voltage	Terminal used for communication therefore determination based on terminal voltage is not possible.			

Generated Pulse (reference)

- Oscilloscope setting:
  - — 2 V/DIV (Y), 20 ms/DIV (X), DC range

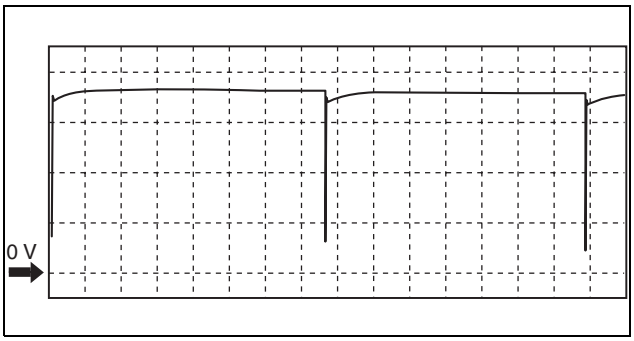

am6zzw0000697

INSTRUMENTATION/DRIVER INFO.

—: Does not operate

Oscilloscope setting:			Terminal							
Ignition	Shift lever position	Vehicle speed	Front corner ultrasonic sensor (LH)	Front ultrasonic sensor (LH)	Front ultrasonic sensor (RH)	Front corner ultrasonic sensor (RH)	Rear corner ultrasonic sensor (LH)	Rear ultrasonic sensor (LH)	Rear ultrasonic sensor (RH)	Rear corner ultrasonic sensor (RH)
ON (engine off or on)	Except R position	0—15 km/h {0—9.3 mph} or less	I—J	K—J	M—J	O—J	—	—	—	—
	R position		I—J	—	—	O—J	E—B	A—B	C—B	G—B

PARKING SENSOR SWITCH/INDICATOR REMOVAL/INSTALLATION

id092200023700

Note

- The parking sensor switch/indicator is integrated with the climate control unit.
- For the parking sensor switch/indicator removal/installation, refer to the climate control unit removal/installation. (See 07-40A-32 CLIMATE CONTROL UNIT REMOVAL/INSTALLATION [FULL-AUTO AIR CONDITIONER].)

PARKING SENSOR SWITCH/INDICATOR INSPECTION

id092200023800

Note

- The parking sensor switch/indicator is integrated with the climate control unit.
- For the parking sensor switch/indicator inspection, refer to the climate control unit inspection. (See 07-40A-33 CLIMATE CONTROL UNIT INSPECTION [FULL-AUTO AIR CONDITIONER].)

FRONT PARKING SENSOR BUZZER REMOVAL/INSTALLATION

id092200030400

1. Disconnect the negative battery cable. (See 01-17A-11 NEGATIVE BATTERY CABLE DISCONNECTION/CONNECTION [SKYACTIV-G 2.0].)(See 01-17A-13 NEGATIVE BATTERY CABLE DISCONNECTION/CONNECTION [SKYACTIV-G 2.0 (WITHOUT i-stop)].)(See 01-17B-9 NEGATIVE BATTERY CABLE DISCONNECTION/CONNECTION [SKYACTIV-D 2.2].)
2. Remove the following parts:
   (1) Upper column cover (See 09-17-25 COLUMN COVER REMOVAL/INSTALLATION.)
   (2) Meter hood (See 09-17-20 METER HOOD REMOVAL/INSTALLATION.)
   (3) Instrument cluster (See 09-22-6 INSTRUMENT CLUSTER REMOVAL/INSTALLATION.)

INSTRUMENTATION/DRIVER INFO.

3. Disconnect the connector.
4. Pull out the front parking sensor buzzer in the direction of arrow (2) shown in the figure while pressing the clip in the direction of arrow (1) shown in the figure, detach the clip and dashboard, and remove the front parking sensor buzzer.
5. Install in the reverse order of removal.

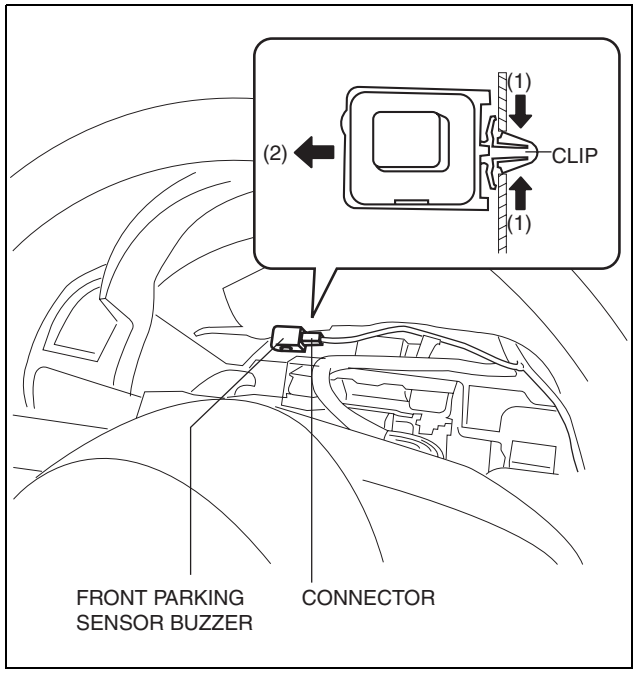

ac5jjw00000402

FRONT PARKING SENSOR BUZZER INSPECTION

id092200030600

1. Disconnect the negative battery cable. (See 01-17A-11 NEGATIVE BATTERY CABLE DISCONNECTION/CONNECTION [SKYACTIV-G 2.0].)(See 01-17A-13 NEGATIVE BATTERY CABLE DISCONNECTION/CONNECTION [SKYACTIV-G 2.0 (WITHOUT i-stop)].)(See 01-17B-9 NEGATIVE BATTERY CABLE DISCONNECTION/CONNECTION [SKYACTIV-D 2.2].)
2. Remove the following parts:
   (1) Upper column cover (See 09-17-25 COLUMN COVER REMOVAL/INSTALLATION.)
   (2) Meter hood (See 09-17-20 METER HOOD REMOVAL/INSTALLATION.)
   (3) Instrument cluster (See 09-22-6 INSTRUMENT CLUSTER REMOVAL/INSTALLATION.)
   (4) Front parking sensor buzzer (See 09-22-62 FRONT PARKING SENSOR BUZZER REMOVAL/INSTALLATION.)
3. Verify the continuity between front parking sensor buzzer terminals A and B.
   - If not as indicated in the table, replace the front parking sensor buzzer.

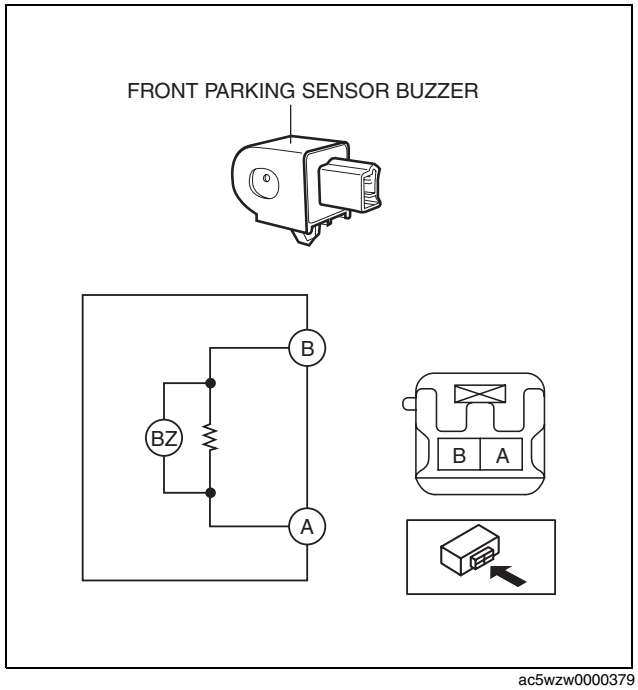

ac5wzw0000379

INSTRUMENTATION/DRIVER INFO.

REAR PARKING SENSOR BUZZER REMOVAL/INSTALLATION

id092200030500

1. Disconnect the negative battery cable. (See 01-17A-11 NEGATIVE BATTERY CABLE DISCONNECTION/CONNECTION [SKYACTIV-G 2.0].)(See 01-17A-13 NEGATIVE BATTERY CABLE DISCONNECTION/CONNECTION [SKYACTIV-G 2.0 (WITHOUT i-stop)].)(See 01-17B-9 NEGATIVE BATTERY CABLE DISCONNECTION/CONNECTION [SKYACTIV-D 2.2].)
2. Remove the following parts:
   (1) Liftgate upper trim (See 09-17-87 LIFTGATE UPPER TRIM REMOVAL/INSTALLATION.)
   (2) Liftgate side trim (See 09-17-87 LIFTGATE SIDE TRIM REMOVAL/INSTALLATION.)
   (3) Liftgate recess (See 09-17-89 LIFTGATE RECESS REMOVAL/INSTALLATION.)
   (4) Liftgate lower trim (See 09-17-89 LIFTGATE LOWER TRIM REMOVAL/INSTALLATION.)
3. Disconnect the connector.
4. Pull out the rear parking sensor buzzer in the direction of arrow (2) shown in the figure while pressing the clip in the direction of arrow (1) shown in the figure and remove the rear parking sensor buzzer.
5. Install in the reverse order of removal.

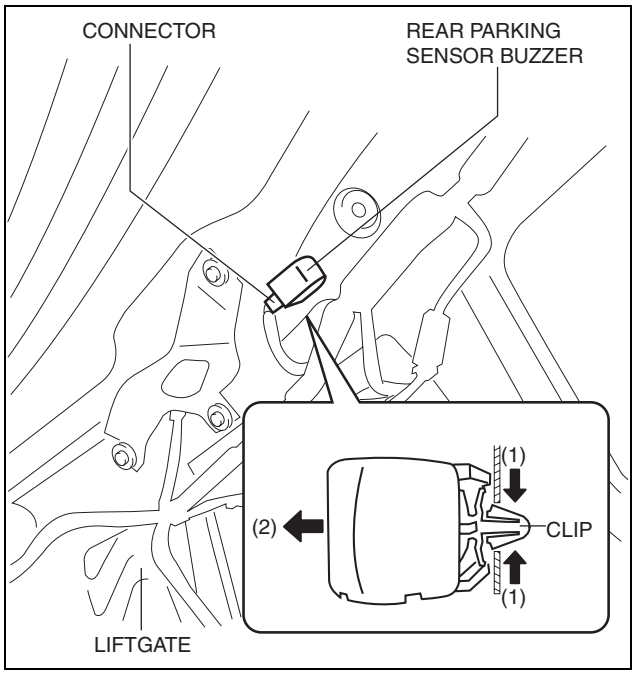

ac5jjw00000403

REAR PARKING SENSOR BUZZER INSPECTION

id092200030700

1. Disconnect the negative battery cable. (See 01-17A-11 NEGATIVE BATTERY CABLE DISCONNECTION/CONNECTION [SKYACTIV-G 2.0].)(See 01-17A-13 NEGATIVE BATTERY CABLE DISCONNECTION/CONNECTION [SKYACTIV-G 2.0 (WITHOUT i-stop)].)(See 01-17B-9 NEGATIVE BATTERY CABLE DISCONNECTION/CONNECTION [SKYACTIV-D 2.2].)
2. Remove the following parts:
   (1) Liftgate upper trim (See 09-17-87 LIFTGATE UPPER TRIM REMOVAL/INSTALLATION.)
   (2) Liftgate side trim (See 09-17-87 LIFTGATE SIDE TRIM REMOVAL/INSTALLATION.)
   (3) Liftgate recess (See 09-17-89 LIFTGATE RECESS REMOVAL/INSTALLATION.)
   (4) Liftgate lower trim (See 09-17-89 LIFTGATE LOWER TRIM REMOVAL/INSTALLATION.)
   (5) Rear parking sensor buzzer (See 09-22-64 REAR PARKING SENSOR BUZZER REMOVAL/INSTALLATION.)

3. Verify the continuity between rear parking sensor buzzer terminals A and B.
   - If not as indicated in the table, replace the rear parking sensor buzzer.

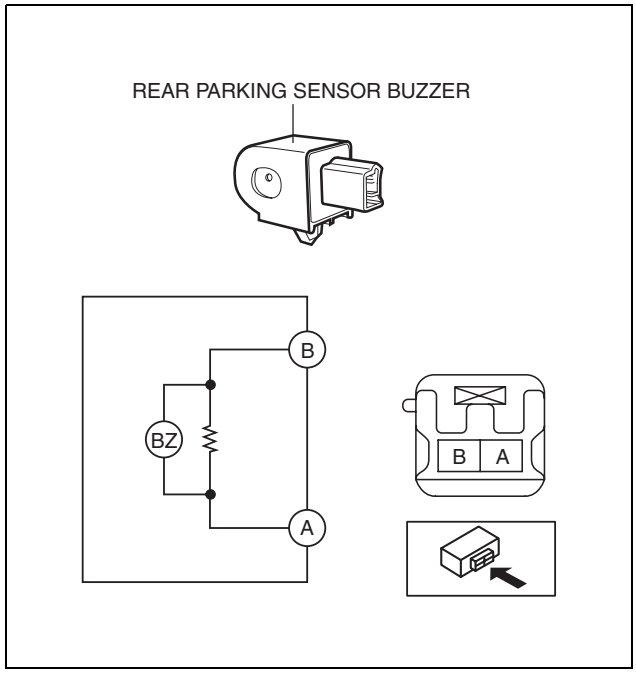

ac5wzw0000379

BEEP SOUND ADJUSTMENT

id092200024100

Note

- The parking buzzer volume change mode is activated by operating the parking sensor switch and ignition using the specified procedure.
- While in the parking buzzer volume change mode, the parking buzzer sounds for approx. 1 s when activating the mode and the parking sensor indicator flashes while activating the mode. If the parking buzzer does not sound or the parking sensor indicator does not flash, the procedure for activating the parking buzzer volume change mode may have been performed incorrectly. Switch the ignition off and repeat the procedure from Step 1.

INSTRUMENTATION/DRIVER INFO.

Front Parking Sensor Buzzer

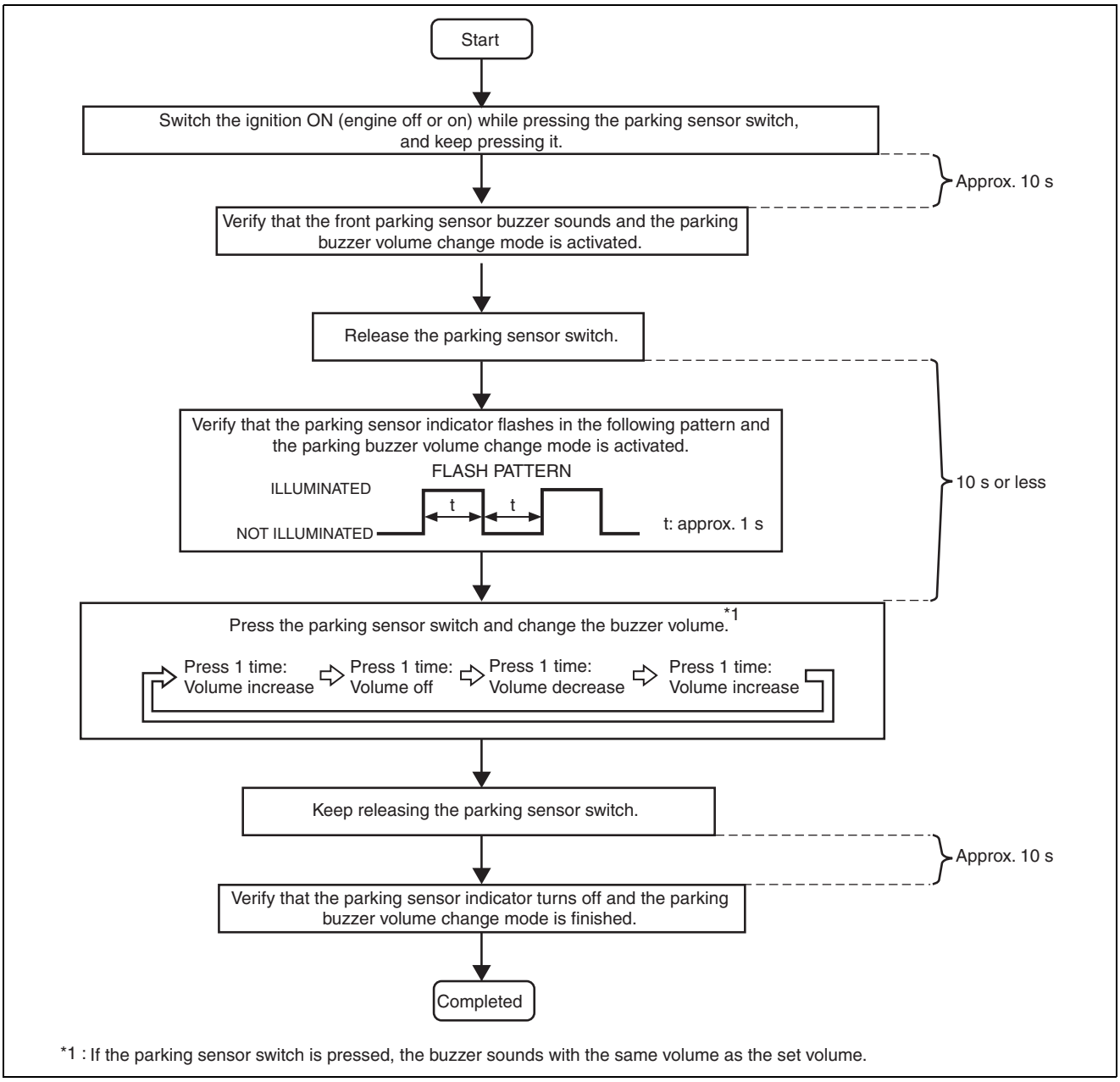

*1 : If the parking sensor switch is pressed, the buzzer sounds with the same volume as the set volume.

ac5wzw0000378

INSTRUMENTATION/DRIVER INFO.

Rear Parking Sensor Buzzer

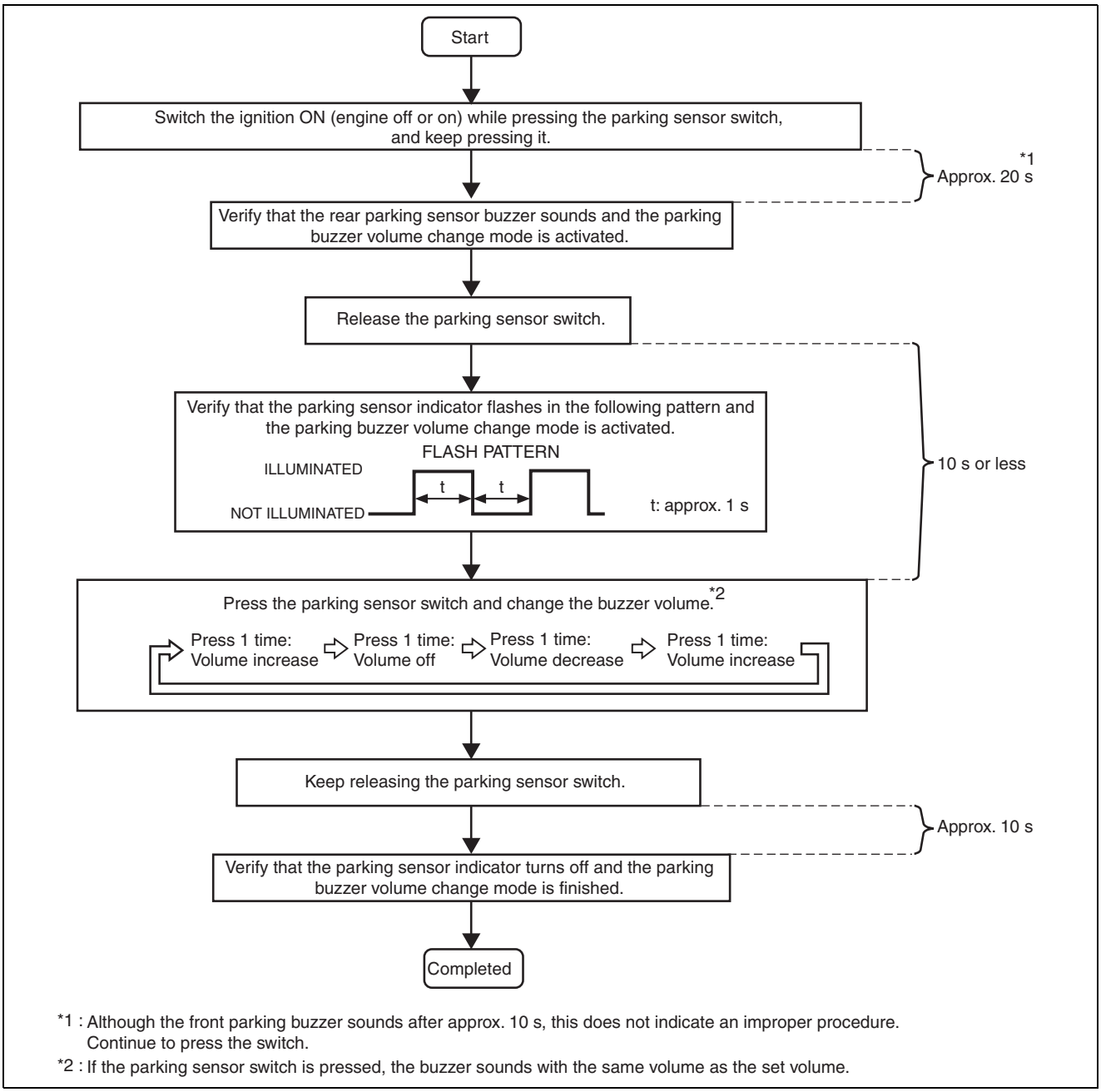

*1 : Although the front parking buzzer sounds after approx. 10 s, this does not indicate an improper procedure. Continue to press the switch.

*2 : If the parking sensor switch is pressed, the buzzer sounds with the same volume as the set volume.

ac5wzw0000378

BLIND SPOT MONITORING (BSM) CONTROL MODULE REMOVAL/INSTALLATION

id092200013600

1. Disconnect the negative battery cable. (See 01-17A-11 NEGATIVE BATTERY CABLE DISCONNECTION/ CONNECTION [SKYACTIV-G 2.0].)(See 01-17B-9 NEGATIVE BATTERY CABLE DISCONNECTION/ CONNECTION [SKYACTIV-D 2.2].)
2. Remove the rear combination light. (See 09-18-54 REAR COMBINATION LIGHT REMOVAL/INSTALLATION.)
3. Remove the rear bumper. (See 09-10-24 REAR BUMPER REMOVAL/INSTALLATION.)

INSTRUMENTATION/DRIVER INFO.

4. Disconnect the connector.
5. Remove the nuts.
6. Remove the BSM control module.
7. Install in the reverse order of removal.
8. Perform the BSM radar test. (See 09-22-71 BLIND SPOT MONITORING (BSM) RADAR TEST.)

Caution

- **If the BSM control module is replaced, not performing the BSM radar test will cause a deviation in the radar emission angle which could result in the system not detecting a vehicle approaching from the rear correctly. If the BSM control module is replaced, perform the BSM radar test.**

ILLUSTRATION INDICATES LEFT SIDE. (RH SIDE IDENTICAL)

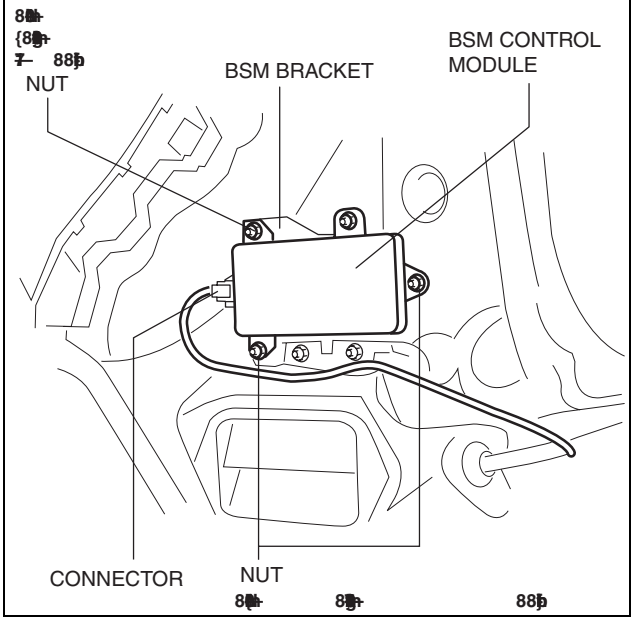

ac5wzw0000085

BLIND SPOT MONITORING (BSM) CONTROL MODULE INSPECTION

id092200013700

1. Disconnect the negative battery cable. (See 01-17A-11 NEGATIVE BATTERY CABLE DISCONNECTION/ CONNECTION [SKYACTIV-G 2.0].)(See 01-17B-9 NEGATIVE BATTERY CABLE DISCONNECTION/ CONNECTION [SKYACTIV-D 2.2].)
2. Remove the rear combination light. (See 09-18-54 REAR COMBINATION LIGHT REMOVAL/INSTALLATION.)
3. Remove the rear bumper. (See 09-10-24 REAR BUMPER REMOVAL/INSTALLATION.)
4. Connect the negative battery cable. (See 01-17A-11 NEGATIVE BATTERY CABLE DISCONNECTION/ CONNECTION [SKYACTIV-G 2.0].)(See 01-17B-9 NEGATIVE BATTERY CABLE DISCONNECTION/ CONNECTION [SKYACTIV-D 2.2].)
5. Verify that the voltages of each of the terminals are as indicated in the terminal voltage table (reference).
   - If the voltage is not as specified in the terminal voltage table (reference), inspect the parts under Inspection item(s).
     — If the system does not operate normally even though the inspection items are normal, replace the BSM control module (RH) or BSM control module (LH).

Terminal Voltage Table (Reference)
BSM control module (RH)

BSM CONTROL MODULE (RH)
WIRING HARNESS SIDE CONNECTOR

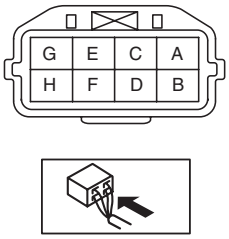

ac5wzw0000148

Terminal	Signal name	Connected to	Measurement conditions	Voltage (V)	Inspection item(s)
A	Ground	Body ground	Under any condition	1.0 or less	• Related wiring harness
B	Power position (IG1)	IG relay	Ignition switched ON (Engine off or on)	B+	• C/U IG1 fuse • IG relay • Related wiring harness
			Ignition switched off (LOCK) or ACC	1.0 or less	
C	—	—	—	—	—

INSTRUMENTATION/DRIVER INFO.

Terminal	Signal name	Connected to	Measurement conditions	Voltage (V)	Inspection item(s)
D	BSM indicator light (RH) signal	BSM indicator light (RH)	Turn off BSM indicator light using BSM system simulation WRN_IND_R	1.0 or less	• BSM indicator light (RH) • Related wiring harness
			Turn on BSM indicator light using rear vehicle monitoring system simulation WRN_IND_R	B+	
E	—	—	—	—	—
F	—	—	—	—	—
G	MS-CAN_L	Related module	Because this terminal is for communication, determination using terminal voltage inspection is not possible.		
H	MS-CAN_H	Related module	Because this terminal is for communication, determination using terminal voltage inspection is not possible.		

BSM control module (LH)

BSM CONTROL MODULE (LH)
WIRING HARNESS SIDE CONNECTOR

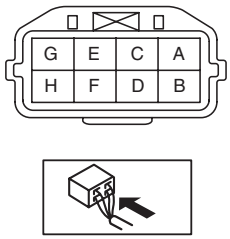

ac5wzw0000148

Terminal	Signal name	Connected to	Measurement conditions	Voltage (V)	Inspection item(s)
A	Ground	Body ground	Under any condition	1.0 or less	• Related wiring harness
B	Power position (1G1)	IG relay	Ignition switched ON (engine off or on)	B+	• C/U IG1 fuse • IG relay • Related wiring harness
			Ignition switched off (LOCK) or ACC	1.0 or less	
C	—	—	—	—	—
D	BSM indicator light (LH) signal	BSM indicator light (LH)	Turn off BSM indicator light using BSM system simulation WRN_IND_L	1.0 or less	• BSM indicator light (LH) • Related wiring harness
			Turn on BSM indicator light using rear vehicle monitoring system simulation WRN_IND_L	B+	
E	Ground	Body ground	Under any condition	1.0 or less	• Related wiring harness
F	—	—	—	—	—
G	MS-CAN_L	Related module	Because this terminal is for communication, determination using terminal voltage inspection is not possible.		
H	MS-CAN_H	Related module	Because this terminal is for communication, determination using terminal voltage inspection is not possible.		

BLIND SPOT MONITORING (BSM) BRACKET REMOVAL/INSTALLATION

id092200013900

1. Disconnect the negative battery cable. (See 01-17A-11 NEGATIVE BATTERY CABLE DISCONNECTION/CONNECTION [SKYACTIV-G 2.0].)(See 01-17B-9 NEGATIVE BATTERY CABLE DISCONNECTION/CONNECTION [SKYACTIV-D 2.2].)
2. Remove the following parts:
   (1) Rear combination lights (See 09-18-54 REAR COMBINATION LIGHT REMOVAL/INSTALLATION.)
   (2) Rear bumper (See 09-10-24 REAR BUMPER REMOVAL/INSTALLATION.)
   (3) BSM control module (See 09-22-67 BLIND SPOT MONITORING (BSM) CONTROL MODULE REMOVAL/INSTALLATION.)

INSTRUMENTATION/DRIVER INFO.

3. Remove the nuts.

ILLUSTRATION INDICATES LEFT SIDE. (RH SIDE IDENTICAL)

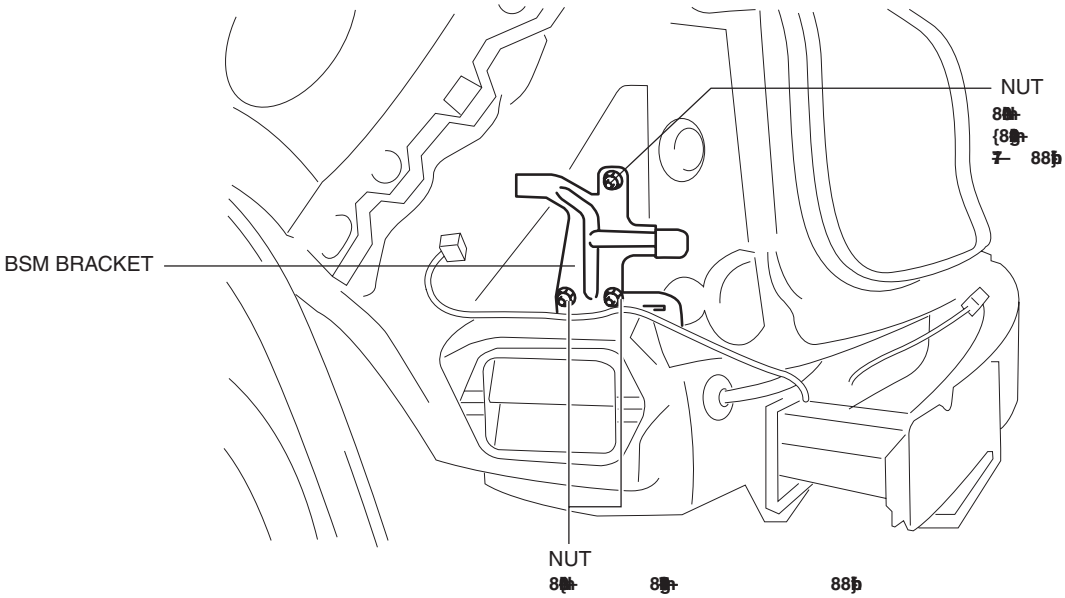

ac5wzw0000085

4. While pressing the clip tabs in the direction of the arrows (1) shown in the figure, press the clip in the direction of the arrow (2) to detach the clip tabs from the bracket.

ILLUSTRATION INDICATES LEFT SIDE. (RH SIDE IDENTICAL)

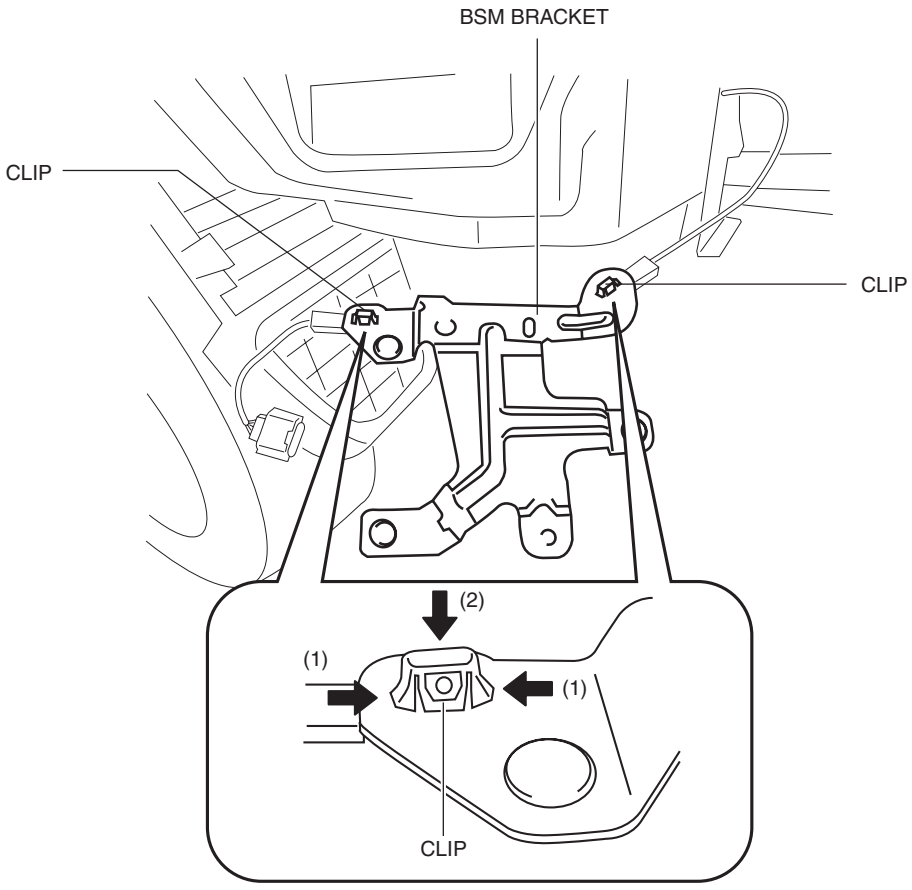

ac5wzw0000085

5. Detach the clip.
6. Remove the BSM bracket.

INSTRUMENTATION/DRIVER INFO.

7. Install in the reverse order of removal.
8. Perform the BSM radar test. (See 09-22-71 BLIND SPOT MONITORING (BSM) RADAR TEST.)

Caution
- **If the BSM bracket is replaced, not performing the BSM radar test will cause a deviation in the radar emission angle which could result in the system not detecting a vehicle approaching from the rear correctly. If the BSM bracket is replaced, perform the BSM radar test.**

BLIND SPOT MONITORING (BSM) RADAR TEST

id092200014000

Note
- The BSM radar test stores the radar angles in the BSM control module based on the forced emission of radar at a SST (reflector) and performing aiming based on the induced tolerance with the radar as it is currently installed and reflected from the SST (reflector).
- Perform the BSM radar test when replacing the BSM control module, BSM bracket, or the rear bumper.
- As there are two BSM control modules, one each on the left and right, radar aiming is performed for each side.
- The BSM radar test cannot be performed correctly if obstructions which interfere with radar emission are stuck on the BSM control modules or the rear bumper. Perform the following procedure before performing the radar test.
  - — Verify that there is no water, mud, soiling, sticker adhesion, or repairs done using putty application on the surface of the rear bumper, and that there is no mud, soiling or scratches on the BSM control modules.

Radar test procedure
1. Empty the vehicle by having all occupants leave the vehicle and remove all the cargo except for the spare tire, jack and tools equipped on the vehicle.
2. Adjust the air pressure of each tire to the specified value. (See 02-12-1 WHEEL AND TIRE SPECIFICATION.)
3. Move the vehicle to level ground.

Caution
- **If the setting surface height and angle between the vehicle and the SST (reflector) differs, a correct radar test cannot be done. Perform the radar test with the vehicle and SST (reflector) set on level ground.**

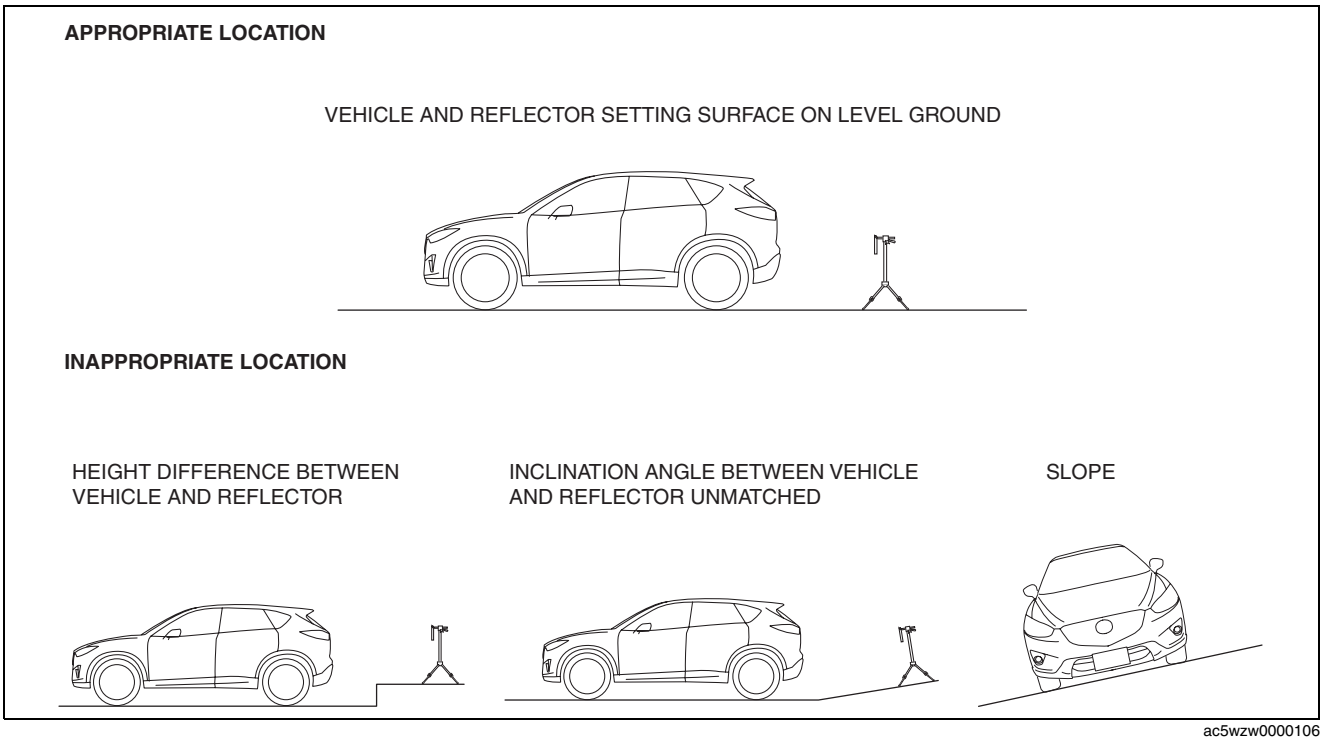

ac5wzw0000106

4. Verify that there are no obstructions which interfere with radar emissions such as metal objects in the radar emission area shown in the figure.

INSTRUMENTATION/DRIVER INFO.

Caution

- **If the radar test is performed in the shaded area shown in the figure with obstructions such as covered drain gutters in the floor or other metal reflective objects, it could result in the radar test not being performed correctly. Move all obstructions out of the area, and when performing the radar test, do not have personnel standing in the area.**

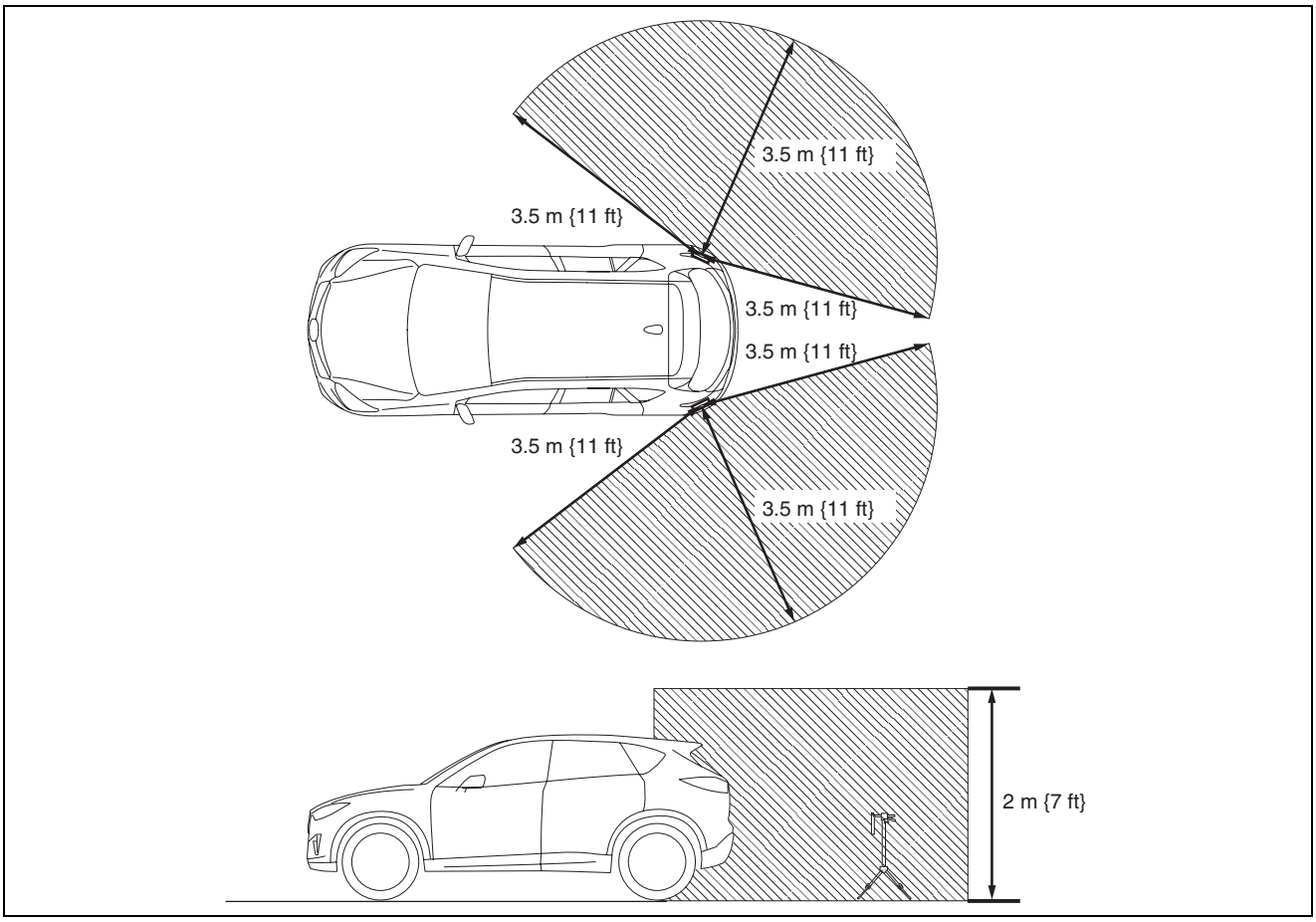

ac5wzw0000244

5. Using the M-MDS, perform a DTC inspection of the BSM control modules and verify that no DTCs are displayed. (See 09-02H-5 DTC INSPECTION [BLIND SPOT MONITORING (BSM)].)

Note

- If any DTCs are displayed, perform malfunction repair referring to the applicable DTC troubleshooting. (See 09-02H-6 DTC TABLE [BLIND SPOT MONITORING (BSM)].)

6. Adjust the SST (plum-bob) so that it is aligned with the center of the brand emblem, determine the center position at the front of the vehicle, and mark the center position (point A) on the floor surface.

Note

- The center of the brand emblem indicates the center position of the vehicle.

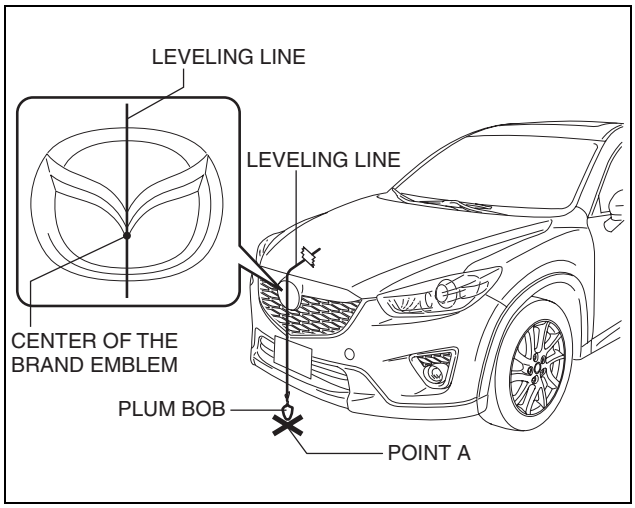

ac5wzw0000106

7. Adjust the SST (plum-bob) so that it is aligned with the center of the brand emblem, determine the center position at the rear of the vehicle, and mark the center position (point B) on the floor surface.

Note
- The center of the brand emblem indicates the center position of the vehicle.

8. Secure the end of the leveling line over point A.

Note
- Use a commercially-available leveling line.

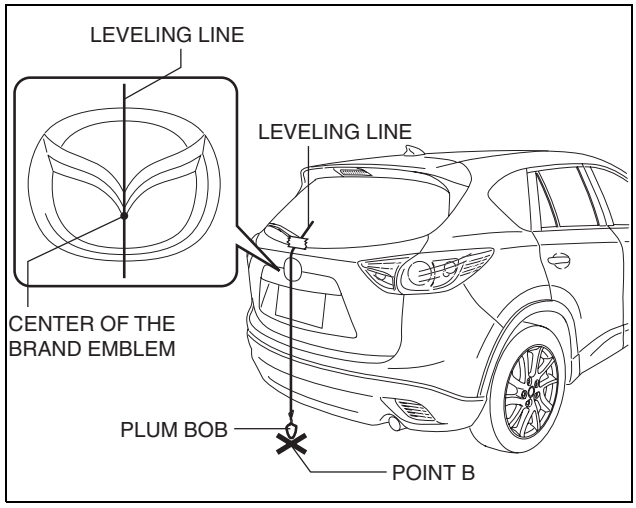

ac5wzw0000106

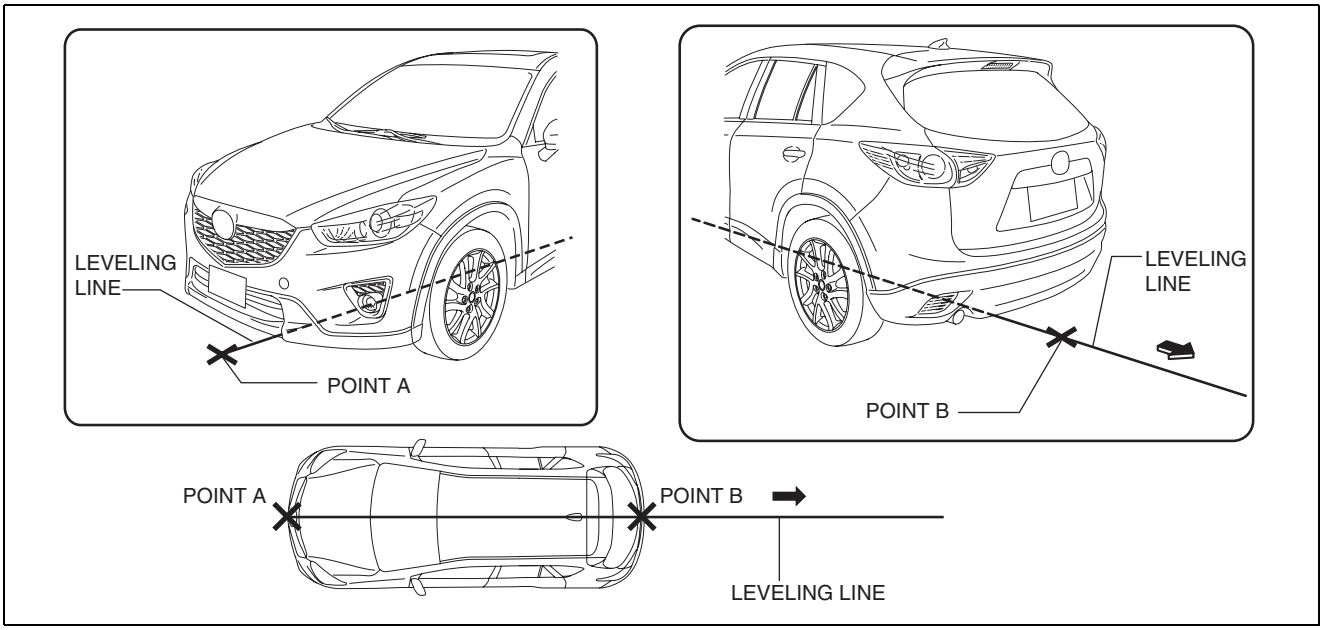

ac5wzw0000106

9. Pull the unsecured end of the leveling line over the vehicle and to the rear and adjust it so that passes over point B.
10. Mark the line (position C) within the range of **156.7—158.3 cm {61.70—62.32 in}** from point B and in the direction rearward of the vehicle.

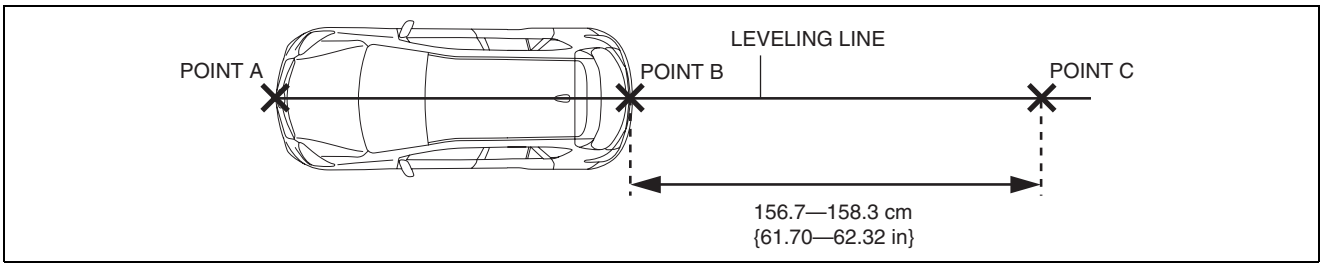

ac5wzw0000244

INSTRUMENTATION/DRIVER INFO.

11. Mark the points (points D and E) (SST (reflector) installation reference points) **171.2—172.8 cm {67.41—68.03 in}** from point C on the line which runs perpendicular to the vehicle center line (SST (reflector) installation reference point).

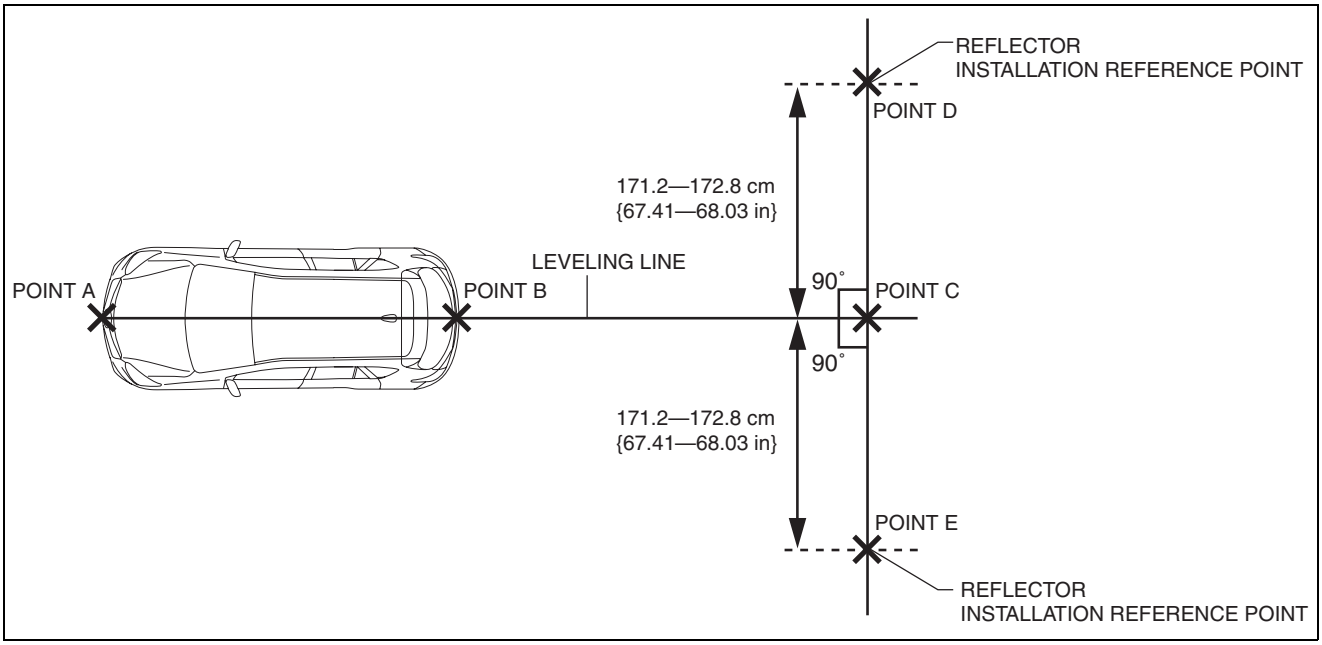

ac5wzw0000245

12. Pull the connected points D, C and E lines (SST (reflector) installation line).
13. Install the SST (reflector and plum bob) to the SST (tripod).
14. Adjust so that the height of the SST (reflector) from the floor surface is **75.2—76.8 cm {29.7—30.2 in}**.

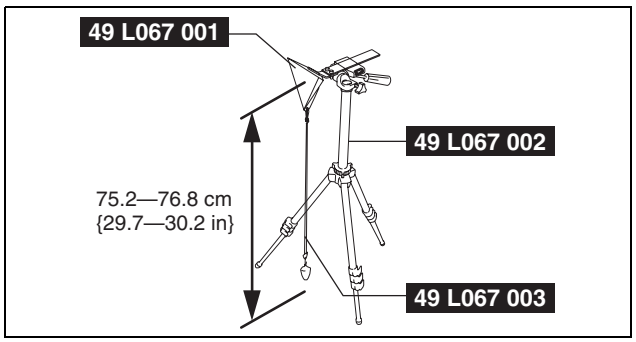

ac5wzw0000245

15. Level the SST (reflector) by adjusting the leveling bubble on the SST (tripod) so that it is centered on the bubble reference line.

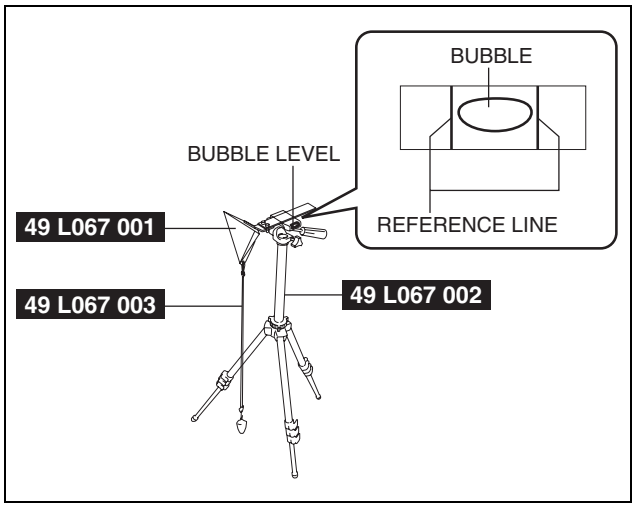

ac5wzw0000106

16. Align point D or point E with the end of the SST (plum bomb).

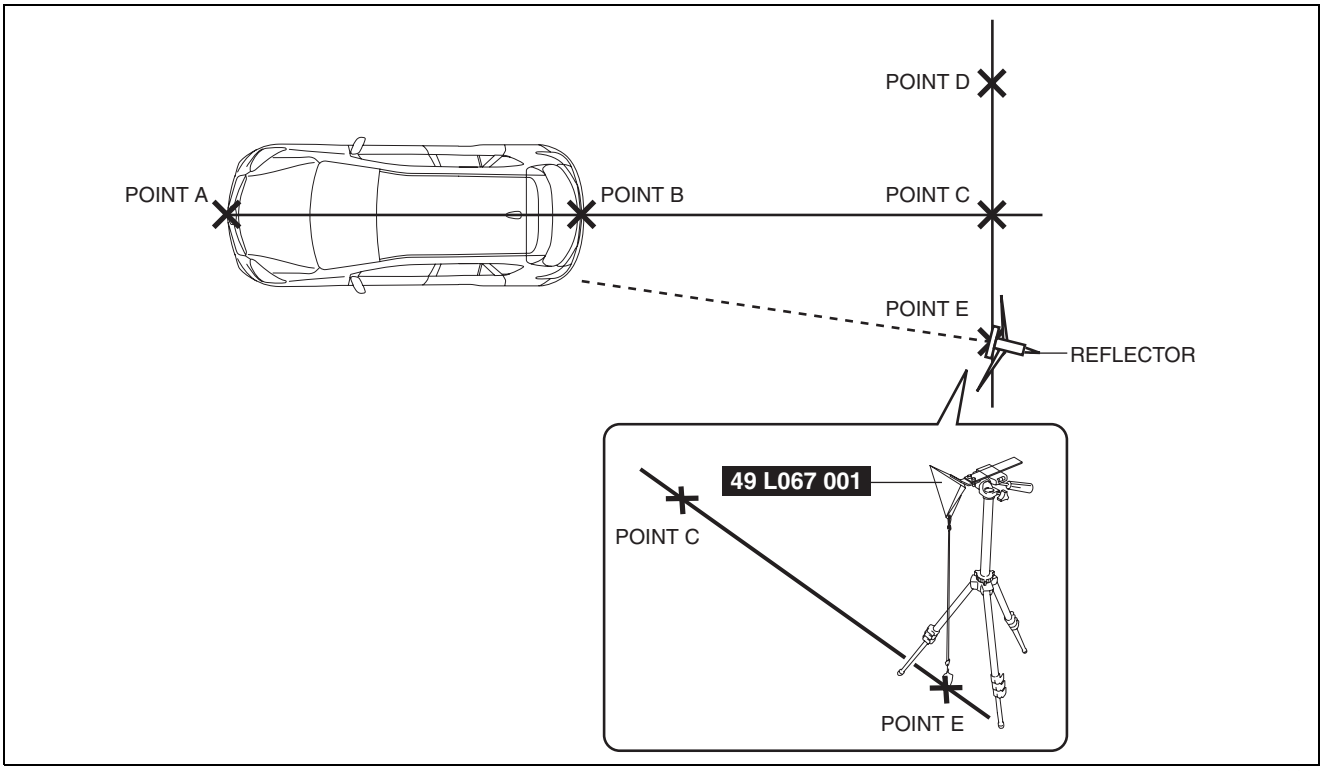

ac5wzw0000106

17. Adjust the reflecting surface of the SST (reflector) so that it faces the radar emission surface (near a rear bumper corner) of BSM control module.
18. Perform the radar test using the M-MDS.
19. Connect the M-MDS to the DLC-2.
20. After vehicle identification, the following can be selected from the M-MDS initialization screen.
    1. "Electrical"
    2. "BSM Radar Test"
21. Select either the left or right rear BSM control module and perform the radar test according to the instructions on the M-MDS screen.
22. Verify the M-MDS display.
    - If "TEST PASSED" is displayed
      — Radar test is completed
    - If "TEST FAILED" is displayed
      — Perform an inspection according to the following table.

Step	Inspection	Action	
1	**VERIFY REFLECTOR POSITION** • Verify if the reflector installation position is correct. • Is the reflector set in the correct position?	Yes	Go to the next step.
		No	Set the reflector in the correct position and perform the BSM radar test.
2	**INSPECT REAR BUMPER** • Remove the rear bumper. (See 09-10-24 REAR BUMPER REMOVAL/ INSTALLATION.) • Perform the BSM radar test. • Is "Procedure completed correctly." displayed?	Yes	Replace the rear bumper and perform the BSM radar test. (See 09-10-24 REAR BUMPER REMOVAL/ INSTALLATION.)
		No	Go to the next step.
3	**VERIFY IF BSM CONTROL MODULE OR BSM BRACKET IS MIS-INSTALLED AND IF THERE IS DISTORTION TO VEHICLE INSTALLATION SURFACE** • Verify whether a BSM control module or BSM bracket has been mis-installed, and if there is distortion to the vehicle installation surface. • Is there poor installation or distortion?	Yes	Repair or replace the malfunctioning part and perform the BSM radar test.
		No	Go to the next step.

INSTRUMENTATION/DRIVER INFO.

Step	Inspection	Action	
4	**RE-PERFORM THE BSM RADAR TEST** • Perform the BSM radar test. • Repeat the M-MDS operation for the BSM radar test 2 or 3 times (Steps 22 to 23). • Is "Procedure completed correctly." displayed?	Yes	BSM radar test is completed.
		No	Replace the BSM control module.

BLIND SPOT MONITORING (BSM) OFF SWITCH REMOVAL/INSTALLATION

id092200014100

Note
- The BSM OFF switch is integrated with the cluster switch.
- For the cluster switch removal/installation, refer to the switch panel removal/installation because the cluster switch is installed to the switch panel. (See 09-17-18 SWITCH PANEL REMOVAL/INSTALLATION.)

BLIND SPOT MONITORING (BSM) OFF SWITCH INSPECTION

id092200014200

1. Disconnect the negative battery cable. (See 01-17A-11 NEGATIVE BATTERY CABLE DISCONNECTION/CONNECTION [SKYACTIV-G 2.0].)(See 01-17B-9 NEGATIVE BATTERY CABLE DISCONNECTION/CONNECTION [SKYACTIV-D 2.2].)
2. Remove the BSM OFF switch. (See 09-22-76 BLIND SPOT MONITORING (BSM) OFF SWITCH REMOVAL/INSTALLATION.)
3. Verify that the resistance between BSM OFF switches B and C is as indicated in the table.

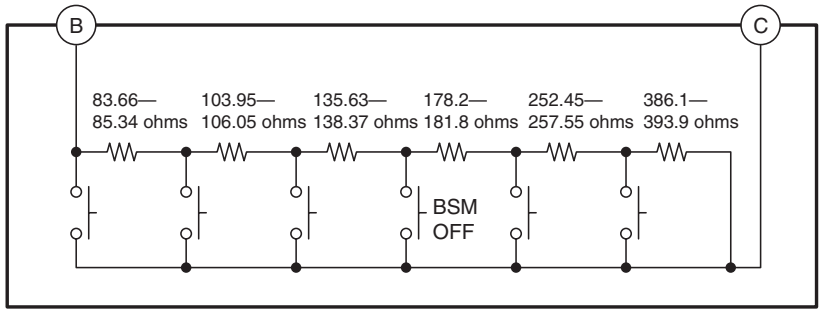

TEST CONDITION	RESISTANCE (ohms)
BSM OFF SWITCH PRESSED	323.24—329.76
ALL SWITCHES RELEASED	1,139.99—1,163.01

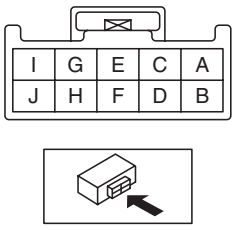

ac5wzw0000294

- If the resistance cannot be verified as indicated in the table, replace the cluster switch.

INSTRUMENTATION/DRIVER INFO.

4. Apply battery positive voltage to BSM OFF switch terminal J, and connect terminal I to ground.
5. Verify that the LED illuminates.
   - If there is any malfunction, replace the cluster switch.

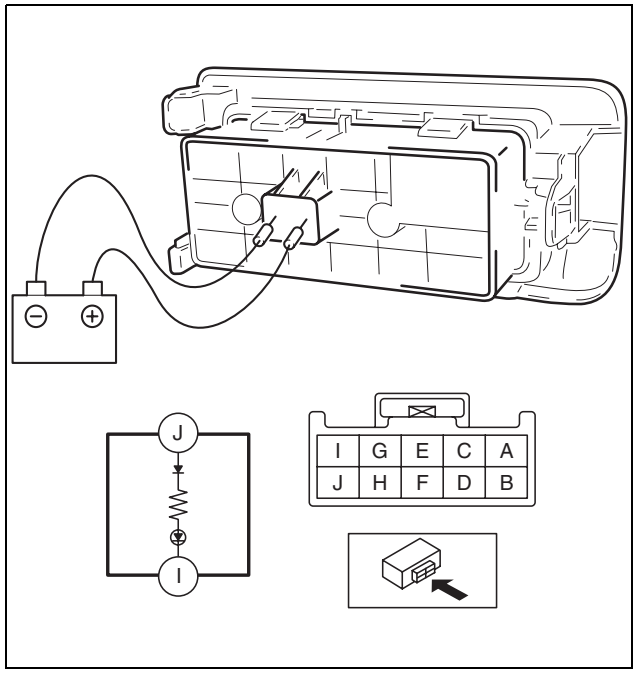

ac5jjw00000654

BLIND SPOT MONITORING (BSM) INDICATOR LIGHT REMOVAL/INSTALLATION

id092200014300

Note
- The BSM indicator lights are integrated into the outer mirror glass.
- For the BSM indicator light removal/installation, refer to the outer mirror glass removal/installation. (See 09-12-73 OUTER MIRROR GLASS REMOVAL.) (See 09-12-78 OUTER MIRROR GLASS INSTALLATION.)

BLIND SPOT MONITORING (BSM) INDICATOR LIGHT INSPECTION

id092200014400

Note
- The BSM indicator lights are integrated into the outer mirror glass.
- For the BSM indicator light inspection, refer to the outer mirror glass inspection. (See 09-12-81 OUTER MIRROR GLASS INSPECTION.)

REAR VEHICLE MONITORING CONTROL MODULE REMOVAL/INSTALLATION

id092200014600

Caution
- **If configuration is not performed when the rear vehicle monitoring control module (RH) is replaced with a new one, the vehicle specification information is not stored in the rear vehicle monitoring control module (RH) and the system will not operate normally.**
- **When performing configuration, it is necessary to read the vehicle specification information from the rear vehicle monitoring control module (RH) before replacing it. Connect the M-MDS to the vehicle and perform vehicle identification before removing the rear vehicle monitoring control module (RH). The vehicle specification information is temporarily stored in the M-MDS.**

Note
- The rear vehicle monitoring control module (RH) prior to replacement stores the vehicle specification information.
- A new rear vehicle monitoring control module (RH) does not store any vehicle specification information.
- If the vehicle specification information from the rear vehicle monitoring control module (RH) prior to replacement cannot be read, perform the configuration using As-Built data.

1. When replacing a rear vehicle monitoring control module (RH), perform the rear vehicle monitoring control module configuration. (See 09-22-82 REAR VEHICLE MONITORING CONTROL MODULE CONFIGURATION (USING READ/WRITE FUNCTION).)

INSTRUMENTATION/DRIVER INFO.

2. Disconnect the negative battery cable. (See 01-17A-11 NEGATIVE BATTERY CABLE DISCONNECTION/CONNECTION [SKYACTIV-G 2.0].)(See 01-17A-13 NEGATIVE BATTERY CABLE DISCONNECTION/CONNECTION [SKYACTIV-G 2.0 (WITHOUT i-stop)].)(See 01-17B-9 NEGATIVE BATTERY CABLE DISCONNECTION/CONNECTION [SKYACTIV-D 2.2].)
3. Remove the rear combination light. (See 09-18-54 REAR COMBINATION LIGHT REMOVAL/INSTALLATION.)
4. Remove the rear bumper. (See 09-10-24 REAR BUMPER REMOVAL/INSTALLATION.)
5. Disconnect the connector.

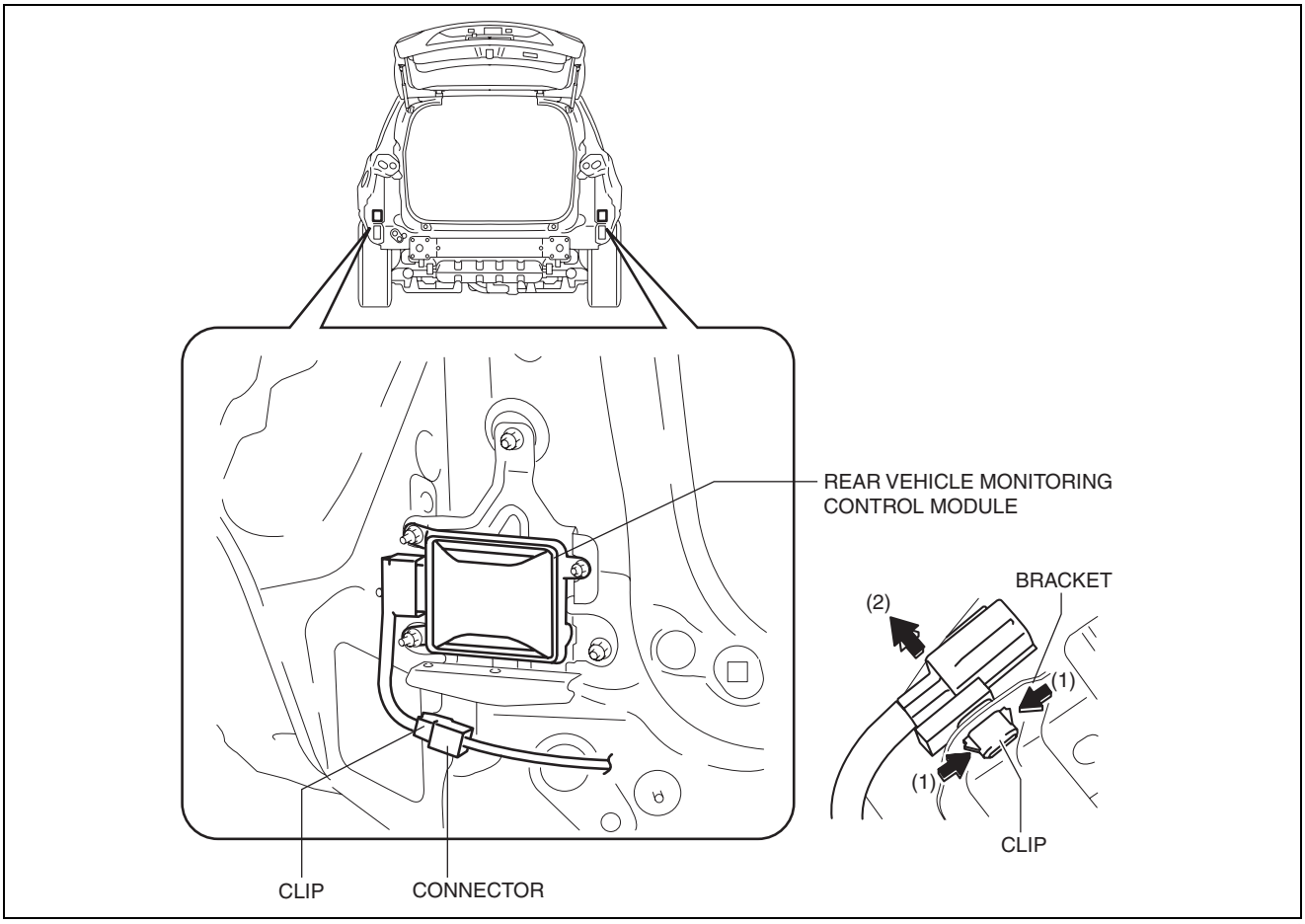

ac5wzw0000291

6. While pressing the tabs of the clip in the direction of the arrows (1) shown in the figure, pull the clip in the direction of the arrow (2) to detach it from the bracket.
7. Remove the clip from the bracket.

INSTRUMENTATION/DRIVER INFO.

8. Remove the nuts from the bracket.
9. Remove the rear vehicle monitoring control module from the bracket.
10. Install in the reverse order of removal.

Note

- If configuration cannot be performed by reading/writing of the vehicle specification information, perform the configuration using As-Built information after replacing the rear vehicle monitoring control module (RH). (See 09-22-83 REAR VEHICLE MONITORING CONTROL MODULE CONFIGURATION (USING AS-BUILT DATA).)

11. Perform the rear vehicle monitoring radar aiming procedure. (See 09-22-83 REAR VEHICLE MONITORING RADAR AIMING.)

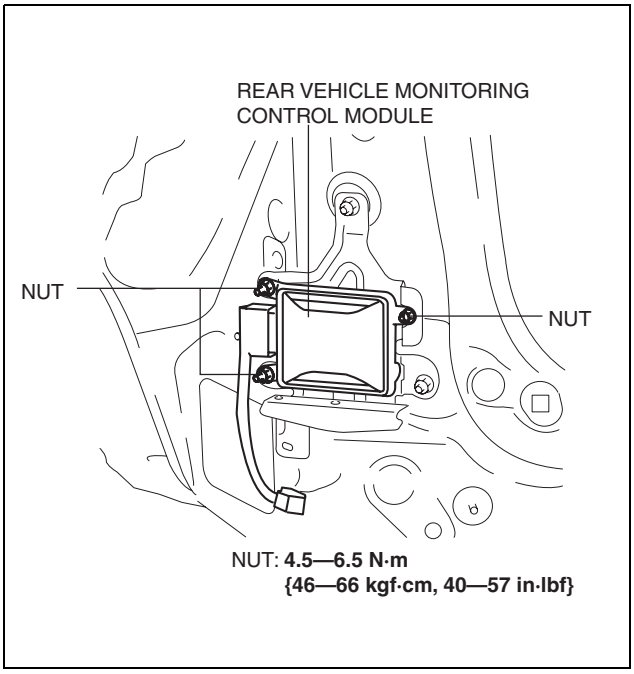

ac5wzw0000291

Caution

- **If a rear vehicle monitoring control module is replaced, not performing the rear vehicle monitoring radar aiming procedure will cause a deviation in the the radar emission angle which could result in the system not detecting a vehicle approaching from the rear correctly. If a rear vehicle monitoring control module is replaced, perform the rear vehicle monitoring radar aiming procedure.**

REAR VEHICLE MONITORING CONTROL MODULE INSPECTION

id092200014700

1. Disconnect the negative battery cable. (See 01-17A-11 NEGATIVE BATTERY CABLE DISCONNECTION/CONNECTION [SKYACTIV-G 2.0].)(See 01-17A-13 NEGATIVE BATTERY CABLE DISCONNECTION/CONNECTION [SKYACTIV-G 2.0 (WITHOUT i-stop)].)(See 01-17B-9 NEGATIVE BATTERY CABLE DISCONNECTION/CONNECTION [SKYACTIV-D 2.2].)
2. Remove the rear combination light. (See 09-18-54 REAR COMBINATION LIGHT REMOVAL/INSTALLATION.)
3. Remove the rear bumper. (See 09-10-24 REAR BUMPER REMOVAL/INSTALLATION.)
4. Connect the negative battery cable. (See 01-17A-11 NEGATIVE BATTERY CABLE DISCONNECTION/CONNECTION [SKYACTIV-G 2.0].)(See 01-17A-13 NEGATIVE BATTERY CABLE DISCONNECTION/CONNECTION [SKYACTIV-G 2.0 (WITHOUT i-stop)].)(See 01-17B-9 NEGATIVE BATTERY CABLE DISCONNECTION/CONNECTION [SKYACTIV-D 2.2].)
5. Verify that the voltages of each of the terminals are as indicated in the terminal voltage table (reference).
   - If the voltage is not as specified in the terminal voltage table (reference), inspect the parts under Inspection item(s).
     — If the system does not operate normally even though the inspection items are normal, replace the rear vehicle monitoring control module (RH) or the rear vehicle monitoring control module (LH).

Terminal Voltage Table (Reference)
Rear vehicle monitoring control module (RH)

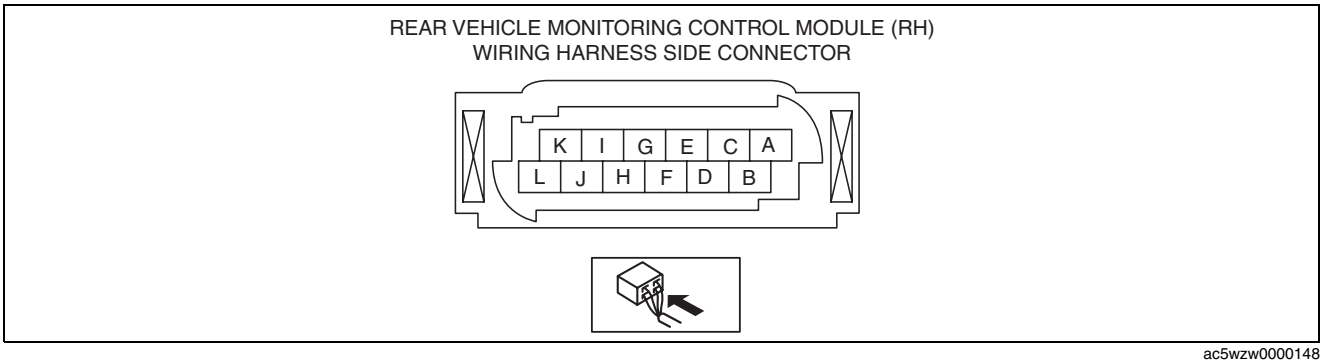

ac5wzw0000148

INSTRUMENTATION/DRIVER INFO.

Terminal	Signal name	Connected to	Measurement conditions	Voltage (V)	Inspection item(s)
A	CAN2_L	Rear vehicle monitoring CM (LH)	Because this terminal is for communication, determination using terminal voltage inspection is not possible.		
B	—	—	—	—	—
C	CAN2_H	Rear vehicle monitoring CM (LH)	Because this terminal is for communication, determination using terminal voltage inspection is not possible.		
D	—	—	—	—	—
E	—	—	—	—	—
F	Power position (1G1)	IG relay	Ignition switched ON (engine off or on)	B+	• C/U IG1 fuse • IG relay • Related wiring harness
			Ignition switched off (LOCK) or ACC	1.0 or less	
G	—	—	—	—	—
H	Ground	Body ground	Under any condition	1.0 or less	• Related wiring harness
I	MS-CAN_L	CAN communication related module	Because this terminal is for communication, determination using terminal voltage inspection is not possible.		
J	—	—	—	—	—
K	—	—	—	—	—
L	MS-CAN_H	CAN communication related module	Because this terminal is for communication, determination using terminal voltage inspection is not possible.		

Rear vehicle monitoring control module (LH)

REAR VEHICLE MONITORING CONTROL MODULE (LH)
WIRING HARNESS SIDE CONNECTOR

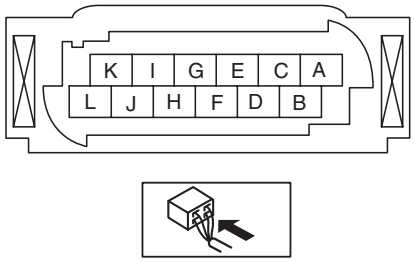

ac5wzw0000148

Terminal	Signal name	Connected to	Measurement conditions	Voltage (V)	Inspection item(s)
A	—	—	—	—	—
B	—	—	—	—	—
C	RVM warning indicator light ground signal (RH)	RVM warning indicator light (RH)	Under any condition	1.0 or less	• RVM warning indicator light (RH) • Related wiring harness
D	RVM warning indicator light signal (RH)	RVM warning indicator light (RH)	Turn off the RVM warning indicator light using the rear vehicle monitoring system simulation WRN_IND_R	1.0 or less	• RVM warning indicator light (RH) • Related wiring harness
			Turn on the RVM warning indicator light using the rear vehicle monitoring system simulation WRN_IND_R	Wave pattern (See 09-22-81 Inspection Using an Oscilloscope (Reference).)	

INSTRUMENTATION/DRIVER INFO.

Terminal	Signal name	Connected to	Measurement conditions	Voltage (V)	Inspection item(s)
E	—	—	—	—	—
F	Power position (1G1)	IG relay	Ignition switched ON (engine off or on)	B+	• C/U IG1 fuse • IG relay • Related wiring harness
			Ignition switched off (LOCK) or ACC	1.0 or less	
G	RVM warning indicator light ground signal (LH)	RVM warning indicator light (LH)	Under any condition	1.0 or less	• RVM warning indicator light (LH) • Related wiring harness
H	Ground	Body ground	Under any condition	1.0 or less	• Related wiring harness
I	CAN2_L	Rear vehicle monitoring CM (RH)	Because this terminal is for communication, determination using terminal voltage inspection is not possible.		
J	—	—	—	—	—
K	RVM warning indicator light signal (LH)	RVM warning indicator light (LH)	Turn off the RVM warning indicator light using the rear vehicle monitoring system simulation WRN_IND_L	1.0 or less	• RVM warning indicator light (LH) • Related wiring harness
			Turn on the RVM warning indicator light using the rear vehicle monitoring system simulation WRN_IND_L	Wave pattern (See 09-22-81 Inspection Using an Oscilloscope (Reference).)	
L	CAN2_H	Rear vehicle monitoring CM (RH)	Because this terminal is for communication, determination using terminal voltage inspection is not possible.		

Inspection Using an Oscilloscope (Reference)
Pattern 1

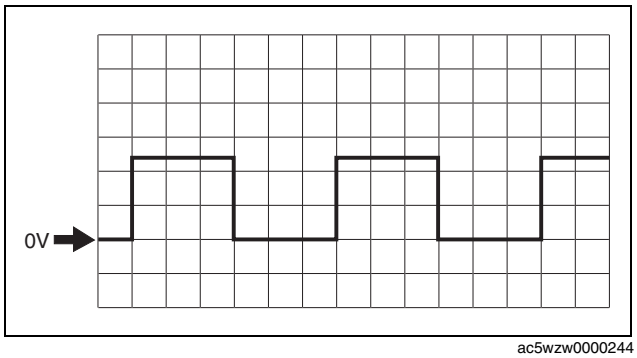

ac5wzw0000244

- Terminal:
  - — RVM warning indicator light signal (RH): D (+) ⇔ body ground (-)
  - — RVM warning indicator light signal (LH): K (+) ⇔ body earth (-)
- Oscilloscope setting: 2 V/DIV (Y), 2 ms/DIV (X), DC range

REAR VEHICLE MONITORING BRACKET REMOVAL/INSTALLATION

id092200014900

1. Disconnect the negative battery cable. (See 01-17A-11 NEGATIVE BATTERY CABLE DISCONNECTION/CONNECTION [SKYACTIV-G 2.0].)(See 01-17A-13 NEGATIVE BATTERY CABLE DISCONNECTION/CONNECTION [SKYACTIV-G 2.0 (WITHOUT i-stop)].)(See 01-17B-9 NEGATIVE BATTERY CABLE DISCONNECTION/CONNECTION [SKYACTIV-D 2.2].)
2. Remove the following parts:
   (1) Rear combination lights (See 09-18-54 REAR COMBINATION LIGHT REMOVAL/INSTALLATION.)
   (2) Rear bumper (See 09-10-24 REAR BUMPER REMOVAL/INSTALLATION.)

INSTRUMENTATION/DRIVER INFO.

(3) Rear vehicle monitoring control module (See 09-22-77 REAR VEHICLE MONITORING CONTROL MODULE REMOVAL/INSTALLATION.)

3. Remove the nuts from the rear vehicle monitoring bracket.

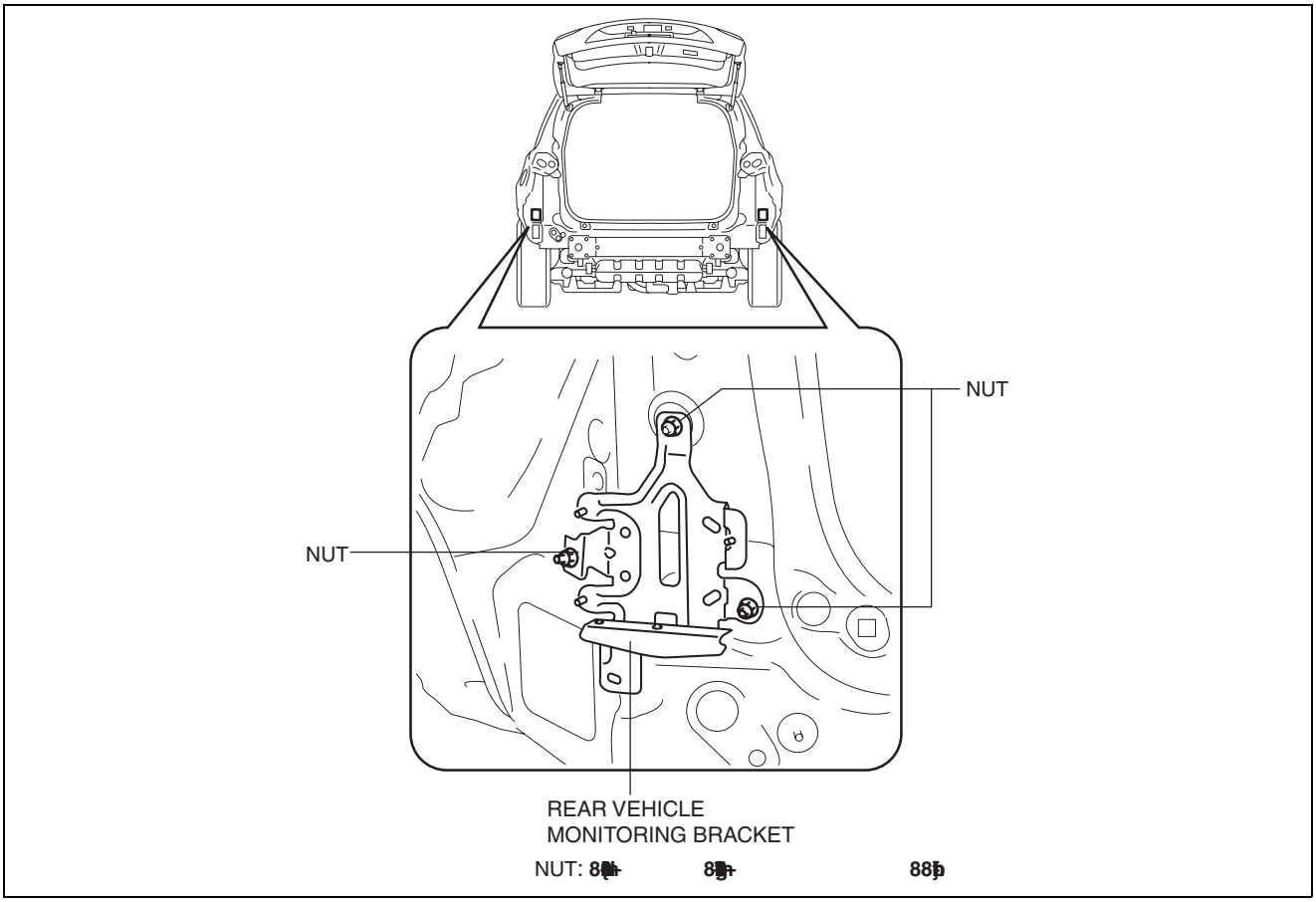

ac5wzw0000292

4. Remove the rear vehicle monitoring bracket.
5. Install in the reverse order of removal.
6. Perform the rear vehicle monitoring radar aiming procedure. (See 09-22-83 REAR VEHICLE MONITORING RADAR AIMING.)

Caution

- **If a rear vehicle monitoring bracket is replaced, not performing the rear vehicle monitoring radar aiming procedure will cause a deviation in the the radar emission angle which could result in the system not detecting a vehicle approaching from the rear correctly. If a rear vehicle monitoring bracket is replaced, perform the rear vehicle monitoring radar aiming.**

REAR VEHICLE MONITORING CONTROL MODULE CONFIGURATION (USING READ/WRITE FUNCTION)

id092200033400

Note

- When performing configuration, it is necessary to read the vehicle specification information from the rear vehicle monitoring control module (RH) before replacing it. Connect the M-MDS to the vehicle and perform vehicle identification before removing the rear vehicle monitoring control module (RH). The vehicle specification information is temporarily stored in the M-MDS.

1. Connect the M-MDS to the DLC-2.
2. After vehicle identification, select the following from the M-MDS initialization screen.
   1. “Module programming”
3. Then, select the following from the screen menu.
   1. “Programmable Module Installation”
   2. “RVM”
4. Perform the configuration following the instructions on the screen.

Caution

- **When the configuration is performed, CAN communication between the rear vehicle monitoring control module (RH) and control module connected to the CAN line is cut temporarily, and communication error DTCs may be detected. After performing the configuration, verify the DTCs for the control module connected to the CAN line and clear it if any DTC is detected.**

5. Verify the DTCs for all of the control modules connected to the CAN line.
   - If any DTC is stored, clear it.
   - If the DTC is cleared, finish the procedure because the configuration has been completed normally.
   - If the DTC remains, perform troubleshooting according to the DTC.

REAR VEHICLE MONITORING CONTROL MODULE CONFIGURATION (USING AS-BUILT DATA)

id092200032200

Note

- If the configuration is performed using As-Built data, the set value of the personalization function is reset to the initial value (condition when shipped from factory). Verify the set value with the customer and perform the personalization function setting after performing the configuration using As-Built data.

1. Connect the M-MDS to the DLC-2.
2. After vehicle identification, select the following from the M-MDS initialization screen.
   1. “Module programming”
3. Then, select the following from the screen menu.
   1. “As-Built”
   2. “RVM”
4. Perform As-Built following the instructions on the screen.

Caution

- **When the configuration is performed, CAN communication between the rear vehicle monitoring control module (RH) and control module connected to the CAN line is cut temporarily, and communication error DTCs may be detected. After performing the configuration, verify the DTCs for the control module connected to the CAN line and clear it if any DTC is detected.**

5. Verify the DTCs for all of the control modules connected to the CAN line.
   - If any DTC is stored, clear it.
   - If the DTC is cleared, finish the procedure because the configuration has been completed normally.
   - If the DTC remains, perform troubleshooting according to the DTC.

REAR VEHICLE MONITORING RADAR AIMING

id092200015000

Note

- The rear vehicle monitoring radar aiming procedure stores the radar angles in the rear vehicle monitoring control module based on the forced emission of radar at a SST (Doppler simulator) and performing aiming based on the induced tolerance with the radar as it is currently installed and reflected from the SST (Doppler simulator).
- The rear vehicle monitoring radar aiming is performed when the rear vehicle monitoring control module, rear vehicle monitoring bracket or the rear bumper is replaced.
- As there are two rear vehicle monitoring control modules, one each on the left and right, radar aiming is performed for each side.
- Radar aiming cannot be performed correctly if obstructions which interfere with radar emission are stuck on the rear vehicle monitoring control modules or the rear bumper. Perform the following procedure before performing the radar aiming.
  - — Verify that there is no water, mud, soiling, sticker adhesion, or repairs done using putty application on the surface of the rear bumper, and that there is no mud, soiling or scratches on the rear vehicle monitoring control modules.

Radar aiming procedure

1. Empty the vehicle by having all occupants leave the vehicle and remove all the cargo except for the spare tire, jack and tools.
2. Adjust the air pressure of each tire to the specified value. (See 02-12-1 WHEEL AND TIRE SPECIFICATION.)
3. Move the vehicle to level ground.

INSTRUMENTATION/DRIVER INFO.

Caution

- **If the setting surface height and angle between the vehicle and the SST (Doppler simulator) differs, correct radar aiming cannot be done. Perform the radar aiming with the vehicle and SST (Doppler simulator) set on level ground.**

APPROPRIATE LOCATION

VEHICLE AND DOPPLER SIMULATOR SETTING SURFACE ON LEVEL GROUND

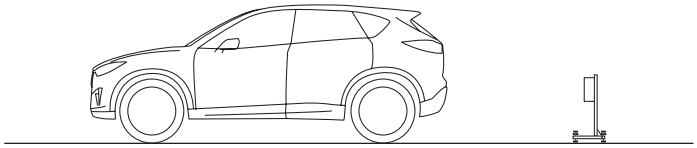

INAPPROPRIATE LOCATION

HEIGHT DIFFERENCE BETWEEN VEHICLE AND DOPPLER SIMULATOR

INCLINATION ANGLE BETWEEN VEHICLE AND DOPPLER SIMULATOR UNMATCHED

SLOPE

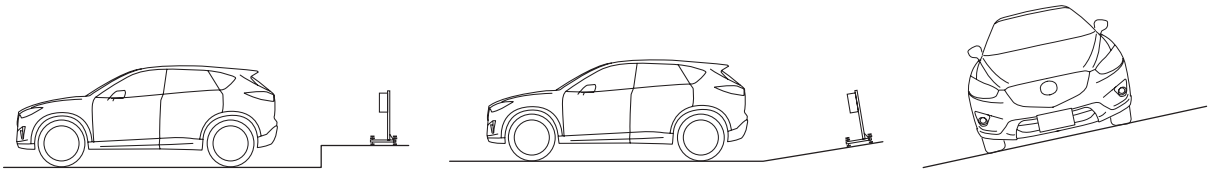

ac5wzw0000086

4. Verify that there are no obstructions which interfere with radar emissions such as metal objects in the radar emission area shown in the figure.

Caution

- **If the radar aiming is performed in the shaded area show in the figure with obstructions such as covered drain gutters in the floor or other metal reflective objects, it could result in the radar aiming not being performed correctly. Move all obstructions out of the area, and when performing the radar aiming, do not have personnel standing in the area.**

INSTRUMENTATION/DRIVER INFO.

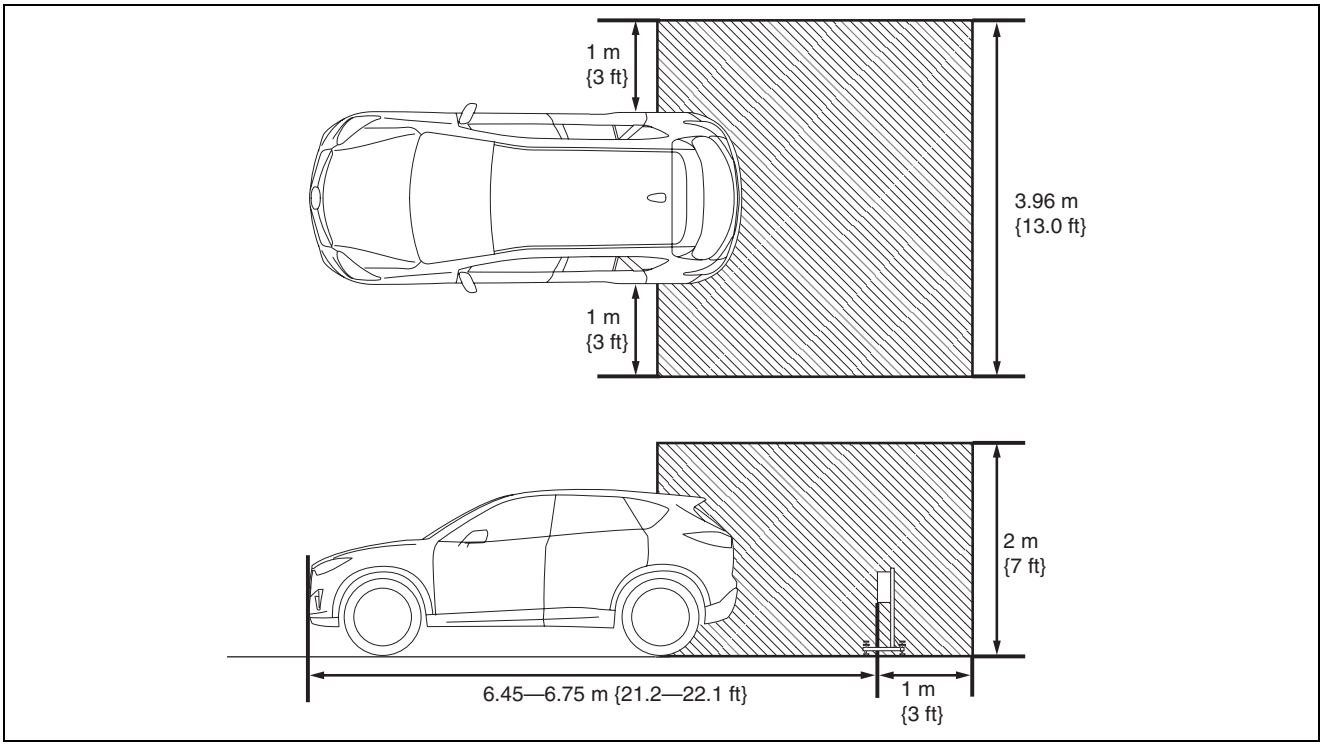

ac5wzw0000086

5. Perform the DTC inspection for the rear vehicle monitoring control module using the M-MDS and verify that no DTCs are displayed. (See 09-02I-4 DTC INSPECTION [REAR VEHICLE MONITORING SYSTEM].)

Note
- If any DTCs are displayed, perform malfunction repair referring to the applicable DTC troubleshooting. (See 09-02I-5 DTC TABLE [REAR VEHICLE MONITORING SYSTEM].)

6. Adjust the SST (plum-bob) so that it is aligned with the center of the brand emblem, determine the center position at the front of the vehicle, and mark the center position (point A) on the floor surface.

Note
- The center of the brand emblem indicates the center position of the vehicle.

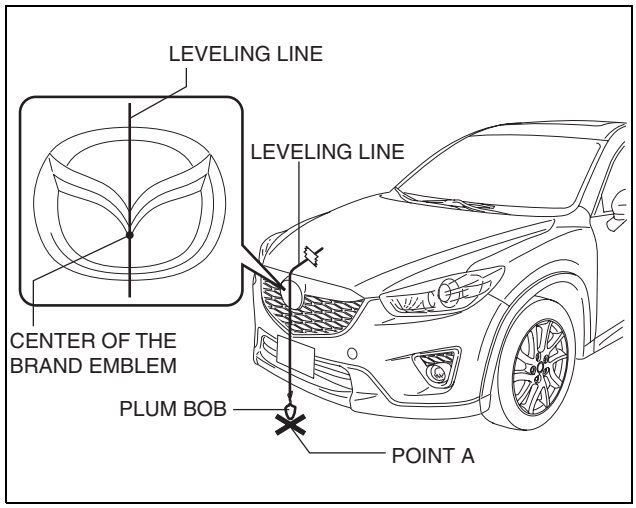

ac5wzw0000086

INSTRUMENTATION/DRIVER INFO.

7. Adjust the SST (plum-bob) so that it is aligned with the center of the brand emblem, determine the center position at the rear of the vehicle, and mark the center position (point B) on the floor surface.

   Note
   - The center of the brand emblem indicates the center position of the vehicle.

8. Secure the end of the leveling line over point A.

   Note
   - Use a commercially-available leveling line.

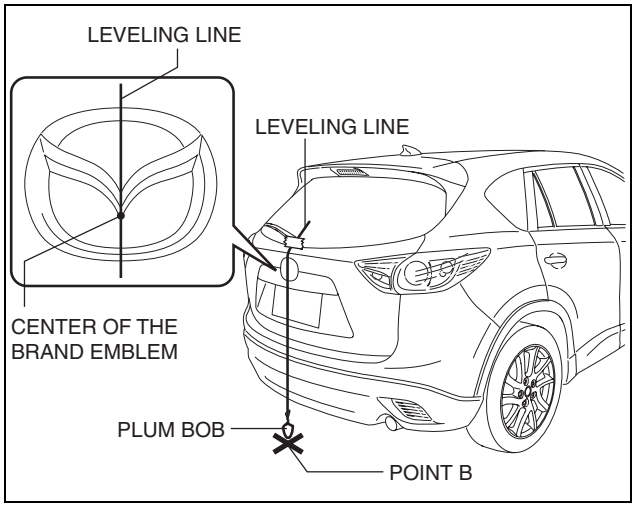

ac5wzw0000086

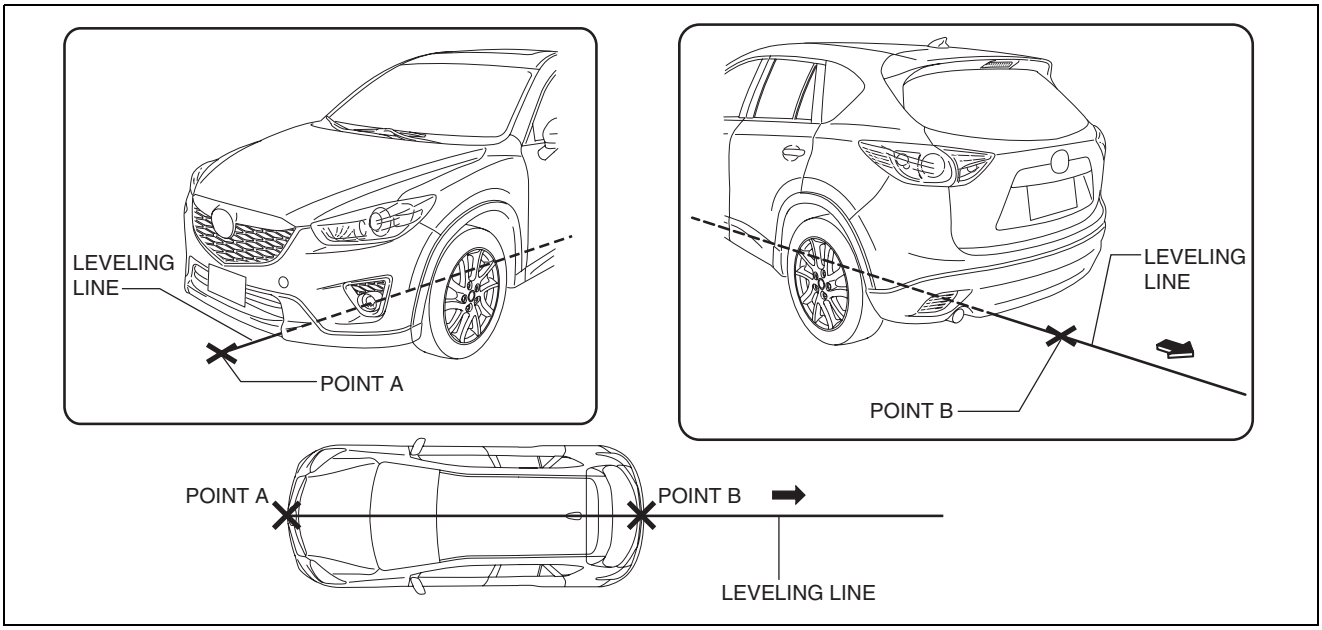

ac5wzw0000086

9. Pull the unsecured end of the leveling line over the vehicle and to the rear and adjust it so that passes over point B.
10. Mark the line (position C) within the range of **6.45 —6.75 m {21.2—22.1 ft}** from point A and in the direction rearward of the vehicle.

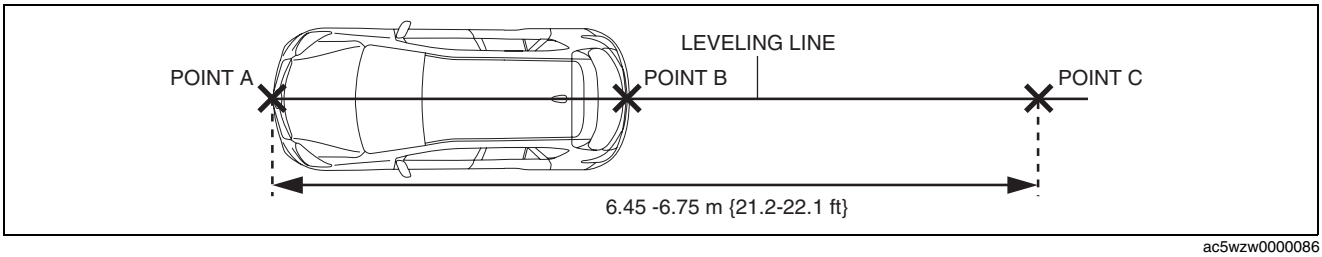

ac5wzw0000086

INSTRUMENTATION/DRIVER INFO.

11. Mark the points (points D and E) (SST (Doppler simulator) installation reference points) **66.7—67.7 cm {26.3—26.6 in}** from point C on the line which runs perpendicular to the vehicle center line (SST (Doppler simulator) installation reference point).

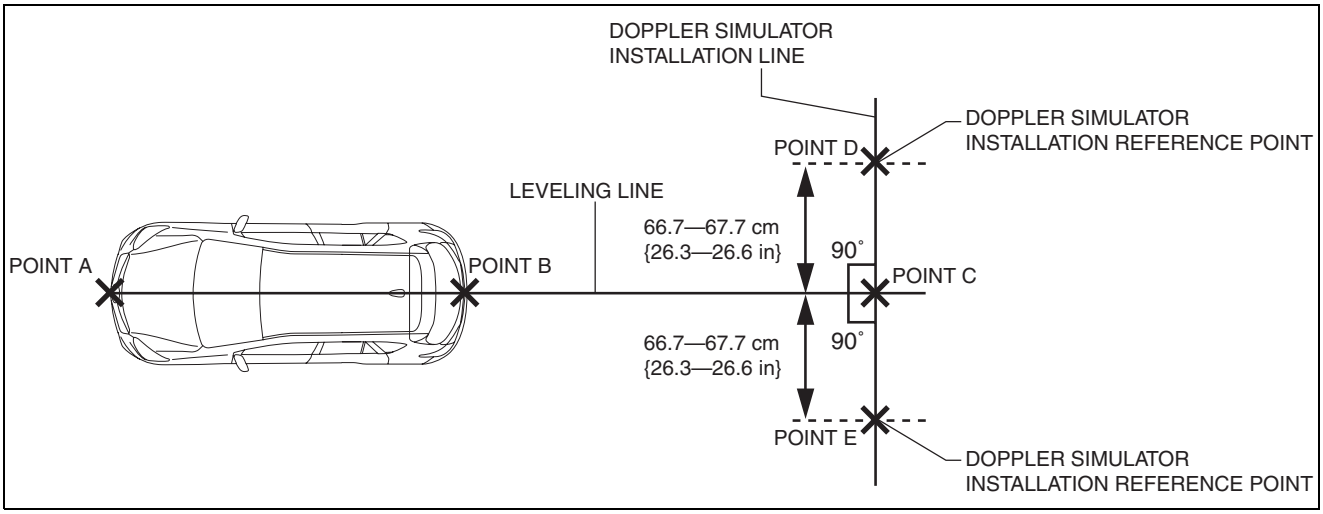

ac5wzw0000086

12. Pull the connected points D, C and E lines (SST (Doppler simulator) installation line).
13. Insert the SST (AC-DC converter) into the side of the SST (Doppler simulator) and turn on the power.

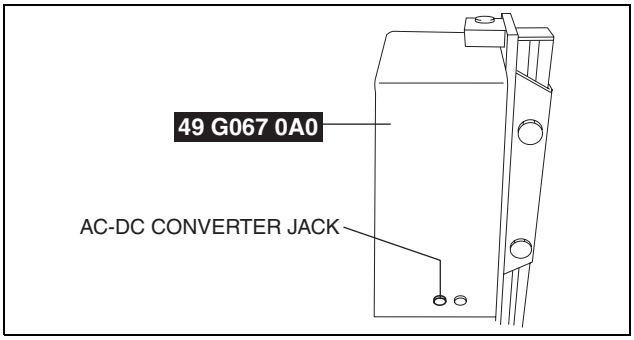

ac5wzw0000086

Note
- Verify that the green lamp on the SST (Doppler simulator) unit illuminates.

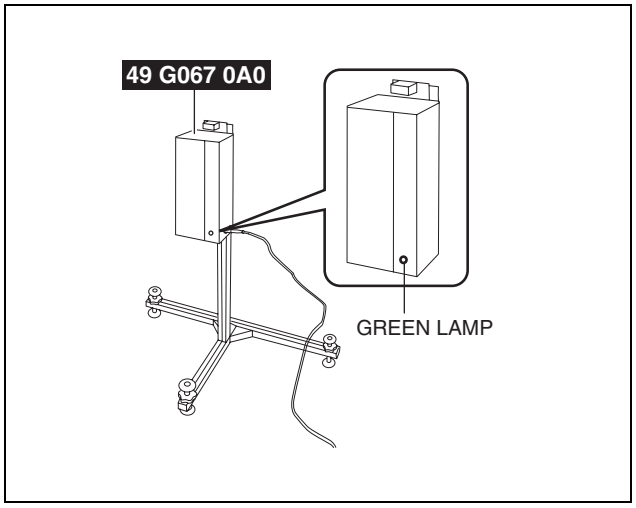

ac5wzw0000086

14. Loosen the fixing knobs on the side of the SST (Doppler simulator) and adjust the height of the SST (Doppler simulator) so that the height is between **99—101 cm {39.0—39.7 in}** from the floor.

Caution
- **If the knobs are loosened excessively, the SST (Doppler simulator) could fall and become damaged. Support the SST (Doppler simulator) with one hand while loosening the fixing knobs.**

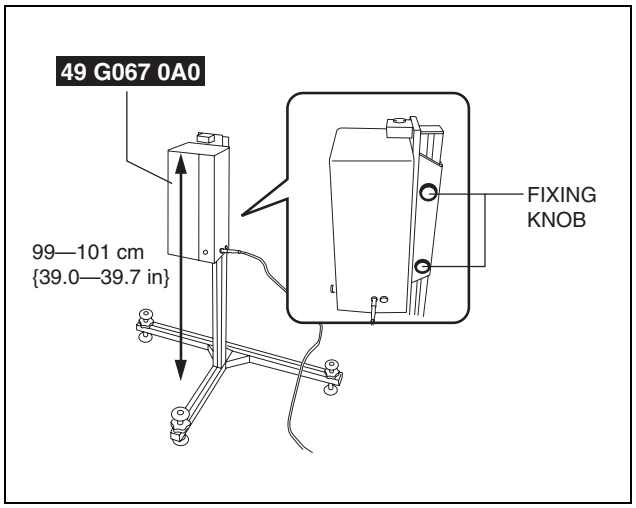

ac5wzw0000086

15. Level the SST (Doppler simulator) by turning the SST (Doppler simulator) adjustment knobs and adjust so that the leveling bubble is centered on the reference line.

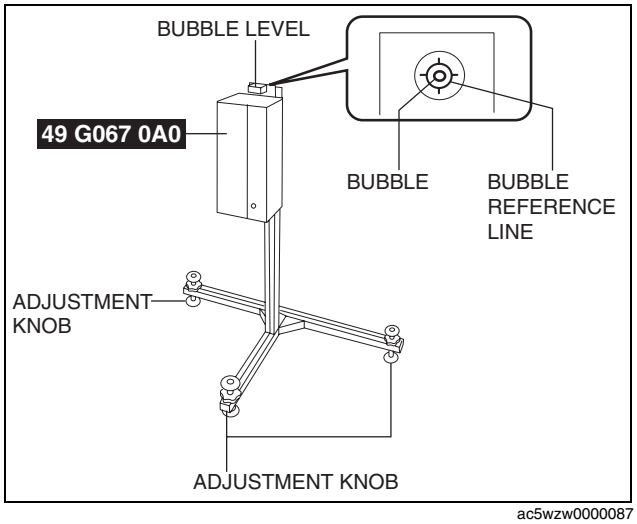

ac5wzw0000087

INSTRUMENTATION/DRIVER INFO.

16. Drop the SST (plum bob) to the floor along the reference line printed on the SST (Doppler simulator).
17. Align point D or point E with the end of the SST (plum bomb).

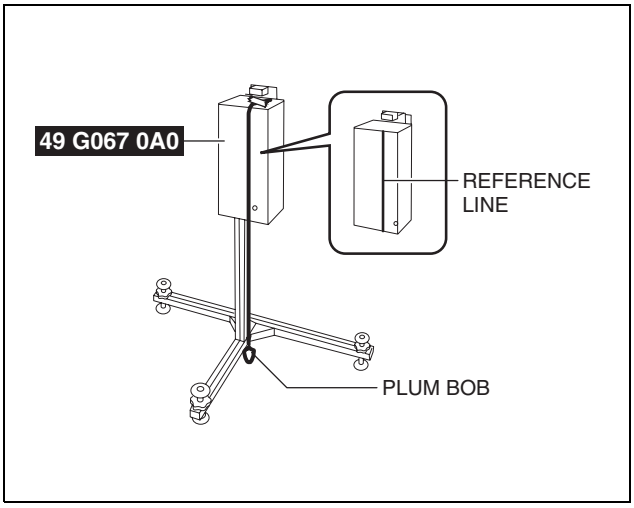

ac5wzw0000087

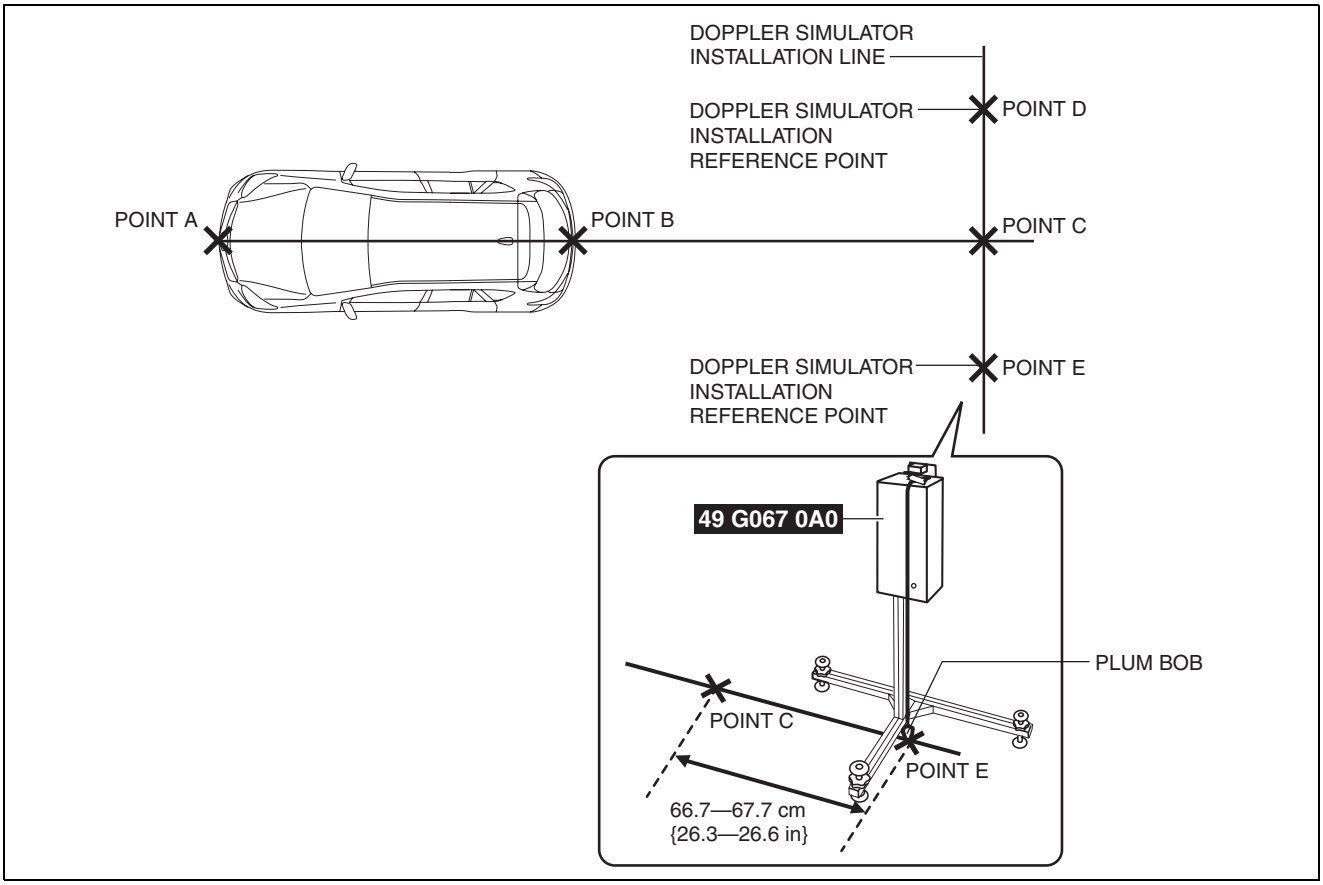

ac5wzw0000087

INSTRUMENTATION/DRIVER INFO.

18. Align so that the SST (Doppler simulator) installation line and the SST stand (Doppler simulator) are level at the center of point D or point E.

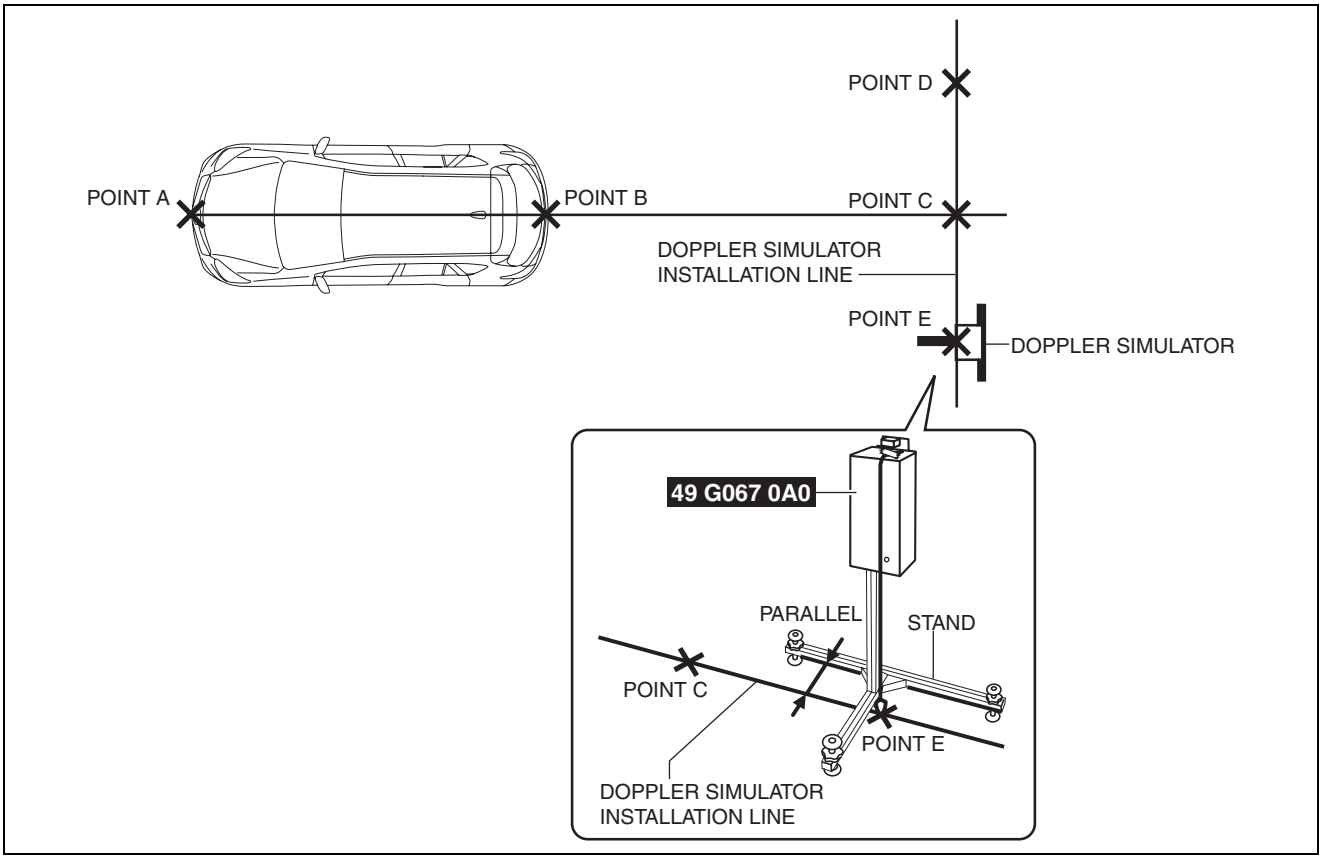

ac5wzw0000087

19. Remove the SST (plum bob).
20. Perform the radar aiming using the M-MDS.
21. Connect the M-MDS to the DLC-2.
22. After vehicle identification, the following can be selected from the M-MDS initialization screen.
    1. “Electrical components”
    2. "RVM aiming"
23. Select either the left or right rear vehicle monitoring control module and perform the radar aiming according to the instructions on the M-MDS screen.
24. Verify the M-MDS display.
    - If "Procedure completed successfully" is displayed
      — The radar aiming procedure is complete
    - If “This test found error.” Or, "Procedure not completed successfully" is displayed.
      — Perform an inspection according to the following table.

Step	Inspection	Action	
1	**DOPPLER SIMULATOR POSITION SET VERIFICATION** • Verify if the Doppler simulator installation position is correct. • Is the Doppler simulator set in the correct position?	Yes	Go to the next step.
		No	Set the Doppler simulator in the correct position and perform the rear vehicle monitoring radar aiming.
2	**INSPECT REAR BUMPER** • Remove the rear bumper. (See 09-10-24 REAR BUMPER REMOVAL/ INSTALLATION.) • Perform the rear vehicle monitoring radar aiming procedure. • Is "Procedure completed successfully." displayed?	Yes	Replace the rear bumper and perform the RVM radar aiming procedure. (See 09-10-24 REAR BUMPER REMOVAL/ INSTALLATION.)
		No	Go to the next step.

INSTRUMENTATION/DRIVER INFO.

Step	Inspection	Action	
3	**VERIFY IF RVM CONTROL MODULE OR RVM BRACKET IS MIS-INSTALLED AND IF THERE IS DISTORTION TO VEHICLE INSTALLATION SURFACE** • Verify whether a RVM control module or RVM bracket has been mis-installed, and if there is distortion to the vehicle installation surface. • Is there poor installation or distortion?	Yes	Repair or replace the malfunctioning part and perform the RVM radar aiming procedure.
		No	Go to the next step.
4	**REPEAT REAR MONITORING RADAR AIMING** • Perform the rear vehicle monitoring radar aiming procedure. • Repeat the M-MDS operation for the rear vehicle monitoring radar aiming 2 or 3 times (Steps 22 to 23). • Is "Procedure completed correctly." displayed?	Yes	The rear vehicle monitoring radar aiming is completed.
		No	Replace the applicable rear vehicle monitoring control module.

RVM SWITCH REMOVAL/INSTALLATION

id092200015100

Note
- The RVM switch is integrated with the cluster switch.
- For the cluster switch removal/installation, refer to the switch panel removal/installation because the cluster switch is installed to the switch panel. (See 09-17-18 SWITCH PANEL REMOVAL/INSTALLATION.)

RVM SWITCH INSPECTION

id092200015200

1. Disconnect the negative battery cable. (See 01-17A-11 NEGATIVE BATTERY CABLE DISCONNECTION/CONNECTION [SKYACTIV-G 2.0].)(See 01-17A-13 NEGATIVE BATTERY CABLE DISCONNECTION/CONNECTION [SKYACTIV-G 2.0 (WITHOUT i-stop)].)(See 01-17B-9 NEGATIVE BATTERY CABLE DISCONNECTION/CONNECTION [SKYACTIV-D 2.2].)
2. Remove the RVM switch. (See 09-22-91 RVM SWITCH REMOVAL/INSTALLATION.)
3. Verify that the resistance between RVM switches B and C is as indicated in the table.

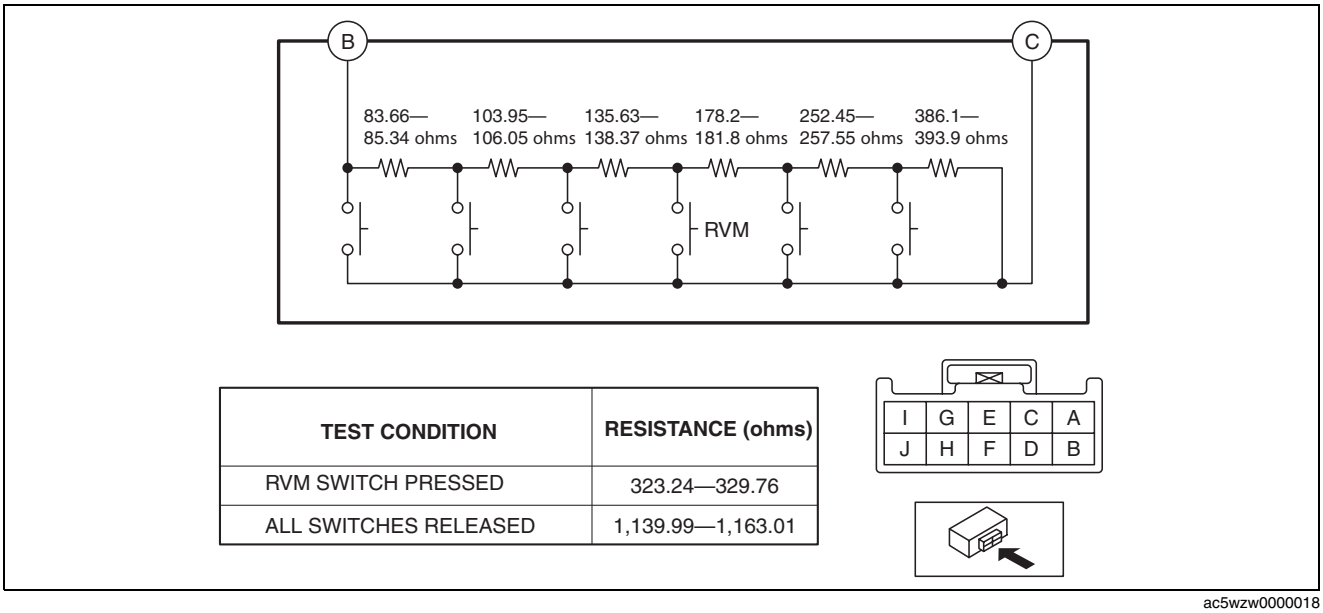

TEST CONDITION	RESISTANCE (ohms)
RVM SWITCH PRESSED	323.24—329.76
ALL SWITCHES RELEASED	1,139.99—1,163.01

ac5wzw0000018

- If the resistance cannot be verified as indicated in the table, replace the cluster switch.

4. Apply battery positive voltage to RVM switch terminal J, and connect terminal I to ground.
5. Verify that the LED illuminates.
   - If there is any malfunction, replace the cluster switch.

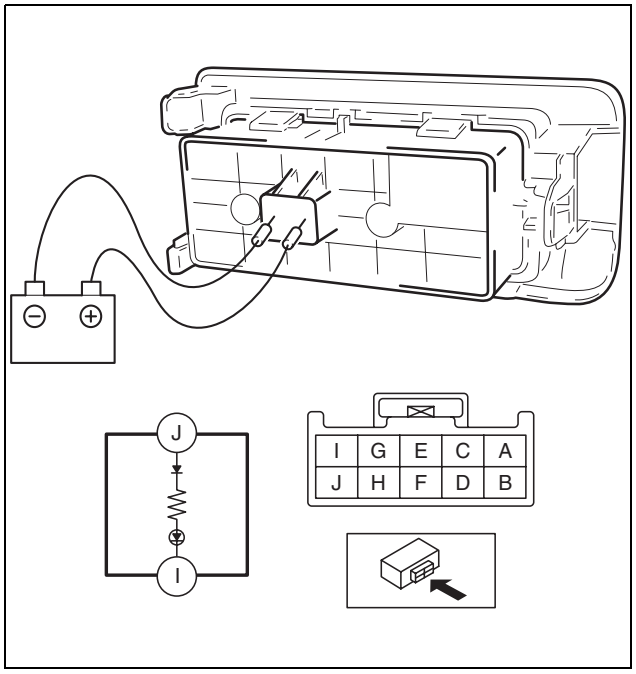

ac5jjw00000654

RVM WARNING INDICATOR LIGHT REMOVAL/INSTALLATION

id092200015300

Note
- The RVM warning indicator lights are integrated into the outer mirror glass.
- For the RVM warning indicator light removal/installation, refer to the outer mirror glass removal/installation. (See 09-12-73 OUTER MIRROR GLASS REMOVAL.) (See 09-12-78 OUTER MIRROR GLASS INSTALLATION.)

RVM WARNING INDICATOR LIGHT INSPECTION

id092200015400

Note
- The RVM warning indicator lights are integrated into the outer mirror glass.
- For the RVM warning indicator light inspection, refer to the outer mirror glass inspection. (See 09-12-81 OUTER MIRROR GLASS INSPECTION.)

CLOCK REMOVAL/INSTALLATION

id092200028900

1. Disconnect the negative battery cable. (See 01-17A-11 NEGATIVE BATTERY CABLE DISCONNECTION/CONNECTION [SKYACTIV-G 2.0].)(See 01-17A-13 NEGATIVE BATTERY CABLE DISCONNECTION/CONNECTION [SKYACTIV-G 2.0 (WITHOUT i-stop)].)(See 01-17B-9 NEGATIVE BATTERY CABLE DISCONNECTION/CONNECTION [SKYACTIV-D 2.2].)
2. Remove the following parts:
   (1) Shift lever knob (MTX) (See 05-16A-1 MANUAL TRANSAXLE SHIFT MECHANISM REMOVAL/INSTALLATION [C66M-R, C66MX-R].)(See 05-16B-1 MANUAL TRANSAXLE SHIFT MECHANISM REMOVAL/INSTALLATION [D66M-R, D66MX-R].)
   (2) Front console box (See 09-17-40 FRONT CONSOLE BOX REMOVAL/INSTALLATION.)
   (3) Shift panel (See 09-17-42 SHIFT PANEL REMOVAL/INSTALLATION.)
   (4) Upper panel (See 09-17-44 UPPER PANEL REMOVAL/INSTALLATION.)
   (5) Rear console (See 09-17-45 REAR CONSOLE REMOVAL/INSTALLATION.)
   (6) Side wall (See 09-17-49 SIDE WALL REMOVAL/INSTALLATION.)
   (7) Decoration panel (See 09-17-33 DECORATION PANEL REMOVAL/INSTALLATION.)
   (8) Front console (See 09-17-50 FRONT CONSOLE REMOVAL/INSTALLATION.)
   (9) Glove compartment (See 09-17-30 GLOVE COMPARTMENT REMOVAL/INSTALLATION.)
   (10) Climate control unit (See 07-40B-16 CLIMATE CONTROL UNIT REMOVAL/INSTALLATION [MANUAL AIR CONDITIONER].)

INSTRUMENTATION/DRIVER INFO.

3. Push out the clock in the direction of the arrow (2) shown in the figure while pressing clip A in the direction of the arrow (1) shown in the figure, and detach clip A and the climate control unit.

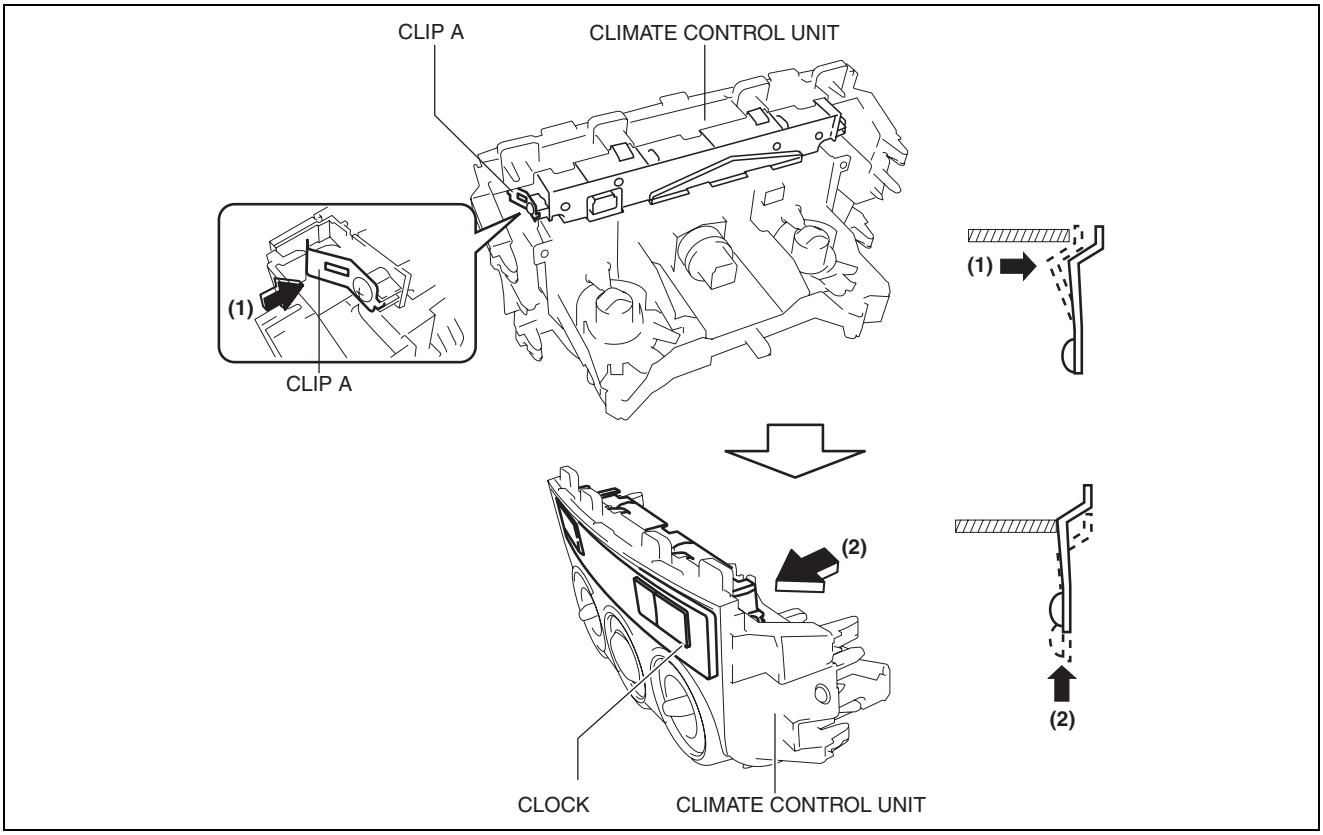

ac5jjw00000242

INSTRUMENTATION/DRIVER INFO.

4. Push out the clock in the direction of the arrow (4) shown in the figure while pressing the clock tab in the direction of the arrow (3) shown in the figure and remove the clock tab and climate control unit.

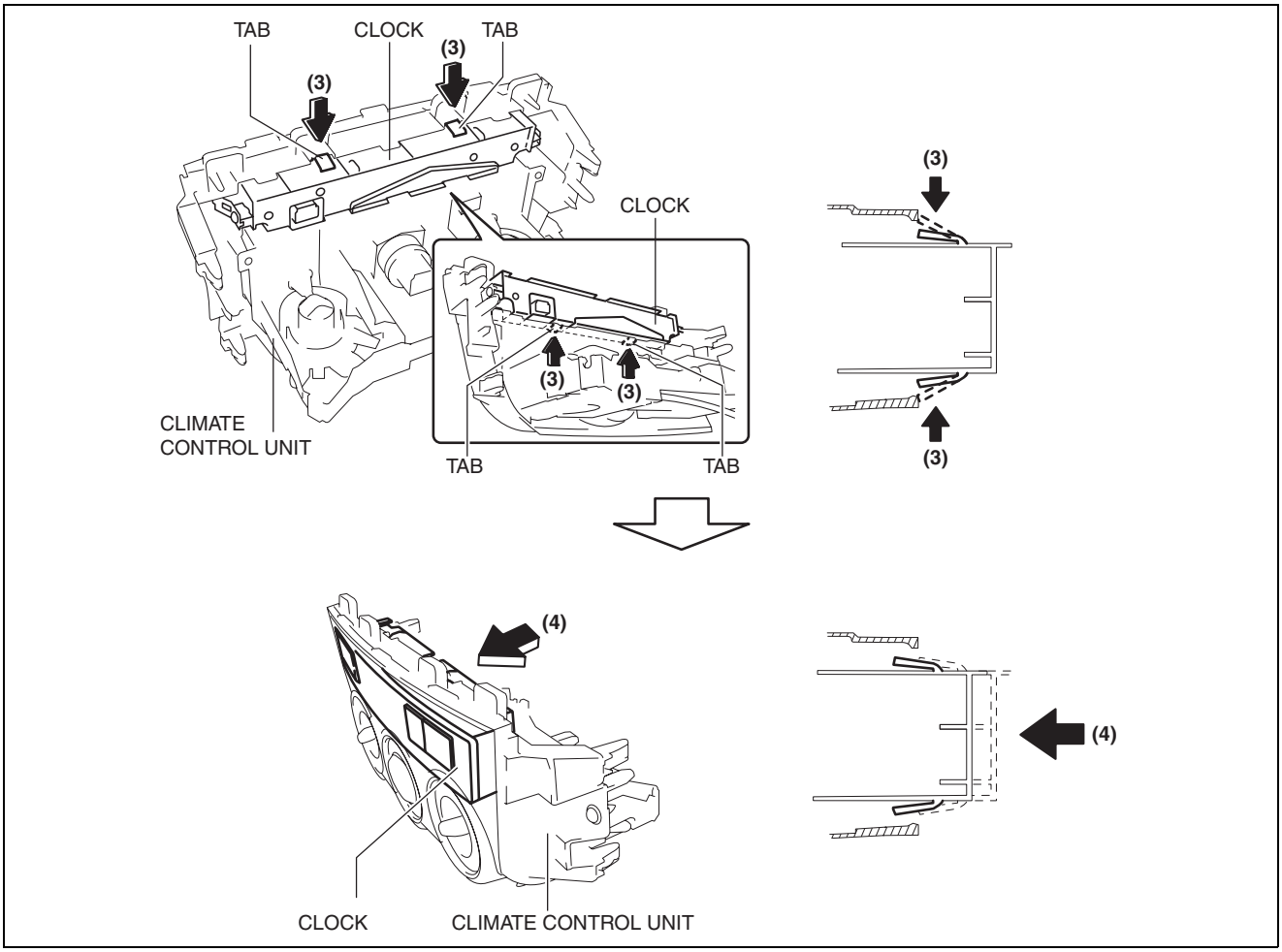

ac5jjw00000220

5. Push out the clock in the direction of the arrow (6) shown in the figure while pressing clip B in the direction of the arrow (5) shown in the figure, detach the clock tab and climate control unit, and remove the clock from the climate control unit.

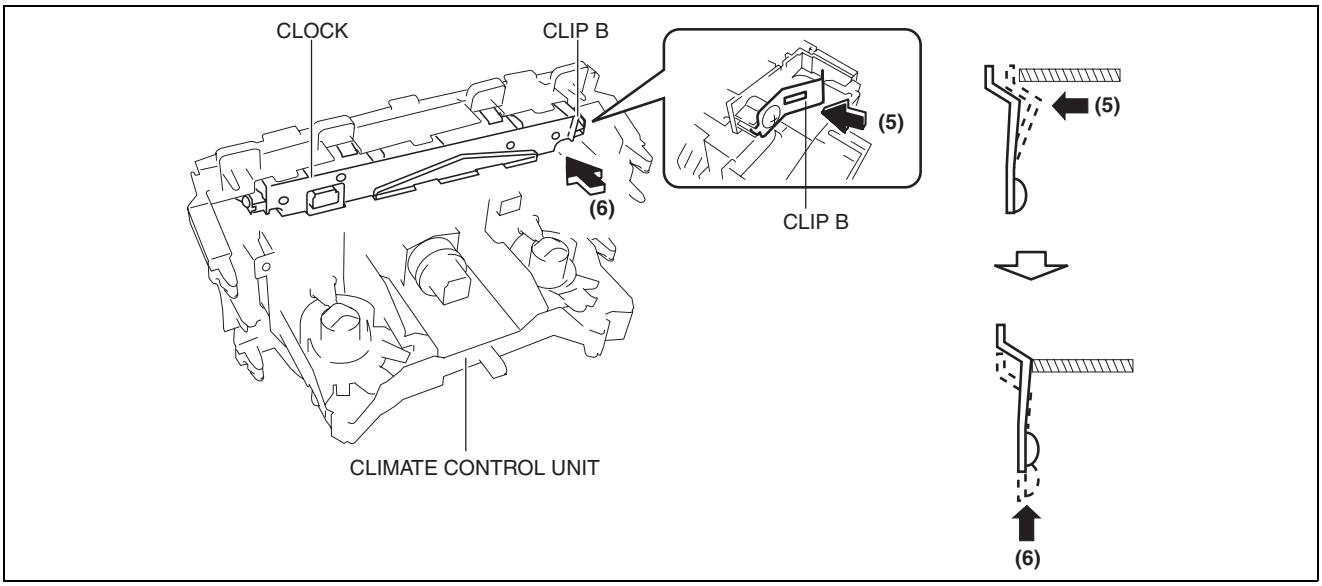

ac5jjw00000221

6. Install in the reverse order of removal.

INSTRUMENTATION/DRIVER INFO.

CLOCK INSPECTION

id092200029000

1. Disconnect the negative battery cable. (See 01-17A-11 NEGATIVE BATTERY CABLE DISCONNECTION/CONNECTION [SKYACTIV-G 2.0].)(See 01-17A-13 NEGATIVE BATTERY CABLE DISCONNECTION/CONNECTION [SKYACTIV-G 2.0 (WITHOUT i-stop)].)(See 01-17B-9 NEGATIVE BATTERY CABLE DISCONNECTION/CONNECTION [SKYACTIV-D 2.2].)
2. Remove the following parts:
   (1) Shift lever knob (MTX) (See 05-16A-1 MANUAL TRANSAXLE SHIFT MECHANISM REMOVAL/INSTALLATION [C66M-R, C66MX-R].)(See 05-16B-1 MANUAL TRANSAXLE SHIFT MECHANISM REMOVAL/INSTALLATION [D66M-R, D66MX-R].)
   (2) Front console box (See 09-17-40 FRONT CONSOLE BOX REMOVAL/INSTALLATION.)
   (3) Shift panel (See 09-17-42 SHIFT PANEL REMOVAL/INSTALLATION.)
   (4) Upper panel (See 09-17-44 UPPER PANEL REMOVAL/INSTALLATION.)
   (5) Rear console (See 09-17-45 REAR CONSOLE REMOVAL/INSTALLATION.)
   (6) Side wall (See 09-17-49 SIDE WALL REMOVAL/INSTALLATION.)
   (7) Decoration panel (See 09-17-33 DECORATION PANEL REMOVAL/INSTALLATION.)
   (8) Front console (See 09-17-50 FRONT CONSOLE REMOVAL/INSTALLATION.)
   (9) Glove compartment (See 09-17-30 GLOVE COMPARTMENT REMOVAL/INSTALLATION.)
   (10)Climate control unit (See 07-40B-16 CLIMATE CONTROL UNIT REMOVAL/INSTALLATION [MANUAL AIR CONDITIONER].)
3. Connect the negative battery cable. (See 01-17A-11 NEGATIVE BATTERY CABLE DISCONNECTION/CONNECTION [SKYACTIV-G 2.0].)(See 01-17A-13 NEGATIVE BATTERY CABLE DISCONNECTION/CONNECTION [SKYACTIV-G 2.0 (WITHOUT i-stop)].)(See 01-17B-9 NEGATIVE BATTERY CABLE DISCONNECTION/CONNECTION [SKYACTIV-D 2.2].)
4. Verify that the voltages of each of the terminals are as indicated in the terminal voltage table (reference).
   - If the voltage is not as specified in the terminal voltage table (reference), inspect the parts under Inspection item(s).
     — If the system does not operate normally even though the inspection items are normal, replace the clock.

Terminal Voltage Table (Reference)

CLOCK
WIRING HARNESS SIDE CONNECTOR

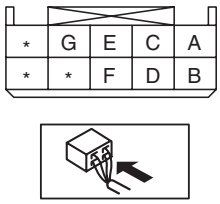

ac5wzw0000291

Terminal	Signal name	Connected to	Measurement conditions	Voltage (V)	Inspection item(s)
A	Power position (1G1)	IG relay	Ignition switch ON (engine off or on)	B+	• METER1 10 A fuse • IG relay • Related wiring harness
			Ignition switch OFF (LOCK) or ACC	1.0 or less	
B	Power supply	ROOM 15 A fuse	Under any condition	B+	• ROOM 15 A fuse • Related wiring harness
C	Power supply (ACC)	Ignition relay (ACC_STAB) {DCDC ACC}*1 ACC relay *2	Ignition switch ACC	B+	• Ignition relay*1 • ACC relay*2 • AUDIO2 7.5 A fuse*2 • Related wiring harness
			Ignition switch OFF (LOCK) or ON (engine off or on)	1.0 or less	
D	Seat warmer switch signal	Seat warmer unit	Because this terminal is for communication, good/no good judgment by terminal voltage is not possible.		• Related wiring harness
E	MS-CAN_H	CAN communication related module	Because this terminal is for communication, determination using terminal voltage inspection is not possible.		
F	Ground	Body ground	Under any condition	1.0 or less	• Related wiring harness

INSTRUMENTATION/DRIVER INFO.

Terminal	Signal name	Connected to	Measurement conditions	Voltage (V)	Inspection item(s)
G	MS-CAN_L	CAN communication related module	Because this terminal is for communication, determination using terminal voltage inspection is not possible.		

*1 : With i-stop system
*2 : Without i-stop system

CLOCK INPUT/OUTPUT CHECK MODE

id092200031700

Activation procedure

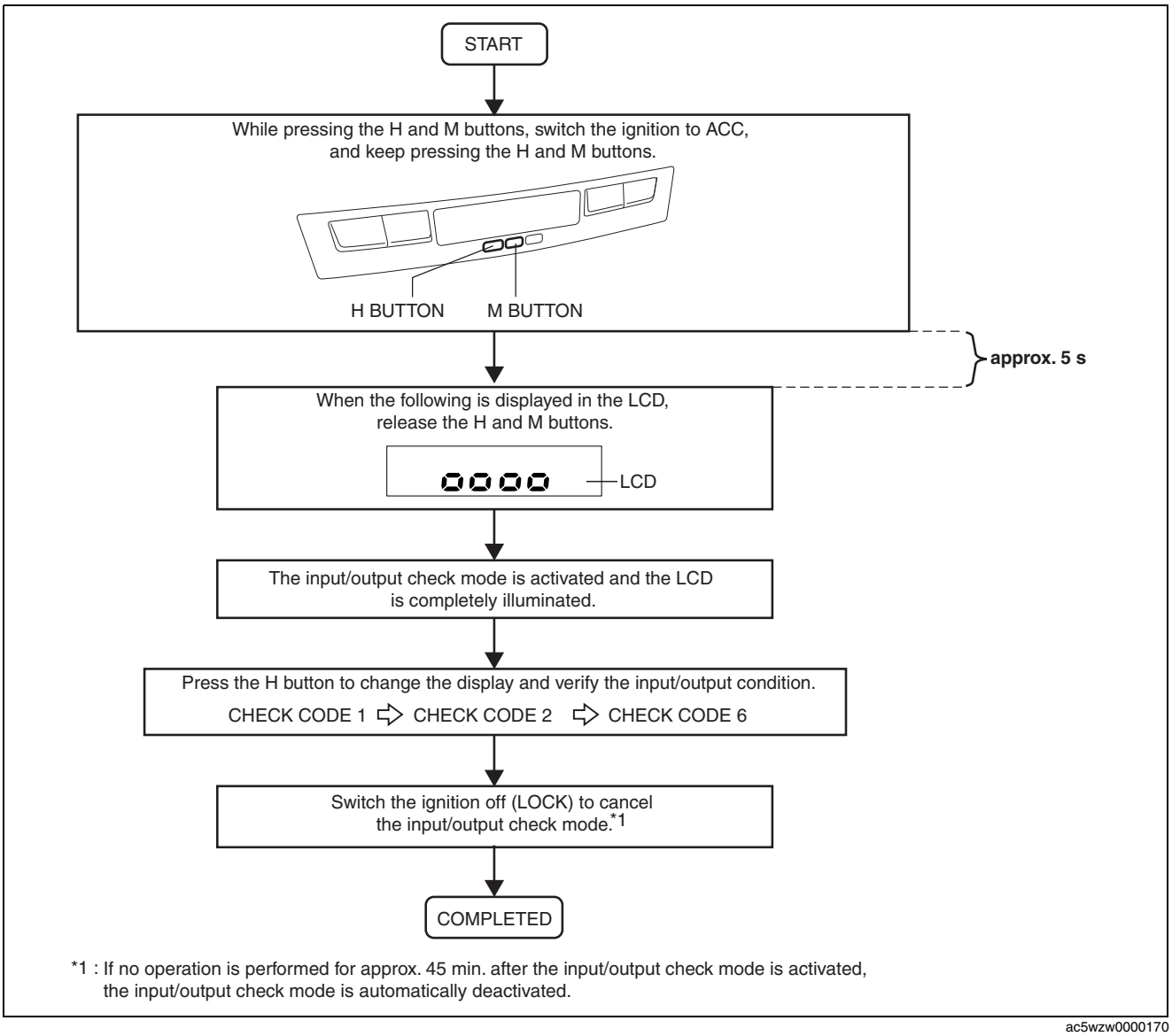

*1 : If no operation is performed for approx. 45 min. after the input/output check mode is activated, the input/output check mode is automatically deactivated.

ac5wzw0000170

Inspection

Note

- The clock input/output check mode is displayed in the following order and returning to the previous screen is impossible.
- If you want to check All LCD illuminated or Check code 1 or 2 after Check code 6 is displayed, activate the input/output check mode again.

INSTRUMENTATION/DRIVER INFO.

Item	Check content
All LCD illuminated	LCD indication
Check code 1	MS-CAN BUS OFF occurrence
Check code 2	Communication between instrument cluster
Check code 6	Ignition switch ON/OFF signal

All LCD illuminated

Inspection	Display	Action	
• Activate the clock input/output check mode. • Are all segments and dots on the LCD illuminated?	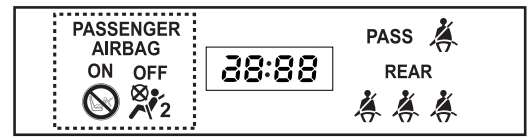 : WITH PASSENGER AIR BAG DEACTIVATION (PAD) SWITCH	Yes	LCD display is normal.
		No	Replace the clock. (See 09-22-95 CLOCK INSPECTION.)

Check code 1

Inspection procedure	Display	Action
1. Press the H button to display check code 1. 2. Verify the screen display.		There is no MS-CAN BUS OFF error (normal)
		There is an MS-CAN BUS OFF error (malfunction) Perform the malfunction diagnosis for the MS-CAN referring to the following: (See 10-02A-1 FOREWORD [SKYACTIV-G 2.0 (L.H.D.)].) (See 10-02B-1 FOREWORD [SKYACTIV-G 2.0 (R.H.D.)].) (See 10-02C-1 FOREWORD [SKYACTIV-D 2.2 (L.H.D.)].) (See 10-02D-1 FOREWORD [SKYACTIV-D 2.2 (R.H.D.)].)

Check code 2

Inspection procedure	Display	Action
1. Press the H button to display check code 2. 2. Verify the screen display.		There is no communication error between the instrument cluster.
		There is a communication error between the instrument cluster. Perform the malfunction diagnosis for the MS-CAN referring to the following: (See 10-02A-1 FOREWORD [SKYACTIV-G 2.0 (L.H.D.)].) (See 10-02B-1 FOREWORD [SKYACTIV-G 2.0 (R.H.D.)].) (See 10-02C-1 FOREWORD [SKYACTIV-D 2.2 (L.H.D.)].) (See 10-02D-1 FOREWORD [SKYACTIV-D 2.2 (R.H.D.)].)

Check code 6

Inspection procedure		Display	Action
Step 1	1. Press the H button to display check code 6. 2. Switch the ignition ON (engine off or on). 3. Verify the screen display.		Go to the next step.
			Refer to the clock inspection and verify the terminal voltage at clock terminal A. (See 09-22-95 CLOCK INSPECTION.) • Replace the clock if the voltage is B+. (See 09-22-92 CLOCK REMOVAL/INSTALLATION.) • Inspect the following parts if the voltage is 1.0 V or less. — METER1 10 A fuse — IG relay — Related wiring harness

INSTRUMENTATION/DRIVER INFO.

Inspection procedure		Display	Action
Step 2	1. Switch the ignition off (LOCK). 2. Verify the screen display.		Ignition switch ON/OFF signal is normal.
			Refer to the clock inspection and verify the terminal voltage at clock terminal A. (See 09-22-95 CLOCK INSPECTION.) • Replace the clock if the voltage is 1.0 V or more. (See 09-22-92 CLOCK REMOVAL/INSTALLATION.) • Inspect the following parts if the voltage is B+. — METER1 10 A fuse — IG relay — Related wiring harness

FORWARD SENSING CAMERA (FSC) REMOVAL/INSTALLATION

id092200028600

Caution

- **If configuration is not performed when the FSC is replaced with a new one, the vehicle specification information is not stored in the FSC and the system will not operate normally.**
- **When performing configuration, it is necessary to read the vehicle specification information from the FSC before replacing it. Connect the M-MDS to the vehicle and perform vehicle identification before removing the FSC. The vehicle specification information is temporarily stored in the M-MDS.**

Note

- The FSC prior to replacement stores the vehicle specification information.
- A new FSC does not store any vehicle specification information.
- If the vehicle specification information from the FSC prior to replacement cannot be read, perform the configuration using As-Built data.

1. When replacing the FSC, perform the configuration. (See 09-22-117 FORWARD SENSING CAMERA (FSC) CONFIGURATION (USING READ/WRITE FUNCTION).)
2. Disconnect the negative battery cable. (See 01-17A-11 NEGATIVE BATTERY CABLE DISCONNECTION/CONNECTION [SKYACTIV-G 2.0].)(See 01-17B-9 NEGATIVE BATTERY CABLE DISCONNECTION/CONNECTION [SKYACTIV-D 2.2].)
3. Pull cover A in the direction of the arrow shown in the figure and detach tab A of cover A and cover B.

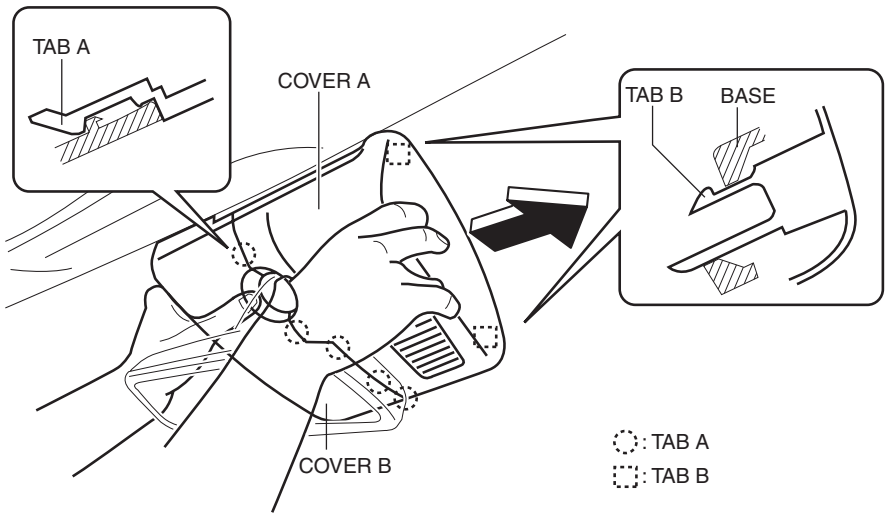

ac5jjw00000243

4. Pull cover A in the direction of the arrow shown in the figure, detach tab B of cover A and the base, and remove cover A from the base.

INSTRUMENTATION/DRIVER INFO.

5. Remove the wiring harness from the hook.

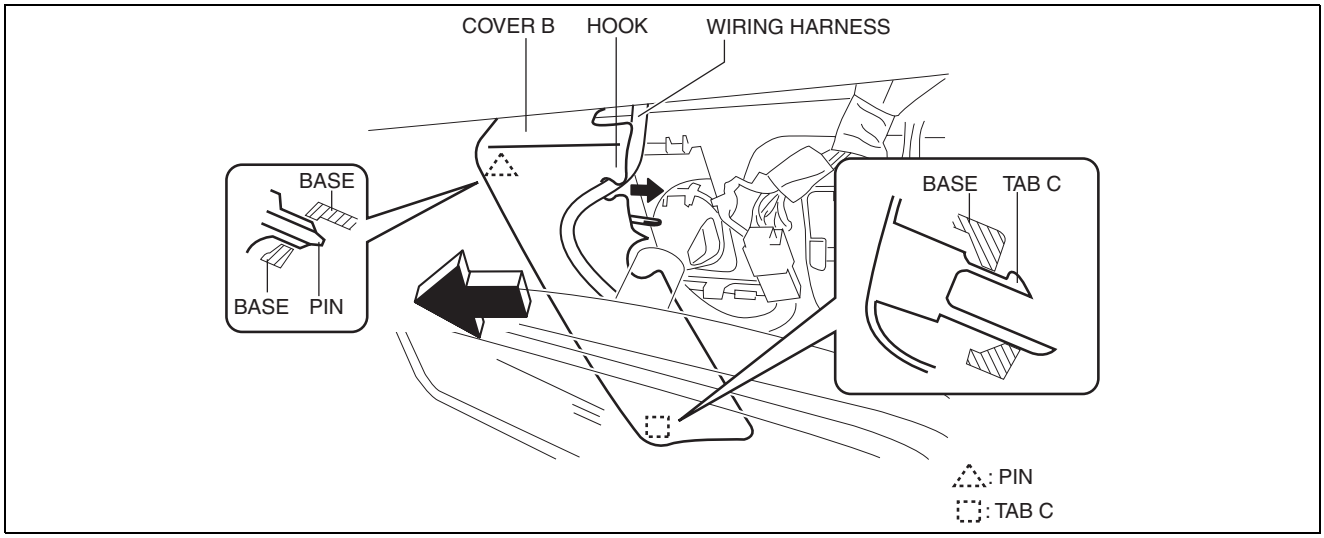

ac5jjw00000244

6. Pull cover B in the direction of the arrow shown in the figure, detach the pin and tab C for cover B and the base, and remove cover B from the base.
7. Disconnect the connector.

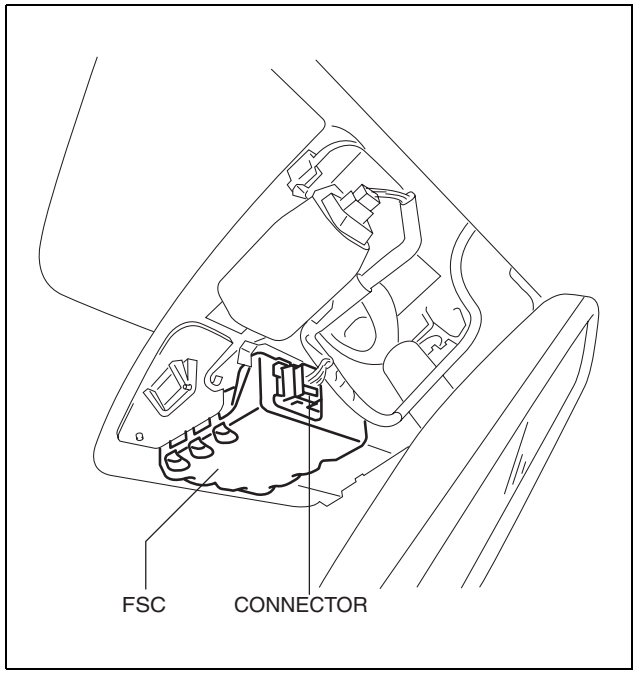

ac5jjw00000245

INSTRUMENTATION/DRIVER INFO.

8. Pull the FSC in the direction of the arrow shown in the figure and remove the FSC pin from bracket A.

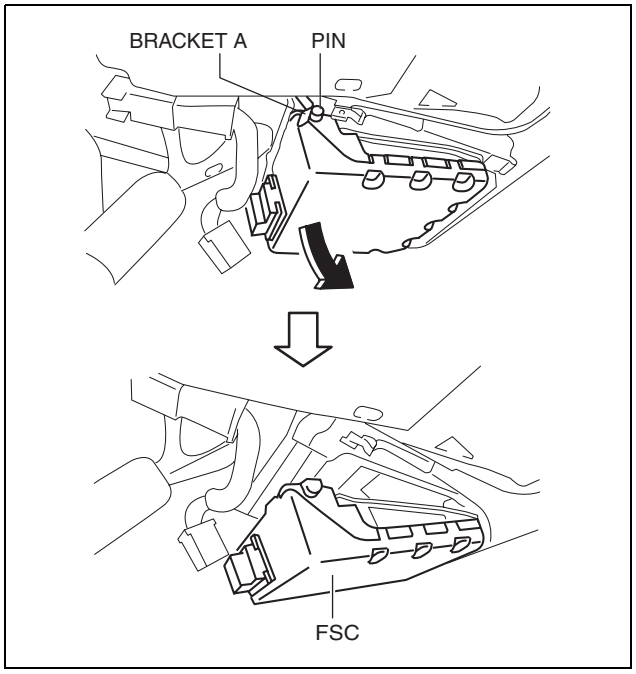

ac5jjw00000246

9. Rotate the FSC in the direction of the arrow shown in the figure, remove the FSC hook from bracket B, and remove the FSC.
10. Install in the reverse order of removal.

Note
- If configuration cannot be performed by reading/writing of the vehicle specification information, perform the configuration using As-Built information after replacing the FSC. (See 09-22-118 FORWARD SENSING CAMERA (FSC) CONFIGURATION (USING AS-BUILT DATA).)

11. If the FSC is replaced, perform the FSC aiming (See 09-22-106 FORWARD SENSING CAMERA (FSC) AIMING.).

Caution
- **If FSC aiming is not performed after replacing the FSC, the high beam control (HBC) system and the lane departure warning system (LDWS) will not operate because the FSC cannot store the camera shot angle. If the FSC is replaced, perform the FSC aiming.**

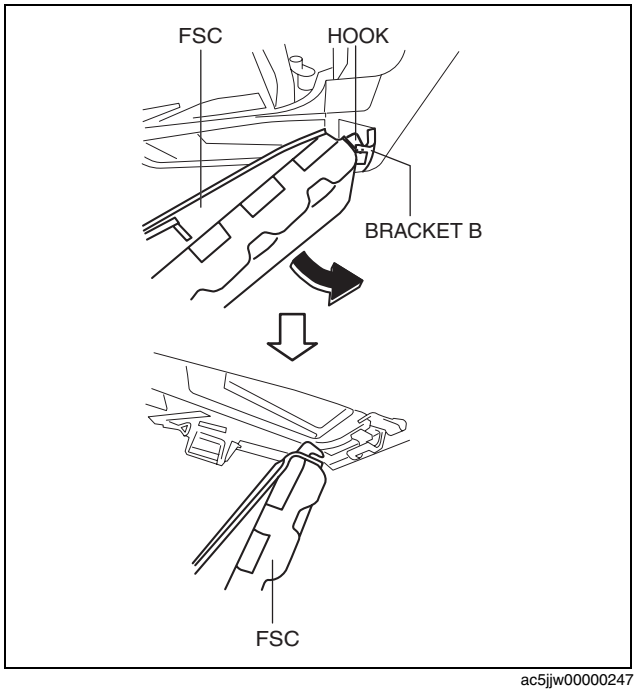

ac5jjw00000247

INSTRUMENTATION/DRIVER INFO.

FORWARD SENSING CAMERA (FSC) BRACKET REMOVAL/INSTALLATION

id092200028700

Note
- The forward sensing camera (FSC) brackets include brackets A and B.

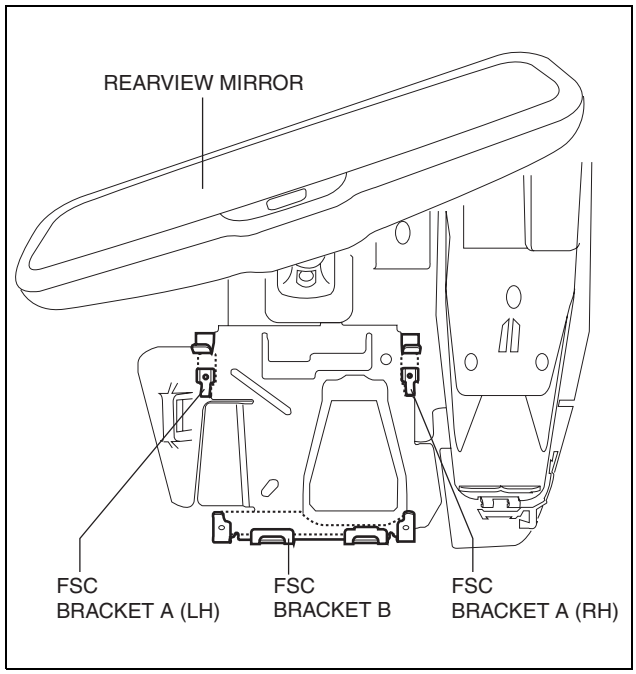

ac5wzw0000294

FSC bracket A

1. Disconnect the negative battery cable. (See 01-17A-11 NEGATIVE BATTERY CABLE DISCONNECTION/CONNECTION [SKYACTIV-G 2.0].)(See 01-17B-9 NEGATIVE BATTERY CABLE DISCONNECTION/CONNECTION [SKYACTIV-D 2.2].)
2. Remove the following parts:
   (1) Cover (See 09-22-98 FORWARD SENSING CAMERA (FSC) REMOVAL/INSTALLATION.)
   (2) Forward sensing camera (FSC) (See 09-22-98 FORWARD SENSING CAMERA (FSC) REMOVAL/INSTALLATION.)
   (3) Laser sensor (See 04-15-17 LASER SENSOR REMOVAL/INSTALLATION.)

INSTRUMENTATION/DRIVER INFO.

3. Insert a tape-wrapped flathead screwdriver into the gap between the base and FSC bracket A.

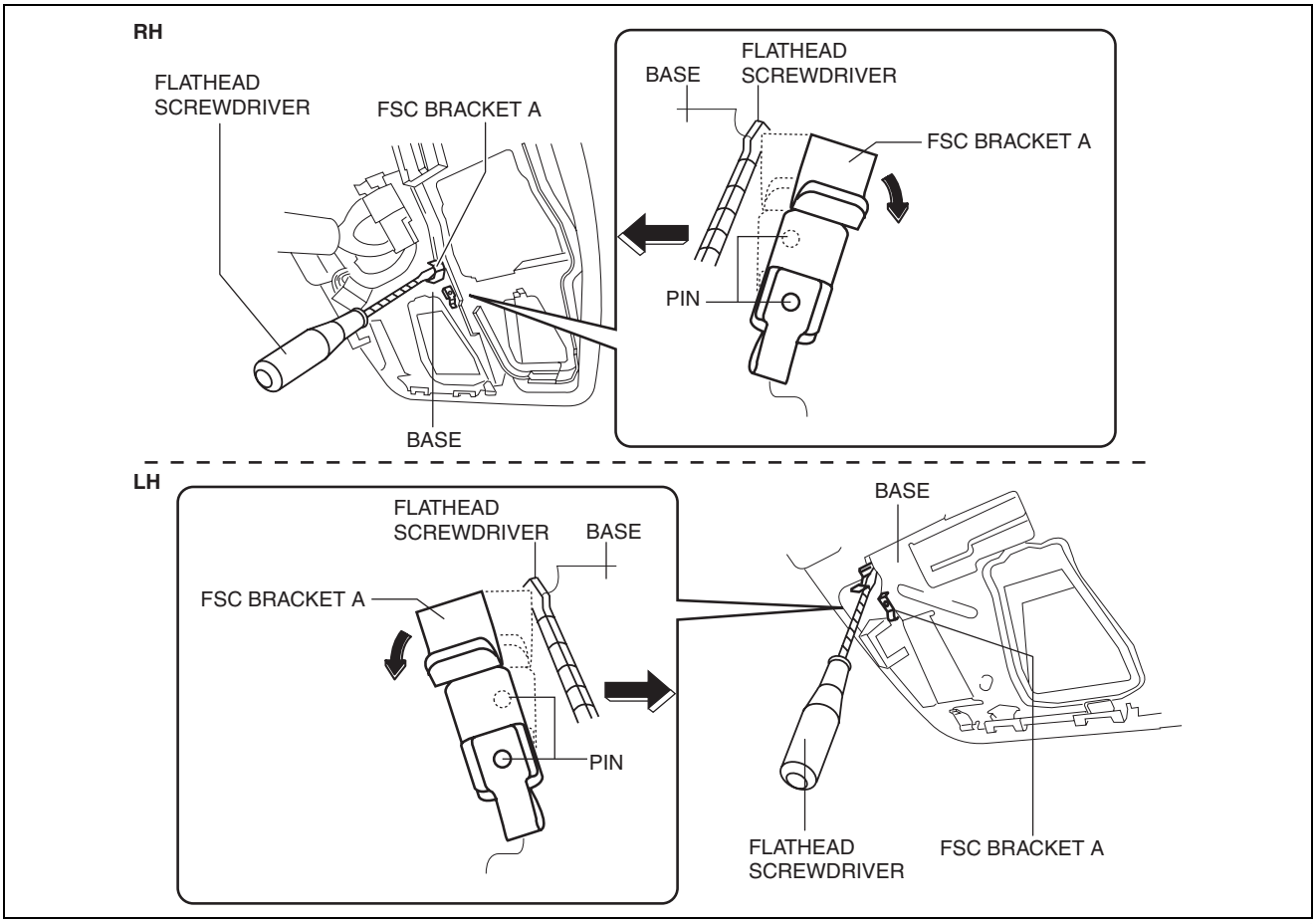

ac5wzw0000294

4. Move the flathead screwdriver in the direction of the arrow shown in the figure and rotate FSC bracket A.

INSTRUMENTATION/DRIVER INFO.

5. In addition, rotate FSC bracket A, detach the base pin and FSC bracket A, and then remove FSC bracket A.

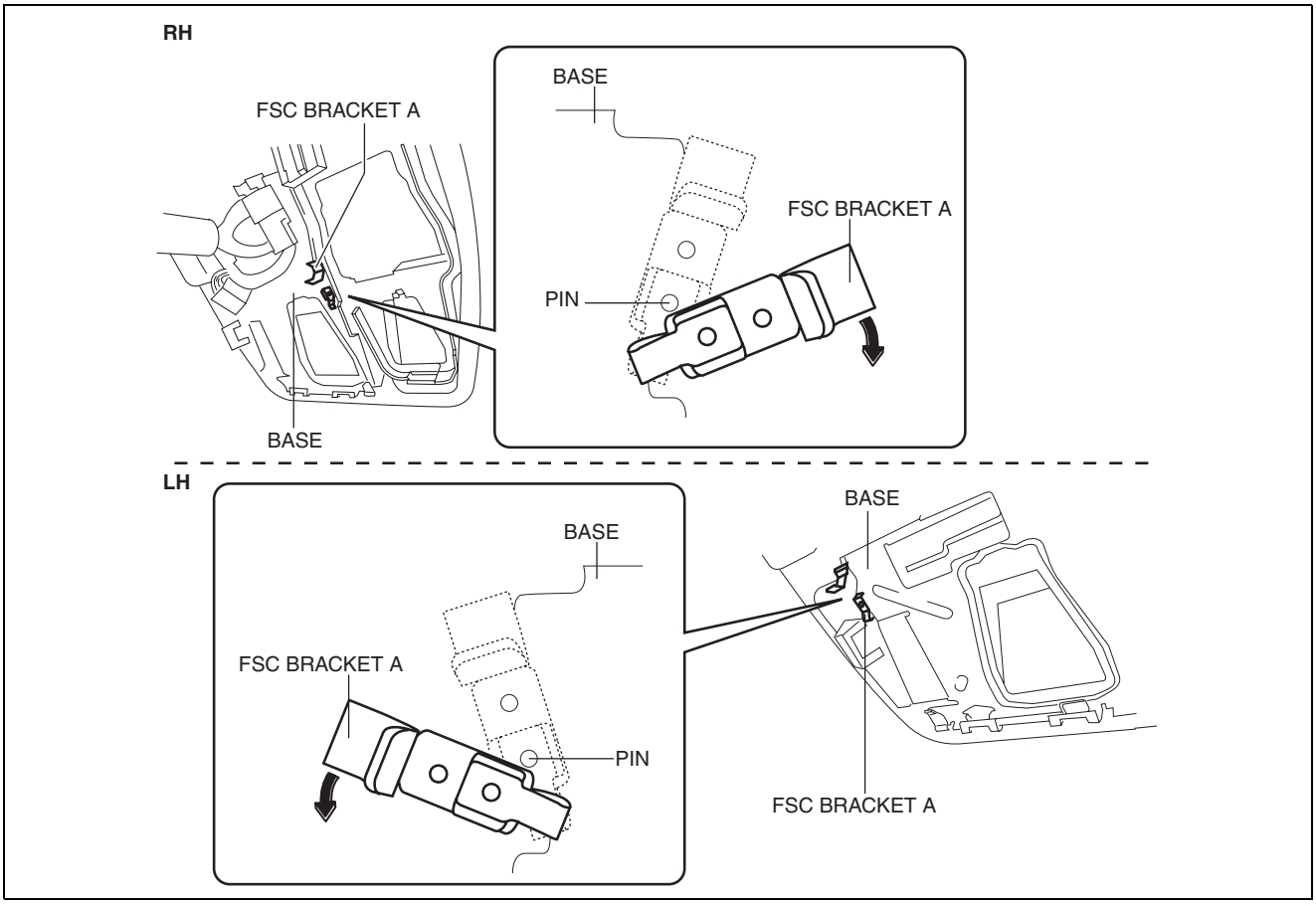

ac5wzw0000294

6. Install in the reverse order of removal.
7. If the FSC bracket is replaced, perform the FSC aiming (See 09-22-106 FORWARD SENSING CAMERA (FSC) AIMING.).

Caution

- **If FSC aiming is not performed after replacing the FSC, the high beam control (HBC) system and the lane departure warning system (LDWS) will not operate because the FSC cannot store the camera shot angle. If the FSC bracket is replaced, perform the FSC aiming.**

FSC bracket B

1. Disconnect the negative battery cable. (See 01-17A-11 NEGATIVE BATTERY CABLE DISCONNECTION/CONNECTION [SKYACTIV-G 2.0].)(See 01-17B-9 NEGATIVE BATTERY CABLE DISCONNECTION/CONNECTION [SKYACTIV-D 2.2].)
2. Remove the following parts:
   (1) Cover (See 09-22-98 FORWARD SENSING CAMERA (FSC) REMOVAL/INSTALLATION.)
   (2) Forward sensing camera (FSC) (See 09-22-98 FORWARD SENSING CAMERA (FSC) REMOVAL/INSTALLATION.)
   (3) Laser sensor (See 04-15-17 LASER SENSOR REMOVAL/INSTALLATION.)

INSTRUMENTATION/DRIVER INFO.

3. Insert a tape-wrapped flathead screwdriver into the gap between the base and FSC bracket B.

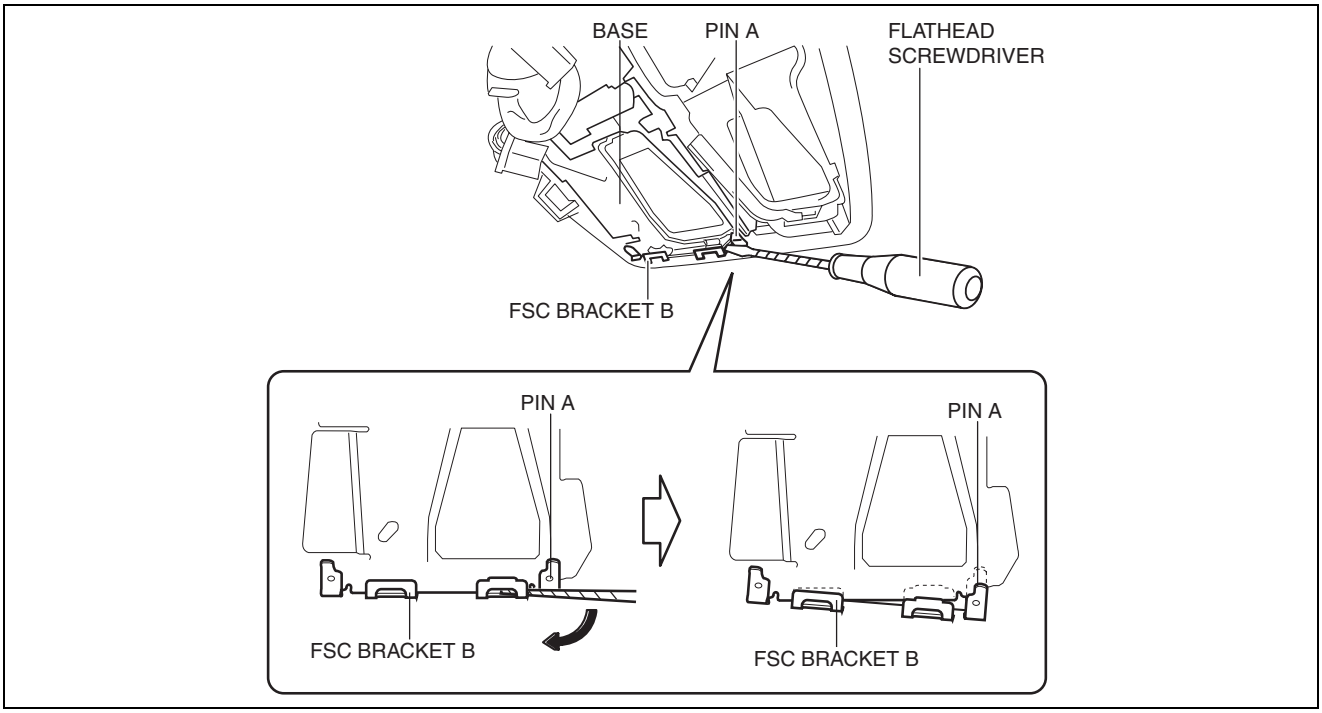

ac5jjw00000252

4. Move the flathead screwdriver in the direction of the arrow shown in the figure, rotate FSC bracket B, and detach base pin A and FSC bracket B.
5. Insert a tape-wrapped flathead screwdriver into the gap between the base and FSC bracket B.

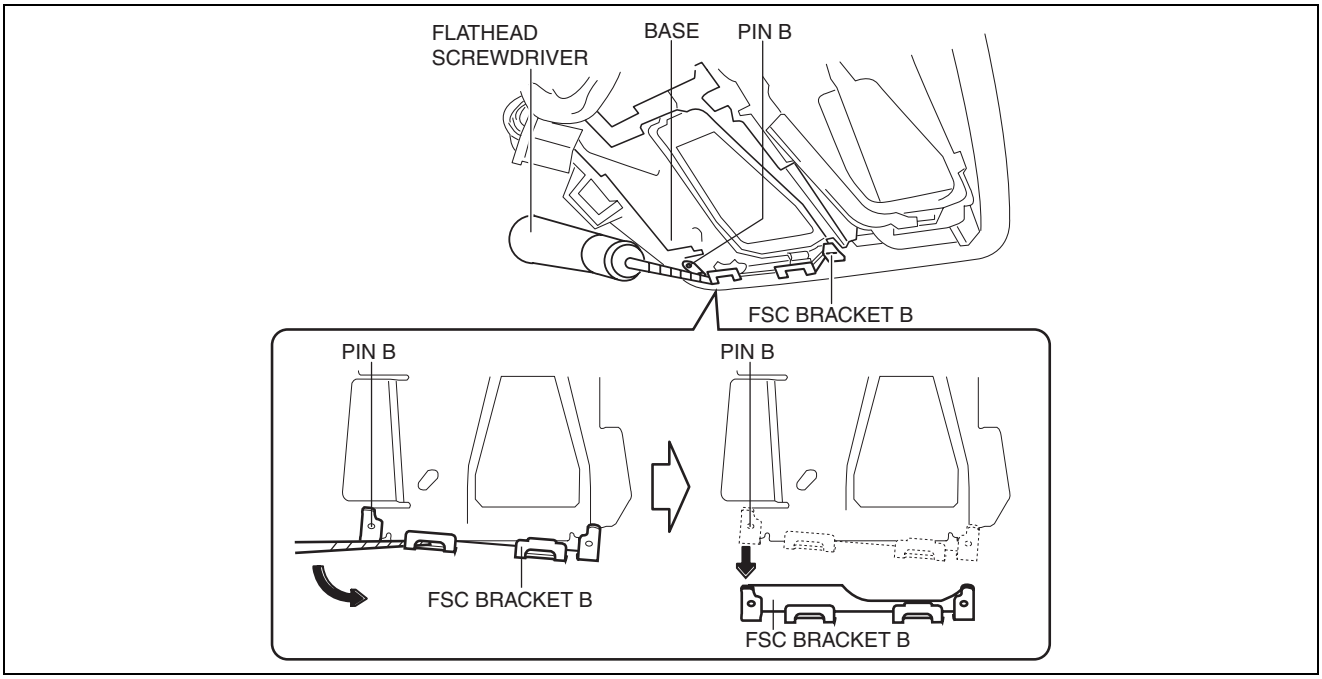

ac5jjw00000253

6. Move the flathead screwdriver in the direction of the arrow shown in the figure, pull down FSC bracket B, detach base pin B and FSC bracket B, and remove FSC bracket B.
7. Install in the reverse order of removal.
8. If the FSC is replaced, perform the FSC aiming (See 09-22-106 FORWARD SENSING CAMERA (FSC) AIMING.).

Caution

- **If FSC aiming is not performed after replacing the FSC, the high beam control (HBC) system and the lane departure warning system (LDWS) will not operate because the FSC cannot store the camera shot angle. If the FSC bracket is replaced, perform the FSC aiming.**

INSTRUMENTATION/DRIVER INFO.

FORWARD SENSING CAMERA (FSC) COVER REMOVAL/INSTALLATION

id092200033800

1. Disconnect the negative battery cable. (See 01-17A-11 NEGATIVE BATTERY CABLE DISCONNECTION/ CONNECTION [SKYACTIV-G 2.0].)(See 01-17B-9 NEGATIVE BATTERY CABLE DISCONNECTION/ CONNECTION [SKYACTIV-D 2.2].)
2. Remove the cover. (See 09-22-98 FORWARD SENSING CAMERA (FSC) REMOVAL/INSTALLATION.)
3. Remove the forward sensing camera (FSC). (See 09-22-98 FORWARD SENSING CAMERA (FSC) REMOVAL/INSTALLATION.)
4. Pull the FSC cover in the direction of the arrow shown in the figure and detach tab of FSC cover.

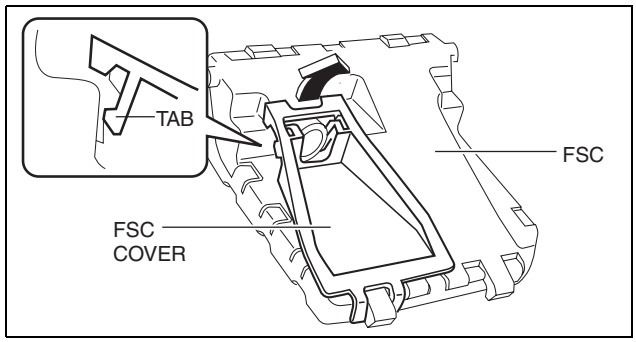

ac5wzw0000249

5. Rotate the FSC cover in the direction of the arrow shown in the figure, remove the FSC cover from FSC hook, and remove the FSC cover.
6. Install in the reverse order of removal.

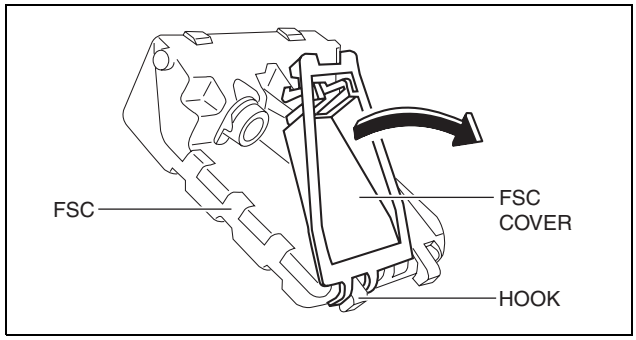

ac5wzw0000249

FORWARD SENSING CAMERA (FSC) SHORT-CORD REMOVAL/INSTALLATION

id092200030300

1. Disconnect the negative battery cable. (See 01-17A-11 NEGATIVE BATTERY CABLE DISCONNECTION/ CONNECTION [SKYACTIV-G 2.0].)(See 01-17B-9 NEGATIVE BATTERY CABLE DISCONNECTION/ CONNECTION [SKYACTIV-D 2.2].)
2. Remove the cover. (See 09-22-98 FORWARD SENSING CAMERA (FSC) REMOVAL/INSTALLATION.)
3. Remove the auto-dimming mirror. (See 09-12-94 AUTO-DIMMING MIRROR REMOVAL/INSTALLATION.)
4. Disconnect the connector.

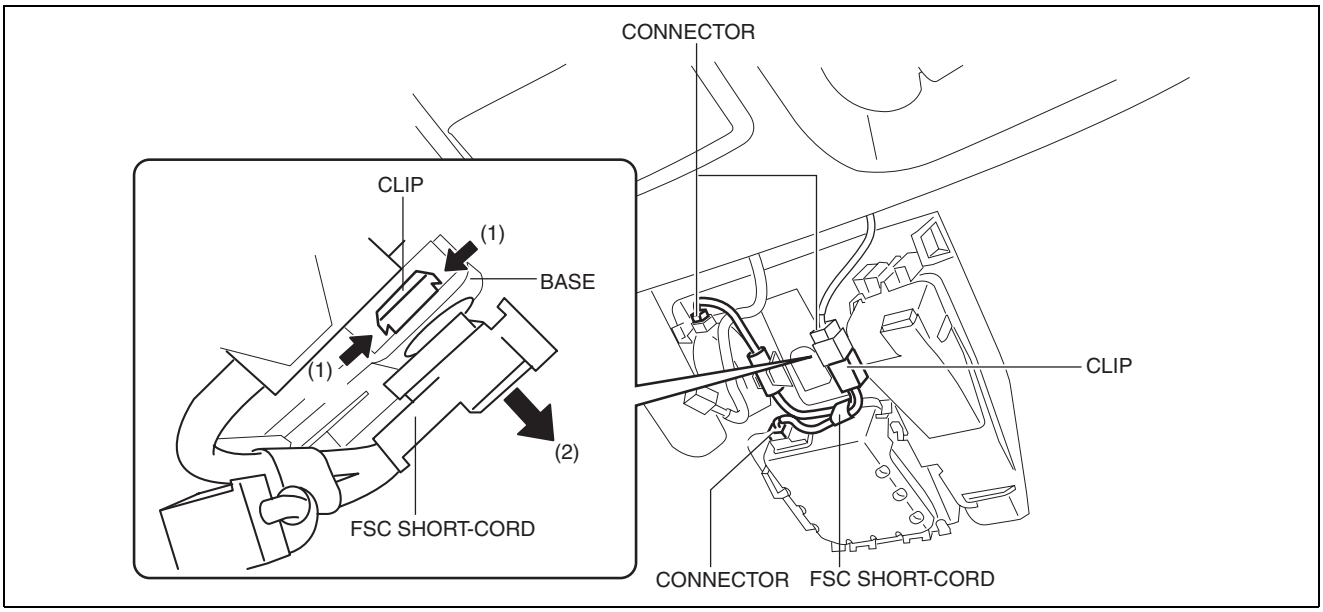

ac5wzw0000010

INSTRUMENTATION/DRIVER INFO.

5. Pull out the FSC short-cord in the direction of arrow (2) shown in the figure while pressing the clip in the direction of arrow (1) shown in the figure, detach the clip and base, and remove the FSC short-cord.
6. Install in the reverse order of removal.

FORWARD SENSING CAMERA (FSC) SHORT-CORD INSPECTION

id092200032000

1. Disconnect the negative battery cable. (See 01-17A-11 NEGATIVE BATTERY CABLE DISCONNECTION/CONNECTION [SKYACTIV-G 2.0].)(See 01-17B-9 NEGATIVE BATTERY CABLE DISCONNECTION/CONNECTION [SKYACTIV-D 2.2].)
2. Remove the following parts:
   (1) Cover (See 09-22-98 FORWARD SENSING CAMERA (FSC) REMOVAL/INSTALLATION.)
   (2) Auto-dimming mirror (See 09-12-94 AUTO-DIMMING MIRROR REMOVAL/INSTALLATION.)
   (3) FSC short-cord (See 09-22-105 FORWARD SENSING CAMERA (FSC) SHORT-CORD REMOVAL/INSTALLATION.)
3. Verify that the continuity between the FSC short-cord terminals is as indicated in the table.

○—○ : Continuity

Test condition	Terminal													
	Vehicle wiring harness (C27) side connector							Auto light sensor / rain sensor side connector			FSC side connector			
	A	B	C	D	E	G	H	A	B	D	A	C	E	I
Under any condition	○													○
		○								○				
			○									○		
				○				○						
					○								○	
						○					○			
							○		○					

ac5jjw00001285

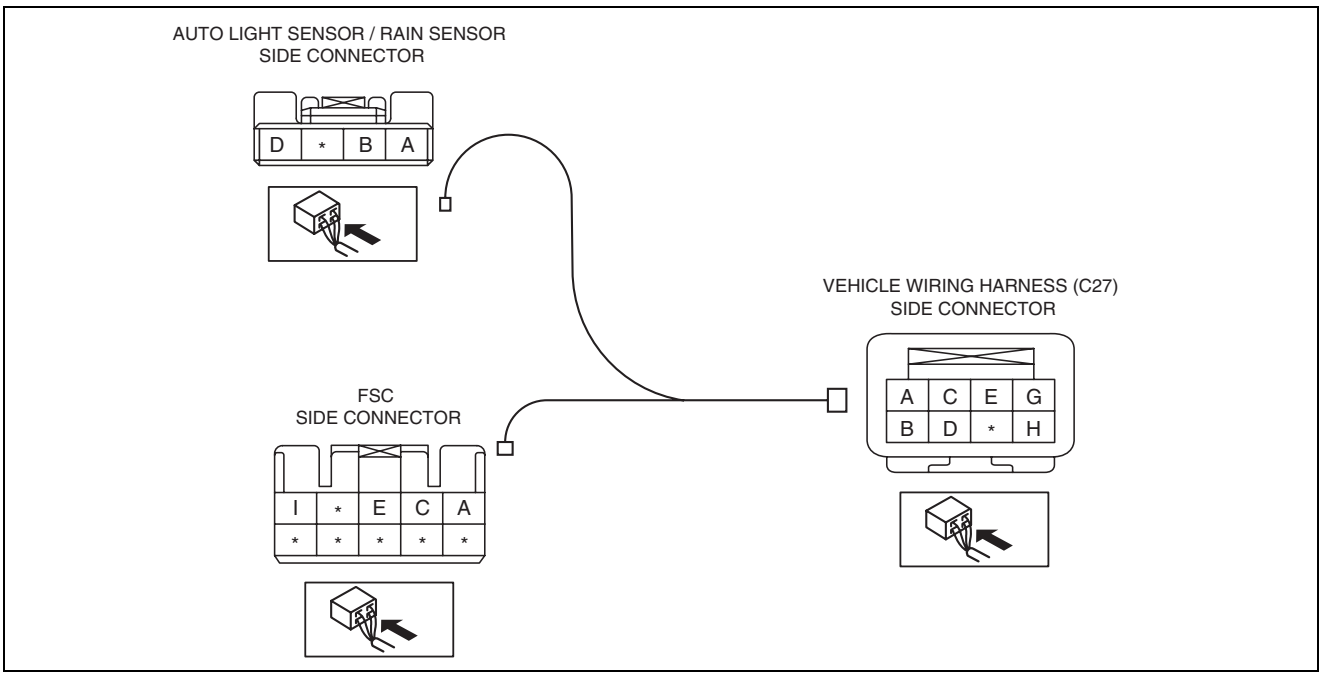

ac5jjw00001286

- If not as indicated in the table, replace the FSC short-cord.

FORWARD SENSING CAMERA (FSC) AIMING

id092200028800

Note

- The forward sensing camera (FSC) aiming procedure stores the camera shot angle in the FSC by reading a target used for aiming into the FSC.
- The FSC aiming procedure is performed when the FSC or the FSC bracket is replaced.

INSTRUMENTATION/DRIVER INFO.

- If an obstruction on the windshield or camera lens is blocking the scene in front of the vehicle, the target used for aiming cannot be read-in and aiming will not be performed correctly. Perform the following procedure before performing the aiming.
  — Verify that there is no water, mud, soiling or sticker adhesion on the windshield, and that there is nothing on the camera lens such as dust or soiling.

Aiming procedure

1. Empty the vehicle by having all occupants leave the vehicle and remove all the cargo except for the spare tire, jack and tools.
2. Adjust the air pressure of each tire to the specified value. (See 02-12-1 WHEEL AND TIRE SPECIFICATION.)
3. Move the vehicle to level ground.

Caution

- **If the setting surface height and angle between the vehicle and the target differs, correct FSC aiming cannot be done. Perform the FSC aiming with the vehicle and target setting surface on level ground.**

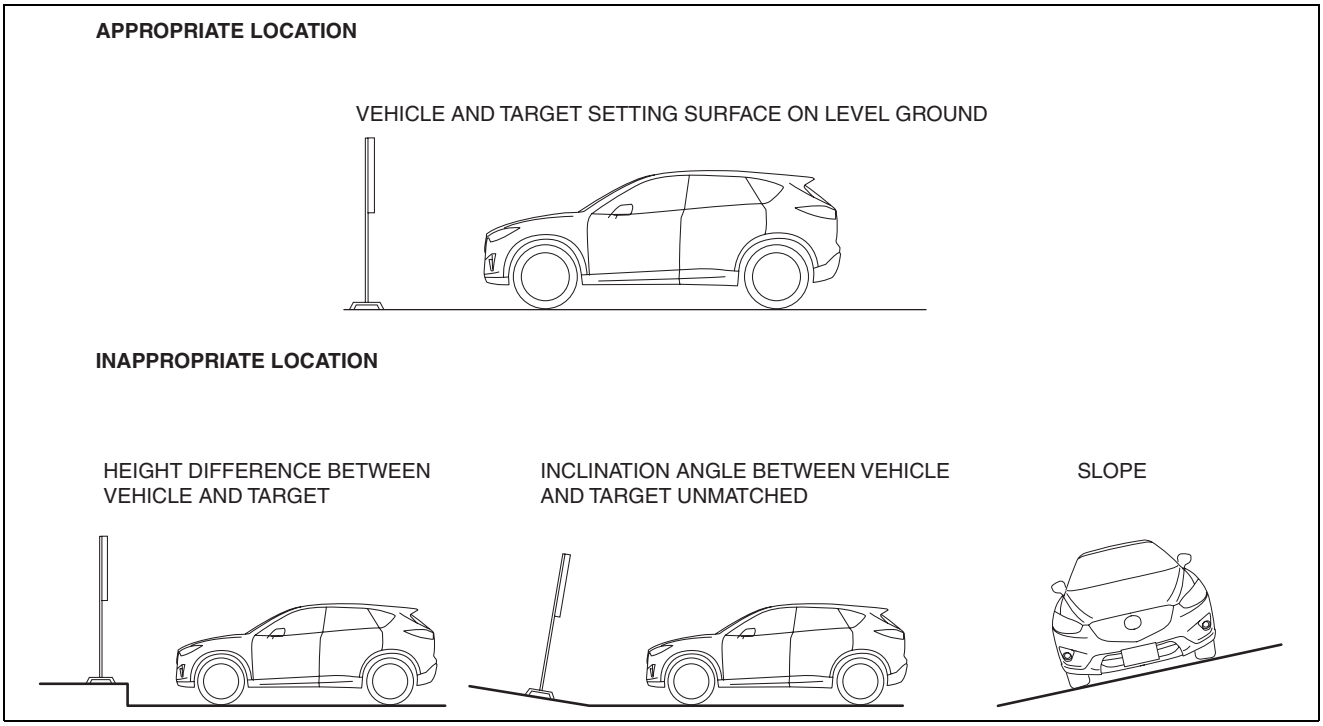

ac5wzw0000087

4. Verify that there are no obstructions such as metal objects in the shaded areas shown in the figure.

Caution

- **If the FSC aiming is performed with obstructions such as white and black patterned objects or reflective metal in the shaded areas, the FSC will determine such obstructions as targets and the FSC aiming procedure will not be performed correctly. Move all obstructions away from the shaded areas, and when performing the aiming, do not have personnel standing in the shaded areas.**

INSTRUMENTATION/DRIVER INFO.

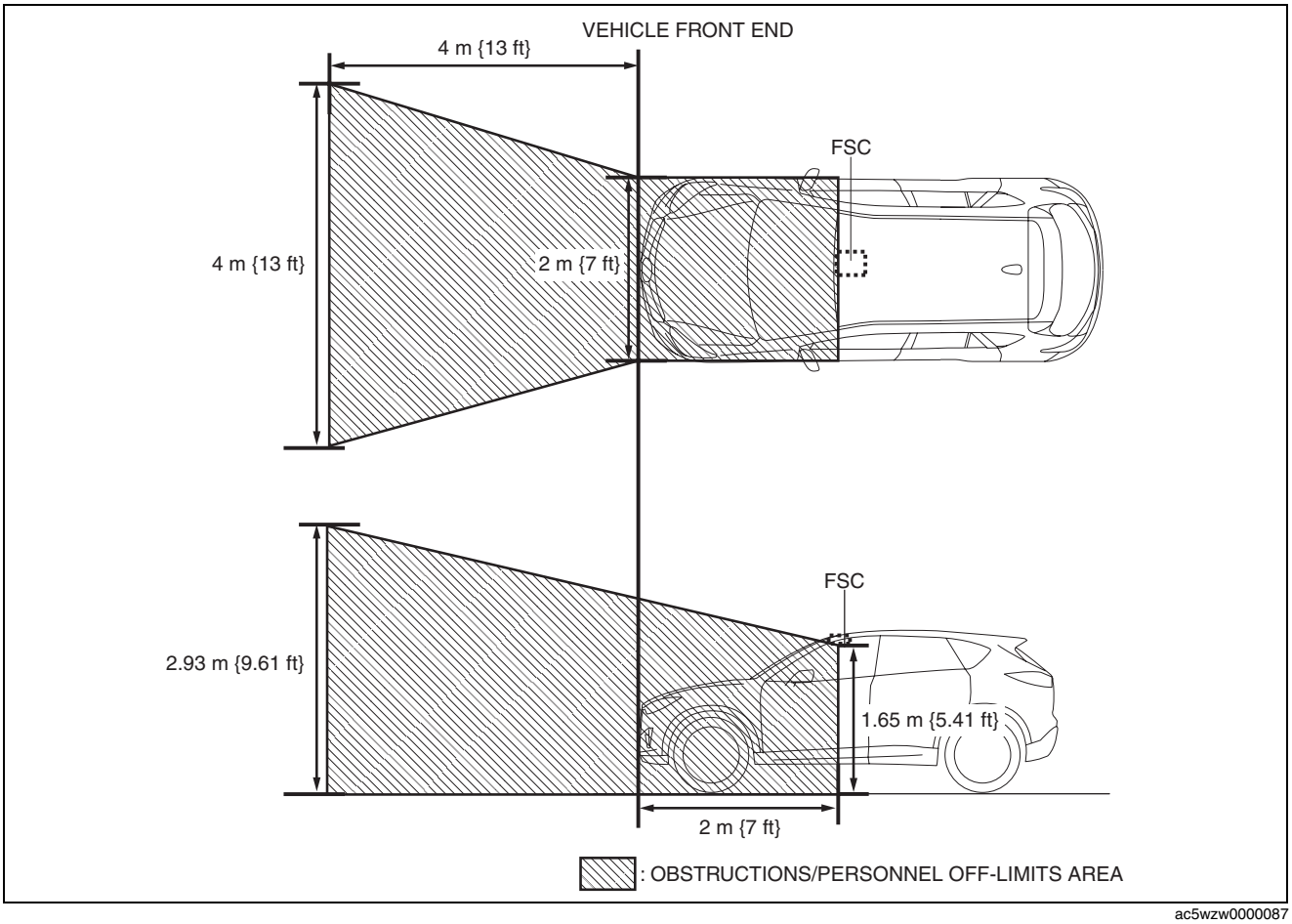

ac5wzw0000087

5. Perform the DTC inspection for the FSC using the M-MDS and verify that no DTCs other than B115E:54 are displayed. (See 09-02J-4 DTC INSPECTION [FORWARD SENSING CAMERA (FSC)].)

Note
- Because DTC B115E:54 is output if aiming is not performed, continue to perform the FSC aiming only if DTC B115E:54 is output. (See 09-02J-5 DTC TABLE [FORWARD SENSING CAMERA (FSC)].)

6. Adjust the SST (plum-bob) so that it is aligned with the center of the brand emblem, determine the center position at the front of the vehicle, and mark the center position (point A) on the floor surface.

Note
- The center of the brand emblem indicates the center position of the vehicle.

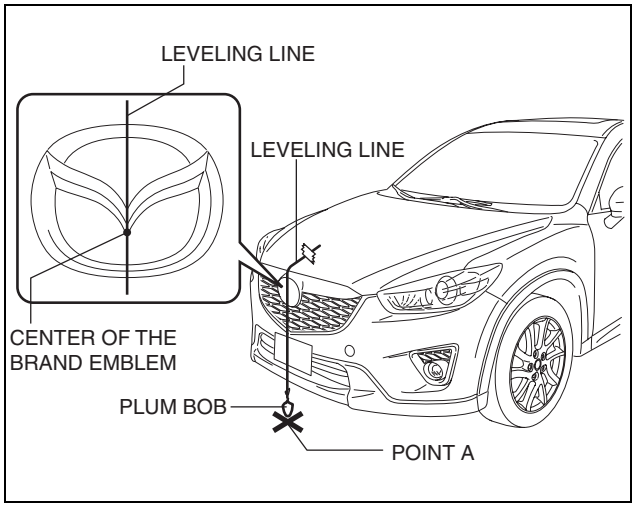

ac5wzw0000087

INSTRUMENTATION/DRIVER INFO.

7. Adjust the SST (plum-bob) so that it is aligned with the center of the brand emblem, determine the center position at the rear of the vehicle, and mark the center position (point B) on the floor surface.

   Note
   - The center of the brand emblem indicates the center position of the vehicle.

8. Secure the end of the leveling line over point B.

   Note
   - Use a commercially-available leveling line.

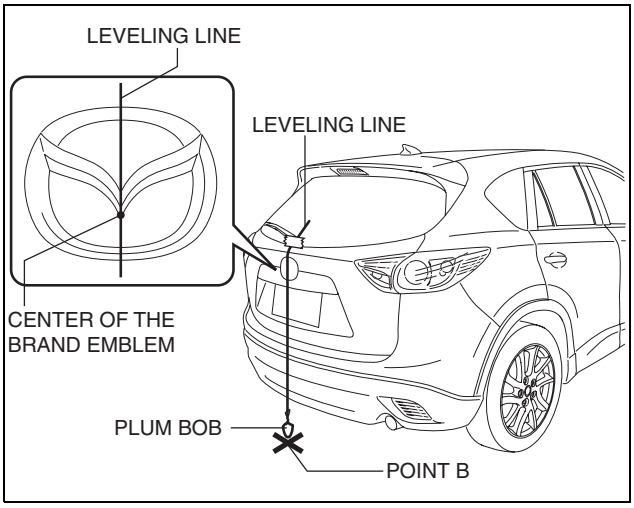

ac5wzw0000087

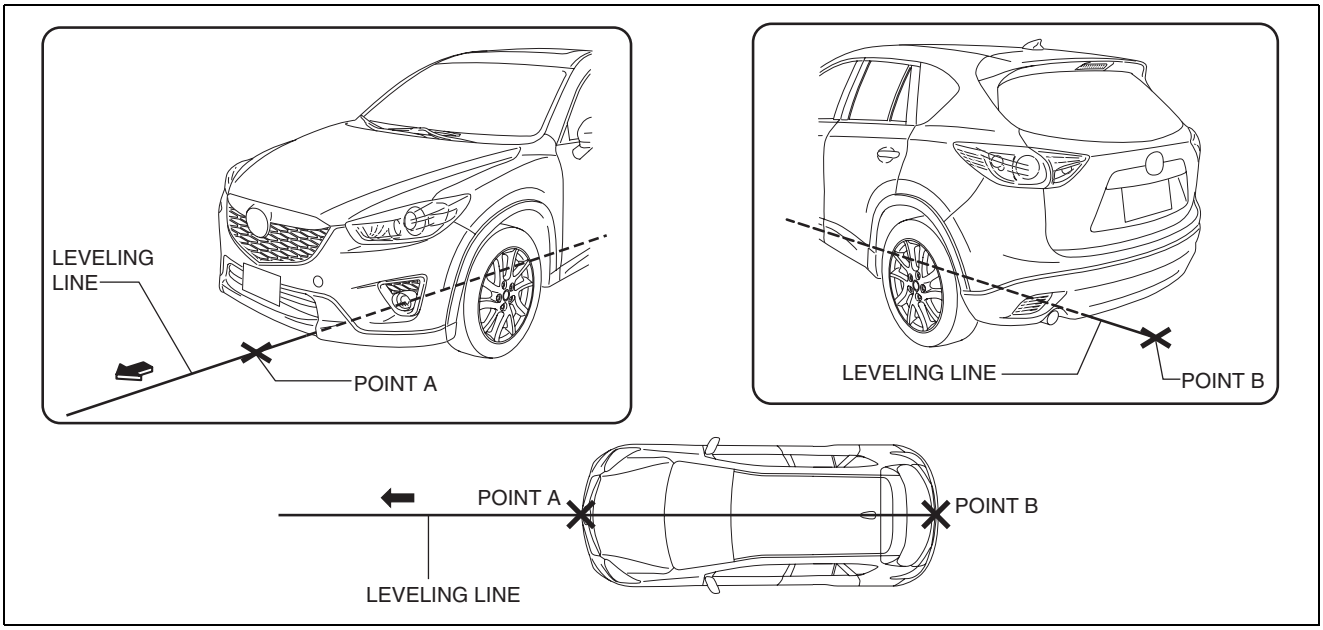

ac5wzw0000087

9. Pull the unsecured end of the leveling line over the vehicle and to the front and adjust it so that it passes over point A.
10. Mark the line (position A) at the point **50 cm {20 in}** from point A and in the direction forward of the vehicle.

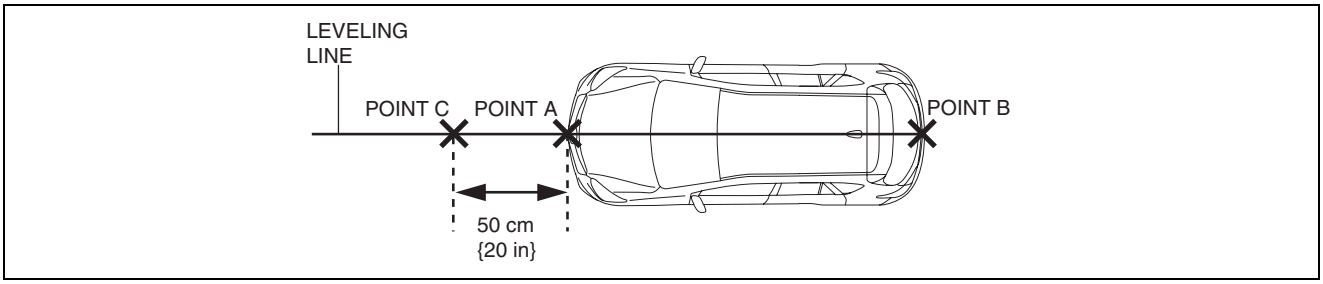

ac5wzw0000087

INSTRUMENTATION/DRIVER INFO.

11. Mark the points (points D and E) **35 cm {14 in}** from point C on the line which runs perpendicular to the vehicle center line.

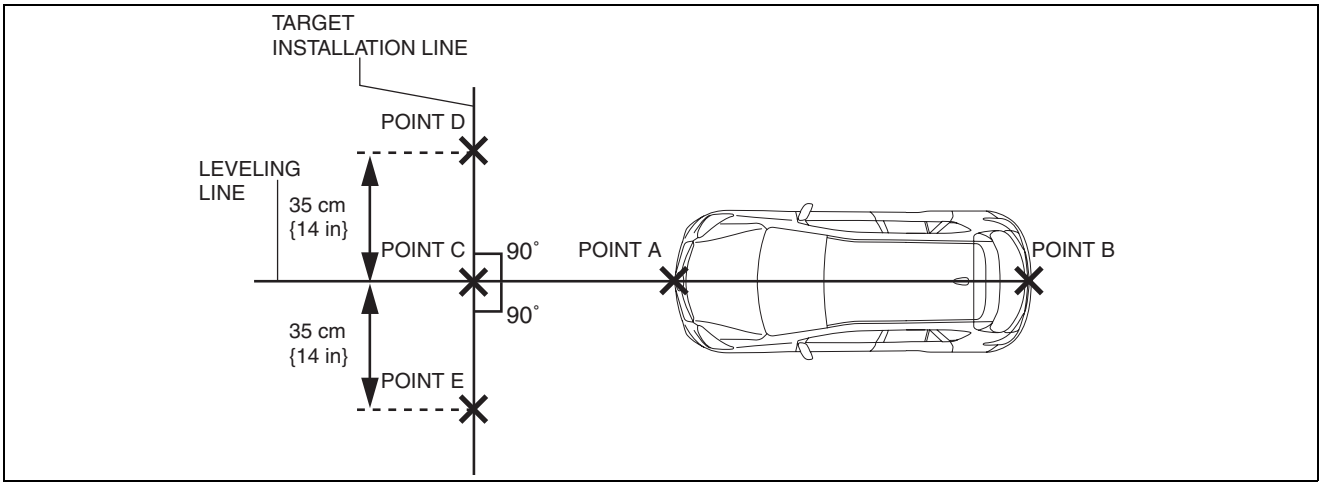

ac5wzw0000088

12. Pull the connected points D, C and E lines (target setting line).

INSTRUMENTATION/DRIVER INFO.

13. Print out two A4-sized copies of the following target pattern.

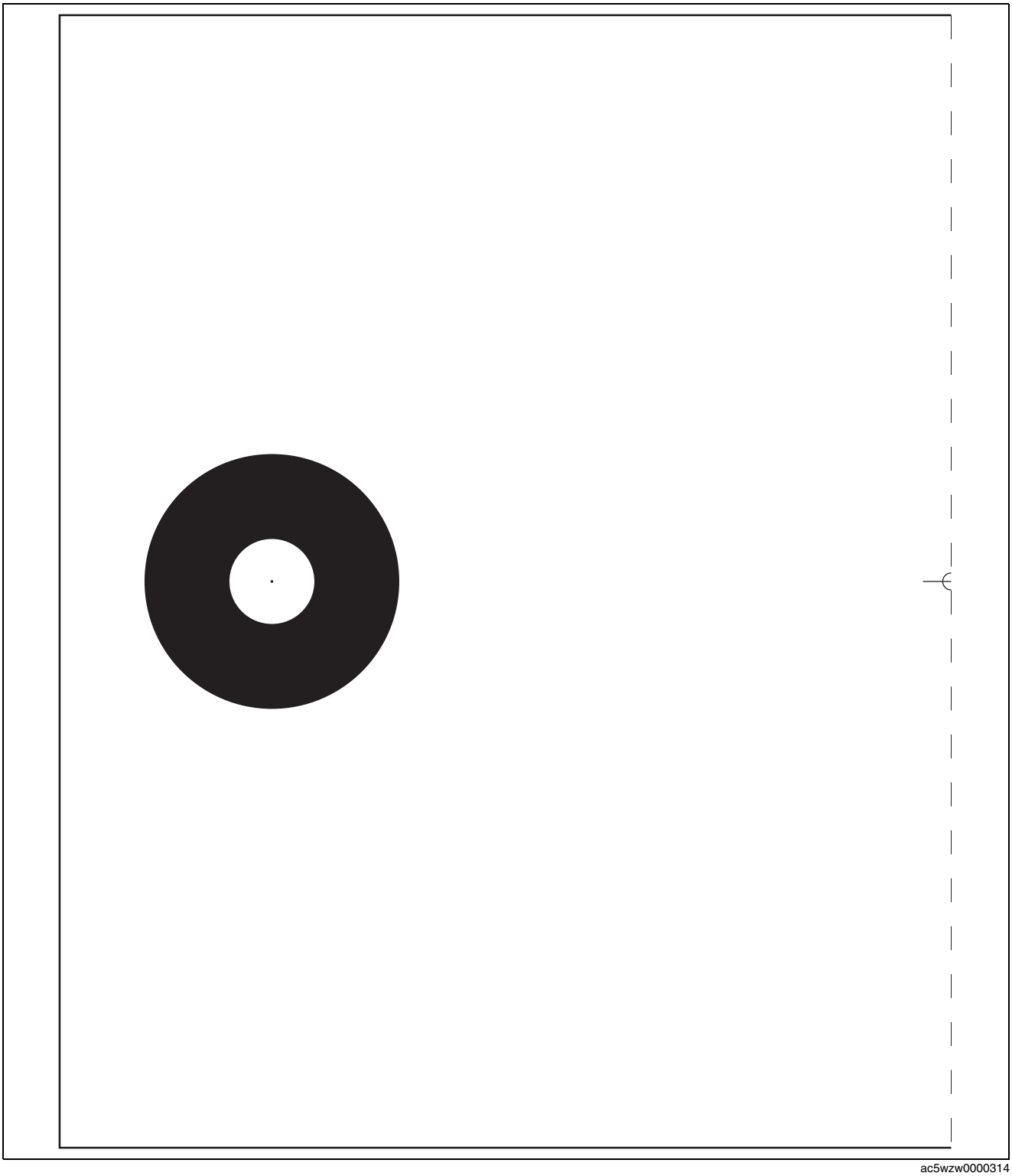

ac5wzw0000314

14. Cut the printed target sheets along the dotted line and line up the two sheets at their respective center marks as shown in the figure, and then affix cellophane tape to the back of the target.

Caution

- **When taping the two target sheets together, if cellophane tape is affixed to the front of the target sheets it could reflect light and adversely affect the aiming accuracy. When taping the two target sheets together, affix the cellophane tape to the back of the target pattern.**

INSTRUMENTATION/DRIVER INFO.

15. Verify that the taped-together target is of the dimensions shown in the figure.

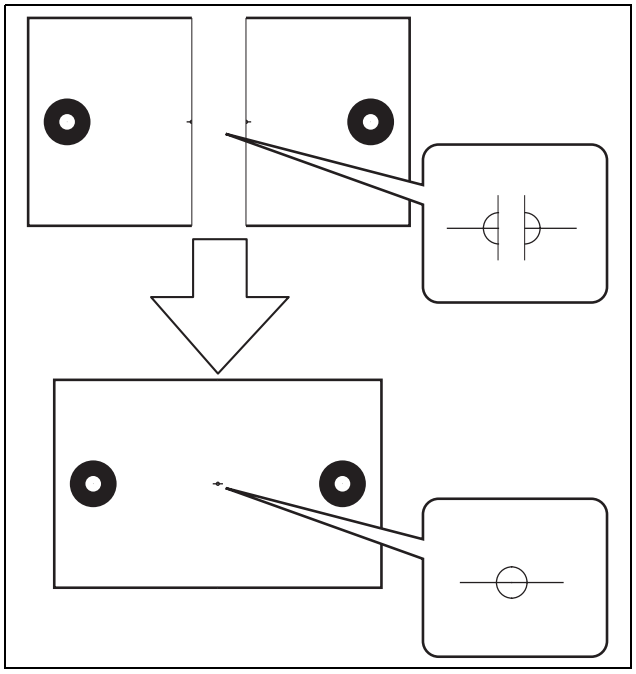

ac5jjw00000715

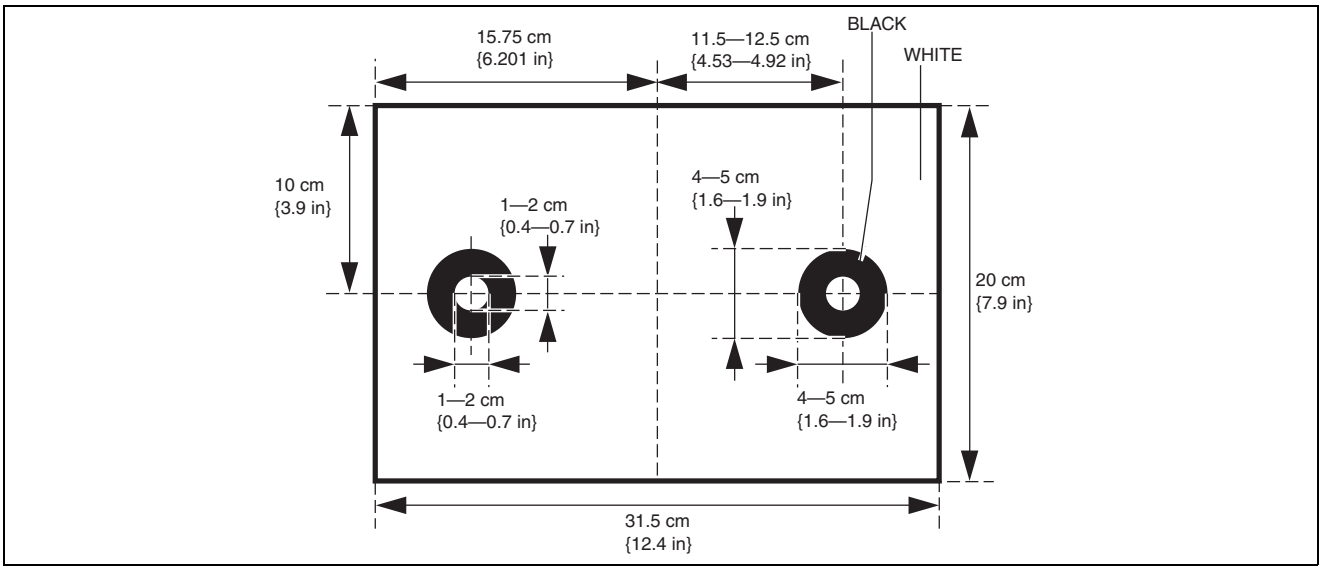

ac5wzw0000326

16. Affix double-sided adhesive tape to the back of the target.

Caution

- **When affixing the target, if tape is affixed to the front of the target it could reflect light and adversely affect the aiming accuracy. When affixing the target, affix the double-sided adhesive tape to the back of the target, and then affix it to the board.**

17. Align the target to the height shown in the figure, and affix it to a board.

Note

- Use a wooden board which does not reflect light to affix the target.

INSTRUMENTATION/DRIVER INFO.

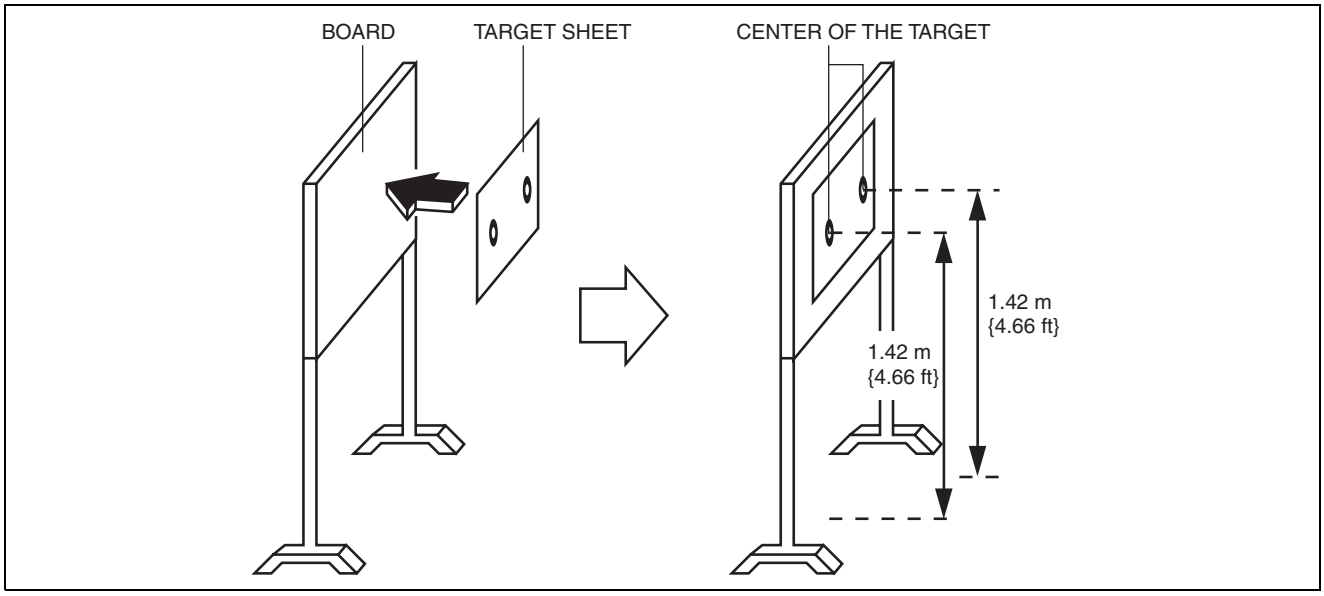

ac5wzw0000294

18. Align the center of the target with point C using the SST (plum bob).

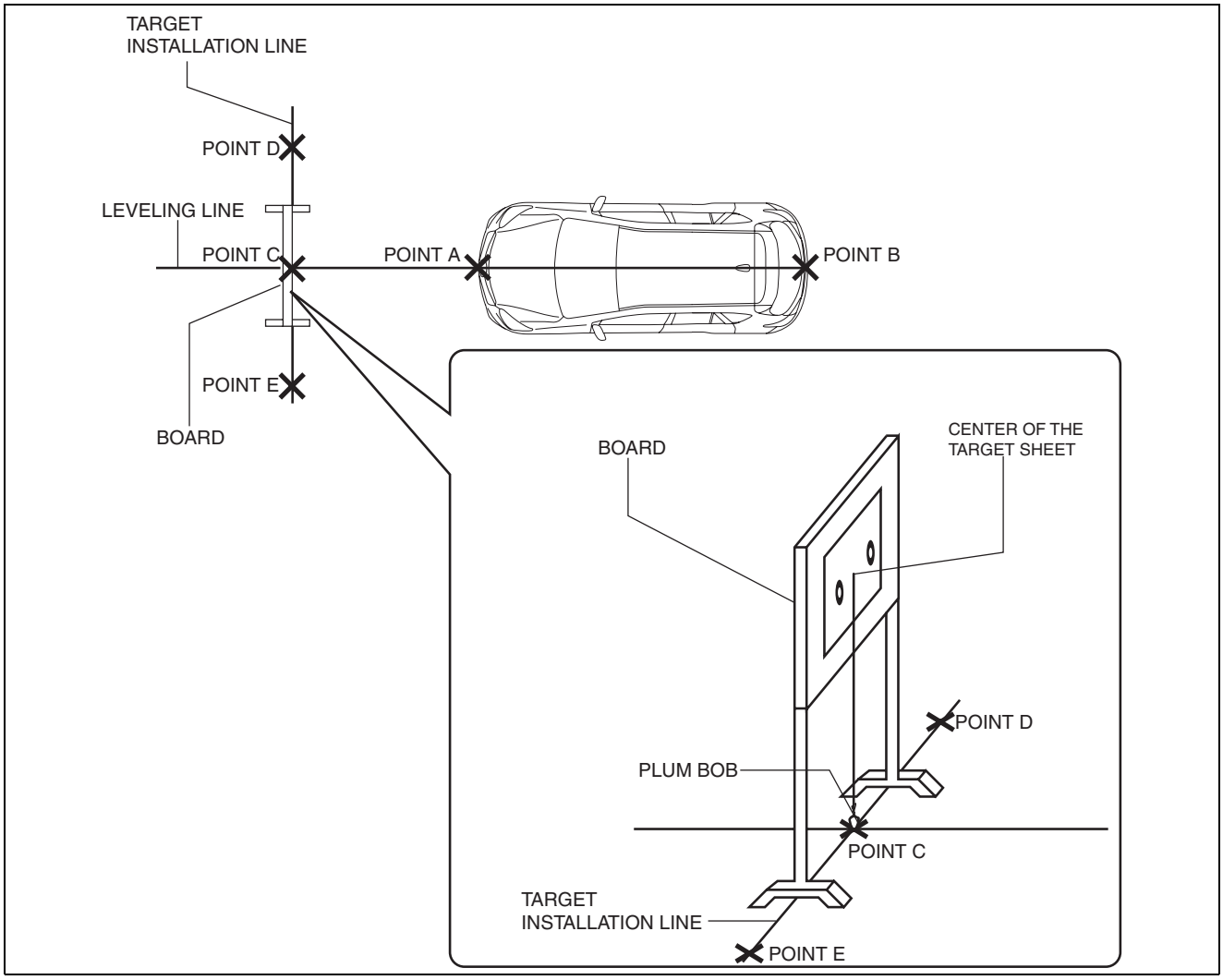

ac5wzw0000088

19. Align so that the board and the target setting line are level with the center of point C.
20. Connect the M-MDS (IDS) to the DLC-2.
21. After vehicle identification, the following can be selected from the M-MDS initialization screen.
    1. "Electrical"

2. "FSC Aiming"

22. Input the following values according to the instructions on the M-MDS screen.

Item		Value	
		mm	in
Input height from the ground to the wheel house.	Front Left	803	$31\frac{5}{8}$
	Front Right	803	$31\frac{5}{8}$
	Rear Left	806	$31\frac{6}{8}$
	Rear Right	806	$31\frac{6}{8}$
Input the distance from the target to the front wheel center.		-1,432	$-56\frac{3}{8}$
Input the distance from the lens center to the vehicle center.		-22	$-\frac{7}{8}$
Input the distance from the ground to the target center.		1,420	56

23. Perform the FSC aiming procedure according to the directions on the M-MDS.
24. Verify the M-MDS display.
- If "Procedure successful" is displayed
  — FSC aiming completed
- If "Procedure unsuccessful" is displayed
  — Perform an inspection according to the following table for the error code procedure.
  — If an error code other than the error codes in the following table is displayed, verify the following and re-perform the FSC aiming if there is no malfunction, as there could be a communication error between the FSC and the diagnostic tester.
    1. Is the battery positive voltage for the vehicle 8 V or more?
    2. Is the ignition switched ON (engine off or on)?

Error code	Detection condition
01	Target set position or input value is incorrect
02	Visibility where aiming is performed is bright or dark, target soiled
03	Target is not detected
04	Target moves during aiming
05	Input vehicle value exceeds specification
06	Aiming result is required during aiming
08	Aiming result is required for FSC with aiming not completed
FF	Aiming cannot be performed due to communication error

INSTRUMENTATION/DRIVER INFO.

Error code 01/05

Step	Inspection	Action	
1	**VERIFY VEHICLE HEIGHT INPUT VALUE** • Verify the vehicle height indicated in Step 22 for aiming with the input value. • Is the value input correctly?	Yes	Go to the next step.
		No	Input the vehicle height indicated in Step 22 for aiming, then go to the next step.
2	**VERIFY TARGET POSITION** • Verify the following: — Are the vehicle and target set on level ground? — Is the target set to the position indicated in the procedure? — Are the board and the target set line parallel and is the height at the center of the target correct? — Is the target produced as indicated in the procedure? — Is there any dirt, cracks, damage, or wrinkling on the target and board? • Is there any malfunction?	Yes	Repair the target for malfunction and go to the next step.
		No	Go to the next step.
3	**PERFORM FSC AIMING** • Perform the FSC aiming. • Is the FSC aiming completed normally?	Yes	FSC aiming is completed.
		No	**Error code 01 or 05 is displayed** • Go to the next step. **Code other than error cord 01 or 05 is displayed** • Go to the procedure for the displayed error code.
4	**PERFORM FSC AIMING AT ACTUAL MEASURED VALUE OF VEHICLE HEIGHT** • Measure the vehicle height according to the actual measurement procedure for the wheel house height. (See 09-22-117 Wheel house height measurement procedure.) • Input the actual measured value and perform the FSC aiming. • Is the FSC aiming completed normally?	Yes	The FSC aiming is completed.
		No	Go to the next step.
5	**VERIFY DTC** • Perform the DTC inspection for the FSC. • Is the DTC displayed?	Yes	• Go to the applicable DTC inspection. (See 09-02J-5 DTC TABLE [FORWARD SENSING CAMERA (FSC)].) • After the diagnostic procedure is completed, perform the FSC aiming.
		No	Re-perform the FSC aiming, and replace the FSC if the FSC aiming is not completed normally. (See 09-22-98 FORWARD SENSING CAMERA (FSC) REMOVAL/INSTALLATION.)

Error code 02/03/04

Step	Inspection	Action	
1	**VERIFY TARGET AND TARGET SETTING ENVIRONMENT** • Verify the following: — Is there any dirt or damage on the windshield, FSC lens, and FSC cover? — Does direct sunlight penetrate the camera or target surroundings? — Is the camera or target surroundings shadowed? — Is there any dirt, cracks, damage, or wrinkling on the target and board? — Is the target produced in white and black? — Is there any obstruction or moving object within the shaded area indicated in Step 4 for aiming? — Is the target produced as indicated in the procedure? — Does the target move during aiming? • Is there any malfunction?	Yes	Repair the malfunctioning part and go to the next step.
		No	Go to the next step.

INSTRUMENTATION/DRIVER INFO.

Step	Inspection	Action	
2	**PERFORM FSC AIMING** • Perform the FSC aiming. • Is the FSC aiming completed normally?	Yes	The FSC aiming is completed.
		No	**Error code 02 or 03 or 04 is displayed** • Go to the next step. **Code other than error code 02 or 03 or 04 is displayed** • Go to the procedure for the displayed error code.
3	**PERFORM FSC AIMING WITH ACTUAL MEASURED VALUE OF VEHICLE HEIGHT** • Measure the vehicle height according to the actual measurement procedure for the wheel house height. (See 09-22-117 Wheel house height measurement procedure.) • Input the actually measured value and perform the FSC aiming. • Is the FSC aiming completed normally?	Yes	The FSC aiming is completed.
		No	Go to the next step.
4	**VERIFY DTC** • Perform the DTC inspection for the FSC. • Is the DTC displayed?	Yes	• Go to the applicable DTC inspection. (See 09-02J-5 DTC TABLE [FORWARD SENSING CAMERA (FSC)].) • After the diagnostic procedure is completed, perform the FSC aiming.
		No	Re-perform the FSC aiming, and replace the FSC if the FSC aiming is not completed normally. (See 09-22-98 FORWARD SENSING CAMERA (FSC) REMOVAL/INSTALLATION.)

INSTRUMENTATION/DRIVER INFO.

Error code 06/08

Step	Inspection	Action	
1	**PERFORM FSC AIMING** • Re-perform the FSC aiming. • Is the FSC aiming completed normally?	Yes	The FSC aiming is completed.
		No	**Error code 06 or 08 is displayed** • Go to the next step. **Code other than error code 06 or 08 is displayed** • Go to the procedure for the displayed error code.
2	**VERIFY DTC** • Perform the DTC inspection for the FSC. • Is the DTC displayed?	Yes	• Go to the applicable DTC inspection. (See 09-02J-5 DTC TABLE [FORWARD SENSING CAMERA (FSC)].) • After the diagnostic procedure is completed, perform the FSC aiming.
		No	Re-perform the FSC aiming, and replace the FSC if the FSC aiming is not completed normally. (See 09-22-98 FORWARD SENSING CAMERA (FSC) REMOVAL/INSTALLATION.)

Error code FF

Step	Inspection	Action	
1	**VERIFY DTC** • Perform the DTC inspection for the FSC. • Is the DTC displayed?	Yes	• Go to the applicable DTC inspection. (See 09-02J-5 DTC TABLE [FORWARD SENSING CAMERA (FSC)].) • After the diagnostic procedure is completed, perform the FSC aiming.
		No	Re-perform the FSC aiming, and replace the FSC if the FSC aiming is not completed normally. (See 09-22-98 FORWARD SENSING CAMERA (FSC) REMOVAL/INSTALLATION.)

Wheel house height measurement procedure

1. Adjust the SST (plum bob) so that it crosses the center of the wheel and identify the center position of the wheel house.
2. Measure the height from the uppermost part of the wheel house to the floor.

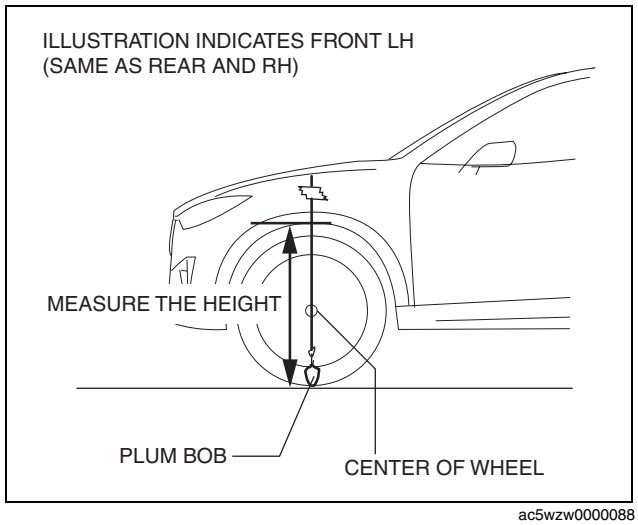

ac5wzw0000088

FORWARD SENSING CAMERA (FSC) CONFIGURATION (USING READ/WRITE FUNCTION)

id092200030200

Note

- When performing configuration, it is necessary to read the vehicle specification information from the FSC before replacing it. Connect the M-MDS to the vehicle and perform vehicle identification before removing the FSC. The vehicle specification information is temporarily stored in the M-MDS.

1. Connect the M-MDS to the DLC-2.
2. After vehicle identification, select the following from the M-MDS initialization screen.
   1. “Module programming”
3. Then, select the following from the screen menu.
   1. “Programmable Module Installation”

2. “FSC”

4. Perform the configuration following the instructions on the screen.

Caution
- **When the configuration is performed, CAN communication between the FSC and control module connected to the CAN line is cut temporarily, and communication error DTCs may be detected. After performing the configuration, verify the DTCs for the control module connected to the CAN line and clear it if any DTC is detected.**

5. Verify the DTCs for all of the control modules connected to the CAN line.
   - If any DTC is stored, clear it.
   - If the DTC is cleared, finish the procedure because the configuration has been completed normally.
   - If the DTC remains, perform troubleshooting according to the DTC.

FORWARD SENSING CAMERA (FSC) CONFIGURATION (USING AS-BUILT DATA)

id092200032300

Note
- If the configuration is performed using As-Built data, the set value of the personalization function is reset to the initial value (condition when shipped from factory). Verify the set value with the customer and perform the personalization function setting after performing the configuration using As-Built data.

1. Connect the M-MDS to the DLC-2.
2. After vehicle identification, select the following from the M-MDS initialization screen.
   1. “Module programming”
3. Then, select the following from the screen menu.
   1. “As-Built”
   2. “FSC”
4. Perform As-Built following the instructions on the screen.

Caution
- **When the configuration is performed, CAN communication between the FSC and control module connected to the CAN line is cut temporarily, and communication error DTCs may be detected. After performing the configuration, verify the DTCs for the control module connected to the CAN line and clear it if any DTC is detected.**

5. Verify the DTCs for all of the control modules connected to the CAN line.
   - If any DTC is stored, clear it.
   - If the DTC is cleared, finish the procedure because the configuration has been completed normally.
   - If the DTC remains, perform troubleshooting according to the DTC.

LDWS SWITCH REMOVAL/INSTALLATION

id092200031500

Note
- The LDWS switch is integrated with the cluster switch.
- For the cluster switch removal/installation, refer to the switch panel removal/installation because the cluster switch is installed to the switch panel. (See 09-17-18 SWITCH PANEL REMOVAL/INSTALLATION.)

LDWS SWITCH INSPECTION

id092200031600

1. Disconnect the negative battery cable. (See 01-17A-11 NEGATIVE BATTERY CABLE DISCONNECTION/CONNECTION [SKYACTIV-G 2.0].)(See 01-17B-9 NEGATIVE BATTERY CABLE DISCONNECTION/CONNECTION [SKYACTIV-D 2.2].)
2. Remove the LDWS switch. (See 09-22-118 LDWS SWITCH REMOVAL/INSTALLATION.)

INSTRUMENTATION/DRIVER INFO.

3. Verify that the resistance between LDWS switches B and C is as indicated in the table.

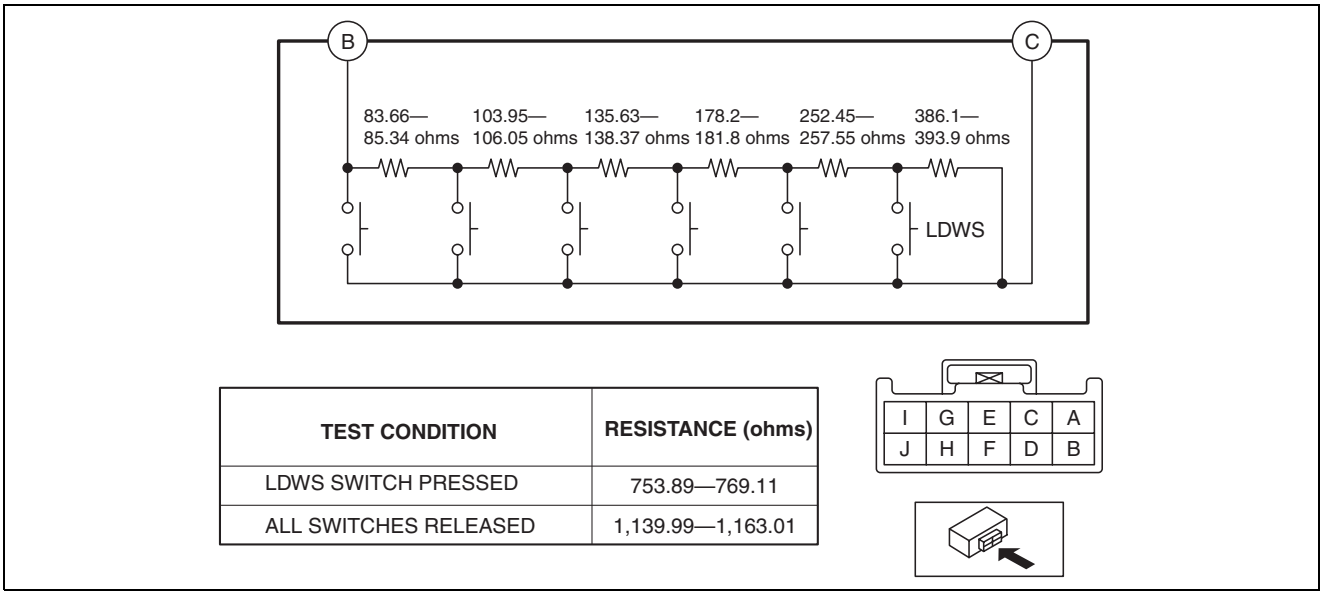

TEST CONDITION	RESISTANCE (ohms)
LDWS SWITCH PRESSED	753.89—769.11
ALL SWITCHES RELEASED	1,139.99—1,163.01

ac5wzw0000121

- If the resistance cannot be verified as indicated in the table, replace the cluster switch.

4. Apply battery positive voltage to LDWS switch terminal J, and connect terminal I to ground.
5. Verify that the LED illuminates.
   - If there is any malfunction, replace the cluster switch.

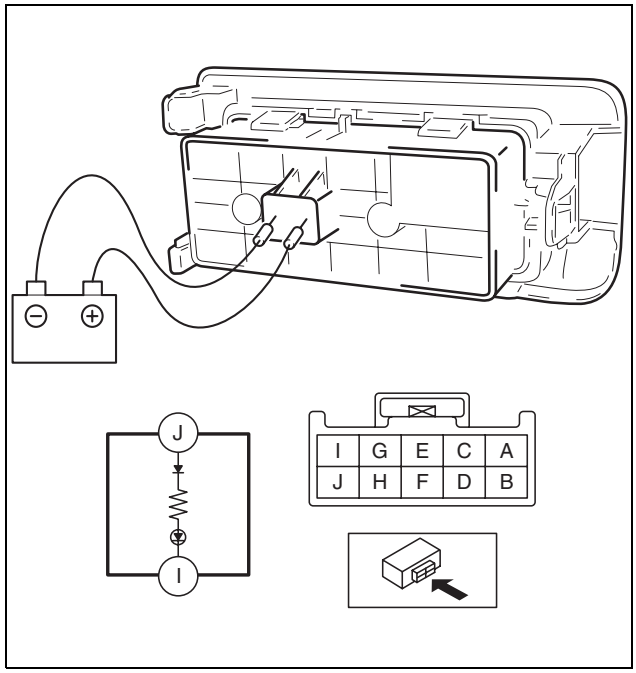

ac5jjw00000654

09-40 CONTROL SYSTEM

CONTROL SYSTEM LOCATION INDEX 09-40–1
FRONT BODY CONTROL MODULE (FBCM) REMOVAL/INSTALLATION . . . 09-40–2
FRONT BODY CONTROL MODULE (FBCM) INSPECTION 09-40–3
Terminal Voltage Table (Reference) . . . 09-40–4
Inspection Using an Oscilloscope (Reference) 09-40–8
FRONT BODY CONTROL MODULE (FBCM) CONFIGURATION (USING READ/WRITE FUNCTION) . . . 09-40–8
FRONT BODY CONTROL MODULE (FBCM) CONFIGURATION (USING AS-BUILT DATA) 09-40–9
REAR BODY CONTROL MODULE (RBCM) REMOVAL/INSTALLATION . . . 09-40–9
REAR BODY CONTROL MODULE (RBCM) INSPECTION 09-40–11
Terminal Voltage Table (Reference) . . . 09-40–12
REAR BODY CONTROL MODULE (RBCM) CONFIGURATION (USING READ/WRITE FUNCTION) 09-40–15
REAR BODY CONTROL MODULE (RBCM) CONFIGURATION (USING AS-BUILT DATA) 09-40–16
CONTROL SYSTEM PERSONALIZATION FEATURES SETTING PROCEDURE 09-40–16
Security And Locks 09-40–16
Lighting Systems 09-40–16
Wiper/washer System 09-40–17

CONTROL SYSTEM

CONTROL SYSTEM LOCATION INDEX

id094000801000

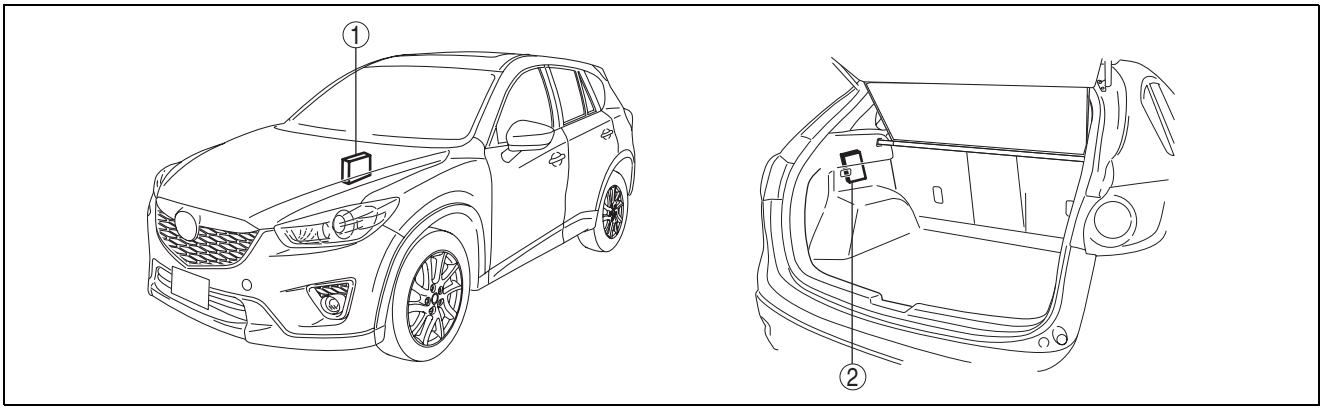

ac5wzw0000136

1	Front body control module (FBCM) (See 09-40-2 FRONT BODY CONTROL MODULE (FBCM) REMOVAL/INSTALLATION.) (See 09-40-3 FRONT BODY CONTROL MODULE (FBCM) INSPECTION.) (See 09-40-8 FRONT BODY CONTROL MODULE (FBCM) CONFIGURATION (USING READ/WRITE FUNCTION).) (See 09-40-9 FRONT BODY CONTROL MODULE (FBCM) CONFIGURATION (USING AS-BUILT DATA).)

2	Rear body control module (RBCM) (See 09-40-9 REAR BODY CONTROL MODULE (RBCM) REMOVAL/INSTALLATION.) (See 09-40-11 REAR BODY CONTROL MODULE (RBCM) INSPECTION.) (See 09-40-15 REAR BODY CONTROL MODULE (RBCM) CONFIGURATION (USING READ/WRITE FUNCTION).) (See 09-40-16 REAR BODY CONTROL MODULE (RBCM) CONFIGURATION (USING AS-BUILT DATA).) (See 09-40-16 CONTROL SYSTEM PERSONALIZATION FEATURES SETTING PROCEDURE.)

CONTROL SYSTEM

FRONT BODY CONTROL MODULE (FBCM) REMOVAL/INSTALLATION

id094000001900

Caution

- **If configuration is not performed when the front body control module (FBCM) is replaced with a new one, the vehicle specification information is not stored in the front body control module (FBCM) and the system will not operate normally.**
- **When performing configuration, it is necessary to read the vehicle specification information from the front body control module (FBCM) before replacing it. Connect the M-MDS to the vehicle and perform vehicle identification before removing the front body control module (FBCM). The vehicle specification information is temporarily stored in the M-MDS.**

Note

- The front body control module (FBCM) prior to replacement stores the vehicle specification information.
- A new front body control module (FBCM) does not store any vehicle specification information.
- If the vehicle specification information from the front body control module (FBCM) prior to replacement cannot be read, perform the configuration using As-Built data.

1. When replacing the front body control module (FBCM), perform the configuration. (See 09-40-8 FRONT BODY CONTROL MODULE (FBCM) CONFIGURATION (USING READ/WRITE FUNCTION).)
2. Disconnect the negative battery cable. (See 01-17A-11 NEGATIVE BATTERY CABLE DISCONNECTION/CONNECTION [SKYACTIV-G 2.0].) (See 01-17A-13 NEGATIVE BATTERY CABLE DISCONNECTION/CONNECTION [SKYACTIV-G 2.0 (WITHOUT i-stop)].) (See 01-17B-9 NEGATIVE BATTERY CABLE DISCONNECTION/CONNECTION [SKYACTIV-D 2.2].)
3. Remove the fuse box cover. (See 09-21-3 RELAY AND FUSE BLOCK REMOVAL/INSTALLATION.)
4. Insert a tape-wrapped flathead screwdriver into the position shown in the figure.
5. Move the screwdriver in the direction of arrow (1) shown in the figure and lift the front body control module (FBCM) in the direction of arrow (2) to detach its tab from the fuse box.

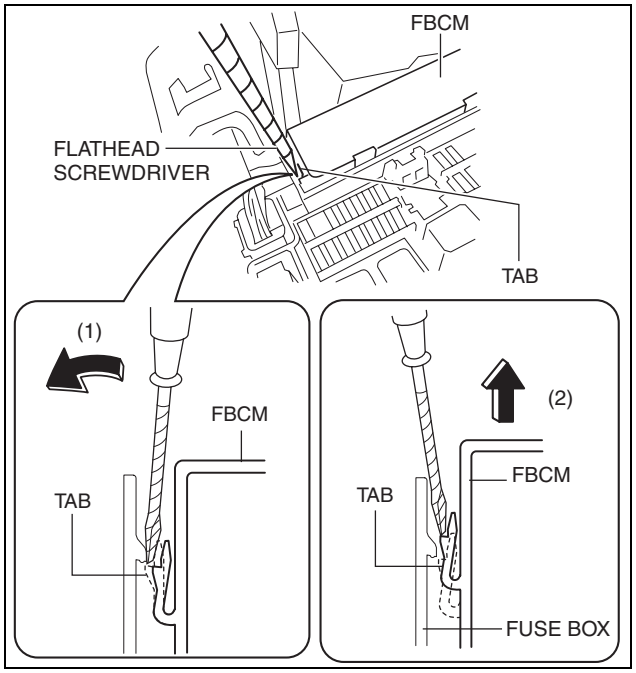

ac5uuw00000006

CONTROL SYSTEM

6. Insert a tape-wrapped flathead screwdriver into the position shown in the figure.
7. Move the screwdriver in the direction of arrow (3) shown in the figure and lift the front body control module (FBCM) in the direction of arrow (4) to detach its tab from the fuse box.

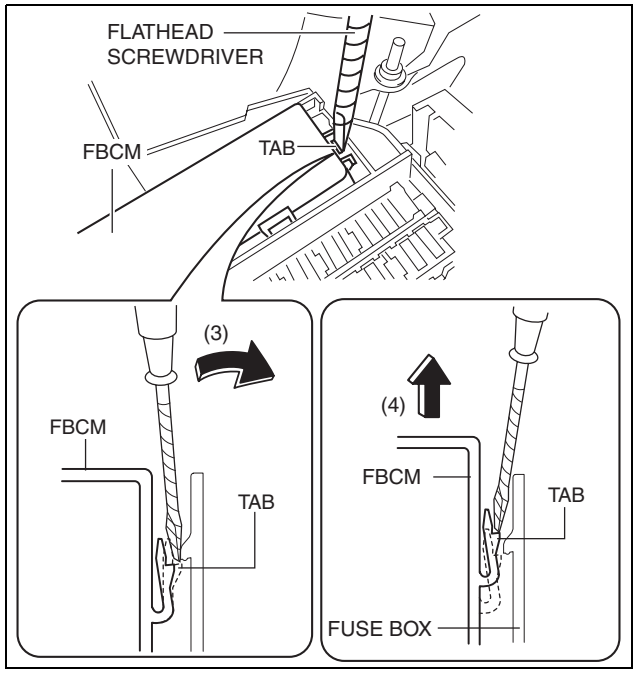

ac5uuw00000007

8. Pull the front body control module (FBCM) in the direction of the arrow shown in the figure to remove it from the fuse box.

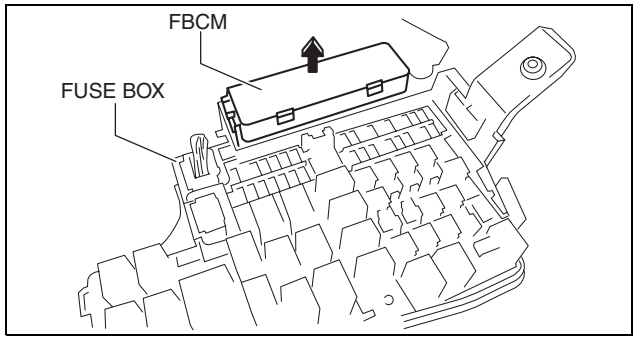

ac5uuw00000008

9. Disconnect the connectors shown in the figure.
10. Install in the reverse order of removal.

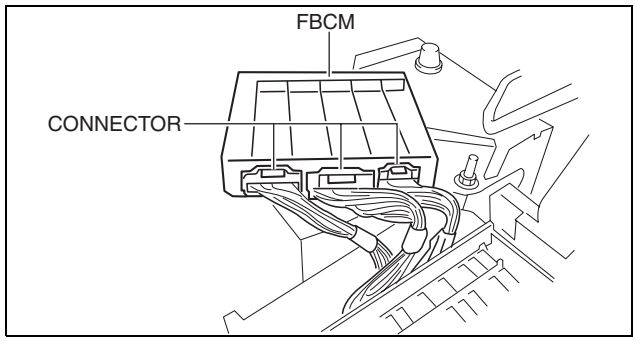

ac5uuw00000009

Note

- If configuration cannot be performed by reading/writing of the vehicle specification information, perform the configuration using As-Built information after replacing the front body control module (FBCM). (See 09-40-9 FRONT BODY CONTROL MODULE (FBCM) CONFIGURATION (USING AS-BUILT DATA).)

FRONT BODY CONTROL MODULE (FBCM) INSPECTION

id094000002100

1. Remove the fuse box cover. (See 09-21-3 RELAY AND FUSE BLOCK REMOVAL/INSTALLATION.)
2. Remove the front body control module (FBCM) from the fuse box. (See 09-40-2 FRONT BODY CONTROL MODULE (FBCM) REMOVAL/INSTALLATION.)
3. Verify that the voltages of each of the terminals are as indicated in the 09-40-4 Terminal Voltage Table (Reference).
   - If the voltage is not as indicated in the table, inspect the parts under Inspection item(s).
     - — If the system does not launch normally even though inspection items are normal, specify the location of the malfunction based on the instructions from the on-board diagnostic system and the symptom troubleshooting, and perform repairs.

CONTROL SYSTEM

Terminal Voltage Table (Reference)

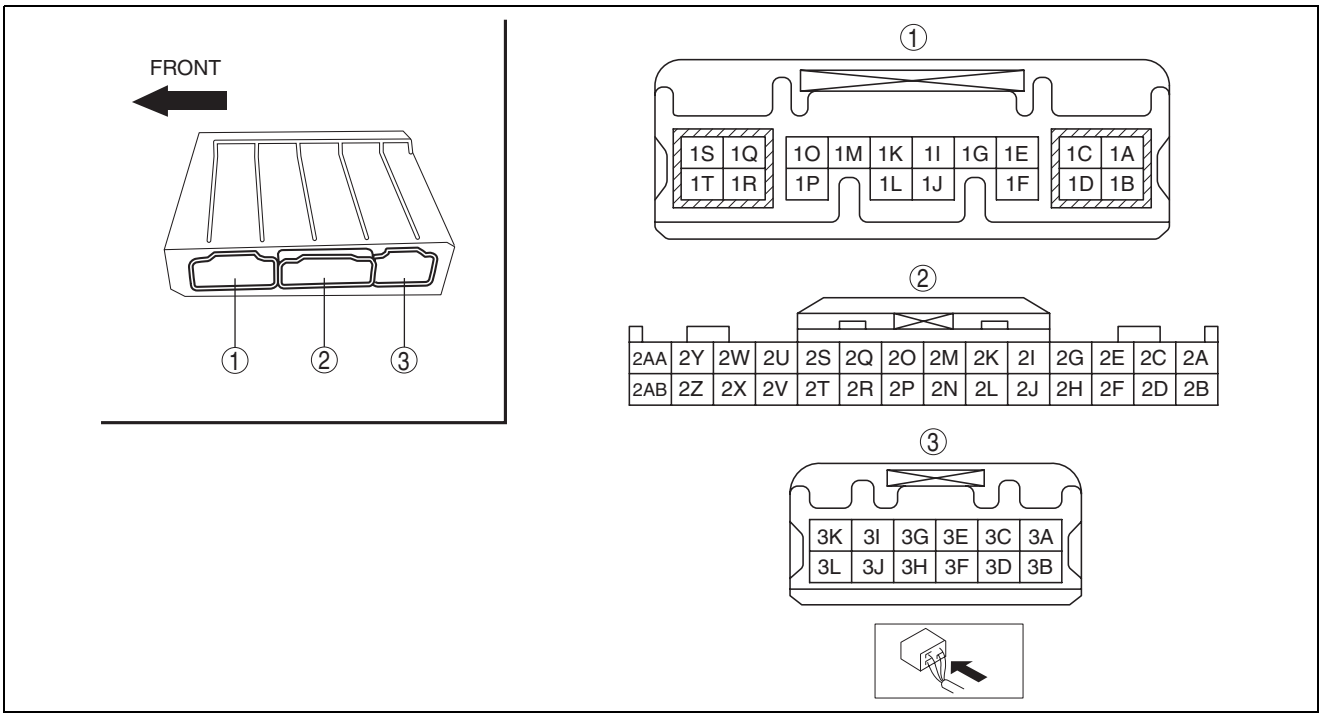

ac5wzw0000088

Terminal	Signal	Connected to	Measurement conditions	Voltage (V)	Inspection item(s)
1A	Power supply	HAZARD 25 A fuse	Under any condition	B+	• HAZARD 25 A fuse • Related wiring harness
1B	Power supply	HAZARD 25 A fuse	Under any condition	B+	• HAZARD 25 A fuse • Related wiring harness
1C	Ignition power supply	• Climate control unit • Seat warmer control unit • A/C relay • PTC heater*6	Ignition switched ON (engine off)	B+	• Climate control unit • Seat warmer control unit • A/C relay • PTC heater*6 • Related wiring harness
			Ignition switched OFF (LOCK)	1.0 or less	
1D	Signal ground	Body ground	Under any condition	1.0 or less	• Related wiring harness
1E	Rear turn light (RH) control	Rear turn light (RH)	Turn switch at right turn light position	1.0 or less ⇔ B+	• Rear turn light (RH) • Related wiring harness
			Turn switch is in position other than above	1.0 or less	
1F	Side turn light (RH) control	Side turn light (RH)	Turn switch at right turn light position	1.0 or less ⇔ B+	• Side turn light (RH) • Related wiring harness
			Turn switch is in position other than above	1.0 or less	
1G	Front turn light (RH) control	Front turn light (RH)	Turn switch at right turn light position	1.0 or less ⇔ B+	• Front turn light (RH) • Related wiring harness
			Turn switch is in position other than above	1.0 or less	
1H	—	—	—	—	—
1I	License light control	TNS relay	Light switch at TNS position	B+	• TNS relay • Related wiring harness
			Light switch at OFF position	1.0 or less	
1J	Parking light control	Parking light (LH, RH)	Light switch at TNS position	B+	• Parking light (LH, RH) • Related wiring harness
			Light switch at OFF position	1.0 or less	
1K	—	—	—	—	—
1L	Horn relay control	Horn relay	Horn switch not pressed	B+	• Horn relay • Related wiring harness
			Horn switch pressed	1.0 or less	

CONTROL SYSTEM

Terminal	Signal	Connected to	Measurement conditions		Voltage (V)	Inspection item(s)
1M	Headlight relay (LO) control	• Headlight LO relay (halogen type) • Headlight LO relay (LH) (discharge type)	Light switch at HEAD position		1.0 or less	• Headlight LO relay (halogen type) • Headlight LO relay (LH) (discharge type) • Related wiring harness
			Light switch is in position other than above		B+	
1N	—	—	—		—	—
1O*7	Theft-deterrent horn input signal	Rear body control module (RBCM)	M-MDS is connected and theft-deterrent is sounded using data monitor function		1.0 or less	• Rear body control module (RBCM) • Related wiring harness
			M-MDS is connected and theft-deterrent is not sounded using data monitor function		B+	
1P	Rear window defroster relay control	Rear window defroster relay	Ignition switched ON (engine off)	Rear window defroster switch OFF	B+	• Rear window defroster relay • Related wiring harness
				Rear window defroster switch ON	1.0 or less	
1Q*1	Headlight cleaner motor control	Headlight cleaner motor	Ignition switched ON (engine off)	Turn front washer switch ON 2 times within 2 s	B+→ 1.0 or less	• Headlight cleaner motor • Related wiring harness
				No operation	1.0 or less	
1R*7	Theft-deterrent horn power supply	R.WIPER 15 A fuse	Under any condition		B+	• R.WIPER 15 A fuse • Related wiring harness
1S*1	Headlight washer power supply	H/CLEAN 20 A fuse	Under any condition		B+	• H/CLEAN 20 A fuse • Related wiring harness
1T*7	Theft-deterrent horn output signal	Theft-deterrent horn	M-MDS is connected and theft-deterrent is sounded using data monitor function		B+	• Theft-deterrent horn • Related wiring harness
			M-MDS is connected and theft-deterrent is not sounded using data monitor function		1.0 or less	
2A	Interior light power supply	ROOM 15 A fuse	Under any condition		B+	• ROOM 15 A fuse • Related wiring harness
2B	Front turn light (LH) control	Front turn light (LH)	Turn switch at left turn light position		1.0 or less ⇔ B+	• Front turn light (LH) • Related wiring harness
			Turn switch is in position other than above		1.0 or less	
2C*2	Running light control	Running light (LH, RH)	Ignition switched ON (engine off) and light switch OFF	Running light illuminates	B+	• Running light (LH, RH) • Related wiring harness
				Running light turns off	1.0 or less	
2D	Rear turn light (LH) control	Rear turn light (LH)	Turn switch at left turn light position		1.0 or less ⇔ B+	• Rear turn light (LH) • Related wiring harness
			Turn switch is in position other than above		1.0 or less	
2E	LIN communication	Current sensor	Terminal used for communication therefore determination based on terminal voltage is not possible.			
2F	Side turn light (LH) control	Side turn light (LH)	Turn switch at left turn light position		1.0 or less ⇔ B+	• Side turn light (LH) • Related wiring harness
			Turn switch is in position other than above		1.0 or less	
2G*3	LIN communication	Auto-light sensor/rain sensor	Terminal used for communication therefore determination based on terminal voltage is not possible.			
2H	LIN communication	DC-DC converter	Terminal used for communication therefore determination based on terminal voltage is not possible.			

CONTROL SYSTEM

Terminal	Signal	Connected to	Measurement conditions		Voltage (V)	Inspection item(s)
2I	CAN_L	CAN system related module	Terminal used for communication therefore determination based on terminal voltage is not possible.			
2J*5	LIN communication	Climate control unit	Terminal used for communication therefore determination based on terminal voltage is not possible.			
2K	CAN_H	CAN system related module	Terminal used for communication therefore determination based on terminal voltage is not possible.			
2L	CAN_L	CAN system related module	Terminal used for communication therefore determination based on terminal voltage is not possible.			
2M	Ignition power supply	C/U IG1 15 A fuse	Ignition switched ON (engine off)		B+	• C/U IG1 15 A fuse • Related wiring harness
			Ignition switched OFF (LOCK)		1.0 or less	
2N	CAN_L	CAN system related module	Terminal used for communication therefore determination based on terminal voltage is not possible.			
2O	—	—	—		—	—
2P	CAN_H	CAN system related module	Terminal used for communication therefore determination based on terminal voltage is not possible.			
2Q	Brake fluid level switch signal	Brake fluid level sensor	Ignition switched ON (engine off)	Brake fluid level is less than MIN (brake fluid level sensor ON)	1.0 or less	• Brake fluid level sensor • Related wiring harness
				Brake fluid level is MIN or more (brake fluid level sensor OFF)	Wave pattern (See 09-40-8 Pattern 1.)	
2R	CAN_H	CAN system related module	Terminal used for communication therefore determination based on terminal voltage is not possible.			
2S*8	Washer level switch signal	Washer fluid-level sensor	Ignition switched ON (engine off)	Washer level is less than MIN (washer fluid-level sensor ON)	1.0 or less	• Washer fluid-level sensor • Related wiring harness
				Washer level is MIN or more (washer fluid-level sensor OFF)	Wave pattern (See 09-40-8 Pattern 1.)	
2T*6	PTC heater signal	PTC heater	Terminal used for communication therefore determination based on terminal voltage is not possible.			
2U	Ignition power supply	Start stop unit	Ignition switched ON (engine off)		B+	• Start stop unit • Related wiring harness
			Ignition switched OFF (LOCK)		1.0 or less	
2V	Headlight relay (LO) control (discharge type)	Headlight LO relay (RH)	Light switch at HEAD position		1.0 or less	• Headlight LO relay (RH) • Related wiring harness
			Light switch is in position other than above		B+	
2W	Headlight (LO) switch signal	Start stop unit	Light switch at HEAD position		1.0 or less	• Start stop unit • Related wiring harness
			Light switch at OFF position		B+	
2X	Headlight relay (HI) control	Headlight HI relay	Headlight at HEAD position and dimmer switch at LO position		B+	• Headlight HI relay • Related wiring harness
			Headlight at HEAD position and dimmer switch at HIGH or passing position		1.0 or less	
2Y	Windshield wiper (LO) switch signal	Start stop unit	Windshield wiper switch at ON position		1.0 or less	• Start stop unit • Related wiring harness
			Windshield wiper switch at OFF position		B+	
2Z	Blower motor relay control	Blower relay	Ignition switched ON (engine off)	Operate blower motor using fan switch	1.0 or less	• Blower relay • Related wiring harness
				Press climate control unit OFF button to stop blower motor	B+	

CONTROL SYSTEM

Terminal	Signal	Connected to	Measurement conditions		Voltage (V)	Inspection item(s)
2AA	Autostop switch signal	Windshield wiper motor	Ignition switched ON (engine off)	Turn windshield wiper switch ON and wiper is operated	B+	• Windshield wiper motor • Related wiring harness
				Windshield wiper switch OFF	1.0 or less	
2AB*4	Front fog light relay control	Front fog light relay	Light switch at HEAD position	Front fog light switch OFF	B+	• Front fog light relay • Related wiring harness
				Front fog light switch ON	1.0 or less	
3A	Wiper power supply	WIPER 20 A fuse	Under any condition		B+	• WIPER 20 A fuse • Related wiring harness
3B	Wiper power supply	WIPER 20 A fuse	Under any condition		B+	• WIPER 20 A fuse • Related wiring harness
3C	Windshield wiper motor (HI) control	Windshield wiper motor	Ignition switched ON (engine off)	Windshield wiper switch at HI position	B+	• Windshield wiper motor • Related wiring harness
				Windshield wiper switch at OFF position	1.0 or less	
3D	Power ground	Body ground	Under any condition		1.0 or less	• Related wiring harness
3E	Windshield wiper motor (HI) control	Windshield wiper motor	Ignition switched ON (engine off)	Windshield wiper switch at HI position	B+	• Windshield wiper motor • Related wiring harness
				Windshield wiper switch at OFF position	1.0 or less	
3F	Windshield washer motor control	Washer motor	Ignition switched ON (engine off)	Windshield washer switch ON	B+	• Washer motor • Related wiring harness
				Windshield washer switch OFF	1.0 or less	
3G	Windshield wiper motor (LOW) control	Windshield wiper motor	Ignition switched ON (engine off)	Windshield wiper switch at LOW position	B+	• Windshield wiper motor • Related wiring harness
				Windshield wiper switch at OFF position	1.0 or less	
3H	Rear window washer motor control	Washer motor	Ignition switched ON (engine off)	Rear window washer switch ON	B+	• Washer motor • Related wiring harness
				Rear washer switch OFF	1.0 or less	
3I	Windshield wiper motor (LOW) control	Windshield wiper motor	Ignition switched ON (engine off)	Windshield wiper switch at LOW position	B+	• Windshield wiper motor • Related wiring harness
				Windshield wiper switch at OFF position	1.0 or less	
3J	Interior illumination power supply	• Glove compartment light • Selector illumination • Hazard warning switch • Climate control unit*5 • Audio unit • Clock spring	Light switch at TNS position		B+	• Glove compartment light • Selector illumination • Hazard warning switch • Climate control unit*5 • Audio unit • Clock spring • Related wiring harness
			Light switch at OFF position		1.0 or less	

CONTROL SYSTEM

Terminal	Signal	Connected to	Measurement conditions	Voltage (V)	Inspection item(s)
3K	Power supply	HAZARD 25 A fuse	Under any condition	B+	• HAZARD 25 A fuse • Related wiring harness
3L	Power supply	HAZARD 25 A fuse	Under any condition	B+	• HAZARD 25 A fuse • Related wiring harness

*1 : Vehicles with headlight cleaner system
*2 : Vehicles with running light system
*3 : Vehicles with auto wiper/ auto light system
*4 : Vehicles with front fog light system
*5 : Vehicles with manual air conditioner
*6 : SKYACTIV-D 2.2
*7 : Vehicles with theft-deterrent system
*8 : Vehicles with washer fluid-level sensor

Inspection Using an Oscilloscope (Reference)
Pattern 1

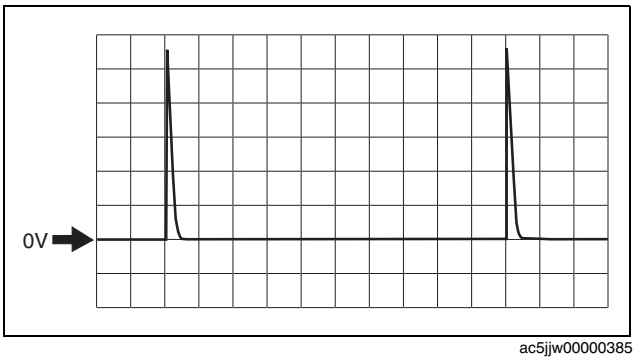

ac5jjw00000385

- Terminal:
  - — Brake fluid level signal: 2Q (+) ⇔ ground (-)
  - — Washer level signal: 2S (+) ⇔ ground (-)
- Oscilloscope setting: 2 V/DIV (Y), 1 ms/DIV (X), DC range

FRONT BODY CONTROL MODULE (FBCM) CONFIGURATION (USING READ/WRITE FUNCTION)
id094000002300

Note
- When performing configuration, it is necessary to read the vehicle specification information from the front body control module (FBCM) before replacing it. Connect the M-MDS to the vehicle and perform vehicle identification before removing the front body control module (FBCM). The vehicle specification information is temporarily stored in the M-MDS.

1. Connect the M-MDS to the DLC-2.
2. After the vehicle is identified, select the following items from the initialization screen of the M-MDS.
   1. Select “Module Programming”.
3. Then, select items from the screen menu in the following order.
   1. Select “Programmable Module Installation”.
   2. Select “F_BCM”.
4. Perform the configuration according to the directions on the screen.

Caution
- **When the configuration is performed, CAN communication between the front body control module (FBCM) and control module connected to the CAN line is cut temporarily, and communication error DTCs may be detected. After performing the configuration, verify the DTCs for the control module connected to the CAN line and clear it if any DTC is detected.**

5. Verify the DTCs for all of the control modules connected to the CAN line.
   - If any DTC is stored, clear it.
   - If the DTC is cleared, finish the procedure because the configuration has been completed normally.
   - If the DTC remains, perform troubleshooting according to the DTC.

CONTROL SYSTEM

FRONT BODY CONTROL MODULE (FBCM) CONFIGURATION (USING AS-BUILT DATA)

id094000005700

Note
- If the configuration is performed using As-Built data, the set value of the personalization function is reset to the initial value (condition when shipped from factory). Verify the set value with the customer and perform the personalization function setting after performing the configuration using As-Built data.

1. Connect the M-MDS to the DLC-2.
2. After the vehicle is identified, select the following items from the initialization screen of the M-MDS.
    1. Select “Module Programming”.
3. Then, select items from the screen menu in the following order.
    1. Select “As-Built”.
    2. Select “F_BCM”.
4. Perform the configuration according to the directions on the screen.

Caution
- **When the configuration is performed, CAN communication between the front body control module (FBCM) and control module connected to the CAN line is cut temporarily, and communication error DTCs may be detected. After performing the configuration, verify the DTCs for the control module connected to the CAN line and clear it if any DTC is detected.**

5. Verify the DTCs for all of the control modules connected to the CAN line.
    - If any DTC is stored, clear it.
    - If the DTC is cleared, finish the procedure because the configuration has been completed normally.
    - If the DTC remains, perform troubleshooting according to the DTC.

REAR BODY CONTROL MODULE (RBCM) REMOVAL/INSTALLATION

id094000002000

Caution
- **If configuration is not performed when the rear body control module (RBCM) is replaced with a new one, the vehicle specification information is not stored in the rear body control module (RBCM) and the system will not operate normally.**
- **When performing configuration, it is necessary to read the vehicle specification information from the rear body control module (RBCM) before replacing it. Connect the M-MDS to the vehicle and perform vehicle identification before removing the rear body control module (RBCM). The vehicle specification information is temporarily stored in the M-MDS.**

Note
- The rear body control module (RBCM) prior to replacement stores the vehicle specification information.
- A new rear body control module (RBCM) does not store any vehicle specification information.
- If the vehicle specification information from the rear body control module (RBCM) prior to replacement cannot be read, perform the configuration using As-Built data.

1. When replacing the rear body control module (RBCM), perform the configuration. (See 09-40-15 REAR BODY CONTROL MODULE (RBCM) CONFIGURATION (USING READ/WRITE FUNCTION).)
2. Disconnect the negative battery cable. (See 01-17A-11 NEGATIVE BATTERY CABLE DISCONNECTION/CONNECTION [SKYACTIV-G 2.0].) (See 01-17A-13 NEGATIVE BATTERY CABLE DISCONNECTION/CONNECTION [SKYACTIV-G 2.0 (WITHOUT i-stop)].) (See 01-17B-9 NEGATIVE BATTERY CABLE DISCONNECTION/CONNECTION [SKYACTIV-D 2.2].)
3. Remove the following parts:
    1. Trunk board (See 09-17-85 TRUNK BOARD REMOVAL/INSTALLATION.)
    2. Trunk end trim (See 09-17-78 TRUNK END TRIM REMOVAL/INSTALLATION.)
    3. Rear scuff plate (LH) (See 09-17-63 REAR SCUFF PLATE REMOVAL/INSTALLATION.)
    4. Trunk side trim (LH) (See 09-17-80 TRUNK SIDE TRIM REMOVAL/INSTALLATION.)

CONTROL SYSTEM

4. Disconnect the connectors shown in the figure.

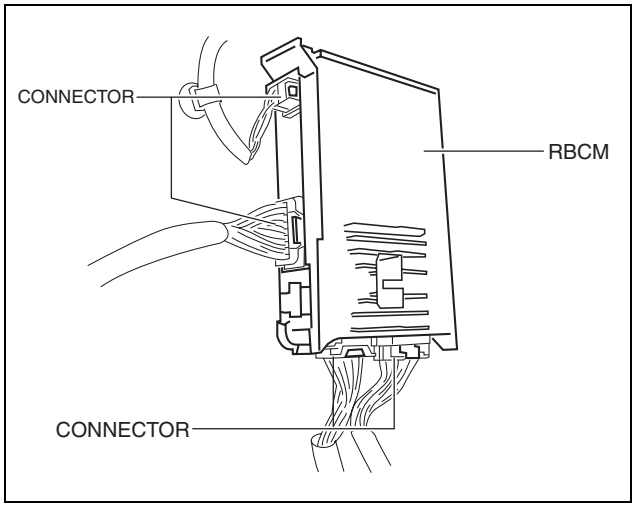

ac5uuw00000010

5. While pressing the rear body control module (RBCM) tab in the direction of arrow (1) shown in the figure, pull it in the direction of arrow (2) to detach the tab from the body.

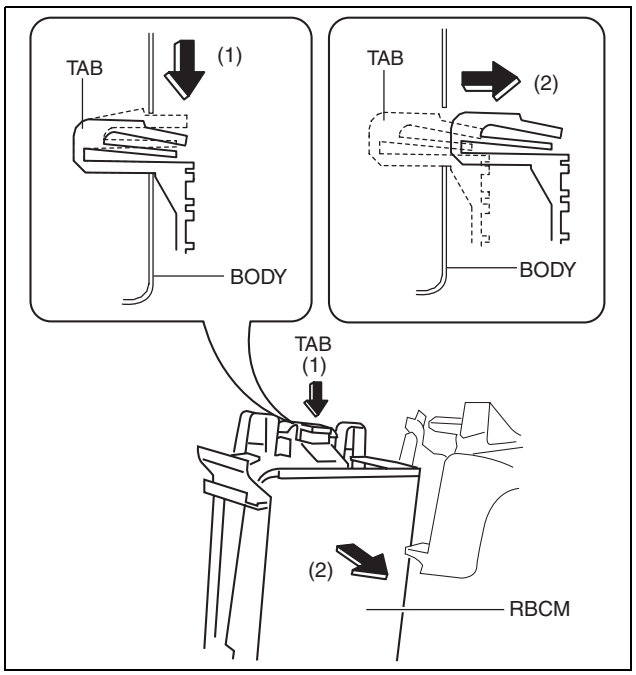

ac5wzw0000112

6. Pull the rear body control module (RBCM) up in the direction of the arrow to detach the hook from the body.
7. Remove the rear body control module (RBCM).

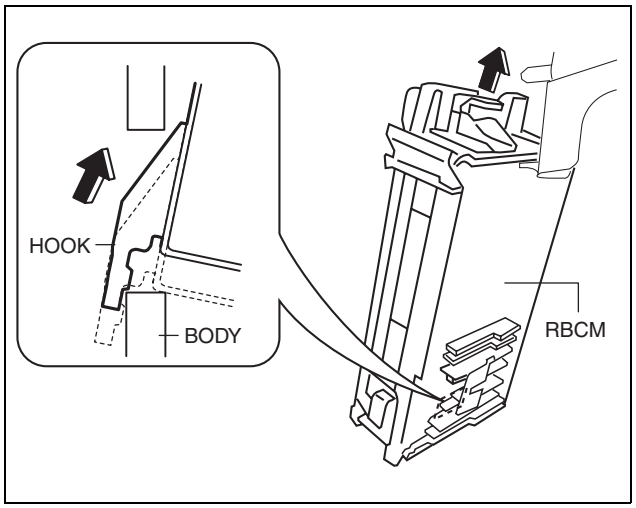

ac5wzw0000113

CONTROL SYSTEM

8. Insert a tape-wrapped flathead screwdriver into the position shown in the figure.
9. Move the screwdriver in the direction of arrow (3) shown in the figure and pull the connector in the direction of arrow (4) to detach its tab from the rear body control module (RBCM).
10. Pull the connector in the direction of arrow (4) shown in the figure and remove it.
11. Install in the reverse order of removal.

Note

- If configuration cannot be performed by reading/writing of the vehicle specification information, perform the configuration using As-Built information after replacing the rear body control module (RBCM). (See 09-40-16 REAR BODY CONTROL MODULE (RBCM) CONFIGURATION (USING AS-BUILT DATA).)

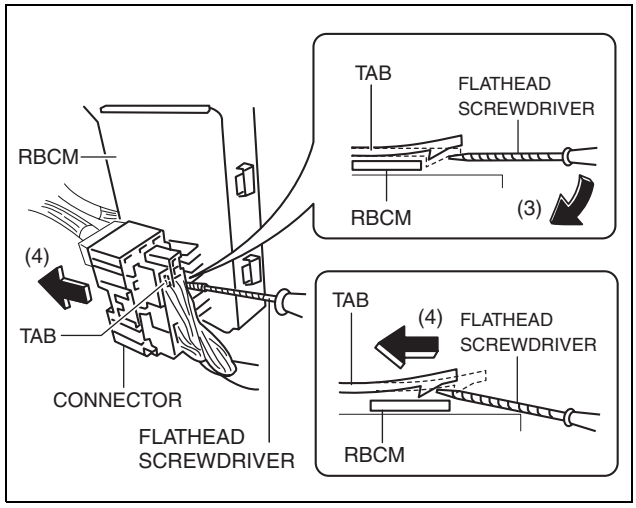

ac5wzw0000113

REAR BODY CONTROL MODULE (RBCM) INSPECTION

id094000002200

1. Disconnect the negative battery cable. (See 01-17A-11 NEGATIVE BATTERY CABLE DISCONNECTION/CONNECTION [SKYACTIV-G 2.0].) (See 01-17A-13 NEGATIVE BATTERY CABLE DISCONNECTION/CONNECTION [SKYACTIV-G 2.0 (WITHOUT i-stop)].) (See 01-17B-9 NEGATIVE BATTERY CABLE DISCONNECTION/CONNECTION [SKYACTIV-D 2.2].)
2. Remove the following parts:
   (1) Trunk board (See 09-17-85 TRUNK BOARD REMOVAL/INSTALLATION.)
   (2) Trunk end trim (See 09-17-78 TRUNK END TRIM REMOVAL/INSTALLATION.)
   (3) Rear scuff plate (LH) (See 09-17-63 REAR SCUFF PLATE REMOVAL/INSTALLATION.)
   (4) Trunk side trim (LH) (See 09-17-80 TRUNK SIDE TRIM REMOVAL/INSTALLATION.)
3. Remove the rear body control module (RBCM) from the body with the connector connected. (See 09-40-9 REAR BODY CONTROL MODULE (RBCM) REMOVAL/INSTALLATION.)
4. Connect the negative battery cable. (See 01-17A-11 NEGATIVE BATTERY CABLE DISCONNECTION/CONNECTION [SKYACTIV-G 2.0].) (See 01-17A-13 NEGATIVE BATTERY CABLE DISCONNECTION/CONNECTION [SKYACTIV-G 2.0 (WITHOUT i-stop)].) (See 01-17B-9 NEGATIVE BATTERY CABLE DISCONNECTION/CONNECTION [SKYACTIV-D 2.2].)
5. Verify that the voltages of each of the terminals are as indicated in the 09-40-12 Terminal Voltage Table (Reference).
   - If the voltage is not as indicated in the table, inspect the parts under Inspection item(s).
     — If the system does not launch normally even though inspection items are normal, specify the location of the malfunction based on the instructions from the on-board diagnostic system and the symptom troubleshooting, and perform repairs.

CONTROL SYSTEM

Terminal Voltage Table (Reference)

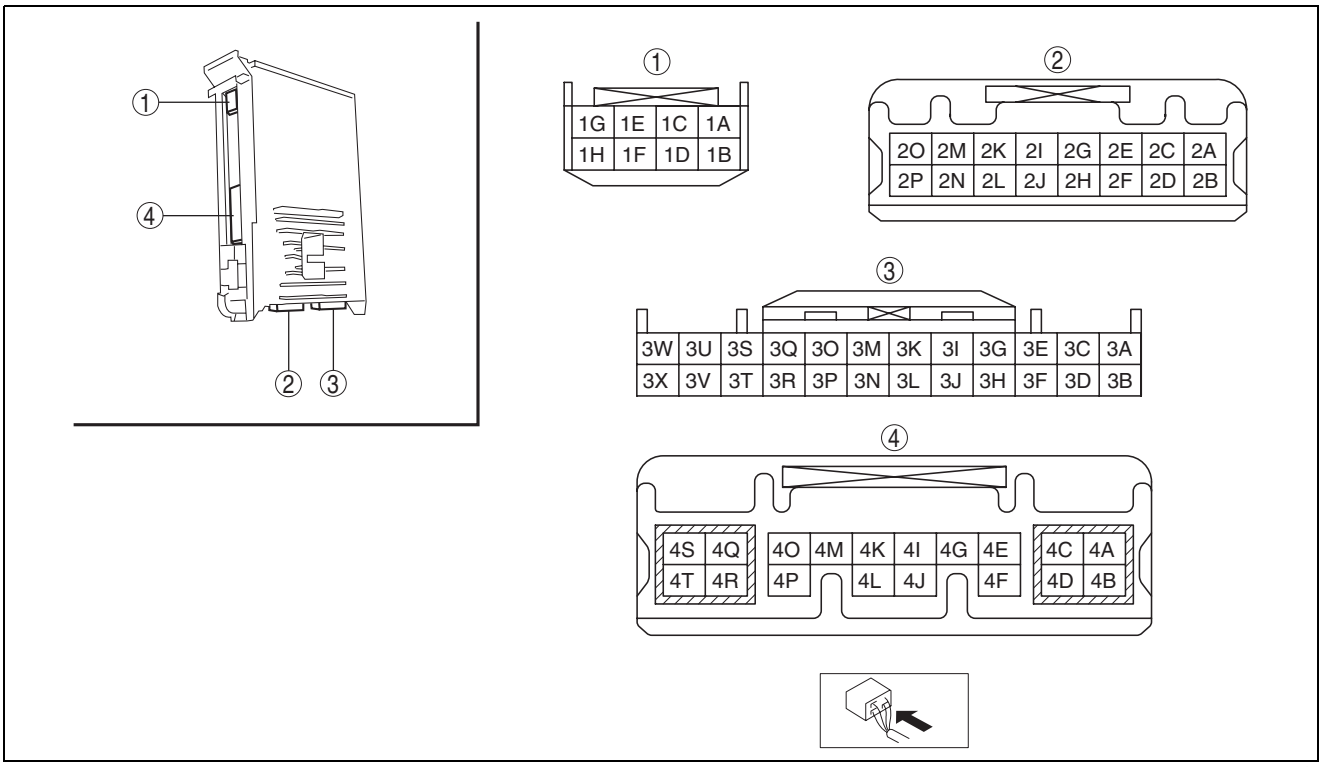

ac5wzw0000218

Terminal	Signal	Connected to	Measurement conditions	Voltage (V)	Inspection item(s)
1A*1	LIN communication ground	Intruder sensor	Under any condition	1.0 or less	• Intruder sensor • Related wiring harness
1B	Interior light ground	• Front map light • Rear map light • Vanity mirror illumination	Under any condition	1.0 or less	• Front map light • Rear map light • Vanity mirror illumination • Related wiring harness
1C	—	—	—	—	—
1D	—	—	—	—	—
1E	Interior light control	Front map light	Under any condition	1.0 or less	• Front map light • Related wiring harness
1F	—	—	—	—	—
1G*1	LIN communication	Intruder sensor	Terminal used for communication therefore determination based on terminal voltage is not possible.		
1H	Interior light power supply	• Front map light • Rear map light • Vanity mirror illumination (LH, RH) • Intruder sensor*1	Under any condition	B+	• Front map light • Rear map light • Vanity mirror illumination (LH, RH) • Intruder sensor • Related wiring harness
2A	—	—	—	—	—
2B	Power supply	D.LOCK 25 A fuse	Under any condition	B+	• D.LOCK 25 A fuse • Related wiring harness
2C	Door lock control	Door lock actuator	Lock driver-side door lock switch from unlock	1.0 or less → B+ → 1.0 or less	• Door lock actuator • Related wiring harness
			Unlock driver-side door lock switch from lock	1.0 or less	
2D	—	—	—	—	—

CONTROL SYSTEM

Terminal	Signal	Connected to	Measurement conditions	Voltage (V)	Inspection item(s)
2E	Door unlock control	Door lock actuator	Unlock driver-side door lock switch from lock	1.0 or less → B+ → 1.0 or less	• Door lock actuator • Related wiring harness
			Lock driver-side door lock switch from unlock	1.0 or less	
2F*1	Theft-deterrent horn relay control	Front body control module (FBCM)	Connected to M-MDS and using data monitor function, theft-deterrent sound activates	1.0 or less	• Front body control module (FBCM) • Related wiring harness
			Connected to M-MDS and using data monitor function, theft-deterrent sound does not activate	B+	
2G*2	Double locking system control	Door lock actuator	Press transmitter lock button two times (double locking system operation condition)	B+ → 1.0 or less	• Door lock actuator • Related wiring harness
			Except above	1.0 or less	
2H*5	Brake light control	Brake light relay	Connect the M-MDS and turn on the "STOP_LMP_CS" using the rear body control module (RBCM) simulation function	1.0 or less	• Brake light relay • Related wiring harness
			Connect the M-MDS and turn off the "STOP_LMP_CS" using the rear body control module (RBCM) simulation function	B+	
2I	Ignition power supply	METER1 10 A fuse	Ignition switched ON (engine off)	B+	• METER1 10 A fuse • Related wiring harness
			Ignition switched OFF (LOCK)	1.0 or less	
2J*5	Brake switch signal	• Brake switch • Start stop unit	Brake pedal depressed	B+	• Brake switch • Start stop unit • Related wiring harness
			Brake pedal not depressed	1.0 or less	
2K*3	Rear fog light power supply	STOP 10 A fuse	Under any condition	B+	• STOP 10 A fuse • Related wiring harness
2L	—	—	—	—	—
2M	Power supply	R.WIPER 15 A fuse	Under any condition	B+	• R.WIPER 15 A fuse • Related wiring harness
2N	—	—	—	—	—
2O	—	—	—	—	—
2P	Power supply	ROOM 15 A fuse	Under any condition	B+	• ROOM 15 A fuse • Related wiring harness
3A*1	LIN communication	Theft-deterrent siren	Terminal used for communication therefore determination based on terminal voltage is not possible.		
3B	Serial communication	Start stop unit	Terminal used for communication therefore determination based on terminal voltage is not possible.		
3C	Fuel sensor ground	• Fuel gauge sensor unit • Fuel gauge sensor unit (sub)	Under any condition	1.0 or less	• Fuel gauge sensor unit • Fuel gauge sensor unit (sub) • Related wiring harness
3D	Serial communication	Power window main switch	Terminal used for communication therefore determination based on terminal voltage is not possible.		
3E	—	—	—	—	—
3F	Door lock switch signal	Door lock switch	Door lock switch unlocked	1.0 or less	• Door lock switch • Related wiring harness
			Other	4.5	
			Door lock switch locked	2.2	
3G	—	—	—	—	—
3H	Driver-side door key cylinder switch signal	Door key cylinder switch	Door key cylinder is turned to unlock side	1.0 or less	• Door key cylinder switch • Related wiring harness
			Other	4.5	
			Door key cylinder is turned to lock side	2.2	

CONTROL SYSTEM

Terminal	Signal	Connected to	Measurement conditions	Voltage (V)	Inspection item(s)
3I	Fuel sensor signal	Fuel gauge sensor unit	Inspect the fuel gauge sender unit and related wiring harnesses because the terminal voltage at this terminal cannot be examined. (See 09-22-34 FUEL GAUGE SENDER UNIT INSPECTION [2WD].) (See 09-22-36 FUEL GAUGE SENDER UNIT INSPECTION [4WD].)		
3J*1	Lock input (lock-link switch (passenger's side, rear door))	Door lock-link switch	The passenger-side and rear doors are all locked	4.6	• Door lock-link switch • Related wiring harness
			Among the passenger-side and rear doors, at least one door is unlocked	1.0 or less	
3K*4	Fuel sensor signal (sub)	Fuel gauge sensor unit (sub)	Inspect the fuel gauge sender unit and related wiring harnesses because the terminal voltage at this terminal cannot be examined. (See 09-22-36 FUEL GAUGE SENDER UNIT INSPECTION [4WD].)		
3L*1	Bonnet latch switch signal	Bonnet latch switch	Bonnet open (bonnet latch switch OFF)	4.6	• Bonnet latch switch • Related wiring harness
			Bonnet is closed (bonnet latch switch ON)	1.0 or less	
3M	Unlock input (front door lock-link switch (driver's door))	Door lock-link switch (driver's door)	Driver's door locked	4.6	• Door lock-link switch (driver's door) • Related wiring harness
			Driver's door unlocked	1.0 or less	
3N	—	—	—	—	—
3O	Lock input (front door lock-link switch (driver's door))	Door lock-link switch (driver's door)	Driver's door locked	1.0 or less	• Door lock-link switch (driver's door) • Related wiring harness
			Driver's door unlocked	4.6	
3P	—	—	—	—	—
3Q	Rear door switch (RH) signal	Door latch switch (RR)	Rear door (RH) open	1.0 or less	• Rear door switch (RH) • Related wiring harness
			Rear door (RH) closed	B+	
3R	—	—	—	—	—
3S	Rear door switch (LH) signal	Door latch switch (LR)	Rear door (LH) open	1.0 or less	• Rear door switch (LH) • Related wiring harness
			Rear door (LH) closed	B+	
3T	Rear seat belt (RH) switch signal	Rear buckle switch (RH)	Insert rear seat belt (RH) into buckle	B+	• Rear buckle switch (RH) • Related wiring harness
			Rear seat belt (RH) not inserted into buckle	1.0 or less	
3U	Front door switch (passenger's door) signal	Door latch switch (passenger's door)	Front door (passenger's door) open	1.0 or less	• Front door switch (passenger's door) • Related wiring harness
			Front door (passenger's door) closed	B+	
3V	Rear seat belt (center) switch	Rear center buckle switch	Insert rear seat belt (center) into buckle	B+	• Rear center buckle switch • Related wiring harness
			Rear seat belt (center) not inserted into buckle	1.0 or less	
3W	Front door switch (driver's door) signal	Door latch switch (driver's door)	Front door (driver's door) open	1.0 or less	• Front door switch (driver's door) • Related wiring harness
			Front door (driver's door) closed	B+	
3X	Rear seat belt (LH) switch	Rear buckle switch (LH)	Insert rear seat belt (LH) into buckle	B+	• Rear buckle switch (LH) • Related wiring harness
			Rear seat belt (LH) not inserted into buckle	1.0 or less	
4A	Rear window wiper motor power supply	Rear wiper motor	Ignition switched ON (engine off)	B+	• Rear wiper motor • Related wiring harness
			Ignition switched OFF (LOCK)	1.0 or less	
4B	Power ground	Body ground	Under any condition	1.0 or less	• Related wiring harness
4C	Liftgate lock actuator control	Liftgate lock actuator	Press liftgate opener switch	B+ → 1.0 or less	• Liftgate lock actuator • Related wiring harness
			Except above	1.0 or less	
4D	Brake light control	• Brake light • High-mount brake light	Brake pedal depressed	B+	• Brake light • High-mount brake light • Related wiring harness
			Brake pedal not depressed	1.0 or less	
4E	—	—	—	—	—

CONTROL SYSTEM

Terminal	Signal	Connected to	Measurement conditions		Voltage (V)	Inspection item(s)
4F	Cargo compartment light power supply	Cargo compartment light	Under any condition		B+	• Cargo compartment light • Related wiring harness
4G	CAN_H	CAN system related module	Terminal used for communication therefore determination based on terminal voltage is not possible.			
4H	—	—	—		—	—
4I	CAN_H	CAN system related module	Terminal used for communication therefore determination based on terminal voltage is not possible.			
4J	CAN_L	CAN system related module	Terminal used for communication therefore determination based on terminal voltage is not possible.			
4K	Liftgate latch switch signal	Cargo compartment light switch	Liftgate open		1.0 or less	• Cargo compartment light switch • Related wiring harness
			Liftgate closed		B+	
4L	CAN_L	CAN system related module	Terminal used for communication therefore determination based on terminal voltage is not possible.			
4M	Liftgate opener switch signal	Liftgate opener switch	Liftgate opener switch pressed		1.0 or less	• Liftgate opener switch • Related wiring harness
			Liftgate opener switch not pressed		4.5	
4N	—	—	—		—	—
4O	—	—	—		—	—
4P	Cargo compartment light control	Cargo compartment light	Liftgate open		1.0 or less	• Cargo compartment light • Related wiring harness
			Liftgate closed		B+	
4Q*3	Rear fog light control	Rear fog light	Light switch at TNS position	Rear fog light at OFF	1.0 or less	• Rear fog light • Related wiring harness
				Rear fog light at ON	B+	
4R	Signal ground	Body ground	Under any condition		1.0 or less	• Related wiring harness
4S	Back-up light control	• Back-up light (LH, RH) • Auto dimming mirror	Ignition switched ON (engine off)	• Selector lever at R position (AT vehicle) • Shift lever at R position (MT vehicle)	B+	• Back-up light switch • Auto dimming mirror • Related wiring harness
				Other	1.0 or less	
4T	Rear wiper motor control (LO)	Rear wiper motor	Rear wiper switch at ON		1.0 or less	• Rear wiper motor • Related wiring harness
			Rear wiper switch at OFF		B+	

*1 : Vehicles with theft-deterrent system
*2 : Vehicles with double locking system
*3 : Vehicles with rear fog light
*4 : 4WD vehicles
*5 : Vehicles with smart city brake support

REAR BODY CONTROL MODULE (RBCM) CONFIGURATION (USING READ/WRITE FUNCTION)

id094000002400

Note
- When performing configuration, it is necessary to read the vehicle specification information from the rear body control module (RBCM) before replacing it. Connect the M-MDS to the vehicle and perform vehicle identification before removing the rear body control module (RBCM). The vehicle specification information is temporarily stored in the M-MDS.

1. Connect the M-MDS to the DLC-2.
2. After the vehicle is identified, select the following items from the initialization screen of the M-MDS.
    1. Select “Module Programming”.
3. Then, select items from the screen menu in the following order.
    1. Select “Programmable Module Installation”.
    2. Select “R_BCM”.
4. Perform the configuration according to the directions on the screen.

CONTROL SYSTEM

Caution
- **When the configuration is performed, CAN communication between the rear body control module (RBCM) and control module connected to the CAN line is cut temporarily, and communication error DTCs may be detected. After performing the configuration, verify the DTCs for the control module connected to the CAN line and clear it if any DTC is detected.**

5. Verify the DTCs for all of the control modules connected to the CAN line.
   - If any DTC is stored, clear it.
   - If the DTC is cleared, finish the procedure because the configuration has been completed normally.
   - If the DTC remains, perform troubleshooting according to the DTC.

REAR BODY CONTROL MODULE (RBCM) CONFIGURATION (USING AS-BUILT DATA)

id094000005800

Note
- If the configuration is performed using As-Built data, the set value of the personalization function is reset to the initial value (condition when shipped from factory). Verify the set value with the customer and perform the personalization function setting after performing the configuration using As-Built data.

1. Connect the M-MDS to the DLC-2.
2. After the vehicle is identified, select the following items from the initialization screen of the M-MDS.
   1. Select “Module Programming”.
3. Then, select items from the screen menu in the following order.
   1. Select “As-Built”.
   2. Select “R_BCM”.
4. Perform the configuration according to the directions on the screen.

Caution
- **When the configuration is performed, CAN communication between the rear body control module (RBCM) and control module connected to the CAN line is cut temporarily, and communication error DTCs may be detected. After performing the configuration, verify the DTCs for the control module connected to the CAN line and clear it if any DTC is detected.**

5. Verify the DTCs for all of the control modules connected to the CAN line.
   - If any DTC is stored, clear it.
   - If the DTC is cleared, finish the procedure because the configuration has been completed normally.
   - If the DTC remains, perform troubleshooting according to the DTC.

CONTROL SYSTEM PERSONALIZATION FEATURES SETTING PROCEDURE

id094000439800

1. Connect the M-MDS to DLC-2.
2. After the vehicle is identified, select the following items from the initial screen of the M-MDS.
   - Select the “Module Programming”.
   - Select “Programmable Parameters”.
   - Select menu in the R_BCM.
3. Select an item name, and then select option.

Security And Locks
Power door lock system

M-MDS display	Function	Initial setting	Setting contents	Control unit
Auto Door Lock Mode.	Auto door lock function can be changed.	Lock: Driving, Unlock: IGN Off.	Not Adopted./OFF/ Lock When Driving./ Lock: Driving, Unlock: IGN Off./Lock When Shifting Out Of P./ Lock: Shift From P, Unlock: In P.	Rear body control module (RBCM)

Lighting Systems
Turn light system

M-MDS display	Function	Initial setting	Setting content	Control unit
3-Flash Turn Signal.	The turn light system can be switched between operable and inoperable.	OFF	Not Adopted./OFF/ON	Rear body control module (RBCM)

CONTROL SYSTEM

Auto light system

M-MDS display	Function	Initial setting	Setting content	Control unit
Auto-headlight On.	Auto light sensor sensitivity can be changed.	Medium	Not Adopted./Dark/ Medium Dark/Medium/ Medium Light/Light	Rear body control module (RBCM)

Note

- If the mode is set to “Light” and “Medium Light”, the illumination level for illuminating the TNS and headlight increases. Therefore, the TNS and headlights illuminate when the ambient light is brighter than when the level is set to “Medium”. In addition, if the mode is set to “Medium Dark” and “Dark”, the illumination level for illuminating the TNS and headlights decreases. Therefore, the TNS and headlights illuminate when the ambient light is lower than when the level is set to “Medium”.

Room Light Control System

M-MDS display	Function	Initial setting	Setting content	Control unit
Interior Light Timeout-Door Open.	The front/rear map light illumination time after any door is open can be changed.	30 minutes.	Not Adopted./30 minutes./60 minutes./ 10 minutes.	Rear body control module (RBCM)
Interior Light Timeout-Door Closed.	The front/rear map light illumination time after any door is closed can be changed.	15 seconds.	Not Adopted./15 seconds./7.5 seconds./30 seconds./ 60 seconds.	Rear body control module (RBCM)

Wiper/washer System
Auto wiper system

M-MDS display	Function	Initial setting	Setting content	Control unit
Rain Sensing Wipers.	Auto wiper system can be set to operable or inoperable.	Lock: Driving, Unlock: IGN Off.	Not Adopted./Off (Intermittent)/On (Rein Sensing)	Rear body control module (RBCM)

09-50 TECHNICAL DATA

BODY AND ACCESSORIES
TECHNICAL DATA 09-50–1

TECHNICAL DATA

BODY AND ACCESSORIES TECHNICAL DATA

id095000800100

Item			Spec (W) × quantity
Exterior	Halogen type	Headlight LO bulb	55 × 2
		Headlight HI bulb (Vehicles without running light)	60 × 2
		Headlight HI bulb (Vehicles with running light)	55 / 15 × 2
	Discharge type	Headlight HI/LO bulb	35 × 2
		Running light bulb	13 × 2
	Parking light bulb		5 × 2
	Front turn light bulb		21 × 2
	Front fog light bulb		55 × 2
	Side turn light (LED)		0.6
	Rear turn light bulb		21 × 2
	Brake/taillight bulb		21 / 5 × 2
	Back-up light bulb		16 × 2
	Taillight bulb (Liftgate light)		5 × 2
	Rear fog light bulb		21 × 1
	High-mount brake light (LED)		2.5
	License plate light bulb		5 × 2
Interior	Front map light bulb		8 × 2
	Rear map light bulb		8 × 2
	Cargo compartment light bulb		5 × 1
	Glove compartment light bulb		1.7× 1
	Vanity mirror illumination bulb		2 × 2

09-60 SERVICE TOOLS

BODY AND ACCESSORIES SST 09-60–1

SERVICE TOOLS

BODY AND ACCESSORIES SST

id096000800100

49 G067 0A0 Doppler simulator set 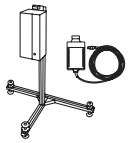	49 G067 001 Doppler simulator (Component part of 49 G067 0A0) 	49 G067 002 Stand (Component part of 49 G067 0A0) 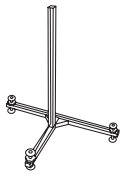
49 G067 003 AC-DC converter (Component part of 49 G067 0A0) 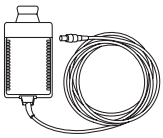	49 L067 001 Reflector 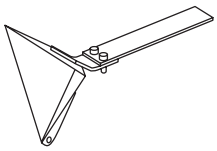	49 L067 002 Tripod 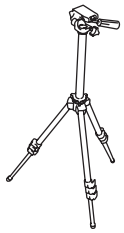
49 L067 003 Plum-bob 	49 L067 006 Plum-bob 	—

MULTIPLEX COMMUNICATION SYSTEM

10 SECTION

ON-BOARD DIAGNOSTIC [SKYACTIV-G 2.0 (R.H.D.)] . . 10-02B

ON-BOARD DIAGNOSTIC [SKYACTIV-D 2.2 (R.H.D.)]. . . 10-02D

10-02B ON-BOARD DIAGNOSTIC [SKYACTIV-G 2.0 (R.H.D.)]

FOREWORD
[SKYACTIV-G 2.0 (R.H.D.)] 10-02B–1
Troubleshooting Procedure **10-02B–2**
Action for non-repeatable malfunction. **10-02B–2**
CONTROLLER AREA NETWORK (CAN) MALFUNCTION DIAGNOSIS FLOW
[SKYACTIV-G 2.0 (R.H.D.)] 10-02B–3
CAN malfunction diagnosis flow. **10-02B–3**
HS-CAN signal waveform **10-02B–8**
MS-CAN signal waveform **10-02B–8**
NETWORK TEST
[SKYACTIV-G 2.0 (R.H.D.)] 10-02B–8
DTC TABLE
[SKYACTIV-G 2.0 (R.H.D.)] 10-02B–9
HS-CAN **10-02B–9**
MS-CAN. **10-02B–10**
DETERMINING OPEN CIRCUIT LOCATION (HS-CAN)
[SKYACTIV-G 2.0 (R.H.D.)] 10-02B–11
DTC output pattern and malfunctioning location. **10-02B–12**
A. **10-02B–13**
B. **10-02B–15**
C **10-02B–17**
D **10-02B–21**
E. **10-02B–23**
F. **10-02B–25**
G **10-02B–27**
H **10-02B–29**
I **10-02B–33**
J. **10-02B–35**
K. **10-02B–39**
L. **10-02B–41**
M **10-02B–43**
N **10-02B–45**
O **10-02B–47**
P. **10-02B–49**
Q **10-02B–51**
R **10-02B–53**
DETERMINING SHORT TO GROUND LOCATION (HS-CAN)
[SKYACTIV-G 2.0 (R.H.D.)] 10-02B–55
System wiring diagram **10-02B–56**
Determination procedure. **10-02B–57**
DETERMINING SHORT TO POWER SUPPLY LOCATION (HS-CAN)
[SKYACTIV-G 2.0 (R.H.D.)] 10-02B–62
System wiring diagram **10-02B–63**
Determination procedure. **10-02B–64**
DETERMINING SHORT BETWEEN CIRCUITS LOCATION (HS-CAN)
[SKYACTIV-G 2.0 (R.H.D.)] 10-02B–74
System wiring diagram **10-02B–75**
Determination procedure. **10-02B–76**
DETERMINING OPEN CIRCUIT LOCATION (MS-CAN)
[SKYACTIV-G 2.0 (R.H.D.)] 10-02B–83
DTC output pattern and malfunctioning location **10-02B–83**
A **10-02B–84**
B **10-02B–85**
C **10-02B–86**
D **10-02B–88**
E **10-02B–89**
F **10-02B–90**
G **10-02B–91**
H **10-02B–92**
I **10-02B–93**
J **10-02B–94**
DETERMINING SHORT TO GROUND LOCATION (MS-CAN)
[SKYACTIV-G 2.0 (R.H.D.)] 10-02B–97
System wiring diagram **10-02B–98**
Determination procedure. **10-02B–98**
DETERMINING SHORT TO POWER SUPPLY LOCATION (MS-CAN)
[SKYACTIV-G 2.0 (R.H.D.)] 10-02B–103
System wiring diagram **10-02B–104**
Determination procedure. **10-02B–104**
DETERMINING SHORT BETWEEN CIRCUITS LOCATION (MS-CAN)
[SKYACTIV-G 2.0 (R.H.D.)] 10-02B–111
System wiring diagram **10-02B–112**
Determination procedure. **10-02B–112**

ON-BOARD DIAGNOSTIC [SKYACTIV-G 2.0 (R.H.D.)]

FOREWORD [SKYACTIV-G 2.0 (R.H.D.)]

id100202000000

- If there is any vehicle malfunction complaint lodged by a customer, perform malfunction diagnosis according to the 10-02B-2 Troubleshooting Procedure.

ON-BOARD DIAGNOSTIC [SKYACTIV-G 2.0 (R.H.D.)]

Troubleshooting Procedure

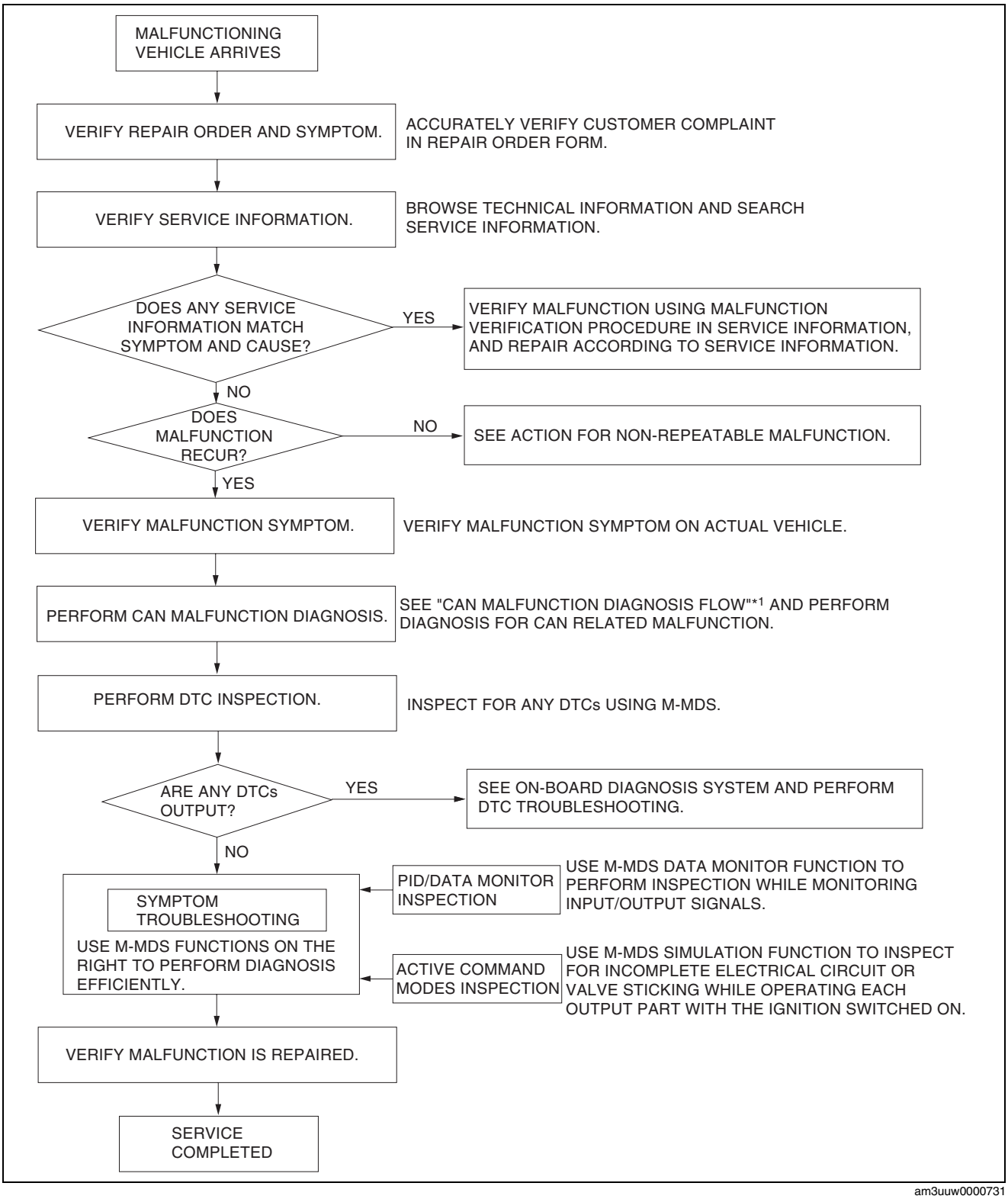

am3uuw0000731

*1 : 10-02B-3 CONTROLLER AREA NETWORK (CAN) MALFUNCTION DIAGNOSIS FLOW [SKYACTIV-G 2.0 (R.H.D.)]

Action for non-repeatable malfunction

- If the malfunction does not recur, verify the malfunction cause by performing the following actions:
  — Based on the repair order form, attempt to drive the vehicle or perform tests to replicate the malfunction, record the data (such as CAN circuit voltage) at that time, and detect the malfunction cause.

ON-BOARD DIAGNOSTIC [SKYACTIV-G 2.0 (R.H.D.)]

— Refer to [Determining Open Circuit Location] based on the recorded DTC, shake the wiring harness or connector of the electrical component which is suspected to be the cause of the malfunction, and inspect for any changes in CAN system voltage or occurrence of any DTCs.

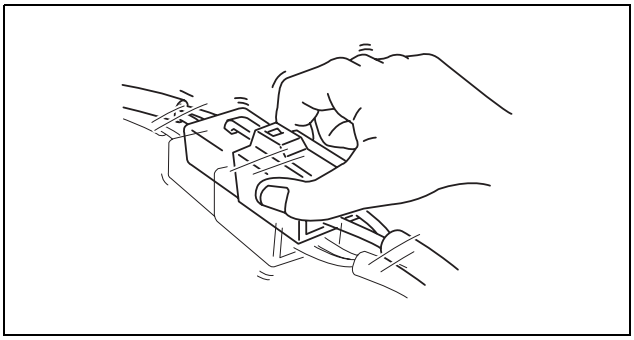

aaxjjw00007274

— Inspect the female terminals on the connector of the electric component which is suspected to be the cause of the malfunction for poor connection.

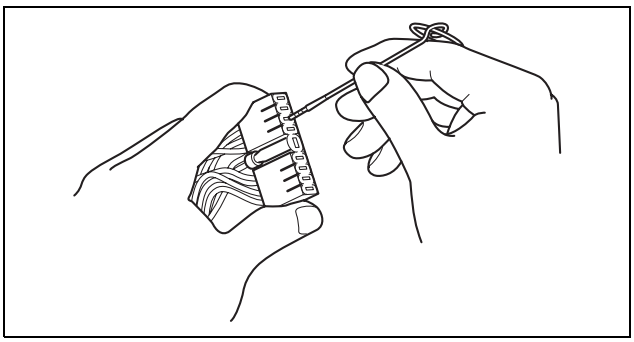

am3uuw0000750

CONTROLLER AREA NETWORK (CAN) MALFUNCTION DIAGNOSIS FLOW [SKYACTIV-G 2.0 (R.H.D.)]

id100202000100

- If there is any vehicle malfunction complaint lodged by a customer, refer to "10-02B-1 FOREWORD [SKYACTIV-G 2.0 (R.H.D.)]" and perform CAN malfunction diagnosis following the steps in the troubleshooting procedure.

CAN malfunction diagnosis flow

Note

- The flowchart and the diagnosis flow of the diagnosis procedure are the same thing, and the detailed procedure of the flowchart is the diagnosis procedure.
- The step numbers in the flowchart indicate the step numbers of the diagnosis procedure.

10

ON-BOARD DIAGNOSTIC [SKYACTIV-G 2.0 (R.H.D.)]

Flowchart

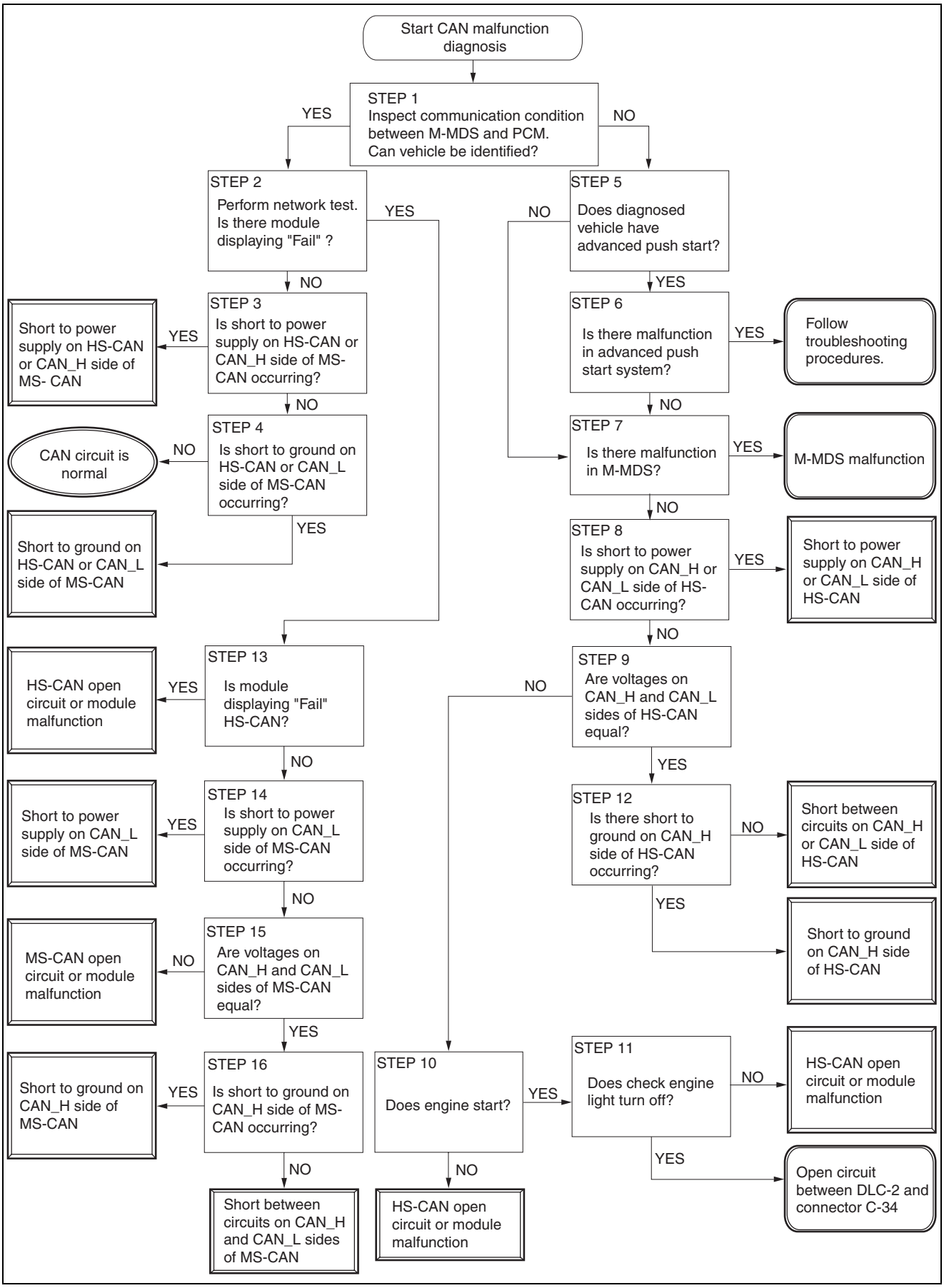

ac5wzw0000442

ON-BOARD DIAGNOSTIC [SKYACTIV-G 2.0 (R.H.D.)]

Diagnostic procedure

Step	Inspection		Action
1	**INSPECT IF COMMUNICATION BETWEEN M-MDS AND PCM IS POSSIBLE** • Connect the M-MDS to the DLC-2. • Switch the ignition ON (engine off). • Perform vehicle identification. • Can the vehicle be identified?	Yes	Go to the next step.
		No	Go to Step 5 as a malfunction in the HS-CAN circuit has occurred.
2	**INSPECT MODULE FOR INABILITY TO COMMUNICATE DUE TO CAN MALFUNCTION** • Implement the network test using the M-MDS. (See 10-02B-8 NETWORK TEST [SKYACTIV-G 2.0 (R.H.D.)].) • Is there a module indicating a malfunction?	Yes	Go to Step 14 as a malfunction in the CAN circuit has occurred.
		No	Go to the next step.
3	**INSPECT FOR SHORT TO POWER SUPPLY IN CAN_H SIDE OF MS-CAN OR HS-CAN** • Measure the voltage between the following terminals: — Between DLC-2 terminal F (CAN_H side of HS CAN) and body ground — Between DLC-2 terminal L (CAN_H side of MS CAN) and body ground • Is B+ voltage measured between any of the terminals? **Note** • If a short to power supply other than the B+ power supply has occurred, a constant voltage other than B+ can be measured.	Yes	A short to power supply in the CAN_H side of MS-CAN or HS-CAN. Determine the location of the short to power supply according to the diagnosis procedure for determining the location of a short to power supply. (See 10-02B-62 DETERMINING SHORT TO POWER SUPPLY LOCATION (HS-CAN) [SKYACTIV-G 2.0 (R.H.D.)].) (See 10-02B-103 DETERMINING SHORT TO POWER SUPPLY LOCATION (MS-CAN) [SKYACTIV-G 2.0 (R.H.D.)].)
		No	Go to the next step.
4	**INSPECT FOR SHORT TO GROUND IN CAN_L SIDE OF HS-CAN OR MS-CAN** • Measure the voltage between the following terminals: — Between DLC-2 terminal E (CAN_L side of HS-CAN) and ground — Between DLC-2 terminal K (CAN_L side of MS-CAN) and ground • Is the voltage measured as 0 V?	Yes	A short to ground on the CAN_L side of the HS-CAN or MS-CAN has occurred. Determine the location of the short to ground according to the diagnosis procedure for determining the location of a short to ground. (See 10-02B-55 DETERMINING SHORT TO GROUND LOCATION (HS-CAN) [SKYACTIV-G 2.0 (R.H.D.)].) (See 10-02B-97 DETERMINING SHORT TO GROUND LOCATION (MS-CAN) [SKYACTIV-G 2.0 (R.H.D.)].)
		No	The current CAN circuit is normal, return to FOREWARD, and go to the next step of the CAN malfunction diagnosis in the troubleshooting procedure. (See 10-02B-1 FOREWORD [SKYACTIV-G 2.0 (R.H.D.)].)
5	**VERIFY IF VEHICLE UNDER DIAGNOSIS IS EQUIPPED WITH ADVANCED PUSH START SYSTEM.** • Is the vehicle equipped with the advanced push start system?	Yes	Go to the next step.
		No	Go to Step 7.
6	**VERIFY IF ADVANCED PUSH START SYSTEM HAS MALFUNCTION** • Switch the ignition ON (engine off). • Can the ignition be switched ON?	Yes	Go to the next step.
		No	A malfunction in the advanced push start system has occurred. Perform diagnosis according to the symptom troubleshooting.
7	**INSPECT FOR MALFUNCTION IN M-MDS** • Connect the M-MDS to a normal vehicle and implement vehicle identification. • Can the vehicle be identified?	Yes	Go to the next step.
		No	A malfunction in the M-MDS can be considered. Repair the M-MDS.

ON-BOARD DIAGNOSTIC [SKYACTIV-G 2.0 (R.H.D.)]

Step	Inspection		Action
8	**INSPECT HS-CAN FOR SHORT TO POWER SUPPLY** • Measure the voltage between the following terminals: — Between DLC-2 terminal F (CAN_H side) and body ground — Between DLC-2 terminal E (CAN_L side) and body ground • Is B+ voltage measured between any of the terminals? **Note** • If a short to power supply other than the B+ power supply has occurred, a constant voltage other than B+ can be measured.	Yes	A short to power supply in the CAN_H side or CAN_L of HS-CAN has occurred. Determine the location of the short to power supply according to the diagnosis procedure for determining the location of a short to power supply. (See 10-02B-62 DETERMINING SHORT TO POWER SUPPLY LOCATION (HS-CAN) [SKYACTIV-G 2.0 (R.H.D.)].)
		No	Go to the next step.
9	**INSPECT HS-CAN FOR OPEN CIRCUIT** • Measure the voltage between the following terminals: — Between DLC-2 terminal F (CAN_H side) and body ground — Between DLC-2 terminal E (CAN_L side) and body ground • Is the voltage between both terminals (CAN_H side and CAN_L side) equal?	Yes	Go to Step 13 as a short to ground or a short between circuits has occurred in the HS-CAN.
		No	Go to the next step.
10	**DETERMINE IF OPEN CIRCUIT LOCATION IN HS-CAN CIRCUIT IS BETWEEN DLC AND CONNECTOR C-35 OR ELSEWHERE** • Start the engine to verify that the immobilizer system operates normally. • Can the engine be started? **Note** • If there is an open circuit in the wiring harness between the PCM and the start stop unit, the engine cannot be started because the key ID number verification for the immobilizer system is performed by CAN communication.	Yes	Go to the next step.
		No	An open circuit has occurred between the PCM and connector C-34 in the HS-CAN. Determine the location of the open circuit according to the diagnosis procedure for determining the location of an open circuit. (See 10-02B-11 DETERMINING OPEN CIRCUIT LOCATION (HS-CAN) [SKYACTIV-G 2.0 (R.H.D.)].)
11	**DETERMINE IF OPEN CIRCUIT LOCATION IN HS-CAN CIRCUIT IS BETWEEN DLC AND CONNECTOR C-34 OR ELSEWHERE** • Switch the ignition ON (engine off). • Verify if the check engine light in the instrument cluster illuminates. • Start the engine. • Verify if the check engine light turns off. • Does the check engine light turn off?	Yes	An open circuit between DLC-2 and connector C-34 has occurred. Repair or replace the wiring harness for an open circuit, then return to Step 1.
		No	An open circuit has occurred between the PCM and connector C-34 in the HS-CAN. Determine the location of the open circuit according to the diagnosis procedure for determining the location of an open circuit. (See 10-02B-11 DETERMINING OPEN CIRCUIT LOCATION (HS-CAN) [SKYACTIV-G 2.0 (R.H.D.)].)
12	**VERIFY MALFUNCTION OCCURRED IN HS-CAN CIRCUIT** • Measure the voltage between the following terminals: — Between DLC-2 terminal F (CAN_H side) and body ground — Between DLC-2 terminal E (CAN_L side) and body ground • Is the voltage between both terminals (CAN_H side and CAN_L side) 0 V?	Yes	A short to ground in CAN_H side of HS-CAN has occurred. Determine the location of the short to ground according to the diagnosis procedure for determining the location of a short to ground. (See 10-02B-55 DETERMINING SHORT TO GROUND LOCATION (HS-CAN) [SKYACTIV-G 2.0 (R.H.D.)].)
		No	A short between circuits in the CAN_H side and the CAN_L side of HS-CAN has occurred. Determine the location of the short between circuits according to the diagnosis procedure for determining the location of a short between circuits. (See 10-02B-74 DETERMINING SHORT BETWEEN CIRCUITS LOCATION (HS-CAN) [SKYACTIV-G 2.0 (R.H.D.)].)

ON-BOARD DIAGNOSTIC [SKYACTIV-G 2.0 (R.H.D.)]

Step	Inspection		Action
13	**DETERMINE CAN COMMUNICATION SPECIFICATION IN WHICH MALFUNCTION OCCURS** • Refer to the CAN communication specification quick reference table and verify the CAN communication specification (HS-CAN or MS-CAN) that is connected to the module which is indicating a malfunction. (See 10-02B-7 CAN communication specification quick reference table.) • Is the module that is indicating a malfunction HS-CAN?	Yes	An open circuit in the HS-CAN has occurred. Determine the location of the open circuit according to the diagnosis procedure for determining the location of an open circuit. (See 10-02B-11 DETERMINING OPEN CIRCUIT LOCATION (HS-CAN) [SKYACTIV-G 2.0 (R.H.D.)].)
		No	Go to the next step.
14	**INSPECT CAN_L SIDE OF MS-CAN FOR SHORT TO POWER SUPPLY** • Measure voltage between DLC-2 terminal K (CAN_L side) and body ground. • Can B+ voltage be measured? **Note** • If a short to power supply other than the B+ power supply has occurred, a constant voltage other than B+ can be measured.	Yes	A short to power supply in the CAN_L side of the MS-CAN has occurred. Determine the location of the short to power supply according to the diagnosis procedure for determining the location of a short to power supply. (See 10-02B-103 DETERMINING SHORT TO POWER SUPPLY LOCATION (MS-CAN) [SKYACTIV-G 2.0 (R.H.D.)].)
		No	Go to the next step.
15	**INSPECT MS-CAN FOR OPEN CIRCUIT** • Measure the voltage between the following terminals: — Between DLC-2 terminal L (CAN_H side) and body ground — Between DLC-2 terminal K (CAN_L side) and body ground • Is the voltage between both terminals (CAN_H side and CAN_L side) equal?	Yes	Go to the next step.
		No	Open circuit in MS-CAN has occurred. Determine the location of the open circuit according to the diagnosis procedure for determining the location of an open circuit. (See 10-02B-11 DETERMINING OPEN CIRCUIT LOCATION (HS-CAN) [SKYACTIV-G 2.0 (R.H.D.)].)
16	**VERIFY MALFUNCTION OCCURRED IN MS-CAN** • Measure the voltage between the following terminals: — Between DLC-2 terminal L (CAN_H side) and body ground — Between DLC-2 terminal K (CAN_L side) and body ground • Is the voltage between both terminals (CAN_H side and CAN_L side) equal?	Yes	A short to ground in the CAN_H side of the MS-CAN has occurred. Determine the location of the short to ground according to the diagnosis procedure for determining the location of a short to ground. (See 10-02B-97 DETERMINING SHORT TO GROUND LOCATION (MS-CAN) [SKYACTIV-G 2.0 (R.H.D.)].)
		No	A short between circuits on the CAN_H side and CAN_L side of MS-CAN has occurred. Determine the location of the short between circuits according to the diagnosis procedure for determining the location of a short between circuits. (See 10-02B-111 DETERMINING SHORT BETWEEN CIRCUITS LOCATION (MS-CAN) [SKYACTIV-G 2.0 (R.H.D.)].)

CAN communication specification quick reference table

CAN communication related module (M-MDS display)	CAN communication specification	
	HS-CAN	MS-CAN
PCM (PCM)	×	
DSC HU/CM (ABS)	×	
TCM (TCM)	×	
AFS control module (AFS)	×	
Front body control module (FBCM) (F_BCM)	×	
4WD control module (4×4)	×	
Laser sensor (SCBS)	×	
Forward sensing camera (FSC)	×	
SAS control module (RCM)	×	
Start stop unit (SSU)	×	
EPS control module (EPS)	×	
Instrument cluster (IC)	×	
Rear body control module (RBCM) (R_BCM)		×

ON-BOARD DIAGNOSTIC [SKYACTIV-G 2.0 (R.H.D.)]

CAN communication related module (M-MDS display)	CAN communication specification	
	HS-CAN	MS-CAN
BSM control module (LH) (BSML)		×
Rear mount camera		×
BSM control module (RH) (BSMR)		×
Rear vehicle monitoring control module (RH) (RVM)		×
Parking sensor control module		×
Clock		×
Climate control unit (EATC)		×
Audio unit (ACU)		×

HS-CAN signal waveform

CAN circuit condition	Signal waveform (reference)
Normal	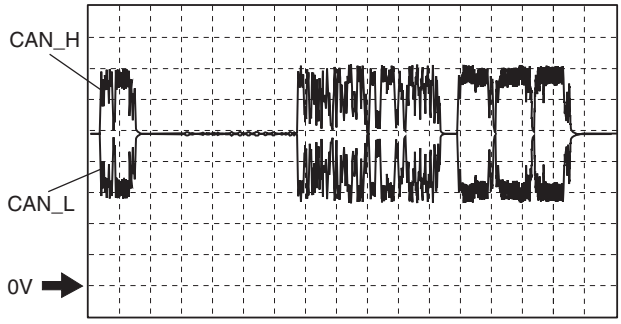
	• CAN_H — Connection terminal: DLC-2: terminal F (+) ⇔ body ground (—) — Oscilloscope setting: 0.5 V/DIV (Y), 200 μs/DIV (X), DC range • CAN_L — Connection terminal: DLC-2: terminal E (+) ⇔ Body ground (—) — Oscilloscope setting: 0.5 V/DIV (Y), 200 μs/DIV (X), DC range

MS-CAN signal waveform

CAN circuit condition	Signal waveform (reference)
Normal	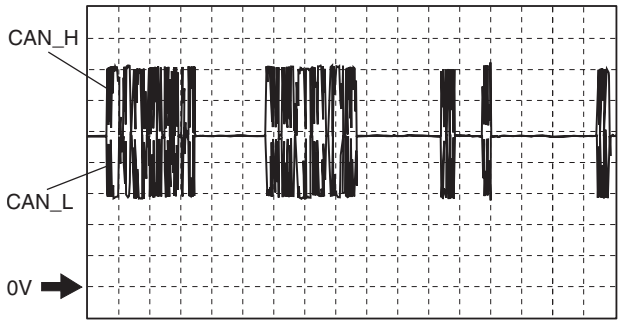
	• CAN_H — Connection terminal: DLC-2: terminal L (+) ⇔ Body ground (—) — Oscilloscope setting: 0.5 V/DIV (Y), 1 ms/DIV (X), DC range • CAN_L — Connection terminal: DLC-2: terminal K (+) ⇔ Body ground (—) — Oscilloscope setting: 0.5 V/DIV (Y), 1 ms/DIV (X), DC range

NETWORK TEST [SKYACTIV-G 2.0 (R.H.D.)]

id100202000200

1. Connect the M-MDS to the DLC-2.
2. After the vehicle is identified, select the "NETWORK TEST" from the initialization screen of the M-MDS.
3. Verify the unit with a communication error according to the directions on the screen.

ON-BOARD DIAGNOSTIC [SKYACTIV-G 2.0 (R.H.D.)]

DTC TABLE [SKYACTIV-G 2.0 (R.H.D.)]

id100202000300

Caution

- **If there is any vehicle malfunction complaint lodged by a customer, refer to "FOREWORD" and perform CAN malfunction diagnosis following the steps in the troubleshooting procedure. (See 10-02B-1 FOREWORD [SKYACTIV-G 2.0 (R.H.D.)].)**

HS-CAN

DTC output module (M-MDS display)	DTC	Malfunction location
PCM (PCM)	U0073:00	Unit communication error
	U0101:00	Communication error with TCM
	U0121:00	Communication error with DSC HU/CM
	U0131:00	Communication error with EPS control module
	U0140:00	Communication error with front body control module (FBCM)
	U0151:00	Communication error with SAS control module
	U0155:00	Communication error with instrument cluster
	U0214:00	Communication error with start stop unit
	U0235:00	Communication error with laser sensor
DSC HU/CM (ABS)	U0001:88	Unit communication error
	U0100:00	Communication error with PCM
	U0101:00	Communication error with TCM
	U0114:00	Communication error with 4WD control module
	U0131:00	• Communication error with EPS control module*6 • Communication error with start stop unit*7
	U0154:00	Communication error with SAS control module
	U0155:00	Communication error with instrument cluster
	U0235:00	Communication error with laser sensor
TCM*1 (TCM)	U0073:00	Unit communication error
	U0100:00	Communication error with PCM
	U0121:00	Communication error with DSC HU/CM
	U0141:00	Communication error with front body control module (FBCM)
	U0155:00	Communication error with instrument cluster
AFS control module*2 (AFS)	U0001:88	Unit communication error
	U0100:00	Communication error with PCM
	U0131:00	Communication error with EPS control module
	U0140:00	Communication error with front body control module (FBCM)
	U0155:00	Communication error with instrument cluster
Front body control module (FBCM) (F_BCM)	U0001:88	Unit communication error
	U0100:00	Communication error with PCM
	U0101:00	Communication error with TCM
	U0121:00	Communication error with DSC HU/CM
	U0155:00	Communication error with instrument cluster
	U0214:00	Communication error with start stop unit
	U0515:00	Communication error with SAS control module
4WD control module*3 (4×4)	U0001:88	Unit communication error
	U0100:00	Communication error with PCM
	U0101:00	Communication error with TCM
	U0121:00	Communication error with DSC HU/CM
Laser sensor*4 (SCBS)	U0001:00	Unit communication error
	U0100:00	Communication error with PCM
	U0121:00	Communication error with DSC HU/CM
	U0131:00	Communication error with EPS control module
	U0155:00	Communication error with instrument cluster

ON-BOARD DIAGNOSTIC [SKYACTIV-G 2.0 (R.H.D.)]

DTC output module (M-MDS display)	DTC	Malfunction location
Forward sensing camera*5 (FSC)	U0001:88	Unit communication error
	U0100:00	Communication error with PCM
	U0121:00	Communication error with DSC HU/CM
	U0131:00	Communication error with EPS control module
	U0140:00	Communication error with front body control module (FBCM)
	U0155:00	Communication error with instrument cluster
	U0214:00	Communication error with start stop unit
SAS control module (RCM)	U0001:88	Unit communication error
	U0155:00	Communication error with instrument cluster
Start stop unit (SSU)	U0001:88	Unit communication error
	U0100:00	Communication error with PCM
	U0101:00	Communication error with TCM
	U0121:00	Communication error with DSC HU/CM
	U0121:87	Communication error with DSC HU/CM
	U0131:00	Communication error with EPS control module
	U0140:00	Communication error with front body control module (FBCM)
	U0146:00	Communication error with instrument cluster
	U0151:00	Communication error with SAS control module
	U0155:00	Communication error with instrument cluster
EPS control module (EPS)	U0001:88	Unit communication error
	U0100:00	Communication error with PCM
	U0121:00	Communication error with DSC HU/CM
	U0155:00	Communication error with instrument cluster
Instrument cluster (IC)	U0001:88	Unit communication error
	U0100:00	Communication error with PCM
	U0101:00	Communication error with TCM
	U0114:00	Communication error with 4WD control module
	U0121:00	Communication error with DSC HU/CM
	U0131:00	Communication error with EPS control module
	U0140:00	Communication error with front body control module (FBCM)
	U0151:00	Communication error with SAS control module
	U0182:00	Communication error with AFS control module
	U0214:00	Communication error with start stop unit
	U0235:00	Communication error with laser sensor
	U023A:00	Communication error with forward sensing camera

*1 : ATX vehicles
*2 : With AFS system
*3 : 4WD vehicles
*4 : With smart city brake support
*5 : With hi-beam control (HBC) system
*6 : Without smart city brake support or steering angle sensor
*7 : With smart city brake support or steering angle sensor

MS-CAN

DTC output module (M-MDS display)	DTC	Malfunction location
Rear body control module (RBCM) (R_BCM)	U0010:88	Unit communication error
	U0155:00	Communication error with instrument cluster
BSM control module (LH)*1 (BSML)	U0001:88	Unit communication error
	U0100:00	Communication error with PCM
	U0131:00	Communication error with EPS control module
	U0155:00	Communication error with instrument cluster
	U0214:00	Communication error with start stop unit
	U0233:00	Communication error with BSM control module (RH)

ON-BOARD DIAGNOSTIC [SKYACTIV-G 2.0 (R.H.D.)]

DTC output module (M-MDS display)	DTC	Malfunction location
BSM control module (RH)*1 (BSMR)	U0001:88	Unit communication error
	U0100:00	Communication error with PCM
	U0131:00	Communication error with EPS control module
	U0155:00	Communication error with instrument cluster
	U0214:00	Communication error with start stop unit
	U0232:00	Communication error with BSM control module (LH)
Rear vehicle monitoring control module (RH)*2 (RVM)	U0001:88	Unit communication error
	U0100:00	Communication error with PCM
	U0121:00	Communication error with DSC HU/CM
	U0155:00	Communication error with instrument cluster
	U0214:00	Communication error with start stop unit
Climate control unit*3 (EATC)	U0010:88	Unit communication error
	U0155:00	Communication error with instrument cluster
Audio unit*4 (ACU)	U0010:88 (16:Er12)	Unit communication error
	U0155:00	Communication error with instrument cluster
Instrument cluster (IC)	U0010:88	Unit communication error
	U0142:00	Communication error with rear body control module (RBCM)
	U0232:00	Communication error with rear vehicle monitoring control module (RH)
	U0233:00	Communication error with BSM control module (RH)

*1 : With BSM system
*2 : With rear vehicle monitoring system
*3 : With full-auto air conditioner
*4 : With audio unit

DETERMINING OPEN CIRCUIT LOCATION (HS-CAN) [SKYACTIV-G 2.0 (R.H.D.)]

id100202000400

Caution

- **Perform the following malfunction diagnosis only when it is diagnosed with a open circuit by 10-02B-3 CONTROLLER AREA NETWORK (CAN) MALFUNCTION DIAGNOSIS FLOW [SKYACTIV-G 2.0 (R.H.D.)].**
- **If the malfunctioning part is detected in the communication line, before disconnecting the related connector for inspection, press the connector in the connection direction to verify that there is no looseness or disconnection.**
- **When disconnecting the connector, verify that there is no damage, deformation, or corrosion of the connector terminals.**

1. Verify the CAN system-related module DTCs and the failed module on the M-MDS screen.
2. Apply the communication error DTC and the failed module to 10-02B-12 DTC output pattern and malfunctioning location, and select the possible cause for the diagnostic result and the reference for the inspection item.

Note

- The open circuit location can be determined by the DTC indicated in the 10-02B-12 DTC output pattern and malfunctioning location chart. DTCs not listed in the chart are not used for the determination of the open circuit location.

3. Inspect the possible cause and inspection item of the applicable malfunctioning part.
4. After repairs, return to 10-02B-3 CONTROLLER AREA NETWORK (CAN) MALFUNCTION DIAGNOSIS FLOW [SKYACTIV-G 2.0 (R.H.D.)], and verify that the repairs have been completed.

ON-BOARD DIAGNOSTIC [SKYACTIV-G 2.0 (R.H.D.)]

DTC output pattern and malfunctioning location

Cross (×): Communication error-related DTC and failed module

M-MDS display		DTC output pattern and malfunctioning location																
DTC output module	DTC																	
PCM (PCM)	U0101:00				×													
	U0121:00		×															
	U0131:00																×	
	U0140:00							×										
	U0151:00														×			
	U0155:00																	×
	U0214:00																×	
	U0235:00											×						
ABS (DSC HU/ CM)	U0100:00	×																
	U0101:00				×													
	U0114:00									×								
	U0131:00																×*7	×*6
	U0154:00														×			
	U0155:00																	×
	U0235:00											×						
TCM*1 (TCM)	U0100:00	×		×														
	U0121:00		×	×														
	U0141:00							×										
	U0155:00																	×
AFS*2 (AFS control module)	U0100:00	×		×		×												
	U0131:00																×	
	U0140:00							×										
	U0155:00																	×
F_BCM (Front body control module (FBCM))	U0100:00	×		×		×												
	U0101:00				×	×												
	U0121:00		×	×		×												
	U0155:00																	×
	U0214:00																×	
	U0515:00														×			
4X4*3 (4WD control module)	U0100:00	×		×		×			×									
	U0101:00				×	×			×									
	U0121:00		×	×		×			×									
SCBS*4 (Laser sensor)	U0100:00	×		×		×			×		×							
	U0121:00		×	×		×			×		×							
	U0131:00																×	
	U0155:00																	×
FSC*5 (Forward sensing camera)	U0100:00	×		×		×			×		×							
	U0121:00		×	×		×			×		×							
	U0131:00																×	
	U0140:00							×	×		×							
	U0155:00																	×
	U0214:00																×	
RCM (SAS control module)	U0155:00																	×

ON-BOARD DIAGNOSTIC [SKYACTIV-G 2.0 (R.H.D.)]

M-MDS display		DTC output pattern and malfunctioning location																
DTC output module	DTC																	
SSU (Start stop unit)	U0100:00	×		×		×			×		×			×		×		
	U0101:00				×	×			×		×			×		×		
	U0121:00		×	×		×			×		×			×		×		
	U0121:87		×	×		×			×		×			×		×		
	U0131:00																×	
	U0140:00							×	×		×			×		×		
	U0146:00																	×
	U0151:00														×	×		
	U0155:00																	×
EPS (EPS control module)	U0100:00	×		×		×			×		×			×		×		
	U0121:00		×	×		×			×		×			×		×		
	U0155:00																	×
IC (Instrument cluster)	U0100:00	×		×		×			×		×			×		×		
	U0101:00				×	×			×		×			×		×		
	U0114:00									×	×			×		×		
	U0121:00		×	×		×			×		×			×		×		
	U0131:00																×	
	U0140:00							×	×		×			×		×		
	U0151:00														×	×		
	U0182:00						×		×		×			×		×		
	U0214:00																×	
	U0235:00											×		×		×		
	U023A:00												×	×		×		
M-MDS display module		[Fail] display pattern																
PCM		×		×		×			×		×			×		×		
ABS			×	×		×			×		×			×		×		
TCM*1					×	×			×		×			×		×		
AFS*2							×		×		×			×		×		
F_BCM								×	×		×			×		×		
4X4*3										×	×			×		×		
SCBS*4												×		×		×		
FSC*5													×	×		×		
RCM															×	×		
SSU																	×	
EPS																	×	
IC																		×
Possible cause and inspection item		10-02B-13A	10-02B-15B	10-02B-17C	10-02B-21D	10-02B-23E	10-02B-25F	10-02B-27G	10-02B-29H	10-02B-33I	10-02B-35J	10-02B-39K	10-02B-41L	10-02B-43M	10-02B-45N	10-02B-47O	10-02B-49P	10-02B-51Q	10-02B-53R

*1 : ATX vehicles
*2 : With AFS system
*3 : 4WD vehicles
*4 : With smart city brake support
*5 : With hi-beam control (HBC) system
*6 : Without smart city brake support or steering angle sensor
*7 : With smart city brake support or steering angle sensor

A
Possible cause
- Connector terminal disconnection, poor contact, damage, deformation, corrosion
- Open circuit in wiring harness between PCM and connector C-32
- Connector C-32 malfunction

ON-BOARD DIAGNOSTIC [SKYACTIV-G 2.0 (R.H.D.)]

- PCM malfunction

System wiring diagram

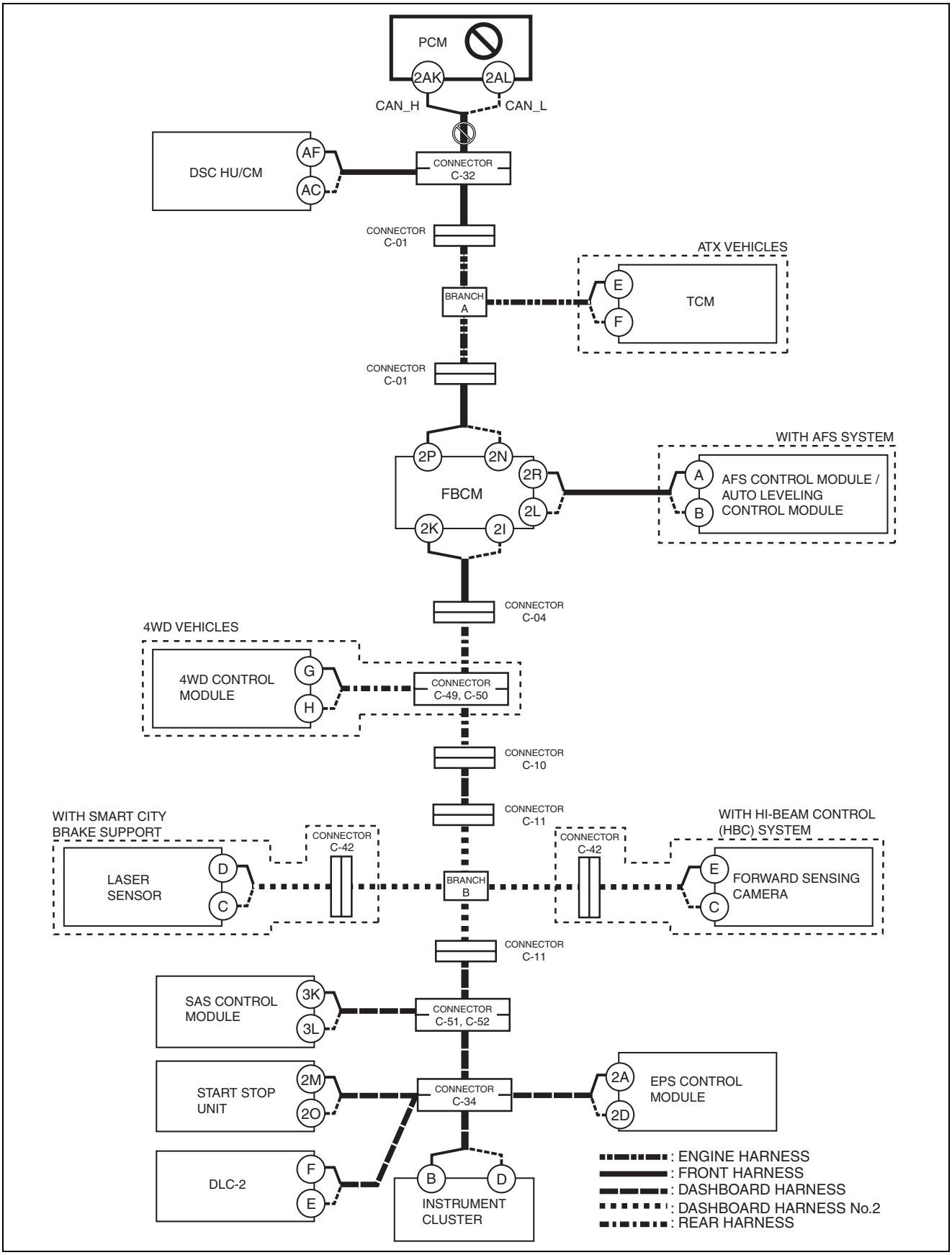

ac5wzw0000358

Inspection item
- PCM connector
- Connector C-32
- Wiring harness between PCM terminal 2AK and connector C-32
- Wiring harness between PCM terminal 2AL and connector C-32
- PCM

B
Possible cause
- Connector terminal disconnection, poor contact, damage, deformation, corrosion
- Open circuit in wiring harness between DSC HU/CM and connector C-32
- Connector C-32 malfunction
- DSC HU/CM malfunction

ON-BOARD DIAGNOSTIC [SKYACTIV-G 2.0 (R.H.D.)]

System wiring diagram

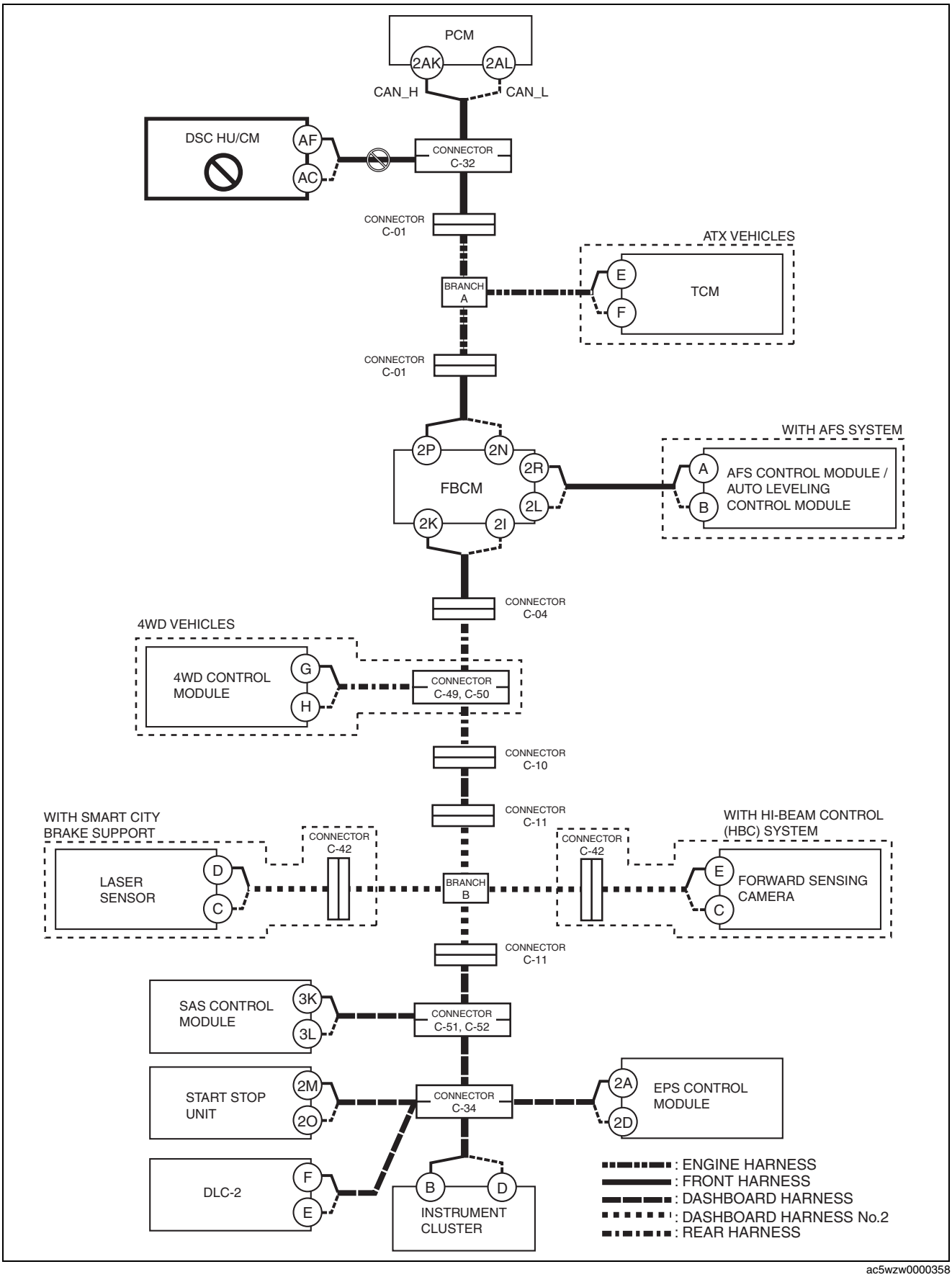

ac5wzw0000358

ON-BOARD DIAGNOSTIC [SKYACTIV-G 2.0 (R.H.D.)]

Inspection item
- DSC HU/CM connector
- Connector C-32
- Wiring harness between DSC HU/CM terminal AF and connector C-32
- Wiring harness between DSC HU/CM terminal AC and connector C-32
- DSC HU/CM

C
ATX vehicles
Possible cause
- Connector terminal disconnection, poor contact, damage, deformation, corrosion
- Open circuit in wiring harness between connectors C-32 and C-01
- Open circuit in wiring harness between connector C-01 and branch A
- Connector C-32 malfunction
- Connector C-01 malfunction

ON-BOARD DIAGNOSTIC [SKYACTIV-G 2.0 (R.H.D.)]

System wiring diagram

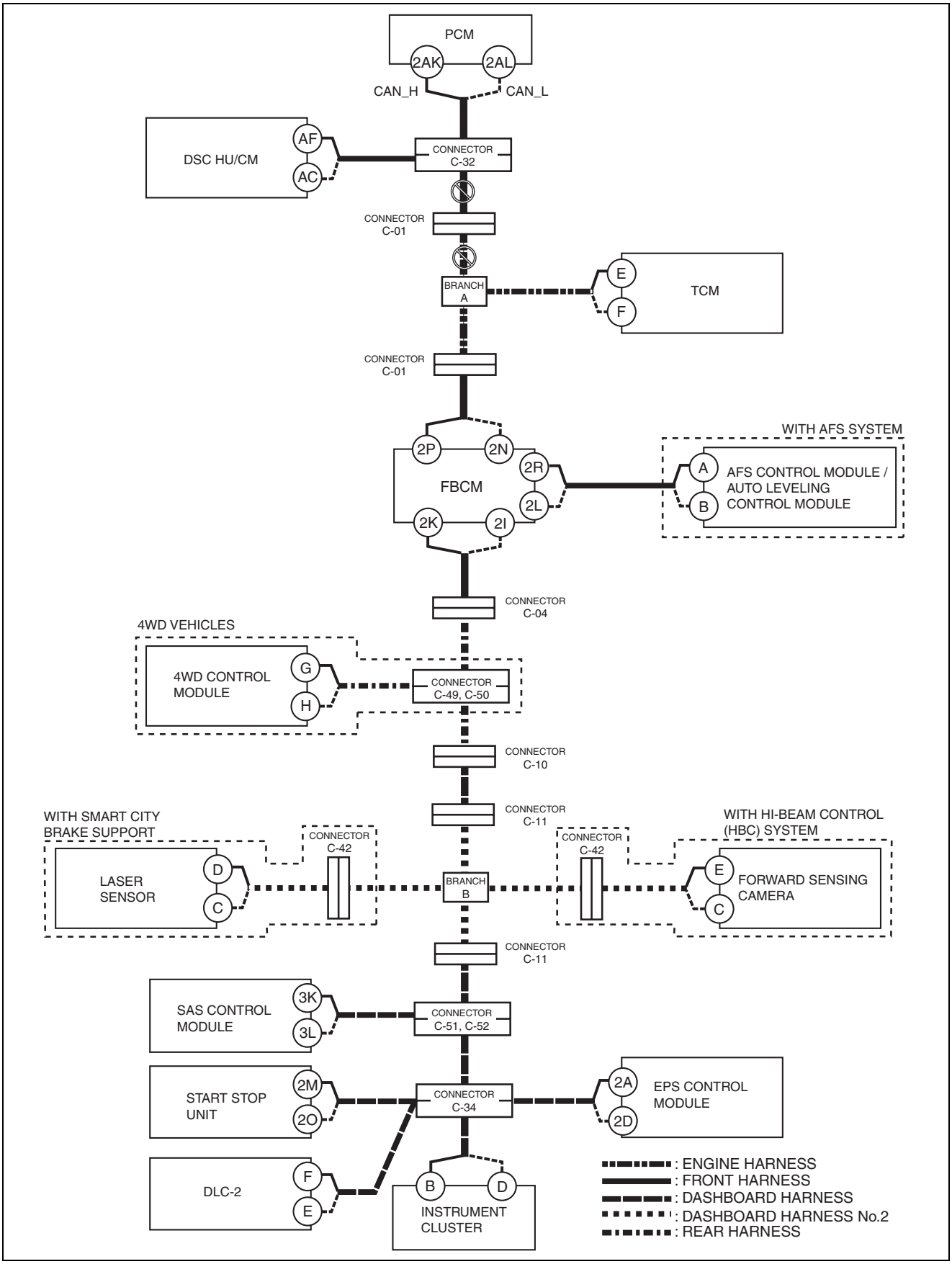

ac5wzw0000358

Inspection item

- Connector C-32

ON-BOARD DIAGNOSTIC [SKYACTIV-G 2.0 (R.H.D.)]

- Connector C-01
- Wiring harness between connectors C-32 and C-01
- Wiring harness between connector C-01 and branch A

MTX vehicles
Possible cause

- Connector terminal disconnection, poor contact, damage, deformation, corrosion
- Open circuit in wiring harness between connectors C-32 and C-01
- Open circuit in wiring harness between connectors C-01 and C-01
- Open circuit in wiring harness between connector C-01 and front body control module (FBCM)
- CAN circuit in front body control module (FBCM) malfunction

ON-BOARD DIAGNOSTIC [SKYACTIV-G 2.0 (R.H.D.)]

System wiring diagram

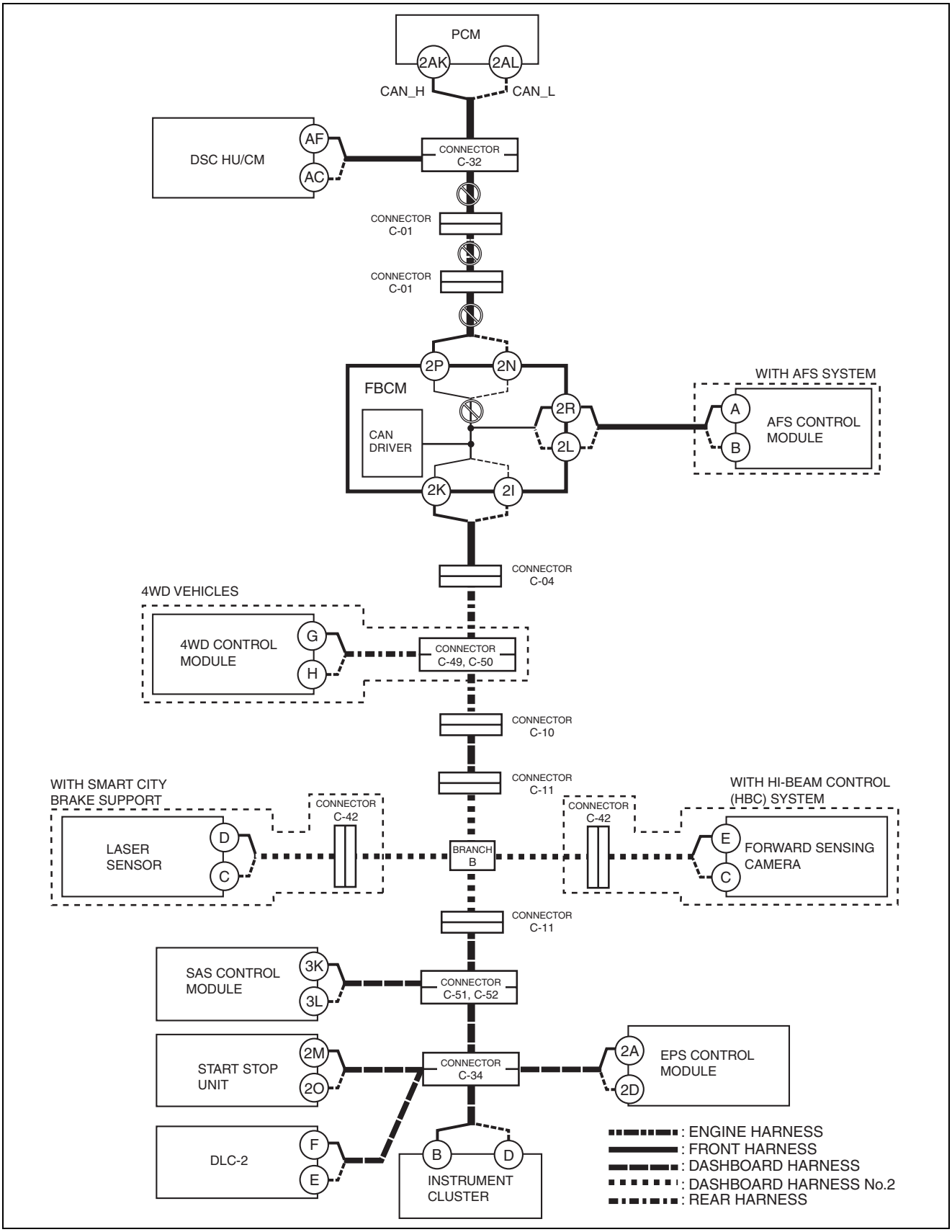

ac5wzw0000358

Inspection item

- Front body control module (FBCM) connector
- Connector C-32

- Connector C-01
- Wiring harness between connectors C-32 and C-01
- Wiring harness between connectors C-01 and C-01
- Wiring harness between front body control module (FBCM) terminal 2P and connector C-01
- Wiring harness between front body control module (FBCM) terminal 2N and connector C-01
- Front body control module (FBCM)
  - — Between front body control module (FBCM) terminal 2P and front body control module (FBCM) terminal 2K
  - — Between front body control module (FBCM) terminal 2N and front body control module (FBCM) terminal 2I

D
Possible cause
- Connector terminal disconnection, poor contact, damage, deformation, corrosion
- Open circuit in wiring harness between TCM and branch A
- TCM malfunction

ON-BOARD DIAGNOSTIC [SKYACTIV-G 2.0 (R.H.D.)]

System wiring diagram

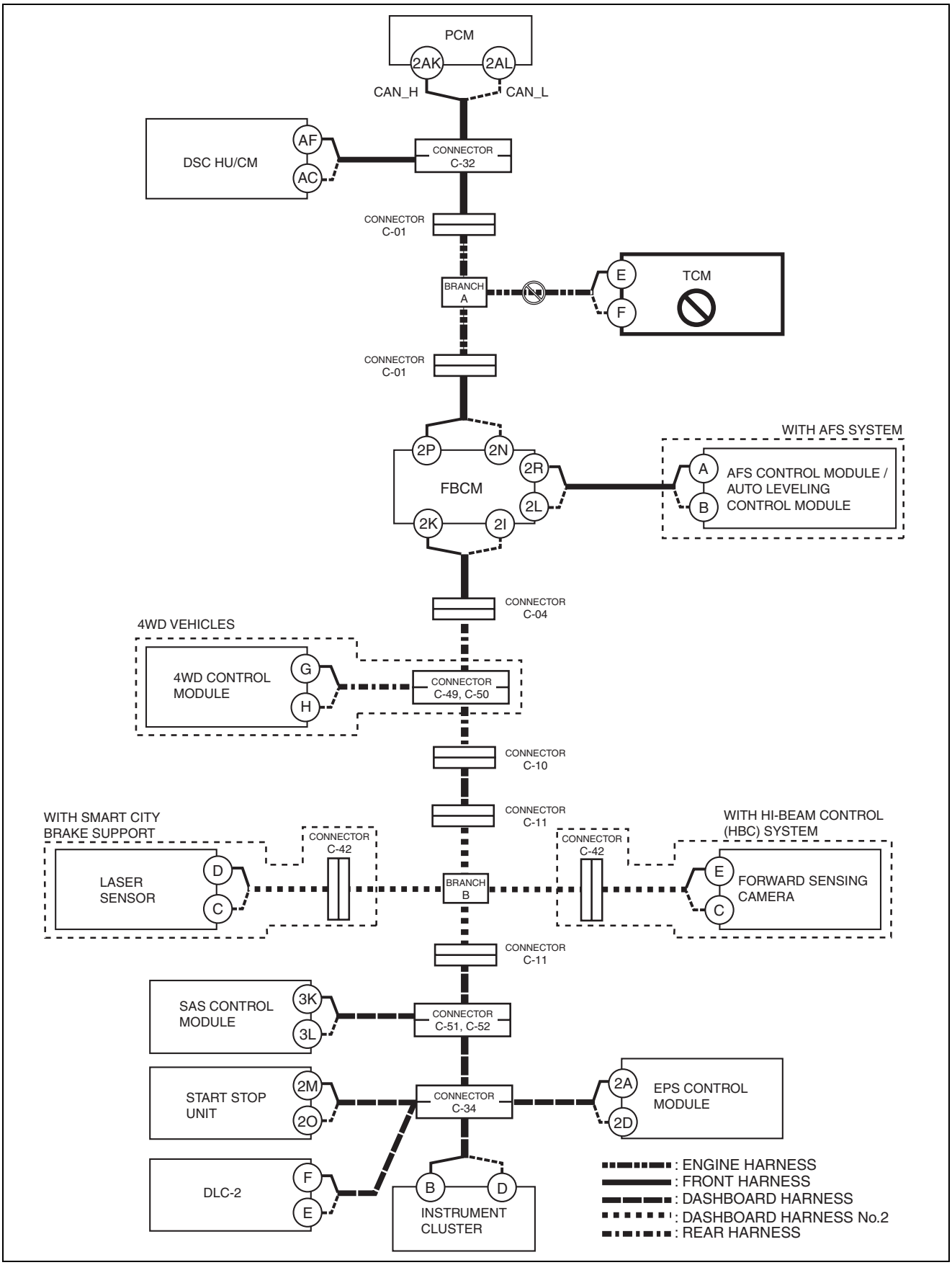

ac5wzw0000358

ON-BOARD DIAGNOSTIC [SKYACTIV-G 2.0 (R.H.D.)]

Inspection item
- TCM connector
- Wiring harness between TCM terminal E and branch A
- Wiring harness between TCM terminal F and branch A
- TCM

E
Possible cause
- Connector terminal disconnection, poor contact, damage, deformation, corrosion
- Open circuit in wiring harness between branch A and connector C-01
- Open circuit in wiring harness between connector C-01 and front body control module (FBCM)
- Connector C-01 malfunction
- CAN circuit in front body control module (FBCM) malfunction

ON-BOARD DIAGNOSTIC [SKYACTIV-G 2.0 (R.H.D.)]

System wiring diagram

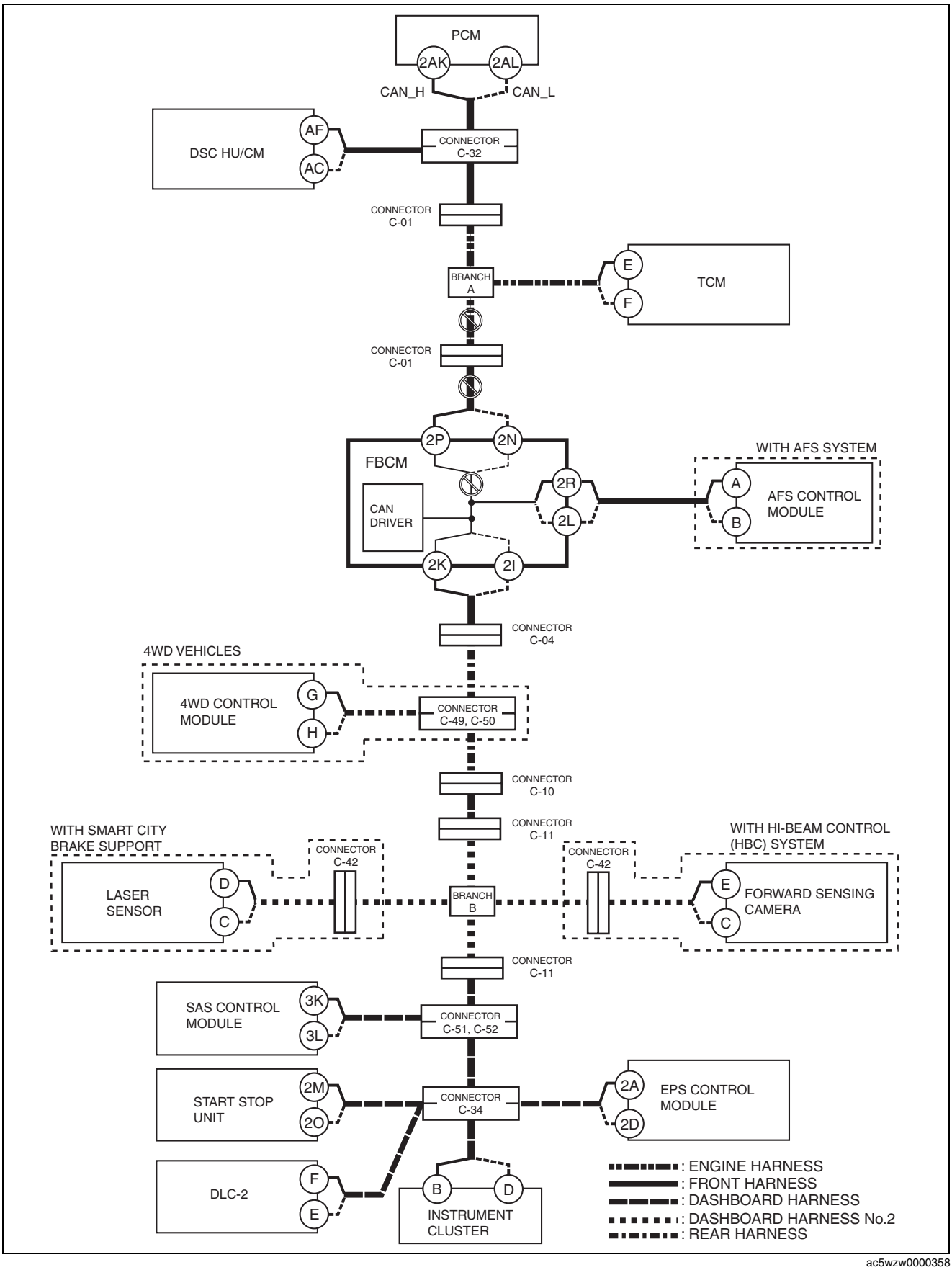

ac5wzw0000358

ON-BOARD DIAGNOSTIC [SKYACTIV-G 2.0 (R.H.D.)]

Inspection item

- Front body control module (FBCM) connector
- Connector C-01
- Wiring harness between branch A and connector C-01
- Wiring harness between front body control module (FBCM) terminal 2P and connector C-01
- Wiring harness between front body control module (FBCM) terminal 2N and connector C-01
- Front body control module (FBCM)
  - — Between front body control module (FBCM) terminal 2P and front body control module (FBCM) terminal 2K
  - — Between front body control module (FBCM) terminal 2N and front body control module (FBCM) terminal 2I

F

Possible cause

- Connector terminal disconnection, poor contact, damage, deformation, corrosion
- Open circuit in wiring harness between AFS control module and front body control module (FBCM)
- CAN circuit in front body control module (FBCM) malfunction
- AFS control module malfunction

ON-BOARD DIAGNOSTIC [SKYACTIV-G 2.0 (R.H.D.)]

System wiring diagram

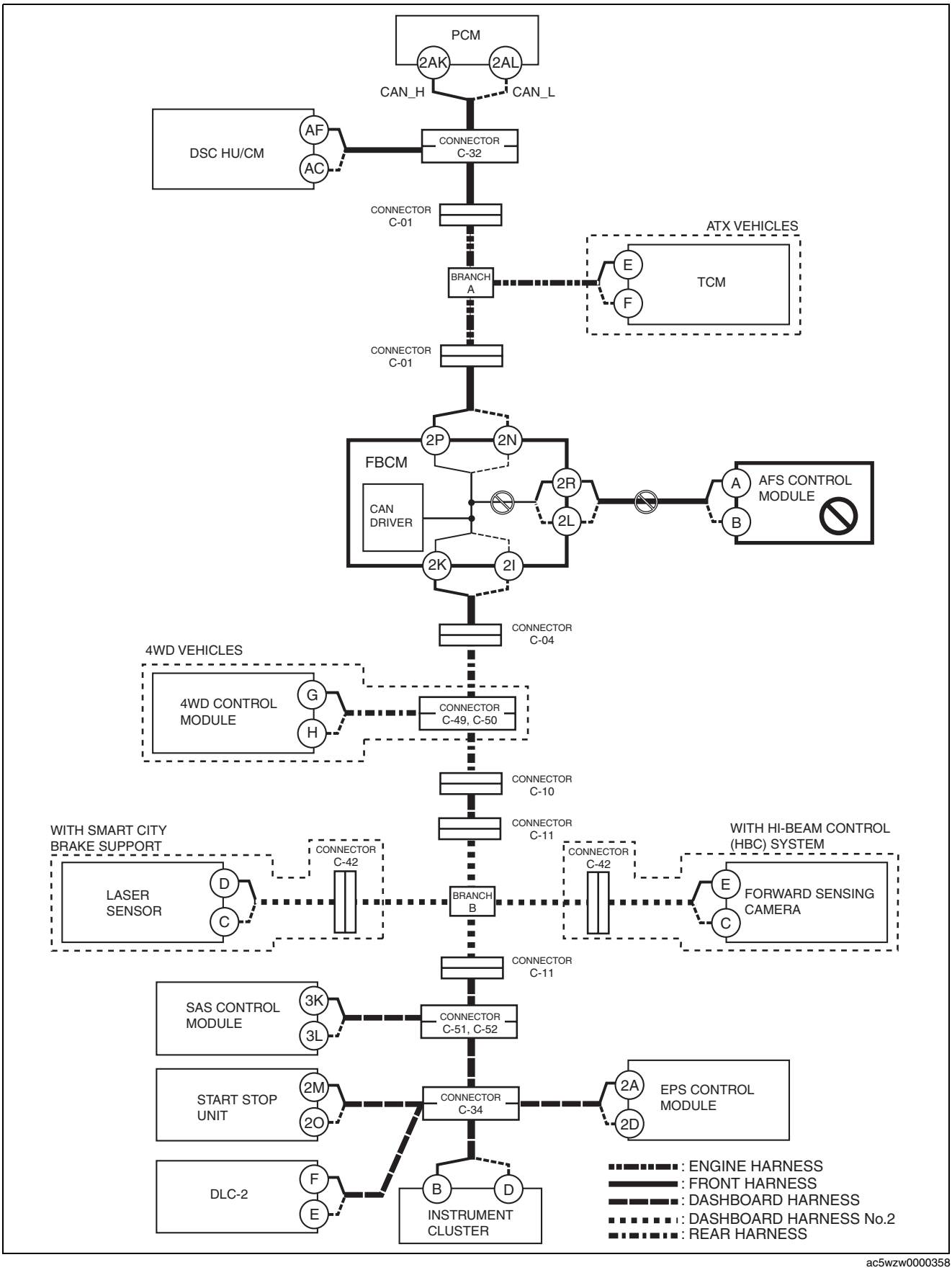

ac5wzw0000358

ON-BOARD DIAGNOSTIC [SKYACTIV-G 2.0 (R.H.D.)]

Inspection item

- Front body control module (FBCM) connector
- AFS control module connector
- Wiring harness between front body control module (FBCM) terminal 2R and AFS control module terminal A
- Wiring harness between front body control module (FBCM) terminal 2L and AFS control module terminal B
- Front body control module (FBCM)
  - — Between front body control module (FBCM) terminal 2R and front body control module (FBCM) terminal 2K
  - — Between front body control module (FBCM) terminal 2L and front body control module (FBCM) terminal 2I

G
Possible cause

- Connector terminal disconnection, poor contact, damage, deformation, corrosion
- Front body control module (FBCM) malfunction

ON-BOARD DIAGNOSTIC [SKYACTIV-G 2.0 (R.H.D.)]

System wiring diagram

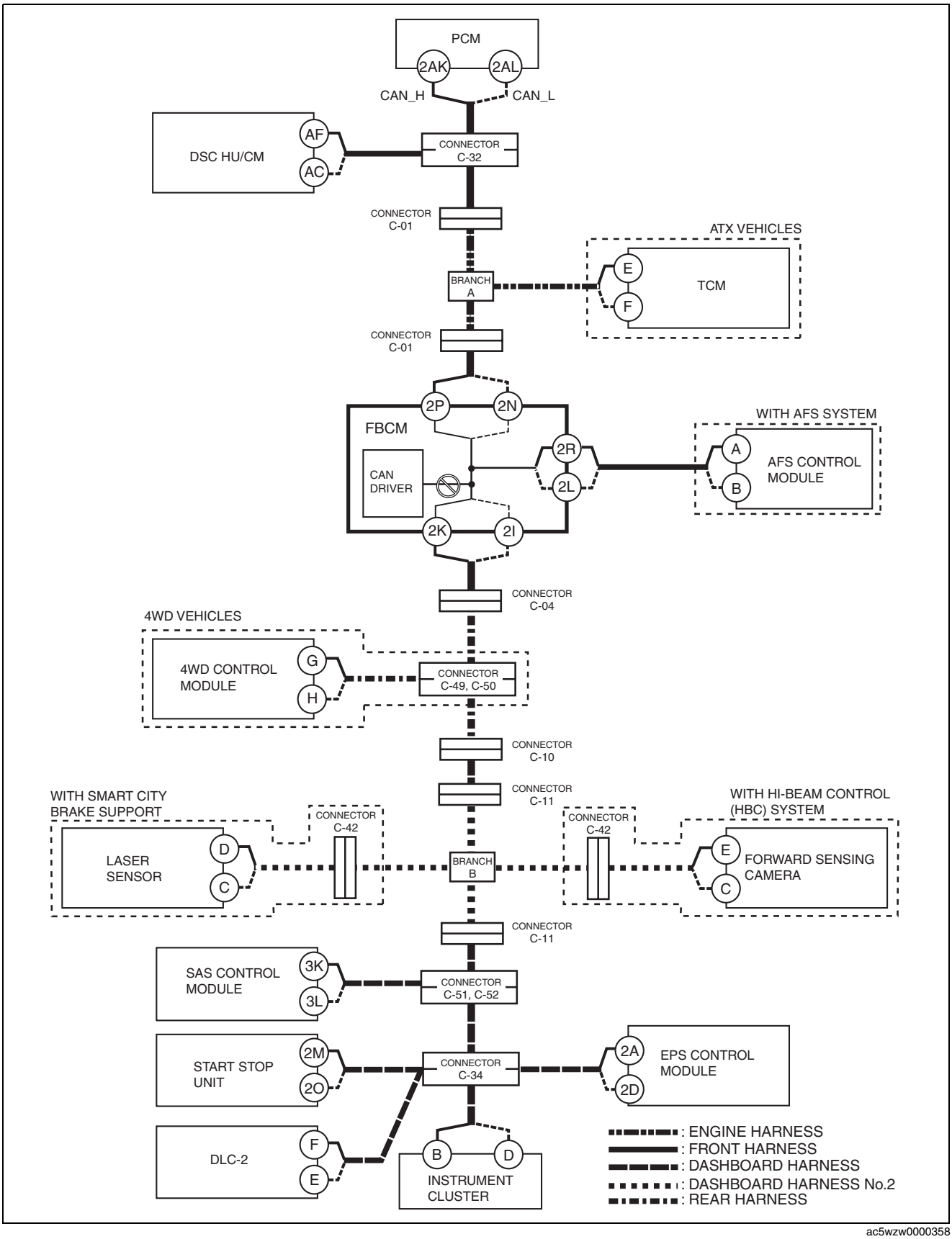

ac5wzw0000358

Inspection item

- Front body control module (FBCM)

ON-BOARD DIAGNOSTIC [SKYACTIV-G 2.0 (R.H.D.)]

H
With 4WD
Possible cause

- Connector terminal disconnection, poor contact, damage, deformation, corrosion
- Open circuit in wiring harness between front body control module (FBCM) and connector C-04
- Open circuit in wiring harness between connectors C-04 and C-49, C-50
- Connector C-04 malfunction
- Connectors C-49, C-50 malfunction
- CAN circuit in front body control module (FBCM) malfunction

ON-BOARD DIAGNOSTIC [SKYACTIV-G 2.0 (R.H.D.)]

System wiring diagram

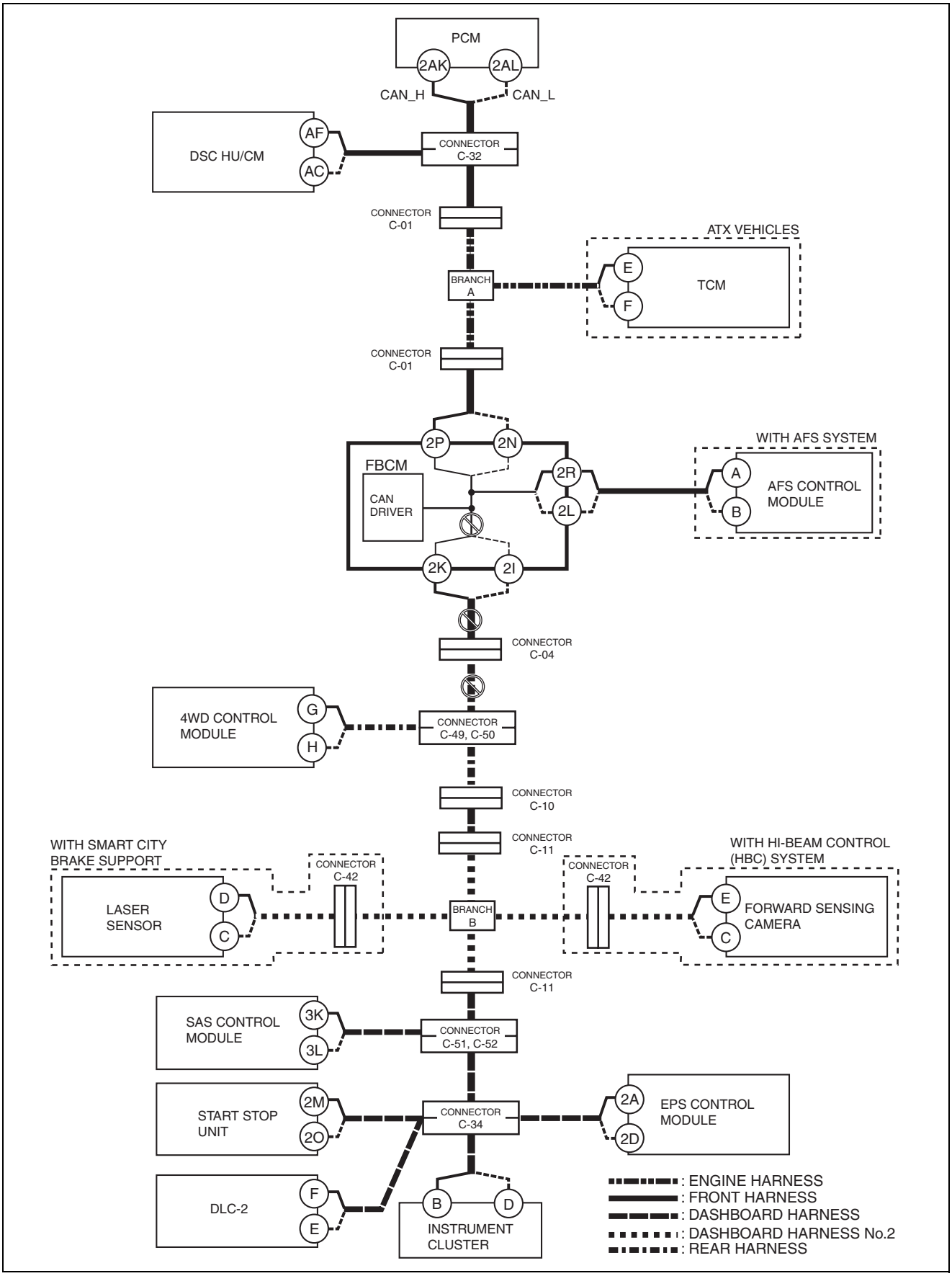

ac5wzw0000358

ON-BOARD DIAGNOSTIC [SKYACTIV-G 2.0 (R.H.D.)]

Inspection item

- Front body control module (FBCM) connector
- Connector C-04
- Connectors C-49, C-50
- Wiring harness between front body control module (FBCM) terminal 2K and connector C-04
- Wiring harness between front body control module (FBCM) terminal 2I and connector C-04
- Wiring harness between connectors C-04 and C-49, C-50
- Front body control module (FBCM)
  - — Between front body control module (FBCM) terminal 2P and front body control module (FBCM) terminal 2K
  - — Between front body control module (FBCM) terminal 2N and front body control module (FBCM) terminal 2I

2WD vehicles
Possible cause

- Connector terminal disconnection, poor contact, damage, deformation, corrosion
- Open circuit in wiring harness between front body control module (FBCM) and connector C-04
- Open circuit in wiring harness between connectors C-04 and C-10
- Open circuit in wiring harness between connectors C-10 and C-11
- Open circuit in wiring harness between connectors C-11 and branch B
- Connector C-04 malfunction
- Connector C-10 malfunction
- Connector C-11 malfunction
- CAN circuit in front body control module (FBCM) malfunction

ON-BOARD DIAGNOSTIC [SKYACTIV-G 2.0 (R.H.D.)]

System wiring diagram

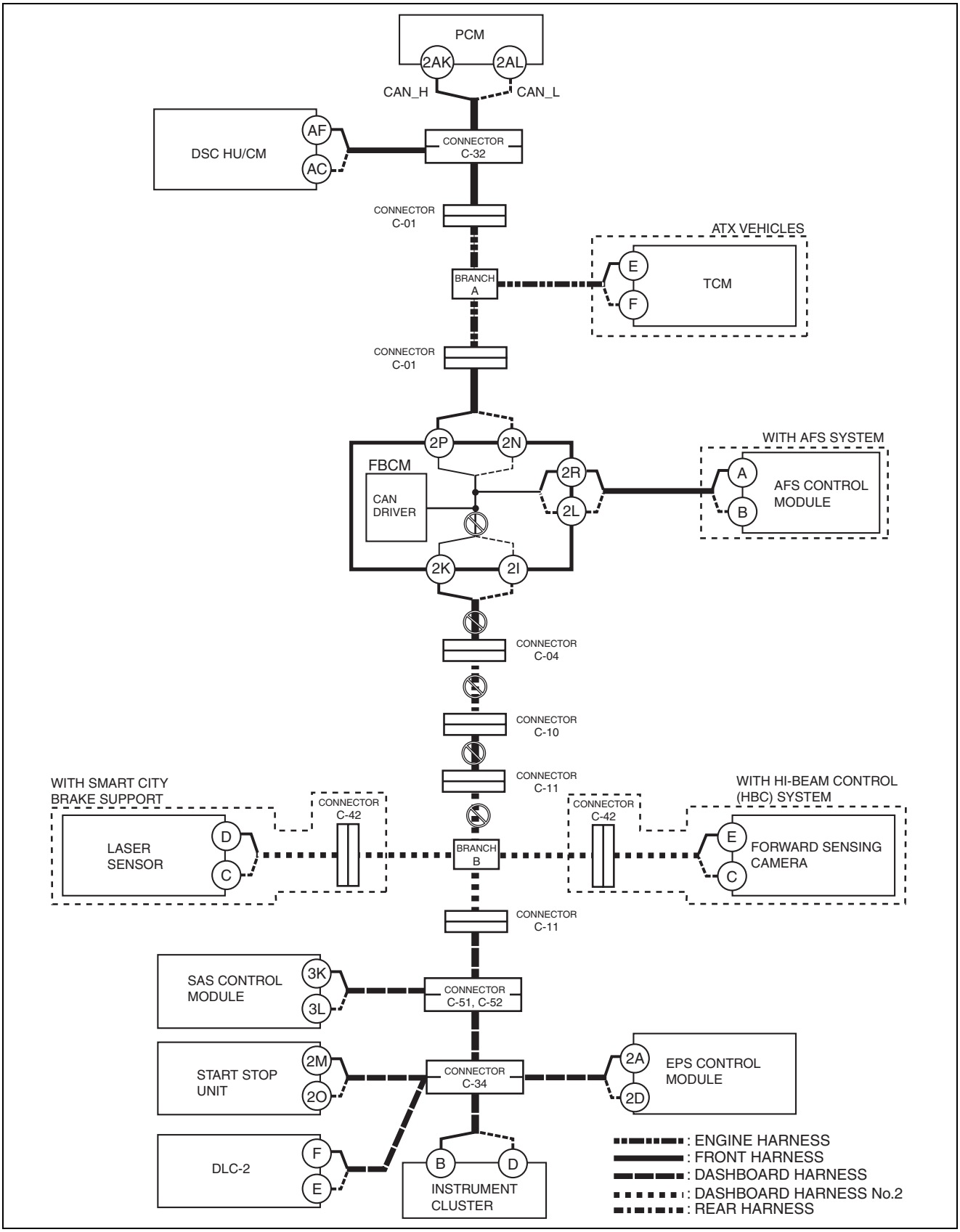

ac5wzw0000358

Inspection item

- Front body control module (FBCM) connector
- Connector C-04
- Connector C-10

- Connector C-11
- Wiring harness between front body control module (FBCM) terminal 2K and connector C-04
- Wiring harness between front body control module (FBCM) terminal 2I and connector C-04
- Wiring harness between connectors C-04 and C-10
- Wiring harness between connectors C-10 and C-11
- Front body control module (FBCM)
  - — Between front body control module (FBCM) terminal 2P and front body control module (FBCM) terminal 2K
  - — Between front body control module (FBCM) terminal 2N and front body control module (FBCM) terminal 2I

I
Possible cause
- Connector terminal disconnection, poor contact, damage, deformation, corrosion
- Open circuit in wiring harness between 4WD control module and connectors C-49, C-50
- Connector C-49, C-50 malfunction
- 4WD control module malfunction

ON-BOARD DIAGNOSTIC [SKYACTIV-G 2.0 (R.H.D.)]

System wiring diagram

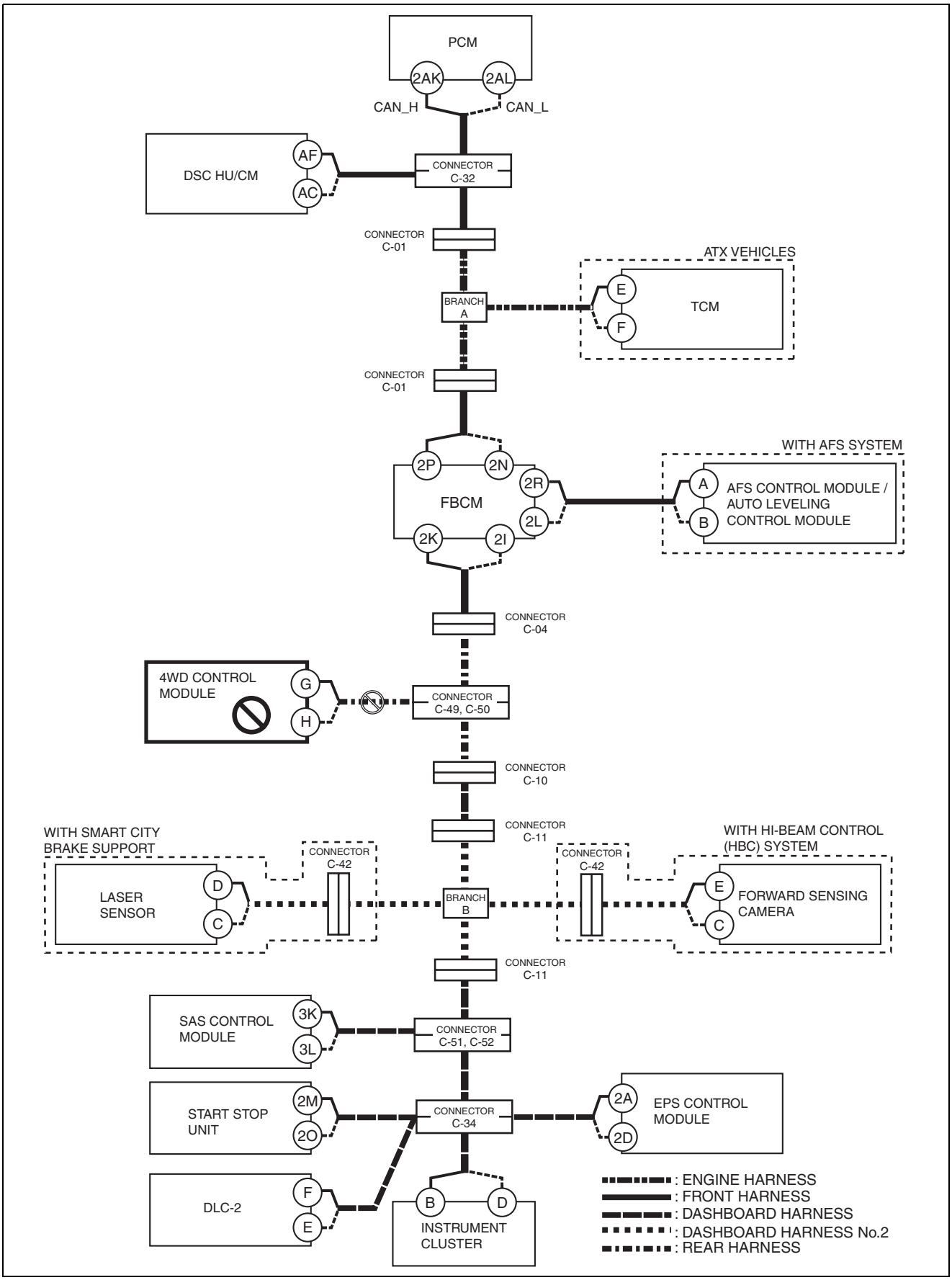

ac5wzw0000359

ON-BOARD DIAGNOSTIC [SKYACTIV-G 2.0 (R.H.D.)]

Inspection item
- 4WD control module connector
- Connectors C-49, C-50
- Wiring harness between 4WD control module terminal G and connector C-49
- Wiring harness between 4WD control module terminal H and connector C-50
- 4WD control module

J
With smart city brake support or hi-beam control (HBC) system
Possible cause
- Connector terminal disconnection, poor contact, damage, deformation, corrosion
- Open circuit in wiring harness between connector C-49, C-50 and connector C-10
- Open circuit in wiring harness between connector C-10 and connector C-11
- Open circuit in wiring harness between connector C-11 and branch B
- Connector C-49, C-50 malfunction
- Connector C-10 malfunction
- Connector C-11 malfunction

ON-BOARD DIAGNOSTIC [SKYACTIV-G 2.0 (R.H.D.)]

System wiring diagram

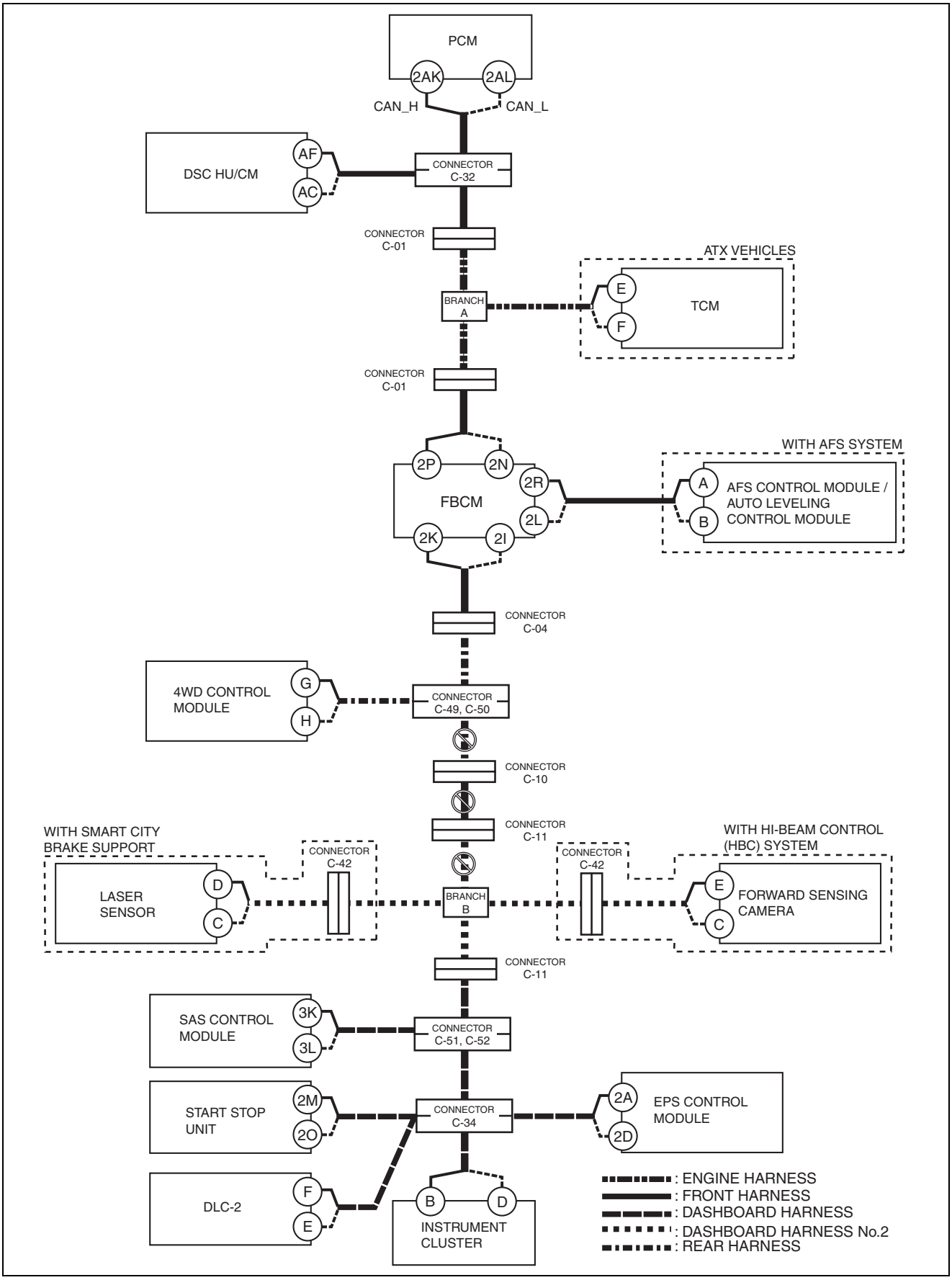

ac5wzw0000359

Inspection item
- Connector C-49, C-50
- Connector C-10
- Connector C-11
- Wiring harness between connector C-49, C-50 and connector C-10
- Wiring harness between connector C-10 and connector C-11
- Wiring harness between connector C-11 and branch B

Without smart city brake support or hi-beam control (HBC) system
Possible cause
- Connector terminal disconnection, poor contact, damage, deformation, corrosion
- Open circuit in wiring harness between connector C-49, C-50 and connector C-10
- Open circuit in wiring harness between connector C-10 and connector C-11
- Open circuit in wiring harness between connector C-11 and connector C-11
- Open circuit in wiring harness between connector C-11 and connector C-51, C-52
- Connector C-49, C-50 malfunction
- Connector C-10 malfunction
- Connector C-11 malfunction
- Connector C-51, C-52 malfunction

ON-BOARD DIAGNOSTIC [SKYACTIV-G 2.0 (R.H.D.)]

System wiring diagram

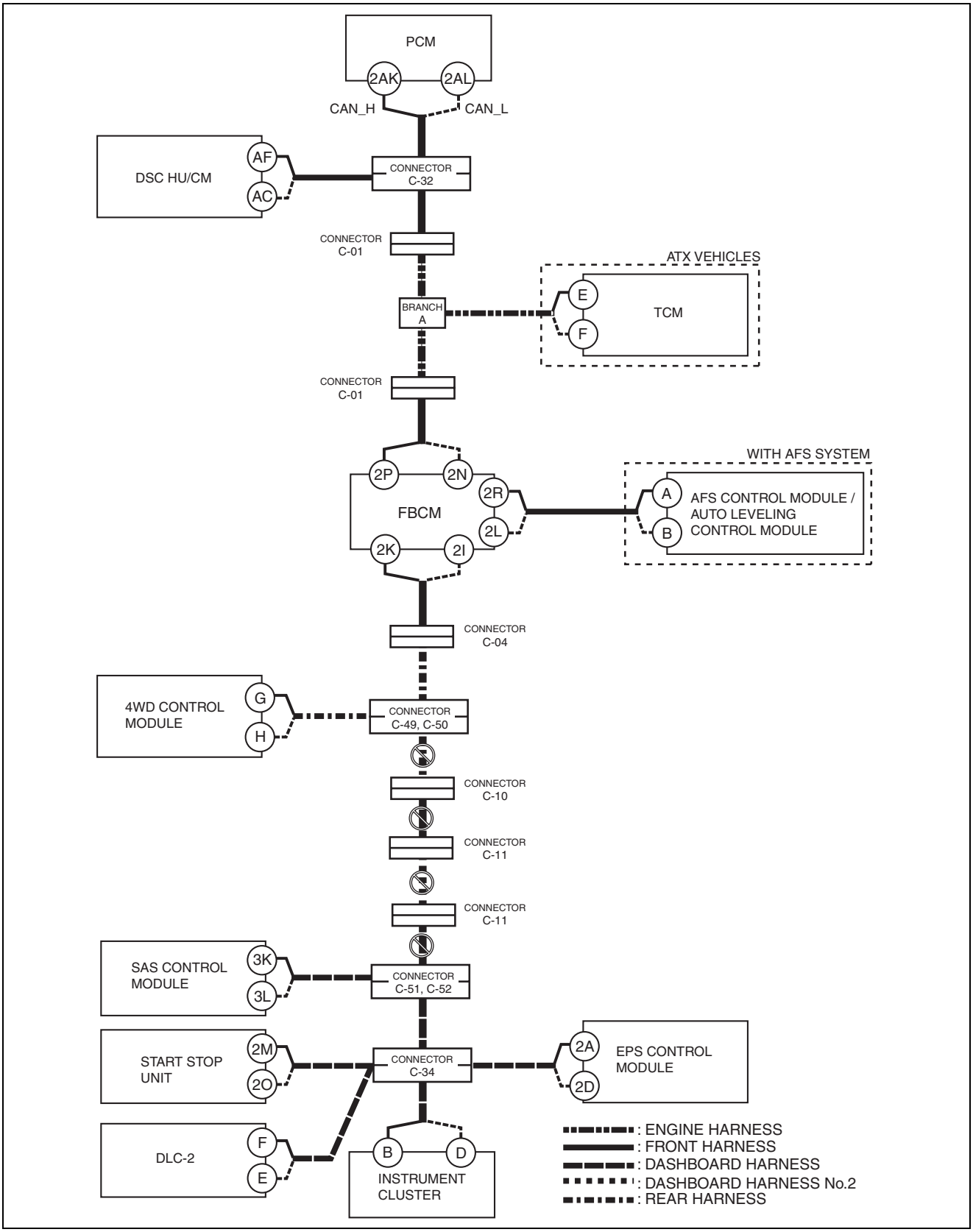

ac5wzw0000359

Inspection item

- Connector C-49, C-50
- Connector C-10
- Connector C-11
- Connector C-51, C-52

- Wiring harness between connector C-49, C-50 and connector C-10
- Wiring harness between connector C-10 and connector C-11
- Wiring harness between connector C-11 and connector C-11
- Wiring harness between connector C-11 and connector C-51, C-52

K
Possible cause
- Connector terminal disconnection, poor contact, damage, deformation, corrosion
- Open circuit in wiring harness between laser sensor and connector C-42
- Open circuit in wiring harness between connector C-42 and branch B
- Connector C-42 malfunction
- Laser sensor malfunction

ON-BOARD DIAGNOSTIC [SKYACTIV-G 2.0 (R.H.D.)]

System wiring diagram

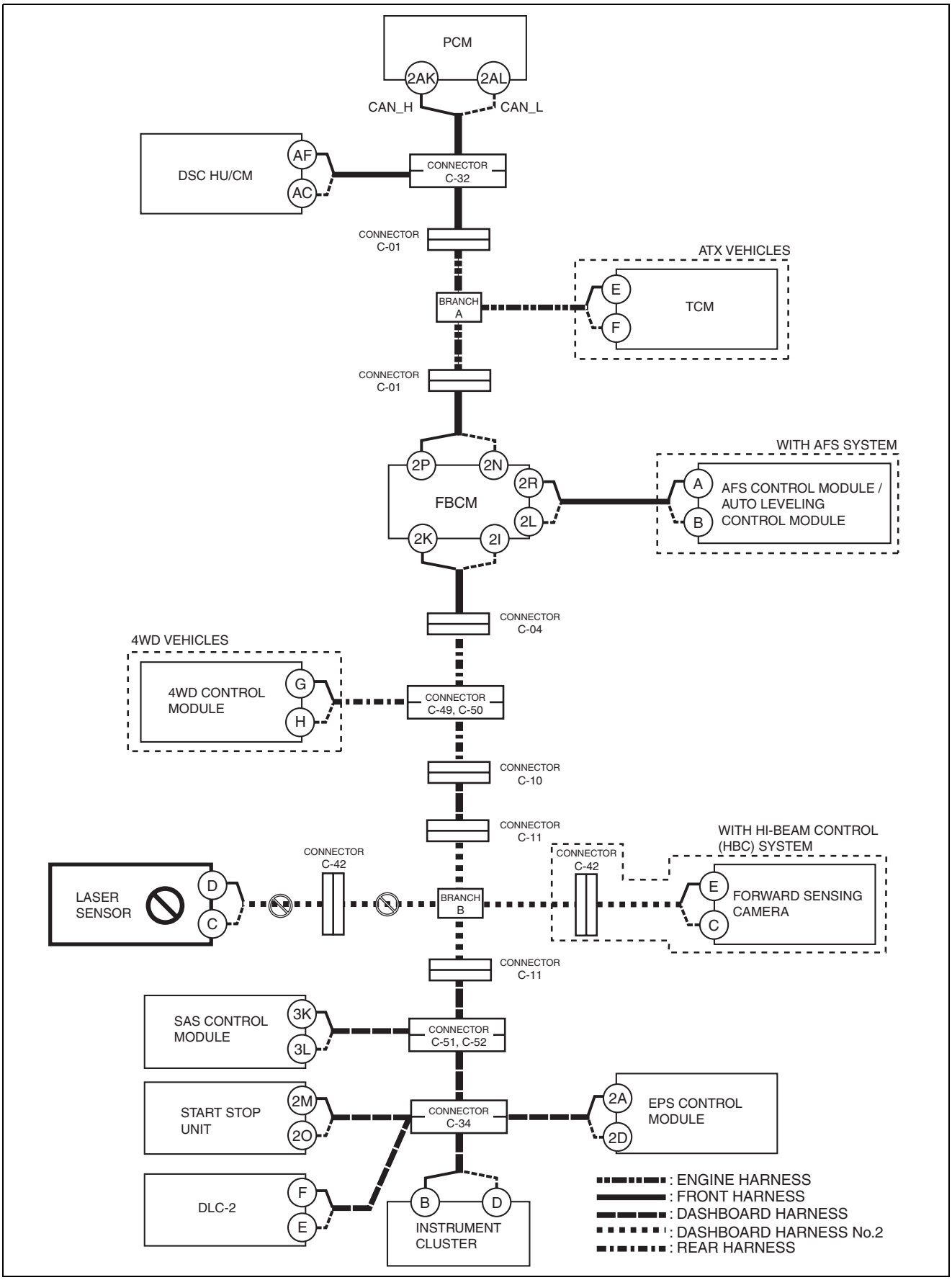

ac5wzw0000359

ON-BOARD DIAGNOSTIC [SKYACTIV-G 2.0 (R.H.D.)]

Inspection item
- laser sensor connector
- Connector C-42
- Wiring harness between laser sensor terminal D and connector C-42
- Wiring harness between laser sensor terminal C and connector C-42
- Wiring harness between connector C-42 and branch B
- Laser sensor

L
Possible cause
- Connector terminal disconnection, poor contact, damage, deformation, corrosion
- Open circuit in wiring harness between forward sensing camera and connector C-42
- Open circuit in wiring harness between connector C-42 and branch B
- Connector C-42 malfunction
- Forward sensing camera malfunction

ON-BOARD DIAGNOSTIC [SKYACTIV-G 2.0 (R.H.D.)]

System wiring diagram

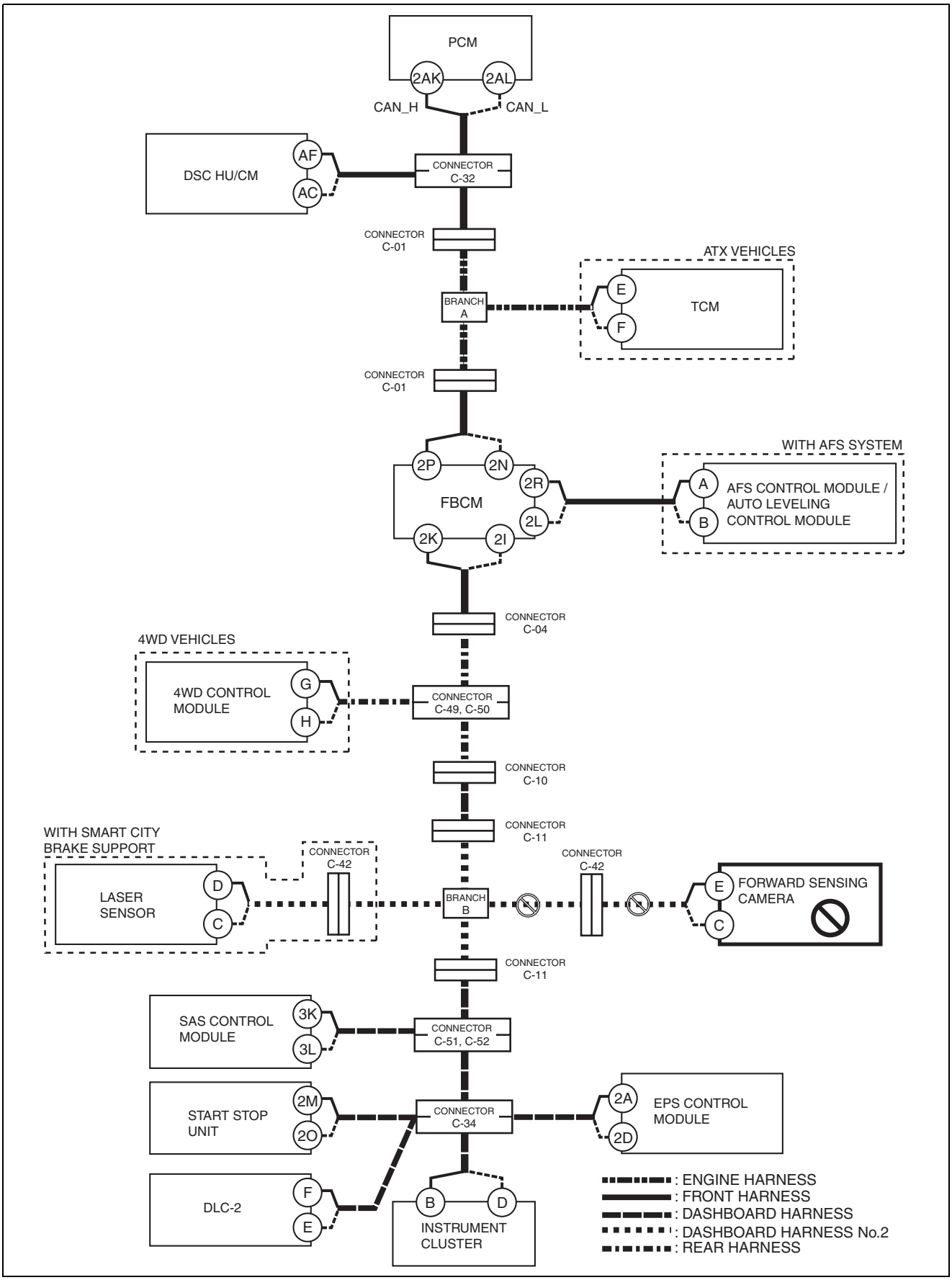

ac5wzw0000359

Inspection item

- Forward sensing camera connector
- Connector C-42
- Wiring harness between forward sensing camera terminal E and connector C-42
- Wiring harness between forward sensing camera terminal C and connector C-42
- Wiring harness between connector C-42 and branch B
- Forward sensing camera

M

Possible cause

- Connector terminal disconnection, poor contact, damage, deformation, corrosion
- Open circuit in wiring harness between branch B and connector C-11
- Open circuit in wiring harness between connectors C-11 and C-51, C-52
- Connector C-11 malfunction
- Connector C-51, C-52 malfunction

ON-BOARD DIAGNOSTIC [SKYACTIV-G 2.0 (R.H.D.)]

System wiring diagram

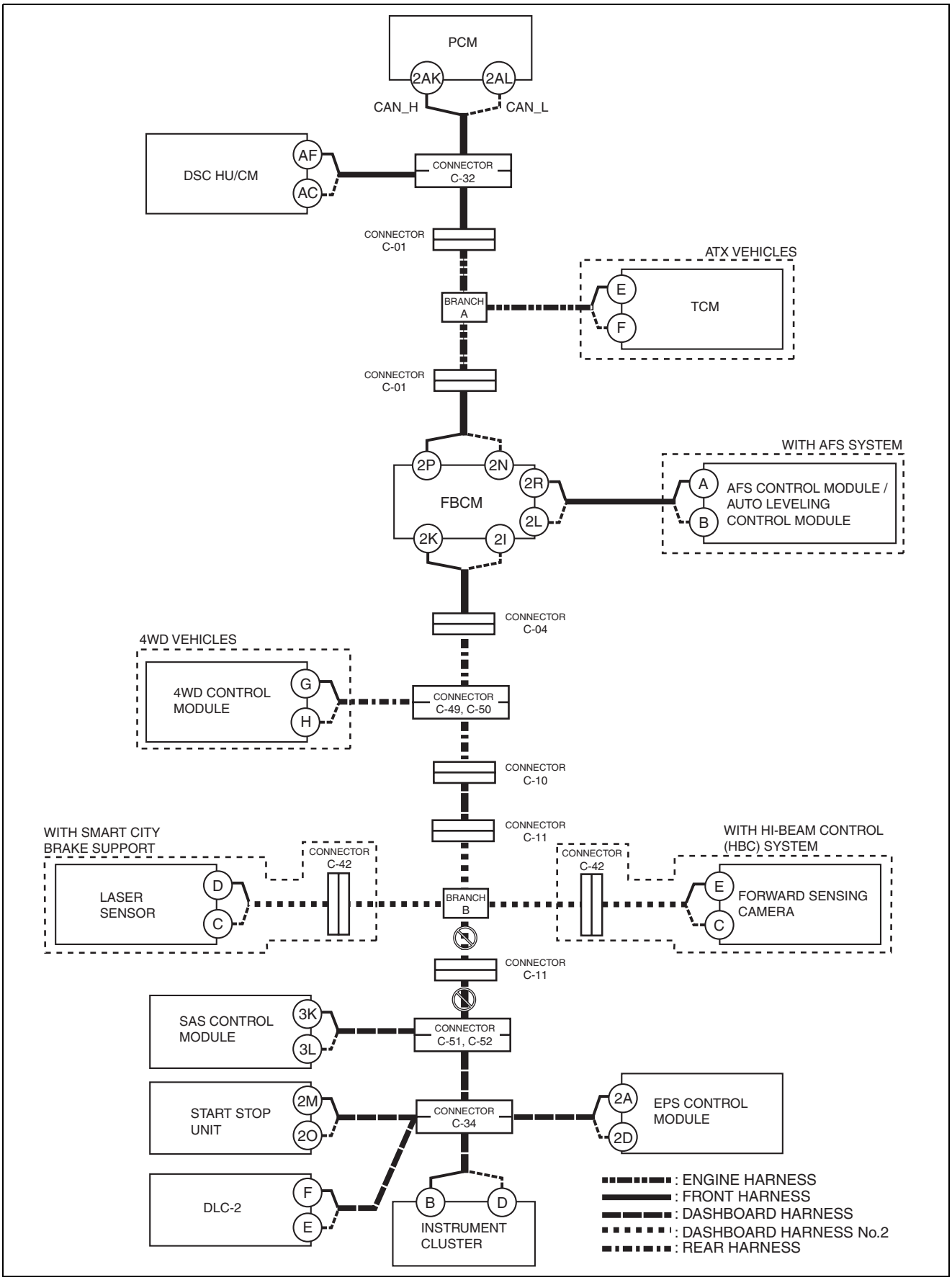

ac5wzw0000359

Inspection item
- Connectors C-11
- Connector C-51, C-52
- Wiring harness between branch B and connector C-11
- Wiring harness between connectors C-11 and C-51, C-52

N
Possible cause
- Connector terminal disconnection, poor contact, damage, deformation, corrosion
- Open circuit in wiring harness between SAS control module and connector C-51, C-52
- Connector C-51, C-52 malfunction
- SAS control module malfunction

ON-BOARD DIAGNOSTIC [SKYACTIV-G 2.0 (R.H.D.)]

System wiring diagram

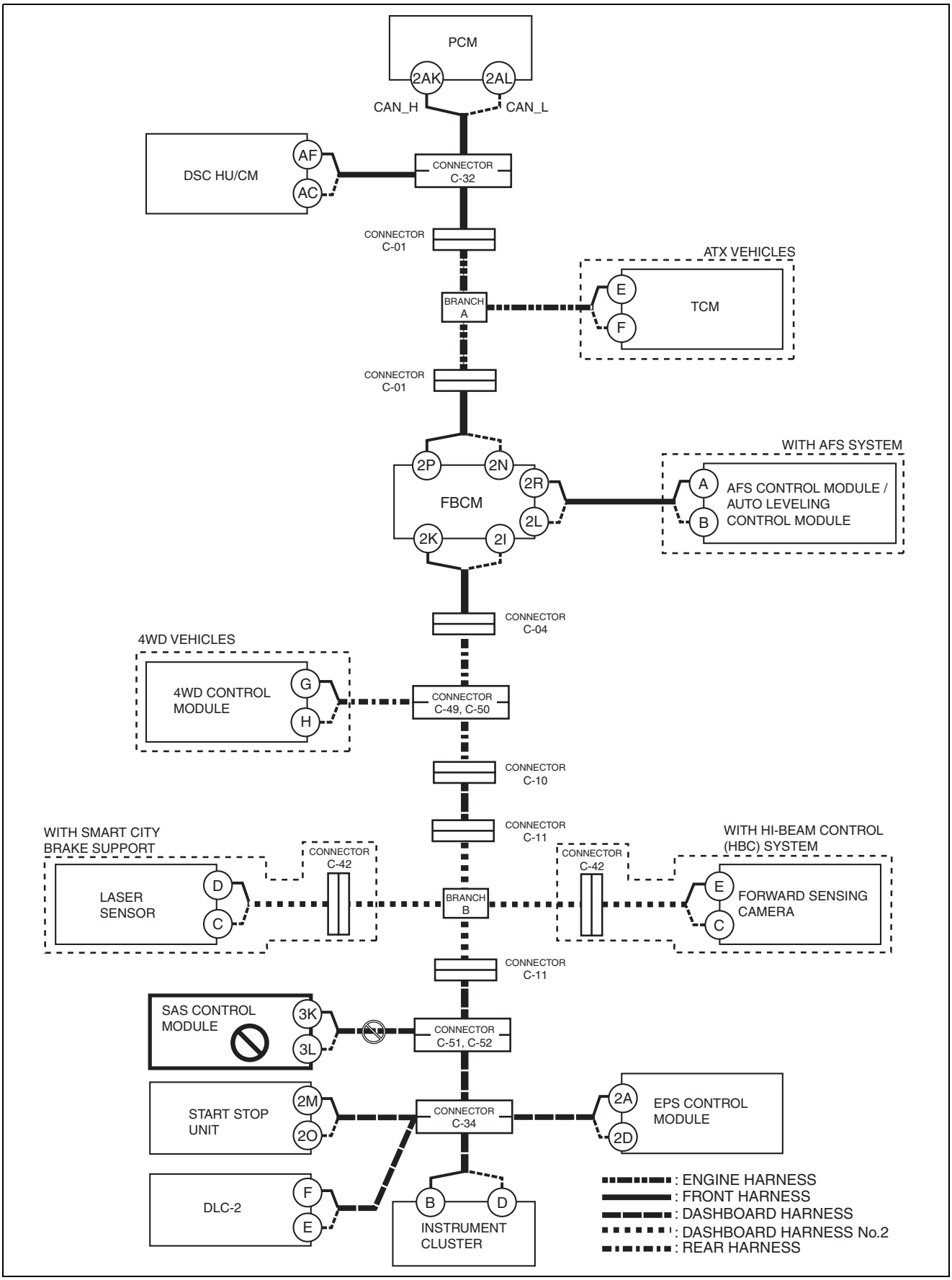

ac5wzw0000359

ON-BOARD DIAGNOSTIC [SKYACTIV-G 2.0 (R.H.D.)]

Inspection item

Warning

- **Handling the component parts of the SRS air bag system improperly can accidentally operate (deploy) the air bag module, which may seriously injure you. Read the service warnings and cautions before handling the air bag system components of the SRS air bag system.**
  (See 08-10-3 AIR BAG SYSTEM SERVICE WARNINGS.)
  (See 08-10-5 AIR BAG SYSTEM SERVICE CAUTIONS.)

- SAS control module connector
- Connector C-51, C-52
- Wiring harness between SAS control module terminal 3K and connector C-51
- Wiring harness between SAS control module terminal 3L and connector C-52
- SAS control module

O
Possible cause

- Connector terminal disconnection, poor contact, damage, deformation, corrosion
- Open circuit in wiring harness between connector C-51, C-52 and C-34
- Connector C-51, C-52 malfunction
- Connector C-34 malfunction

ON-BOARD DIAGNOSTIC [SKYACTIV-G 2.0 (R.H.D.)]

System wiring diagram

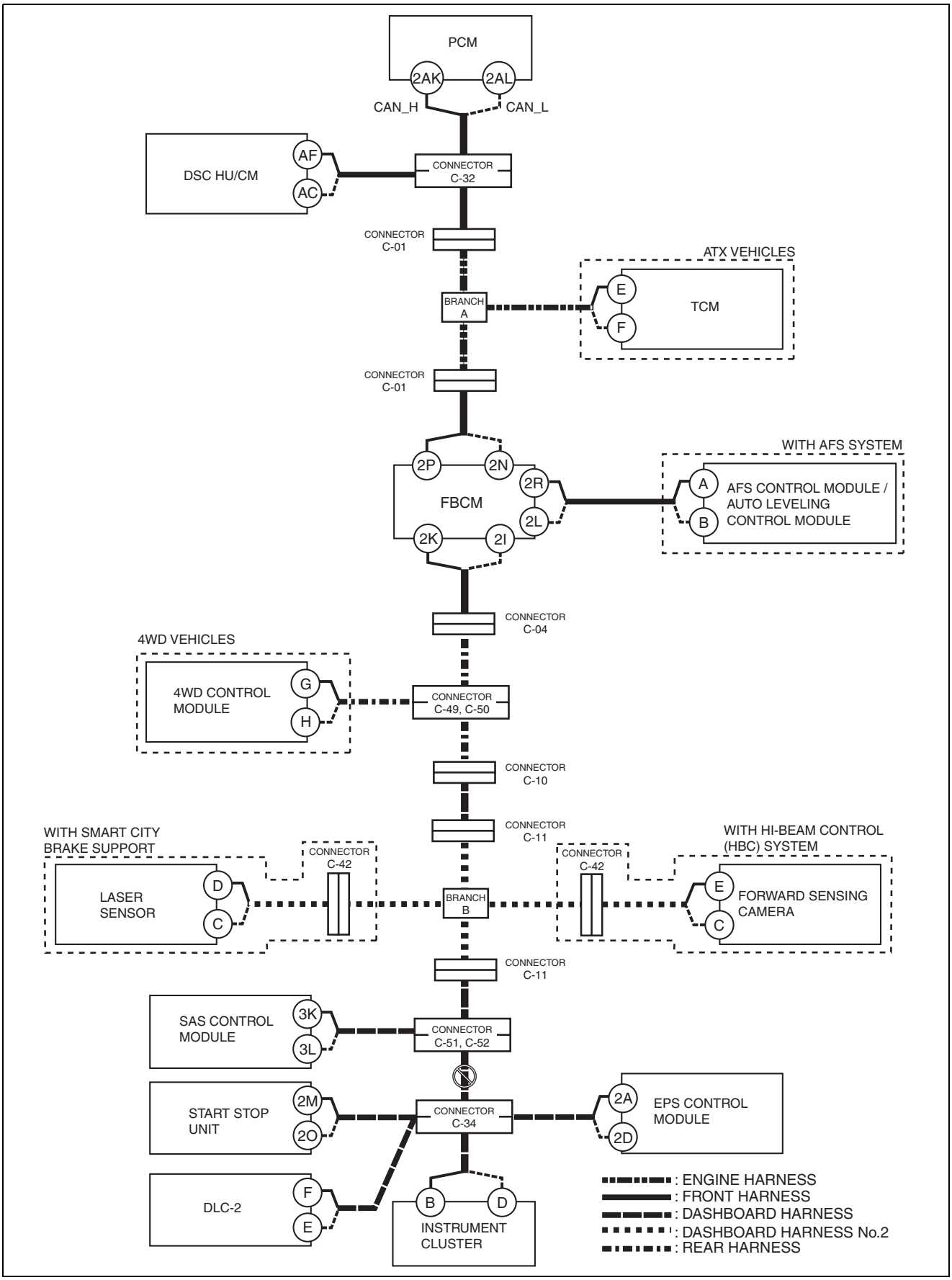

ac5wzw0000359

Inspection item
- Connector C-51, C-52
- Connector C-34
- Wiring harness between connector C-51, C-52 and C-34

P
Possible cause
- Connector terminal disconnection, poor contact, damage, deformation, corrosion
- Open circuit in wiring harness between start stop unit and connector C-34
- Connector C-34 malfunction
- Start stop unit malfunction

ON-BOARD DIAGNOSTIC [SKYACTIV-G 2.0 (R.H.D.)]

System wiring diagram

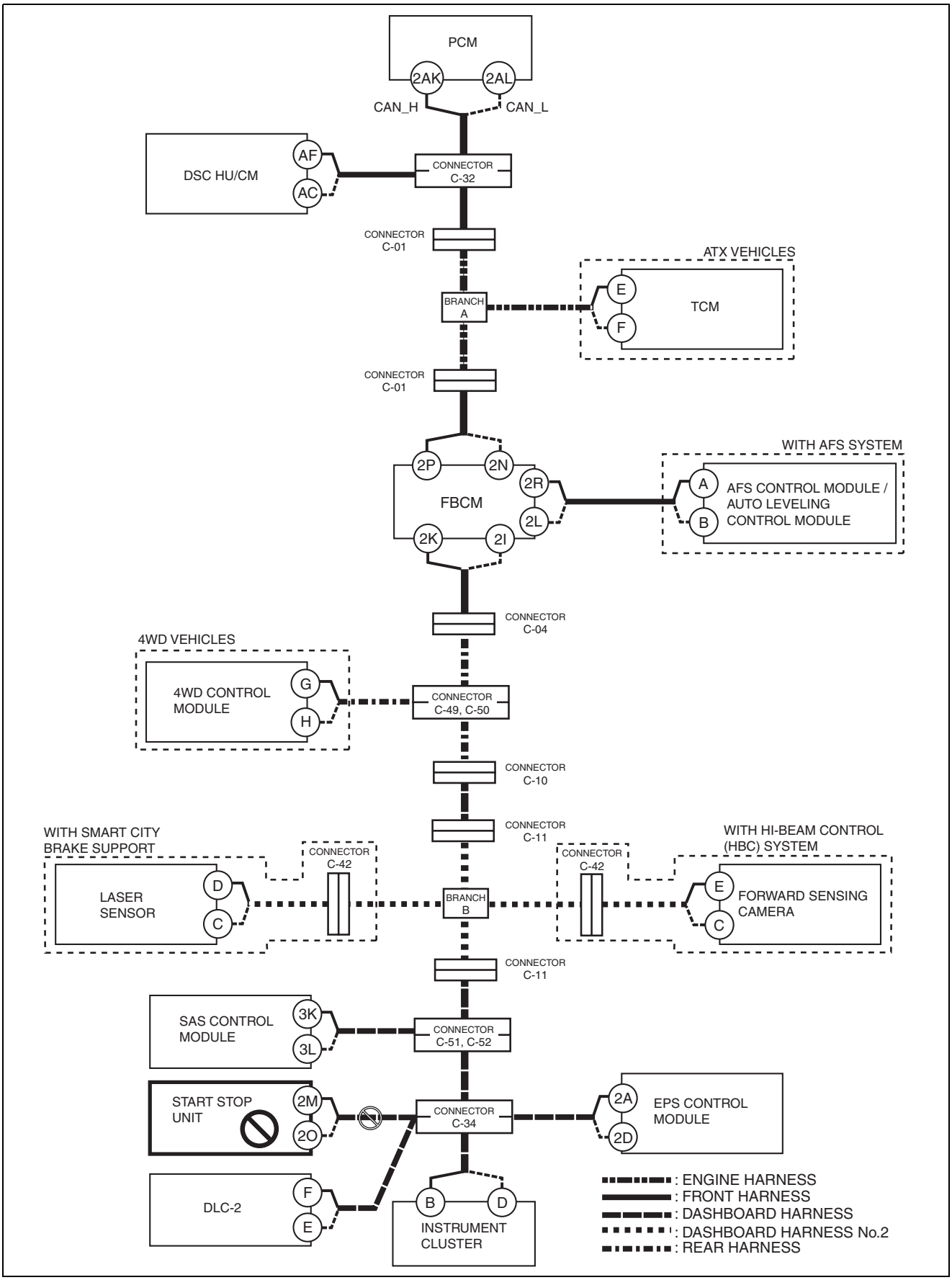

ac5wzw0000359

ON-BOARD DIAGNOSTIC [SKYACTIV-G 2.0 (R.H.D.)]

Inspection item
- Start stop unit connector
- Connector C-34
- Wiring harness between start stop unit terminal 2M and connector C-34
- Wiring harness between start stop unit terminal 2O and connector C-34
- Start stop unit

Q
Possible cause
- Connector terminal disconnection, poor contact, damage, deformation, corrosion
- Open circuit in wiring harness between EPS control module and connector C-34
- Connector C-34 malfunction
- EPS control module malfunction

ON-BOARD DIAGNOSTIC [SKYACTIV-G 2.0 (R.H.D.)]

System wiring diagram

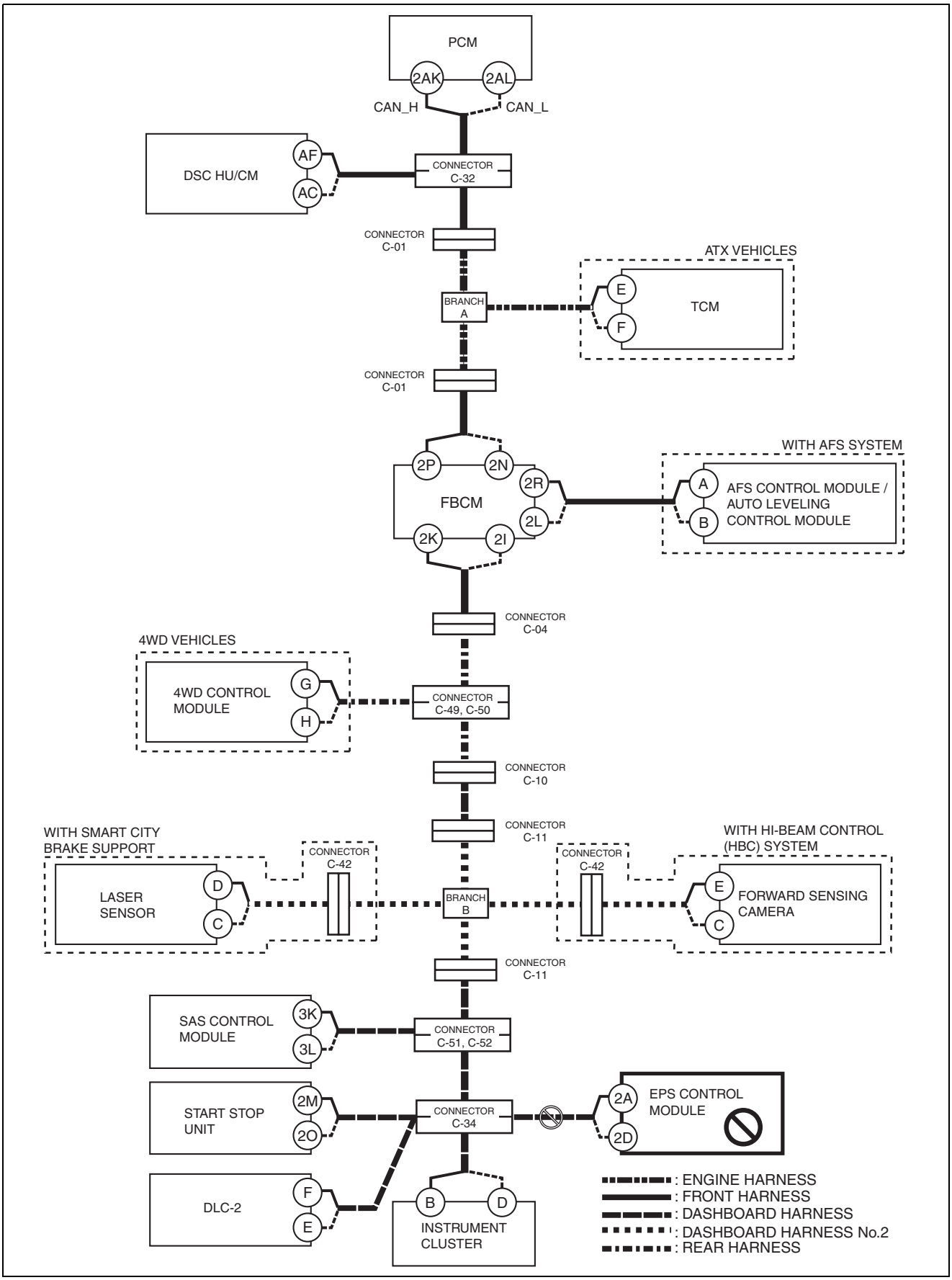

ac5wzw0000359

ON-BOARD DIAGNOSTIC [SKYACTIV-G 2.0 (R.H.D.)]

Inspection item
- EPS control module connector
- Connector C-34
- Wiring harness between EPS control module terminal 2A and connector C-34
- Wiring harness between EPS control module terminal 2D and connector C-34
- EPS control module

R
Possible cause
- Connector terminal disconnection, poor contact, damage, deformation, corrosion
- Open circuit in wiring harness between instrument cluster and connector C-34
- Connector C-34 malfunction
- Instrument cluster malfunction

ON-BOARD DIAGNOSTIC [SKYACTIV-G 2.0 (R.H.D.)]

System wiring diagram

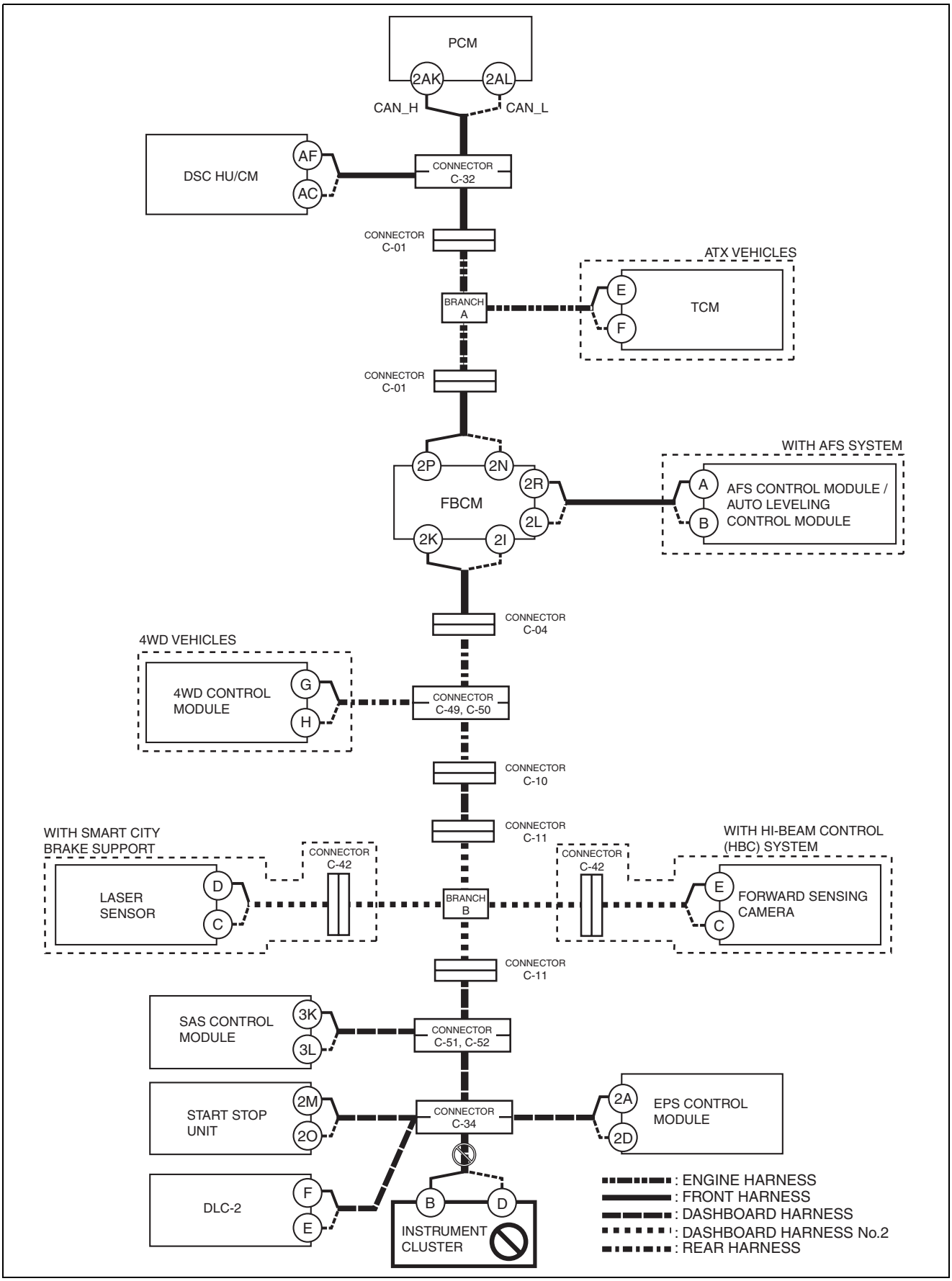

ac5wzw0000360

ON-BOARD DIAGNOSTIC [SKYACTIV-G 2.0 (R.H.D.)]

Inspection item

- Instrument cluster connector
- Connector C-34
- Wiring harness between instrument cluster terminal B and connector C-34
- Wiring harness between instrument cluster terminal D and connector C-34
- Instrument cluster

DETERMINING SHORT TO GROUND LOCATION (HS-CAN) [SKYACTIV-G 2.0 (R.H.D.)]

id100202000600

Caution

- **Perform the following malfunction diagnosis only when it is diagnosed with a short to ground by 10-02B-3 CONTROLLER AREA NETWORK (CAN) MALFUNCTION DIAGNOSIS FLOW [SKYACTIV-G 2.0 (R.H.D.)].**

ON-BOARD DIAGNOSTIC [SKYACTIV-G 2.0 (R.H.D.)]

System wiring diagram

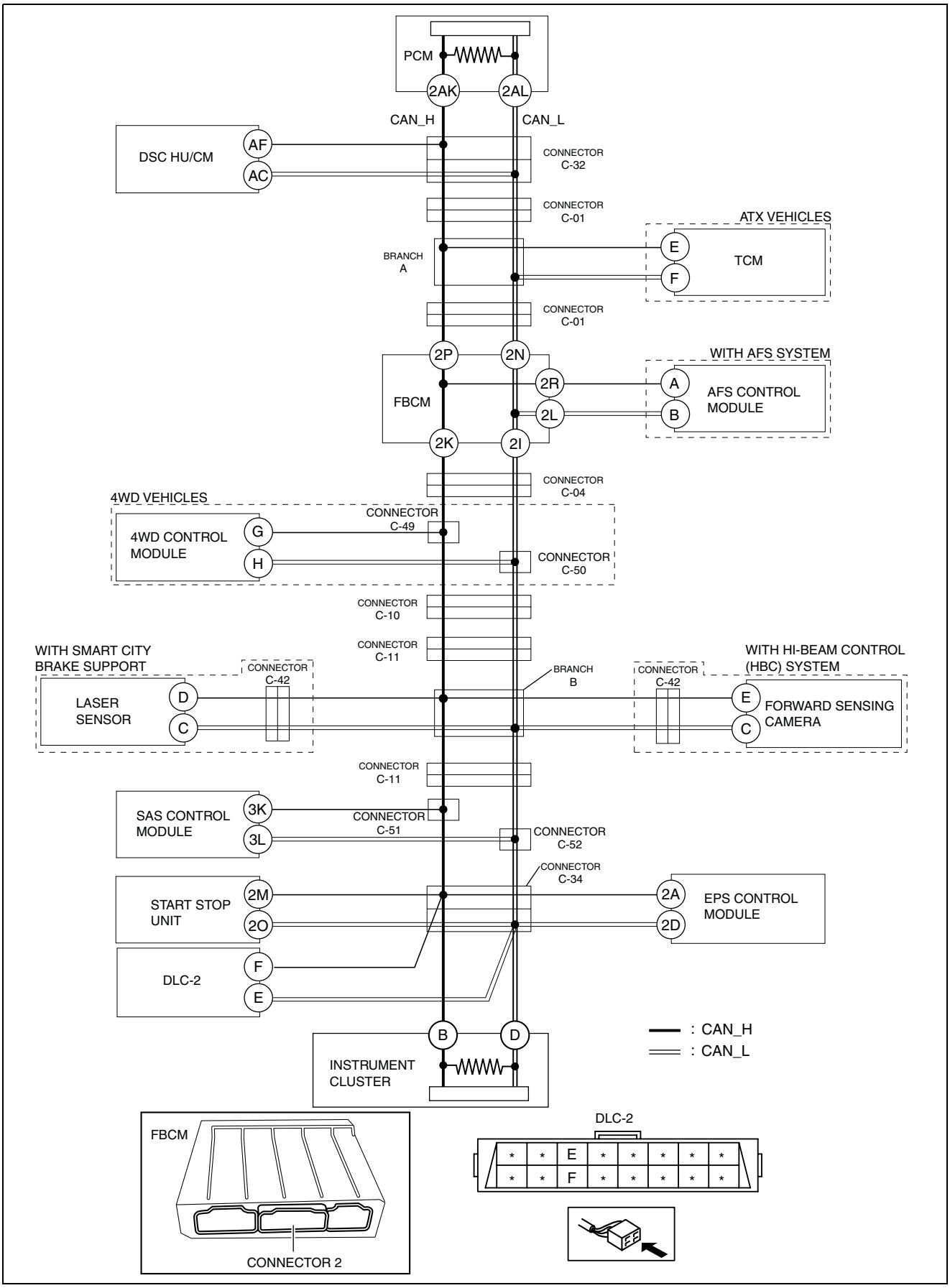

ac5wzw0000457

ON-BOARD DIAGNOSTIC [SKYACTIV-G 2.0 (R.H.D.)]

Determination procedure

Caution
- **When disconnecting the connector, verify that there is no looseness, damage, deformation, corrosion, or poor connection of the connector terminals.**
- **When inspecting the DLC-2, touch it with a paper clip or similar thin pin without directly inserting a tester into the terminals.**

Step	Inspection		Action
1	**INSPECT FOR SHORT TO GROUND BETWEEN FRONT BODY CONTROL MODULE (FBCM) AND INSTRUMENT CLUSTER** • Disconnect the negative battery cable. (See 01-17A-11 NEGATIVE BATTERY CABLE DISCONNECTION/CONNECTION [SKYACTIV-G 2.0].) (See 01-17A-13 NEGATIVE BATTERY CABLE DISCONNECTION/CONNECTION [SKYACTIV-G 2.0 (WITHOUT i-stop)].) • Disconnect connector 2 which has front body control module (FBCM) terminals 2P and 2N. • Inspect for continuity at the following terminals: — Between DLC-2 terminal F and body ground — Between DLC-2 terminal E and body ground • Is there continuity?	Yes	Go to Step 5.
		No	Go to the next step.
2	**INSPECT CAN LINE INSIDE FRONT BODY CONTROL MODULE (FBCM) FOR SHORT TO GROUND** • Inspect for continuity at the following terminals: — Between front body control module (FBCM) terminal 2P and body ground — Between front body control module (FBCM) terminal 2N and body ground • Is there continuity?	Yes	Replace the front body control module (FBCM) because there is a short to ground in the front body control module (FBCM). (See 09-40-2 FRONT BODY CONTROL MODULE (FBCM) REMOVAL/INSTALLATION.)
		No	Go to the next step.
3	**INSPECT FOR SHORT TO GROUND BETWEEN AFS CONTROL MODULE AND FRONT BODY CONTROL MODULE (FBCM)** • Inspect for continuity at the following terminals: — Between AFS control module terminal A and body ground — Between AFS control module terminal B and body ground • Is there continuity?	Yes	Go to the next step.
		No	Go to Step 26.
4	**INSPECT CAN LINE IN AFS CONTROL MODULE FOR SHORT TO GROUND** • Disconnect the AFS control module connector. • Inspect for continuity at the following terminals: — Between AFS control module terminal A (wiring harness side) and body ground — Between AFS control module terminal B (wiring harness side) and body ground • Is there continuity?	Yes	Repair or replace the wiring harness between the AFS control module and front body control module (FBCM) because the wiring harness is shorted to ground.
		No	Replace the AFS control module because there is a short to ground in the AFS control module. (See 09-18-30 ADAPTIVE FRONT LIGHTING SYSTEM (AFS) CONTROL MODULE REMOVAL/INSTALLATION.)

ON-BOARD DIAGNOSTIC [SKYACTIV-G 2.0 (R.H.D.)]

Step	Inspection		Action
5	**INSPECT FOR SHORT TO GROUND BETWEEN CONNECTOR C-04 AND INSTRUMENT CLUSTER** • Disconnect connector C-04. • Inspect for continuity at the following terminals: — Between DLC-2 terminal F and body ground — Between DLC-2 terminal E and body ground • Is there continuity?	Yes	Go to the next step.
		No	Repair or replace the wiring harness between the front body control module (FBCM) and connector C-04 because the wiring harness is shorted to ground.
6	**INSPECT FOR SHORT TO GROUND BETWEEN CONNECTORS C-49 AND C-50 AND INSTRUMENT CLUSTER** • Disconnect connectors C-49 and C-50. • Inspect for continuity at the following terminals: — Between DLC-2 terminal F and body ground — Between DLC-2 terminal E and body ground • Is there continuity?	Yes	Go to Step 9.
		No	Go to the next step.
7	**INSPECT FOR SHORT TO GROUND BETWEEN 4WD CONTROL MODULE AND CONNECTORS C-49 AND C-50** • Inspect for continuity at the following terminals: — Between 4WD control module terminal G and body ground — Between 4WD control module terminal H and body ground • Is there continuity?	Yes	Go to the next step.
		No	Repair or replace the wiring harness between connector C-04 and connectors C-49 and C-50 because the wiring harness is shorted to ground.
8	**INSPECT CAN LINE IN 4WD CONTROL MODULE FOR SHORT TO GROUND** • Disconnect the 4WD control module connector. • Inspect for continuity at the following terminals: — Between 4WD control module terminal G (wiring harness side) and body ground — Between 4WD control module terminal H (wiring harness side) and body ground • Is there continuity?	Yes	Repair or replace the wiring harness between the 4WD control module and connectors C-49 and C-50 because the wiring harness is shorted to ground.
		No	Replace the 4WD control module because there is a short to ground in the 4WD control module. (See 03-18-4 4WD CONTROL MODULE REMOVAL/ INSTALLATION.)
9	**INSPECT FOR SHORT TO GROUND BETWEEN CONNECTOR C-10 AND INSTRUMENT CLUSTER** • Disconnect connector C-10. • Inspect for continuity at the following terminals: — Between DLC-2 terminal F and body ground — Between DLC-2 terminal E and body ground • Is there continuity?	Yes	Go to the next step.
		No	Repair or replace the wiring harness between connectors C-49 and C-50 and connector C-10 because the wiring harness is shorted to ground.
10	**INSPECT FOR SHORT TO GROUND BETWEEN CONNECTOR C-11 AND INSTRUMENT CLUSTER** • Disconnect connector C-11. • Inspect for continuity at the following terminals: — Between DLC-2 terminal F and body ground — Between DLC-2 terminal E and body ground • Is there continuity?	Yes	Go to Step 16.
		No	Go to the next step.

ON-BOARD DIAGNOSTIC [SKYACTIV-G 2.0 (R.H.D.)]

Step	Inspection		Action
11	**INSPECT FOR SHORT TO GROUND BETWEEN LASER SENSOR AND CONNECTOR C-42** • Disconnect connector C-42. • Inspect for continuity at the following terminals: — Between laser sensor terminal D and body ground — Between laser sensor terminal C and body ground • Is there continuity?	Yes	Go to the next step.
		No	Go to Step 13.
12	**INSPECT CAN LINE INSIDE LASER SENSOR FOR SHORT TO GROUND** • Disconnect the laser sensor connector. • Inspect for continuity at the following terminals: — Between laser sensor terminal D (wiring harness side) and body ground — Between laser sensor terminal C (wiring harness side) and body ground • Is there continuity?	Yes	Repair or replace the wiring harness between the laser sensor and connector C-42 because the wiring harness is shorted to ground.
		No	Replace the laser sensor because there is a short to ground in the laser sensor. (See 04-15-17 LASER SENSOR REMOVAL/INSTALLATION.)
13	**INSPECT FOR SHORT TO GROUND BETWEEN FORWARD SENSING CAMERA AND CONNECTOR C-42** • Inspect for continuity at the following terminals: — Between forward sensing camera terminal E and body ground — Between forward sensing camera terminal C and body ground • Is there continuity?	Yes	Go to the next step.
		No	Go to Step 15.
14	**INSPECT CAN LINE IN FORWARD SENSING CAMERA FOR SHORT TO GROUND** • Disconnect the forward sensing camera connector. • Inspect for continuity at the following terminals: — Between forward sensing camera terminal E (wiring harness side) and body ground — Between forward sensing camera terminal C (wiring harness side) and body ground • Is there continuity?	Yes	Repair or replace the wiring harness between the forward sensing camera and connector C-42 because the wiring harness is shorted to ground.
		No	Replace the forward sensing camera because there is a short to ground in the forward sensing camera. (See 09-18-94 FORWARD SENSING CAMERA (FSC) REMOVAL/INSTALLATION.)
15	**INSPECT FOR SHORT TO GROUND BETWEEN CONNECTORS C-11 AND C-42** • Connect connector C-42. • Inspect for continuity at the following terminals: — Between forward sensing camera terminal E and body ground (with high beam control (HBC) system) — Between forward sensing camera terminal C and body ground (with high beam control (HBC) system) — Between laser sensor terminal D and body ground (with smart city brake support) — Between laser sensor terminal C and body ground (with smart city brake support) • Is there continuity?	Yes	Repair or replace the wiring harness between connector C-11 and connector C-42 because the wiring harness is shorted to ground.
		No	Repair or replace the wiring harness between connector C-10 and connector C-11 because the wiring harness is shorted to ground.

ON-BOARD DIAGNOSTIC [SKYACTIV-G 2.0 (R.H.D.)]

Step	Inspection		Action
16	**INSPECT FOR SHORT TO GROUND BETWEEN CONNECTOR C-51, C-52 AND INSTRUMENT CLUSTER** • Disconnect connector C-51, C-52. • Inspect for continuity at the following terminals: — Between DLC-2 terminal F and body ground — Between DLC-2 terminal E and body ground • Is there continuity?	Yes	Go to Step 19.
		No	Go to the next step.
17	**INSPECT FOR SHORT TO GROUND BETWEEN SAS CONTROL MODULE AND CONNECTOR C-51, C-52** • Inspect for continuity at the following terminals: — Between SAS control module terminal 3K and body ground — Between SAS control module terminal 3L and body ground • Is there continuity?	Yes	Go to the next step.
		No	Repair or replace the wiring harness between connector C-11 and connector C-51, C-52 because the wiring harness is shorted to ground.
18	**INSPECT CAN LINE IN SAS CONTROL MODULE FOR SHORT TO GROUND** • Disconnect the SAS control module connector. • Inspect for continuity at the following terminals: — Between SAS control module terminal 3K (wiring harness side) and body ground — Between SAS control module terminal 3L (wiring harness side) and body ground • Is there continuity?	Yes	Repair or replace the wiring harness between the SAS control module and connector C-51, C-52 because the wiring harness is shorted to ground.
		No	Replace the SAS control module because there is a short to ground in the SAS control module. (See 08-10-20 SAS CONTROL MODULE REMOVAL/ INSTALLATION.)
19	**INSPECT FOR SHORT TO GROUND BETWEEN CONNECTORS C-34 AND DLC-2** • Disconnect connector C-34. • Inspect for continuity at the following terminals: — Between DLC-2 terminal F and body ground — Between DLC-2 terminal E and body ground • Is there continuity?	Yes	Repair or replace the wiring harness between connector C-34 and DLC-2 because the wiring harness is shorted to ground.
		No	Go to the next step.
20	**INSPECT FOR SHORT TO GROUND BETWEEN START STOP UNIT AND CONNECTOR C-34** • Inspect for continuity at the following terminals: — Between start stop unit terminal 2M and body ground — Between start stop unit terminal 2O and body ground • Is there continuity?	Yes	Go to the next step.
		No	Go to Step 22.
21	**INSPECT CAN LINE IN START STOP UNIT FOR SHORT TO GROUND** • Disconnect the start stop unit connector. • Inspect for continuity at the following terminals: — Between start stop unit terminal 2M (wiring harness side) and body ground — Between start stop unit terminal 2O (wiring harness side) and body ground • Is there continuity?	Yes	Repair or replace the wiring harness between the start stop unit and connector C-34 because the wiring harness is shorted to ground.
		No	Replace the start stop unit because there is a short to ground in the start stop unit. (See 09-14-54 START STOP UNIT REMOVAL/ INSTALLATION.)

ON-BOARD DIAGNOSTIC [SKYACTIV-G 2.0 (R.H.D.)]

Step	Inspection		Action
22	**INSPECT FOR SHORT TO GROUND BETWEEN EPS CONTROL MODULE AND CONNECTOR C-34** • Inspect for continuity at the following terminals: — Between EPS control module terminal 2A and body ground — Between EPS control module terminal 2D and body ground • Is there continuity?	Yes	Go to the next step.
		No	Go to Step 24.
23	**INSPECT CAN LINE IN EPS CONTROL MODULE FOR SHORT TO GROUND** • Disconnect the EPS control module connector. • Inspect for continuity at the following terminals: — Between EPS control module terminal 2A (wiring harness side) and body ground — Between EPS control module terminal 2D (wiring harness side) and body ground • Is there continuity?	Yes	Repair or replace the wiring harness between the EPS control module and connector C-34 because the wiring harness is shorted to ground.
		No	Replace the EPS control module because there is a short to ground in the EPS control module. (See 06-13-4 STEERING WHEEL AND COLUMN REMOVAL/INSTALLATION.)
24	**INSPECT FOR SHORT TO GROUND BETWEEN INSTRUMENT CLUSTER AND CONNECTOR C-34** • Inspect for continuity at the following terminals: — Between instrument cluster terminal B and body ground — Between instrument cluster terminal D and body ground • Is there continuity?	Yes	Go to the next step.
		No	Repair or replace the wiring harness between connector C-51, C-52 and connector C-34 because the wiring harness is shorted to ground.
25	**INSPECT CAN LINE IN INSTRUMENT CLUSTER FOR SHORT TO GROUND** • Disconnect the instrument cluster connector. • Inspect for continuity at the following terminals: — Between instrument cluster terminal B (wiring harness side) and body ground — Between instrument cluster terminal D (wiring harness side) and body ground • Is there continuity?	Yes	Repair or replace the wiring harness between the instrument cluster and connector C-34 because the wiring harness is shorted to ground.
		No	Replace the instrument cluster because there is a short to ground in the instrument cluster. (See 09-22-6 INSTRUMENT CLUSTER REMOVAL/INSTALLATION.)
26	**INSPECT FOR SHORT TO GROUND BETWEEN CONNECTOR C-01 AND FRONT BODY CONTROL MODULE (FBCM)** • Disconnect connector C-01. • Connect connector 2 which has front body control module (FBCM) terminals 2P and 2N. • Inspect for continuity at the following terminals: — Between DLC-2 terminal F and body ground — Between DLC-2 terminal E and body ground • Is there continuity?	Yes	Repair or replace the wiring harness between connector C-01 and the front body control module (FBCM) because the wiring harness is shorted to ground.
		No	Go to the next step.
27	**INSPECT FOR SHORT TO GROUND BETWEEN CONNECTOR C-01 AND TCM** • Inspect for continuity at the following terminals: — Between TCM terminal E and body ground — Between TCM terminal F and body ground • Is there continuity?	Yes	Go to the next step.
		No	Go to Step 29.

ON-BOARD DIAGNOSTIC [SKYACTIV-G 2.0 (R.H.D.)]

Step	Inspection		Action
28	**INSPECT CAN LINE IN TCM FOR SHORT TO GROUND** • Disconnect the TCM connector. • Inspect for continuity at the following terminals: — Between TCM terminal E (wiring harness side) and body ground — Between TCM terminal F (wiring harness side) and body ground • Is there continuity?	Yes	Repair or replace the wiring harness between the TCM and connector C-01 because the wiring harness is shorted to ground.
		No	Replace the TCM because there is a short to ground in the TCM. (See 05-17A-67 CONTROL VALVE BODY REMOVAL/INSTALLATION [FW6A-EL, FW6AX-EL].)
29	**INSPECT FOR SHORT TO GROUND BETWEEN CONNECTORS C-32 AND C-01** • Disconnect connector C-32. • Connect connector C-01. • Inspect for continuity at the following terminals: — Between DLC-2 terminal F and body ground — Between DLC-2 terminal E and body ground • Is there continuity?	Yes	Repair or replace the wiring harness between connector C-32 and connector C-01 because the wiring harness is shorted to ground.
		No	Go to the next step.
30	**INSPECT FOR SHORT TO GROUND BETWEEN DSC HU/CM AND CONNECTOR C-32** • Inspect for continuity at the following terminals: — Between DSC HU/CM terminal AF and body ground — Between DSC HU/CM terminal AC and body ground • Is there continuity?	Yes	Go to the next step.
		No	Go to Step 31.
31	**INSPECT CAN LINE IN DSC HU/CM FOR SHORT TO GROUND** • Disconnect the DSC HU/CM connector. • Inspect for continuity at the following terminals: — Between DSC HU/CM terminal AF (wiring harness side) and body ground — Between DSC HU/CM terminal AC (wiring harness side) and body ground • Is there continuity?	Yes	Repair or replace the wiring harness between the DSC HU/CM and connector C-32 because the wiring harness is shorted to ground.
		No	Replace the DSC HU/CM because there is a short to ground in the DSC HU/CM. (See 04-15-4 DSC HU/CM REMOVAL/INSTALLATION.)
32	**INSPECT CAN LINE IN PCM FOR SHORT TO GROUND** • Disconnect the PCM connector. • Inspect for continuity at the following terminals: — Between PCM terminal 2AK (wiring harness side) and body ground — Between PCM terminal 2AL (wiring harness side) and body ground • Is there continuity?	Yes	Repair or replace the wiring harness between the PCM and connector C-32 because the wiring harness is shorted to ground .
		No	Replace the PCM because there is a short to ground in the PCM. (See 01-40-10 PCM REMOVAL/INSTALLATION [SKYACTIV-G 2.0].)

DETERMINING SHORT TO POWER SUPPLY LOCATION (HS-CAN) [SKYACTIV-G 2.0 (R.H.D.)]

id100202000700

Caution

- **Perform the following malfunction diagnosis only when it is diagnosed with a short to the power supply by 10-02B-3 CONTROLLER AREA NETWORK (CAN) MALFUNCTION DIAGNOSIS FLOW [SKYACTIV-G 2.0 (R.H.D.)].**

ON-BOARD DIAGNOSTIC [SKYACTIV-G 2.0 (R.H.D.)]

System wiring diagram

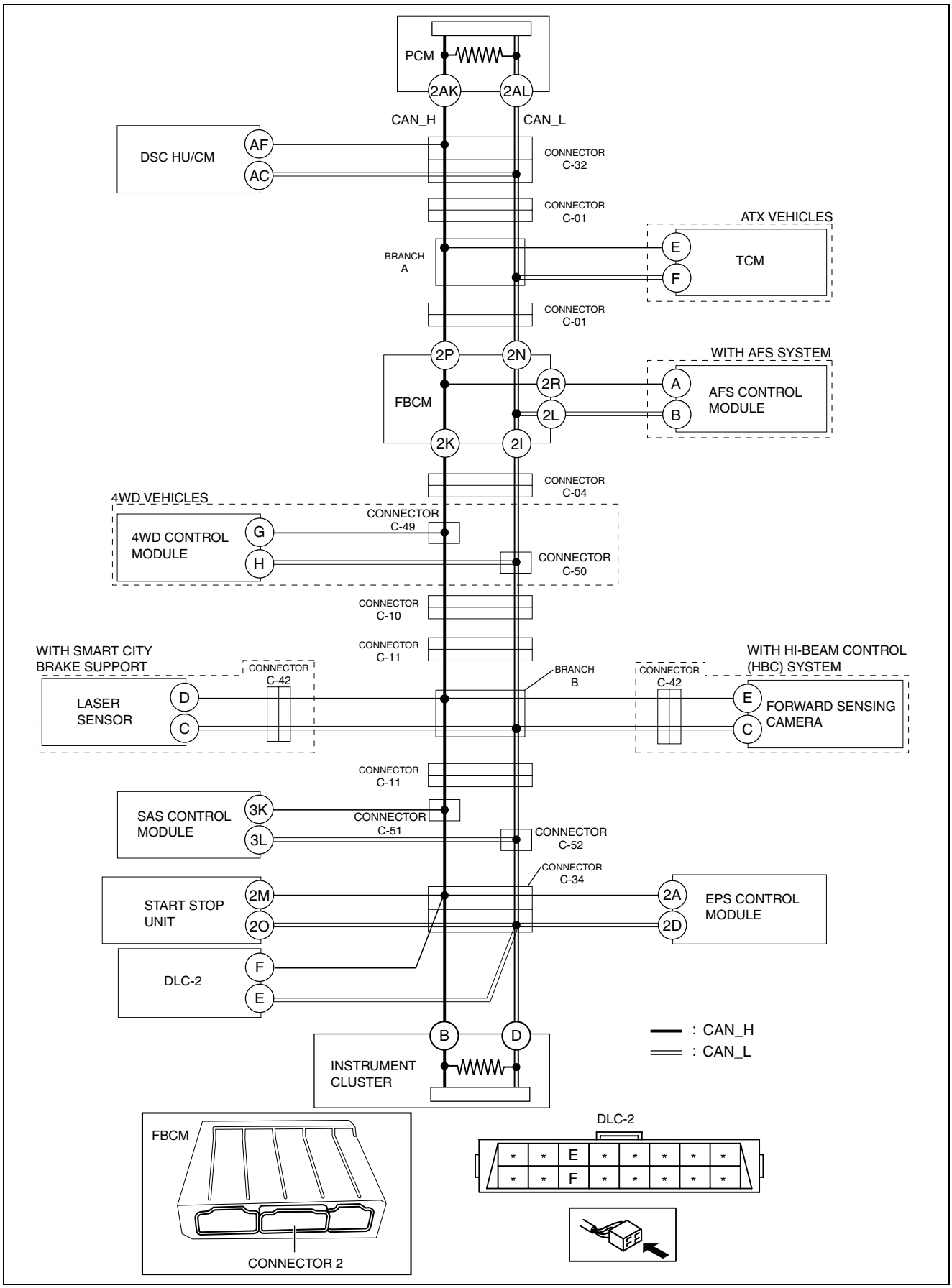

ac5wzw0000457

ON-BOARD DIAGNOSTIC [SKYACTIV-G 2.0 (R.H.D.)]

Determination procedure

Caution
- **When disconnecting the connector, verify that there is no looseness, damage, deformation, corrosion, or poor connection of the connector terminals.**
- **When inspecting the DLC-2, touch it with a paper clip or similar thin pin without directly inserting a tester into the terminals.**
- **Disconnect the negative battery cable before performing any work that requires handling of connectors.**

Step	Inspection		Action
1	**INSPECT FOR SHORT TO POWER SUPPLY BETWEEN FRONT BODY CONTROL MODULE (FBCM) AND INSTRUMENT CLUSTER** • Disconnect the negative battery cable. (See 01-17A-11 NEGATIVE BATTERY CABLE DISCONNECTION/CONNECTION [SKYACTIV-G 2.0].) (See 01-17A-13 NEGATIVE BATTERY CABLE DISCONNECTION/CONNECTION [SKYACTIV-G 2.0 (WITHOUT i-stop)].) • Disconnect connector 2 which has front body control module (FBCM) terminals 2K and 2I • Connect the negative battery cable. (See 01-17A-11 NEGATIVE BATTERY CABLE DISCONNECTION/CONNECTION [SKYACTIV-G 2.0].) (See 01-17A-13 NEGATIVE BATTERY CABLE DISCONNECTION/CONNECTION [SKYACTIV-G 2.0 (WITHOUT i-stop)].) • Switch the ignition ON (engine off). • Measure the voltage at DLC-2 terminals F and E. • Is the voltage between 1.5 — 3.5 V?	Yes	Go to the next step.
		No	Go to Step 4.
2	**INSPECT CAN LINE BETWEEN AFS CONTROL MODULE AND FRONT BODY CONTROL MODULE (FBCM) FOR SHORT TO POWER SUPPLY** • Measure the voltage at AFS control module terminals A and B. • Is the voltage between 1.5 — 3.5 V?	Yes	Go to Step 25.
		No	Go to the next step.
3	**INSPECT AFS CONTROL MODULE FOR SHORT TO POWER SUPPLY** • Switch the ignition off (LOCK). • Disconnect the negative battery cable. (See 01-17A-11 NEGATIVE BATTERY CABLE DISCONNECTION/CONNECTION [SKYACTIV-G 2.0].) (See 01-17A-13 NEGATIVE BATTERY CABLE DISCONNECTION/CONNECTION [SKYACTIV-G 2.0 (WITHOUT i-stop)].) • Disconnect the AFS control module connector. • Connect connector 2 which has front body control module (FBCM) terminals 2K and 2I. • Connect the negative battery cable. (See 01-17A-11 NEGATIVE BATTERY CABLE DISCONNECTION/CONNECTION [SKYACTIV-G 2.0].) (See 01-17A-13 NEGATIVE BATTERY CABLE DISCONNECTION/CONNECTION [SKYACTIV-G 2.0 (WITHOUT i-stop)].) • Switch the ignition ON (engine off). • Measure the voltage at DLC-2 terminals F and E. • Is the voltage between 1.5 — 3.5 V?	Yes	Replace the AFS control module because there is a short to the power supply in the AFS control module. (See 09-18-30 ADAPTIVE FRONT LIGHTING SYSTEM (AFS) CONTROL MODULE REMOVAL/INSTALLATION.)
		No	Repair or replace the wiring harness between AFS control module and the front body control module (FBCM) because the wiring harness is shorted to the power supply.

ON-BOARD DIAGNOSTIC [SKYACTIV-G 2.0 (R.H.D.)]

Step	Inspection		Action
4	**INSPECT CAN LINE BETWEEN CONNECTOR C-04 AND INSTRUMENT CLUSTER FOR SHORT TO POWER SUPPLY** • Switch the ignition off (LOCK). • Disconnect the negative battery cable. (See 01-17A-11 NEGATIVE BATTERY CABLE DISCONNECTION/CONNECTION [SKYACTIV-G 2.0].) (See 01-17A-13 NEGATIVE BATTERY CABLE DISCONNECTION/CONNECTION [SKYACTIV-G 2.0 (WITHOUT i-stop)].) • Disconnect connector C-04. • Connect the negative battery cable. (See 01-17A-11 NEGATIVE BATTERY CABLE DISCONNECTION/CONNECTION [SKYACTIV-G 2.0].) (See 01-17A-13 NEGATIVE BATTERY CABLE DISCONNECTION/CONNECTION [SKYACTIV-G 2.0 (WITHOUT i-stop)].) • Switch the ignition ON (engine off). • Measure the voltage at DLC-2 terminals F and E. • Is the voltage between 1.5 — 3.5 V?	Yes	Repair or replace the wiring harness between the front body control module (FBCM) and connector C-04 because the wiring harness is shorted to the power supply.
		No	Go to the next step.
5	**INSPECT CAN LINE BETWEEN CONNECTORS C-49 AND C-50 AND INSTRUMENT CLUSTER FOR SHORT TO POWER SUPPLY** • Switch the ignition off (LOCK). • Disconnect the negative battery cable. (See 01-17A-11 NEGATIVE BATTERY CABLE DISCONNECTION/CONNECTION [SKYACTIV-G 2.0].) (See 01-17A-13 NEGATIVE BATTERY CABLE DISCONNECTION/CONNECTION [SKYACTIV-G 2.0 (WITHOUT i-stop)].) • Disconnect connectors C-49 and C-50. • Connect the negative battery cable. (See 01-17A-11 NEGATIVE BATTERY CABLE DISCONNECTION/CONNECTION [SKYACTIV-G 2.0].) (See 01-17A-13 NEGATIVE BATTERY CABLE DISCONNECTION/CONNECTION [SKYACTIV-G 2.0 (WITHOUT i-stop)].) • Switch the ignition ON (engine off). • Measure the voltage at DLC-2 terminals F and E. • Is the voltage between 1.5 — 3.5 V?	Yes	Go to the next step.
		No	Go to Step 8.
6	**INSPECT CAN LINE BETWEEN 4WD CONTROL MODULE AND CONNECTORS C-49 AND C-50 FOR SHORT TO POWER SUPPLY** • Measure the voltage at 4WD control module terminals G and H. • Is the voltage between 1.5 — 3.5 V?	Yes	Repair or replace the wiring harness between connector C-04 and connectors C-49 and C-50 because the wiring harness is shorted to the power supply.
		No	Go to the next step.

ON-BOARD DIAGNOSTIC [SKYACTIV-G 2.0 (R.H.D.)]

Step	Inspection		Action
7	**INSPECT 4WD CONTROL MODULE FOR SHORT TO POWER SUPPLY** • Switch the ignition off (LOCK). • Disconnect the negative battery cable. (See 01-17A-11 NEGATIVE BATTERY CABLE DISCONNECTION/CONNECTION [SKYACTIV-G 2.0].) (See 01-17A-13 NEGATIVE BATTERY CABLE DISCONNECTION/CONNECTION [SKYACTIV-G 2.0 (WITHOUT i-stop)].) • Connect connectors C-49 and C-50 • Disconnect the 4WD control module connector. • Connect the negative battery cable. (See 01-17A-11 NEGATIVE BATTERY CABLE DISCONNECTION/CONNECTION [SKYACTIV-G 2.0].) (See 01-17A-13 NEGATIVE BATTERY CABLE DISCONNECTION/CONNECTION [SKYACTIV-G 2.0 (WITHOUT i-stop)].) • Switch the ignition ON (engine off). • Measure the voltage at DLC-2 terminals F and E. • Is the voltage between 1.5 — 3.5 V?	Yes	Replace the 4WD control module because there is a short to the power supply in the 4WD control module. (See 03-18-4 4WD CONTROL MODULE REMOVAL/ INSTALLATION.)
		No	Repair or replace the wiring harness between the 4WD control module and connectors C-49 and C-50 because the wiring harness is shorted to the power supply.
8	**INSPECT CAN LINE BETWEEN CONNECTOR C-10 AND INSTRUMENT CLUSTER FOR SHORT TO POWER SUPPLY** • Switch the ignition off (LOCK). • Disconnect the negative battery cable. (See 01-17A-11 NEGATIVE BATTERY CABLE DISCONNECTION/CONNECTION [SKYACTIV-G 2.0].) (See 01-17A-13 NEGATIVE BATTERY CABLE DISCONNECTION/CONNECTION [SKYACTIV-G 2.0 (WITHOUT i-stop)].) • Disconnect connector C-10. • Connect the negative battery cable. (See 01-17A-11 NEGATIVE BATTERY CABLE DISCONNECTION/CONNECTION [SKYACTIV-G 2.0].) (See 01-17A-13 NEGATIVE BATTERY CABLE DISCONNECTION/CONNECTION [SKYACTIV-G 2.0 (WITHOUT i-stop)].) • Switch the ignition ON (engine off). • Measure the voltage at DLC-2 terminals F and E. • Is the voltage between 1.5 — 3.5 V?	Yes	Repair or replace the wiring harness between connectors C-49 and C-50 and connector C-10 because the wiring harness is shorted to the power supply.
		No	Go to the next step.

ON-BOARD DIAGNOSTIC [SKYACTIV-G 2.0 (R.H.D.)]

Step	Inspection		Action
9	**INSPECT CAN LINE BETWEEN CONNECTOR C-11 AND INSTRUMENT CLUSTER FOR SHORT TO POWER SUPPLY** • Switch the ignition off (LOCK). • Disconnect the negative battery cable. (See 01-17A-11 NEGATIVE BATTERY CABLE DISCONNECTION/CONNECTION [SKYACTIV-G 2.0].) (See 01-17A-13 NEGATIVE BATTERY CABLE DISCONNECTION/CONNECTION [SKYACTIV-G 2.0 (WITHOUT i-stop)].) • Disconnect connector C-11. • Connect the negative battery cable. (See 01-17A-11 NEGATIVE BATTERY CABLE DISCONNECTION/CONNECTION [SKYACTIV-G 2.0].) (See 01-17A-13 NEGATIVE BATTERY CABLE DISCONNECTION/CONNECTION [SKYACTIV-G 2.0 (WITHOUT i-stop)].) • Switch the ignition ON (engine off). • Measure the voltage at DLC-2 terminals F and E. • Is the voltage between 1.5 — 3.5 V?	Yes	Go to the next step.
		No	Go to Step 15.
10	**INSPECT CAN LINE BETWEEN CONNECTOR C-11 AND FORWARD SENSING CAMERA/ LASER SENSOR FOR SHORT TO POWER SUPPLY** • Measure the voltage at forward sensing camera terminals E and C. (with high beam control (HBC) system) • Measure the voltage at laser sensor terminals D and C. (with smart city brake support) • Is the voltage between 1.5 — 3.5 V?	Yes	Repair or replace the wiring harness between connector C-10 and connector C-11 because the wiring harness is shorted to the power supply.
		No	Go to the next step.
11	**INSPECT CAN LINE BETWEEN LASER SENSOR AND CONNECTOR C-42 FOR SHORT TO POWER SUPPLY** • Switch the ignition off (LOCK). • Disconnect the negative battery cable. (See 01-17A-11 NEGATIVE BATTERY CABLE DISCONNECTION/CONNECTION [SKYACTIV-G 2.0].) (See 01-17A-13 NEGATIVE BATTERY CABLE DISCONNECTION/CONNECTION [SKYACTIV-G 2.0 (WITHOUT i-stop)].) • Disconnect connector C-42. • Connect the negative battery cable. (See 01-17A-11 NEGATIVE BATTERY CABLE DISCONNECTION/CONNECTION [SKYACTIV-G 2.0].) (See 01-17A-13 NEGATIVE BATTERY CABLE DISCONNECTION/CONNECTION [SKYACTIV-G 2.0 (WITHOUT i-stop)].) • Switch the ignition ON (engine off). • Measure the voltage at laser sensor terminals D and C. • Is the voltage between 1.5 — 3.5 V?	Yes	Go to Step 13.
		No	Go to the next step.

ON-BOARD DIAGNOSTIC [SKYACTIV-G 2.0 (R.H.D.)]

Step	Inspection		Action
12	**INSPECT LASER SENSOR FOR SHORT TO POWER SUPPLY** • Switch the ignition off (LOCK). • Disconnect the negative battery cable. (See 01-17A-11 NEGATIVE BATTERY CABLE DISCONNECTION/CONNECTION [SKYACTIV-G 2.0].) (See 01-17A-13 NEGATIVE BATTERY CABLE DISCONNECTION/CONNECTION [SKYACTIV-G 2.0 (WITHOUT i-stop)].) • Disconnect the laser sensor connector. • Connect connector C-42. • Connect connector C-11. • Connect the negative battery cable. (See 01-17A-11 NEGATIVE BATTERY CABLE DISCONNECTION/CONNECTION [SKYACTIV-G 2.0].) (See 01-17A-13 NEGATIVE BATTERY CABLE DISCONNECTION/CONNECTION [SKYACTIV-G 2.0 (WITHOUT i-stop)].) • Switch the ignition ON (engine off). • Measure the voltage at DLC-2 terminals F and E. • Is the voltage between 1.5 — 3.5 V?	Yes	Replace the laser sensor because there is a short to the power supply in the laser sensor. (See 04-15-17 LASER SENSOR REMOVAL/ INSTALLATION.)
		No	Repair or replace the wiring harness between the laser sensor and connector C-42 because the wiring harness is shorted to the power supply.
13	**INSPECT CAN LINE BETWEEN FORWARD SENSING CAMERA AND CONNECTOR C-42 FOR SHORT TO POWER SUPPLY** • Measure the voltage at forward sensing camera terminals E and C. • Is the voltage between 1.5 — 3.5 V?	Yes	Repair or replace the wiring harness between connector C-11 and connector C-42 because the wiring harness is shorted to the power supply.
		No	Go to the next step.
14	**INSPECT FORWARD SENSING CAMERA FOR SHORT TO POWER SUPPLY** • Switch the ignition off (LOCK). • Disconnect the negative battery cable. (See 01-17A-11 NEGATIVE BATTERY CABLE DISCONNECTION/CONNECTION [SKYACTIV-G 2.0].) (See 01-17A-13 NEGATIVE BATTERY CABLE DISCONNECTION/CONNECTION [SKYACTIV-G 2.0 (WITHOUT i-stop)].) • Disconnect the forward sensing camera connector. • Connect connector C-42. • Connect connector C-11. • Connect the negative battery cable. (See 01-17A-11 NEGATIVE BATTERY CABLE DISCONNECTION/CONNECTION [SKYACTIV-G 2.0].) (See 01-17A-13 NEGATIVE BATTERY CABLE DISCONNECTION/CONNECTION [SKYACTIV-G 2.0 (WITHOUT i-stop)].) • Switch the ignition ON (engine off). • Measure the voltage at DLC-2 terminals F and E. • Is the voltage between 1.5 — 3.5 V?	Yes	Replace the forward sensing camera because there is a short to the power supply in the forward sensing camera. (See 09-18-94 FORWARD SENSING CAMERA (FSC) REMOVAL/INSTALLATION.)
		No	Repair or replace the wiring harness between the forward sensing camera and connector C-42 because the wiring harness is shorted to the power supply.

ON-BOARD DIAGNOSTIC [SKYACTIV-G 2.0 (R.H.D.)]

Step	Inspection		Action
15	**INSPECT CAN LINE BETWEEN CONNECTOR C-51, C-52 AND INSTRUMENT CLUSTER FOR SHORT TO POWER SUPPLY** • Switch the ignition off (LOCK). • Disconnect the negative battery cable. • Disconnect connector C-51, C-52. • Connect the negative battery cable. (See 01-17A-11 NEGATIVE BATTERY CABLE DISCONNECTION/CONNECTION [SKYACTIV-G 2.0].) (See 01-17A-13 NEGATIVE BATTERY CABLE DISCONNECTION/CONNECTION [SKYACTIV-G 2.0 (WITHOUT i-stop)].) • Switch the ignition ON (engine off). • Measure the voltage at DLC-2 terminals F and E. • Is the voltage between 1.5 — 3.5 V?	Yes	Go to Step 23.
		No	Go to the next step.
16	**INSPECT CAN LINE BETWEEN CONNECTOR C-34 AND DLC-2 FOR SHORT TO POWER SUPPLY** • Switch the ignition off (LOCK). • Disconnect the negative battery cable. (See 01-17A-11 NEGATIVE BATTERY CABLE DISCONNECTION/CONNECTION [SKYACTIV-G 2.0].) (See 01-17A-13 NEGATIVE BATTERY CABLE DISCONNECTION/CONNECTION [SKYACTIV-G 2.0 (WITHOUT i-stop)].) • Disconnect connector C-34. • Connect the negative battery cable. (See 01-17A-11 NEGATIVE BATTERY CABLE DISCONNECTION/CONNECTION [SKYACTIV-G 2.0].) (See 01-17A-13 NEGATIVE BATTERY CABLE DISCONNECTION/CONNECTION [SKYACTIV-G 2.0 (WITHOUT i-stop)].) • Switch the ignition ON (engine off). • Measure the voltage at DLC-2 terminals F and E. • Is the voltage 0 V?	Yes	Go to the next step.
		No	Repair or replace the wiring harness between connector C-34 and DLC-2 because the wiring harness is shorted to the power supply.
17	**INSPECT CAN LINE BETWEEN START STOP UNIT AND CONNECTOR C-34 FOR SHORT TO POWER SUPPLY** • Measure the voltage at start stop unit terminals 2M and 2O. • Is the voltage between 1.5 — 3.5 V?	Yes	Go to Step 19.
		No	Go to the next step.

ON-BOARD DIAGNOSTIC [SKYACTIV-G 2.0 (R.H.D.)]

Step	Inspection		Action
18	**INSPECT START STOP UNIT FOR SHORT TO POWER SUPPLY** • Switch the ignition off (LOCK). • Disconnect the negative battery cable. (See 01-17A-11 NEGATIVE BATTERY CABLE DISCONNECTION/CONNECTION [SKYACTIV-G 2.0].) (See 01-17A-13 NEGATIVE BATTERY CABLE DISCONNECTION/CONNECTION [SKYACTIV-G 2.0 (WITHOUT i-stop)].) • Connect connector C-34. • Disconnect the start stop unit connector. • Connect the negative battery cable. (See 01-17A-11 NEGATIVE BATTERY CABLE DISCONNECTION/CONNECTION [SKYACTIV-G 2.0].) (See 01-17A-13 NEGATIVE BATTERY CABLE DISCONNECTION/CONNECTION [SKYACTIV-G 2.0 (WITHOUT i-stop)].) • Switch the ignition ON (engine off). • Measure the voltage at DLC-2 terminals F and E. • Is the voltage between 1.5 — 3.5 V?	Yes	Replace the start stop unit because there is a short to the power supply in the start stop unit. (See 09-14-54 START STOP UNIT REMOVAL/ INSTALLATION.)
		No	Repair or replace the wiring harness between the start stop unit and connector C-34 because the wiring harness is shorted to the power supply.
19	**INSPECT CAN LINE BETWEEN EPS CONTROL MODULE AND CONNECTOR C-34 FOR SHORT TO POWER SUPPLY** • Measure the voltage at EPS control module terminals 2A and 2D. • Is the voltage between 1.5 — 3.5 V?	Yes	Go to Step 21.
		No	Go to the next step.
20	**INSPECT EPS CONTROL MODULE FOR SHORT TO POWER SUPPLY** • Switch the ignition off (LOCK). • Disconnect the negative battery cable. (See 01-17A-11 NEGATIVE BATTERY CABLE DISCONNECTION/CONNECTION [SKYACTIV-G 2.0].) (See 01-17A-13 NEGATIVE BATTERY CABLE DISCONNECTION/CONNECTION [SKYACTIV-G 2.0 (WITHOUT i-stop)].) • Connect connector C-34. • Disconnect the EPS control module connector. • Connect the negative battery cable. (See 01-17A-11 NEGATIVE BATTERY CABLE DISCONNECTION/CONNECTION [SKYACTIV-G 2.0].) (See 01-17A-13 NEGATIVE BATTERY CABLE DISCONNECTION/CONNECTION [SKYACTIV-G 2.0 (WITHOUT i-stop)].) • Switch the ignition ON (engine off). • Measure the voltage at DLC-2 terminals F and E. • Is the voltage between 1.5 — 3.5 V?	Yes	Replace the EPS control module because there is a short to the power supply in the EPS control module. (See 06-13-4 STEERING WHEEL AND COLUMN REMOVAL/INSTALLATION.)
		No	Repair or replace the wiring harness between the EPS control module and connector C-34 because the wiring harness is shorted to the power supply.
21	**INSPECT CAN LINE BETWEEN INSTRUMENT CLUSTER AND CONNECTOR C-34 FOR SHORT TO POWER SUPPLY** • Measure the voltage at instrument cluster terminals B and D. • Is the voltage between 1.5 — 3.5 V?	Yes	Repair or replace the wiring harness between connector C-51, C-52 and connector C-34 because the wiring harness is shorted to the power supply.
		No	Go to the next step.

ON-BOARD DIAGNOSTIC [SKYACTIV-G 2.0 (R.H.D.)]

Step	Inspection		Action
22	**INSPECT INSTRUMENT CLUSTER FOR SHORT TO POWER SUPPLY** • Switch the ignition off (LOCK). • Disconnect the negative battery cable. (See 01-17A-11 NEGATIVE BATTERY CABLE DISCONNECTION/CONNECTION [SKYACTIV-G 2.0].) (See 01-17A-13 NEGATIVE BATTERY CABLE DISCONNECTION/CONNECTION [SKYACTIV-G 2.0 (WITHOUT i-stop)].) • Connect connector C-34. • Disconnect the instrument cluster connector. • Connect the negative battery cable. (See 01-17A-11 NEGATIVE BATTERY CABLE DISCONNECTION/CONNECTION [SKYACTIV-G 2.0].) (See 01-17A-13 NEGATIVE BATTERY CABLE DISCONNECTION/CONNECTION [SKYACTIV-G 2.0 (WITHOUT i-stop)].) • Switch the ignition ON (engine off). • Measure the voltage at DLC-2 terminals F and E. • Is the voltage between 1.5 — 3.5 V?	Yes	Replace the instrument cluster because the instrument cluster is shorted to the power supply. (See 09-22-6 INSTRUMENT CLUSTER REMOVAL/INSTALLATION.)
		No	Repair or replace the wiring harness between the instrument cluster and connector C-34 because the wiring harness is shorted to the power supply.
23	**INSPECT CAN LINE BETWEEN SAS CONTROL MODULE AND CONNECTOR C-51, C-52 FOR SHORT TO POWER SUPPLY** • Switch the ignition off (LOCK). • Disconnect the negative battery cable. (See 01-17A-11 NEGATIVE BATTERY CABLE DISCONNECTION/CONNECTION [SKYACTIV-G 2.0].) (See 01-17A-13 NEGATIVE BATTERY CABLE DISCONNECTION/CONNECTION [SKYACTIV-G 2.0 (WITHOUT i-stop)].) • Disconnect the SAS control module connector. • Connect the negative battery cable. (See 01-17A-11 NEGATIVE BATTERY CABLE DISCONNECTION/CONNECTION [SKYACTIV-G 2.0].) (See 01-17A-13 NEGATIVE BATTERY CABLE DISCONNECTION/CONNECTION [SKYACTIV-G 2.0 (WITHOUT i-stop)].) • Switch the ignition ON (engine off). • Measure the voltage at SAS control module terminals 3K and 3L (wiring harness side). • Is the voltage 0 V?	Yes	Go to the next step.
		No	Repair or replace the wiring harness between the SAS control module and connector C-51, C-52 because the wiring harness is shorted to the power supply.

ON-BOARD DIAGNOSTIC [SKYACTIV-G 2.0 (R.H.D.)]

Step	Inspection		Action
24	**INSPECT CAN LINE BETWEEN CONNECTOR C-11 AND CONNECTOR C-51, C-52 FOR SHORT TO POWER SUPPLY** • Switch the ignition off (LOCK). • Disconnect the negative battery cable. (See 01-17A-11 NEGATIVE BATTERY CABLE DISCONNECTION/CONNECTION [SKYACTIV-G 2.0].) (See 01-17A-13 NEGATIVE BATTERY CABLE DISCONNECTION/CONNECTION [SKYACTIV-G 2.0 (WITHOUT i-stop)].) • Connect connector C-51, C-52. • Connect the negative battery cable. (See 01-17A-11 NEGATIVE BATTERY CABLE DISCONNECTION/CONNECTION [SKYACTIV-G 2.0].) (See 01-17A-13 NEGATIVE BATTERY CABLE DISCONNECTION/CONNECTION [SKYACTIV-G 2.0 (WITHOUT i-stop)].) • Switch the ignition ON (engine off). • Measure the voltage at DLC-2 terminals F and E. • Is the voltage between 1.5 — 3.5 V?	Yes	Replace the SAS control module because there is a short to the power supply in the SAS control module. (See 08-10-20 SAS CONTROL MODULE REMOVAL/INSTALLATION.)
		No	Repair or replace the wiring harness between connector C-11 and connector C-51, C-52 because the wiring harness is shorted to the power supply.
25	**INSPECT CAN LINE BETWEEN PCM AND FRONT BODY CONTROL MODULE (FBCM) FOR SHORT TO POWER SUPPLY** • Measure voltage at PCM terminals 2AK and 2AL. • Is the voltage between 1.5 — 3.5 V?	Yes	Replace the front body control module (FBCM) because there is a short to the power supply in the front body control module (FBCM). (See 09-40-2 FRONT BODY CONTROL MODULE (FBCM) REMOVAL/INSTALLATION.)
		No	Go to the next step.
26	**INSPECT CAN LINE BETWEEN CONNECTOR C-01 AND FRONT BODY CONTROL MODULE (FBCM) FOR SHORT TO POWER SUPPLY** • Switch the ignition off (LOCK). • Disconnect the negative battery cable. (See 01-17A-11 NEGATIVE BATTERY CABLE DISCONNECTION/CONNECTION [SKYACTIV-G 2.0].) (See 01-17A-13 NEGATIVE BATTERY CABLE DISCONNECTION/CONNECTION [SKYACTIV-G 2.0 (WITHOUT i-stop)].) • Disconnect connector C-01. • Connect connector 2 which has front body control module (FBCM) terminals 2K and 2I. • Connect the negative battery cable. (See 01-17A-11 NEGATIVE BATTERY CABLE DISCONNECTION/CONNECTION [SKYACTIV-G 2.0].) (See 01-17A-13 NEGATIVE BATTERY CABLE DISCONNECTION/CONNECTION [SKYACTIV-G 2.0 (WITHOUT i-stop)].) • Switch the ignition ON (engine off). • Measure the voltage at DLC-2 terminals F and E. • Is the voltage between 1.5 — 3.5 V?	Yes	Go to the next step.
		No	Repair or replace the wiring harness between connector C-01 and the front body control module (FBCM) because the wiring harness is shorted to the power supply.
27	**INSPECT CAN LINE BETWEEN TCM AND CONNECTOR C-01 FOR SHORT TO POWER SUPPLY** • Measure the voltage at TCM terminals E and F. • Is the voltage between 1.5 — 3.5 V?	Yes	Go to Step 29.
		No	Go to the next step.

ON-BOARD DIAGNOSTIC [SKYACTIV-G 2.0 (R.H.D.)]

Step	Inspection		Action
28	**INSPECT TCM FOR SHORT TO POWER SUPPLY** • Switch the ignition off (LOCK). • Disconnect the negative battery cable. (See 01-17A-11 NEGATIVE BATTERY CABLE DISCONNECTION/CONNECTION [SKYACTIV-G 2.0].) (See 01-17A-13 NEGATIVE BATTERY CABLE DISCONNECTION/CONNECTION [SKYACTIV-G 2.0 (WITHOUT i-stop)].) • Connect connector C-01. • Disconnect the TCM connector. • Connect the negative battery cable. (See 01-17A-11 NEGATIVE BATTERY CABLE DISCONNECTION/CONNECTION [SKYACTIV-G 2.0].) (See 01-17A-13 NEGATIVE BATTERY CABLE DISCONNECTION/CONNECTION [SKYACTIV-G 2.0 (WITHOUT i-stop)].) • Switch the ignition ON (engine off). • Measure the voltage at DLC-2 terminals F and E. • Is the voltage between 1.5 — 3.5 V?	Yes	Replace the TCM because there is a short to the power supply in the TCM. (See 05-17A-67 CONTROL VALVE BODY REMOVAL/ INSTALLATION [FW6A-EL, FW6AX-EL].)
		No	Repair or replace the wiring harness between the TCM and connector C-01 because the wiring harness is shorted to the power supply.
29	**INSPECT CAN LINE BETWEEN CONNECTOR C-32 AND CONNECTOR C-01 FOR SHORT TO POWER SUPPLY** • Switch the ignition off (LOCK). • Disconnect the negative battery cable. (See 01-17A-11 NEGATIVE BATTERY CABLE DISCONNECTION/CONNECTION [SKYACTIV-G 2.0].) (See 01-17A-13 NEGATIVE BATTERY CABLE DISCONNECTION/CONNECTION [SKYACTIV-G 2.0 (WITHOUT i-stop)].) • Connect connector C-01. • Disconnect connector C-32. • Connect the negative battery cable. (See 01-17A-11 NEGATIVE BATTERY CABLE DISCONNECTION/CONNECTION [SKYACTIV-G 2.0].) (See 01-17A-13 NEGATIVE BATTERY CABLE DISCONNECTION/CONNECTION [SKYACTIV-G 2.0 (WITHOUT i-stop)].) • Switch the ignition ON (engine off). • Measure the voltage at DLC-2 terminals F and E. • Is the voltage between 1.5 — 3.5 V?	Yes	Go to the next step.
		No	Repair or replace the wiring harness between connector C-32 and connector C-01 because the wiring harness is shorted to the power supply.
30	**INSPECT CAN LINE BETWEEN DSC HU/CM AND CONNECTOR C-32 FOR SHORT TO POWER SUPPLY** • Measure voltage at DSC HU/CM terminals AF and AC. • Is the voltage between 1.5 — 3.5 V?	Yes	Go to Step 32.
		No	Go to the next step.

ON-BOARD DIAGNOSTIC [SKYACTIV-G 2.0 (R.H.D.)]

Step	Inspection		Action
31	**INSPECT DSC HU/CM FOR SHORT TO POWER SUPPLY** • Switch the ignition off (LOCK). • Disconnect the negative battery cable. (See 01-17A-11 NEGATIVE BATTERY CABLE DISCONNECTION/CONNECTION [SKYACTIV-G 2.0].) (See 01-17A-13 NEGATIVE BATTERY CABLE DISCONNECTION/CONNECTION [SKYACTIV-G 2.0 (WITHOUT i-stop)].) • Connect connector C-32. • Disconnect the DSC HU/CM connector. • Connect the negative battery cable. (See 01-17A-11 NEGATIVE BATTERY CABLE DISCONNECTION/CONNECTION [SKYACTIV-G 2.0].) (See 01-17A-13 NEGATIVE BATTERY CABLE DISCONNECTION/CONNECTION [SKYACTIV-G 2.0 (WITHOUT i-stop)].) • Switch the ignition ON (engine off). • Measure the voltage at DLC-2 terminals F and E. • Is the voltage between 1.5 — 3.5 V?	Yes	Replace the DSC HU/CM because the DSC HU/CM is shorted to the power supply. (See 04-15-4 DSC HU/CM REMOVAL/INSTALLATION.)
		No	Repair or replace the wiring harness between the DSC HU/CM and connector C-32 because the wiring harness is shorted to the power supply.
32	**INSPECT PCM FOR SHORT TO POWER SUPPLY** • Switch the ignition off (LOCK). • Disconnect the negative battery cable. (See 01-17A-11 NEGATIVE BATTERY CABLE DISCONNECTION/CONNECTION [SKYACTIV-G 2.0].) (See 01-17A-13 NEGATIVE BATTERY CABLE DISCONNECTION/CONNECTION [SKYACTIV-G 2.0 (WITHOUT i-stop)].) • Connect connector C-32. • Disconnect the PCM connector. • Connect the negative battery cable. (See 01-17A-11 NEGATIVE BATTERY CABLE DISCONNECTION/CONNECTION [SKYACTIV-G 2.0].) (See 01-17A-13 NEGATIVE BATTERY CABLE DISCONNECTION/CONNECTION [SKYACTIV-G 2.0 (WITHOUT i-stop)].) • Switch the ignition ON (engine off). • Measure the voltage at DLC-2 terminals F and E. • Is the voltage between 1.5 — 3.5 V?	Yes	Replace the PCM because there is a short to the power supply in the PCM. (See 01-40-10 PCM REMOVAL/INSTALLATION [SKYACTIV-G 2.0].)
		No	Repair or replace the wiring harness between the PCM and connector C-32 because the wiring harness is shorted to the power supply.

DETERMINING SHORT BETWEEN CIRCUITS LOCATION (HS-CAN) [SKYACTIV-G 2.0 (R.H.D.)]

id100202000800

Caution

- **Perform the following malfunction diagnosis only when it is diagnosed with a short between circuits by 10-02B-3 CONTROLLER AREA NETWORK (CAN) MALFUNCTION DIAGNOSIS FLOW [SKYACTIV-G 2.0 (R.H.D.)].**

ON-BOARD DIAGNOSTIC [SKYACTIV-G 2.0 (R.H.D.)]

System wiring diagram

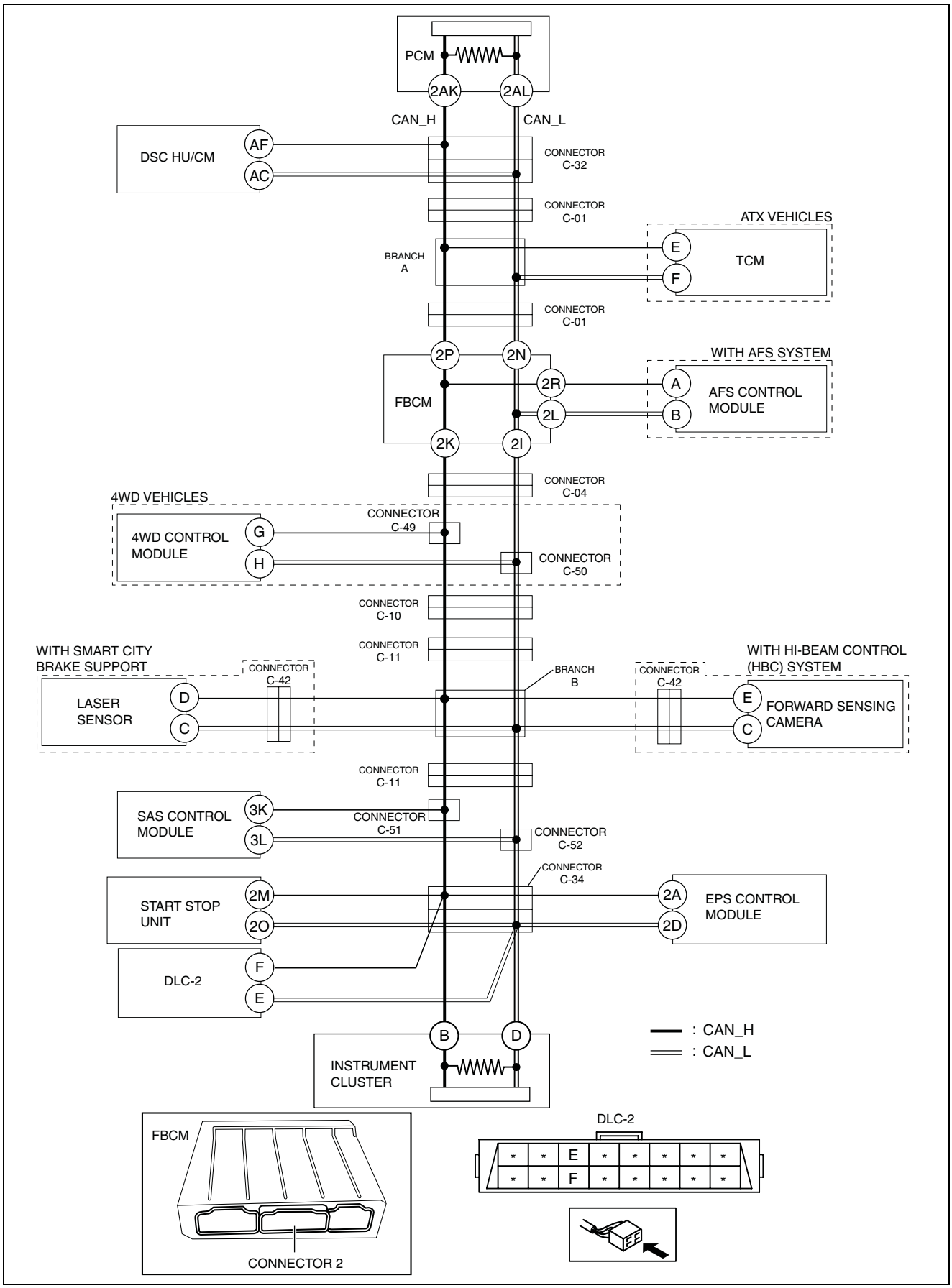

ac5wzw0000457

ON-BOARD DIAGNOSTIC [SKYACTIV-G 2.0 (R.H.D.)]

Determination procedure

Caution
- **When disconnecting the connector, verify that there is no looseness, damage, deformation, corrosion, or poor connection of the connector terminals.**
- **When inspecting the DLC-2, touch it with a paper clip or similar thin pin without directly inserting a tester into the terminals.**

Step	Inspection		Action
1	**INSPECT BETWEEN FRONT BODY CONTROL MODULE (FBCM) AND INSTRUMENT CLUSTER FOR SHORT BETWEEN CIRCUITS** • Disconnect the negative battery cable. (See 01-17A-11 NEGATIVE BATTERY CABLE DISCONNECTION/CONNECTION [SKYACTIV-G 2.0].) (See 01-17A-13 NEGATIVE BATTERY CABLE DISCONNECTION/CONNECTION [SKYACTIV-G 2.0 (WITHOUT i-stop)].) • Disconnect connector 2 which has front body control module (FBCM) terminals 2K and 2I • Connect the negative battery cable. (See 01-17A-11 NEGATIVE BATTERY CABLE DISCONNECTION/CONNECTION [SKYACTIV-G 2.0].) (See 01-17A-13 NEGATIVE BATTERY CABLE DISCONNECTION/CONNECTION [SKYACTIV-G 2.0 (WITHOUT i-stop)].) • Switch the ignition ON (engine off). • Measure the voltage at DLC-2 terminals F and E. • Is the voltage at DLC-2 terminals F and E the same?	Yes	Go to Step 5.
		No	Go to the next step.
2	**INSPECT FRONT BODY CONTROL MODULE (FBCM) FOR SHORT BETWEEN CIRCUITS** • Switch the ignition off (LOCK). • Disconnect the negative battery cable. (See 01-17A-11 NEGATIVE BATTERY CABLE DISCONNECTION/CONNECTION [SKYACTIV-G 2.0].) (See 01-17A-13 NEGATIVE BATTERY CABLE DISCONNECTION/CONNECTION [SKYACTIV-G 2.0 (WITHOUT i-stop)].) • Inspect for continuity between front body control module (FBCM) terminals 2K and 2I. • Is there continuity?	Yes	Replace the front body control module (FBCM) because there is a short between circuits in the front body control module (FBCM). (See 09-40-2 FRONT BODY CONTROL MODULE (FBCM) REMOVAL/INSTALLATION.)
		No	Go to the next step.
3	**INSPECT BETWEEN AFS CONTROL MODULE AND FRONT BODY CONTROL MODULE (FBCM) FOR SHORT BETWEEN CIRCUITS** • Inspect for continuity between AFS control module terminals A and B. • Is there continuity?	Yes	Go to the next step.
		No	Go to Step 26.
4	**INSPECT AFS CONTROL MODULE FOR SHORT BETWEEN CIRCUITS** • Disconnect the AFS control module connector. • Inspect for continuity between AFS control module terminals A and B (wiring harness side). • Is there continuity?	Yes	Repair or replace the wiring harness between the AFS control module and front body control module (FBCM) because the wiring harness is shorted between circuits.
		No	Replace the AFS control module because there is a short between circuits in the AFS control module. (See 09-18-30 ADAPTIVE FRONT LIGHTING SYSTEM (AFS) CONTROL MODULE REMOVAL/INSTALLATION.)

ON-BOARD DIAGNOSTIC [SKYACTIV-G 2.0 (R.H.D.)]

Step	Inspection		Action
5	**INSPECT BETWEEN CONNECTOR C-04 AND INSTRUMENT CLUSTER FOR SHORT BETWEEN CIRCUITS** • Switch the ignition off (LOCK). • Disconnect the negative battery cable. (See 01-17A-11 NEGATIVE BATTERY CABLE DISCONNECTION/CONNECTION [SKYACTIV-G 2.0].) (See 01-17A-13 NEGATIVE BATTERY CABLE DISCONNECTION/CONNECTION [SKYACTIV-G 2.0 (WITHOUT i-stop)].) • Disconnect connector C-04. • Connect the negative battery cable. (See 01-17A-11 NEGATIVE BATTERY CABLE DISCONNECTION/CONNECTION [SKYACTIV-G 2.0].) (See 01-17A-13 NEGATIVE BATTERY CABLE DISCONNECTION/CONNECTION [SKYACTIV-G 2.0 (WITHOUT i-stop)].) • Switch the ignition ON (engine off). • Measure the voltage at DLC-2 terminals F and E. • Is the voltage at DLC-2 terminals F and E the same?	Yes	Go to the next step.
		No	Repair or replace the wiring harness between the front body control module (FBCM) and connector C-04 because the wiring harness is shorted between circuits.
6	**INSPECT BETWEEN CONNECTORS C-49 AND C-50 AND INSTRUMENT CLUSTER FOR SHORT BETWEEN CIRCUITS** • Switch the ignition off (LOCK). • Disconnect the negative battery cable. (See 01-17A-11 NEGATIVE BATTERY CABLE DISCONNECTION/CONNECTION [SKYACTIV-G 2.0].) (See 01-17A-13 NEGATIVE BATTERY CABLE DISCONNECTION/CONNECTION [SKYACTIV-G 2.0 (WITHOUT i-stop)].) • Disconnect connectors C-49 and C-50. • Connect the negative battery cable. (See 01-17A-11 NEGATIVE BATTERY CABLE DISCONNECTION/CONNECTION [SKYACTIV-G 2.0].) (See 01-17A-13 NEGATIVE BATTERY CABLE DISCONNECTION/CONNECTION [SKYACTIV-G 2.0 (WITHOUT i-stop)].) • Switch the ignition ON (engine off). • Measure the voltage at DLC-2 terminals F and E. • Is the voltage at DLC-2 terminals F and E the same?	Yes	Go to Step 9.
		No	Go to the next step.
7	**INSPECT BETWEEN 4WD CONTROL MODULE AND CONNECTORS C-49 AND C-50 FOR SHORT BETWEEN CIRCUITS** • Switch the ignition off (LOCK). • Disconnect the negative battery cable. (See 01-17A-11 NEGATIVE BATTERY CABLE DISCONNECTION/CONNECTION [SKYACTIV-G 2.0].) (See 01-17A-13 NEGATIVE BATTERY CABLE DISCONNECTION/CONNECTION [SKYACTIV-G 2.0 (WITHOUT i-stop)].) • Inspect for continuity between 4WD control module terminals G and H. • Is there continuity?	Yes	Go to the next step.
		No	Repair or replace the wiring harness between connector C-04 and connectors C-49 and C-50 because the wiring harness is shorted between circuits.

ON-BOARD DIAGNOSTIC [SKYACTIV-G 2.0 (R.H.D.)]

Step	Inspection		Action
8	**INSPECT 4WD CONTROL MODULE FOR SHORT BETWEEN CIRCUITS** • Disconnect the 4WD control module connector. • Inspect for continuity between 4WD control module terminals G and H (wiring harness side). • Is there continuity?	Yes	Repair or replace the wiring harness between the 4WD control module and connectors C-49 and C-50 because the wiring harness is shorted between circuits.
		No	Replace the 4WD control module because there is a short between circuits in the 4WD control module. (See 03-18-4 4WD CONTROL MODULE REMOVAL/ INSTALLATION.)
9	**INSPECT BETWEEN CONNECTOR C-10 AND INSTRUMENT CLUSTER FOR SHORT BETWEEN CIRCUITS** • Switch the ignition off (LOCK). • Disconnect the negative battery cable. (See 01-17A-11 NEGATIVE BATTERY CABLE DISCONNECTION/CONNECTION [SKYACTIV-G 2.0].) (See 01-17A-13 NEGATIVE BATTERY CABLE DISCONNECTION/CONNECTION [SKYACTIV-G 2.0 (WITHOUT i-stop)].) • Disconnect connector C-10. • Connect the negative battery cable. (See 01-17A-11 NEGATIVE BATTERY CABLE DISCONNECTION/CONNECTION [SKYACTIV-G 2.0].) (See 01-17A-13 NEGATIVE BATTERY CABLE DISCONNECTION/CONNECTION [SKYACTIV-G 2.0 (WITHOUT i-stop)].) • Switch the ignition ON (engine off). • Measure the voltage at DLC-2 terminals F and E. • Is the voltage at DLC-2 terminals F and E the same?	Yes	Go to the next step.
		No	Repair or replace the wiring harness between connectors C-49 and C-50 and connector C-10 because the wiring harness is shorted between circuits.
10	**INSPECT BETWEEN CONNECTOR C-11 AND INSTRUMENT CLUSTER FOR SHORT BETWEEN CIRCUITS** • Switch the ignition off (LOCK). • Disconnect the negative battery cable. (See 01-17A-11 NEGATIVE BATTERY CABLE DISCONNECTION/CONNECTION [SKYACTIV-G 2.0].) (See 01-17A-13 NEGATIVE BATTERY CABLE DISCONNECTION/CONNECTION [SKYACTIV-G 2.0 (WITHOUT i-stop)].) • Disconnect connector C-11. • Connect the negative battery cable. (See 01-17A-11 NEGATIVE BATTERY CABLE DISCONNECTION/CONNECTION [SKYACTIV-G 2.0].) (See 01-17A-13 NEGATIVE BATTERY CABLE DISCONNECTION/CONNECTION [SKYACTIV-G 2.0 (WITHOUT i-stop)].) • Switch the ignition ON (engine off). • Measure the voltage at DLC-2 terminals F and E. • Is the voltage at DLC-2 terminals F and E the same?	Yes	Go to Step 16.
		No	Go to the next step.

ON-BOARD DIAGNOSTIC [SKYACTIV-G 2.0 (R.H.D.)]

Step	Inspection		Action
11	**INSPECT BETWEEN CONNECTOR C-11 AND FORWARD SENSING CAMERA/LASER SENSOR FOR SHORT BETWEEN CIRCUITS** • Switch the ignition off (LOCK). • Disconnect the negative battery cable. (See 01-17A-11 NEGATIVE BATTERY CABLE DISCONNECTION/CONNECTION [SKYACTIV-G 2.0].) (See 01-17A-13 NEGATIVE BATTERY CABLE DISCONNECTION/CONNECTION [SKYACTIV-G 2.0 (WITHOUT i-stop)].) • Inspect for continuity between forward sensing camera terminals E and C. (With high beam control (HBC) system) • Inspect for continuity between laser sensor terminals D and C. (With smart city brake support) • Is there continuity?	Yes	Go to the next step.
		No	Repair or replace the wiring harness between connector C-11 and connector C-10 because the wiring harness is shorted between circuits.
12	**INSPECT BETWEEN LASER SENSOR AND CONNECTOR C-42 FOR SHORT BETWEEN CIRCUITS** • Disconnect connector C-42. • Inspect for continuity between laser sensor terminals D and C. • Is there continuity?	Yes	Go to the next step.
		No	Go to Step 14.
13	**INSPECT LASER SENSOR FOR SHORT BETWEEN CIRCUITS** • Disconnect the laser sensor connector. • Inspect for continuity between laser sensor terminals D and C (wiring harness side). • Is there continuity?	Yes	Repair or replace the wiring harness between the laser sensor and connector C-42 because the wiring harness is shorted between circuits.
		No	Replace the laser sensor because there is a short between circuits in the laser sensor. (See 04-15-17 LASER SENSOR REMOVAL/INSTALLATION.)
14	**INSPECT BETWEEN FORWARD SENSING CAMERA AND CONNECTOR C-42 FOR SHORT BETWEEN CIRCUITS** • Inspect for continuity between forward sensing camera terminals E and C. • Is there continuity?	Yes	Go to the next step.
		No	Repair or replace the wiring harness between connector C-11 and connector C-42 because the wiring harness is shorted between circuits.
15	**INSPECT FORWARD SENSING CAMERA FOR SHORT BETWEEN CIRCUITS** • Disconnect the forward sensing camera connector. • Inspect for continuity between forward sensing camera terminals E and C (wiring harness side). • Is there continuity?	Yes	Repair or replace the wiring harness between the forward sensing camera and connector C-42 because the wiring harness is shorted between circuits.
		No	Replace the forward sensing camera because there is a short between circuits in the forward sensing camera. (See 09-18-94 FORWARD SENSING CAMERA (FSC) REMOVAL/INSTALLATION.)

ON-BOARD DIAGNOSTIC [SKYACTIV-G 2.0 (R.H.D.)]

Step	Inspection		Action
16	**INSPECT BETWEEN CONNECTOR C-51, C-52 AND INSTRUMENT CLUSTER FOR SHORT BETWEEN CIRCUITS** • Switch the ignition off (LOCK). • Disconnect the negative battery cable. (See 01-17A-11 NEGATIVE BATTERY CABLE DISCONNECTION/CONNECTION [SKYACTIV-G 2.0].) (See 01-17A-13 NEGATIVE BATTERY CABLE DISCONNECTION/CONNECTION [SKYACTIV-G 2.0 (WITHOUT i-stop)].) • Disconnect connector C-51, C-52. • Connect the negative battery cable. (See 01-17A-11 NEGATIVE BATTERY CABLE DISCONNECTION/CONNECTION [SKYACTIV-G 2.0].) (See 01-17A-13 NEGATIVE BATTERY CABLE DISCONNECTION/CONNECTION [SKYACTIV-G 2.0 (WITHOUT i-stop)].) • Switch the ignition ON (engine off). • Measure the voltage at DLC-2 terminals F and E. • Is the voltage at DLC-2 terminals F and E the same?	Yes	Go to Step 19.
		No	Go to the next step.
17	**INSPECT BETWEEN SAS CONTROL MODULE AND CONNECTOR C-51, C-52 FOR SHORT BETWEEN CIRCUITS** • Switch the ignition off (LOCK). • Disconnect the negative battery cable. (See 01-17A-11 NEGATIVE BATTERY CABLE DISCONNECTION/CONNECTION [SKYACTIV-G 2.0].) (See 01-17A-13 NEGATIVE BATTERY CABLE DISCONNECTION/CONNECTION [SKYACTIV-G 2.0 (WITHOUT i-stop)].) • Inspect for continuity between SAS control module terminals 3K and 3L. • Is there continuity?	Yes	Go to the next step.
		No	Repair or replace the wiring harness between connector C-11 and connector C-51, C-52 because the wiring harness is shorted between circuits.
18	**INSPECT SAS CONTROL MODULE FOR SHORT BETWEEN CIRCUITS** • Disconnect the SAS control module connector. • Is there continuity between SAS control module terminals 3K and 3L (wiring harness side)? • Is there continuity?	Yes	Repair or replace the wiring harness between the SAS control module and connector C-51, C-52 because the wiring harness is shorted between circuits.
		No	Replace the SAS control module because there is a short between circuits in the SAS control module. (See 08-10-20 SAS CONTROL MODULE REMOVAL/INSTALLATION.)
19	**INSPECT BETWEEN DLC-2 AND CONNECTOR C-34 FOR SHORT BETWEEN CIRCUITS** • Switch the ignition off (LOCK). • Disconnect the negative battery cable. (See 01-17A-11 NEGATIVE BATTERY CABLE DISCONNECTION/CONNECTION [SKYACTIV-G 2.0].) (See 01-17A-13 NEGATIVE BATTERY CABLE DISCONNECTION/CONNECTION [SKYACTIV-G 2.0 (WITHOUT i-stop)].) • Disconnect connector C-34. • Inspect for continuity between DLC-2 terminals F and E. • Is there continuity?	Yes	Repair or replace the wiring harness between DLC-2 and connector C-34 because the wiring harness is shorted between circuits.
		No	Go to the next step.
20	**INSPECT BETWEEN START STOP UNIT AND CONNECTOR C-34 FOR SHORT BETWEEN CIRCUITS** • Inspect for continuity between start stop unit terminals 2M and 2O. • Is there continuity?	Yes	Go to the next step.
		No	Go to Step 22.

ON-BOARD DIAGNOSTIC [SKYACTIV-G 2.0 (R.H.D.)]

Step	Inspection		Action
21	**INSPECT START STOP UNIT FOR SHORT BETWEEN CIRCUITS** • Disconnect the start stop unit connector. • Is there continuity between start stop unit terminals 2M and 2O (wiring harness side)? • Is there continuity?	Yes	Repair or replace the wiring harness between the start stop unit and connector C-34 because the wiring harness is shorted between circuits.
		No	Replace the start stop unit because there is a short between circuits in the start stop unit. (See 09-14-54 START STOP UNIT REMOVAL/INSTALLATION.)
22	**INSPECT BETWEEN EPS CONTROL MODULE AND CONNECTOR C-34 FOR SHORT BETWEEN CIRCUITS** • Inspect for continuity between EPS control module terminals 2A and 2D. • Is there continuity?	Yes	Go to the next step.
		No	Go to Step 24.
23	**INSPECT EPS CONTROL MODULE FOR SHORT BETWEEN CIRCUITS** • Disconnect the EPS control module connector. • Is there continuity between EPS control module terminals 2A and 2D (wiring harness side)? • Is there continuity?	Yes	Repair or replace the wiring harness between the EPS control module and connector C-34 because the wiring harness is shorted between circuits.
		No	Replace the EPS control module because there is a short between circuits in the EPS control module. (See 06-13-4 STEERING WHEEL AND COLUMN REMOVAL/INSTALLATION.)
24	**INSPECT BETWEEN INSTRUMENT CLUSTER AND CONNECTOR C-34 FOR SHORT BETWEEN CIRCUITS** • Inspect for continuity between instrument cluster terminals B and D. • Is there continuity?	Yes	Go to the next step.
		No	Repair or replace the wiring harness between connector C-51, C-52 and connector C-34 because the wiring harness is shorted between circuits.
25	**INSPECT INSTRUMENT CLUSTER FOR SHORT BETWEEN CIRCUITS** • Disconnect the instrument cluster connector. • Is there continuity between instrument cluster terminals B and D (wiring harness side)? • Is there continuity?	Yes	Repair or replace the wiring harness between the instrument cluster and connector C-34 because the wiring harness is shorted between circuits.
		No	Replace the instrument cluster because there is a short between circuits in the instrument cluster. (See 09-22-6 INSTRUMENT CLUSTER REMOVAL/INSTALLATION.)
26	**INSPECT BETWEEN CONNECTOR C-01 AND front body control module (FBCM) FOR SHORT BETWEEN CIRCUITS** • Switch the ignition off (LOCK). • Disconnect the negative battery cable. (See 01-17A-11 NEGATIVE BATTERY CABLE DISCONNECTION/CONNECTION [SKYACTIV-G 2.0].) (See 01-17A-13 NEGATIVE BATTERY CABLE DISCONNECTION/CONNECTION [SKYACTIV-G 2.0 (WITHOUT i-stop)].) • Connect connector 2 which has front body control module (FBCM) terminals 2K and 2I. • Disconnect connector C-01. • Connect the negative battery cable. (See 01-17A-11 NEGATIVE BATTERY CABLE DISCONNECTION/CONNECTION [SKYACTIV-G 2.0].) (See 01-17A-13 NEGATIVE BATTERY CABLE DISCONNECTION/CONNECTION [SKYACTIV-G 2.0 (WITHOUT i-stop)].) • Switch the ignition ON (engine off). • Measure the voltage at DLC-2 terminals F and E. • Is the voltage at DLC-2 terminals F and E the same?	Yes	Repair or replace the wiring harness between connector C-01 and the front body control module (FBCM) because the wiring harness is shorted between circuits.
		No	Go to the next step.

ON-BOARD DIAGNOSTIC [SKYACTIV-G 2.0 (R.H.D.)]

Step	Inspection		Action
27	**INSPECT BETWEEN TCM AND CONNECTOR C-01 FOR SHORT BETWEEN CIRCUITS** • Switch the ignition off (LOCK). • Disconnect the negative battery cable. (See 01-17A-11 NEGATIVE BATTERY CABLE DISCONNECTION/CONNECTION [SKYACTIV-G 2.0].) (See 01-17A-13 NEGATIVE BATTERY CABLE DISCONNECTION/CONNECTION [SKYACTIV-G 2.0 (WITHOUT i-stop)].) • Inspect for continuity between TCM terminals E and F. • Is there continuity?	Yes	Go to the next step.
		No	Go to Step 29.
28	**INSPECT TCM FOR SHORT BETWEEN CIRCUITS** • Disconnect the TCM connector. • Inspect for continuity between TCM terminals E and F (wiring harness side). • Is there continuity?	Yes	Repair or replace the wiring harness between the TCM and connector C-01 because the wiring harness is shorted between circuits.
		No	Replace the TCM because there is a short between circuits in the TCM. (See 05-17A-67 CONTROL VALVE BODY REMOVAL/INSTALLATION [FW6A-EL, FW6AX-EL].)
29	**INSPECT BETWEEN CONNECTORS C-32 AND C-01 FOR SHORT BETWEEN CIRCUITS** • Connect connector C-01. • Disconnect connector C-32. • Connect the negative battery cable. (See 01-17A-11 NEGATIVE BATTERY CABLE DISCONNECTION/CONNECTION [SKYACTIV-G 2.0].) (See 01-17A-13 NEGATIVE BATTERY CABLE DISCONNECTION/CONNECTION [SKYACTIV-G 2.0 (WITHOUT i-stop)].) • Switch the ignition ON (engine off). • Measure the voltage at DLC-2 terminals F and E. • Is the voltage at DLC-2 terminals F and E the same?	Yes	Repair or replace the wiring harness between connector C-32 and connector C-01 because the wiring harness is shorted between circuits.
		No	Go to the next step.
30	**INSPECT BETWEEN DSC HU/CM AND CONNECTOR C-32 FOR SHORT BETWEEN CIRCUITS** • Switch the ignition off (LOCK). • Disconnect the negative battery cable. (See 01-17A-11 NEGATIVE BATTERY CABLE DISCONNECTION/CONNECTION [SKYACTIV-G 2.0].) (See 01-17A-13 NEGATIVE BATTERY CABLE DISCONNECTION/CONNECTION [SKYACTIV-G 2.0 (WITHOUT i-stop)].) • Inspect for continuity between DSC HU/CM terminals AF and AC. • Is there continuity?	Yes	Go to the next step.
		No	Go to Step 32.
31	**INSPECT DSC HU/CM FOR SHORT BETWEEN CIRCUITS** • Disconnect the DSC HU/CM connector. • Inspect for continuity between DSC HU/CM terminals AF and AC (wiring harness side). • Is there continuity?	Yes	Repair or replace the wiring harness between the DSC HU/CM and connector C-32 because the wiring harness is shorted between circuits.
		No	Replace the DSC HU/CM because there is a short between circuits in the DSC HU/CM. (See 04-15-4 DSC HU/CM REMOVAL/INSTALLATION.)
32	**INSPECT PCM FOR SHORT BETWEEN CIRCUITS** • Disconnect the PCM connector. • Inspect for continuity between PCM terminals 2AK and 2AL (wiring harness side). • Is there continuity?	Yes	Repair or replace the wiring harness between the PCM and connector C-32 because the wiring harness is shorted between circuits.
		No	Replace the PCM because there is a short between circuits in the PCM. (See 01-40-10 PCM REMOVAL/INSTALLATION [SKYACTIV-G 2.0].)

ON-BOARD DIAGNOSTIC [SKYACTIV-G 2.0 (R.H.D.)]

DETERMINING OPEN CIRCUIT LOCATION (MS-CAN) [SKYACTIV-G 2.0 (R.H.D.)]

id100202000500

Caution

- **Perform the following malfunction diagnosis only when it is diagnosed with a open circuit by 10-02B-3 CONTROLLER AREA NETWORK (CAN) MALFUNCTION DIAGNOSIS FLOW [SKYACTIV-G 2.0 (R.H.D.)].**
- **If the malfunctioning part is detected in the communication line, before disconnecting the related connector for inspection, press the connector in the connection direction to verify that there is no looseness or disconnection.**
- **When disconnecting the connector, verify that there is no damage, deformation, or corrosion of the connector terminals.**

1. Verify DTCs of the modules related to the CAN system.
2. Apply the communication error DTC and the failed module to 10-02B-83 DTC output pattern and malfunctioning location, and select the possible cause for the diagnostic result and the reference for the inspection item.

Note

- The open circuit location can be determined by the DTC indicated in the 10-02B-83 DTC output pattern and malfunctioning location chart. DTCs not listed in the chart are not used for the determination of the open circuit location.

3. Inspect the possible cause and inspection item of the applicable malfunctioning part.
4. After repairs, return to 10-02B-3 CONTROLLER AREA NETWORK (CAN) MALFUNCTION DIAGNOSIS FLOW [SKYACTIV-G 2.0 (R.H.D.)], and verify that the repairs have been completed.

DTC output pattern and malfunctioning location

Cross (×): Displayed

M-MDS display		DTC output pattern and malfunctioning location									
DTC output module	DTC										
R_BCM (Rear body control module (RBCM))	U0155									×	
BSML*1 (BSM control module (LH))	U0100:00									×	
	U0131:00									×	
	U0155:00									×	
	U0214:00									×	
	U0233:00					×					
BSMR*1 (BSM control module (RH))	U0100:00									×	
	U0131:00									×	
	U0155:00									×	
	U0214:00									×	
	U0232:00	×									
RVM*2 (Rear vehicle monitoring control module (RH))	U0100:00									×	
	U0121:00									×	
	U0155:00									×	
	U0214:00									×	
EATC*3 (Climate control unit)	U0155:00									×	
ACU*4 (Audio unit)	U0155:00									×	
IC (Instrument cluster)	U0142:00		×	×			×				
	U0232:00	×		×			×				
	U0233:00					×	×				
M-MDS display module		[Fail] display pattern									
R_BCM			×	×			×				
BSML*1		×		×			×				
BSMR*1						×	×				

ON-BOARD DIAGNOSTIC [SKYACTIV-G 2.0 (R.H.D.)]

M-MDS display		DTC output pattern and malfunctioning location									
DTC output module	DTC										
RVM*2					×		×				
EATC*3								×			
ACU*4									×		
IC										×	
Diagnostic result											
Possible cause and inspection item		10-02B-84 A	10-02B-85 B	10-02B-86 C	10-02B-88 D	10-02B-89 E	10-02B-90 F	10-02B-91 G	10-02B-92 H	10-02B-93 I	10-02B-94 J

*1 : With BSM
*2 : With rear vehicle monitoring system
*3 : With full-auto air conditioner
*4 : With audio unit

A
Possible cause
- Connector terminal disconnection, poor contact, damage, deformation, corrosion
- Open circuit in wiring harness between BSM control module (LH) and connector C-23
- Open circuit in wiring harness between connector C-23 and RCBM
- Connector C-23 malfunction
- BSM control module (LH) malfunction
- CAN circuit in rear body control module (RBCM) malfunction

ON-BOARD DIAGNOSTIC [SKYACTIV-G 2.0 (R.H.D.)]

System wiring diagram

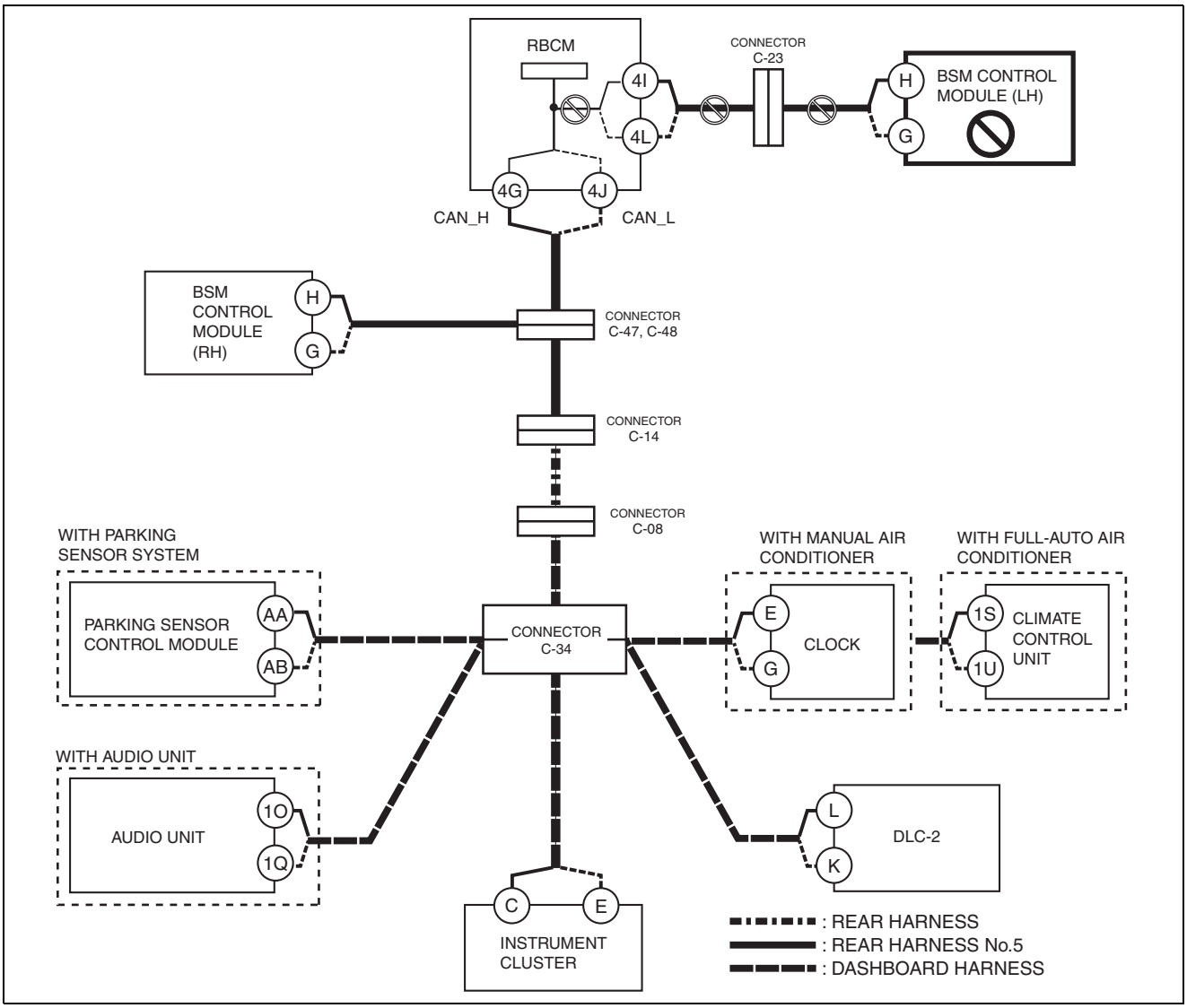

ac5wzw0000356

Inspection item

- BSM control module (LH) connector
- Rear body control module (RBCM) connector
- Connector C-23
- Wiring harness between BSM control module (LH) terminal H and connector C-23.
- Wiring harness between BSM control module (LH) terminal G and connector C-23
- Wiring harness between rear body control module (RBCM) terminal 4I and connector C-23
- Wiring harness between rear body control module (RBCM) terminal 4L and connector C-23
- BSM control module (LH)
- Rear body control module (RBCM)
  - — Between rear body control module (RBCM) terminal 4G and rear body control module (RBCM) terminal 4I
  - — Between rear body control module (RBCM) terminal 4J and rear body control module (RBCM) terminal 4L

B

Possible cause

- Connector terminal disconnection, poor contact, damage, deformation, corrosion
- Rear body control module (RBCM) malfunction

10

ON-BOARD DIAGNOSTIC [SKYACTIV-G 2.0 (R.H.D.)]

System wiring diagram

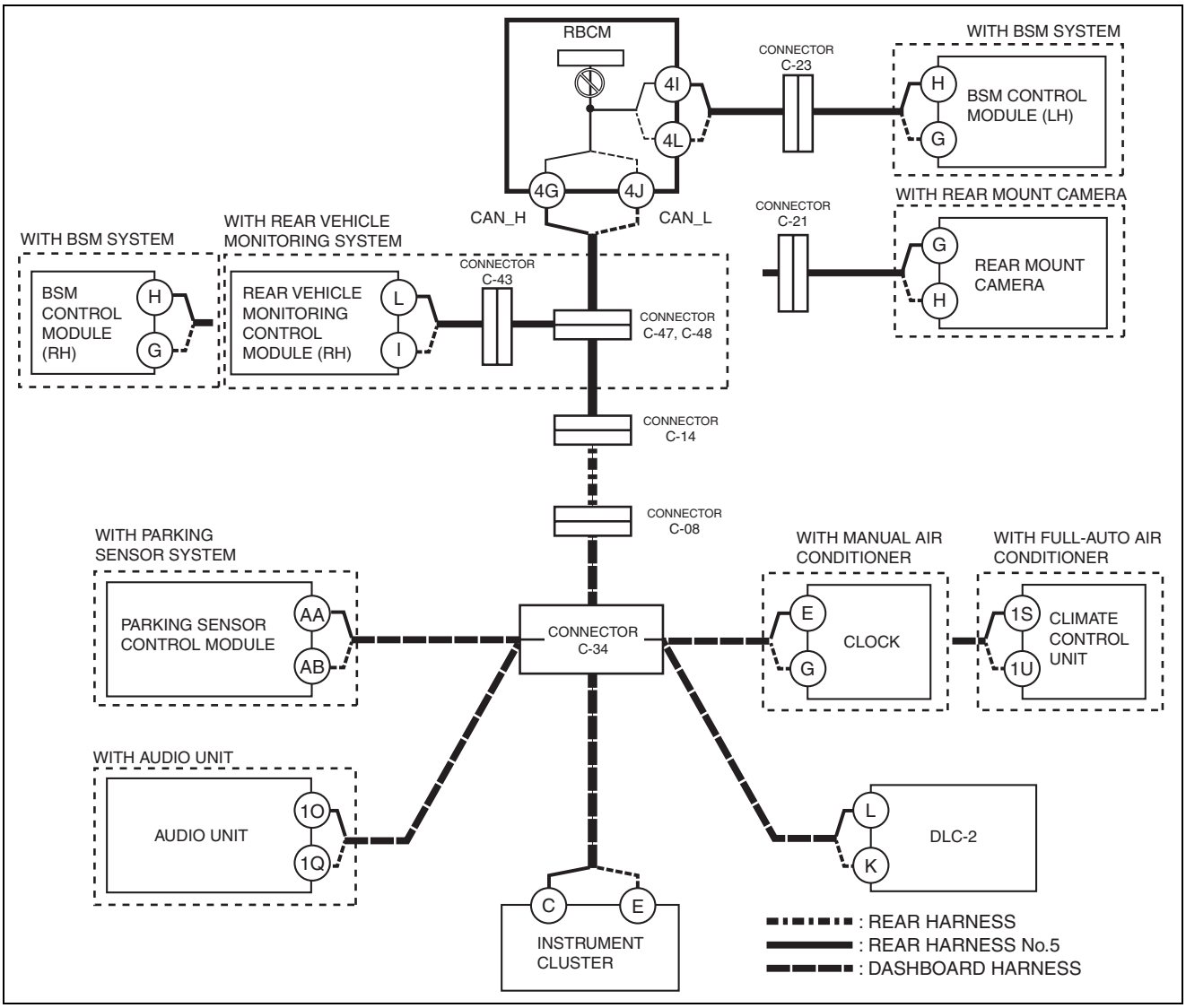

ac5wzw0000356

Inspection item

- Rear body control module (RBCM)

C
With rear vehicle monitoring system or BSM system
Possible cause

- Connector terminal disconnection, poor contact, damage, deformation, corrosion
- Open circuit in wiring harness between rear body control module (RBCM) and connectors C-47, C-48
- Connector C-47, C-48 malfunction
- CAN circuit in rear body control module (RBCM) malfunction

ON-BOARD DIAGNOSTIC [SKYACTIV-G 2.0 (R.H.D.)]

System wiring diagram

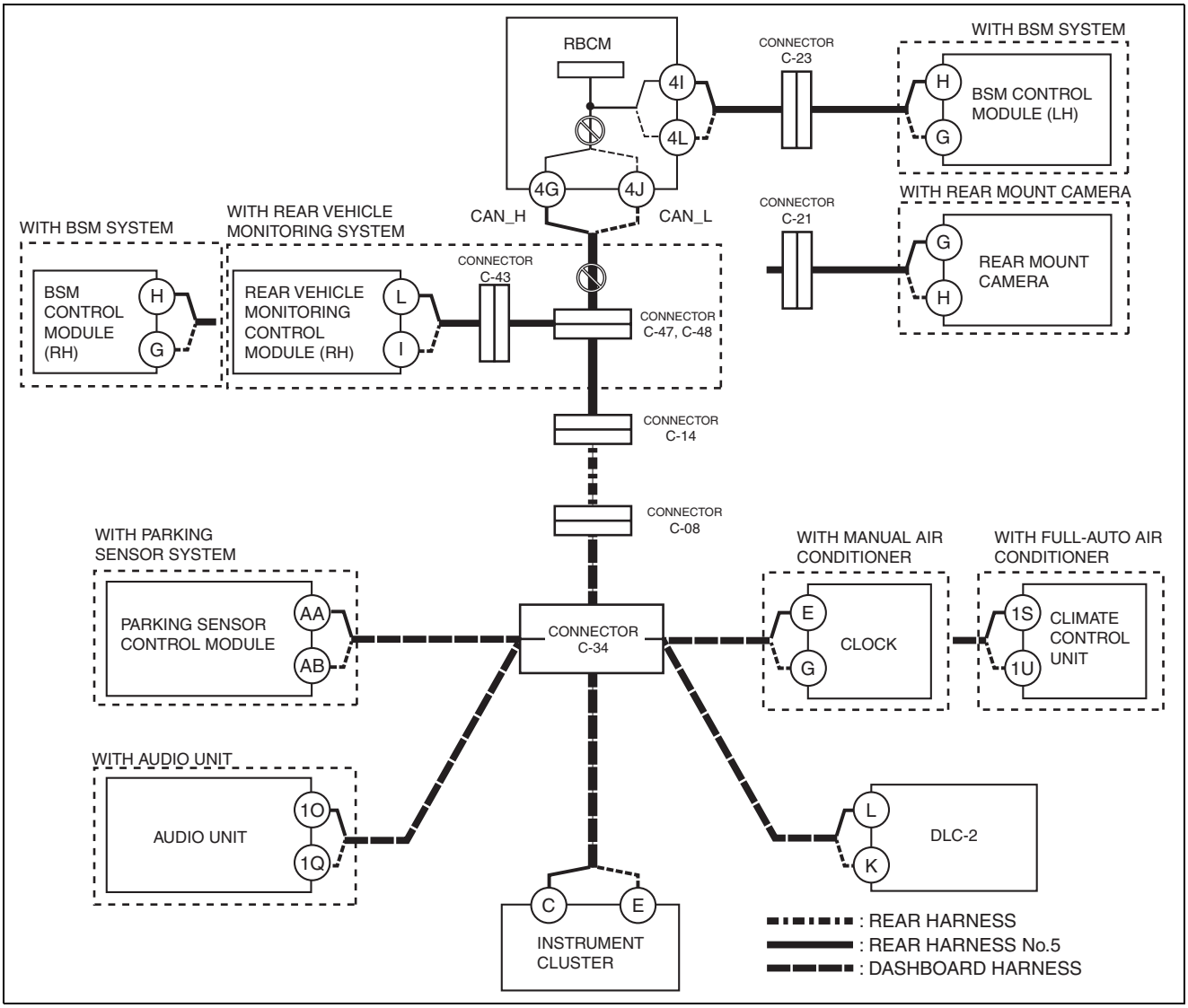

ac5wzw0000356

Inspection item

- Rear body control module (RBCM) connector
- Connectors C-47, C-48
- Wiring harness between rear body control module (RBCM) terminal 4G and connectors C-47
- Wiring harness between rear body control module (RBCM) terminal 4J and connectors C-48
- Rear body control module (RBCM)
  - — Between rear body control module (RBCM) terminal 4G and rear body control module (RBCM) terminal 4I
  - — Between rear body control module (RBCM) terminal 4J and rear body control module (RBCM) terminal 4L

Without rear vehicle monitoring system or BSM system

Possible cause

- Connector terminal disconnection, poor contact, damage, deformation, corrosion
- Open circuit in wiring harness between rear body control module (RBCM) and connector C-14
- Open circuit in wiring harness between connector C-14 and connector C-08
- Open circuit in wiring harness between connector C-08 and connector C-34
- Connector C-14 malfunction
- Connector C-08 malfunction
- Connector C-34 malfunction
- Rear body control module (RBCM) malfunction

10

ON-BOARD DIAGNOSTIC [SKYACTIV-G 2.0 (R.H.D.)]

System wiring diagram

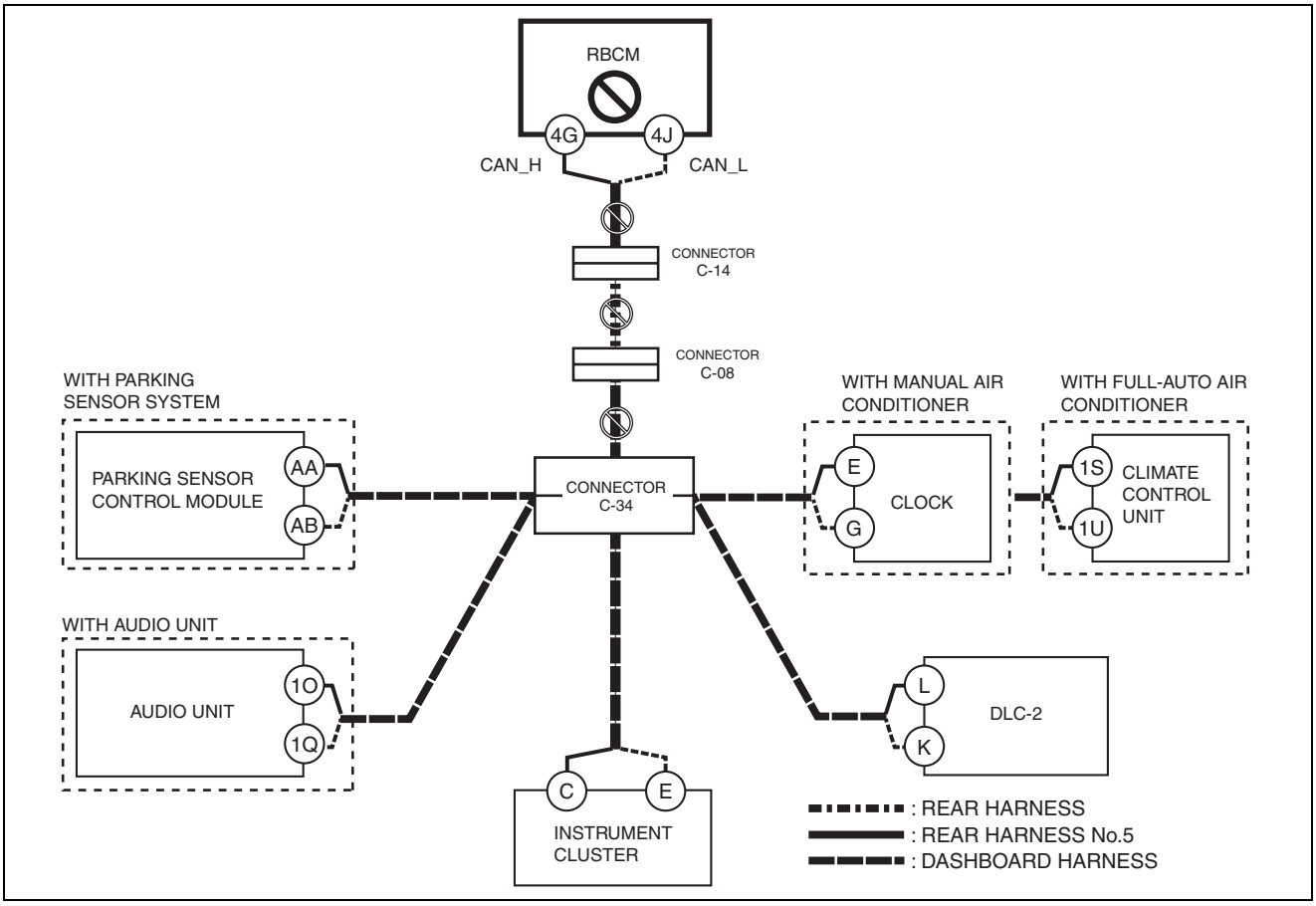

ac5wzw0000357

Inspection item

- Rear body control module (RBCM) connector
- Connector C-14
- Connector C-08
- Connector C-34
- Wiring harness between rear body control module (RBCM) terminal 4G and connector C-14
- Wiring harness between rear body control module (RBCM) terminal 4J and connector C-14
- Wiring harness between connector C-14 and connector C-08
- Wiring harness between connector C-08 and connector C-34
- Rear body control module (RBCM)

D

Possible cause

- Connector terminal disconnection, poor contact, damage, deformation, corrosion
- Open circuit in wiring harness between rear vehicle monitoring (RH) and connectors C-43
- Open circuit in wiring harness between connectors C-43 and connectors C-47, C-48
- Connector C-43 malfunction
- Connector C-47, C-48 malfunction
- Rear vehicle monitoring control module (RH) malfunction

ON-BOARD DIAGNOSTIC [SKYACTIV-G 2.0 (R.H.D.)]

System wiring diagram

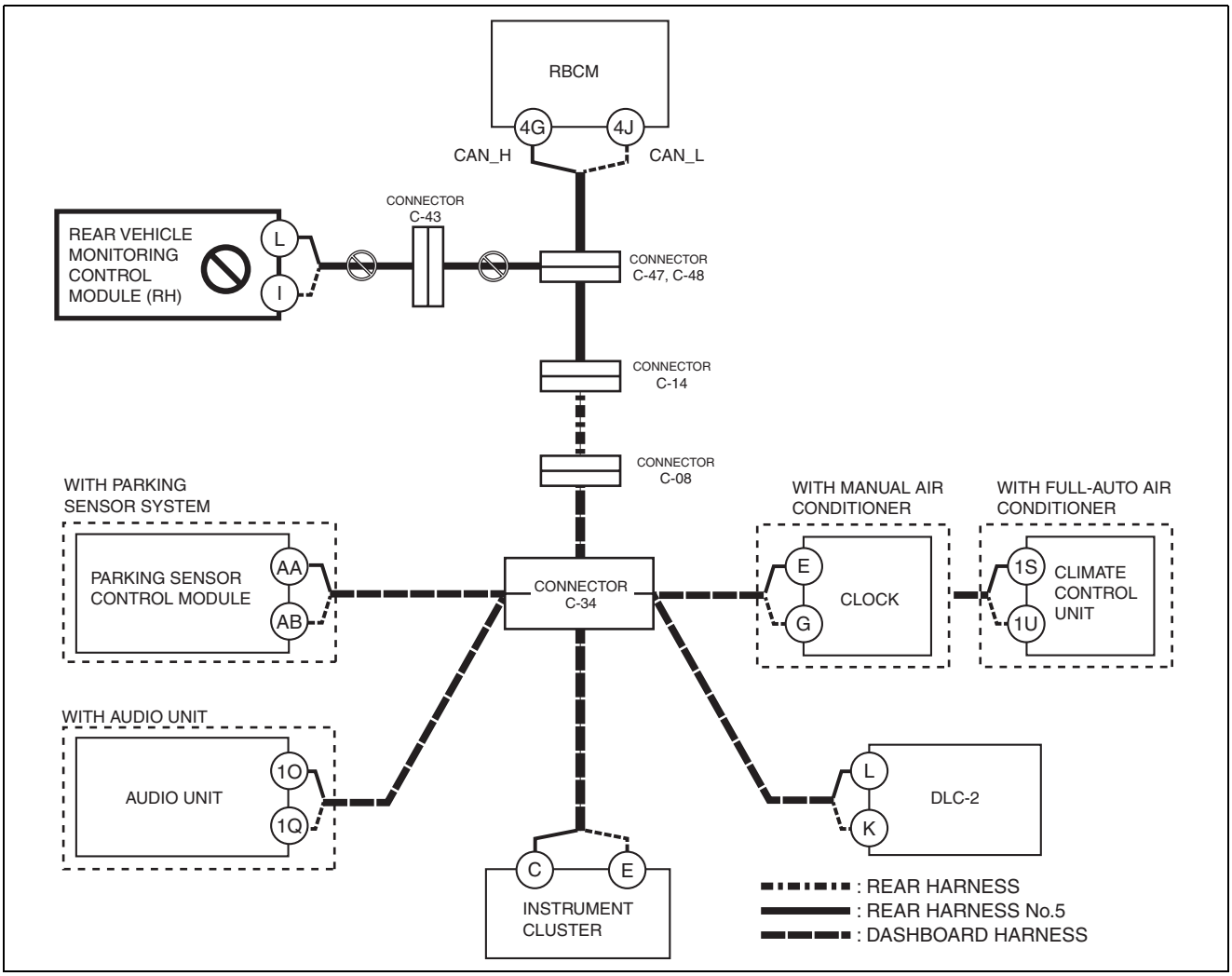

ac5wzw0000357

Inspection item

- Rear vehicle monitoring control module (RH) connector
- Connectors C-43
- Connectors C-47, C-48
- Wiring harness between Rear vehicle monitoring control module (RH) terminal L and connector C-43
- Wiring harness between Rear vehicle monitoring control module (RH) terminal I and connector C-43
- Wiring harness between connector C-43 and connector C-47, C-48
- Rear vehicle monitoring control module (RH)

E

Possible cause

- Connector terminal disconnection, poor contact, damage, deformation, corrosion
- Open circuit in wiring harness between BSM control module (RH) and connectors C-47, C-48
- Connector C-47, C-48 malfunction
- BSM control module (RH) malfunction

10

ON-BOARD DIAGNOSTIC [SKYACTIV-G 2.0 (R.H.D.)]

System wiring diagram

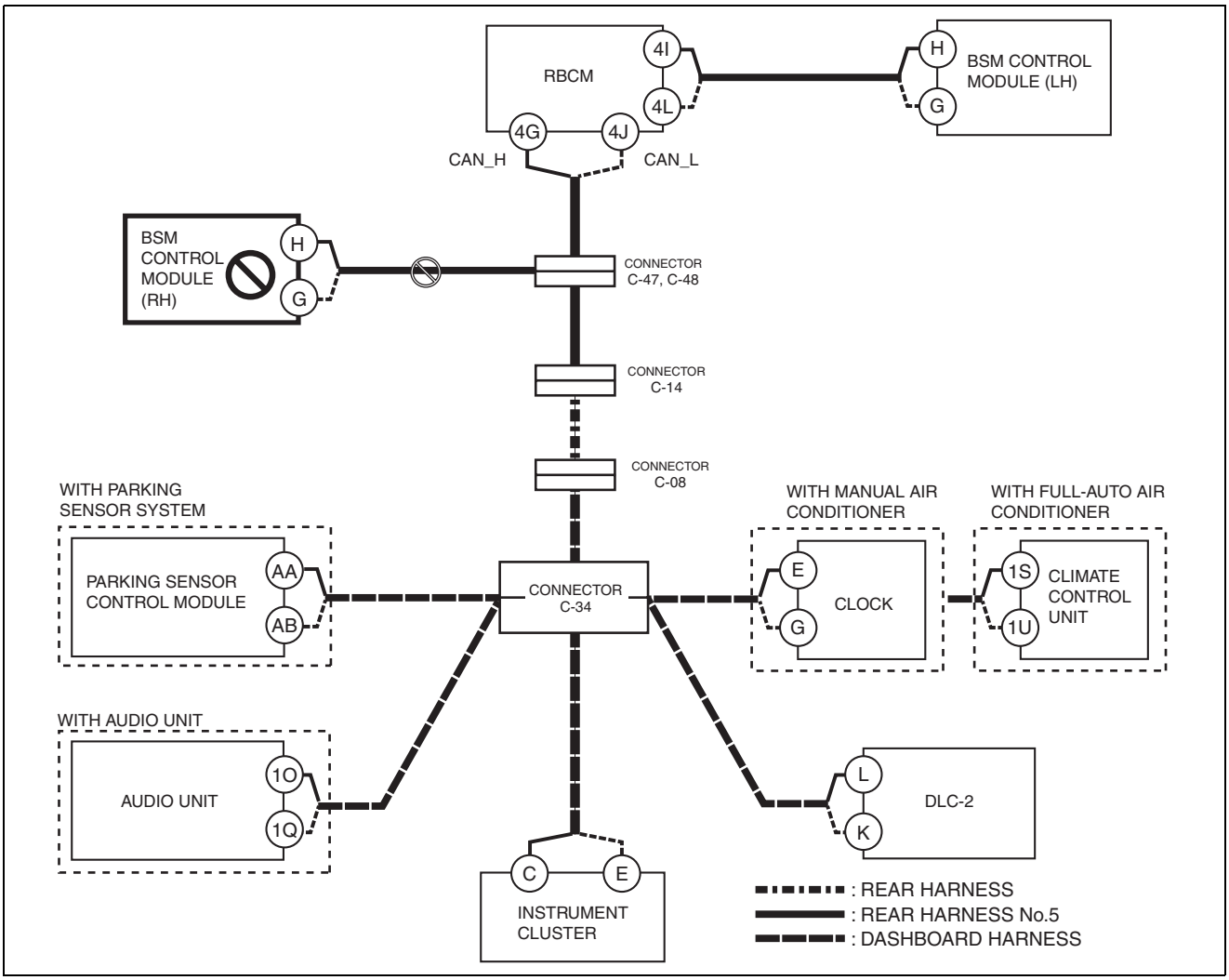

ac5wzw0000357

Inspection item

- BSM control module (RH) connector
- Connectors C-47, C-48
- Wiring harness between BSM control module (RH) terminal H and connector C-47
- Wiring harness between BSM control module (RH) terminal G and connector C-48
- BSM control module (RH)

F

Possible cause

- Connector terminal disconnection, poor contact, damage, deformation, corrosion
- Open circuit in wiring harness between connectors C-47, C-48 and connector C-14
- Open circuit in wiring harness between connector C-14 and C-08
- Open circuit in wiring harness between connectors C-08 and C-34
- Connectors C-47, C-48 malfunction
- Connector C-14 malfunction
- Connector C-08 malfunction
- Connector C-34 malfunction

ON-BOARD DIAGNOSTIC [SKYACTIV-G 2.0 (R.H.D.)]

System wiring diagram

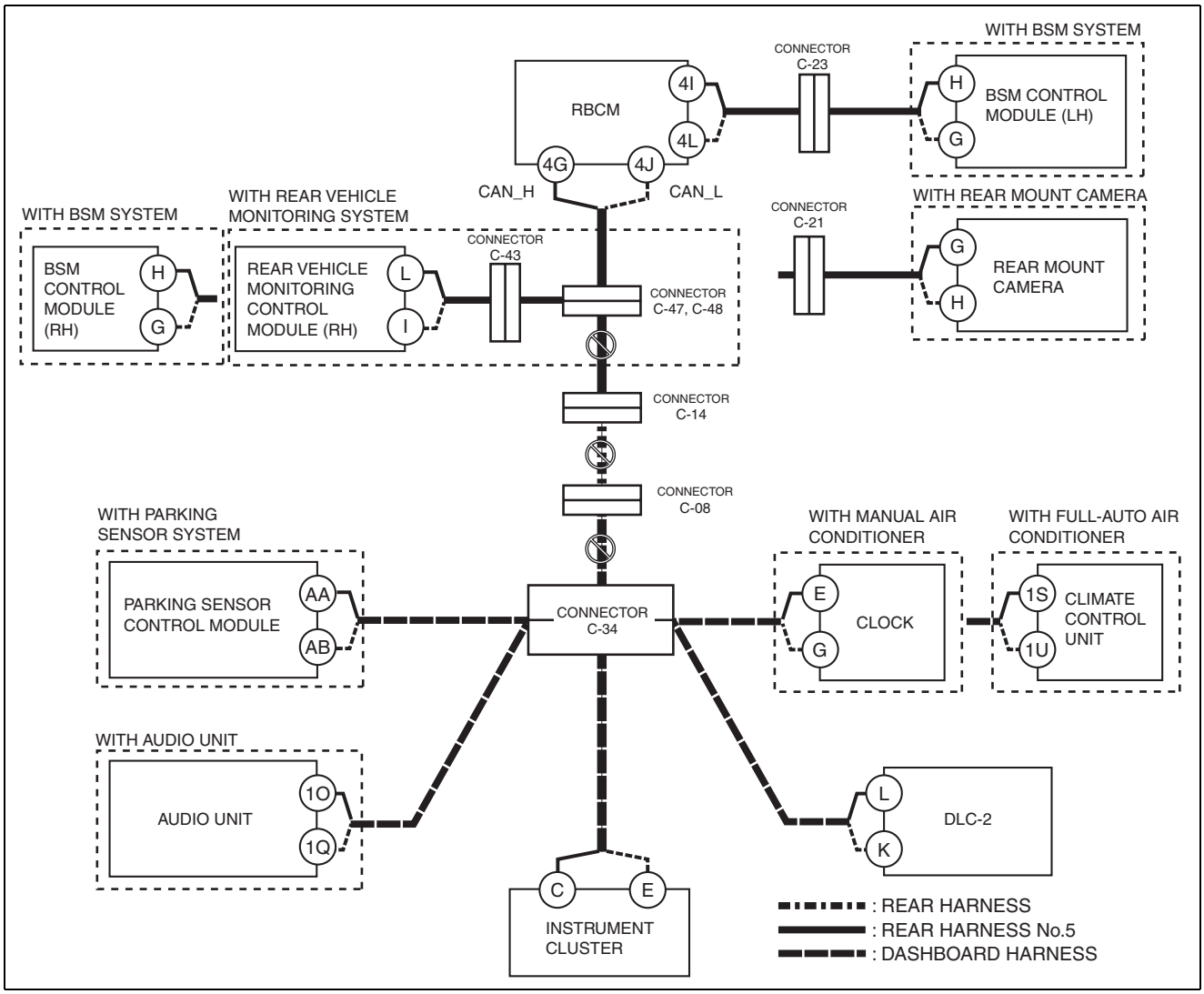

ac5wzw0000357

Inspection item

- Connectors C-47, C-48
- Connector C-14
- Connector C-08
- Connector C-34
- Wiring harness between connectors C-47, C-48 and connector C-14
- Wiring harness between connector C-14 and connector C-08
- Wiring harness between connector C-08 and connector C-34

G

Possible cause

- Connector terminal disconnection, poor contact, damage, deformation, corrosion
- Open circuit in wiring harness between climate control unit and connector C-34
- Connector C-34 malfunction
- Climate control unit malfunction

10

ON-BOARD DIAGNOSTIC [SKYACTIV-G 2.0 (R.H.D.)]

System wiring diagram

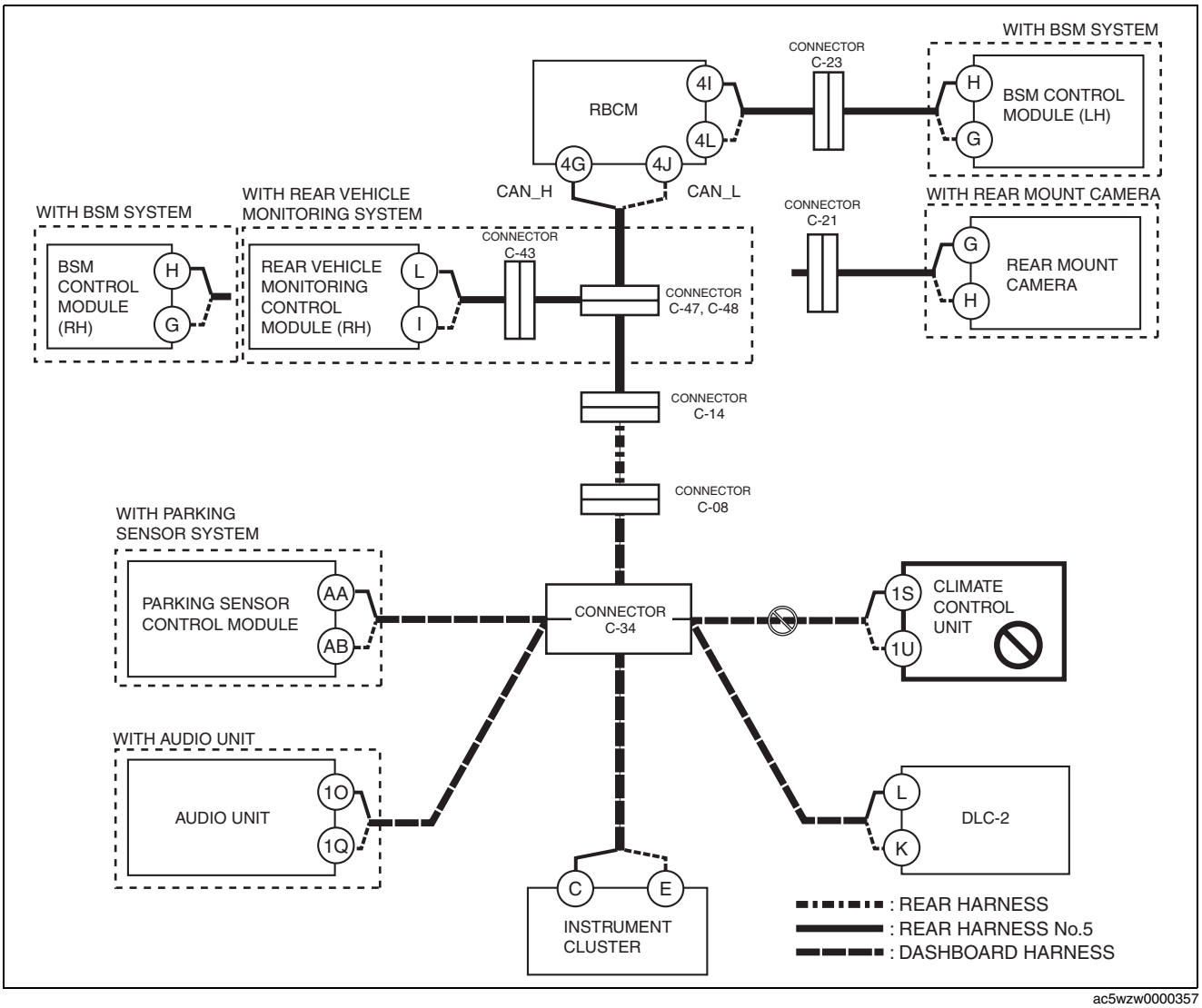

ac5wzw0000357

Possible cause

- Connector terminal disconnection, poor contact, damage, deformation, corrosion
- Open circuit in wiring harness between climate control unit and connector C-34
- Connector C-34 malfunction
- Climate control unit malfunction

H

Possible cause

- Connector terminal disconnection, poor contact, damage, deformation, corrosion
- Open circuit in wiring harness between vehicle with audio unit and connector C-34
- Connector C-34 malfunction
- Audio unit malfunction

ON-BOARD DIAGNOSTIC [SKYACTIV-G 2.0 (R.H.D.)]

System wiring diagram

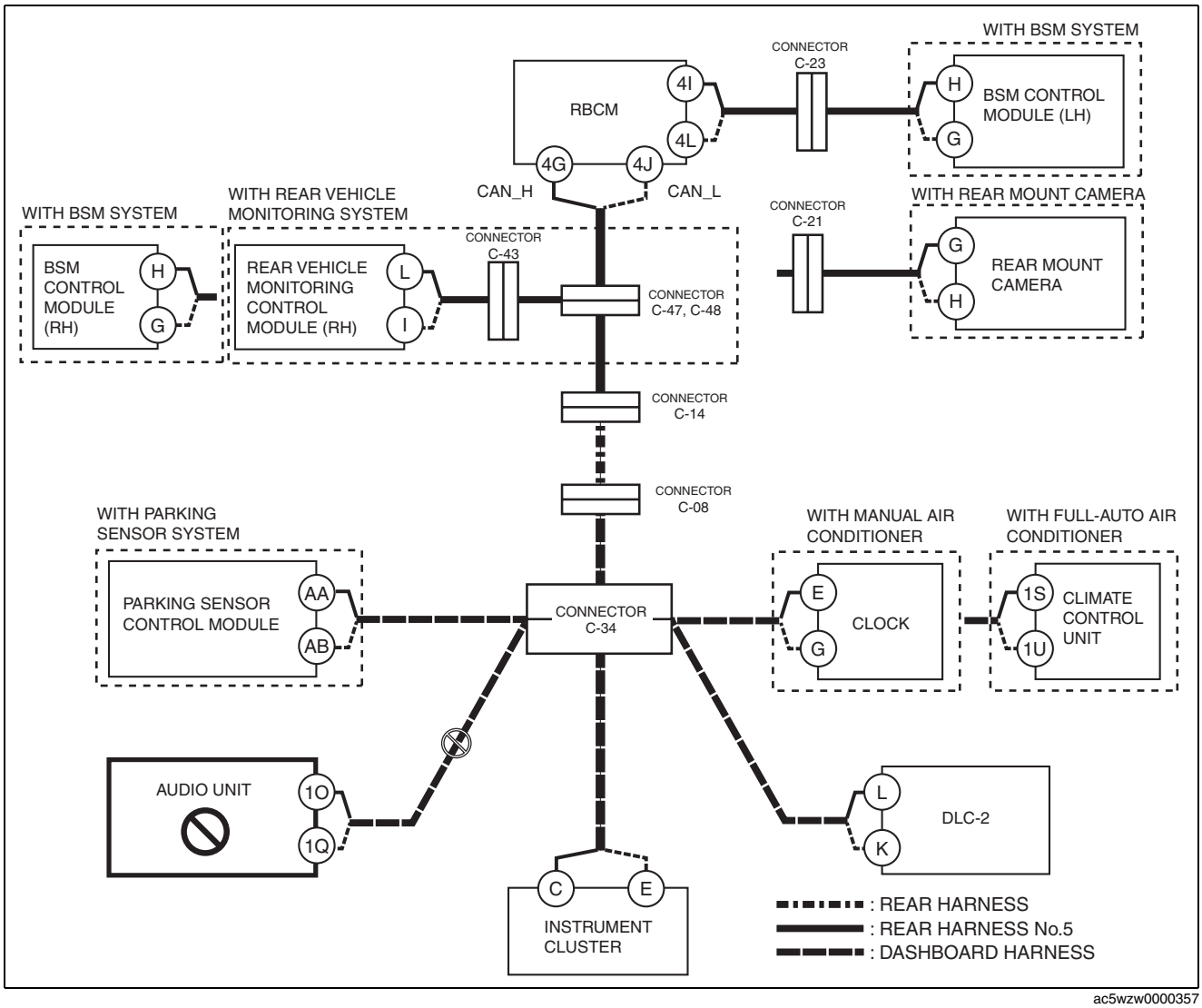

ac5wzw0000357

Inspection item

- Audio unit connector
- Connector C-34
- Wiring harness between audio unit terminal 1O and connector C-34
- Wiring harness between audio unit terminal 1Q and connector C-34
- Audio unit

I

Possible cause

- Connector terminal disconnection, poor contact, damage, deformation, corrosion
- Open circuit in wiring harness between instrument cluster and connector C-34
- Connector C-34 malfunction
- Instrument cluster malfunction

10

ON-BOARD DIAGNOSTIC [SKYACTIV-G 2.0 (R.H.D.)]

System wiring diagram

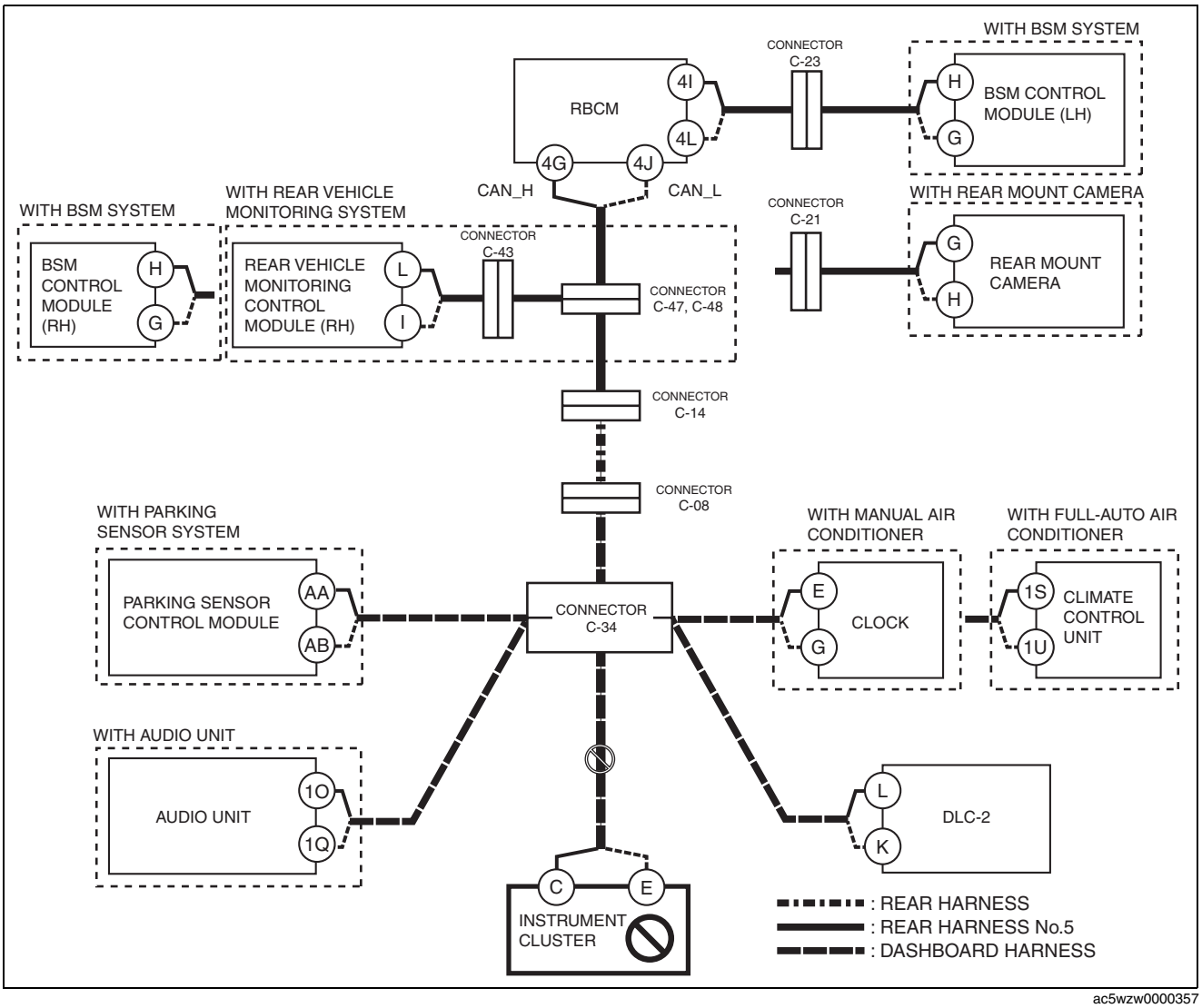

ac5wzw0000357

Inspection item

- Instrument cluster connector
- Connector C-34
- Wiring harness between instrument cluster terminal C and connector C-34
- Wiring harness between instrument cluster terminal E and connector C-34
- Instrument cluster

J

1. Perform the clock input/output check mode. (See 09-22-96 CLOCK INPUT/OUTPUT CHECK MODE.)
   - If "2:00" is displayed, go to the next step.
   - If "2:Er is displayed, inspect the inspection items in the possible causes for 10-02B-94 Clock Circuit Malfunction.
2. Shift the selector lever (ATX) or shift lever (MTX) to the R position.
   - If images from the rear mount camera appear in the audio unit, inspect the inspection items in the possible causes for the 10-02B-95 Parking Sensor Control Module Circuit Malfunction.
   - If images from the rear mount camera do not appear in the audio unit, inspect the inspection items in the possible causes for 10-02B-96 Rear Mount Camera Circuit Malfunction.

Clock Circuit Malfunction
Possible cause

- Connector terminal disconnection, poor contact, damage, deformation, corrosion
- Open circuit in wiring harness between clock component and connector C-34
- Connector C-34 malfunction
- Clock component malfunction

ON-BOARD DIAGNOSTIC [SKYACTIV-G 2.0 (R.H.D.)]

System wiring diagram

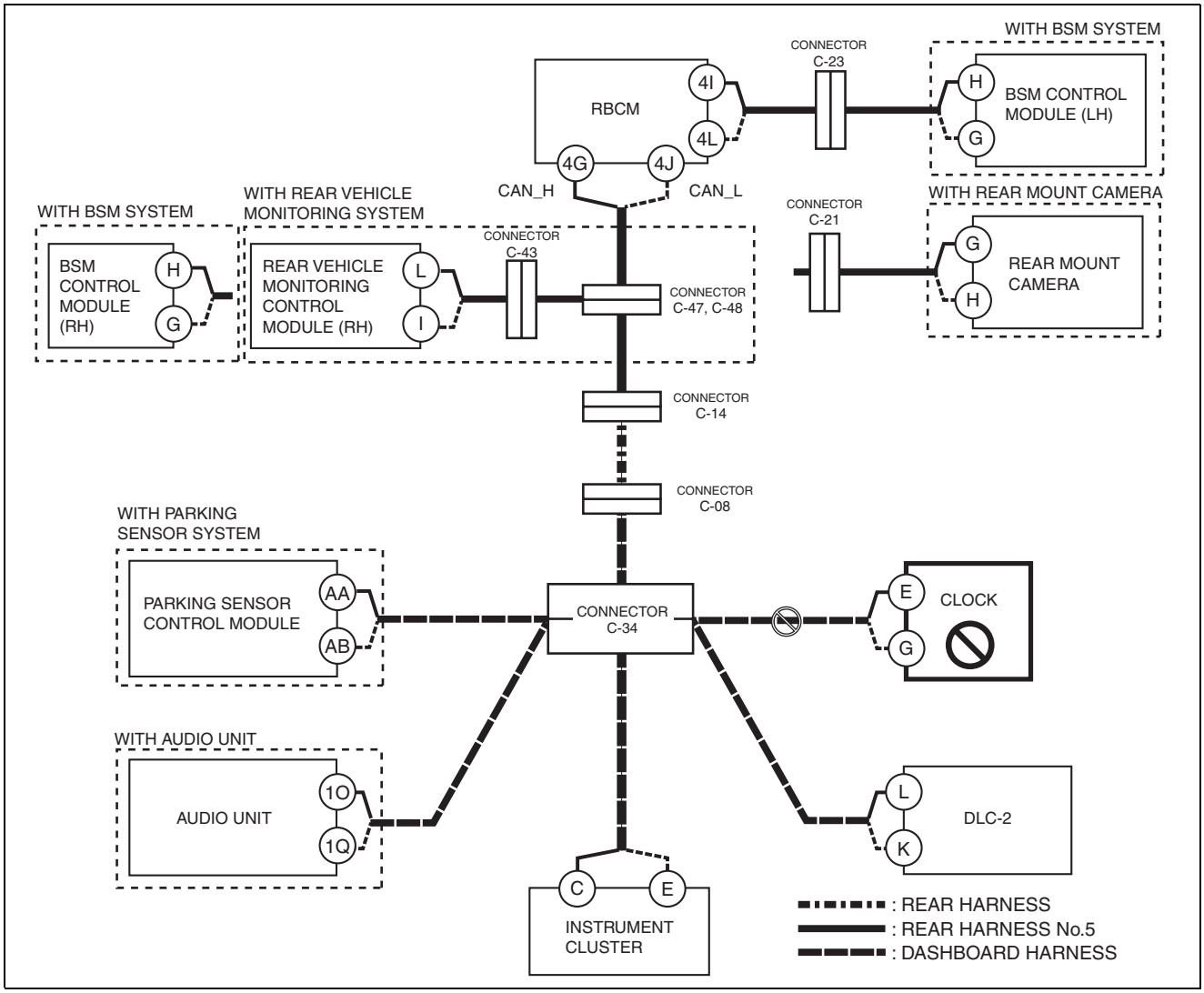

ac5wzw0000357

Inspection item

- Clock component connector
- Connector C-34
- Wiring harness between clock component terminal E and connector C-34
- Wiring harness between clock component terminal G and connector C-34
- Clock component

Parking Sensor Control Module Circuit Malfunction
Possible cause

- Connector terminal disconnection, poor contact, damage, deformation, corrosion
- Open circuit in wiring harness between parking sensor control module and connector C-34
- Connector C-34 malfunction
- Parking sensor control module malfunction

10

ON-BOARD DIAGNOSTIC [SKYACTIV-G 2.0 (R.H.D.)]

System wiring diagram

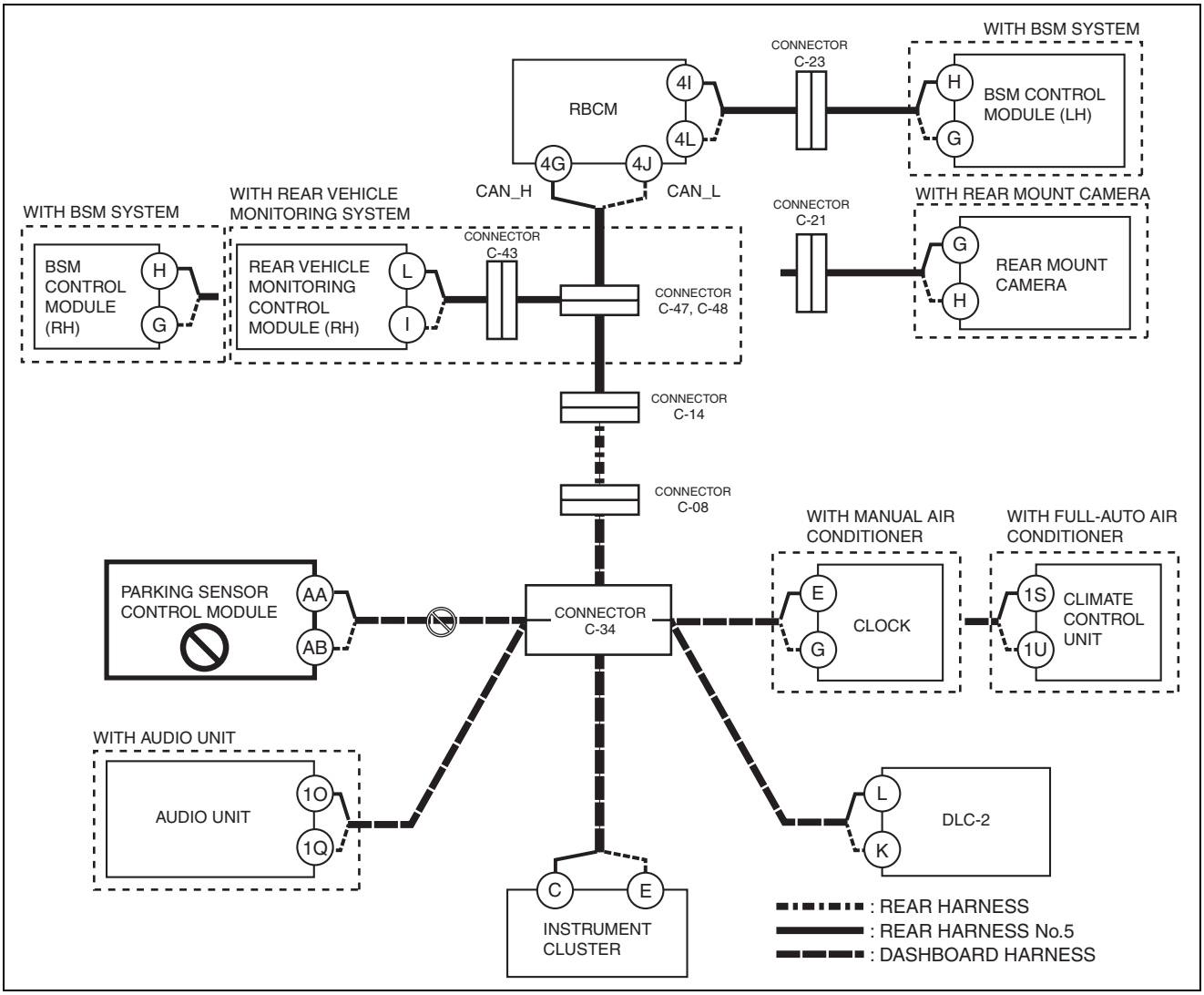

ac5wzw0000357

Inspection item

- Parking sensor control module connector
- Connector C-34
- Wiring harness between parking sensor control module terminal AA and connector C-34
- Wiring harness between parking sensor control module terminal AB and connector C-34
- Parking sensor control module

Rear Mount Camera Circuit Malfunction

Possible cause

- Connector terminal disconnection, poor contact, damage, deformation, corrosion
- Open circuit in wiring harness between rear mount camera and connector C-21
- Open circuit in wiring harness between connector C-21 and RCBM
- Connector C-21 malfunction
- Rear mount camera malfunction
- CAN circuit in rear body control module (RBCM) malfunction

ON-BOARD DIAGNOSTIC [SKYACTIV-G 2.0 (R.H.D.)]

System wiring diagram

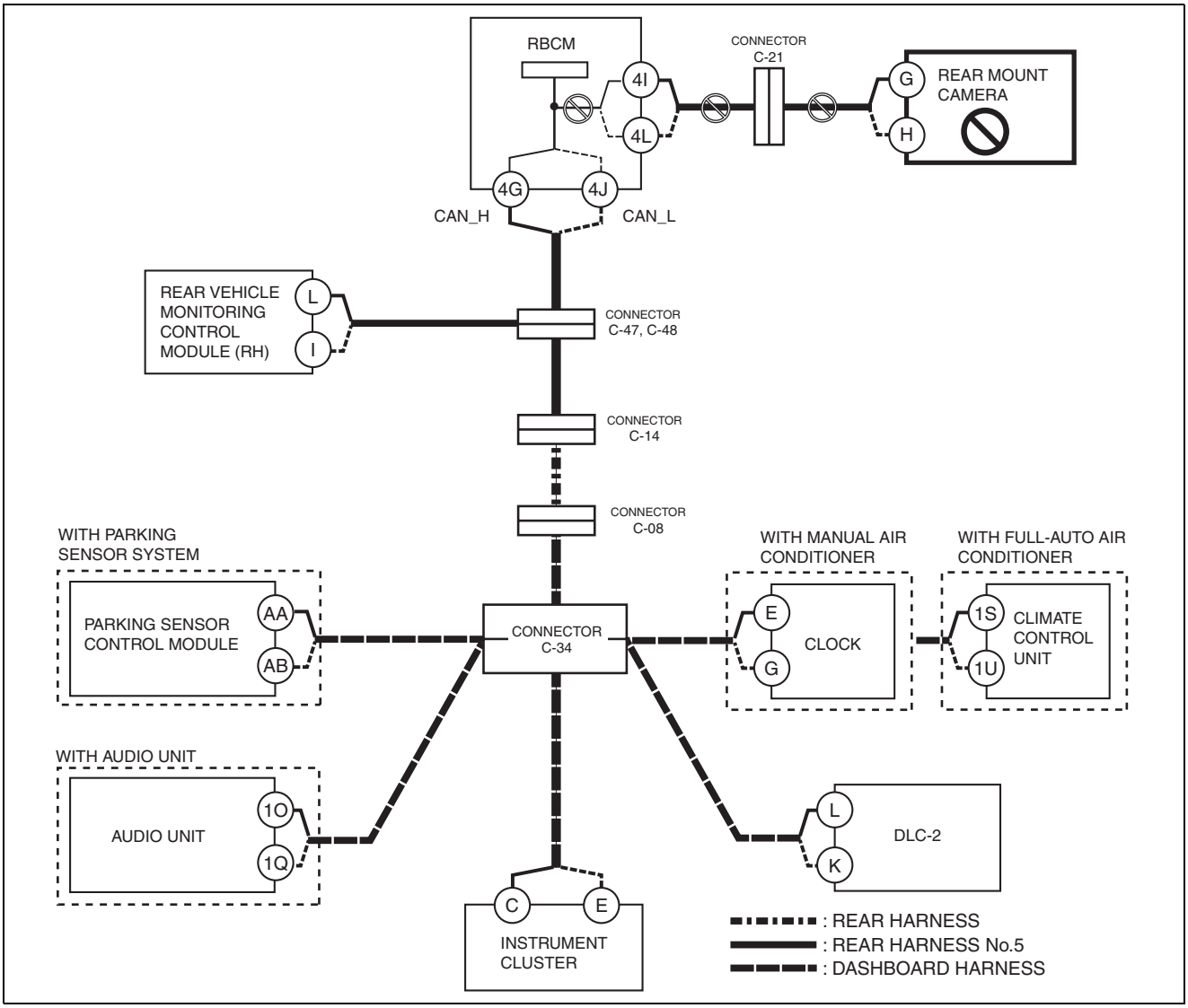

ac5wzw0000357

Inspection item

- Rear mount camera connector
- Rear body control module (RBCM) connector
- Connector C-21
- Wiring harness between rear mount camera terminal G and connector C-21.
- Wiring harness between rear mount camera terminal H and connector C-21.
- Wiring harness between rear body control module (RBCM) terminal 4I and connector C-21
- Wiring harness between rear body control module (RBCM) terminal 4L and connector C-21
- Rear mount camera
- Rear body control module (RBCM)
  - — Between rear body control module (RBCM) terminal 4G and rear body control module (RBCM) terminal 4I
  - — Between rear body control module (RBCM) terminal 4J and rear body control module (RBCM) terminal 4L

DETERMINING SHORT TO GROUND LOCATION (MS-CAN) [SKYACTIV-G 2.0 (R.H.D.)]

id100202000900

Caution

- **Perform the following malfunction diagnosis only when it is diagnosed with a short to ground by 10-02B-3 CONTROLLER AREA NETWORK (CAN) MALFUNCTION DIAGNOSIS FLOW [SKYACTIV-G 2.0 (R.H.D.)].**

ON-BOARD DIAGNOSTIC [SKYACTIV-G 2.0 (R.H.D.)]

System wiring diagram

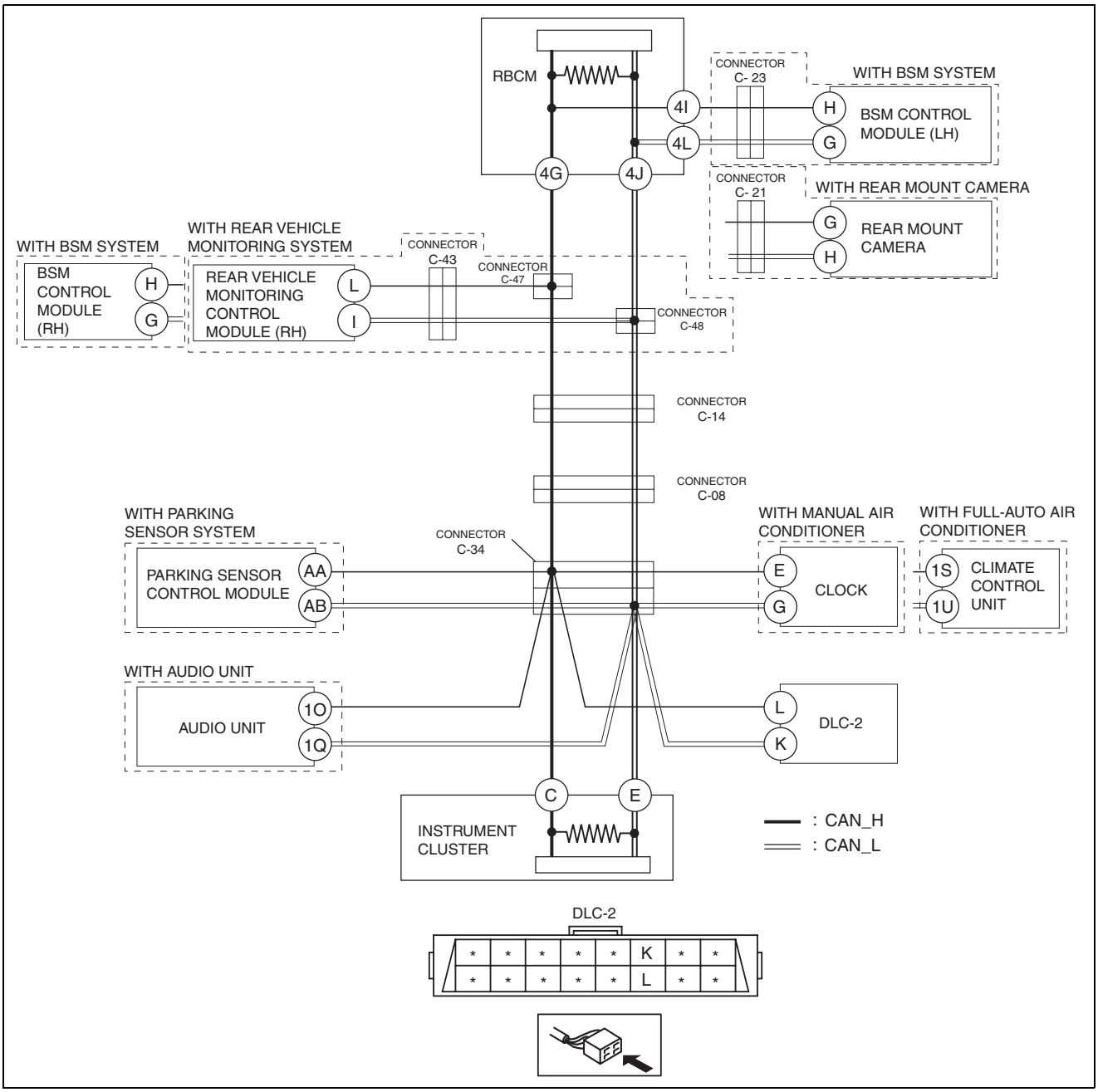

ac5wzw0000068

Determination procedure

Caution

- **When disconnecting the connector, verify that there is no looseness, damage, deformation, corrosion, or poor connection of the connector terminals.**
- **When inspecting the DLC-2, touch it with a paper clip or similar thin pin without directly inserting a tester into the terminals.**

ON-BOARD DIAGNOSTIC [SKYACTIV-G 2.0 (R.H.D.)]

Step	Inspection		Action
1	**INSPECT FOR SHORT TO GROUND BETWEEN CONNECTOR C-08 AND INSTRUMENT CLUSTER** • Disconnect the negative battery cable. (See 01-17A-11 NEGATIVE BATTERY CABLE DISCONNECTION/CONNECTION [SKYACTIV-G 2.0].) (See 01-17A-13 NEGATIVE BATTERY CABLE DISCONNECTION/CONNECTION [SKYACTIV-G 2.0 (WITHOUT i-stop)].) • Disconnect connector C-08. • Inspect for continuity at the following terminals: — Between DLC-2 terminal L and body ground — Between DLC-2 terminal K and body ground • Is there continuity?	Yes	Go to the next step.
		No	Go to Step 11.
2	**INSPECT FOR SHORT TO GROUND BETWEEN CONNECTORS C-34 AND DLC-2** • Disconnect connector C-34. • Inspect for continuity at the following terminals: — Between DLC-2 terminal L and body ground — Between DLC-2 terminal K and body ground • Is there continuity?	Yes	Repair or replace the wiring harness between connector C-34 and DLC-2 because the wiring harness is shorted to ground.
		No	Go to the next step.
3	**INSPECT FOR SHORT TO GROUND BETWEEN CONNECTOR C-34 AND PARKING SENSOR CONTROL MODULE** • Inspect for continuity at the following terminals: — Between parking sensor control module terminal AA and body ground — Between parking sensor control module terminal AB and body ground • Is there continuity?	Yes	Go to the next step.
		No	Go to Step 5.
4	**INSPECT CAN LINE IN PARKING SENSOR CONTROL MODULE FOR SHORT TO GROUND** • Disconnect the parking sensor connector. • Inspect for continuity at the following terminals: — Between parking sensor control module terminal AA (wiring harness side) and body ground — Between parking sensor control module terminal AB (wiring harness side) and body ground • Is there continuity?	Yes	Repair or replace the wiring harness between the parking sensor control module and connector C-34 because the wiring harness is shorted to ground.
		No	Replace the parking sensor control module because there is a short to ground in the parking sensor control module. (See 09-22-57 PARKING SENSOR CONTROL MODULE REMOVAL/INSTALLATION.)
5	**INSPECT FOR SHORT TO GROUND BETWEEN CONNECTOR C-34 AND CLIMATE CONTROL UNIT** • Inspect for continuity at the following terminals: — Between climate control unit terminal 1S and body ground (with full-auto air conditioner) — Between climate control unit terminal 1U and body ground (with full-auto air conditioner) — Between clock terminal E and body ground (with manual air conditioner) — Between clock terminal G and body ground (with manual air conditioner) • Is there continuity?	Yes	Go to the next step.
		No	Go to Step 7.

ON-BOARD DIAGNOSTIC [SKYACTIV-G 2.0 (R.H.D.)]

Step	Inspection		Action
6	**INSPECT CAN LINE IN CLIMATE CONTROL UNIT OR CLOCK FOR SHORT TO GROUND** • Disconnect the climate control unit connector or clock connector. • Inspect for continuity at the following terminals: — Between climate control unit terminal 1S (wiring harness side) and body ground (with full-auto air conditioner) — Between climate control unit terminal 1U (wiring harness side) and body ground (with full-auto air conditioner) — Between clock terminal E (wiring harness side) and body ground (with manual air conditioner) — Between clock terminal G (wiring harness side) and body ground (with manual air conditioner) • Is there continuity?	Yes	Repair or replace the wiring harness between the climate control unit or clock and connector C-34 because the wiring harness is shorted to ground.
		No	Replace the climate control unit or the clock because there is a short to ground inside the climate control unit or the clock. (See 07-40A-32 CLIMATE CONTROL UNIT REMOVAL/INSTALLATION [FULL-AUTO AIR CONDITIONER].) (See 09-22-92 CLOCK REMOVAL/INSTALLATION.)
7	**INSPECT FOR SHORT TO GROUND BETWEEN CONNECTOR C-34 AND AUDIO UNIT** • Inspect for continuity at the following terminals: — Between audio unit terminal 1O and body ground — Between audio unit terminal 1Q and body ground • Is there continuity?	Yes	Go to the next step.
		No	Go to Step 9.
8	**INSPECT CAN LINE IN AUDIO UNIT FOR SHORT TO GROUND** • Disconnect the audio unit connector. • Inspect for continuity at the following terminals: — Between audio unit terminal 1O (wiring harness side) and body ground — Between audio unit terminal 1Q (wiring harness side) and body ground • Is there continuity?	Yes	Repair or replace the wiring harness between the audio unit and connector C-34 because the wiring harness is shorted to ground.
		No	Replace the audio unit because there is a short to ground in the audio unit. (See 09-20-4 AUDIO UNIT REMOVAL/INSTALLATION.)
9	**INSPECT FOR SHORT TO GROUND BETWEEN CONNECTOR C-34 AND INSTRUMENT CLUSTER** • Inspect for continuity at the following terminals: — Between instrument cluster terminal C and body ground — Between instrument cluster terminal E and body ground • Is there continuity?	Yes	Go to the next step.
		No	Repair or replace the wiring harness between connectors C-08 and C-34 because the wiring harness is shorted to ground.
10	**INSPECT CAN LINE IN INSTRUMENT CLUSTER FOR SHORT TO GROUND** • Disconnect the instrument cluster connector. • Inspect for continuity at the following terminals: — Between instrument cluster terminal C (wiring harness side) and body ground — Between instrument cluster terminal E (wiring harness side) and body ground • Is there continuity?	Yes	Repair or replace the wiring harness between the instrument cluster and connector C-34 because the wiring harness is shorted to ground.
		No	Replace the instrument cluster because there is a short to ground in the instrument cluster. (See 09-22-6 INSTRUMENT CLUSTER REMOVAL/INSTALLATION.)

ON-BOARD DIAGNOSTIC [SKYACTIV-G 2.0 (R.H.D.)]

Step	Inspection		Action
11	**INSPECT FOR SHORT TO GROUND BETWEEN CONNECTORS C-14 AND C-08** • Disconnect connector C-14. • Connect connector C-08. • Inspect for continuity at the following terminals: — Between DLC-2 terminal L and body ground — Between DLC-2 terminal K and body ground • Is there continuity?	Yes	Repair or replace the wiring harness between connectors C-14 and C-08 because the wiring harness is shorted to ground.
		No	Go to the next step.
12	**INSPECT FOR SHORT TO GROUND BETWEEN CONNECTOR C-14 AND CONNECTORS C-47 AND C-48** • Disconnect connectors C-47 and C-48. • Connect connector C-14. • Inspect for continuity at the following terminals: — Between DLC-2 terminal L and body ground — Between DLC-2 terminal K and body ground • Is there continuity?	Yes	Repair or replace the wiring harness between connectors C-47 and C-48 and connector C-14 because the wiring harness is shorted to ground.
		No	Go to the next step.
13	**INSPECT FOR SHORT TO GROUND BETWEEN REAR VEHICLE MONITORING CONTROL MODULE (RH) OR BSM CONTROL MODULE (RH) AND CONNECTORS C-47 AND C-48** • Inspect for continuity at the following terminals: — Between rear vehicle monitoring control module (RH) terminal L and body ground (with rear vehicle monitoring system) — Between rear vehicle monitoring control module (RH) terminal I and body ground (with rear vehicle monitoring system) — Between BSM control module (RH) terminal H and body ground (with BSM system) — Between BSM control module (RH) terminal G and body ground (with BSM system) • Is there continuity?	Yes	• Go to the next step. (With rear vehicle monitoring system) • Go to Step 15. (With BSM system)
		No	Go to Step 16.
14	**INSPECT FOR SHORT TO GROUND BETWEEN REAR VEHICLE MONITORING CONTROL MODULE (RH) AND CONNECTOR C-43** • Disconnect connector C-43. • Inspect for continuity at the following terminals: — Between rear vehicle monitoring control module (RH) terminal L and body ground — Between rear vehicle monitoring control module (RH) terminal I and body ground • Is there continuity?	Yes	Go to the next step.
		No	Repair or replace the wiring harness between connector C-43 and connectors C-47 and C-48 because the wiring harness is shorted to ground.

ON-BOARD DIAGNOSTIC [SKYACTIV-G 2.0 (R.H.D.)]

Step	Inspection		Action
15	**INSPECT CAN LINE IN REAR VEHICLE MONITORING CONTROL MODULE (RH) OR BSM CONTROL MODULE (RH) FOR SHORT TO GROUND** • Disconnect the rear vehicle monitoring control module (RH) connector or BSM control module (RH) connector. • Inspect for continuity at the following terminals: — Between rear vehicle monitoring control module (RH) terminal L (wiring harness side) and body ground (with rear vehicle monitoring system) — Between rear vehicle monitoring control module (RH) terminal I (wiring harness side) and body ground (with rear vehicle monitoring system) — Between BSM control module (RH) terminal H (wiring harness side) and body ground (with BSM system) — Between rear vehicle monitoring control module (RH) terminal G (wiring harness side) and body ground (with rear vehicle monitoring system) • Is there continuity?	Yes	• Repair or replace the wiring harness between the rear vehicle monitoring control module (RH) and connector C-43 because the wiring harness is shorted to ground. (With rear vehicle monitoring system) • Repair or replace the wiring harness between the BSM control module (RH) and connectors C-47 and C-48 because the wiring harness is shorted to ground. (With BSM system)
		No	Replace the rear vehicle monitoring control module (RH) or the BSM control module (RH) because there is a short to ground in the rear vehicle monitoring control module (RH) or the BSM control module (RH). (See 09-22-77 REAR VEHICLE MONITORING CONTROL MODULE REMOVAL/INSTALLATION.) (See 09-22-67 BLIND SPOT MONITORING (BSM) CONTROL MODULE REMOVAL/INSTALLATION.)
16	**INSPECT FOR SHORT TO GROUND BETWEEN REAR BODY CONTROL MODULE (RBCM) AND BSM CONTROL MODULE (LH) OR REAR MOUNT CAMERA** • Disconnect the rear body control module (RBCM) connector. • Inspect for continuity at the following terminals: — Between BSM control module (LH) terminal H and body ground (with BSM system) — Between BSM control module (LH) terminal G and body ground (with BSM system) — Between rear mount camera terminal G and body ground (with rear mount camera) — Between rear mount camera terminal H and body ground (with rear mount camera) • Is there continuity?	Yes	Go to the next step.
		No	Go to Step 19.
17	**INSPECT FOR SHORT TO GROUND BETWEEN REAR BODY CONTROL MODULE (RBCM) AND CONNECTOR C-23 OR C-21** • Disconnect connector C-23 or C-21. • Inspect for continuity at the following terminals: — Between rear body control module (RBCM) terminal 4I (wiring harness side) and body ground — Between rear body control module (RBCM) terminal 4L (wiring harness side) and body ground • Is there continuity?	Yes	Repair or replace the wiring harness between the rear body control module (RBCM) and connector C-23 or C-21 because the wiring harness is shorted to ground.
		No	Go to the next step.

ON-BOARD DIAGNOSTIC [SKYACTIV-G 2.0 (R.H.D.)]

Step	Inspection		Action
18	**INSPECT CAN LINE IN BSM CONTROL MODULE (LH) OR REAR MOUNT CAMERA FOR SHORT TO GROUND** • Disconnect the BSM control module (LH) connector or the rear mount camera connector. • Inspect for continuity at the following terminals: — Between BSM control module (LH) terminal H (wiring harness side) and body ground (with BSM system) — Between BSM control module (LH) terminal G (wiring harness side) and body ground (with BSM system) — Between rear mount camera terminal G (wiring harness side) and body ground (with rear mount camera) — Between rear mount camera terminal H (wiring harness side) and body ground (with rear mount camera) • Is there continuity?	Yes	• Repair or replace the wiring harness between BSM control module (LH) and connector C-23 because the wiring harness is shorted to ground. (With BSM system) • Repair or replace the wiring harness between the rear mount camera and connector C-21 because the wiring harness is shorted to ground. (With rear mount camera)
		No	Replace the BSM control module (LH) or the rear mount camera because there is a short to ground in the BSM control module (LH) or the rear mount camera. (See 09-22-67 BLIND SPOT MONITORING (BSM) CONTROL MODULE REMOVAL/INSTALLATION.)
19	**INSPECT CAN LINE INSIDE REAR BODY CONTROL MODULE (RBCM) FOR SHORT TO GROUND** • Disconnect the rear body control module (RBCM) connector. • Inspect for continuity at the following terminals: — Between rear body control module (RBCM) terminal 4G (wiring harness side) and body ground — Between rear body control module (RBCM) terminal 4J (wiring harness side) and body ground • Is there continuity?	Yes	Repair or replace the wiring harness between the rear body control module (RBCM) and connectors C-47 and C-48 because the wiring harness is shorted to ground.
		No	Replace the rear body control module (RBCM) because there is a short to ground in the rear body control module (RBCM). (See 09-40-9 REAR BODY CONTROL MODULE (RBCM) REMOVAL/INSTALLATION.)

DETERMINING SHORT TO POWER SUPPLY LOCATION (MS-CAN) [SKYACTIV-G 2.0 (R.H.D.)]

id100202001000

Caution

- **Perform the following malfunction diagnosis only when it is diagnosed with a short to the power supply by 10-02B-3 CONTROLLER AREA NETWORK (CAN) MALFUNCTION DIAGNOSIS FLOW [SKYACTIV-G 2.0 (R.H.D.)].**

ON-BOARD DIAGNOSTIC [SKYACTIV-G 2.0 (R.H.D.)]

System wiring diagram

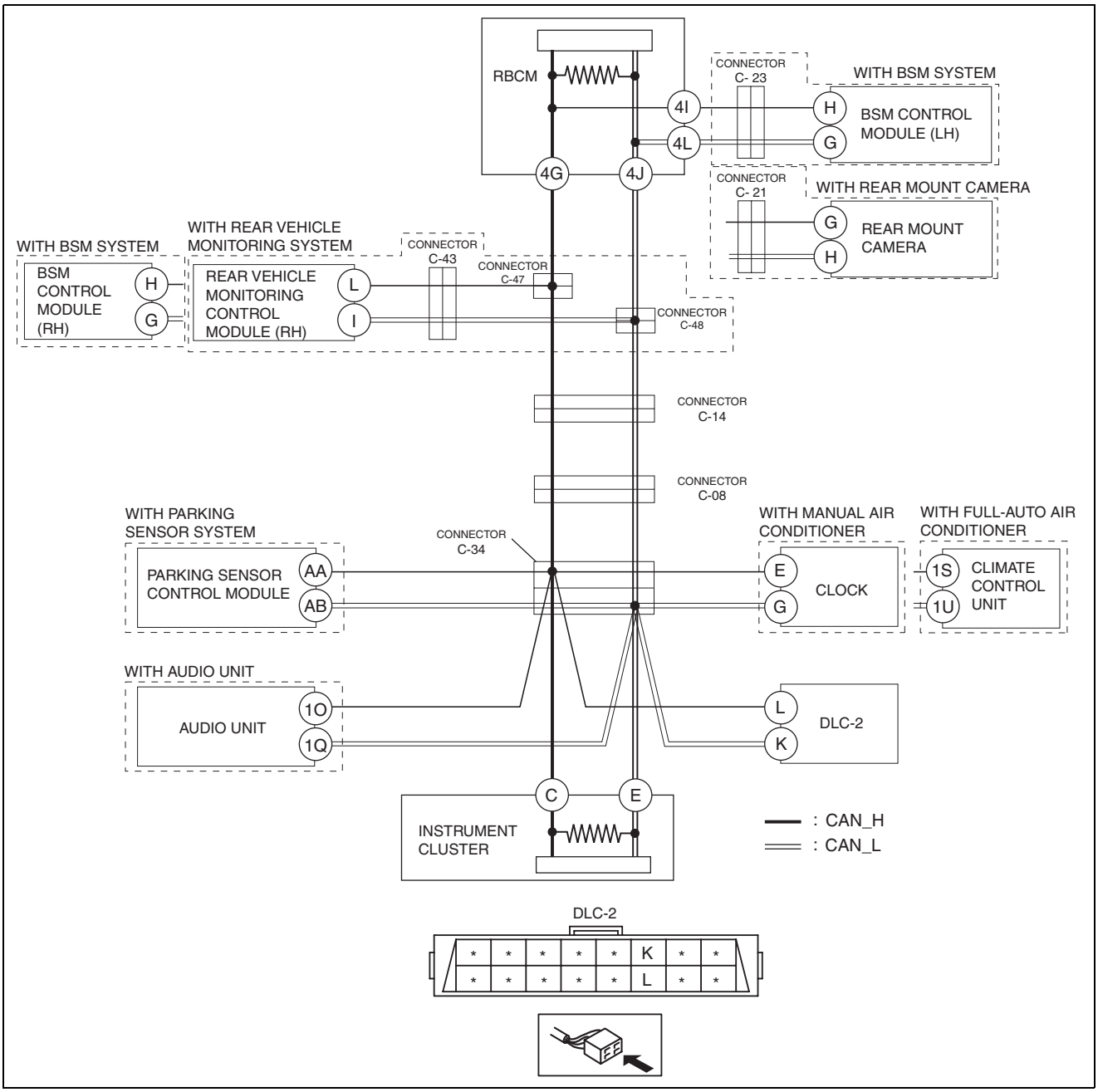

ac5wzw0000068

Determination procedure

Caution

- **When disconnecting the connector, verify that there is no looseness, damage, deformation, corrosion, or poor connection of the connector terminals.**
- **When inspecting the DLC-2, touch it with a paper clip or similar thin pin without directly inserting a tester into the terminals.**
- **Disconnect the negative battery cable before performing any work that requires handling of connectors.**

ON-BOARD DIAGNOSTIC [SKYACTIV-G 2.0 (R.H.D.)]

Step	Inspection		Action
1	**INSPECT FOR SHORT TO POWER SUPPLY BETWEEN CONNECTOR C-08 AND INSTRUMENT CLUSTER** • Disconnect the negative battery cable. (See 01-17A-11 NEGATIVE BATTERY CABLE DISCONNECTION/CONNECTION [SKYACTIV-G 2.0].) (See 01-17A-13 NEGATIVE BATTERY CABLE DISCONNECTION/CONNECTION [SKYACTIV-G 2.0 (WITHOUT i-stop)].) • Disconnect connector C-08. • Connect the negative battery cable. (See 01-17A-11 NEGATIVE BATTERY CABLE DISCONNECTION/CONNECTION [SKYACTIV-G 2.0].) (See 01-17A-13 NEGATIVE BATTERY CABLE DISCONNECTION/CONNECTION [SKYACTIV-G 2.0 (WITHOUT i-stop)].) • Switch the ignition ON (engine off). • Measure the voltage at DLC-2 terminals L and K. • Is the voltage between 1.5 — 3.5 V?	Yes	Go to Step 11.
		No	Go to the next step.
2	**INSPECT FOR SHORT TO POWER SUPPLY BETWEEN CONNECTORS C-34 AND DLC-2** • Switch the ignition off (LOCK). • Disconnect the negative battery cable. (See 01-17A-11 NEGATIVE BATTERY CABLE DISCONNECTION/CONNECTION [SKYACTIV-G 2.0].) (See 01-17A-13 NEGATIVE BATTERY CABLE DISCONNECTION/CONNECTION [SKYACTIV-G 2.0 (WITHOUT i-stop)].) • Disconnect connector C-34. • Connect the negative battery cable. (See 01-17A-11 NEGATIVE BATTERY CABLE DISCONNECTION/CONNECTION [SKYACTIV-G 2.0].) (See 01-17A-13 NEGATIVE BATTERY CABLE DISCONNECTION/CONNECTION [SKYACTIV-G 2.0 (WITHOUT i-stop)].) • Switch the ignition ON (engine off). • Measure the voltage at DLC-2 terminals L and K. • Is the voltage 0 V?	Yes	Go to the next step.
		No	Repair or replace the wiring harness between DLC-2 and connector C-34 because the wiring harness is shorted to the power supply.
3	**INSPECT FOR SHORT TO POWER SUPPLY BETWEEN CONNECTOR C-34 AND PARKING SENSOR CONTROL MODULE** • Measure the voltage at parking sensor control module terminals AA and AB. • Is the voltage between 1.5 — 3.5 V?	Yes	Go to Step 5.
		No	Go to the next step.

ON-BOARD DIAGNOSTIC [SKYACTIV-G 2.0 (R.H.D.)]

Step	Inspection		Action
4	**INSPECT PARKING SENSOR CONTROL MODULE FOR SHORT TO POWER SUPPLY** • Switch the ignition off (LOCK). • Disconnect the negative battery cable. (See 01-17A-11 NEGATIVE BATTERY CABLE DISCONNECTION/CONNECTION [SKYACTIV-G 2.0].) (See 01-17A-13 NEGATIVE BATTERY CABLE DISCONNECTION/CONNECTION [SKYACTIV-G 2.0 (WITHOUT i-stop)].) • Disconnect the parking sensor control module connector. • Connect connector C-34. • Connect the negative battery cable. (See 01-17A-11 NEGATIVE BATTERY CABLE DISCONNECTION/CONNECTION [SKYACTIV-G 2.0].) (See 01-17A-13 NEGATIVE BATTERY CABLE DISCONNECTION/CONNECTION [SKYACTIV-G 2.0 (WITHOUT i-stop)].) • Switch the ignition ON (engine off). • Measure the voltage at DLC-2 terminals L and K. • Is the voltage between 1.5 — 3.5 V?	Yes	Replace the parking sensor control module because there is a short to power supply in the parking sensor control module. (See 09-22-57 PARKING SENSOR CONTROL MODULE REMOVAL/INSTALLATION.)
		No	Repair or replace the wiring harness between the parking sensor control module and connector C-34 because the wiring harness is shorted to the power supply.
5	**INSPECT FOR SHORT TO POWER SUPPLY BETWEEN CONNECTOR C-34 AND CLIMATE CONTROL UNIT OR CLOCK** • Measure the voltage at climate control unit terminals 1S and 1U. (with full-auto air conditioner) • Measure the voltage at clock terminals E and G. (with manual air conditioner) • Is the voltage between 1.5 — 3.5 V?	Yes	Go to Step 7.
		No	Go to the next step.
6	**INSPECT CLIMATE CONTROL UNIT OR CLOCK FOR SHORT TO POWER SUPPLY** • Switch the ignition off (LOCK). • Disconnect the negative battery cable. (See 01-17A-11 NEGATIVE BATTERY CABLE DISCONNECTION/CONNECTION [SKYACTIV-G 2.0].) (See 01-17A-13 NEGATIVE BATTERY CABLE DISCONNECTION/CONNECTION [SKYACTIV-G 2.0 (WITHOUT i-stop)].) • Disconnect the climate control unit connector or the clock connector. • Connect connector C-34. • Connect the negative battery cable. (See 01-17A-11 NEGATIVE BATTERY CABLE DISCONNECTION/CONNECTION [SKYACTIV-G 2.0].) (See 01-17A-13 NEGATIVE BATTERY CABLE DISCONNECTION/CONNECTION [SKYACTIV-G 2.0 (WITHOUT i-stop)].) • Switch the ignition ON (engine off). • Measure the voltage at DLC-2 terminals L and K. • Is the voltage between 1.5 — 3.5 V?	Yes	Replace the climate control unit or the clock because there is a short to power supply inside the climate control unit or the clock. (See 07-40A-32 CLIMATE CONTROL UNIT REMOVAL/INSTALLATION [FULL-AUTO AIR CONDITIONER].) (See 09-22-92 CLOCK REMOVAL/INSTALLATION.)
		No	Repair or replace the wiring harness between the climate control unit or the clock and connector C-34 because the wiring harness is shorted to the power supply.
7	**INSPECT FOR SHORT TO POWER SUPPLY BETWEEN CONNECTOR C-34 AND AUDIO** • Measure the voltage at audio unit terminals 1O and 1Q. • Is the voltage between 1.5 — 3.5 V?	Yes	Go to Step 9.
		No	Go to the next step.

ON-BOARD DIAGNOSTIC [SKYACTIV-G 2.0 (R.H.D.)]

Step	Inspection		Action
8	**INSPECT AUDIO UNIT FOR SHORT TO POWER SUPPLY** • Switch the ignition off (LOCK). • Disconnect the negative battery cable. (See 01-17A-11 NEGATIVE BATTERY CABLE DISCONNECTION/CONNECTION [SKYACTIV-G 2.0].) (See 01-17A-13 NEGATIVE BATTERY CABLE DISCONNECTION/CONNECTION [SKYACTIV-G 2.0 (WITHOUT i-stop)].) • Disconnect the audio unit connector. • Connect connector C34. • Connect the negative battery cable. (See 01-17A-11 NEGATIVE BATTERY CABLE DISCONNECTION/CONNECTION [SKYACTIV-G 2.0].) (See 01-17A-13 NEGATIVE BATTERY CABLE DISCONNECTION/CONNECTION [SKYACTIV-G 2.0 (WITHOUT i-stop)].) • Switch the ignition ON (engine off). • Measure the voltage at audio unit terminals 1O and 1Q (wiring harness side). • Is the voltage between 1.5 — 3.5 V?	Yes	Replace the audio unit because there is a short to the power supply in the audio unit. (See 09-20-4 AUDIO UNIT REMOVAL/INSTALLATION.)
		No	Repair or replace the wiring harness between the audio unit and connector C-34 because the wiring harness is shorted to the power supply.
9	**INSPECT FOR SHORT TO POWER SUPPLY BETWEEN CONNECTOR C-34 AND INSTRUMENT CLUSTER** • Measure the voltage at instrument cluster terminals C and E. • Is the voltage between 1.5 — 3.5 V?	Yes	Repair or replace the wiring harness between connector C-08 and connector C-34 because the wiring harness is shorted to the power supply.
		No	Go to the next step.
10	**INSPECT INSTRUMENT CLUSTER FOR SHORT TO POWER SUPPLY** • Switch the ignition off (LOCK). • Disconnect the negative battery cable. (See 01-17A-11 NEGATIVE BATTERY CABLE DISCONNECTION/CONNECTION [SKYACTIV-G 2.0].) (See 01-17A-13 NEGATIVE BATTERY CABLE DISCONNECTION/CONNECTION [SKYACTIV-G 2.0 (WITHOUT i-stop)].) • Disconnect the instrument cluster connector. • Connect connector C-34. • Connect the negative battery cable. (See 01-17A-11 NEGATIVE BATTERY CABLE DISCONNECTION/CONNECTION [SKYACTIV-G 2.0].) (See 01-17A-13 NEGATIVE BATTERY CABLE DISCONNECTION/CONNECTION [SKYACTIV-G 2.0 (WITHOUT i-stop)].) • Switch the ignition ON (engine off). • Measure the voltage at DLC-2 terminals L and K. • Is the voltage between 1.5 — 3.5 V?	Yes	Replace the instrument cluster because there is a short to the power supply in the instrument cluster. (See 09-22-6 INSTRUMENT CLUSTER REMOVAL/INSTALLATION.)
		No	Repair or replace the wiring harness between the instrument cluster and connector C-34 because the wiring harness is shorted to the power supply.

ON-BOARD DIAGNOSTIC [SKYACTIV-G 2.0 (R.H.D.)]

Step	Inspection		Action
11	**INSPECT FOR SHORT TO POWER SUPPLY BETWEEN CONNECTORS C-14 AND C-08** • Switch the ignition off (LOCK). • Disconnect the negative battery cable. (See 01-17A-11 NEGATIVE BATTERY CABLE DISCONNECTION/CONNECTION [SKYACTIV-G 2.0].) (See 01-17A-13 NEGATIVE BATTERY CABLE DISCONNECTION/CONNECTION [SKYACTIV-G 2.0 (WITHOUT i-stop)].) • Disconnect connector C-14. • Connect connector C-08. • Connect the negative battery cable. (See 01-17A-11 NEGATIVE BATTERY CABLE DISCONNECTION/CONNECTION [SKYACTIV-G 2.0].) (See 01-17A-13 NEGATIVE BATTERY CABLE DISCONNECTION/CONNECTION [SKYACTIV-G 2.0 (WITHOUT i-stop)].) • Switch the ignition ON (engine off). • Measure the voltage at DLC-2 terminals L and K. • Is the voltage between 1.5 — 3.5 V?	Yes	Go to the next step.
		No	Repair or replace the wiring harness between connector C-14 and connector C-08 because the wiring harness is shorted to the power supply.
12	**INSPECT FOR SHORT TO POWER SUPPLY BETWEEN CONNECTORS C-47 AND C-48 AND CONNECTOR C-14** • Switch the ignition off (LOCK). • Disconnect the negative battery cable. (See 01-17A-11 NEGATIVE BATTERY CABLE DISCONNECTION/CONNECTION [SKYACTIV-G 2.0].) (See 01-17A-13 NEGATIVE BATTERY CABLE DISCONNECTION/CONNECTION [SKYACTIV-G 2.0 (WITHOUT i-stop)].) • Disconnect connectors C-47 and C-48. • Connect connector C-14. • Connect the negative battery cable. (See 01-17A-11 NEGATIVE BATTERY CABLE DISCONNECTION/CONNECTION [SKYACTIV-G 2.0].) (See 01-17A-13 NEGATIVE BATTERY CABLE DISCONNECTION/CONNECTION [SKYACTIV-G 2.0 (WITHOUT i-stop)].) • Switch the ignition ON (engine off). • Measure the voltage at DLC-2 terminals L and K. • Is the voltage between 1.5 — 3.5 V?	Yes	Go to the next step.
		No	Repair or replace the wiring harness between connectors C-47 and C-48 and connector C-14 because the wiring harness is shorted to the power supply.
13	**INSPECT BETWEEN REAR VEHICLE MONITORING CONTROL MODULE (RH) OR BSM CONTROL MODULE (RH) AND CONNECTORS C-47 AND C-48 FOR SHORT TO POWER SUPPLY** • Measure the voltage at rear vehicle monitoring control module (RH) terminals L and I. (With rear vehicle monitoring system) • Measure the voltage at BSM control module (RH) terminals H and G. (With BSM system) • Is the voltage between 1.5 — 3.5 V?	Yes	Go to Step 16.
		No	• Go to the next step. (With rear vehicle monitoring system) • Go to Step 15.

ON-BOARD DIAGNOSTIC [SKYACTIV-G 2.0 (R.H.D.)]

Step	Inspection		Action
14	**INSPECT FOR SHORT TO POWER SUPPLY BETWEEN REAR VEHICLE MONITORING CONTROL MODULE (RH) AND CONNECTOR C-43** • Switch the ignition off (LOCK). • Disconnect the negative battery cable. (See 01-17A-11 NEGATIVE BATTERY CABLE DISCONNECTION/CONNECTION [SKYACTIV-G 2.0].) (See 01-17A-13 NEGATIVE BATTERY CABLE DISCONNECTION/CONNECTION [SKYACTIV-G 2.0 (WITHOUT i-stop)].) • Disconnect connectors C-43. • Connect the negative battery cable. (See 01-17A-11 NEGATIVE BATTERY CABLE DISCONNECTION/CONNECTION [SKYACTIV-G 2.0].) (See 01-17A-13 NEGATIVE BATTERY CABLE DISCONNECTION/CONNECTION [SKYACTIV-G 2.0 (WITHOUT i-stop)].) • Switch the ignition ON (engine off). • Measure the voltage at rear vehicle monitoring (RH) terminals L and I. • Is the voltage between 1.5 — 3.5 V?	Yes	Repair or replace the wiring harness between connector C-43 and connectors C-47 and C-48 because the wiring harness is shorted to the power supply.
		No	Go to the next step.
15	**INSPECT BETWEEN REAR VEHICLE MONITORING CONTROL MODULE (RH) OR BSM CONTROL MODULE (RH) FOR SHORT TO POWER SUPPLY** • Switch the ignition off (LOCK). • Disconnect the negative battery cable. (See 01-17A-11 NEGATIVE BATTERY CABLE DISCONNECTION/CONNECTION [SKYACTIV-G 2.0].) (See 01-17A-13 NEGATIVE BATTERY CABLE DISCONNECTION/CONNECTION [SKYACTIV-G 2.0 (WITHOUT i-stop)].) • Disconnect the rear vehicle monitoring control modules (RH) connector or the BSM control module (RH) connector. • Connect connectors C-47 and C-48. • Connect the negative battery cable. (See 01-17A-11 NEGATIVE BATTERY CABLE DISCONNECTION/CONNECTION [SKYACTIV-G 2.0].) (See 01-17A-13 NEGATIVE BATTERY CABLE DISCONNECTION/CONNECTION [SKYACTIV-G 2.0 (WITHOUT i-stop)].) • Switch the ignition ON (engine off). • Measure the voltage at DLC-2 terminals L and K. • Is the voltage between 1.5 — 3.5 V?	Yes	Replace the rear vehicle monitoring control module (RH) or the BSM control module (RH) because there is a short to the power supply in the rear vehicle monitoring control module (RH) or the BSM control module (RH). (See 09-22-77 REAR VEHICLE MONITORING CONTROL MODULE REMOVAL/INSTALLATION.) (See 09-22-67 BLIND SPOT MONITORING (BSM) CONTROL MODULE REMOVAL/INSTALLATION.)
		No	• Repair or replace the wiring harness between the rear vehicle monitoring control module (RH) and connector C-43 because the wiring harness is shorted to the power supply. (With rear vehicle monitoring system) • Repair or replace the wiring harness between the BSM control module (RH) and connectors C-47 and C-48 because the wiring harness is shorted to the power supply. (With BSM system)

ON-BOARD DIAGNOSTIC [SKYACTIV-G 2.0 (R.H.D.)]

Step	Inspection		Action
16	**INSPECT FOR SHORT TO POWER SUPPLY BETWEEN REAR BODY CONTROL MODULE (RBCM) AND BSM CONTROL MODULE (LH) OR REAR MOUNT CAMERA** • Switch the ignition off (LOCK). • Disconnect the negative battery cable. (See 01-17A-11 NEGATIVE BATTERY CABLE DISCONNECTION/CONNECTION [SKYACTIV-G 2.0].) (See 01-17A-13 NEGATIVE BATTERY CABLE DISCONNECTION/CONNECTION [SKYACTIV-G 2.0 (WITHOUT i-stop)].) • Disconnect the rear body control module (RBCM) connector. • Connect the negative battery cable. (See 01-17A-11 NEGATIVE BATTERY CABLE DISCONNECTION/CONNECTION [SKYACTIV-G 2.0].) (See 01-17A-13 NEGATIVE BATTERY CABLE DISCONNECTION/CONNECTION [SKYACTIV-G 2.0 (WITHOUT i-stop)].) • Switch the ignition ON (engine off). • Measure the voltage at BSM control module (LH) terminals H and G. (With BSM system) • Measure the voltage at BSM control module (LH) terminals H and G. (With rear mount camera) • Is the voltage between 1.5 — 3.5 V?	Yes	Go to Step 19.
		No	Go to the next step.
17	**INSPECT BETWEEN REAR BODY CONTROL MODULE (RBCM) AND CONNECTOR C-23 OR C-21 FOR SHORT TO POWER SUPPLY** • Switch the ignition off (LOCK). • Disconnect the negative battery cable. (See 01-17A-11 NEGATIVE BATTERY CABLE DISCONNECTION/CONNECTION [SKYACTIV-G 2.0].) (See 01-17A-13 NEGATIVE BATTERY CABLE DISCONNECTION/CONNECTION [SKYACTIV-G 2.0 (WITHOUT i-stop)].) • Disconnect connector C-23 or C-21. • Connect the rear body control module (RBCM) connector. • Connect connectors C-47 and C-48. • Connect the negative battery cable. (See 01-17A-11 NEGATIVE BATTERY CABLE DISCONNECTION/CONNECTION [SKYACTIV-G 2.0].) (See 01-17A-13 NEGATIVE BATTERY CABLE DISCONNECTION/CONNECTION [SKYACTIV-G 2.0 (WITHOUT i-stop)].) • Switch the ignition ON (engine off). • Measure the voltage at DLC-2 terminals L and K. • Is the voltage between 1.5 — 3.5 V?	Yes	Go to the next step.
		No	Repair or replace the wiring harness between the rear body control module (RBCM) and connector C-23 or C-21 because the wiring harness is shorted to the power supply.

ON-BOARD DIAGNOSTIC [SKYACTIV-G 2.0 (R.H.D.)]

Step	Inspection		Action
18	**INSPECT BSM CONTROL MODULE (LH) OR REAR MOUNT CAMERA FOR SHORT TO POWER SUPPLY** • Switch the ignition off (LOCK). • Disconnect the negative battery cable. (See 01-17A-11 NEGATIVE BATTERY CABLE DISCONNECTION/CONNECTION [SKYACTIV-G 2.0].) (See 01-17A-13 NEGATIVE BATTERY CABLE DISCONNECTION/CONNECTION [SKYACTIV-G 2.0 (WITHOUT i-stop)].) • Disconnect the BSM control module (LH) connector or the rear mount camera connector. • Connect connector C-23 or C-21. • Connect the negative battery cable. (See 01-17A-11 NEGATIVE BATTERY CABLE DISCONNECTION/CONNECTION [SKYACTIV-G 2.0].) (See 01-17A-13 NEGATIVE BATTERY CABLE DISCONNECTION/CONNECTION [SKYACTIV-G 2.0 (WITHOUT i-stop)].) • Switch the ignition ON (engine off). • Measure the voltage at DLC-2 terminals L and K. • Is the voltage between 1.5 — 3.5 V?	Yes	Replace the BSM control module (LH) or the rear mount camera because there is a short to the power supply in the BSM control module (LH) or the rear mount camera. (See 09-22-67 BLIND SPOT MONITORING (BSM) CONTROL MODULE REMOVAL/INSTALLATION.) (See 09-20-68 REAR MOUNT CAMERA REMOVAL/INSTALLATION.)
		No	• Repair or replace the wiring harness between BSM control module (LH) and connector C-23 because the wiring harness is shorted to the power supply. (With BSM system) • Repair or replace the wiring harness between the rear mount camera and connector C-21 because the wiring harness is shorted to the power supply. (With rear mount camera)
19	**INSPECT REAR BODY CONTROL MODULE (RBCM) FOR SHORT TO POWER SUPPLY** • Switch the ignition off (LOCK). • Disconnect the negative battery cable. (See 01-17A-11 NEGATIVE BATTERY CABLE DISCONNECTION/CONNECTION [SKYACTIV-G 2.0].) (See 01-17A-13 NEGATIVE BATTERY CABLE DISCONNECTION/CONNECTION [SKYACTIV-G 2.0 (WITHOUT i-stop)].) • Connect connectors C-47 and C-48. • Connect the negative battery cable. (See 01-17A-11 NEGATIVE BATTERY CABLE DISCONNECTION/CONNECTION [SKYACTIV-G 2.0].) (See 01-17A-13 NEGATIVE BATTERY CABLE DISCONNECTION/CONNECTION [SKYACTIV-G 2.0 (WITHOUT i-stop)].) • Switch the ignition ON (engine off). • Measure the voltage at DLC-2 terminals L and K. • Is the voltage between 1.5 — 3.5 V?	Yes	Replace the rear body control module (RBCM) because there is a short to the power supply in the rear body control module (RBCM). (See 09-40-9 REAR BODY CONTROL MODULE (RBCM) REMOVAL/INSTALLATION.)
		No	Repair or replace the wiring harness between the rear body control module (RBCM) and connectors C-47 and C-48 because the wiring harness is shorted to the power supply.

DETERMINING SHORT BETWEEN CIRCUITS LOCATION (MS-CAN) [SKYACTIV-G 2.0 (R.H.D.)]

id100202001100

Caution

- **Perform the following malfunction diagnosis only when it is diagnosed with a short between circuits by 10-02B-3 CONTROLLER AREA NETWORK (CAN) MALFUNCTION DIAGNOSIS FLOW [SKYACTIV-G 2.0 (R.H.D.)].**

ON-BOARD DIAGNOSTIC [SKYACTIV-G 2.0 (R.H.D.)]

System wiring diagram

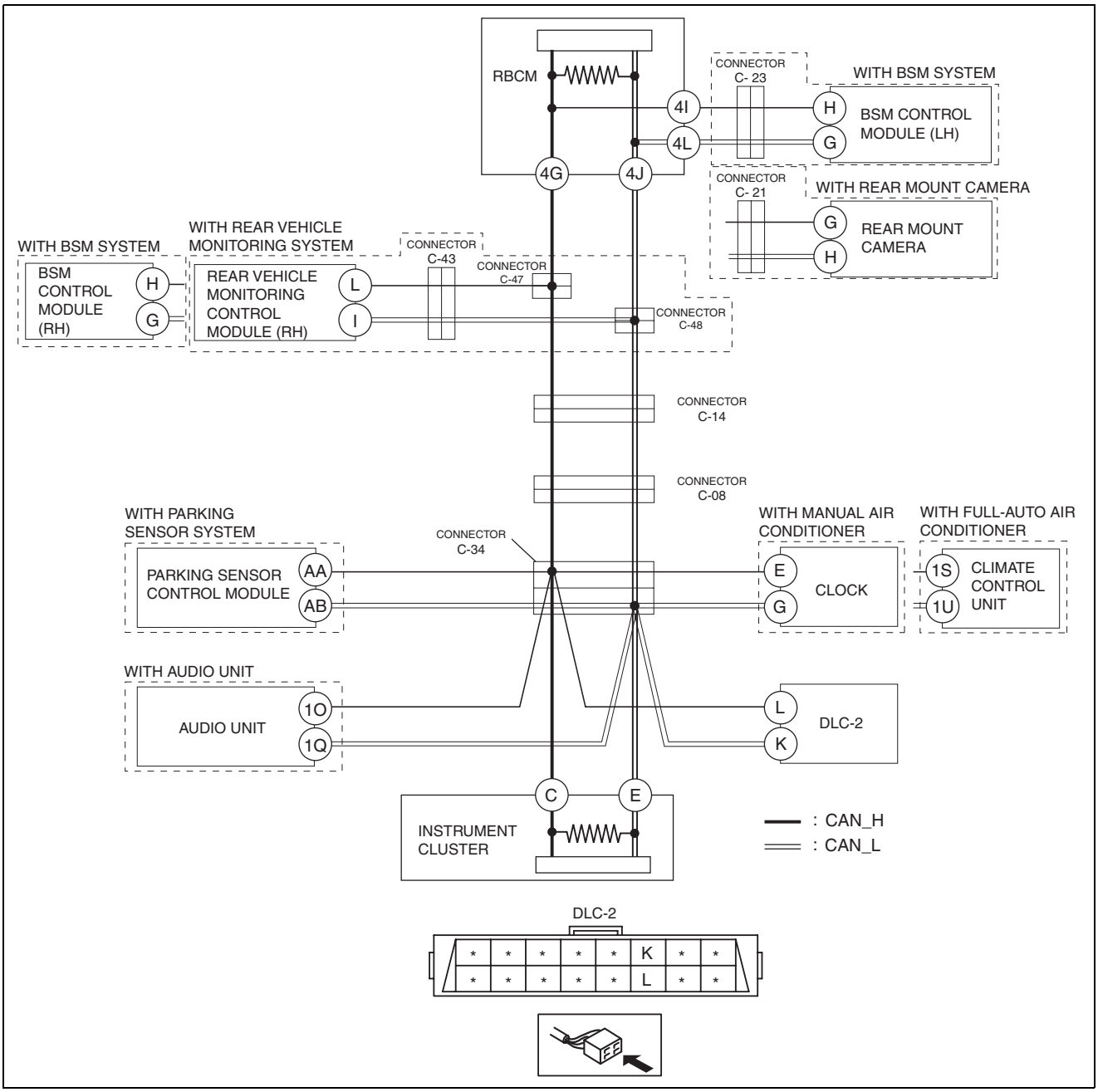

ac5wzw0000068

Determination procedure

Caution

- **When disconnecting the connector, verify that there is no looseness, damage, deformation, corrosion, or poor connection of the connector terminals.**
- **When inspecting the DLC-2, touch it with a paper clip or similar thin pin without directly inserting a tester into the terminals.**

ON-BOARD DIAGNOSTIC [SKYACTIV-G 2.0 (R.H.D.)]

Step	Inspection		Action
1	**INSPECT BETWEEN CONNECTOR C-08 AND INSTRUMENT CLUSTER FOR SHORT BETWEEN CIRCUITS** • Disconnect the negative battery cable. (See 01-17A-11 NEGATIVE BATTERY CABLE DISCONNECTION/CONNECTION [SKYACTIV-G 2.0].) (See 01-17A-13 NEGATIVE BATTERY CABLE DISCONNECTION/CONNECTION [SKYACTIV-G 2.0 (WITHOUT i-stop)].) • Disconnect connector C-08. • Connect the negative battery cable. (See 01-17A-11 NEGATIVE BATTERY CABLE DISCONNECTION/CONNECTION [SKYACTIV-G 2.0].) (See 01-17A-13 NEGATIVE BATTERY CABLE DISCONNECTION/CONNECTION [SKYACTIV-G 2.0 (WITHOUT i-stop)].) • Switch the ignition ON (engine off). • Measure the voltage at DLC-2 terminals L and K. • Is the voltage at DLC-2 terminals L and K the same?	Yes	Go to the next step.
		No	Go to Step 11.
2	**INSPECT BETWEEN CONNECTOR C-34 AND DLC-2 FOR SHORT BETWEEN CIRCUITS** • Switch the ignition off (LOCK). • Disconnect the negative battery cable. (See 01-17A-11 NEGATIVE BATTERY CABLE DISCONNECTION/CONNECTION [SKYACTIV-G 2.0].) (See 01-17A-13 NEGATIVE BATTERY CABLE DISCONNECTION/CONNECTION [SKYACTIV-G 2.0 (WITHOUT i-stop)].) • Disconnect connector C-34. • Inspect for continuity between DLC-2 terminals L and K. • Is there continuity?	Yes	Repair or replace the wiring harness between connector C-34 and DLC-2 because the wiring harness is shorted between circuits.
		No	Go to the next step.
3	**INSPECT BETWEEN CONNECTOR C-34 AND PARKING SENSOR CONTROL MODULE FOR SHORT BETWEEN CIRCUITS** • Inspect for continuity between parking sensor control module terminals AA and AB. • Is there continuity?	Yes	Go to the next step.
		No	Go to Step 5.
4	**INSPECT PARKING SENSOR CONTROL MODULE FOR SHORT BETWEEN CIRCUITS** • Disconnect the parking sensor control module connector. • Inspect for continuity between parking sensor control module terminals AA and AB (wiring harness side). • Is there continuity?	Yes	Repair or replace the wiring harness between the parking sensor control module and connector C-34 because the wiring harness is shorted between circuits.
		No	Replace the parking sensor control module because there is a short between circuits in the parking sensor control module. (See 09-22-57 PARKING SENSOR CONTROL MODULE REMOVAL/INSTALLATION.)
5	**INSPECT BETWEEN CONNECTOR C-34 AND CLIMATE CONTROL UNIT OR CLOCK FOR SHORT BETWEEN CIRCUITS** • Inspect for continuity between climate control unit terminals 1S and 1U. (with full-auto air conditioner) • Inspect for continuity between clock terminals E and G. (with manual air conditioner) • Is there continuity?	Yes	Go to the next step.
		No	Go to Step 7.

ON-BOARD DIAGNOSTIC [SKYACTIV-G 2.0 (R.H.D.)]

Step	Inspection		Action
6	**INSPECT CLIMATE CONTROL UNIT OR CLOCK FOR SHORT BETWEEN CIRCUITS** • Disconnect the climate control unit connector or the clock connector. • Inspect for continuity between climate control unit terminals 1S and 1U (wiring harness side). (with full-auto air conditioner) • Inspect for continuity between clock terminals E and G (wiring harness side). (with manual air conditioner) • Is there continuity?	Yes	Repair or replace the wiring harness between the climate control unit or clock and connector C-34 because the wiring harness is shorted between circuits.
		No	Replace the climate control unit or the clock because there is a short between circuits inside the climate control unit or the clock. (See 07-40A-32 CLIMATE CONTROL UNIT REMOVAL/INSTALLATION [FULL-AUTO AIR CONDITIONER].) (See 09-22-92 CLOCK REMOVAL/INSTALLATION.)
7	**INSPECT BETWEEN CONNECTOR C-34 AND AUDIO UNIT FOR SHORT BETWEEN CIRCUITS** • Inspect for continuity between audio unit terminals 1O and 1Q. • Is there continuity?	Yes	Go to the next step.
		No	Go to Step 9.
8	**INSPECT AUDIO UNIT FOR SHORT BETWEEN CIRCUITS** • Disconnect the audio unit connector. • Inspect for continuity between audio unit terminals 1O and 1Q (wiring harness side). • Is there continuity?	Yes	Repair or replace the wiring harness between the audio unit and connector C-34 because the wiring harness is shorted between circuits.
		No	Replace the audio unit because there is a short between circuits in the audio unit. (See 09-20-4 AUDIO UNIT REMOVAL/INSTALLATION.)
9	**INSPECT BETWEEN CONNECTOR C-34 AND INSTRUMENT CLUSTER FOR SHORT BETWEEN CIRCUITS** • Inspect for continuity between instrument cluster terminals C and E. • Is there continuity?	Yes	Go to the next step.
		No	Repair or replace the wiring harness between connectors C-34 and C-08 because the wiring harness is shorted between circuits.
10	**INSPECT INSTRUMENT CLUSTER FOR SHORT BETWEEN CIRCUITS** • Disconnect the instrument cluster connector. • Inspect for continuity between instrument cluster terminals C and E (wiring harness side). • Is there continuity?	Yes	Repair or replace the wiring harness between the instrument cluster and connector C-34 because the wiring harness is shorted between circuits.
		No	Replace the instrument cluster because there is a short between circuits in the instrument cluster. (See 09-22-6 INSTRUMENT CLUSTER REMOVAL/INSTALLATION.)
11	**INSPECT BETWEEN CONNECTORS C-14 AND C-08 FOR SHORT BETWEEN CIRCUITS** • Switch the ignition off (LOCK). • Disconnect the negative battery cable. (See 01-17A-11 NEGATIVE BATTERY CABLE DISCONNECTION/CONNECTION [SKYACTIV-G 2.0].) (See 01-17A-13 NEGATIVE BATTERY CABLE DISCONNECTION/CONNECTION [SKYACTIV-G 2.0 (WITHOUT i-stop)].) • Disconnect connector C-14. • Connect connector C-08. • Connect the negative battery cable. (See 01-17A-11 NEGATIVE BATTERY CABLE DISCONNECTION/CONNECTION [SKYACTIV-G 2.0].) (See 01-17A-13 NEGATIVE BATTERY CABLE DISCONNECTION/CONNECTION [SKYACTIV-G 2.0 (WITHOUT i-stop)].) • Switch the ignition ON (engine off). • Measure the voltage at DLC-2 terminals L and K. • Is the voltage at DLC-2 terminals L and K the same?	Yes	Repair or replace the wiring harness between connectors C-14 and C-08 because the wiring harness is shorted between circuits.
		No	Go to the next step.

ON-BOARD DIAGNOSTIC [SKYACTIV-G 2.0 (R.H.D.)]

Step	Inspection		Action
12	**INSPECT BETWEEN CONNECTORS C-47 AND C-48 AND CONNECTOR C-14 FOR SHORT BETWEEN CIRCUITS** • Switch the ignition off (LOCK). • Disconnect the negative battery cable. (See 01-17A-11 NEGATIVE BATTERY CABLE DISCONNECTION/CONNECTION [SKYACTIV-G 2.0].) (See 01-17A-13 NEGATIVE BATTERY CABLE DISCONNECTION/CONNECTION [SKYACTIV-G 2.0 (WITHOUT i-stop)].) • Disconnect connectors C-47 and C-48. • Connect connector C-14. • Connect the negative battery cable. (See 01-17A-11 NEGATIVE BATTERY CABLE DISCONNECTION/CONNECTION [SKYACTIV-G 2.0].) (See 01-17A-13 NEGATIVE BATTERY CABLE DISCONNECTION/CONNECTION [SKYACTIV-G 2.0 (WITHOUT i-stop)].) • Switch the ignition ON (engine off). • Measure the voltage at DLC-2 terminals L and K. • Is the voltage at DLC-2 terminals L and K the same?	Yes	Repair or replace the wiring harness between connectors C-47 and C-48 and connector C-14 because the wiring harness is shorted between circuits.
		No	Go to the next step.
13	**INSPECT BETWEEN REAR VEHICLE MONITORING CONTROL MODULE (RH) OR BSM CONTROL MODULE (RH) AND CONNECTORS C-47 AND C-48 FOR SHORT BETWEEN CIRCUITS** • Switch the ignition off (LOCK). • Inspect for continuity between rear vehicle control module (RH) terminals L and I. (With rear vehicle monitoring system) • Inspect for continuity between BSM control module (RH) terminals H and G. (With BSM system) • Is there continuity?	Yes	• Go to the next step. (With rear vehicle monitoring system) • Go to Step 15. (With BSM system)
		No	Go to Step 16.
14	**INSPECT BETWEEN REAR VEHICLE MONITORING CONTROL MODULE (RH) AND CONNECTOR C-43 FOR SHORT BETWEEN CIRCUITS** • Disconnect connector C-43. • Inspect for continuity between rear vehicle control module (RH) terminals L and I. • Is there continuity?	Yes	Go to the next step.
		No	Repair or replace the wiring harness between connector C-43 and connectors C-47 and C-48 because the wiring harness is shorted between circuits.
15	**INSPECT BETWEEN REAR VEHICLE MONITORING CONTROL MODULE (RH) OR BSM CONTROL MODULE (RH) FOR SHORT BETWEEN CIRCUITS** • Disconnect the rear vehicle monitoring control modules (RH) connector or the BSM control module (RH) connector. • Inspect for continuity between rear vehicle control module (RH) terminals L and I (wiring harness side). (With rear vehicle monitoring system) • Inspect for continuity between BSM control module (RH) terminals H and G (wiring harness side). (With BSM system) • Is there continuity?	Yes	• Repair or replace the wiring harness between the rear vehicle monitoring control module (RH) and connector C-43 because the wiring harness is shorted between circuits. (With rear vehicle monitoring system) • Repair or replace the wiring harness between the BSM control module (RH) and connectors C-47 and C-48 because the wiring harness is shorted between circuits. (With BSM system)
		No	Replace the rear vehicle monitoring control module (RH) or the BSM control module (RH) because there is a short between circuits in the rear vehicle monitoring control module (RH) or the BSM control module (RH). (See 09-22-77 REAR VEHICLE MONITORING CONTROL MODULE REMOVAL/INSTALLATION.) (See 09-22-67 BLIND SPOT MONITORING (BSM) CONTROL MODULE REMOVAL/INSTALLATION.)

ON-BOARD DIAGNOSTIC [SKYACTIV-G 2.0 (R.H.D.)]

Step	Inspection		Action
16	**INSPECT BETWEEN BSM CONTROL MODULE (LH) OR REAR MOUNT CAMERA AND REAR BODY CONTROL MODULE (RBCM) FOR SHORT BETWEEN CIRCUITS** • Disconnect the negative battery cable. (See 01-17A-11 NEGATIVE BATTERY CABLE DISCONNECTION/CONNECTION [SKYACTIV-G 2.0].) (See 01-17A-13 NEGATIVE BATTERY CABLE DISCONNECTION/CONNECTION [SKYACTIV-G 2.0 (WITHOUT i-stop)].) • Disconnect the rear body control module (RBCM) connector. • Inspect for continuity between BSM control module (LH) terminals H and G (wiring harness side). (With BSM system) • Inspect the continuity between rear mount camera terminals G and H (wiring harness side). (With rear mount camera) • Is there continuity?	Yes	Go to the next step.
		No	Go to Step 19.
17	**INSPECT BETWEEN REAR BODY CONTROL MODULE (RBCM) AND CONNECTOR C-23 OR C-21 FOR SHORT BETWEEN CIRCUITS** • Disconnect connector C-23 or C-21. • Inspect for continuity between BSM control module (LH) terminals H and G (wiring harness side). (With BSM system) • Inspect the continuity between rear mount camera terminals G and H (wiring harness side). (With rear mount camera) • Is there continuity?	Yes	Repair or replace the wiring harness between the rear body control module (RBCM) and connector C-23 or C-21 because the wiring harness is shorted between circuits.
		No	Go to the next step.
18	**INSPECT BSM CONTROL MODULE (LH) OR REAR MOUNT CAMERA FOR SHORT BETWEEN CIRCUITS** • Disconnect the BSM control module (LH) connector or the rear mount camera connector. • Connect the rear body control module (RBCM) connector. • Connect connectors C-47 and C-48 • Connect the negative battery cable. (See 01-17A-11 NEGATIVE BATTERY CABLE DISCONNECTION/CONNECTION [SKYACTIV-G 2.0].) (See 01-17A-13 NEGATIVE BATTERY CABLE DISCONNECTION/CONNECTION [SKYACTIV-G 2.0 (WITHOUT i-stop)].) • Switch the ignition ON (engine off). • Measure the voltage at DLC-2 terminals L and K. • Is the voltage at DLC-2 terminals L and K the same?	Yes	• Repair or replace the wiring harness between BSM control module (LH) and rear body control module (RBCM) because the wiring harness is shorted between circuits. (With BSM system) • Repair or replace the wiring harness between the rear mount camera and rear body control module (RBCM) because the wiring harness is shorted between circuits. (With rear mount camera)
		No	Replace the BSM control module (LH) or the rear mount camera because there is a short between circuits in the BSM control module (LH) or the rear mount camera. (See 09-22-67 BLIND SPOT MONITORING (BSM) CONTROL MODULE REMOVAL/INSTALLATION.) (See 09-20-68 REAR MOUNT CAMERA REMOVAL/INSTALLATION.)

ON-BOARD DIAGNOSTIC [SKYACTIV-G 2.0 (R.H.D.)]

Step	Inspection		Action
19	**INSPECT REAR BODY CONTROL MODULE (RBCM) FOR SHORT BETWEEN CIRCUITS** • Switch the ignition off (LOCK). • Disconnect the negative battery cable. (See 01-17A-11 NEGATIVE BATTERY CABLE DISCONNECTION/CONNECTION [SKYACTIV-G 2.0].) (See 01-17A-13 NEGATIVE BATTERY CABLE DISCONNECTION/CONNECTION [SKYACTIV-G 2.0 (WITHOUT i-stop)].) • Connect connectors C-47 and C-48 • Connect the negative battery cable. (See 01-17A-11 NEGATIVE BATTERY CABLE DISCONNECTION/CONNECTION [SKYACTIV-G 2.0].) (See 01-17A-13 NEGATIVE BATTERY CABLE DISCONNECTION/CONNECTION [SKYACTIV-G 2.0 (WITHOUT i-stop)].) • Switch the ignition ON (engine off). • Measure the voltage at DLC-2 terminals L and K. • Is the voltage at DLC-2 terminals L and K the same?	Yes	Repair or replace the wiring harness between the rear body control module (RBCM) and connectors C-47 and C-48 because the wiring harness is shorted between circuits.
		No	Replace the rear body control module (RBCM) because there is a short between circuits in the rear body control module (RBCM). (See 09-40-9 REAR BODY CONTROL MODULE (RBCM) REMOVAL/INSTALLATION.)

10-02D ON-BOARD DIAGNOSTIC [SKYACTIV-D 2.2 (R.H.D.)]

FOREWORD
[SKYACTIV-D 2.2 (R.H.D.)] 10-02D–1
Troubleshooting Procedure **10-02D–2**
Action for non-repeatable malfunction **10-02D–2**
CONTROLLER AREA NETWORK (CAN) MALFUNCTION DIAGNOSIS FLOW
[SKYACTIV-D 2.2 (R.H.D.)] 10-02D–3
CAN malfunction diagnosis flow. **10-02D–3**
HS-CAN signal waveform **10-02D–8**
MS-CAN signal waveform **10-02D–8**
NETWORK TEST
[SKYACTIV-D 2.2 (R.H.D.)] 10-02D–8
DTC TABLE
[SKYACTIV-D 2.2 (R.H.D.)] 10-02D–9
HS-CAN **10-02D–9**
MS-CAN. **10-02D–10**
DETERMINING OPEN CIRCUIT LOCATION (HS-CAN)
[SKYACTIV-D 2.2 (R.H.D.)] 10-02D–11
DTC output pattern and malfunctioning location. **10-02D–12**
A. **10-02D–13**
B. **10-02D–15**
C **10-02D–17**
D **10-02D–21**
E. **10-02D–23**
F. **10-02D–25**
G **10-02D–29**
H **10-02D–32**
I **10-02D–35**
J. **10-02D–37**
K. **10-02D–41**
L. **10-02D–43**
M **10-02D–45**
N **10-02D–47**
O **10-02D–49**
P. **10-02D–51**
Q **10-02D–53**
R **10-02D–55**
DETERMINING SHORT TO GROUND LOCATION (HS-CAN)
[SKYACTIV-D 2.2 (R.H.D.)] 10-02D–57
System wiring diagram **10-02D–58**
Determination procedure. **10-02D–59**
DETERMINING SHORT TO POWER SUPPLY LOCATION (HS-CAN)
[SKYACTIV-D 2.2 (R.H.D.)]. 10-02D–65
System wiring diagram **10-02D–66**
Determination procedure. **10-02D–67**
DETERMINING SHORT BETWEEN CIRCUITS LOCATION (HS-CAN)
[SKYACTIV-D 2.2 (R.H.D.)]. 10-02D–75
System wiring diagram **10-02D–76**
Determination procedure. **10-02D–77**
DETERMINING OPEN CIRCUIT LOCATION (MS-CAN)
[SKYACTIV-D 2.2 (R.H.D.)]. 10-02D–83
DTC output pattern and malfunctioning location **10-02D–83**
A **10-02D–84**
B **10-02D–85**
C **10-02D–86**
D **10-02D–88**
E **10-02D–89**
F **10-02D–90**
G **10-02D–91**
H **10-02D–92**
I **10-02D–93**
J **10-02D–94**
DETERMINING SHORT TO GROUND LOCATION (MS-CAN)
[SKYACTIV-D 2.2 (R.H.D.)]. 10-02D–97
System wiring diagram **10-02D–98**
Determination procedure. **10-02D–98**
DETERMINING SHORT TO POWER SUPPLY LOCATION (MS-CAN)
[SKYACTIV-D 2.2 (R.H.D.)]. 10-02D–103
System wiring diagram **10-02D–104**
Determination procedure. **10-02D–104**
DETERMINING SHORT BETWEEN CIRCUITS LOCATION (MS-CAN)
[SKYACTIV-D 2.2 (R.H.D.)]. 10-02D–109
System wiring diagram **10-02D–110**
Determination procedure. **10-02D–110**

ON-BOARD DIAGNOSTIC [SKYACTIV-D 2.2 (R.H.D.)]

FOREWORD [SKYACTIV-D 2.2 (R.H.D.)]

id100206000000

- If there is any vehicle malfunction complaint lodged by a customer, perform malfunction diagnosis according to the 10-02D-2 Troubleshooting Procedure.

ON-BOARD DIAGNOSTIC [SKYACTIV-D 2.2 (R.H.D.)]

Troubleshooting Procedure

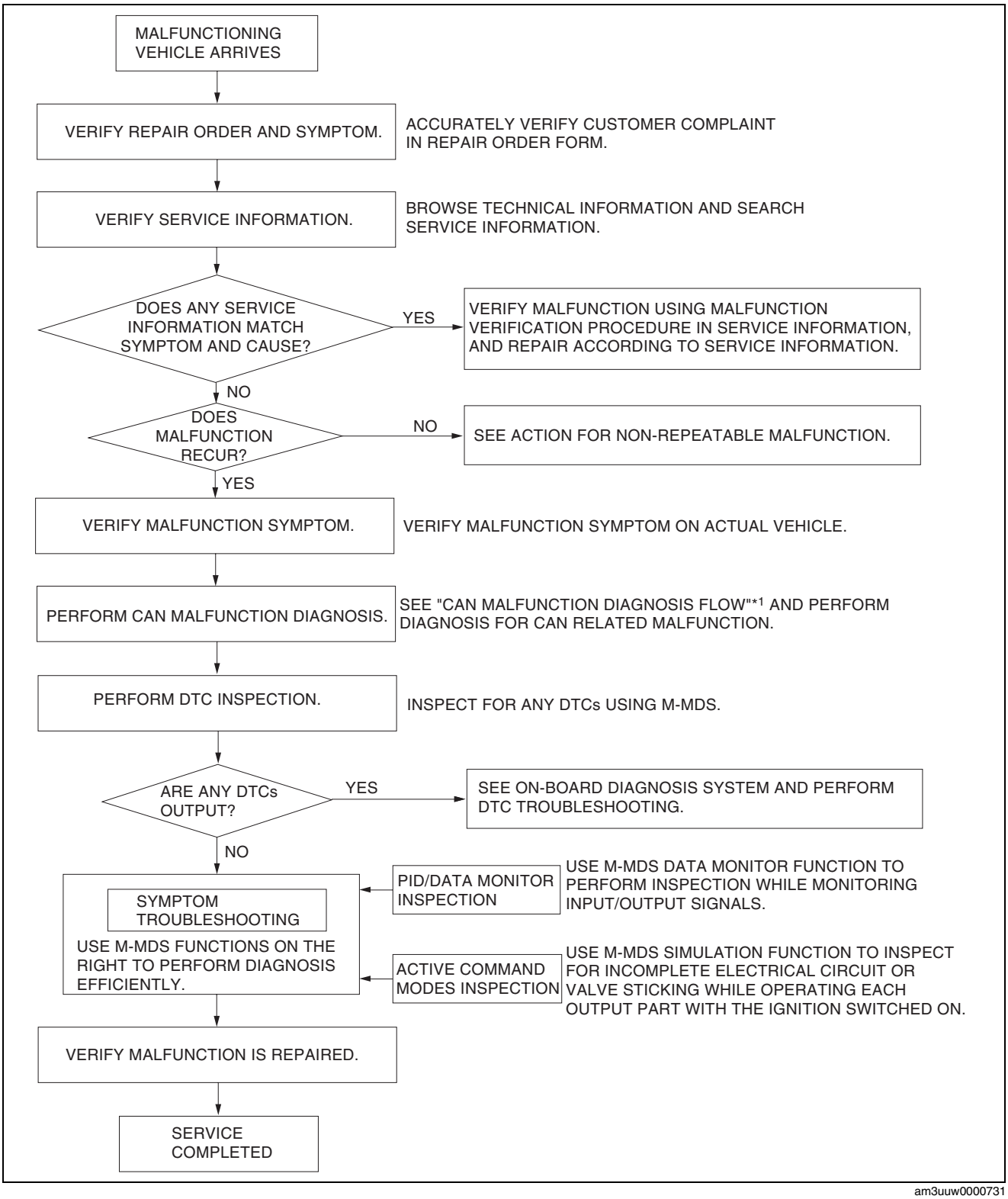

am3uuw0000731

*1 : 10-02D-3 CONTROLLER AREA NETWORK (CAN) MALFUNCTION DIAGNOSIS FLOW [SKYACTIV-D 2.2 (R.H.D.)]

Action for non-repeatable malfunction

- If the malfunction does not recur, verify the malfunction cause by performing the following actions:
  - — Based on the repair order form, attempt to drive the vehicle or perform tests to replicate the malfunction, record the data (such as CAN circuit voltage) at that time, and detect the malfunction cause.

ON-BOARD DIAGNOSTIC [SKYACTIV-D 2.2 (R.H.D.)]

— Refer to [Determining Open Circuit Location] based on the recorded DTC, shake the wiring harness or connector of the electrical component which is suspected to be the cause of the malfunction, and inspect for any changes in CAN system voltage or occurrence of any DTCs.

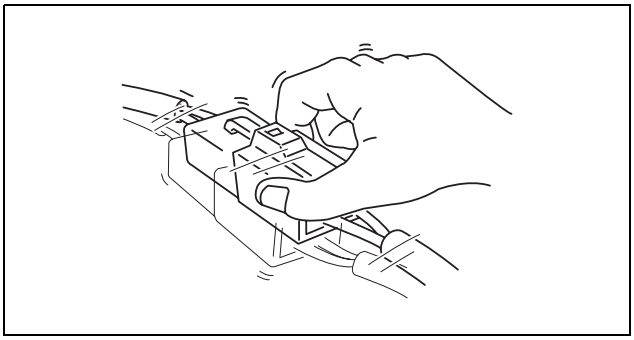

aaxjjw00007274

— Inspect the female terminals on the connector of the electric component which is suspected to be the cause of the malfunction for poor connection.

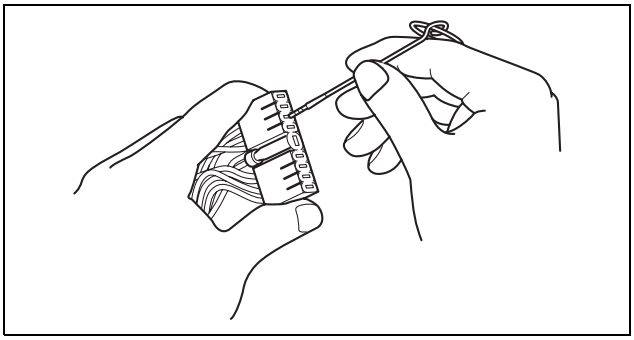

am3uuw0000750

CONTROLLER AREA NETWORK (CAN) MALFUNCTION DIAGNOSIS FLOW [SKYACTIV-D 2.2 (R.H.D.)]

id100206000100

- If there is any vehicle malfunction complaint lodged by a customer, refer to "10-02D-1 FOREWORD [SKYACTIV-D 2.2 (R.H.D.)]" and perform CAN malfunction diagnosis following the steps in the troubleshooting procedure.

CAN malfunction diagnosis flow

Note

- The flowchart and the diagnosis flow of the diagnosis procedure are the same thing, and the detailed procedure of the flowchart is the diagnosis procedure.
- The step numbers in the flowchart indicate the step numbers of the diagnosis procedure.

ON-BOARD DIAGNOSTIC [SKYACTIV-D 2.2 (R.H.D.)]

Flowchart

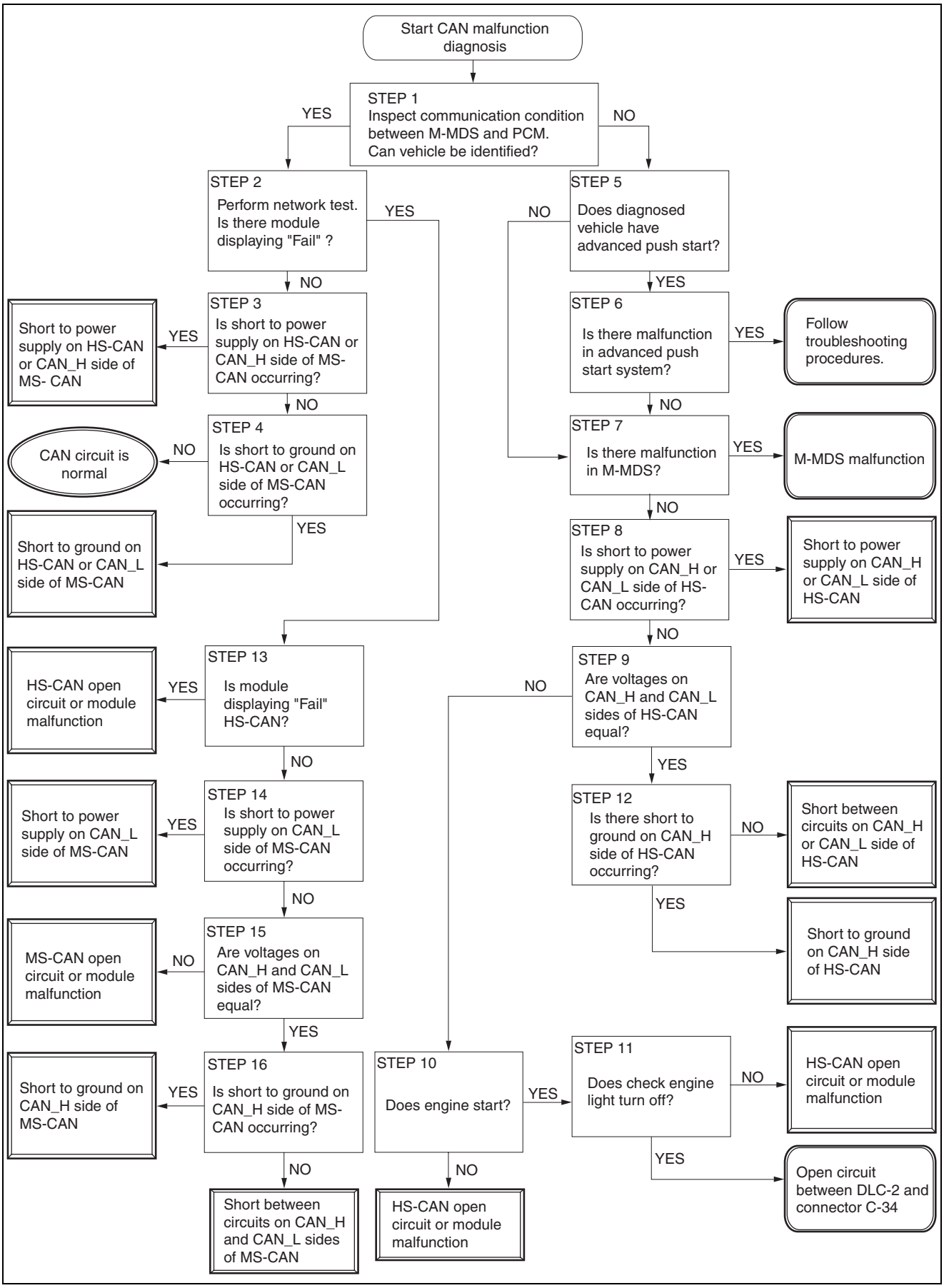

ac5wzw0000244

ON-BOARD DIAGNOSTIC [SKYACTIV-D 2.2 (R.H.D.)]

Diagnostic procedure

Step	Inspection		Action
1	**INSPECT IF COMMUNICATION BETWEEN M-MDS AND PCM IS POSSIBLE** • Connect the M-MDS to the DLC-2. • Switch the ignition ON (engine off). • Perform vehicle identification. • Can the vehicle be identified?	Yes	Go to the next step.
		No	Go to Step 5 as a malfunction in the HS-CAN circuit has occurred.
2	**INSPECT MODULE FOR INABILITY TO COMMUNICATE DUE TO CAN MALFUNCTION** • Implement the network test using the M-MDS. (See 10-02D-8 NETWORK TEST [SKYACTIV-D 2.2 (R.H.D.)].) • Is there a module indicating a malfunction?	Yes	Go to Step 14 as a malfunction in the CAN circuit has occurred.
		No	Go to the next step.
3	**INSPECT FOR SHORT TO POWER SUPPLY IN CAN_H SIDE OF MS-CAN OR HS-CAN** • Measure the voltage between the following terminals: — Between DLC-2 terminal F (CAN_H side of HS CAN) and body ground — Between DLC-2 terminal L (CAN_H side of MS CAN) and body ground • Is B+ voltage measured between any of the terminals? **Note** • If a short to power supply other than the B+ power supply has occurred, a constant voltage other than B+ can be measured.	Yes	A short to power supply in the CAN_H side of MS-CAN or HS-CAN. Determine the location of the short to power supply according to the diagnosis procedure for determining the location of a short to power supply. (See 10-02D-65 DETERMINING SHORT TO POWER SUPPLY LOCATION (HS-CAN) [SKYACTIV-D 2.2 (R.H.D.)].) (See 10-02D-103 DETERMINING SHORT TO POWER SUPPLY LOCATION (MS-CAN) [SKYACTIV-D 2.2 (R.H.D.)].)
		No	Go to the next step.
4	**INSPECT FOR SHORT TO GROUND IN CAN_L SIDE OF HS-CAN OR MS-CAN** • Measure the voltage between the following terminals: — Between DLC-2 terminal E (CAN_L side of HS-CAN) and ground — Between DLC-2 terminal K (CAN_L side of MS-CAN) and ground • Is the voltage measured as 0 V?	Yes	A short to ground on the CAN_L side of the HS-CAN or MS-CAN has occurred. Determine the location of the short to ground according to the diagnosis procedure for determining the location of a short to ground. (See 10-02D-57 DETERMINING SHORT TO GROUND LOCATION (HS-CAN) [SKYACTIV-D 2.2 (R.H.D.)].) (See 10-02D-97 DETERMINING SHORT TO GROUND LOCATION (MS-CAN) [SKYACTIV-D 2.2 (R.H.D.)].)
		No	The current CAN circuit is normal, return to FOREWARD, and go to the next step of the CAN malfunction diagnosis in the troubleshooting procedure. (See 10-02D-1 FOREWORD [SKYACTIV-D 2.2 (R.H.D.)].)
5	**VERIFY IF VEHICLE UNDER DIAGNOSIS IS EQUIPPED WITH ADVANCED PUSH START SYSTEM.** • Is the vehicle equipped with the advanced push start system?	Yes	Go to the next step.
		No	Go to Step 7.
6	**VERIFY IF ADVANCED PUSH START SYSTEM HAS MALFUNCTION** • Switch the ignition ON (engine off). • Can the ignition be switched ON?	Yes	Go to the next step.
		No	A malfunction in the advanced push start system has occurred. Perform diagnosis according to the symptom troubleshooting.
7	**INSPECT FOR MALFUNCTION IN M-MDS** • Connect the M-MDS to a normal vehicle and implement vehicle identification. • Can the vehicle be identified?	Yes	Go to the next step.
		No	A malfunction in the M-MDS can be considered. Repair the M-MDS.

ON-BOARD DIAGNOSTIC [SKYACTIV-D 2.2 (R.H.D.)]

Step	Inspection		Action
8	**INSPECT HS-CAN FOR SHORT TO POWER SUPPLY** • Measure the voltage between the following terminals: — Between DLC-2 terminal F (CAN_H side) and body ground — Between DLC-2 terminal E (CAN_L side) and body ground • Is B+ voltage measured between any of the terminals? **Note** • If a short to power supply other than the B+ power supply has occurred, a constant voltage other than B+ can be measured.	Yes	A short to power supply in the CAN_H side or CAN_L of HS-CAN has occurred. Determine the location of the short to power supply according to the diagnosis procedure for determining the location of a short to power supply. (See 10-02D-65 DETERMINING SHORT TO POWER SUPPLY LOCATION (HS-CAN) [SKYACTIV-D 2.2 (R.H.D.)].)
		No	Go to the next step.
9	**INSPECT HS-CAN FOR OPEN CIRCUIT** • Measure the voltage between the following terminals: — Between DLC-2 terminal F (CAN_H side) and body ground — Between DLC-2 terminal E (CAN_L side) and body ground • Is the voltage between both terminals (CAN_H side and CAN_L side) equal?	Yes	Go to Step 13 as a short to ground or a short between circuits has occurred in the HS-CAN.
		No	Go to the next step.
10	**DETERMINE IF OPEN CIRCUIT LOCATION IN HS-CAN CIRCUIT IS BETWEEN DLC AND CONNECTOR C-35 OR ELSEWHERE** • Start the engine to verify that the immobilizer system operates normally. • Can the engine be started? **Note** • If there is an open circuit in the wiring harness between the PCM and the start stop unit, the engine cannot be started because the key ID number verification for the immobilizer system is performed by CAN communication.	Yes	Go to the next step.
		No	An open circuit has occurred between the PCM and connector C-34 in the HS-CAN. Determine the location of the open circuit according to the diagnosis procedure for determining the location of an open circuit. (See 10-02D-11 DETERMINING OPEN CIRCUIT LOCATION (HS-CAN) [SKYACTIV-D 2.2 (R.H.D.)].)
11	**DETERMINE IF OPEN CIRCUIT LOCATION IN HS-CAN CIRCUIT IS BETWEEN DLC AND CONNECTOR C-34 OR ELSEWHERE** • Switch the ignition ON (engine off). • Verify if the check engine light in the instrument cluster illuminates. • Start the engine. • Verify if the check engine light turns off. • Does the check engine light turn off?	Yes	An open circuit between DLC-2 and connector C-34 has occurred. Repair or replace the wiring harness for an open circuit, then return to Step 1.
		No	An open circuit has occurred between the PCM and connector C-34 in the HS-CAN. Determine the location of the open circuit according to the diagnosis procedure for determining the location of an open circuit. (See 10-02D-11 DETERMINING OPEN CIRCUIT LOCATION (HS-CAN) [SKYACTIV-D 2.2 (R.H.D.)].)
12	**VERIFY MALFUNCTION OCCURRED IN HS-CAN CIRCUIT** • Measure the voltage between the following terminals: — Between DLC-2 terminal F (CAN_H side) and body ground — Between DLC-2 terminal E (CAN_L side) and body ground • Is the voltage between both terminals (CAN_H side and CAN_L side) 0 V?	Yes	A short to ground in CAN_H side of HS-CAN has occurred. Determine the location of the short to ground according to the diagnosis procedure for determining the location of a short to ground. (See 10-02D-57 DETERMINING SHORT TO GROUND LOCATION (HS-CAN) [SKYACTIV-D 2.2 (R.H.D.)].)
		No	A short between circuits in the CAN_H side and the CAN_L side of HS-CAN has occurred. Determine the location of the short between circuits according to the diagnosis procedure for determining the location of a short between circuits. (See 10-02D-75 DETERMINING SHORT BETWEEN CIRCUITS LOCATION (HS-CAN) [SKYACTIV-D 2.2 (R.H.D.)].)

ON-BOARD DIAGNOSTIC [SKYACTIV-D 2.2 (R.H.D.)]

Step	Inspection		Action
13	**DETERMINE CAN COMMUNICATION SPECIFICATION IN WHICH MALFUNCTION OCCURS** • Refer to the CAN communication specification quick reference table and verify the CAN communication specification (HS-CAN or MS-CAN) that is connected to the module which is indicating a malfunction. (See 10-02D-7 CAN communication specification quick reference table.) • Is the module that is indicating a malfunction HS-CAN?	Yes	An open circuit in the HS-CAN has occurred. Determine the location of the open circuit according to the diagnosis procedure for determining the location of an open circuit. (See 10-02D-11 DETERMINING OPEN CIRCUIT LOCATION (HS-CAN) [SKYACTIV-D 2.2 (R.H.D.)].)
		No	Go to the next step.
14	**INSPECT CAN_L SIDE OF MS-CAN FOR SHORT TO POWER SUPPLY** • Measure voltage between DLC-2 terminal K (CAN_L side) and body ground. • Can B+ voltage be measured? **Note** • If a short to power supply other than the B+ power supply has occurred, a constant voltage other than B+ can be measured.	Yes	A short to power supply in the CAN_L side of the MS-CAN has occurred. Determine the location of the short to power supply according to the diagnosis procedure for determining the location of a short to power supply. (See 10-02D-103 DETERMINING SHORT TO POWER SUPPLY LOCATION (MS-CAN) [SKYACTIV-D 2.2 (R.H.D.)].)
		No	Go to the next step.
15	**INSPECT MS-CAN FOR OPEN CIRCUIT** • Measure the voltage between the following terminals: — Between DLC-2 terminal L (CAN_H side) and body ground — Between DLC-2 terminal K (CAN_L side) and body ground • Is the voltage between both terminals (CAN_H side and CAN_L side) equal?	Yes	Go to the next step.
		No	Open circuit in MS-CAN has occurred. Determine the location of the open circuit according to the diagnosis procedure for determining the location of an open circuit. (See 10-02D-83 DETERMINING OPEN CIRCUIT LOCATION (MS-CAN) [SKYACTIV-D 2.2 (R.H.D.)].)
16	**VERIFY MALFUNCTION OCCURRED IN MS-CAN** • Measure the voltage between the following terminals: — Between DLC-2 terminal L (CAN_H side) and body ground — Between DLC-2 terminal K (CAN_L side) and body ground • Is the voltage between both terminals (CAN_H side and CAN_L side) equal?	Yes	A short to ground in the CAN_H side of the MS-CAN has occurred. Determine the location of the short to ground according to the diagnosis procedure for determining the location of a short to ground. (See 10-02D-97 DETERMINING SHORT TO GROUND LOCATION (MS-CAN) [SKYACTIV-D 2.2 (R.H.D.)].)
		No	A short between circuits on the CAN_H side and CAN_L side of MS-CAN has occurred. Determine the location of the short between circuits according to the diagnosis procedure for determining the location of a short between circuits. (See 10-02D-109 DETERMINING SHORT BETWEEN CIRCUITS LOCATION (MS-CAN) [SKYACTIV-D 2.2 (R.H.D.)].)

CAN communication specification quick reference table

CAN communication related module (M-MDS display)	CAN communication specification	
	HS-CAN	MS-CAN
PCM (PCM)	×	
DSC HU/CM (ABS)	×	
TCM (TCM)	×	
AFS control module (AFS)	×	
Front body control module (FBCM) (F_BCM)	×	
4WD control module (4×4)	×	
Laser sensor (SCBS)	×	
Forward sensing camera (FSC)	×	
SAS control module (RCM)	×	
Start stop unit (SSU)	×	
EPS control module (EPS)	×	
Instrument cluster (IC)	×	
Rear body control module (RBCM) (R_BCM)		×

ON-BOARD DIAGNOSTIC [SKYACTIV-D 2.2 (R.H.D.)]

CAN communication related module (M-MDS display)	CAN communication specification	
	HS-CAN	MS-CAN
BSM control module (LH) (BSML)		×
Rear mount camera		×
BSM control module (RH) (BSMR)		×
Rear vehicle monitoring control module (RH) (RVM)		×
Parking sensor control module		×
Clock		×
Climate control unit (EATC)		×
Audio unit (ACU)		×

HS-CAN signal waveform

CAN circuit condition	Signal waveform (reference)
Normal	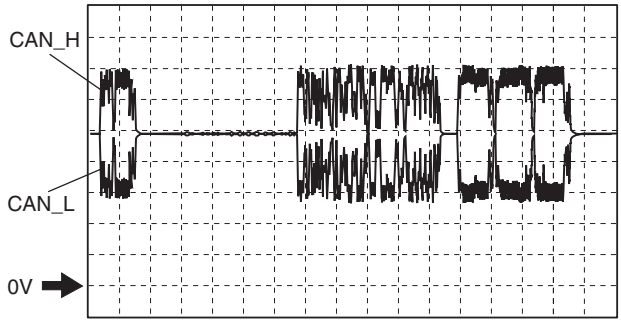
	• CAN_H — Connection terminal: DLC-2: terminal F (+) ⇔ body ground (—) — Oscilloscope setting: 0.5 V/DIV (Y), 200 μs/DIV (X), DC range • CAN_L — Connection terminal: DLC-2: terminal E (+) ⇔ Body ground (—) — Oscilloscope setting: 0.5 V/DIV (Y), 200 μs/DIV (X), DC range

MS-CAN signal waveform

CAN circuit condition	Signal waveform (reference)
Normal	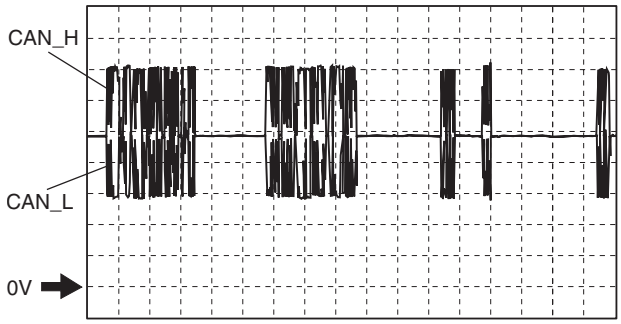
	• CAN_H — Connection terminal: DLC-2: terminal L (+) ⇔ Body ground (—) — Oscilloscope setting: 0.5 V/DIV (Y), 1 ms/DIV (X), DC range • CAN_L — Connection terminal: DLC-2: terminal K (+) ⇔ Body ground (—) — Oscilloscope setting: 0.5 V/DIV (Y), 1 ms/DIV (X), DC range

NETWORK TEST [SKYACTIV-D 2.2 (R.H.D.)]

id100206000200

1. Connect the M-MDS to the DLC-2.
2. After the vehicle is identified, select the "NETWORK TEST" from the initialization screen of the M-MDS.
3. Verify the unit with a communication error according to the directions on the screen.

ON-BOARD DIAGNOSTIC [SKYACTIV-D 2.2 (R.H.D.)]

DTC TABLE [SKYACTIV-D 2.2 (R.H.D.)]

id100206000300

Caution

- **If there is any vehicle malfunction complaint lodged by a customer, refer to "FOREWORD" and perform CAN malfunction diagnosis following the steps in the troubleshooting procedure. (See 10-02D-1 FOREWORD [SKYACTIV-D 2.2 (R.H.D.)].)**

HS-CAN

DTC output module (M-MDS display)	DTC	Malfunction location
PCM (PCM)	U0073:00	Unit communication error
	U0101:00	Communication error with TCM
	U0120:00	Communication error with start stop unit
	U0121:00	Communication error with DSC HU/CM
	U0131:00	Communication error with EPS control module
	U0140:00	Communication error with front body control module (FBCM)
	U0151:00	Communication error with SAS control module
	U0155:00	Communication error with instrument cluster
	U0235:00	Communication error with laser sensor
DSC HU/CM (ABS)	U0001:88	Unit communication error
	U0100:00	Communication error with PCM
	U0101:00	Communication error with TCM
	U0114:00	Communication error with 4WD control module
	U0131:00	• Communication error with EPS control module*6 • Communication error with start stop unit*7
	U0154:00	Communication error with SAS control module
	U0155:00	Communication error with instrument cluster
	U0235:00	Communication error with laser sensor
TCM*1 (TCM)	U0073:00	Unit communication error
	U0100:00	Communication error with PCM
	U0121:00	Communication error with DSC HU/CM
	U0141:00	Communication error with front body control module (FBCM)
	U0155:00	Communication error with instrument cluster
Front body control module (FBCM) (F_BCM)	U0001:88	Unit communication error
	U0100:00	Communication error with PCM
	U0101:00	Communication error with TCM
	U0121:00	Communication error with DSC HU/CM
	U0155:00	Communication error with instrument cluster
	U0214:00	Communication error with start stop unit
	U0515:00	Communication error with SAS control module
AFS control module*2 (AFS)	U0001:88	Unit communication error
	U0100:00	Communication error with PCM
	U0131:00	Communication error with EPS control module
	U0140:00	Communication error with front body control module (FBCM)
	U0155:00	Communication error with instrument cluster
4WD control module*3 (4×4)	U0001:88	Unit communication error
	U0100:00	Communication error with PCM
	U0101:00	Communication error with TCM
	U0121:00	Communication error with DSC HU/CM
Laser sensor*4 (SCBS)	U0001:00	Unit communication error
	U0100:00	Communication error with PCM
	U0121:00	Communication error with DSC HU/CM
	U0131:00	Communication error with EPS control module
	U0155:00	Communication error with instrument cluster

ON-BOARD DIAGNOSTIC [SKYACTIV-D 2.2 (R.H.D.)]

DTC output module (M-MDS display)	DTC	Malfunction location
Forward sensing camera*5 (FSC)	U0001:88	Unit communication error
	U0100:00	Communication error with PCM
	U0121:00	Communication error with DSC HU/CM
	U0131:00	Communication error with EPS control module
	U0140:00	Communication error with front body control module (FBCM)
	U0155:00	Communication error with instrument cluster
	U0214:00	Communication error with start stop unit
SAS control module (RCM)	U0001:88	Unit communication error
	U0155:00	Communication error with instrument cluster
Start stop unit (SSU)	U0001:88	Unit communication error
	U0100:00	Communication error with PCM
	U0101:00	Communication error with TCM
	U0121:00	Communication error with DSC HU/CM
	U0121:87	Communication error with DSC HU/CM
	U0131:00	Communication error with EPS control module
	U0140:00	Communication error with front body control module (FBCM)
	U0146:00	Communication error with instrument cluster
	U0151:00	Communication error with SAS control module
	U0155:00	Communication error with instrument cluster
EPS control module (EPS)	U0001:88	Unit communication error
	U0100:00	Communication error with PCM
	U0121:00	Communication error with DSC HU/CM
	U0155:00	Communication error with instrument cluster
Instrument cluster (IC)	U0001:88	Unit communication error
	U0100:00	Communication error with PCM
	U0101:00	Communication error with TCM
	U0114:00	Communication error with 4WD control module
	U0121:00	Communication error with DSC HU/CM
	U0131:00	Communication error with EPS control module
	U0140:00	Communication error with front body control module (FBCM)
	U0151:00	Communication error with SAS control module
	U0182:00	Communication error with AFS control module
	U0214:00	Communication error with start stop unit
	U0235:00	Communication error with laser sensor
	U023A:00	Communication error with forward sensing camera

*1 : ATX vehicles
*2 : With AFS system
*3 : 4WD vehicles
*4 : With smart city brake support
*5 : With hi-beam control (HBC) system
*6 : Without smart city brake support or steering angle sensor
*7 : With smart city brake support or steering angle sensor

MS-CAN

DTC output module (M-MDS display)	DTC	Malfunction location
Rear body control module (RBCM) (R_BCM)	U0010:88	Unit communication error
	U0155:00	Communication error with instrument cluster
BSM control module (LH)*1 (BSML)	U0001:88	Unit communication error
	U0100:00	Communication error with PCM
	U0131:00	Communication error with EPS control module
	U0155:00	Communication error with instrument cluster
	U0214:00	Communication error with start stop unit
	U0233:00	Communication error with BSM control module (RH)

ON-BOARD DIAGNOSTIC [SKYACTIV-D 2.2 (R.H.D.)]

DTC output module (M-MDS display)	DTC	Malfunction location
BSM control module (RH)*1 (BSMR)	U0001:88	Unit communication error
	U0100:00	Communication error with PCM
	U0131:00	Communication error with EPS control module
	U0155:00	Communication error with instrument cluster
	U0214:00	Communication error with start stop unit
	U0232:00	Communication error with BSM control module (LH)
Rear vehicle monitoring control module (RH)*2 (RVM)	U0001:88	Unit communication error
	U0100:00	Communication error with PCM
	U0121:00	Communication error with DSC HU/CM
	U0155:00	Communication error with instrument cluster
	U0214:00	Communication error with start stop unit
Climate control unit*3 (EATC)	U0010:88	Unit communication error
	U0155:00	Communication error with instrument cluster
Audio unit*4 (ACU)	U0010:88 (16:Er12)	Unit communication error
	U0155:00	Communication error with instrument cluster
Instrument cluster (IC)	U0010:88	Unit communication error
	U0142:00	Communication error with rear body control module (RBCM)
	U0232:00	Communication error with rear vehicle monitoring control module (RH)
	U0233:00	Communication error with BSM control module (RH)

*1 : With BSM system
*2 : With rear vehicle monitoring system
*3 : With full-auto air conditioner
*4 : With audio unit

DETERMINING OPEN CIRCUIT LOCATION (HS-CAN) [SKYACTIV-D 2.2 (R.H.D.)]

id100206000400

Caution

- **Perform the following malfunction diagnosis only when it is diagnosed with a open circuit by 10-02D-3 CONTROLLER AREA NETWORK (CAN) MALFUNCTION DIAGNOSIS FLOW [SKYACTIV-D 2.2 (R.H.D.)].**
- **If the malfunctioning part is detected in the communication line, before disconnecting the related connector for inspection, press the connector in the connection direction to verify that there is no looseness or disconnection.**
- **When disconnecting the connector, verify that there is no damage, deformation, or corrosion of the connector terminals.**

1. Verify the CAN system-related module DTCs and the failed module on the M-MDS screen.
2. Apply the communication error DTC and the failed module to 10-02D-12 DTC output pattern and malfunctioning location, and select the possible cause for the diagnostic result and the reference for the inspection item.

Note

- The open circuit location can be determined by the DTC indicated in the 10-02D-12 DTC output pattern and malfunctioning location chart. DTCs not listed in the chart are not used for the determination of the open circuit location.

3. Inspect the possible cause and inspection item of the applicable malfunctioning part.
4. After repairs, return to 10-02D-3 CONTROLLER AREA NETWORK (CAN) MALFUNCTION DIAGNOSIS FLOW [SKYACTIV-D 2.2 (R.H.D.)], and verify that the repairs have been completed.

ON-BOARD DIAGNOSTIC [SKYACTIV-D 2.2 (R.H.D.)]

DTC output pattern and malfunctioning location

Cross (×): Communication error-related DTC and failed module

M-MDS display		DTC output pattern and malfunctioning location																
DTC output module	DTC																	
PCM (PCM)	U0101:00				×													
	U0120:00															×		
	U0121:00		×															
	U0131:00																×	
	U0140:00					×												
	U0151:00													×				
	U0155:00																	×
	U0235:00										×							
ABS (DSC HU/ CM)	U0100:00	×																
	U0101:00				×													
	U0114:00									×								
	U0131:00															×*7	×*6	
	U0154:00													×				
	U0155:00																	×
	U0235:00										×							
TCM*1 (TCM)	U0100:00	×		×														
	U0121:00		×	×														
	U0141:00					×												
	U0155:00																	×
F_BCM (Front body control module (FBCM))	U0100:00	×		×														
	U0101:00				×													
	U0121:00		×	×														
	U0155:00																	×
	U0214:00															×		
	U0515:00													×				
AFS*2 (AFS control module)	U0100:00	×		×			×*1											
	U0131:00																×	
	U0140:00					×	×*1											
	U0155:00																	×
4X4*3 (4WD control module)	U0100:00	×		×			×		×									
	U0101:00				×		×		×									
	U0121:00		×	×			×		×									
SCBS*4 (Laser sensor)	U0100:00	×		×			×		×		×							
	U0121:00		×	×			×		×		×							
	U0131:00																×	
	U0155:00																	×
FSC*5 (Forward sensing camera)	U0100:00	×		×			×		×		×							
	U0121:00		×	×			×		×		×							
	U0131:00																×	
	U0140:00					×	×		×		×							
	U0155:00																	×
	U0214:00															×		
RCM (SAS control module)	U0155:00																	×

ON-BOARD DIAGNOSTIC [SKYACTIV-D 2.2 (R.H.D.)]

M-MDS display		DTC output pattern and malfunctioning location																
DTC output module	DTC																	
SSU (Start stop unit)	U0100:00	×		×			×		×		×			×		×		
	U0101:00				×		×		×		×			×		×		
	U0121:00		×	×			×		×		×			×		×		
	U0121:87		×	×			×		×		×			×		×		
	U0131:00																×	
	U0140:00					×	×		×		×			×		×		
	U0146:00																	×
	U0151:00														×	×		
	U0155:00																	×
EPS (EPS control module)	U0100:00	×		×			×		×		×			×		×		
	U0121:00		×	×			×		×		×			×		×		
	U0155:00																	×
IC (Instrument cluster)	U0100:00	×		×			×		×		×			×		×		
	U0101:00				×		×		×		×			×		×		
	U0114:00									×	×			×		×		
	U0121:00		×	×			×		×		×			×		×		
	U0131:00																×	
	U0140:00					×	×		×		×			×		×		
	U0151:00														×	×		
	U0182:00						×*8	×	×		×			×		×		
	U0214:00																×	
	U0235:00											×		×		×		
	U023A:00												×	×		×		
M-MDS display module		[Fail] display pattern																
PCM		×		×			×		×		×			×		×		
ABS			×	×			×		×		×			×		×		
TCM*1					×		×		×		×			×		×		
F_BCM						×	×		×		×			×		×		
AFS*2							×*8	×	×		×			×		×		
4X4*3										×	×			×		×		
SCBS*4												×		×		×		
FSC*5													×	×		×		
RCM															×	×		
SSU																	×	
EPS																	×	
IC																		×
Possible cause and inspection item		10-02D-13A	10-02D-15B	10-02D-17C	10-02D-21D	10-02D-23E	10-02D-25F	10-02D-29G	10-02D-32H	10-02D-35I	10-02D-37J	10-02D-41K	10-02D-43L	10-02D-45M	10-02D-47N	10-02D-49O	10-02D-51P	10-02D-53Q	10-02D-55R

*1 : ATX vehicles
*2 : With AFS system
*3 : 4WD vehicles
*4 : With smart city brake support
*5 : With hi-beam control (HBC) system
*6 : Without smart city brake support or steering angle sensor
*7 : With smart city brake support or steering angle sensor
*8 : MTX vehicles

A
Possible cause
- Connector terminal disconnection, poor contact, damage, deformation, corrosion
- Open circuit in wiring harness between PCM and connector C-32

ON-BOARD DIAGNOSTIC [SKYACTIV-D 2.2 (R.H.D.)]

- Connector C-32 malfunction
- PCM malfunction

System wiring diagram

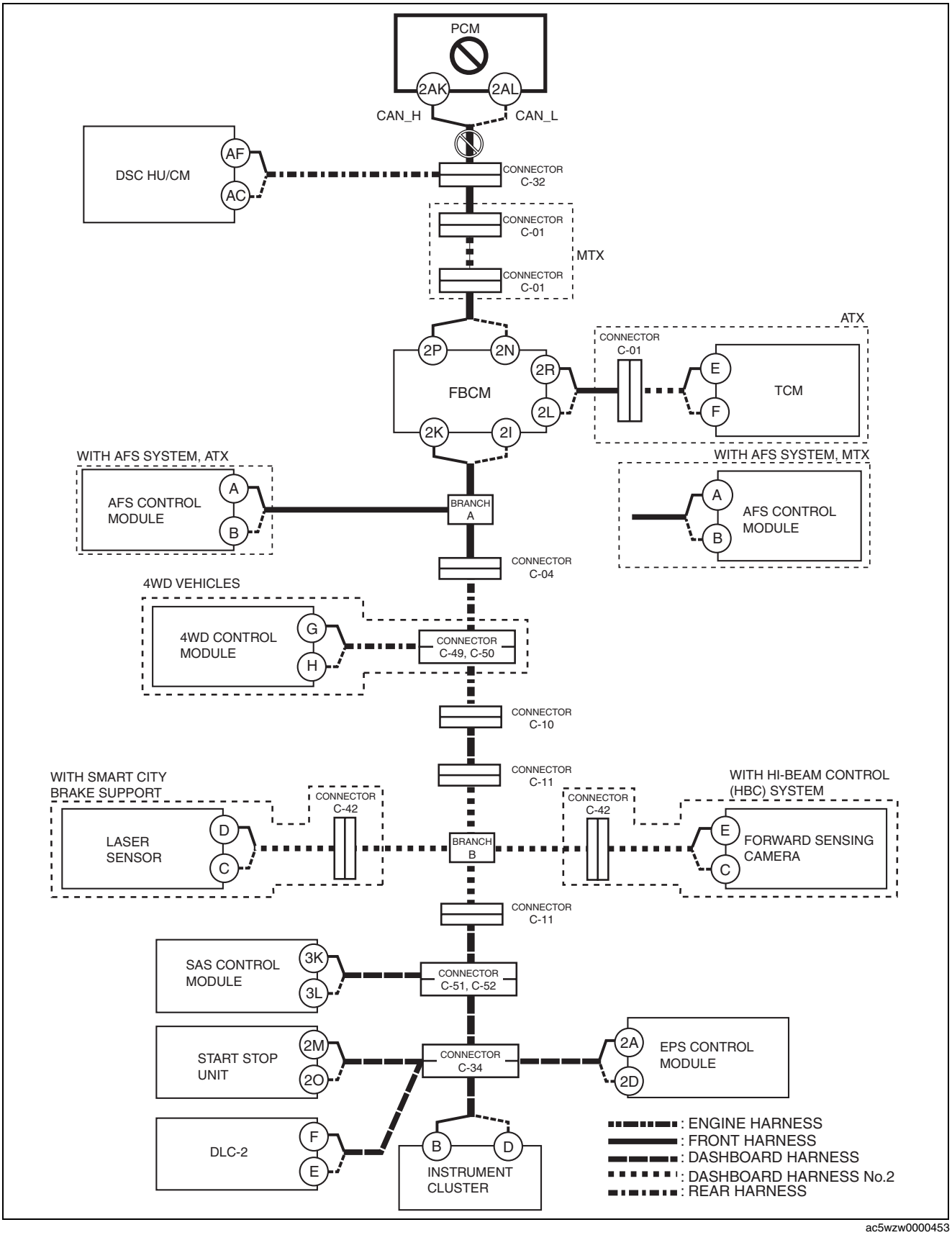

ac5wzw0000453

ON-BOARD DIAGNOSTIC [SKYACTIV-D 2.2 (R.H.D.)]

Inspection item
- PCM connector
- Connector C-32
- Wiring harness between PCM terminal 2AK and connector C-32
- Wiring harness between PCM terminal 2AL and connector C-32
- PCM

B
Possible cause
- Connector terminal disconnection, poor contact, damage, deformation, corrosion
- Open circuit in wiring harness between DSC HU/CM and connector C-32
- Connector C-32 malfunction
- DSC HU/CM malfunction

ON-BOARD DIAGNOSTIC [SKYACTIV-D 2.2 (R.H.D.)]

System wiring diagram

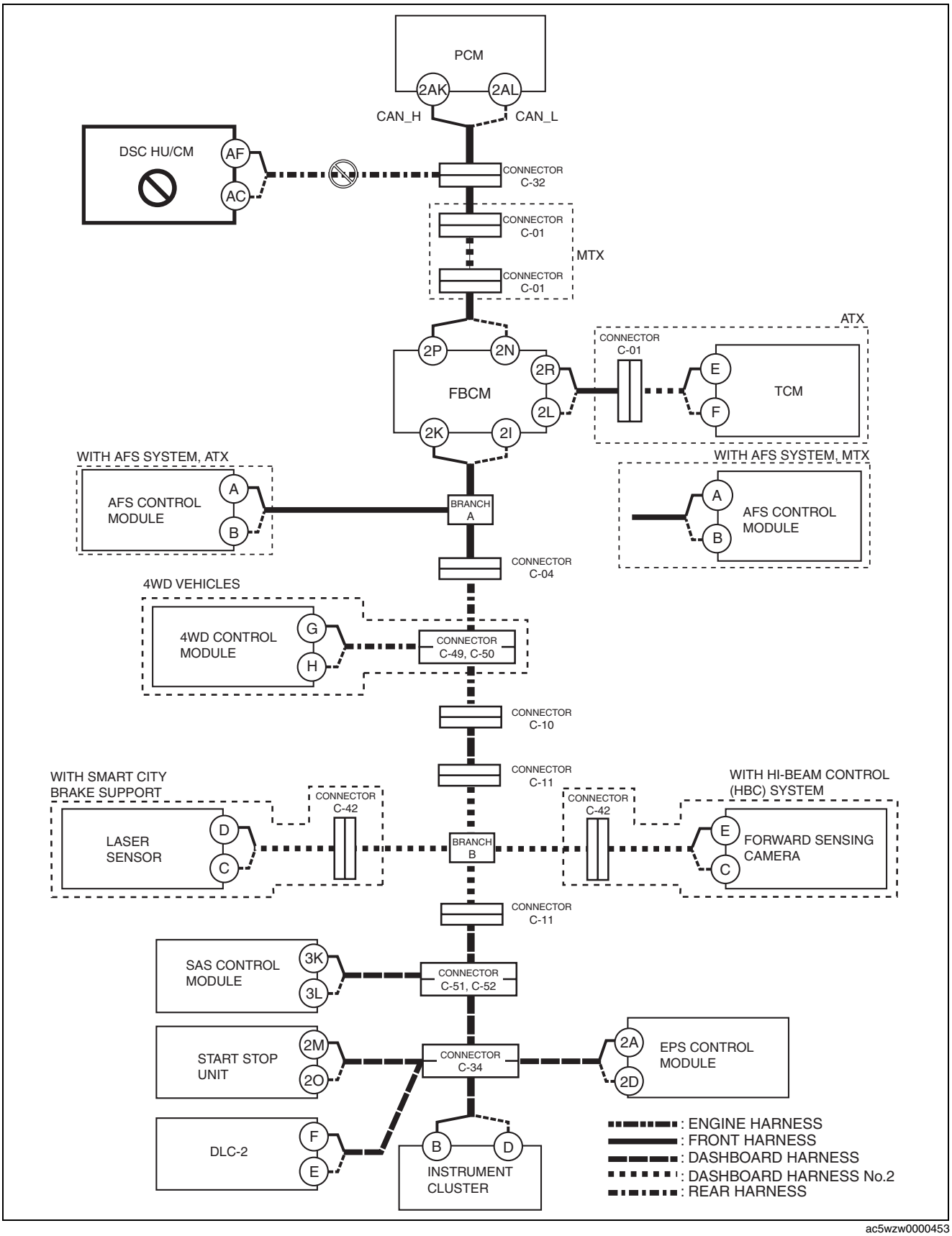

ac5wzw0000453

Inspection item

- DSC HU/CM connector
- Connector C-32

ON-BOARD DIAGNOSTIC [SKYACTIV-D 2.2 (R.H.D.)]

- Wiring harness between DSC HU/CM terminal AF and connector C-32
- Wiring harness between DSC HU/CM terminal AC and connector C-32
- DSC HU/CM

C
ATX vehicles
Possible cause

- Connector terminal disconnection, poor contact, damage, deformation, corrosion
- Open circuit in wiring harness between connector C-32 and front body control module (FBCM)
- Connector C-32 malfunction
- CAN circuit in front body control module (FBCM) malfunction

ON-BOARD DIAGNOSTIC [SKYACTIV-D 2.2 (R.H.D.)]

System wiring diagram

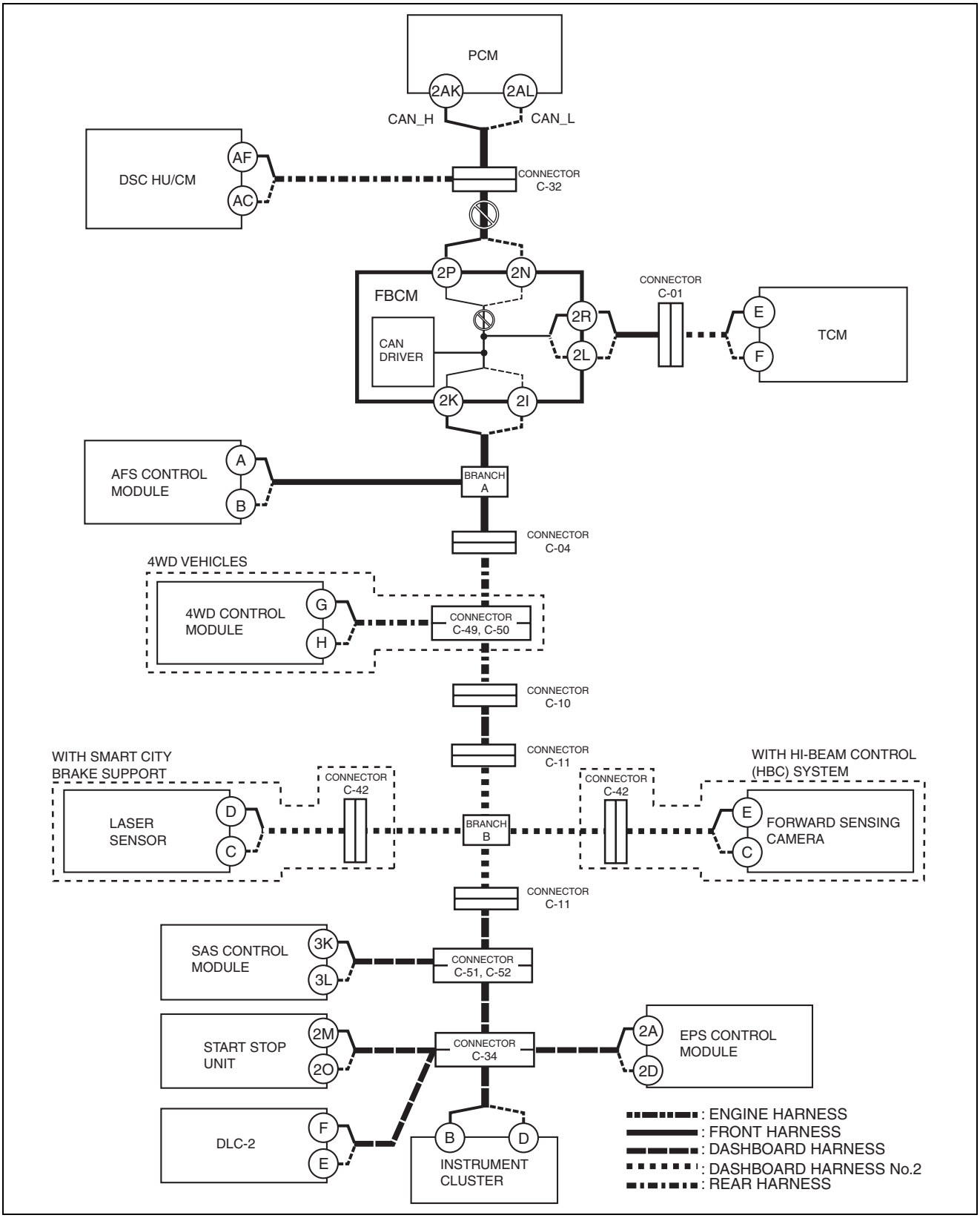

ac5wzw0000453

Inspection item

- Connector C-32
- Wiring harness between connector C-32 and front body control module (FBCM) terminal 2P
- Wiring harness between connector C-32 and front body control module (FBCM) terminal 2N
- Front body control module (FBCM)
  - — Between front body control module (FBCM) terminal 2P and front body control module (FBCM) terminal 2K

— Between front body control module (FBCM) terminal 2N and front body control module (FBCM) terminal 2I

MTX vehicles
Possible cause

- Connector terminal disconnection, poor contact, damage, deformation, corrosion
- Open circuit in wiring harness between connector C-32 and connector C-01
- Open circuit in wiring harness between connector C-01 and connector C-01
- Open circuit in wiring harness between connector C-01 and front body control module (FBCM)
- Connector C-32
- Connector C-01
- CAN circuit in front body control module (FBCM) malfunction

ON-BOARD DIAGNOSTIC [SKYACTIV-D 2.2 (R.H.D.)]

System wiring diagram

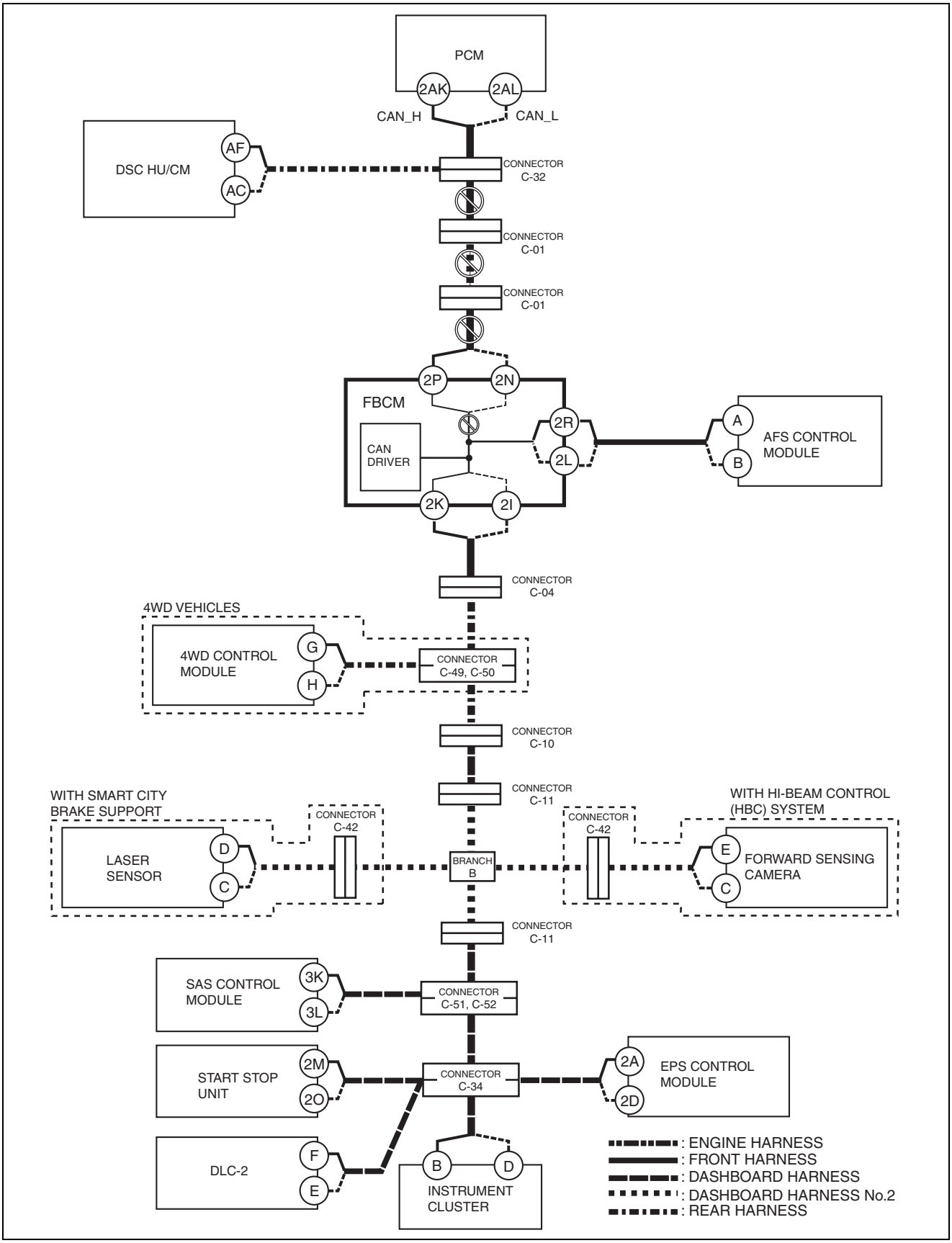

ac5wzw0000453

Inspection item

- Front body control module (FBCM) connector
- Connector C-32

- Connector C-01
- Wiring harness between connector C-32 and connector C-01
- Wiring harness between connector C-01 and connector C-01
- Wiring harness between connector C-01 and front body control module (FBCM) terminal 2P
- Wiring harness between connector C-01 and front body control module (FBCM) terminal 2N
- Front body control module (FBCM)
  - — Between front body control module (FBCM) terminal 2P and front body control module (FBCM) terminal 2K
  - — Between front body control module (FBCM) terminal 2N and front body control module (FBCM) terminal 2I

D
Possible cause
- Connector terminal disconnection, poor contact, damage, deformation, corrosion
- Open circuit in wiring harness between TCM and connector C-01
- Open circuit in wiring harness between connector C-01 and front body control module (FBCM)
- Connector C-01 malfunction
- TCM malfunction
- CAN circuit in front body control module (FBCM) malfunction

ON-BOARD DIAGNOSTIC [SKYACTIV-D 2.2 (R.H.D.)]

System wiring diagram

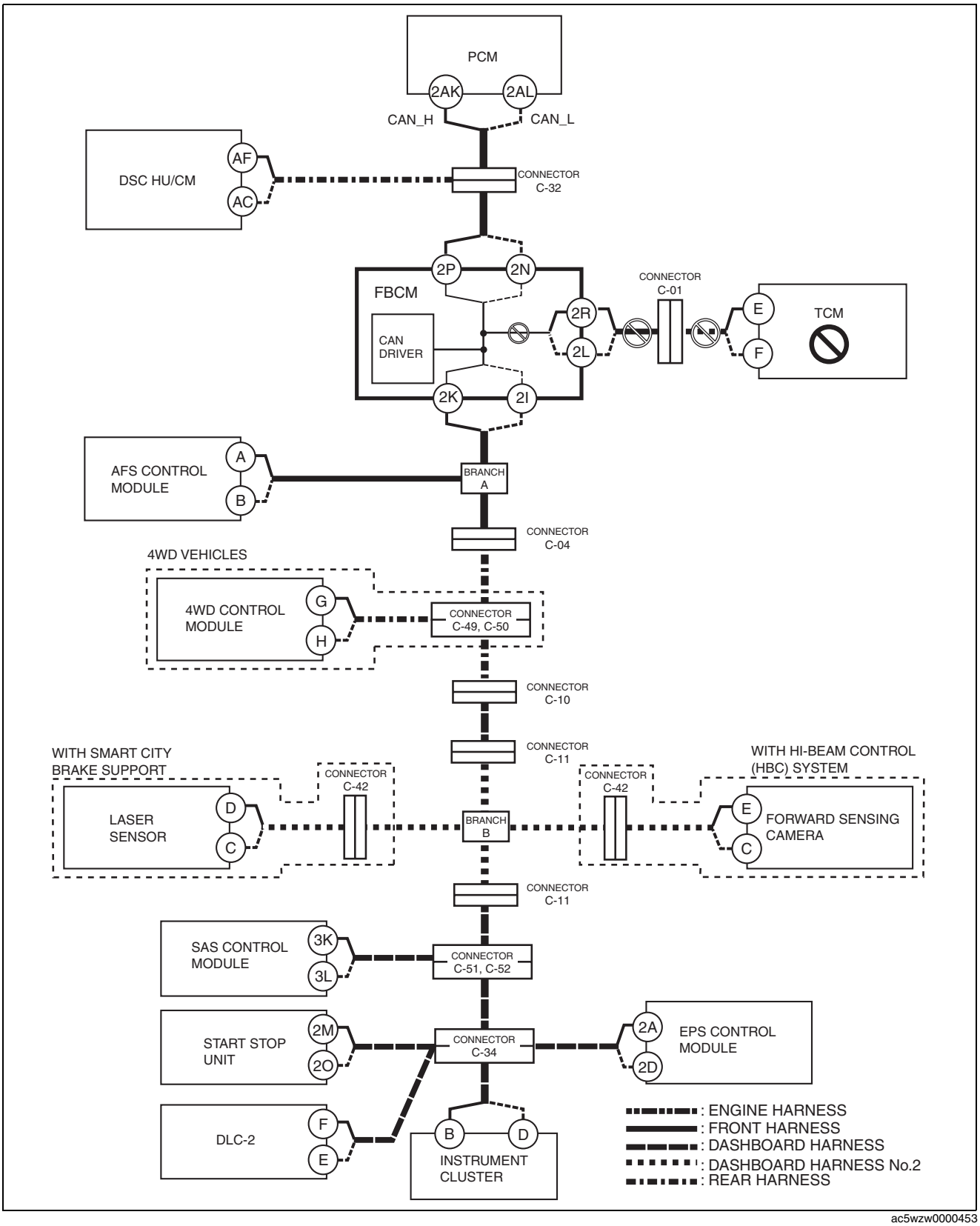

ac5wzw0000453

Inspection item

- TCM connector
- Connector C-01
- Front body control module (FBCM) connector
- Wiring harness between TCM terminal E and connector C-01

- Wiring harness between TCM terminal F and connector C-01
- Wiring harness between connector C-01 and front body control module (FBCM) terminal 2R
- Wiring harness between connector C-01 and front body control module (FBCM) terminal 2L
- TCM
- Front body control module (FBCM)
  - — Between front body control module (FBCM) terminal 2R and front body control module (FBCM) terminal 2K
  - — Between front body control module (FBCM) terminal 2L and front body control module (FBCM) terminal 2I

E
Possible cause
- Connector terminal disconnection, poor contact, damage, deformation, corrosion
- Front body control module (FBCM) malfunction

ON-BOARD DIAGNOSTIC [SKYACTIV-D 2.2 (R.H.D.)]

System wiring diagram

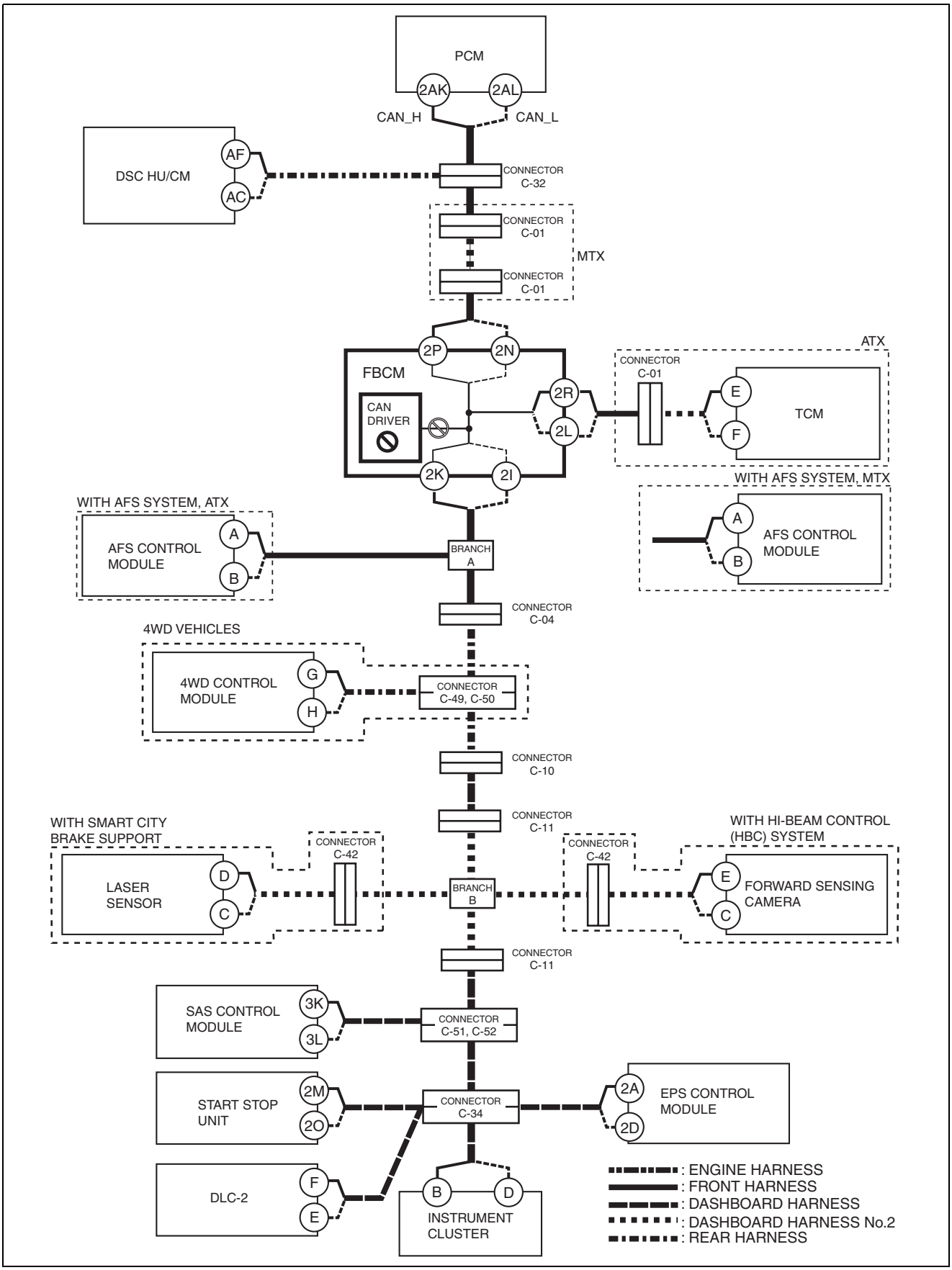

ac5wzw0000453

Inspection item
- Front body control module (FBCM)

F
ATX vehicles
Possible cause
- Connector terminal disconnection, poor contact, damage, deformation, corrosion
- Open circuit in wiring harness between front body control module (FBCM) and branch A
- CAN circuit in front body control module (FBCM) malfunction

ON-BOARD DIAGNOSTIC [SKYACTIV-D 2.2 (R.H.D.)]

System wiring diagram

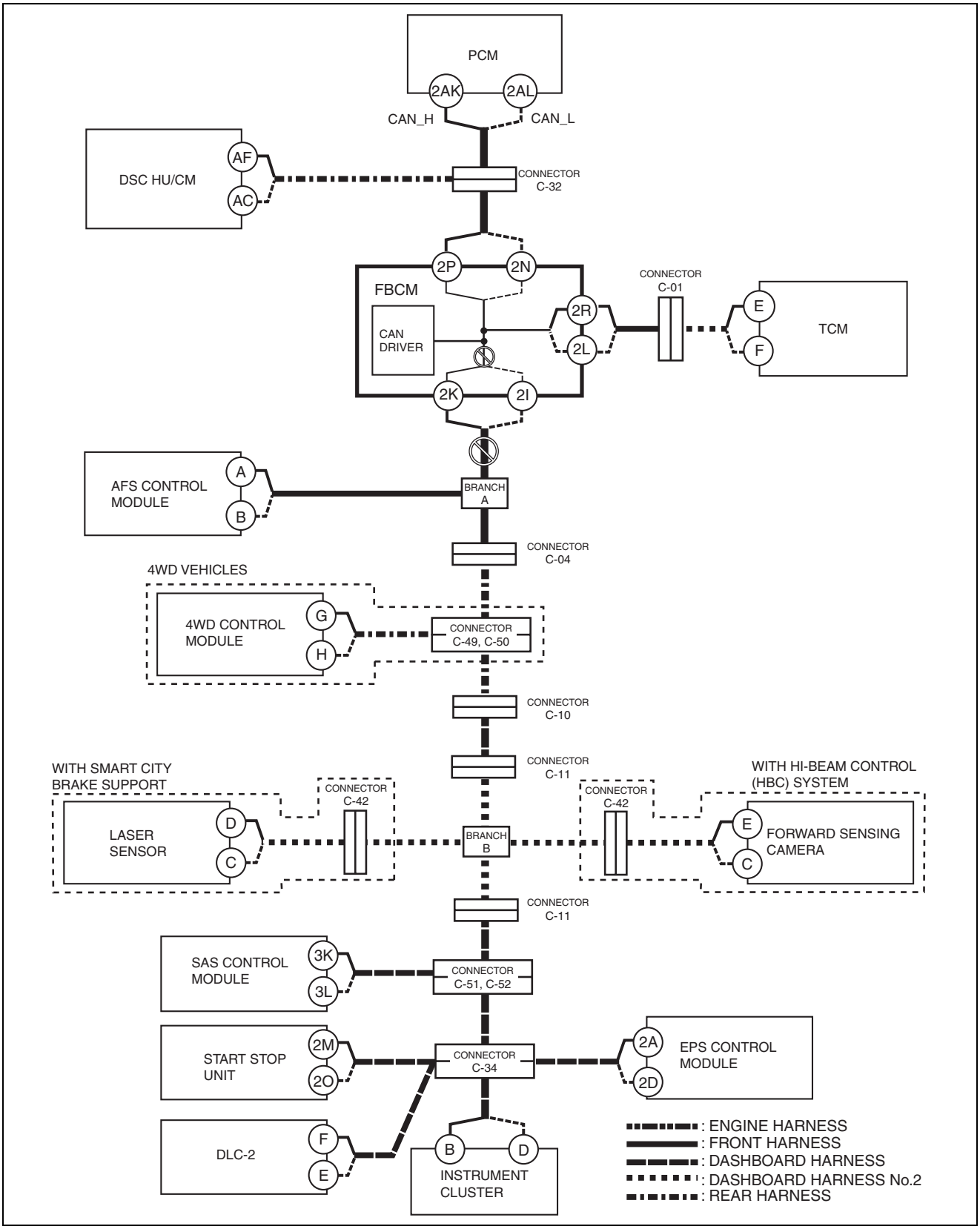

ac5wzw0000453

Inspection item

- Front body control module (FBCM) connector
- Wiring harness between front body control module (FBCM) terminal 2K and branch A
- Wiring harness between front body control module (FBCM) terminal 2I and branch A
- Front body control module (FBCM)

— Between front body control module (FBCM) terminal 2P and front body control module (FBCM) terminal 2K
— Between front body control module (FBCM) terminal 2N and front body control module (FBCM) terminal 2I

MTX vehicles
Possible cause

- Connector terminal disconnection, poor contact, damage, deformation, corrosion
- Open circuit in wiring harness between front body control module (FBCM) and connector C-04
- Open circuit in wiring harness between connector C-04 and connectors C-49, C-50
- Connector C-04 malfunction
- Connectors C-49, C-50 malfunction
- CAN circuit in front body control module (FBCM) malfunction

ON-BOARD DIAGNOSTIC [SKYACTIV-D 2.2 (R.H.D.)]

System wiring diagram

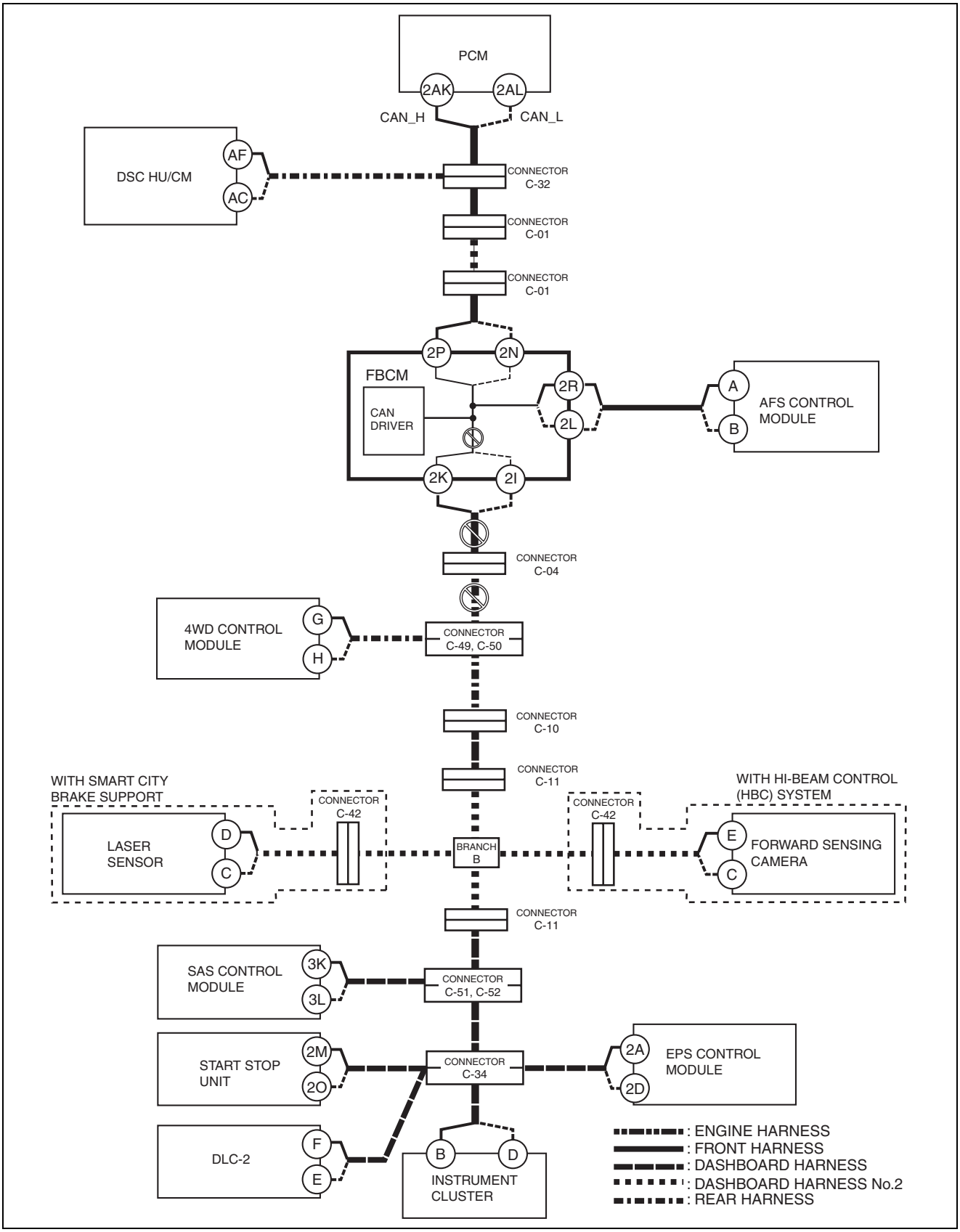

ac5wzw0000453

Inspection item

- Front body control module (FBCM) connector
- Connector C-04
- Connectors C-49, C-50

ON-BOARD DIAGNOSTIC [SKYACTIV-D 2.2 (R.H.D.)]

- Wiring harness between front body control module (FBCM) terminal 2K and connector C-04
- Wiring harness between front body control module (FBCM) terminal 2I and connector C-04
- Wiring harness between connector C-04 and connectors C-49, C-50
- Front body control module (FBCM)
  - — Between front body control module (FBCM) terminal 2P and front body control module (FBCM) terminal 2K
  - — Between front body control module (FBCM) terminal 2N and front body control module (FBCM) terminal 2I

G
ATX vehicles
Possible cause

- Connector terminal disconnection, poor contact, damage, deformation, corrosion
- Open circuit in wiring harness between AFS control module and branch A
- AFS control module malfunction

ON-BOARD DIAGNOSTIC [SKYACTIV-D 2.2 (R.H.D.)]

System wiring diagram

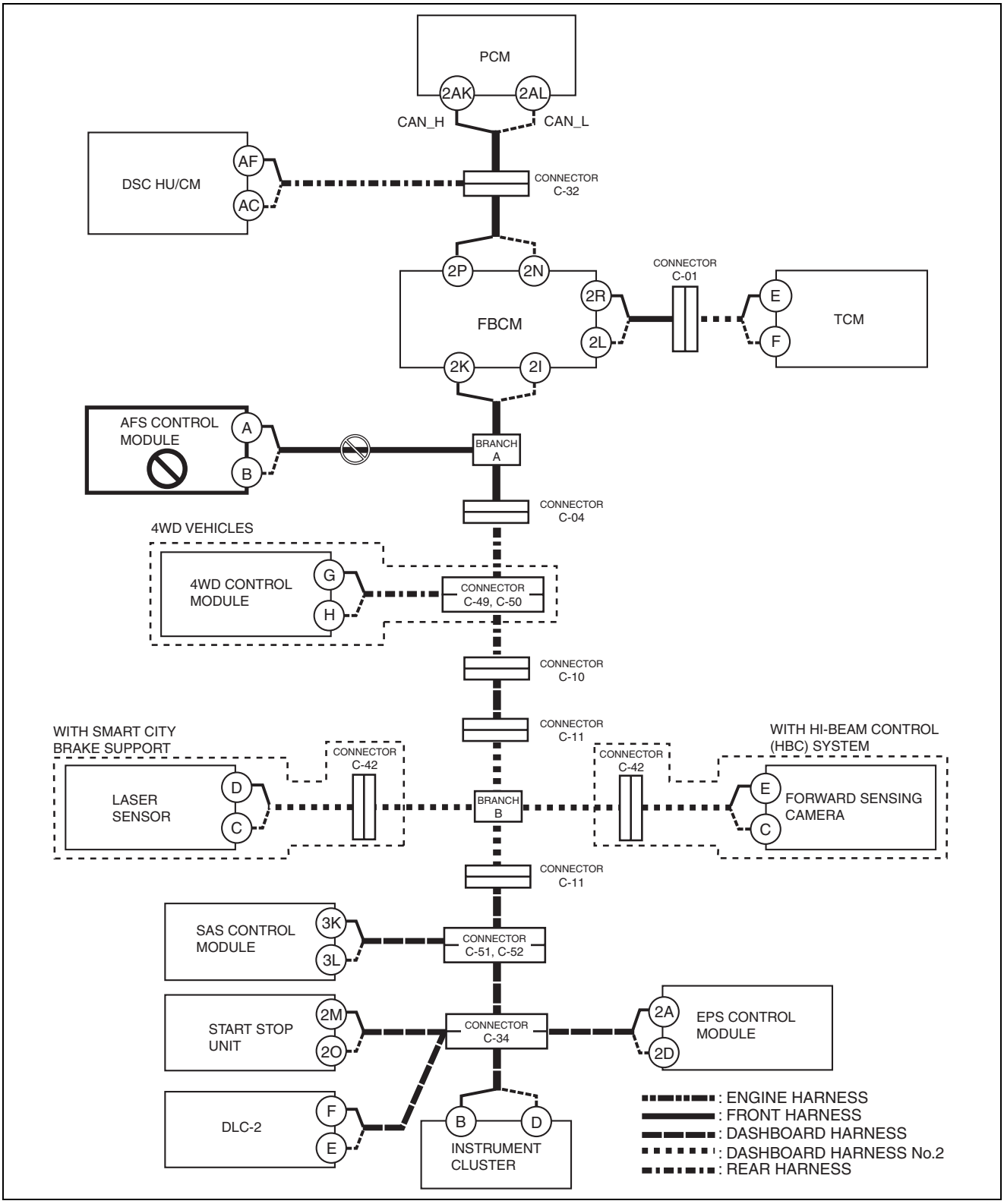

ac5wzw0000453

Inspection item

- AFS control module connector
- Wiring harness between AFS control module terminal A and branch A
- Wiring harness between AFS control module terminal B and branch A
- AFS control module

ON-BOARD DIAGNOSTIC [SKYACTIV-D 2.2 (R.H.D.)]

MTX vehicles
Possible cause

- Connector terminal disconnection, poor contact, damage, deformation, corrosion
- Open circuit in wiring harness between AFS control module and front body control module (FBCM)
- CAN circuit in front body control module (FBCM) malfunction
- AFS control module malfunction
- CAN circuit in front body control module (FBCM) malfunction

System wiring diagram

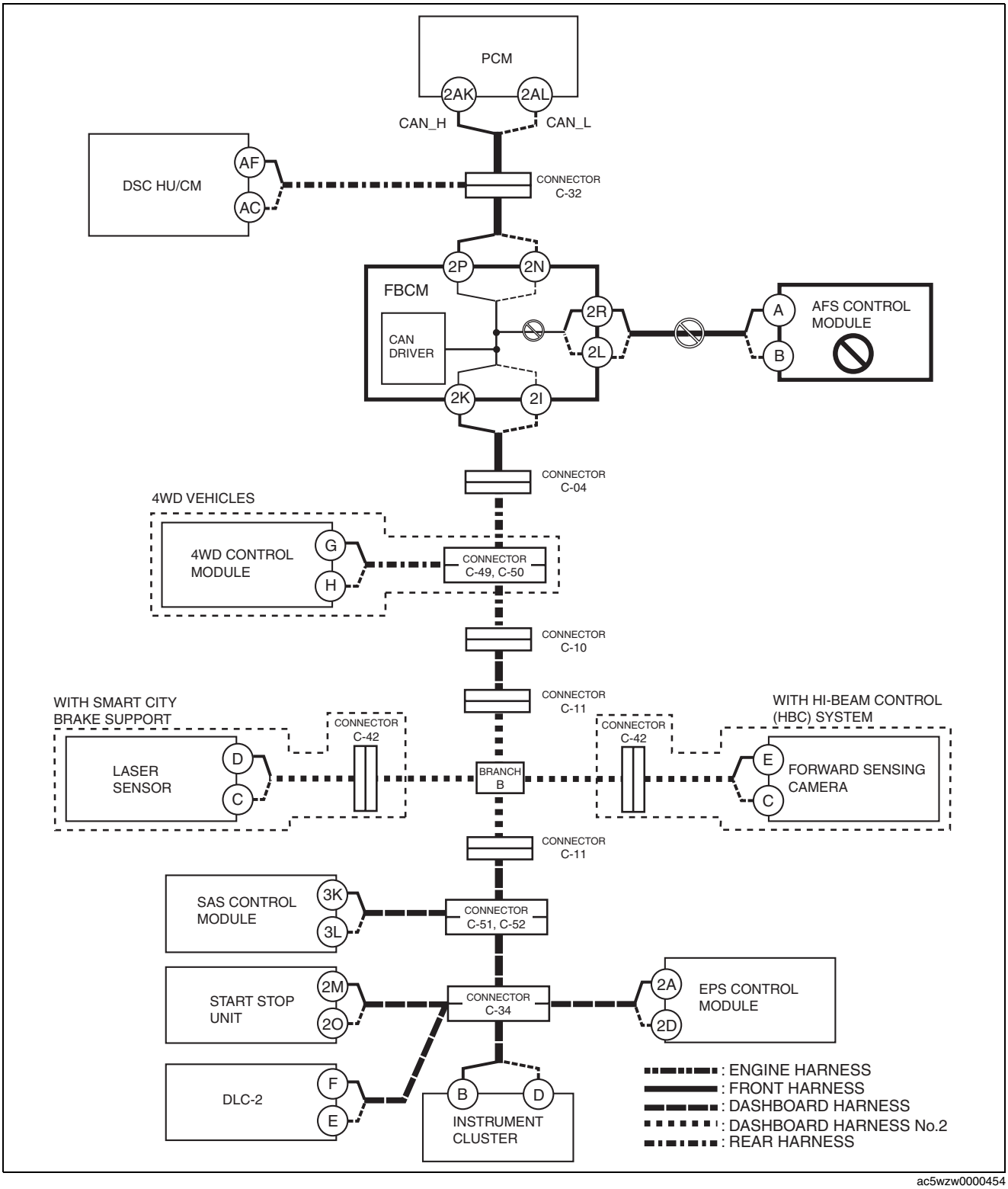

ac5wzw0000454

Inspection item

- Front body control module (FBCM) connector

ON-BOARD DIAGNOSTIC [SKYACTIV-D 2.2 (R.H.D.)]

- AFS control module connector
- Wiring harness between AFS control module terminal A and front body control module (FBCM) terminal 2R
- Wiring harness between AFS control module terminal B and front body control module (FBCM) terminal 2L
- AFS control module
- Front body control module (FBCM)
  - — Between front body control module (FBCM) terminal 2R and front body control module (FBCM) terminal 2K
  - — Between front body control module (FBCM) terminal 2L and front body control module (FBCM) terminal 2I

H
4WD vehicles (ATX)
Possible cause

- Connector terminal disconnection, poor contact, damage, deformation, corrosion
- Open circuit in wiring harness between branch A and connector C-04
- Open circuit in wiring harness between connector C-04 and connectors C-49, C-50
- Connector C-04 malfunction
- Connectors C-49, C-50 malfunction

ON-BOARD DIAGNOSTIC [SKYACTIV-D 2.2 (R.H.D.)]

System wiring diagram

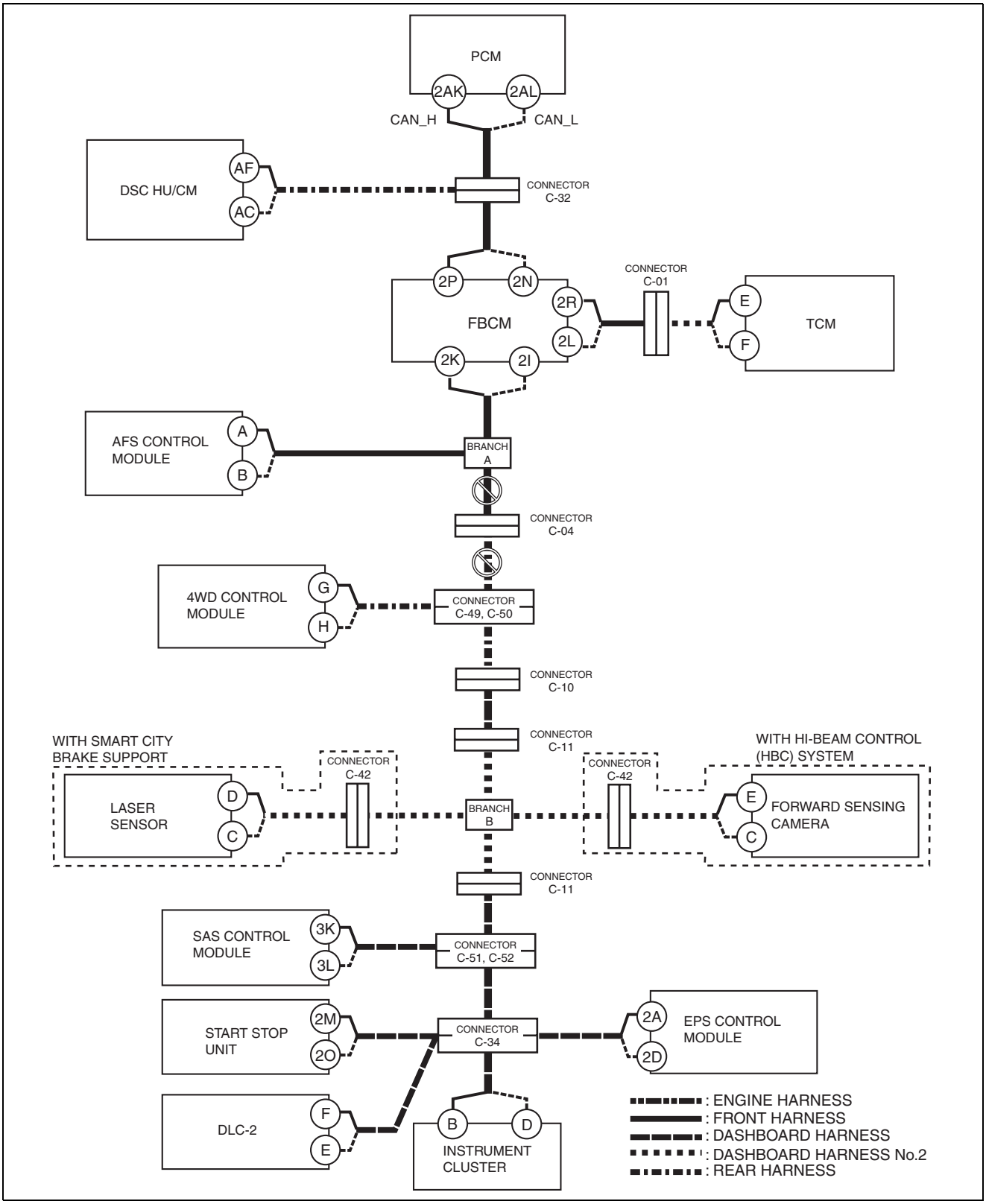

ac5wzw0000454

Inspection item

- Connector C-04
- Connectors C-49, C-50
- Wiring harness between branch A and connector C-04
- Wiring harness between connector C-04 and connectors C-49, C-50

10

ON-BOARD DIAGNOSTIC [SKYACTIV-D 2.2 (R.H.D.)]

2WD vehicles (ATX)
Possible cause

- Connector terminal disconnection, poor contact, damage, deformation, corrosion
- Open circuit in wiring harness between branch A and connector C-04
- Open circuit in wiring harness between connector C-04 and connector C-10
- Open circuit in wiring harness between connector C-10 and connector C-11
- Open circuit in wiring harness between connector C-11 and branch B
- Connector C-04 malfunction
- Connector C-10 malfunction
- Connector C-11 malfunction

System wiring diagram

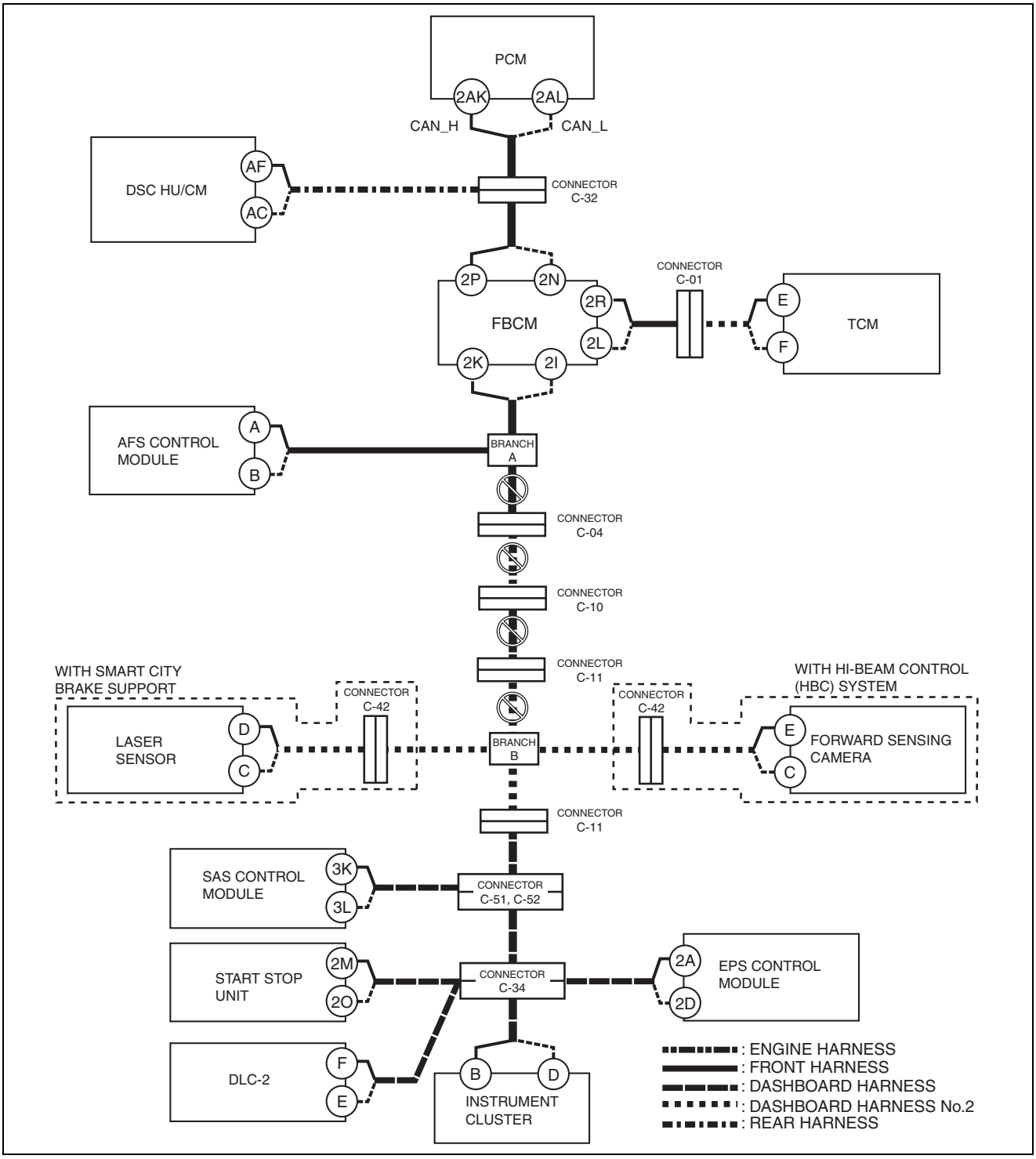

ac5wzw0000454

Inspection item

- Connector C-04

ON-BOARD DIAGNOSTIC [SKYACTIV-D 2.2 (R.H.D.)]

- Connector C-10
- Connector C-11
- Wiring harness between branch A and connector C-04
- Wiring harness between connector C-04 and connector C-10
- Wiring harness between connector C-10 and connector C-11
- Wiring harness between connector C-11 and branch B

I

Possible cause

- Connector terminal disconnection, poor contact, damage, deformation, corrosion
- Open circuit in wiring harness between 4WD control module and connectors C-49, C-50
- Connectors C-49, C-50 malfunction
- 4WD control module malfunction

ON-BOARD DIAGNOSTIC [SKYACTIV-D 2.2 (R.H.D.)]

System wiring diagram

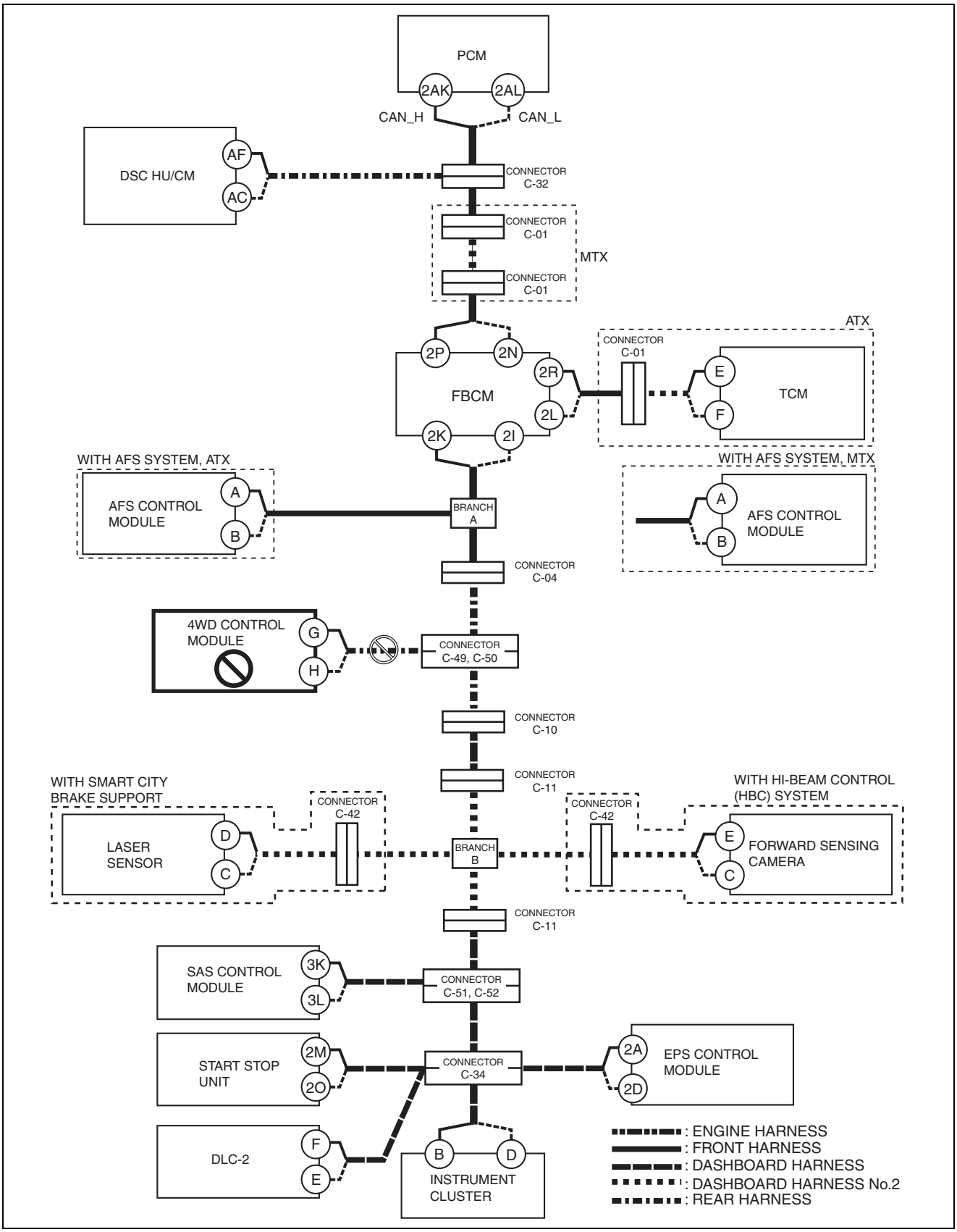

ac5wzw0000454

Inspection item

- 4WD control module connector
- Connectors C-49, C-50

- Wiring harness between 4WD control module terminal G and connector C-49
- Wiring harness between 4WD control module terminal H and connector C-50
- 4WD control module

J
With smart city brake support or hi-beam control (HBC) system
Possible cause

- Connector terminal disconnection, poor contact, damage, deformation, corrosion
- Open circuit in wiring harness between connectors C-49, C-50 and connector C-10
- Open circuit in wiring harness between connector C-10 and connector C-11
- Open circuit in wiring harness between connector C-11 and branch B
- Connectors C-49, C-50 malfunction
- Connector C-10 malfunction
- Connector C-11 malfunction

ON-BOARD DIAGNOSTIC [SKYACTIV-D 2.2 (R.H.D.)]

System wiring diagram

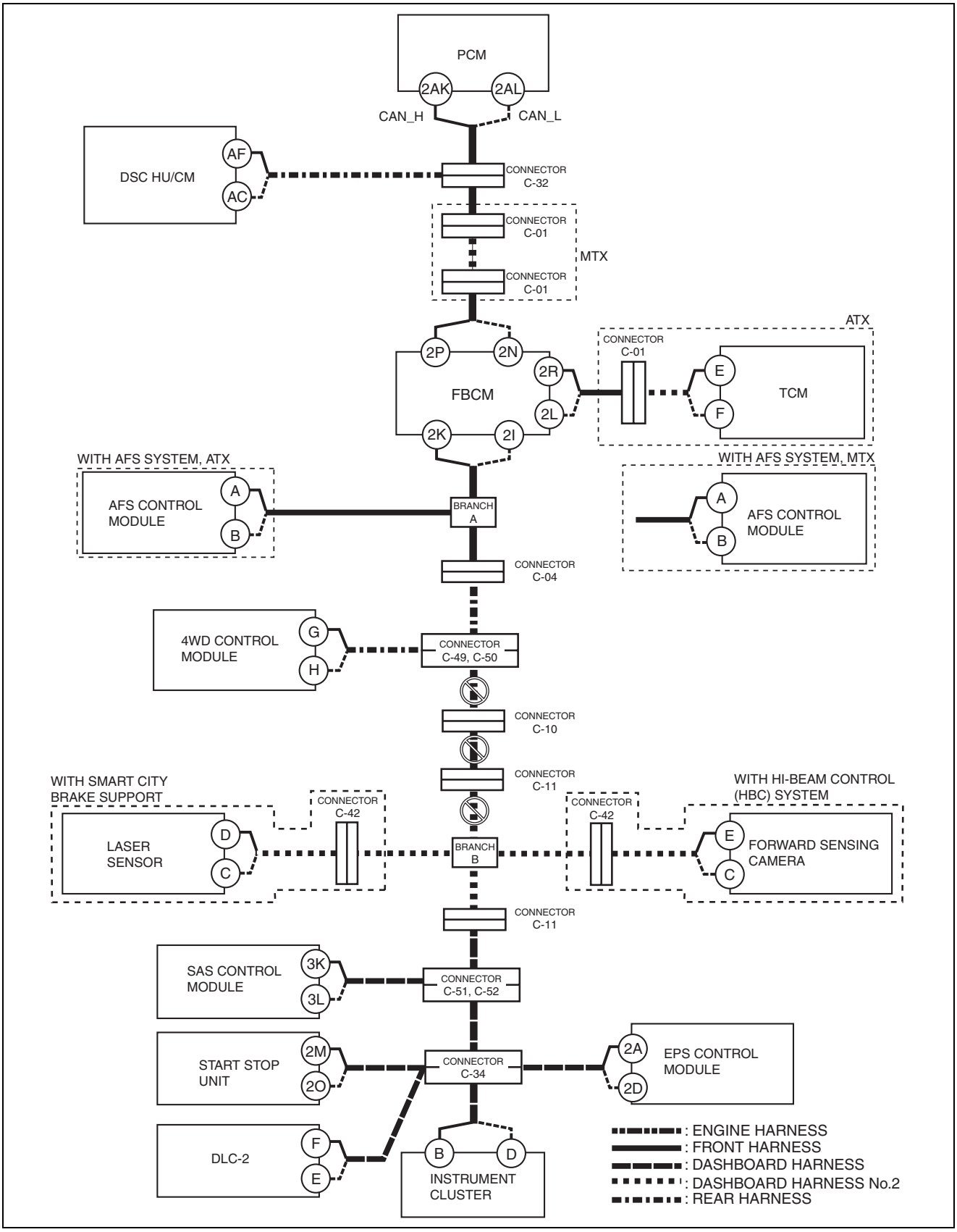

ac5wzw0000454

Inspection item

- Connectors C-49, C-50
- Connector C-10
- Connector C-11

- Wiring harness between connectors C-49, C-50 and connector C-10
- Wiring harness between connector C-10 and connector C-11
- Wiring harness between connector C-11 and branch B

Without smart city brake support or hi-beam control (HBC) system
Possible cause

- Connector terminal disconnection, poor contact, damage, deformation, corrosion
- Open circuit in wiring harness between connectors C-49, C-50 and connector C-10
- Open circuit in wiring harness between connector C-10 and connector C-11
- Open circuit in wiring harness between connector C-11 and connector C-11
- Open circuit in wiring harness between connector C-11 and connectors C-51, C-52
- Connectors C-49, C-50 malfunction
- Connector C-10 malfunction
- Connector C-11 malfunction
- Connectors C-51, C-52 malfunction

ON-BOARD DIAGNOSTIC [SKYACTIV-D 2.2 (R.H.D.)]

System wiring diagram

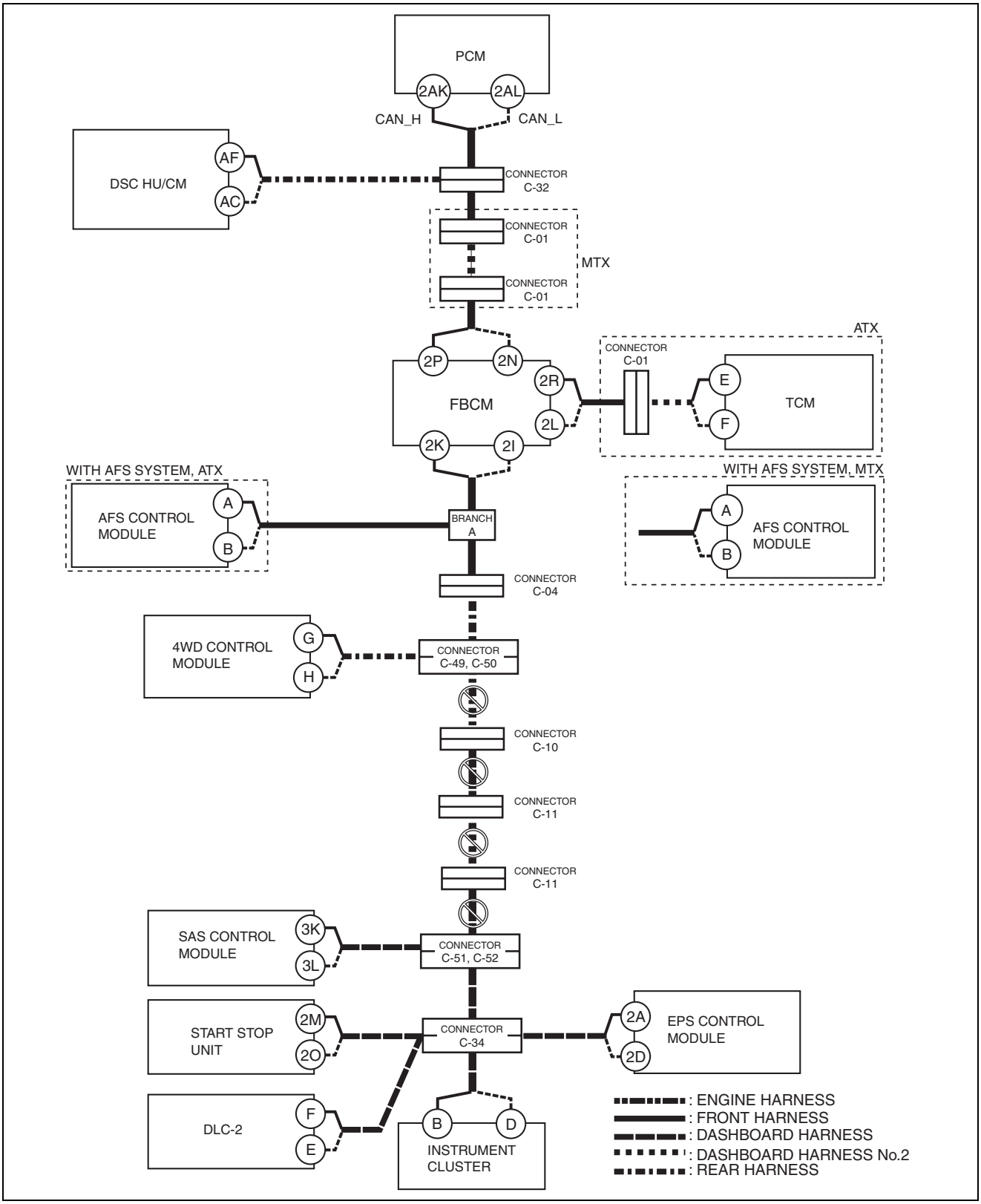

ac5wzw0000454

Inspection item

- Connectors C-49, C-50
- Connector C-10
- Connector C-11
- Connectors C-51, C-52
- Wiring harness between connectors C-49, C-50 and connector C-10
- Wiring harness between connector C-10 and connector C-11

- Wiring harness between connector C-11 and connector C-11
- Wiring harness between connector C-11 and connectors C-51, C-52

K
Possible cause
- Connector terminal disconnection, poor contact, damage, deformation, corrosion
- Open circuit in wiring harness between laser sensor and connector C-42
- Open circuit in wiring harness between connector C-42 and branch B
- Connector C-42 malfunction
- Laser sensor malfunction

ON-BOARD DIAGNOSTIC [SKYACTIV-D 2.2 (R.H.D.)]

System wiring diagram

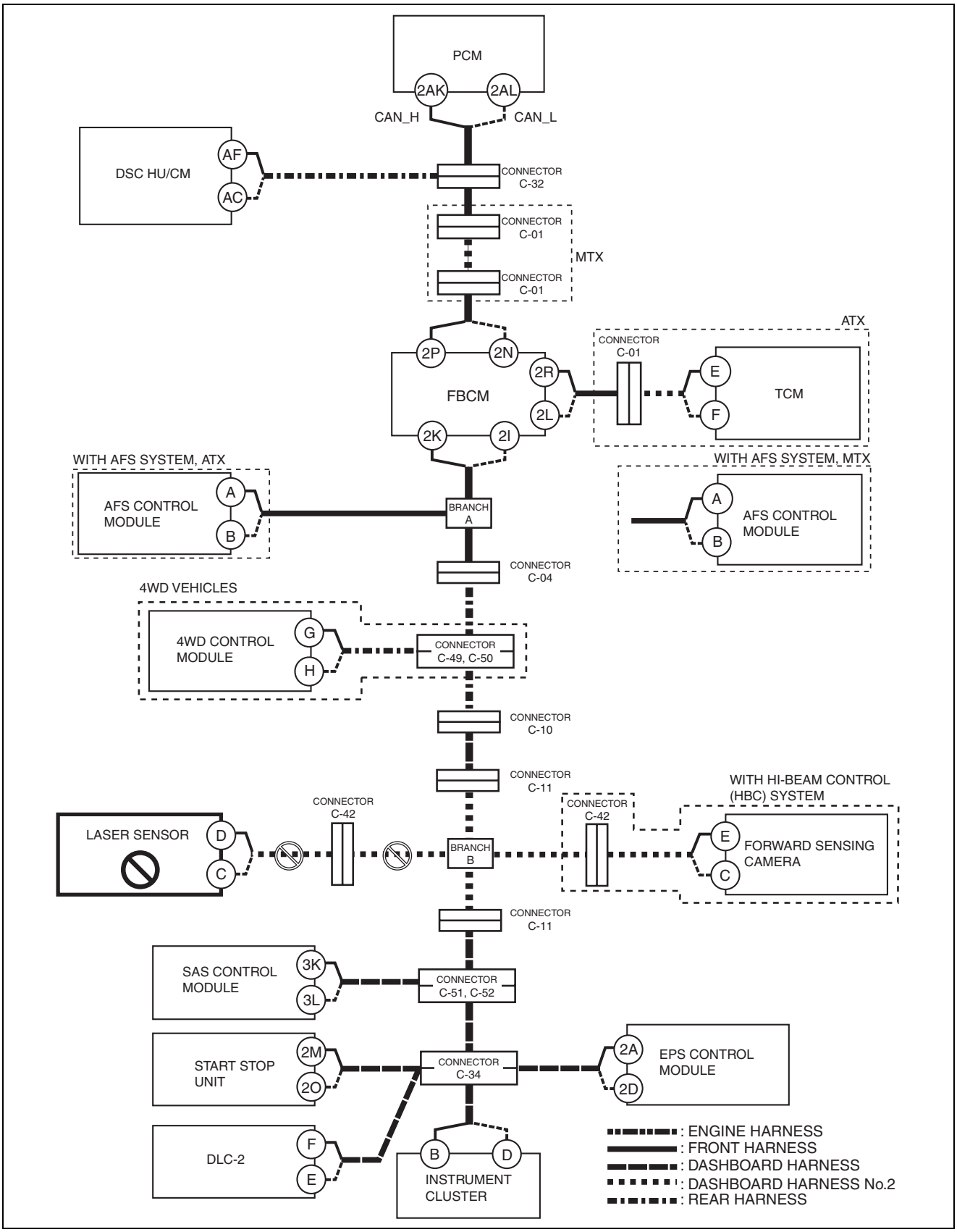

ac5wzw0000454

Inspection item

- laser sensor connector
- Connector C-42

ON-BOARD DIAGNOSTIC [SKYACTIV-D 2.2 (R.H.D.)]

- Wiring harness between laser sensor terminal D and connector C-42
- Wiring harness between laser sensor terminal C and connector C-42
- Wiring harness between connector C-42 and branch B
- Laser sensor

L
Possible cause
- Connector terminal disconnection, poor contact, damage, deformation, corrosion
- Open circuit in wiring harness between forward sensing camera and connector C-42
- Open circuit in wiring harness between connector C-42 and branch B
- Connector C-42 malfunction
- Forward sensing camera malfunction

ON-BOARD DIAGNOSTIC [SKYACTIV-D 2.2 (R.H.D.)]

System wiring diagram

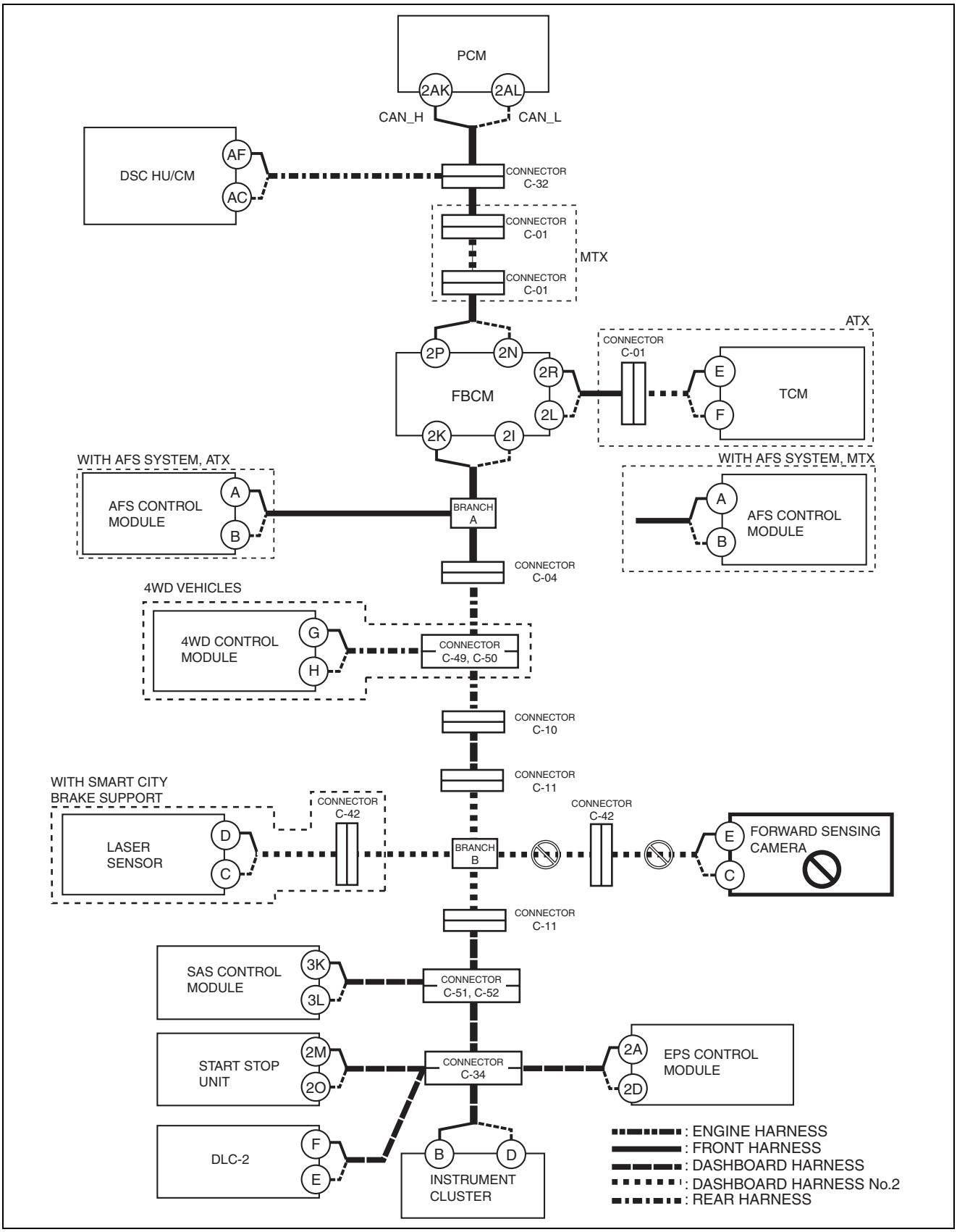

ac5wzw0000454

Inspection item

- Forward sensing camera connector
- Connector C-42

- Wiring harness between forward sensing camera terminal E and connector C-42
- Wiring harness between forward sensing camera terminal C and connector C-42
- Wiring harness between connector C-42 and branch B
- Forward sensing camera

M
Possible cause
- Connector terminal disconnection, poor contact, damage, deformation, corrosion
- Open circuit in wiring harness between branch B and connector C-11
- Open circuit in wiring harness between connector C-11 and connector C-51, C-52
- Connector C-11 malfunction
- Connectors C-51, C-52 malfunction

ON-BOARD DIAGNOSTIC [SKYACTIV-D 2.2 (R.H.D.)]

System wiring diagram

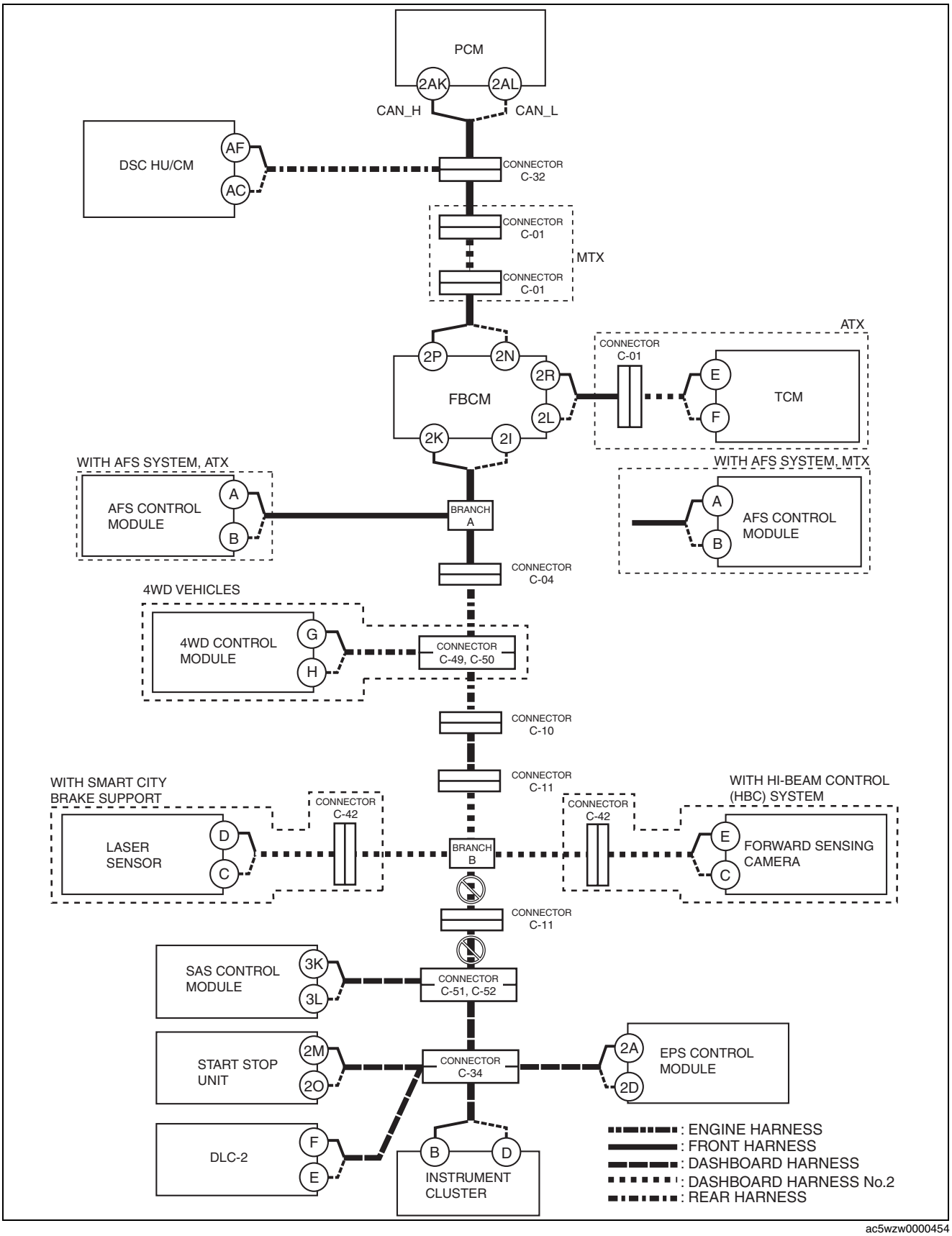

ac5wzw0000454

Inspection item

- Connector C-11
- Connectors C-51, C-52

- Wiring harness between branch B and connector C-11
- Wiring harness between connector C-11 and connectors C-51, C-52

N
Possible cause
- Connector terminal disconnection, poor contact, damage, deformation, corrosion
- Open circuit in wiring harness between SAS control module and connectors C-51, C-52
- Connectors C-51, C-52 malfunction
- SAS control module malfunction

ON-BOARD DIAGNOSTIC [SKYACTIV-D 2.2 (R.H.D.)]

System wiring diagram

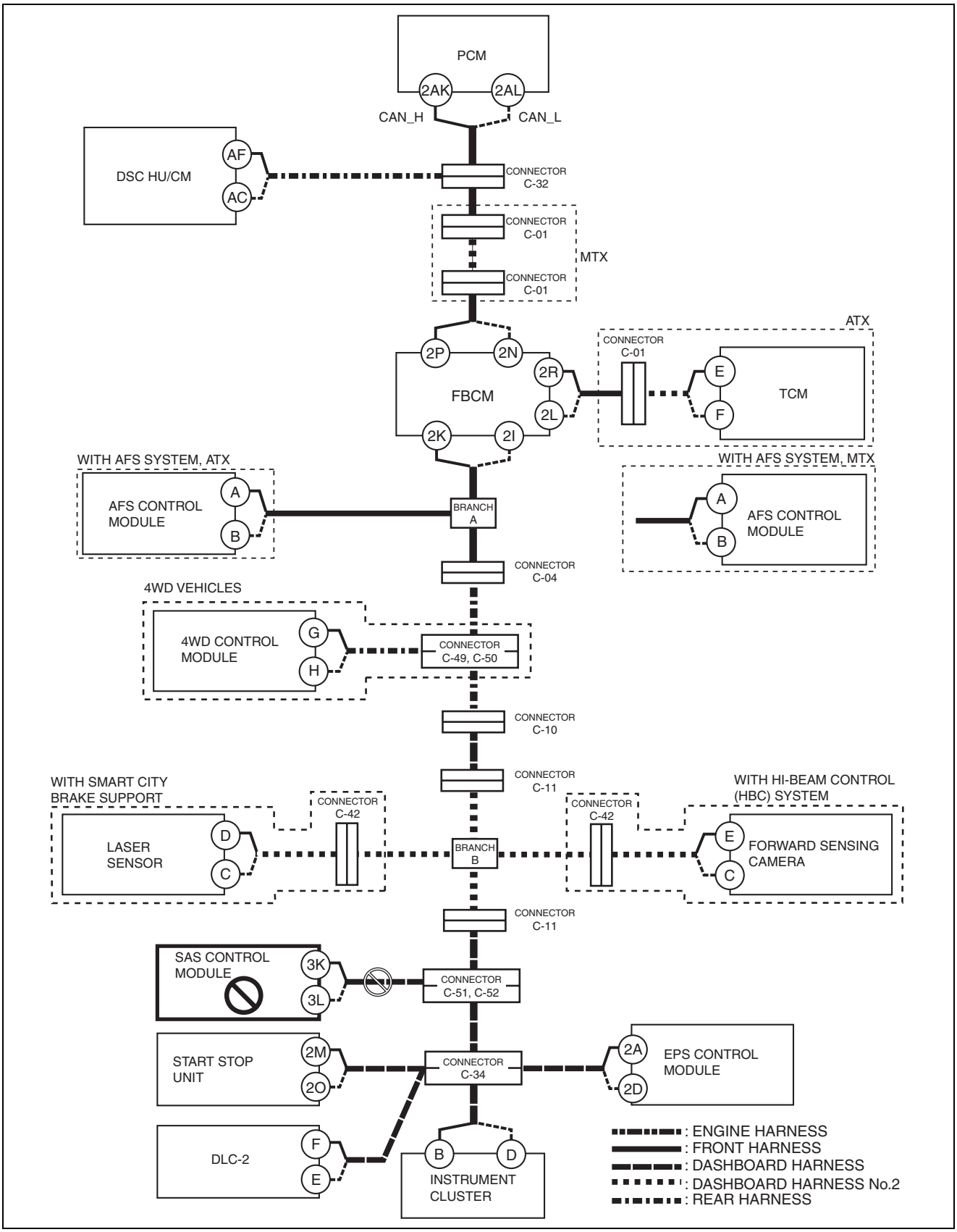

ac5wzw0000454

Inspection item

Warning

- **Handling the component parts of the SRS air bag system improperly can accidentally operate (deploy) the air bag module, which may seriously injure you. Read the service warnings and cautions before handling the air bag system components of the SRS air bag system.**
  (See 08-10-3 AIR BAG SYSTEM SERVICE WARNINGS.)
  (See 08-10-5 AIR BAG SYSTEM SERVICE CAUTIONS.)

- SAS control module connector
- Connectors C-51, C-52
- Wiring harness between SAS control module terminal 3K and connector C-51
- Wiring harness between SAS control module terminal 3L and connector C-52
- SAS control module

O
Possible cause
- Connector terminal disconnection, poor contact, damage, deformation, corrosion
- Open circuit in wiring harness between connectors C-51, C-52 and connector C-34
- Connectors C-51, C-52 malfunction
- Connector C-34 malfunction

ON-BOARD DIAGNOSTIC [SKYACTIV-D 2.2 (R.H.D.)]

System wiring diagram

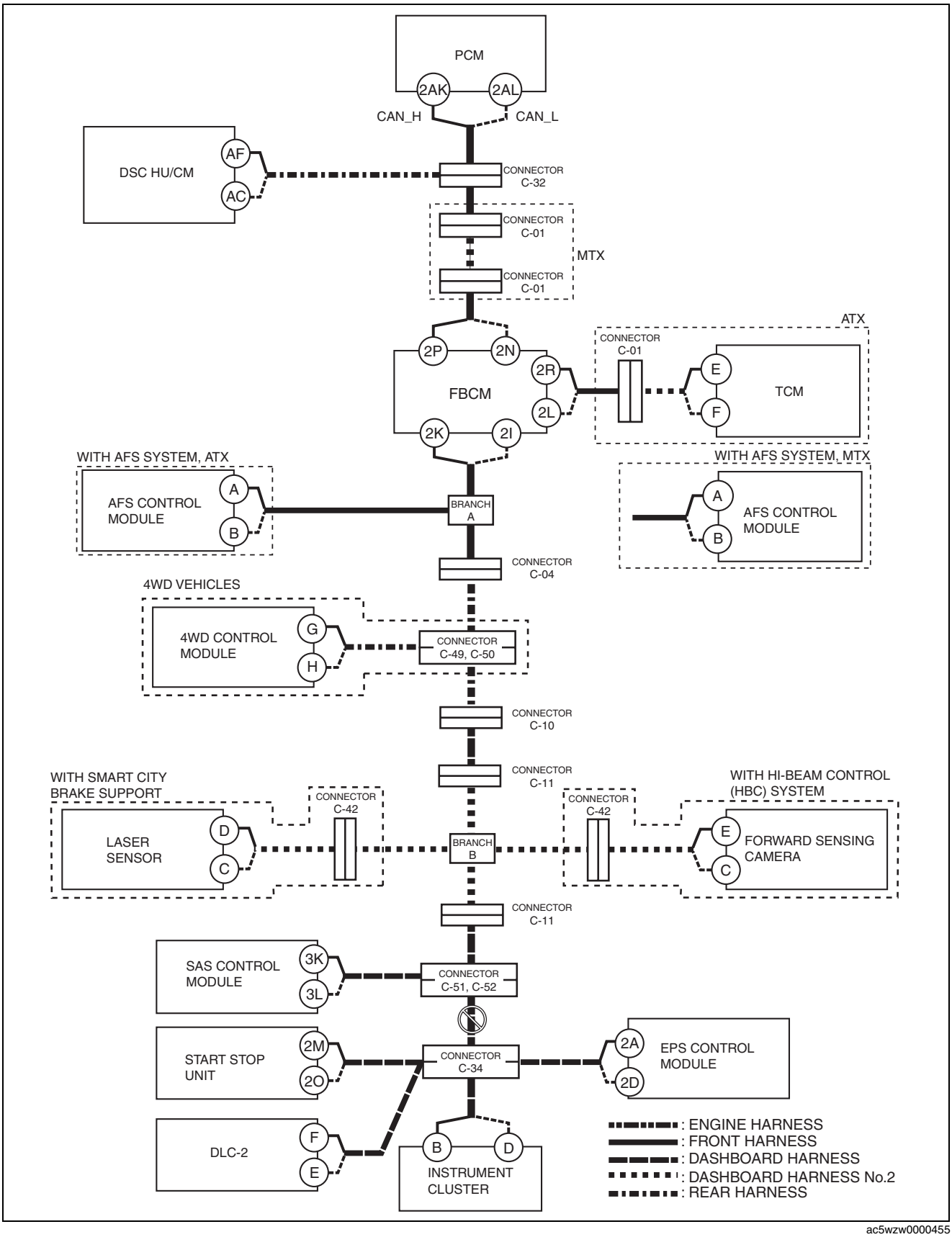

ac5wzw0000455

Inspection item

- Connectors C-51, C-52
- Connector C-34

- Wiring harness between connectors C-51, C-52 and connector C-34

P
Possible cause
- Connector terminal disconnection, poor contact, damage, deformation, corrosion
- Open circuit in wiring harness between start stop unit and connector C-34
- Connector C-34 malfunction
- Start stop unit malfunction

ON-BOARD DIAGNOSTIC [SKYACTIV-D 2.2 (R.H.D.)]

System wiring diagram

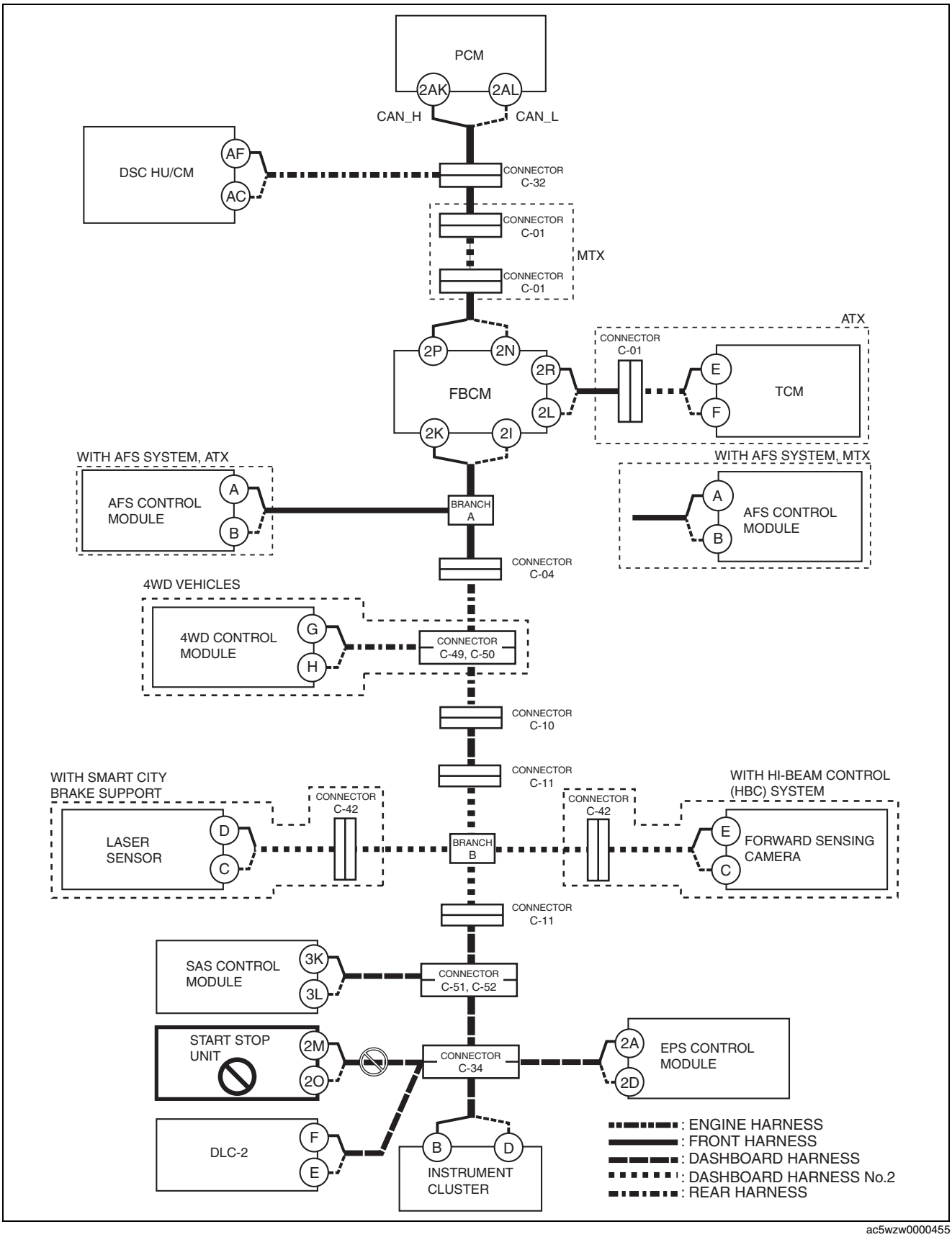

ac5wzw0000455

Inspection item

- Start stop unit connector
- Connector C-34

- Wiring harness between start stop unit terminal 2M and connector C-34
- Wiring harness between start stop unit terminal 2O and connector C-34
- Start stop unit

Q
Possible cause
- Connector terminal disconnection, poor contact, damage, deformation, corrosion
- Open circuit in wiring harness between EPS control module and connector C-34
- Connector C-34 malfunction
- EPS control module malfunction

ON-BOARD DIAGNOSTIC [SKYACTIV-D 2.2 (R.H.D.)]

System wiring diagram

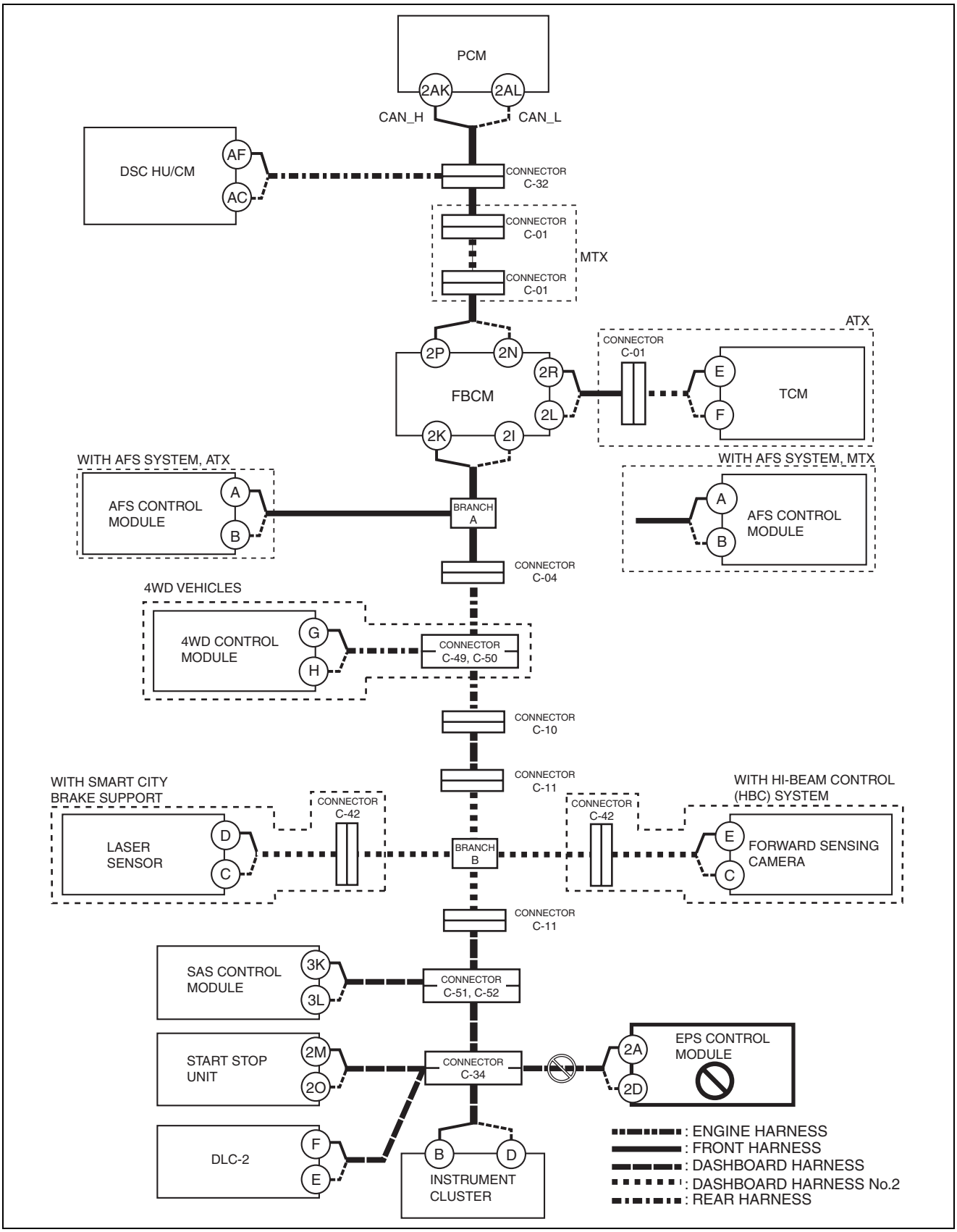

ac5wzw0000455

Inspection item

- EPS control module connector
- Connector C-34

- Wiring harness between EPS control module terminal 2A and connector C-34
- Wiring harness between EPS control module terminal 2D and connector C-34
- EPS control module

R
Possible cause
- Connector terminal disconnection, poor contact, damage, deformation, corrosion
- Open circuit in wiring harness between instrument cluster and connector C-34
- Connector C-34 malfunction
- Instrument cluster malfunction

ON-BOARD DIAGNOSTIC [SKYACTIV-D 2.2 (R.H.D.)]

System wiring diagram

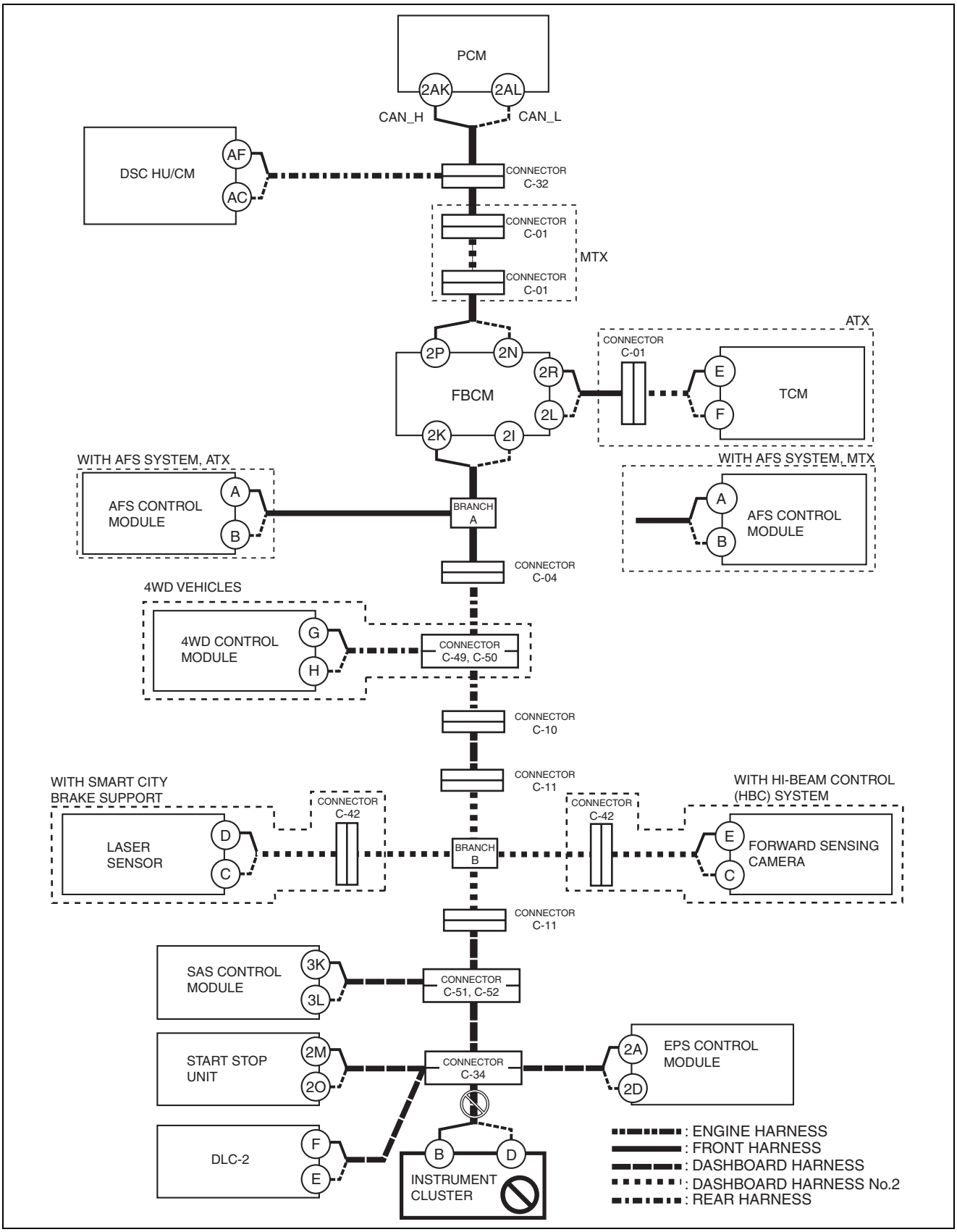

ac5wzw0000455

Inspection item

- Instrument cluster connector
- Connector C-34

- Wiring harness between instrument cluster terminal B and connector C-34
- Wiring harness between instrument cluster terminal D and connector C-34
- Instrument cluster

DETERMINING SHORT TO GROUND LOCATION (HS-CAN) [SKYACTIV-D 2.2 (R.H.D.)]

id100206000600

Caution

- **Perform the following malfunction diagnosis only when it is diagnosed with a short to ground by 10-02D-3 CONTROLLER AREA NETWORK (CAN) MALFUNCTION DIAGNOSIS FLOW [SKYACTIV-D 2.2 (R.H.D.)].**

ON-BOARD DIAGNOSTIC [SKYACTIV-D 2.2 (R.H.D.)]

System wiring diagram

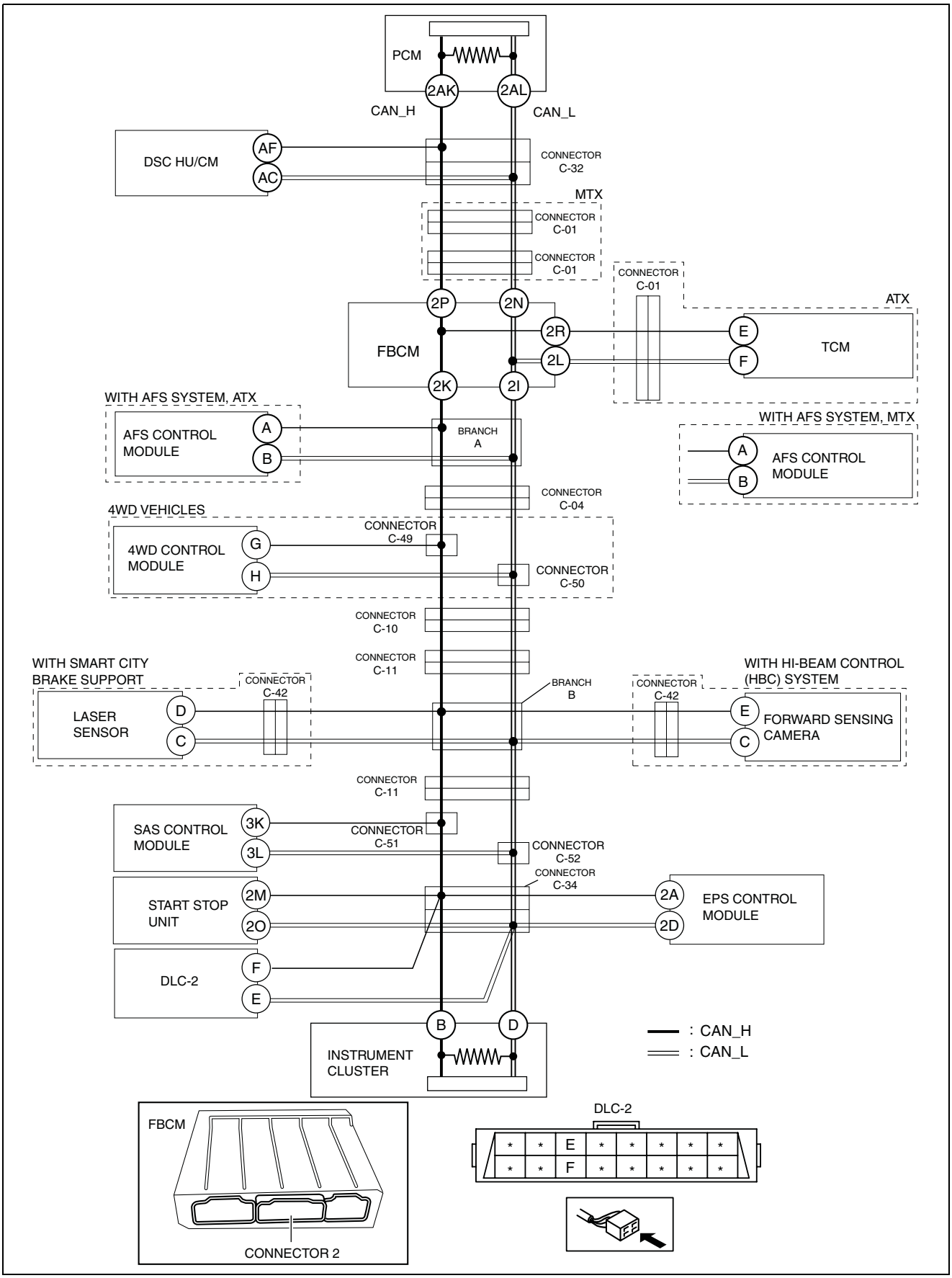

ac5wzw0000068

ON-BOARD DIAGNOSTIC [SKYACTIV-D 2.2 (R.H.D.)]

Determination procedure

Caution
- **When disconnecting the connector, verify that there is no looseness, damage, deformation, corrosion, or poor connection of the connector terminals.**
- **When inspecting the DLC-2, touch it with a paper clip or similar thin pin without directly inserting a tester into the terminals.**

Step	Inspection		Action
1	**INSPECT FOR SHORT TO GROUND BETWEEN FRONT BODY CONTROL MODULE (FBCM) AND INSTRUMENT CLUSTER** • Disconnect the negative battery cable. (See 01-17B-9 NEGATIVE BATTERY CABLE DISCONNECTION/CONNECTION [SKYACTIV-D 2.2].) • Disconnect connector 2 which has front body control module (FBCM) terminals 2P and 2N. • Inspect for continuity at the following terminals: — Between DLC-2 terminal F and body ground — Between DLC-2 terminal E and body ground • Is there continuity?	Yes	Go to Step 6.
		No	Go to the next step.
2	**INSPECT CAN LINE INSIDE FRONT BODY CONTROL MODULE (FBCM) FOR SHORT TO GROUND** • Inspect for continuity at the following terminals: — Between front body control module (FBCM) terminal 2P and body ground — Between front body control module (FBCM) terminal 2N and body ground • Is there continuity?	Yes	Replace the front body control module (FBCM) because there is a short to ground in the front body control module (FBCM). (See 09-40-2 FRONT BODY CONTROL MODULE (FBCM) REMOVAL/INSTALLATION.)
		No	Go to the next step.
3	**INSPECT FOR SHORT TO GROUND BETWEEN TCM OR AFS CONTROL MODULE AND FRONT BODY CONTROL MODULE (FBCM)** • Inspect for continuity at the following terminals: — Between TCM control module terminal E and body ground (ATX) — Between TCM control module terminal F and body ground (ATX) — Between AFS control module terminal A and body ground (MTX) — Between AFS control module terminal B and body ground (MTX) • Is there continuity?	Yes	• Go to the next step. (ATX) • Go to Step 5. (MTX)
		No	• Go to Step 30. (ATX) • Go to Step 28. (MTX)
4	**INSPECT FOR SHORT TO GROUND BETWEEN TCM AND CONNECTOR C-01** • Disconnect connector C-01. • Inspect for continuity at the following terminals: — Between TCM control module terminal E and body ground — Between TCM control module terminal F and body ground • Is there continuity?	Yes	Go to the next step.
		No	Repair or replace the wiring harness between the front body control module (FBCM) and connector C-01 because the wiring harness is shorted to ground.

10

ON-BOARD DIAGNOSTIC [SKYACTIV-D 2.2 (R.H.D.)]

Step	Inspection		Action
5	**INSPECT CAN LINE IN TCM OR AFS CONTROL MODULE FOR SHORT TO GROUND** • Disconnect the TCM connector. (ATX) • Disconnect the AFS control module connector. (MTX) • Inspect for continuity at the following terminals: — Between TCM terminal E (wiring harness side) and body ground (ATX) — Between TCM terminal F (wiring harness side) and body ground (ATX) — Between AFS control module terminal A (wiring harness side) and body ground (MTX) — Between AFS control module terminal B (wiring harness side) and body ground (MTX) • Is there continuity?	Yes	• Repair or replace the wiring harness between the TCM and connector C-01because the wiring harness is shorted to ground. (ATX) • Repair or replace the wiring harness between the AFS control module and front body control module (FBCM) because the wiring harness is shorted to ground. (MTX)
		No	• Replace the TCM because there is a short to ground in the TCM. (ATX) (See 05-17A-67 CONTROL VALVE BODY REMOVAL/INSTALLATION [FW6A-EL, FW6AX-EL].) (See 05-17B-81 CONTROL VALVE BODY REMOVAL/INSTALLATION [GW6A-EL, GW6AX-EL].) • Replace the AFS control module because there is a short to ground in the AFS control module. (MTX) (See 09-18-30 ADAPTIVE FRONT LIGHTING SYSTEM (AFS) CONTROL MODULE REMOVAL/INSTALLATION.)
6	**INSPECT FOR SHORT TO GROUND BETWEEN CONNECTOR C-04 AND INSTRUMENT CLUSTER** • Disconnect connector C-04. • Inspect for continuity at the following terminals: — Between DLC-2 terminal F and body ground — Between DLC-2 terminal E and body ground • Is there continuity?	Yes	Go to Step 8.
		No	• Go to the next step. (ATX) • Repair or replace the wiring harness between the front body control module (FBCM) and connector C-04 because the wiring harness is shorted to ground. (MTX)
7	**INSPECT CAN LINE IN AFS CONTROL MODULE FOR SHORT TO GROUND** • Disconnect the AFS control module connector. • Inspect for continuity at the following terminals: — Between AFS control module terminal A (wiring harness side) and body ground — Between AFS control module terminal B (wiring harness side) and body ground • Is there continuity?	Yes	Repair or replace the wiring harness between the AFS control module and front body control module (FBCM) / connector C-04 because the wiring harness is shorted to ground.
		No	Replace the AFS control module because there is a short to ground in the AFS control module. (See 09-18-30 ADAPTIVE FRONT LIGHTING SYSTEM (AFS) CONTROL MODULE REMOVAL/INSTALLATION.)
8	**INSPECT FOR SHORT TO GROUND BETWEEN CONNECTORS C-49 AND C-50 AND INSTRUMENT CLUSTER** • Disconnect connectors C-49 and C-50. • Inspect for continuity at the following terminals: — Between DLC-2 terminal F and body ground — Between DLC-2 terminal E and body ground • Is there continuity?	Yes	Go to Step 11.
		No	Go to the next step.
9	**INSPECT FOR SHORT TO GROUND BETWEEN 4WD CONTROL MODULE AND CONNECTORS C-49 AND C-50** • Inspect for continuity at the following terminals: — Between 4WD control module terminal G and body ground — Between 4WD control module terminal H and body ground • Is there continuity?	Yes	Go to the next step.
		No	Repair or replace the wiring harness between connector C-04 and connectors C-49 and C-50 because the wiring harness is shorted to ground.

ON-BOARD DIAGNOSTIC [SKYACTIV-D 2.2 (R.H.D.)]

Step	Inspection		Action
10	**INSPECT CAN LINE IN 4WD CONTROL MODULE FOR SHORT TO GROUND** • Disconnect the 4WD control module connector. • Inspect for continuity at the following terminals: — Between 4WD control module terminal G (wiring harness side) and body ground — Between 4WD control module terminal H (wiring harness side) and body ground • Is there continuity?	Yes	Repair or replace the wiring harness between the 4WD control module and connectors C-49 and C-50 because the wiring harness is shorted to ground.
		No	Replace the 4WD control module because there is a short to ground in the 4WD control module. (See 03-18-4 4WD CONTROL MODULE REMOVAL/ INSTALLATION.)
11	**INSPECT FOR SHORT TO GROUND BETWEEN CONNECTOR C-10 AND INSTRUMENT CLUSTER** • Disconnect connector C-10. • Inspect for continuity at the following terminals: — Between DLC-2 terminal F and body ground — Between DLC-2 terminal E and body ground • Is there continuity?	Yes	Go to the next step.
		No	Repair or replace the wiring harness between connectors C-49 and C-50 and connector C-10 because the wiring harness is shorted to ground.
12	**INSPECT FOR SHORT TO GROUND BETWEEN CONNECTOR C-11 AND INSTRUMENT CLUSTER** • Disconnect connector C-11. • Inspect for continuity at the following terminals: — Between DLC-2 terminal F and body ground — Between DLC-2 terminal E and body ground • Is there continuity?	Yes	Go to Step 18.
		No	Go to the next step.
13	**INSPECT FOR SHORT TO GROUND BETWEEN LASER SENSOR AND CONNECTOR C-42** • Disconnect connector C-42. • Inspect for continuity at the following terminals: — Between laser sensor terminal D and body ground — Between laser sensor terminal C and body ground • Is there continuity?	Yes	Go to the next step.
		No	Go to Step 15.
14	**INSPECT CAN LINE INSIDE LASER SENSOR FOR SHORT TO GROUND** • Disconnect the laser sensor connector. • Inspect for continuity at the following terminals: — Between laser sensor terminal D (wiring harness side) and body ground — Between laser sensor terminal C (wiring harness side) and body ground • Is there continuity?	Yes	Repair or replace the wiring harness between the laser sensor and connector C-42 because the wiring harness is shorted to ground.
		No	Replace the laser sensor because there is a short to ground in the laser sensor. (See 04-15-17 LASER SENSOR REMOVAL/ INSTALLATION.)
15	**INSPECT FOR SHORT TO GROUND BETWEEN FORWARD SENSING CAMERA AND CONNECTOR C-42** • Inspect for continuity at the following terminals: — Between forward sensing camera terminal E and body ground — Between forward sensing camera terminal C and body ground • Is there continuity?	Yes	Go to the next step.
		No	Go to Step 17.

ON-BOARD DIAGNOSTIC [SKYACTIV-D 2.2 (R.H.D.)]

Step	Inspection		Action
16	**INSPECT CAN LINE IN FORWARD SENSING CAMERA FOR SHORT TO GROUND** • Disconnect the forward sensing camera connector. • Inspect for continuity at the following terminals: — Between forward sensing camera terminal E (wiring harness side) and body ground — Between forward sensing camera terminal C (wiring harness side) and body ground • Is there continuity?	Yes	Repair or replace the wiring harness between the forward sensing camera and connector C-42 because the wiring harness is shorted to ground.
		No	Replace the forward sensing camera because there is a short to ground in the forward sensing camera. (See 09-18-94 FORWARD SENSING CAMERA (FSC) REMOVAL/INSTALLATION.)
17	**INSPECT FOR SHORT TO GROUND BETWEEN CONNECTORS C-11 AND C-42** • Connect connector C-42. • Inspect for continuity at the following terminals: — Between forward sensing camera terminal E and body ground (with high beam control (HBC) system) — Between forward sensing camera terminal C and body ground (with high beam control (HBC) system) — Between laser sensor terminal D and body ground (with smart city brake support) — Between laser sensor terminal C and body ground (with smart city brake support) • Is there continuity?	Yes	Repair or replace the wiring harness between connector C-11 and connector C-42 because the wiring harness is shorted to ground.
		No	Repair or replace the wiring harness between connector C-10 and connector C-11 because the wiring harness is shorted to ground.
18	**INSPECT FOR SHORT TO GROUND BETWEEN CONNECTOR C-51, C-52 AND INSTRUMENT CLUSTER** • Disconnect connector C-51, C-52. • Inspect for continuity at the following terminals: — Between DLC-2 terminal F and body ground — Between DLC-2 terminal E and body ground • Is there continuity?	Yes	Go to Step 21.
		No	Go to the next step.
19	**INSPECT FOR SHORT TO GROUND BETWEEN SAS CONTROL MODULE AND CONNECTOR C-51, C-52** • Inspect for continuity at the following terminals: — Between SAS control module terminal 3K and body ground — Between SAS control module terminal 3L and body ground • Is there continuity?	Yes	Go to the next step.
		No	Repair or replace the wiring harness between connector C-11 and connector C-51, C-52 because the wiring harness is shorted to ground.
20	**INSPECT CAN LINE IN SAS CONTROL MODULE FOR SHORT TO GROUND** • Disconnect the SAS control module connector. • Inspect for continuity at the following terminals: — Between SAS control module terminal 3K (wiring harness side) and body ground — Between SAS control module terminal 3L (wiring harness side) and body ground • Is there continuity?	Yes	Repair or replace the wiring harness between the SAS control module and connector C-51, C-52 because the wiring harness is shorted to ground.
		No	Replace the SAS control module because there is a short to ground in the SAS control module. (See 08-10-20 SAS CONTROL MODULE REMOVAL/INSTALLATION.)

ON-BOARD DIAGNOSTIC [SKYACTIV-D 2.2 (R.H.D.)]

Step	Inspection		Action
21	**INSPECT FOR SHORT TO GROUND BETWEEN CONNECTORS C-34 AND DLC-2** • Disconnect connector C-34. • Inspect for continuity at the following terminals: — Between DLC-2 terminal F and body ground — Between DLC-2 terminal E and body ground • Is there continuity?	Yes	Repair or replace the wiring harness between connector C-34 and DLC-2 because the wiring harness is shorted to ground.
		No	Go to the next step.
22	**INSPECT FOR SHORT TO GROUND BETWEEN START STOP UNIT AND CONNECTOR C-34** • Inspect for continuity at the following terminals: — Between start stop unit terminal 2M and body ground — Between start stop unit terminal 2O and body ground • Is there continuity?	Yes	Go to the next step.
		No	Go to Step 24.
23	**INSPECT CAN LINE IN START STOP UNIT FOR SHORT TO GROUND** • Disconnect the start stop unit connector. • Inspect for continuity at the following terminals: — Between start stop unit terminal 2M (wiring harness side) and body ground — Between start stop unit terminal 2O (wiring harness side) and body ground • Is there continuity?	Yes	Repair or replace the wiring harness between the start stop unit and connector C-34 because the wiring harness is shorted to ground.
		No	Replace the start stop unit because there is a short to ground in the start stop unit. (See 09-14-54 START STOP UNIT REMOVAL/INSTALLATION.)
24	**INSPECT FOR SHORT TO GROUND BETWEEN EPS CONTROL MODULE AND CONNECTOR C-34** • Inspect for continuity at the following terminals: — Between EPS control module terminal 2A and body ground — Between EPS control module terminal 2D and body ground • Is there continuity?	Yes	Go to the next step.
		No	Go to Step 26.
25	**INSPECT CAN LINE IN EPS CONTROL MODULE FOR SHORT TO GROUND** • Disconnect the EPS control module connector. • Inspect for continuity at the following terminals: — Between EPS control module terminal 2A (wiring harness side) and body ground — Between EPS control module terminal 2D (wiring harness side) and body ground • Is there continuity?	Yes	Repair or replace the wiring harness between the EPS control module and connector C-34 because the wiring harness is shorted to ground.
		No	Replace the EPS control module because there is a short to ground in the EPS control module. (See 06-13-4 STEERING WHEEL AND COLUMN REMOVAL/INSTALLATION.)
26	**INSPECT FOR SHORT TO GROUND BETWEEN INSTRUMENT CLUSTER AND CONNECTOR C-34** • Inspect for continuity at the following terminals: — Between instrument cluster terminal B and body ground — Between instrument cluster terminal D and body ground • Is there continuity?	Yes	Go to the next step.
		No	Repair or replace the wiring harness between connector C-51, C-52 and connector C-34 because the wiring harness is shorted to ground.

ON-BOARD DIAGNOSTIC [SKYACTIV-D 2.2 (R.H.D.)]

Step	Inspection		Action
27	**INSPECT CAN LINE IN INSTRUMENT CLUSTER FOR SHORT TO GROUND** • Disconnect the instrument cluster connector. • Inspect for continuity at the following terminals: — Between instrument cluster terminal B (wiring harness side) and body ground — Between instrument cluster terminal D (wiring harness side) and body ground • Is there continuity?	Yes	Repair or replace the wiring harness between the instrument cluster and connector C-34 because the wiring harness is shorted to ground.
		No	Replace the instrument cluster because there is a short to ground in the instrument cluster. (See 09-22-6 INSTRUMENT CLUSTER REMOVAL/ INSTALLATION.)
28	**INSPECT FOR SHORT TO GROUND BETWEEN CONNECTOR C-01 AND FRONT BODY CONTROL MODULE (FBCM)** • Disconnect connector C-01. • Connect connector 2 which has front body control module (FBCM) terminals 2P and 2N. • Inspect for continuity at the following terminals: — Between DLC-2 terminal F and body ground — Between DLC-2 terminal E and body ground • Is there continuity?	Yes	Repair or replace the wiring harness between connector C-01 and the front body control module (FBCM) because the wiring harness is shorted to ground.
		No	Go to the next step.
29	**INSPECT FOR SHORT TO GROUND BETWEEN CONNECTOR C-32 AND CONNECTOR C-01** • Disconnect connector C-32. • Connect connector C-01. • Inspect for continuity at the following terminals: — Between DLC-2 terminal F and body ground — Between DLC-2 terminal E and body ground • Is there continuity?	Yes	Repair or replace the wiring harness between connector C-32 and connector C-01 because the wiring harness is shorted to ground.
		No	Go to Step 31.
30	**INSPECT FOR SHORT TO GROUND BETWEEN CONNECTORS C-32 AND FRONT BODY CONTROL MODULE (FBCM)** • Disconnect connector C-32. • Connect connector 2 which has front body control module (FBCM) terminals 2P and 2N. • Inspect for continuity at the following terminals: — Between DLC-2 terminal F and body ground — Between DLC-2 terminal E and body ground • Is there continuity?	Yes	Repair or replace the wiring harness between connector C-32 and the front body control module (FBCM) because the wiring harness is shorted to ground.
		No	Go to the next step.
31	**INSPECT FOR SHORT TO GROUND BETWEEN DSC HU/CM AND CONNECTOR C-32** • Inspect for continuity at the following terminals: — Between DSC HU/CM terminal AF and body ground — Between DSC HU/CM terminal AC and body ground • Is there continuity?	Yes	Go to the next step.
		No	Go to Step 33.

ON-BOARD DIAGNOSTIC [SKYACTIV-D 2.2 (R.H.D.)]

Step	Inspection		Action
32	**INSPECT CAN LINE IN DSC HU/CM FOR SHORT TO GROUND** • Disconnect the DSC HU/CM connector. • Inspect for continuity at the following terminals: — Between DSC HU/CM terminal AF (wiring harness side) and body ground — Between DSC HU/CM terminal AC (wiring harness side) and body ground • Is there continuity?	Yes	Repair or replace the wiring harness between the DSC HU/CM and connector C-32 because the wiring harness is shorted to ground.
		No	Replace the DSC HU/CM because there is a short to ground in the DSC HU/CM. (See 04-15-4 DSC HU/CM REMOVAL/INSTALLATION.)
33	**INSPECT CAN LINE IN PCM FOR SHORT TO GROUND** • Disconnect the PCM connector. • Inspect for continuity at the following terminals: — Between PCM terminal 2AK (wiring harness side) and body ground — Between PCM terminal 2AL (wiring harness side) and body ground • Is there continuity?	Yes	Repair or replace the wiring harness between the PCM and connector C-32 because the wiring harness is shorted to ground .
		No	Replace the PCM because there is a short to ground in the PCM.

DETERMINING SHORT TO POWER SUPPLY LOCATION (HS-CAN) [SKYACTIV-D 2.2 (R.H.D.)]

id100206000700

Caution

- **Perform the following malfunction diagnosis only when it is diagnosed with a short to the power supply by 10-02D-3 CONTROLLER AREA NETWORK (CAN) MALFUNCTION DIAGNOSIS FLOW [SKYACTIV-D 2.2 (R.H.D.)].**

10

ON-BOARD DIAGNOSTIC [SKYACTIV-D 2.2 (R.H.D.)]

System wiring diagram

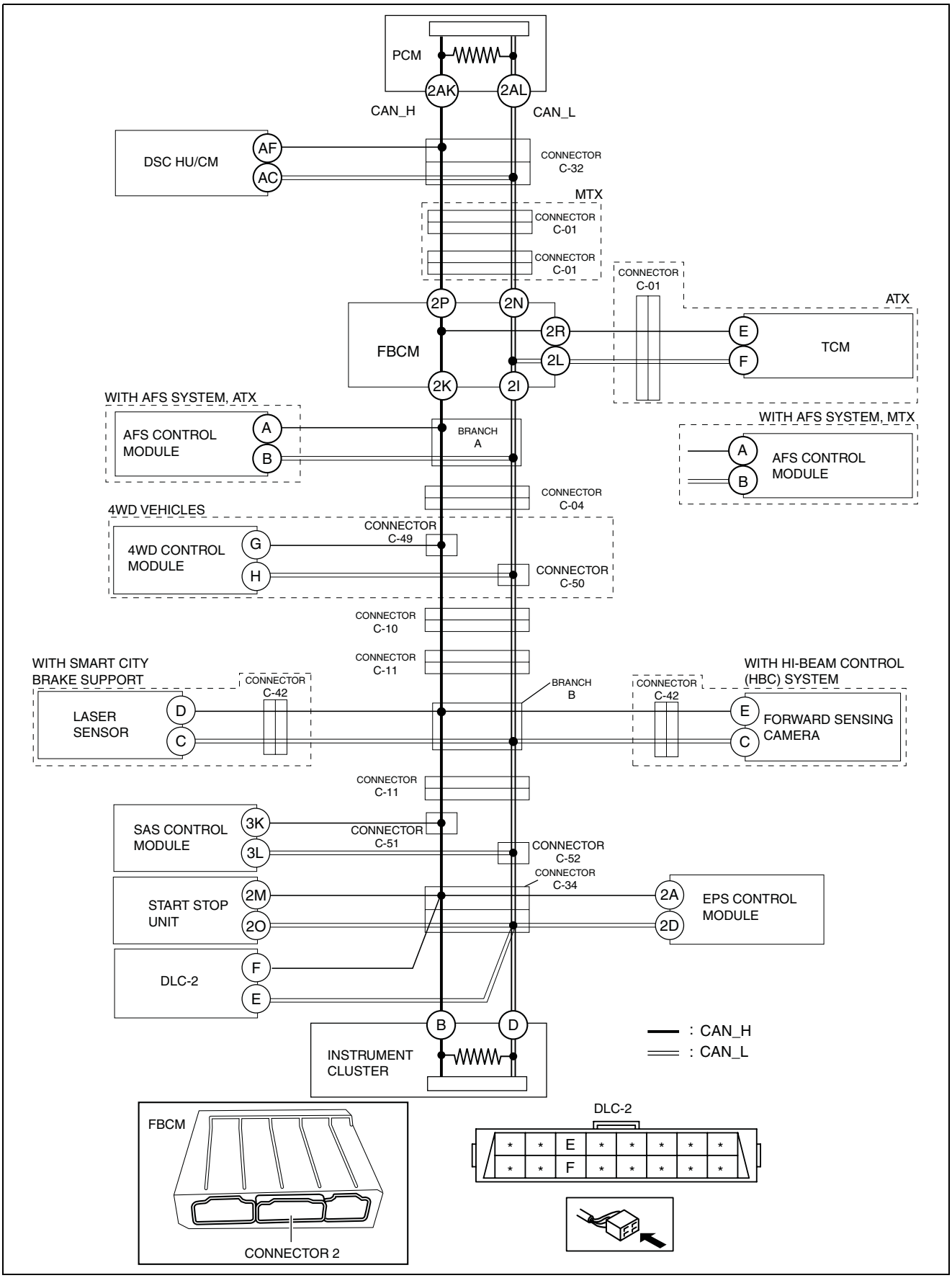

ac5wzw0000068

ON-BOARD DIAGNOSTIC [SKYACTIV-D 2.2 (R.H.D.)]

Determination procedure

Caution
- **When disconnecting the connector, verify that there is no looseness, damage, deformation, corrosion, or poor connection of the connector terminals.**
- **When inspecting the DLC-2, touch it with a paper clip or similar thin pin without directly inserting a tester into the terminals.**
- **Disconnect the negative battery cable before performing any work that requires handling of connectors.**

Step	Inspection		Action
1	**INSPECT FOR SHORT TO POWER SUPPLY BETWEEN FRONT BODY CONTROL MODULE (FBCM) AND INSTRUMENT CLUSTER** • Disconnect the negative battery cable. (See 01-17B-9 NEGATIVE BATTERY CABLE DISCONNECTION/CONNECTION [SKYACTIV-D 2.2].) • Disconnect connector 2 which has front body control module (FBCM) terminals 2K and 2I • Connect the negative battery cable. (See 01-17B-9 NEGATIVE BATTERY CABLE DISCONNECTION/CONNECTION [SKYACTIV-D 2.2].) • Switch the ignition ON (engine off). • Measure the voltage at DLC-2 terminals F and E. • Is the voltage between 1.5 — 3.5 V?	Yes	Go to the next step.
		No	Go to Step 5.
2	**INSPECT CAN LINE BETWEEN TCM OR AFS CONTROL MODULE AND FRONT BODY CONTROL MODULE (FBCM) FOR SHORT TO POWER SUPPLY** • Measure the voltage at TCM terminals E and F. (ATX) • Measure the voltage at AFS control module terminals A and B. (MTX) • Is the voltage between 1.5 - 3.5 V?	Yes	Go to Step 27.
		No	• Go to the next step. (ATX) • Go to Step 4. (MTX)
3	**INSPECT CAN LINE BETWEEN TCM AND CONNECTOR C-01 FOR SHORT TO POWER SUPPLY** • Switch the ignition off (LOCK). • Disconnect the negative battery cable. (See 01-17B-9 NEGATIVE BATTERY CABLE DISCONNECTION/CONNECTION [SKYACTIV-D 2.2].) • Disconnect connector C-01. • Connect the negative battery cable. (See 01-17B-9 NEGATIVE BATTERY CABLE DISCONNECTION/CONNECTION [SKYACTIV-D 2.2].) • Switch the ignition ON (engine off). • Measure the voltage at TCM terminals E and F. • Is the voltage between 1.5 - 3.5 V?	Yes	Repair or replace the wiring harness between connector C-01 and the front body control module (FBCM) because the wiring harness is shorted to the power supply.
		No	Go to the next step.

ON-BOARD DIAGNOSTIC [SKYACTIV-D 2.2 (R.H.D.)]

Step	Inspection		Action
4	**INSPECT TCM OR AFS CONTROL MODULE FOR SHORT TO POWER SUPPLY** • Switch the ignition off (LOCK). • Disconnect the negative battery cable. (See 01-17B-9 NEGATIVE BATTERY CABLE DISCONNECTION/CONNECTION [SKYACTIV-D 2.2].) • Disconnect the TCM connector. (ATX) • Connect connector C-01. (ATX) • Disconnect the AFS control module connector. (MTX) • Connect connector 2 which has front body control module (FBCM) terminals 2K and 2I • Connect the negative battery cable. (See 01-17B-9 NEGATIVE BATTERY CABLE DISCONNECTION/CONNECTION [SKYACTIV-D 2.2].) • Switch the ignition ON (engine off). • Measure the voltage at DLC-2 terminals F and E. • Is the voltage between 1.5 - 3.5 V?	Yes	• Replace the TCM because there is a short to the power supply in the TCM. (ATX) (See 05-17A-67 CONTROL VALVE BODY REMOVAL/INSTALLATION [FW6A-EL, FW6AX-EL].) (See 05-17B-81 CONTROL VALVE BODY REMOVAL/INSTALLATION [GW6A-EL, GW6AX-EL].) • Replace the AFS control module because there is a short to the power supply in the AFS control module. (MTX) (See 09-18-30 ADAPTIVE FRONT LIGHTING SYSTEM (AFS) CONTROL MODULE REMOVAL/INSTALLATION.)
		No	• Repair or replace the wiring harness between TCM and connector C-01 because the wiring harness is shorted to the power supply. (ATX) • Repair or replace the wiring harness between AFS control module and the front body control module (FBCM) because the wiring harness is shorted to the power supply. (MTX)
5	**INSPECT CAN LINE BETWEEN CONNECTOR C-04 AND INSTRUMENT CLUSTER FOR SHORT TO POWER SUPPLY** • Switch the ignition off (LOCK). • Disconnect the negative battery cable. (See 01-17B-9 NEGATIVE BATTERY CABLE DISCONNECTION/CONNECTION [SKYACTIV-D 2.2].) • Disconnect connector C-04. • Connect the negative battery cable. (See 01-17B-9 NEGATIVE BATTERY CABLE DISCONNECTION/CONNECTION [SKYACTIV-D 2.2].) • Switch the ignition ON (engine off). • Measure the voltage at DLC-2 terminals F and E. • Is the voltage between 1.5 - 3.5 V?	Yes	• Go to the next step. (ATX) • Repair or replace the wiring harness between the front body control module (FBCM) and connector C-04 because the wiring harness is shorted to the power supply. (MTX)
		No	Go to Step 7.
6	**INSPECT AFS CONTROL MODULE FOR SHORT TO POWER SUPPLY** • Switch the ignition off (LOCK). • Disconnect the negative battery cable. (See 01-17B-9 NEGATIVE BATTERY CABLE DISCONNECTION/CONNECTION [SKYACTIV-D 2.2].) • Disconnect the AFS control module connector. • Connect connector 2 which has front body control module (FBCM) terminals 2K and 2I • Connect the negative battery cable. (See 01-17B-9 NEGATIVE BATTERY CABLE DISCONNECTION/CONNECTION [SKYACTIV-D 2.2].) • Switch the ignition ON (engine off). • Measure the voltage at DLC-2 terminals F and E. • Is the voltage between 1.5 - 3.5 V?	Yes	Replace the AFS control module because there is a short to the power supply in the AFS control module. (See 09-18-30 ADAPTIVE FRONT LIGHTING SYSTEM (AFS) CONTROL MODULE REMOVAL/INSTALLATION.)
		No	Repair or replace the wiring harness between AFS control module and the front body control module (FBCM) / connector C-04 because the wiring harness is shorted to the power supply.

ON-BOARD DIAGNOSTIC [SKYACTIV-D 2.2 (R.H.D.)]

Step	Inspection		Action
7	**INSPECT CAN LINE BETWEEN CONNECTORS C-49 AND C-50 AND INSTRUMENT CLUSTER FOR SHORT TO POWER SUPPLY** • Switch the ignition off (LOCK). • Disconnect the negative battery cable. (See 01-17B-9 NEGATIVE BATTERY CABLE DISCONNECTION/CONNECTION [SKYACTIV-D 2.2].) • Disconnect connectors C-49 and C-50. • Connect the negative battery cable. (See 01-17B-9 NEGATIVE BATTERY CABLE DISCONNECTION/CONNECTION [SKYACTIV-D 2.2].) • Switch the ignition ON (engine off). • Measure the voltage at DLC-2 terminals F and E. • Is the voltage between 1.5 — 3.5 V?	Yes	Go to the next step.
		No	Go to Step 10.
8	**INSPECT CAN LINE BETWEEN 4WD CONTROL MODULE AND CONNECTORS C-49 AND C-50 FOR SHORT TO POWER SUPPLY** • Measure the voltage at 4WD control module terminals G and H. • Is the voltage between 1.5 — 3.5 V?	Yes	Repair or replace the wiring harness between connector C-04 and connectors C-49 and C-50 because the wiring harness is shorted to the power supply.
		No	Go to the next step.
9	**INSPECT 4WD CONTROL MODULE FOR SHORT TO POWER SUPPLY** • Switch the ignition off (LOCK). • Disconnect the negative battery cable. (See 01-17B-9 NEGATIVE BATTERY CABLE DISCONNECTION/CONNECTION [SKYACTIV-D 2.2].) • Connect connectors C-49 and C-50 • Disconnect the 4WD control module connector. • Connect the negative battery cable. (See 01-17B-9 NEGATIVE BATTERY CABLE DISCONNECTION/CONNECTION [SKYACTIV-D 2.2].) • Switch the ignition ON (engine off). • Measure the voltage at DLC-2 terminals F and E. • Is the voltage between 1.5 — 3.5 V?	Yes	Replace the 4WD control module because there is a short to the power supply in the 4WD control module. (See 03-18-4 4WD CONTROL MODULE REMOVAL/INSTALLATION.)
		No	Repair or replace the wiring harness between the 4WD control module and connectors C-49 and C-50 because the wiring harness is shorted to the power supply.
10	**INSPECT CAN LINE BETWEEN CONNECTOR C-10 AND INSTRUMENT CLUSTER FOR SHORT TO POWER SUPPLY** • Switch the ignition off (LOCK). • Disconnect the negative battery cable. (See 01-17B-9 NEGATIVE BATTERY CABLE DISCONNECTION/CONNECTION [SKYACTIV-D 2.2].) • Disconnect connector C-10. • Connect the negative battery cable. (See 01-17B-9 NEGATIVE BATTERY CABLE DISCONNECTION/CONNECTION [SKYACTIV-D 2.2].) • Switch the ignition ON (engine off). • Measure the voltage at DLC-2 terminals F and E. • Is the voltage between 1.5 — 3.5 V?	Yes	Repair or replace the wiring harness between connectors C-49 and C-50 and connector C-10 because the wiring harness is shorted to the power supply.
		No	Go to the next step.

ON-BOARD DIAGNOSTIC [SKYACTIV-D 2.2 (R.H.D.)]

Step	Inspection		Action
11	**INSPECT CAN LINE BETWEEN CONNECTOR C-11 AND INSTRUMENT CLUSTER FOR SHORT TO POWER SUPPLY** • Switch the ignition off (LOCK). • Disconnect the negative battery cable. (See 01-17B-9 NEGATIVE BATTERY CABLE DISCONNECTION/CONNECTION [SKYACTIV-D 2.2].) • Disconnect connector C-11. • Connect the negative battery cable. (See 01-17B-9 NEGATIVE BATTERY CABLE DISCONNECTION/CONNECTION [SKYACTIV-D 2.2].) • Switch the ignition ON (engine off). • Measure the voltage at DLC-2 terminals F and E. • Is the voltage between 1.5 — 3.5 V?	Yes	Go to the next step.
		No	Go to Step 17.
12	**INSPECT CAN LINE BETWEEN CONNECTOR C-11 AND FORWARD SENSING CAMERA/ LASER SENSOR FOR SHORT TO POWER SUPPLY** • Measure the voltage at forward sensing camera terminals E and C. (with high beam control (HBC) system) • Measure the voltage at laser sensor terminals D and C. (with smart city brake support) • Is the voltage between 1.5 — 3.5 V?	Yes	Repair or replace the wiring harness between connector C-10 and connector C-11 because the wiring harness is shorted to the power supply.
		No	Go to the next step.
13	**INSPECT CAN LINE BETWEEN LASER SENSOR AND CONNECTOR C-42 FOR SHORT TO POWER SUPPLY** • Switch the ignition off (LOCK). • Disconnect the negative battery cable. (See 01-17B-9 NEGATIVE BATTERY CABLE DISCONNECTION/CONNECTION [SKYACTIV-D 2.2].) • Disconnect connector C-42. • Connect the negative battery cable. (See 01-17B-9 NEGATIVE BATTERY CABLE DISCONNECTION/CONNECTION [SKYACTIV-D 2.2].) • Switch the ignition ON (engine off). • Measure the voltage at laser sensor terminals D and C. • Is the voltage between 1.5 — 3.5 V?	Yes	Go to Step 15.
		No	Go to the next step.
14	**INSPECT LASER SENSOR FOR SHORT TO POWER SUPPLY** • Switch the ignition off (LOCK). • Disconnect the negative battery cable. (See 01-17B-9 NEGATIVE BATTERY CABLE DISCONNECTION/CONNECTION [SKYACTIV-D 2.2].) • Disconnect the laser sensor connector. • Connect connector C-42. • Connect connector C-11. • Connect the negative battery cable. (See 01-17B-9 NEGATIVE BATTERY CABLE DISCONNECTION/CONNECTION [SKYACTIV-D 2.2].) • Switch the ignition ON (engine off). • Measure the voltage at DLC-2 terminals F and E. • Is the voltage between 1.5 — 3.5 V?	Yes	Replace the laser sensor because there is a short to the power supply in the laser sensor. (See 04-15-17 LASER SENSOR REMOVAL/ INSTALLATION.)
		No	Repair or replace the wiring harness between the laser sensor and connector C-42 because the wiring harness is shorted to the power supply.

ON-BOARD DIAGNOSTIC [SKYACTIV-D 2.2 (R.H.D.)]

Step	Inspection		Action
15	**INSPECT CAN LINE BETWEEN FORWARD SENSING CAMERA AND CONNECTOR C-42 FOR SHORT TO POWER SUPPLY** • Measure the voltage at forward sensing camera terminals E and C. • Is the voltage between 1.5 — 3.5 V?	Yes	Repair or replace the wiring harness between connector C-11 and connector C-42 because the wiring harness is shorted to the power supply.
		No	Go to the next step.
16	**INSPECT FORWARD SENSING CAMERA FOR SHORT TO POWER SUPPLY** • Switch the ignition off (LOCK). • Disconnect the negative battery cable. (See 01-17B-9 NEGATIVE BATTERY CABLE DISCONNECTION/CONNECTION [SKYACTIV-D 2.2].) • Disconnect the forward sensing camera connector. • Connect connector C-42. • Connect connector C-11. • Connect the negative battery cable. (See 01-17B-9 NEGATIVE BATTERY CABLE DISCONNECTION/CONNECTION [SKYACTIV-D 2.2].) • Switch the ignition ON (engine off). • Measure the voltage at DLC-2 terminals F and E. • Is the voltage between 1.5 — 3.5 V?	Yes	Replace the forward sensing camera because there is a short to the power supply in the forward sensing camera. (See 09-18-94 FORWARD SENSING CAMERA (FSC) REMOVAL/INSTALLATION.)
		No	Repair or replace the wiring harness between the forward sensing camera and connector C-42 because the wiring harness is shorted to the power supply.
17	**INSPECT CAN LINE BETWEEN CONNECTOR C-51, C-52 AND INSTRUMENT CLUSTER FOR SHORT TO POWER SUPPLY** • Switch the ignition off (LOCK). • Disconnect the negative battery cable. (See 01-17B-9 NEGATIVE BATTERY CABLE DISCONNECTION/CONNECTION [SKYACTIV-D 2.2].) • Disconnect connector C-51, C-52. • Connect the negative battery cable. (See 01-17B-9 NEGATIVE BATTERY CABLE DISCONNECTION/CONNECTION [SKYACTIV-D 2.2].) • Switch the ignition ON (engine off). • Measure the voltage at DLC-2 terminals F and E. • Is the voltage between 1.5 — 3.5 V?	Yes	Go to Step 25.
		No	Go to the next step.
18	**INSPECT CAN LINE BETWEEN CONNECTOR C-34 AND DLC-2 FOR SHORT TO POWER SUPPLY** • Switch the ignition off (LOCK). • Disconnect the negative battery cable. (See 01-17B-9 NEGATIVE BATTERY CABLE DISCONNECTION/CONNECTION [SKYACTIV-D 2.2].) • Disconnect connector C-34. • Connect the negative battery cable. (See 01-17B-9 NEGATIVE BATTERY CABLE DISCONNECTION/CONNECTION [SKYACTIV-D 2.2].) • Switch the ignition ON (engine off). • Measure the voltage at DLC-2 terminals F and E. • Is the voltage 0 V?	Yes	Go to the next step.
		No	Repair or replace the wiring harness between connector C-34 and DLC-2 because the wiring harness is shorted to the power supply.
19	**INSPECT CAN LINE BETWEEN START STOP UNIT AND CONNECTOR C-34 FOR SHORT TO POWER SUPPLY** • Measure the voltage at start stop unit terminals 2M and 2O. • Is the voltage between 1.5 — 3.5 V?	Yes	Go to Step 21.
		No	Go to the next step.

ON-BOARD DIAGNOSTIC [SKYACTIV-D 2.2 (R.H.D.)]

Step	Inspection		Action
20	**INSPECT START STOP UNIT FOR SHORT TO POWER SUPPLY** • Switch the ignition off (LOCK). • Disconnect the negative battery cable. (See 01-17B-9 NEGATIVE BATTERY CABLE DISCONNECTION/CONNECTION [SKYACTIV-D 2.2].) • Connect connector C-34. • Disconnect the start stop unit connector. • Connect the negative battery cable. (See 01-17B-9 NEGATIVE BATTERY CABLE DISCONNECTION/CONNECTION [SKYACTIV-D 2.2].) • Switch the ignition ON (engine off). • Measure the voltage at DLC-2 terminals F and E. • Is the voltage between 1.5 — 3.5 V?	Yes	Replace the start stop unit because there is a short to the power supply in the start stop unit. (See 09-14-54 START STOP UNIT REMOVAL/ INSTALLATION.)
		No	Repair or replace the wiring harness between the start stop unit and connector C-34 because the wiring harness is shorted to the power supply.
21	**INSPECT CAN LINE BETWEEN EPS CONTROL MODULE AND CONNECTOR C-34 FOR SHORT TO POWER SUPPLY** • Measure the voltage at EPS control module terminals 2A and 2D. • Is the voltage between 1.5 — 3.5 V?	Yes	Go to Step 23.
		No	Go to the next step.
22	**INSPECT EPS CONTROL MODULE FOR SHORT TO POWER SUPPLY** • Switch the ignition off (LOCK). • Disconnect the negative battery cable. (See 01-17B-9 NEGATIVE BATTERY CABLE DISCONNECTION/CONNECTION [SKYACTIV-D 2.2].) • Connect connector C-34. • Disconnect the EPS control module connector. • Connect the negative battery cable. (See 01-17B-9 NEGATIVE BATTERY CABLE DISCONNECTION/CONNECTION [SKYACTIV-D 2.2].) • Switch the ignition ON (engine off). • Measure the voltage at DLC-2 terminals F and E. • Is the voltage between 1.5 — 3.5 V?	Yes	Replace the EPS control module because there is a short to the power supply in the EPS control module. (See 06-13-4 STEERING WHEEL AND COLUMN REMOVAL/INSTALLATION.)
		No	Repair or replace the wiring harness between the EPS control module and connector C-34 because the wiring harness is shorted to the power supply.
23	**INSPECT CAN LINE BETWEEN INSTRUMENT CLUSTER AND CONNECTOR C-34 FOR SHORT TO POWER SUPPLY** • Measure the voltage at instrument cluster terminals B and D. • Is the voltage between 1.5 — 3.5 V?	Yes	Repair or replace the wiring harness between connector C-51, C-52 and connector C-34 because the wiring harness is shorted to the power supply.
		No	Go to the next step.
24	**INSPECT INSTRUMENT CLUSTER FOR SHORT TO POWER SUPPLY** • Switch the ignition off (LOCK). • Disconnect the negative battery cable. (See 01-17B-9 NEGATIVE BATTERY CABLE DISCONNECTION/CONNECTION [SKYACTIV-D 2.2].) • Connect connector C-34. • Disconnect the instrument cluster connector. • Connect the negative battery cable. (See 01-17B-9 NEGATIVE BATTERY CABLE DISCONNECTION/CONNECTION [SKYACTIV-D 2.2].) • Switch the ignition ON (engine off). • Measure the voltage at DLC-2 terminals F and E. • Is the voltage between 1.5 — 3.5 V?	Yes	Replace the instrument cluster because the instrument cluster is shorted to the power supply. (See 09-22-6 INSTRUMENT CLUSTER REMOVAL/ INSTALLATION.)
		No	Repair or replace the wiring harness between the instrument cluster and connector C-34 because the wiring harness is shorted to the power supply.

ON-BOARD DIAGNOSTIC [SKYACTIV-D 2.2 (R.H.D.)]

Step	Inspection		Action
25	**INSPECT CAN LINE BETWEEN SAS CONTROL MODULE AND CONNECTOR C-51, C-52 FOR SHORT TO POWER SUPPLY** • Switch the ignition off (LOCK). • Disconnect the negative battery cable. (See 01-17B-9 NEGATIVE BATTERY CABLE DISCONNECTION/CONNECTION [SKYACTIV-D 2.2].) • Disconnect the SAS control module connector. • Connect the negative battery cable. (See 01-17B-9 NEGATIVE BATTERY CABLE DISCONNECTION/CONNECTION [SKYACTIV-D 2.2].) • Switch the ignition ON (engine off). • Measure the voltage at SAS control module terminals 3K and 3L (wiring harness side). • Is the voltage 0 V?	Yes	Go to the next step.
		No	Repair or replace the wiring harness between the SAS control module and connector C-51, C-52 because the wiring harness is shorted to the power supply.
26	**INSPECT CAN LINE BETWEEN CONNECTOR C-11 AND CONNECTOR C-51, C-52 FOR SHORT TO POWER SUPPLY** • Switch the ignition off (LOCK). • Disconnect the negative battery cable. (See 01-17B-9 NEGATIVE BATTERY CABLE DISCONNECTION/CONNECTION [SKYACTIV-D 2.2].) • Connect connector C-51, C-52. • Connect the negative battery cable. (See 01-17B-9 NEGATIVE BATTERY CABLE DISCONNECTION/CONNECTION [SKYACTIV-D 2.2].) • Switch the ignition ON (engine off). • Measure the voltage at DLC-2 terminals F and E. • Is the voltage between 1.5 — 3.5 V?	Yes	Replace the SAS control module because there is a short to the power supply in the SAS control module. (See 08-10-20 SAS CONTROL MODULE REMOVAL/INSTALLATION.)
		No	Repair or replace the wiring harness between connector C-11 and connector C-51, C-52 because the wiring harness is shorted to the power supply.
27	**INSPECT CAN LINE BETWEEN PCM AND FRONT BODY CONTROL MODULE (FBCM) FOR SHORT TO POWER SUPPLY** • Measure voltage at PCM terminals 2AK and 2AL. • Is the voltage between 1.5 — 3.5 V?	Yes	Replace the front body control module (FBCM) because there is a short to the power supply in the front body control module (FBCM). (See 09-40-2 FRONT BODY CONTROL MODULE (FBCM) REMOVAL/INSTALLATION.)
		No	• Go to Step 30. (ATX) • Go to the next step. (MTX)
28	**INSPECT CAN LINE BETWEEN CONNECTOR C-01 AND FRONT BODY CONTROL MODULE (FBCM) FOR SHORT TO POWER SUPPLY** • Switch the ignition off (LOCK). • Disconnect the negative battery cable. (See 01-17B-9 NEGATIVE BATTERY CABLE DISCONNECTION/CONNECTION [SKYACTIV-D 2.2].) • Disconnect connector C-01. • Connect connector 2 which has front body control module (FBCM) terminals 2K and 2I. • Connect the negative battery cable. (See 01-17B-9 NEGATIVE BATTERY CABLE DISCONNECTION/CONNECTION [SKYACTIV-D 2.2].) • Switch the ignition ON (engine off). • Measure the voltage at DLC-2 terminals F and E. • Is the voltage between 1.5 — 3.5 V?	Yes	Go to the next step.
		No	Repair or replace the wiring harness between connector C-01 and the front body control module (FBCM) because the wiring harness is shorted to the power supply.

ON-BOARD DIAGNOSTIC [SKYACTIV-D 2.2 (R.H.D.)]

Step	Inspection		Action
29	**INSPECT CAN LINE BETWEEN CONNECTOR C-01 AND CONNECTOR C-32 FOR SHORT TO POWER SUPPLY** • Switch the ignition off (LOCK). • Disconnect the negative battery cable. (See 01-17B-9 NEGATIVE BATTERY CABLE DISCONNECTION/CONNECTION [SKYACTIV-D 2.2].) • Disconnect connector C-32. • Connect connector C-01. • Connect the negative battery cable. (See 01-17B-9 NEGATIVE BATTERY CABLE DISCONNECTION/CONNECTION [SKYACTIV-D 2.2].) • Switch the ignition ON (engine off). • Measure the voltage at DLC-2 terminals F and E. • Is the voltage between 1.5 — 3.5 V?	Yes	Go to Step 31.
		No	Repair or replace the wiring harness between connector C-01 and connector C-32 because the wiring harness is shorted to the power supply.
30	**INSPECT CAN LINE BETWEEN CONNECTOR C-32 AND FRONT BODY CONTROL MODULE (FBCM) FOR SHORT TO POWER SUPPLY** • Switch the ignition off (LOCK). • Disconnect the negative battery cable. (See 01-17B-9 NEGATIVE BATTERY CABLE DISCONNECTION/CONNECTION [SKYACTIV-D 2.2].) • Connect connector 2 which has front body control module (FBCM) terminals 2K and 2I. • Disconnect connector C-32. • Connect the negative battery cable. (See 01-17B-9 NEGATIVE BATTERY CABLE DISCONNECTION/CONNECTION [SKYACTIV-D 2.2].) • Switch the ignition ON (engine off). • Measure the voltage at DLC-2 terminals F and E. • Is the voltage between 1.5 — 3.5 V?	Yes	Go to the next step.
		No	Repair or replace the wiring harness between connector C-32 and front body control module (FBCM) because the wiring harness is shorted to the power supply.
31	**INSPECT CAN LINE BETWEEN DSC HU/CM AND CONNECTOR C-32 FOR SHORT TO POWER SUPPLY** • Measure voltage at DSC HU/CM terminals AF and AC. • Is the voltage between 1.5 — 3.5 V?	Yes	Go to Step 33.
		No	Go to the next step.
32	**INSPECT DSC HU/CM FOR SHORT TO POWER SUPPLY** • Switch the ignition off (LOCK). • Disconnect the negative battery cable. (See 01-17B-9 NEGATIVE BATTERY CABLE DISCONNECTION/CONNECTION [SKYACTIV-D 2.2].) • Connect connector C-32. • Disconnect the DSC HU/CM connector. • Connect the negative battery cable. (See 01-17B-9 NEGATIVE BATTERY CABLE DISCONNECTION/CONNECTION [SKYACTIV-D 2.2].) • Switch the ignition ON (engine off). • Measure the voltage at DLC-2 terminals F and E. • Is the voltage between 1.5 — 3.5 V?	Yes	Replace the DSC HU/CM because the DSC HU/CM is shorted to the power supply. (See 04-15-4 DSC HU/CM REMOVAL/INSTALLATION.)
		No	Repair or replace the wiring harness between the DSC HU/CM and connector C-32 because the wiring harness is shorted to the power supply.

ON-BOARD DIAGNOSTIC [SKYACTIV-D 2.2 (R.H.D.)]

Step	Inspection		Action
33	**INSPECT PCM FOR SHORT TO POWER SUPPLY** • Switch the ignition off (LOCK). • Disconnect the negative battery cable. (See 01-17B-9 NEGATIVE BATTERY CABLE DISCONNECTION/CONNECTION [SKYACTIV-D 2.2].) • Connect connector C-32. • Disconnect the PCM connector. • Connect the negative battery cable. (See 01-17B-9 NEGATIVE BATTERY CABLE DISCONNECTION/CONNECTION [SKYACTIV-D 2.2].) • Switch the ignition ON (engine off). • Measure the voltage at DLC-2 terminals F and E. • Is the voltage between 1.5 — 3.5 V?	Yes	Replace the PCM because there is a short to the power supply in the PCM.
		No	Repair or replace the wiring harness between the PCM and connector C-32 because the wiring harness is shorted to the power supply.

DETERMINING SHORT BETWEEN CIRCUITS LOCATION (HS-CAN) [SKYACTIV-D 2.2 (R.H.D.)]

id100206000800

Caution

- **Perform the following malfunction diagnosis only when it is diagnosed with a short between circuits by 10-02D-3 CONTROLLER AREA NETWORK (CAN) MALFUNCTION DIAGNOSIS FLOW [SKYACTIV-D 2.2 (R.H.D.)].**

ON-BOARD DIAGNOSTIC [SKYACTIV-D 2.2 (R.H.D.)]

System wiring diagram

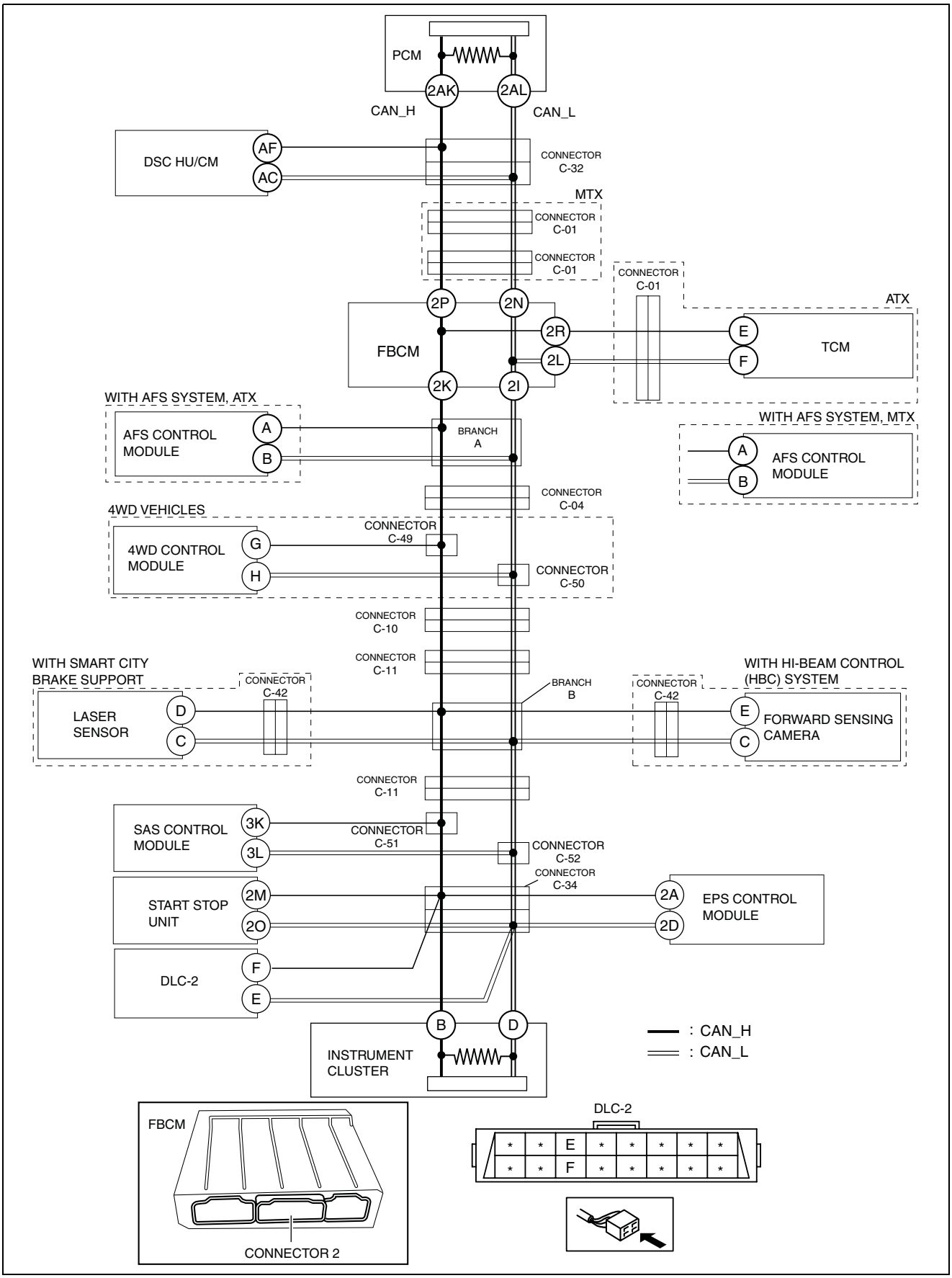

ac5wzw0000068

ON-BOARD DIAGNOSTIC [SKYACTIV-D 2.2 (R.H.D.)]

Determination procedure

Caution
- **When disconnecting the connector, verify that there is no looseness, damage, deformation, corrosion, or poor connection of the connector terminals.**
- **When inspecting the DLC-2, touch it with a paper clip or similar thin pin without directly inserting a tester into the terminals.**

Step	Inspection		Action
1	**INSPECT BETWEEN FRONT BODY CONTROL MODULE (FBCM) AND INSTRUMENT CLUSTER FOR SHORT BETWEEN CIRCUITS** • Disconnect the negative battery cable. (See 01-17B-9 NEGATIVE BATTERY CABLE DISCONNECTION/CONNECTION [SKYACTIV-D 2.2].) • Disconnect connector 2 which has front body control module (FBCM) terminals 2K and 2I • Connect the negative battery cable. (See 01-17B-9 NEGATIVE BATTERY CABLE DISCONNECTION/CONNECTION [SKYACTIV-D 2.2].) • Switch the ignition ON (engine off). • Measure the voltage at DLC-2 terminals F and E. • Is the voltage at DLC-2 terminals F and E the same?	Yes	Go to Step 6.
		No	Go to the next step.
2	**INSPECT FRONT BODY CONTROL MODULE (FBCM) FOR SHORT BETWEEN CIRCUITS** • Switch the ignition off (LOCK). • Disconnect the negative battery cable. (See 01-17B-9 NEGATIVE BATTERY CABLE DISCONNECTION/CONNECTION [SKYACTIV-D 2.2].) • Inspect for continuity between front body control module (FBCM) terminals 2K and 2I. • Is there continuity?	Yes	Replace the front body control module (FBCM) because there is a short between circuits in the front body control module (FBCM). (See 09-40-2 FRONT BODY CONTROL MODULE (FBCM) REMOVAL/INSTALLATION.)
		No	Go to the next step.
3	**INSPECT BETWEEN TCM OR AFS CONTROL MODULE AND FRONT BODY CONTROL MODULE (FBCM) FOR SHORT BETWEEN CIRCUITS** • Inspect for continuity between TCM terminals E and F. (ATX) • Inspect for continuity between AFS control module terminals A and B. (MTX) • Is there continuity?	Yes	• Go to the next step. (ATX) • Go to Step 5. (MTX)
		No	• Go to Step 30. (ATX) • Go to Step 28. (MTX)
4	**INSPECT BETWEEN TCM AND CONNECTOR C-01 FOR SHORT BETWEEN CIRCUITS** • Disconnect connector C-01. • Inspect for continuity between TCM terminals E and F. • Is there continuity?	Yes	Go to the next step.
		No	Repair or replace the wiring harness between the front body control module (FBCM) and connector C-01 because the wiring harness is shorted between circuits.

10

ON-BOARD DIAGNOSTIC [SKYACTIV-D 2.2 (R.H.D.)]

Step	Inspection		Action
5	**INSPECT TCM OR AFS CONTROL MODULE FOR SHORT BETWEEN CIRCUITS** • Disconnect the TCM connector. (ATX) • Disconnect the AFS control module connector. (MTX) • Inspect for continuity between TCM terminals E and F (wiring harness side) (ATX). • Inspect for continuity between AFS control module terminals A and B (wiring harness side). (MTX) • Is there continuity?	Yes	• Repair or replace the wiring harness between the TCM and connector C-01 because the wiring harness is shorted between circuits. (ATX) • Repair or replace the wiring harness between the AFS control module and front body control module (FBCM) because the wiring harness is shorted between circuits. (MTX)
		No	• Replace the TCM because there is a short between circuits in the TCM. (ATX) (See 05-17A-67 CONTROL VALVE BODY REMOVAL/INSTALLATION [FW6A-EL, FW6AX-EL].) (See 05-17B-81 CONTROL VALVE BODY REMOVAL/INSTALLATION [GW6A-EL, GW6AX-EL].) • Replace the AFS control module because there is a short between circuits in the AFS control module. (See 09-18-30 ADAPTIVE FRONT LIGHTING SYSTEM (AFS) CONTROL MODULE REMOVAL/INSTALLATION.)
6	**INSPECT BETWEEN CONNECTOR C-04 AND INSTRUMENT CLUSTER FOR SHORT BETWEEN CIRCUITS** • Switch the ignition off (LOCK). • Disconnect the negative battery cable. (See 01-17B-9 NEGATIVE BATTERY CABLE DISCONNECTION/CONNECTION [SKYACTIV-D 2.2].) • Disconnect connector C-04. • Connect the negative battery cable. (See 01-17B-9 NEGATIVE BATTERY CABLE DISCONNECTION/CONNECTION [SKYACTIV-D 2.2].) • Switch the ignition ON (engine off). • Measure the voltage at DLC-2 terminals F and E. • Is the voltage at DLC-2 terminals F and E the same?	Yes	Go to Step 8.
		No	• Go to the next step. (ATX) • Repair or replace the wiring harness between the front body control module (FBCM) and connector C-04 because the wiring harness is shorted between circuits. (MTX)
7	**INSPECT AFS CONTROL MODULE FOR SHORT BETWEEN CIRCUITS** • Disconnect the AFS control module connector. • Inspect for continuity between AFS control module terminals A and B (wiring harness side). • Is there continuity?	Yes	Repair or replace the wiring harness between the AFS control module and front body control module (FBCM) / connector C-04 because the wiring harness is shorted between circuits.
		No	Replace the AFS control module because there is a short between circuits in the AFS control module. (See 09-18-30 ADAPTIVE FRONT LIGHTING SYSTEM (AFS) CONTROL MODULE REMOVAL/INSTALLATION.)
8	**INSPECT BETWEEN CONNECTORS C-49 AND C-50 AND INSTRUMENT CLUSTER FOR SHORT BETWEEN CIRCUITS** • Switch the ignition off (LOCK). • Disconnect the negative battery cable. (See 01-17B-9 NEGATIVE BATTERY CABLE DISCONNECTION/CONNECTION [SKYACTIV-D 2.2].) • Disconnect connectors C-49 and C-50. • Connect the negative battery cable. (See 01-17B-9 NEGATIVE BATTERY CABLE DISCONNECTION/CONNECTION [SKYACTIV-D 2.2].) • Switch the ignition ON (engine off). • Measure the voltage at DLC-2 terminals F and E. • Is the voltage at DLC-2 terminals F and E the same?	Yes	Go to Step 9.
		No	Go to the next step.

ON-BOARD DIAGNOSTIC [SKYACTIV-D 2.2 (R.H.D.)]

Step	Inspection		Action
9	**INSPECT BETWEEN 4WD CONTROL MODULE AND CONNECTORS C-49 AND C-50 FOR SHORT BETWEEN CIRCUITS** • Switch the ignition off (LOCK). • Disconnect the negative battery cable. (See 01-17B-9 NEGATIVE BATTERY CABLE DISCONNECTION/CONNECTION [SKYACTIV-D 2.2].) • Inspect for continuity between 4WD control module terminals G and H. • Is there continuity?	Yes	Go to the next step.
		No	Repair or replace the wiring harness between connector C-04 and connectors C-49 and C-50 because the wiring harness is shorted between circuits.
10	**INSPECT 4WD CONTROL MODULE FOR SHORT BETWEEN CIRCUITS** • Disconnect the 4WD control module connector. • Inspect for continuity between 4WD control module terminals G and H (wiring harness side). • Is there continuity?	Yes	Repair or replace the wiring harness between the 4WD control module and connectors C-49 and C-50 because the wiring harness is shorted between circuits.
		No	Replace the 4WD control module because there is a short between circuits in the 4WD control module. (See 03-18-4 4WD CONTROL MODULE REMOVAL/INSTALLATION.)
11	**INSPECT BETWEEN CONNECTOR C-10 AND INSTRUMENT CLUSTER FOR SHORT BETWEEN CIRCUITS** • Switch the ignition off (LOCK). • Disconnect the negative battery cable. (See 01-17B-9 NEGATIVE BATTERY CABLE DISCONNECTION/CONNECTION [SKYACTIV-D 2.2].) • Disconnect connector C-10. • Connect the negative battery cable. (See 01-17B-9 NEGATIVE BATTERY CABLE DISCONNECTION/CONNECTION [SKYACTIV-D 2.2].) • Switch the ignition ON (engine off). • Measure the voltage at DLC-2 terminals F and E. • Is the voltage at DLC-2 terminals F and E the same?	Yes	Go to the next step.
		No	Repair or replace the wiring harness between connectors C-49 and C-50 and connector C-10 because the wiring harness is shorted between circuits.
12	**INSPECT BETWEEN CONNECTOR C-11 AND INSTRUMENT CLUSTER FOR SHORT BETWEEN CIRCUITS** • Switch the ignition off (LOCK). • Disconnect the negative battery cable. (See 01-17B-9 NEGATIVE BATTERY CABLE DISCONNECTION/CONNECTION [SKYACTIV-D 2.2].) • Disconnect connector C-11. • Connect the negative battery cable. (See 01-17B-9 NEGATIVE BATTERY CABLE DISCONNECTION/CONNECTION [SKYACTIV-D 2.2].) • Switch the ignition ON (engine off). • Measure the voltage at DLC-2 terminals F and E. • Is the voltage at DLC-2 terminals F and E the same?	Yes	Go to Step 18.
		No	Go to the next step.

ON-BOARD DIAGNOSTIC [SKYACTIV-D 2.2 (R.H.D.)]

Step	Inspection		Action
13	**INSPECT BETWEEN CONNECTOR C-11 AND FORWARD SENSING CAMERA/LASER SENSOR FOR SHORT BETWEEN CIRCUITS** • Switch the ignition off (LOCK). • Disconnect the negative battery cable. (See 01-17B-9 NEGATIVE BATTERY CABLE DISCONNECTION/CONNECTION [SKYACTIV-D 2.2].) • Inspect for continuity between forward sensing camera terminals E and C. (With high beam control (HBC) system) • Inspect for continuity between laser sensor terminals D and C. (With smart city brake support) • Is there continuity?	Yes	Go to the next step.
		No	Repair or replace the wiring harness between connector C-11 and connector C-10 because the wiring harness is shorted between circuits.
14	**INSPECT BETWEEN LASER SENSOR AND CONNECTOR C-42 FOR SHORT BETWEEN CIRCUITS** • Disconnect connector C-42. • Inspect for continuity between laser sensor terminals D and C. • Is there continuity?	Yes	Go to the next step.
		No	Go to Step 16.
15	**INSPECT LASER SENSOR FOR SHORT BETWEEN CIRCUITS** • Disconnect the laser sensor connector. • Inspect for continuity between laser sensor terminals D and C (wiring harness side). • Is there continuity?	Yes	Repair or replace the wiring harness between the laser sensor and connector C-42 because the wiring harness is shorted between circuits.
		No	Replace the laser sensor because there is a short between circuits in the laser sensor. (See 04-15-17 LASER SENSOR REMOVAL/INSTALLATION.)
16	**INSPECT BETWEEN FORWARD SENSING CAMERA AND CONNECTOR C-42 FOR SHORT BETWEEN CIRCUITS** • Inspect for continuity between forward sensing camera terminals E and C. • Is there continuity?	Yes	Go to the next step.
		No	Repair or replace the wiring harness between connector C-11 and connector C-42 because the wiring harness is shorted between circuits.
17	**INSPECT FORWARD SENSING CAMERA FOR SHORT BETWEEN CIRCUITS** • Disconnect the forward sensing camera connector. • Inspect for continuity between forward sensing camera terminals E and C (wiring harness side). • Is there continuity?	Yes	Repair or replace the wiring harness between the forward sensing camera and connector C-42 because the wiring harness is shorted between circuits.
		No	Replace the forward sensing camera because there is a short between circuits in the forward sensing camera. (See 09-18-94 FORWARD SENSING CAMERA (FSC) REMOVAL/INSTALLATION.)
18	**INSPECT BETWEEN CONNECTOR C-51, C-52 AND INSTRUMENT CLUSTER FOR SHORT BETWEEN CIRCUITS** • Switch the ignition off (LOCK). • Disconnect the negative battery cable. (See 01-17B-9 NEGATIVE BATTERY CABLE DISCONNECTION/CONNECTION [SKYACTIV-D 2.2].) • Disconnect connector C-51, C-52. • Connect the negative battery cable. (See 01-17B-9 NEGATIVE BATTERY CABLE DISCONNECTION/CONNECTION [SKYACTIV-D 2.2].) • Switch the ignition ON (engine off). • Measure the voltage at DLC-2 terminals F and E. • Is the voltage at DLC-2 terminals F and E the same?	Yes	Go to Step 21.
		No	Go to the next step.

ON-BOARD DIAGNOSTIC [SKYACTIV-D 2.2 (R.H.D.)]

Step	Inspection		Action
19	**INSPECT BETWEEN SAS CONTROL MODULE AND CONNECTOR C-51, C-52 FOR SHORT BETWEEN CIRCUITS** • Switch the ignition off (LOCK). • Disconnect the negative battery cable. (See 01-17B-9 NEGATIVE BATTERY CABLE DISCONNECTION/CONNECTION [SKYACTIV-D 2.2].) • Inspect for continuity between SAS control module terminals 3K and 3L. • Is there continuity?	Yes	Go to the next step.
		No	Repair or replace the wiring harness between connector C-11 and connector C-51, C-52 because the wiring harness is shorted between circuits.
20	**INSPECT SAS CONTROL MODULE FOR SHORT BETWEEN CIRCUITS** • Disconnect the SAS control module connector. • Is there continuity between SAS control module terminals 3K and 3L (wiring harness side)? • Is there continuity?	Yes	Repair or replace the wiring harness between the SAS control module and connector C-51, C-52 because the wiring harness is shorted between circuits.
		No	Replace the SAS control module because there is a short between circuits in the SAS control module. (See 08-10-20 SAS CONTROL MODULE REMOVAL/INSTALLATION.)
21	**INSPECT BETWEEN DLC-2 AND CONNECTOR C-34 FOR SHORT BETWEEN CIRCUITS** • Switch the ignition off (LOCK). • Disconnect the negative battery cable. (See 01-17B-9 NEGATIVE BATTERY CABLE DISCONNECTION/CONNECTION [SKYACTIV-D 2.2].) • Disconnect connector C-34. • Inspect for continuity between DLC-2 terminals F and E. • Is there continuity?	Yes	Repair or replace the wiring harness between DLC-2 and connector C-34 because the wiring harness is shorted between circuits.
		No	Go to the next step.
22	**INSPECT BETWEEN START STOP UNIT AND CONNECTOR C-34 FOR SHORT BETWEEN CIRCUITS** • Inspect for continuity between start stop unit terminals 2M and 2O. • Is there continuity?	Yes	Go to the next step.
		No	Go to Step 24.
23	**INSPECT START STOP UNIT FOR SHORT BETWEEN CIRCUITS** • Disconnect the start stop unit connector. • Is there continuity between start stop unit terminals 2M and 2O (wiring harness side)? • Is there continuity?	Yes	Repair or replace the wiring harness between the start stop unit and connector C-34 because the wiring harness is shorted between circuits.
		No	Replace the start stop unit because there is a short between circuits in the start stop unit. (See 09-14-54 START STOP UNIT REMOVAL/INSTALLATION.)
24	**INSPECT BETWEEN EPS CONTROL MODULE AND CONNECTOR C-34 FOR SHORT BETWEEN CIRCUITS** • Inspect for continuity between EPS control module terminals 2A and 2D. • Is there continuity?	Yes	Go to the next step.
		No	Go to Step 26.
25	**INSPECT EPS CONTROL MODULE FOR SHORT BETWEEN CIRCUITS** • Disconnect the EPS control module connector. • Is there continuity between EPS control module terminals 2A and 2D (wiring harness side)? • Is there continuity?	Yes	Repair or replace the wiring harness between the EPS control module and connector C-34 because the wiring harness is shorted between circuits.
		No	Replace the EPS control module because there is a short between circuits in the EPS control module. (See 06-13-4 STEERING WHEEL AND COLUMN REMOVAL/INSTALLATION.)
26	**INSPECT BETWEEN INSTRUMENT CLUSTER AND CONNECTOR C-34 FOR SHORT BETWEEN CIRCUITS** • Inspect for continuity between instrument cluster terminals B and D. • Is there continuity?	Yes	Go to the next step.
		No	Repair or replace the wiring harness between connector C-51, C-52 and connector C-34 because the wiring harness is shorted between circuits.

ON-BOARD DIAGNOSTIC [SKYACTIV-D 2.2 (R.H.D.)]

Step	Inspection		Action
27	**INSPECT INSTRUMENT CLUSTER FOR SHORT BETWEEN CIRCUITS** • Disconnect the instrument cluster connector. • Is there continuity between instrument cluster terminals B and D (wiring harness side)? • Is there continuity?	Yes	Repair or replace the wiring harness between the instrument cluster and connector C-34 because the wiring harness is shorted between circuits.
		No	Replace the instrument cluster because there is a short between circuits in the instrument cluster. (See 09-22-6 INSTRUMENT CLUSTER REMOVAL/ INSTALLATION.)
28	**INSPECT BETWEEN CONNECTOR C-01 AND FRONT BODY CONTROL MODULE (FBCM) FOR SHORT BETWEEN CIRCUITS** • Switch the ignition off (LOCK). • Disconnect the negative battery cable. (See 01-17B-9 NEGATIVE BATTERY CABLE DISCONNECTION/CONNECTION [SKYACTIV-D 2.2].) • Connect connector 2 which has front body control module (FBCM) terminals 2K and 2I. • Disconnect connector C-01. • Connect the negative battery cable. (See 01-17B-9 NEGATIVE BATTERY CABLE DISCONNECTION/CONNECTION [SKYACTIV-D 2.2].) • Switch the ignition ON (engine off). • Measure the voltage at DLC-2 terminals F and E. • Is the voltage at DLC-2 terminals F and E the same?	Yes	Repair or replace the wiring harness between connector C-01 and the front body control module (FBCM) because the wiring harness is shorted between circuits.
		No	Go to the next step.
29	**INSPECT BETWEEN CONNECTOR C-01 AND CONNECTOR C-32 FOR SHORT BETWEEN CIRCUITS** • Switch the ignition off (LOCK). • Disconnect the negative battery cable. (See 01-17B-9 NEGATIVE BATTERY CABLE DISCONNECTION/CONNECTION [SKYACTIV-D 2.2].) • Connect connector C-01. • Disconnect connector C-32. • Connect the negative battery cable. (See 01-17B-9 NEGATIVE BATTERY CABLE DISCONNECTION/CONNECTION [SKYACTIV-D 2.2].) • Switch the ignition ON (engine off). • Measure the voltage at DLC-2 terminals F and E. • Is the voltage at DLC-2 terminals F and E the same?	Yes	Repair or replace the wiring harness between connector C-01 and connector C-32 because the wiring harness is shorted between circuits.
		No	Go to Step 31.
30	**INSPECT BETWEEN CONNECTORS C-32 AND FRONT BODY CONTROL MODULE (FBCM) FOR SHORT BETWEEN CIRCUITS** • Switch the ignition off (LOCK). • Disconnect the negative battery cable. (See 01-17B-9 NEGATIVE BATTERY CABLE DISCONNECTION/CONNECTION [SKYACTIV-D 2.2].) • Connect connector 2 which has front body control module (FBCM) terminals 2K and 2I. • Disconnect connector C-32. • Connect the negative battery cable. (See 01-17B-9 NEGATIVE BATTERY CABLE DISCONNECTION/CONNECTION [SKYACTIV-D 2.2].) • Switch the ignition ON (engine off). • Measure the voltage at DLC-2 terminals F and E. • Is the voltage at DLC-2 terminals F and E the same?	Yes	Repair or replace the wiring harness between connector C-32 and the front body control module (FBCM) because the wiring harness is shorted between circuits.
		No	Go to the next step.

ON-BOARD DIAGNOSTIC [SKYACTIV-D 2.2 (R.H.D.)]

Step	Inspection		Action
31	**INSPECT BETWEEN DSC HU/CM AND CONNECTOR C-32 FOR SHORT BETWEEN CIRCUITS** • Switch the ignition off (LOCK). • Disconnect the negative battery cable. (See 01-17B-9 NEGATIVE BATTERY CABLE DISCONNECTION/CONNECTION [SKYACTIV-D 2.2].) • Inspect for continuity between DSC HU/CM terminals AF and AC. • Is there continuity?	Yes	Go to the next step.
		No	Go to Step 33.
32	**INSPECT DSC HU/CM FOR SHORT BETWEEN CIRCUITS** • Disconnect the DSC HU/CM connector. • Inspect for continuity between DSC HU/CM terminals AF and AC (wiring harness side). • Is there continuity?	Yes	Repair or replace the wiring harness between the DSC HU/CM and connector C-32 because the wiring harness is shorted between circuits.
		No	Replace the DSC HU/CM because there is a short between circuits in the DSC HU/CM. (See 04-15-4 DSC HU/CM REMOVAL/INSTALLATION.)
33	**INSPECT PCM FOR SHORT BETWEEN CIRCUITS** • Disconnect the PCM connector. • Inspect for continuity between PCM terminals 2AK and 2AL (wiring harness side). • Is there continuity?	Yes	Repair or replace the wiring harness between the PCM and connector C-32 because the wiring harness is shorted between circuits.
		No	Replace the PCM because there is a short between circuits in the PCM.

DETERMINING OPEN CIRCUIT LOCATION (MS-CAN) [SKYACTIV-D 2.2 (R.H.D.)]

id100206000500

Caution

- **Perform the following malfunction diagnosis only when it is diagnosed with a open circuit by 10-02D-3 CONTROLLER AREA NETWORK (CAN) MALFUNCTION DIAGNOSIS FLOW [SKYACTIV-D 2.2 (R.H.D.)].**
- **If the malfunctioning part is detected in the communication line, before disconnecting the related connector for inspection, press the connector in the connection direction to verify that there is no looseness or disconnection.**
- **When disconnecting the connector, verify that there is no damage, deformation, or corrosion of the connector terminals.**

1. Verify DTCs of the modules related to the CAN system.
2. Apply the communication error DTC and the failed module to 10-02D-83 DTC output pattern and malfunctioning location, and select the possible cause for the diagnostic result and the reference for the inspection item.

Note

- The open circuit location can be determined by the DTC indicated in the 10-02D-83 DTC output pattern and malfunctioning location chart. DTCs not listed in the chart are not used for the determination of the open circuit location.

3. Inspect the possible cause and inspection item of the applicable malfunctioning part.
4. After repairs, return to 10-02D-3 CONTROLLER AREA NETWORK (CAN) MALFUNCTION DIAGNOSIS FLOW [SKYACTIV-D 2.2 (R.H.D.)], and verify that the repairs have been completed.

DTC output pattern and malfunctioning location

Cross (×): Displayed

M-MDS display		DTC output pattern and malfunctioning location									
DTC output module	DTC										
R_BCM (Rear body control module (RBCM))	U0155									×	

ON-BOARD DIAGNOSTIC [SKYACTIV-D 2.2 (R.H.D.)]

M-MDS display		DTC output pattern and malfunctioning location									
DTC output module	DTC										
BSML*1 (BSM control module (LH))	U0100:00									×	
	U0131:00									×	
	U0155:00									×	
	U0214:00									×	
	U0233:00					×					
BSMR*1 (BSM control module (RH))	U0100:00									×	
	U0131:00									×	
	U0155:00									×	
	U0214:00									×	
	U0232:00	×									
RVM*2 (Rear vehicle monitoring control module (RH))	U0100:00									×	
	U0121:00									×	
	U0155:00									×	
	U0214:00									×	
EATC*3 (Climate control unit)	U0155:00									×	
ACU*4 (Audio unit)	U0155:00									×	
IC (Instrument cluster)	U0142:00		×	×			×				
	U0232:00	×		×			×				
	U0233:00					×	×				
M-MDS display module		[Fail] display pattern									
R_BCM			×	×			×				
BSML*1		×		×			×				
BSMR*1						×	×				
RVM*2					×		×				
EATC*3								×			
ACU*4									×		
IC										×	
Diagnostic result											
Possible cause and inspection item		10-02D-84 A	10-02D-85 B	10-02D-86 C	10-02D-88 D	10-02D-89 E	10-02D-90 F	10-02D-91 G	10-02D-92 H	10-02D-93 I	10-02D-94 J

*1 : With BSM
*2 : With rear vehicle monitoring system
*3 : With full-auto air conditioner
*4 : With audio unit

A
Possible cause
- Connector terminal disconnection, poor contact, damage, deformation, corrosion
- Open circuit in wiring harness between BSM control module (LH) and connector C-23
- Open circuit in wiring harness between connector C-23 and RCBM
- Connector C-23 malfunction
- BSM control module (LH) malfunction
- CAN circuit in rear body control module (RBCM) malfunction

ON-BOARD DIAGNOSTIC [SKYACTIV-D 2.2 (R.H.D.)]

System wiring diagram

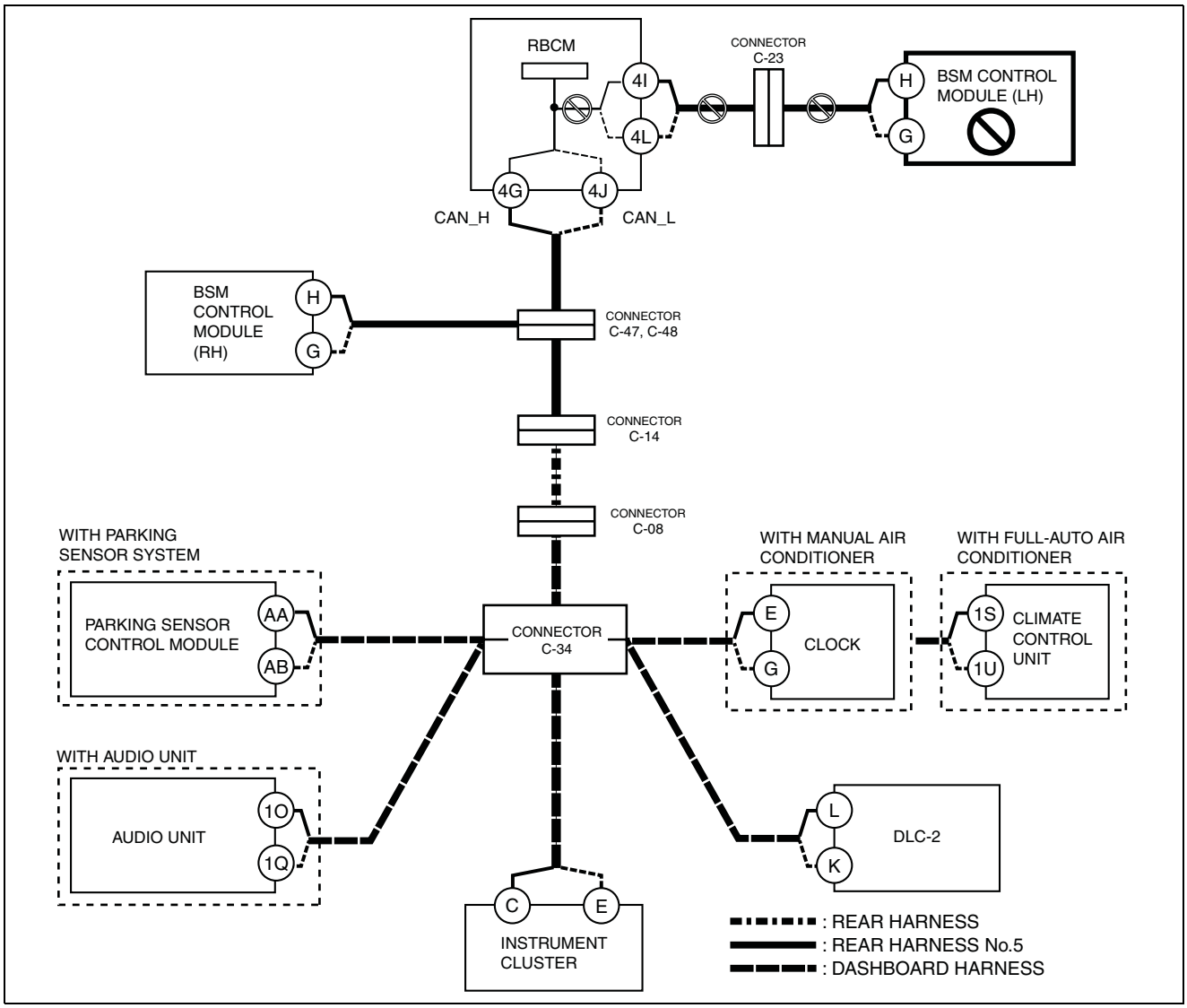

ac5wzw0000067

Inspection item

- BSM control module (LH) connector
- Rear body control module (RBCM) connector
- Connector C-23
- Wiring harness between BSM control module (LH) terminal H and connector C-23.
- Wiring harness between BSM control module (LH) terminal G and connector C-23
- Wiring harness between rear body control module (RBCM) terminal 4I and connector C-23
- Wiring harness between rear body control module (RBCM) terminal 4L and connector C-23
- BSM control module (LH)
- Rear body control module (RBCM)
  - — Between rear body control module (RBCM) terminal 4G and rear body control module (RBCM) terminal 4I
  - — Between rear body control module (RBCM) terminal 4J and rear body control module (RBCM) terminal 4L

B

Possible cause

- Connector terminal disconnection, poor contact, damage, deformation, corrosion
- Rear body control module (RBCM) malfunction

10

ON-BOARD DIAGNOSTIC [SKYACTIV-D 2.2 (R.H.D.)]

System wiring diagram

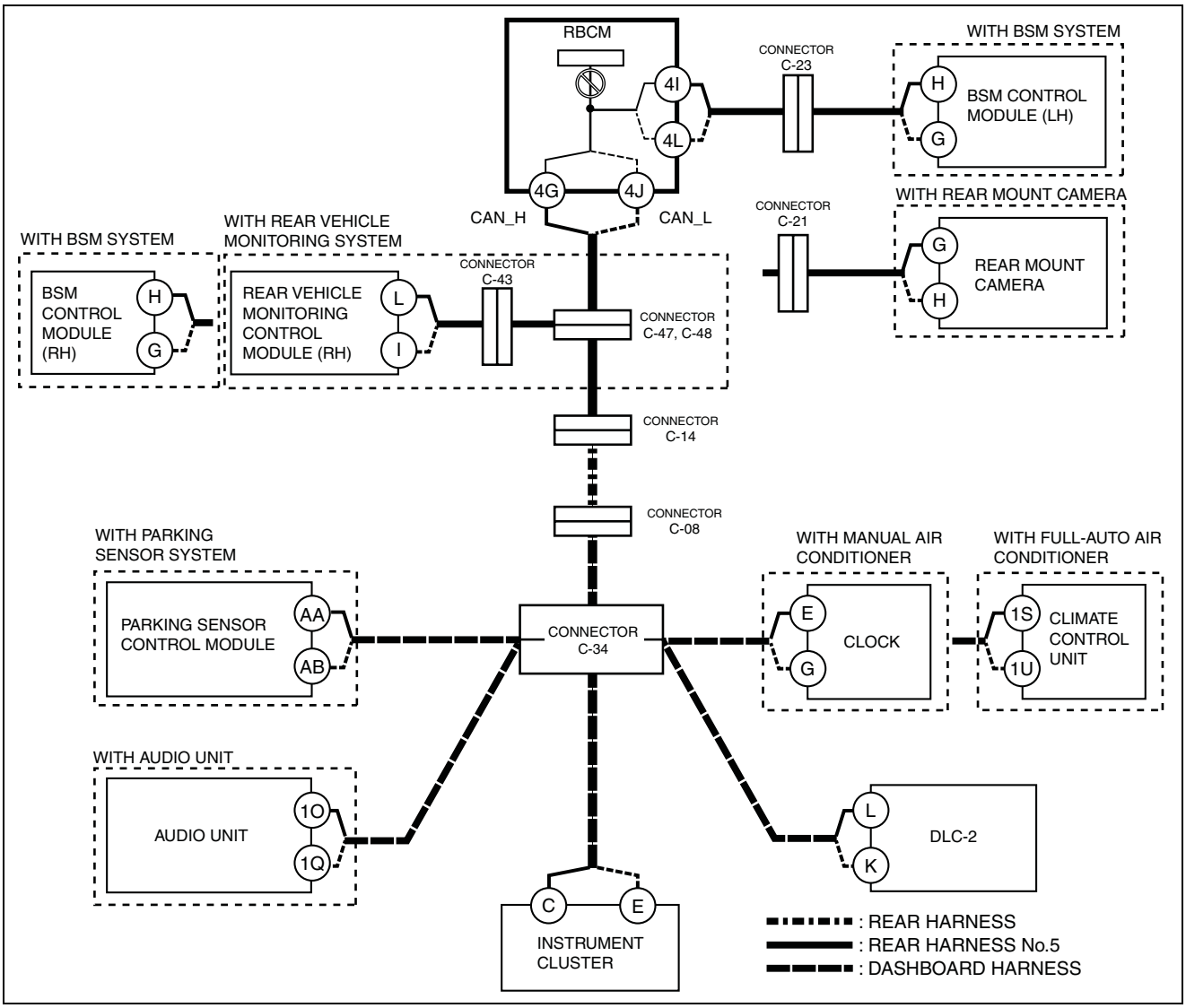

ac5wzw0000253

Inspection item

- Rear body control module (RBCM)

C
With rear vehicle monitoring system or BSM system
Possible cause

- Connector terminal disconnection, poor contact, damage, deformation, corrosion
- Open circuit in wiring harness between rear body control module (RBCM) and connectors C-47, C-48
- Connector C-47, C-48 malfunction
- CAN circuit in rear body control module (RBCM) malfunction

ON-BOARD DIAGNOSTIC [SKYACTIV-D 2.2 (R.H.D.)]

System wiring diagram

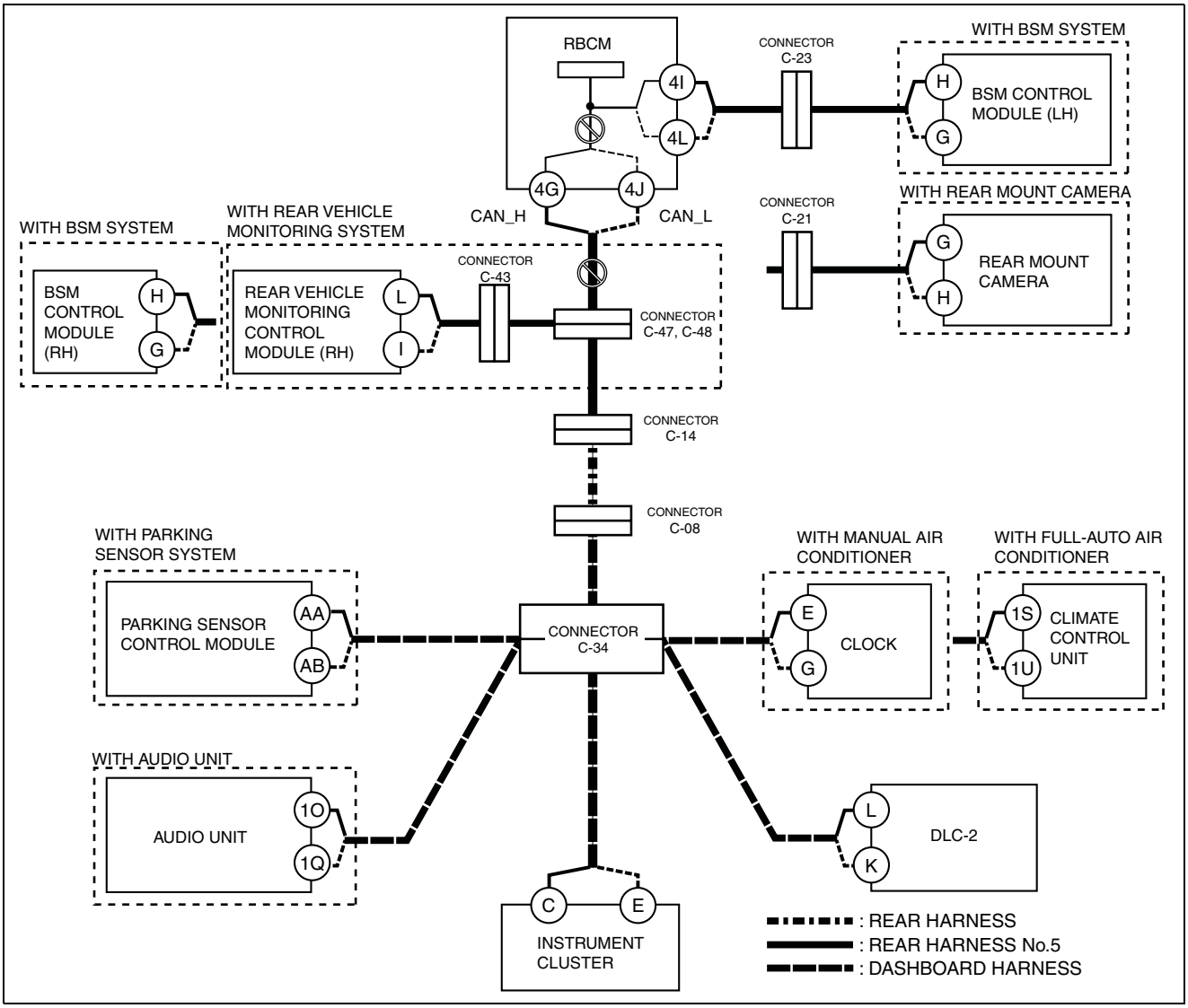

ac5wzw0000067

Inspection item

- Rear body control module (RBCM) connector
- Connectors C-47, C-48
- Wiring harness between rear body control module (RBCM) terminal 4G and connectors C-47
- Wiring harness between rear body control module (RBCM) terminal 4J and connectors C-48
- Rear body control module (RBCM)
  - — Between rear body control module (RBCM) terminal 4G and rear body control module (RBCM) terminal 4I
  - — Between rear body control module (RBCM) terminal 4J and rear body control module (RBCM) terminal 4L

Without rear vehicle monitoring system or BSM system
Possible cause

- Connector terminal disconnection, poor contact, damage, deformation, corrosion
- Open circuit in wiring harness between rear body control module (RBCM) and connector C-14
- Open circuit in wiring harness between connector C-14 and connector C-08
- Open circuit in wiring harness between connector C-08 and connector C-34
- Connector C-14 malfunction
- Connector C-08 malfunction
- Connector C-34 malfunction
- Rear body control module (RBCM) malfunction

10

ON-BOARD DIAGNOSTIC [SKYACTIV-D 2.2 (R.H.D.)]

System wiring diagram

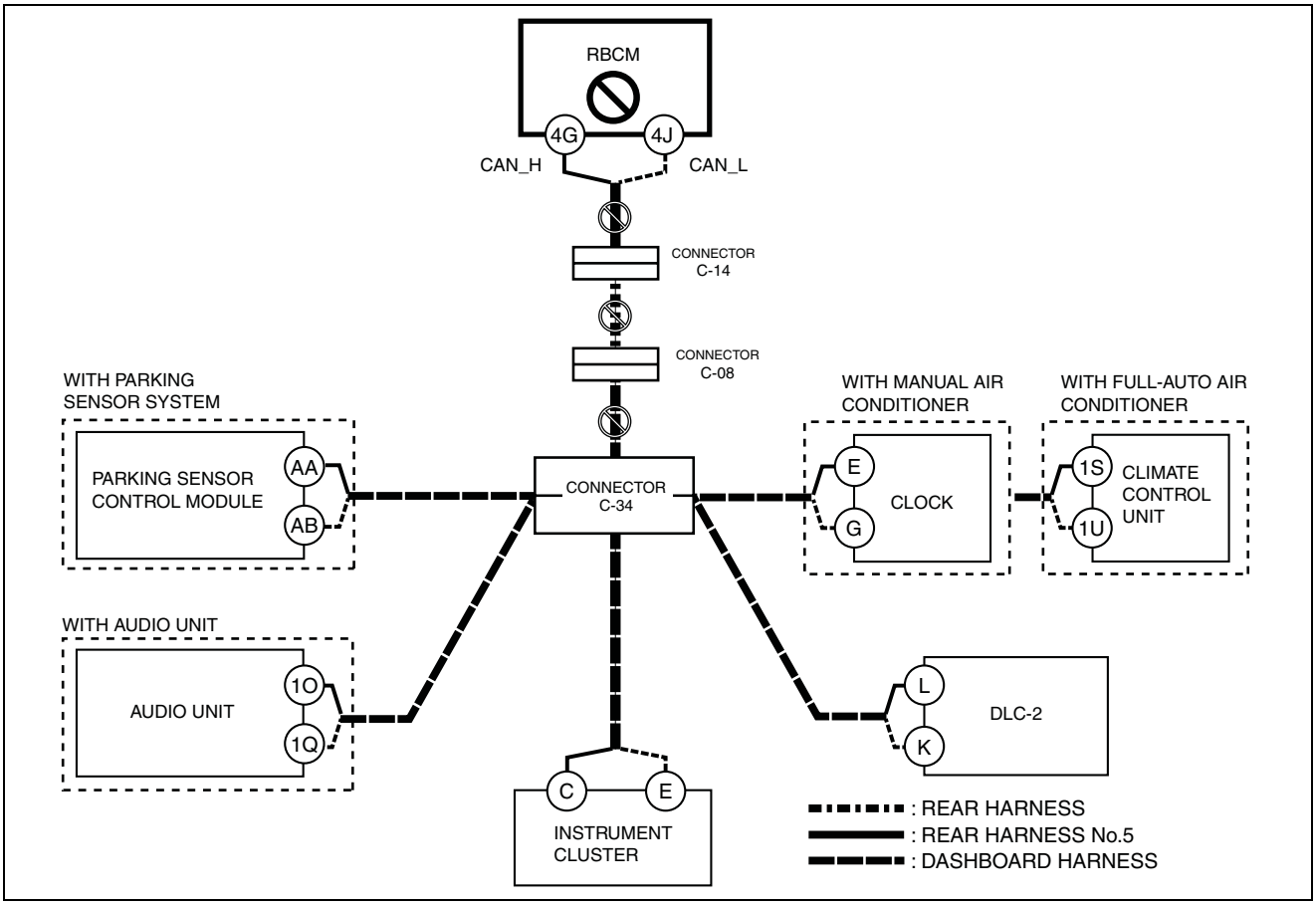

ac5wzw0000067

Inspection item

- Rear body control module (RBCM) connector
- Connector C-14
- Connector C-08
- Connector C-34
- Wiring harness between rear body control module (RBCM) terminal 4G and connector C-14
- Wiring harness between rear body control module (RBCM) terminal 4J and connector C-14
- Wiring harness between connector C-14 and connector C-08
- Wiring harness between connector C-08 and connector C-34
- Rear body control module (RBCM)

D

Possible cause

- Connector terminal disconnection, poor contact, damage, deformation, corrosion
- Open circuit in wiring harness between rear vehicle monitoring (RH) and connectors C-43
- Open circuit in wiring harness between connectors C-43 and connectors C-47, C-48
- Connector C-43 malfunction
- Connector C-47, C-48 malfunction
- Rear vehicle monitoring control module (RH) malfunction

ON-BOARD DIAGNOSTIC [SKYACTIV-D 2.2 (R.H.D.)]

System wiring diagram

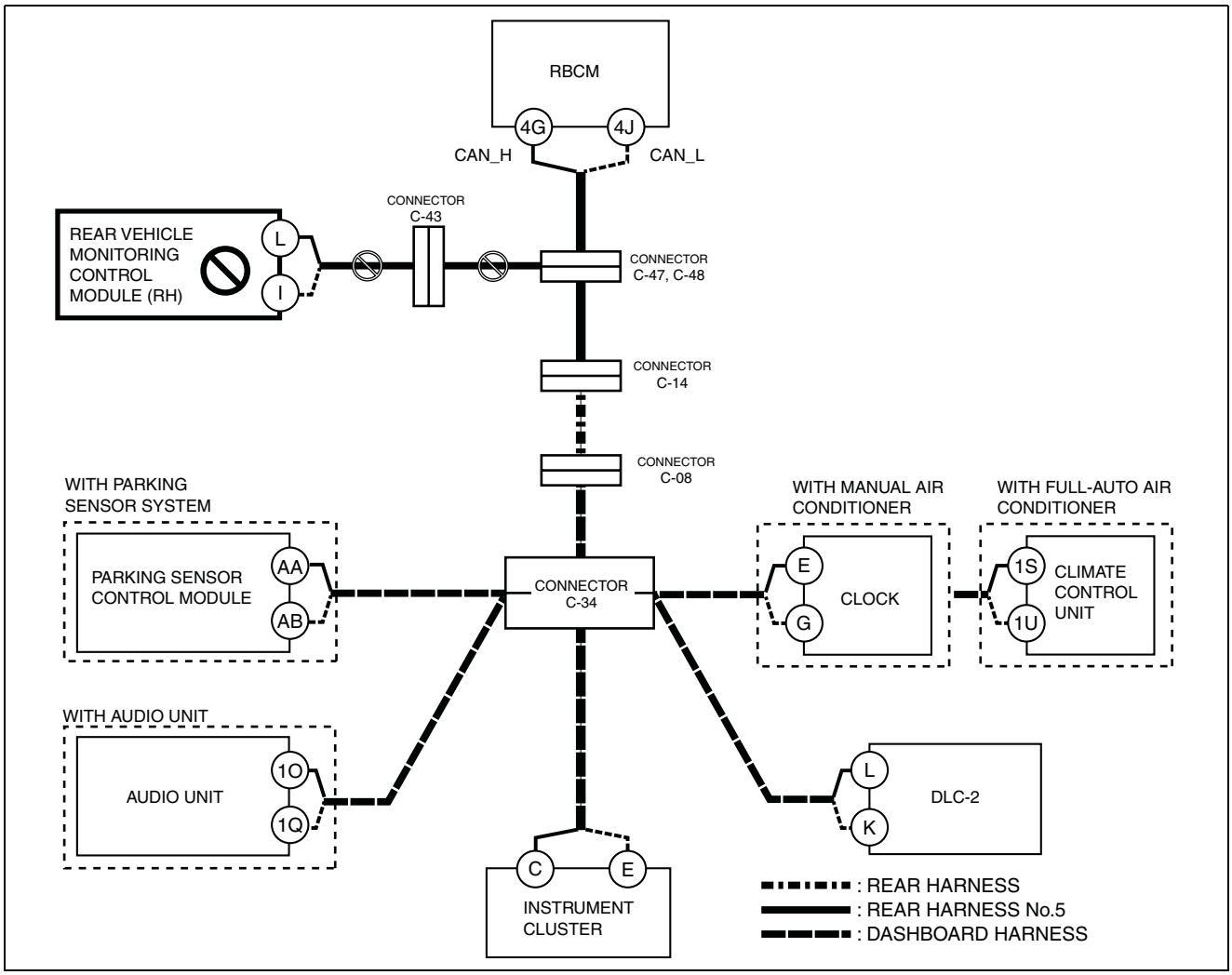

ac5wzw0000067

Inspection item

- Rear vehicle monitoring control module (RH) connector
- Connectors C-43
- Connectors C-47, C-48
- Wiring harness between Rear vehicle monitoring control module (RH) terminal L and connector C-43
- Wiring harness between Rear vehicle monitoring control module (RH) terminal I and connector C-43
- Wiring harness between connector C-43 and connector C-47, C-48
- Rear vehicle monitoring control module (RH)

E

Possible cause

- Connector terminal disconnection, poor contact, damage, deformation, corrosion
- Open circuit in wiring harness between BSM control module (RH) and connectors C-47, C-48
- Connector C-47, C-48 malfunction
- BSM control module (RH) malfunction

ON-BOARD DIAGNOSTIC [SKYACTIV-D 2.2 (R.H.D.)]

System wiring diagram

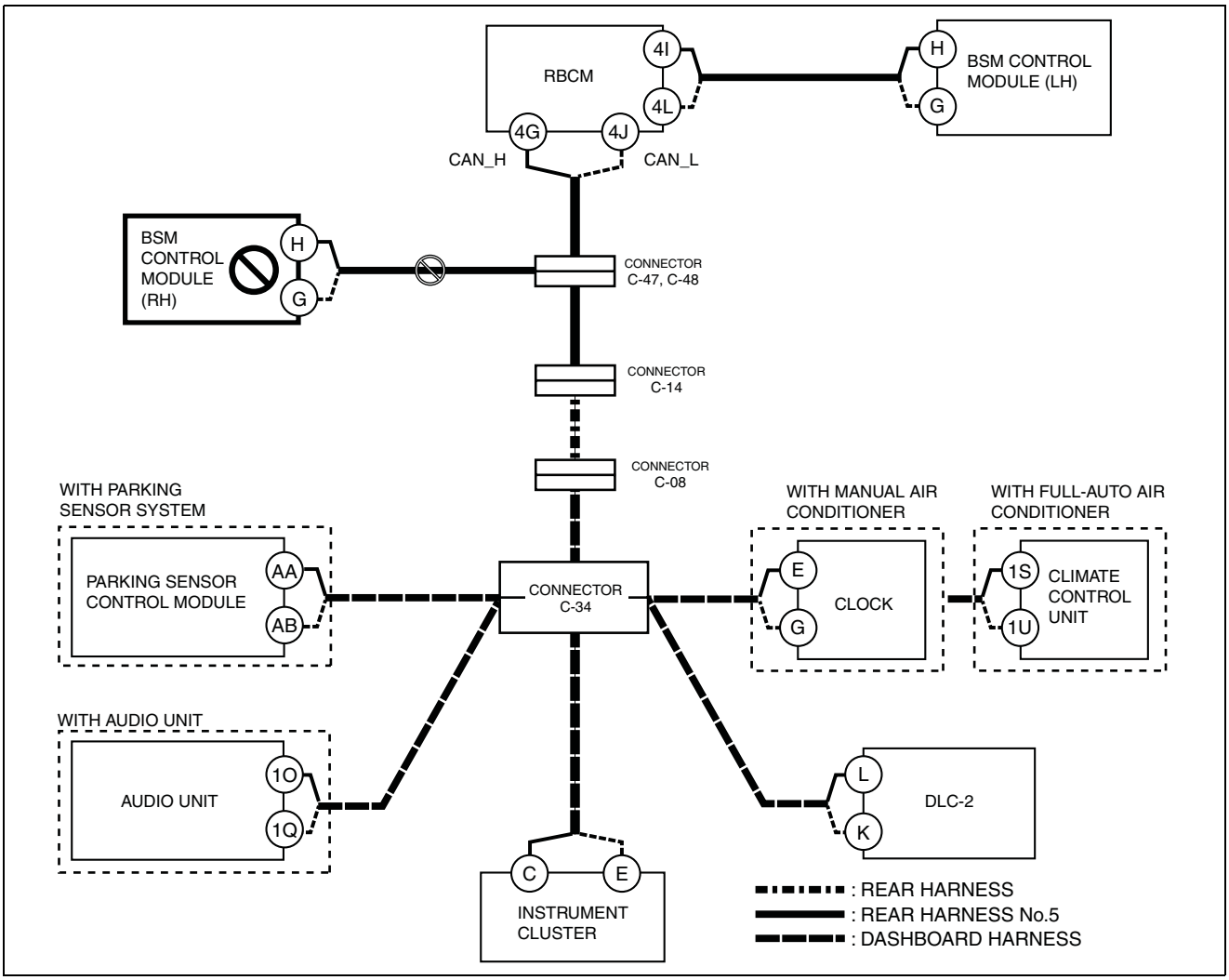

ac5wzw0000067

Inspection item

- BSM control module (RH) connector
- Connectors C-47, C-48
- Wiring harness between BSM control module (RH) terminal H and connector C-47
- Wiring harness between BSM control module (RH) terminal G and connector C-48
- BSM control module (RH)

F

Possible cause

- Connector terminal disconnection, poor contact, damage, deformation, corrosion
- Open circuit in wiring harness between connectors C-47, C-48 and connector C-14
- Open circuit in wiring harness between connector C-14 and C-08
- Open circuit in wiring harness between connectors C-08 and C-34
- Connectors C-47, C-48 malfunction
- Connector C-14 malfunction
- Connector C-08 malfunction
- Connector C-34 malfunction

ON-BOARD DIAGNOSTIC [SKYACTIV-D 2.2 (R.H.D.)]

System wiring diagram

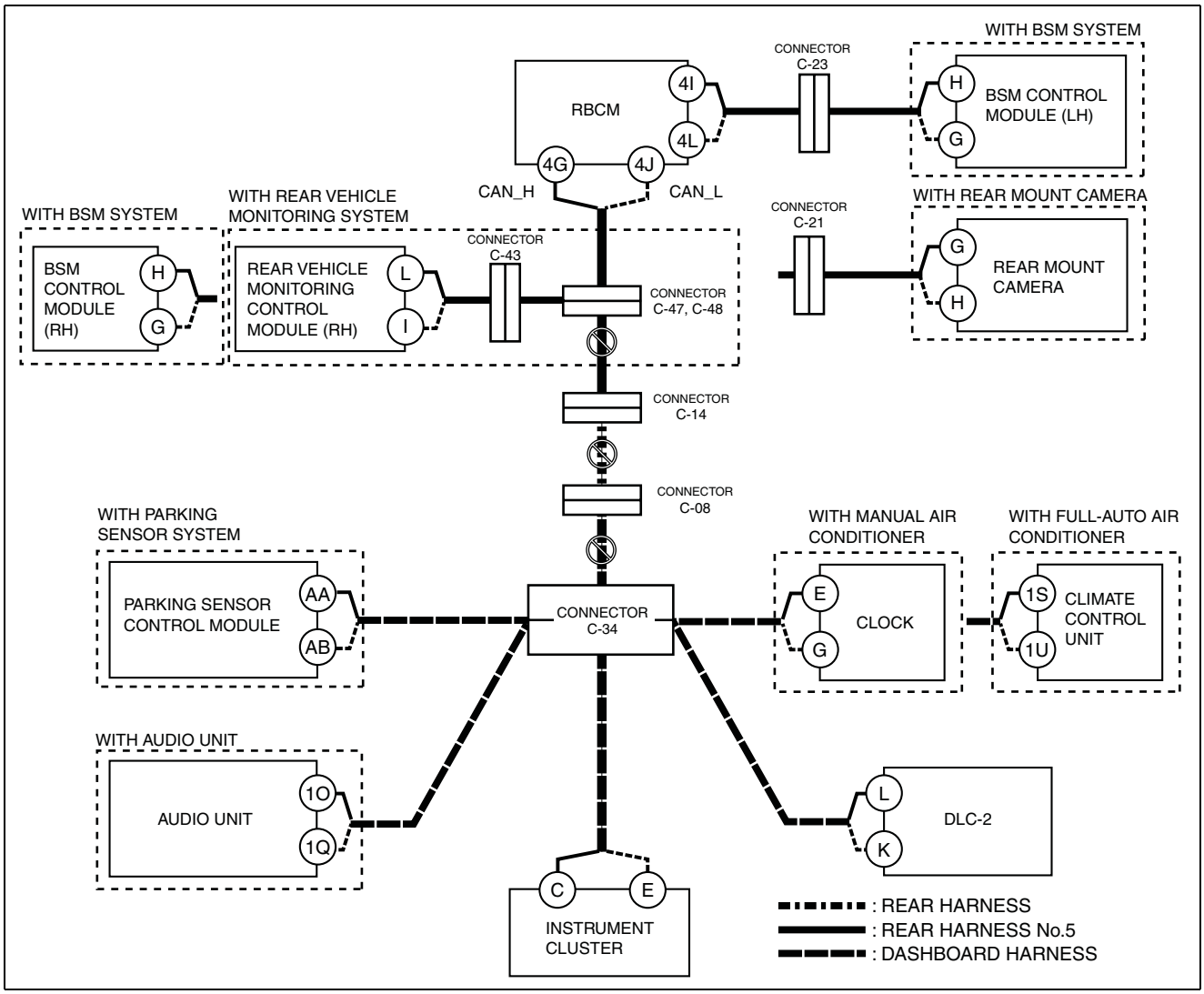

ac5wzw0000067

Inspection item

- Connectors C-47, C-48
- Connector C-14
- Connector C-08
- Connector C-34
- Wiring harness between connectors C-47, C-48 and connector C-14
- Wiring harness between connector C-14 and connector C-08
- Wiring harness between connector C-08 and connector C-34

G

Possible cause

- Connector terminal disconnection, poor contact, damage, deformation, corrosion
- Open circuit in wiring harness between climate control unit and connector C-34
- Connector C-34 malfunction
- Climate control unit malfunction

10

ON-BOARD DIAGNOSTIC [SKYACTIV-D 2.2 (R.H.D.)]

System wiring diagram

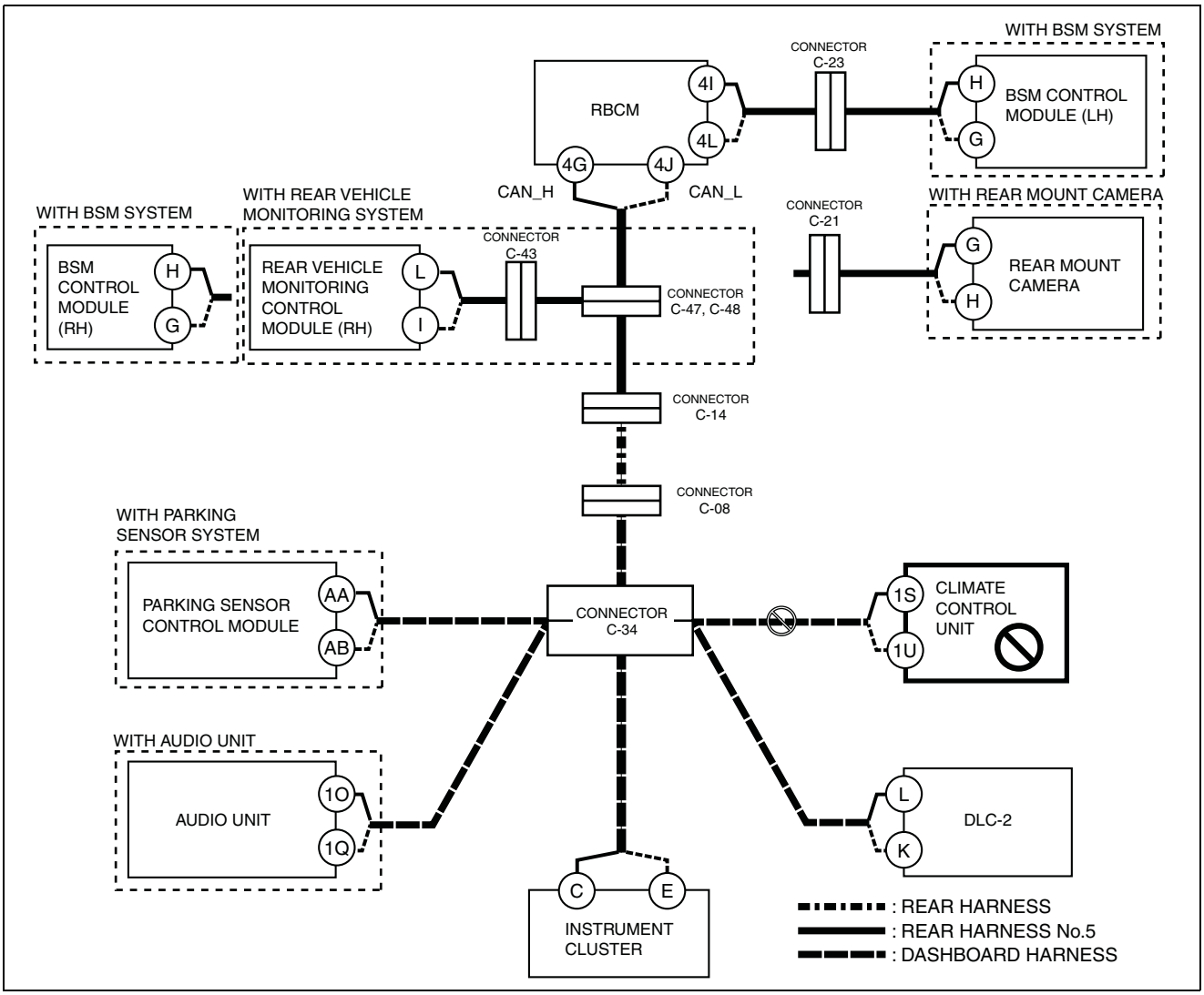

ac5wzw0000067

Possible cause

- Connector terminal disconnection, poor contact, damage, deformation, corrosion
- Open circuit in wiring harness between climate control unit and connector C-34
- Connector C-34 malfunction
- Climate control unit malfunction

H

Possible cause

- Connector terminal disconnection, poor contact, damage, deformation, corrosion
- Open circuit in wiring harness between vehicle with audio unit and connector C-34
- Connector C-34 malfunction
- Audio unit malfunction

ON-BOARD DIAGNOSTIC [SKYACTIV-D 2.2 (R.H.D.)]

System wiring diagram

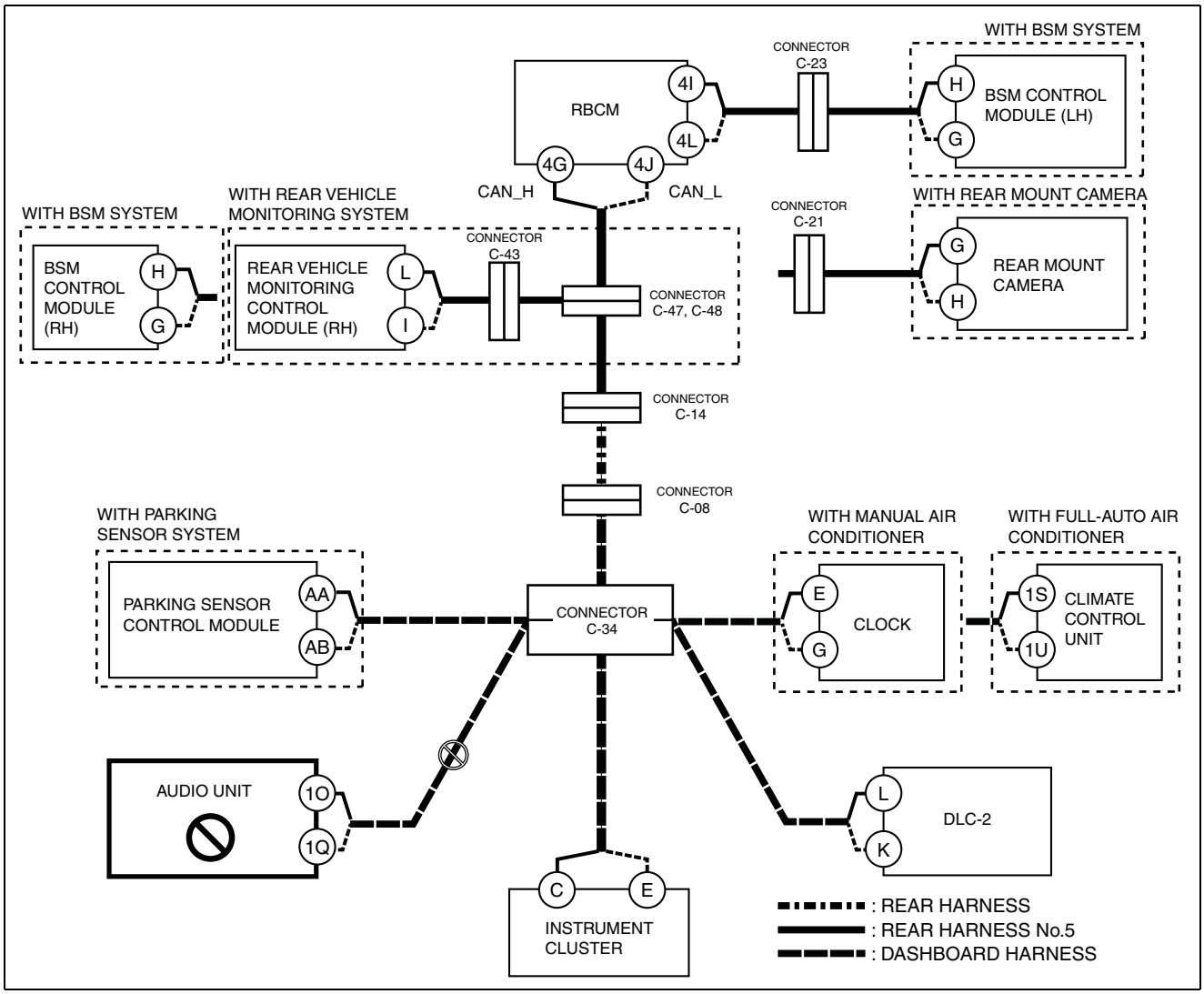

ac5wzw0000067

Inspection item

- Audio unit connector
- Connector C-34
- Wiring harness between audio unit terminal 1O and connector C-34
- Wiring harness between audio unit terminal 1Q and connector C-34
- Audio unit

I

Possible cause

- Connector terminal disconnection, poor contact, damage, deformation, corrosion
- Open circuit in wiring harness between instrument cluster and connector C-34
- Connector C-34 malfunction
- Instrument cluster malfunction

10

ON-BOARD DIAGNOSTIC [SKYACTIV-D 2.2 (R.H.D.)]

System wiring diagram

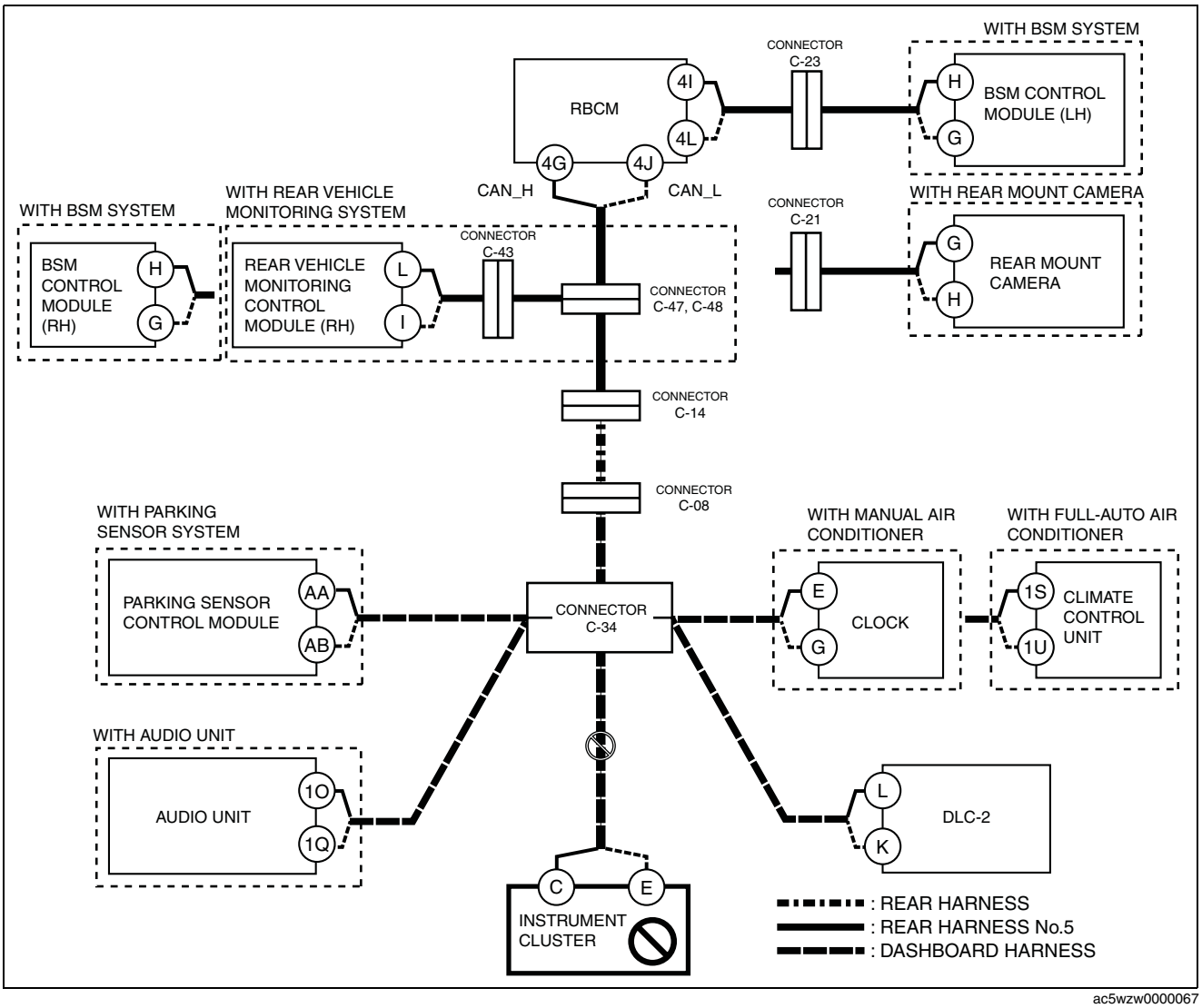

ac5wzw0000067

Inspection item

- Instrument cluster connector
- Connector C-34
- Wiring harness between instrument cluster terminal C and connector C-34
- Wiring harness between instrument cluster terminal E and connector C-34
- Instrument cluster

J

1. Perform the clock input/output check mode. (See 09-22-96 CLOCK INPUT/OUTPUT CHECK MODE.)
   - If "2:00" is displayed, go to the next step.
   - If "2:Er is displayed, inspect the inspection items in the possible causes for 10-02D-94 Clock Circuit Malfunction.
2. Shift the selector lever (ATX) or shift lever (MTX) to the R position.
   - If images from the rear mount camera appear in the audio unit, inspect the inspection items in the possible causes for the 10-02D-95 Parking Sensor Control Module Circuit Malfunction.
   - If images from the rear mount camera do not appear in the audio unit, inspect the inspection items in the possible causes for 10-02D-96 Rear Mount Camera Circuit Malfunction.

Clock Circuit Malfunction
Possible cause

- Connector terminal disconnection, poor contact, damage, deformation, corrosion
- Open circuit in wiring harness between clock component and connector C-34
- Connector C-34 malfunction
- Clock component malfunction

ON-BOARD DIAGNOSTIC [SKYACTIV-D 2.2 (R.H.D.)]

System wiring diagram

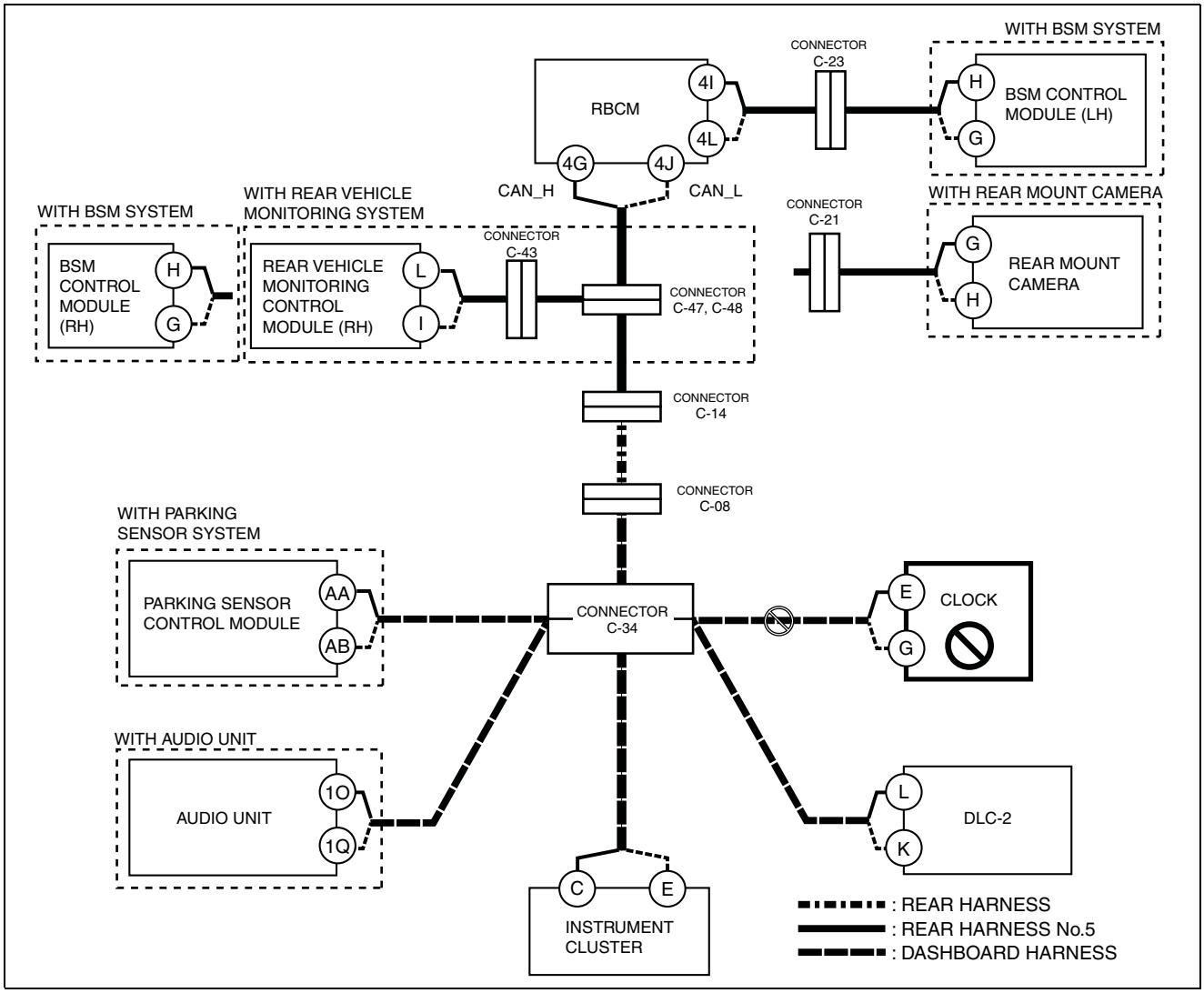

ac5wzw0000244

Inspection item

- Clock component connector
- Connector C-34
- Wiring harness between clock component terminal E and connector C-34
- Wiring harness between clock component terminal G and connector C-34
- Clock component

Parking Sensor Control Module Circuit Malfunction
Possible cause

- Connector terminal disconnection, poor contact, damage, deformation, corrosion
- Open circuit in wiring harness between parking sensor control module and connector C-34
- Connector C-34 malfunction
- Parking sensor control module malfunction

ON-BOARD DIAGNOSTIC [SKYACTIV-D 2.2 (R.H.D.)]

System wiring diagram

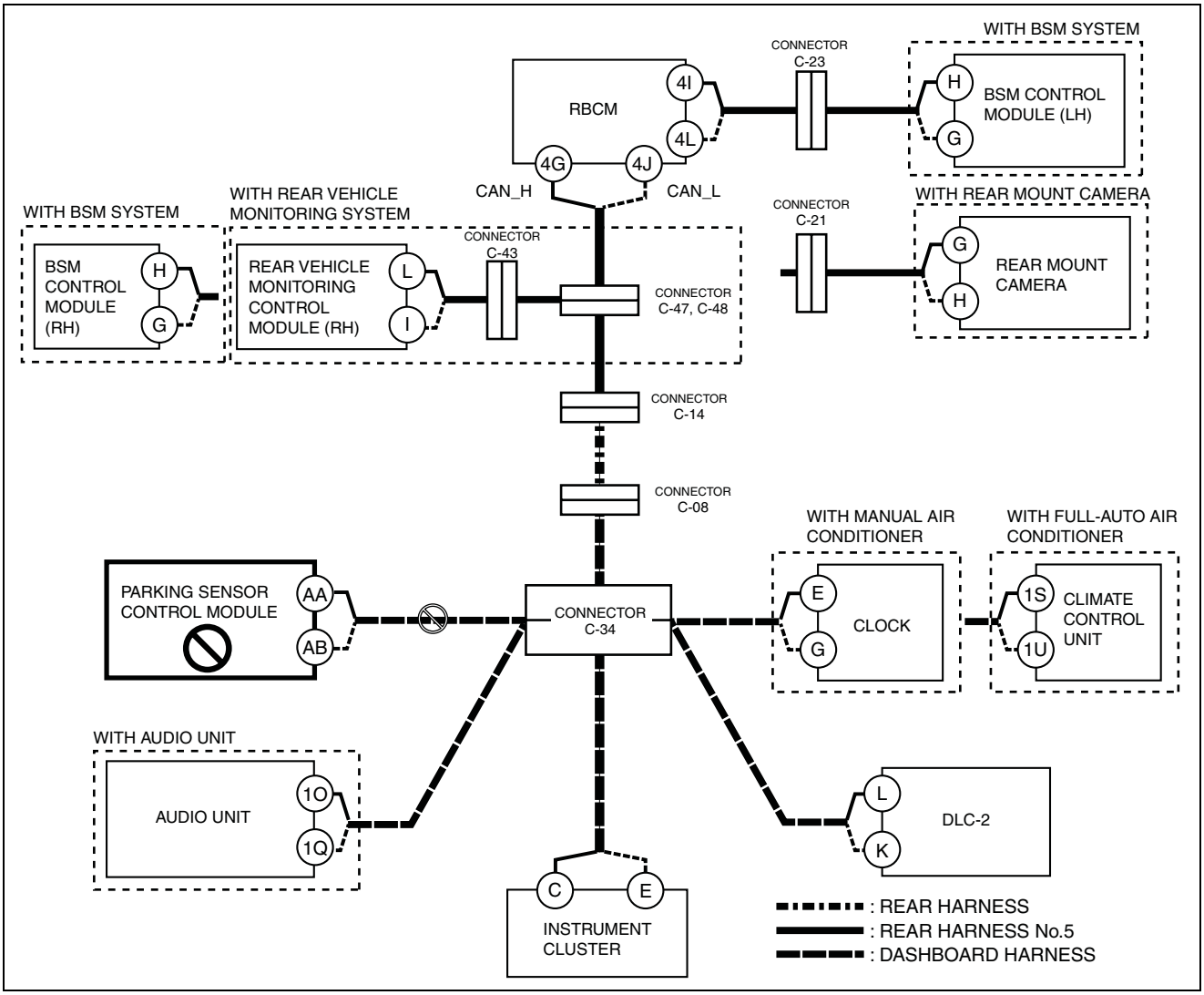

ac5wzw0000067

Inspection item

- Parking sensor control module connector
- Connector C-34
- Wiring harness between parking sensor control module terminal AA and connector C-34
- Wiring harness between parking sensor control module terminal AB and connector C-34
- Parking sensor control module

Rear Mount Camera Circuit Malfunction

Possible cause

- Connector terminal disconnection, poor contact, damage, deformation, corrosion
- Open circuit in wiring harness between rear mount camera and connector C-21
- Open circuit in wiring harness between connector C-21 and RCBM
- Connector C-21 malfunction
- Rear mount camera malfunction
- CAN circuit in rear body control module (RBCM) malfunction

ON-BOARD DIAGNOSTIC [SKYACTIV-D 2.2 (R.H.D.)]

System wiring diagram

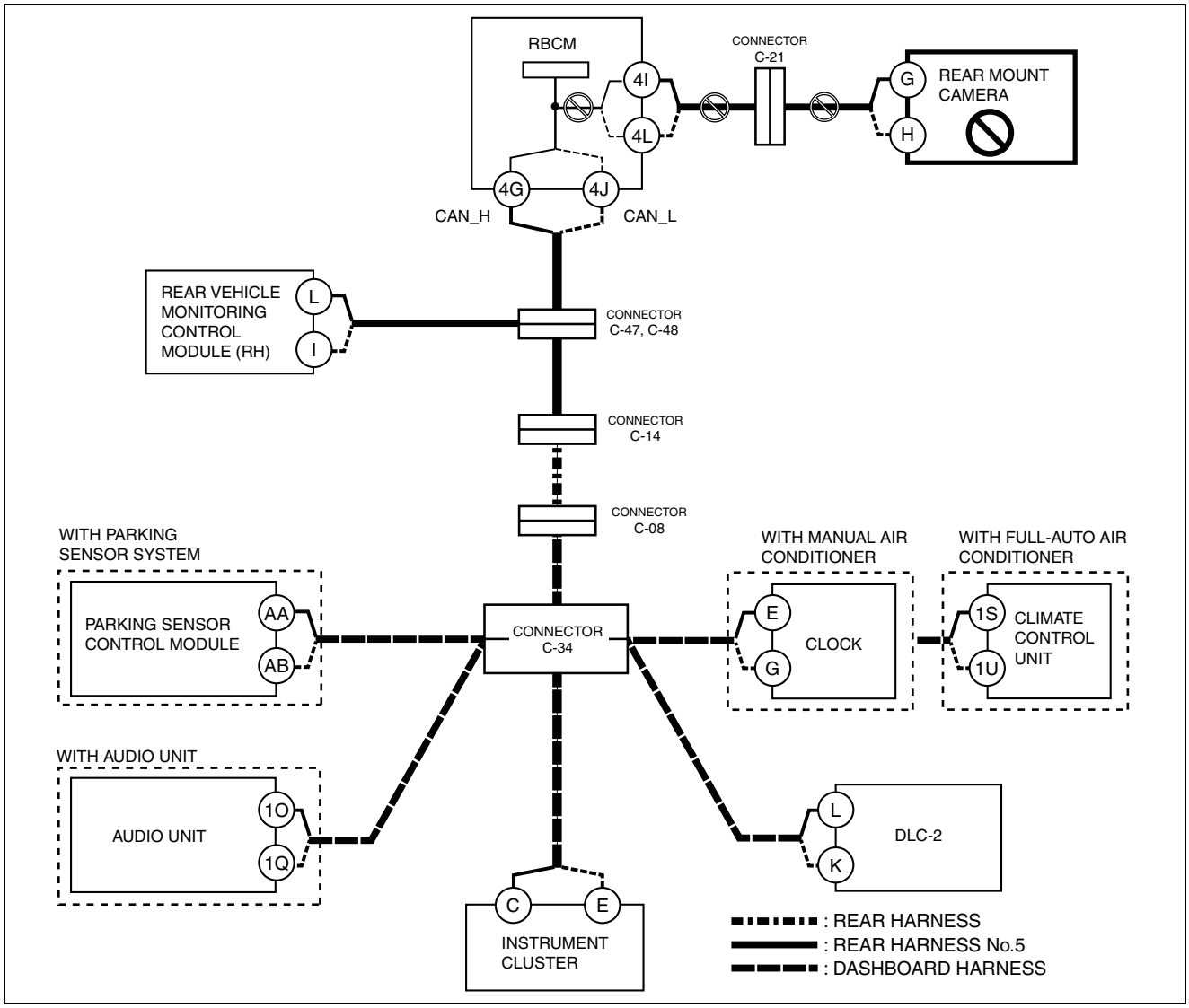

ac5wzw0000244

Inspection item

- Rear mount camera connector
- Rear body control module (RBCM) connector
- Connector C-21
- Wiring harness between rear mount camera terminal G and connector C-21.
- Wiring harness between rear mount camera terminal H and connector C-21.
- Wiring harness between rear body control module (RBCM) terminal 4I and connector C-21
- Wiring harness between rear body control module (RBCM) terminal 4L and connector C-21
- Rear mount camera
- Rear body control module (RBCM)
  - — Between rear body control module (RBCM) terminal 4G and rear body control module (RBCM) terminal 4I
  - — Between rear body control module (RBCM) terminal 4J and rear body control module (RBCM) terminal 4L

DETERMINING SHORT TO GROUND LOCATION (MS-CAN) [SKYACTIV-D 2.2 (R.H.D.)]

id100206000900

Caution

- **Perform the following malfunction diagnosis only when it is diagnosed with a short to ground by 10-02D-3 CONTROLLER AREA NETWORK (CAN) MALFUNCTION DIAGNOSIS FLOW [SKYACTIV-D 2.2 (R.H.D.)].**

ON-BOARD DIAGNOSTIC [SKYACTIV-D 2.2 (R.H.D.)]

System wiring diagram

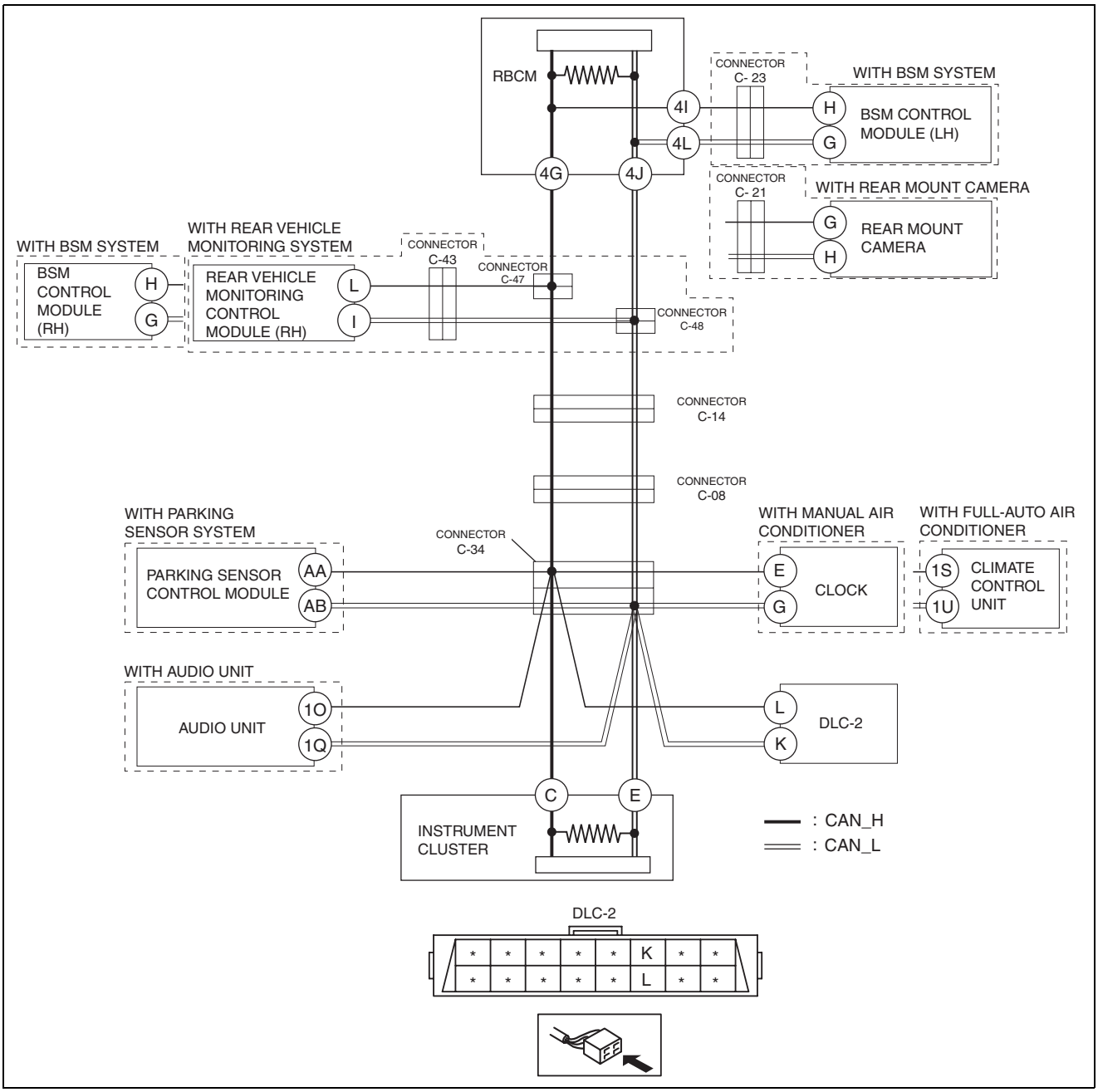

ac5wzw0000068

Determination procedure

Caution

- **When disconnecting the connector, verify that there is no looseness, damage, deformation, corrosion, or poor connection of the connector terminals.**
- **When inspecting the DLC-2, touch it with a paper clip or similar thin pin without directly inserting a tester into the terminals.**

ON-BOARD DIAGNOSTIC [SKYACTIV-D 2.2 (R.H.D.)]

Step	Inspection		Action
1	**INSPECT FOR SHORT TO GROUND BETWEEN CONNECTOR C-08 AND INSTRUMENT CLUSTER** • Disconnect the negative battery cable. (See 01-17B-9 NEGATIVE BATTERY CABLE DISCONNECTION/CONNECTION [SKYACTIV-D 2.2].) • Disconnect connector C-08. • Inspect for continuity at the following terminals: — Between DLC-2 terminal L and body ground — Between DLC-2 terminal K and body ground • Is there continuity?	Yes	Go to the next step.
		No	Go to Step 11.
2	**INSPECT FOR SHORT TO GROUND BETWEEN CONNECTORS C-34 AND DLC-2** • Disconnect connector C-34. • Inspect for continuity at the following terminals: — Between DLC-2 terminal L and body ground — Between DLC-2 terminal K and body ground • Is there continuity?	Yes	Repair or replace the wiring harness between connector C-34 and DLC-2 because the wiring harness is shorted to ground.
		No	Go to the next step.
3	**INSPECT FOR SHORT TO GROUND BETWEEN CONNECTOR C-34 AND PARKING SENSOR CONTROL MODULE** • Inspect for continuity at the following terminals: — Between parking sensor control module terminal AA and body ground — Between parking sensor control module terminal AB and body ground • Is there continuity?	Yes	Go to the next step.
		No	Go to Step 5.
4	**INSPECT CAN LINE IN PARKING SENSOR CONTROL MODULE FOR SHORT TO GROUND** • Disconnect the parking sensor connector. • Inspect for continuity at the following terminals: — Between parking sensor control module terminal AA (wiring harness side) and body ground — Between parking sensor control module terminal AB (wiring harness side) and body ground • Is there continuity?	Yes	Repair or replace the wiring harness between the parking sensor control module and connector C-34 because the wiring harness is shorted to ground.
		No	Replace the parking sensor control module because there is a short to ground in the parking sensor control module. (See 09-22-57 PARKING SENSOR CONTROL MODULE REMOVAL/INSTALLATION.)
5	**INSPECT FOR SHORT TO GROUND BETWEEN CONNECTOR C-34 AND CLIMATE CONTROL UNIT** • Inspect for continuity at the following terminals: — Between climate control unit terminal 1S and body ground (with full-auto air conditioner) — Between climate control unit terminal 1U and body ground (with full-auto air conditioner) — Between clock terminal E and body ground (with manual air conditioner) — Between clock terminal G and body ground (with manual air conditioner) • Is there continuity?	Yes	Go to the next step.
		No	Go to Step 7.

ON-BOARD DIAGNOSTIC [SKYACTIV-D 2.2 (R.H.D.)]

Step	Inspection		Action
6	**INSPECT CAN LINE IN CLIMATE CONTROL UNIT OR CLOCK FOR SHORT TO GROUND** • Disconnect the climate control unit connector or clock connector. • Inspect for continuity at the following terminals: — Between climate control unit terminal 1S (wiring harness side) and body ground (with full-auto air conditioner) — Between climate control unit terminal 1U (wiring harness side) and body ground (with full-auto air conditioner) — Between clock terminal E (wiring harness side) and body ground (with manual air conditioner) — Between clock terminal G (wiring harness side) and body ground (with manual air conditioner) • Is there continuity?	Yes	Repair or replace the wiring harness between the climate control unit or clock and connector C-34 because the wiring harness is shorted to ground.
		No	Replace the climate control unit or the clock because there is a short to ground inside the climate control unit or the clock. (See 07-40A-32 CLIMATE CONTROL UNIT REMOVAL/INSTALLATION [FULL-AUTO AIR CONDITIONER].) (See 09-22-92 CLOCK REMOVAL/INSTALLATION.)
7	**INSPECT FOR SHORT TO GROUND BETWEEN CONNECTOR C-34 AND AUDIO UNIT** • Inspect for continuity at the following terminals: — Between audio unit terminal 1O and body ground — Between audio unit terminal 1Q and body ground • Is there continuity?	Yes	Go to the next step.
		No	Go to Step 9.
8	**INSPECT CAN LINE IN AUDIO UNIT FOR SHORT TO GROUND** • Disconnect the audio unit connector. • Inspect for continuity at the following terminals: — Between audio unit terminal 1O (wiring harness side) and body ground — Between audio unit terminal 1Q (wiring harness side) and body ground • Is there continuity?	Yes	Repair or replace the wiring harness between the audio unit and connector C-34 because the wiring harness is shorted to ground.
		No	Replace the audio unit because there is a short to ground in the audio unit. (See 09-20-4 AUDIO UNIT REMOVAL/INSTALLATION.)
9	**INSPECT FOR SHORT TO GROUND BETWEEN CONNECTOR C-34 AND INSTRUMENT CLUSTER** • Inspect for continuity at the following terminals: — Between instrument cluster terminal C and body ground — Between instrument cluster terminal E and body ground • Is there continuity?	Yes	Go to the next step.
		No	Repair or replace the wiring harness between connectors C-08 and C-34 because the wiring harness is shorted to ground.
10	**INSPECT CAN LINE IN INSTRUMENT CLUSTER FOR SHORT TO GROUND** • Disconnect the instrument cluster connector. • Inspect for continuity at the following terminals: — Between instrument cluster terminal C (wiring harness side) and body ground — Between instrument cluster terminal E (wiring harness side) and body ground • Is there continuity?	Yes	Repair or replace the wiring harness between the instrument cluster and connector C-34 because the wiring harness is shorted to ground.
		No	Replace the instrument cluster because there is a short to ground in the instrument cluster. (See 09-22-6 INSTRUMENT CLUSTER REMOVAL/INSTALLATION.)

ON-BOARD DIAGNOSTIC [SKYACTIV-D 2.2 (R.H.D.)]

Step	Inspection		Action
11	**INSPECT FOR SHORT TO GROUND BETWEEN CONNECTORS C-14 AND C-08** • Disconnect connector C-14. • Connect connector C-08. • Inspect for continuity at the following terminals: — Between DLC-2 terminal L and body ground — Between DLC-2 terminal K and body ground • Is there continuity?	Yes	Repair or replace the wiring harness between connectors C-14 and C-08 because the wiring harness is shorted to ground.
		No	Go to the next step.
12	**INSPECT FOR SHORT TO GROUND BETWEEN CONNECTOR C-14 AND CONNECTORS C-47 AND C-48** • Disconnect connectors C-47 and C-48. • Connect connector C-14. • Inspect for continuity at the following terminals: — Between DLC-2 terminal L and body ground — Between DLC-2 terminal K and body ground • Is there continuity?	Yes	Repair or replace the wiring harness between connectors C-47 and C-48 and connector C-14 because the wiring harness is shorted to ground.
		No	Go to the next step.
13	**INSPECT FOR SHORT TO GROUND BETWEEN REAR VEHICLE MONITORING CONTROL MODULE (RH) OR BSM CONTROL MODULE (RH) AND CONNECTORS C-47 AND C-48** • Inspect for continuity at the following terminals: — Between rear vehicle monitoring control module (RH) terminal L and body ground (with rear vehicle monitoring system) — Between rear vehicle monitoring control module (RH) terminal I and body ground (with rear vehicle monitoring system) — Between BSM control module (RH) terminal H and body ground (with BSM system) — Between BSM control module (RH) terminal G and body ground (with BSM system) • Is there continuity?	Yes	• Go to the next step. (With rear vehicle monitoring system) • Go to Step 15. (With BSM system)
		No	Go to Step 16.
14	**INSPECT FOR SHORT TO GROUND BETWEEN REAR VEHICLE MONITORING CONTROL MODULE (RH) AND CONNECTOR C-43** • Disconnect connector C-43. • Inspect for continuity at the following terminals: — Between rear vehicle monitoring control module (RH) terminal L and body ground — Between rear vehicle monitoring control module (RH) terminal I and body ground • Is there continuity?	Yes	Go to the next step.
		No	Repair or replace the wiring harness between connector C-43 and connectors C-47 and C-48 because the wiring harness is shorted to ground.

ON-BOARD DIAGNOSTIC [SKYACTIV-D 2.2 (R.H.D.)]

Step	Inspection		Action
15	**INSPECT CAN LINE IN REAR VEHICLE MONITORING CONTROL MODULE (RH) OR BSM CONTROL MODULE (RH) FOR SHORT TO GROUND** • Disconnect the rear vehicle monitoring control module (RH) connector or BSM control module (RH) connector. • Inspect for continuity at the following terminals: — Between rear vehicle monitoring control module (RH) terminal L (wiring harness side) and body ground (with rear vehicle monitoring system) — Between rear vehicle monitoring control module (RH) terminal I (wiring harness side) and body ground (with rear vehicle monitoring system) — Between BSM control module (RH) terminal H (wiring harness side) and body ground (with BSM system) — Between rear vehicle monitoring control module (RH) terminal G (wiring harness side) and body ground (with rear vehicle monitoring system) • Is there continuity?	Yes	• Repair or replace the wiring harness between the rear vehicle monitoring control module (RH) and connector C-43 because the wiring harness is shorted to ground. (With rear vehicle monitoring system) • Repair or replace the wiring harness between the BSM control module (RH) and connectors C-47 and C-48 because the wiring harness is shorted to ground. (With BSM system)
		No	Replace the rear vehicle monitoring control module (RH) or the BSM control module (RH) because there is a short to ground in the rear vehicle monitoring control module (RH) or the BSM control module (RH). (See 09-22-77 REAR VEHICLE MONITORING CONTROL MODULE REMOVAL/INSTALLATION.) (See 09-22-67 BLIND SPOT MONITORING (BSM) CONTROL MODULE REMOVAL/INSTALLATION.)
16	**INSPECT FOR SHORT TO GROUND BETWEEN REAR BODY CONTROL MODULE (RBCM) AND BSM CONTROL MODULE (LH) OR REAR MOUNT CAMERA** • Disconnect the rear body control module (RBCM) connector. • Inspect for continuity at the following terminals: — Between BSM control module (LH) terminal H and body ground (with BSM system) — Between BSM control module (LH) terminal G and body ground (with BSM system) — Between rear mount camera terminal G and body ground (with rear mount camera) — Between rear mount camera terminal H and body ground (with rear mount camera) • Is there continuity?	Yes	Go to the next step.
		No	Go to Step 19.
17	**INSPECT FOR SHORT TO GROUND BETWEEN REAR BODY CONTROL MODULE (RBCM) AND CONNECTOR C-23 OR C-21** • Disconnect connector C-23 or C-21. • Inspect for continuity at the following terminals: — Between rear body control module (RBCM) terminal 4I (wiring harness side) and body ground — Between rear body control module (RBCM) terminal 4L (wiring harness side) and body ground • Is there continuity?	Yes	Repair or replace the wiring harness between the rear body control module (RBCM) and connector C-23 or C-21 because the wiring harness is shorted to ground.
		No	Go to the next step.

ON-BOARD DIAGNOSTIC [SKYACTIV-D 2.2 (R.H.D.)]

Step	Inspection		Action
18	**INSPECT CAN LINE IN BSM CONTROL MODULE (LH) OR REAR MOUNT CAMERA FOR SHORT TO GROUND** • Disconnect the BSM control module (LH) connector or the rear mount camera connector. • Inspect for continuity at the following terminals: — Between BSM control module (LH) terminal H (wiring harness side) and body ground (with BSM system) — Between BSM control module (LH) terminal G (wiring harness side) and body ground (with BSM system) — Between rear mount camera terminal G (wiring harness side) and body ground (with rear mount camera) — Between rear mount camera terminal H (wiring harness side) and body ground (with rear mount camera) • Is there continuity?	Yes	• Repair or replace the wiring harness between BSM control module (LH) and connector C-23 because the wiring harness is shorted to ground. (With BSM system) • Repair or replace the wiring harness between the rear mount camera and connector C-21 because the wiring harness is shorted to ground. (With rear mount camera)
		No	Replace the BSM control module (LH) or the rear mount camera because there is a short to ground in the BSM control module (LH) or the rear mount camera. (See 09-22-67 BLIND SPOT MONITORING (BSM) CONTROL MODULE REMOVAL/INSTALLATION.)
19	**INSPECT CAN LINE INSIDE REAR BODY CONTROL MODULE (RBCM) FOR SHORT TO GROUND** • Disconnect the rear body control module (RBCM) connector. • Inspect for continuity at the following terminals: — Between rear body control module (RBCM) terminal 4G (wiring harness side) and body ground — Between rear body control module (RBCM) terminal 4J (wiring harness side) and body ground • Is there continuity?	Yes	Repair or replace the wiring harness between the rear body control module (RBCM) and connectors C-47 and C-48 because the wiring harness is shorted to ground.
		No	Replace the rear body control module (RBCM) because there is a short to ground in the rear body control module (RBCM). (See 09-40-9 REAR BODY CONTROL MODULE (RBCM) REMOVAL/INSTALLATION.)

DETERMINING SHORT TO POWER SUPPLY LOCATION (MS-CAN) [SKYACTIV-D 2.2 (R.H.D.)]

id100206001000

Caution

- **Perform the following malfunction diagnosis only when it is diagnosed with a short to the power supply by 10-02D-3 CONTROLLER AREA NETWORK (CAN) MALFUNCTION DIAGNOSIS FLOW [SKYACTIV-D 2.2 (R.H.D.)].**

ON-BOARD DIAGNOSTIC [SKYACTIV-D 2.2 (R.H.D.)]

System wiring diagram

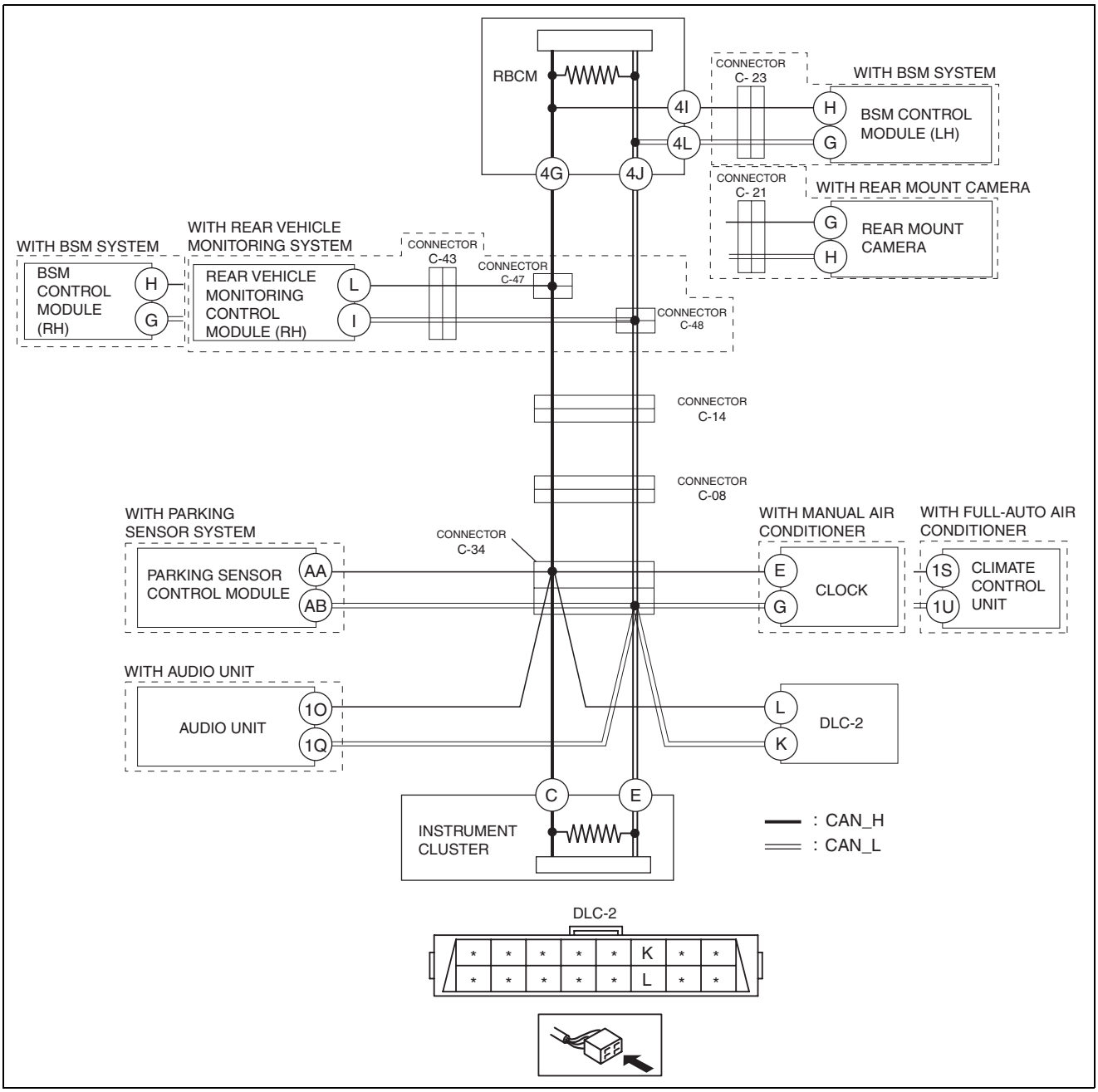

ac5wzw0000068

Determination procedure

Caution

- **When disconnecting the connector, verify that there is no looseness, damage, deformation, corrosion, or poor connection of the connector terminals.**
- **When inspecting the DLC-2, touch it with a paper clip or similar thin pin without directly inserting a tester into the terminals.**
- **Disconnect the negative battery cable before performing any work that requires handling of connectors.**

ON-BOARD DIAGNOSTIC [SKYACTIV-D 2.2 (R.H.D.)]

Step	Inspection		Action
1	**INSPECT FOR SHORT TO POWER SUPPLY BETWEEN CONNECTOR C-08 AND INSTRUMENT CLUSTER** • Disconnect the negative battery cable. (See 01-17B-9 NEGATIVE BATTERY CABLE DISCONNECTION/CONNECTION [SKYACTIV-D 2.2].) • Disconnect connector C-08. • Connect the negative battery cable. (See 01-17B-9 NEGATIVE BATTERY CABLE DISCONNECTION/CONNECTION [SKYACTIV-D 2.2].) • Switch the ignition ON (engine off). • Measure the voltage at DLC-2 terminals L and K. • Is the voltage between 1.5 - 3.5 V?	Yes	Go to Step 11.
		No	Go to the next step.
2	**INSPECT FOR SHORT TO POWER SUPPLY BETWEEN CONNECTORS C-34 AND DLC-2** • Switch the ignition off (LOCK). • Disconnect the negative battery cable. (See 01-17B-9 NEGATIVE BATTERY CABLE DISCONNECTION/CONNECTION [SKYACTIV-D 2.2].) • Disconnect connector C-34. • Connect the negative battery cable. (See 01-17B-9 NEGATIVE BATTERY CABLE DISCONNECTION/CONNECTION [SKYACTIV-D 2.2].) • Switch the ignition ON (engine off). • Measure the voltage at DLC-2 terminals L and K. • Is the voltage 0 V?	Yes	Go to the next step.
		No	Repair or replace the wiring harness between DLC-2 and connector C-34 because the wiring harness is shorted to the power supply.
3	**INSPECT FOR SHORT TO POWER SUPPLY BETWEEN CONNECTOR C-34 AND PARKING SENSOR CONTROL MODULE** • Measure the voltage at parking sensor control module terminals AA and AB. • Is the voltage between 1.5 - 3.5 V?	Yes	Go to Step 5.
		No	Go to the next step.
4	**INSPECT PARKING SENSOR CONTROL MODULE FOR SHORT TO POWER SUPPLY** • Switch the ignition off (LOCK). • Disconnect the negative battery cable. (See 01-17B-9 NEGATIVE BATTERY CABLE DISCONNECTION/CONNECTION [SKYACTIV-D 2.2].) • Disconnect the parking sensor control module connector. • Connect connector C-34. • Connect the negative battery cable. (See 01-17B-9 NEGATIVE BATTERY CABLE DISCONNECTION/CONNECTION [SKYACTIV-D 2.2].) • Switch the ignition ON (engine off). • Measure the voltage at DLC-2 terminals L and K. • Is the voltage between 1.5 - 3.5 V?	Yes	Replace the parking sensor control module because there is a short to power supply in the parking sensor control module. (See 09-22-57 PARKING SENSOR CONTROL MODULE REMOVAL/INSTALLATION.)
		No	Repair or replace the wiring harness between the parking sensor control module and connector C-34 because the wiring harness is shorted to the power supply.
5	**INSPECT FOR SHORT TO POWER SUPPLY BETWEEN CONNECTOR C-34 AND CLIMATE CONTROL UNIT OR CLOCK** • Measure the voltage at climate control unit terminals 1S and 1U. (with full-auto air conditioner) • Measure the voltage at clock terminals E and G. (with manual air conditioner) • Is the voltage between 1.5 - 3.5 V?	Yes	Go to Step 7.
		No	Go to the next step.

ON-BOARD DIAGNOSTIC [SKYACTIV-D 2.2 (R.H.D.)]

Step	Inspection		Action
6	**INSPECT CLIMATE CONTROL UNIT OR CLOCK FOR SHORT TO POWER SUPPLY** • Switch the ignition off (LOCK). • Disconnect the negative battery cable. (See 01-17B-9 NEGATIVE BATTERY CABLE DISCONNECTION/CONNECTION [SKYACTIV-D 2.2].) • Disconnect the climate control unit connector or the clock connector. • Connect connector C-34. • Connect the negative battery cable. (See 01-17B-9 NEGATIVE BATTERY CABLE DISCONNECTION/CONNECTION [SKYACTIV-D 2.2].) • Switch the ignition ON (engine off). • Measure the voltage at DLC-2 terminals L and K. • Is the voltage between 1.5 - 3.5 V?	Yes	Replace the climate control unit or the clock because there is a short to power supply inside the climate control unit or the clock. (See 07-40A-32 CLIMATE CONTROL UNIT REMOVAL/INSTALLATION [FULL-AUTO AIR CONDITIONER].) (See 09-22-92 CLOCK REMOVAL/INSTALLATION.)
		No	Repair or replace the wiring harness between the climate control unit or the clock and connector C-34 because the wiring harness is shorted to the power supply.
7	**INSPECT FOR SHORT TO POWER SUPPLY BETWEEN CONNECTOR C-34 AND AUDIO** • Measure the voltage at audio unit terminals 1O and 1Q. • Is the voltage between 1.5 - 3.5 V?	Yes	Go to Step 9.
		No	Go to the next step.
8	**INSPECT AUDIO UNIT FOR SHORT TO POWER SUPPLY** • Switch the ignition off (LOCK). • Disconnect the negative battery cable. (See 01-17B-9 NEGATIVE BATTERY CABLE DISCONNECTION/CONNECTION [SKYACTIV-D 2.2].) • Disconnect the audio unit connector. • Connect connector C34. • Connect the negative battery cable. (See 01-17B-9 NEGATIVE BATTERY CABLE DISCONNECTION/CONNECTION [SKYACTIV-D 2.2].) • Switch the ignition ON (engine off). • Measure the voltage at audio unit terminals 1O and 1Q (wiring harness side). • Is the voltage between 1.5 - 3.5 V?	Yes	Replace the audio unit because there is a short to the power supply in the audio unit. (See 09-20-4 AUDIO UNIT REMOVAL/INSTALLATION.)
		No	Repair or replace the wiring harness between the audio unit and connector C-34 because the wiring harness is shorted to the power supply.
9	**INSPECT FOR SHORT TO POWER SUPPLY BETWEEN CONNECTOR C-34 AND INSTRUMENT CLUSTER** • Measure the voltage at instrument cluster terminals C and E. • Is the voltage between 1.5 - 3.5 V?	Yes	Repair or replace the wiring harness between connector C-08 and connector C-34 because the wiring harness is shorted to the power supply.
		No	Go to the next step.
10	**INSPECT INSTRUMENT CLUSTER FOR SHORT TO POWER SUPPLY** • Switch the ignition off (LOCK). • Disconnect the negative battery cable. (See 01-17B-9 NEGATIVE BATTERY CABLE DISCONNECTION/CONNECTION [SKYACTIV-D 2.2].) • Disconnect the instrument cluster connector. • Connect connector C-34. • Connect the negative battery cable. (See 01-17B-9 NEGATIVE BATTERY CABLE DISCONNECTION/CONNECTION [SKYACTIV-D 2.2].) • Switch the ignition ON (engine off). • Measure the voltage at DLC-2 terminals L and K. • Is the voltage between 1.5 - 3.5 V?	Yes	Replace the instrument cluster because there is a short to the power supply in the instrument cluster. (See 09-22-6 INSTRUMENT CLUSTER REMOVAL/INSTALLATION.)
		No	Repair or replace the wiring harness between the instrument cluster and connector C-34 because the wiring harness is shorted to the power supply.

ON-BOARD DIAGNOSTIC [SKYACTIV-D 2.2 (R.H.D.)]

Step	Inspection		Action
11	**INSPECT FOR SHORT TO POWER SUPPLY BETWEEN CONNECTORS C-14 AND C-08** • Switch the ignition off (LOCK). • Disconnect the negative battery cable. (See 01-17B-9 NEGATIVE BATTERY CABLE DISCONNECTION/CONNECTION [SKYACTIV-D 2.2].) • Disconnect connector C-14. • Connect connector C-08. • Connect the negative battery cable. (See 01-17B-9 NEGATIVE BATTERY CABLE DISCONNECTION/CONNECTION [SKYACTIV-D 2.2].) • Switch the ignition ON (engine off). • Measure the voltage at DLC-2 terminals L and K. • Is the voltage between 1.5 - 3.5 V?	Yes	Go to the next step.
		No	Repair or replace the wiring harness between connector C-14 and connector C-08 because the wiring harness is shorted to the power supply.
12	**INSPECT FOR SHORT TO POWER SUPPLY BETWEEN CONNECTORS C-47 AND C-48 AND CONNECTOR C-14** • Switch the ignition off (LOCK). • Disconnect the negative battery cable. (See 01-17B-9 NEGATIVE BATTERY CABLE DISCONNECTION/CONNECTION [SKYACTIV-D 2.2].) • Disconnect connectors C-47 and C-48. • Connect connector C-14. • Connect the negative battery cable. (See 01-17B-9 NEGATIVE BATTERY CABLE DISCONNECTION/CONNECTION [SKYACTIV-D 2.2].) • Switch the ignition ON (engine off). • Measure the voltage at DLC-2 terminals L and K. • Is the voltage between 1.5 - 3.5 V?	Yes	Go to the next step.
		No	Repair or replace the wiring harness between connectors C-47 and C-48 and connector C-14 because the wiring harness is shorted to the power supply.
13	**INSPECT BETWEEN REAR VEHICLE MONITORING CONTROL MODULE (RH) OR BSM CONTROL MODULE (RH) AND CONNECTORS C-47 AND C-48 FOR SHORT TO POWER SUPPLY** • Measure the voltage at rear vehicle monitoring control module (RH) terminals L and I. (With rear vehicle monitoring system) • Measure the voltage at BSM control module (RH) terminals H and G. (With BSM system) • Is the voltage between 1.5 - 3.5 V?	Yes	Go to Step 16.
		No	• Go to the next step. (With rear vehicle monitoring system) • Go to Step 15.
14	**INSPECT FOR SHORT TO POWER SUPPLY BETWEEN REAR VEHICLE MONITORING CONTROL MODULE (RH) AND CONNECTOR C-43** • Switch the ignition off (LOCK). • Disconnect the negative battery cable. (See 01-17B-9 NEGATIVE BATTERY CABLE DISCONNECTION/CONNECTION [SKYACTIV-D 2.2].) • Disconnect connectors C-43. • Connect the negative battery cable. (See 01-17B-9 NEGATIVE BATTERY CABLE DISCONNECTION/CONNECTION [SKYACTIV-D 2.2].) • Switch the ignition ON (engine off). • Measure the voltage at rear vehicle monitoring (RH) terminals L and I. • Is the voltage between 1.5 - 3.5 V?	Yes	Repair or replace the wiring harness between connector C-43 and connectors C-47 and C-48 because the wiring harness is shorted to the power supply.
		No	Go to the next step.

ON-BOARD DIAGNOSTIC [SKYACTIV-D 2.2 (R.H.D.)]

Step	Inspection		Action
15	**INSPECT BETWEEN REAR VEHICLE MONITORING CONTROL MODULE (RH) OR BSM CONTROL MODULE (RH) FOR SHORT TO POWER SUPPLY** • Switch the ignition off (LOCK). • Disconnect the negative battery cable. (See 01-17B-9 NEGATIVE BATTERY CABLE DISCONNECTION/CONNECTION [SKYACTIV-D 2.2].) • Disconnect the rear vehicle monitoring control modules (RH) connector or the BSM control module (RH) connector. • Connect connectors C-47 and C-48. • Connect the negative battery cable. (See 01-17B-9 NEGATIVE BATTERY CABLE DISCONNECTION/CONNECTION [SKYACTIV-D 2.2].) • Switch the ignition ON (engine off). • Measure the voltage at DLC-2 terminals L and K. • Is the voltage between 1.5 - 3.5 V?	Yes	Replace the rear vehicle monitoring control module (RH) or the BSM control module (RH) because there is a short to the power supply in the rear vehicle monitoring control module (RH) or the BSM control module (RH). (See 09-22-77 REAR VEHICLE MONITORING CONTROL MODULE REMOVAL/INSTALLATION.) (See 09-22-67 BLIND SPOT MONITORING (BSM) CONTROL MODULE REMOVAL/INSTALLATION.)
		No	• Repair or replace the wiring harness between the rear vehicle monitoring control module (RH) and connector C-43 because the wiring harness is shorted to the power supply. (With rear vehicle monitoring system) • Repair or replace the wiring harness between the BSM control module (RH) and connectors C-47 and C-48 because the wiring harness is shorted to the power supply. (With BSM system)
16	**INSPECT FOR SHORT TO POWER SUPPLY BETWEEN REAR BODY CONTROL MODULE (RBCM) AND BSM CONTROL MODULE (LH) OR REAR MOUNT CAMERA** • Switch the ignition off (LOCK). • Disconnect the negative battery cable. (See 01-17B-9 NEGATIVE BATTERY CABLE DISCONNECTION/CONNECTION [SKYACTIV-D 2.2].) • Disconnect the rear body control module (RBCM) connector. • Connect the negative battery cable. (See 01-17B-9 NEGATIVE BATTERY CABLE DISCONNECTION/CONNECTION [SKYACTIV-D 2.2].) • Switch the ignition ON (engine off). • Measure the voltage at BSM control module (LH) terminals H and G. (With BSM system) • Measure the voltage at BSM control module (LH) terminals H and G. (With rear mount camera) • Is the voltage between 1.5 - 3.5 V?	Yes	Go to Step 19.
		No	Go to the next step.
17	**INSPECT BETWEEN REAR BODY CONTROL MODULE (RBCM) AND CONNECTOR C-23 OR C-21 FOR SHORT TO POWER SUPPLY** • Switch the ignition off (LOCK). • Disconnect the negative battery cable. (See 01-17B-9 NEGATIVE BATTERY CABLE DISCONNECTION/CONNECTION [SKYACTIV-D 2.2].) • Disconnect connector C-23 or C-21. • Connect the rear body control module (RBCM) connector. • Connect connectors C-47 and C-48. • Connect the negative battery cable. (See 01-17B-9 NEGATIVE BATTERY CABLE DISCONNECTION/CONNECTION [SKYACTIV-D 2.2].) • Switch the ignition ON (engine off). • Measure the voltage at DLC-2 terminals L and K. • Is the voltage between 1.5 - 3.5 V?	Yes	Go to the next step.
		No	Repair or replace the wiring harness between the rear body control module (RBCM) and connector C-23 or C-21 because the wiring harness is shorted to the power supply.

ON-BOARD DIAGNOSTIC [SKYACTIV-D 2.2 (R.H.D.)]

Step	Inspection		Action
18	**INSPECT BSM CONTROL MODULE (LH) OR REAR MOUNT CAMERA FOR SHORT TO POWER SUPPLY** • Switch the ignition off (LOCK). • Disconnect the negative battery cable. (See 01-17B-9 NEGATIVE BATTERY CABLE DISCONNECTION/CONNECTION [SKYACTIV-D 2.2].) • Disconnect the BSM control module (LH) connector or the rear mount camera connector. • Connect connector C-23 or C-21. • Connect the negative battery cable. (See 01-17B-9 NEGATIVE BATTERY CABLE DISCONNECTION/CONNECTION [SKYACTIV-D 2.2].) • Switch the ignition ON (engine off). • Measure the voltage at DLC-2 terminals L and K. • Is the voltage between 1.5 - 3.5 V?	Yes	Replace the BSM control module (LH) or the rear mount camera because there is a short to the power supply in the BSM control module (LH) or the rear mount camera. (See 09-22-67 BLIND SPOT MONITORING (BSM) CONTROL MODULE REMOVAL/INSTALLATION.) (See 09-20-68 REAR MOUNT CAMERA REMOVAL/INSTALLATION.)
		No	• Repair or replace the wiring harness between BSM control module (LH) and connector C-23 because the wiring harness is shorted to the power supply. (With BSM system) • Repair or replace the wiring harness between the rear mount camera and connector C-21 because the wiring harness is shorted to the power supply. (With rear mount camera)
19	**INSPECT REAR BODY CONTROL MODULE (RBCM) FOR SHORT TO POWER SUPPLY** • Switch the ignition off (LOCK). • Disconnect the negative battery cable. (See 01-17B-9 NEGATIVE BATTERY CABLE DISCONNECTION/CONNECTION [SKYACTIV-D 2.2].) • Connect connectors C-47 and C-48. • Connect the negative battery cable. (See 01-17B-9 NEGATIVE BATTERY CABLE DISCONNECTION/CONNECTION [SKYACTIV-D 2.2].) • Switch the ignition ON (engine off). • Measure the voltage at DLC-2 terminals L and K. • Is the voltage between 1.5 - 3.5 V?	Yes	Replace the rear body control module (RBCM) because there is a short to the power supply in the rear body control module (RBCM). (See 09-40-9 REAR BODY CONTROL MODULE (RBCM) REMOVAL/INSTALLATION.)
		No	Repair or replace the wiring harness between the rear body control module (RBCM) and connectors C-47 and C-48 because the wiring harness is shorted to the power supply.

DETERMINING SHORT BETWEEN CIRCUITS LOCATION (MS-CAN) [SKYACTIV-D 2.2 (R.H.D.)]

id100206001100

Caution

- **Perform the following malfunction diagnosis only when it is diagnosed with a short between circuits by 10-02D-3 CONTROLLER AREA NETWORK (CAN) MALFUNCTION DIAGNOSIS FLOW [SKYACTIV-D 2.2 (R.H.D.)].**

ON-BOARD DIAGNOSTIC [SKYACTIV-D 2.2 (R.H.D.)]

System wiring diagram

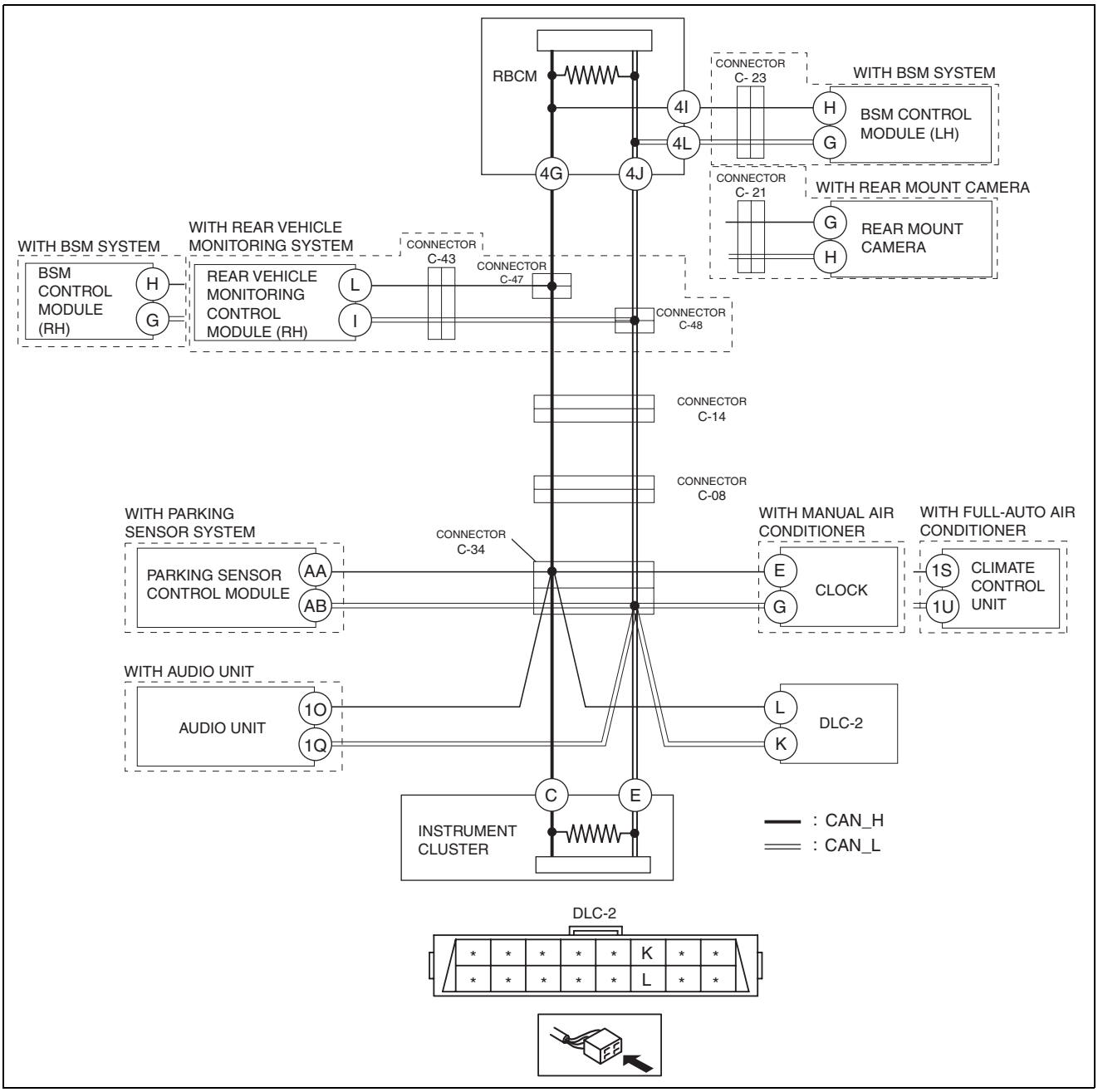

ac5wzw0000068

Determination procedure

Caution

- **When disconnecting the connector, verify that there is no looseness, damage, deformation, corrosion, or poor connection of the connector terminals.**
- **When inspecting the DLC-2, touch it with a paper clip or similar thin pin without directly inserting a tester into the terminals.**

ON-BOARD DIAGNOSTIC [SKYACTIV-D 2.2 (R.H.D.)]

Step	Inspection		Action
1	**INSPECT BETWEEN CONNECTOR C-08 AND INSTRUMENT CLUSTER FOR SHORT BETWEEN CIRCUITS** • Disconnect the negative battery cable. (See 01-17B-9 NEGATIVE BATTERY CABLE DISCONNECTION/CONNECTION [SKYACTIV-D 2.2].) • Disconnect connector C-08. • Connect the negative battery cable. (See 01-17B-9 NEGATIVE BATTERY CABLE DISCONNECTION/CONNECTION [SKYACTIV-D 2.2].) • Switch the ignition ON (engine off). • Measure the voltage at DLC-2 terminals L and K. • Is the voltage at DLC-2 terminals L and K the same?	Yes	Go to the next step.
		No	Go to Step 11.
2	**INSPECT BETWEEN CONNECTOR C-34 AND DLC-2 FOR SHORT BETWEEN CIRCUITS** • Switch the ignition off (LOCK). • Disconnect the negative battery cable. (See 01-17B-9 NEGATIVE BATTERY CABLE DISCONNECTION/CONNECTION [SKYACTIV-D 2.2].) • Disconnect connector C-34. • Inspect for continuity between DLC-2 terminals L and K. • Is there continuity?	Yes	Repair or replace the wiring harness between connector C-34 and DLC-2 because the wiring harness is shorted between circuits.
		No	Go to the next step.
3	**INSPECT BETWEEN CONNECTOR C-34 AND PARKING SENSOR CONTROL MODULE FOR SHORT BETWEEN CIRCUITS** • Inspect for continuity between parking sensor control module terminals AA and AB. • Is there continuity?	Yes	Go to the next step.
		No	Go to Step 5.
4	**INSPECT PARKING SENSOR CONTROL MODULE FOR SHORT BETWEEN CIRCUITS** • Disconnect the parking sensor control module connector. • Inspect for continuity between parking sensor control module terminals AA and AB (wiring harness side). • Is there continuity?	Yes	Repair or replace the wiring harness between the parking sensor control module and connector C-34 because the wiring harness is shorted between circuits.
		No	Replace the parking sensor control module because there is a short between circuits in the parking sensor control module. (See 09-22-57 PARKING SENSOR CONTROL MODULE REMOVAL/INSTALLATION.)
5	**INSPECT BETWEEN CONNECTOR C-34 AND CLIMATE CONTROL UNIT OR CLOCK FOR SHORT BETWEEN CIRCUITS** • Inspect for continuity between climate control unit terminals 1S and 1U. (with full-auto air conditioner) • Inspect for continuity between clock terminals E and G. (with manual air conditioner) • Is there continuity?	Yes	Go to the next step.
		No	Go to Step 7.
6	**INSPECT CLIMATE CONTROL UNIT OR CLOCK FOR SHORT BETWEEN CIRCUITS** • Disconnect the climate control unit connector or the clock connector. • Inspect for continuity between climate control unit terminals 1S and 1U (wiring harness side). (with full-auto air conditioner) • Inspect for continuity between clock terminals E and G (wiring harness side). (with manual air conditioner) • Is there continuity?	Yes	Repair or replace the wiring harness between the climate control unit or clock and connector C-34 because the wiring harness is shorted between circuits.
		No	Replace the climate control unit or the clock because there is a short between circuits inside the climate control unit or the clock. (See 07-40A-32 CLIMATE CONTROL UNIT REMOVAL/INSTALLATION [FULL-AUTO AIR CONDITIONER].) (See 09-22-92 CLOCK REMOVAL/INSTALLATION.)

ON-BOARD DIAGNOSTIC [SKYACTIV-D 2.2 (R.H.D.)]

Step	Inspection		Action
7	**INSPECT BETWEEN CONNECTOR C-34 AND AUDIO UNIT FOR SHORT BETWEEN CIRCUITS** • Inspect for continuity between audio unit terminals 1O and 1Q. • Is there continuity?	Yes	Go to the next step.
		No	Go to Step 9.
8	**INSPECT AUDIO UNIT FOR SHORT BETWEEN CIRCUITS** • Disconnect the audio unit connector. • Inspect for continuity between audio unit terminals 1O and 1Q (wiring harness side). • Is there continuity?	Yes	Repair or replace the wiring harness between the audio unit and connector C-34 because the wiring harness is shorted between circuits.
		No	Replace the audio unit because there is a short between circuits in the audio unit. (See 09-20-4 AUDIO UNIT REMOVAL/INSTALLATION.)
9	**INSPECT BETWEEN CONNECTOR C-34 AND INSTRUMENT CLUSTER FOR SHORT BETWEEN CIRCUITS** • Inspect for continuity between instrument cluster terminals C and E. • Is there continuity?	Yes	Go to the next step.
		No	Repair or replace the wiring harness between connectors C-34 and C-08 because the wiring harness is shorted between circuits.
10	**INSPECT INSTRUMENT CLUSTER FOR SHORT BETWEEN CIRCUITS** • Disconnect the instrument cluster connector. • Inspect for continuity between instrument cluster terminals C and E (wiring harness side). • Is there continuity?	Yes	Repair or replace the wiring harness between the instrument cluster and connector C-34 because the wiring harness is shorted between circuits.
		No	Replace the instrument cluster because there is a short between circuits in the instrument cluster. (See 09-22-6 INSTRUMENT CLUSTER REMOVAL/INSTALLATION.)
11	**INSPECT BETWEEN CONNECTORS C-14 AND C-08 FOR SHORT BETWEEN CIRCUITS** • Switch the ignition off (LOCK). • Disconnect the negative battery cable. (See 01-17B-9 NEGATIVE BATTERY CABLE DISCONNECTION/CONNECTION [SKYACTIV-D 2.2].) • Disconnect connector C-14. • Connect connector C-08. • Connect the negative battery cable. (See 01-17B-9 NEGATIVE BATTERY CABLE DISCONNECTION/CONNECTION [SKYACTIV-D 2.2].) • Switch the ignition ON (engine off). • Measure the voltage at DLC-2 terminals L and K. • Is the voltage at DLC-2 terminals L and K the same?	Yes	Repair or replace the wiring harness between connectors C-14 and C-08 because the wiring harness is shorted between circuits.
		No	Go to the next step.
12	**INSPECT BETWEEN CONNECTORS C-47 AND C-48 AND CONNECTOR C-14 FOR SHORT BETWEEN CIRCUITS** • Switch the ignition off (LOCK). • Disconnect the negative battery cable. (See 01-17B-9 NEGATIVE BATTERY CABLE DISCONNECTION/CONNECTION [SKYACTIV-D 2.2].) • Disconnect connectors C-47 and C-48. • Connect connector C-14. • Connect the negative battery cable. (See 01-17B-9 NEGATIVE BATTERY CABLE DISCONNECTION/CONNECTION [SKYACTIV-D 2.2].) • Switch the ignition ON (engine off). • Measure the voltage at DLC-2 terminals L and K. • Is the voltage at DLC-2 terminals L and K the same?	Yes	Repair or replace the wiring harness between connectors C-47 and C-48 and connector C-14 because the wiring harness is shorted between circuits.
		No	Go to the next step.

ON-BOARD DIAGNOSTIC [SKYACTIV-D 2.2 (R.H.D.)]

Step	Inspection		Action
13	**INSPECT BETWEEN REAR VEHICLE MONITORING CONTROL MODULE (RH) OR BSM CONTROL MODULE (RH) AND CONNECTORS C-47 AND C-48 FOR SHORT BETWEEN CIRCUITS** • Switch the ignition off (LOCK). • Inspect for continuity between rear vehicle control module (RH) terminals L and I. (With rear vehicle monitoring system) • Inspect for continuity between BSM control module (RH) terminals H and G. (With BSM system) • Is there continuity?	Yes	• Go to the next step. (With rear vehicle monitoring system) • Go to Step 15. (With BSM system)
		No	Go to Step 16.
14	**INSPECT BETWEEN REAR VEHICLE MONITORING CONTROL MODULE (RH) AND CONNECTOR C-43 FOR SHORT BETWEEN CIRCUITS** • Disconnect connector C-43. • Inspect for continuity between rear vehicle control module (RH) terminals L and I. • Is there continuity?	Yes	Go to the next step.
		No	Repair or replace the wiring harness between connector C-43 and connectors C-47 and C-48 because the wiring harness is shorted between circuits.
15	**INSPECT BETWEEN REAR VEHICLE MONITORING CONTROL MODULE (RH) OR BSM CONTROL MODULE (RH) FOR SHORT BETWEEN CIRCUITS** • Disconnect the rear vehicle monitoring control modules (RH) connector or the BSM control module (RH) connector. • Inspect for continuity between rear vehicle control module (RH) terminals L and I (wiring harness side). (With rear vehicle monitoring system) • Inspect for continuity between BSM control module (RH) terminals H and G (wiring harness side). (With BSM system) • Is there continuity?	Yes	• Repair or replace the wiring harness between the rear vehicle monitoring control module (RH) and connector C-43 because the wiring harness is shorted between circuits. (With rear vehicle monitoring system) • Repair or replace the wiring harness between the BSM control module (RH) and connectors C-47 and C-48 because the wiring harness is shorted between circuits. (With BSM system)
		No	Replace the rear vehicle monitoring control module (RH) or the BSM control module (RH) because there is a short between circuits in the rear vehicle monitoring control module (RH) or the BSM control module (RH). (See 09-22-77 REAR VEHICLE MONITORING CONTROL MODULE REMOVAL/INSTALLATION.) (See 09-22-67 BLIND SPOT MONITORING (BSM) CONTROL MODULE REMOVAL/INSTALLATION.)
16	**INSPECT BETWEEN BSM CONTROL MODULE (LH) OR REAR MOUNT CAMERA AND REAR BODY CONTROL MODULE (RBCM) FOR SHORT BETWEEN CIRCUITS** • Disconnect the negative battery cable. (See 01-17B-9 NEGATIVE BATTERY CABLE DISCONNECTION/CONNECTION [SKYACTIV-D 2.2].) • Disconnect the rear body control module (RBCM) connector. • Inspect for continuity between BSM control module (LH) terminals H and G (wiring harness side). (With BSM system) • Inspect the continuity between rear mount camera terminals G and H (wiring harness side). (With rear mount camera) • Is there continuity?	Yes	Go to the next step.
		No	Go to Step 19.
17	**INSPECT BETWEEN REAR BODY CONTROL MODULE (RBCM) AND CONNECTOR C-23 OR C-21 FOR SHORT BETWEEN CIRCUITS** • Disconnect connector C-23 or C-21. • Inspect for continuity between BSM control module (LH) terminals H and G (wiring harness side). (With BSM system) • Inspect the continuity between rear mount camera terminals G and H (wiring harness side). (With rear mount camera) • Is there continuity?	Yes	Repair or replace the wiring harness between the rear body control module (RBCM) and connector C-23 or C-21 because the wiring harness is shorted between circuits.
		No	Go to the next step.

ON-BOARD DIAGNOSTIC [SKYACTIV-D 2.2 (R.H.D.)]

Step	Inspection		Action
18	**INSPECT BSM CONTROL MODULE (LH) OR REAR MOUNT CAMERA FOR SHORT BETWEEN CIRCUITS** • Disconnect the BSM control module (LH) connector or the rear mount camera connector. • Connect the rear body control module (RBCM) connector. • Connect connectors C-47 and C-48 • Connect the negative battery cable. (See 01-17B-9 NEGATIVE BATTERY CABLE DISCONNECTION/CONNECTION [SKYACTIV-D 2.2].) • Switch the ignition ON (engine off). • Measure the voltage at DLC-2 terminals L and K. • Is the voltage at DLC-2 terminals L and K the same?	Yes	• Repair or replace the wiring harness between BSM control module (LH) and rear body control module (RBCM) because the wiring harness is shorted between circuits. (With BSM system) • Repair or replace the wiring harness between the rear mount camera and rear body control module (RBCM) because the wiring harness is shorted between circuits. (With rear mount camera)
		No	Replace the BSM control module (LH) or the rear mount camera because there is a short between circuits in the BSM control module (LH) or the rear mount camera. (See 09-22-67 BLIND SPOT MONITORING (BSM) CONTROL MODULE REMOVAL/INSTALLATION.) (See 09-20-68 REAR MOUNT CAMERA REMOVAL/INSTALLATION.)
19	**INSPECT REAR BODY CONTROL MODULE (RBCM) FOR SHORT BETWEEN CIRCUITS** • Switch the ignition off (LOCK). • Disconnect the negative battery cable. (See 01-17B-9 NEGATIVE BATTERY CABLE DISCONNECTION/CONNECTION [SKYACTIV-D 2.2].) • Connect connectors C-47 and C-48 • Connect the negative battery cable. (See 01-17B-9 NEGATIVE BATTERY CABLE DISCONNECTION/CONNECTION [SKYACTIV-D 2.2].) • Switch the ignition ON (engine off). • Measure the voltage at DLC-2 terminals L and K. • Is the voltage at DLC-2 terminals L and K the same?	Yes	Repair or replace the wiring harness between the rear body control module (RBCM) and connectors C-47 and C-48 because the wiring harness is shorted between circuits.
		No	Replace the rear body control module (RBCM) because there is a short between circuits in the rear body control module (RBCM). (See 09-40-9 REAR BODY CONTROL MODULE (RBCM) REMOVAL/INSTALLATION.)

i-stop

11
SECTION

SYMPTOM
TROUBLESHOOTING
[SKYACTIV-G 2.0] 11-03

SYMPTOM TROUBLESHOOTING [SKYACTIV-G 2.0]

11-03 SYMPTOM TROUBLESHOOTING [SKYACTIV-G 2.0]

FOREWORD [SKYACTIV-G 2.0] 11-03–1
Troubleshooting Procedure 11-03–2
Repair order form 11-03–3
Repair order form (i-stop) 11-03–5
Action for Non-repeatable Malfunction 11-03–6
i-stop control 11-03–6
SYMPTOM DIAGNOSTIC INDEX [SKYACTIV-G 2.0] 11-03–9
QUICK DIAGNOSTIC CHART [SKYACTIV-G 2.0] 11-03–10
NO.1 i-stop WARNING LIGHT (AMBER) ILLUMINATES [SKYACTIV-G 2.0] 11-03–14
NO.2 i-stop WARNING LIGHT (AMBER) FLASHES [SKYACTIV-G 2.0] 11-03–15
NO.3 i-stop INDICATOR LIGHT (GREEN) FLASHES [SKYACTIV-G 2.0] 11-03–16
NO.4 i-stop FUNCTION DOES NOT OPERATE [SKYACTIV-G 2.0] 11-03–17
NO.5 i-stop FUNCTION OPERATES UNDER NO ENGINE-STOP CONDITIONS [SKYACTIV-G 2.0] 11-03–25
NO.6 ENGINE DOES NOT RESTART [SKYACTIV-G 2.0] 11-03–30
NO.7 LIMITED i-stop FUNCTION OPERATION TIME [SKYACTIV-G 2.0] 11-03–36
NO.8 INEFFECTIVE OPERATION OF A/C DURING ENGINE STOP (i-stop system) [SKYACTIV-G 2.0] 11-03–39
NO.9 ACCELERATION MALFUNCTION [SKYACTIV-G 2.0] 11-03–42
NO.10 VEHICLE MOVES WHEN ACCELERATING FROM STANDSTILL ON SLOPE [SKYACTIV-G 2.0] 11-03–45

SYMPTOM TROUBLESHOOTING [SKYACTIV-G 2.0]

FOREWORD [SKYACTIV-G 2.0]

id1103a1000200

- If there is any vehicle malfunction complaint lodged by a customer, perform malfunction diagnosis according to the troubleshooting procedure.

SYMPTOM TROUBLESHOOTING [SKYACTIV-G 2.0]

Troubleshooting Procedure

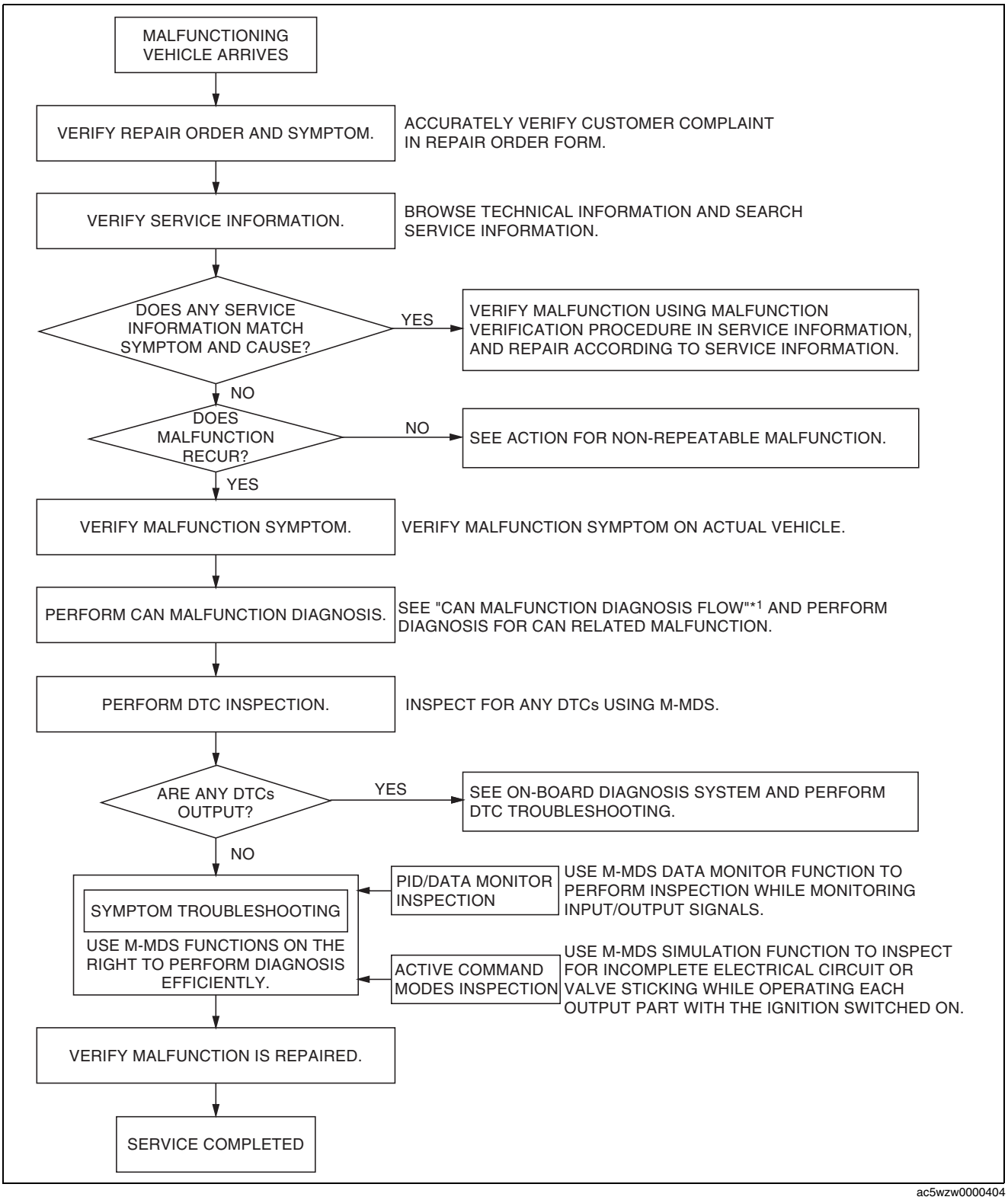

ac5wzw0000404

*1 : 10-02A-3 CONTROLLER AREA NETWORK (CAN) MALFUNCTION DIAGNOSIS FLOW [SKYACTIV-G 2.0 (L.H.D.)]/10-02B-3 CONTROLLER AREA NETWORK (CAN) MALFUNCTION DIAGNOSIS FLOW [SKYACTIV-G 2.0 (R.H.D.)]

SYMPTOM TROUBLESHOOTING [SKYACTIV-G 2.0]

Repair order form

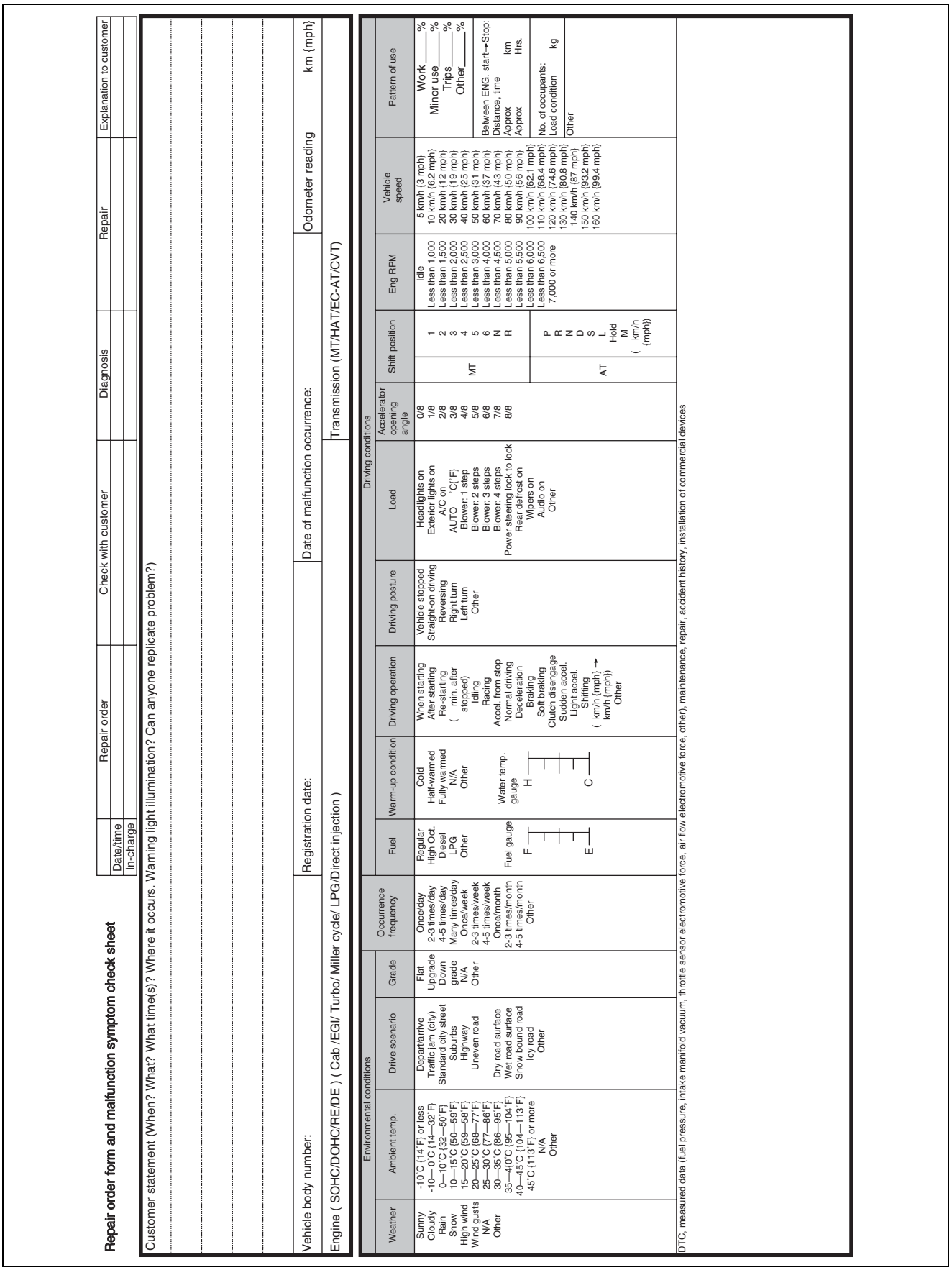

Repair order form and malfunction symptom check sheet

	Repair order	Check with customer	Diagnosis	Repair	Explanation to customer
Date/time					
In-charge					

Customer statement (When? What? What time(s)? Where it occurs. Warning light illumination? Can anyone replicate problem?)

Vehicle body number: | Registration date: | Date of malfunction occurrence: | Odometer reading: km {mph}

Engine (SOHC/DOHC/RE/DE) (Cab /EGI/ Turbo/ Miller cycle/ LPG/Direct injection) | Transmission (MT/HAT/EC-AT/CVT)

Environmental conditions					Driving conditions							
Weather	Ambient temp.	Drive scenario	Grade	Occurrence frequency	Fuel	Warm-up condition	Driving operation	Driving posture	Load	Accelerator opening angle	Shift position	Eng RPM	Vehicle speed	Pattern of use
Sunny Cloudy Rain Snow High wind Wind gusts N/A Other	-10°C {14°F} or less -10— 0°C {14—32°F} 0—10°C {32—50°F} 10—15°C {50—59°F} 15—20°C {59—68°F} 20—25°C {68—77°F} 25—30°C {77—86°F} 30—35°C {86—95°F} 35—40°C {95—104°F} 40—45°C {104—113°F} or more 45°C {113°F} N/A Other	Depart/arrive Traffic jam (city) Standard city street Suburbs Highway Uneven road Dry road surface Wet road surface Snow bound road Icy road Other	Flat Upgrade Down grade N/A Other	Once/day 2-3 times/day 4-5 times/day Many times/day Once/week 2-3 times/week 4-5 times/week Once/month 2-3 times/month 4-5 times/month Other	Regular High Oct. Diesel LPG Other Fuel gauge F E	Cold Half-warmed Fully warmed N/A Other Water temp. gauge H C	When starting After starting Re-starting (min. after stopped) Idling Racing Accel. from stop Normal driving Deceleration Braking Soft braking Clutch disengage Sudden accel. Light accel. Shifting (km/h {mph} → km/h {mph}) Other	Vehicle stopped Straight-on driving Reversing Right turn Left turn Other	Headlights on Exterior lights on A/C on AUTO °C{°F} Blower: 1 step Blower: 2 steps Blower: 3 steps Blower: 4 steps Power steering lock to lock Rear defrost on Wipers on Audio on Other	0/8 1/8 2/8 3/8 4/8 5/8 6/8 7/8 8/8	MT: 1 2 3 4 5 6 R AT: P R N D S L Hold M km/h ({mph})	Idle Less than 1,000 Less than 1,500 Less than 2,000 Less than 2,500 Less than 3,000 Less than 4,000 Less than 4,500 Less than 5,000 Less than 5,500 Less than 6,000 Less than 6,500 7,000 or more	5 km/h {3 mph} 10 km/h {6.2 mph} 20 km/h {12 mph} 30 km/h {19 mph} 40 km/h {25 mph} 50 km/h {31 mph} 60 km/h {37 mph} 70 km/h {43 mph} 80 km/h {50 mph} 90 km/h {56 mph} 100 km/h {62.1 mph} 110 km/h {68.4 mph} 120 km/h {74.6 mph} 130 km/h {80.8 mph} 140 km/h {87 mph} 150 km/h {93.2 mph} 160 km/h {99.4 mph}	Work____% Minor use____% Trips____% Other____% Between ENG. start→Stop: Distance, time km Approx Hrs. Approx No. of occupants: Load condition kg Other

DTC, measured data (fuel pressure, intake manifold vacuum, throttle sensor electromotive force, air flow electromotive force, other), maintenance, repair, accident history, installation of commercial devices

ac5wzw0000382

11

SYMPTOM TROUBLESHOOTING [SKYACTIV-G 2.0]

Dealer name:	Vehicle body number:	Odometer reading:
Vehicle-in date:	Estimated repair completion date:	Person in-charge:
Subject (Content):		
Audio memory		

	1	2	3	4	5	6	Fuel level
FM1							E F
FM2							
AM							

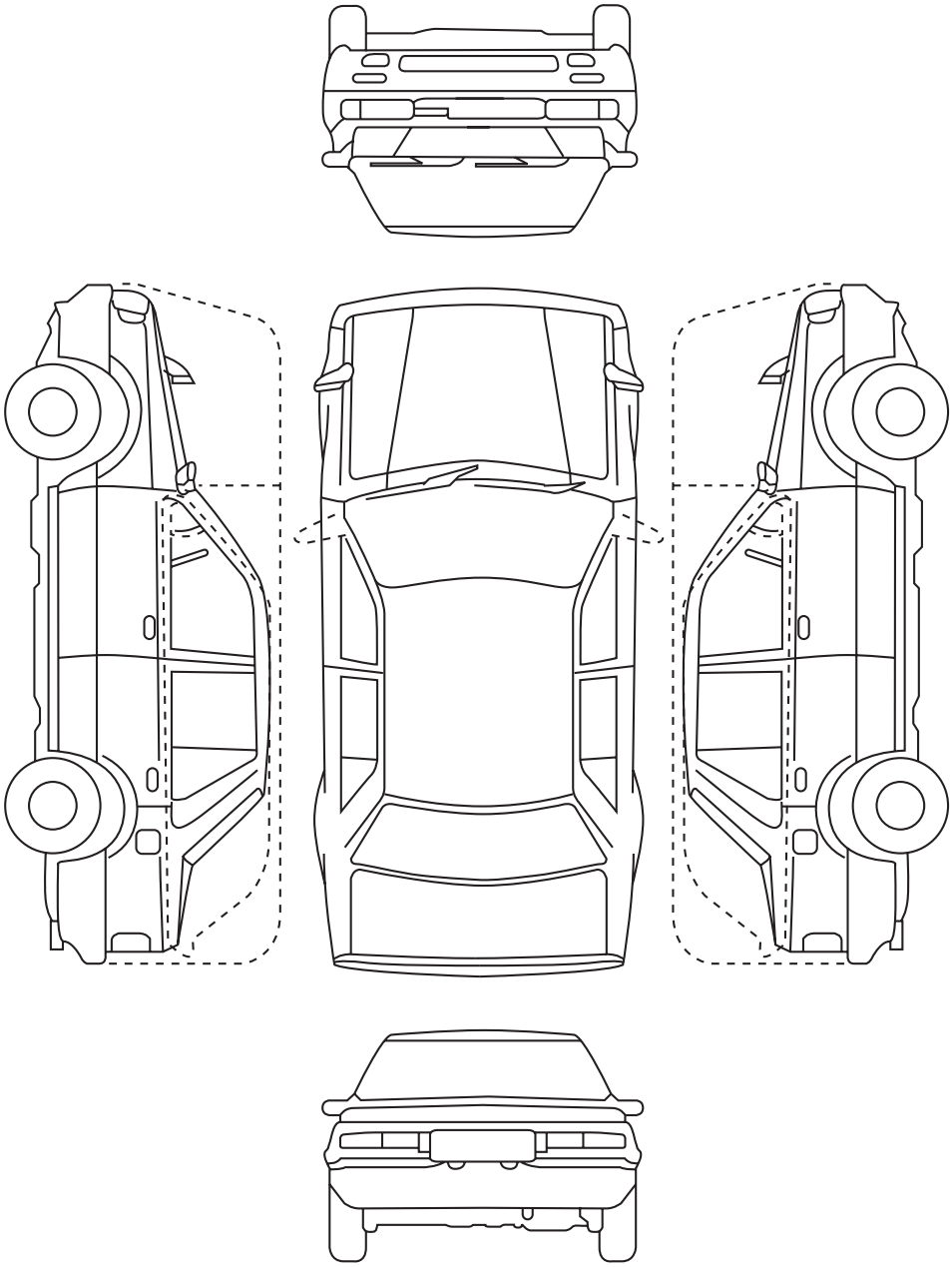

ac5wzw0000404

SYMPTOM TROUBLESHOOTING [SKYACTIV-G 2.0]

Repair order form (i-stop)

i-stop inoperable diagnostic sheet (i-stop indicator light (green) non-illumination while driving)

Dealer name: VIN:

1. Vehicle inspection

Inspection date Date customer verified malfunction:

No	Item	Inspection result					
1	Inoperable i-stop replicated?	During replication		Not replicated			
2	DTCs (including pending code) Yes/No	DTC:					
3	Extension FFD acquired (zip file) (Can/cannot acquire)	—					
4	Verification of BATT_SOC "i-stop operation conditions 68.4% or more."	%	* Due to the possibility of recurrence when BATT_SOC is 70% or less, after inspection completion, perform normal battery charging (10 A/3 hrs) and after battery learning, deliver vehicle.				
		Measurement timing: Vehicle-in, after charging, after inspection completed					
5	Battery specific gravity measurement	+ side (1)	-2	-3	-4	-5	(6) - side
6	BATT_CUR (current) measurement during idling	A					
7	BATT_V (voltage) measurement during idling If constant 14.5 V, in refresh mode.	M-MDS V		Circuit tester V			

2. Repair order form

1) Customer's usual vehicle pattern of use

Frequency of use	Electrical load		Usual driving environment		Usual use purpose		Meters & MID display
Once/day or more Once every 2-3 days Once/week Once/2-3 weeks Once/month Other	Headlights	Used often Sometimes Does not use	City traffic jam	%	Work use	%	When i-stop does not operate, does the A/C operation priority display appear? Yes, No, Unknown,
	A/C	・AUTO ℃ ・Manual Blower step	City streets	%	Shopping	%	
			Suburbs	%	Travel	%	
			Highway	%	Other	%	
	Period of time used		Other		From ENG start to stop: Distance, time Approx. km Approx. Hrs.		
	Morning	%			Occupant number Load condition kg		
	Noon (during day)	%					
	Nighttime	%					

2) Has customer discharged the battery accidently at some time Yes/No Yes, No

3) Has initialization learning (i-stop learning) been performed on the battery in the past? Yes, No

4) If learning has been performed, record the charging method, charging time, and BATT_SOC value after battery initialization learning (i-stop learning) was completed.

Quick charging (Hrs.) Normal charging (Hrs.) BATT_SOC value (%)

5) Number of times vehicle is stopped per one drive and i-stop frequency
(Ex: One drive, vehicle stopped times, i-stop times)

No. of times vehicle stopped in one driver ( ) No. of times i-stop functions ( )

6) Are there any variations prior to the stated malfunction
Ex.) Happens when driving to work. When going to pick up the kids at kindergarten.

7) Verify the use conditions which consume battery power when the vehicle is mainly used.
Ex.) Kindergarten, pick-up from after-school events, how long vehicle is stopped, and the electric load at those times (AC, audio use conditions).

ac5wzw0000417

SYMPTOM TROUBLESHOOTING [SKYACTIV-G 2.0]

Action for Non-repeatable Malfunction

- If the malfunction does not recur, verify the malfunction cause by performing the following actions:
  - — Based on the repair order form, attempt to drive the vehicle or perform tests to replicate the malfunction, record the data (such as PCM circuit voltage) at that time, and detect the malfunction cause.
  - — Shake the wiring harness or connector of the electrical component which is suspected to be the cause of the malfunction, and inspect for malfunction or occurrence of any DTCs.

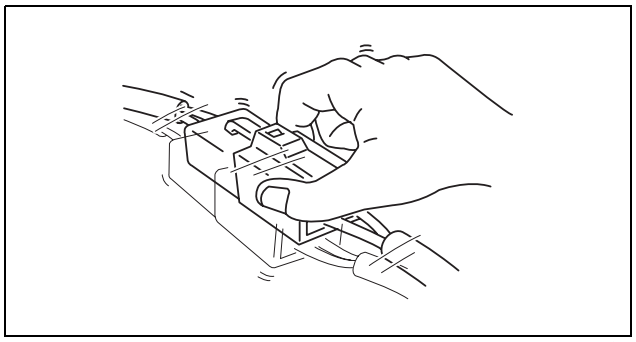

ac5wzw0000405

  - — Inspect the female terminals on the connector of the electric component which is suspected to be the cause of the malfunction for poor connection.

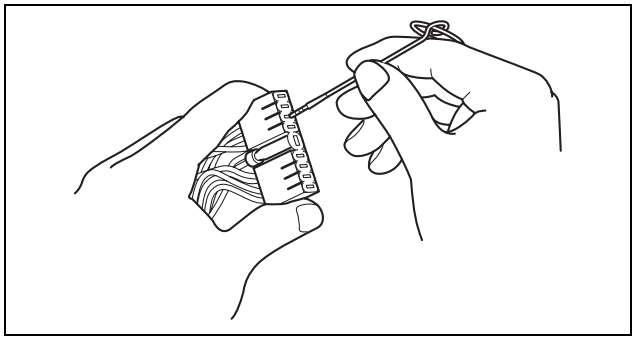

am3uuw0000750

i-stop control

- The i-stop system is programmed to not function (stop or restart engine) while the bonnet is open, however, when performing servicing in the engine compartment be careful so as to prevent getting caught in a rotating part if the engine were too restart accidentally.
- When performing an asterisks (*) troubleshooting inspection, shake the applicable part, wiring harness, and connector by hand to discover whether poor contact points are the cause of any intermittent malfunction. If there is a problem, inspect to make sure connectors, terminals and wiring harnesses are connected correctly and undamaged, and repair or replace if necessary.
- Depending on the vehicle operation status and the conditions indicated in the table below, the engine may not stop or it may restart for a condition unrelated to driving operations (system is normal).

i-stop (engine-stop control) permit condition

- The conditions to stop the engine by the i-stop control are as follows:

SYMPTOM TROUBLESHOOTING [SKYACTIV-G 2.0]

Purpose	Condition item	ATX	MTX
Driveability	Vehicle speed	0 km/h {0 mph}	3 km/h {2 mph} or less
	Brake pedal	Brake pedal depressed in D position or M position (except 2nd gear fixed mode) (If ABS operates during deceleration, i-stop operation is inhibited.)	Not applicable
	Brake fluid pressure	Brake fluid pressure is 1.25 MPa {12.7 kgf/cm^2, 181 psi} or more in D position or M position (except 2nd gear fixed mode) (pedal force sufficient to suppress vehicle lurch when engine is restarted)	Not applicable
	Accelerator pedal	Released (foot removed from accelerator pedal)	←
	Clutch pedal	Not applicable	30% or less (clutch pedal opening angle)
	Gear position	Not applicable	Neutral
	Vehicle conditions	Vehicle stopped in D position (After vehicle is stopped and shifted into N position, engine stops 0.6 s after operation. In addition, after vehicle is stopped in D position and if shifted into P position, engine stop condition continues by i-stop control	Not applicable
Marketability	Cabin temperature	Difference between target temperature in cabin and temperature in cabin is within a certain value (A/C cabin temperature control is performed)	←
	A/C temperature	Setting other than MAX/MIN	←
	Ambient temperature	-10—50 °C {14—122 °F}	←
	Steering speed	15 deg/sec or less	←
	Steering angle	-65—65 ° (Center) (After EPS control module learned center value)	Not applicable
	Steering torque	1.4 N·m {14 kgf·cm, 12 in·lbf} or less	←
	i-stop OFF switch	OFF	←
	Vehicle speed history	3 km/h {2 mph} or more	4 km/h {2.5 mph} or more

SYMPTOM TROUBLESHOOTING [SKYACTIV-G 2.0]

Purpose	Condition item	ATX	MTX
Safety	Battery charge condition	68.4% or more (determined from current sensor signal))	←
	Battery fluid temperature	0—70 °C {32—158 °F}	←
	Battery voltage	11.2 V or more	←
	Estimated battery voltage during engine restart	7.45 or more*1	←
	Defroster switch	OFF	←
	Power brake unit vacuum	-45 kPa {-0.46 kgf/cm^2, -6.5 psi} or less 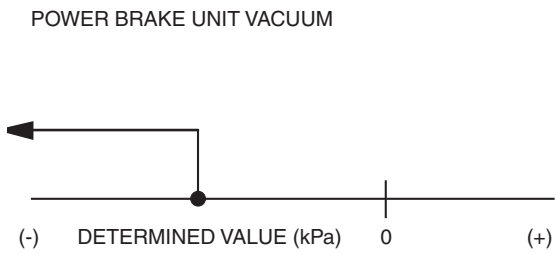	
	Door (front, rear)	Closed	←
	Bonnet	Closed*2	←
	Liftgate	Closed	←
	Vehicle inclination angle	When level, less than ± 7%	Not applicable
	Seat belt (driver)	Fastened	←
	Push button start system	Normal	←
	System condition	i-stop related module normal	←
System restriction	Number of starter operations	Within 180,000 times	←
	Number of starter relay operations	Within 180,000 times	←
	Number of i-stop operations	Within 300,000 times	←
	ISC learning	Completed	←
	Battery condition learning setting	Completed	←
	Steering angle sensor initialization setting	Completed	Not applicable
	DSC sensor initialization	Completed	Not applicable
	Elapsed time after engine restart	Maximum 6.4 s or more (Engine stop time fluctuation by i-stop control)	Not applicable
	PCM DTC	DTC except P11A:00 and P117A:00 and P2299:00 not detected	←
Engine condition	Engine coolant temperature	55—110 °C {131—230 °F}	←
	Intake air temperature	100°C {212 °F} or less	←
	ATF temperature	20—120 °C {68—248 °F}	Not applicable
Environment condition	Altitude	**European (L.H.D. U.K.) specs.** • 1,800 m or less **Except for European (L.H.D. U.K.) specs.** • 1,500 m or less	←

*1 : If the i-stop is operated repeatedly with a high-capacity audio system or added electronic device connected to the DC-DC converter, engine stop by the i-stop control is inhibited at a faster timing than normal.
*2 : If the engine is started while the hood is open, i-stop is inhibited until the engine is stopped.

SYMPTOM TROUBLESHOOTING [SKYACTIV-G 2.0]

i-stop (engine restart control) conditions

- Conditions for restarting the engine during i-stop control (engine stopped) are as follows:

Purpose	Condition item	
	ATX	MTX
Driver operation	Not applicable	Clutch pedal depression rate: 86% or more (If the clutch pedal depressed and then it is released while the engine is cranking to restart by the i-stop control, engine stop by the i-stop control continues. If the same operation is repeated several times, the engine will stall.)
	Brake pedal released → depressed while in P or N position	Not applicable
	Brake fluid pressure is 0.35 MPa {3.6 kgf/cm2, 51 psi} or less in D position or M position	Not applicable
	Accelerator pedal depressed while in D or M position	Not applicable
	Steering torque is 2.8 N·m {29 kgf·cm, 25 in·lbf} or more in D position or M position	Not applicable
	Steering angle (D or M position (except 2nd gear fixed mode)): -70° or less or 70° or more (after EPS control module learned center value)	Not applicable
	Engine start by key operation	←
	Shift operation • When changed to the M position (except 2nd gear fixed mode) • P or N position →D or M or R position	Not applicable
Marketability	A/C request	←
	A/C temperature MAX setting, MIN setting	←
	Battery charge 67.9% or less	←
	Battery charge rate is specified value or more	←
	Estimated battery voltage when engine is restarted is 7.25 V or less	←
	i-stop OFF switch on	←
	• The following conditions are met. — Seat belt (driver): Not fastened — Door or liftgate: Open	←
Safety	**Except for European (L.H.D. U.K.) specs.** • The following conditions are met while in P or N position (determined that driver is not in vehicle). — Seat belt (driver): Not fastened — Door (driver): Open	**Except for European (L.H.D. U.K.) specs.** • The following conditions are met while in neutral position (determined that driver is not in vehicle). — Seat belt (driver): Not fastened — Door (driver): Open
	Defroster switch on	←
	Power brake unit vacuum: -43 kPa {-0.44 kgf/cm^2, -6.2 psi} or more POWER BRAKE UNIT VACUUM 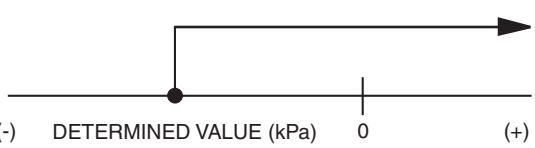 	←
	Vehicle speed: 1 km/h {0.6 mph} or more	Vehicle speed: 4 km/h {2.5 mph} or more
	Engine stop time by the i-stop control: 120 s or more	←

SYMPTOM DIAGNOSTIC INDEX [SKYACTIV-G 2.0]

id1103a1000300

- Verify malfunction symptoms using the following diagnostic index, then go to the appropriate troubleshooting chart.

SYMPTOM TROUBLESHOOTING [SKYACTIV-G 2.0]

Diagnostic Index

No.	TROUBLESHOOTING ITEM	DESCRIPTION
1	i-stop warning light (amber) illuminates	• i-stop warning light (amber) remains illuminated while engine is running.
2	i-stop warning light (amber) flashes	• i-stop function is inhibited because an i-stop control system error is detected.
3	i-stop indicator light (green) flashes	• i-stop indicator light (green) remains flashing during idling.
4	i-stop function does not operate	• i-stop function does not operate when vehicle is stopped.
5	i-stop function operates under no engine-stop conditions	• i-stop function operates even though system is turned off by pressing i-stop OFF switch. • i-stop function operates even though vehicle conditions are for non-operation. • i-stop function operates frequently while parking vehicle.
6	Engine does not restart	• The i-stop warning light (amber) illuminates and engine does not restart while the i-stop function is operating. • Engine does not restart when attempting to resume driving vehicle after stopping, and i-stop warning light (amber) is illuminated. • Engine does not restart even though restart conditions are met.
7	Limited i-stop function operation time	• Frequency of which i-stop function operates is low. • Frequent occurrence of engine restarting other than for driving vehicle from stop.
8	Ineffective operation of A/C during engine stop (i-stop system)	• A/C airflow temperature gradually increases or decreases while i-stop function is operating.
9	Acceleration malfunction	• Acceleration from i-stop is not smooth. • Suppresses (shock) when accelerating vehicle from i-stop. • Engine vibration increases when engine is restarted.
10	Vehicle moves when accelerating from standstill on slope	• Vehicle slips backwards on inclined road surface when accelerating after i-stop operates.

QUICK DIAGNOSTIC CHART [SKYACTIV-G 2.0]

id1103a1000400

X: Applied

Troubleshooting item		Starter motor malfunction (mechanical or electrical)	Starter circuit including ignition switch is open	Improper engine oil level	Low or dead battery	Charging system malfunction	Improper engine compression	Improper dipstick	Base engine malfunction	Drive plate (ATX) or flywheel (MTX) is seized	Improper tension or damaged drive belts	Improper engine coolant level	Water and anti-freeze mixture is improper	Cooling system malfunction (radiator, hoses,overflow system, thermostat, etc.)	Cooling fan system malfunction
1	i-stop warning light (amber) illuminates					X									
2	i-stop warning light (amber) flashes	X	X												
3	i-stop indicator light (green) flashes														
4	i-stop function does not operate	X	X			X									
5	i-stop function operates under no engine-stop conditions														
6	Engine does not restart	X	X			X									
7	Limited i-stop function operation time														
8	Ineffective operation of A/C during engine stop (i-stop system)														
9	Acceleration malfunction														
10	Vehicle moves when accelerating from standstill on slope														

ac5wzw0000405

SYMPTOM TROUBLESHOOTING [SKYACTIV-G 2.0]

X: Applied

Troubleshooting item		Possible factor: Engine or transaxle mounts are improperly installed	Cooling fan or condenser fan seats improper	Fuel quality	Improper engine oil viscosity	Improper valve timing	Oil leakage (internal, turbocharger, external)	Improper oil or fluid level	Coolant leakage (internal, turbocharger, external)	Electric variable valve timing system malfunction	Hydraulic variable valve timing system malfunction	Engine overheating	Air cleaner element clogged or restricted	Air leakage from intake-air system (loose tubes, cracks, gaskets breakage)	Air suction in intake-air system	Intake-air system restriction
1	i-stop warning light (amber) illuminates					X				X	X				X	
2	i-stop warning light (amber) flashes															
3	i-stop indicator light (green) flashes															
4	i-stop function does not operate															
5	i-stop function operates under no engine-stop conditions															
6	Engine does not restart														X	
7	Limited i-stop function operation time															
8	Ineffective operation of A/C during engine stop (i-stop system)															
9	Acceleration malfunction															
10	Vehicle moves when accelerating from standstill on slope															

ac5wzw0000405

X: Applied

Troubleshooting item		Possible factor: Drive-by-wire control system improper operation	Drive-by-wire control system operates with brake override system	Throttle body malfunction	Vacuum leakage (vacuum hose damage, misrouting)	Ignition coil malfunction (e.g. open, short or cracks)	Initial ignition timing misadjustment (CKP and pulse wheel misadjustment)	Spark plug malfunction	Fuel pump (low-pressure side) malfunction (mechanically or electrically)	Pressure regulator (built-into fuel pump unit at fuel tank)	Inadequate fuel pressure (high-pressure side)	Inadequate fuel pressure (low-pressure side)	Fuel line restricted or clogged
1	i-stop warning light (amber) illuminates	X											
2	i-stop warning light (amber) flashes												
3	i-stop indicator light (green) flashes												
4	i-stop function does not operate												
5	i-stop function operates under no engine-stop conditions												
6	Engine does not restart	X											
7	Limited i-stop function operation time												
8	Ineffective operation of A/C during engine stop (i-stop system)												
9	Acceleration malfunction												
10	Vehicle moves when accelerating from standstill on slope												

ac5wzw0000405

SYMPTOM TROUBLESHOOTING [SKYACTIV-G 2.0]

X: Applied

Troubleshooting item		Constant voltage supply circuit malfunction	Main relay malfunction (mechanically or electrically)	No battery power supply to PCM	Poor PCM ground or vehicle ground (open)	Electrical connector disconnection	ECT sensor or related circuit malfunction	Transaxle range sensor malfunction (ATX)	Brake switch or related circuit malfunction	A/F sensor or HO2S or related circuit malfunction	IAT sensor No.1 (integrated in MAF sensor/ IAT sensor No.1) or related circuit malfunction	Fuel pressure sensor or related circuit malfunction	MAP sensor or related circuit malfunction
	Possible factor												
1	i-stop warning light (amber) illuminates												
2	i-stop warning light (amber) flashes												
3	i-stop indicator light (green) flashes												
4	i-stop function does not operate						X				X		
5	i-stop function operates under no engine-stop conditions							X					
6	Engine does not restart							X					
7	Limited i-stop function operation time							X					
8	Ineffective operation of A/C during engine stop (i-stop system)												
9	Acceleration malfunction												
10	Vehicle moves when accelerating from standstill on slope												

ac5wzw0000406

SYMPTOM TROUBLESHOOTING [SKYACTIV-G 2.0]

X: Applied

	Troubleshooting item / Possible factor	Intake CMP sensor damaged (e.g.open or short circuit)	Intake CMP sensor pulse wheel (intake camshaft) damaged	Exhaust CMP sensor damaged (e.g.open or short circuit)	Exhaust CMP sensor pulse wheel (exhaust camshaft) damaged	Improper gap between CKP sensor and pulse wheel	CKP sensor damaged (e.g.open or short circuit)	CKP sensor pulse wheel damaged	CPP switch or related circuit malfunction (MTX)	Neutral switch or related circuit malfunction (MTX)	MAF sensor or related circuit malfunction	KS or related circuit malfunction	TP sensor or related circuit malfunction	APP sensor or related circuit malfunction	Improper vehicle speed signal	Cruise control system operation improperly
1	i-stop warning light (amber) illuminates						X	X								
2	i-stop warning light (amber) flashes															
3	i-stop indicator light (green) flashes									X						
4	i-stop function does not operate									X				X		
5	i-stop function operates under no engine-stop conditions									X				X		
6	Engine does not restart													X		
7	Limited i-stop function operation time													X		
8	Ineffective operation of A/C during engine stop (i-stop system)															
9	Acceleration malfunction															
10	Vehicle moves when accelerating from standstill on slope															

ac5wzw0000406

X: Applied

	Troubleshooting item / Possible factor	i-stop OFF switch malfunction	Instrument cluster malfunction	Driver-side buckle switch malfunction	Door latch switch or liftgate latch switch malfunction	Bonnet latch switch malfunction	Battery malfunction (deterioration)	Ambient temperature sensor malfunction	ABS wheel-speed sensor malfunction	Clutch stroke sensor malfunction (MTX)	Steering angle sensor malfunction	Driver-side air mix actuator malfunction	Climate control unit malfunction	Battery fluid temperature sensor malfunction	Keyless antenna malfunction
1	i-stop warning light (amber) illuminates	X	X	X	X	X									
2	i-stop warning light (amber) flashes						X								
3	i-stop indicator light (green) flashes				X		X								
4	i-stop function does not operate	X		X	X	X	X	X	X	X	X	X	X	X	X
5	i-stop function operates under no engine-stop conditions	X		X	X	X		X	X	X	X	X	X		
6	Engine does not restart			X	X					X	X				
7	Limited i-stop function operation time	X					X			X		X	X		
8	Ineffective operation of A/C during engine stop (i-stop system)							X				X			
9	Acceleration malfunction														
10	Vehicle moves when accelerating from standstill on slope														

ac5wzw0000406

11

SYMPTOM TROUBLESHOOTING [SKYACTIV-G 2.0]

X: Applied

Troubleshooting item		Possible factor: Heater core temperature sensor malfunction	Power brake unit vacuum sensor malfunction	Cabin temperature sensor malfunction	Solar radiation sensor malfunction	Number of times i-stop function operates exceeds assured operation amount of components	Brake fluid pressure sensor malfunction	M range switch malfunction (ATX)	Low-G (XY) sensor malfunction	TFT sensor malfunction (ATX)	Electric AT oil pump malfunction (ATX)	DSC HU/CM malfunction	Generator drive belt wear
1	i-stop warning light (amber) illuminates												X
2	i-stop warning light (amber) flashes					X							
3	i-stop indicator light (green) flashes							X					
4	i-stop function does not operate		X			X	X	X	X	X			
5	i-stop function operates under no engine-stop conditions					X		X	X				
6	Engine does not restart						X	X					X
7	Limited i-stop function operation time	X	X				X	X					
8	Ineffective operation of A/C during engine stop (i-stop system)	X		X	X								
9	Acceleration malfunction						X		X		X	X	
10	Vehicle moves when accelerating from standstill on slope						X		X		X	X	

ac5wzw0000406

NO.1 i-stop WARNING LIGHT (AMBER) ILLUMINATES [SKYACTIV-G 2.0]

id1103a1000600

1	i-stop WARNING LIGHT (AMBER) ILLUMINATES
DESCRIPTION	• i-stop warning light (amber) remains illuminated while engine is running.
POSSIBLE CAUSE	**System off recognized due to false detection of i-stop OFF switch** • i-stop OFF switch malfunction — i-stop OFF switch malfunction **Instrument cluster malfunction** • i-stop warming light (amber) illumination circuit in instrument cluster disabled • CAN communication line between instrument cluster and PCM malfunction

SYMPTOM TROUBLESHOOTING [SKYACTIV-G 2.0]

Diagnostic Procedure

STEP	INSPECTION	RESULTS	ACTION
1	**VERIFY DTC** • Retrieve the PCM and instrument cluster DTCs using the M-MDS. (See 01-02-8 ON-BOARD DIAGNOSTIC TEST [SKYACTIV-G 2.0].) (See 09-02G-7 DTC INSPECTION [INSTRUMENT CLUSTER].) • Are any DTCs present?	Yes	Go to the applicable DTC inspection. (See 01-02-14 DTC TABLE [SKYACTIV-G 2.0].) (See 09-02G-10 DTC TABLE [INSTRUMENT CLUSTER].)
		No	Go to the next step.
2	**DETERMINE FALSE ILLUMINATION OF i-stop WARNING LIGHT (AMBER)** • Does the i-stop operate while the i-stop warning light (amber) is illuminated?	Yes	False illumination of i-stop warning light (amber) can be considered the cause. Go to the next step.
		No	Go to Step 4.
3	**DETERMINE IF MALFUNCTION CAUSE IS INSTRUMENT CLUSTER WARNING LIGHT ILLUMINATION CIRCUIT OR ERROR SIGNAL FROM PCM** • Switch the ignition ON (engine off or on). • Access the instrument cluster PID WL+IL and illuminate and turn off the warning light in the instrument cluster using the M-MDS. (See 09-02G-38 ACTIVE COMMAND MODES INSPECTION [INSTRUMENT CLUSTER].) • Does the i-stop warning light (amber) illuminate or turn off according to the M-MDS operation? (See 09-02G-38 ACTIVE COMMAND MODES TABLE [INSTRUMENT CLUSTER].)	Yes	Repeat the inspection from Step 1. • If the malfunction is not resolved, replace the PCM. (See 01-40-10 PCM REMOVAL/INSTALLATION [SKYACTIV-G 2.0].) Go to Step 6.
		No	Replace the instrument cluster. (See 09-22-6 INSTRUMENT CLUSTER REMOVAL/INSTALLATION.)
4	**INSPECT i-stop OFF SWITCH** • Inspect the i-stop OFF switch. (See 01-40-66 i-stop OFF SWITCH INSPECTION [SKYACTIV-G 2.0].) • Is there any malfunction?	Yes	Replace the cluster switch. (See 09-17-18 SWITCH PANEL REMOVAL/INSTALLATION.)
		No	Go to the next step.
5*	**DETERMINE IF MALFUNCTION CAUSE IS i-stop OFF SWITCH SIGNAL OR OTHER** • Switch the ignition to off. • Disconnect the cluster switch and instrument cluster connectors. • Inspect for continuity between cluster switch terminal B (wiring harness-side) and body ground. • Is there continuity?	Yes	Repair or replace the wiring harness for a possible short to ground, then go to the next step.
		No	Replace the instrument cluster, then go to the next step. (See 09-22-6 INSTRUMENT CLUSTER REMOVAL/INSTALLATION.)
6	Verify the test results. • If normal, return to the diagnostic index to service any additional symptoms. (See 01-03-5 SYMPTOM DIAGNOSTIC INDEX [SKYACTIV-G 2.0].) • If a malfunction remains, inspect the related Service Information and perform the repair or diagnosis. — If the vehicle is repaired, troubleshooting is completed. — If the vehicle is not repaired or additional diagnostic information is not available, replace the PCM. (See 01-40-10 PCM REMOVAL/INSTALLATION [SKYACTIV-G 2.0].)		

NO.2 i-stop WARNING LIGHT (AMBER) FLASHES [SKYACTIV-G 2.0]

id1103a1000700

2	i-stop WARNING LIGHT (AMBER) FLASHES
DESCRIPTION	• i-stop function is inhibited because an i-stop control system error is detected.

SYMPTOM TROUBLESHOOTING [SKYACTIV-G 2.0]

2	i-stop WARNING LIGHT (AMBER) FLASHES
POSSIBLE CAUSE	**i-stop component parts malfunction** • Detects malfunction in i-stop component part (i-stop related module detects DTC) — PCM — DC-DC converter — Current sensor — Battery malfunction (deterioration) — Generator malfunction (part, system, control malfunction) — DSC HU/CM — SAS control module — TCM (ATX) **Number of times i-stop function operates exceeds assured operation amount of components** • Number of times engine restart exceed limit • Any of following parts exceeds assured operation amount: — Starter relay — Starter

Diagnostic Procedure

STEP	INSPECTION	RESULTS	ACTION
1	**VERIFY DTC** • Retrieve the PCM, DSC HU/CM, SAS control module and TCM DTCs using the M-MDS. (See 01-02-8 ON-BOARD DIAGNOSTIC TEST [SKYACTIV-G 2.0].) (See 04-02A-7 ON-BOARD DIAGNOSIS [DYNAMIC STABILITY CONTROL (DSC)].) (See 08-02-7 DTC INSPECTION.) (See 05-02A-7 ON-BOARD DIAGNOSTIC SYSTEM DTC INSPECTION [FW6A-EL, FW6AX-EL].) • Are any DTCs present?	Yes	Go to the applicable DTC inspection. (See 01-02-14 DTC TABLE [SKYACTIV-G 2.0].) (See 04-02A-7 ON-BOARD DIAGNOSIS [DYNAMIC STABILITY CONTROL (DSC)].) (See 08-02-11 DTC TABLE.) (See 05-02A-11 ON-BOARD DIAGNOSTIC SYSTEM DTC TABLE [FW6A-EL, FW6AX-EL].)
		No	Go to the next step.
2	**DETERMINE IF MALFUNCTION CAUSE IS BATTERY VOLTAGE DECREASE OR OTHER** • Start the engine and warm it up completely. • Idle the engine. • Access the BATT_SOC PID using the M-MDS. (See 01-02-8 ON-BOARD DIAGNOSTIC TEST [SKYACTIV-G 2.0].) • Is the BATT_SOC PID value **above 68 %**?	Yes	Go to Step 4.
		No	Go to the next step.
3	**INSPECT BATTERY** • Recharge the battery. (See 01-17A-9 BATTERY RECHARGING [SKYACTIV-G 2.0].) • Inspect the battery. (See 01-17A-7 BATTERY INSPECTION [SKYACTIV-G 2.0].) • Is there any malfunction?	Yes	Replace the battery. (See 01-17A-3 BATTERY REMOVAL/INSTALLATION [SKYACTIV-G 2.0].)
		No	Go to the next step.
4	**INSPECT GENERATOR** • Inspect the generator. (See 01-17A-19 GENERATOR INSPECTION [SKYACTIV-G 2.0].) • Is there any malfunction?	Yes	Repair or replace the malfunctioning part according to the inspection results.
		No	Replace the PCM. (See 01-40-10 PCM REMOVAL/INSTALLATION [SKYACTIV-G 2.0].)
5	Verify the test results. • If normal, return to the diagnostic index to service any additional symptoms. (See 01-03-5 SYMPTOM DIAGNOSTIC INDEX [SKYACTIV-G 2.0].) • If a malfunction remains, inspect the related Service Information and perform the repair or diagnosis. — If the vehicle is repaired, troubleshooting is completed. — If the vehicle is not repaired or additional diagnostic information is not available, replace the PCM. (See 01-40-10 PCM REMOVAL/INSTALLATION [SKYACTIV-G 2.0].)		

NO.3 i-stop INDICATOR LIGHT (GREEN) FLASHES [SKYACTIV-G 2.0]

id1103a1000800

3	i-stop INDICATOR LIGHT (GREEN) FLASHES
DESCRIPTION	• i-stop indicator light (green) remains flashing during idling.

SYMPTOM TROUBLESHOOTING [SKYACTIV-G 2.0]

3	i-stop INDICATOR LIGHT (GREEN) FLASHES
POSSIBLE CAUSE	**Note** • If the brake pedal depression is insufficient, the i-stop indicator light (green) illuminates and the i-stop function operates by increasing brake pedal depression. (ATX, Except for European (L.H.D. U.K.) specs.) • If in gear while i-stop is operating, the i-stop indicator light (green) flashes continuously. (MTX) • If the driver's door is open while i-stop is operating, the i-stop warning light (green) flashes continuously. (European (L.H.D. U.K.) specs.) **i-stop function operation conditions are not set** • False detection of insufficient brake depression (fluid pressure). — Brake fluid pressure sensor (built-into DSC HU/CM) malfunction

Diagnostic Procedure

STEP	INSPECTION	RESULTS	ACTION
1	**VERIFY DTC** • Retrieve the PCM and DSC HU/CM DTCs using the M-MDS. (See 01-02-8 ON-BOARD DIAGNOSTIC TEST [SKYACTIV-G 2.0].) (See 04-02A-7 ON-BOARD DIAGNOSIS [DYNAMIC STABILITY CONTROL (DSC)].) • Are any DTCs present?	Yes	Go to the applicable DTC inspection. (See 01-02-14 DTC TABLE [SKYACTIV-G 2.0].) (See 04-02A-7 ON-BOARD DIAGNOSIS [DYNAMIC STABILITY CONTROL (DSC)].)
		No	Go to the next step.
2	**INSPECT BRAKE FLUID PRESSURE SENSOR** • Inspect the brake fluid pressure sensor. (See 04-11-14 BRAKE FLUID LEVEL SENSOR INSPECTION.) • Is there any malfunction?	Yes	Replace the DSC HU/CM. (See 04-15-4 DSC HU/CM REMOVAL/INSTALLATION.)
		No	Repeat the inspection from Step 1. • If the malfunction is not resolved, replace the PCM. (See 01-40-10 PCM REMOVAL/INSTALLATION [SKYACTIV-G 2.0].) Go to the next step.
3	Verify the test results. • If normal, return to the diagnostic index to service any additional symptoms. (See 01-03-5 SYMPTOM DIAGNOSTIC INDEX [SKYACTIV-G 2.0].) • If a malfunction remains, inspect the related Service Information and perform the repair or diagnosis. — If the vehicle is repaired, troubleshooting is completed. — If the vehicle is not repaired or additional diagnostic information is not available, replace the PCM. (See 01-40-10 PCM REMOVAL/INSTALLATION [SKYACTIV-G 2.0].)		

NO.4 i-stop FUNCTION DOES NOT OPERATE [SKYACTIV-G 2.0]

id1103a1000900

4	i-stop FUNCTION DOES NOT OPERATE
DESCRIPTION	• i-stop function does not operate when vehicle is stopped.

SYMPTOM TROUBLESHOOTING [SKYACTIV-G 2.0]

4	i-stop FUNCTION DOES NOT OPERATE
POSSIBLE CAUSE	**False detection of conditions other than i-stop function operation.** • Falsely detects that driver does not intend to stop. — False detection of brake pedal not depressed • Brake switch No.1 malfunction • Open circuit in wiring harness between brake switch terminal D and PCM terminal 2G • Brake fluid pressure sensor (built-into DSC HU/CM) malfunction (i-stop indicator light (green) flashes) • Falsely detection of external vehicle temperature out of operation range **(–10 to 50 °C {14 to 122 °F})** — Ambient temperature sensor malfunction (sensor specific malfunction) — Short or open circuit in wiring harness between ambient temperature sensor terminal A and PCM terminal 2I — Open circuit in wiring harness between ambient temperature sensor terminal B and PCM terminal 2AJ • Climate control unit falsely detects that internal vehicle temperature is high. (vehicles with full-auto air conditioner) — Cabin temperature sensor malfunction (sensor specific or motor malfunction) — Short or open circuit in wiring harness between cabin temperature sensor terminal A and climate control unit terminal 1J — Open circuit in wiring harness between cabin temperature sensor terminal B and climate control unit terminal 1X • Falsely detects that climate control unit detects driver-side air mix door position at MAX HOT or MAX COLD (vehicles with full-auto air conditioner) — Driver-side air mix actuator malfunction — Driver-side air mix actuator position sensor malfunction — Driver-side air mix door or linkage stuck • Climate control unit falsely detects that i-stop function is operating in manual defroster mode. — Climate control unit (panel switch) malfunction • False detection of vehicle not being parked — False detection of steering wheel rotation and rotation speed • Steering angle sensor initialization malfunction • Steering angle sensor malfunction • Short or open circuit in wiring harness between steering angle sensor and start stop unit terminals 1U, 1T, 1W or 1S

SYMPTOM TROUBLESHOOTING [SKYACTIV-G 2.0]

4	i-stop FUNCTION DOES NOT OPERATE
POSSIBLE CAUSE	• False detection of vehicle in unsafe condition — False detection of open bonnet • Bonnet latch switch malfunction (stuck open) • Open circuit in wiring harness between bonnet latch switch terminal A and rear body control module (RBCM) terminal 3L — False detection of open door and liftgate • Door latch switch malfunction • Liftgate latch switch malfunction • Open circuit in wiring harness between door latch switch and rear body control module (RBCM) • Short to ground in wiring harness between liftgate latch switch and rear body control module (RBCM) — False detection of unfastened driver seat belt • Driver-side buckle switch malfunction • Short to ground in wiring harness between driver-side buckle switch terminal 4A and SAS control module terminal 2U — False detection of inclination angle (false detection of **12 % or more**) • Low-G (XY) sensor (built-into SAS control module) malfunction (In this case, the SAS control module records DTCs C0061:29 and C0062:29.) • Low-G (XY) sensor (built-into SAS control module) initialization malfunction — DC-DC converter system error (exceeds capacity of DC-DC converter output due to open or short circuit in wiring harness and after-market electrical part) — False detection of low power brake unit load • Power brake unit vacuum sensor malfunction • Short or open circuit in wiring harness between power brake unit vacuum sensor terminal C and PCM terminal 2BG • Short or open circuit in wiring harness between power brake unit vacuum sensor terminal B and PCM terminal 2Q • Short or open circuit in wiring harness between power brake unit vacuum sensor terminal A and PCM terminal 2AH • Power brake unit malfunction (air tightness malfunction) • Malfunction in vacuum hose to power brake unit (damage, bad check valve) **Falsely detects possible inability of engine to restart** • False detection of low (**55 °C {131 °F} or less**) or high (**110 °C {230 °F} or more**) engine coolant temperature — ECT sensor malfunction (sensor specific malfunction) • False detection of high intake air temperature (**100 °C {212 °F} or more**) — IAT sensor No.1 malfunction (sensor specific malfunction) • False detection of low (**less than 0 °C {32 °F}**) or high (**70 °C {158 °F} or more**) battery fluid temperature • False detection of low (**20 °C {68 °F} or less**) or high (**120 °C {248 °F} or more**) ATF temperature (ATX) **Determines possible inability of engine to restart** • Battery voltage decrease — Battery malfunction — Generator malfunction — Generator malfunction (part, system, control malfunction) — Large amount of vehicle power consumption/Large amount of back-up current • Determination of jump-start possibility — Engine start using key with bonnet opened

SYMPTOM TROUBLESHOOTING [SKYACTIV-G 2.0]

Diagnostic Procedure

STEP	INSPECTION	RESULTS	ACTION
1	**VERIFY i-stop INDICATOR LIGHT (GREEN) CONDITION WHEN MALFUNCTION OCCURS** • Is the i-stop indicator light (green) flashing?	Yes	Perform the symptom troubleshooting “NO.3 i-stop INDICATOR LIGHT (GREEN) FLASHES”. (See 11-03-16 NO.3 i-stop INDICATOR LIGHT (GREEN) FLASHES [SKYACTIV-G 2.0].)
		No	Go to the next step.
2	**DETERMINE IF MALFUNCTION CAUSE IS BATTERY VOLTAGE DECREASE OR OTHER** • Start the engine and warm it up completely. • Idle the engine. • Access the BATT_SOC PID using the M-MDS. (See 01-02-8 ON-BOARD DIAGNOSTIC TEST [SKYACTIV-G 2.0].) • Is the BATT_SOC PID value **above 75 %**?	Yes	Go to the next step.
		No	Recharge the battery (6-hour normal recharge at **10 A** recharge current). (See 01-17A-9 BATTERY RECHARGING [SKYACTIV-G 2.0].)
3	**INSPECT INSUFFICIENT ADVANCED KEY BATTERY POWER FOR MALFUNCTION** **Note** • The following test should be performed on the advanced keyless entry system. If not equipped, go to Step 3. • Verify the condition of the KEY indicator light (green) in the instrument cluster while the advanced key is in the cabin. • Is the KEY indicator light (green) flashing?	Yes	Replace the advanced key battery.
		No	Go to the next step.
4	**INSPECT EFFECT OF NON-GENUINE ELECTRICAL ACCESSORY FOR CAUSE OF MALFUNCTION** • Remove any non-genuine electrical accessory. • Verify the malfunction symptom. • Does the i-stop function operate when the vehicle is stopped?	Yes	The system is normal. • Explain to the customer that the i-stop function does not operate due to the effect of the non-genuine electrical accessory installed.
		No	Go to the next step.
5	**VERIFY DTC** • Retrieve the PCM, TCM, front body control module (FBCM), rear body control module (RBCM), DSC HU/CM, SAS control module, instrument cluster and climate control unit DTCs using the M-MDS. (See 01-02-8 ON-BOARD DIAGNOSTIC TEST [SKYACTIV-G 2.0].) (See 05-02A-7 ON-BOARD DIAGNOSTIC SYSTEM DTC INSPECTION [FW6A-EL, FW6AX-EL].) (See 09-02K-10 DTC INSPECTION [FRONT BODY CONTROL MODULE (FBCM)].) (See 09-02L-9 DTC INSPECTION [REAR BODY CONTROL MODULE (RBCM)].) (See 04-02A-7 ON-BOARD DIAGNOSIS [DYNAMIC STABILITY CONTROL (DSC)].) (See 08-02-7 DTC INSPECTION.) (See 09-02G-7 DTC INSPECTION [INSTRUMENT CLUSTER].) (See 07-02-6 DTC DISPLAY [FULL-AUTO AIR CONDITIONER].) • Are any DTCs present?	Yes	Go to the applicable DTC inspection. (See 01-02-14 DTC TABLE [SKYACTIV-G 2.0].) (See 05-02A-11 ON-BOARD DIAGNOSTIC SYSTEM DTC TABLE [FW6A-EL, FW6AX-EL].) (See 09-02K-13 DTC TABLE [FRONT BODY CONTROL MODULE (FBCM)].) (See 09-02L-12 DTC TABLE [REAR BODY CONTROL MODULE (RBCM)].) (See 04-02A-7 ON-BOARD DIAGNOSIS [DYNAMIC STABILITY CONTROL (DSC)].) (See 08-02-11 DTC TABLE.) (See 09-02G-10 DTC TABLE [INSTRUMENT CLUSTER].) (See 07-02-7 DTC TABLE [FULL-AUTO AIR CONDITIONER].)
		No	Go to the next step.
6	**INSPECT BATTERY** • Inspect the battery. (See 01-17A-7 BATTERY INSPECTION [SKYACTIV-G 2.0].) • Is there any malfunction?	Yes	Replace the battery. (See 01-17A-3 BATTERY REMOVAL/INSTALLATION [SKYACTIV-G 2.0].)
		No	Go to the next step.

SYMPTOM TROUBLESHOOTING [SKYACTIV-G 2.0]

STEP	INSPECTION	RESULTS	ACTION
7	**INSPECT GENERATOR** • Inspect the generator. (See 01-17A-19 GENERATOR INSPECTION [SKYACTIV-G 2.0].) • Is there any malfunction?	Yes	Repair or replace the malfunctioning part according to the inspection results.
		No	Go to the next step.
8	**DETERMINE IF MALFUNCTION CAUSE IS APP SENSOR SIGNAL OR OTHER** • Start the engine and drive the vehicle for **5 min**. • Idle the engine. • Access the following PCM and TCM PIDs using the M-MDS: (See 01-02-8 ON-BOARD DIAGNOSTIC TEST [SKYACTIV-G 2.0].) (See 05-02A-94 ON-BOARD DIAGNOSTIC SYSTEM PID/DATA MONITOR INSPECTION [FW6A-EL, FW6AX-EL].) **PCM PIDs:** — BATT_TEMP (**0—70 °C {32—158 °F}**) — ECT (**55—110 °C {131—230 °F}**) — IAT (**less than 100 °C {212 °F}**) **TCM PID: (ATX)** — TFT **(20—120 °C {68—248 °F})** • Are the PID values within the i-stop operation range?	Yes	Inspect the related-PID sensor which is out of range and the wiring harness. • If there is any malfunction: — Repair or replace the malfunctioning part according to the inspection results.
		No	Go to the next step.
9	**DETERMINE IF MALFUNCTION CAUSE IS AMBIENT TEMPERATURE SENSOR SIGNAL OR OTHER** • Switch the ignition ON (engine off or on). • Compare the ambient temperature sensor on the LCD with the actual ambient temperature. • Does the ambient temperature on the LCD correspond to the actual ambient temperature?	Yes	ATX: • Go to Step 12. MTX: • Go to Step 13.
		No	Go to the next step.
10	**INSPECT AMBIENT TEMPERATURE SENSOR** • Inspect the ambient temperature sensor. (See 07-40A-23 AMBIENT TEMPERATURE SENSOR INSPECTION [FULL-AUTO AIR CONDITIONER].) • Is there any malfunction?	Yes	Replace the ambient temperature sensor. (See 07-40A-22 AMBIENT TEMPERATURE SENSOR REMOVAL/INSTALLATION [FULL-AUTO AIR CONDITIONER].)
		No	Go to the next step.
11	**INSPECT AMBIENT TEMPERATURE SENSOR CIRCUIT FOR SHORT TO GROUND OR OPEN CIRCUIT** • Inspect for open or short circuit between the following terminals (wiring harness-side): — Ambient temperature sensor terminal A—PCM terminal 2I — Ambient temperature sensor terminal B—PCM terminal 2AJ • Is there any malfunction?	Yes	Repair or replace the suspected wiring harness.
		No	Replace the PCM. (See 01-40-10 PCM REMOVAL/INSTALLATION [SKYACTIV-G 2.0].)
12	**VERIFY IF MALFUNCTION CAUSE IS STEERING ANGLE SENSOR INITIALIZATION NOT PERFORMED** • Drive the vehicle and verify the steering learning. • Can learning be completed?	Yes	Malfunction caused by the steering angle sensor initialization malfunction. • Investigate when there is a malfunction in steering angle learning.
		No	Go to the next step.

SYMPTOM TROUBLESHOOTING [SKYACTIV-G 2.0]

STEP	INSPECTION	RESULTS	ACTION
13*	**DETERMINE IF MALFUNCTION CAUSE IS DOOR LATCH SWITCH AND LIFTGATE LATCH SWITCH SIGNAL OR OTHER** • Switch the ignition ON (engine off or on). • Access the following rear body control module (RBCM) PIDs using the M-MDS: (See 09-02L-93 PID/DATA MONITOR INSPECTION [REAR BODY CONTROL MODULE (RBCM)].) — TRUNK — DOOR_D — DOOR_ALL • Are the PID values congruent with the opening and closing of the doors and liftgate? (See 09-02L-94 PID/DATA MONITOR TABLE [REAR BODY CONTROL MODULE (RBCM)].)	Yes	Go to Step 15.
		No	Go to the next step.
14	**INSPECT DOOR LATCH SWITCH AND LIFTGATE LATCH SWITCH** • Inspect the PID-related switch in which the malfunction occurred in Step 13. (See 09-14-50 LIFTGATE LATCH SWITCH INSPECTION.) (See 09-14-40 FRONT DOOR LATCH SWITCH INSPECTION.) (See 09-14-46 REAR DOOR LATCH SWITCH INSPECTION.) • Is there any malfunction?	Yes	Replace the applicable switch. (See 09-14-48 LIFTGATE LATCH AND LOCK ACTUATOR REMOVAL/INSTALLATION.) (See 09-14-35 FRONT DOOR LATCH AND LOCK ACTUATOR REMOVAL/INSTALLATION.) (See 09-14-42 REAR DOOR LATCH AND LOCK ACTUATOR REMOVAL/INSTALLATION.)
		No	Inspect the following wiring harness in which the malfunction occurred in Step 13: • Open circuit in wiring harness between door latch switch and rear body control module (RBCM) • Short to ground in wiring harness between liftgate latch switch and rear body control module (RBCM) — If there is any malfunction: • Repair or replace the suspected wiring harness.
15	**DETERMINE IF MALFUNCTION CAUSE IS DRIVER-SIDE BUCKLE SWITCH SIGNAL OR OTHER** • Switch the ignition ON (engine off or on). • Access the SAS control module PID SEAT_B_D using the M-MDS. (See 08-02-136 PID/DATA MONITOR INSPECTION.) • Is the SEAT_B_D PID value congruent with the seat belt condition? (See 08-02-136 PID/DATA MONITOR TABLE.)	Yes	Vehicles with manual air conditioner: • Go to Step 19. Vehicles with full-auto air conditioner: • Go to Step 17.
		No	Go to the next step.
16	**INSPECT DRIVER-SIDE BUCKLE SWITCH** • Inspect the driver-side buckle switch. (See 08-11-11 BUCKLE SWITCH INSPECTION.) • Is there any malfunction?	Yes	Replace the driver-side buckle switch. (See 08-11-9 FRONT BUCKLE REMOVAL/INSTALLATION.)
		No	Repair or replace the wiring harness between driver-side buckle switch terminal 4A and SAS control module terminal 2U for a possible short to ground.
17	**DETERMINE IF MALFUNCTION CAUSE IS CABIN TEMPERATURE SENSOR SIGNAL OR OTHER** • Access the climate control unit PID INC_TMP_SEN using the M-MDS. (See 07-02-38 PID/DATA MONITOR DISPLAY [FULL-AUTO AIR CONDITIONER].) • Does the INC_TMP_SEN PID value indicate the actual cabin temperature of the vehicle?	Yes	Go to Step 19.
		No	Go to the next step.

SYMPTOM TROUBLESHOOTING [SKYACTIV-G 2.0]

STEP	INSPECTION	RESULTS	ACTION
18	**INSPECT CABIN TEMPERATURE SENSOR** • Inspect the cabin temperature sensor. (See 07-40A-26 CABIN TEMPERATURE SENSOR INSPECTION [FULL-AUTO AIR CONDITIONER].) • Is there any malfunction?	Yes	Replace the cabin temperature sensor. (See 07-40A-23 CABIN TEMPERATURE SENSOR REMOVAL/INSTALLATION [FULL-AUTO AIR CONDITIONER].)
		No	Inspect the wiring harness between the following terminals for a short or open circuit: • Cabin temperature sensor terminal A—Climate control unit terminal 1J • Cabin temperature sensor terminal B—Climate control unit terminal 1X — If there is any malfunction: • Repair or replace the suspected wiring harness.
19*	**DETERMINE IF MALFUNCTION CAUSE IS BONNET LATCH SWITCH SIGNAL OR OTHER** • Switch the ignition ON (engine off or on). • Access the rear body control module (RBCM) PID HOOD_SW using the M-MDS. (See 09-02L-93 PID/DATA MONITOR INSPECTION [REAR BODY CONTROL MODULE (RBCM)].) • Is the HOOD_SW PID value normal? (See 09-02L-94 PID/DATA MONITOR TABLE [REAR BODY CONTROL MODULE (RBCM)].)	Yes	Go to Step 21.
		No	Go to the next step.
20	**INSPECT BONNET LATCH SWITCH** • Inspect the bonnet latch switch. (See 09-14-20 BONNET LATCH SWITCH INSPECTION.) • Is there any malfunction?	Yes	Replace the bonnet latch switch. (See 09-14-16 BONNET LATCH AND RELEASE LEVER REMOVAL/INSTALLATION.)
		No	Repair or replace the wiring harness between bonnet latch switch terminal A and rear body control module (RBCM) terminal 3L for a possible open circuit.
21	**DETERMINE IF MALFUNCTION CAUSE IS STEERING ANGLE SENSOR SIGNAL OR OTHER** • Start the engine and it at idle. • Access the EPS control module PID STR_ANG using the M-MDS. (See 06-02-5 ELECTRIC POWER STEERING (EPS) ON-BOARD DIAGNOSIS.) • Is the PID value normal?	Yes	Go to Step 23.
		No	Go to the next step.
22	**INSPECT STEERING ANGLE SENSOR** • Inspect the steering angle sensor. (See 09-18-33 STEERING ANGLE SENSOR INSPECTION.) • Is there any malfunction?	Yes	Replace the steering angle sensor. (See 09-18-33 STEERING ANGLE SENSOR REMOVAL/INSTALLATION.)
		No	Inspect the wiring harness between the following terminals for a short or open circuit: • Steering angle sensor terminal A—Start stop unit terminal 1U • Steering angle sensor terminal B—Start stop unit terminal 1T • Steering angle sensor terminal C—Start stop unit terminal 1W • Steering angle sensor terminal D—Start stop unit terminal 1S — If there is any malfunction: • Repair or replace the suspected wiring harness.

SYMPTOM TROUBLESHOOTING [SKYACTIV-G 2.0]

STEP	INSPECTION	RESULTS	ACTION
23	**DETERMINE IF MALFUNCTION CAUSED BY BRAKE OPERATION SIGNAL ERROR** • Switch the ignition ON (engine off or on). • Access the PCM PID BOO using the M-MDS. (See 01-02-8 ON-BOARD DIAGNOSTIC TEST [SKYACTIV-G 2.0].) • Does the BOO PID value change according to the brake pedal operation? (See 01-40-17 PCM INSPECTION [SKYACTIV-G 2.0].)	Yes	Go to Step 25.
		No	Go to the next step.
24	**INSPECT BRAKE SWITCH** • Inspect the brake switch. (See 04-11-11 BRAKE SWITCH INSPECTION.) • Is there any malfunction?	Yes	Replace the brake switch. (See 04-11-8 BRAKE PEDAL REMOVAL/INSTALLATION [L.H.D.].) (See 04-11-9 BRAKE PEDAL REMOVAL/INSTALLATION [R.H.D.].)
		No	Open circuit in wiring harness between brake switch terminal D and PCM terminal 2G. • If there is any malfunction: — Repair or replace the suspected wiring harness.
25	**DETERMINE IF MALFUNCTION CAUSE IS POWER BRAKE UNIT VACUUM SENSOR SIGNAL OR OTHER** • Start the engine and run it is idling. • Access the PCM PID BBP using the M-MDS with the brake pedal held depressed while the i-stop function is operating. (See 01-02-8 ON-BOARD DIAGNOSTIC TEST [SKYACTIV-G 2.0].) • Does the BBP PID value remain **less than –43 kPa {–0.44 kgf/cm^2, –6.2 psi}**?	Yes	Vehicles with manual air conditioner: • Go to Step 31. Vehicles with full-auto air conditioner: • Go to Step 29.
		No	Go to the next step.
26	**INSPECT POWER BRAKE UNIT VACUUM SENSOR FOR AIR TIGHTNESS MALFUNCTION** • Perform the vacuum function inspection for the power brake unit and the vacuum loss inspection. (See 04-11-14 POWER BRAKE UNIT INSPECTION.) • Is there any malfunction?	Yes	Repair or replace the malfunctioning part according to the inspection results.
		No	Go to the next step.
27	**INSPECT POWER BRAKE UNIT VACUUM SENSOR** • Inspect the power brake unit vacuum sensor. (See 04-11-14 POWER BRAKE UNIT INSPECTION.) • Is there any malfunction?	Yes	Replace the power brake unit vacuum sensor. (See 01-40-68 POWER BRAKE UNIT VACUUM SENSOR INSPECTION [SKYACTIV-G 2.0].)
		No	Go to the next step.
28	**INSPECT POWER BRAKE UNIT VACUUM SENSOR CIRCUIT FOR SHORT TO GROUND OR OPEN CIRCUIT** • Inspect for open or short circuit between the following terminals (wiring harness-side): — Power brake unit vacuum sensor terminal C—PCM terminal 2BG — Power brake unit vacuum sensor terminal B—PCM terminal 2Q — Power brake unit vacuum sensor terminal A—PCM terminal 2AH • Is there any malfunction?	Yes	Repair or replace the suspected wiring harness.
		No	Replace the PCM. (See 01-40-10 PCM REMOVAL/INSTALLATION [SKYACTIV-G 2.0].)

SYMPTOM TROUBLESHOOTING [SKYACTIV-G 2.0]

STEP	INSPECTION	RESULTS	ACTION
29	**DETERMINE IF MALFUNCTION CAUSE IS DRIVER-SIDE AIR MIX ACTUATOR SIGNAL OR OTHER** • Measure the voltage at the climate control unit terminal 1N (wiring harness-side) when the driver-side temperature setting is MAX HOT and MAX COLD. • Is the voltage normal? (See 07-40A-33 CLIMATE CONTROL UNIT INSPECTION [FULL-AUTO AIR CONDITIONER].)	Yes	Repeat the inspection from Step 1. • If the malfunction is not resolved, replace the PCM. (See 01-40-10 PCM REMOVAL/INSTALLATION [SKYACTIV-G 2.0].) Go to Step 31.
		No	Go to the next step.
30	**INSPECT DRIVER-SIDE AIR MIX ACTUATOR** • Inspect the driver-side air mix actuator. (See 07-40A-9 AIR MIX ACTUATOR INSPECTION [FULL-AUTO AIR CONDITIONER].) • Is there any malfunction?	Yes	Replace the driver-side air mix actuator. (See 07-40A-7 AIR MIX ACTUATOR REMOVAL/INSTALLATION [FULL-AUTO AIR CONDITIONER].)
		No	Inspect the air mix actuator and linkage for sticking. (See 07-11-14 A/C UNIT DISASSEMBLY/ASSEMBLY.) • If there is any malfunction: — Repair or replace the malfunctioning part according to the inspection results.
31	Verify the test results. • If normal, return to the diagnostic index to service any additional symptoms. (See 01-03-5 SYMPTOM DIAGNOSTIC INDEX [SKYACTIV-G 2.0].) • If a malfunction remains, inspect the related Service Information and perform the repair or diagnosis. — If the vehicle is repaired, troubleshooting is completed. — If the vehicle is not repaired or additional diagnostic information is not available, replace the PCM. (See 01-40-10 PCM REMOVAL/INSTALLATION [SKYACTIV-G 2.0].)		

NO.5 i-stop FUNCTION OPERATES UNDER NO ENGINE-STOP CONDITIONS [SKYACTIV-G 2.0]

id1103a1001000

5	i-stop FUNCTION OPERATES UNDER NO ENGINE-STOP CONDITIONS
DESCRIPTION	• i-stop function operates even though system is turned off by pressing i-stop OFF switch. • i-stop function operates even though vehicle conditions are for non-operation. • i-stop function operates frequently while parking vehicle.

SYMPTOM TROUBLESHOOTING [SKYACTIV-G 2.0]

5	i-stop FUNCTION OPERATES UNDER NO ENGINE-STOP CONDITIONS
POSSIBLE CAUSE	**i-stop warning light (amber) false illumination** • i-stop warning light (amber) illumination circuit malfunction in instrument cluster • CAN communication line between instrument cluster and PCM malfunction **False detection of i-stop function operation conditions** • False detection of external vehicle temperature within operable range (**–10 to 50 °C {14 to 122 °F}**) — Ambient temperature sensor malfunction (sensor specific malfunction) — Short or open circuit in wiring harness between ambient temperature sensor terminal A and PCM terminal 2I — Open circuit in wiring harness between ambient temperature sensor terminal B and PCM terminal 2AJ • Climate control unit falsely detects that internal vehicle temperature is within operation range. (vehicles with full-auto air conditioner) — Cabin temperature sensor malfunction (sensor specific or motor malfunction) — Short or open circuit in wiring harness between cabin temperature sensor terminal A and climate control unit terminal 1J — Open circuit in wiring harness between cabin temperature sensor terminal B and climate control unit terminal 1X • Falsely detects that climate control unit detects that driver-side air mix door is not in MAX HOT or MAX COLD position even though driver-side air mix door is in MAX HOT or MAX COLD position (vehicles with full-auto air conditioner) — Driver-side air mix actuator malfunction — Driver-side air mix actuator position sensor malfunction — Driver-side air mix door or linkage stuck • False detection of vehicle not being parked — False detection of steering wheel rotation speed • Steering angle sensor initialization malfunction • Steering angle sensor malfunction • Short or open circuit in wiring harness between steering angle sensor and start stop unit terminals 1U, 1T, 1W or 1S • Falsely detects that vehicle is under safety condition — False detection of closed bonnet • Bonnet latch switch malfunction (stuck closed) • Short to ground in wiring harness between bonnet latch switch terminal A and rear body control module (RBCM) terminal 3L — False detection of closed door, liftgate • Door latch switch malfunction • Liftgate latch switch malfunction • Short to ground in wiring harness between door latch switch and rear body control module (RBCM) • Open circuit in wiring harness between liftgate latch switch and rear body control module (RBCM) — False detection of fastened driver seat belt • Driver-side buckle switch malfunction • Open circuit in wiring harness between driver-side buckle switch terminal 4A and SAS control module terminal 2U — False detection of inclination angle (false detection of **12 % or less**) • Low-G (XY) sensor (built-into SAS control module) malfunction (In this case, the SAS control module records DTCs C0061:29 and C0062:29.) • Low-G (XY) sensor (built-into SAS control module) initialization malfunction — False detection of low power brake unit load • Power brake unit vacuum sensor malfunction • Short or open circuit in wiring harness between power brake unit vacuum sensor terminal C and PCM terminal 2BG • Short or open circuit in wiring harness between power brake unit vacuum sensor terminal B and PCM terminal 2Q • Short or open circuit in wiring harness between power brake unit vacuum sensor terminal A and PCM terminal 2AH

SYMPTOM TROUBLESHOOTING [SKYACTIV-G 2.0]

Diagnostic Procedure

STEP	INSPECTION	RESULTS	ACTION
1	**VERIFY DTC** • Retrieve the PCM, TCM, front body control module (FBCM), rear body control module (RBCM), DSC HU/CM, SAS control module, instrument cluster and climate control unit DTCs using the M-MDS. (See 01-02-8 ON-BOARD DIAGNOSTIC TEST [SKYACTIV-G 2.0].) (See 05-02A-7 ON-BOARD DIAGNOSTIC SYSTEM DTC INSPECTION [FW6A-EL, FW6AX-EL].) (See 09-02K-10 DTC INSPECTION [FRONT BODY CONTROL MODULE (FBCM)].) (See 09-02L-9 DTC INSPECTION [REAR BODY CONTROL MODULE (RBCM)].) (See 04-02A-7 ON-BOARD DIAGNOSIS [DYNAMIC STABILITY CONTROL (DSC)].) (See 08-02-7 DTC INSPECTION.) (See 09-02G-7 DTC INSPECTION [INSTRUMENT CLUSTER].) (See 07-02-6 DTC DISPLAY [FULL-AUTO AIR CONDITIONER].) • Are any DTCs present?	Yes	Go to the applicable DTC inspection. (See 01-02-14 DTC TABLE [SKYACTIV-G 2.0].) (See 05-02A-11 ON-BOARD DIAGNOSTIC SYSTEM DTC TABLE [FW6A-EL, FW6AX-EL].) (See 09-02K-13 DTC TABLE [FRONT BODY CONTROL MODULE (FBCM)].) (See 09-02L-12 DTC TABLE [REAR BODY CONTROL MODULE (RBCM)].) (See 04-02A-7 ON-BOARD DIAGNOSIS [DYNAMIC STABILITY CONTROL (DSC)].) (See 08-02-11 DTC TABLE.) (See 09-02G-10 DTC TABLE [INSTRUMENT CLUSTER].) (See 07-02-7 DTC TABLE [FULL-AUTO AIR CONDITIONER].)
		No	Go to the next step.
2*	**DETERMINE IF MALFUNCTION CAUSE IS AMBIENT TEMPERATURE SENSOR SIGNAL OR OTHER** • Switch the ignition ON (engine off or on). • Compare the ambient temperature sensor on the LCD with the actual ambient temperature. • Does the ambient temperature on the LCD correspond to the actual ambient temperature?	Yes	Go to Step 4.
		No	Go to the next step.
3	**INSPECT AMBIENT TEMPERATURE SENSOR** • Inspect the ambient temperature sensor. (See 07-40A-23 AMBIENT TEMPERATURE SENSOR INSPECTION [FULL-AUTO AIR CONDITIONER].) • Is there any malfunction?	Yes	Replace the ambient temperature sensor. (See 07-40A-22 AMBIENT TEMPERATURE SENSOR REMOVAL/INSTALLATION [FULL-AUTO AIR CONDITIONER].)
		No	Inspect the following: • Short or open circuit in wiring harness between ambient temperature sensor terminal A and PCM terminal 2I • Open circuit in wiring harness between ambient temperature sensor terminal B and PCM terminal 2AJ — If there is any malfunction: • Repair or replace the suspected wiring harness.
4*	**DETERMINE IF MALFUNCTION CAUSE IS DOOR LATCH SWITCH AND LIFTGATE LATCH SWITCH SIGNAL OR OTHER** • Switch the ignition ON (engine off or on). • Access the following rear body control module (RBCM) PIDs using the M-MDS: (See 09-02L-93 PID/DATA MONITOR INSPECTION [REAR BODY CONTROL MODULE (RBCM)].) — TRUNK — DOOR_D — DOOR_ALL • Are the PID values congruent with the opening and closing of the doors and liftgate? (See 09-02L-94 PID/DATA MONITOR TABLE [REAR BODY CONTROL MODULE (RBCM)].)	Yes	Go to Step 6.
		No	Go to the next step.

SYMPTOM TROUBLESHOOTING [SKYACTIV-G 2.0]

STEP	INSPECTION	RESULTS	ACTION
5	**INSPECT DOOR LATCH SWITCH AND LIFTGATE LATCH SWITCH** • Inspect the PID-related switch in which the malfunction occurred in Step 4. (See 09-14-50 LIFTGATE LATCH SWITCH INSPECTION.) (See 09-14-40 FRONT DOOR LATCH SWITCH INSPECTION.) (See 09-14-46 REAR DOOR LATCH SWITCH INSPECTION.) • Is there any malfunction?	Yes	Replace the applicable switch. (See 09-14-48 LIFTGATE LATCH AND LOCK ACTUATOR REMOVAL/INSTALLATION.) (See 09-14-35 FRONT DOOR LATCH AND LOCK ACTUATOR REMOVAL/INSTALLATION.) (See 09-14-42 REAR DOOR LATCH AND LOCK ACTUATOR REMOVAL/INSTALLATION.)
		No	Inspect the following in which the malfunction occurred in Step 4: • Short to ground in wiring harness between door latch switch and rear body control module (RBCM) • Open circuit in wiring harness between liftgate latch switch and rear body control module (RBCM) — If there is any malfunction: • Repair or replace the suspected wiring harness.
6*	**DETERMINE IF MALFUNCTION CAUSE IS DRIVER-SIDE BUCKLE SWITCH SIGNAL OR OTHER** • Switch the ignition ON (engine off or on). • Access the SAS control module PID SEAT_B_D using the M-MDS. (See 08-02-136 PID/DATA MONITOR INSPECTION.) • Is the SEAT_B_D PID value congruent with the seat belt condition? (See 08-02-136 PID/DATA MONITOR TABLE.)	Yes	Vehicles with manual air conditioner: • Go to Step 10. Vehicles with full-auto air conditioner: • Go to Step 8.
		No	Go to the next step.
7	**INSPECT DRIVER-SIDE BUCKLE SWITCH** • Inspect the driver-side buckle switch. (See 08-11-11 BUCKLE SWITCH INSPECTION.) • Is there any malfunction?	Yes	Replace the driver-side buckle switch. (See 08-11-9 FRONT BUCKLE REMOVAL/INSTALLATION.)
		No	Repair or replace the wiring harness between driver-side buckle switch terminal 4A and SAS control module terminal 2U for a possible open circuit.
8	**DETERMINE IF MALFUNCTION CAUSE IS CABIN TEMPERATURE SENSOR SIGNAL OR OTHER** • Access the climate control unit PID INC_TMP_SEN using the M-MDS. (See 07-02-38 PID/DATA MONITOR DISPLAY [FULL-AUTO AIR CONDITIONER].) • Does the INC_TMP_SEN PID value indicate the actual cabin temperature of the vehicle?	Yes	Go to Step 10.
		No	Go to the next step.
9	**INSPECT CABIN TEMPERATURE SENSOR** • Inspect the cabin temperature sensor. (See 07-40A-26 CABIN TEMPERATURE SENSOR INSPECTION [FULL-AUTO AIR CONDITIONER].) • Is there any malfunction?	Yes	Replace the cabin temperature sensor. (See 07-40A-23 CABIN TEMPERATURE SENSOR REMOVAL/INSTALLATION [FULL-AUTO AIR CONDITIONER].)
		No	Inspect the wiring harness between the following terminals for a short or open circuit: • Cabin temperature sensor terminal A—Climate control unit terminal 1J • Cabin temperature sensor terminal B—Climate control unit terminal 1X — If there is any malfunction: • Repair or replace the suspected wiring harness.

SYMPTOM TROUBLESHOOTING [SKYACTIV-G 2.0]

STEP	INSPECTION	RESULTS	ACTION
10*	**DETERMINE IF MALFUNCTION CAUSE IS BONNET LATCH SWITCH SIGNAL OR OTHER** • Switch the ignition ON (engine off or on). • Access the rear body control module (RBCM) PID HOOD_SW using the M-MDS. (See 09-02L-93 PID/DATA MONITOR INSPECTION [REAR BODY CONTROL MODULE (RBCM)].) • Is the HOOD_SW PID value normal? (See 09-02L-94 PID/DATA MONITOR TABLE [REAR BODY CONTROL MODULE (RBCM)].)	Yes	Go to Step 12.
		No	Go to the next step.
11	**INSPECT BONNET LATCH SWITCH** • Inspect the bonnet latch switch. (See 09-14-20 BONNET LATCH SWITCH INSPECTION.) • Is there any malfunction?	Yes	Replace the bonnet latch switch. (See 09-14-16 BONNET LATCH AND RELEASE LEVER REMOVAL/INSTALLATION.)
		No	Repair or replace the wiring harness between bonnet latch switch terminal A and rear body control module (RBCM) terminal 3L for a possible short to ground.
12	**DETERMINE IF MALFUNCTION CAUSE IS STEERING ANGLE SENSOR SIGNAL OR OTHER** • Switch the ignition ON (engine off or on). • Access the EPS control module PID STR_ANG using the M-MDS. (See 06-02-5 ELECTRIC POWER STEERING (EPS) ON-BOARD DIAGNOSIS.) • Is the PID value normal?	Yes	Go to Step 14.
		No	Go to the next step.
13*	**INSPECT STEERING ANGLE SENSOR** • Inspect the steering angle sensor. (See 09-18-33 STEERING ANGLE SENSOR INSPECTION.) • Is there any malfunction?	Yes	Replace the steering angle sensor. (See 09-18-33 STEERING ANGLE SENSOR REMOVAL/INSTALLATION.)
		No	Inspect the wiring harness between the following terminals for a short or open circuit: • Steering angle sensor terminal A—Start stop unit terminal 1U • Steering angle sensor terminal B—Start stop unit terminal 1T • Steering angle sensor terminal C—Start stop unit terminal 1W • Steering angle sensor terminal D—Start stop unit terminal 1S — If there is any malfunction: • Repair or replace the suspected wiring harness.
14	**DETERMINE IF MALFUNCTION CAUSE IS POWER BRAKE UNIT VACUUM SENSOR SIGNAL OR OTHER** • Turn off the i-stop system with i-stop OFF switch. • Start the engine and run it is idling. • Switch the ignition to off. • Switch the ignition ON (engine off). • Access the PCM PID BBP using the M-MDS while the brake pedal has been depressed several times. (See 01-02-8 ON-BOARD DIAGNOSTIC TEST [SKYACTIV-G 2.0].) • Does the monitor value decrease every time the brake pedal is depressed?	Yes	Vehicles with manual air conditioner: • Go to Step 18. Vehicles with full-auto air conditioner: • Go to Step 16.
		No	Go to the next step.

SYMPTOM TROUBLESHOOTING [SKYACTIV-G 2.0]

STEP	INSPECTION	RESULTS	ACTION
15	**INSPECT POWER BRAKE UNIT VACUUM SENSOR** • Inspect the power brake unit vacuum sensor. (See 04-11-14 POWER BRAKE UNIT INSPECTION.) • Is there any malfunction?	Yes	Replace the power brake unit vacuum sensor. (See 01-40-68 POWER BRAKE UNIT VACUUM SENSOR INSPECTION [SKYACTIV-G 2.0].)
		No	Inspect the wiring harness between the following terminals for a short or open circuit: • Power brake unit vacuum sensor terminal C—PCM terminal 2BG • Power brake unit vacuum sensor terminal B—PCM terminal 2Q • Power brake unit vacuum sensor terminal A—PCM terminal 2AH — If there is any malfunction: • Repair or replace the suspected wiring harness. — If there is no malfunction: • Replace the PCM. (See 01-40-10 PCM REMOVAL/INSTALLATION [SKYACTIV-G 2.0].)
16	**DETERMINE IF MALFUNCTION CAUSE IS DRIVER-SIDE AIR MIX ACTUATOR SIGNAL OR OTHER** • Measure the voltage at the climate control unit terminal 1N (wiring harness-side) when the driver-side temperature setting is MAX HOT and MAX COLD. • Is the voltage normal? (See 07-40A-33 CLIMATE CONTROL UNIT INSPECTION [FULL-AUTO AIR CONDITIONER].)	Yes	Repeat the inspection from Step 1. • If the malfunction is not resolved, replace the PCM. (See 01-40-10 PCM REMOVAL/INSTALLATION [SKYACTIV-G 2.0].) Go to Step 18.
		No	Go to the next step.
17	**INSPECT DRIVER-SIDE AIR MIX ACTUATOR** • Inspect the driver-side air mix actuator. (See 07-40A-9 AIR MIX ACTUATOR INSPECTION [FULL-AUTO AIR CONDITIONER].) • Is there any malfunction?	Yes	Replace the driver-side air mix actuator. (See 07-40A-7 AIR MIX ACTUATOR REMOVAL/INSTALLATION [FULL-AUTO AIR CONDITIONER].)
		No	Inspect the air mix actuator and linkage for sticking. (See 07-11-14 A/C UNIT DISASSEMBLY/ASSEMBLY.) • If there is any malfunction: — Repair or replace the malfunctioning part according to the inspection results.
18	Verify the test results. • If normal, return to the diagnostic index to service any additional symptoms. (See 01-03-5 SYMPTOM DIAGNOSTIC INDEX [SKYACTIV-G 2.0].) • If a malfunction remains, inspect the related Service Information and perform the repair or diagnosis. — If the vehicle is repaired, troubleshooting is completed. — If the vehicle is not repaired or additional diagnostic information is not available, replace the PCM. (See 01-40-10 PCM REMOVAL/INSTALLATION [SKYACTIV-G 2.0].)		

NO.6 ENGINE DOES NOT RESTART [SKYACTIV-G 2.0]

id1103a1001100

6	ENGINE DOES NOT RESTART
DESCRIPTION	• The i-stop warning light (amber) illuminates and engine does not restart while the i-stop function is operating. • Engine does not restart when attempting to resume driving vehicle after stopping, and i-stop warning light (amber) is illuminated. • Engine does not restart even though restart conditions are met.

SYMPTOM TROUBLESHOOTING [SKYACTIV-G 2.0]

6	ENGINE DOES NOT RESTART
POSSIBLE CAUSE	**False detection of engine restart restriction conditions during engine stop** • False detection of vehicle in unsafe condition while i-stop function is operating — False detection of open bonnet (engine stalls and i-stop warning light (amber) illuminates) • Bonnet latch switch malfunction • Open circuit in wiring harness between bonnet latch switch terminal A and rear body control module (RBCM) terminal 3L — False detection of open driver's door (when driver's seat belt is unfastened, engine stalls and i-stop warning light (amber) illuminates) • Front door latch switch (driver's side) malfunction • Open circuit in wiring harness between front door latch switch (driver's side) and rear body control module (RBCM) — False detection of unfastened driver seat belt (when driver's door is opened, engine stalls and i-stop warning light (amber) illuminates) • Driver-side buckle switch malfunction • Short to ground in wiring harness between driver-side buckle switch terminal 4A and SAS control module terminal 2U **Engine does not crank when engine is restarted (i-stop warning light (amber) illuminates)** • Engine starting system malfunction **Cannot recognize signal for conditions permitting engine restart** • False detection of i-stop operation not switched OFF even though switched OFF — i-stop OFF switch malfunction • False detection of brake pedal non-operation even though operated — Brake fluid pressure sensor (built-into DSC HU/CM) malfunction • Falsely detects that climate control unit detects driver-side air mix door position at MAX HOT or MAX COLD (vehicles with full-auto air conditioner) — Driver-side air mix actuator malfunction — Driver-side air mix actuator position sensor malfunction — Driver-side air mix door link stuck • False detection of assured power brake unit vacuum (assist force) even though vacuum decreases — Power brake unit vacuum sensor malfunction — Short or open circuit in wiring harness between the following terminals: • Power brake unit vacuum sensor terminal C—PCM terminal 2BG • Power brake unit vacuum sensor terminal B—PCM terminal 2Q • Power brake unit vacuum sensor terminal A—PCM terminal 2AH • Cannot recognize steering wheel angle and speed even though steering wheel is turned. (ATX, D or M position) — Steering angle sensor malfunction — Short or open circuit in wiring harness between steering angle sensor and start stop unit terminals 1U, 1T, 1W or 1S **Engine system malfunction (engine does not start even though cranking for 3 s or more when engine is restarted) (i-stop warning light (amber) illuminates)** • Piston-stop position malfunction while i-stop function is operating — CKP sensor malfunction — Throttle value operation malfunction (drive-by-wire control malfunction) — Intake-air system related malfunction (air suction, vacuum hose breakage) — Purge control malfunction • Mechanical (engine) malfunction — Valve timing malfunction — Improper operation of electric variable valve timing control system (PCM DTC is stored.) — Improper operation of hydraulic variable valve timing control system

SYMPTOM TROUBLESHOOTING [SKYACTIV-G 2.0]

Diagnostic Procedure

STEP	INSPECTION	RESULTS	ACTION
1	**VERIFY DTC** • Retrieve the PCM, TCM, front body control module (FBCM), rear body control module (RBCM) and climate control unit DTCs using the M-MDS. (See 01-02-8 ON-BOARD DIAGNOSTIC TEST [SKYACTIV-G 2.0].) (See 05-02A-7 ON-BOARD DIAGNOSTIC SYSTEM DTC INSPECTION [FW6A-EL, FW6AX-EL].) (See 09-02K-10 DTC INSPECTION [FRONT BODY CONTROL MODULE (FBCM)].) (See 09-02L-9 DTC INSPECTION [REAR BODY CONTROL MODULE (RBCM)].) (See 07-02-6 DTC DISPLAY [FULL-AUTO AIR CONDITIONER].) • Are any DTCs present?	Yes	Go to the applicable DTC inspection. (See 01-02-14 DTC TABLE [SKYACTIV-G 2.0].) (See 05-02A-11 ON-BOARD DIAGNOSTIC SYSTEM DTC TABLE [FW6A-EL, FW6AX-EL].) (See 09-02K-13 DTC TABLE [FRONT BODY CONTROL MODULE (FBCM)].) (See 09-02L-12 DTC TABLE [REAR BODY CONTROL MODULE (RBCM)].) (See 07-02-7 DTC TABLE [FULL-AUTO AIR CONDITIONER].)
		No	Go to the next step.
2	**VERIFY i-stop WARNING LIGHT (AMBER) CONDITION** • Does the i-stop warning light (amber) illuminate?	Yes	Go to Step 12.
		No	Go to the next step.
3	**DETERMINE IF MALFUNCTION CAUSE IS i-stop OFF SWITCH SIGNAL OR OTHER** • Switch the ignition to off. • Disconnect the instrument cluster connector. • Inspect for continuity between instrument cluster terminal V and body ground when the i-stop OFF switch is pressed. • Is there continuity?	Yes	Go to Step 5.
		No	Go to the next step.
4	**INSPECT i-stop OFF SWITCH** • Inspect the i-stop OFF switch. (See 01-40-66 i-stop OFF SWITCH INSPECTION [SKYACTIV-G 2.0].) • Is there any malfunction?	Yes	Replace the cluster switch. (See 09-17-18 SWITCH PANEL REMOVAL/ INSTALLATION.)
		No	Inspect the wiring harness between the following terminals for open circuit: • Cluster switch terminal B—Instrument cluster terminal V • Cluster switch terminal C—Instrument cluster terminal T — If there is any malfunction: • Repair or replace the suspected wiring harness.
5	**DETERMINE IF MALFUNCTION CAUSE IS STEERING ANGLE SENSOR SIGNAL OR OTHER** • Start the engine and it at idle. • Access the EPS control module PID STR_ANG using the M-MDS. (See 06-02-5 ELECTRIC POWER STEERING (EPS) ON-BOARD DIAGNOSIS.) • Is the PID value normal?	Yes	Go to Step 7.
		No	Go to the next step.

SYMPTOM TROUBLESHOOTING [SKYACTIV-G 2.0]

STEP	INSPECTION	RESULTS	ACTION
6	**INSPECT STEERING ANGLE SENSOR** • Inspect the steering angle sensor. (See 09-18-33 STEERING ANGLE SENSOR INSPECTION.) • Is there any malfunction?	Yes	Replace the steering angle sensor. (See 09-18-33 STEERING ANGLE SENSOR REMOVAL/INSTALLATION.)
		No	Inspect the wiring harness between the following terminals for a short or open circuit: • Steering angle sensor terminal A—Start stop unit terminal 1U • Steering angle sensor terminal B—Start stop unit terminal 1T • Steering angle sensor terminal C—Start stop unit terminal 1W • Steering angle sensor terminal D—Start stop unit terminal 1S — If there is any malfunction: • Repair or replace the suspected wiring harness.
7	**INSPECT BRAKE FLUID PRESSURE SENSOR** • Inspect the brake fluid pressure sensor. (See 04-15-14 BRAKE FLUID PRESSURE SENSOR INSPECTION.) • Is there any malfunction?	Yes	Replace the DSC HU/CM. (See 04-15-4 DSC HU/CM REMOVAL/INSTALLATION.)
		No	Go to the next step.
8	**DETERMINE IF MALFUNCTION CAUSE IS DRIVER-SIDE AIR MIX ACTUATOR SIGNAL OR OTHER** • Measure the voltage at the climate control unit terminal 1N (wiring harness-side) when the driver-side temperature setting is MAX HOT and MAX COLD. • Is the voltage normal? (See 07-40A-33 CLIMATE CONTROL UNIT INSPECTION [FULL-AUTO AIR CONDITIONER].)	Yes	Go to Step 10.
		No	Go to the next step.
9	**INSPECT DRIVER-SIDE AIR MIX ACTUATOR** • Inspect the driver-side air mix actuator. (See 07-40A-9 AIR MIX ACTUATOR INSPECTION [FULL-AUTO AIR CONDITIONER].) • Is there any malfunction?	Yes	Replace the driver-side air mix actuator. (See 07-40A-7 AIR MIX ACTUATOR REMOVAL/INSTALLATION [FULL-AUTO AIR CONDITIONER].)
		No	Inspect the air mix actuator and linkage for sticking. (See 07-11-14 A/C UNIT DISASSEMBLY/ASSEMBLY.) • If there is any malfunction: — Repair or replace the malfunctioning part according to the inspection results.
10	**DETERMINE IF MALFUNCTION CAUSE IS POWER BRAKE UNIT VACUUM SENSOR SIGNAL OR OTHER** • Turn off the i-stop system with i-stop OFF switch. • Start the engine and run it is idling. • Stop the engine. • Switch the ignition ON (engine off). • Access the PCM PID BBP using the M-MDS while the brake pedal has been depressed several times. (See 01-02-8 ON-BOARD DIAGNOSTIC TEST [SKYACTIV-G 2.0].) • Does the monitor value decrease every time the brake pedal is depressed?	Yes	Repeat the inspection from Step 1. • If the malfunction is not resolved, replace the PCM. (See 01-40-10 PCM REMOVAL/INSTALLATION [SKYACTIV-G 2.0].) Go to Step 23.
		No	Go to the next step.

SYMPTOM TROUBLESHOOTING [SKYACTIV-G 2.0]

STEP	INSPECTION	RESULTS	ACTION
11	**INSPECT POWER BRAKE UNIT VACUUM SENSOR** • Inspect the power brake unit vacuum sensor. (See 04-11-14 POWER BRAKE UNIT INSPECTION.) • Is there any malfunction?	Yes	Replace the power brake unit vacuum sensor. (See 01-40-68 POWER BRAKE UNIT VACUUM SENSOR INSPECTION [SKYACTIV-G 2.0].)
		No	Inspect the wiring harness between the following terminals for a short or open circuit: • Power brake unit vacuum sensor terminal C—PCM terminal 2BG • Power brake unit vacuum sensor terminal B—PCM terminal 2Q • Power brake unit vacuum sensor terminal A—PCM terminal 2AH — If there is any malfunction: • Repair or replace the suspected wiring harness. — If there is no malfunction: • Replace the PCM. (See 01-40-10 PCM REMOVAL/ INSTALLATION [SKYACTIV-G 2.0].)
12	**VERIFY IF ENGINE STALLS AFTER CRANKING DURING ENGINE RESTART** • Does the engine restart by i-stop engine start?	Yes	Go to Step 19.
		No	Go to the next step.
13	**DETERMINE IF MALFUNCTION CAUSE IS FRONT DOOR LATCH SWITCH (DRIVER'S SIDE) SIGNAL OR OTHER** • Switch the ignition ON (engine off or on). • Access the rear body control module (RBCM) PID DOOR_D using the M-MDS. (See 09-02L-93 PID/DATA MONITOR INSPECTION [REAR BODY CONTROL MODULE (RBCM)].) • Are the DOOR_D PID values congruent with the opening and closing of the driver's door? (See 09-02L-94 PID/DATA MONITOR TABLE [REAR BODY CONTROL MODULE (RBCM)].)	Yes	Go to Step 15.
		No	Go to the next step.
14	**INSPECT FRONT DOOR LATCH SWITCH (DRIVER'S SIDE)** • Inspect the front door latch switch (driver's side). (See 09-14-40 FRONT DOOR LATCH SWITCH INSPECTION.) • Is there any malfunction?	Yes	Replace the front door latch and lock actuator (driver's side). (See 09-14-35 FRONT DOOR LATCH AND LOCK ACTUATOR REMOVAL/INSTALLATION.)
		No	Repair or replace the wiring harness between front door latch switch (driver's side) and rear body control module (RBCM) for a possible open circuit.
15	**DETERMINE IF MALFUNCTION CAUSE IS DRIVER-SIDE BUCKLE SWITCH SIGNAL OR OTHER** • Switch the ignition ON (engine off or on). • Access the SAS control module PID SEAT_B_D using the M-MDS. (See 08-02-136 PID/DATA MONITOR INSPECTION.) • Is the SEAT_B_D PID value congruent with the seat belt condition? (See 08-02-136 PID/DATA MONITOR TABLE.)	Yes	Go to Step 17.
		No	Go to the next step.
16	**INSPECT DRIVER-SIDE BUCKLE SWITCH** • Inspect the driver-side buckle switch. (See 08-11-11 BUCKLE SWITCH INSPECTION.) • Is there any malfunction?	Yes	Replace the driver-side buckle switch. (See 08-11-9 FRONT BUCKLE REMOVAL/ INSTALLATION.)
		No	Repair or replace the wiring harness between driver-side buckle switch terminal 4A and SAS control module terminal 2U for a possible short to ground.

SYMPTOM TROUBLESHOOTING [SKYACTIV-G 2.0]

STEP	INSPECTION	RESULTS	ACTION
17	**DETERMINE IF MALFUNCTION CAUSE IS BONNET LATCH SWITCH SIGNAL OR OTHER** • Switch the ignition ON (engine off). • Access the rear body control module (RBCM) PID HOOD_SW using the M-MDS. (See 09-02L-93 PID/DATA MONITOR INSPECTION [REAR BODY CONTROL MODULE (RBCM)].) • Is the HOOD_SW PID value normal? (See 09-02L-94 PID/DATA MONITOR TABLE [REAR BODY CONTROL MODULE (RBCM)].)	Yes	Repeat the inspection from Step 1. • If the malfunction is not resolved, replace the PCM. (See 01-40-10 PCM REMOVAL/INSTALLATION [SKYACTIV-G 2.0].) Go to Step 23.
		No	Go to the next step.
18	**INSPECT BONNET LATCH SWITCH** • Inspect the bonnet latch switch. (See 09-14-20 BONNET LATCH SWITCH INSPECTION.) • Is there any malfunction?	Yes	Replace the bonnet latch switch. (See 09-14-16 BONNET LATCH AND RELEASE LEVER REMOVAL/INSTALLATION.)
		No	Repair or replace the wiring harness between bonnet latch switch terminal A and rear body control module (RBCM) terminal 3L for a possible open circuit.
19	**DETERMINE IF MALFUNCTION IS CAUSED BY ROUGH IDLING OR A PISTON-STOP POSITION CONTROL MALFUNCTION** • Start the engine and warm it up completely. • Verify the idling condition. • Is the engine idling rough?	Yes	Inspect the following: • Air suction into intake-air system • Vacuum hose leakage • Purge system • Electric variable valve timing system • Hydraulic variable valve timing system — If there is any malfunction: • Repair or replace the malfunctioning part according to the inspection results.
		No	Go to the next step.
20	**INSPECT CKP SENSOR SIGNAL WAVE** • Start the engine and idle it. • Verify the PCM terminal 1AD output signal wave pattern using an oscilloscope. (See 01-40-17 PCM INSPECTION [SKYACTIV-G 2.0].) • Is the output wave pattern normal?	Yes	Go to Step 22.
		No	Go to the next step.
21	**INSPECT CKP SENSOR PULSE WHEEL** • Visually inspect the CKP sensor pulse wheel. • Are there any cracks or bending in the pulse wheel?	Yes	Replace the crankshaft pulley. (See 01-40-59 CRANKSHAFT POSITION (CKP) SENSOR REMOVAL/INSTALLATION [SKYACTIV-G 2.0].)
		No	Inspect the wiring harness between the following terminals: • CKP sensor terminal A—PCM terminal 1BN • CKP sensor terminal C—PCM terminal 1AD • CKP sensor terminal B—PCM terminal 1AH — If there is any malfunction: • Repair or replace the suspected wiring harness. — If there is no malfunction: • Replace the CKP sensor. (See 01-40-59 CRANKSHAFT POSITION (CKP) SENSOR REMOVAL/INSTALLATION [SKYACTIV-G 2.0].)
22	**INSPECT DRIVE-BY-WIRE CONTROL SYSTEM OPERATION** • Perform the Drive-by-wire Control System Inspection. (See 01-03-118 ENGINE CONTROL SYSTEM OPERATION INSPECTION [SKYACTIV-G 2.0].) • Is the drive-by-wire control system normal?	Yes	Repeat the inspection from Step 1. • If the malfunction is not resolved, replace the PCM. (See 01-40-10 PCM REMOVAL/INSTALLATION [SKYACTIV-G 2.0].) Go to the next step.
		No	Repair or replace the malfunctioning part according to the inspection results.

SYMPTOM TROUBLESHOOTING [SKYACTIV-G 2.0]

STEP	INSPECTION	RESULTS	ACTION
23	Verify the test results. • If normal, return to the diagnostic index to service any additional symptoms. (See 01-03-5 SYMPTOM DIAGNOSTIC INDEX [SKYACTIV-G 2.0].) • If a malfunction remains, inspect the related Service Information and perform the repair or diagnosis. — If the vehicle is repaired, troubleshooting is completed. — If the vehicle is not repaired or additional diagnostic information is not available, replace the PCM. (See 01-40-10 PCM REMOVAL/INSTALLATION [SKYACTIV-G 2.0].)		

NO.7 LIMITED i-stop FUNCTION OPERATION TIME [SKYACTIV-G 2.0]

id1103a1001200

7	LIMITED i-stop FUNCTION OPERATION TIME
DESCRIPTION	• Frequency of which i-stop function operates is low. • Frequent occurrence of engine restarting other than for driving vehicle from stop.
POSSIBLE CAUSE	**Note** • To ensure electric vehicle system reliability, restart the engine regardless of the vehicle condition after **120 s** have elapsed since the i-stop function operated. **Battery voltage low during i-stop function operation** • Battery deterioration • Insufficient battery recharge while engine is running — Low recharge effect • Generator malfunction (part, system, control malfunction) • Large amount of vehicle power consumption • High electrical load from aftermarket electrical accessories **False detection of engine starting conditions** • False detection of battery voltage • False detection of low power brake unit load — Power brake unit vacuum sensor malfunction — Short or open circuit in wiring harness between the following terminals: • Power brake unit vacuum sensor terminal C—PCM terminal 2BG • Power brake unit vacuum sensor terminal B—PCM terminal 2Q • Power brake unit vacuum sensor terminal A—PCM terminal 2AH — Power brake unit malfunction (air tightness malfunction) — Malfunction in vacuum hose to power brake unit (damage, bad check valve) **False recognition of driver performing engine start operation** • False detection of depressed clutch pedal (MTX) — Clutch stroke sensor malfunction — Short to power supply in wiring harness between clutch stroke sensor terminal B and PCM terminal 2M • False detection of released brake pedal (ATX) — Brake fluid pressure sensor (built-into DSC HU/CM) malfunction • False detection of steering wheel operation — Steering angle sensor initialization malfunction — Steering angle sensor malfunction — Short or open circuit in wiring harness between steering angle sensor and start stop unit terminals 1U, 1T, 1W or 1S

SYMPTOM TROUBLESHOOTING [SKYACTIV-G 2.0]

Diagnostic Procedure

STEP	INSPECTION	RESULTS	ACTION
1	**INSPECT EFFECT OF NON-GENUINE ELECTRICAL ACCESSORY FOR CAUSE OF MALFUNCTION** • Remove any non-genuine electrical accessory. • Verify the malfunction symptom. • Is the frequency of the engine restarting from the i-stop off condition the same as that of another vehicle of the same model?	Yes	The system is normal. • Explain to the customer that the frequency of the engine restarting increases due to the effect of the non-genuine electrical accessory installed.
		No	Go to the next step.
2	**VERIFY DTC** • Retrieve the PCM, TCM, rear body control module (RBCM), DSC HU/CM, instrument cluster and climate control unit DTCs using the M-MDS. (See 01-02-8 ON-BOARD DIAGNOSTIC TEST [SKYACTIV-G 2.0].) (See 05-02A-7 ON-BOARD DIAGNOSTIC SYSTEM DTC INSPECTION [FW6A-EL, FW6AX-EL].) (See 09-02L-9 DTC INSPECTION [REAR BODY CONTROL MODULE (RBCM)].) (See 04-02A-7 ON-BOARD DIAGNOSIS [DYNAMIC STABILITY CONTROL (DSC)].) (See 09-02G-7 DTC INSPECTION [INSTRUMENT CLUSTER].) (See 07-02-6 DTC DISPLAY [FULL-AUTO AIR CONDITIONER].) • Are any DTCs present?	Yes	Go to the applicable DTC inspection. (See 01-02-14 DTC TABLE [SKYACTIV-G 2.0].) (See 05-02A-11 ON-BOARD DIAGNOSTIC SYSTEM DTC TABLE [FW6A-EL, FW6AX-EL].) (See 09-02L-12 DTC TABLE [REAR BODY CONTROL MODULE (RBCM)].) (See 04-02A-7 ON-BOARD DIAGNOSIS [DYNAMIC STABILITY CONTROL (DSC)].) (See 09-02G-10 DTC TABLE [INSTRUMENT CLUSTER].) (See 07-02-7 DTC TABLE [FULL-AUTO AIR CONDITIONER].)
		No	Go to the next step.
3	**VERIFY BATTERY CONDITION** • Inspect the battery. (See 01-17A-7 BATTERY INSPECTION [SKYACTIV-G 2.0].) • Is there any malfunction?	Yes	Go to the next step.
		No	Go to Step 5.
4	**DETERMINE IF MALFUNCTION CAUSE IS BATTERY OR GENERATOR** • Recharge the battery. (See 01-17A-9 BATTERY RECHARGING [SKYACTIV-G 2.0].) • Inspect the battery again. (See 01-17A-7 BATTERY INSPECTION [SKYACTIV-G 2.0].) • Is there any malfunction?	Yes	Replace the battery. (See 01-17A-3 BATTERY REMOVAL/INSTALLATION [SKYACTIV-G 2.0].)
		No	Go to the next step.
5	**INSPECT GENERATOR** • Inspect the generator. (See 01-17A-19 GENERATOR INSPECTION [SKYACTIV-G 2.0].) • Is there any malfunction?	Yes	Repair or replace the malfunctioning part according to the inspection results.
		No	ATX: • Go to the next step. MTX: • Go to Step 9.
6	**DETERMINE IF MALFUNCTION CAUSE IS STEERING ANGLE SENSOR SIGNAL OR OTHER** • Start the engine and let it idle. • Access the EPS control module PID STR_ANG using the M-MDS. (See 06-02-5 ELECTRIC POWER STEERING (EPS) ON-BOARD DIAGNOSIS.) • Is the PID value normal?	Yes	Go to Step 9.
		No	Go to the next step.
7	**INSPECT STEERING ANGLE SENSOR** • Inspect the steering angle sensor. (See 09-18-33 STEERING ANGLE SENSOR INSPECTION.) • Is there any malfunction?	Yes	Replace the steering angle sensor. (See 09-18-33 STEERING ANGLE SENSOR REMOVAL/INSTALLATION.)
		No	Go to the next step.

SYMPTOM TROUBLESHOOTING [SKYACTIV-G 2.0]

STEP	INSPECTION	RESULTS	ACTION
8	**INSPECT STEERING ANGLE SENSOR CIRCUIT FOR SHORT TO GROUND OR OPEN CIRCUIT** • Inspect for open or short circuit between the following terminals (wiring harness-side): — Steering angle sensor terminal A—Start stop unit terminal 1U — Steering angle sensor terminal B—Start stop unit terminal 1T — Steering angle sensor terminal C—Start stop unit terminal 1W — Steering angle sensor terminal D—Start stop unit terminal 1S • Is there any malfunction?	Yes	Repair or replace the suspected wiring harness.
		No	Replace the EPS control module.
9	**DETERMINE IF MALFUNCTION CAUSE IS POWER BRAKE UNIT VACUUM SENSOR SIGNAL OR OTHER** • Put the vehicle in an i-stop condition (engine stopped). • Access the PCM PID BBP using the M-MDS with the brake pedal depressed and the engine stopped. (See 01-02-8 ON-BOARD DIAGNOSTIC TEST [SKYACTIV-G 2.0].) • Does the BBP PID value remain **less than** –**43 kPa {–0.44 kgf/cm^2, –6.2 psi}**?	Yes	ATX: • Go to Step 13. MTX: • Go to Step 14.
		No	Go to the next step.
10	**INSPECT POWER BRAKE UNIT VACUUM SENSOR FOR AIR TIGHTNESS MALFUNCTION** • Perform the vacuum function inspection for the power brake unit and the vacuum loss inspection. (See 04-11-14 POWER BRAKE UNIT INSPECTION.) • Is there any malfunction?	Yes	Repair or replace the malfunctioning part according to the inspection results.
		No	Go to the next step.
11	**INSPECT POWER BRAKE UNIT VACUUM SENSOR** • Inspect the power brake unit vacuum sensor. (See 04-11-14 POWER BRAKE UNIT INSPECTION.) • Is there any malfunction?	Yes	Replace the power brake unit vacuum sensor. (See 01-40-68 POWER BRAKE UNIT VACUUM SENSOR INSPECTION [SKYACTIV-G 2.0].)
		No	Go to the next step.
12	**INSPECT POWER BRAKE UNIT VACUUM SENSOR CIRCUIT FOR SHORT TO GROUND OR OPEN CIRCUIT** • Inspect for open or short circuit between the following terminals (wiring harness-side): — Power brake unit vacuum sensor terminal C—PCM terminal 2BG — Power brake unit vacuum sensor terminal B—PCM terminal 2Q — Power brake unit vacuum sensor terminal A—PCM terminal 2AH • Is there any malfunction?	Yes	Repair or replace the suspected wiring harness.
		No	Replace the PCM. (See 01-40-10 PCM REMOVAL/INSTALLATION [SKYACTIV-G 2.0].)
13	**DETERMINE IF MALFUNCTION CAUSE IS BRAKE FLUID PRESSURE SENSOR SIGNAL OR OTHER** • Put the vehicle in an i-stop condition (engine stopped). • Monitor the PCM PID BFP using the M-MDS while the brake is depressed and held with the i-stop function operating. (See 04-02A-7 ON-BOARD DIAGNOSIS [DYNAMIC STABILITY CONTROL (DSC)].) • Does the monitoring value change?	Yes	Repeat the inspection from Step 1. • If the malfunction is not resolved, replace the PCM. (See 01-40-10 PCM REMOVAL/INSTALLATION [SKYACTIV-G 2.0].) Go to Step 16.
		No	Brake fluid pressure sensor malfunction. • Replace the DSC HU/CM. (See 04-15-4 DSC HU/CM REMOVAL/INSTALLATION.)

SYMPTOM TROUBLESHOOTING [SKYACTIV-G 2.0]

STEP	INSPECTION	RESULTS	ACTION
14*	**DETERMINE IF MALFUNCTION CAUSE IS CLUTCH STROKE SENSOR SIGNAL OR OTHER** • Switch the ignition ON (engine off or on). • Access the PCM PID CPP using the M-MDS. (See 01-02-8 ON-BOARD DIAGNOSTIC TEST [SKYACTIV-G 2.0].) • Does the CPP PID value change according to the amount the clutch pedal is depressed?	Yes	Repeat the inspection from Step 1. • If the malfunction is not resolved, replace the PCM. (See 01-40-10 PCM REMOVAL/INSTALLATION [SKYACTIV-G 2.0].) Go to Step 16.
		No	Go to the next step.
15	**INSPECT CLUTCH STROKE SENSOR** • Inspect the clutch stroke sensor. (See 01-40-67 CLUTCH STROKE SENSOR INSPECTION [SKYACTIV-G 2.0].) • Is there any malfunction?	Yes	Replace the clutch master cylinder. (See 05-10A-17 CLUTCH MASTER CYLINDER REMOVAL/INSTALLATION [C66M-R, C66MX-R].)
		No	Inspect for short to power supply between clutch stroke sensor terminal B and PCM terminal 2M. • If there is any malfunction: — Repair or replace the wiring harness for a possible short to power supply. • If there is no malfunction: — Replace the PCM. (See 01-40-10 PCM REMOVAL/INSTALLATION [SKYACTIV-G 2.0].)
16	Verify the test results. • If normal, return to the diagnostic index to service any additional symptoms. (See 01-03-5 SYMPTOM DIAGNOSTIC INDEX [SKYACTIV-G 2.0].) • If a malfunction remains, inspect the related Service Information and perform the repair or diagnosis. — If the vehicle is repaired, troubleshooting is completed. — If the vehicle is not repaired or additional diagnostic information is not available, replace the PCM. (See 01-40-10 PCM REMOVAL/INSTALLATION [SKYACTIV-G 2.0].)		

NO.8 INEFFECTIVE OPERATION OF A/C DURING ENGINE STOP (i-stop system) [SKYACTIV-G 2.0]

id1103a1001300

8	INEFFECTIVE OPERATION OF A/C DURING ENGINE STOP (i-stop SYSTEM)
DESCRIPTION	• A/C airflow temperature gradually increases or decreases while i-stop function is operating.
POSSIBLE CAUSE	**A/C system malfunction** • Climate control unit falsely recognizes MAX HOT or MAX COLD of air mix door on driver-side — Driver-side air mix actuator malfunction — Driver-side air mix actuator position sensor malfunction — Driver-side air mix door link stuck • Airflow temperature cannot be determined correctly. — Heater core temperature sensor (heater airflow temperature sensor) malfunction • Cabin temperature of target vehicle cannot be calculated. — Cabin temperature sensor malfunction — Solar radiation sensor malfunction — Ambient temperature sensor malfunction

SYMPTOM TROUBLESHOOTING [SKYACTIV-G 2.0]

Diagnostic Procedure

STEP	INSPECTION	RESULTS	ACTION
1	**DETERMINE IF MALFUNCTION CAUSE IS i-stop SYSTEM OR A/C SYSTEM** • Verify the malfunction symptom. • Does the malfunction occur only while the i-stop function is operating (engine stopped)?	Yes	Go to the next step.
		No	Go to the applicable A/C malfunction diagnostic procedure. (See 07-03A-4 TROUBLESHOOTING INDEX [FULL-AUTO AIR CONDITIONER].)
2	**VERIFY DTC** • Retrieve the PCM, instrument cluster and climate control unit DTCs using the M-MDS. (See 01-02-8 ON-BOARD DIAGNOSTIC TEST [SKYACTIV-G 2.0].) (See 09-02G-7 DTC INSPECTION [INSTRUMENT CLUSTER].) (See 07-02-6 DTC DISPLAY [FULL-AUTO AIR CONDITIONER].) • Are any DTCs present?	Yes	Go to the applicable DTC inspection. (See 01-02-14 DTC TABLE [SKYACTIV-G 2.0].) (See 09-02G-10 DTC TABLE [INSTRUMENT CLUSTER].) (See 07-02-7 DTC TABLE [FULL-AUTO AIR CONDITIONER].)
		No	Go to the next step.
3	**DETERMINE IF MALFUNCTION CAUSE IS AMBIENT TEMPERATURE SENSOR SIGNAL OR OTHER** • Switch the ignition ON (engine off or on). • Compare the ambient temperature sensor on the LCD with the actual ambient temperature. • Does the ambient temperature on the LCD correspond to the actual ambient temperature?	Yes	Vehicles with manual air conditioner: • Go to Step 13. Vehicles with full-auto air conditioner: • Go to Step 5.
		No	Go to the next step.
4	**INSPECT AMBIENT TEMPERATURE SENSOR** • Inspect the ambient temperature sensor. (See 07-40A-23 AMBIENT TEMPERATURE SENSOR INSPECTION [FULL-AUTO AIR CONDITIONER].) • Is there any malfunction?	Yes	Replace the ambient temperature sensor. (See 07-40A-22 AMBIENT TEMPERATURE SENSOR REMOVAL/INSTALLATION [FULL-AUTO AIR CONDITIONER].)
		No	Inspect the wiring harness between the following terminals: • Ambient temperature sensor terminal A—PCM terminal 2I • Ambient temperature sensor terminal B—PCM terminal 2AJ — If there is any malfunction: • Repair or replace the suspected wiring harness.
5	**DETERMINE IF MALFUNCTION CAUSE IS CABIN TEMPERATURE SENSOR SIGNAL OR OTHER** • Access the climate control unit PID INC_TMP_SEN using the M-MDS. (See 07-02-38 PID/DATA MONITOR DISPLAY [FULL-AUTO AIR CONDITIONER].) • Does the INC_TMP_SEN PID value indicate the actual cabin temperature of the vehicle?	Yes	Go to Step 7.
		No	Go to the next step.
6	**INSPECT CABIN TEMPERATURE SENSOR** • Inspect the cabin temperature sensor. (See 07-40A-26 CABIN TEMPERATURE SENSOR INSPECTION [FULL-AUTO AIR CONDITIONER].) • Is there any malfunction?	Yes	Replace the cabin temperature sensor. (See 07-40A-23 CABIN TEMPERATURE SENSOR REMOVAL/INSTALLATION [FULL-AUTO AIR CONDITIONER].)
		No	Inspect the wiring harness between the following terminals for a short or open circuit: • Cabin temperature sensor terminal A—Climate control unit terminal 1J • Cabin temperature sensor terminal B—Climate control unit terminal 1X — If there is any malfunction: • Repair or replace the suspected wiring harness.

SYMPTOM TROUBLESHOOTING [SKYACTIV-G 2.0]

STEP	INSPECTION	RESULTS	ACTION
7	**DETERMINE IF MALFUNCTION CAUSE IS SOLAR RADIATION SENSOR SIGNAL OR OTHER** • Access the climate control unit PID SLR_R_SEN_L and SLR_R_SEN_R using the M-MDS. (See 07-02-38 PID/DATA MONITOR DISPLAY [FULL-AUTO AIR CONDITIONER].) • Does the SLR_R_SEN_L and SLR_R_SEN_R PID value display according to the solar radiation condition?	Yes	Go to Step 9.
		No	Go to the next step.
8	**INSPECT SOLAR RADIATION SENSOR** • Inspect the solar radiation sensor. (See 07-40A-22 SOLAR RADIATION SENSOR INSPECTION [FULL-AUTO AIR CONDITIONER].) • Is there any malfunction?	Yes	Replace the solar radiation sensor. (See 07-40A-21 SOLAR RADIATION SENSOR REMOVAL/INSTALLATION [FULL-AUTO AIR CONDITIONER].)
		No	Inspect the wiring harness between the following terminals: • Solar radiation sensor terminal B—Climate control unit terminal 1T • Solar radiation sensor terminal C—Climate control unit terminal 1V — If there is any malfunction: • Repair or replace the suspected wiring harness.
9	**DETERMINE IF MALFUNCTION CAUSE IS DRIVER-SIDE AIR MIX ACTUATOR SIGNAL OR OTHER** • Measure the voltage at the climate control unit terminal 1N (wiring harness-side) when the driver-side temperature setting is MAX HOT and MAX COLD. • Is the voltage normal? (See 07-40A-33 CLIMATE CONTROL UNIT INSPECTION [FULL-AUTO AIR CONDITIONER].)	Yes	Go to Step 11.
		No	Go to the next step.
10	**INSPECT DRIVER-SIDE AIR MIX ACTUATOR** • Inspect the driver-side air mix actuator. (See 07-40A-9 AIR MIX ACTUATOR INSPECTION [FULL-AUTO AIR CONDITIONER].) • Is there any malfunction?	Yes	Replace the driver-side air mix actuator. (See 07-40A-7 AIR MIX ACTUATOR REMOVAL/INSTALLATION [FULL-AUTO AIR CONDITIONER].)
		No	Inspect the air mix actuator and linkage for sticking. (See 07-11-14 A/C UNIT DISASSEMBLY/ASSEMBLY.) • If there is any malfunction: — Repair or replace the malfunctioning part according to the inspection results.
11	**DETERMINE IF MALFUNCTION CAUSE IS HEATER CORE TEMPERATURE SENSOR SIGNAL OR OTHER** • Measure the voltage at the climate control unit terminal 1L (wiring harness-side) while the engine is stopped via i-stop control. • Do the elapsed time and voltage values change?	Yes	The system is normal. • Effect is due to a possible change in the vehicle environment while the engine is stopped (change in solar radiation).
		No	Go to the next step.
12	**INSPECT HEATER CORE TEMPERATURE SENSOR** • Inspect the heater core temperature sensor. (See 07-40A-29 HEATER CORE TEMPERATURE SENSOR INSPECTION [FULL-AUTO AIR CONDITIONER].) • Is there any malfunction?	Yes	Replace the heater core temperature sensor. (See 07-40A-27 HEATER CORE TEMPERATURE SENSOR REMOVAL/INSTALLATION [FULL-AUTO AIR CONDITIONER].)
		No	Repair or replace the wiring harness between heater core temperature sensor terminal B and climate control unit terminal 1L.
13	Verify the test results. • If normal, return to the diagnostic index to service any additional symptoms. (See 01-03-5 SYMPTOM DIAGNOSTIC INDEX [SKYACTIV-G 2.0].) • If a malfunction remains, inspect the related Service Information and perform the repair or diagnosis. — If the vehicle is repaired, troubleshooting is completed. — If the vehicle is not repaired or additional diagnostic information is not available, replace the PCM. (See 01-40-10 PCM REMOVAL/INSTALLATION [SKYACTIV-G 2.0].)		

SYMPTOM TROUBLESHOOTING [SKYACTIV-G 2.0]

NO.9 ACCELERATION MALFUNCTION [SKYACTIV-G 2.0]

id1103a1001400

9	ACCELERATION MALFUNCTION
DESCRIPTION	• Acceleration from i-stop is not smooth. • Suppresses (shock) when accelerating vehicle from i-stop. • Engine vibration increases when engine is restarted.
POSSIBLE CAUSE	**ATX system malfunction** • Electric AT oil pump malfunction (operation malfunction, insufficient pressure) — Electric AT oil pump relay malfunction (stuck open) — Short to ground or open circuit in electric AT oil pump relay power supply circuit • Short to ground in wiring harness between MAIN 200 A fuse and electric AT oil pump relay terminal A • Short to ground in wiring harness between MAIN 200 A fuse and electric AT oil pump relay terminal D • MAIN 200 A fuse and/or AT PUMP 15 A fuse malfunction • Open circuit in wiring harness between battery positive terminal and electric AT oil pump relay terminal A • Open circuit in wiring harness between battery positive terminal and electric AT oil pump relay terminal D — Electric AT oil pump connector or terminals malfunction — Short to ground in wiring harness between electric AT oil pump relay terminal C and electric AT oil pump terminal D — Open circuit in wiring harness between electric AT oil pump terminal A and body ground — Open circuit in wiring harness between electric AT oil pump relay terminal C and electric AT oil pump terminal D — TCM connector or terminals malfunction — Short to ground in wiring harness between the following terminals: • Electric AT oil pump relay terminal E—TCM terminal K • Electric AT oil pump terminal C—TCM terminal L • Electric AT oil pump terminal B—TCM terminal N — Open circuit in wiring harness between the following terminals: • Electric AT oil pump relay terminal E—TCM terminal K • Electric AT oil pump terminal C—TCM terminal L • Electric AT oil pump terminal B—TCM terminal N — Electric AT oil pump malfunction — TCM malfunction • ATX malfunction **Hill launch assist function system (DSC) malfunction** • False detection of inclination angle (cannot calculate correct road slope) — Low-G (XY) sensor (built-into SAS control module) malfunction (In this case, the SAS control module records DTCs C0061:29 and C0062:29.) — Low-G (XY) sensor (built-into SAS control module) initialization malfunction • False detection of brake fluid pressure — Brake fluid pressure sensor (built-into DSC HU/CM) malfunction • Cannot maintain brake fluid pressure — DSC HU/CM malfunction

SYMPTOM TROUBLESHOOTING [SKYACTIV-G 2.0]

9	ACCELERATION MALFUNCTION

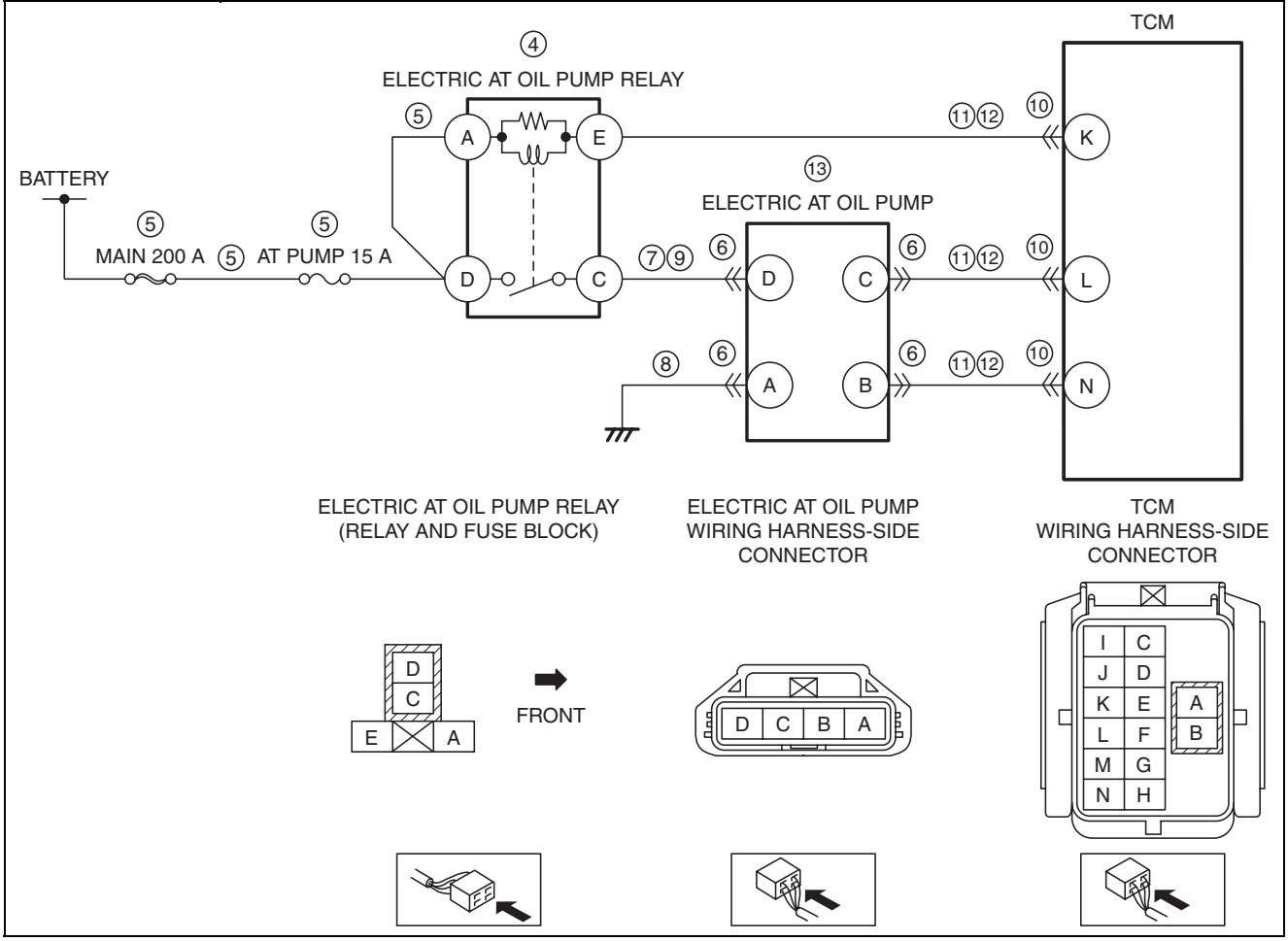

11

SYMPTOM TROUBLESHOOTING [SKYACTIV-G 2.0]

Diagnostic Procedure

STEP	INSPECTION	RESULTS	ACTION
1	**DETERMINE IF MALFUNCTION CAUSED BY ATX BODY** • Compare the malfunction symptom with the i-stop system stop condition. • Is there any shock or slippage during acceleration with the i-stop system disabled?	Yes	Perform the applicable symptom troubleshooting procedure. (See 05-03A-6 SYMPTOM TROUBLESHOOTING ITEM TABLE [FW6A-EL, FW6AX-EL].)
		No	Go to the next step.
2	**VERIFY DTC** • Retrieve the PCM, TCM, DSC HU/CM, SAS control module DTCs using the M-MDS. (See 01-02-8 ON-BOARD DIAGNOSTIC TEST [SKYACTIV-G 2.0].) (See 05-02A-7 ON-BOARD DIAGNOSTIC SYSTEM DTC INSPECTION [FW6A-EL, FW6AX-EL].) (See 04-02A-7 ON-BOARD DIAGNOSIS [DYNAMIC STABILITY CONTROL (DSC)].) (See 08-02-7 DTC INSPECTION.) • Are any DTCs present?	Yes	Go to the applicable DTC inspection. (See 01-02-14 DTC TABLE [SKYACTIV-G 2.0].) (See 05-02A-11 ON-BOARD DIAGNOSTIC SYSTEM DTC TABLE [FW6A-EL, FW6AX-EL].) (See 04-02A-7 ON-BOARD DIAGNOSIS [DYNAMIC STABILITY CONTROL (DSC)].) (See 08-02-11 DTC TABLE.)
		No	Go to the next step.
3	**DETERMINE IF MALFUNCTION CAUSE IS BRAKE FLUID PRESSURE SENSOR SIGNAL OR OTHER** • Put the vehicle in an i-stop condition (engine stopped). • Monitor the PCM PID BFP using the M-MDS while the brake is depressed and held with the i-stop function operating. (See 04-02A-7 ON-BOARD DIAGNOSIS [DYNAMIC STABILITY CONTROL (DSC)].) • Does the monitoring value change?	Yes	Brake fluid pressure sensor (built-into DSC HU/CM) or DSC HU/CM brake pressure hold function malfunction. • Replace the DSC HU/CM. (See 04-15-4 DSC HU/CM REMOVAL/ INSTALLATION.)
		No	Go to the next step.
4	**INSPECT ELECTRIC AT OIL PUMP RELAY** • Switch the ignition to off. • Remove the electric AT oil pump relay. • Inspect the electric AT oil pump relay. (See 09-21-29 RELAY INSPECTION.) • Is there any malfunction?	Yes	Replace the electric AT oil pump relay.
		No	Go to the next step.
5	**INSPECT ELECTRIC AT OIL PUMP RELAY POWER SUPPLY CIRCUIT FOR SHORT TO GROUND OR OPEN CIRCUIT** • Electric AT oil pump relay is removed. • Measure the voltage at the following terminals (wiring harness-side): — Electric AT oil pump relay terminal A — Electric AT oil pump relay terminal D • Is the voltage **B+**?	Yes	Go to the next step.
		No	Inspect the MAIN 200 A fuse and AT PUMP 15 A fuse. • If the fuse is blown: — Repair or replace the wiring harness for a possible short to ground. — Replace the malfunctioning fuse. • If the fuse is deteriorated: — Replace the malfunctioning fuse. • If all fuses are normal: — Repair or replace the wiring harness for a possible open circuit.
6	**INSPECT ELECTRIC AT OIL PUMP CONNECTOR CONDITION** • Disconnect the electric AT oil pump connector. • Inspect for poor connection (such as damaged/pulled-out pins, corrosion). • Is there any malfunction?	Yes	Repair or replace the connector and/or terminals.
		No	Go to the next step.
7	**INSPECT ELECTRIC AT OIL PUMP POWER SUPPLY CIRCUIT FOR SHORT TO GROUND** • Electric AT oil pump relay is removed. • Verify that the electric AT oil pump connector is disconnected. • Inspect for continuity between electric AT oil pump relay terminal C (wiring harness-side) and body ground. • Is there continuity?	Yes	Repair or replace the wiring harness for a possible short to ground.
		No	Go to the next step.

SYMPTOM TROUBLESHOOTING [SKYACTIV-G 2.0]

STEP	INSPECTION	RESULTS	ACTION
8	**INSPECT ELECTRIC AT OIL PUMP GROUND CIRCUIT FOR OPEN CIRCUIT** • Electric AT oil pump relay is removed. • Verify that the electric AT oil pump connector is disconnected. • Inspect for continuity between electric AT oil pump terminal A (wiring harness-side) and body ground. • Is there continuity?	Yes	Go to the next step.
		No	Repair or replace the wiring harness for a possible open circuit.
9	**INSPECT ELECTRIC AT OIL PUMP POWER SUPPLY CIRCUIT FOR OPEN CIRCUIT** • Electric AT oil pump relay is removed. • Verify that the electric AT oil pump connector is disconnected. • Inspect for continuity between electric AT oil pump relay terminal C (wiring harness-side) and electric AT oil pump terminal D (wiring harness-side). • Is there continuity?	Yes	Go to the next step.
		No	Repair or replace the wiring harness for a possible open circuit.
10	**INSPECT TCM CONNECTOR CONDITION** • Disconnect the TCM connector. • Inspect for poor connection (such as damaged/pulled-out pins, corrosion). • Is there any malfunction?	Yes	Repair or replace the connector and/or terminals.
		No	Go to the next step.
11	**INSPECT TCM CIRCUIT FOR SHORT TO GROUND** • Electric AT oil pump relay is removed. • Verify that the electric AT oil pump and TCM connectors are disconnected. • Inspect for continuity between the following terminals (wiring harness-side) and body ground: — Electric AT oil pump relay terminal E — Electric AT oil pump terminal C — Electric AT oil pump terminal B • Is there continuity?	Yes	Repair or replace the wiring harness for a possible short to ground.
		No	Go to the next step.
12	**INSPECT TCM CIRCUIT FOR OPEN CIRCUIT** • Electric AT oil pump relay is removed. • Verify that the electric AT oil pump and TCM connectors are disconnected. • Inspect for continuity between the following terminals (wiring harness-side): — Electric AT oil pump relay terminal E—TCM terminal K — Electric AT oil pump terminal C—TCM terminal L — Electric AT oil pump terminal B—TCM terminal N • Is there continuity?	Yes	Replace the electric AT oil pump. (See 05-17A-27 ELECTRIC AT OIL PUMP REMOVAL/INSTALLATION [FW6A-EL, FW6AX-EL].)
		No	Repair or replace the wiring harness for a possible open circuit.
13	Verify the test results. • If normal, return to the diagnostic index to service any additional symptoms. (See 01-03-5 SYMPTOM DIAGNOSTIC INDEX [SKYACTIV-G 2.0].) • If a malfunction remains, inspect the related Service Information and perform the repair or diagnosis. — If the vehicle is repaired, troubleshooting is completed. — If the vehicle is not repaired or additional diagnostic information is not available, replace the PCM. (See 01-40-10 PCM REMOVAL/INSTALLATION [SKYACTIV-G 2.0].)		

NO.10 VEHICLE MOVES WHEN ACCELERATING FROM STANDSTILL ON SLOPE [SKYACTIV-G 2.0]

id1103a1001700

10	VEHICLE MOVES WHEN ACCELERATING FROM STANDSTILL ON SLOPE
DESCRIPTION	• Vehicle slips backwards on inclined road surface when accelerating after i-stop operates.

SYMPTOM TROUBLESHOOTING [SKYACTIV-G 2.0]

10	VEHICLE MOVES WHEN ACCELERATING FROM STANDSTILL ON SLOPE
POSSIBLE CAUSE	**Note** • i-stop (engine-stop control) continues operating when shifting the selector lever from D position to N or P position while i-stop (engine-stop control) is operating, however, if the slope of the road surface is **within ±4 %**, the Hill Launch Assist (HLA) function is canceled. **Hill launch assist function system (DSC) malfunction** • False detection of inclination angle (cannot calculate correct road slope) — Low-G (XY) sensor (built-into SAS control module) malfunction (In this case, the SAS control module records DTCs C0061:29 and C0062:29.) — Low-G (XY) sensor (built-into SAS control module) initialization malfunction • False detection of brake fluid pressure — Brake fluid pressure sensor (built-into DSC HU/CM) malfunction • Cannot maintain brake fluid pressure — DSC HU/CM malfunction • DC-DC converter system error (exceeds capacity of DC-DC converter output due to open or short circuit in wiring harness and after-market electrical part) **ATX system malfunction** • Electric AT oil pump malfunction (operation malfunction, insufficient pressure) • ATX malfunction

Diagnostic Procedure

STEP	INSPECTION	RESULTS	ACTION
1	**INSPECT EFFECT OF NON-GENUINE ELECTRICAL ACCESSORY FOR CAUSE OF MALFUNCTION** • Remove any non-genuine electrical accessory. • Verify the malfunction symptom. • Does vehicle slip backwards on inclined road surface when accelerating after i-stop operates?	Yes	The system is normal. • Explain to the customer that the vehicle slips backwards on an inclined road surface when accelerating after i-stop operates due to the effect of the non-genuine electrical accessory installed.
		No	Go to the next step.
2	**VERIFY DTC** • Retrieve the PCM, TCM, DSC HU/CM, SAS control module DTCs using the M-MDS. (See 01-02-8 ON-BOARD DIAGNOSTIC TEST [SKYACTIV-G 2.0].) (See 05-02A-7 ON-BOARD DIAGNOSTIC SYSTEM DTC INSPECTION [FW6A-EL, FW6AX-EL].) (See 04-02A-7 ON-BOARD DIAGNOSIS [DYNAMIC STABILITY CONTROL (DSC)].) (See 08-02-7 DTC INSPECTION.) • Are any DTCs present?	Yes	Go to the applicable DTC inspection. (See 01-02-14 DTC TABLE [SKYACTIV-G 2.0].) (See 05-02A-11 ON-BOARD DIAGNOSTIC SYSTEM DTC TABLE [FW6A-EL, FW6AX-EL].) (See 04-02A-7 ON-BOARD DIAGNOSIS [DYNAMIC STABILITY CONTROL (DSC)].) (See 08-02-11 DTC TABLE.)
		No	Go to the next step.
3	**DETERMINE IF MALFUNCTION CAUSE IS HILL LAUNCH ASSIST FUNCTION OR ATX SYSTEM** • Verify the malfunction symptom on a flat road surface. • Does the acceleration lag when accelerating?	Yes	Perform the symptom troubleshooting “NO.9 ACCELERATION MALFUNCTION”. (See 11-03-42 NO.9 ACCELERATION MALFUNCTION [SKYACTIV-G 2.0].)
		No	Brake fluid pressure sensor (built-into DSC HU/CM) or DSC HU/CM brake pressure hold function malfunction. • Replace the DSC HU/CM. (See 04-15-4 DSC HU/CM REMOVAL/INSTALLATION.)
4	Verify the test results. • If normal, return to the diagnostic index to service any additional symptoms. (See 01-03-5 SYMPTOM DIAGNOSTIC INDEX [SKYACTIV-G 2.0].) • If a malfunction remains, inspect the related Service Information and perform the repair or diagnosis. — If the vehicle is repaired, troubleshooting is completed. — If the vehicle is not repaired or additional diagnostic information is not available, replace the PCM. (See 01-40-10 PCM REMOVAL/INSTALLATION [SKYACTIV-G 2.0].)		

PERSONALIZATION FEATURES

12
SECTION

PERSONALIZATION
FEATURES 12-00

12-00 PERSONALIZATION FEATURES

PERSONALIZATION FEATURES 12-00–1
Security And Locks **12-00–1**
Lighting Systems **12-00–2**
High Beam Control (HBC) System **12-00–3**
Wiper/Washer System **12-00–3**
Instrumentation/Driver Info. **12-00–3**
Rear Vehicle Monitoring (RVM) System **12-00–3**
Blind Spot Monitoring (BSM) System **12-00–4**
Lane Departure Warning System (LDWS) **12-00–4**

PERSONALIZATION FEATURES

PERSONALIZATION FEATURES

id120000000000

- The following systems can be customized.
- When performing a customized setting, refer to the referenced section for the detailed setting procedure.

Security And Locks

Note
- There are two types of customization procedures; one using the M-MDS and the other using the audio unit screen.

Advanced keyless entry system

Personalization features	Setting contents	Setting procedure
The advanced keyless entry system and push button start system functions can be disabled.	Enabled./Disabled.	M-MDS is used. (See 09-14-63 SECURITY AND LOCKS PERSONALIZATION FEATURES SETTING PROCEDURE.)
The out-of-area (reception area) type auto lock function can be set.	Not Adopted./OFF/ON	M-MDS is used. (See 09-14-63 SECURITY AND LOCKS PERSONALIZATION FEATURES SETTING PROCEDURE.)
	OFF/ON	Audio unit screen is used for the setting. (See 09-20-9 AUDIO UNIT PERSONALIZATION FEATURES SETTING PROCEDURE.)
The operation start time of the auto re-lock function can be changed.	Not Adopted./30 seconds/60 seconds/90 seconds	M-MDS is used. (See 09-14-63 SECURITY AND LOCKS PERSONALIZATION FEATURES SETTING PROCEDURE.)
	30 seconds/60 seconds/ 90 seconds	Audio unit screen is used for the setting. (See 09-20-9 AUDIO UNIT PERSONALIZATION FEATURES SETTING PROCEDURE.)
The keyless beeper volume can be adjusted.	Not Adopted./Off/Low/ Medium/High	M-MDS is used. (See 09-14-63 SECURITY AND LOCKS PERSONALIZATION FEATURES SETTING PROCEDURE.)
	Off/Low/Medium/High	Audio unit screen is used for the setting. (See 09-20-9 AUDIO UNIT PERSONALIZATION FEATURES SETTING PROCEDURE.)

Keyless entry system

Personalization features	Setting contents	Setting procedure
The keyless entry system and push button start system functions can be disabled.	Enabled./Disabled.	M-MDS is used. (See 09-14-63 SECURITY AND LOCKS PERSONALIZATION FEATURES SETTING PROCEDURE.)

PERSONALIZATION FEATURES

Personalization features	Setting contents	Setting procedure
The operation start time of the auto re-lock function can be changed.	Not Adopted./30 seconds/60 seconds/90 seconds	M-MDS is used. (See 09-14-63 SECURITY AND LOCKS PERSONALIZATION FEATURES SETTING PROCEDURE.)
	30 seconds/60 seconds/ 90 seconds	Audio unit screen is used for the setting. (See 09-20-9 AUDIO UNIT PERSONALIZATION FEATURES SETTING PROCEDURE.)

Power door lock system

Personalization features	Setting contents	Setting procedure
Auto door lock function can be changed.	Not Adopted. / OFF / Lock When Driving. / Lock: Driving, Unlock: IGN Off. / Lock When Shifting Out Of P. / Lock: Shift From P, Unlock: In P.	M-MDS is used. (See 09-14-63 SECURITY AND LOCKS PERSONALIZATION FEATURES SETTING PROCEDURE.)

Lighting Systems

Note

- There are two types of customization procedures; one using the M-MDS and the other using the audio unit screen.

Auto light system

Personalization features	Setting contents	Setting procedure
Auto light sensor sensitivity can be changed.	Not Adopted./Dark/ Medium Dark/Medium/ Medium Light/Light	M-MDS is used. (See 09-40-16 CONTROL SYSTEM PERSONALIZATION FEATURES SETTING PROCEDURE.)
	Light/Medium Light/ Medium/Medium Dark/ Dark	Audio unit screen is used for the setting. (See 09-20-9 AUDIO UNIT PERSONALIZATION FEATURES SETTING PROCEDURE.)

Turn light system

Personalization features	Setting contents	Setting procedure
The turn light system can be switched between operable and inoperable.	Not Adopted./OFF/ON	M-MDS is used. (See 09-40-16 CONTROL SYSTEM PERSONALIZATION FEATURES SETTING PROCEDURE.)
	On/Off	Audio unit screen is used for the setting. (See 09-20-9 AUDIO UNIT PERSONALIZATION FEATURES SETTING PROCEDURE.)

Room light control system

Personalization features	Setting contents	Setting procedure
The front/rear map light illumination time after any door is open can be changed.	Not Adopted./30 minutes./60 minutes./10 minutes.	M-MDS is used. (See 09-40-16 CONTROL SYSTEM PERSONALIZATION FEATURES SETTING PROCEDURE.)
	60 minutes/30 minutes/ 10 minutes	Audio unit screen is used for the setting. (See 09-20-9 AUDIO UNIT PERSONALIZATION FEATURES SETTING PROCEDURE.)
The front/rear map light illumination time after any door is closed can be changed.	Not Adopted./15 seconds./7.5 seconds./ 30 seconds./60 seconds.	M-MDS is used. (See 09-40-16 CONTROL SYSTEM PERSONALIZATION FEATURES SETTING PROCEDURE.)
	60 seconds/30 seconds/ 15 seconds/7.5 seconds	Audio unit screen is used for the setting. (See 09-20-9 AUDIO UNIT PERSONALIZATION FEATURES SETTING PROCEDURE.)

PERSONALIZATION FEATURES

High Beam Control (HBC) System

Note
- There are two types of customization procedures; one using the M-MDS and the other using the audio unit screen.

Personalization features	Setting contents	Setting procedure
The high beam control (HBC) system can be switched between operable and inoperable.	Not Adopted./OFF/ON	M-MDS is used. (See 09-22-21 FORWARD SENSING CAMERA (FSC) PERSONALIZATION FEATURES SETTING PROCEDURE.)
	On/Off	Audio unit screen is used for the setting. (See 09-20-9 AUDIO UNIT PERSONALIZATION FEATURES SETTING PROCEDURE.)

Wiper/Washer System

Note
- There are two types of customization procedures; one using the M-MDS and the other using the audio unit screen.

Auto wiper system

Personalization features	Setting contents	Setting procedure
Auto wiper system can be set to operable or inoperable.	Not Adopted./Off (Intermittent)/On (Rain Sensing)	M-MDS is used. (See 09-40-16 CONTROL SYSTEM PERSONALIZATION FEATURES SETTING PROCEDURE.)
	On (Rain Sensing)/ Off (Intermittent)	Audio unit screen is used for the setting. (See 09-20-9 AUDIO UNIT PERSONALIZATION FEATURES SETTING PROCEDURE.)

Instrumentation/Driver Info.

Note
- There are two types of customization procedures; one using the M-MDS and the other using the instrument cluster.

Instrument cluster

Personalization features	Setting contents	Setting procedure
The volume for the lights-on reminder warning alarm can be changed.	Not Adopted./OFF/Low/ High	M-MDS is used. (See 09-22-20 INSTRUMENT CLUSTER PERSONALIZATION FEATURES SETTING PROCEDURE.)
	High/Low/OFF	Instrument cluster (with TFT LCD display) is used. (See 09-22-20 INSTRUMENT CLUSTER PERSONALIZATION FEATURES SETTING PROCEDURE.)
The volume of the turn and hazard indicator alarm can be changed.	Not Adopted./Low/High	M-MDS is used. (See 09-22-20 INSTRUMENT CLUSTER PERSONALIZATION FEATURES SETTING PROCEDURE.)
	High/Low	Instrument cluster (with TFT LCD display) is used. (See 09-22-20 INSTRUMENT CLUSTER PERSONALIZATION FEATURES SETTING PROCEDURE.)
The volume of the operation sound which the instrument cluster outputs can be changed.	High/Low/OFF	Instrument cluster (with TFT LCD display) is used. (See 09-22-20 INSTRUMENT CLUSTER PERSONALIZATION FEATURES SETTING PROCEDURE.)

Rear Vehicle Monitoring (RVM) System

Note
- There are two types of customization procedures; one using the M-MDS and the other using the instrument cluster.

PERSONALIZATION FEATURES

Personalization features	Setting contents	Setting procedure
The volume of the rear vehicle monitoring (RVM) warning alarm can be changed.	Not Adopted./OFF/Low/ High	M-MDS is used. (See 09-22-20 INSTRUMENT CLUSTER PERSONALIZATION FEATURES SETTING PROCEDURE.)
	High/Low/OFF	Instrument cluster (with TFT LCD display) is used. (See 09-22-20 INSTRUMENT CLUSTER PERSONALIZATION FEATURES SETTING PROCEDURE.)

Blind Spot Monitoring (BSM) System

Personalization features	Setting contents	Setting procedure
The volume of the blind spot monitoring (BSM) warning alarm can be changed.	Not Adopted./OFF/Low/ High	M-MDS is used. (See 09-22-20 INSTRUMENT CLUSTER PERSONALIZATION FEATURES SETTING PROCEDURE.)

Lane Departure Warning System (LDWS)

Note

- There are two types of customization procedures; one using the M-MDS and the other using the instrument cluster.

Personalization features	Setting contents	Setting procedure
The volume of the LDWS warning alarm can be changed.	Not Adopted./Volume 1/ Volume 2/Volume 3	M-MDS is used. (See 09-22-20 INSTRUMENT CLUSTER PERSONALIZATION FEATURES SETTING PROCEDURE.)
	High/Medium/Low	Instrument cluster (with TFT LCD display) is used. (See 09-22-20 INSTRUMENT CLUSTER PERSONALIZATION FEATURES SETTING PROCEDURE.)
The type of the LDWS warning alarm can be changed.	Beep/Rumble	M-MDS is used. (See 09-22-20 INSTRUMENT CLUSTER PERSONALIZATION FEATURES SETTING PROCEDURE.)
	Rumble/Beep	Instrument cluster (with TFT LCD display) is used. (See 09-22-20 INSTRUMENT CLUSTER PERSONALIZATION FEATURES SETTING PROCEDURE.)
The warning operation timing of the lane departure warning system (LDWS) can be changed.	Not Adopted/Adaptive/ Early/Medium/Late	M-MDS is used. (See 09-22-21 FORWARD SENSING CAMERA (FSC) PERSONALIZATION FEATURES SETTING PROCEDURE.)
	Early/Medium/Late/ Adaptive	Instrument cluster (with TFT LCD display) is used. (See 09-22-20 INSTRUMENT CLUSTER PERSONALIZATION FEATURES SETTING PROCEDURE.)
The warning operation sensitivity of the lane departure warning system (LDWS) can be changed.	Not Adopted./Often/ Medium/Rare	M-MDS is used. (See 09-22-21 FORWARD SENSING CAMERA (FSC) PERSONALIZATION FEATURES SETTING PROCEDURE.)
	Often/Medium/Rare	Instrument cluster (with TFT LCD display) is used. (See 09-22-20 INSTRUMENT CLUSTER PERSONALIZATION FEATURES SETTING PROCEDURE.)
The high and low range of the LDWS warning alarm can be changed.	High/Low	Instrument cluster (with TFT LCD display) is used. (See 09-22-20 INSTRUMENT CLUSTER PERSONALIZATION FEATURES SETTING PROCEDURE.)