STARTER

COMPONENTS

ST0MJ–01

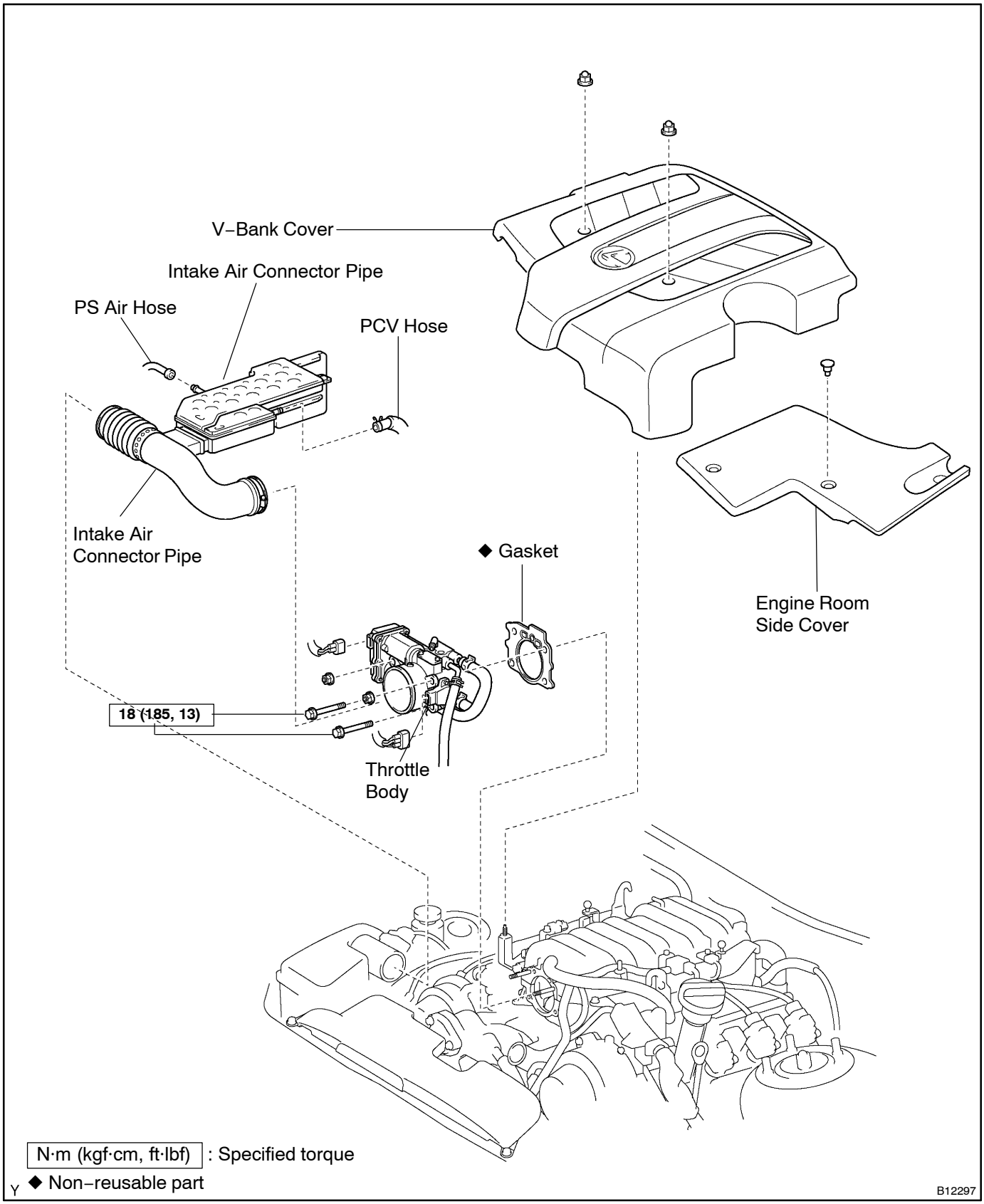

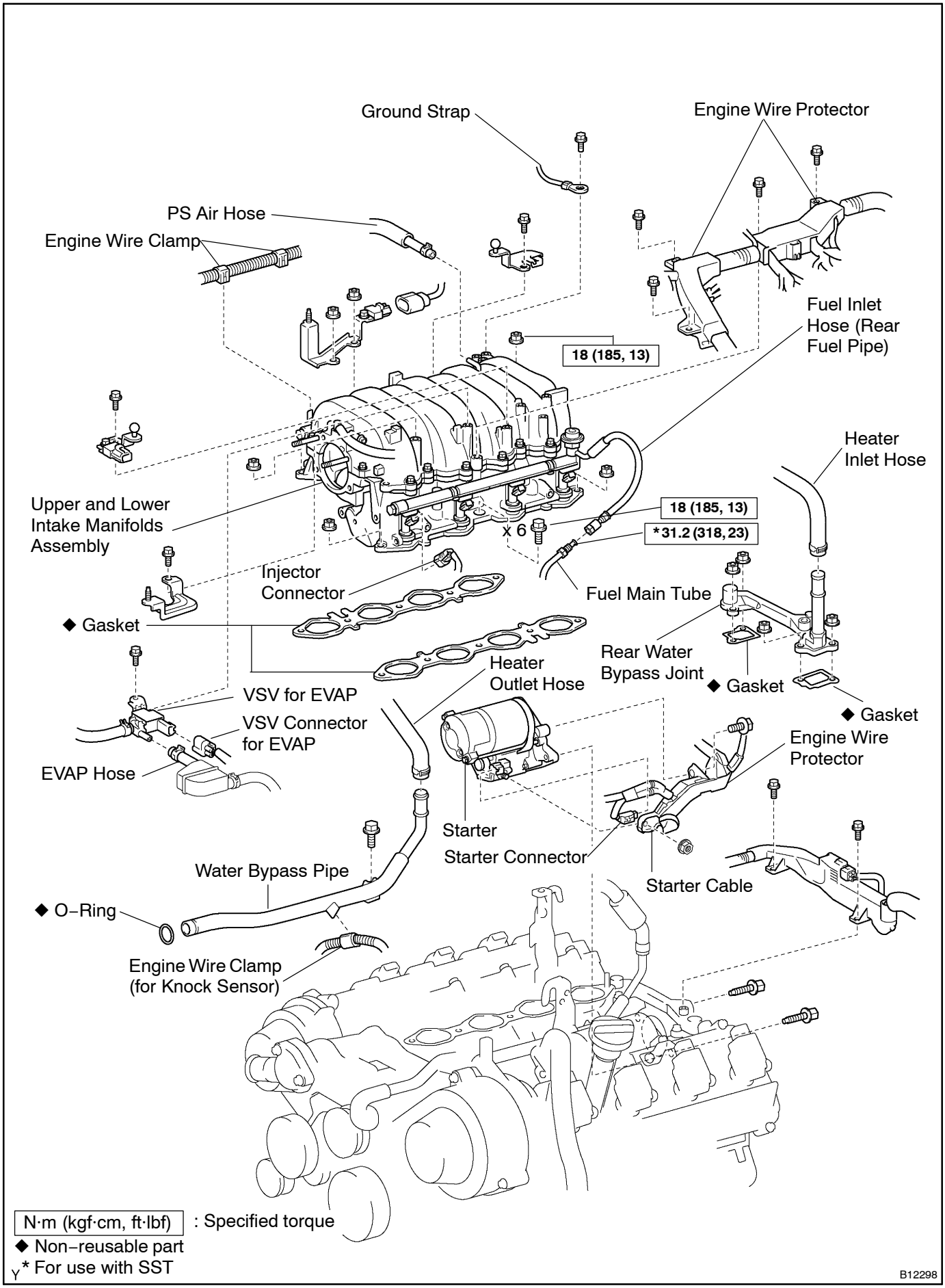
Ground Strap
Engine Wire Protector
PS Air Hose
Engine Wire Clamp
Fuel Inlet Hose (Rear Fuel Pipe)
18 (185, 13)
Heater Inlet Hose
Upper and Lower Intake Manifolds Assembly
18 (185, 13)
x 6
*31.2 (318, 23)
Injector Connector
Fuel Main Tube
◆ Gasket
Rear Water Bypass Joint
Heater Outlet Hose
◆ Gasket
VSV for EVAP
◆ Gasket
VSV Connector for EVAP
Engine Wire Protector
EVAP Hose
Starter
Starter Connector
Water Bypass Pipe
Starter Cable
◆ O–Ring
Engine Wire Clamp (for Knock Sensor)
N·m (kgf·cm, ft·lbf) : Specified torque
◆ Non–reusable part
Y* For use with SST
B12298

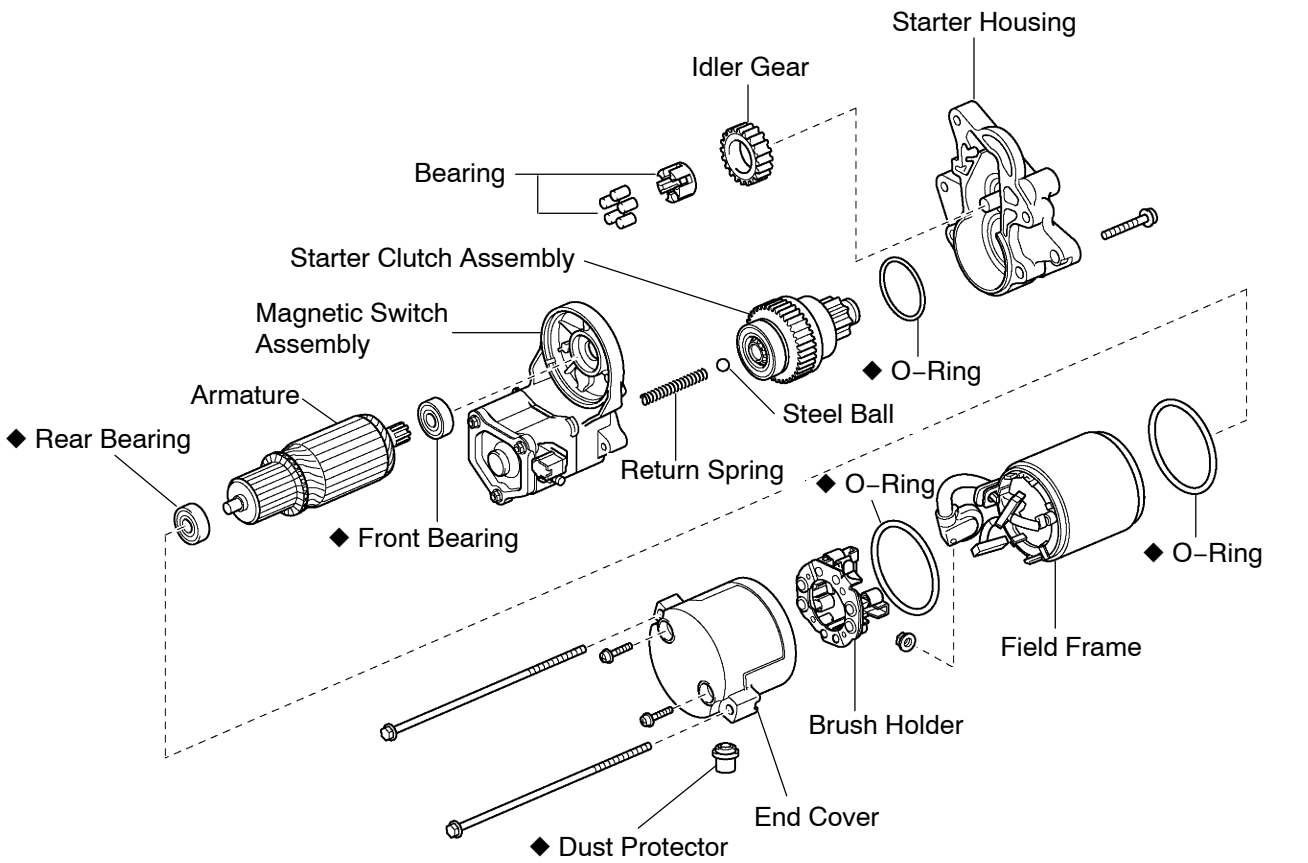

Magnetic Switch Assembly

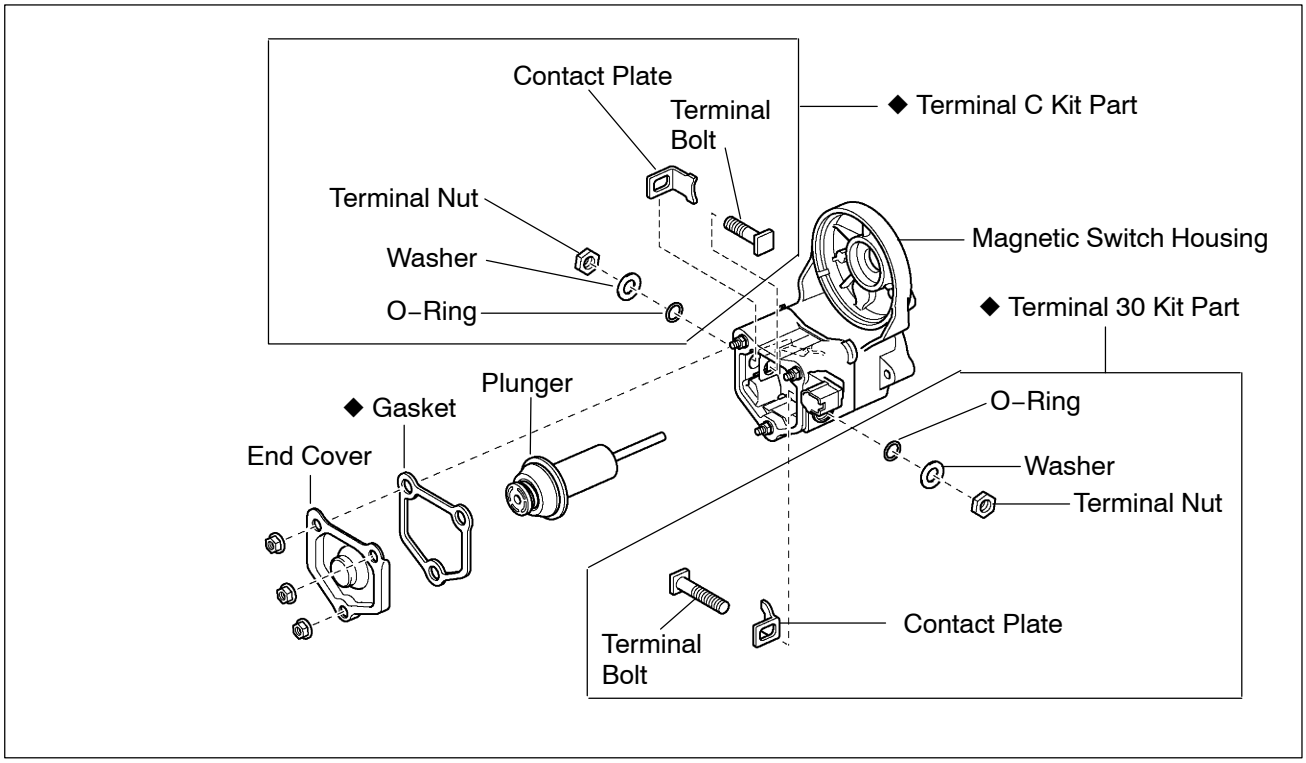

Y ◆ Non–reusable part

B12317