EM0E5–02

INSTALLATION

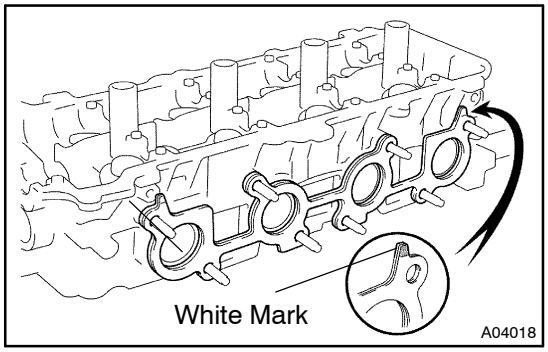

1. INSTALL LH EXHAUST MANIFOLD TO CYLINDER HEAD

(a) Place a new gasket on the cylinder head with the white mark facing the manifold side.

NOTICE:

Be careful of the installation direction.

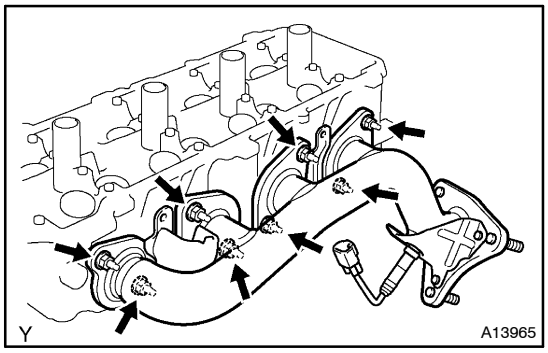

(b) Install the exhaust manifold with 8 new nuts. Uniformly tighten the nuts in several passes.
Torque: 44 N·m (450 kgf·cm, 32 ft·lbf)

(c) Install the heat insulator with the 3 bolts.

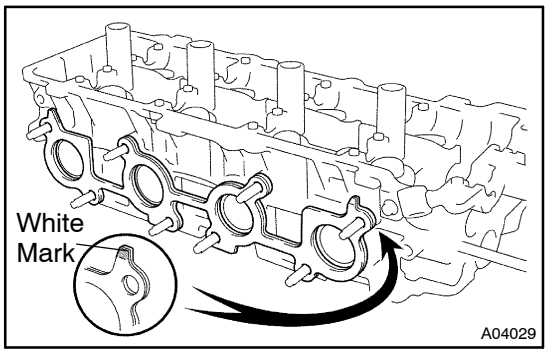

2. INSTALL RH EXHAUST MANIFOLD TO CYLINDER HEAD

(a) Place a new gasket on the cylinder head with the white mark facing the manifold side.

NOTICE:

Be careful of the installation direction.

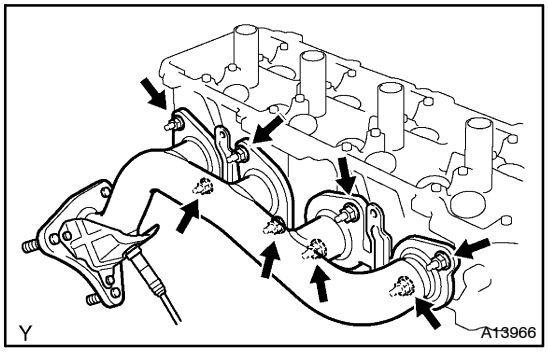

(b) Install the exhaust manifold with 8 new nuts. Uniformly tighten the nuts in several passes.
Torque: 44 N·m (450 kgf·cm, 32 ft·lbf)

(c) Install the heat insulator with the 3 bolts.

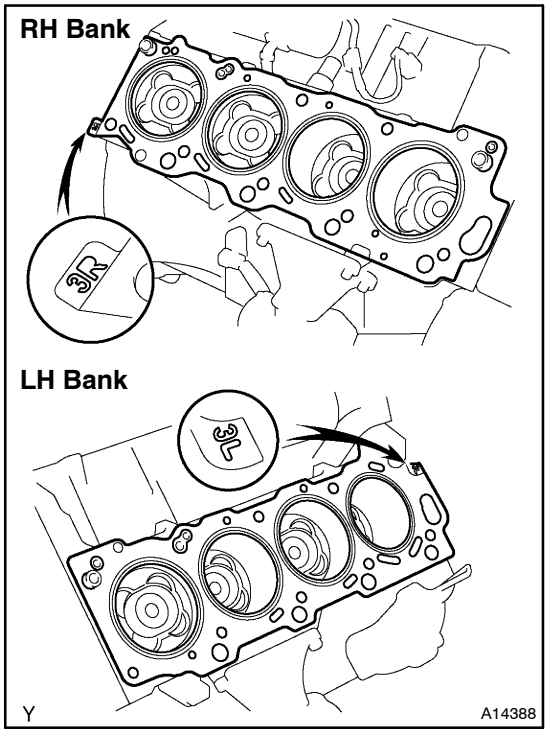

3. PLACE CYLINDER HEAD ON CYLINDER BLOCK

(a) Place 2 new cylinder head gaskets in position on the cylinder block.

HINT:

On the rear side of the cylinder head gasket are marks to distinguish the RH and LH banks, a ”3R” mark for the RH bank and a ”3L” mark for the LH bank.

NOTICE:

Be careful of the installation direction.

(b) Place the 2 cylinder heads in position on the cylinder head gaskets.

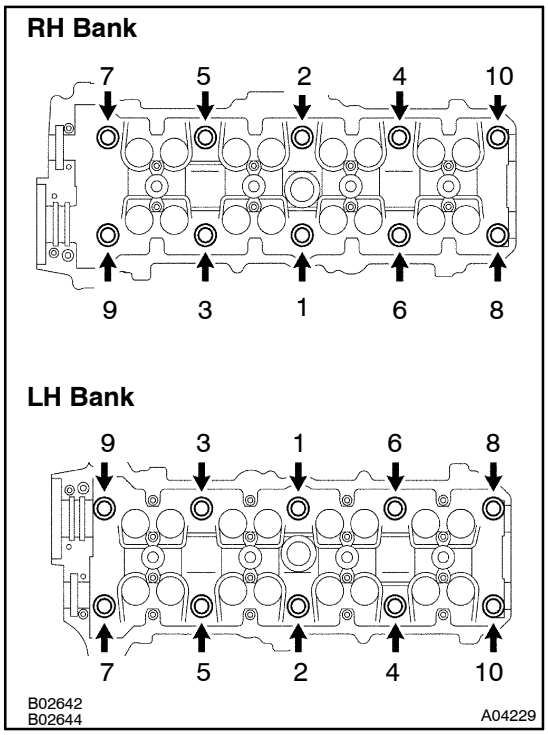

4. INSTALL CYLINDER HEAD BOLTS

HINT:

- The cylinder head bolts are tightened in 2 progressive steps (steps (c) and (e)).
- If any cylinder head bolt is broken or deformed, replace it.

(a) Apply a light coat of engine oil on the threads and under the heads of the cylinder head bolts.

(b) Install the plate washer to the cylinder head bolt.

(c) Install and uniformly tighten the 10 cylinder head bolts on one side of the cylinder head in several passes in the sequence shown, then do the other side as shown.

Torque: 59 N·m (600 kgf·cm, 44 ft·lbf)

If any one of the cylinder head bolts does not meet the torque specification, replace the cylinder head bolt.

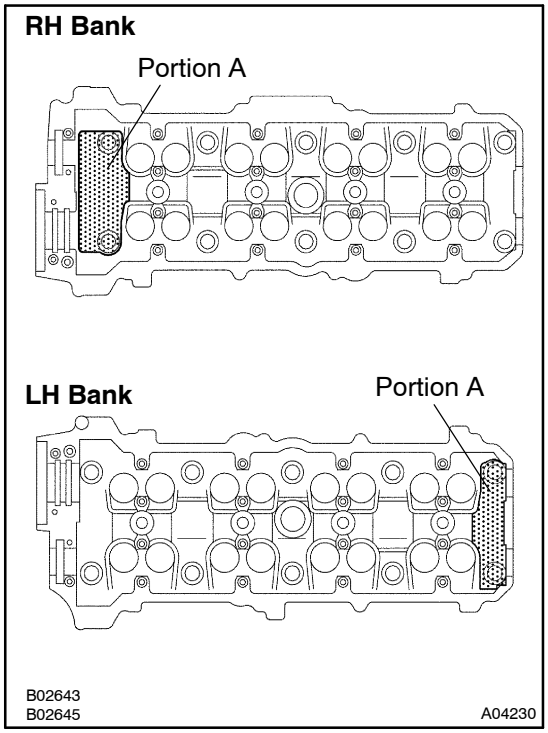

NOTICE:
Do not drop the plate washer for cylinder head bolt into portion A of the cylinder head. If dropped into portion A, the plate washer will pass through the cylinder head and cylinder block into the oil pan.

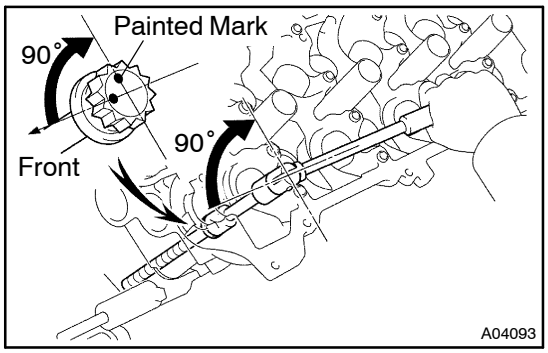

(d) Mark the front of the cylinder head bolt head with paint.
(e) Retighten the cylinder head bolts by 90° in the numerical order shown.
(f) Check that the painted mark is now at a 90° angle to front.

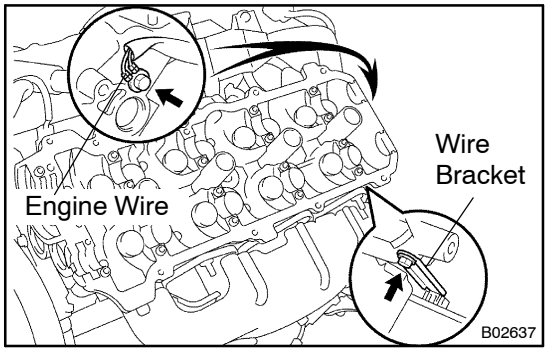

5. INSTALL ENGINE WIRE
(a) Install the engine wire bracket for the heated oxygen sensor to the LH cylinder head with the bolt.
(b) Install the ground wire to LH cylinder head with the bolt.

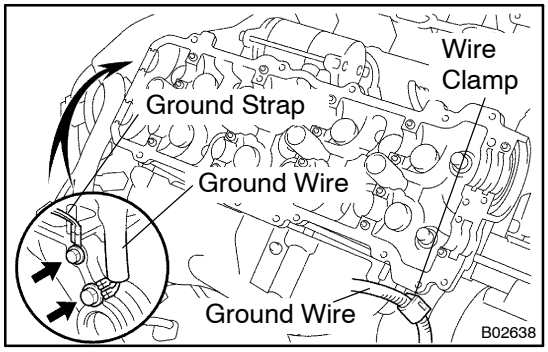

(c) Install the ground wire to RH cylinder head with the bolt.
(d) Install the ground strap to RH cylinder head with the bolt.
(e) Install the engine wire to the wire clamp on the RH cylinder head.
(f) Connect the 2 heated oxygen sensor connectors.

6. INSTALL SPARK PLUGS

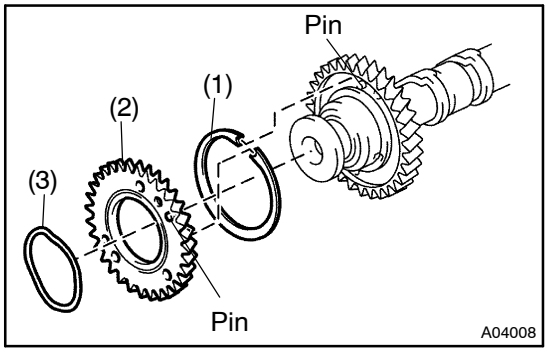

7. ASSEMBLE EXHAUST CAMSHAFT

(a) Install these parts:

(1) Install the camshaft gear spring.

(2) Install the camshaft driven sub–gear.

HINT:

Attach the pins on the gears to the gear spring ends.

(3) Install the wave washer.

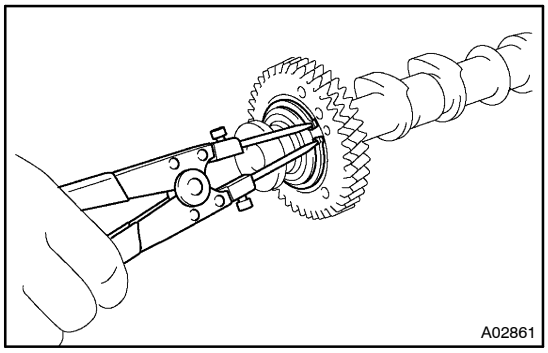

(b) Using snap ring pliers, install the snap ring.

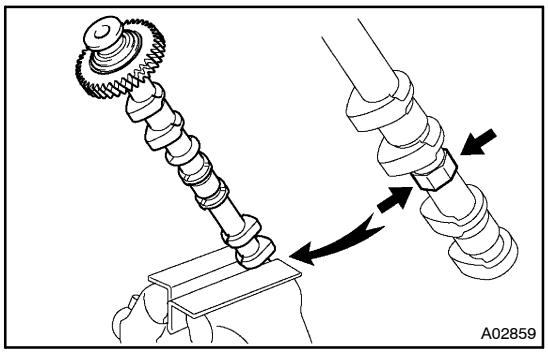

(c) Mount the hexagon wrench head portion of the camshaft in a vise.

NOTICE:

Be careful not to damage the camshaft.

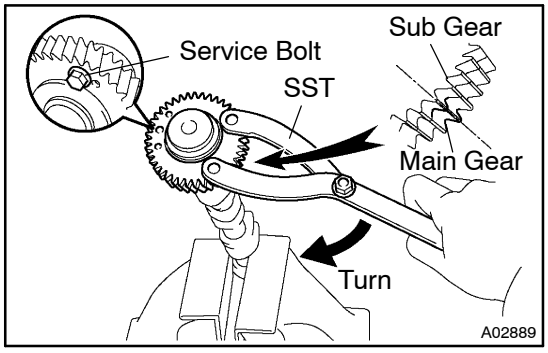

(d) Using SST, align the holes of the driven main gear and sub–gear by turning the sub–gear clockwise, and temporarily install a service bolt.

SST 09960–10010 (09962–01000, 09963–00500)

(e) Align the gear teeth of the driven main gear and sub–gear, and tighten the service bolt.

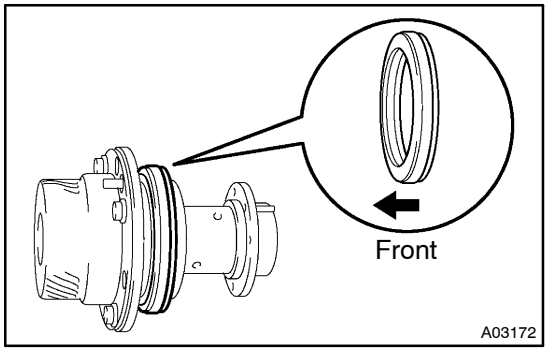

8. INSTALL CAMSHAFT TIMING TUBE TO INTAKE CAMSHAFT

(a) Place a new oil seal to the timing tube.

NOTICE:

Be careful of the installation direction.

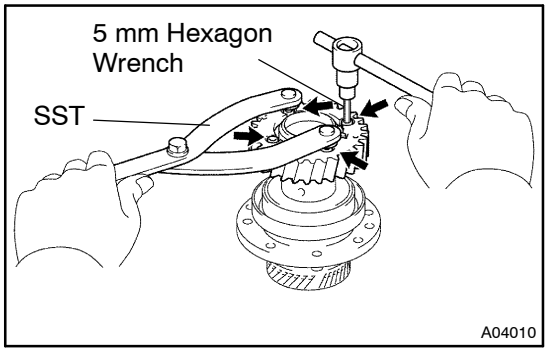

(b) Align the timing tube knock pin with the knock pin groove of the drive gear, and temporarily install the drive gear with the 4 bolts.

(c) Using SST and a 5 mm hexagon wrench, uniformly tighten the 4 bolts in several passes.
SST 09960–10010 (09962–01000, 09963–00500)
Torque: 7.5 N·m (80 kgf·cm, 66 in.·lbf)

NOTICE:
Be careful not to damage the timing tube.

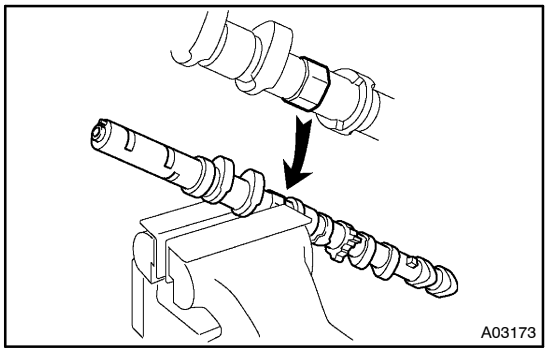

(d) Mount the hexagon wrench head portion of the camshaft in a vise.

NOTICE:
Be careful not to damage the camshaft.

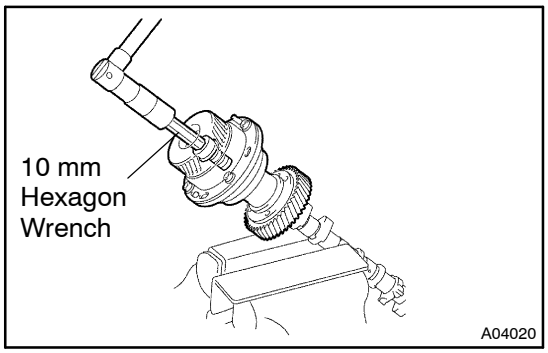

(e) Align the camshaft knock pin with the knock pin groove of the timing tube, and push the timing tube by hand until you feel it touch the bottom.

(f) Using a 10 mm hexagon wrench, install the bolt.
Torque: 78 N·m (790 kgf·cm, 58 ft·lbf)

(g) Install the seal washer and screw plug.
Torque: 15 N·m (150 kgf·cm, 11 ft·lbf)

9. INSTALL CAMSHAFTS

NOTICE:
Since the thrust clearance of the camshaft is small, the camshaft must be kept level while it is being installed. If the camshaft is not kept level, the portion of the cylinder head receiving the shaft thrust may crack or be damaged, causing the camshaft to seize or break. To avoid this, the following steps should be carried out.

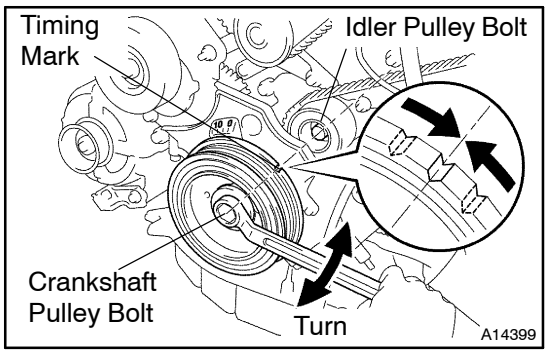

(a) Set the crankshaft pulley position.
Turn the pulley clockwise or counterclockwise, and put the timing mark of the crankshaft pulley in line with the centers of the crankshaft pulley bolt and idler pulley bolt.

NOTICE:
Having the crankshaft pulley at the wrong angle can cause the piston head and valve head to come into contact with each other when you install the camshaft, causing damage. So always set the crankshaft pulley at the correct angle.

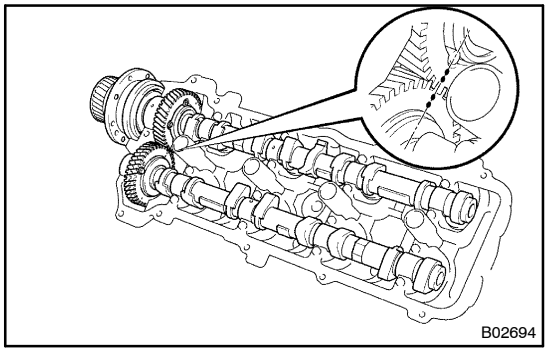

(b) Install the LH camshafts.
  (1) Apply MP grease to the thrust portion of the intake and exhaust camshafts.
  (2) Align the timing marks (2 dot marks) of the camshaft drive and driven main gears, and place the intake and exhaust camshafts.

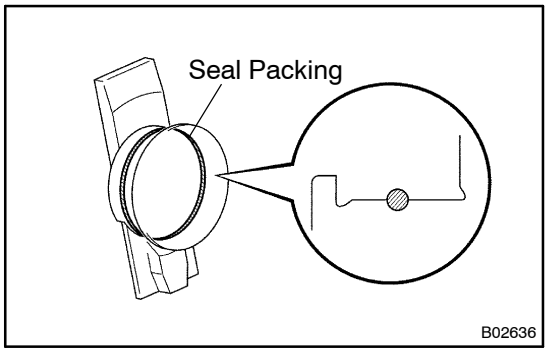

  (3) Apply seal packing to the camshaft housing plug.
    - Remove the old packing (FIPG) material.
    - Apply seal packing to the housing plug.

Seal packing: Part No. 08826–00080 or equivalent

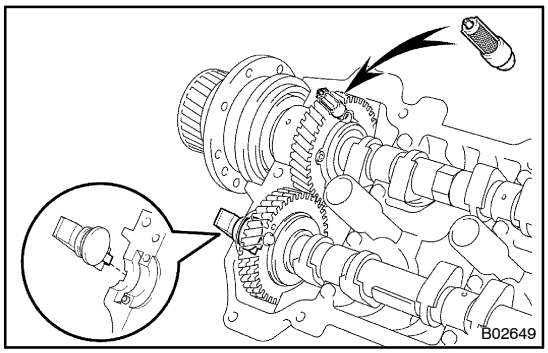

  (4) Install the camshaft housing plug to the cylinder head as shown in the illustration.
  (5) Install the oil control valve filter to the cylinder head.

NOTICE:
Be careful of the installation direction.

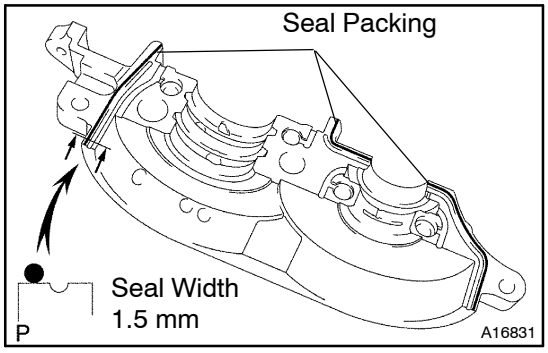

  (6) Apply seal packing to the front bearing cap.
    - Remove any old packing (FIPG) material and be care not to drop any oil on the contact surfaces of the bearing cap and cylinder head.
      Using a razor blade and gasket scraper, remove all the old packing (FIPG) material from the gasket surfaces and groove.
      Thoroughly clean all components to remove all the loose material.
      Using a non–residue solvent, clean both sealing surfaces.
    - Apply seal packing to the bearing cap as shown in the illustration.
      Install a nozzle that has been cut to a 1.5 mm (0.059 in.) opening.
      Parts must be assembled within 5 minutes of application. Otherwise the material must be removed and reapplied.
      Immediately remove nozzle from the tube and reinstall cap.

Seal packing: Part No. 08826–00080 or equivalent

NOTICE:

Do not apply seal packing to the front bearing cap grooves.

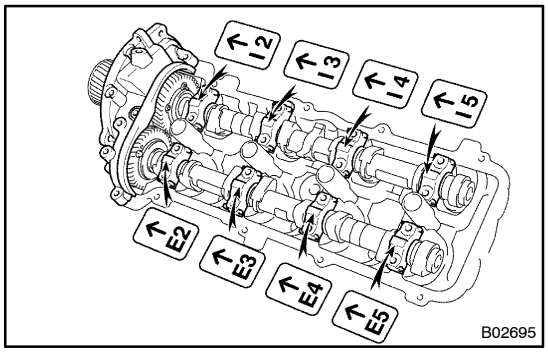

(7) Install the front bearing cap.

HINT:

Installing the front bearing cap will determine the thrust portion of the camshaft.

(8) Install the other bearing cap in the sequence shown with the arrow mark facing forward.

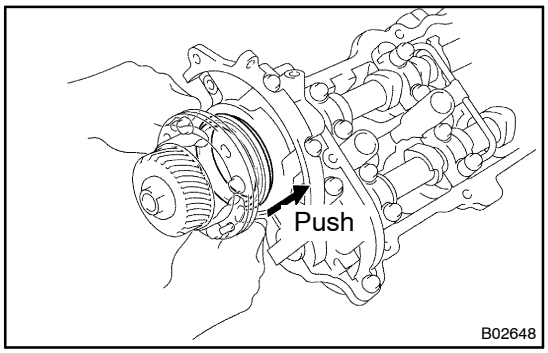

(9) Push in the camshaft oil seal.

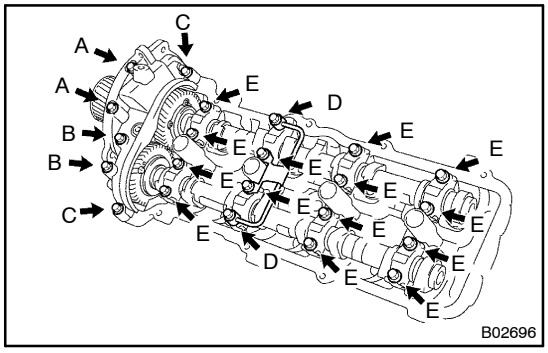

(10) Install a new seal washer to the bearing cap bolt (A and B).

(11) Apply a light coat of engine oil on the threads and under the heads of the bearing cap bolts (D and E).

NOTICE:

Do not apply engine oil under the heads of the bearing cap bolt (A), (B) and (C).

HINT:

Each bolt length is indicated in the illustration.

Bolt length:

94 mm (3.70 in.) for A with seal washer

72 mm (2.83 in.) for B with seal washer

25 mm (0.98 in.) for C

52 mm (2.05 in.) for D

38 mm (1.50 in.) for E

(12) Install the oil feed pipe and the 22 bearing cap bolts as shown in the illustration.

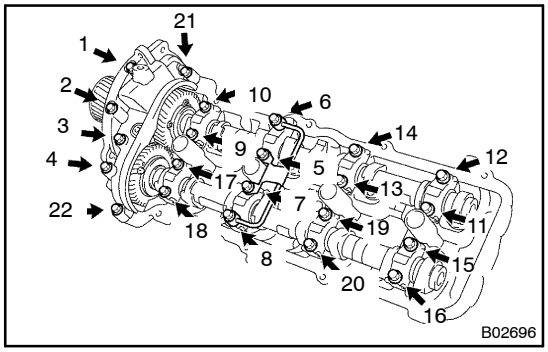

(13) Uniformly tighten the 22 bearing cap bolts in several passes, in the sequence shown.

Torque:
7.5 N·m (80 kgf·cm, 66 in.·lbf) for bolt C
16 N·m (160 kgf·cm, 12 ft·lbf) for others

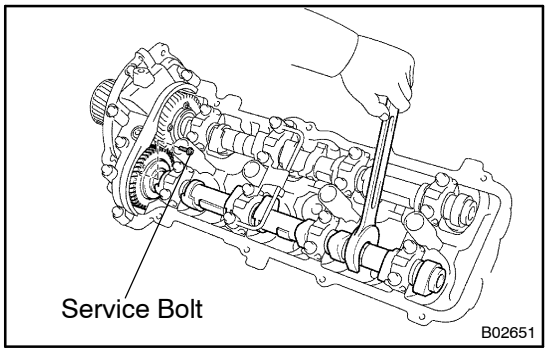

(14) Remove the service bolt.

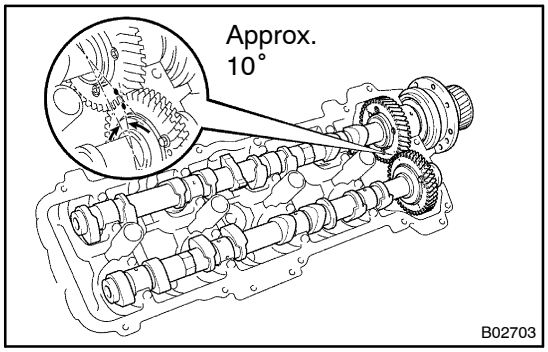

(c) Install the RH camshafts.
(1) Apply MP grease to the thrust portion of the intake and exhaust camshafts.
(2) Align the timing marks (1 dot mark) of the camshaft drive and driven main gears, and place the intake and exhaust camshafts.
(3) Set the timing mark (1 dot mark) of the camshaft drive and driven main gears at approx. 10° angle.

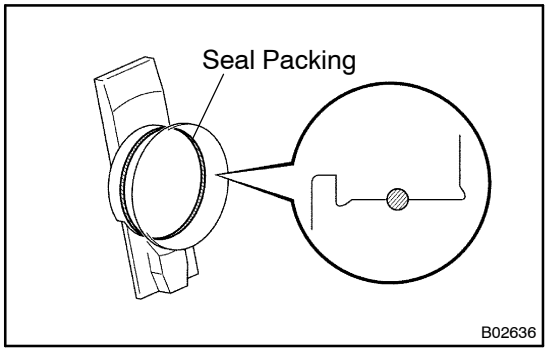

(4) Apply seal packing to the camshaft housing plug.
- Remove the old packing (FIPG) material.
- Apply seal packing to the housing plug.

Seal packing: Part No. 08826–00080 or equivalent

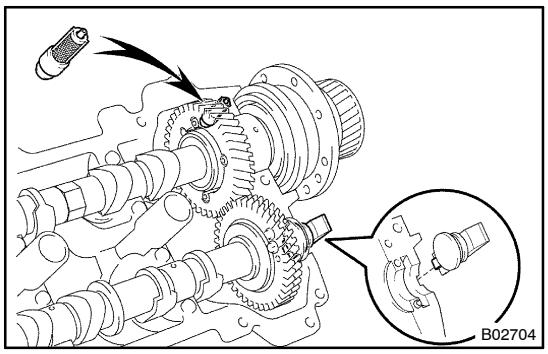

(5) Install the camshaft housing plug to the cylinder head as shown in the illustration.
(6) Install the oil control valve filter to the cylinder head.

NOTICE:
Be careful of the installation direction.

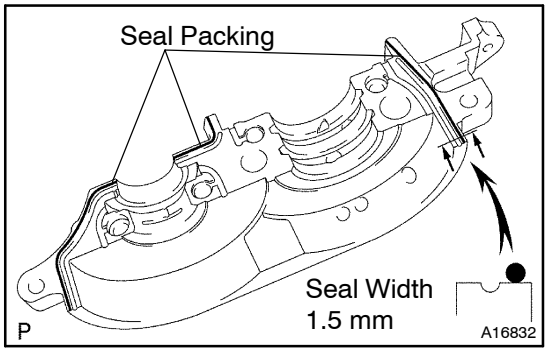

(7) Apply seal packing to the front bearing cap.

- Remove any old packing (FIPG) material and be careful not to drop any oil on the contact surfaces of the bearing cap and cylinder head.
  Using a razor blade and gasket scraper, remove all the old packing (FIPG) material from the gasket surfaces and groove.
  Thoroughly clean all components to remove all the loose material.
  Using a non–residue solvent, clean both sealing surfaces.
- Apply seal packing to the bearing cap as shown in the illustration.
  Install a nozzle that has been cut to a 1.5 mm (0.059 in.) opening.
  Parts must be assembled within 5 minutes of application. Otherwise the material must be removed and reapplied.
  Immediately remove nozzle from the tube and reinstall cap.

Seal packing: Part No. 08826–00080 or equivalent

NOTICE:

Do not apply seal packing to the front bearing cap grooves.

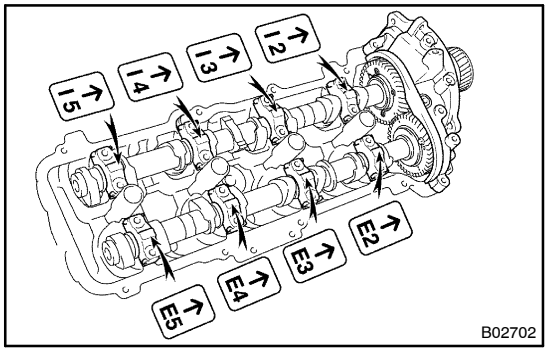

(8) Install the front bearing cap.

HINT:

Installing the front bearing cap will determine the thrust portion of the camshaft.

(9) Install the other bearing caps in the sequence shown with the arrow mark facing forward.

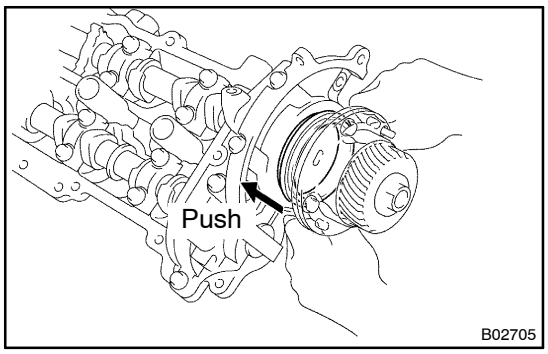

(10) Push in the camshaft oil seal.

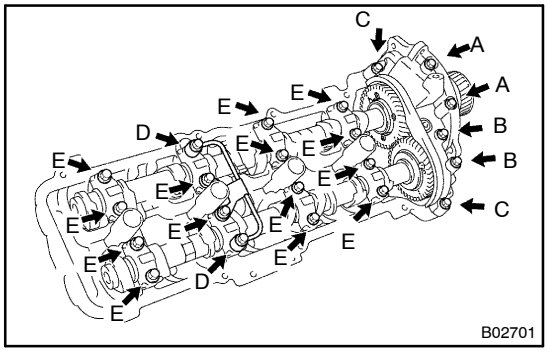

(11) Install a new seal washer to the bearing cap bolt (A and B).

(12) Apply a light coat of engine oil on the threads and under the heads of the bearing cap bolts (D and E).

NOTICE:

Do not apply engine oil under the heads of the bearing cap bolt (A), (B) and (C).

HINT:

Each bolt length is indicated in the illustration.

Bolt length:

94 mm (3.70 in.) for A with seal washer

72 mm (2.83 in.) for B with seal washer

25 mm (0.98 in.) for C

52 mm (2.05 in.) for D

38 mm (1.50 in.) for E

(13) Install the oil feed pipe and the 22 bearing cap bolts as shown in the illustration.

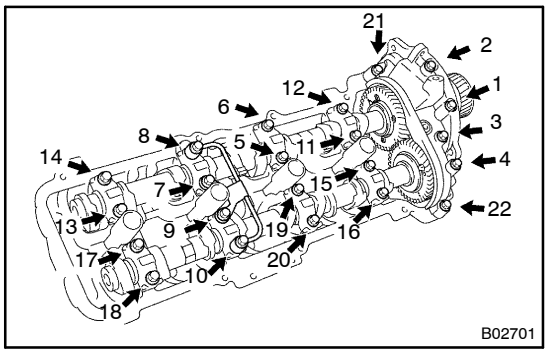

(14) Uniformly tighten the 22 bearing cap bolts in several passes, in the sequence shown.

Torque:

7.5 N·m (80 kgf·cm, 66 in.·lbf) for bolt C

16 N·m (160 kgf·cm, 12 ft·lbf) for others

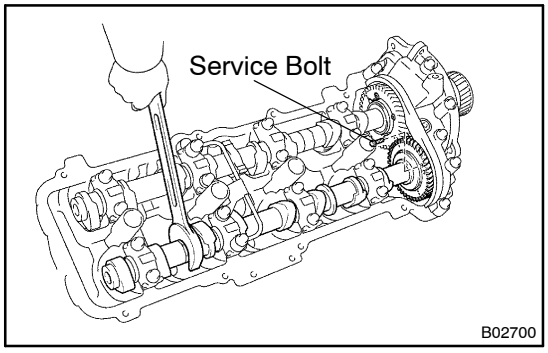

(15) Remove the service bolt.

10. CHECK AND ADJUST VALVE CLEARANCE
(See page EM–7)

Turn the camshaft and position the cam lobe upward, and check and adjust the valve clearance.

11. INSTALL CAMSHAFT TIMING OIL CONTROL VALVE
(See page FI–47)

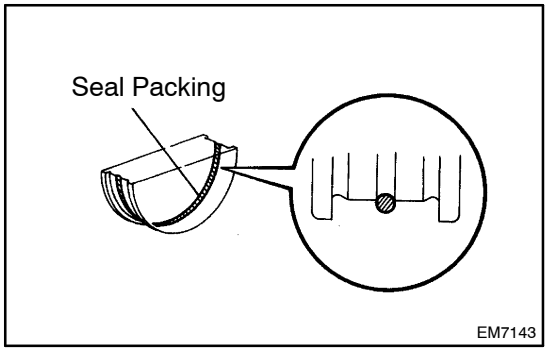

12. INSTALL SEMI–CIRCULAR PLUGS

(a) Remove any old packing (FIPG) material.

(b) Apply seal packing to the semi–circular plug grooves.
Seal packing: Part No. 08826–00080 or equivalent

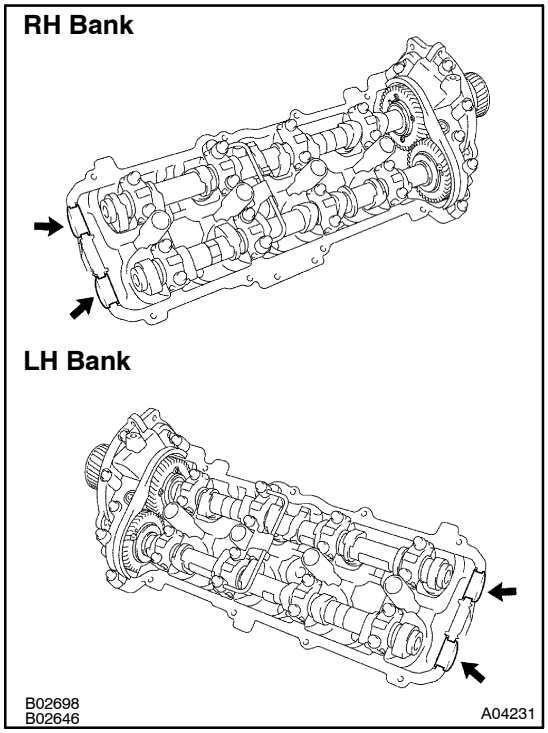

(c) Install the 4 semi–circular plugs to the cylinder heads a shown in the illustration.

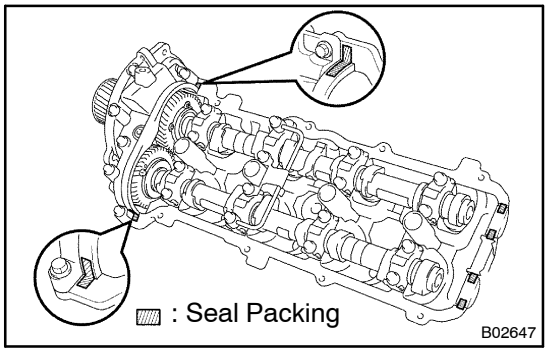

13. INSTALL LH CYLINDER HEAD COVER

(a) Remove any old packing (FIPG) material.

(b) Apply seal packing to the cylinder heads as shown in the illustration.
Seal packing: Part No. 08826–00080 or equivalent

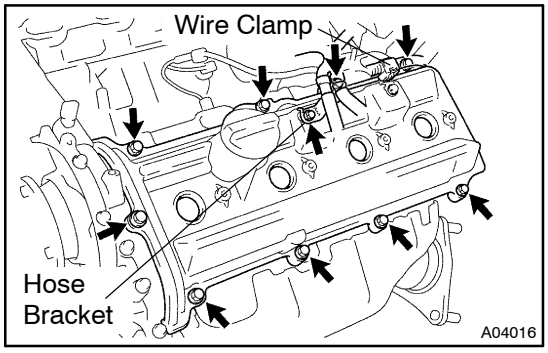

(c) Install the gasket to the cylinder head cover.

(d) Install the seal washer to the bolt.

(e) Install the cylinder head cover with the 9 bolts. Uniformly tighten the bolts in several passes.
Torque: 6.0 N·m (60 kgf·cm, 53 in.·lbf)

(f) Install the hose bracket for the EVAP to the cylinder head cover.

(g) Install the wire clamp to the bracket on the cylinder head cover.

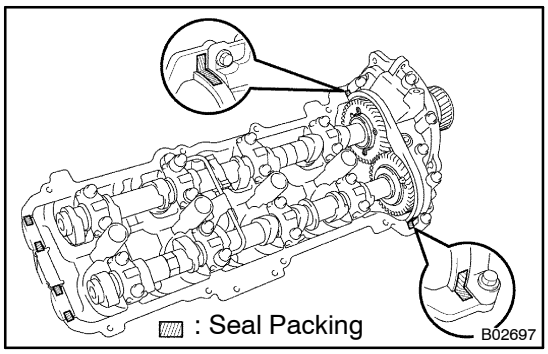

14. INSTALL RH CYLINDER HEAD COVER

(a) Remove any old packing (FIPG) material.

(b) Apply seal packing to the cylinder heads as shown in the illustration.
Seal packing: Part No. 08826–00080 or equivalent

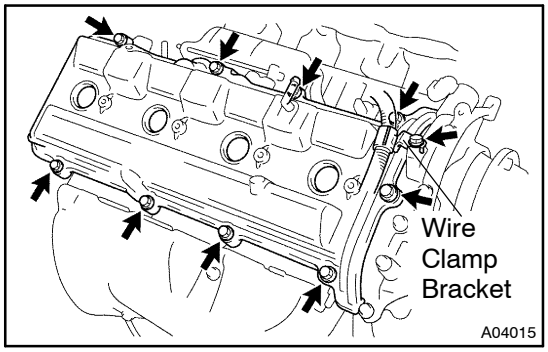

(c) Install the gasket to the cylinder head cover.
(d) Install the seal washer to the bolt.
(e) Install the cylinder head cover with the 9 bolts. Uniformly tighten the bolts in several passes. Install the 2 cylinder head covers.
Torque: 6.0 N·m (60 kgf·cm, 53 in.·lbf)
(f) Install the wire clamp bracket on the engine wire to the camshaft bearing cap.

15. INSTALL ENGINE HANGERS
Torque: 37 N·m (380 kgf·cm, 27 ft·lbf)

16. INSTALL VVT SENSORS (See page FI–82)

17. INSTALL OIL DIPSTICK AND GUIDE FOR ENGINE

18. INSTALL OIL DIPSTICK AND GUIDE FOR A/T

19. INSTALL IGNITION COILS (See page IG–6)

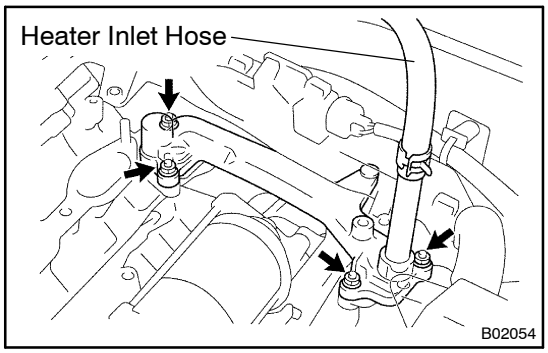

20. INSTALL REAR WATER BYPASS JOINT
(a) Install 2 new gaskets and the water bypass joint with the 4 nuts. Alternately tighten the nuts.
(b) Connect the heater inlet hose to the water bypass joint.
Torque: 18 N·m (185 kgf·cm, 13 ft·lbf)

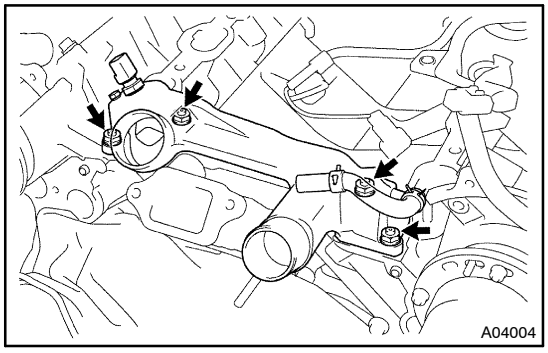

21. INSTALL FRONT WATER BYPASS JOINT
(a) Install 2 new gaskets and the water bypass joint with the 4 nuts. Alternately tighten the nuts.
Torque: 18 N·m (185 kgf·cm, 13 ft·lbf)
(b) Connect the water temperature sensor connector.

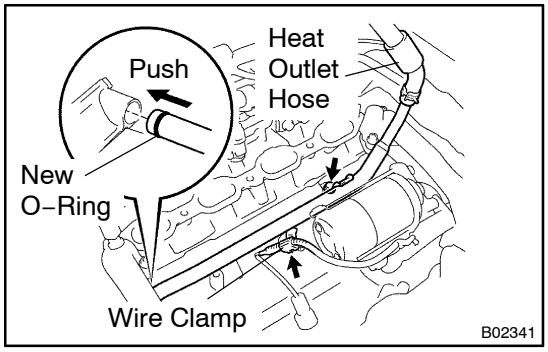

22. INSTALL WATER BYPASS PIPE
(a) Install a new O–ring to the water bypass pipe.
(b) Apply soapy water to the O–ring.
(c) Push in the water bypass pipe end into the pipe hole of the water pump.
(d) Install the water bypass pipe with the bolt.
Torque: 18 N·m (185 kgf·cm, 13 ft·lbf)
(e) Install the wire clamp to the bracket of the water bypass pipe.
(f) Connect the heater outlet hose to the water bypass pipe.

23. INSTALL WATER INLET AND INLET HOUSING ASSEMBLY (See page CO–9)

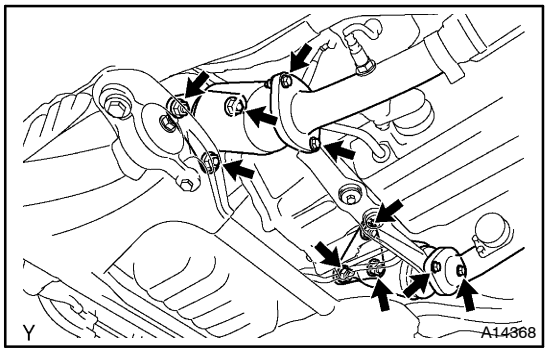

24. INSTALL TWC (unleaded gasoline) OR SUB–MUFFLERS (leaded gasoline)

(a) Install new gaskets and the TWC or sub–muffler with 3 new nuts.
Install the 2 TWC or sub–mufflers.

(b) Connect the new gasket to each front end of the front exhaust pipe.

(c) Connect the front exhaust pipe to the 2 TWC or 2 sub–mufflers with the 4 bolts and 4 new nuts.
Torque: 43 N·m (440 kgf·cm, 32 ft·lbf)

25. INSTALL PS PUMP (See page SR–37)

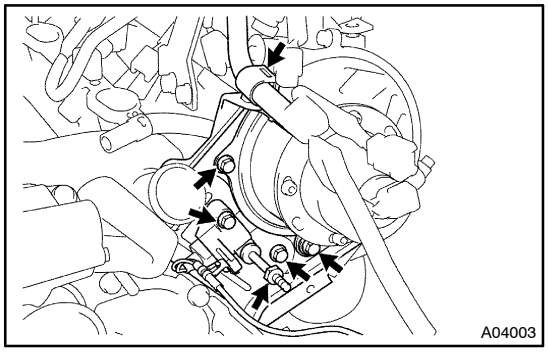

26. INSTALL LH TIMING BELT REAR PLATES AND CAMSHAFT POSITION SENSOR

Install the No.1, No.2 rear plates and camshaft position sensor with the stud bolt and 3 bolts.
Torque: 7.5 N·m (80 kgf·cm, 66 in.·lbf)

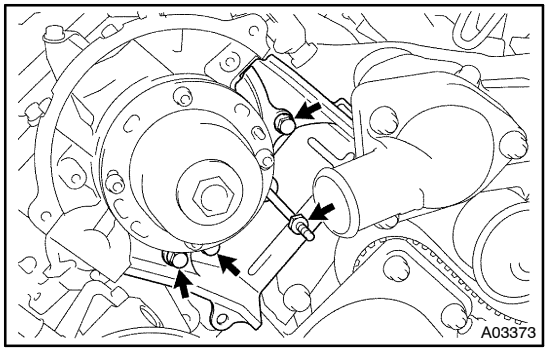

27. INSTALL RH TIMING BELT REAR PLATES

Install the No.1 and No.2 rear plates with the stud bolt and 3 bolts.
Torque: 7.5 N·m (80 kgf·cm, 66 in.·lbf)

28. INSTALL CAMSHAFT TIMING PULLEYS (See page EM–26)

29. CONNECT TIMING BELT TO CAMSHAFT TIMING PULLEYS (See page EM–26)

30. ASSEMBLE UPPER AND LOWER INTAKE MANIFOLDS

(a) Install the 2 delivery pipes and 8 injectors.
(See page FI–25)

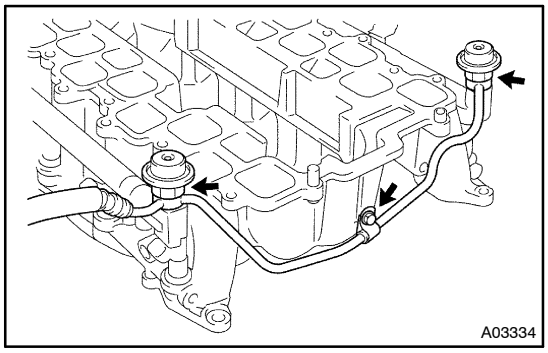

(b) Temporarily install the rear fuel pipe to delivery pipes with new lower, upper gaskets and 2 fuel pressure pulsation dampers.
(c) Install the rear fuel pipe to the lower intake manifold with the bolt.
(d) Tighten the fuel pressure pulsation dampers.
(See page FI–29)
(e) Install the EVAP hose with the VSV for the EVAP to the upper intake manifold.
(f) Install the air tube to the upper intake manifold with the 2 bolts.
(g) Install the air control valve to the upper intake manifold with the 6 bolts. Uniformly tighten the bolts in several passes.
Torque: 8.5 N·m (85 kgf·cm, 75 in.·lbf)

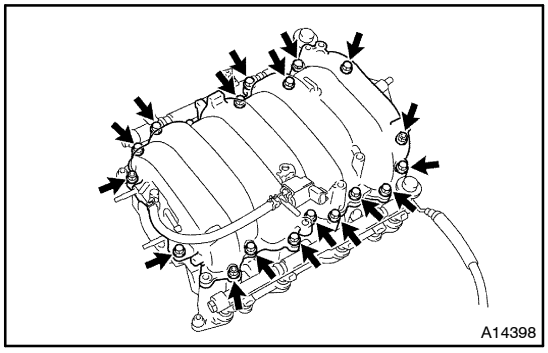

(h) Install a new gasket and the upper intake manifold with the 15 bolts and 3 nuts.
Torque: 18 N·m (185 kgf·cm, 13 ft·lbf)
(i) Install the air control valve. (See page FI–56)

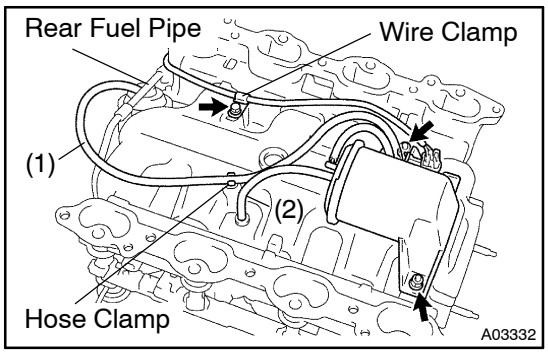

(j) Install the vacuum tank and VSV assembly for the ACIS with the 2 nuts.
Torque: 18 N·m (185 kgf·cm, 13 ft·lbf)
(k) Install the wire clamp to the lower intake manifold with the bolt.
(l) Connect these vacuum hoses:
(1) Vacuum hose (from VSV for ACIS) to air control valve actuator.

HINT:
Pass the vacuum hose over the rear fuel pipe.

(2) Vacuum hose (from vacuum tank) to lower intake manifold.

(m) Install the vacuum hose (the VSV for the ACIS to the air control valve actuator) to the hose clamp.

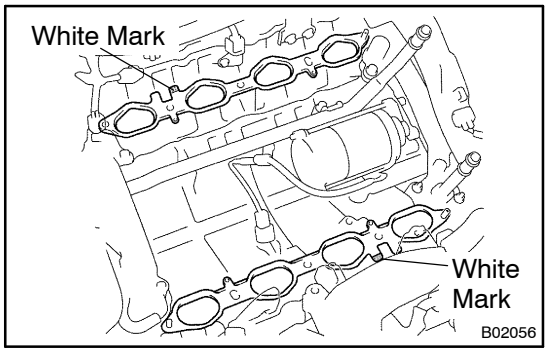

31. INSTALL UPPER AND LOWER INTAKE MANIFOLDS ASSEMBLY

(a) Place 2 new gaskets on the cylinder heads with the white mark facing outward.

NOTICE:

Be careful of the installation direction.

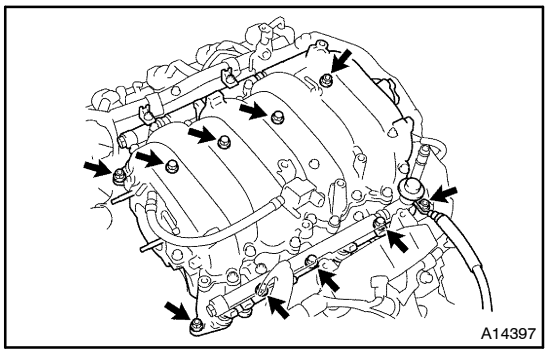

(b) Install the upper and lower intake manifolds assembly with the 6 bolts and 4 nuts.
Torque: 18 N·m (185 kgf·cm, 13 ft·lbf)

(c) Connect the 8 injector connectors.

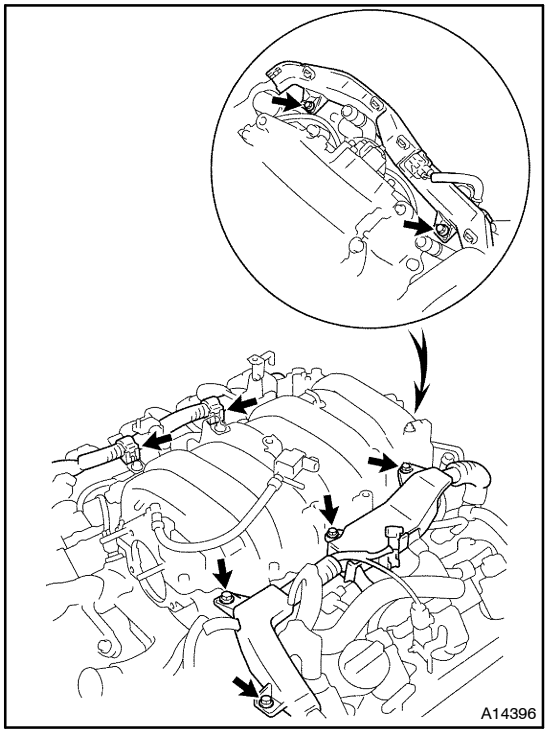

(d) Install the engine wire protector (rear side) with the 2 bolts.

(e) Install the engine wire protector (LH side) with the 4 bolts.

(f) Install the 2 wire clamps on the engine wire (Rh side) to the brackets on the RH delivery pipe.

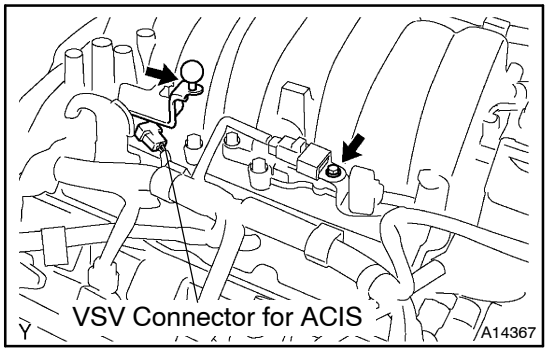

(g) Install and connect these parts:
(1) Install the No. 4 V–bank cover bracket with bolt.
(2) Install the No. 1 V–bank cover bracket with bolt.
(3) Connect the VSV connector for ACIS.

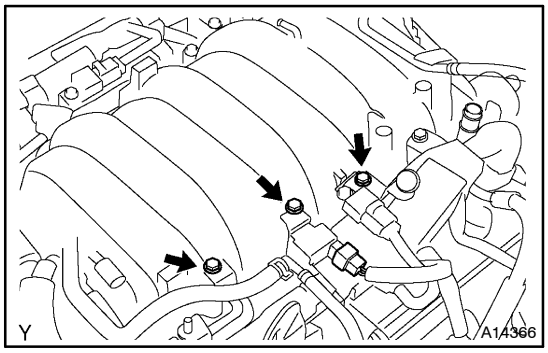

(4) Install the No. 3 V–bank cover bracket with bolt.
(5) Install the No. 2 V–bank cover bracket with bolt.
(6) Connect the VSV for EVAP to the upper intake manifold with the bolt.
(7) Connect the vacuum hose to the vacuum tube.
(8) Connect the EVAP hose to the VSV for EVAP.
(9) Connect the PCV hose to the upper intake manifold.
(10) Connect the VSV connector for EVAP.

(h) Connect the fuel inlet hose (rear fuel pipe) to the fuel main tube (See page FI–1).

32. INSTALL THROTTLE BODY (See page FI–41)
33. INSTALL RADIATOR ASSEMBLY (See page CO–25)
34. INSTALL INTAKE AIR CONNECTOR PIPE
35. INSTALL AIR CLEANER ASSEMBLY
36. FILL WITH ENGINE COOLANT (See page CO–2)
37. START ENGINE AND CHECK FOR ENGINE COOLANT AND FUEL
38. CHECK ENGINE OIL LEVEL
39. INSTALL V–BANK COVER AND ENGINE ROOM SIDE COVERS
40. INSTALL ENGINE UNDER COVER