FRONT SEAT

COMPONENTS

BO0PF–05

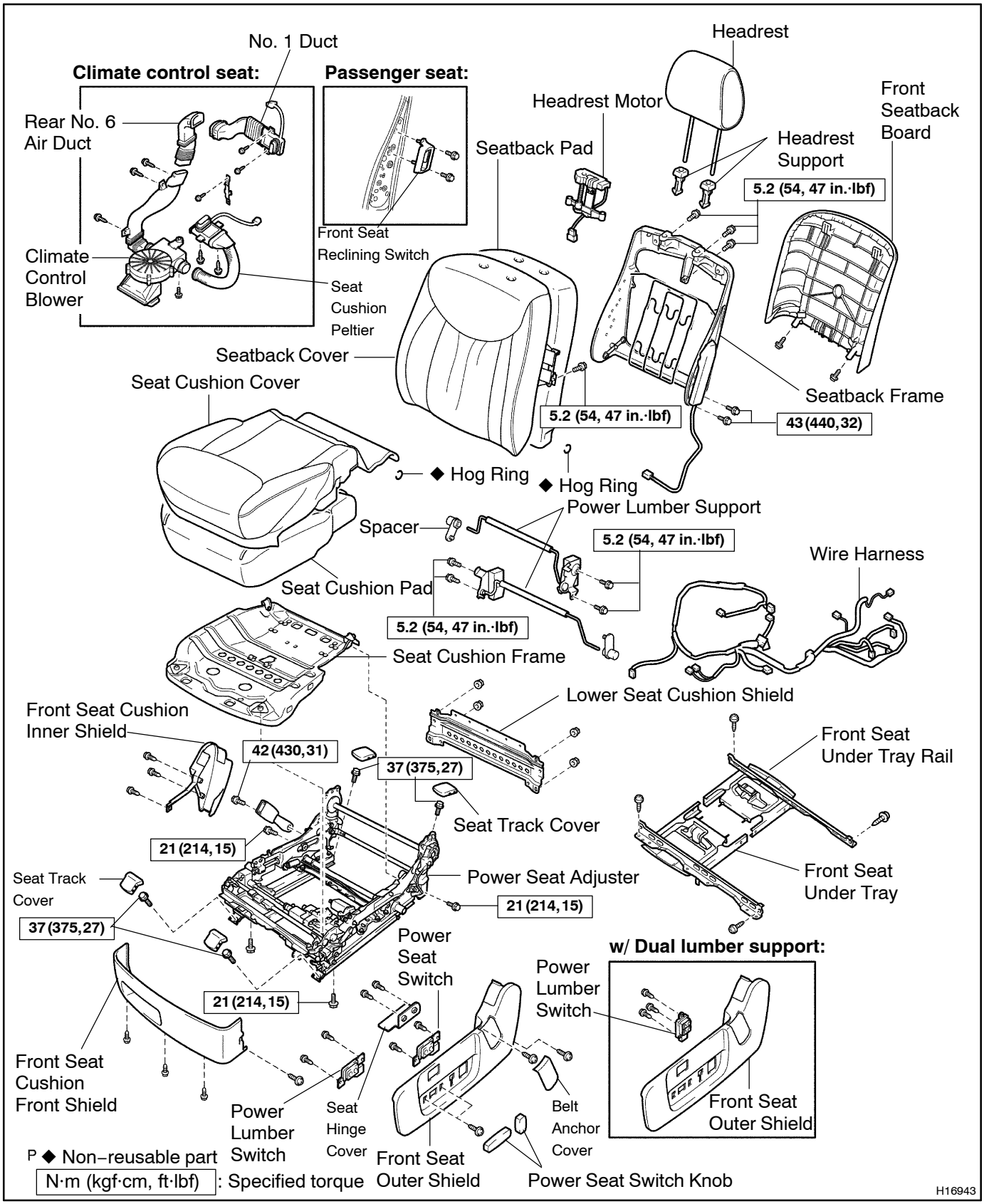

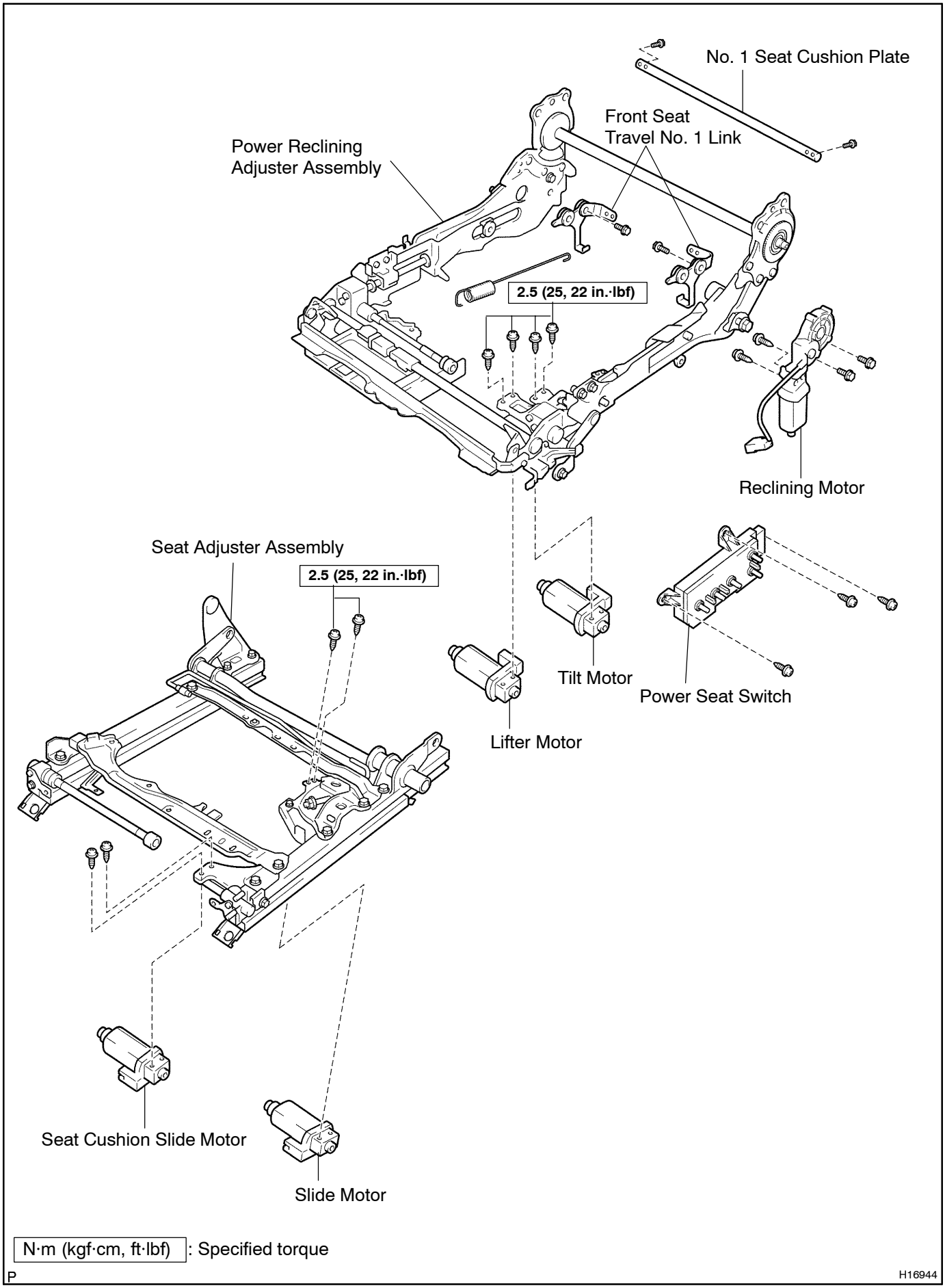
No. 1 Seat Cushion Plate
Front Seat
Travel No. 1 Link
Power Reclining
Adjuster Assembly
2.5 (25, 22 in.·lbf)
Reclining Motor
Seat Adjuster Assembly
2.5 (25, 22 in.·lbf)
Tilt Motor
Power Seat Switch
Lifter Motor
Seat Cushion Slide Motor
Slide Motor
N·m (kgf·cm, ft·lbf) : Specified torque
P
H16944