FLOOR SHIFT ASSEMBLY

COMPONENTS

AT062–05

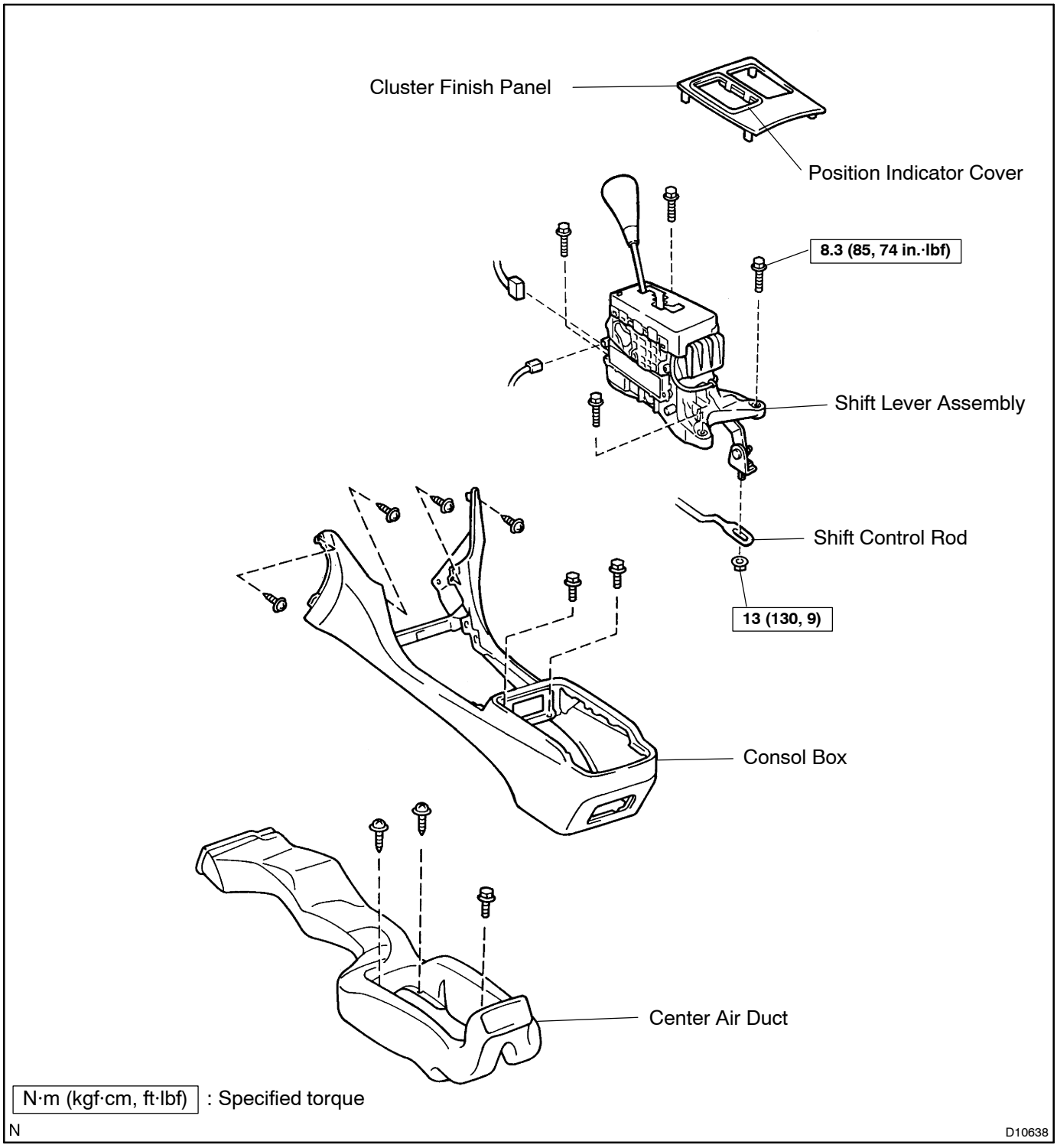

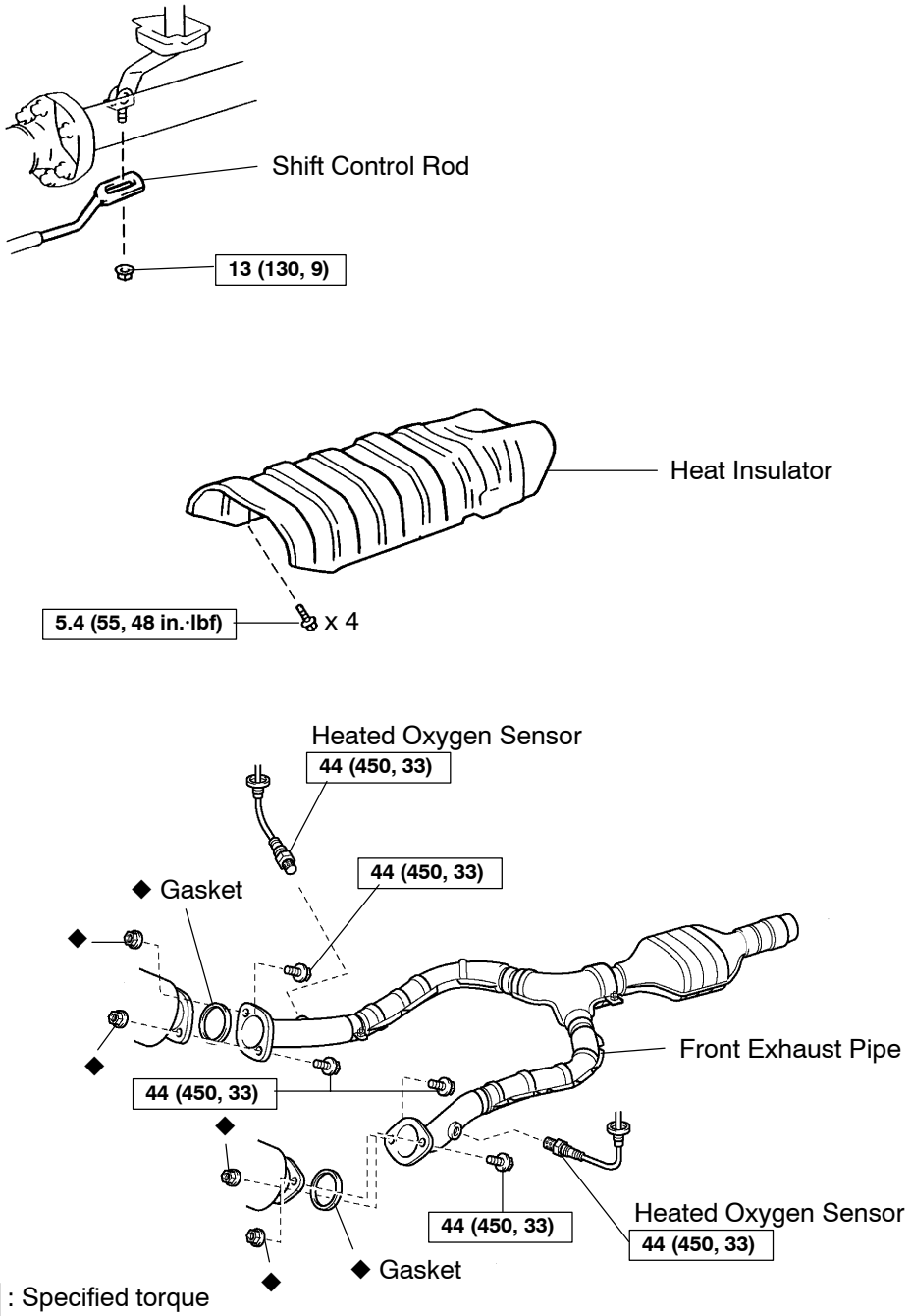

N·m (kgf·cm, ft·lbf) : Specified torque

◆ Non−reusable part

D10833

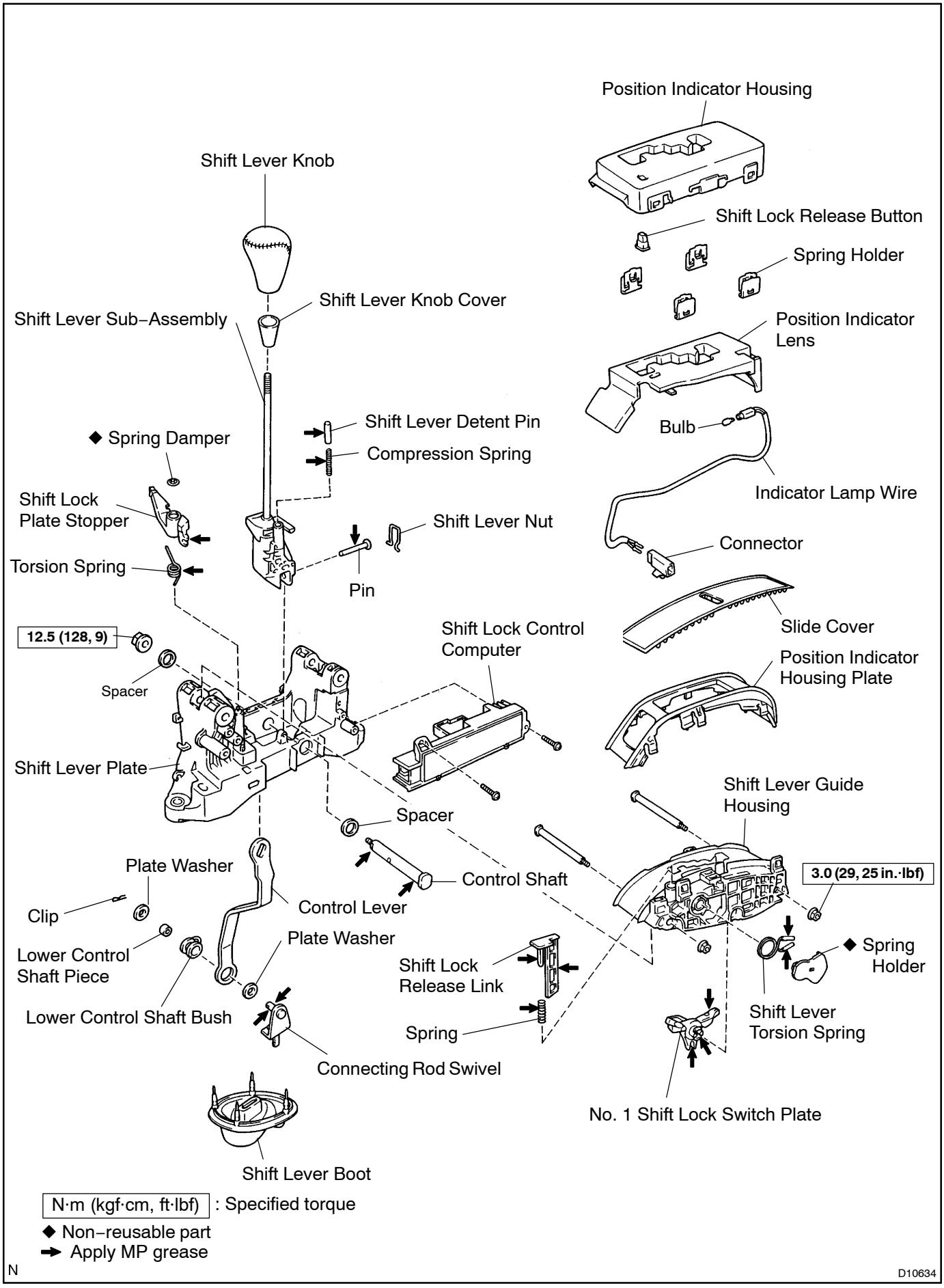
Position Indicator Housing
Shift Lever Knob
Shift Lock Release Button
Spring Holder
Shift Lever Knob Cover
Shift Lever Sub–Assembly
Position Indicator Lens
Shift Lever Detent Pin
Bulb
◆ Spring Damper
Compression Spring
Indicator Lamp Wire
Shift Lock Plate Stopper
Shift Lever Nut
Connector
Torsion Spring
Pin
Slide Cover
12.5 (128, 9)
Shift Lock Control Computer
Position Indicator Housing Plate
Spacer
Shift Lever Plate
Shift Lever Guide Housing
Spacer
Plate Washer
Control Shaft
3.0 (29, 25 in.·lbf)
Clip
Control Lever
Plate Washer
Lower Control Shaft Piece
Shift Lock Release Link
◆ Spring Holder
Lower Control Shaft Bush
Spring
Shift Lever Torsion Spring
Connecting Rod Swivel
No. 1 Shift Lock Switch Plate
Shift Lever Boot
N·m (kgf·cm, ft·lbf) : Specified torque
◆ Non–reusable part
➡ Apply MP grease
N
D10634