400XK–02

# OVERHAUL

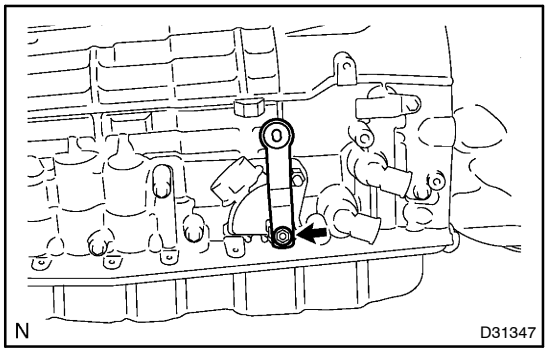


**1. REMOVE TRANSMISSION CONTROL SHAFT LEVER RH**

(a) Remove the nut and the transmission control shaft lever RH.

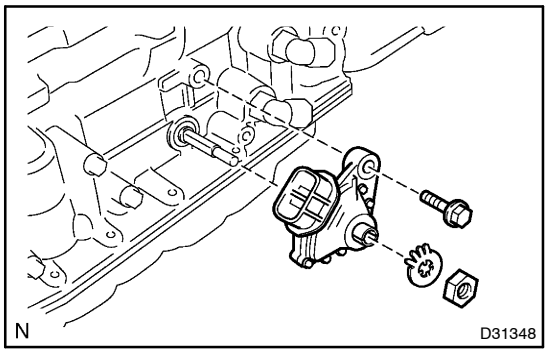


**2. REMOVE PARK/NEUTRAL POSITION SWITCH ASSY**

(a) Using a screwdriver, unstake the lock washer.
(b) Remove the lock washer, the nut and the bolt.
(c) Remove the park/neutral position switch.

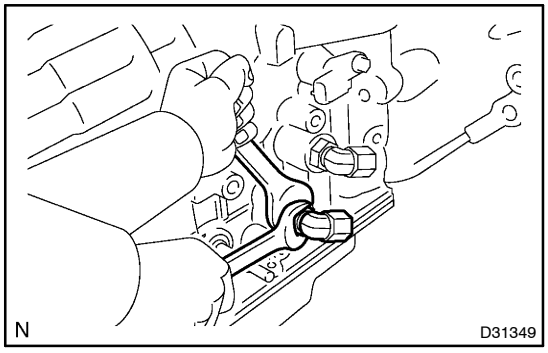


**3. REMOVE OIL COOLER TUBE UNION**

(a) Remove the 2 oil cooler tube unions.
(b) Remove the O–rings from the oil cooler tube unions.

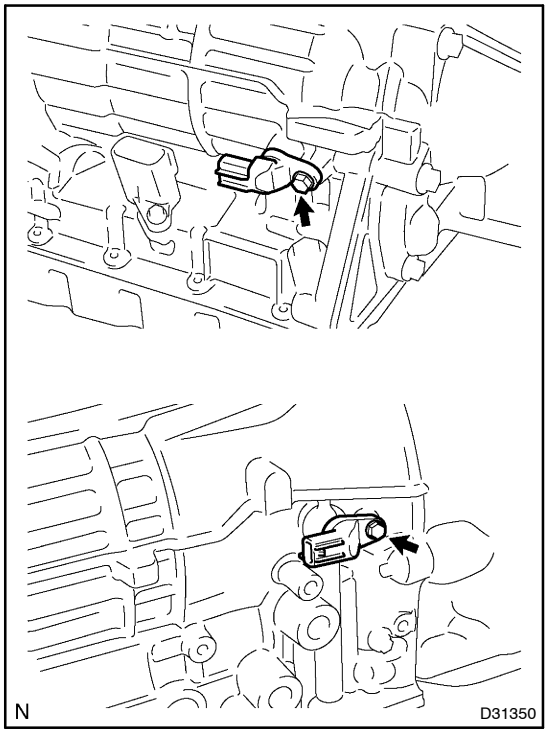


**4. REMOVE TRANSMISSION REVOLUTION SENSOR**

(a) Remove the 2 bolts and the 2 transmission revolution sensors.

(b) Remove the O–ring from each sensor.

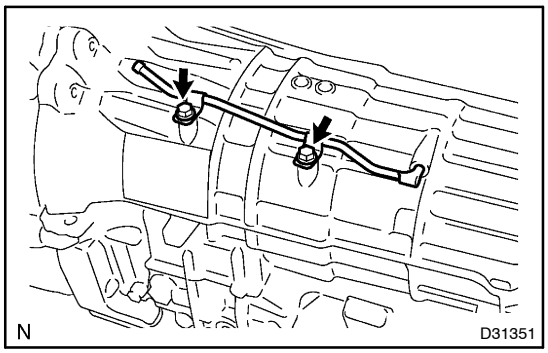


**5. REMOVE AUTOMATIC TRANSMISSION BREATHE TUBE**

(a) Remove the 2 bolts.

(b) Remove the breather tube.

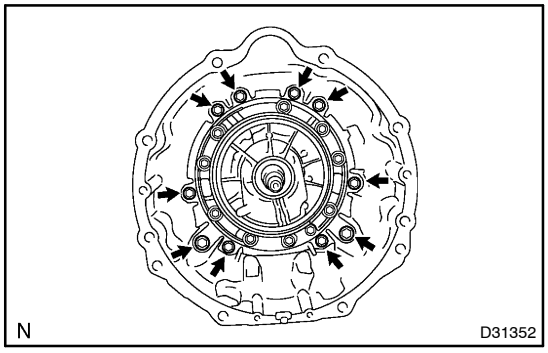


**6. REMOVE AUTOMATIC TRANSMISSION FLANGE YOKE ASSY**

(a) Remove the 10 bolts.

(b) Remove the transmission housing.

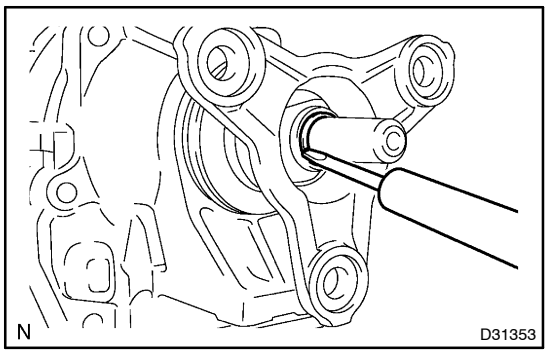


**7. REMOVE AUTOMATIC TRANSMISSION FLANGE YOKE ASSY**

(a) Using a hammer and chisel, loosen the staked part of the nut.

(b) Remove the nut and flange yoke assy.

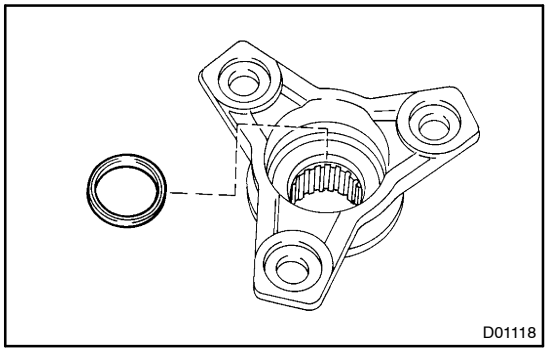


(c) Remove the oil seal from the flange yoke assy.

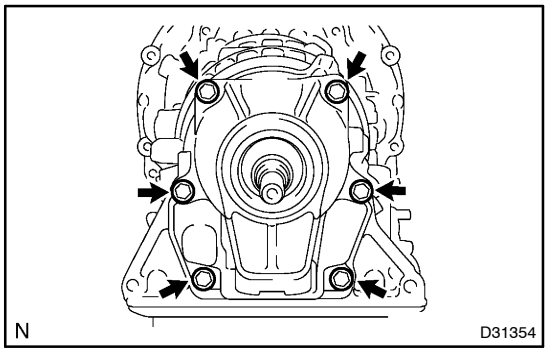


**8. REMOVE EXTENSION (ATM) HOUSING SUB–ASSY**

(a) Remove the 6 bolts.

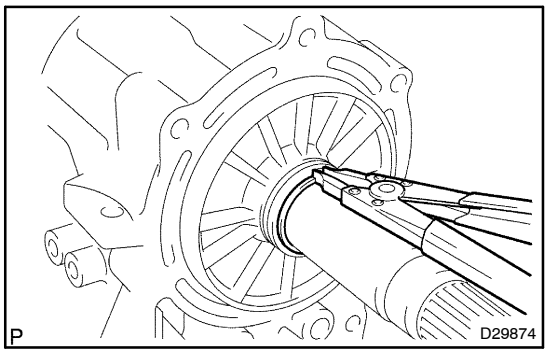


(b) Using a snap ring expander, remove the snap ring.

(c) Remove the thrust needle roller bearing and the 2 bearing race.

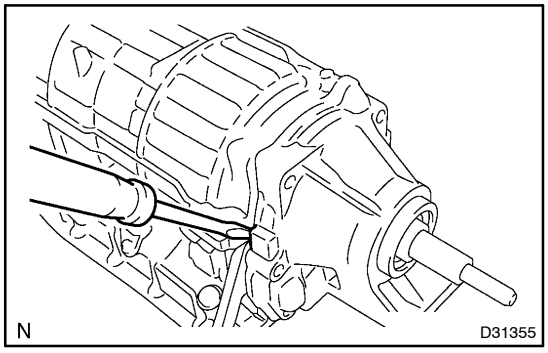


(d) Use a screwdriver to remove the extension housing sub–assy.

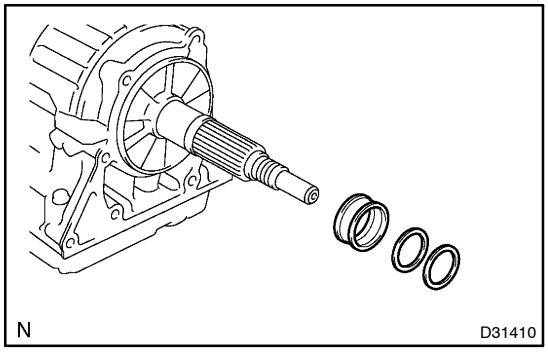


**9. REMOVE RR COVER SLEEVE**

(a) Remove the 2 washers and RR cover sleeve.

**10. REMOVE TRANSMISSION CASE ADAPTOR RADIAL BALL BEARING**

(a) Remove the transmission case adaptor radial ball bearing from the extension housing sub–assy.

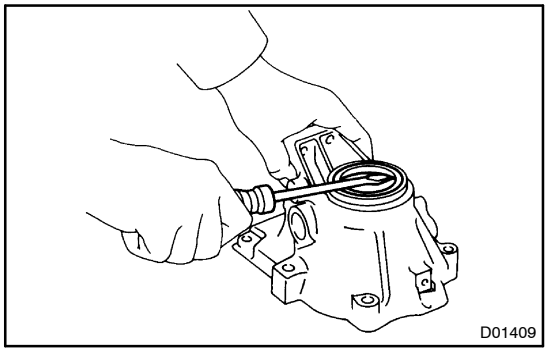


**11. REMOVE AUTOMATIC TRANSMISSION EXTENSION HOUSING OIL SEAL**

(a) Using a screwdriver, remove the oil seal.

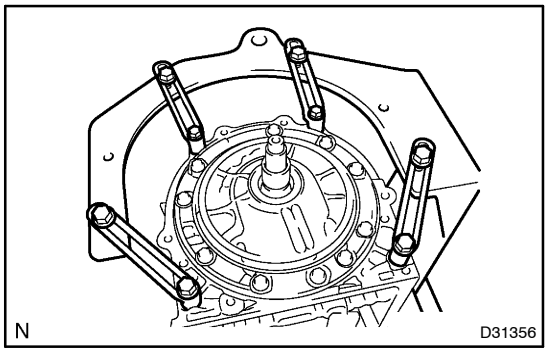


**12. FIX AUTOMATIC TRANSMISSION CASE SUB–ASSY**

(a) Install the transmission case on the overhaul attachment.

**13. REMOVE AUTOMATIC TRANSMISSION OIL PAN SUB–ASSY**

**NOTICE:**

**Do not turn the transmission over as this will contaminate the valve body with foreign matter located at the bottom of the pan.**

(a) Remove the drain plug and the gasket.

(b) Remove the 20 bolts, oil pan and gasket.

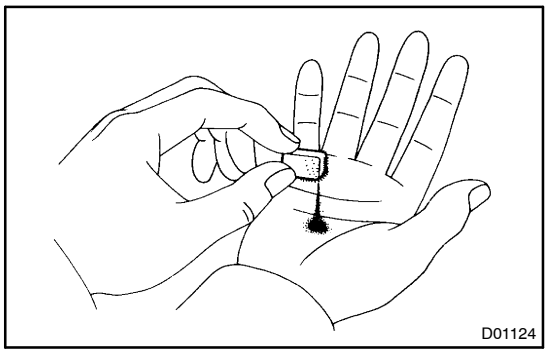


**14. INSPECT AUTOMATIC TRANSMISSION OIL PAN SUB–ASSY**

(a) Remove the magnets, and use them to collect steel particles.

(b) Carefully look at the foreign matter and particles in the pan and on the magnets to anticipate the type of wear you will find in the transmission.

- Steel (magnetic): bearing, gear and clutch plate wear
- Brass (non–magnetic): bushing wear

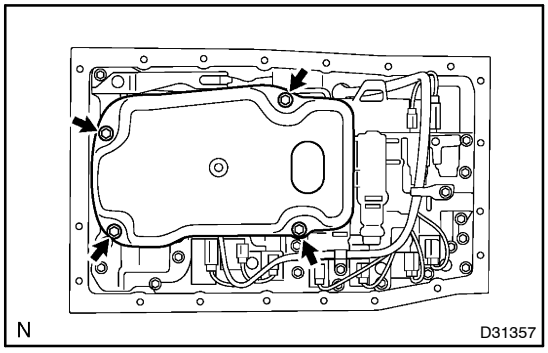


**15. REMOVE VALVE BODY OIL STRAINER ASSY**

(a) Turn over the transmission.

(b) Remove the 4 bolts holding the valve body oil strainer assy to the valve body.

(c) Remove the O–ring from the valve body oil strainer assy.

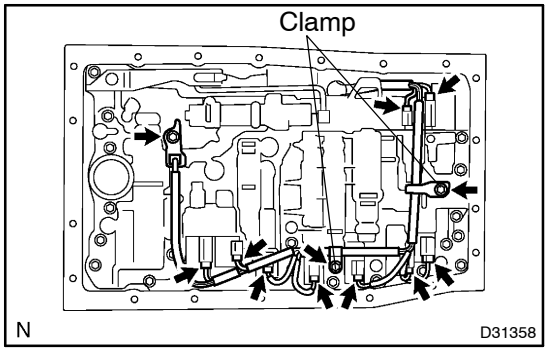


**16. REMOVE TRANSMISSION WIRE**

(a) Remove the ATF temperature sensor.

(b) Remove the 2 bolts and disconnect the 2 clamps.

(c) Disconnect the 9 connectors from the shift solenoid valves.

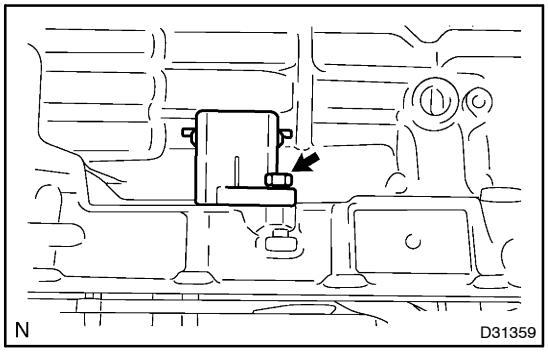


(d) Remove the bolt from the case.
(e) Pull the transmission wire out of the transmission case.
(f) Remove the O–ring from the transmission wire.

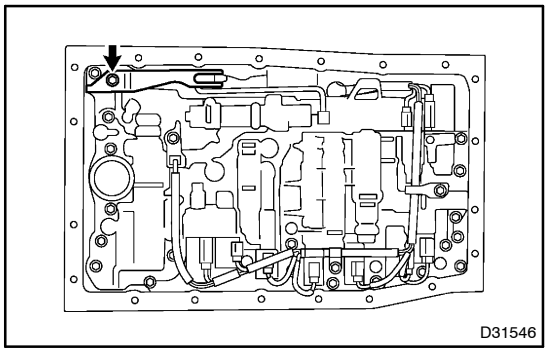


**17. REMOVE TRANSMISSION VALVE BODY ASSY**

(a) Remove the bolt and detente spring.

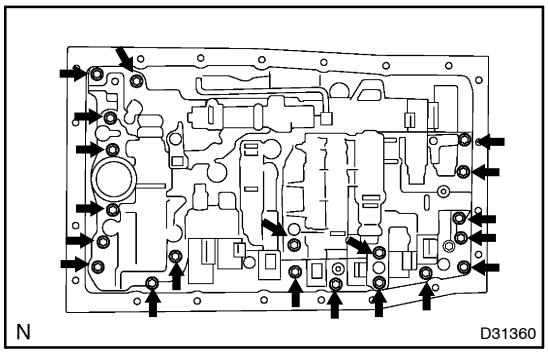


(b) Remove the 20 bolts.
(c) Remove the valve body assy.

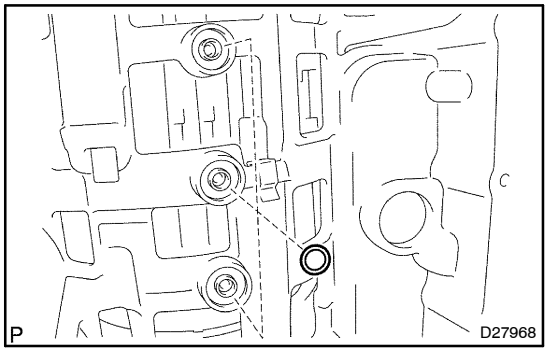


**18. REMOVE TRANSAXLE CASE GASKET**

(a) Remove the 3 transaxle case gaskets.

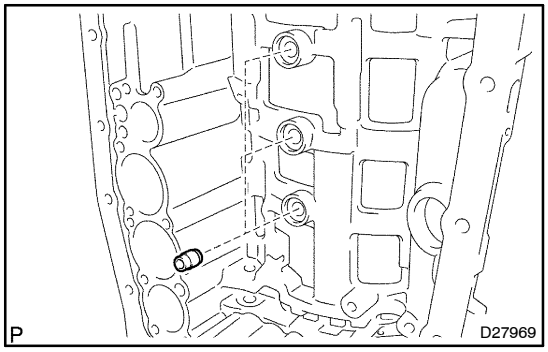


**19. REMOVE BRAKE DRUM GASKET**

(a) Remove the 3 brake drum gaskets.

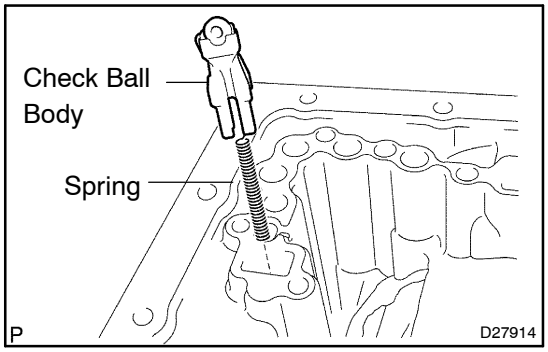


**20. REMOVE CHECK BALL BODY**

(a) Remove the check ball body and the spring.

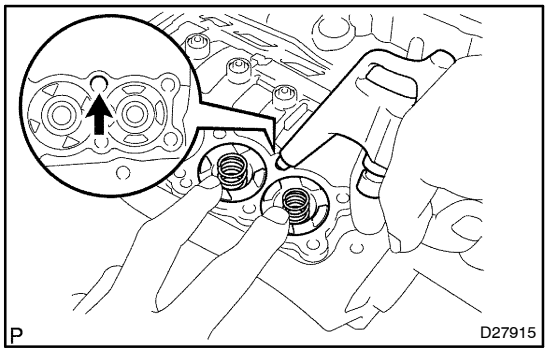


**21. REMOVE C–2 ACCUMULATOR PISTON**

(a) While bowing compressed air into the oil hole, remove the C–2 accumulator piston and the spring.

(b) Remove the 2 O–rings from the piston.

**NOTICE:**

**Take care as the C–3 and B–3 accumulator piston may eject.**

**22. REMOVE B–3 ACCUMULATOR PISTON**

(a) Applying compressed air to the oil hole, remove the B–3 accumulator piston and the spring.

(b) Remove the 2 O–rings from the piston.

**NOTICE:**

**Take care as the C–3 accumulator piston may jump out.**

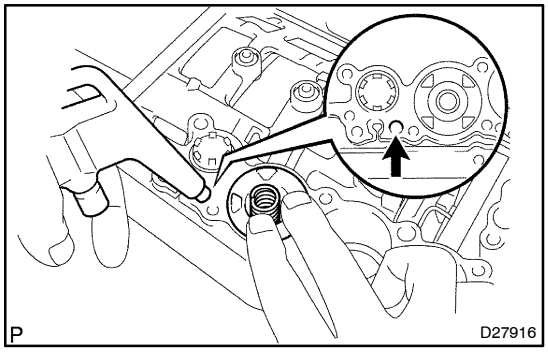


**23. REMOVE C–3 ACCUMULATOR PISTON**

(a) While blowing compressed air into the oil hole, remove the C–3 accumulator piston and the 2 springs.

(b) Remove the 2 O–rings from the piston.

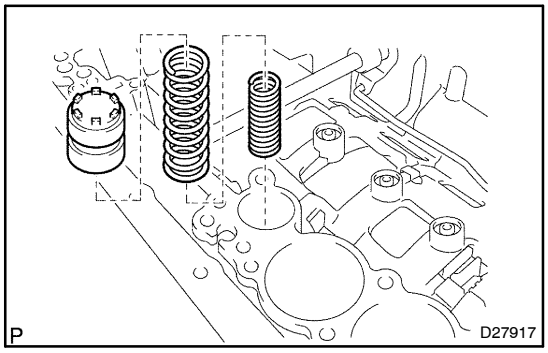


**24. REMOVE B–1 ACCUMULATOR VALVE**

(a) Remove the B–1 accumulator valve and the 2 springs.

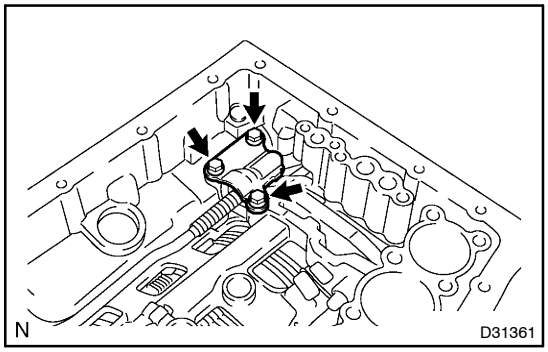


**25. REMOVE PARKING LOCK PAWL BRACKET**

(a) Remove the 3 bolts and the parking lock pawl bracket.

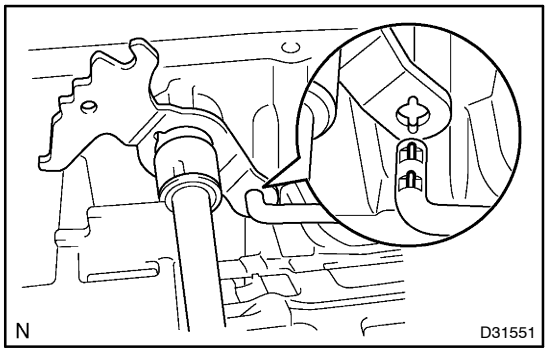


**26. REMOVE PARKING LOCK ROD SUB–ASSY**

(a) Disconnect the parking lock rod from the manual valve lever.

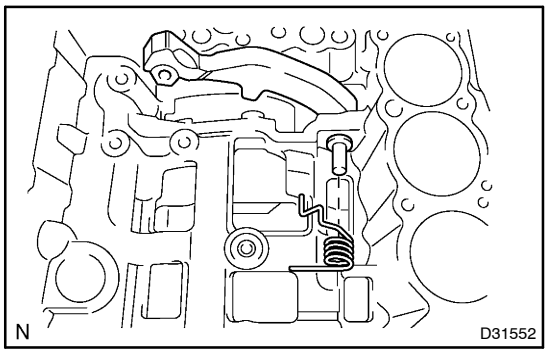


**27. REMOVE PARKING LOCK PAWL SHAFT**

(a) Pull out the parking lock pawl shaft from the front side, then remove the lock pawl and the spring.

(b) Remove the E–ring from the shaft.

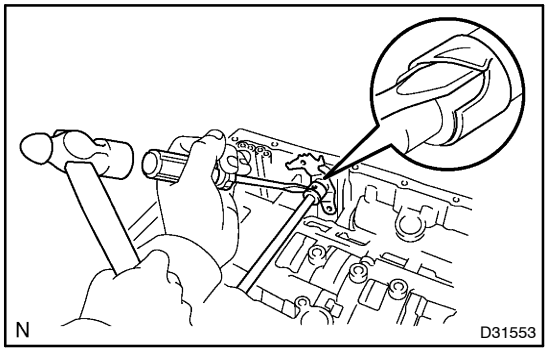


**28. REMOVE MANUAL VALVE LEVER SUB–ASSY**

(a) Using a hammer and a screwdriver, cut off the spacer and remove it from the shaft.

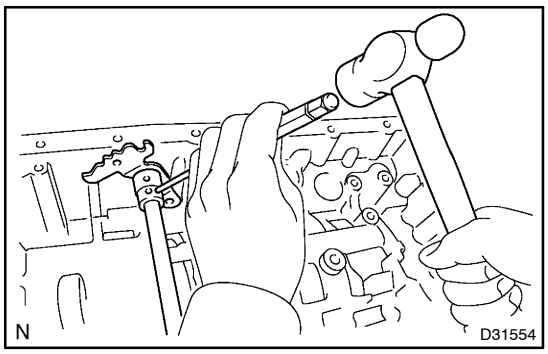


(b) Using a pin punch and a hammer, drive out the spring pin.

HINT:

Slowly drive out the spring pin so that it does not fall into the transmission case.

(c) Pull the manual valve lever shaft out through the case, and remove the manual valve lever.

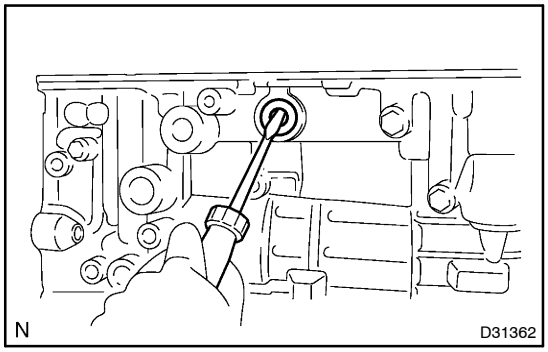


**29. REMOVE MANUAL VALVE LEVER SHAFT OIL SEAL**

(a) Using a screwdriver, remove the 2 oil seals.

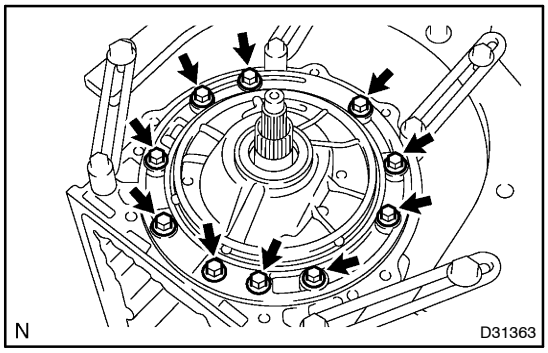


**30. REMOVE OIL PUMP ASSY**

(a) Remove the 10 bolts from the transmission case.

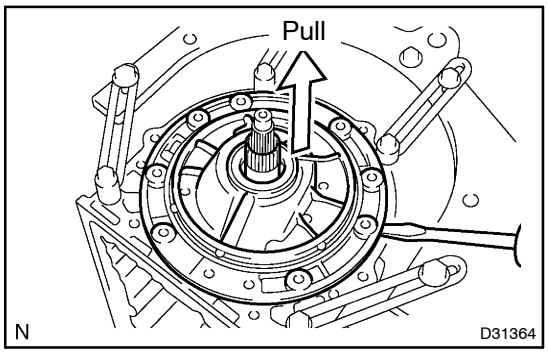


(b) Using screwdriver, pull out the oil pump.

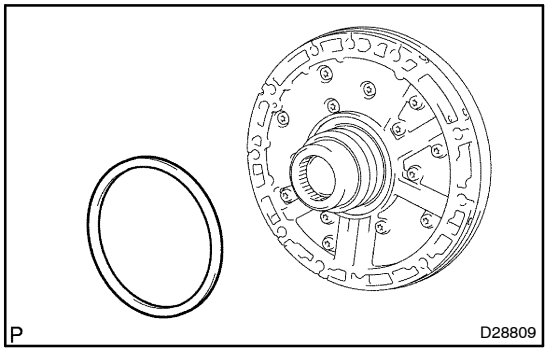


(c) Remove the thrust bearing race No.1 from the oil pump.

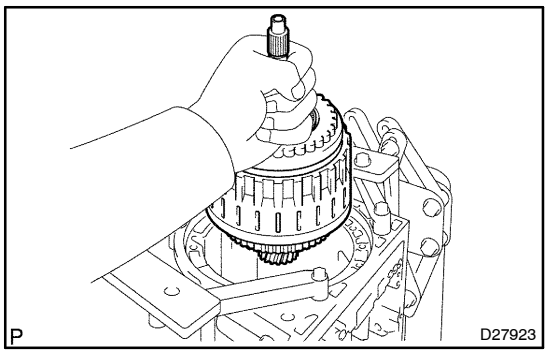


**31. REMOVE CLUTCH DRUM & INPUT SHAFT ASSY**

(a) Remove the clutch drum & input shaft assy from the transmission case.

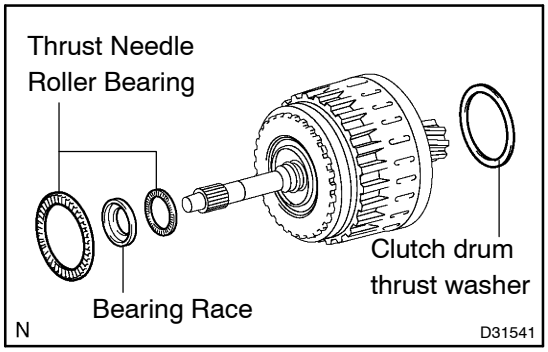


(b) Remove the clutch drum thrust washer, 2 thrust needle roller bearings and bearing race.

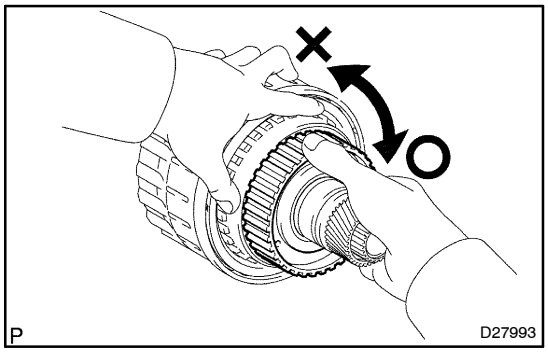


**32. INSPECT 1 WAY N0.2 CLUTCH ASSY**

(a) Hold the reverse clutch hub and turn the 1 way clutch assy No.2.

(b) The 1 way clutch assy No.2 turns freely clockwise and locks counterclockwise.

If there is a problem with the 1 way clutch, replace the 1 way clutch.

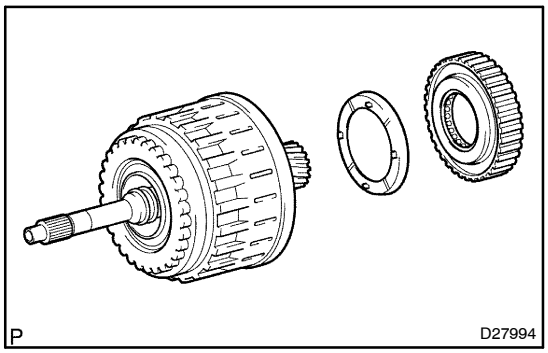


**33. REMOVE 1 WAY N0.2 CLUTCH ASSY**

(a) Remove the 1 way clutch assy No.2 and clutch drum thrust washer from the clutch drum and input shaft assy.

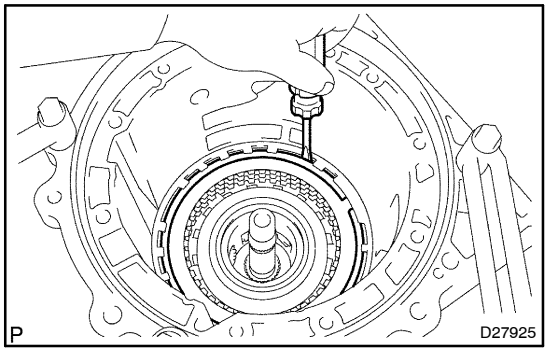


**34. REMOVE BRAKE NO.3 SNAP RING**

(a) Using a screwdriver, remove the brake No.3 snap ring from the case.

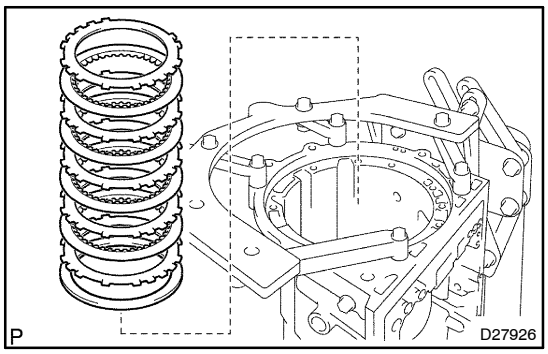


**35. REMOVE 2ND BRAKE DISC SET**

(a) Remove the flange, cushion plate, 4 discs and the 4 plates from the case.

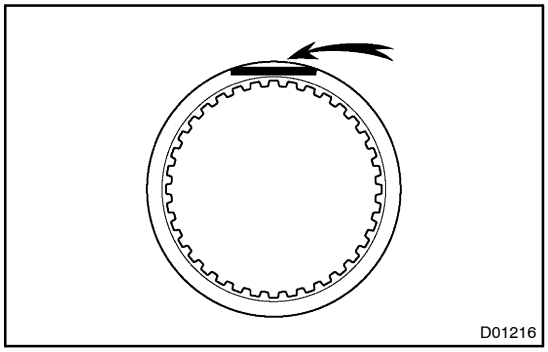


**36. INSPECT 2ND BRAKE DISC SET**

(a) Check whether the sliding surface of the disc, the plate or the flange are worn or burnt.

If necessary, replace them.

**NOTICE:**

- **If the lining of the disc is peeled off or discolored, or if any part of the printed numbers is damaged, replace all discs.**
- **Before assembling new discs, soak them in ATF for at least 15 minutes.**

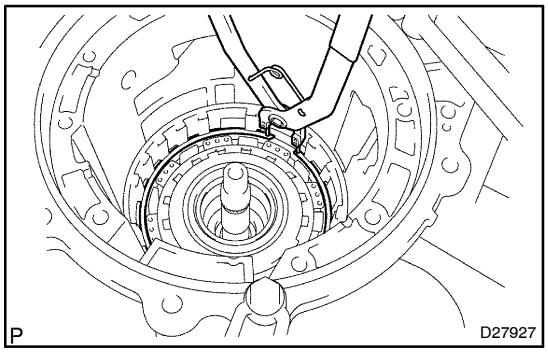


**37. REMOVE 2ND BRAKE PISTON HOLE SNAP RING**

(a) Using SST, remove the snap ring.
SST 09350–30020 (09350–07060)

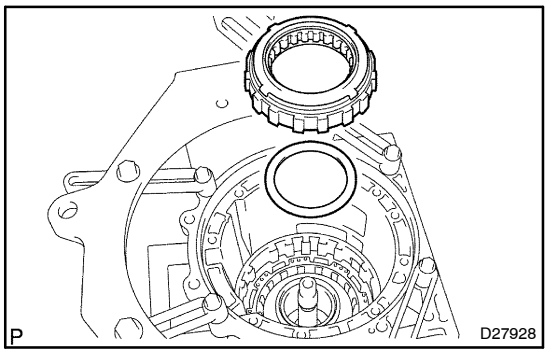


**38. REMOVE 1 WAY CLUTCH ASSY**

(a) Remove the 1 way clutch assy and the planetary carrier thrust washer No.1 from the case.

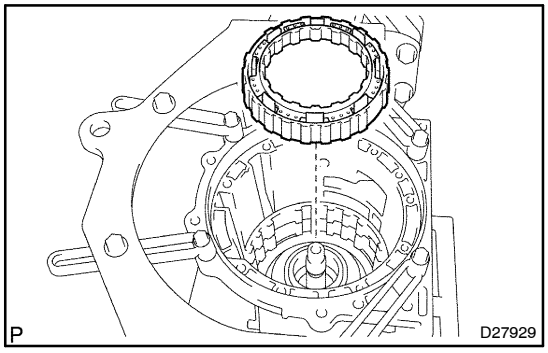


**39. REMOVE 2ND BRAKE CYLINDER**

(a) Remove the 2nd brake cylinder from the case.

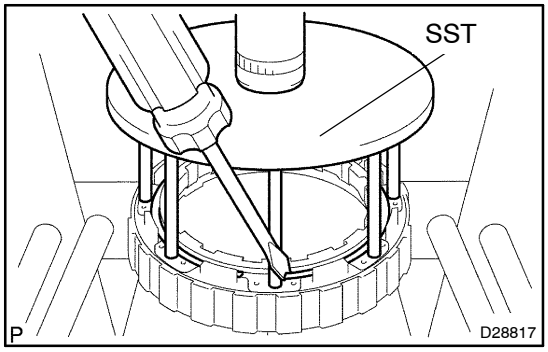


**40. REMOVE 2ND BRAKE PISTON**

(a) Using SST and a press, remove the snap ring.
SST 09351–40010 (09351–04060, 09351–04070)

(b) Remove the 2nd brake piston return spring.

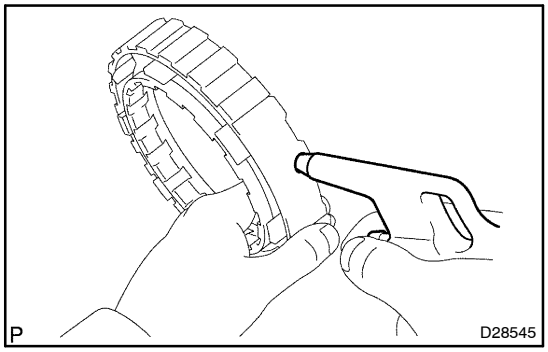


(c) Hold the 2nd brake piston and apply compressed air (392 kPa, 4.0 kgf/cm$^2$, 57 psi) to the 2nd brake cylinder to remove the 2nd brake piston.

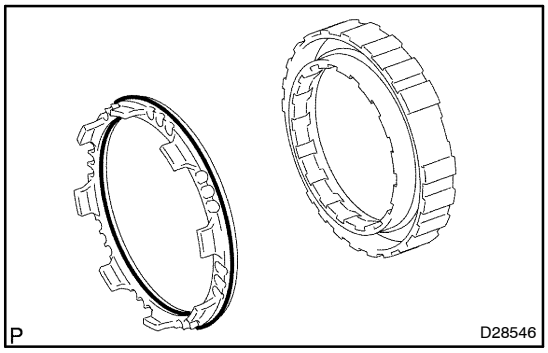


(d) Remove the 2 O–rings from the 2nd brake piston.

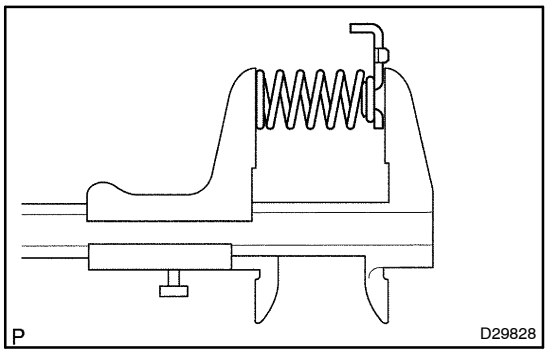


**41. INSPECT BRAKE PISTON RETURN SPRING SUB–ASSYNO.3**

(a) Using a vernier calipers, measure the free length of the spring together with the spring seat.
**Standard free length: 15.72 mm (0.619 in.)**
**Minimum free length: 9.74 mm (0.383 in.)**

If the inside diameter is shorter than the minimum free length, replace the brake piston return spring sub–assy No.3.

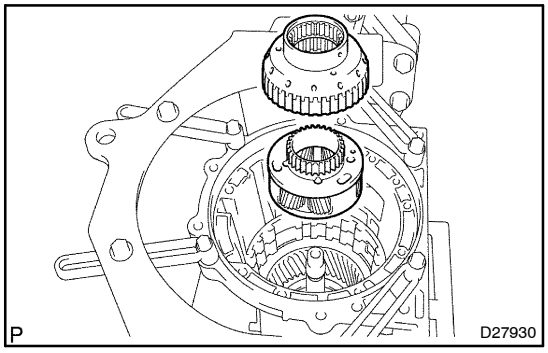


**42. REMOVE FRONT PLANETARY GEAR ASSY**

(a) Remove the front planetary gear assy and the 1 way clutch inner race from the case.

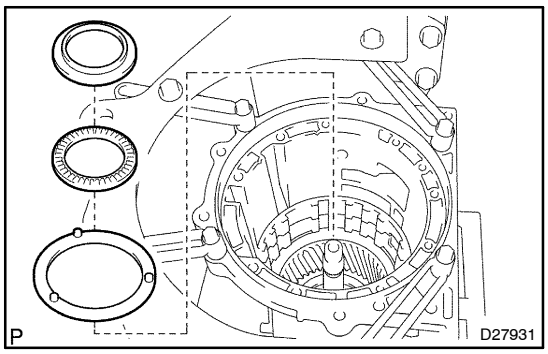


(b) Remove the thrust needle roller bearing, the thrust bearing race No.3 and the planetary carrier thrust washer No.2 from the front planetary gear assy.

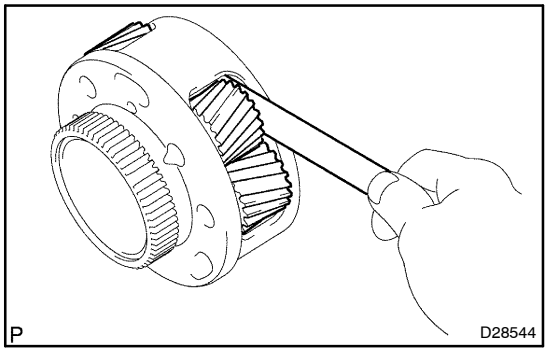


**43. INSPECT FRONT PLANETARY GEAR ASSY**

(a) Using a feeler gauge, measure the front planetary pinion gear thrust clearance.
**Standard clearance:**
**0.20 to 0.60 mm (0.008 to 0.024 in.)**
**Maximum clearance: 0.65 mm (0.026 in.)**

If the clearance is greater than the maximum clearance, replace the front planetary gear assembly.

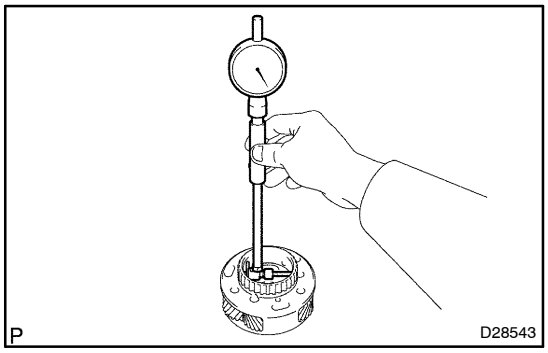


(b) Using a dial indicator, measure the inside diameter of the front planetary gear bushing.
**Maximum inside diameter: 57.48 mm (2.263 in.)**

If the inside diameter is greater than the maximum inside diameter, replace the front planetary gear assy.

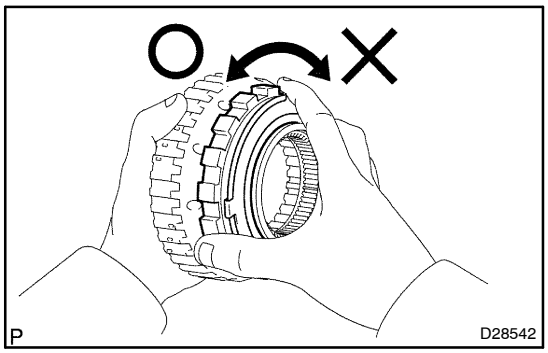


**44. INSPECT 1 WAY CLUTCH ASSY**

(a) Install the 1 way clutch assy to 1 way clutch inner race.
(b) Hold the 1 way clutch inner race and turn the 1 way clutch assy.
(c) Check that the 1 way clutch assy turns freely counter-clockwise and locks clockwise.

If there is a problem with the 1 way clutch, replace the 1 way clutch.

(d) Remove the 1 way clutch assy from the 1 way clutch inner race.

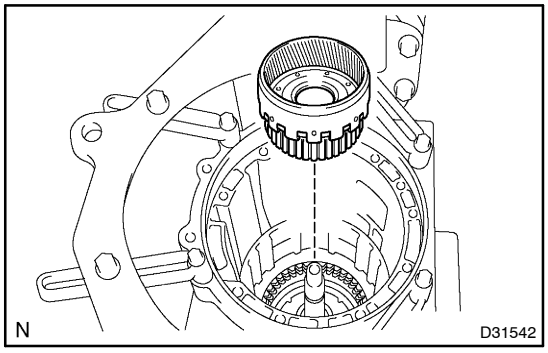


**45. REMOVE FRONT PLANETARY RING GEAR**

(a) Remove the front planetary ring gear from the transmission case.

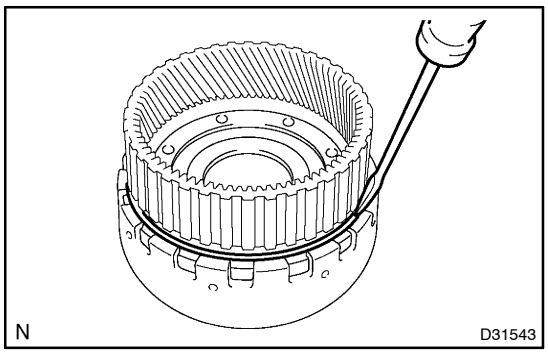


**46. REMOVE CTR PLANETARY RING GEAR**

(a) Using a screwdriver, remove the snap ring.

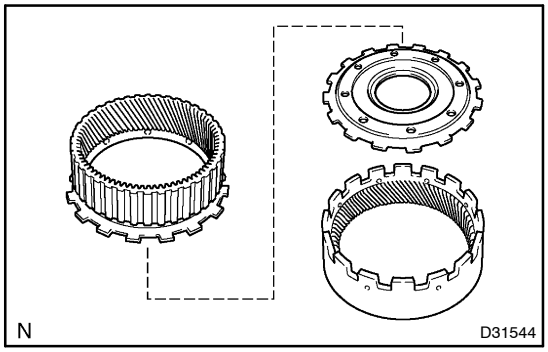


(b) Remove the CTR planetary ring gear and the front planetary ring gear flange from the front planetary ring gear.

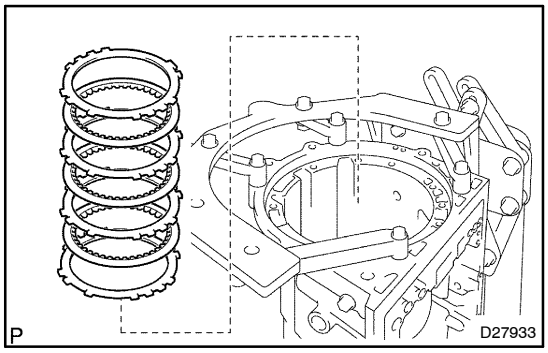


**47. REMOVE BRAKE DISC NO.1**

(a) Remove the flange, the 3 discs and the 3 plates from the case.

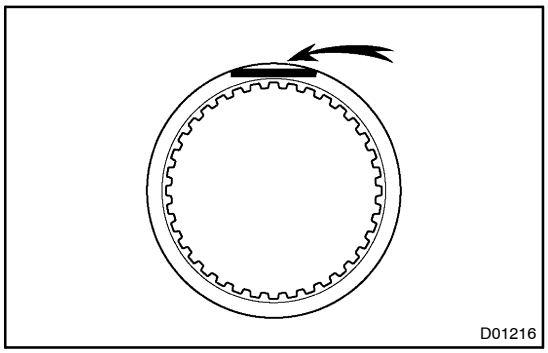


**48. INSPECT BRAKE DISC NO.1**

(a) Check whether the sliding surface of the disc, the plate or the flange are worn or burnt.

If necessary, replace them.

**NOTICE:**

- **If the lining of the disc is peeled off or discolored, or if any part of the groove is damaged, replace all discs.**
- **Before assembling new discs, soak them in ATF for at least 15 minutes.**

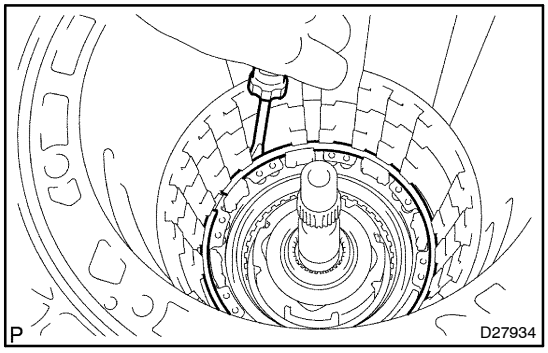


**49. REMOVE BRAKE PISTON RETURN SPRING SNAP RING**

(a) Using a screwdriver, remove the brake piston return spring snap ring from the case.

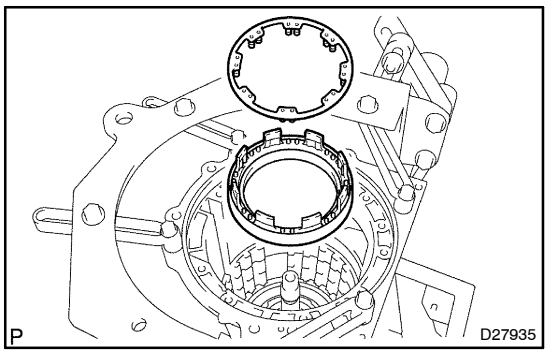


**50. REMOVE BRAKE PISTON RETURN SPRING SUB–ASSY**

(a) Remove the brake piston return spring and the brake piston No.1 with the brake cylinder No.1 from the transmission case.

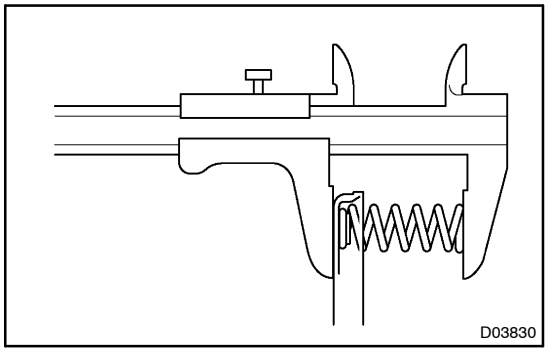


**51. INSPECT BRAKE PISTON RETURN SPRING SUB–ASSY**

(a) Using a vernier calipers, measure the free length of the spring together with the spring seat.
**Standard free length: 17.05 mm (0.671 in.)**
**Minimum free length: 10.53 mm (0.415 in.)**

If the inside diameter is shorter than the minimum free length, replace the brake piston return spring sub–assy.

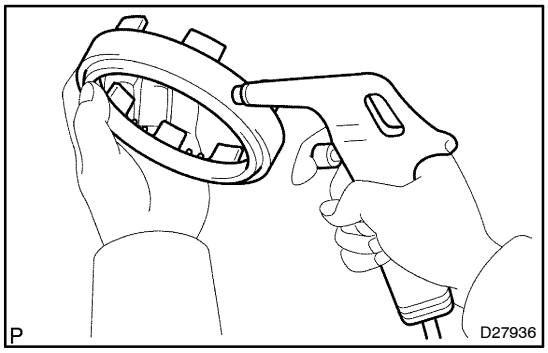


**52. REMOVE BRAKE PISTON NO.1**

(a) Hold the brake piston No.1 and apply compressed air (392 kPa, 4 kgf/cm$^2$, 57 psi) to the transmission case to remove the brake piston No.1.

HINT:
If the piston does not pop out with compressed air, lift the piston out with needle–nose pliers.

(b) Remove the 2 O–rings from the brake piston No.1.

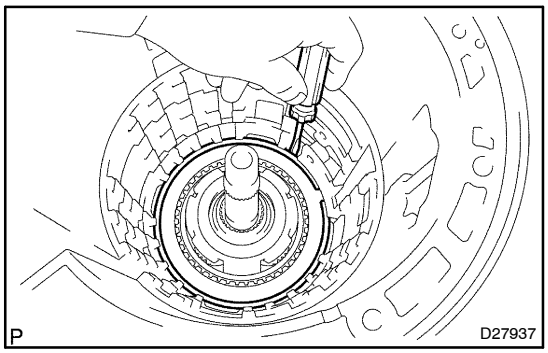


**53. REMOVE BRAKE DISC NO.2**

(a) Using a screwdriver, remove the snap ring from the case.

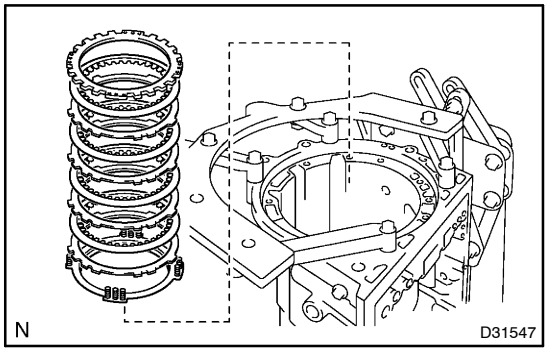


(b) Remove the 2 flanges, the brake piston return spring, the 4 discs and the 3 plates from the case.

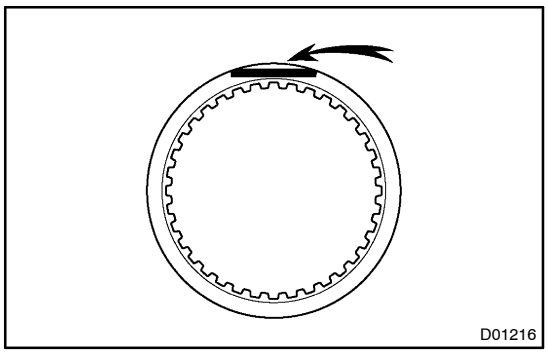


**54. INSPECT BRAKE DISC NO.2**

(a) Check whether the sliding surface of the disc, the plate and the flange are worn or burnt.

If necessary, replace them.

**NOTICE:**

- **If the lining of the disc is peeled off or discolor, or if any part of the printed numbers is damaged, replace all discs.**
- **Before assembling new discs, soak them in ATF for at least 15 minutes.**

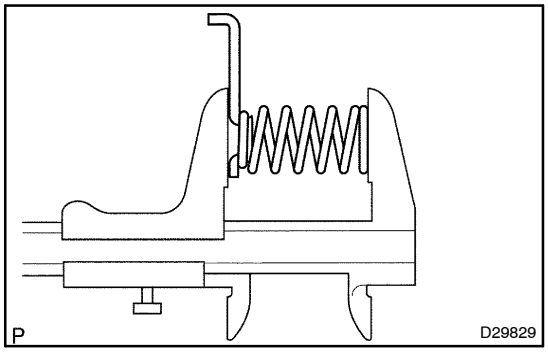


**55. INSPECT BRAKE PISTON RETURN SPRING SUB–ASSYNO.2**

(a) Using a vernier calipers, measure the free length of the spring together with the spring seat.
**Standard free length: 22.66 mm (0.8921 in.)**
**Minimum free length: 14.21 mm (0.5594 in.)**

If the inside diameter is shorter than the minimum free length, replace the brake piston return spring sub–assy No.2.

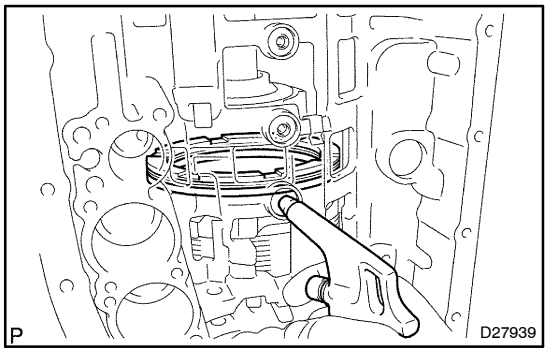


**56. REMOVE BRAKE PISTON NO.2**

(a) Hold the brake piston No.2 and apply compressed air (392 kPa, 4 kgf/cm$^2$, 57 psi) to the transmission case to remove the brake piston No.2 with the cylinder.

HINT:
If the piston does not pop out with compressed air, lift the piston out with needle–nose pliers.

(b) Remove the piston from the cylinder.
(c) Remove the 2 O–rings from the brake piston No. 2.

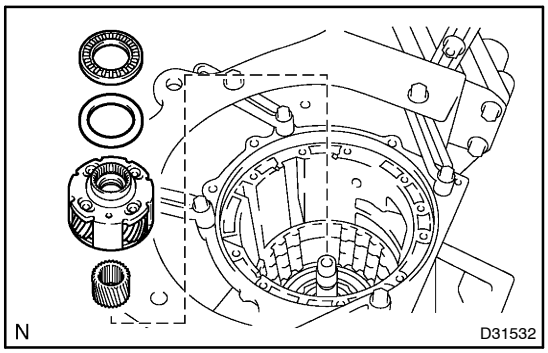


**57. REMOVE CTR PLANETARY GEAR ASSY**

(a) Remove the CTR planetary gear assy, the planetary sun gear, thrust needle roller bearing and the thrust bearing race No.4 from the case.

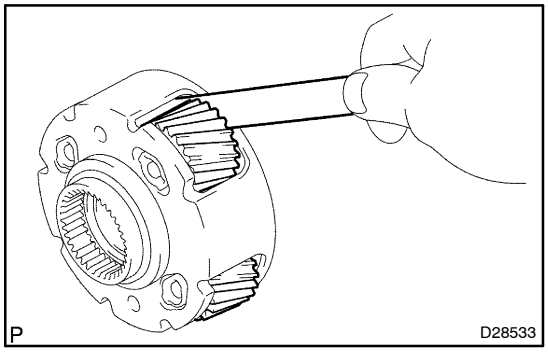


**58. INSPECT CTR PLANETARY GEAR ASSY**

(a) Using a feeler gauge, measure the CTR planetary gear pinion thrust clearance.
**Standard clearance:**
**0.12 to 0.68 mm (0.005 to 0.027 in.)**
**Maximum clearance: 0.73 mm (0.029 in.)**

If the clearance is greater than the maximum clearance, replace the CTR planetary gear assy.

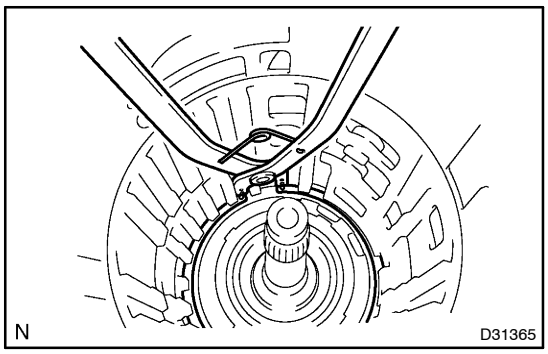


**59. REMOVE INTERMEDIATE SHAFT**

(a) Using SST, remove the snap ring from the case.
SST 09350–30020 (09350–07060)

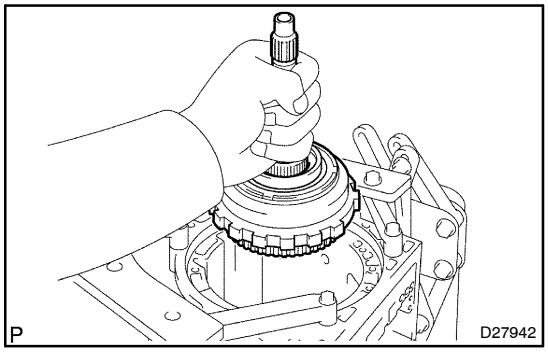


(b) Remove the intermediate shaft with the 1 way clutch assy No.3 from the case.

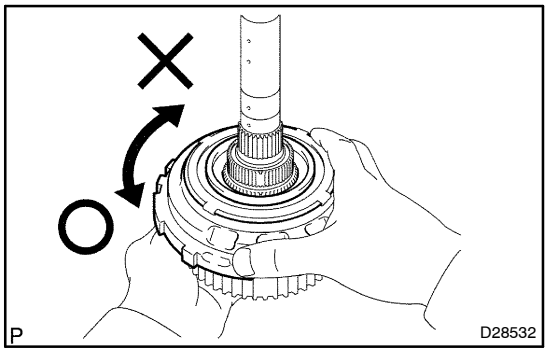


**60. INSPECT 1WAY NO.3 CLUTCH ASSY**

(a) Hold the RR planetary ring gear flange sub assy and turn the 1 way clutch assy.

(b) Check that the 1 way clutch assy turns freely counter-clockwise and locks clockwise.

If there is a problem with the 1 way clutch, replace the 1 way clutch.

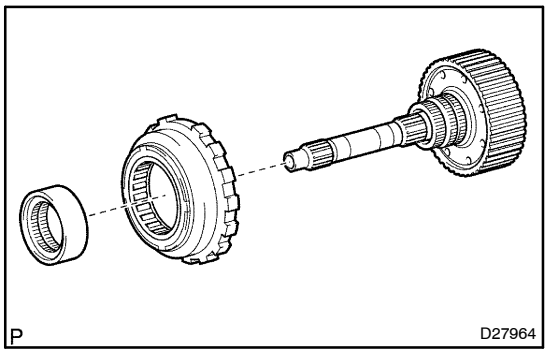


**61. REMOVE 1WAY NO.3 CLUTCH ASSY**

(a) Remove the 1 way clutch assy No.3 and the 1 way clutch inner race from the intermediate shaft.

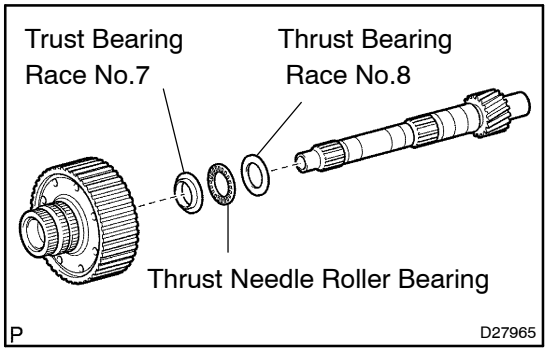


**62. REMOVE RR PLANETARY RING GEAR FLANGE SUB–ASSY**

(a) Remove the thrust bearing race No.8, the thrust needle roller bearing, the thrust bearing race No.7 and the planetary ring gear flange from the intermediate shaft.

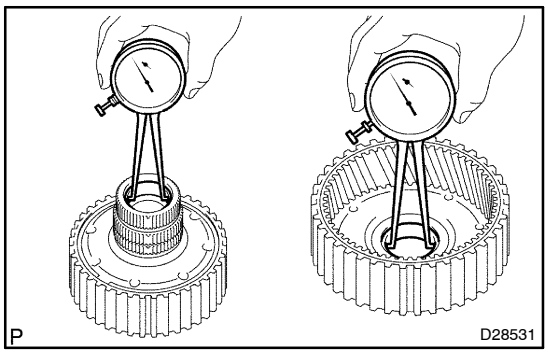


**63. INSPECT RR PLANETARY RING GEAR FLANGE SUB–ASSY**

(a) Using a dial indicator, measure the inside diameter of the RR planetary ring gear bushing.

**Maximum inside diameter: 32.24 mm (1.2693 in.)**

If the inside diameter is greater than the maximum inside diameter, replace the RR planetary ring gear.

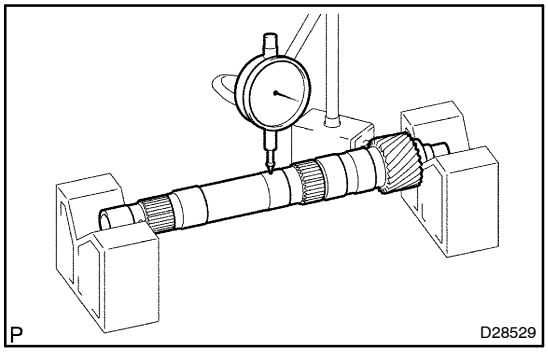


**64. INSPECT INTERMEDIATE SHAFT**

(a) Using a dial indicator, check the intermediate shaft run out.

**Maximum run out: 0.08 mm (0.003 in.)**

If the bend exceeds the specification, replace the intermediate shaft with a new one.

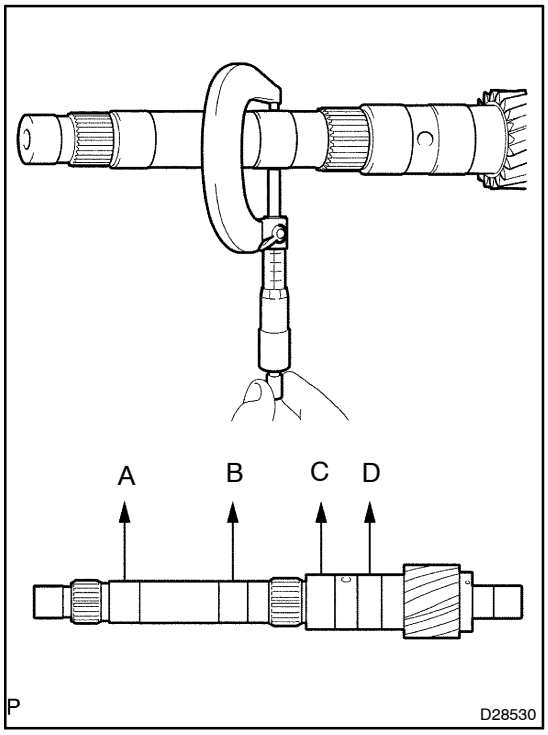


(b) Using a micrometer, check the outer diameter of the intermediate shaft positions shown in the diagram.

**Standard diameter:**
**A: 25.962 to 25.975 mm (1.022 to 1.023 in.)**
**B: 25.962 to 25.975 mm (1.022 to 1.023 in.)**
**C: 32.062 to 32.075 mm(1.262 to 1.263 in.)**
**D: 32.062 to 32.075 mm (1.262 to 1.263 in.)**
**Minimum diameter:**
**A: 25.912 mm (1.020 in.)**
**B: 25.912 mm (1.020 in.)**
**C: 32.012 mm (1.260 in.)**
**D: 32.012 mm (1.260 in.)**

If the outer diameter is outside the standard, replace the intermediate shaft with the new one.

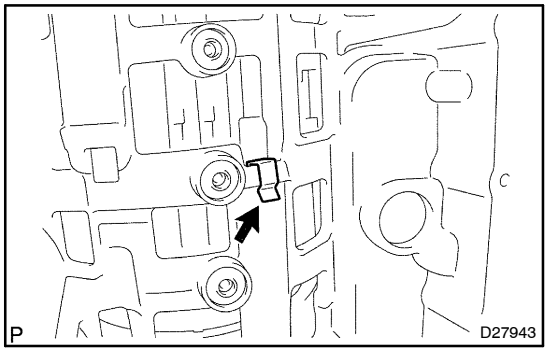


**65. REMOVE BRAKE PLATE STOPPER SPRING**

(a) Remove the brake plate stopper spring from the case.

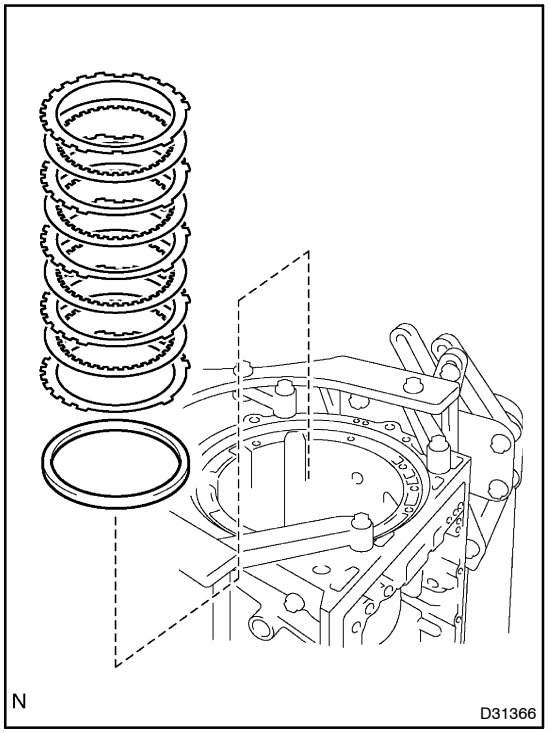


**66. REMOVE BRAKE DISC NO.4**

(a) Remove the sleeve, 4 plates, 4 discs and flange from the case.

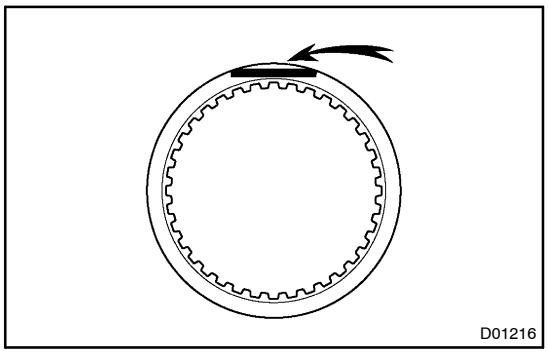


**67. INSPECT BRAKE DISC NO.4**

(a) Check whether the sliding surface of the disc, the plate and the flange are worn or burnt.

If necessary, replace them.

**NOTICE:**

- **If the lining of the disc is peeled off or discolor, or if any part of the printed numbers is damaged, replace all discs.**
- **Before assembling new discs, soak them in ATF for at least 15 minutes.**

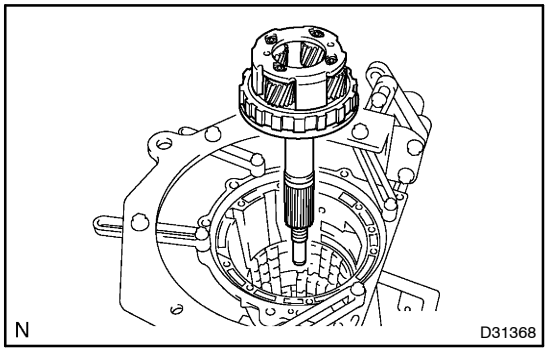


**68. REMOVE REAR PLANETARY GEAR ASSY**

(a) Remove the rear planetary gear assy from the case.

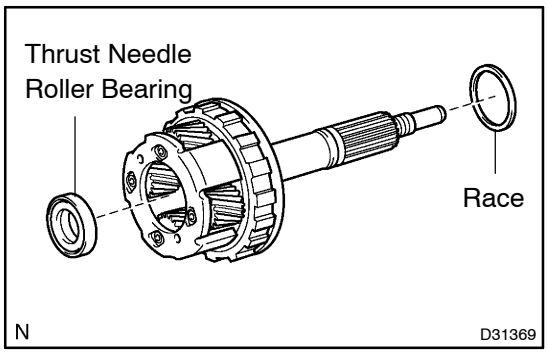


(b) Remove the thrust bearing race No.9 and the thrust needle roller bearing from the rear planetary gear assy.

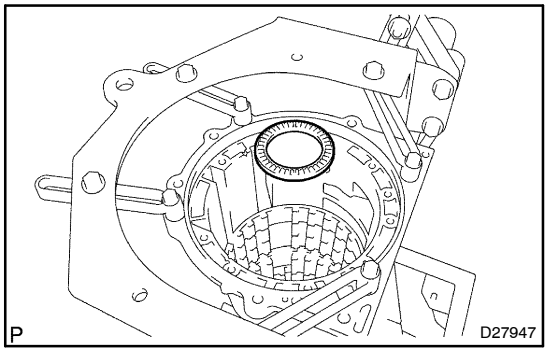


(c) Remove the thrust needle roller bearing from the case.

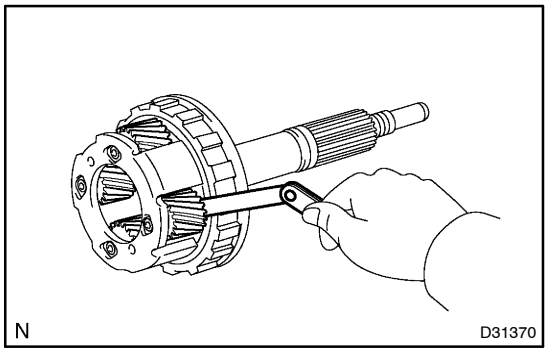


**69. INSPECT REAR PLANETARY GEAR ASSY**

(a) Using a feeler gauge, measure the rear planetary gear pinion thrust clearance.
**Standard clearance: 0.2 to 0.6 mm (0.008 to 0.024 in.)**
**Maximum clearance: 0.65 mm (0.026 in.)**

If the clearance is greater than the maximum clearance, replace the planetary gear assy.

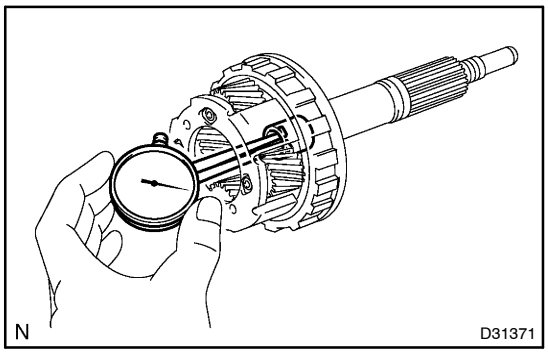


(b) Using a dial indicator, measure the inside diameter of the rear planetary gear bushing.
**Maximum inside diameter: 20.075 mm (0.790 in.)**

If the inside diameter is greater than the maximum inside diameter, replace the rear planetary gear assy.

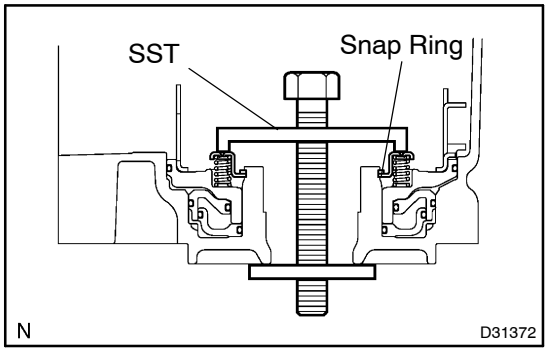


**70. REMOVE 1ST & REVERSE BRAKE RETURN SPRING SUB–ASSY**

(a) Place SST on the 1st & reverse brake return spring sub–assy and compress the brake return spring.
SST 09350–30020 (09350–07050)

(b) Using SST, remove the snap ring and the brake return spring.
SST 09350–30020 (09350–07070)

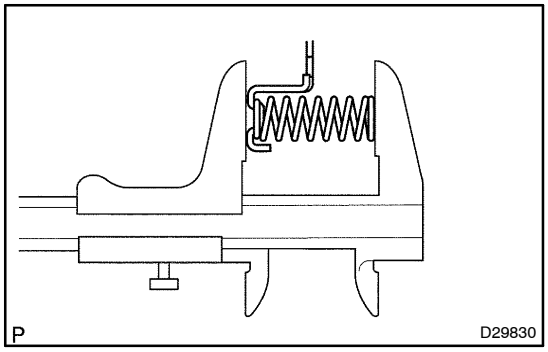


**71. INSPECT 1ST & REVERSE BRAKE RETURN SPRING SUB–ASSY**

(a) Using a vernier calipers, measure the free length of the spring together with the spring seat.
**Standard free length: 23.74 mm (0.935 in.)**
**Minimum free length: 14.42 mm (0.5677 in.)**

If the inside diameter is shorter than the minimum free length, replace the brake piston return spring sub–assy.

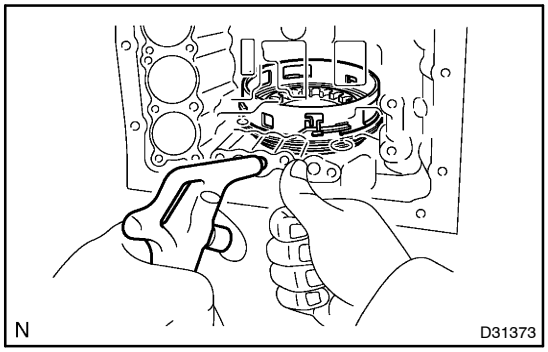


**72. REMOVE 1ST & REVERSE BRAKE PISTON**

(a) Hold the 1st & reverse brake piston and blow compressed air (392 kPa, 4 kgf/cm$^2$, 57 psi) into the transmission case to remove the brake piston.

HINT:

If the piston does not pop out with compressed air, lift the piston out with needle–nose pliers.

(b) Remove the brake apply tube from the piston.

(c) Remove the O–ring from brake piston.

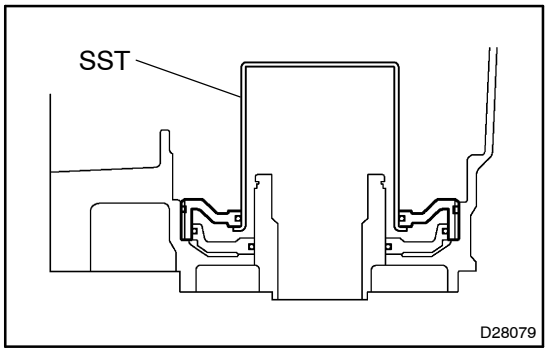


**73. REMOVE BRAKE REACTION SLEEVE**

(a) Using SST, remove the reaction sleeve.
SST 09350–30020 (09350–07080)

(b) Remove the 2 O–rings from the reaction sleeve.

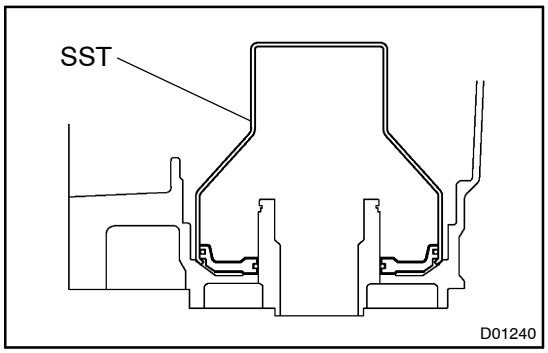


**74. REMOVE BRAKE PISTON NO.4**

(a) Using SST, remove the brake piston No.4.
SST 09350–30020 (09350–07090)

(b) Remove the 2 O–rings from the piston No.4.

## 75. BEARING POSITION

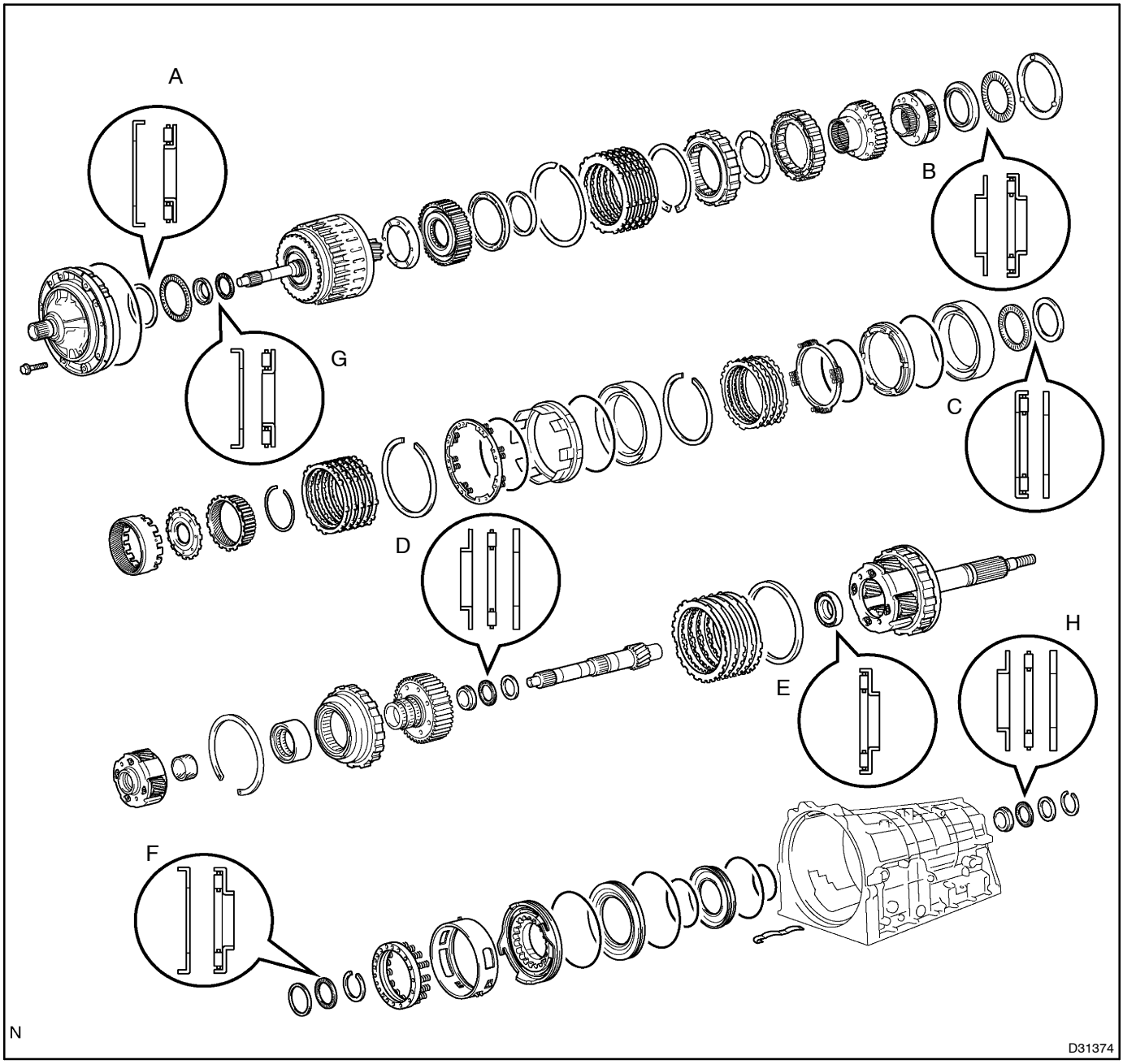


| Mark | Front Race Diameter<br>Inside / Outside | Thrust Bearing Diameter<br>Inside / Outside | Rear Race Diameter<br>Inside / Outside |
|---|---|---|---|
| A | 73.6 mm (2.898 in.) / 102.0 mm (4.016 in.) | 71.9 mm (2.831 in.) / 85.6 mm (3.370 in.) | – |
| B | 38.0 mm (1.496) / 57.0 mm (2.244 in.) | 43.4 mm (1.709 in.) / 58.3 mm (2.295 in.) | – |
| C | – | 55.7 mm (2.193 in.) / 76.4 mm (3.008 in.) | 53.7 mm (2.114 in.) / 74.0 mm (2.913 in.) |
| D | 33.4 mm (1.315) / 49.0 mm (1.929 in.) | 32.1 mm (1.264 in.) / 49.35 mm (1.943 in.) | 32.1 mm (1.264 in.) / 49.0 mm (1.929 in.) |
| E | – | 21.5 mm (0.847 in.) / 40.8 mm (1.606 in.) | – |
| F | 48.5 mm (1.909) / 62.7 mm (2.469 in.) | 45.9 mm (1.807 in.) / 64.0 mm (2.520 in.) | – |
| G | 37 mm (1.45 in.) / 52.3 mm (2.059 in.) | 34.6 mm (1.362 in.) / 52.0 mm (2.047 in.) | – |
| H | 36.9 mm (1.453 in.) / 49.7 mm (1.957 in.) | 36.1 mm (1.421 in.) / 52.5 mm (2.067 in.) | 36.1 mm (1.421 in.) / 51.0 mm (2.007 in.) |

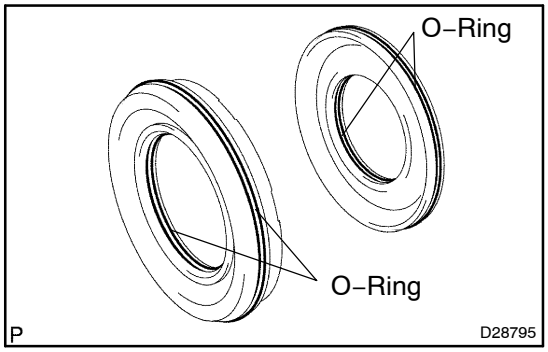


**76. INSTALL BRAKE PISTON NO.4**

(a) Coat 2 new O–rings with ATF, and install them to the brake reaction sleeve.

(b) Coat 2 new O–rings with ATF, and install them to the brake piston No.4.

(c) Install the brake piston No.4 to the reaction sleeve.

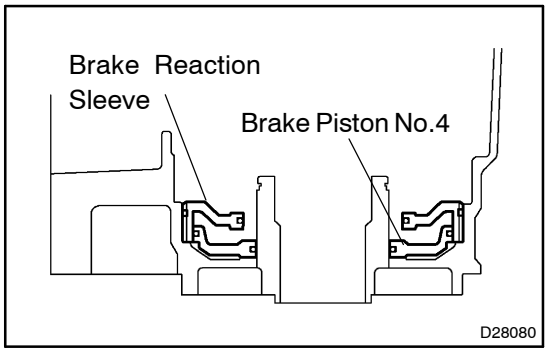


**77. INSTALL BRAKE REACTION SLEEVE**

(a) Coat a new O–ring with ATF, and install it to the reaction sleeve.

(b) With the brake piston No.4 underneath (the rear side), install the brake reaction sleeve and the brake piston No.4 to the transmission case.

**NOTICE:**

**Be careful not to damage the O–rings.**

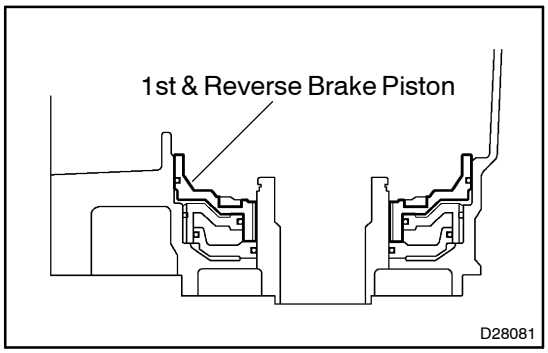


**78. INSTALL 1ST & REVERSE BRAKE PISTON**

(a) Coat a new O–ring with ATF.

(b) Install the O–ring on the 1st & reverse brake piston .

(c) With the spring seat of the piston facing upwards (the front side), place the piston in the transmission case.

**NOTICE:**

**Be careful not to damage the O–ring.**

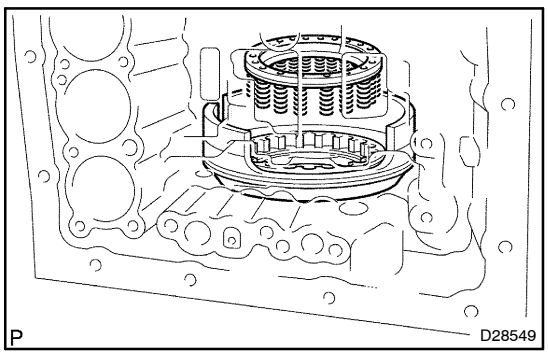


(d) Place the piston return spring onto the brake piston No.4.

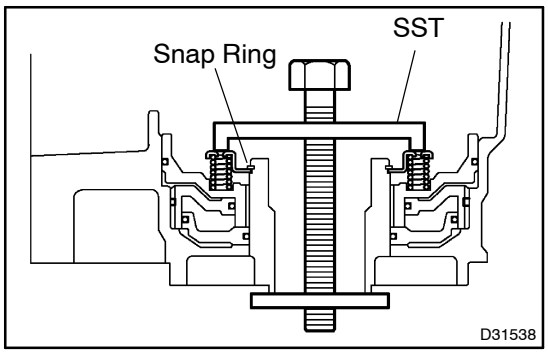


**79. INSTALL 1ST & REVERSE BRAKE RETURN SPRING SUB–ASSY**

(a) Place SST on the brake return spring, and compress the return spring.

SST 09350–30020 (09350–07050)

(b) Using SST, install the snap ring.

SST 09350–30020 (09350–07070)

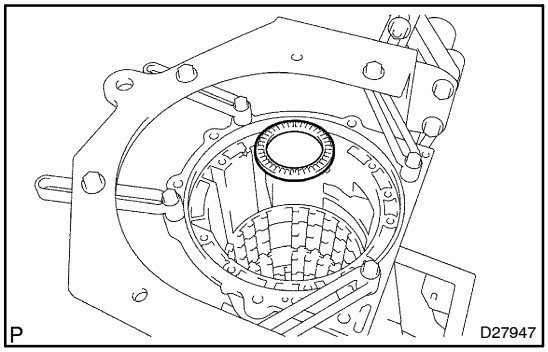


**80. INSTALL REAR PLANETARY GEAR ASSY**

(a) Install the thrust needle roller bearing.

**Thrust needle roller bearing diameter:**

| | Inside | Outside |
|---|---|---|
| Thrust needle roller bearing | 45.9 mm (1.807 in.) | 64.0 mm (2.520 in.) |

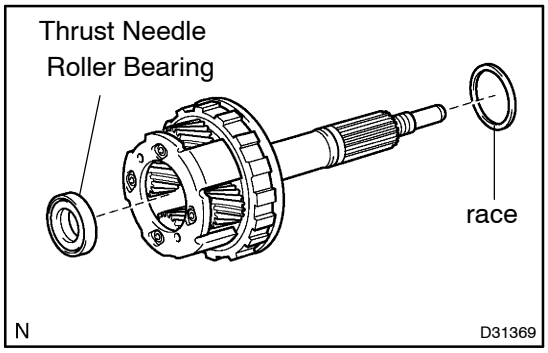


(b) Install the thrust needle roller bearing.

(c) Coat the thrust bearing race No.9 with petroleum jelly, and install it onto the rear planetary ring gear.

**Bearing & race diameter:**

| | Inside | Outside |
|---|---|---|
| Bearing | 21.5 mm (0.847 in.) | 40.8 mm (1.606 in.) |
| Race | 48.5 mm (1.909 in.) | 62.7 mm (2.469 in.) |

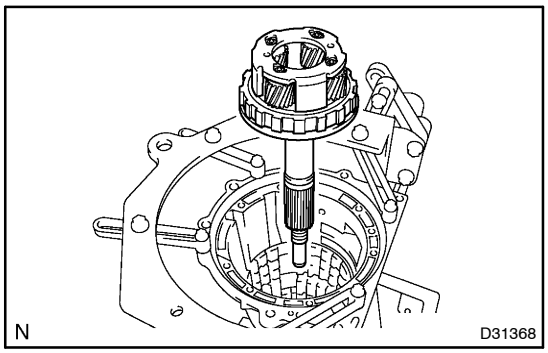


(d) Install the rear planetary gear assy.

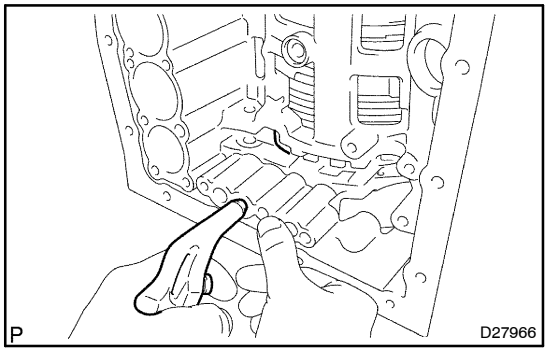


**81. INSPECT PACK CLEARANCE OF FIRST & REVERSE BRAKE**

(a) Make sure that the 1st & reverse brake piston move smoothly when pulling and releasing the compressed air gun lever while applying compressed air into the transmission case.

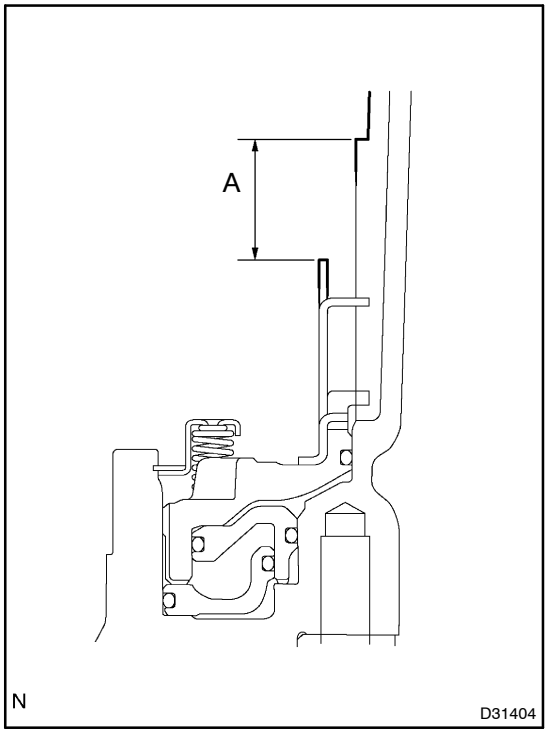


(b) Using vernier calipers, measure the level difference (length A) between the upper surface of the brake apply tube and the hitting surface of the brake flange No.4 at both ends across the 1st & reverse brake piston diameter, and calculate the average.

**NOTICE:**

**The 1st & reverse brake piston must be securely installed to the end face of the transmission case.**

HINT:

Length A = 22.05 to 22.91 mm (0.8681 to 0.9020 in.)

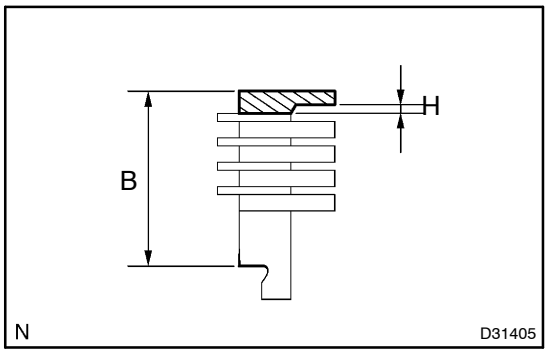


(c) Using vernier calipers, measure the thickness (length B) of the brake flanges the 4 brake plates No.4 and the 4 brake discs No.4 altogether at the both ends across a diameter, and calculate the average.

HINT:

Length B = 23.11 to 23.89 mm (0.9098 to 0.9405 in.)

Pack Clearance =

Length A – Length B – 0.22 mm (0.0087 in.) + 1.8 mm (0.071 in.)

**Pack Clearance: 0.4 to 0.7 mm (0.016 to 0.028 in.)**

(d) If the pack clearance is outside the standard, select and install a brake flange that brings the pack clearance to be within the standard.

HINT:

There are 8 types of flanges that can be used to adjust the pack clearance. Select the one with the most appropriate thickness.

**Thickness H:**

| No. | Thickness H | No. | Thickness H |
|---|---|---|---|
| 0 | 0 mm (0 in.) | 8 | 0.8 mm (0.03150 in.) |
| 2 | 0.2 mm (0.00787 in.) | 10 | 1.0 mm (0.03937 in.) |
| 4 | 0.4 mm (0.01575 in.) | 12 | 1.2 mm (0.04724 in.) |
| 6 | 0.6 mm (0.02362 in.) | 14 | 1.4 mm (0.05512 in.) |

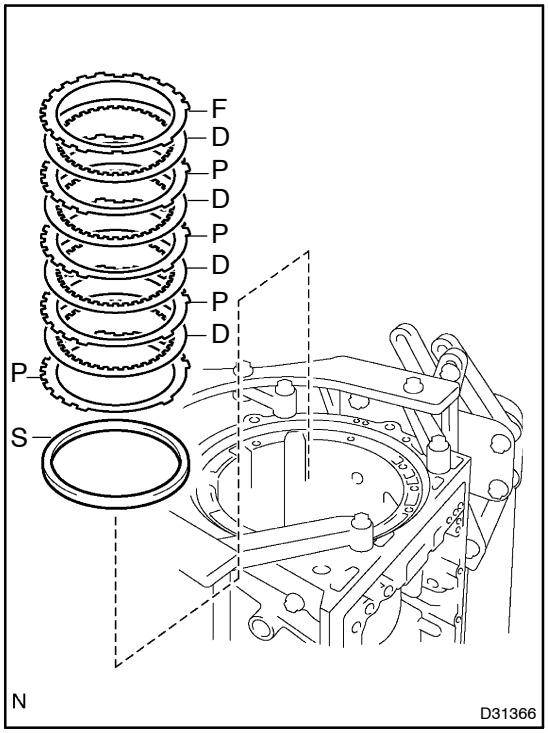


**82. INSTALL BRAKE DISC NO.4**

(a) Install the sleeve, 4 plates, the 4 discs and the flange.
**Install in order: P = Plate, D = Disc, F = Flange, S = Sleeve**
**F – D – P – D – P – D – P – D – P – S**

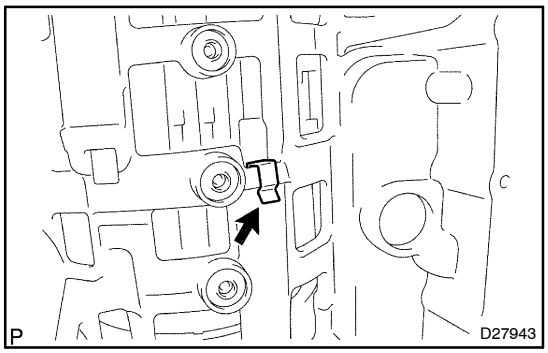


**83. INSTALL BRAKE PLATE STOPPER SPRING**

(a) Install the brake plate stopper spring.

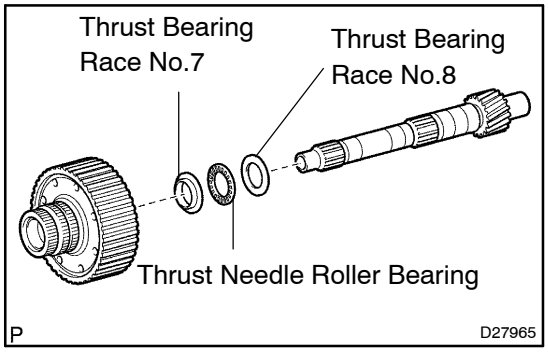


**84. INSTALL RR PLANETARY RING GEAR FLANGE SUB–ASSY**

(a) Install the thrust bearing race No.8, the thrust needle roller bearing, the thrust bearing race No.7 and the planetary ring gear flange to the intermediate shaft.

**Bearing and race diameter:**

| | Inside | Outside |
|---|---|---|
| Thrust bearing race No.7 | 33.4 mm (1.315 in.) | 49.0 mm (1.929 in.) |
| Thrust needle roller bearing | 32.1 mm (1.264 in.) | 49.35 mm (1.943 in.) |
| Thrust bearing race No.8 | 32.1 mm (1.264 in.) | 49.0 mm (1.929 in.) |

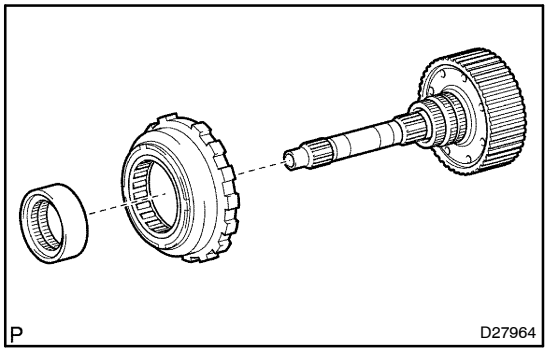


**85. INSTALL 1WAY NO.3 CLUTCH ASSY**

(a) Install the 1 way clutch assy No.3 and the 1 way clutch inner race to the intermediate shaft.

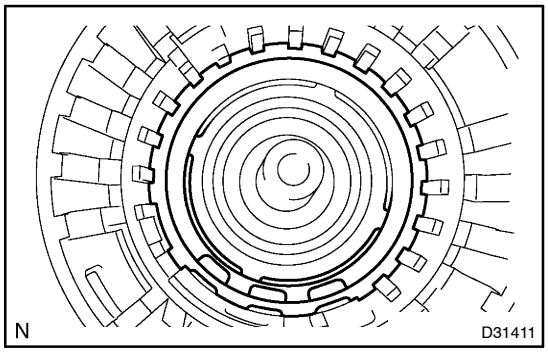


**86. INSTALL INTERMEDIATE SHAFT**

(a) Install the intermediate shaft with the 1 way clutch assy No.3 to the case.

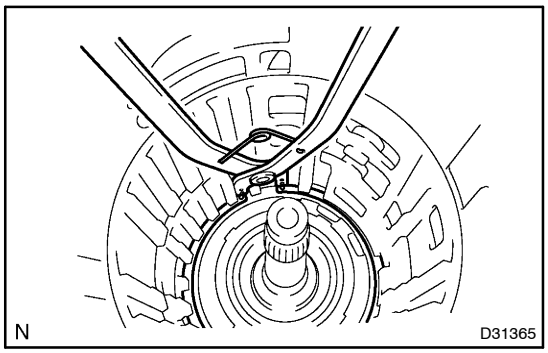


(b) Using SST, install the snap ring.
SST 09350–30020 (09350–07050, 09350–07060)

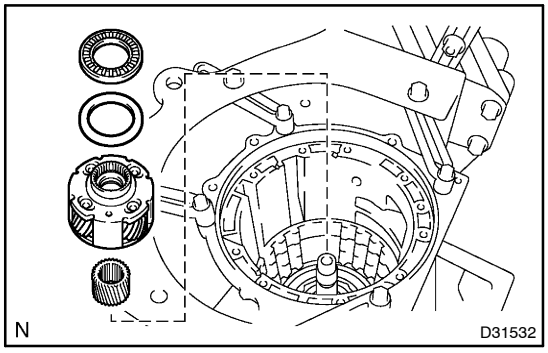


**87. INSTALL CTR PLANETARY GEAR ASSY**

(a) Install the center planetary gear assy and the planetary sun gear to the case.

(b) Coat the thrust bearing race with petroleum jelly, and install it onto the CTR planetary ring gear.

**Race diameter:**

| | Inside | Outside |
|---|---|---|
| Race | 53.7 mm (2.114 in.) | 74.0 mm (2.913 in.) |
| Bearing | 55.7 mm (2.192 in.) | 76.4 mm (3.008 in.) |

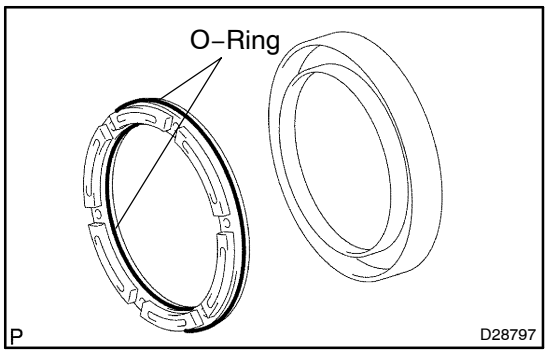


**88. INSTALL BRAKE PISTON NO.2**

(a) Coat 2 new O–rings with ATF, and install them to the brake piston No.2.

(b) Being careful not to damage the O–rings, press the brake piston No.2 into the brake cylinder No.2.

(c) Install the brake piston No.2 to the case.

HINT:
Install the brake cylinder No.2 so that the projection protrudes from the upside of the transmission case.

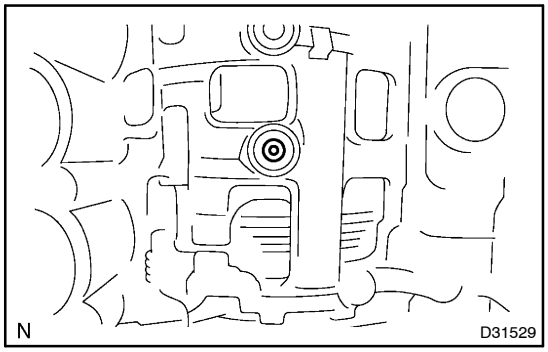


(d) Check that the oil pressure apply hole of the brake cylinder No.2 aligns with the oil pressure apply hole of the transmission case.

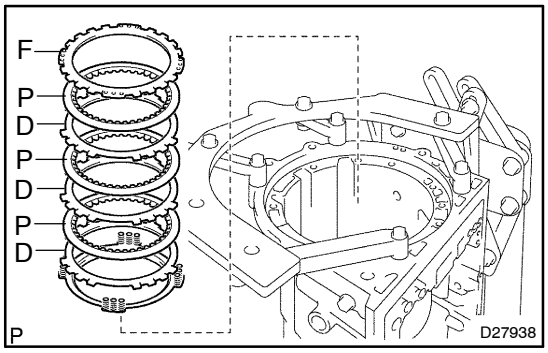


**89. INSTALL BRAKE DISC NO.2**

(a) Install the flange, the 3 plates, 3 discs and brake piston return spring.
**Install in order: P = Plate, D = Disc, F = Flange**
**F – P – D – P – D – P – D**

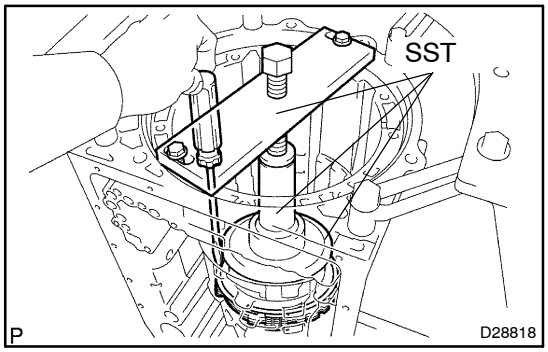


(b) Using SST and a press, install the brake No.2 spring snap ring.
SST 09351–40010 (09351–04010, 09351–04020, 09351–04040, 09351–04050)

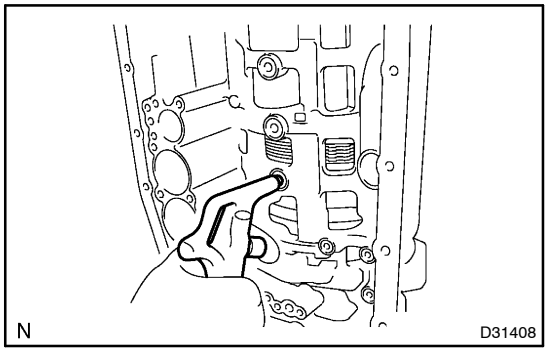


**90. INSPECT PISTON STROKE OF BRAKE PISTON NO.2**

(a) Make sure that the brake piston No.2 moves smoothly when pulling and releasing the compressed air gun lever while applying compressed air into the transmission case.

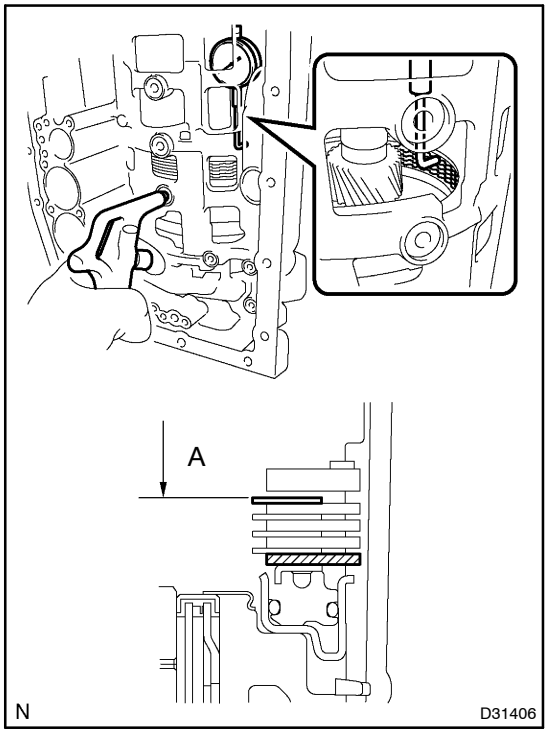


(b) Using a SST and a dial gauge, measure the moving distance (distance A) of the clutch disc at the both ends across a diameter while blowing air from the oil hole as shown in the illustration, and calculate the average.
SST 09350–30020 (09350–06120)
**Pack clearance: 0.6 to 0.9 mm (0.024 to 0.035 in.)**

(c) If the piston stroke is outside the standard, select & install a brake flange that brings the piston stroke within the standard.

HINT:
There are 7 types of flanges that can be used to adjust the pack clearance. Select one with the most appropriate thickness.

**Flange thickness:**

| No. | Thickness | No. | Thickness |
|---|---|---|---|
| 0 | 2.0 mm (0.079 in.) | 4 | 2.4 mm (0.094 in.) |
| 1 | 2.1 mm (0.083 in.) | 5 | 2.5 mm (0.098 in.) |
| 2 | 2.2 mm (0.087 in.) | 6 | 2.6 mm (0.102 in.) |
| 3 | 2.3 mm (0.091 in.) | 7 | 2.7 mm (0.106 in.) |

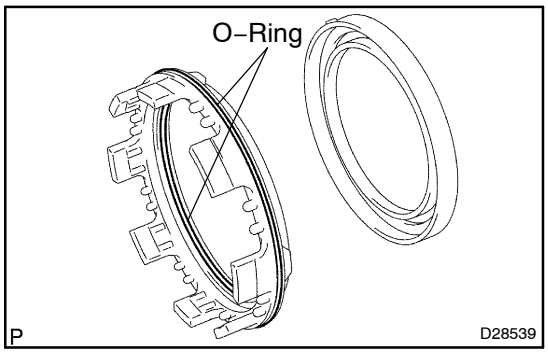


**91. INSTALL BRAKE PISTON NO.1**

(a) Coat 2 new O–rings with ATF, and install them on the brake piston No.1.

(b) Be careful not to damage the O–rings. Press the brake piston No.1 into the brake cylinder No.1 by hands.

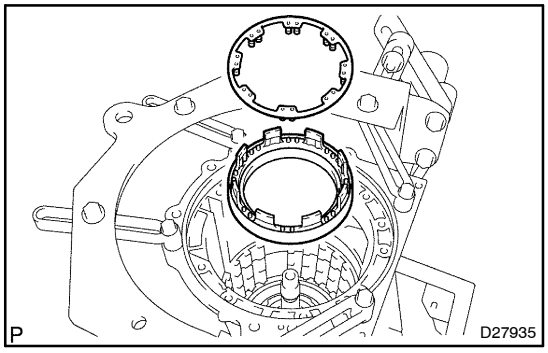


**92. INSTALL BRAKE PISTON RETURN SPRING SUB–ASSY**

(a) Install the brake piston return spring and the brake piston No.1 with the brake cylinder No.1 to the transmission case.

HINT:
Install the brake cylinder No.1 so that the projection protrudes from the upside of the transmission case.

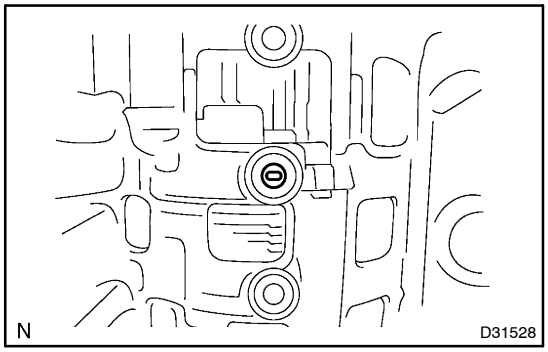


(b) Check that the oil pressure apply hole of the brake cylinder NO.2 aligns with the oil pressure apply hole of the transmission case.

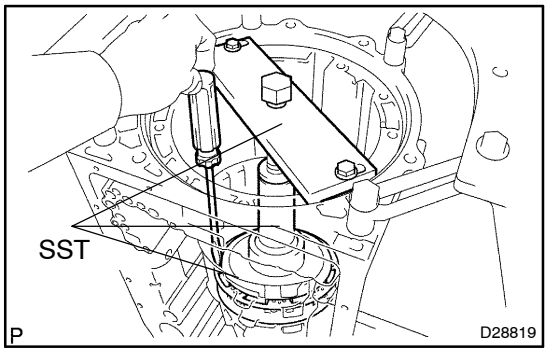


**93. INSTALL BRAKE PISTON RETURN SPRING SNAP RING**

(a) Using SST and press, install the brake piston return spring snap ring.

SST 09351–40010 (09351–04010, 09351–04030, 09351–04040, 09351–04050)

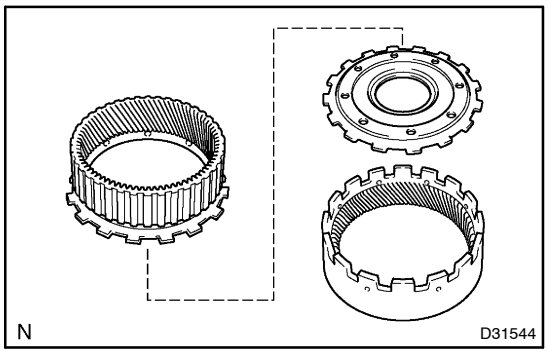


**94. INSTALL CTR PLANETARY RING GEAR**

(a) Install the CTR planetary ring gear and the front planetary ring gear flange on the front planetary ring gear.

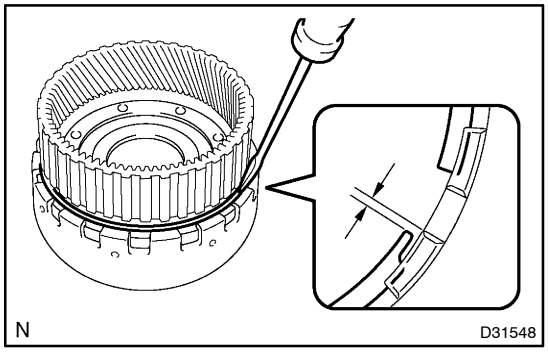


(b) Using a screwdriver, install the snap ring.

**NOTICE:**

**Install the snap ring to the ring gear so that the both ends of the snap ring come to the center of a protrusion on the ring gear.**

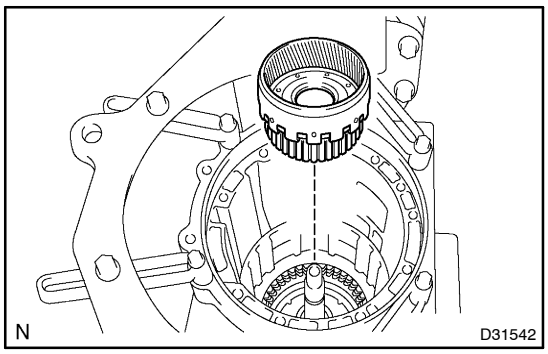


**95. INSTALL FRONT PLANETARY RING GEAR**

(a) Install the front planetary ring gear and the thrust needle roller bearing to the case.

**Thrust needle roller bearing diameter:**

| | Inside | Outside |
|---|---|---|
| Thrust needle roller bearing | 55.7 mm (2.193 in.) | 76.4 mm (3.008 in.) |

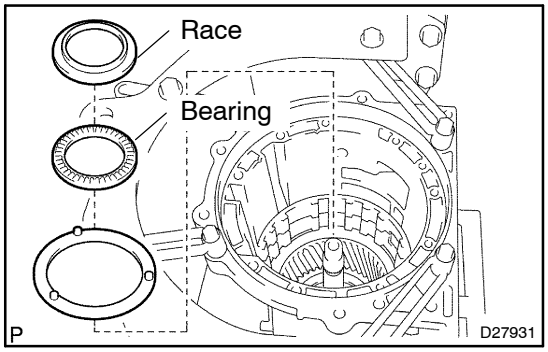


**96. INSTALL FRONT PLANETARY GEAR ASSY**

(a) Install the thrust needle roller bearing and the thrust washer.

(b) Coat the thrust race with petroleum jelly, and install it onto the front planetary ring gear.

**Thrust needle roller bearing and race diameter:**

| | Inside | Outside |
|---|---|---|
| Bearing | 43.4 mm (1.709 in.) | 58.3 mm (2.295 in.) |
| Race | 38.0 mm (1.496 in.) | 57.0 mm (2.244 in.) |

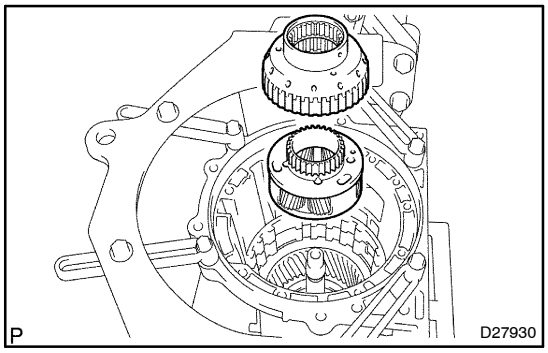


(c) Install the front planetary gear assy and the 1 way clutch inner race to the case.

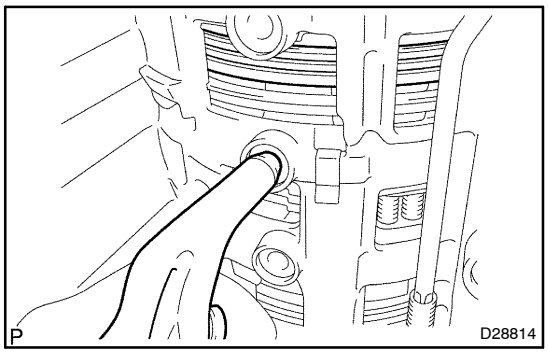


**97. INSPECT PISTON STROKE OF BRAKE PISTON NO.1**

(a) Make sure the brake piston No.1 moves smoothly when pulling and releasing the compressed air gun lever while applying compressed air into the transmission case.

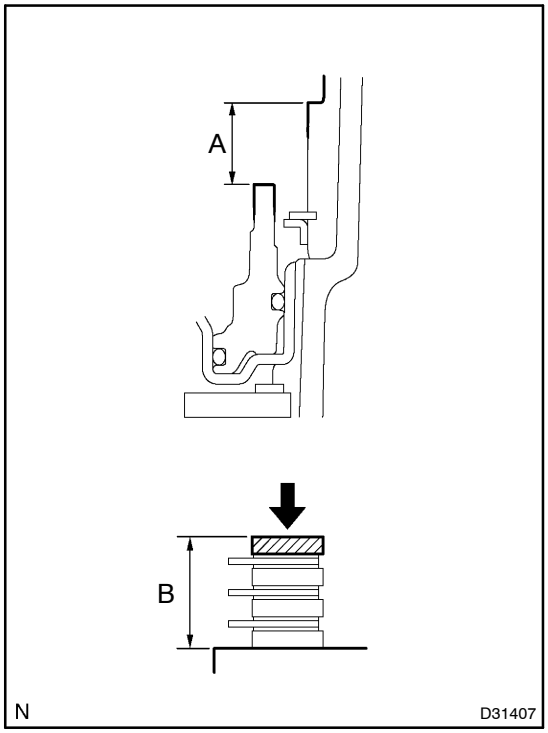


(b) Using vernier calipers, measure the level difference (length A) between the upper surface of the brake piston No.1 and the hitting surface of the brake flange No.1 at both ends across the brake piston No.1 diameter.

(c) Using vernier calipers, measure the thickness (length B) of the brake flange, the 3 brake plates No.1 and the 3 brake discs No.1 altogether at the both ends across a diameter, and calculate the average.

HINT:
Length A = 15.29 to 15.77 mm (0.6020 to 0.6209 in.)
Length B = 14.72 to 15.12 mm (0.5795 to 0.5953 in.)
Piston stroke = Length A – Length B

**Piston stroke: 0.42 to 0.72 mm (0.017 to 0.028 in.)**

If the piston stroke is outside the specification, parts may have been assembled incorrectly, so check and reassemble again.
If the piston stroke is not still outside the specification range, select another flange.

HINT:
There are 4 different thickness for the flange.

**Flange thickness:**

| No. | Thickness | No. | Thickness |
|---|---|---|---|
| 0 | 2.0 mm (0.079 in.) | 2 | 2.4 mm (0.094 in.) |
| 1 | 2.2 mm (0.087 in.) | 3 | 2.6 mm (0.102 in.) |

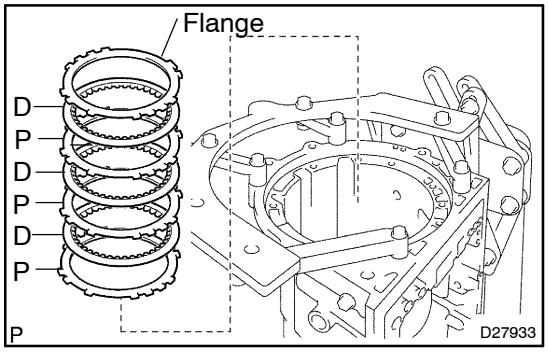


**98. INSTALL BRAKE DISC NO.1**

(a) Install the the 3 plates, the 3 discs and the flange.
**Install in order: P = Plate, D = Disc, F = Flange**
**F – D – P – D – P – D – P**

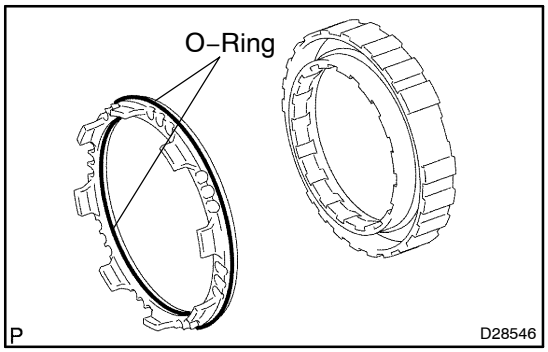


**99. INSTALL 2ND BRAKE PISTON**

(a) Coat 2 new O–rings with ATF, and install them to the 2nd brake piston.

(b) Be careful not to damage the O–rings. Press the 2nd brake cylinder into the 2nd brake piston by hands.

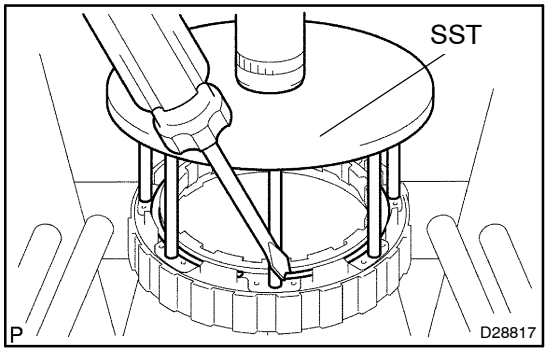


(c) Using SST and press, install the snap ring.

**NOTICE:**

**Be sure that the end gap of the snap ring is not aligned with the spring retainer claw.**

SST 09351–40010 (09351–04060, 09351–04070)

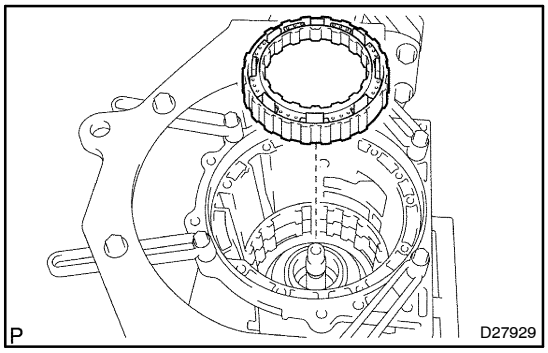


**100. INSTALL 2ND BRAKE CYLINDER**

(a) Install the 2nd brake cylinder to the case.

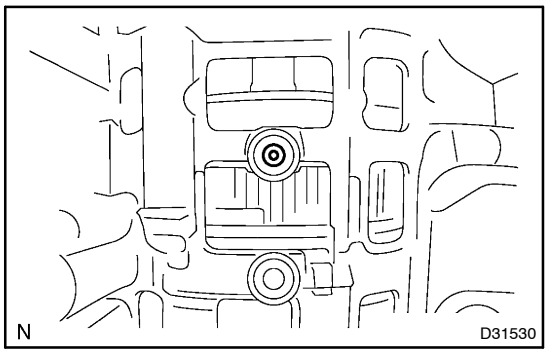


(b) Check that the oil pressure apply hole of the brake cylinder No.2 aligns with the oil pressure apply hole of the transmission case.

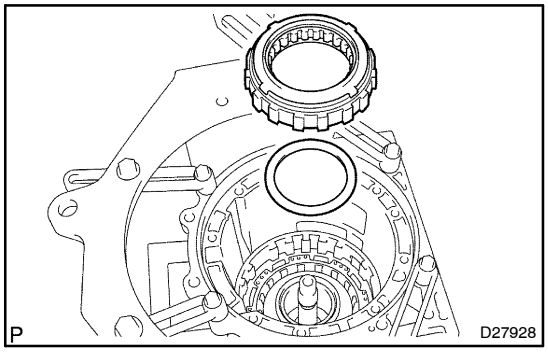


**101. INSTALL 1 WAY CLUTCH ASSY**

(a) Install the 1 way clutch assy and the thrust washer to the case.

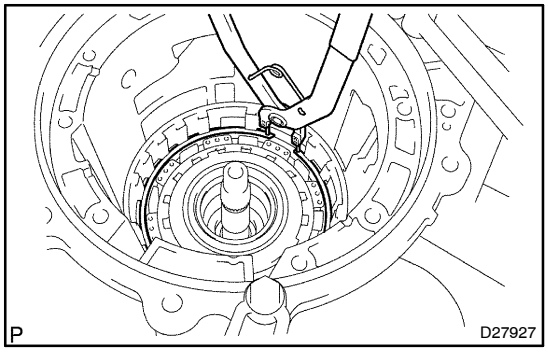


**102. INSTALL 2ND BRAKE PISTON HOLE SNAP RING**

(a) Using SST, install the snap ring.

SST 09350–30020 (09350–07060)

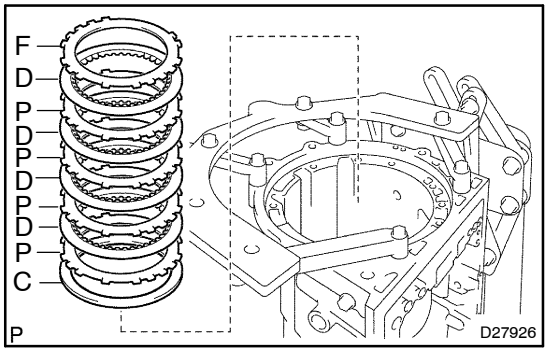


**103. INSTALL 2ND BRAKE DISC SET**

(a) Install the flange, the 4 discs and the 4 plates to the case.
**Install in order: P = Plate, D = Disc, F = Flange**
**C = Cushion**
**F – D – P – D – P – D – P – D – P – C**

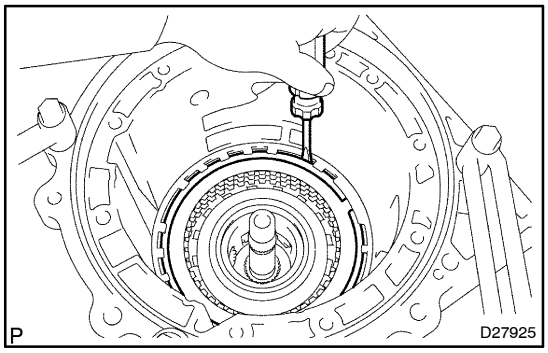


**104. INSTALL BRAKE NO.3 SNAP RING**

(a) Using a screwdriver, install the snap ring.
SST 09350–30020 (09350–07060)

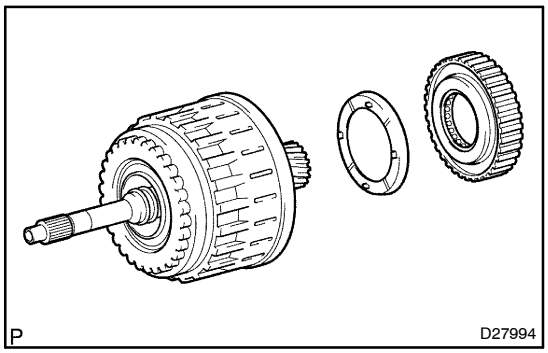


**105. INSTALL 1 WAY N0.2 CLUTCH ASSY**

(a) Coat the race with petroleum jelly and install it onto the clutch drum thrust washer No.2.
(b) Install the 1 Way clutch assy No.2 and washer No.2.

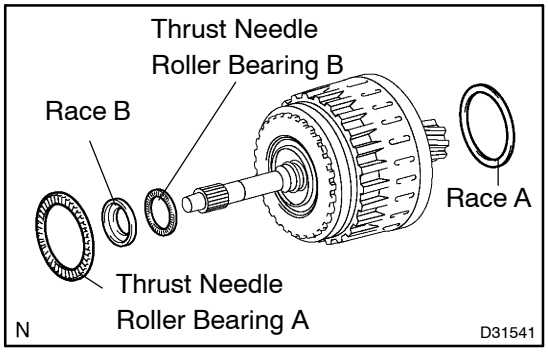


**106. INSTALL CLUTCH DRUM & INPUT SHAFT ASSY**

(a) Install the thrust needle roller bearing.
(b) Coat the race with petroleum jelly and install it onto the clutch drum & input shaft assy.

**Thrust needle roller bearing and diameter:**

| | Inside | Outside |
|---|---|---|
| Thrust needle roller bearing A | 71.9 mm (2.831 in.) | 85.6 mm (3.370 in.) |
| Race A | 73.6 mm (2.898 in.) | 102.0 mm (4.016 in.) |
| Thrust needle roller bearing B | 34.6 mm (1.362 in.) | 52.0 mm (2.047 in.) |
| Race B | 37.0 mm (1.457 in.) | 52.3 mm (2.059 in.) |

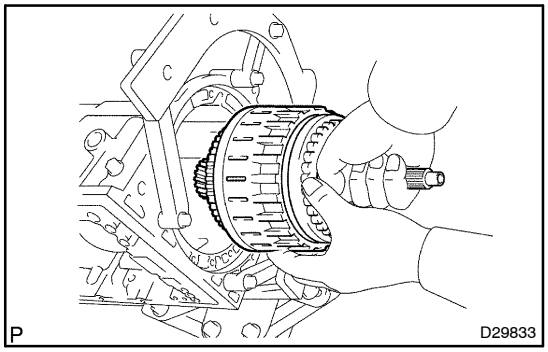


(c) Install the input shaft sub assy with the clutch drum &input shaft assy onto the transmission case.

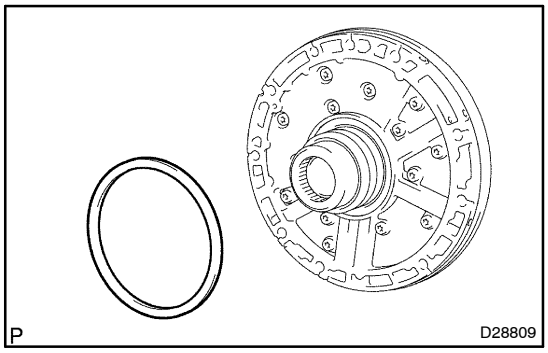


**107. INSTALL OIL PUMP ASSY**

(a) Install the thrust bearing race No.1 to the front oil pump

| | Inside | Outside |
|---|---|---|
| Race | 74.2 mm (2.921 in.) | 87.74 mm (3.454 in.) |

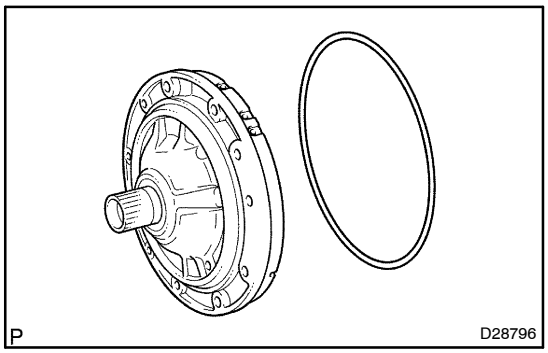


(b) Coat a new O–ring with ATF, and install it around the oil pump assy.

(c) Place the oil pump through the input shaft, and align the bolt holes of the oil pump assy with the transmission case.

(d) Hold the input shaft, and lightly press the oil pump body to slide the oil seal rings into the overdrive direct clutch drum.

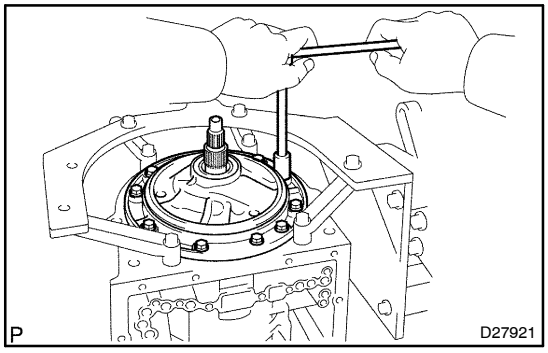


(e) Install the 10 bolts.
**Torque: 21 N·m (214 kgf·cm, 15 ft·lbf)**

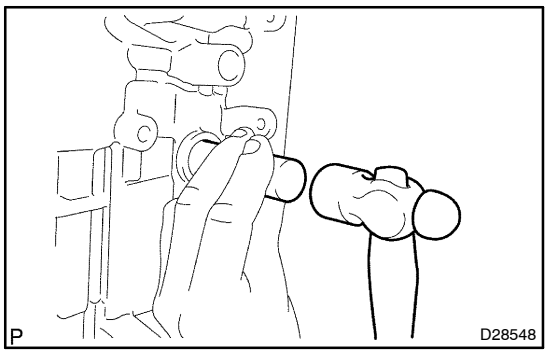


**108. INSTALL MANUAL VALVE LEVER SHAFT OIL SEAL**

(a) Using SST, drive in 2 new oil seals.
SST 09350–30020 (09350–07110)

(b) Coat the oil seal lips with MP grease.

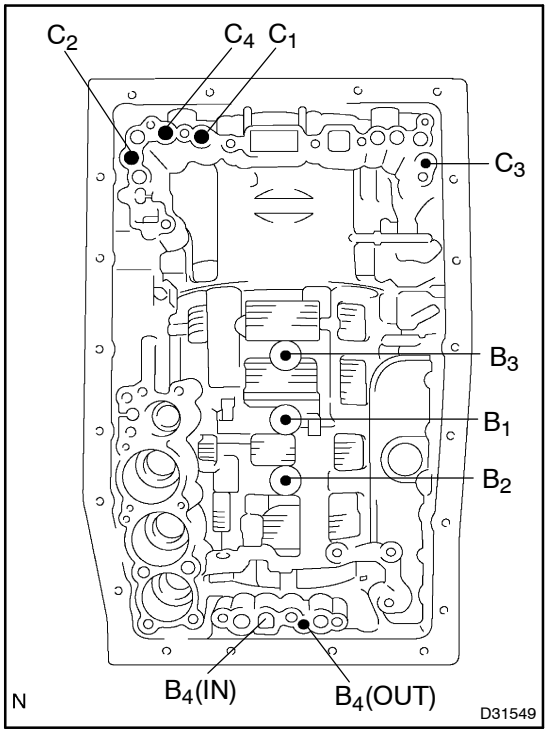


**109. INSPECT INDIVIDUAL PISTON OPERATION INSPECTION**

(a) Check the operating sound while applying compressed air into the oil holes indicated in the illustration.

HINT:

When inspecting the O/D direct clutch, check with the $C_3$ accumulator piston hole closed.

If there is no sound, disassemble and check the parts installation condition.

(1) Clutch No.2 ($C_2$)
(2) Clutch No.4 ($C_4$)
(3) Clutch No.3 ($C_3$)
(4) Clutch No.1 ($C_1$)
(5) Brake No.3 ($B_3$)
(6) Brake No.1 ($B_1$)
(7) Brake No.2 ($B_2$)
(8) Brake No.4 ($B_4$)

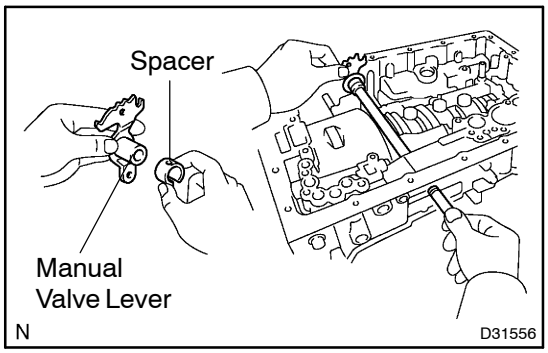


**110. INSTALL MANUAL VALVE LEVER SUB–ASSY**

(a) Install a new spacer to the manual valve lever.

(b) Install the manual valve lever shaft to the transmission case through the manual valve lever.

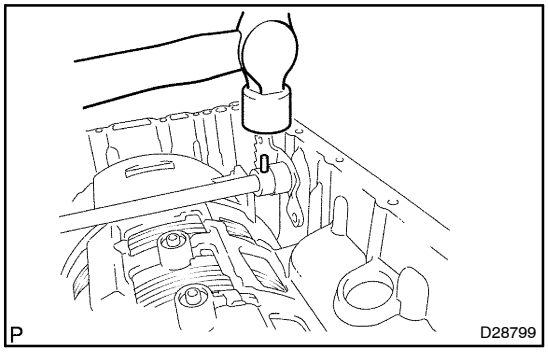


(c) Using a hammer, drive in a new spring pin.

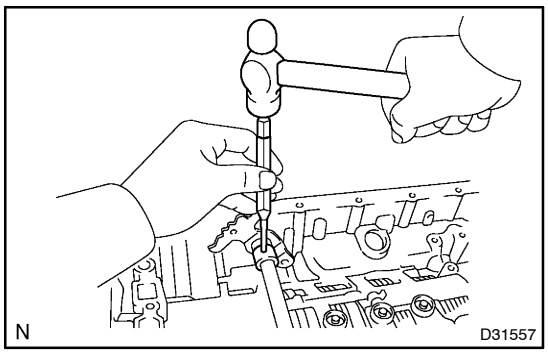


(d) Align the manual valve lever indentation with the spacer hole, and stake them together with the punch.

(e) Make sure that the shaft rotates smoothly.

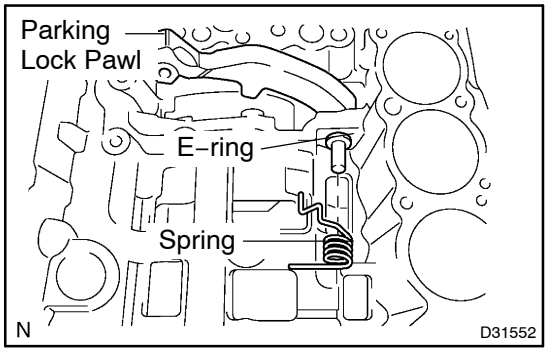


**111. INSTALL PARKING LOCK PAWL SHAFT**

(a) Install the E–ring to the shaft.

(b) Install the parking lock pawl, the shaft and the spring.

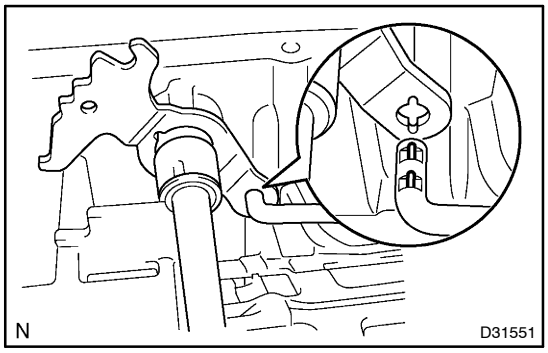


**112. INSTALL PARKING LOCK ROD SUB–ASSY**

(a) Connect the parking lock rod to the manual valve lever.

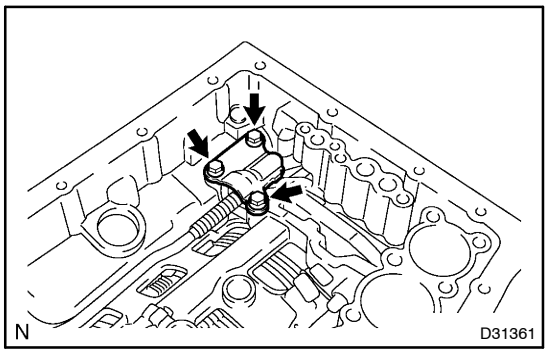


**113. INSTALL PARKING LOCK PAWL BRACKET**

(a) Place the parking lock pawl bracket onto the transmission case and torque the 3 bolts.
**Torque: 7.4 N·m (75 kgf·cm, 65 in.·lbf)**

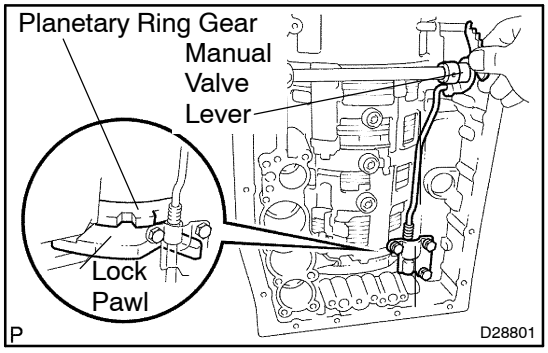


(b) Shift the manual valve lever to the P position, and confirm the planetary ring gear is correctly locked up by the lock pawl.

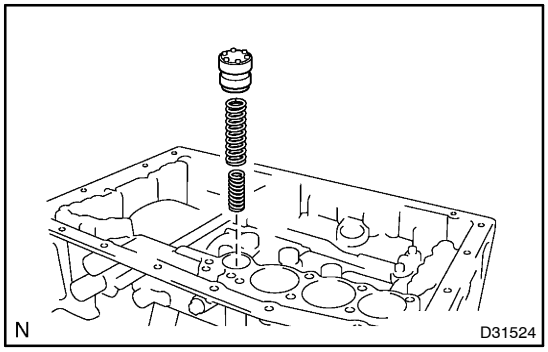


**114. INSTALL B–1 ACCUMULATOR VALVE**

(a) Install the spring and the accumulator valve to the hole.

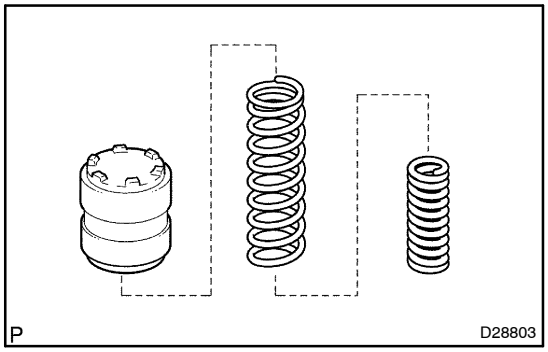


**B–1 Accumulator spring:**

**Inner spring:**

| Free length | Outer diameter | Color |
|---|---|---|
| 44.98 mm (1.7709 in.) | 11.30 mm (0.445 in.) | Natural |

**Outer spring:**

| Free length | Outer diameter) | Color |
|---|---|---|
| 46.36 mm (1.8252 in.) | 17.10 mm (0.6732 in.) | Natural |

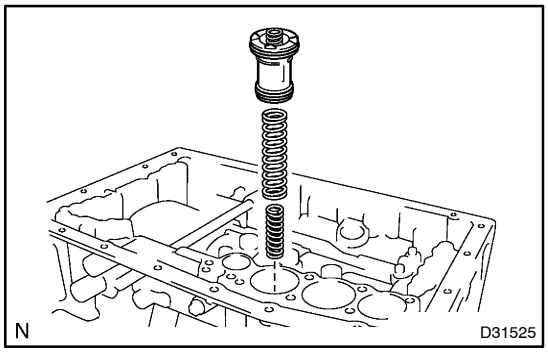


**115. INSTALL C–3 ACCUMULATOR PISTON**

(a) Coat a new O–ring with ATF, and install it to the piston.

(b) Install the spring and the accumulator piston to the hole.

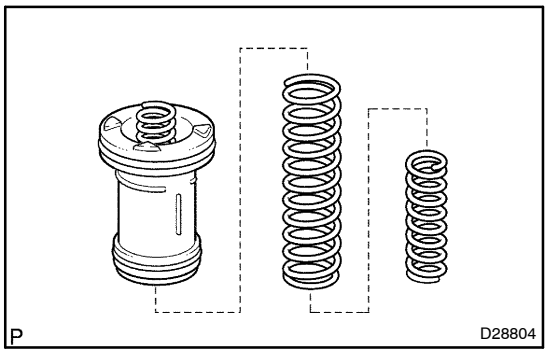


**C–3 Accumulator spring:**

**Inner spring:**

| Free length | Outer diameter | Color |
|---|---|---|
| 44.0 mm (1.732 in.) | 14.0 mm (0.551 in.) | Yellow |

**Outer spring:**

| Free length | Outer diameter | Color |
|---|---|---|
| 76.65 mm (3.0178 in.) | 20.10 mm (0.7913 in.) | Natural |

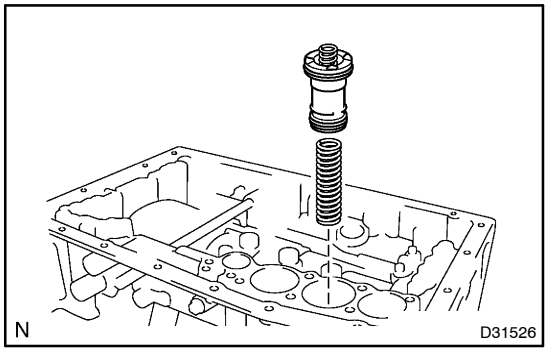


**116. INSTALL B–3 ACCUMULATOR PISTON**

(a) Coat 2 new O–rings with ATF, and install them to the piston.

(b) Install the spring and the accumulator piston to the hole.

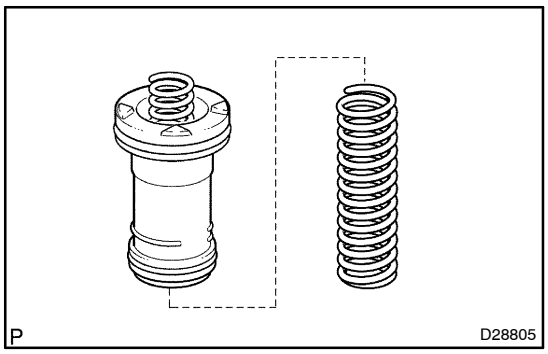


**Accumulator spring:**

| Free length | Outer diameter | Color |
|---|---|---|
| 64.5 mm (2.539 in.) | 19.5 mm (0.768 in.) | Orange |

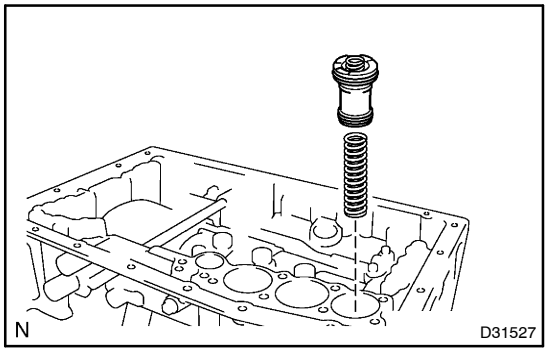


**117. INSTALL C–2 ACCUMULATOR PISTON**

(a) Coat 2 new O–rings with ATF, and install them to the piston.

(b) Install the spring and the accumulator piston to the hole.

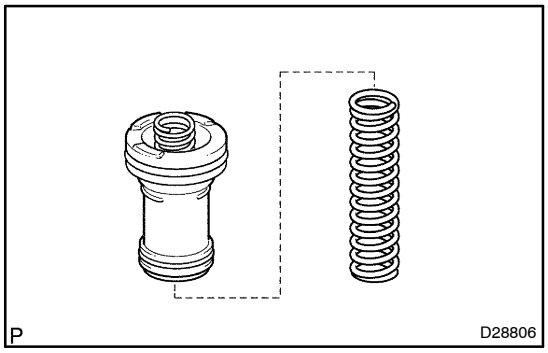


**Accumulator spring:**

| Free length | Outer diameter | Color |
|---|---|---|
| 63.14 mm (2.4858 in.) | 16.0 mm (0.6299 in.) | Light Gray |

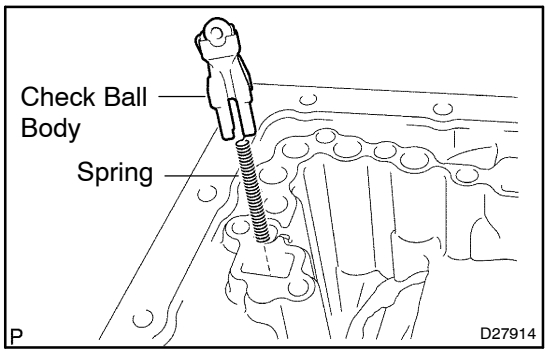


**118. INSTALL CHECK BALL BODY**

(a) Install the check ball body and the spring.

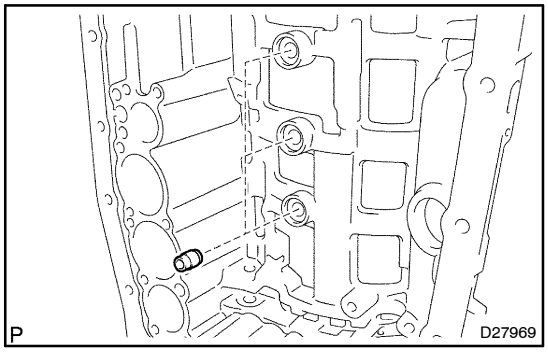


**119. INSTALL BRAKE DRUM GASKET**

(a) Install the 3 brake drum gaskets.

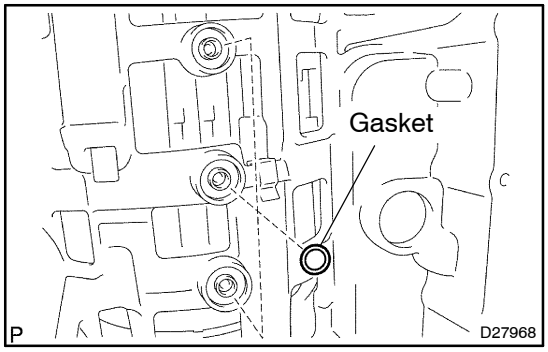


**120. INSTALL TRANSAXLE CASE GASKET**

(a) Install the 3 transaxle case gaskets.

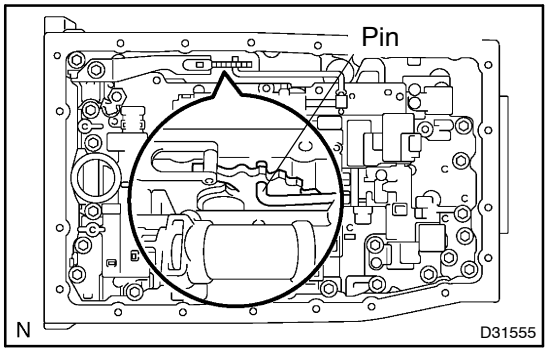


**121. INSTALL TRANSMISSION VALVE BODY ASSY**

(a) Align the groove of the manual valve with the pin of the lever.

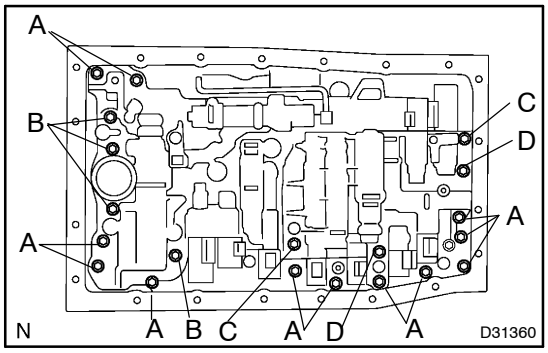


(b) Install the 20 bolts.
**Torque: 11 N·m (110 kgf·cm, 8 ft·lbf)**

HINT:
Each bolt length is indicated below.

**Blot length:**
**Bolt A: 25 mm (0.98 in.)**
**Bolt B: 36 mm (1.42 in.)**
**Bolt C: 45 mm (1.77 in.)**
**Bolt D: 50 mm (1.97 in.)**

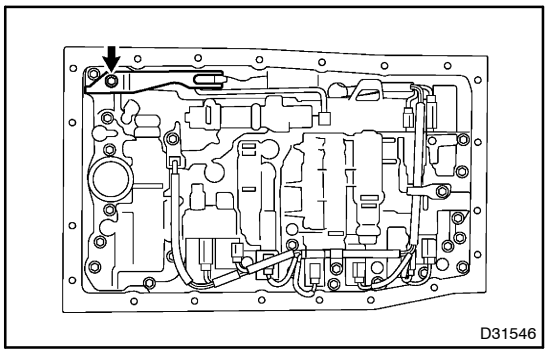


(c) Install the detente spring with the bolt.
**Torque: 11 N·m (110 kgf·cm, 8 ft·lbf)**

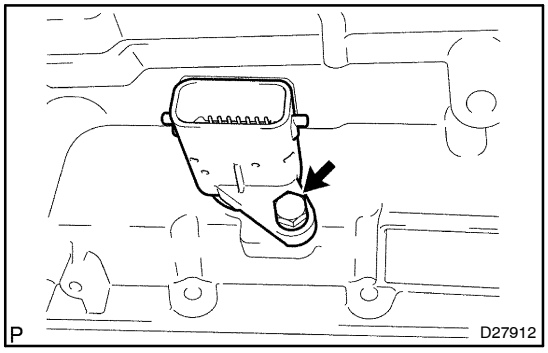


**122. INSTALL TRANSMISSION WIRE**

(a) Install a new O–ring to the transmission wire.
(b) Install the transmission wire harness.
(c) Install the bolt.
**Torque: 5.4 N·m (55 kgf·cm, 48 in.·lbf)**

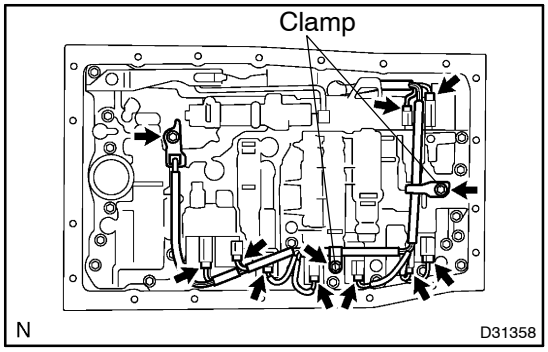


(d) Connect the 9 solenoid connectors.
(e) Install the ATF temperature sensor.
**Torque: 10 N·m (100 kgf·cm, 7 ft·lbf)**
(f) Install the clamp and the 2 bolts.
**Torque: 10 N·m (100 kgf·cm, 7 ft·lbf)**

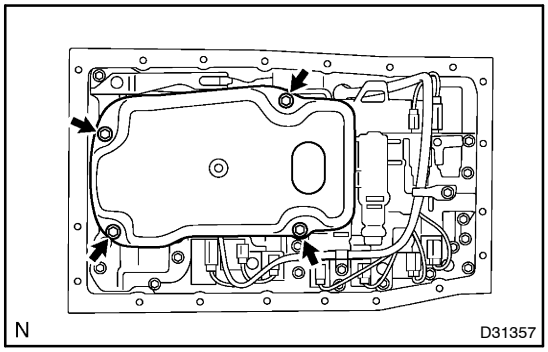


**123. INSTALL VALVE BODY OIL STRAINER ASSY**

(a) Coat new O–ring with ATF, and install them to the valve body oil strainer assy.

(b) Install the oil strainer with the 4 bolts.
**Torque: 10 N·m (100 kgf·cm, 7 ft·lbf)**

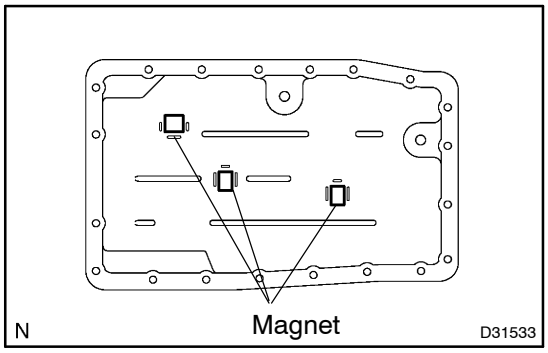


**124. INSTALL TRANSMISSION OIL CLEANER MAGNET**

(a) Install the 3 transmission oil cleaner magnets.

**125. INSTALL AUTOMATIC TRANSMISSION OIL PAN SUB–ASSY**

(a) Install a new gasket on the oil pan.

(b) Install and torque the 20 bolts.
**Torque 4.4 N·m (45 kgf·cm, 39 in.·lbf)**

(c) Install a new gasket and the drain plug.
**Torque 20 N·m (204 kgf·cm, 15 ft·lbf)**

(d) Install a new gasket and the over flow plug.
**Torque 20 N·m (204 kgf·cm, 15 ft·lbf)**

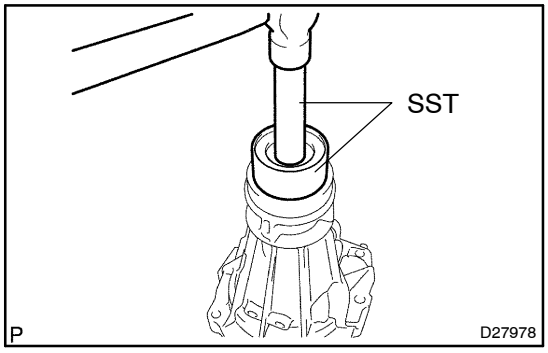


**126. INSTALL AUTOMATIC TRANSMISSION EXTENSION HOUSING OIL SEAL**

(a) Using SST and a hammer, install a new oil seal.
SST 09309–37010

**127. INSTALL TRANSMISSION CASE ADAPTOR RADIAL BALL BEARING**

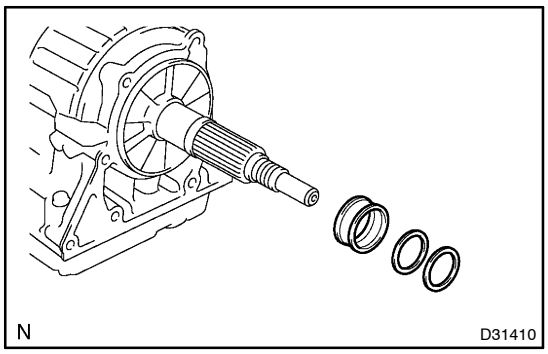


**128. INSTALL RR COVER SLEEVE**

(a) Install the 2 washers and RR cover sleeve to the output shaft.

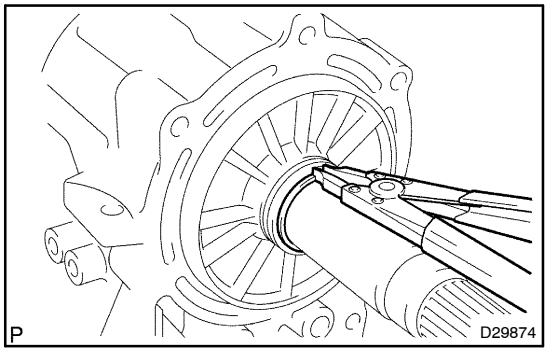


**129. INSTALL EXTENSION (ATM) HOUSING SUB–ASSY**

(a) Install the thrust needle roller bearing and the 2 bearing races.

(b) Using a snap ring expander, install the snap ring.

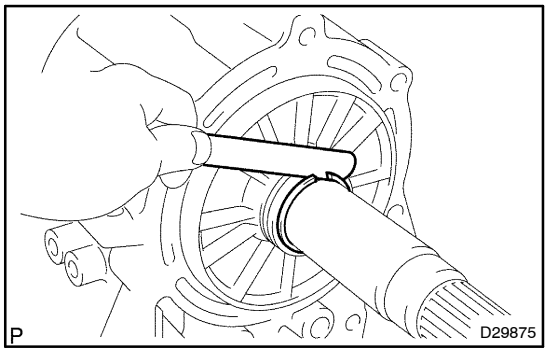


(c) Using feeler gauge, measure the clearance between the snap ring and the race.

**Clearance: 0.02 to 0.12 mm (0.0008 to 0.0047 in.)**

If the clearance is still standard, select another race.

HINT:

There are 12 different thickness for the race.

**Flange thickness:**

| No. | Thickness | No. | Thickness |
|---|---|---|---|
| 1 | 3.80 mm (0.1496 in.) | 7 | 4.10 mm (0.1614 in.) |
| 2 | 3.85 mm (0.1516 in.) | 8 | 4.15 mm (0.1634 in.) |
| 3 | 3.90 mm (0.1535 in.) | 9 | 4.20 mm (0.1653 in.) |
| 4 | 3.95 mm (0.1555 in.) | 10 | 4.25 mm (0.1673 in.) |
| 5 | 4.00 mm (0.1575 in.) | 11 | 4.30 mm (0.1693 in.) |
| 6 | 4.05 mm (0.1594 in.) | 12 | 4.35 mm (0.1713 in.) |

(d) Clean the threads of the bolts and the case with white gasoline.

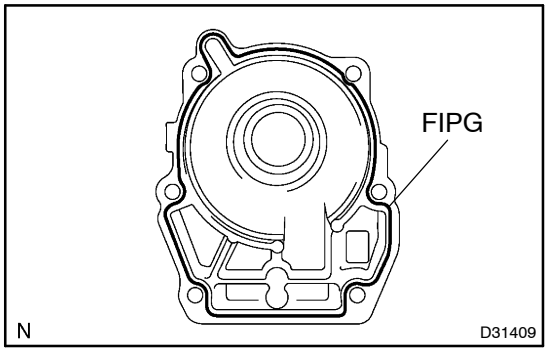


(e) Apply FIPG to the extension housing as shown in the illustration.

**FIPG:**

**Part No. 08826–00090, THREE BOND 1281 or equivalent**

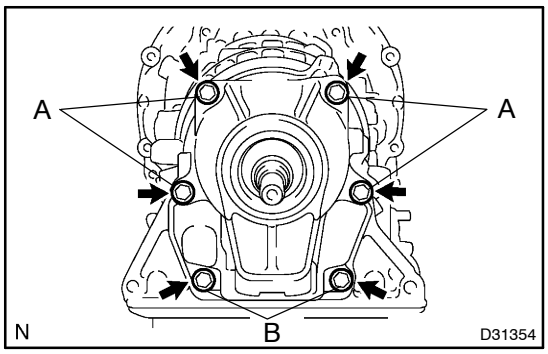


(f) Install the extension housing with new 6 bolts.

**Torque: 34 N·m (347 kgf·cm, 25 ft·lbf)**

HINT:

Each blot length is indicated below.

**Bolt length:**

**Bolt A: 45 mm (1.772 in.)**

**Bolt B: 35 mm (1.378 in.)**

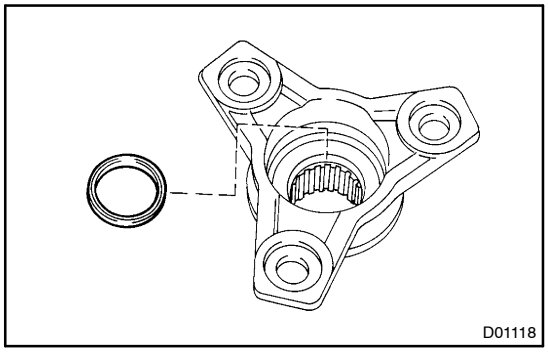


**130. INSTALL AUTOMATIC TRANSMISSION FLANGE YOKE ASSY**

(a) Using SST, install a new oil seal to the automatic transmission flange yoke.
SST 09950–60010 (09951–00350), 09950–70010 (09951–07100)

(b) Install the automatic transmission flange yoke assy to the output shaft with a new nut.
**Torque: 126 N·m (1,280 kgf·cm, 92 ft·lbf)**

(c) Using a hammer and chisel, stake the nut.

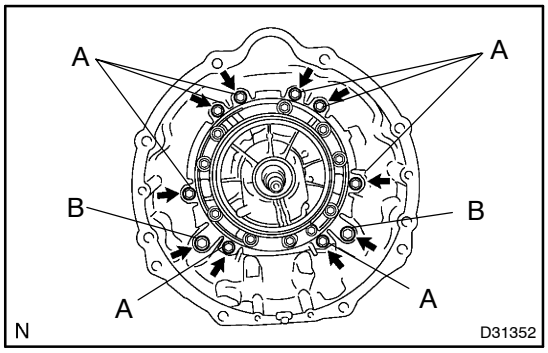


**131. INSTALL AUTOMATIC TRANSMISSION HOUSING**

(a) Clean the threads of the bolts and the case with white gasoline.

(b) Install the transmission housing with the 10 bolts.
**Torque:**
**A (14 mm bolt): 34 N·m (347 kgf·cm, 25 ft·lbf)**
**B (17 mm bolt): 57 N·m (581 kgf·cm, 42 ft·lbf)**

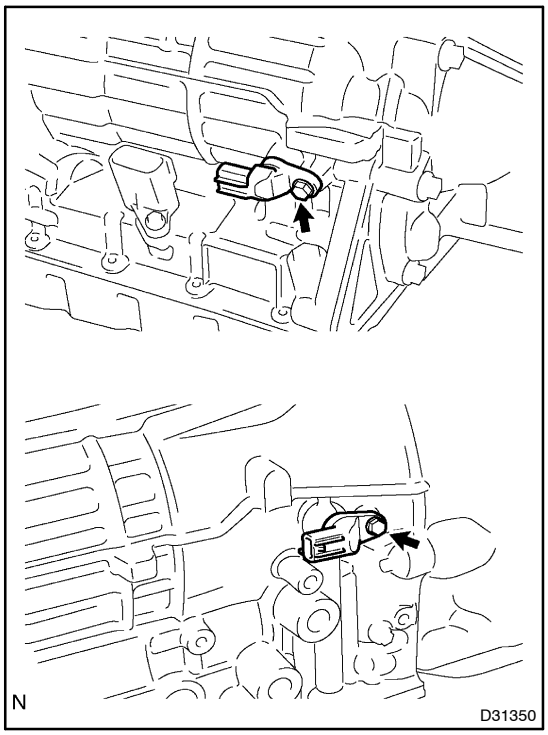


**132. INSTALL TRANSMISSION REVOLUTION SENSOR**

(a) Coat 2 new O–rings with ATF, and install it to the transmission revolution sensor.

(b) Install the 2 transmission revolution sensors.

(c) Install the 2 bolts.
**Torque: 5.4 N·m (55 kgf·cm, 48 in.·lbf)**

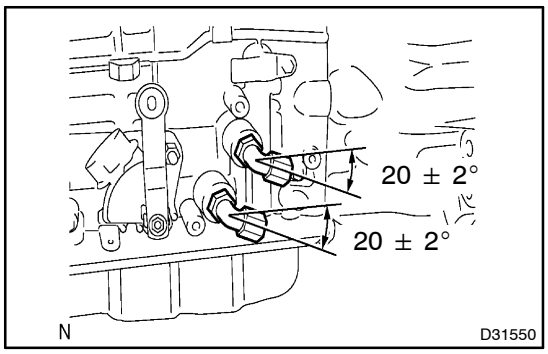


**133. INSTALL OIL COOLER TUBE UNION**

(a) Coat new O–ring with ATF, and install it to oil cooler tube union.

(b) Install the oil cooler tube union as shown in the illustration.
**Torque: 29 N·m (296 kgf·cm, 21 ft·lbf)**

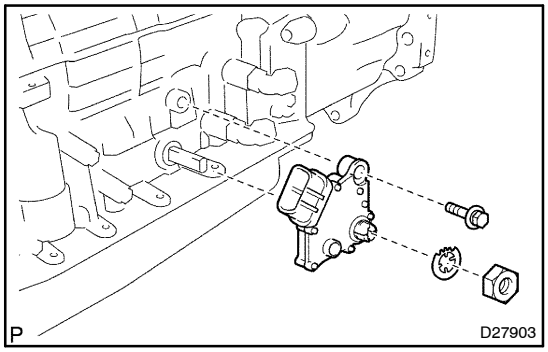


**134. INSTALL PARK/NEUTRAL POSITION SWITCH ASSY**

(a) Install the park/neutral position switch onto the manual valve lever shaft, and temporarily install the adjusting bolt.

(b) Install the new lock washer. Install and torque the nut.
**Torque: 6.9 N·m (70 kgf·cm, 61 in.·lbf)**

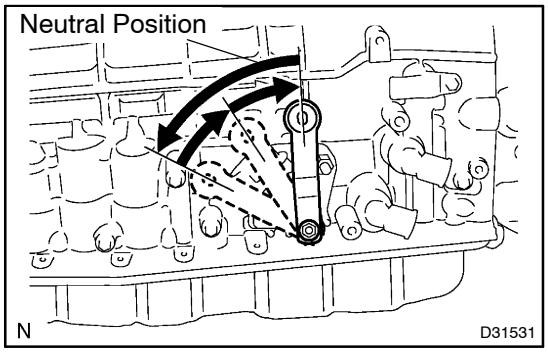


(c) Using the control shaft lever, turn the manual lever shaft back all the way and then forward 2 notches. It is now in neutral.

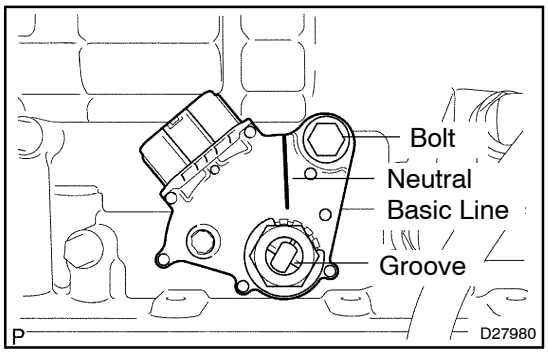


(d) Align the neutral basic line with the switch groove as shown in the illustration, and tighten the adjusting bolt.
**Torque: 13 N·m (130 kgf·cm, 9 ft·lbf)**

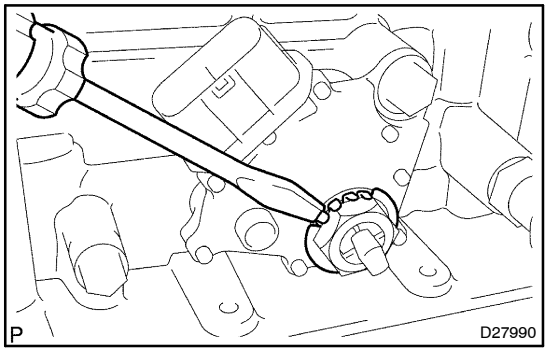


(e) Using a screwdriver, bend the tabs of the lock washer.
HINT:
Bend at least 2 of the lock washer tabs.

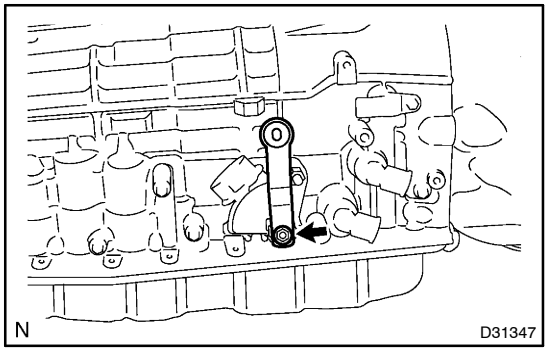


**135. INSTALL TRANSMISSION CONTROL SHAFT LEVER RH**

(a) Install the washer and the nut to the control shaft lever RH.
**Torque: 16 N·m (163 kgf·cm, 12 ft·lbf)**