5517D–02

LOCATION

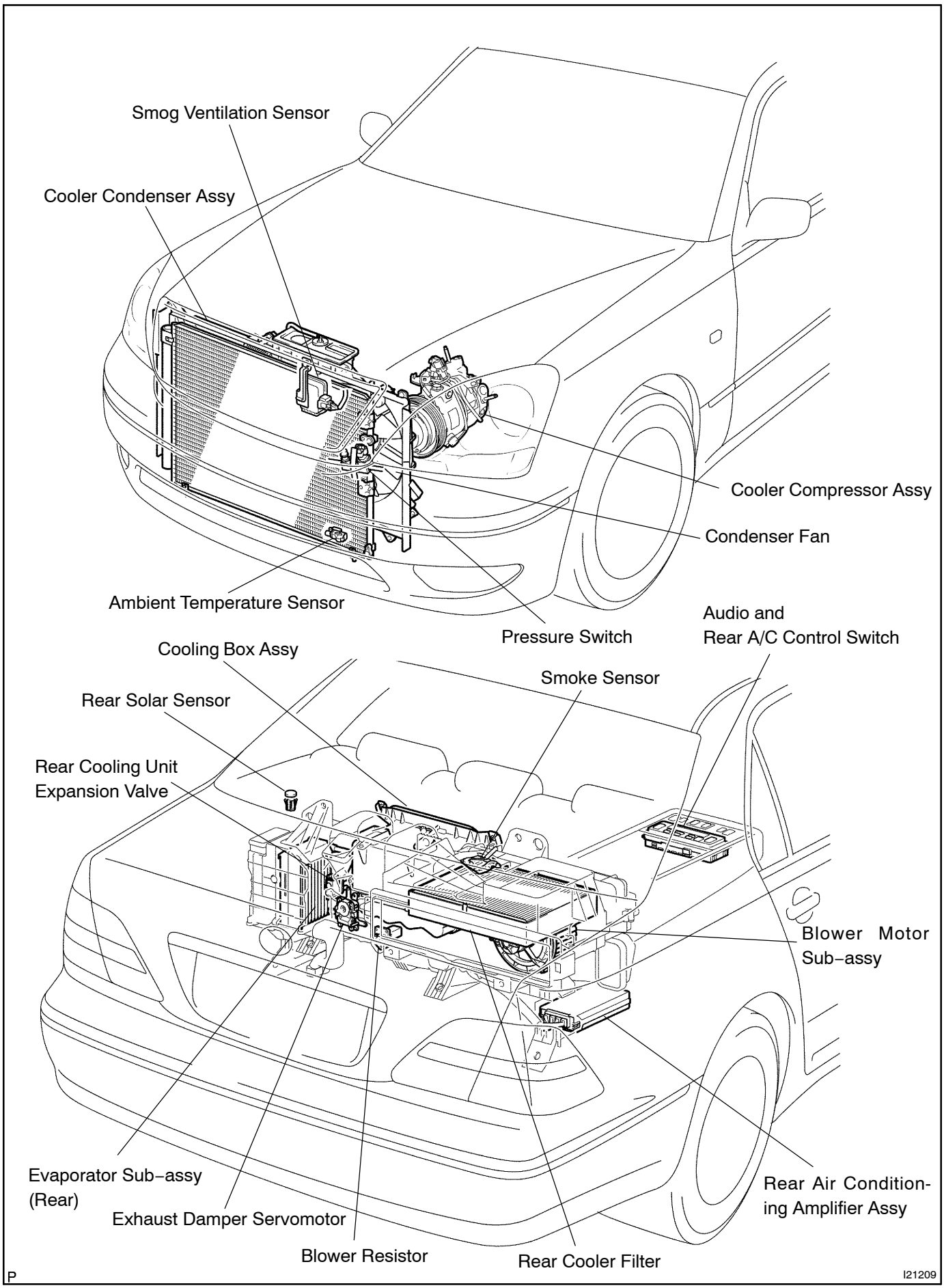

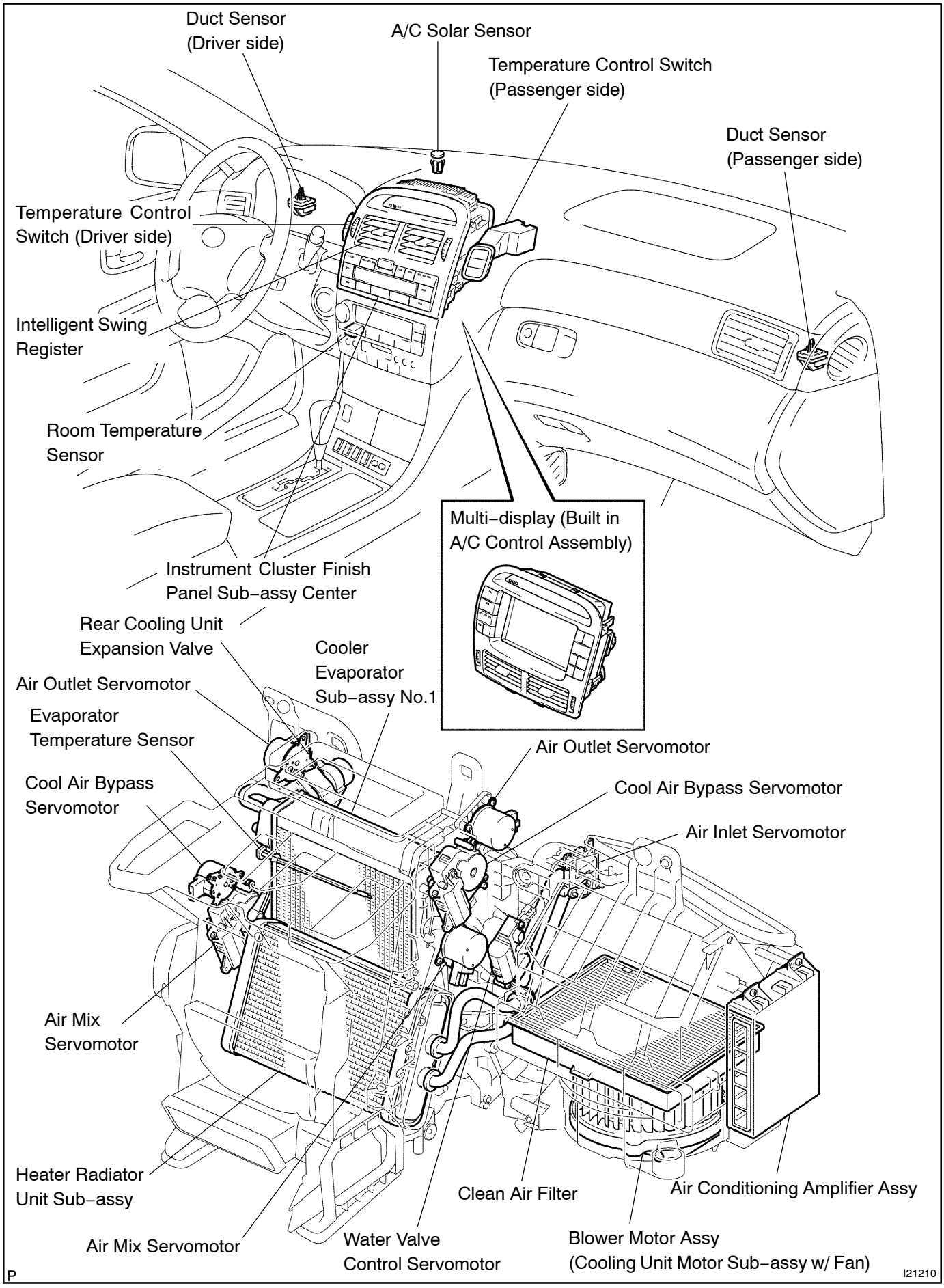
Duct Sensor (Driver side)
A/C Solar Sensor
Temperature Control Switch (Passenger side)
Duct Sensor (Passenger side)
Temperature Control Switch (Driver side)
Intelligent Swing Register
Room Temperature Sensor
Multi–display (Built in A/C Control Assembly)
Instrument Cluster Finish Panel Sub–assy Center
Rear Cooling Unit Expansion Valve
Cooler Evaporator Sub–assy No.1
Air Outlet Servomotor
Evaporator Temperature Sensor
Cool Air Bypass Servomotor
Air Outlet Servomotor
Cool Air Bypass Servomotor
Air Inlet Servomotor
Air Mix Servomotor
Heater Radiator Unit Sub–assy
Air Mix Servomotor
Water Valve Control Servomotor
Clean Air Filter
Blower Motor Assy (Cooling Unit Motor Sub–assy w/ Fan)
Air Conditioning Amplifier Assy
P
I21210