# DIFFERENTIAL CARRIER ASSY REAR

2909I–01

## OVERHAUL

HINT:

COMPONENTS: See page 30–4

**1. REMOVE REAR WHEEL**

**2. REMOVE EXHAUST PIPE ASSY (SEE PAGE 15–4)**

**3. REMOVE FRONT FLOOR HEAT INSULATOR NO.1 (SEE PAGE 30–9)**

**4. REMOVE PROPELLER SHAFT HEAT INSULATOR (SEE PAGE 30–9)**

**5. REMOVE PROPELLER W/CENTER BEARING SHAFT ASSY (SEE PAGE 30–9)**

**6. REMOVE REAR DIFFERENTIAL FILLER PLUG**

(a) Using a hexagon wrench (10 mm), remove the filler plug and gasket.

**7. REMOVE REAR DIFFERENTIAL DRAIN PLUG**

(a) Using a hexagon wrench (10 mm), remove the drain plug and gasket.

(b) Drain the differential oil.

**8. REMOVE REAR DRIVE SHAFT ASSY LH (SEE PAGE 30–24)**

**9. REMOVE REAR DRIVE SHAFT ASSY RH**

HINT:

Removal procedure of the RH side is the same as that of the LH side.

**10. REMOVE STABILIZER BAR REAR (SEE PAGE 27–29)**

HINT:

Perform this procedure only when the rear differential mount cushion should be changed.

**11. REMOVE HEIGHT CONTROL VALVE SUB–ASSY NO.2 (W/ AIR SUSPENSION) (SEE PAGE 25–19)**

HINT:

Perform this procedure only when the rear differential mount cushion should be changed.

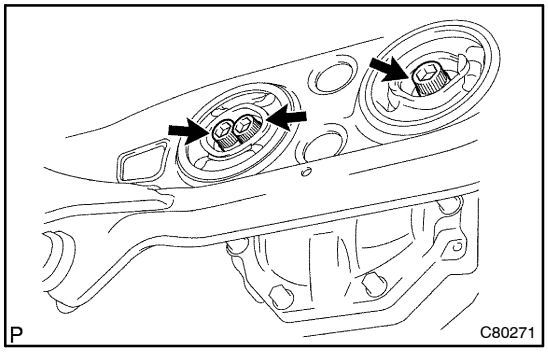


**12. REMOVE DIFFERENTIAL CARRIER ASSY REAR**

(a) Support the differential carrier with a jack and wooden block.

**NOTICE:**

**Be careful not to drop the differential carrier assy rear.**

(b) Using a hexagon wrench (12 mm), remove the 3 hexagon bolts.

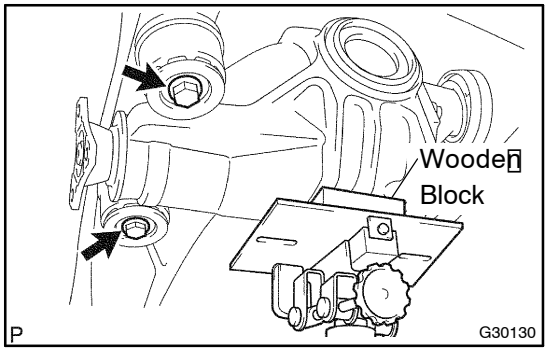


(c) Remove the 2 bolts and lower mount stoppers.

(d) Remove the differential.

(e) Remove the 2 upper mount stoppers from the differential carrier.

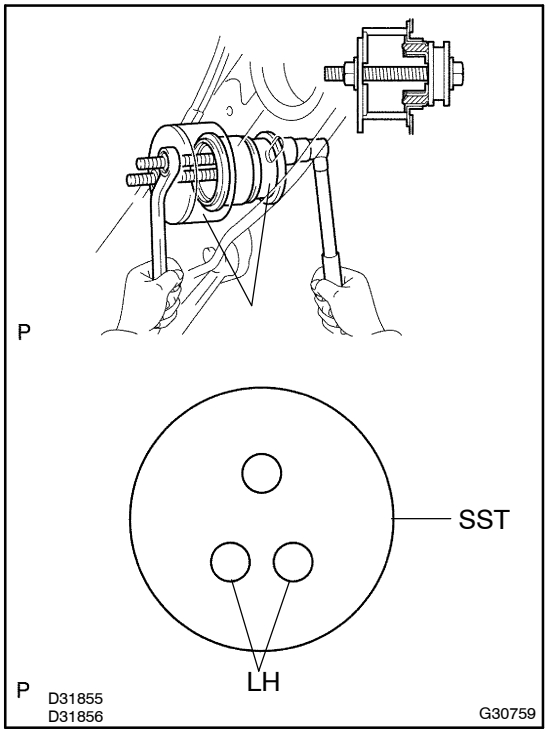


**13. REMOVE REAR DIFFERENTIAL MOUNT CUSHION NO.1**

(a) Using SST, remove the rear differential mount cushion No.1.
SST 09570–24010, 09316–12010

HINT:
Perform this operation only when the rear differential mount cushion No.1 is damaged.

**NOTICE:**
- **Do not bring the SST into contact with the sub–flame.**
- **Do not slant the SST bolts.**
- **Do not set the SST in the wrong direction.**
- **Screw the 2 SST bolts equally into the 2 holes of the rear differential mount.**

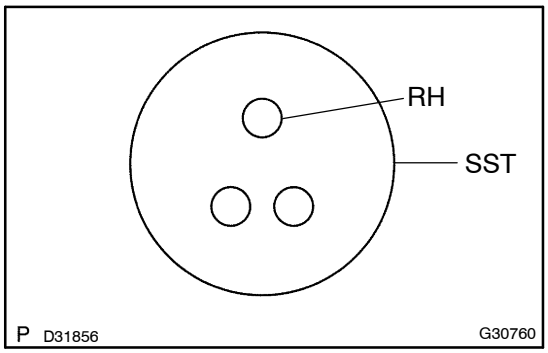


**14. REMOVE REAR DIFFERENTIAL MOUNT CUSHION NO.2**

(a) Using SST remove the rear differential mount cushion No.2.
SST 09570–24010, 09316–12010

HINT:
Perform this operation only when the rear differential mount cushion No.2 is damaged.

**NOTICE:**
- **Do not bring the SST into contact with the sub–flame.**
- **Do not slant the SST bolts.**
- **Do not set the SST in the wrong direction.**

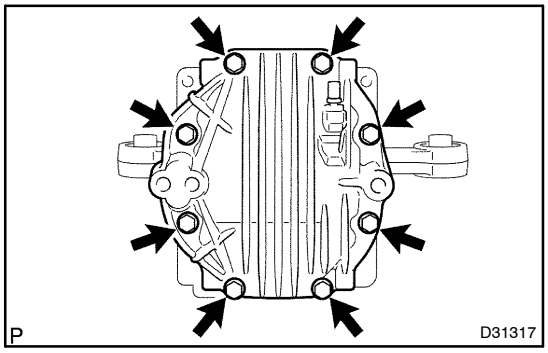


**15. REMOVE REAR DIFFERENTIAL CARRIER COVER**

(a) Remove the 8 bolts from the carrier cover.

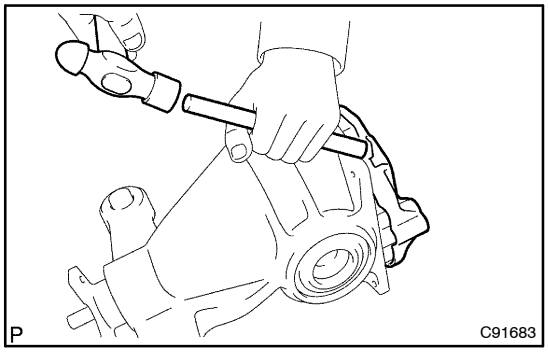


(b) Using a brass bar and a hammer, separate the cover from carrier.

(c) If necessary, remove the breather plug from the differential carrier cover.

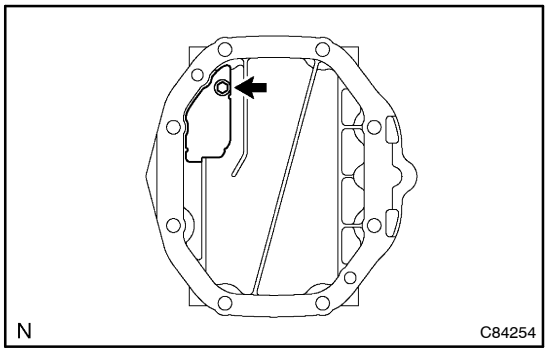


(d) Remove the bolt and oil deflector from the differential carrier cover.

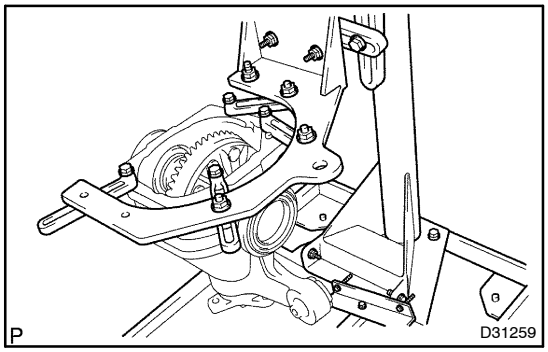


**16. FIX DIFFERENTIAL CARRIER ASSY REAR**

(a) Set the differential carrier to the overhaul stand, etc., as shown in the illustration.

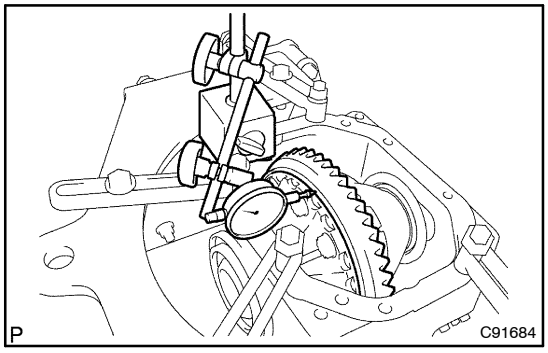


**17. INSPECT RUNOUT OF DIFFERENTIAL RING GEAR**

(a) Using a dial indicator, measure the ring gear runout.
**Maximum runout: 0.05 mm (0.0020 in.)**

If the runout is greater than the maximum, replace the drive pinion, ring gear and differential case.

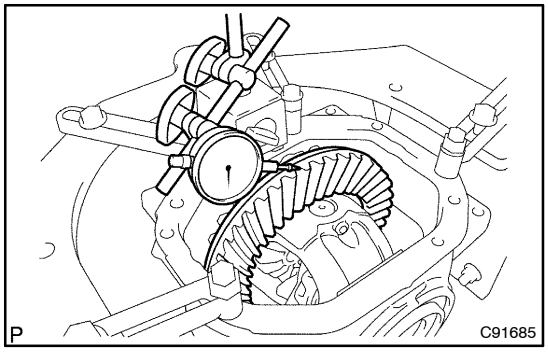


**18. INSPECT DIFFERENTIAL RING GEAR BACKLASH**

(a) Using a dial indicator, measure the backlash of the ring gear at 3 points.
**Backlash: 0.08 to 0.13 mm (0.0031 to 0.0051 in.)**

**NOTICE:**

**The difference between the maximum and minimum measured values must be less than 0.05 mm (0.0020 in.).**

If the backlash is not within the specification, adjust the backlash (see step 55).

**19. INSPECT TOOTH CONTACT BETWEEN RING GEAR AND DRIVE PINION**

(a) Coat 3 or 4 teeth at the 3 different positions on the ring gear with red lead primer.

(b) Hold the companion flange firmly and rotate the ring gear in both directions.

(c) Inspect the tooth contact pattern.

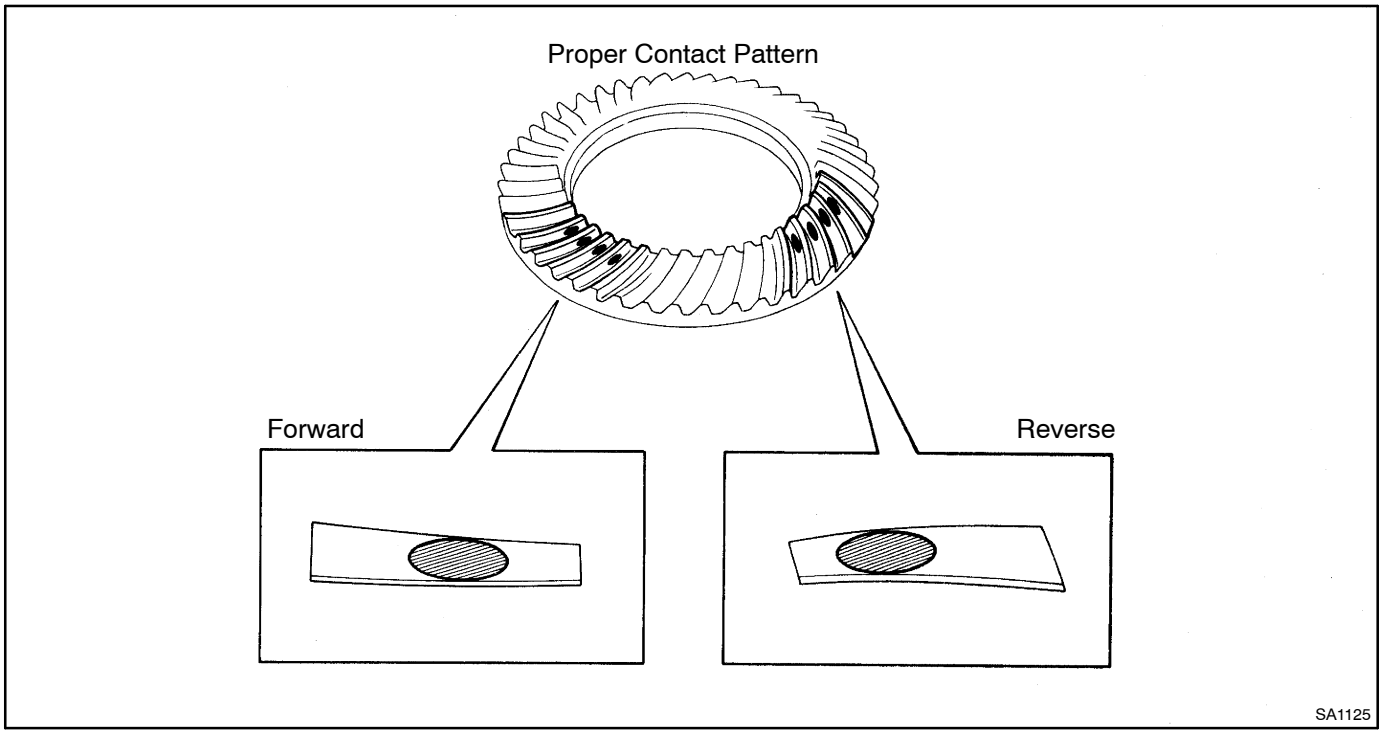


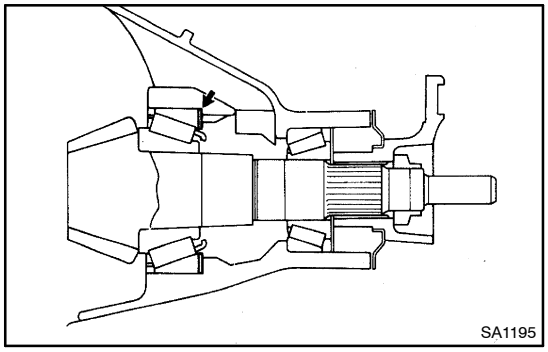


If tooth contact pattern is not correct, replace the adjusting washer installed on the front of the drive pinion rear bearing to adjust it.

**NOTICE:**

**Make sure to always replace the adjusting washer with a new one.**

HINT:

Refer to the table on the next page to select of the adjusting washer.

| Example tooth contact pattern | | Adjusting rear differential drive pinion plate washer selection | |
|---|---|---|---|
| Forward | Reverse | | |
| 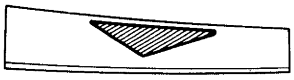 | | + 0.08 mm (+ 0.0031 in.) | Replacing the washer with one 0.08 mm (0.0031 in.) thicker will give proper contact pattern. |
| 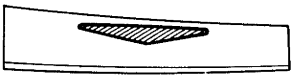 | | + 0.14 mm (+ 0.0055 in.) | Replacing the washer with one 0.14 mm (0.0055 in.) thicker will give proper contact pattern. |
| 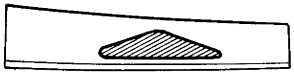 | 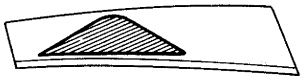 | – 0.08 mm (– 0.0031 in.) | Replacing the washer with one 0.08 mm (0.0031 in.) thinner will give proper contact pattern. |
| 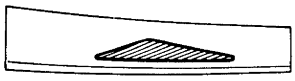 | 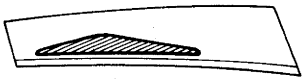 | – 0.14 mm (– 0.0055 in.) | Replacing the washer with one 0.14 mm (0.0055 in.) thinner will give proper contact pattern. |

V02917

HINT:
There are 42 thicknesses of the rear differential drive pinion plate washers available in 0.01 mm (0.004 in.) difference.

| Parts No. | Thickness mm (in.) | No. | Parts No. | Thickness mm (in.) | No. |
|---|---|---|---|---|---|
| 90201–70001 | 1.87 (0.0736) | 87 | 90201–70022 | 2.08 (0.0819) | 08 |
| 90201–70002 | 1.88 (0.0740) | 88 | 90201–70023 | 2.09 (0.0823) | 09 |
| 90201–70003 | 1.89 (0.0744) | 89 | 90201–70024 | 2.10 (0.0827) | 10 |
| 90201–70004 | 1.90 (0.0748) | 90 | 90201–70025 | 2.11 (0.0831) | 11 |
| 90201–70005 | 1.91 (0.0752) | 91 | 90201–70026 | 2.12 (0.0835) | 12 |
| 90201–70006 | 1.92 (0.0756) | 92 | 90201–70027 | 2.13 (0.0839) | 13 |
| 90201–70007 | 1.93 (0.0760) | 93 | 90201–70028 | 2.14 (0.0843) | 14 |
| 90201–70008 | 1.94 (0.0764) | 94 | 90201–70029 | 2.15 (0.0846) | 15 |
| 90201–70009 | 1.95 (0.0768) | 95 | 90201–70030 | 2.16 (0.0850) | 16 |
| 90201–70010 | 1.96 (0.0772) | 96 | 90201–70031 | 2.17 (0.0854) | 17 |
| 90201–70011 | 1.97 (0.0776) | 97 | 90201–70032 | 2.18 (0.0858) | 18 |
| 90201–70012 | 1.98 (0.0780) | 98 | 90201–70033 | 2.19 (0.0862) | 19 |
| 90201–70013 | 1.99 (0.0783) | 99 | 90201–70034 | 2.20 (0.0866) | 20 |
| 90201–70014 | 2.00 (0.0787) | 00 | 90201–70035 | 2.21 (0.0870) | 21 |
| 90201–70015 | 2.01 (0.0791) | 01 | 90201–70036 | 2.22 (0.0874) | 22 |
| 90201–70016 | 2.02 (0.0795) | 02 | 90201–70037 | 2.23 (0.0878) | 23 |
| 90201–70017 | 2.03 (0.0799) | 03 | 90201–70038 | 2.24 (0.0882) | 24 |
| 90201–70018 | 2.04 (0.0803) | 04 | 90201–70039 | 2.25 (0.0886) | 25 |
| 90201–70019 | 2.05 (0.0807) | 05 | 90201–70040 | 2.26 (0.0890) | 26 |
| 90201–70020 | 2.06 (0.0811) | 06 | 90201–70041 | 2.27 (0.0894) | 27 |
| 90201–70021 | 2.07 (0.0815) | 07 | 90201–70042 | 2.28 (0.0898) | 28 |

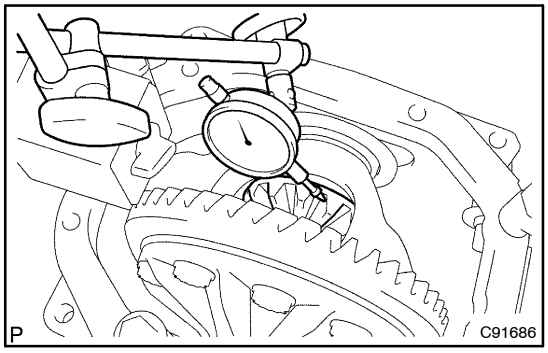


**20. INSPECT DIFFERENTIAL SIDE GEAR BACKLASH**

(a) Using a vise, hold the differential case between two aluminium plates.

(b) Place a dial indicator on the tip of the pinion gear tooth at a right angle. Hold the side gear in the differential case and check that the backlash is 0 mm (0 in.).

If the backlash is not within the specification, replace the rear differential case sub–assy with a new one.

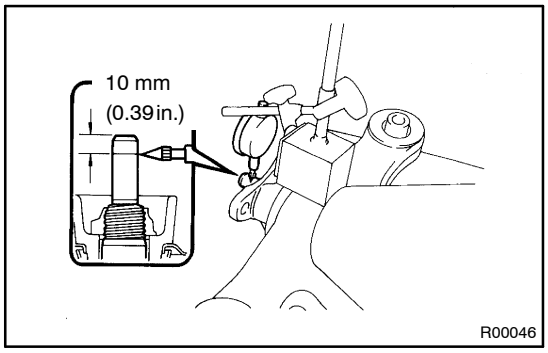


**21. INSPECT RUNOUT OF DIFFERENTIAL DRIVE PINION**

(a) Using a dial indicator, measure the runout of the drive pinion shaft at a position 10 mm (0.39 in.) away from the end of the shaft.

**Maximum runout: 0.08 mm (0.0031 in.)**

If the runout is greater than the maximum, replace the drive pinion and ring gear.

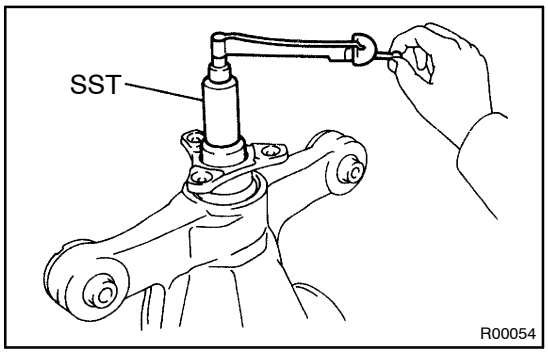


**22. INSPECT DIFFERENTIAL DRIVE PINION PRELOAD**

(a) Using SST and a torque wrench, measure the preload using the backlash of the drive pinion and ring gear.

SST 09229–55010

**Drive pinion preload (at starting):**
**0.5 to 0.8 N·m (5 to 8 kgf·cm, 4.3 to 6.9 in.·lbf)**

If the preload is not within the specification, adjust the rear differential drive pinion preload or repair as necessary.

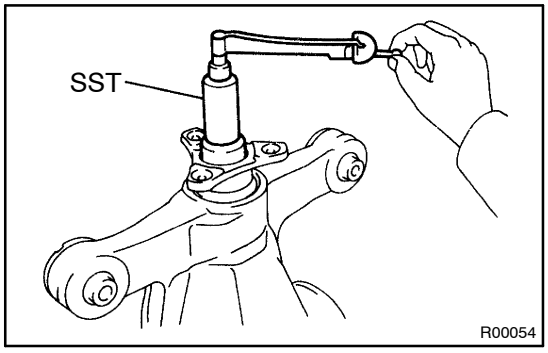


**23. INSPECT TOTAL PRELOAD**

(a) Using SST and a torque wrench, measure the preload with the teeth of the drive pinion and ring gear in contact.

SST 09229–55010

**Total preload (at starting):**
**Drive pinion preload plus 0.48 to 1.43 N·m**
**(4.89 to 14.58 kgf·cm, 4.25 to 12.66 in.·lbf)**

If necessary, disassemble and inspect the differential.

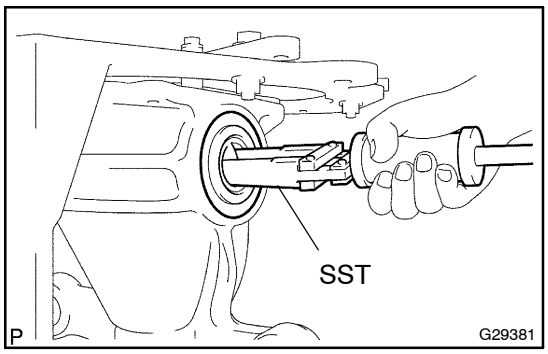


**24. REMOVE REAR DIFFERENTIAL SIDE GEAR SHAFT OIL SEAL**

(a) Using SST, remove the 2 oil seals.

SST 09308–00010

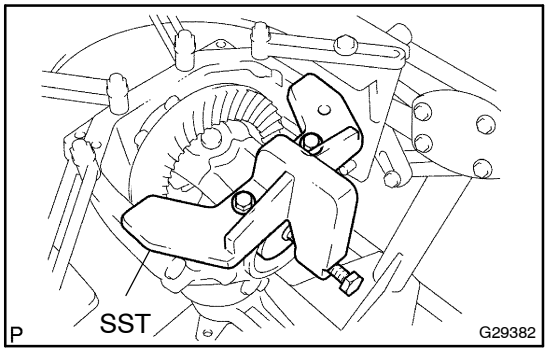


**25. REMOVE REAR DIFFERENTIAL SIDE GEAR SHAFT SHAFT SNAP RING**

(a) Install the SST to the rear differential carrier assy.
SST 09571–50010

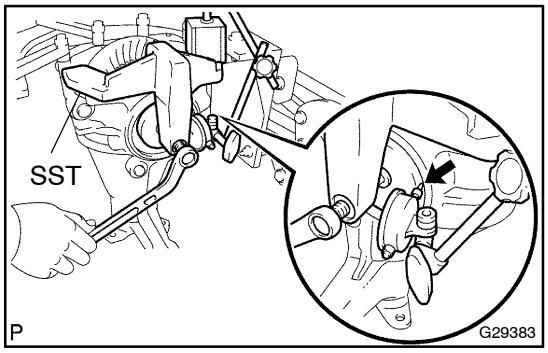


(b) Install a dial indicator to the rear differential carrier assy.

(c) Tighten the SST bolt and alter the differential carrier's shape to create a 0.1 mm (0.004 in.) clearance between the side bearing (outer race) and side gear shaft shaft snap ring.

**NOTICE:**

**Observe the dial indicator to ensure that the shape of the differential carrier does not change more than 0.2 mm (0.008 in.).**

HINT:

- Set the dial indicator to the rearmost position (upper side in the illustration) of the area around where the side gear shaft oil seal is tapped in.
- Approximately 0.1 mm (0.004 in.) clearance between the side bearing (outer race) and the side gear shaft shaft snap ring is sufficient enough for the washer to move slightly.

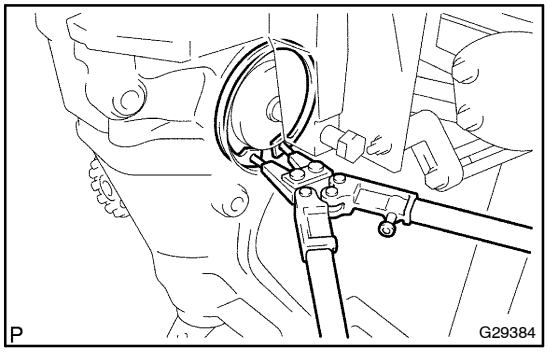


(d) Using snap ring pliers, remove the side gear shaft shaft snap ring on the drive pinion side.

HINT:

For reassembly purposes, measure the thickness of the side gear shaft shaft snap ring. Write down the result.

(e) Remove the dial indicator and loosen the SST bolt.

**NOTICE:**

**Do not remove the SST.**

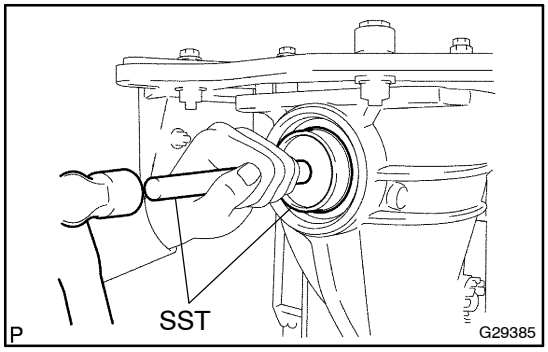


**26. REMOVE REAR DIFFERENTIAL SIDE GEAR SHAFT SHAFT SNAP RING**

(a) Using SST and a hammer, create a clearance between the side bearing (outer race) on the ring gear and side gear shaft shaft snap ring.
SST 09608–32010, 09950–70010 (09951–07200)

HINT:

The clearance cannot be seen, but tapping the SST with a hammer three or four times should be enough.

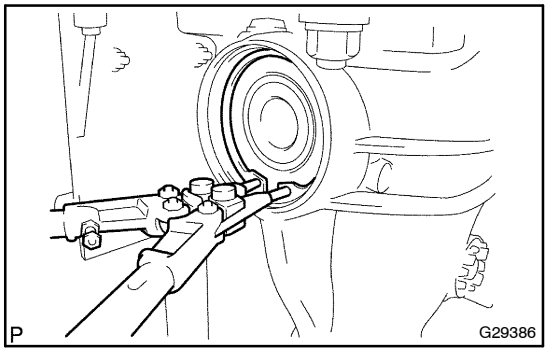


(b) Using snap ring pliers, remove the side gear shaft shaft snap ring on the ring gear side.

HINT:

For reassembly purposes, measure the thickness of the side gear shaft shaft snap ring. Write down the result.

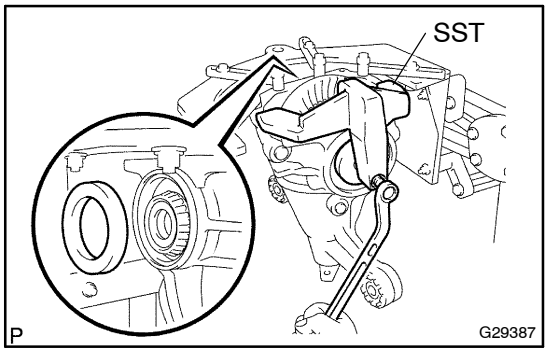


**27. REMOVE REAR DIFFERENTIAL CASE BEARING**

(a) Tighten the SST bolt and push out the outer race on the ring gear side.

SST 09571–50010

**NOTICE:**

**Do not drop the side bearing (outer race).**

(b) Remove the SST.

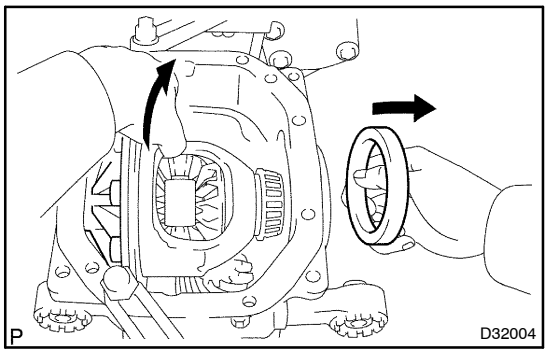


**28. REMOVE REAR DIFFERENTIAL CASE BEARING**

(a) Raise the ring gear of the differential case slightly to remove the drive pinion side outer race.

HINT:

For reassembly, check the installation position of the outer race and the side gear shaft shaft snap ring before removing the outer race. Write down the result.

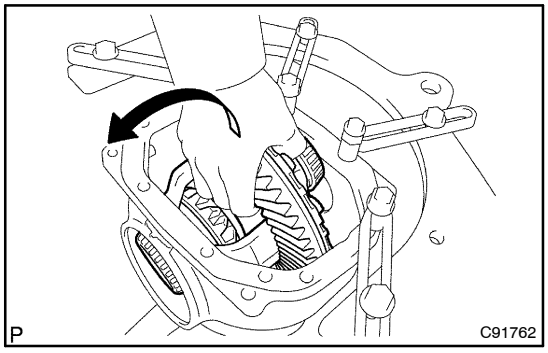


**29. REMOVE REAR DIFFERENTIAL CASE SUB–ASSY**

**NOTICE:**

**Do not damage the case bearing.**

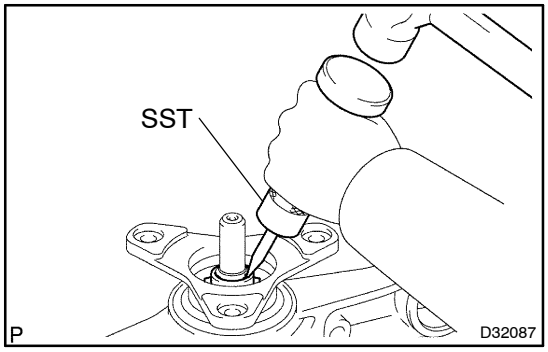


**30. REMOVE REAR DRIVE PINION NUT**

(a) Using SST and a hammer, loosen the staked part of the nut.

SST 09930–00010

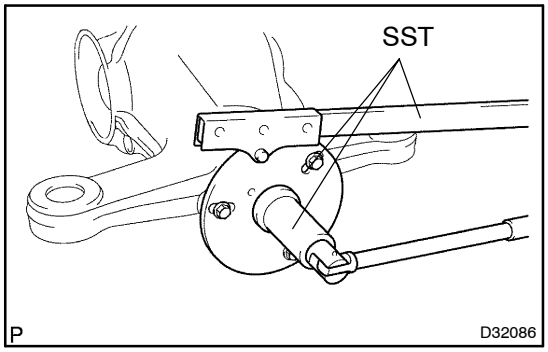


(b) Using SST to hold the flange, remove the nut.
SST 09229–55010, 09330–00021, 09950–30012 (09955–03040)

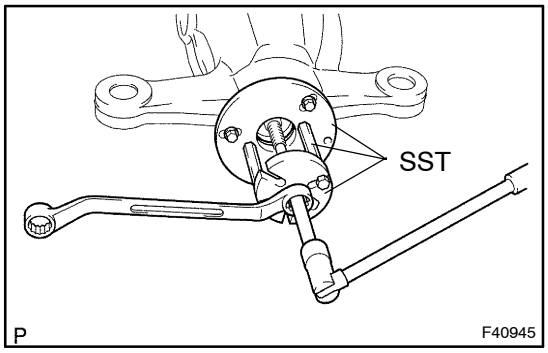


**31. REMOVE REAR DRIVE PINION COMPANION FLANGE SUB–ASSY REAR**

(a) Using SST, remove the companion flange.
SST 09950–30012 (09951–03010, 09953–03010, 09954–03010, 09955–03030, 09956–03060)

**NOTICE:**
**Apply hypoid gear oil to the SST center bolt tip and threads before use.**

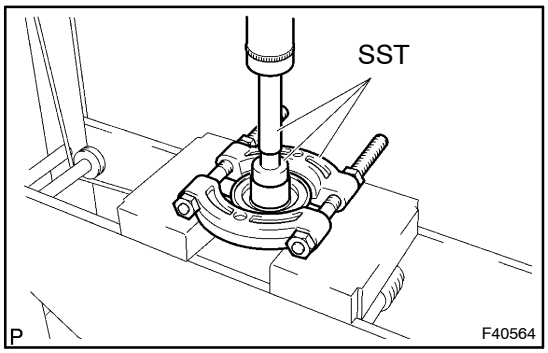


**32. REMOVE REAR DIFFERENTIAL DUST DEFLECTOR**

(a) Using SST and a press, remove the dust deflector.
SST 09950–60010 (09951–00440), 09950–00020, 09950–70010 (09951–07100)

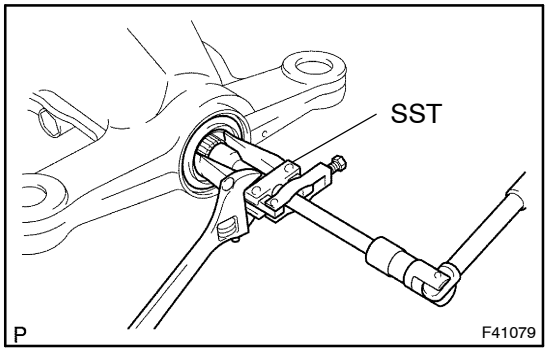


**33. REMOVE REAR DIFFERENTIAL CARRIER OIL SEAL**

(a) Using SST, remove the oil seal from the differential carrier.
SST 09308–10010

**34. REMOVE REAR DIFFERENTIAL DRIVE PINION OIL SLINGER**

(a) Using a magnet hand, remove the differential drive pinion oil slinger.

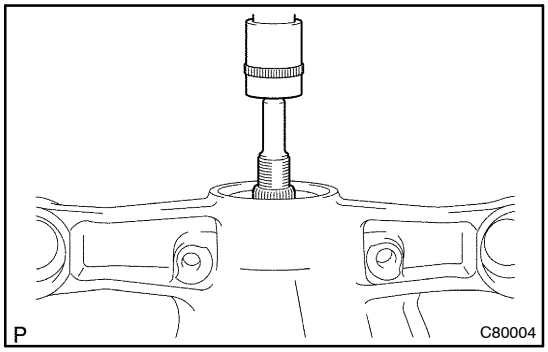


**35. REMOVE DIFFERENTIAL DRIVE PINION**

(a) Using a press, remove the drive pinion with the rear bearing from the differential carrier.

**NOTICE:**

**Be careful not to drop the drive pinion.**

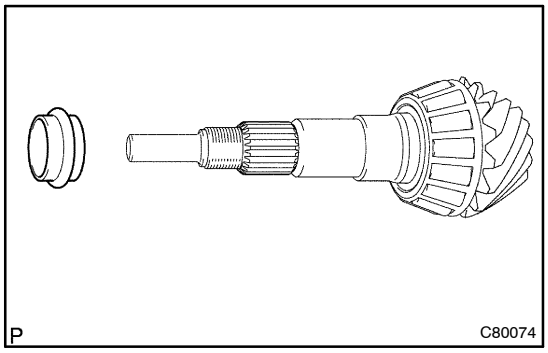


**36. REMOVE REAR DIFFERENTIAL DRIVE PINION BEARING SPACER**

(a) Remove the spacer from the drive pinion.

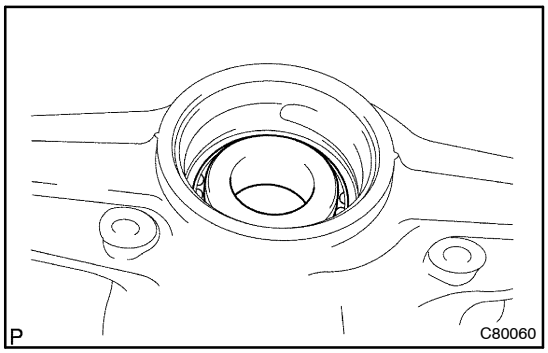


**37. REMOVE REAR DRIVE PINION FRONT TAPERED ROLLER BEARING**

(a) Remove the front bearing from the differential carrier.

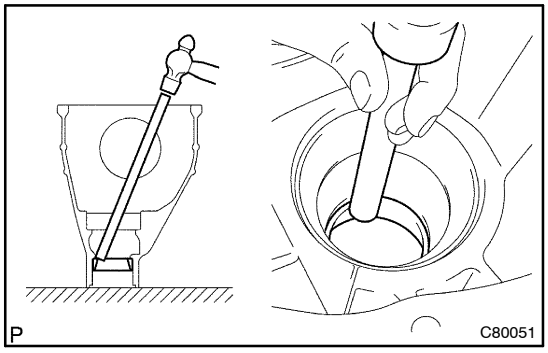


(b) Using a brass bar and a hammer, remove the front bearing outer race.

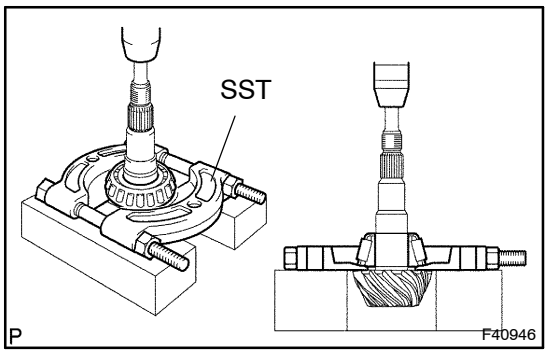


**38. REMOVE REAR DRIVE PINION REAR TAPERED ROLLER BEARING**

(a) Using SST and a press, remove the rear bearing from the drive pinion.

SST 09950–00020

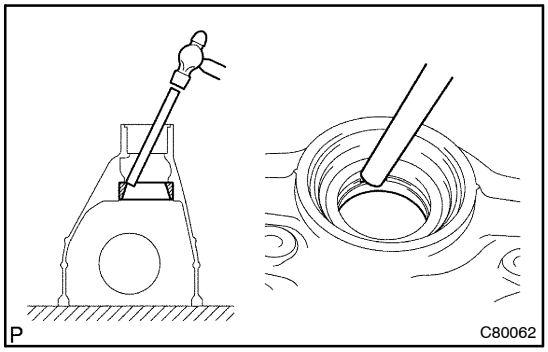


(b) Using a brass bar and a hammer, remove the rear bearing outer race.

(c) Remove the plate washer.

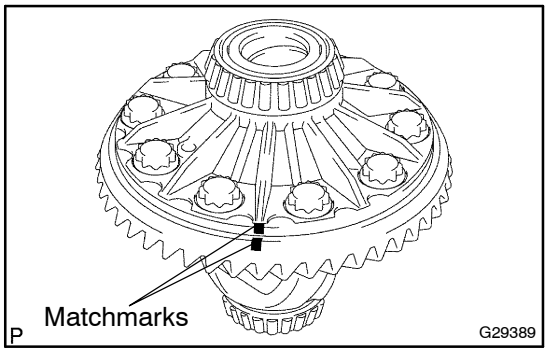


**39. REMOVE DIFFERENTIAL RING GEAR**

(a) Place matchmarks on the ring gear and differential case.

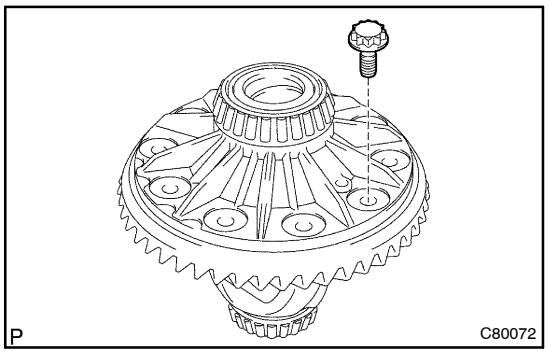


(b) Remove the 10 ring gear set bolts.

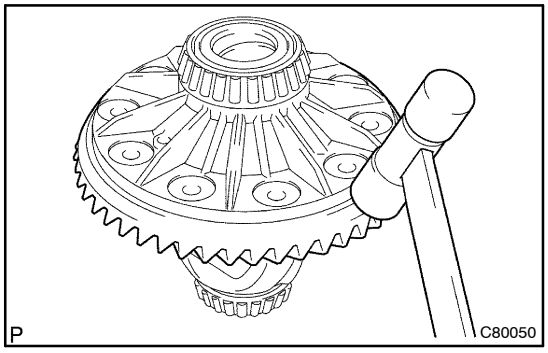


(c) Using a plastic hammer, tap on the ring gear to separate it from the differential case.

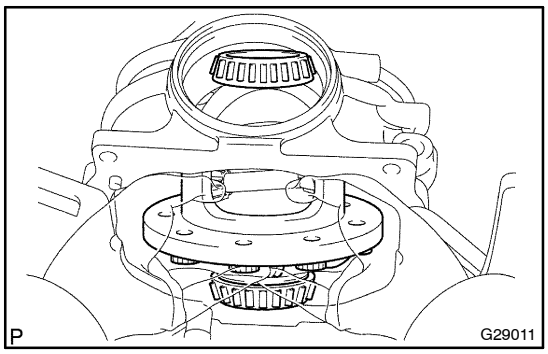


**40. INSPECT RUNOUT OF REAR DIFFERENTIAL CASE SUB–ASSY**

(a) Install the drive side bearing in the differential carrier first, as shown in the illustration, then install the differential case.

**NOTICE:**

**Do not damage the case bearing.**

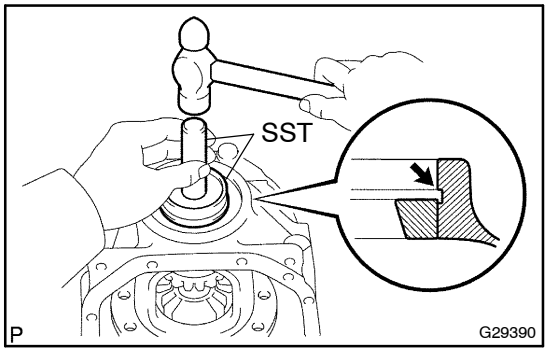


(b) Using SST and a hammer, install the outer race on the drive pinion side.
SST 09608–32010, 09950–70010 (09951–07200)

HINT:
Tap in the outer race until half on the side gear shaft shaft snap ring groove of the differential carrier can be seen.

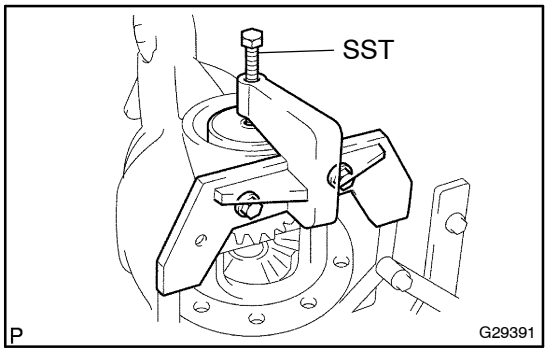


(c) Place the SST on the differential carrier.
SST 09571–50010

(d) Tighten the SST bolt until the SST disc lightly touches the case bearing (outer race).

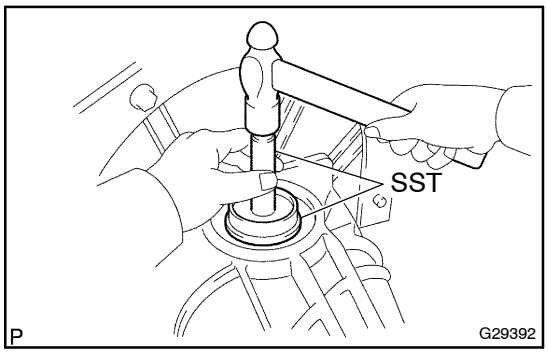


(e) Using SST and a hammer, install the outer race on the ring gear side.
SST 09950–70010 (09951–07200), 09608–32010

HINT:
Tap in the outer race until it touches the case bearing roller.

(f) Place a dial indicator on the differential case flange surface at a right angle.

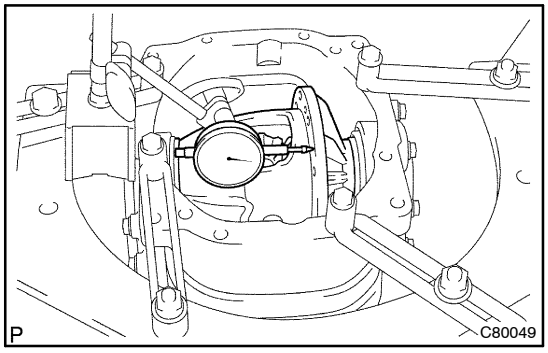


(g) Using a dial indicator, measure the differential case runout.
**Maximum runout: 0.05 mm (0.0020 in.)**

If the runout is greater than the maximum, replace the rear differential case sub–assy with a new one.

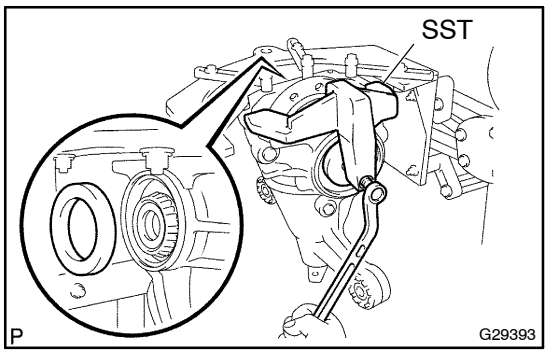


**41. REMOVE REAR DIFFERENTIAL CASE BEARING**

(a) Tighten the SST bolt to push out the ring gear side outer race.
SST 09571–50010

**NOTICE:**
**Do not drop the side bearing (outer race).**

(b) Remove the SST.

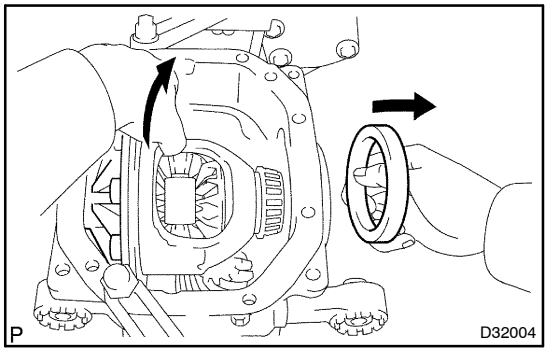


**42. REMOVE REAR DIFFERENTIAL CASE BEARING**

(a) Raise the ring gear side of the differential case slightly to remove the drive pinion side outer race.

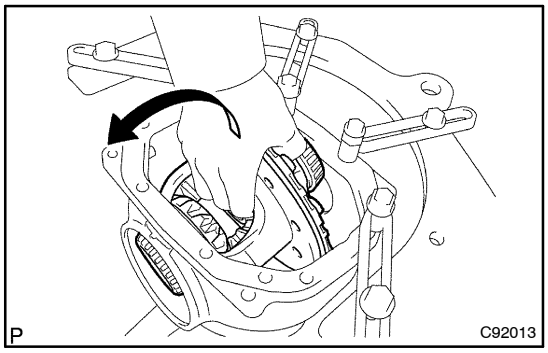


**43. REMOVE REAR DIFFERENTIAL CASE SUB–ASSY**

**NOTICE:**

**Do not damage the side bearing.**

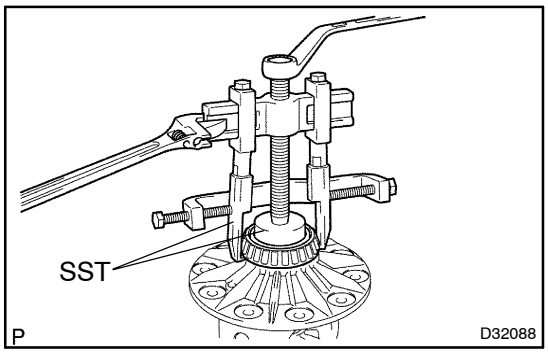


**44. REMOVE REAR DIFFERENTIAL CASE BEARING**

(a) Using SST, remove the 2 differential case bearings from the differential case.

SST 09950–60010 (09951–00480), 09950–40011 (09951–04020, 09952–04010, 09953–04030, 09954–04010, 09955–04061, 09957–04010, 09958–04011)

**NOTICE:**

- **Apply hypoid gear oil to the SST center bolt tip and threads before use.**
- **Do not deform the bearing case.**
- **Hook the claws of the SST to the bearing inner race from the differential case.**

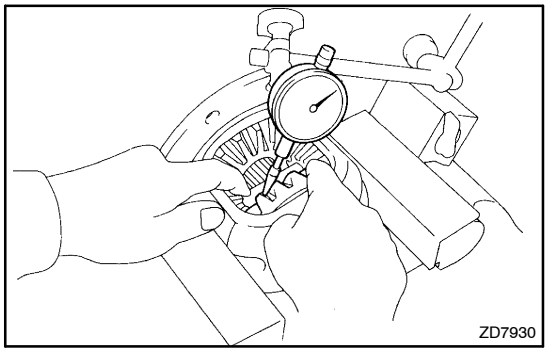


**45. INSPECT DIFFERENTIAL PINION GEAR BACKLASH**

(a) Using a vise, hold the differential case between two aluminium plates.

(b) Place a dial indicator on the tip of the pinion gear tooth at a right angle. Hold the side gear in the differential case and check that the backlash is 0 mm (0 in.).

If the backlash is not within the specification, replace the rear differential case sub–assy with a new one.

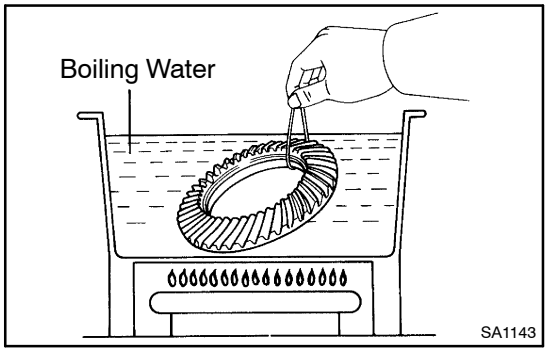


**46. INSTALL DIFFERENTIAL RING GEAR**

(a) Clean the contact surfaces of the differential case and the threads of the ring gear and differential case.

(b) Heat the ring gear to approximately 100°C (212°F) in boiling water.

(c) Carefully remove the ring gear from the boiling water.

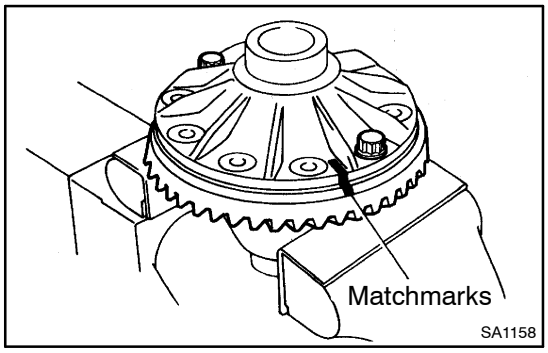


(d) After the moisture on the ring gear has completely evaporated, quickly install the ring gear to the differential case.

HINT:

Align the matchmarks on the ring gear and the differential case.

(e) Tighten the new 2 bolts temporarily so that the bolt holes in the ring gear and differential case are not misaligned.

**NOTICE:**

**The ring gear set bolts should not be tightened until the ring gear has been cooled sufficiently.**

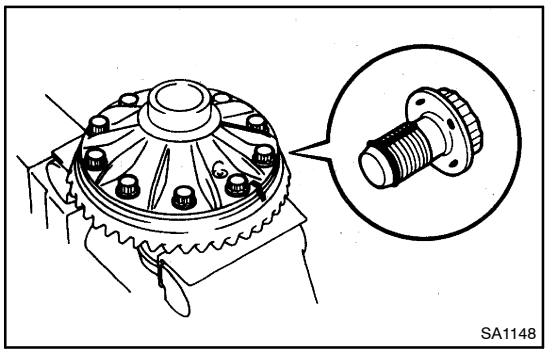


**47. INSTALL REAR DIFFERENTIAL CASE BOLT**

(a) Clean the differential ring gear set bolt hole.

(b) After the ring gear has been cooled sufficiently, install the new 8 ring gear set bolts to which thread lock has been applied.

**Thread lock:**

**Part No. 08833–00100, THREE BOND 1360 K or equivalent.**

**NOTICE:**

**New ring gear set bolts should be used in every case.**

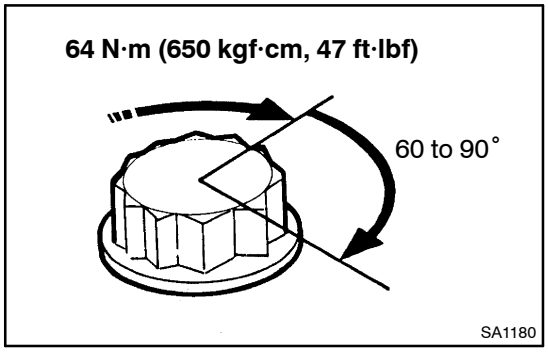


(c) Torque the 10 set bolts uniformly and a little at a time.

**Torque: 64 N·m (650 kgf·cm, 47 ft·lbf)**

(d) Tighten the bolts further by 60 to 90°.

**NOTICE:**

**Tighten the bolts in diagonally opposite pairs.**

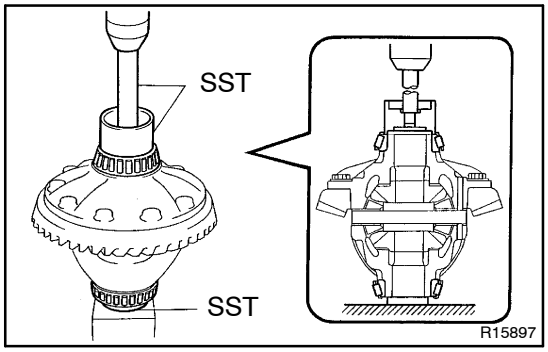


**48. INSTALL REAR DIFFERENTIAL CASE BEARING**

(a) Using SST and a press, install the 2 differential case bearings.
SST 09950–60010 (09951–00560), 09950–70010 (09951–07100), 09950–60020 (09951–00810), 09950–70010 (09951–07100)

**NOTICE:**

- **Align the SST with the center of the differential case.**
- **Replace the bearing outer race when bearing is replaced.**
- **The ring gear tooth (90366–50087) and back surfaces (90366–50027) have different bearing. Because of this, install the ring gear paying attention to their part numbers.**

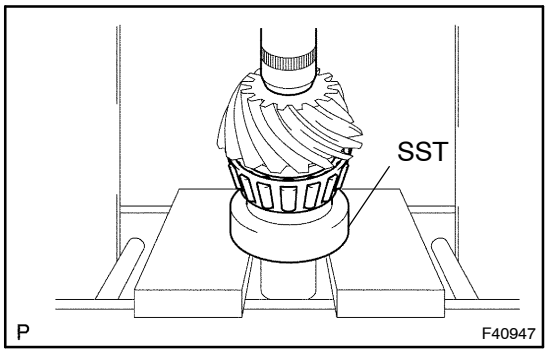


**49. INSTALL REAR DRIVE PINION REAR TAPERED ROLLER BEARING**

(a) Using SST and a press, install the rear bearing.
SST 09502–24010

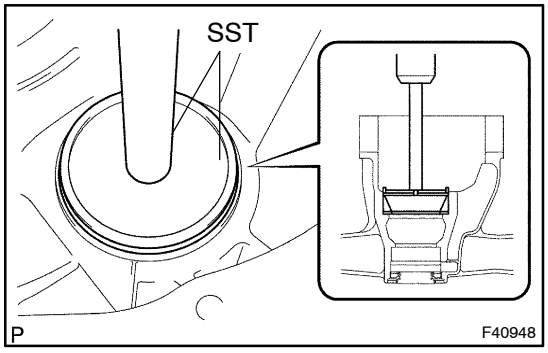


(b) Using SST and a press, install the rear bearing outer race and adjusting washer.
SST 09950–70010 (09951–07100), 09255–10012

HINT:
Select a thrust shim of the same thickness as the removed one.

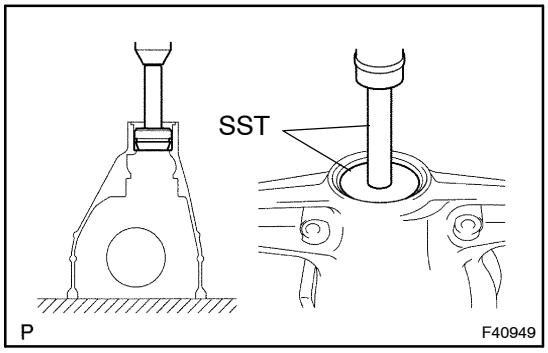


**50. INSTALL DIFFERENTIAL DRIVE PINION**

(a) Using SST and a press, install the front bearing outer race.
SST 09950–60020 (09951–00710), 09950–70010 (09951–07100)

(b) Install the drive pinion in the differential carrier.

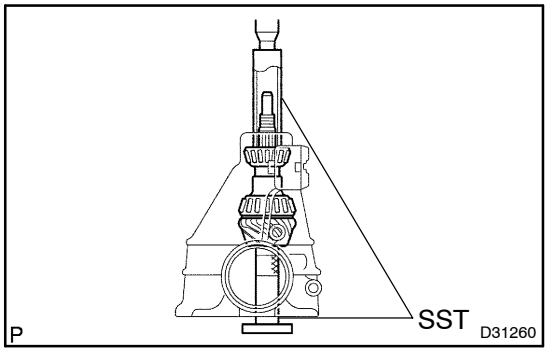


(c) Using SST and a press, install the front bearing on the drive pinion.
SST 09316–60011 (09316–00011), 09608–04031 (09951–07200)

HINT:
Assemble the spacer and oil seal after adjusting the tooth contact pattern.

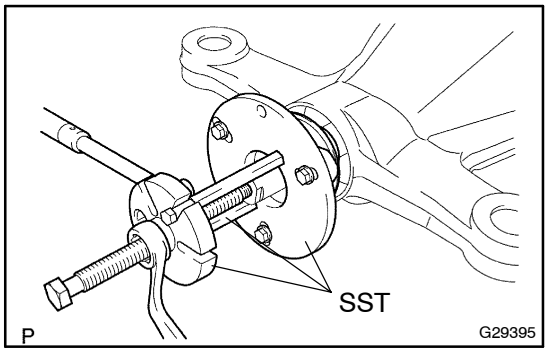


**51. ADJUST DIFFERENTIAL DRIVE PINION PRELOAD**

(a) Using SST, install the companion flange onto the differential carrier.
SST 09950–30012 (09951–03010, 09954–03010, 09956–03060, 09955–03040)

**NOTICE:**
- **Because the spacer is not installed, maintain a little looseness between the companion flange and the drive pinion when installing.**
- **Apply hypoid gear oil to the SST center bolt tip and threads before use.**

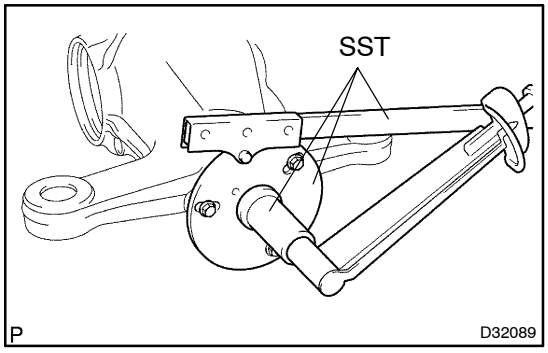


(b) Adjust the drive pinion preload by tightening the companion flange nut.

HINT:
Tighten the nut using approximately 98 N·m (1,000 kgf·cm) of force and then tighten it further while observing the preload.
Using SST to hold the flange, tighten the nut.
SST 09229–55010, 09330–00021

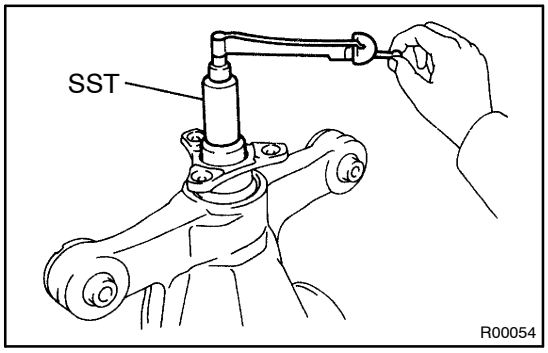


(c) Using SST and a torque wrench, measure the preload.
**Drive pinion preload (at starting):**
**New bearing:**
**1.5 to 2.0 N·m (15 to 21 kgf·cm, 13 to 18 in.·lbf)**
**Reused bearing:**
**0.5 to 0.8 N·m (5 to 8 kgf·cm, 4.3 to 6.9 in.·lbf)**

HINT:
- Do not apply hypoid gear oil if a new bearing is used.
- Turn the bearing clockwise and counterclockwise several times to stabilize the bearing, and then measure the backlash.
- If the preload is not within the specification, adjust the rear differential drive pinion preload or repair as necessary.

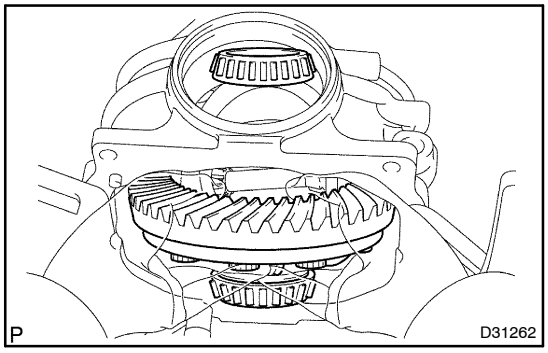


**52. INSTALL REAR DIFFERENTIAL CASE SUB–ASSY**

(a) Install the drive side bearing in the differential carrier first, as shown in the illustration, then install the differential case.

**NOTICE:**

**Do not damage the case bearing and ring gear.**

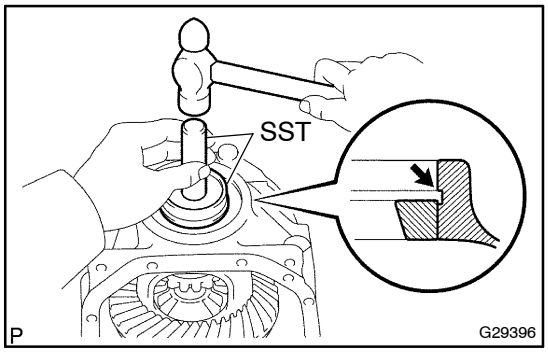


**53. INSTALL REAR DIFFERENTIAL CASE BEARING**

(a) Using SST and a hammer, install the drive pinion side outer race.
SST 09608–32010, 09950–70010 (09951–07200)

HINT:

Tap in the outer race until half of the side gear shaft snap ring groove of the differential carrier can be seen.

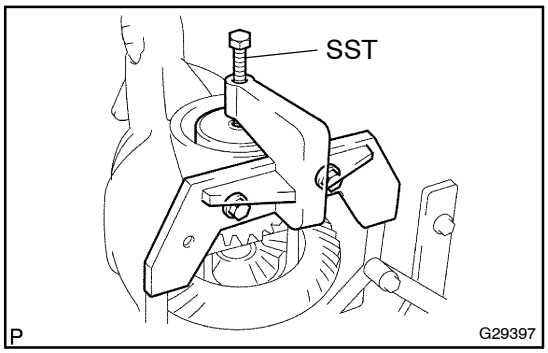


(b) Place the SST to the differential carrier.
SST 09571–50010

(c) Tighten the SST bolt until the SST disc lightly touches to the case bearing (outer race).

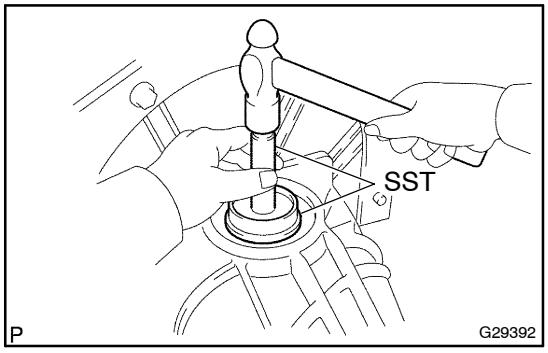


(d) Using SST and a hammer, install the ring gear side outer race.
SST 09950–70010 (09951–07200), 09608–32010

HINT:

Tap in the outer race until it touches the case bearing roller.

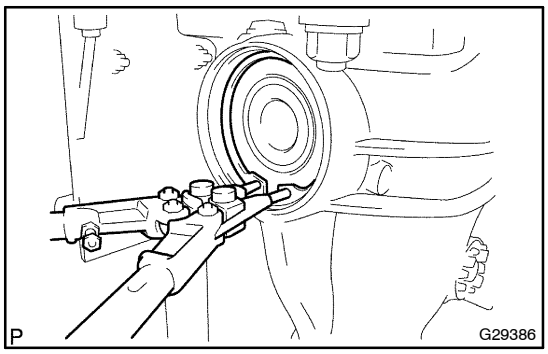


**54. INSTALL REAR DIFFERENTIAL SIDE GEAR SHAFT SHAFT SNAP RING**

HINT:

This procedure is required only when final gear set (drive pinion & ring gear) is replaced.

(a) Using snap ring pliers, install the thinnest side gear shaft shaft snap ring on the ring gear side.

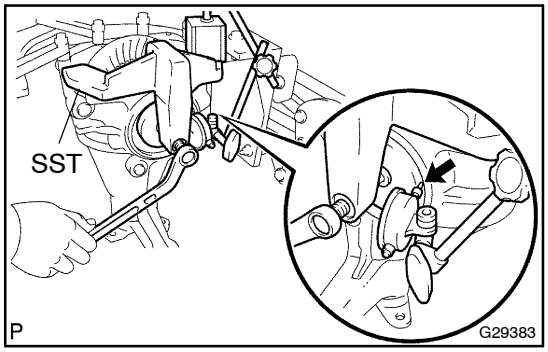


(b) Install a dial indicator to the differential carrier.

(c) Tighten the SST bolt to alter the differential carrier's shape by approximately 0.1 mm (0.004 in.).
SST 09571–50010

**NOTICE:**

**Observe the dial indicator to ensure that the shape of the differential carrier does not change more than 0.2 mm (0.008 in.).**

HINT:

- Set the dial indicator to the rearmost position (upper side in the illustration) of the area around where the side gear shaft oil seal is tapped in.
- Tighten the SST bolt to apply the preload to the case bearing.

(d) Turn the ring gear clockwise and counterclockwise several times.

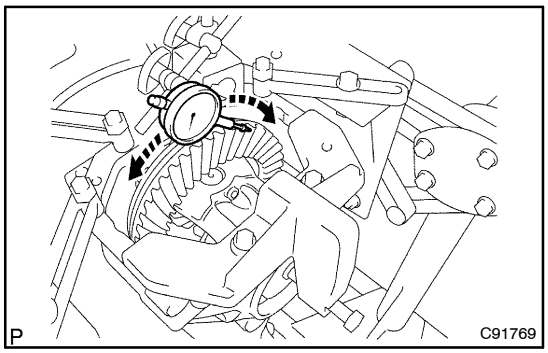


(e) Using a dial indicator, measure the backlash of the ring gear at 3 positions.
**Backlash: 0.08 to 0.13 mm (0.0031 to 0.0051 in.)**

**NOTICE:**

**The difference between the maximum and minimum values must be within 0.05 mm (0.020 in.).**

HINT:

Write the values for reference to select a side gear shaft shaft snap ring. If a value is not within the specified range, replace it with one of a different thickness in the following procedure.

(f) Loosen the SST bolt and separate the SST disc from the case bearing (outer race) on the drive pinion.

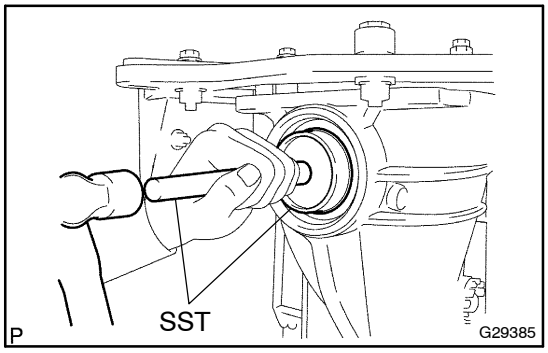


(g) Using SST and a hammer, create a clearance between the side gear shaft shaft snap ring on the ring gear side and outer race.
SST 09608–32010, 09950–70010 (09951–07200)

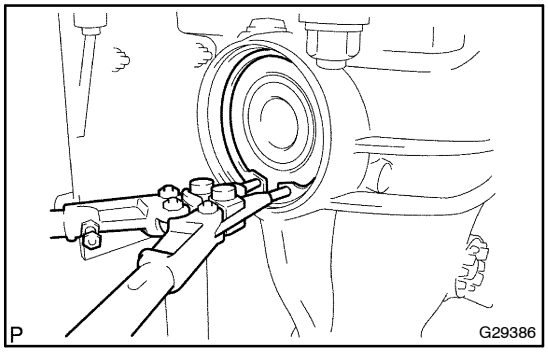


(h) Using snap ring pliers, remove the side gear shaft shaft snap ring on the ring gear side.

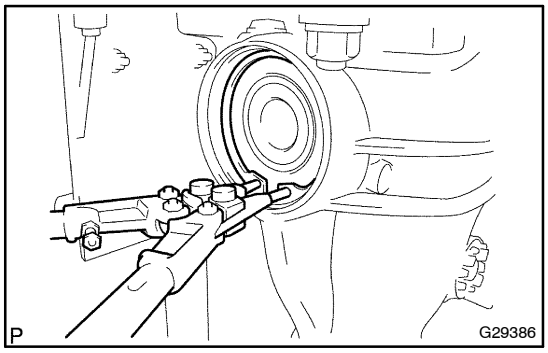


(i) Using snap ring pliers, install a side gear shaft shaft snap ring with different thickness.

HINT:

- There are 39 different thicknesses of the side gear shaft shaft snap ring available in 0.02 mm (0.0008 in.) difference.
- When the side gear shaft shaft snap ring thickness changes by 0.02 mm (0.0008 in.), the backlash changes by 0.02 mm (0.0008 in.).

| Parts No. | Thickness mm (in.) | Parts No. | Thickness mm (in.) |
|---|---|---|---|
| 90521–99062 | 3.66 (0.1441) | 90521–99084 | 4.06 (0.1598) |
| 90521–99063 | 3.68 (0.1449) | 90521–99085 | 4.08 (0.1606) |
| 90521–99064 | 3.70 (0.1457) | 90521–99086 | 4.10 (0.1614) |
| 90521–99065 | 3.72 (0.1465) | 90521–99087 | 4.12 (0.1622) |
| 90521–99066 | 3.74 (0.1472) | 90521–99088 | 4.14 (0.1630) |
| 90521–99067 | 3.76 (0.1480) | 90521–99089 | 4.16 (0.1638) |
| 90521–99068 | 3.78 (0.1488) | 90521–99090 | 4.18 (0.1646) |
| 90521–99070 | 3.80 (0.1496) | 90521–99091 | 4.20 (0.1654) |
| 90521–99071 | 3.82 (0.1503) | 90521–99092 | 4.22 (0.1661) |
| 90521–99072 | 3.84 (0.1512) | 90521–99095 | 4.24 (0.1669) |
| 90521–99073 | 3.86 (0.1520) | 90521–99096 | 4.26 (0.1677) |
| 90521–99074 | 3.88 (0.1528) | 90521–99097 | 4.28 (0.1685) |
| 90521–99075 | 3.90 (0.1535) | 90521–99100 | 4.30 (0.1693) |
| 90521–99076 | 3.92 (0.1543) | 90521–99101 | 4.32 (0.1701) |
| 90521–99077 | 3.94 (0.1551) | 90521–99102 | 4.34 (0.1709) |
| 90521–99078 | 3.96 (0.1559) | 90521–99103 | 4.36 (0.1717) |
| 90521–99079 | 3.98 (0.1567) | 90521–99104 | 4.38 (0.1724) |
| 90521–99081 | 4.00 (0.1575) | 90521–99105 | 4.40 (0.1732) |
| 90521–99082 | 4.02 (0.1583) | 90521–99107 | 4.42 (0.1740) |
| 90521–99083 | 4.04 (0.1591) | | |

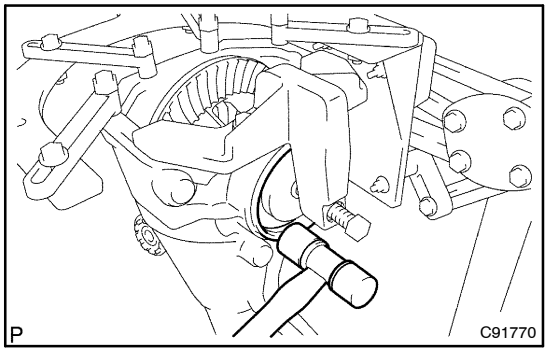


(j) Using a plastic hammer, lightly tap the drive pinion side of the differential carrier.

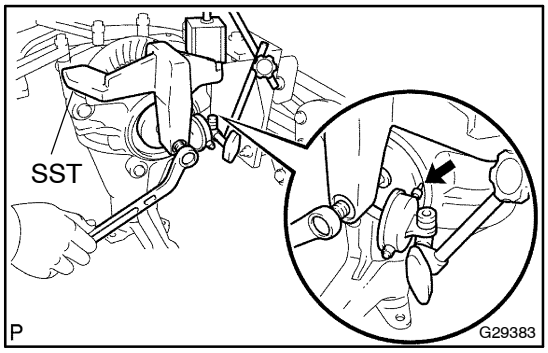


(k) Install a dial indicator onto the differential carrier.

(l) Tighten the SST bolt to alter the differential carrier's shape by approximately 0.1 mm (0.004 in.).
SST 09571–50010

HINT:
Set the dial indicator to the rearmost position (upper side in the illustration) of the area around where the side oil seal tapped in.

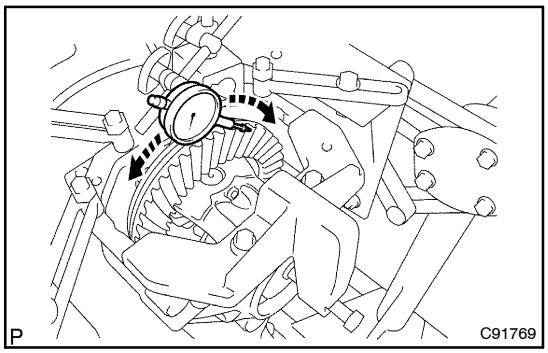


(m) Using a dial indicator, measure the ring gear backlash.
**Backlash: 0.08 to 0.13 mm (0.0031 to 0.0051 in.)**

(n) If the backlash is not within the specified range, replace the side gear shaft shaft snap ring on the ring gear side with one of a different thickness.

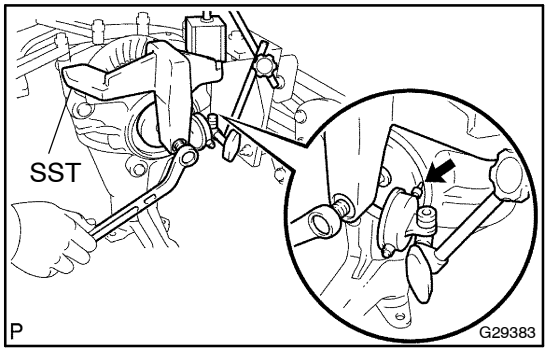


**55. ADJUST DIFFERENTIAL RING GEAR BACKLASH**

(a) Install a dial indicator to the differential carrier.

(b) Tighten the SST bolt to alter the differential carrier's shape by approximately 0.1 mm (0.004 in.).
SST 09571–50010

HINT:
Set the dial indicator to the rearmost position (upper side in the illustration) of the area around where the side oil seal tapped in.

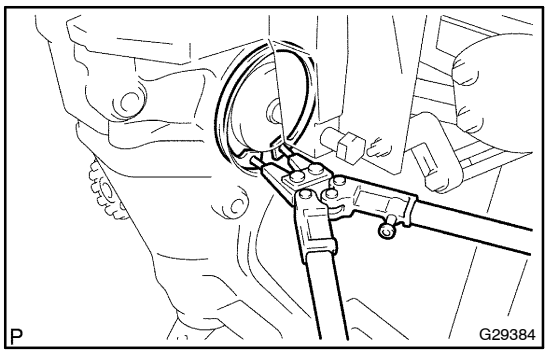


(c) Using snap ring pliers, install the thinnest side gear shaft shaft snap ring on the drive pinion side.

(d) Remove the dial indicator and loosen the bolt until the SST disc is separated from the outer race.

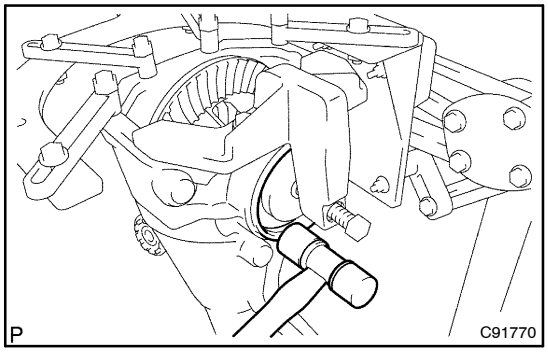


(e) Using a plastic hammer, lightly tap the drive pinion side of the differential carrier.

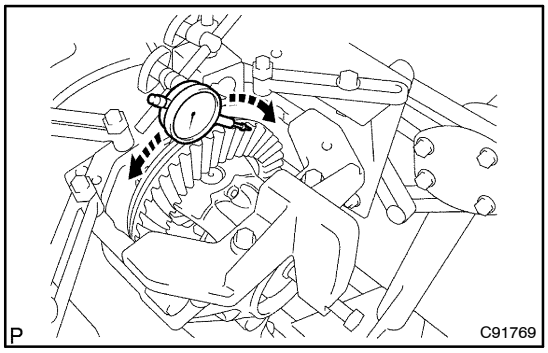


(f) Check the backlash around the ring gear. If even one backlash is smaller than the specified value, adjust the differential ring gear backlash by replacing the side gear shaft shaft snap ring on the drive pinion side with a thicker one.

**Backlash: 0.08 to 0.13 mm (0.0031 to 0.0051 in.)**

HINT:

If a value is not within the specified range, replace it with one of a different thickness in the following procedure.

(g) Loosen the SST bolt and separate the SST disc from the case bearing (outer race) on the drive pinion.

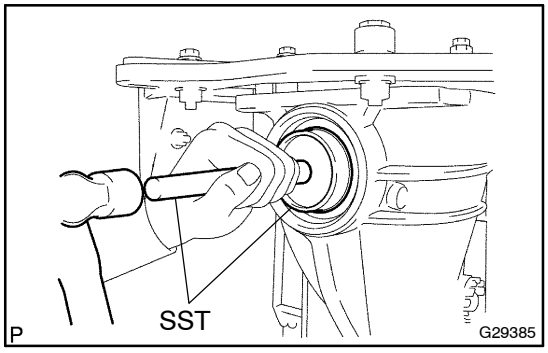


(h) Using SST and a hammer, create a clearance between the side gear shaft shaft snap ring on the ring gear side and outer race.

SST 09608–32010, 09950–70010 (09951–07200)

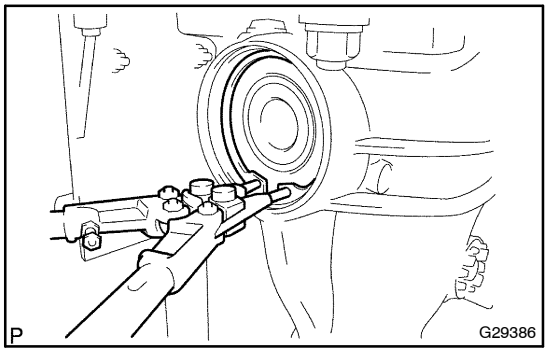


(i) Using snap ring pliers, remove the side gear shaft shaft snap ring on the ring gear side.

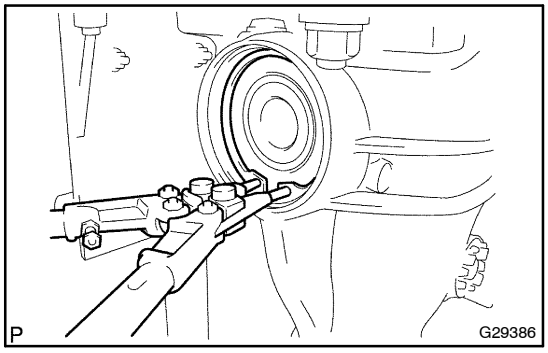


(j) Using snap ring pliers, install a side gear shaft shaft snap ring with different thickness.

HINT:

- There are 39 different thicknesses of the side gear shaft shaft snap ring available in 0.02 mm (0.0008 in.) difference.
- When the side gear shaft shaft snap ring thickness changes by 0.02 mm (0.0008 in.), the backlash changes by 0.02 mm (0.0008 in.).

| Parts No. | Thickness mm (in.) | Parts No. | Thickness mm (in.) |
|---|---|---|---|
| 90521–99062 | 3.66 (0.1441) | 90521–99084 | 4.06 (0.1598) |
| 90521–99063 | 3.68 (0.1449) | 90521–99085 | 4.08 (0.1606) |
| 90521–99064 | 3.70 (0.1457) | 90521–99086 | 4.10 (0.1614) |
| 90521–99065 | 3.72 (0.1465) | 90521–99087 | 4.12 (0.1622) |
| 90521–99066 | 3.74 (0.1472) | 90521–99088 | 4.14 (0.1630) |
| 90521–99067 | 3.76 (0.1480) | 90521–99089 | 4.16 (0.1638) |
| 90521–99068 | 3.78 (0.1488) | 90521–99090 | 4.18 (0.1646) |
| 90521–99070 | 3.80 (0.1496) | 90521–99091 | 4.20 (0.1654) |
| 90521–99071 | 3.82 (0.1503) | 90521–99092 | 4.22 (0.1661) |
| 90521–99072 | 3.84 (0.1512) | 90521–99095 | 4.24 (0.1669) |
| 90521–99073 | 3.86 (0.1520) | 90521–99096 | 4.26 (0.1677) |
| 90521–99074 | 3.88 (0.1528) | 90521–99097 | 4.28 (0.1685) |
| 90521–99075 | 3.90 (0.1535) | 90521–99100 | 4.30 (0.1693) |
| 90521–99076 | 3.92 (0.1543) | 90521–99101 | 4.32 (0.1701) |
| 90521–99077 | 3.94 (0.1551) | 90521–99102 | 4.34 (0.1709) |
| 90521–99078 | 3.96 (0.1559) | 90521–99103 | 4.36 (0.1717) |
| 90521–99079 | 3.98 (0.1567) | 90521–99104 | 4.38 (0.1724) |
| 90521–99081 | 4.00 (0.1575) | 90521–99105 | 4.40 (0.1732) |
| 90521–99082 | 4.02 (0.1583) | 90521–99107 | 4.42 (0.1740) |
| 90521–99083 | 4.04 (0.1591) | | |

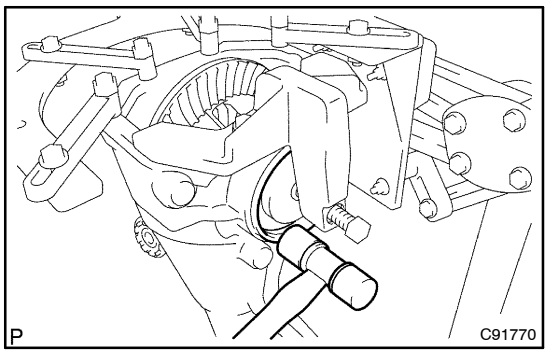


(k) Using a plastic hammer, lightly tap the drive pinion side of the differential carrier.

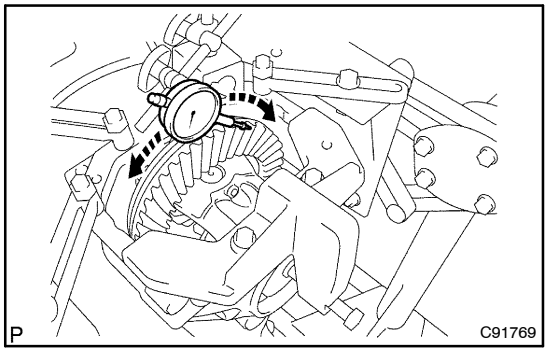


(l) Check the backlash around the ring gear. If even one backlash is smaller than the specified value, adjust the differential ring gear backlash by replacing the side gear shaft shaft snap ring on the drive pinion side with a thicker one.
**Backlash: 0.08 to 0.13 mm (0.0031 to 0.0051 in.)**

HINT:
- If a value is not within the specified range, replace it with one of a different thickness in the same procedure.

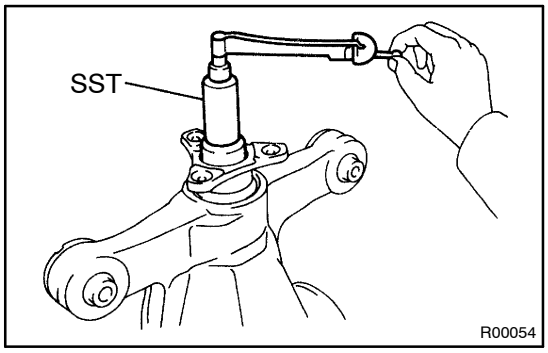


**56. ADJUST TOTAL PRELOAD**

(a) Using SST and a torque wrench, measure the preload with the teeth of the drive pinion and ring gear in contact.
SST 09229–55010
**Total preload (at starting):**
**Drive pinion preload plus 0.48 to 1.43 N·m**
**(4.89 to 14.58 kgf·cm, 4.25 to 12.66 in.·lbf)**

**NOTICE:**
- **If the measured preload is less than the specification, replace the rear differential side gear shaft shaft snap ring of the ring gear's tooth surface side with a thicker one.**
  **If the preload is greater than the specification, replace the rear differential side gear shaft shaft snap ring of the ring gear's tooth surface side with a thinner one.**

HINT:
When the rear differential side gear shaft shaft snap ring thickness changes by 0.02 mm (0.0008 in.), the total preload will change by approximately 0.1 N·m (1 kgf·cm, 0.9 in.·lbf).

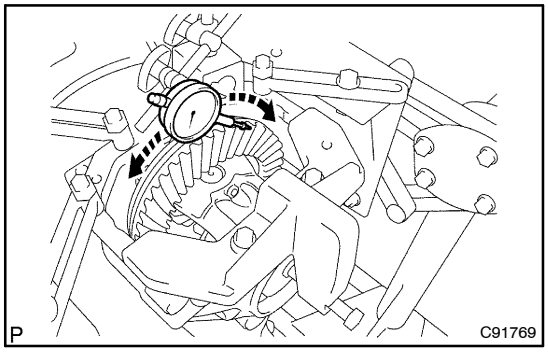


(b) Set a dial indicator to the end of the differential ring gear face.

(c) While holding the rear drive pinion companion flange rear, rotate the differential ring gear and measure the backlash.
**Backlash: 0.08 to 0.13 mm (0.0031 to 0.0051 in.)**

**NOTICE:**
- **If the measured value is out of the specified value, adjust it by increasing or decreasing the thickness of both right and left side gear shaft shaft snap ring equally.**
- **When the side gear shaft shaft snap ring thickness changes by 0.02 mm (0.0008 in.), the backlash will change by approximately 0.02 mm (0.0008 in.).**

(d) Recheck the total preload.

**57. INSPECT TOOTH CONTACT BETWEEN RING GEAR AND DRIVE PINION**

(a) Coat 3 or 4 teeth at the 3 different positions on the ring gear with red lead primer.
(b) Hold the companion flange firmly and rotate the ring gear in both directions.
(c) Inspect the tooth contact pattern.

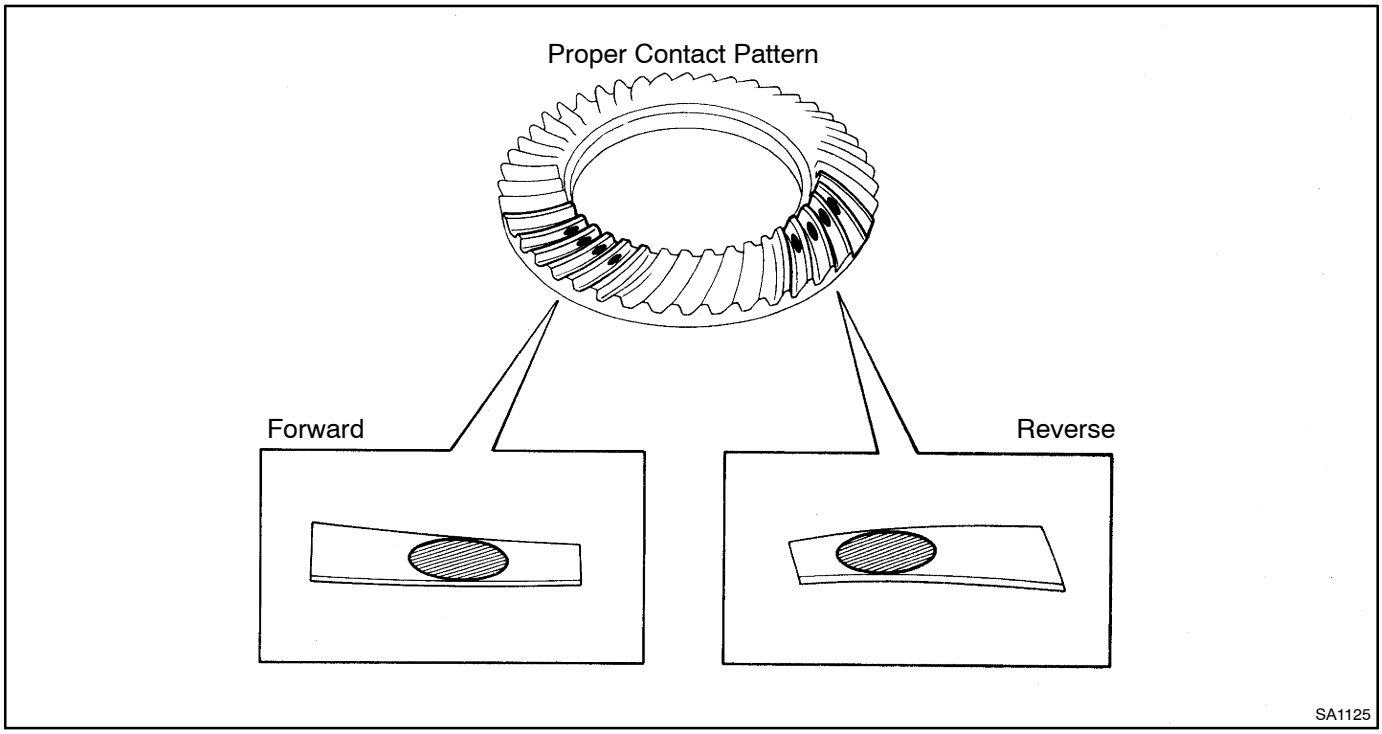


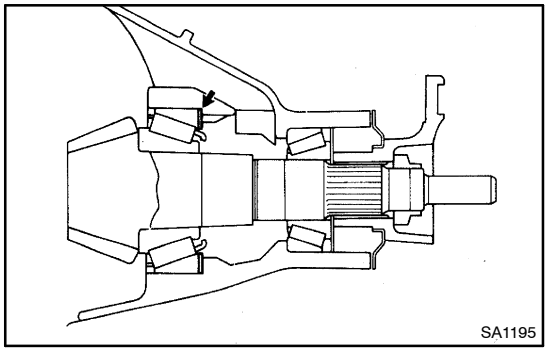


If tooth contact pattern is not correct, replace the adjusting washer installed on the front of the drive pinion rear bearing to adjust it.

**NOTICE:**

**Make sure to always replace the adjusting washer with a new one.**

HINT:

Refer to the table on the next page to select the adjusting washer.

| Example tooth contact pattern | | Adjusting rear differential drive pinion plate washer selection | |
|---|---|---|---|
| Forward | Reverse | | |
| 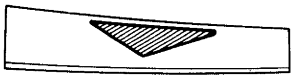 | | + 0.08 mm (+ 0.0031 in.) | Replacing the washer with one 0.08 mm (0.0031 in.) thicker will give proper contact pattern. |
| 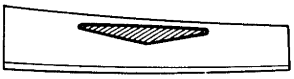 | | + 0.14 mm (+ 0.0055 in.) | Replacing the washer with one 0.14 mm (0.0055 in.) thicker will give proper contact pattern. |
| 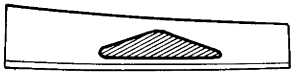 | 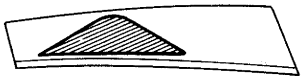 | – 0.08 mm (– 0.0031 in.) | Replacing the washer with one 0.08 mm (0.0031 in.) thinner will give proper contact pattern. |
| 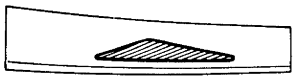 | 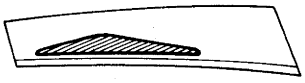 | – 0.14 mm (– 0.0055 in.) | Replacing the washer with one 0.14 mm (0.0055 in.) thinner will give proper contact pattern. |

V02917

HINT:
There are 42 thicknesses of the rear differential drive pinion plate washers available in 0.01 mm (0.04 in.) difference.

| Parts No. | Thickness mm (in.) | No. | Parts No. | Thickness mm (in.) | No. |
|---|---|---|---|---|---|
| 90201–70001 | 1.87 (0.0736) | 87 | 90201–70022 | 2.08 (0.0819) | 08 |
| 90201–70002 | 1.88 (0.0740) | 88 | 90201–70023 | 2.09 (0.0823) | 09 |
| 90201–70003 | 1.89 (0.0744) | 89 | 90201–70024 | 2.10 (0.0827) | 10 |
| 90201–70004 | 1.90 (0.0748) | 90 | 90201–70025 | 2.11 (0.0831) | 11 |
| 90201–70005 | 1.91 (0.0752) | 91 | 90201–70026 | 2.12 (0.0835) | 12 |
| 90201–70006 | 1.92 (0.0756) | 92 | 90201–70027 | 2.13 (0.0839) | 13 |
| 90201–70007 | 1.93 (0.0760) | 93 | 90201–70028 | 2.14 (0.0843) | 14 |
| 90201–70008 | 1.94 (0.0764) | 94 | 90201–70029 | 2.15 (0.0846) | 15 |
| 90201–70009 | 1.95 (0.0768) | 95 | 90201–70030 | 2.16 (0.0850) | 16 |
| 90201–70010 | 1.96 (0.0772) | 96 | 90201–70031 | 2.17 (0.0854) | 17 |
| 90201–70011 | 1.97 (0.0776) | 97 | 90201–70032 | 2.18 (0.0858) | 18 |
| 90201–70012 | 1.98 (0.0780) | 98 | 90201–70033 | 2.19 (0.0862) | 19 |
| 90201–70013 | 1.99 (0.0783) | 99 | 90201–70034 | 2.20 (0.0866) | 20 |
| 90201–70014 | 2.00 (0.0787) | 00 | 90201–70035 | 2.21 (0.0870) | 21 |
| 90201–70015 | 2.01 (0.0791) | 01 | 90201–70036 | 2.22 (0.0874) | 22 |
| 90201–70016 | 2.02 (0.0795) | 02 | 90201–70037 | 2.23 (0.0878) | 23 |
| 90201–70017 | 2.03 (0.0799) | 03 | 90201–70038 | 2.24 (0.0882) | 24 |
| 90201–70018 | 2.04 (0.0803) | 04 | 90201–70039 | 2.25 (0.0886) | 25 |
| 90201–70019 | 2.05 (0.0807) | 05 | 90201–70040 | 2.26 (0.0890) | 26 |
| 90201–70020 | 2.06 (0.0811) | 06 | 90201–70041 | 2.27 (0.0894) | 27 |
| 90201–70021 | 2.07 (0.0815) | 07 | 90201–70042 | 2.28 (0.0898) | 28 |

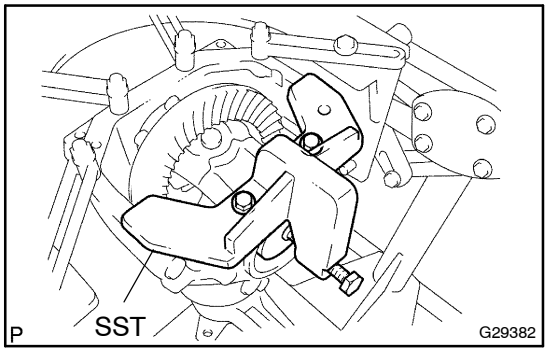


**58. REMOVE REAR DIFFERENTIAL SIDE GEAR SHAFT SHAFT SNAP RING**

(a) Install the SST to the rear differential carrier assy.
SST 09571–50010

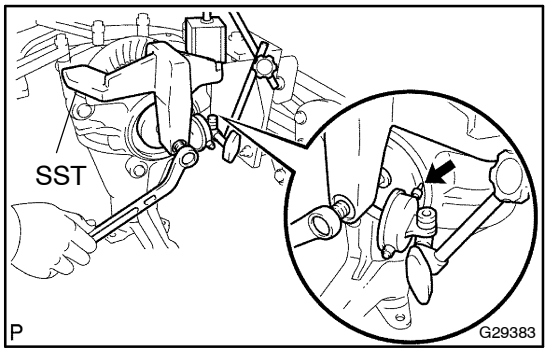


(b) Install a dial indicator to the rear differential carrier assy.

(c) Tighten the SST bolt and alter the differential carrier's shape to create a 0.1 mm (0.004 in.) clearance between the side bearing (outer race) and side gear shaft shaft snap ring.

**NOTICE:**

**Observe the dial indicator to ensure that the shape of the differential carrier does not change more than 0.2 mm (0.008 in.).**

HINT:

- Set the dial indicator to the rearmost position (upper side in the illustration) of the area around where the side oil seal tapped in.
- Approximately 0.1 mm (0.004 in.) clearance between the side bearing (outer race) and the side gear shaft shaft snap ring is sufficient enough for the washer to move slightly.

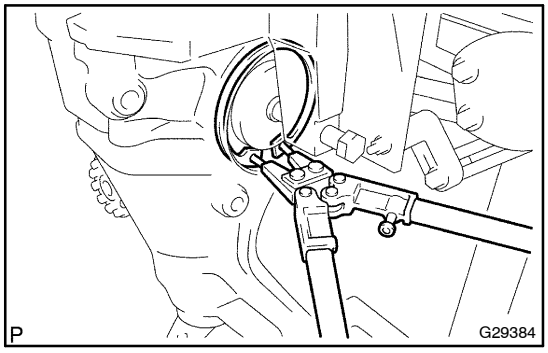


(d) Using snap ring pliers, remove the side gear shaft shaft snap ring on the drive pinion side.

HINT:

For reassembly purposes, measure the thickness of the side gear shaft shaft snap ring. Write down the result.

(e) Remove the dial indicator and loosen the SST bolt.

**NOTICE:**

**Do not remove the SST.**

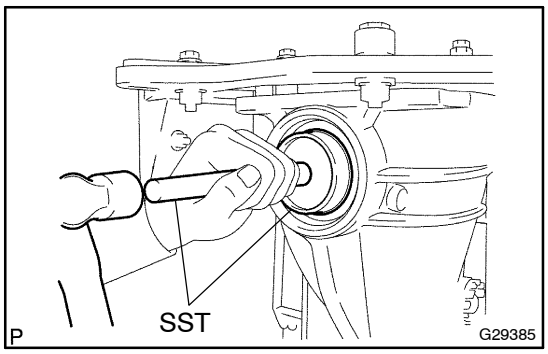


**59. REMOVE REAR DIFFERENTIAL SIDE GEAR SHAFT SHAFT SNAP RING**

(a) Using SST and a hammer, create a clearance between the side bearing (outer race) on the ring gear and side gear shaft shaft snap ring.
SST 09608–32010, 09950–70010 (09951–07200)

HINT:

The clearance cannot be seen, but tapping the SST with a hammer three or four times should be enough.

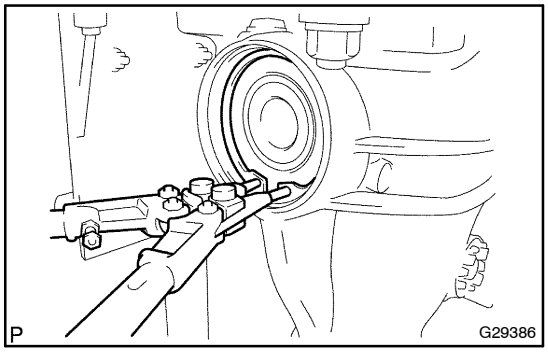


(b) Using snap ring pliers, remove the side gear shaft shaft snap ring on the ring gear side.

HINT:

For reassembly purposes, measure the thickness of the side gear shaft shaft snap ring. Write down the result.

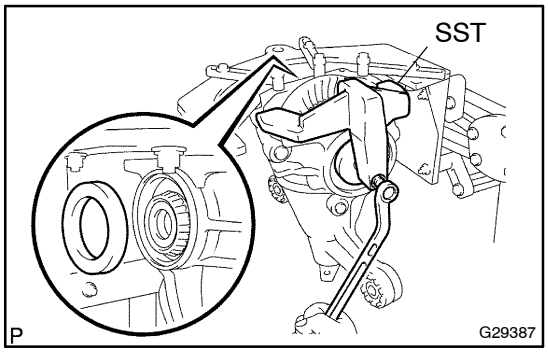


**60. REMOVE REAR DIFFERENTIAL CASE BEARING**

(a) Tighten the SST bolt and push out the outer race on the ring gear side.

SST 09571–50010

**NOTICE:**

**Do not drop the side bearing (outer race).**

(b) Remove the SST.

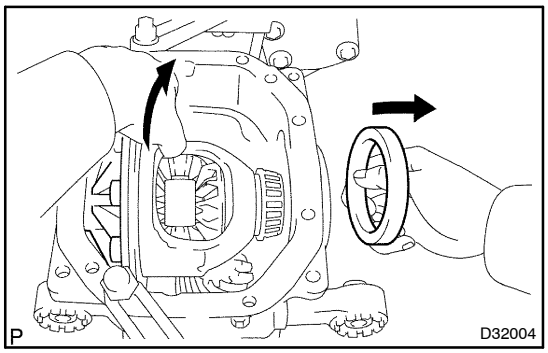


**61. REMOVE REAR DIFFERENTIAL CASE BEARING**

(a) Raise the ring gear side of the differential case slightly to remove the drive pinion side outer race.

HINT:

For reassembly, check the installation position of the outer race and of the side gear shaft shaft snap ring before removing the outer race. Write down the result.

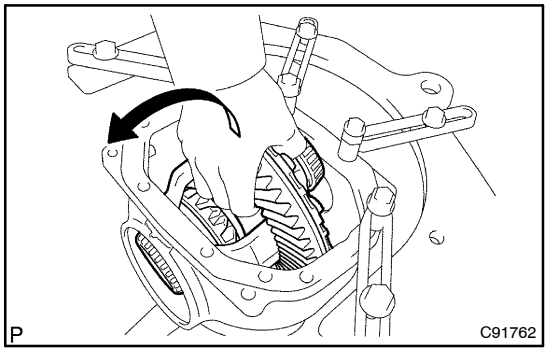


**62. REMOVE REAR DIFFERENTIAL CASE SUB–ASSY**

**NOTICE:**

**Do not damage the case bearing.**

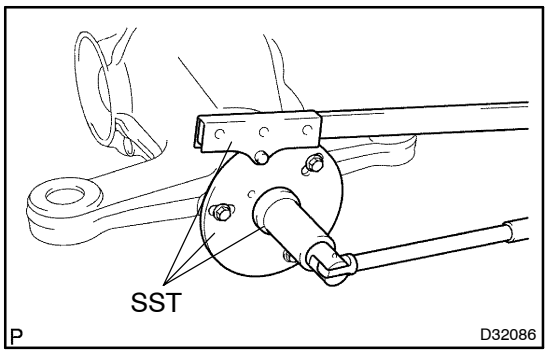


**63. REMOVE REAR DRIVE PINION NUT**

(a) Using SST to hold the flange, remove the nut.

SST 09229–55010, 09330–00021, 09950–30012 (09955–03040)

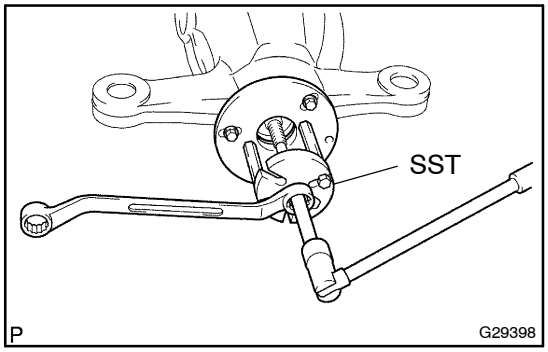


**64. REMOVE REAR DRIVE PINION COMPANION FLANGE SUB–ASSY REAR**

(a) Using SST, remove the companion flange.

SST 09950–30012 (09951–03010, 09953–03010, 09954–03010, 09956–03060, 09955–03040)

**65. REMOVE REAR DIFFERENTIAL DRIVE PINION OIL SLINGER**

(a) Using a magnet hand, remove the differential drive pinion oil slinger.

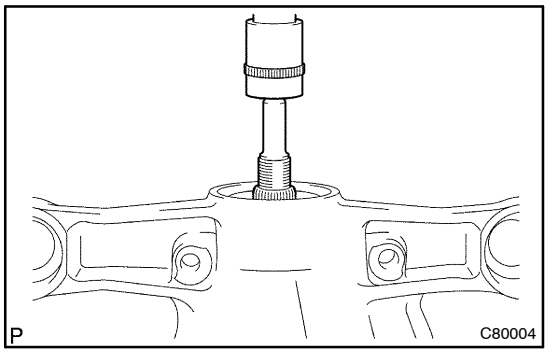


**66. REMOVE DIFFERENTIAL DRIVE PINION**

(a) Using a press, remove the drive pinion with the rear bearing from the differential carrier.

**NOTICE:**

**Be careful not to drop the drive pinion.**

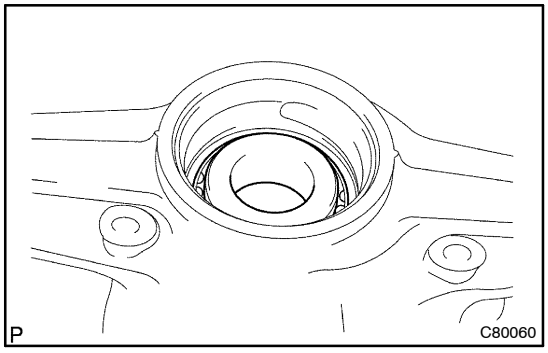


**67. REMOVE REAR DRIVE PINION FRONT TAPERED ROLLER BEARING**

(a) Remove the front bearing from the differential carrier.

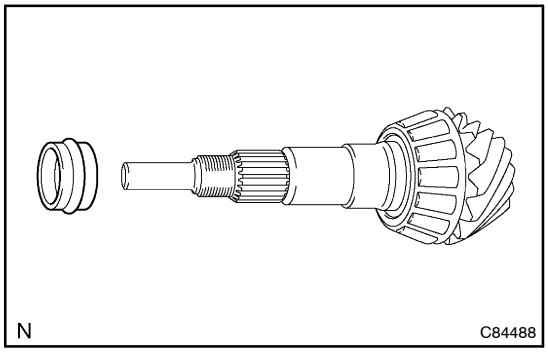


**68. INSTALL REAR DIFFERENTIAL DRIVE PINION BEARING SPACER**

(a) Install the spacer to the drive pinion.

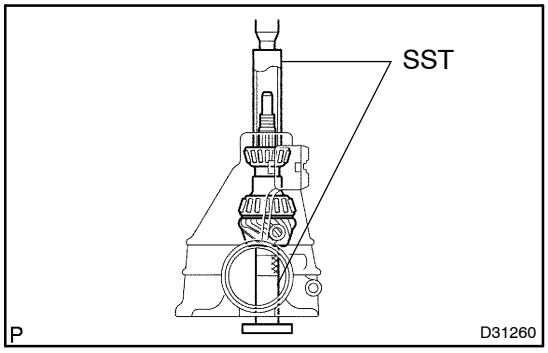


**69. INSTALL DIFFERENTIAL DRIVE PINION**

(a) Using SST and a press, install the drive pinion (rear bearing RR inner race) and rear drive pinion tapered roller bearing FR inner race to the differential carrier.
SST 09316–60011 (09316–00011), 09608–04031

**70. INSTALL REAR DIFFERENTIAL DRIVE PINION OIL SLINGER**

(a) Install the rear differential drive pinion oil slinger to the differential drive pinion.

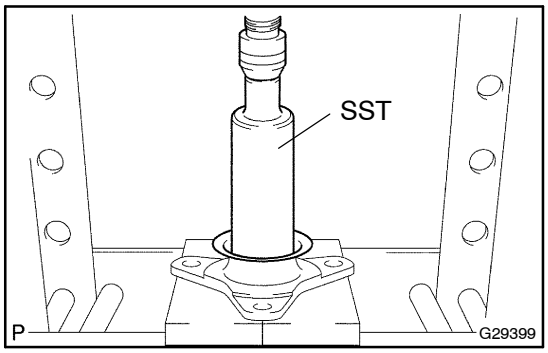


**71. INSTALL REAR DIFFERENTIAL DUST DEFLECTOR**

(a) Perform this procedure only when replacing the dust cover.

(b) Using SST and a press, insert a new dust deflector into the companion flange.
SST 09316–60011 (09316–00011)

**NOTICE:**

- **Slowly press a new dust deflector into the companion flange while observing the dust deflector. Do not press excessively.**
- **If necessary, remove any burrs after inserting the new dust deflector.**

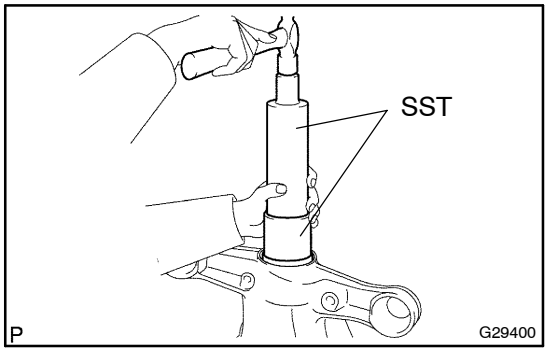


**72. INSTALL REAR DIFFERENTIAL CARRIER OIL SEAL**

(a) Apply a small amount of MP grease to a new oil seal lip.

(b) Using SST and a press, insert the new oil seal into the rear differential carrier.

**NOTICE:**

**Be sure that the oil seal is straight when inserting.**
**Oil seal drive in depth: 0 ± 0.5 mm (0 ± 0.020 in.)**
SST 09316–60011 (09316–00011), 09710–04101

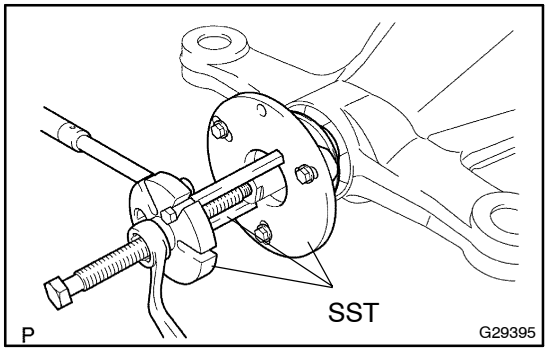


**73. INSTALL REAR DRIVE PINION COMPANION FLANGE SUB–ASSY REAR**

(a) Using SST, install the companion flange to the differential carrier ASSY.
SST 09950–30012 (09951–03010, 09953–03010, 09954–03010, 09956–03060, 09955–03040)

**NOTICE:**

**Apply hypoid gear oil to the SST center bolt tip and threads before use.**

(b) Apply hypoid gear oil LSD to the threads of a new nut.

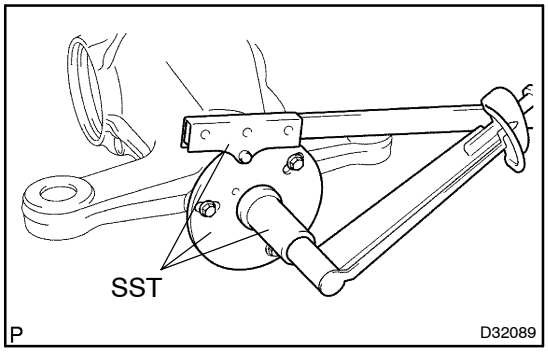


(c) Using SST, hold the flange and tighten the nut while observing the preload with SST and torque wrench.
SST 09229–55010, 09330–00021
**Torque: 98 N·m to 490 N·m**
**(1000 kgf·cm to 5,000 kgf·cm, 72 ft·lbf to 361 ft·lbf)**

**NOTICE:**

- **Do not tighten excessively, otherwise the threads will be stripped.**
- **Apply hypoid gear oil LSD to the threads of the nut and drive pinion.**

HINT:
Tighten the nut using approximately 98 N·m (1,000 kgf·cm) of force and then tighten it further while observing the preload.

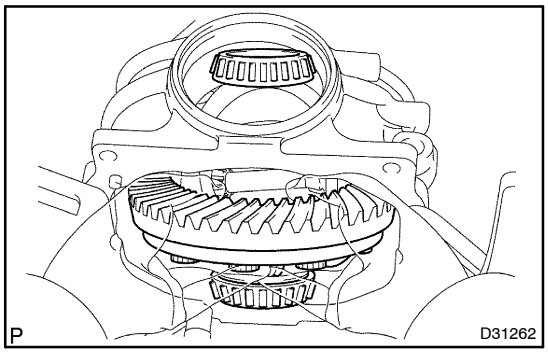


**74. INSTALL REAR DIFFERENTIAL CASE SUB–ASSY**

(a) Insert the differential case from the ring gear tooth side to install.

**NOTICE:**
**Do not damage the case bearing or ring gear.**

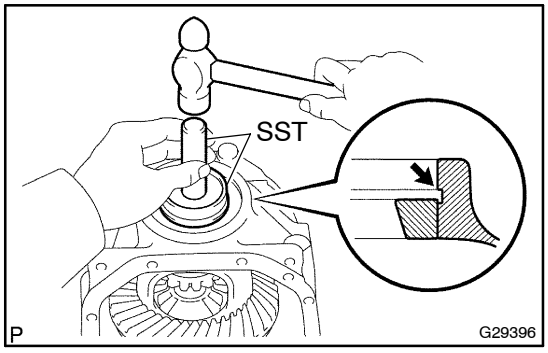


**75. INSTALL REAR DIFFERENTIAL CASE BEARING**

(a) Using SST and a hammer, install the drive pinion side outer race.
SST 09608–32010, 09950–70010 (09951–07200)

HINT:
Tap in the outer race until half of the side gear shaft shaft snap ring groove of the differential carrier can be seen.

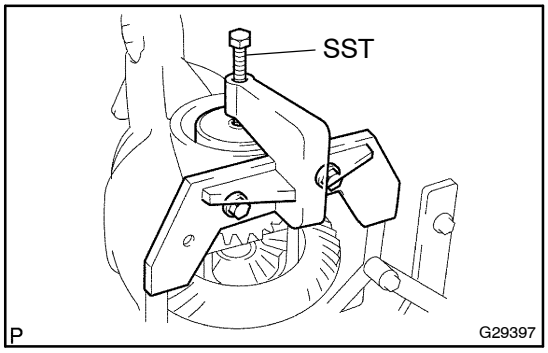


(b) Place the SST to the differential carrier.
SST 09571–50010

(c) Tighten the SST bolt until the SST disc lightly touches to the case bearing (outer race).

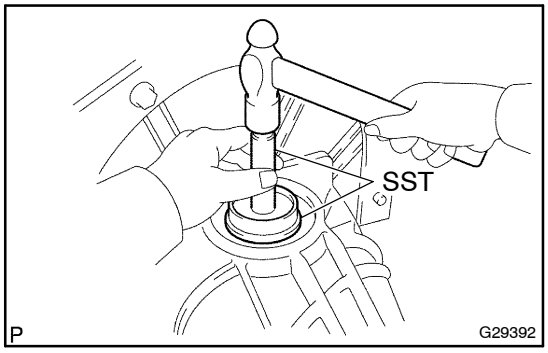


(d) Using SST and a hammer, install the ring gear side outer race.
SST 09950–70010 (09951–07200), 09608–32010

HINT:
Tap in the outer race until it touches the case bearing roller.

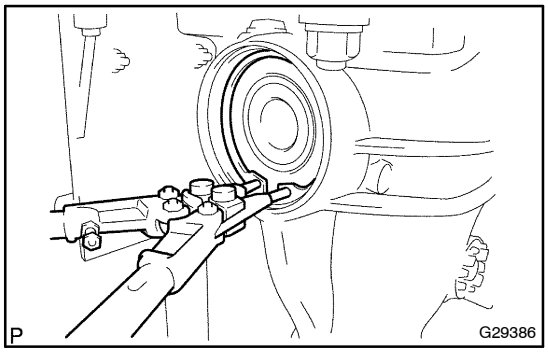


**76. INSTALL REAR DIFFERENTIAL SIDE GEAR SHAFT SHAFT SNAP RING**

(a) Using snap ring pliers, install the side gear shaft shaft snap ring in the differential carrier on the ring gear side.

HINT:
Use the side gear shaft shaft snap ring installed when performing tooth contact adjustment.

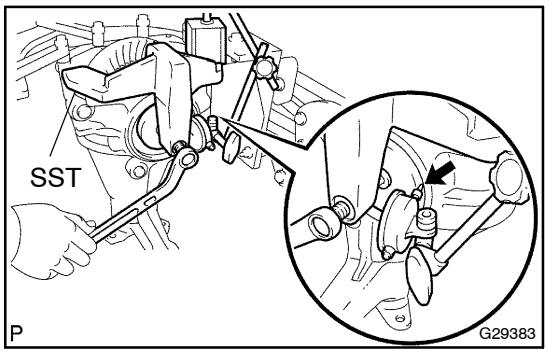


(b) Set a dial indicator on the differential carrier.

(c) Tighten the SST bolt to alter the differential carrier's shaft.

**NOTICE:**
**Do not alter the shape excessively.**
**Shaped limit: 0.20 mm (0.0079 in.)**

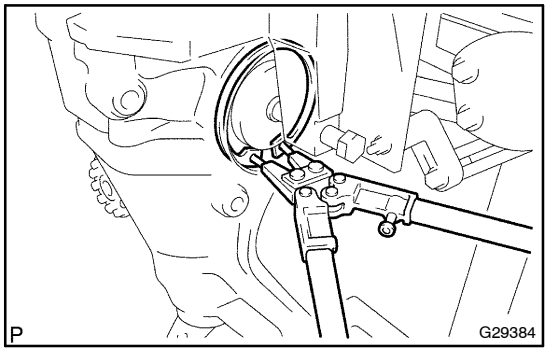


(d) Using snap ring pliers, install the side gear shaft shaft snap ring on the drive pinion side.

HINT:
Use the side gear shaft shaft snap ring installed at tooth contact adjustment.

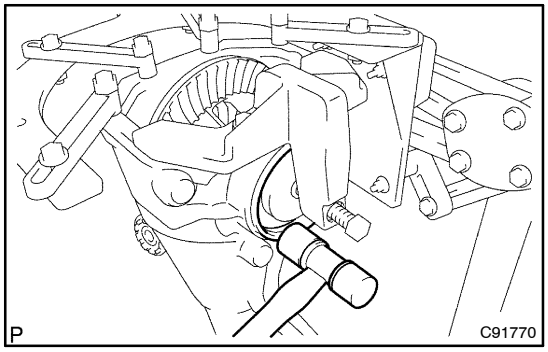


(e) Remove the dial indicator, tap the differential carrier on the drive pinion side using a plastic hammer to stabilize the case bearing.

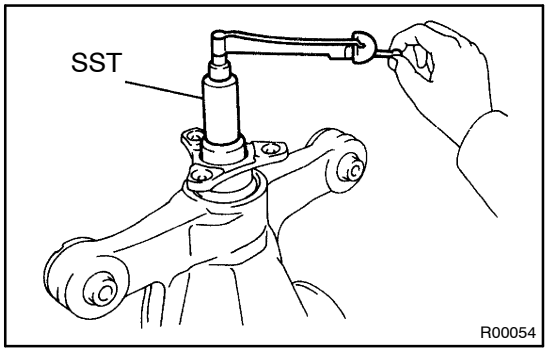


**77. ADJUST DIFFERENTIAL DRIVE PINION PRELOAD**

(a) Using SST and a torque wrench, measure the preload.
SST 09229–55010
**Drive pinion preload (at starting):**
**New bearing:**
**1.5 to 2.0 N·m (15 to 21 kgf·cm, 13 to 18 in.·lbf)**
**Reused bearing:**
**0.5 to 0.8 N·m (5 to 8 kgf·cm, 4.3 to 6.9 in.·lbf)**

**NOTICE:**
**Rotate the flange clockwise and counterclockwise several times to stabilize the bearing before measuring the differential drive pinion preload.**

(b) If the preload is greater than the specified maximum value, replace the bearing spacer.

**NOTICE:**
**Because the bearing spacer deforms with use, replace the bearing spacer with a new one if the drive pinion preload is greater than the maximum value.**

(c) If the preload is less than the specified minimum value, check the preload while retightening the nut by 5 to 10 degrees to adjust it into the specified value range.
**Torque: 98 to 490 N·m**
**(1,000 to 5000 kgf·cm, 72 to 361 ft·lbf)**

HINT:
Tighten the nut using approximately 98 N·m (1,000 kgf·cm) of force and then tighten it further while observing the preload.

(d) Even if the nut tightening torque is greater than the specified maximum value, if the preload is less than the specified minimum value, loosen the nut and check that the threads of the nut and drive pinion are not stripped.

(e) If the threads are not stripped, replace the spacer and apply hypoid gear oil LSD to the threads and repeat the procedure.

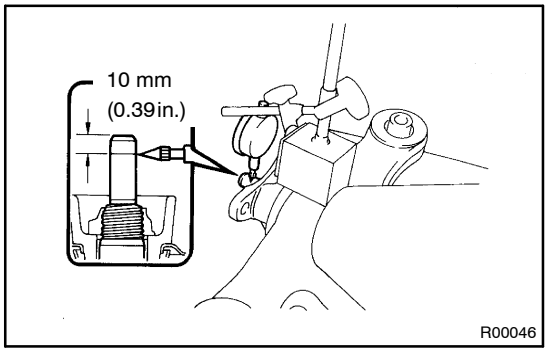


**78. INSPECT RUNOUT OF DIFFERENTIAL DRIVE PINION**

(a) Place a dial indicator where 10 mm (0.39 in.) away from the drive pinion shaft tip at a right angle.

(b) Measure the shaft runout.
**Maximum runout: 0.08 mm (0.0031 in.)**

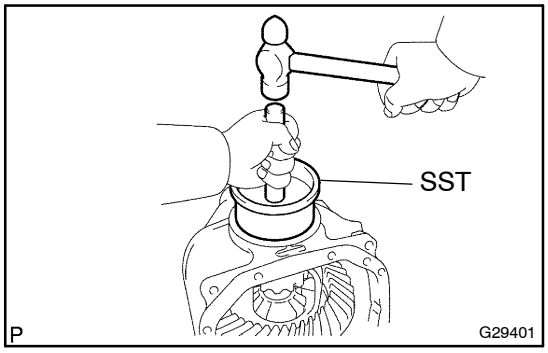


**79. INSTALL REAR DIFFERENTIAL SIDE GEAR SHAFT OIL SEAL**

(a) Apply MP grease to the 2 new oil seal lips.

(b) Using SST and a hammer, tap a new oil seal until the face becomes flush with the differential carrier surface.
SST 09223–15030, 09950–70010 (09951–07200)

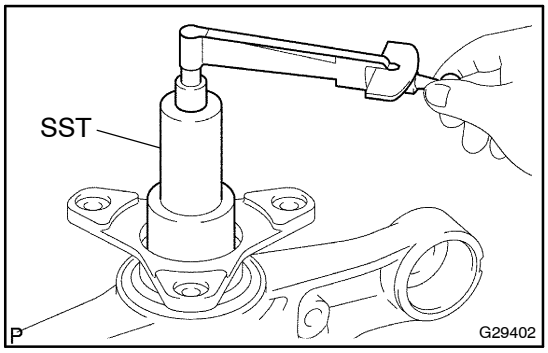


**80. INSPECT TOTAL PRELOAD**

(a) Using SST and a torque wrench, check the torque (at starting) with the drive pinion and ring gear teeth in contact.
SST 09229–55010
**Total preload (at starting):**
**Drive pinion preload plus 0.48 to 1.43 N·m**
**(4.89 to 14.58 kgf·cm, 4.25 to 12.66 in.·lbf)**

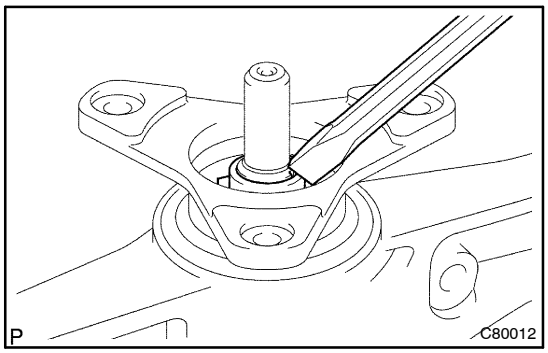


**81. INSTALL REAR DRIVE PINION NUT**

(a) Using a chisel and a hammer, calk the nut.

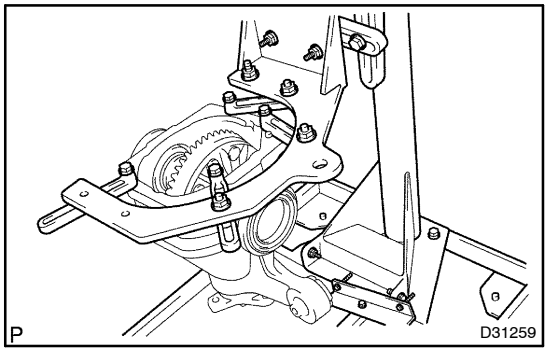


**82. REMOVE DIFFERENTIAL CARRIER ASSY REAR**

(a) Remove the differential carrier assy from the overhaul attachment.

**NOTICE:**

**Clean the fitting surface between the differential carrier and carrier cover.**

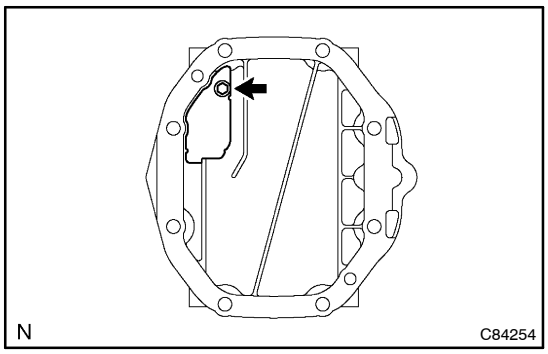


**83. INSTALL REAR DIFFERENTIAL CARRIER COVER**

(a) Clean the seal packing attached on the differential carrier and carrier cover using a scraper and wire brush. Then remove the oil with white gasoline or equivalent.

**NOTICE:**

**Be careful not to scratch the fitting surface.**

(b) Install the rear differential breather plug oil deflector to the rear differential carrier cover.
**Torque: 7.0 N·m (70 kgf·cm, 62 ft·lbf)**

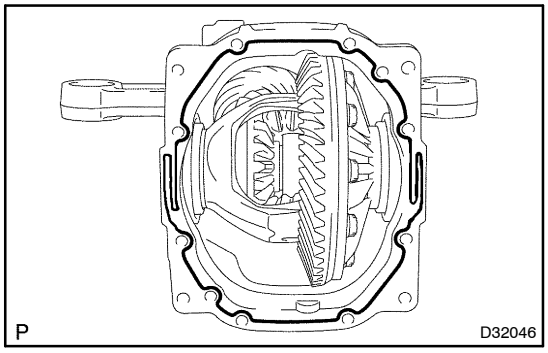


(c) Apply seal packing 1281 to the differential carrier at the position shown in the illustration.

**NOTICE:**

- **Apply the seal packing in drops, approximately 2 to 3 mm (0.08 to 0.12 in.) in diameter entirely.**
- **Overlap the seal packing at least 10 mm at the beginning and the end of application.**
- **Install the differential carrier cover within 3 minutes of application.**

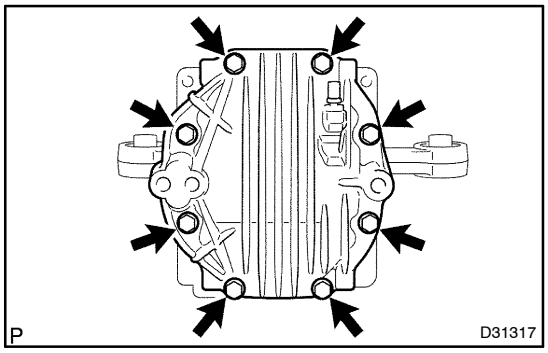


(d) Install the differential carrier cover with the 8 bolts.
**Torque: 47 N·m (475 kgf·cm, 35 ft·lbf)**

**NOTICE:**

**Do not fill the oil or drive immediately after installing the differential carrier cover. Leave the vehicle for at least 1 hour. Also, avoid sudden acceleration and deceleration for at least 12 hours after application.**

(e) Install the rear differential breather plug.
**Torque: 21 N·m (210 kgf·cm, 15 ft·lbf)**

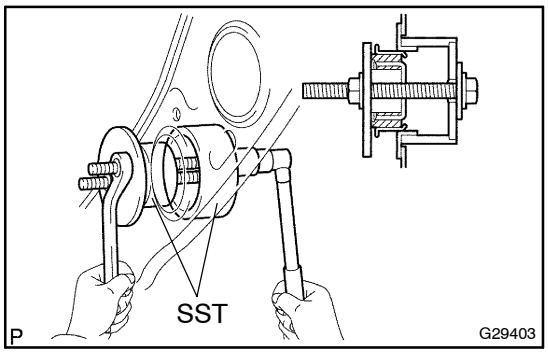


**84. INSTALL REAR DIFFERENTIAL MOUNT CUSHION NO.1**

(a) This procedure is required only when replacing the rear differential mount.

(b) Using SST, install the rear differential mount.
SST 09570–24010, 09316–12010

**NOTICE:**

- **The rear differential mount installation angle has a 3° tolerance.**
- **Temporarily install the rear differential to the member to prevent its tilt and the finally tighten SST.**
- **Install the SST in the correct direction.**
- **Be sure to contact the SST with the entire circumference of the rear differential mount.**
- **The rear differential mount direction can be identified by the mark on the outside.**

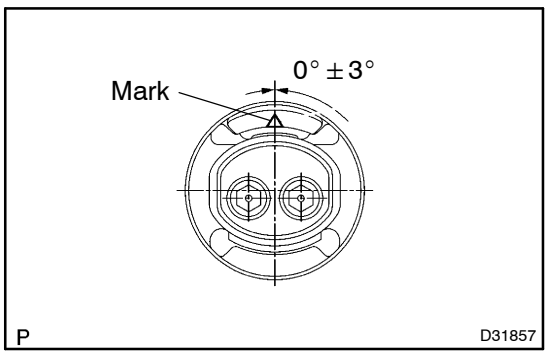

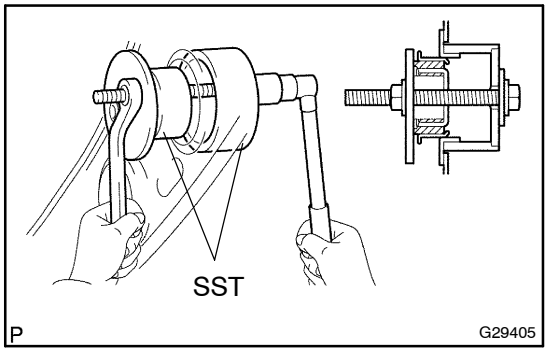


**85. INSTALL REAR DIFFERENTIAL MOUNT CUSHION NO.2**

(a) This procedure is required only when replacing the rear differential mount.

(b) Using SST, install the rear differential mount.
SST 09570–24010, 09316–12010

**NOTICE:**

- **The rear differential mount installation angle has a 3° tolerance.**
- **Temporarily install the rear differential to the member to prevent its tilt and then finally tighten SST.**
- **Install the SST in the correct direction.**
- **Be sure to contact the SST with the entire circumference of the rear differential mount.**
- **The rear differential mount direction can be identified by the mark on the outside.**

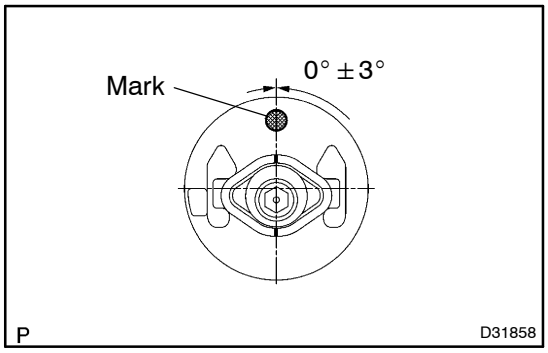


**86. INSTALL DIFFERENTIAL CARRIER ASSY REAR**

(a) Install the 2 upper mount stoppers on the rear differential carrier assembly.

HINT:
Use the upper mount stopper which was removed.

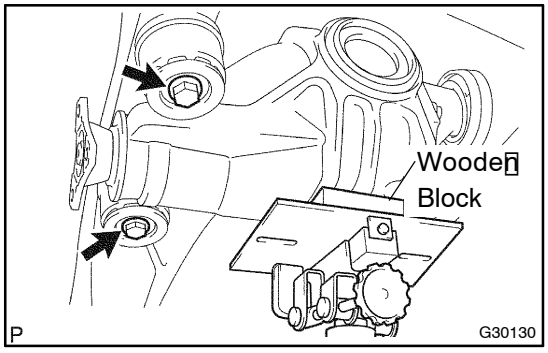


(b) Support the rear differential carrier assembly with a jack and wooden block.

(c) Temporally install the lower mount stoppers and 2 new front side set bolts.

**NOTICE:**
**Do not let the rear differential carrier assembly interfere with the drive shaft.**

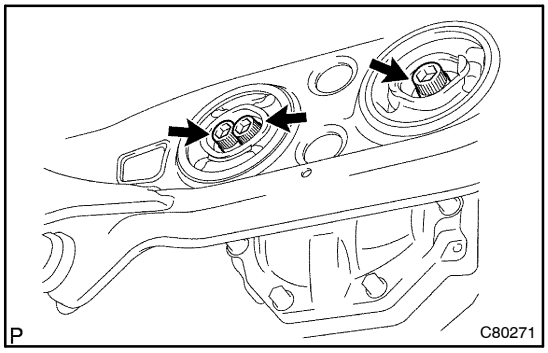


(d) Using a hexagon wrench (12 mm), install the 3 rear side set hexagon bolts.
**Torque: 142 N·m (1,450 kgf·cm, 105 ft·lbf)**

(e) Torque the 2 front side set bolts.
**Torque: 105 N·m (1,065 kgf·cm, 77 ft·lbf)**

(f) Lower the jack.

**87. INSTALL HEIGHT CONTROL VALVE SUB–ASSY NO.2 (W/ AIR SUSPENSION) (SEE PAGE 25–19)**

HINT:
Perform this operation only when the rear differential mount cushion is replaced.

**88. INSTALL STABILIZER BAR REAR (SEE PAGE 27–29)**

HINT:

Perform this operation only when the rear differential mount cushion is replaced.

**89. INSTALL REAR DIFFERENTIAL DRAIN PLUG**

(a) Using a hexagon wrench (10 mm), install the drain plug with a new gasket.

**Torque: 49 N·m (500 kgf·cm, 36 ft·lbf)**

**90. ADD DIFFERENTIAL OIL**

(a) Fill the rear differential carrier assy with differential gear oil equivalent.

**Oil type: Differential synthetic gear oil GL–5 75W–90 or equivalent**

**Capacity: 1.35 ± 0.05 liters (1.43 ± 0.05 US qts, 1.19 ± 0.04 Imp. qts)**

**91. INSPECT DIFFERENTIAL OIL (SEE PAGE 29–5)**

**92. INSTALL REAR DIFFERENTIAL FILLER PLUG**

(a) Using a hexagon wrench (10 mm), install the filler plug with a new gasket.

**Torque: 49 N·m (500 kgf·cm, 36 ft·lbf)**

**93. INSTALL REAR DRIVE SHAFT ASSY LH (SEE PAGE 30–24)**

**94. INSTALL REAR DRIVE SHAFT ASSY RH**

HINT:

Installation procedure of the RH side is the same as that of the LH side.

**95. INSTALL FRONT FLOOR HEAT INSULATOR NO.1**

(a) Install the front floor heat insulator No.1 with the 4 bolts.

**Torque: 5.4 N·m (55 kgf·cm, 48 in.·lbf)**

**96. INSTALL REAR WHEEL**

(a) Install the rear wheel with the 5 nuts.

**Torque: 103 N·m (1,050 kgf·cm, 76 ft·lbf)**

(b) Install the ornament with the 10 bolts.

**Torque: 20 N·m (204 kgf·cm, 15 ft·lbf)**

**97. INSTALL PROPELLER W/CENTER BEARING SHAFT ASSY (SEE PAGE 30–9)**

**98. FULLY TIGHTEN CENTER SUPPORT BEARING ASSY NO.1 (SEE PAGE 30–9)**

SST 09922–10010

**99. INSPECT AND ADJUST NO.2 AND NO.3 JOINT ANGLE (SEE PAGE 30–9)**

**100. INSTALL PROPELLER SHAFT HEAT INSULATOR (SEE PAGE 30–9)**

**101. INSTALL EXHAUST PIPE ASSY (SEE PAGE 15–4)**

**102. INSTALL OXYGEN SENSOR (SEE PAGE 15–4)**

**103. INSPECT AND ADJUST REAR WHEEL ALIGNMENT (SEE PAGE 27–8)**

**104. ADJUST VEHICLE HEIGHT (W/ AIR SUSPENSION) (SEE PAGE 25–4)**

**105. INSPECT HEADLIGHT AIM (ONLY) (SEE PAGE 65–12)**

**106. CHECK ABS SPEED SENSOR SIGNAL (SEE PAGE 05–389)**

**107. INSPECT AIR LEAK (W/ AIR SUSPENSION) (SEE PAGE 25–19)**

HINT:

Perform this operation only when the rear differential mount cushion is replaced.