141MX–01

OVERHAUL

HINT:

- Thoroughly clean all parts to be assembled.
- Before installing the parts, apply new engine oil to all sliding and rotating surfaces.
- Replace all gaskets, O–rings and oil seals with new parts.

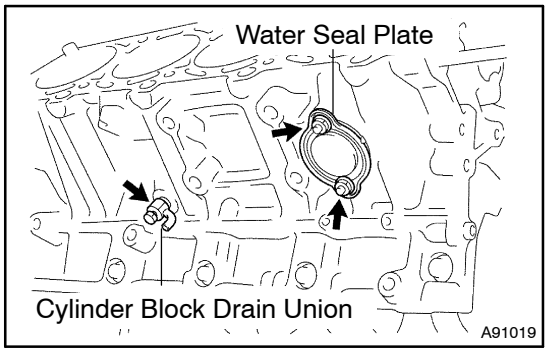

1. REMOVE CYLINDER BLOCK DRAIN COCK SUB–ASSY AND WATER SEAL PLATE

(a) Remove the 2 nuts and seal plate.

(b) Remove the RH and LH drain unions.

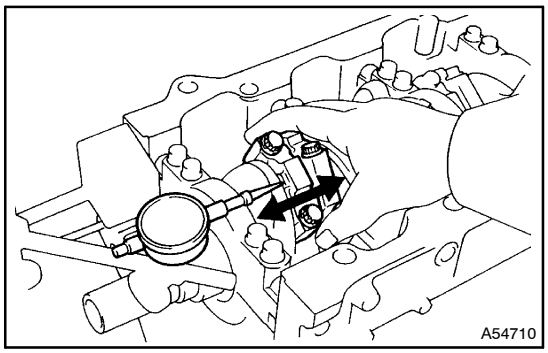

2. INSPECT CONNECTING ROD THRUST CLEARANCE

(a) Using a dial indicator, measure the thrust clearance while moving the connecting rod back and forth.

Standard thrust clearance:
0.160 to 0.290 mm (0.0063 to 0.0138 in.)
Maximum thrust clearance: 0.35 mm (0.0138 in.)

If the thrust clearance is greater than the maximum, replace the connecting rod assembly(s).

If necessary, replace the crankshaft.

Connecting rod thickness:
22.880 to 22.920 mm (0.9008 to 0.9024 in.)

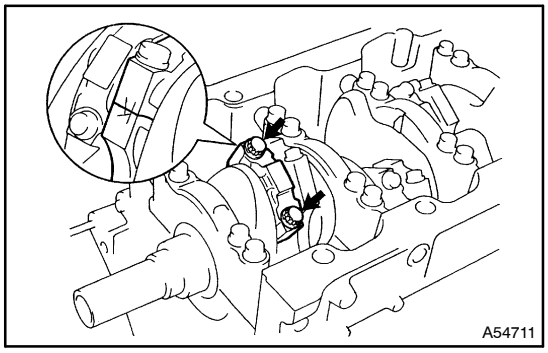

3. INSPECT CONNECTING ROD OIL CLEARANCE

(a) Check that the matchmarks on the connecting rod and cap ensure correct reassembly.

(b) Remove the 2 connecting rod cap bolts.

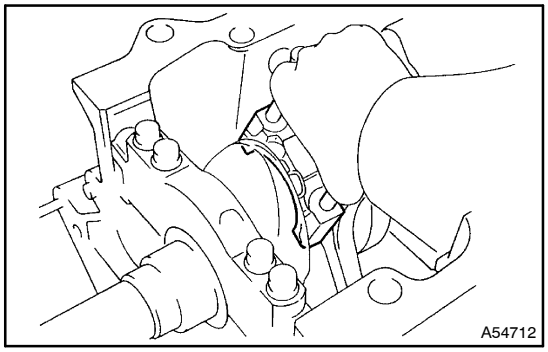

(c) Using the removed connecting rod cap bolts, remove the connecting rod cap and lower bearing by wiggling the connecting rod cap right and left.

HINT:

Keep the lower bearing inserted with the connecting rod cap.

(d) Clean the crank pin and bearing.

(e) Check the crank pin and bearing for pitting and scratches.

If the crank pin or bearing is damaged, replace the bearings. If necessary, replace the crankshaft.

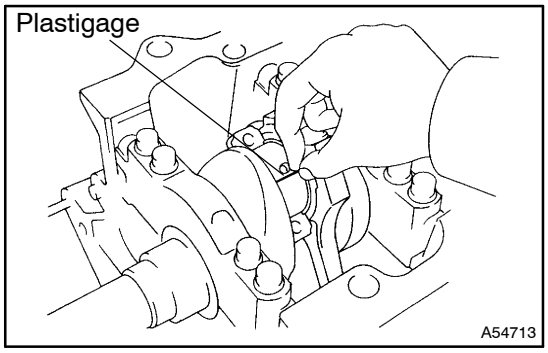

(f) Lay a strip of Plastigage across the crank pin.

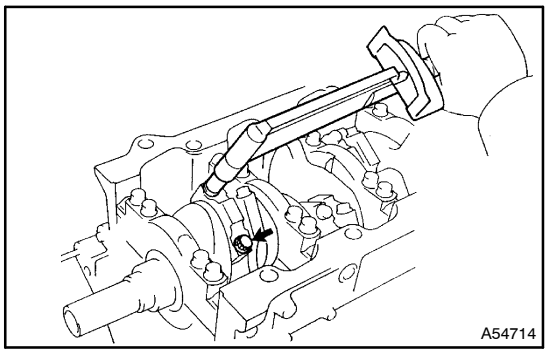

(g) Install the connecting rod cap with the 2 bolts (see step 22).

(h) Remove the 2 bolts, connecting rod cap and lower bearing (see steps (b) and (c) above).

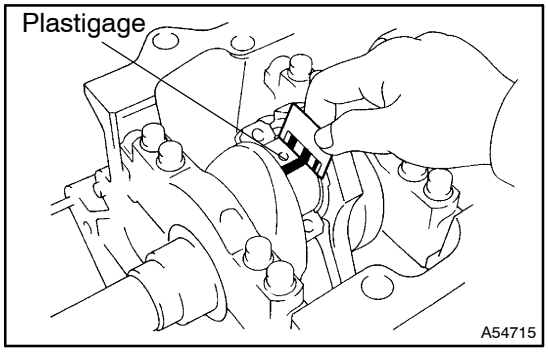

(i) Measure the Plastigage at its widest point.

Standard oil clearance:
0.021 to 0.047 mm (0.0008 to 0.0019 in.)
Maximum oil clearance: 0.059 mm (0.0023 in.)

If the oil clearance is greater than the maximum, replace the bearings. If necessary, replace the crankshaft.

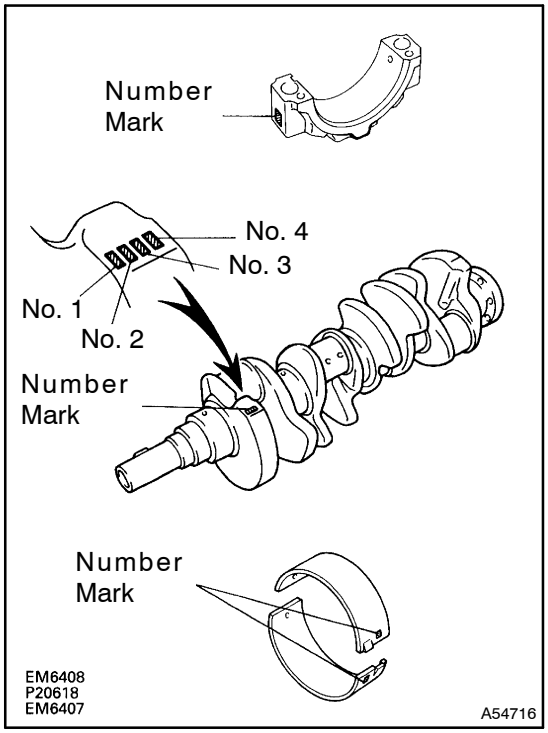

HINT:
If using a standard bearing, replace it with one that has the same number. If the number of the bearing cannot be determined, select the correct bearing by adding together the numbers imprinted on the connecting rod cap and crankshaft, then select the bearing with the same number as the total. There are 6 sizes of standard bearings, marked 2, 3, 4, 5, 6 and 7.

Item	Number Mark											
Connecting rod	1		2	1	2	3	2	3	4	3	4	
Crankshaft	1	2	1	3	2	1	3	2	1	3	2	3
Use bearing	2	3		4			5			6		7

EXAMPLE:
Connecting rod cap ”3” + Crankshaft ”1” =
Total number 4 (Use bearing ”4”)

Reference

Connecting rod big end inside diameter:

Mark 1	55.000 to less than 55.006 mm (2.1654 to less than 2.1656 in.)
Mark 2	55.006 to less than 55.012 mm (2.1656 to less than 2.1658 in.)
Mark 3	55.012 to less than 55.018 mm (2.1658 to less than 2.1661 in.)
Mark 4	55.018 to less than 55.024 mm (2.1661 to less than 2.1663 in.)

Crankshaft crank pin diameter:

Mark 1	51.994 to less than 52.000 mm (2.0470 to less than 2.0472 in.)
Mark 2	51.988 to less than 51.994 mm (2.0468 to less than 2.0470 in.)
Mark 3	51.982 to less than 51.988 mm (2.0465 to less than 2.0468 in.)

Standard sized bearing center wall thickness:

Mark 2	1.484 to less than 1.487 mm (0.0584 to less than 0.0585 in.)
Mark 3	1.487 to less than 1.490 mm (0.0585 to less than 0.0587 in.)
Mark 4	1.490 to less than 1.493 mm (0.0587 to less than 0.0588 in.)
Mark 5	1.493 to less than 1.496 mm (0.0588 to less than 0.0589 in.)
Mark 6	1.496 to less than 1.499 mm (0.0589 to less than 0.0590 in.)
Mark 7	1.499 to less than 1.502 mm (0.0590 to less than 0.0591 in.)

(j) Completely remove the Plastigage.

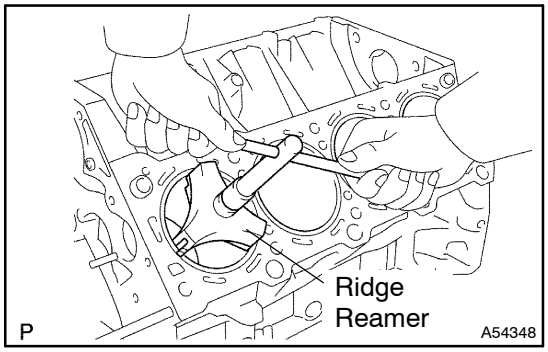

4. REMOVE PISTON AND CONNECTING ROD

(a) Using a ridge reamer, remove all the carbon from the top of the cylinder.

(b) Push the piston, connecting rod assembly and upper bearing through the top of the cylinder block.

HINT:

- Keep the bearings, connecting rod and cap together.
- Be sure to organize the removed piston and connecting rod assemblies in such a way that they can be reinstalled exactly as before.

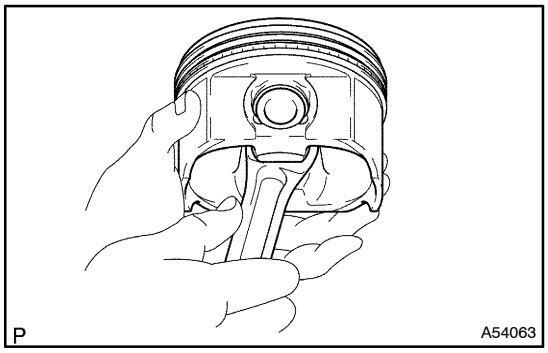

5. REMOVE W/PIN PISTON SUB–ASSY

(a) Check the fit between the piston and piston pin.

(1) Try to move the piston back and forth on the piston pin.

If any movement is felt, replace the piston and pin with a new piston and pin set.

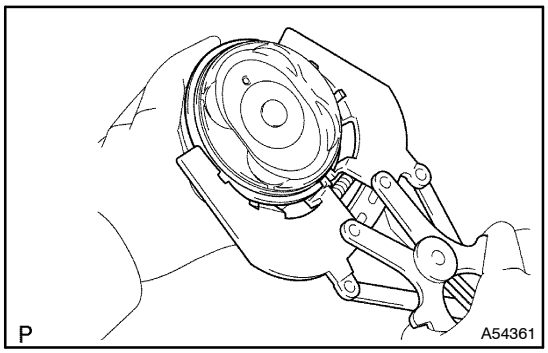

(b) Using a piston ring expander, remove the 2 compression rings.

HINT:

Be sure to organize the removed piston rings in such a way that they can be reinstalled exactly as before.

(c) Remove the 2 side rails and oil ring by hand.

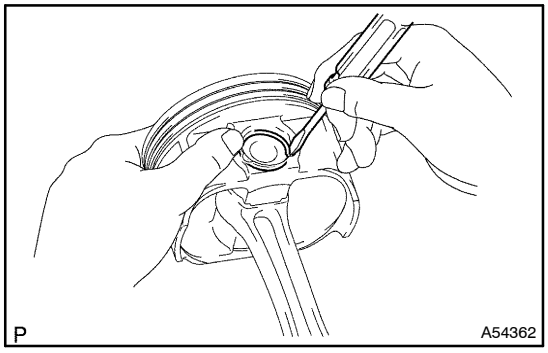

(d) Using a small screwdriver, pry out the 2 snap rings.

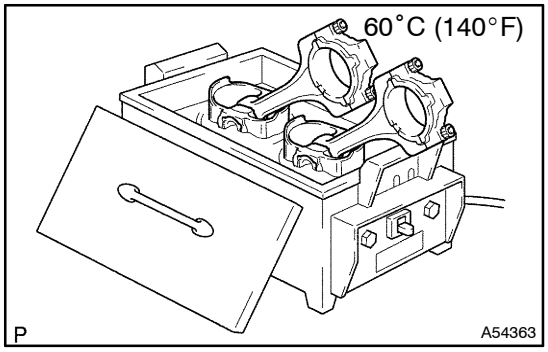

(e) Gradually heat the piston to approximately 60°C (140°F).

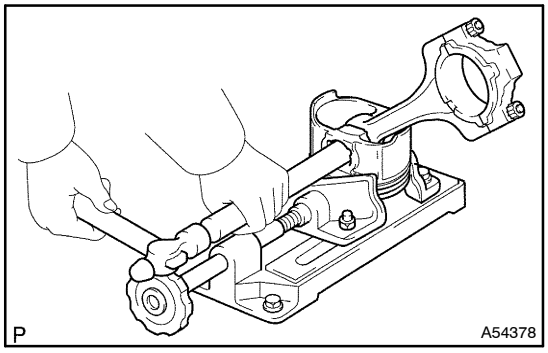

(f) Using a plastic–faced hammer and brass bar, lightly tap out the piston and pin.Then remove the connecting rod.

HINT:

- The piston and pin are a matched set.
- Be sure to organize the removed pistons, pins, rings, connecting rods and bearings in such a way that the parts can be reinstalled exactly as before.

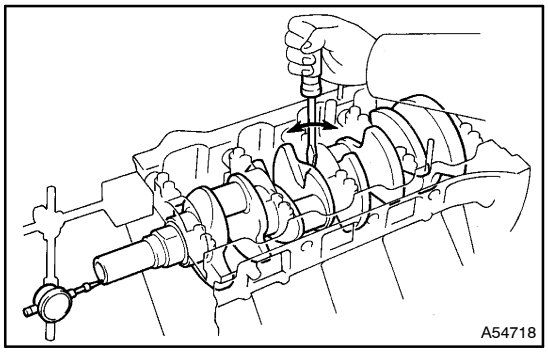

6. INSPECT CRANKSHAFT THRUST CLEARANCE

(a) Using a dial indicator, measure the thrust clearance while prying the crankshaft back and forth with a screwdriver.

Standard thrust clearance:
0.020 to 0.220 mm (0.0008 to 0.0087 in.)
Maximum thrust clearance: 0.30 mm (0.0118 in.)

If the thrust clearance is greater than the maximum, replace the thrust washers as a set.

Thrust washer thickness:
2.440 to 2.490 mm (0.0961 to 0.0980 in.)

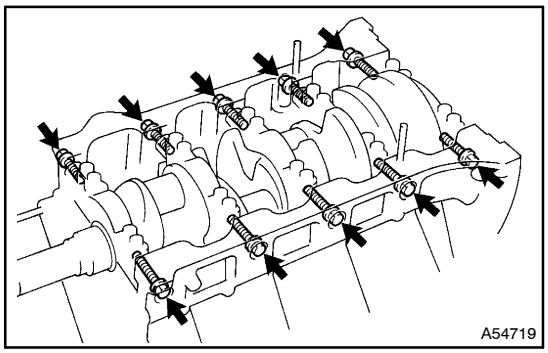

7. INSPECT CRANKSHAFT OIL CLEARANCE

(a) Remove the 10 crankshaft bearing cap bolts.

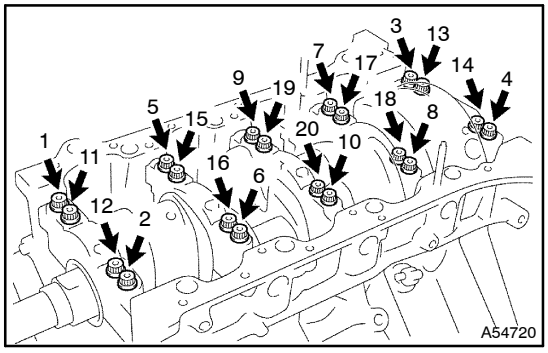

(b) Uniformly loosen and remove the 20 crankshaft bearing cap bolts in the sequence shown in the illustration.

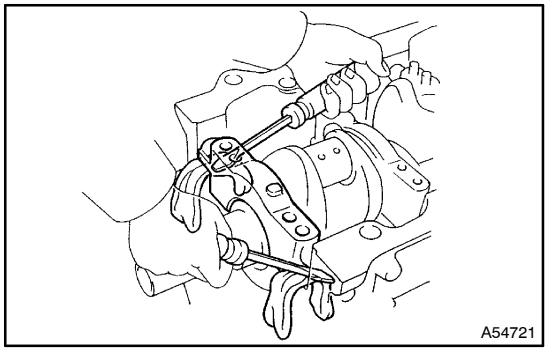

(c) Using 2 screwdrivers, pry out the crankshaft bearing cap, and remove the 5 crankshaft bearing caps, 5 lower bearings and 2 lower thrust washers (No. 3 crankshaft bearing cap only).

NOTICE:
Be careful not to damage the cylinder block.

HINT:

- Keep the lower bearing and bearing cap together.

- Be sure to organize the bearing caps and lower thrust washers in such a way that they can be reinstalled exactly as before.

(d) Lift out the crankshaft.

(e) Remove the 2 upper thrust washers.

HINT:

- Be sure to organize the removed upper thrust washers in such a way that they can be reinstalled exactly as before.
- Keep the upper bearings together with the cylinder block.

(f) Clean each crankshaft journal and bearing.

(g) Check each crankshaft journal and bearing for pitting and scratches.

If the journal or bearing is damaged, replace the bearings. If necessary, replace the crankshaft.

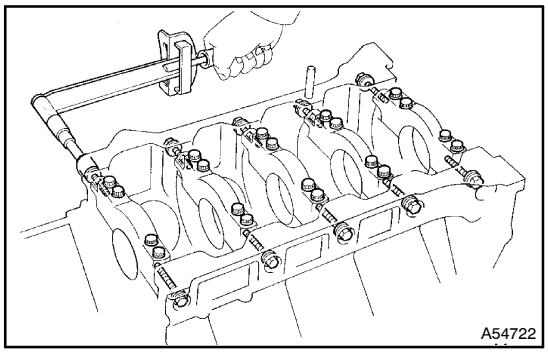

(h) Install the 10 crankshaft bearings and 5 crankshaft bearing caps with the 30 bolts (see step 26). Do not install the crankshaft.

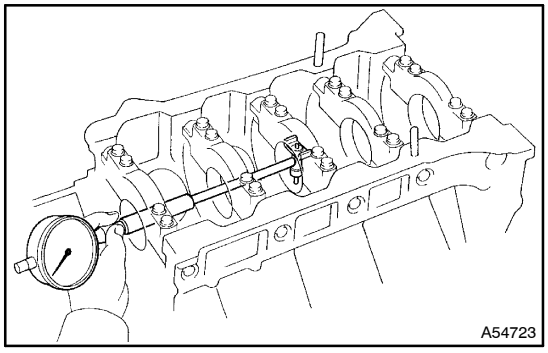

(i) Using a cylinder gauge, measure the inside diameter of the crankshaft bearing.

Bearing inside diameter:
66.986 to 67.000 mm (2.6372 to 2.6378 in.)

(j) Measure the diameter of the crankshaft journal (see step 17).

(k) Subtract the crankshaft journal diameter measurement from the crankshaft bearing inside diameter measurement.

Standard clearance:

No. 1 and No. 5	0.017 to 0.033 mm (0.0007 to 0.0013 in.)
Others	0.029 to 0.045 mm (0.0011 to 0.0018 in.)

Maximum clearance:

No. 1 and No. 5	0.043 mm (0.0017 in.)
Others	0.055 mm (0.0022 in.)

If the oil clearance is greater than the maximum, replace the bearings. If necessary, replace the crankshaft.

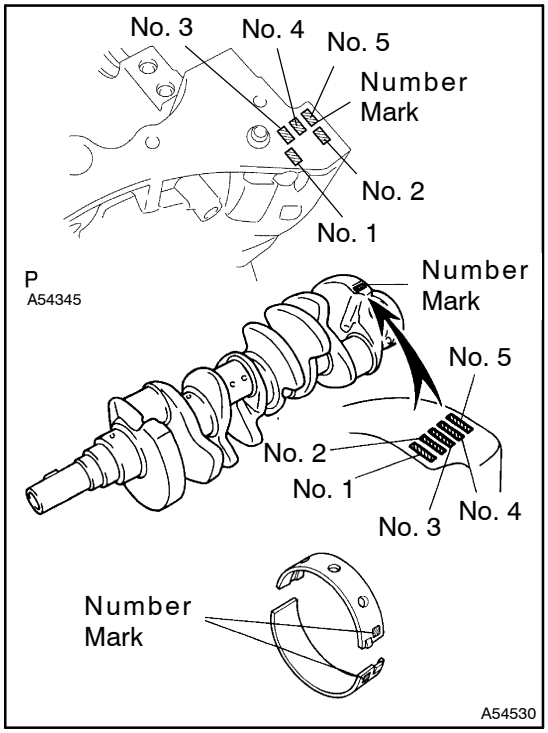

HINT:
If using a standard bearing, replace it with one that has the same number. If the number of the bearing cannot be determined, select the correct bearing by adding together the numbers imprinted on the cylinder block and crankshaft, then refer to the table on the next page for the appropriate bearing number. There are 5 sizes of the standard bearings. For No. 1 and No. 5 position bearings, use bearings marked 3, 4, 5, 6 and 7. For others position bearings, use bearings marked 1, 2, 3, 4 and 5.

No. 1, No. 5:

–		Use bearing	
	(A) + (B)	Upper	Lower
Cylinder block (A) + Crankshaft (B)	0 – 5	3	3
	6 – 8	3	4
	9 – 11	4	4
	12 – 14	4	5
	15 – 17	5	5
	18 – 20	5	6
	21 – 23	6	6
	24 – 26	6	7
	27 – 28	7	7

EXAMPLE:
Cylinder block ”08” + Crankshaft ”06” =
Total number 14 (Use bearing ”4” (Upper), ”5” (Lower))

Others:

–		Use bearing	
	(A) + (B)	Upper	Lower
Cylinder block (A) + Crankshaft (B)	0 – 5	1	1
	6 – 8	1	2
	9 – 11	2	2
	12 – 14	2	3
	15 – 17	3	3
	18 – 20	3	4
	21 – 23	4	4
	24 – 26	4	5
	27 – 28	5	5

EXAMPLE:
Cylinder block ”08” + Crankshaft ”06” =
Total number 14 (Use bearing ”2” (Upper), ”3” (Lower))

Reference

Cylinder block crankshaft journal bore diameter (A):

Mark 00	72.000 mm (2.8346 in.)
Mark 01	72.001 mm (2.8347 in.)
Mark 02	72.002 mm (2.8347 in.)
Mark 03	72.003 mm (2.8348 in.)
Mark 04	72.004 mm (2.8348 in.)
Mark 05	72.005 mm (2.8348 in.)
Mark 06	72.006 mm (2.8349 in.)
Mark 07	72.007 mm (2.8349 in.)
Mark 08	72.008 mm (2.8350 in.)
Mark 09	72.009 mm (2.8350 in.)
Mark 10	72.010 mm (2.8350 in.)
Mark 11	72.011 mm (2.8351 in.)
Mark 12	72.012 mm (2.8351 in.)
Mark 13	72.013 mm (2.8352 in.)
Mark 14	72.014 mm (2.8352 in.)
Mark 15	72.015 mm (2.8352 in.)
Mark 16	72.016 mm (2.8353 in.)

Crankshaft journal diameter (B):

Mark 00	67.000 mm (2.6378 in.)
Mark 01	66.999 mm (2.6378 in.)
Mark 02	66.998 mm (2.6377 in.)
Mark 03	66.997 mm (2.6377 in.)
Mark 04	66.996 mm (2.6376 in.)
Mark 05	66.995 mm (2.6376 in.)
Mark 06	66.994 mm (2.6376 in.)
Mark 07	66.993 mm (2.6375 in.)
Mark 08	66.992 mm (2.6375 in.)
Mark 09	66.991 mm (2.6374 in.)
Mark 10	66.990 mm (2.6374 in.)
Mark 11	66.989 mm (2.6374 in.)
Mark 12	66.988 mm (2.6373 in.)

Standard bearing center wall thickness:
No. 1 and No. 5

Mark 3	2.492 to less than 2.495 mm (0.0981 to less than 0.0982 in.)
Mark 4	2.495 to less than 2.498 mm (0.0982 to less than 0.0983 in.)
Mark 5	2.498 to less than 2.501 mm (0.0983 to less than 0.0985 in.)
Mark 6	2.501 to less than 2.504 mm (0.0985 to less than 0.0986 in.)
Mark 7	2.504 to less than 2.507 mm (0.0986 to less than 0.0987 in.)

Others:

Mark 1	2.486 to less than 2.489 mm (0.0979 to less than 0.0980 in.)
Mark 2	2.489 to less than 2.492 mm (0.0980 to less than 0.0981 in.)
Mark 3	2.492 to less than 2.495 mm (0.0981 to less than 0.0982 in.)
Mark 4	2.495 to less than 2.498 mm (0.0982 to less than 0.0983 in.)
Mark 5	2.498 to less than 2.501 mm (0.0983 to less than 0.0985 in.)

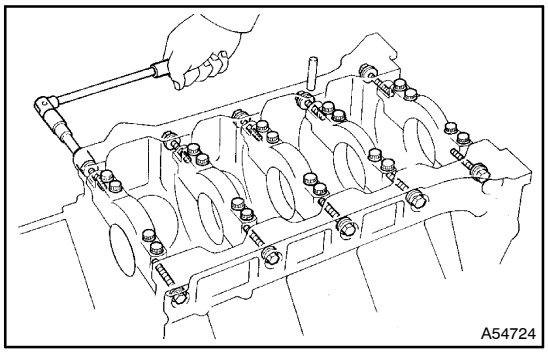

(l) Remove the 10 bolts, 20 nuts, 5 crankshaft bearing caps and 5 lower crankshaft bearings (See steps (a) to (c) on the previous pages).

(m) Remove the 5 upper crankshaft bearings from the cylinder block.

HINT:

Be sure to organize the bearing caps, bearings and thrust washers in such a way that they can be reinstalled exactly as before.

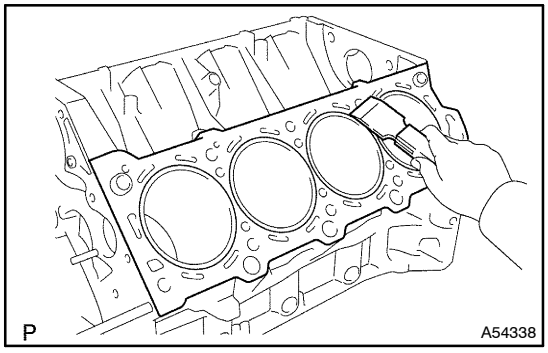

8. INSPECT CYLINDER BLOCK SUB–ASSY

(a) Clean the cylinder block.

(1) Using a gasket scraper, remove all the gasket material from the top surface of the cylinder block.

(2) Using a soft brush and solvent, thoroughly clean the cylinder block.

NOTICE:

If the cylinder is washed at high temperatures, the cylinder liner sticks out beyond the cylinder block. Always wash the cylinder block at a temperature of 45°C (113°F) or less.

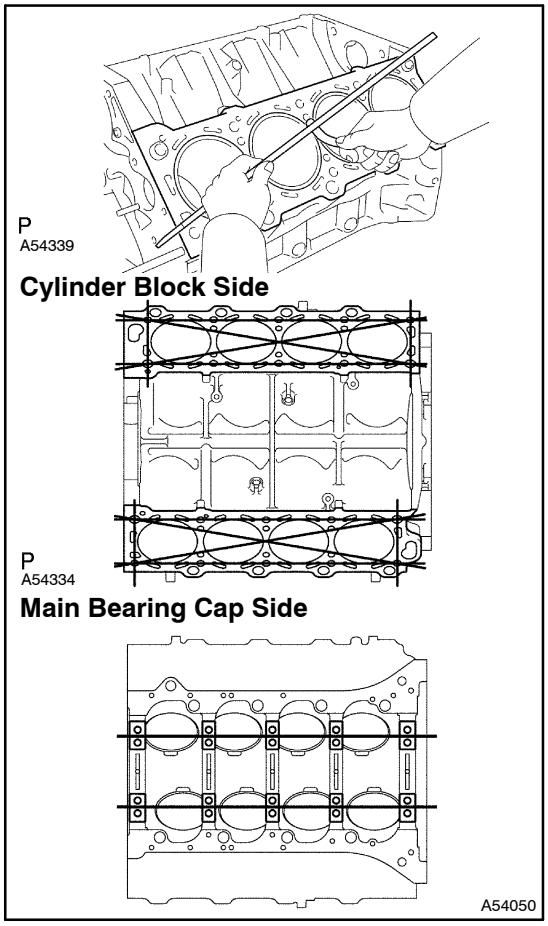

(b) Inspect for warpage.

(1) Using a precision straight edge and feeler gauge, measure the surfaces contacting the cylinder head and main bearing cap for warpage.

Maximum warpage: 0.07 mm (0.0028 in.)

If the warpage is greater than the maximum, replace the cylinder block sub–assy.

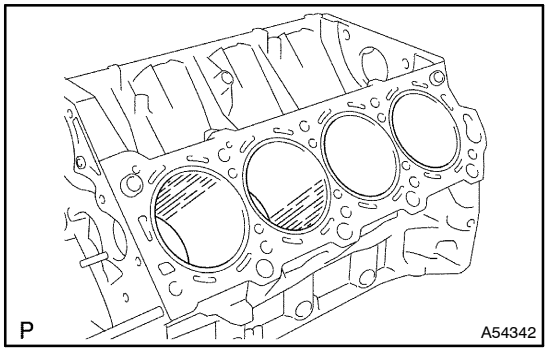

(c) Visually check the cylinder for vertical scratches.

If deep scratches are present, replace the cylinder block sub–assy.

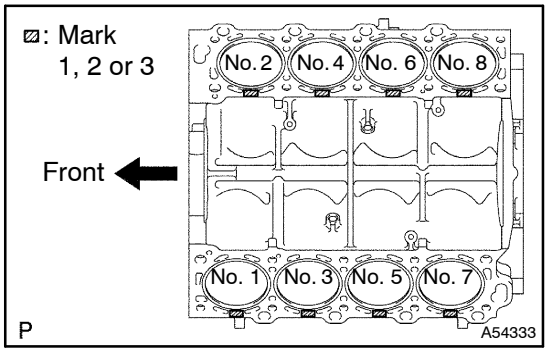

(d) Inspect the cylinder bore diameter.

HINT:

There are 3 sizes of the standard cylinder bore diameter, marked ”1”, ”2” and ”3” accordingly. The mark is stamped on the top of the cylinder block.

If deep scratches are present, replace the cylinder block sub–assy.

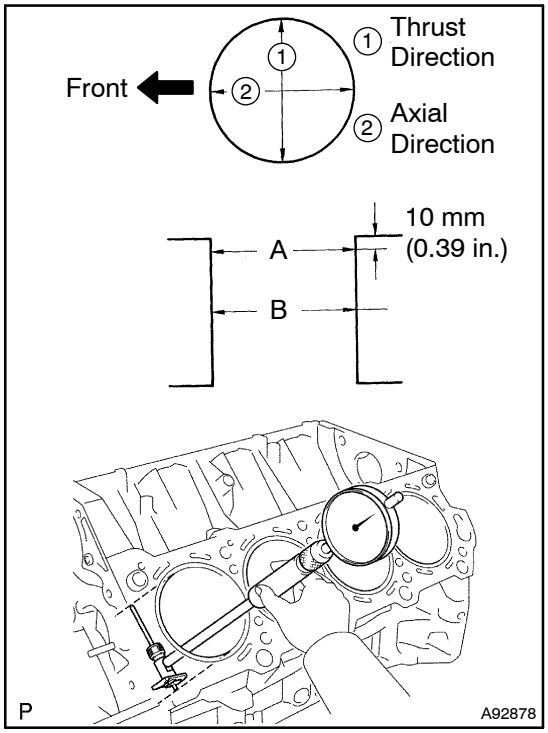

(1) Using a cylinder gauge, measure the cylinder bore diameter at positions A and B in the thrust and axial directions.

Standard diameter:

Mark 1	91.000 to 91.008 mm (3.5827 to 3.5830 in.)
Mark 2	91.008 to 91.021 mm (3.5830 to 3.5835 in.)
Mark 3	91.021 to 91.029 mm (3.5835 to 3.5838 in.)

Maximum diameter: 91.149 mm (3.5885 in.)

If the average of the diameter is greater than the maximum, replace the cylinder block.

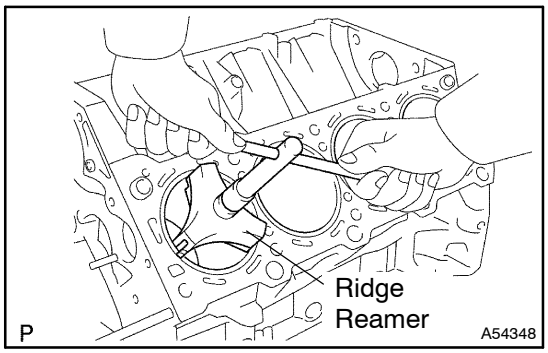

(e) Remove the cylinder ridge.

If the wear is less than 0.2 mm (0.008 in.), using a ridge reamer, grind the top of the cylinder.

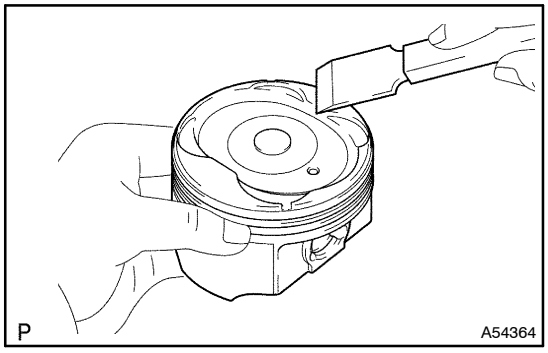

9. INSPECT W/PIN PISTON SUB–ASSY

(a) Clean the piston.

(1) Using a gasket scraper, remove the carbon from the piston top.

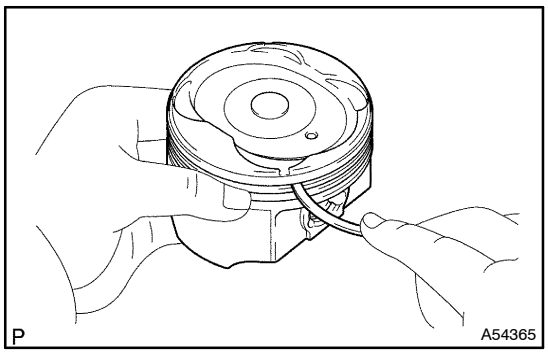

(2) Using a groove cleaning tool or broken ring, clean the piston ring grooves.

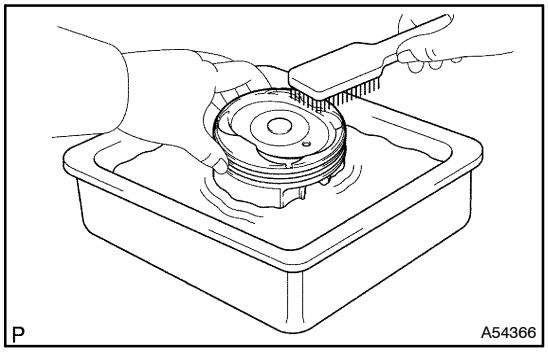

(3) Using solvent and a brush, thoroughly clean the piston.

NOTICE:
Do not use a wire brush.

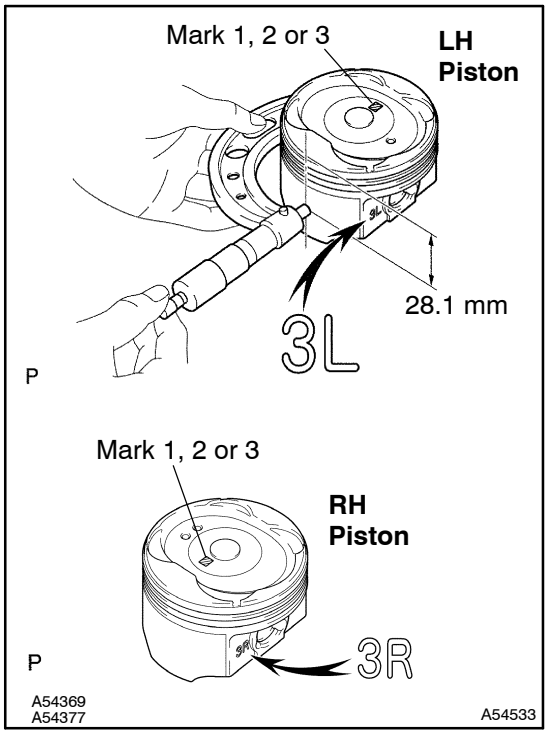

(b) Inspect the piston oil clearance.

HINT:
There are 3 standard piston diameter size, marked ”1”, ”2” and ”3”. The mark is stamped on the piston top.

(1) Using a micrometer, measure the piston diameter at right angles to the piston pin center line, 28.1 mm (1.106 in.) from the piston head.

Piston diameter:

Mark 1	90.910 to 90.920 mm (3.5791 to 3.5795 in.)
Mark 2	90.920 to 90.928 mm (3.5795 to 3.5798 in.)
Mark 3	90.928 to 90.938 mm (3.5798 to 3.5802 in.)

(2) Measure the cylinder bore diameter in the thrust directions (see step 1 above).

(3) Subtract the piston diameter measurement from the cylinder bore diameter measurement.

Standard oil clearance:
0.084 to 0.104 mm (0.0033 to 0.0041 in.)
Maximum oil clearance: 0.124 mm (0.0049 in.)

If the oil clearance is greater than the maximum, replace all the 8 pistons. If necessary, replace the cylinder block sub–assy.

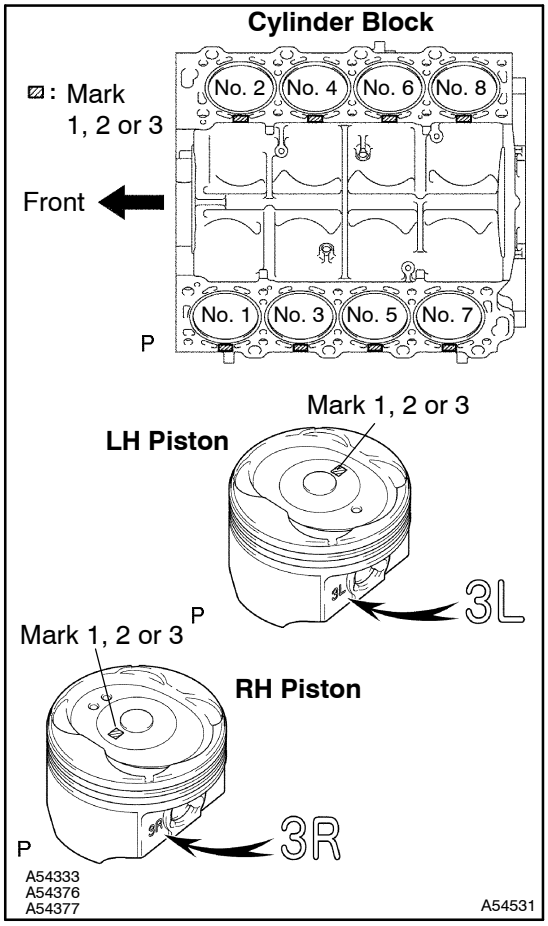

HINT:

Use a new cylinder block:

- Use a piston with the same number mark as the cylinder diameter marked on the cylinder block.
- The shape of the piston varies for the LH and RH banks. The LH piston is marked with ”3L” and the RH piston is marked with ”3R”.

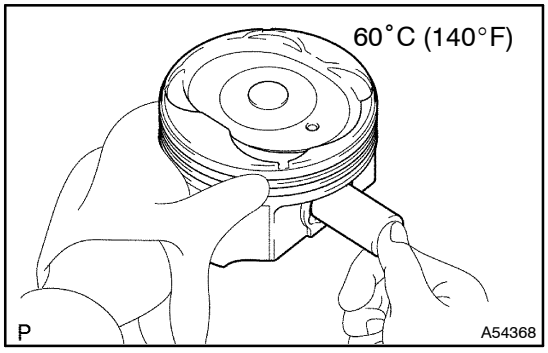

(c) Inspect the piston pin fit.

(1) At 60°C (140°F), check that the piston pin can be pushed into the piston pin hole with your thumb.

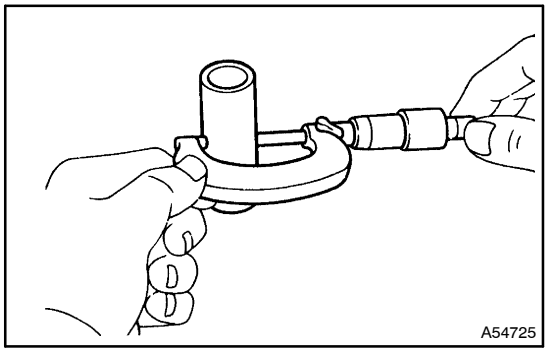

(d) Using a micrometer, measure the piston pin diameter.

Piston pin diameter:

21.997 to 22.006 mm (0.8660 to 0.8664 in.)

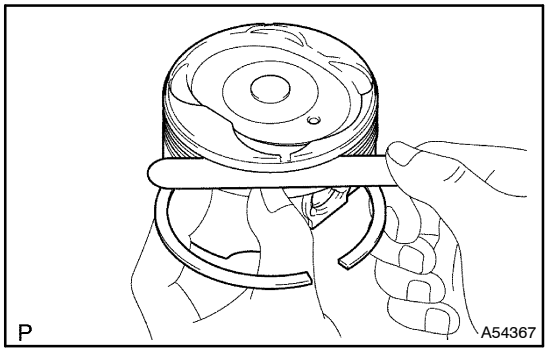

10. INSPECT PISTON RING SET

(a) Inspect the piston ring groove clearance.

(1) Using a feeler gauge, measure the clearance between a new piston ring and the wall of the ring groove.

Ring groove clearance:

No.1	0.030 to 0.080 mm (0.0012 to 0.0031 in.)
No.2	0.020 to 0.060 mm (0.0008 to 0.0024 in.)

If the clearance is not as specified, replace the piston.

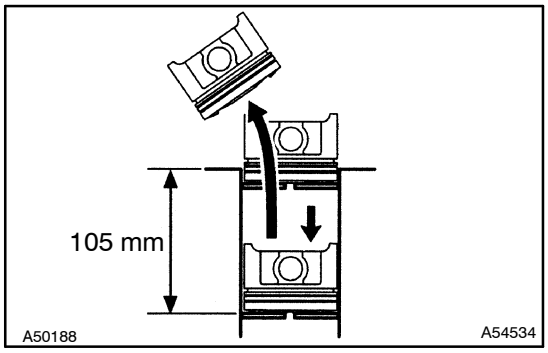

(b) Inspect the piston ring end gap.

(1) Insert the piston ring into the cylinder bore.

(2) Using a piston, push the piston ring a little beyond the bottom of the ring travel 105 mm (4.13 in.) from the top of the cylinder block.

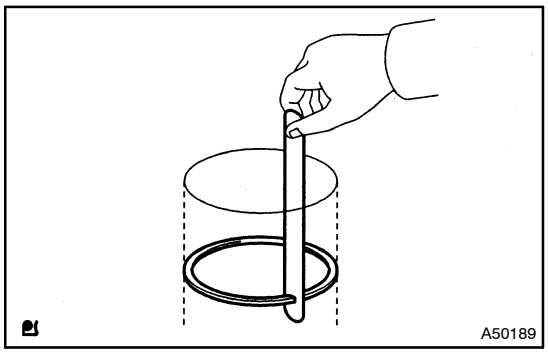

(3) Using a feeler gauge, measure the end gap.

Standard end gap:

No. 1	0.300 to 0.500 mm (0.0118 to 0.0197 in.)
No. 2	0.400 to 0.600 mm (0.0157 to 0.0236 in.)
Oil (Side rail)	0.150 to 0.500 mm (0.0059 to 0.0197 in.)

Maximum end gap:

No. 1	1.05 mm (0.0413 in.)
No. 2	1.20 mm (0.0472 in.)
Oil (Side rail)	1.10 mm (0.0433 in.)

If the end gap is greater than the maximum, replace the piston ring. If the end gap is greater than the maximum, even with a new piston ring, replace the cylinder block sub–assy.

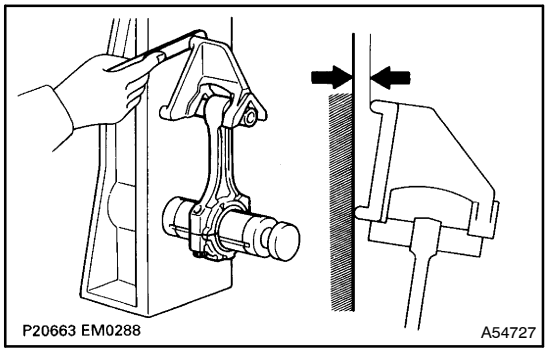

11. INSPECT CONNECTING ROD SUB–ASSY

(a) Using a rod aligner and feeler gauge, check the connecting rod alignment.

(1) Check if it is bent.

Maximum bend:

0.05 mm (0.0020 in.) per 100 mm (3.94 in.)

If the bend is greater than the maximum, replace the connecting rod sub–assy.

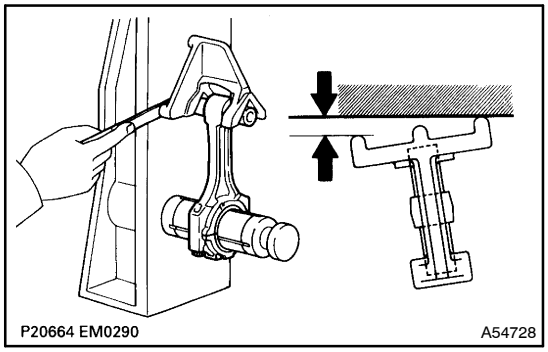

(2) Check if it is twisted.

Maximum twist:

0.15 mm (0.0059 in.) per 100 mm (3.94 in.)

If the twist is greater than the maximum, replace the connecting rod sub–assy.

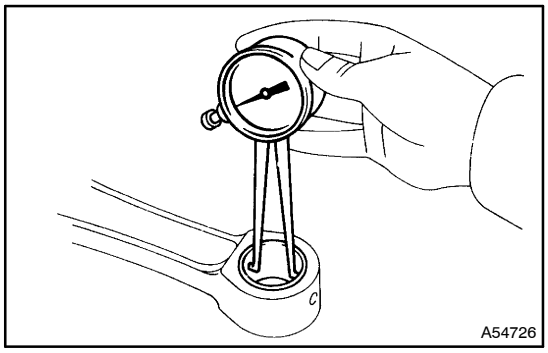

12. INSPECT PISTON PIN OIL CLEARANCE

(a) Inspect the piston pin oil clearance.

(1) Using a caliper gauge, measure the inside diameter of the connecting rod bushing.

Bushing inside diameter:

22.005 to 22.014 mm (0.8663 to 0.8667 in.)

If the bushing inside diameter is not as specified, check the oil clearance.

(2) Subtract the piston pin diameter measurement (see step 10) from the bush inside diameter measurement.

Standard oil clearance:

0.005 to 0.011 mm (0.0002 to 0.0004 in.)

Maximum oil clearance: 0.05 mm (0.0020 in.)

If the oil clearance is greater than the maximum, replace the bush. If necessary, replace the piston and piston pin with a new piston and pin set.

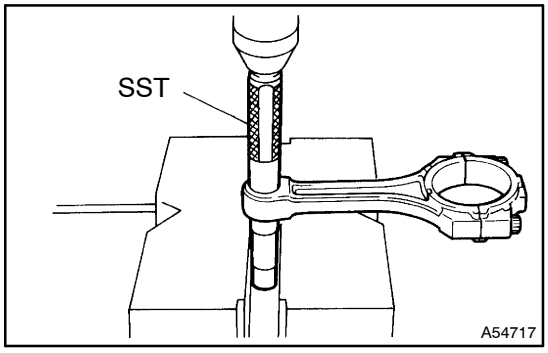

13. REMOVE CONNECTING ROD SMALL END BUSH

(a) Using SST and a press, press out the bush.

SST 09222–30010

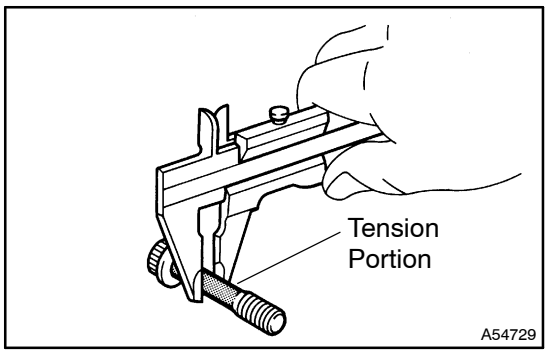

14. INSPECT CONNECTING ROD BOLT

(a) Using a vernier caliper, measure the tension portion of the connecting rod bolt.

Standard diameter:

7.200 to 7.300 mm (0.2835 to 0.2874 in.)

Minimum diameter: 7.00 mm (0.2756 in.)

If the diameter is less than the minimum, replace the bolt.

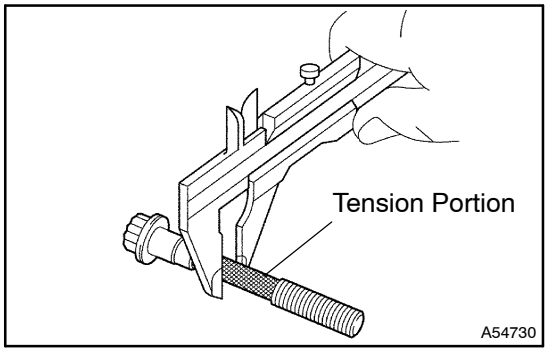

15. INSPECT CRANKSHAFT BEARING CAP BOLT

(a) Using a vernier caliper, measure the tension portion diameter of the main bearing cap bolt.

Standard diameter:
7.500 to 7.600 mm (0.2953 to 0.2992 in.)
Minimum diameter: 7.20 mm (0.2835 in.)

If the diameter is less than the minimum, replace the cap bolt.

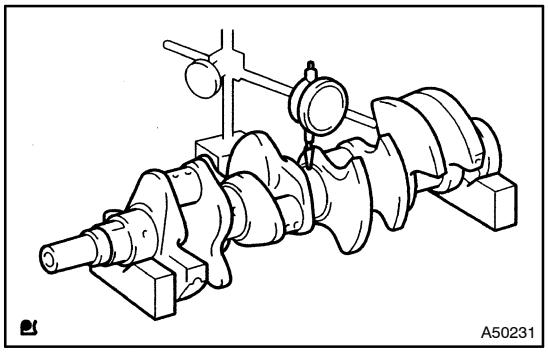

16. INSPECT CRANKSHAFT

(a) Inspect for circle runout.

(1) Place the crankshaft on V–blocks.

(2) Using a dial indicator, measure the circle runout at the center journal.

Maximum circle runout: 0.08 mm (0.0031 in.)

If the circle runout is greater than the maximum, replace the crankshaft.

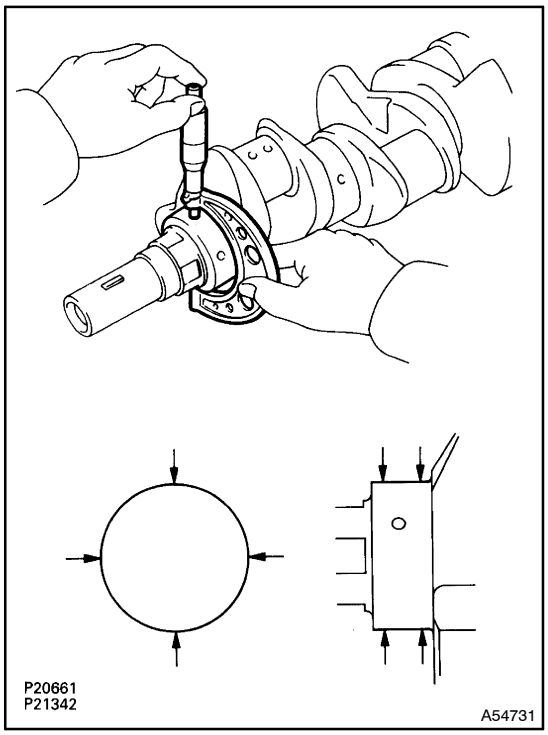

(b) Inspect the main journals and crank pins.

(1) Using a micrometer, measure the diameter of each main journal and crank pin.

Main journal diameter:
66.988 to 67.000 mm (2.6373 to 2.6378 in.)
Crank pin diameter:
51.982 to 52.000 mm (2.0465 to 2.0472 in.)

If the diameter is not as specified, check the oil clearance (see steps 4 and 8). If necessary, replace the crankshaft.

(2) Check each main journal and crank pin for taper and out–of–round as shown in the illustration.

Maximum taper and out–of–round:
0.02 mm (0.0008 in.)

If the taper and out–of–round is greater than the maximum, replace the crankshaft.

17. INSTALL STUD BOLT

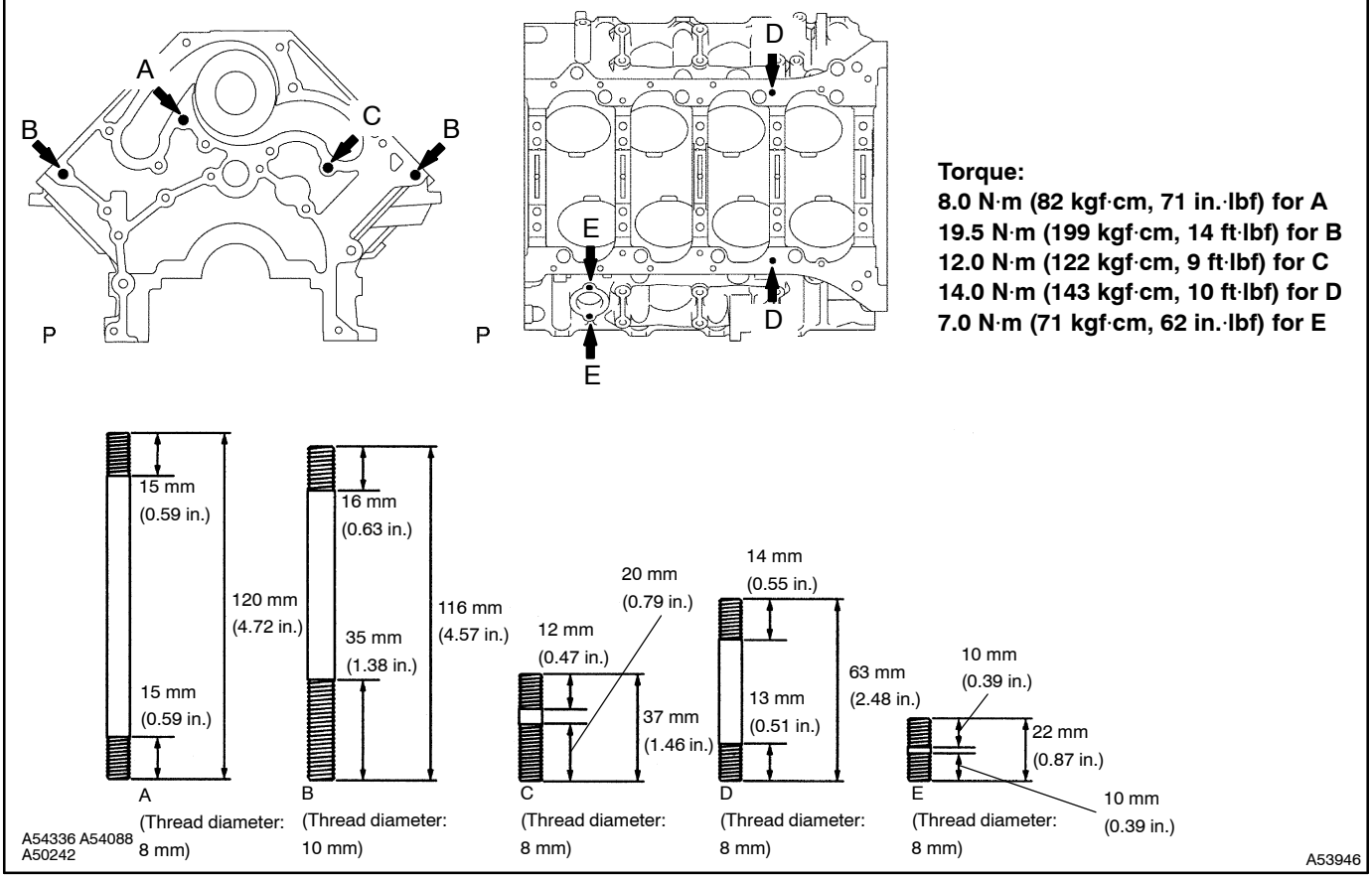

18. INSTALL STRAIGHT PIN

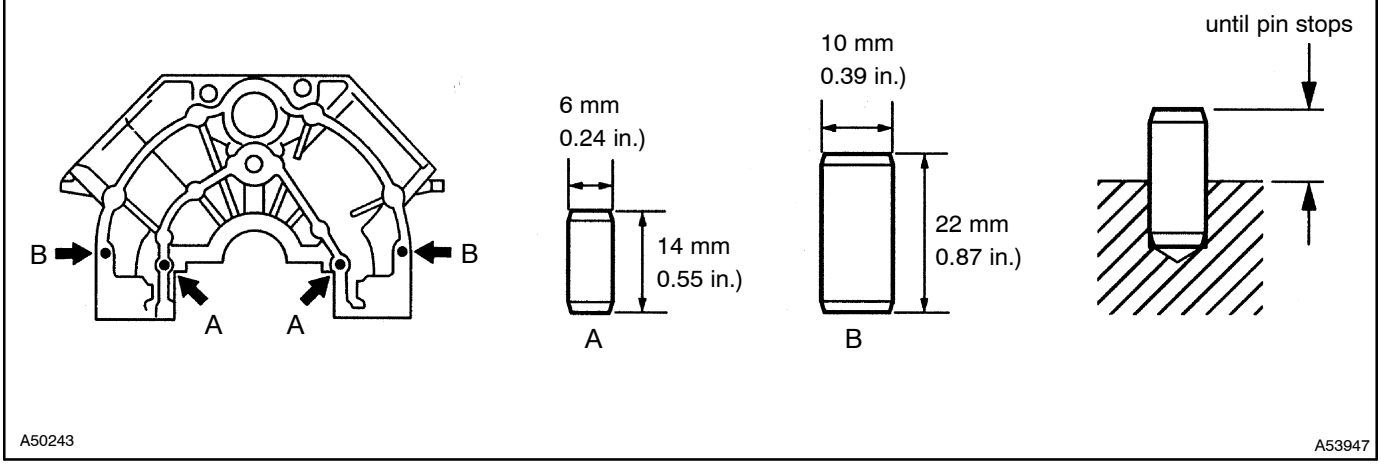

19. INSTALL RING PIN

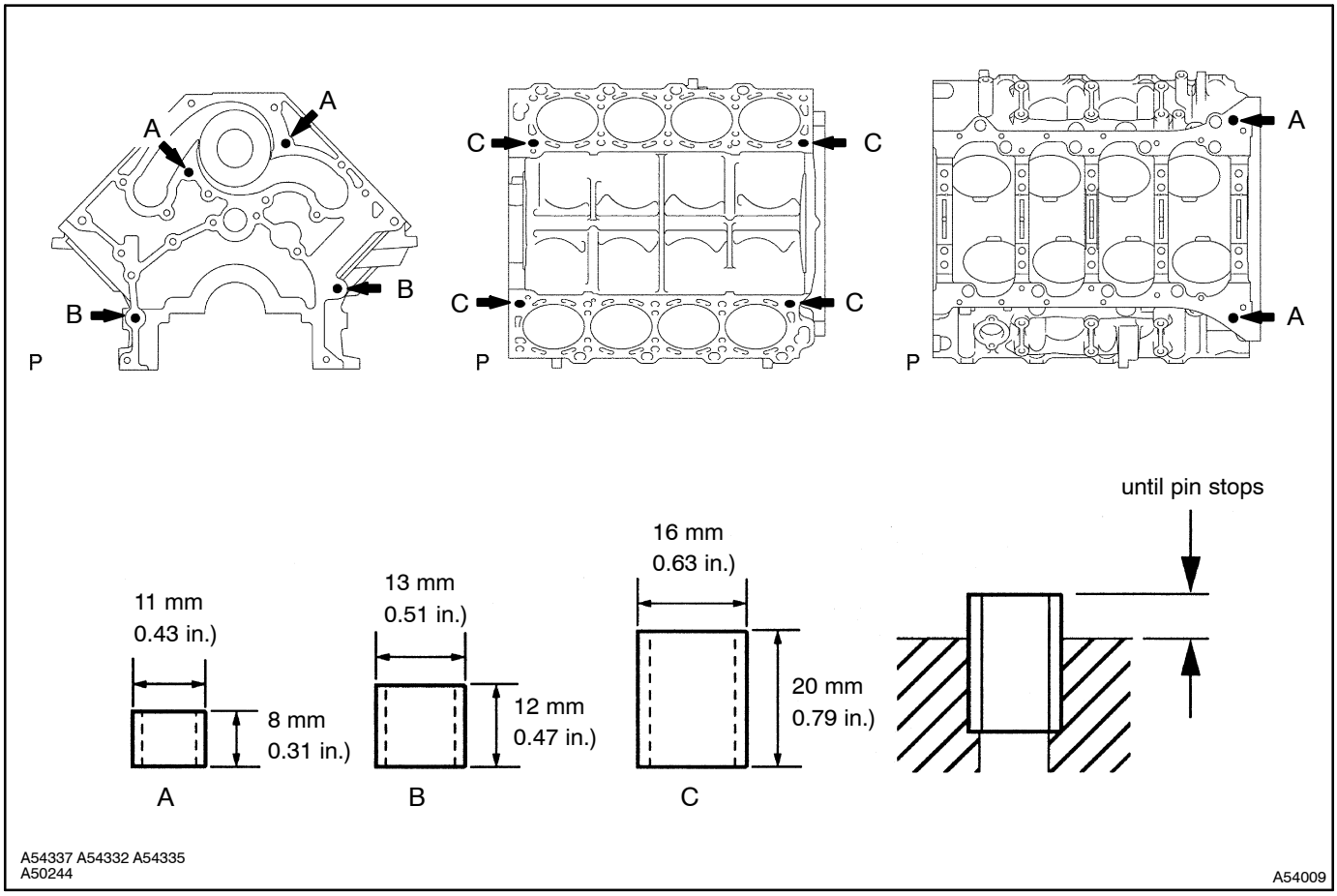

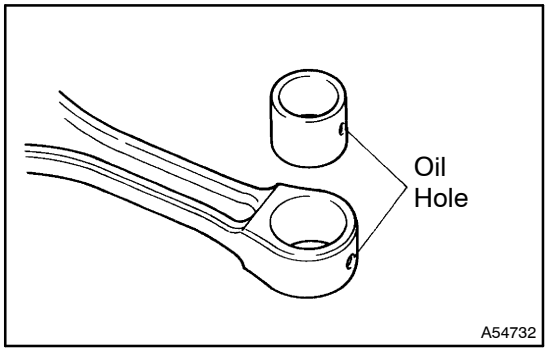

20. INSTALL CONNECTING ROD SMALL END BUSH

(a) Align the oil holes of a new bush and the connecting rod.

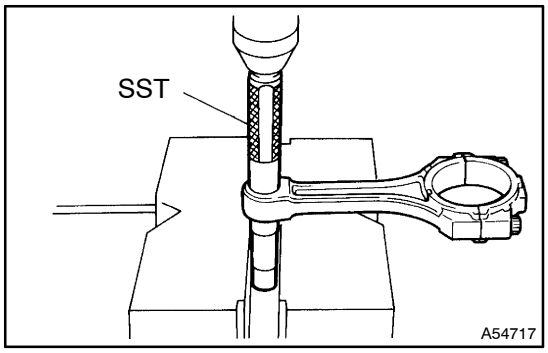

(b) Using SST and a press, press in the bush.
SST 09222–30010

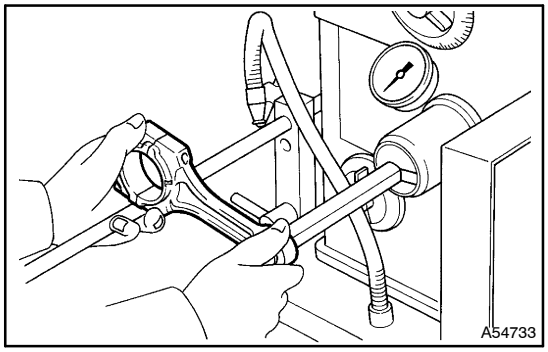

(c) Using a pin hole grinder, hone the bush to obtain the standard specified clearance (see step 13) between the bush and piston pin.

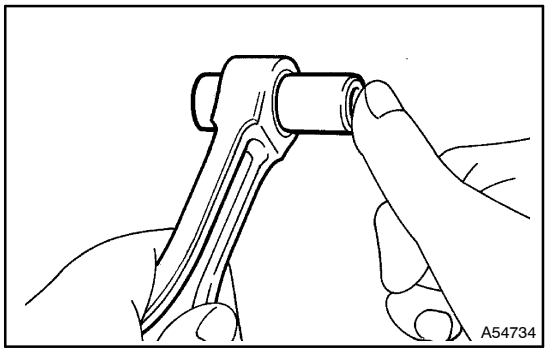

(d) Check the piston pin fits at normal room temperature.
(1) Coat the piston pin with engine oil, and push it into the connecting rod with your thumb.

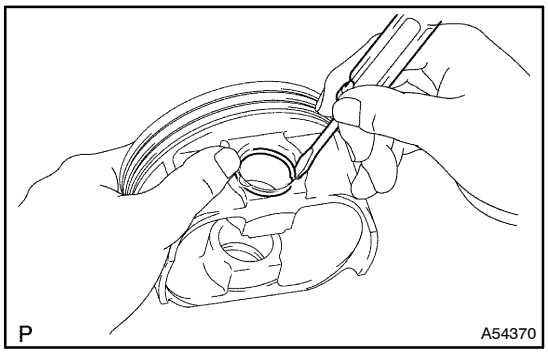

21. INSTALL W/PIN PISTON SUB–ASSY

(a) Using a small screwdriver, install a new snap ring on one side of the piston pin hole.

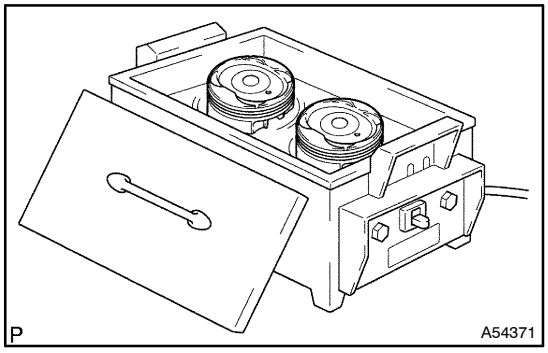

(b) Gradually heat the piston to about 60˚C (140˚F).

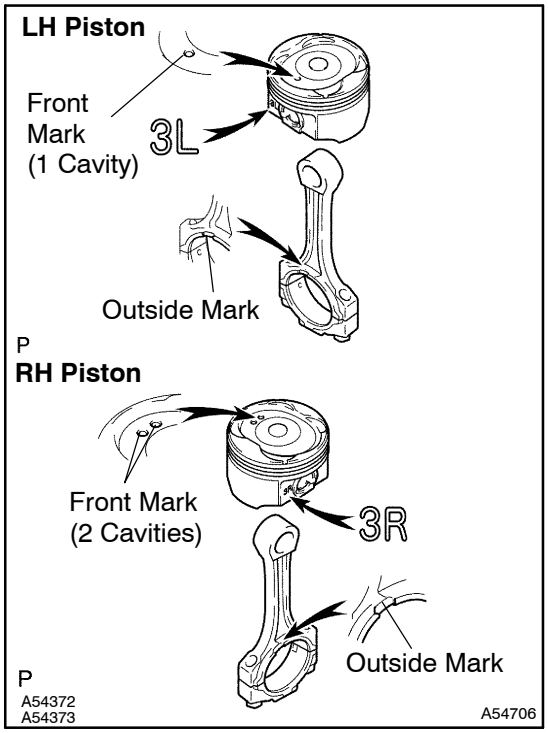

(c) Coat the piston pin with engine oil.

(d) The piston's front mark and the connecting rod's outside mark should face the same direction, as shown in the illustaration.

NOTICE:

The installation directions of the piston and connecting rod are different for the LH and RH banks. The LH piston is marked with "3L" and the RH piston is marked with "3R".

(e) Align the piston pin holes of the piston and connecting rod, and push in the piston pin with your thumb.

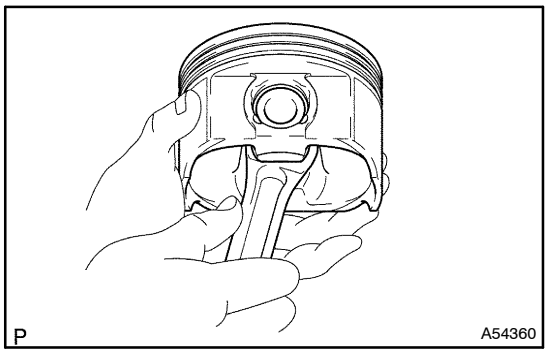

(f) Check the fit between the piston and piston pin.

(1) Try to move the piston back and forth on the piston pin.

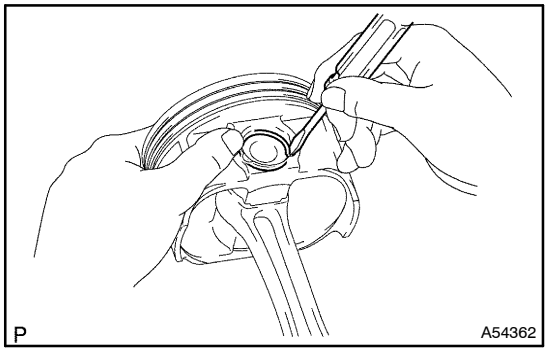

(g) Using a small screwdriver, install a new snap ring on the other side of the piston pin hole.

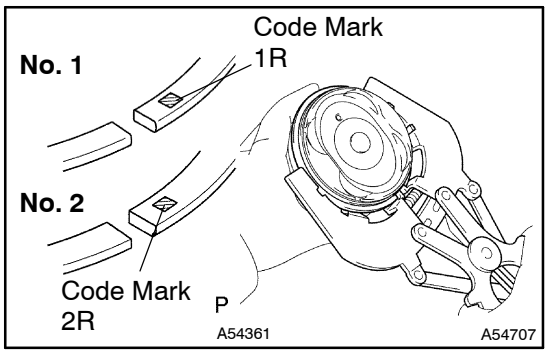

(h) Install the oil ring expander and 2 side rails by hand.

(i) Using a piston ring expander, install the 2 compression rings with the code mark facing upward.

Code mark:

No. 1	1R
No. 2	2R

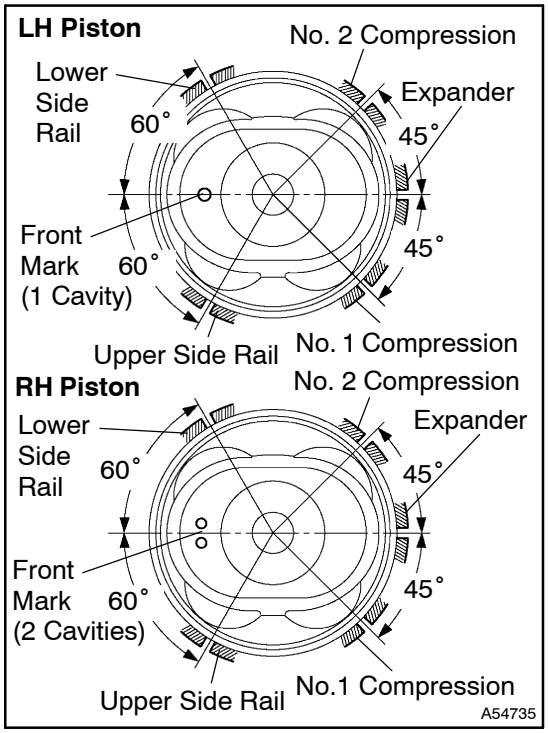

(j) Position the piston rings so that the ring ends are as shown in the illustration.

NOTICE:

Do not align the ring ends.

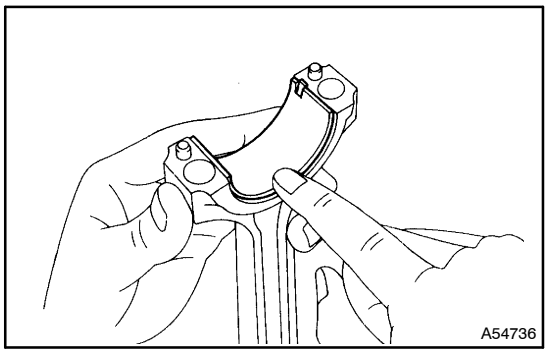

22. INSTALL CONNECTING ROD BEARING

(a) Align the bearing claw with the groove of the connecting rod or connecting cap.

(b) Install the bearings in the connecting rod and connecting rod cap.

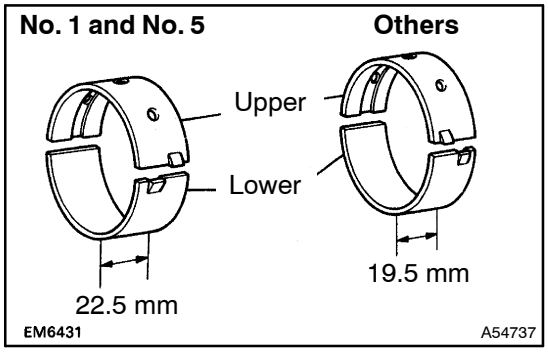

23. INSTALL CRANKSHAFT BEARING

HINT:

- Main bearings come in widths of 19.5 mm (0.768 in.) and 22.5 mm (0.886 in.). Install the 22.5 mm (0.886 in.) bearings in the No. 1 and No. 5 cylinder block journal positions with the crankshaft bearing cap. Install the 19.5 mm (0.768 in.) bearings in the other positions.
- Upper bearings have an oil groove and oil holes; lower bearings do not.

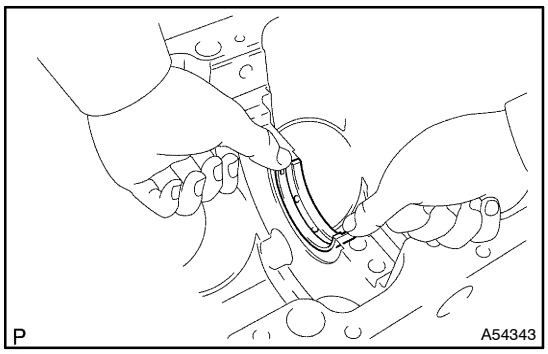

(a) Align the bearing claw with the claw groove of the cylinder block, and push in the 5 upper bearings.

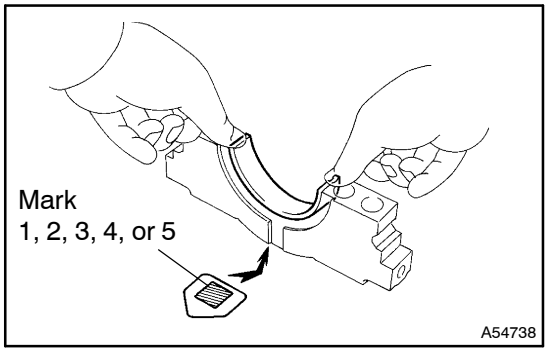

(b) Align the bearing claw with the claw groove of the crankshaft bearing cap, and push in the 5 lower bearings.

HINT:
A number is marked on each bearing cap to indicate the installation position.

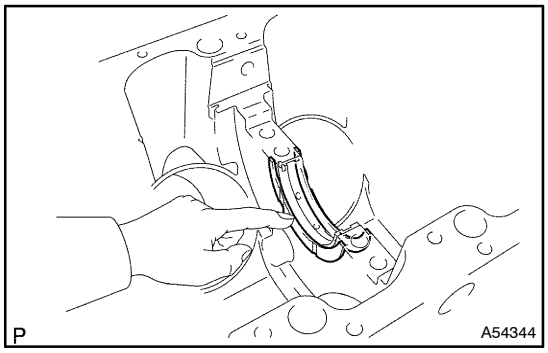

24. INSTALL CRANKSHAFT THRUST WASHER SET

(a) Install the 2 thrust washers under the No. 3 journal position of the cylinder block with the oil grooves facing outward.

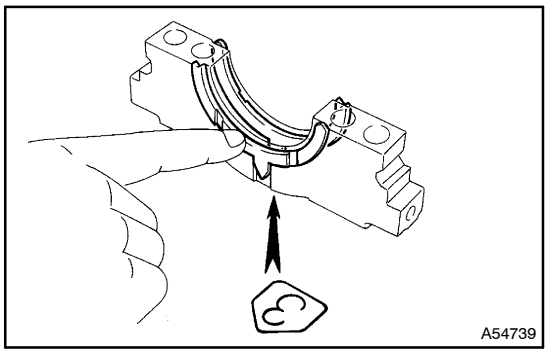

(b) Install the 2 thrust washers on the No. 3 bearing cap with the grooves facing outward.

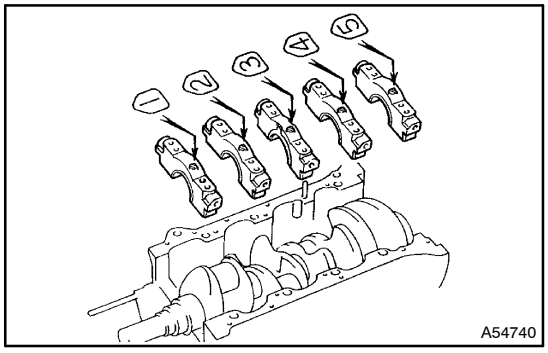

25. INSTALL CRANKSHAFT

(a) Place the crankshaft on the cylinder block.

(b) Install the 5 crankshaft bearing caps in their proper locations.

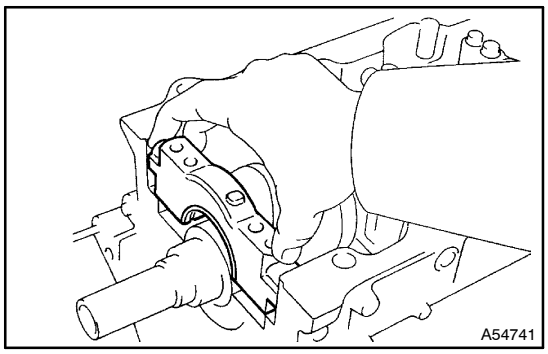

HINT:
Place the bearing caps level and let them return to their original position by their own weight.

NOTICE:

Do not install the bearing cap by tapping it.

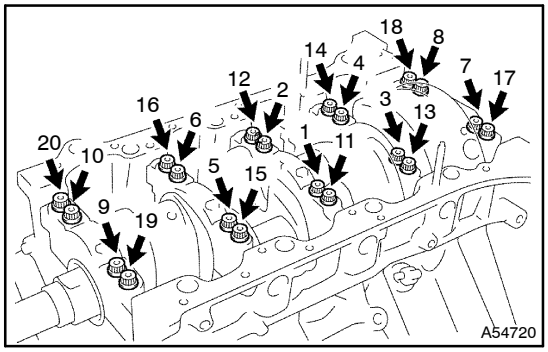

(c) Install the crankshaft bearing cap bolts.

HINT:

- The bearing cap bolts are tightened in 2 progressive steps (steps (2) and (4)).
- If any one of the bearing cap bolts is broken or deformed, replace it.
  (1) Apply a light coat of engine oil on the threads and under the crankshaft bearing cap bolts.
  (2) Install and uniformly tighten the 20 crankshaft bearing cap bolts in several passes in the sequence shown in the illustration.
  Torque: 27 N·m (275 kgf·cm, 20 ft·lbf)

If any one of the bearing cap bolts does not meet the torque specification, replace the bearing cap bolt.

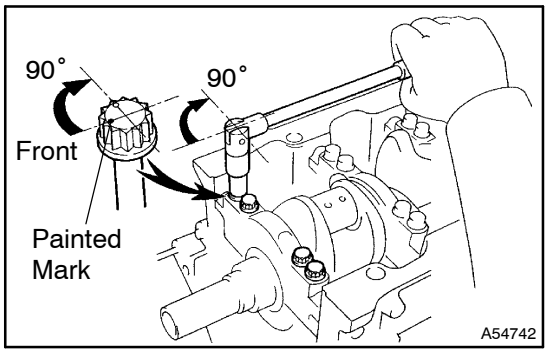

(3) Mark the front of the crankshaft bearing cap bolt with paint.
(4) Retighten the crankshaft bearing cap bolts by 90° in the sequence shown in the illustration.
(5) Check that the painted mark is now at a 90° angle to the front.

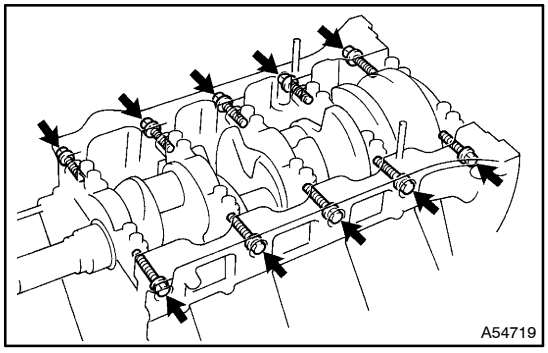

(6) Install a new seal washer to the crankshaft bearing cap bolt.
(7) Install and uniformly tighten the 10 crankshaft bearing cap bolts.
Torque: 49 N·m (500 kgf·cm, 36 ft·lbf)

(d) Check that the crankshaft turns smoothly.
(e) Check the crankshaft thrust clearance (see step 7).

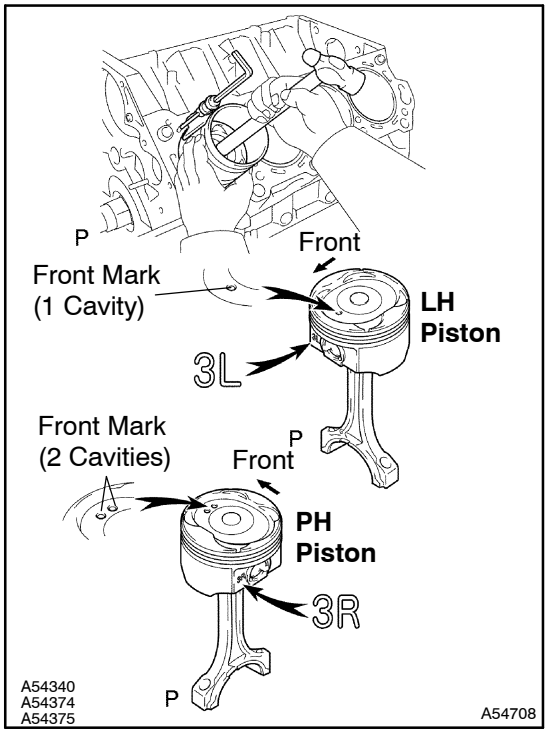

26. INSTALL PISTON AND CONNECTING ROD

(a) Using a piston ring compressor, push the correctly numbered piston and connecting rod assemblies into each cylinder with the front mark of the piston facing forward.

NOTICE:

The shape of the piston varies for the LH and RH banks. The LH piston is marked with ”3L” and the RH piston is marked with ”3R”.

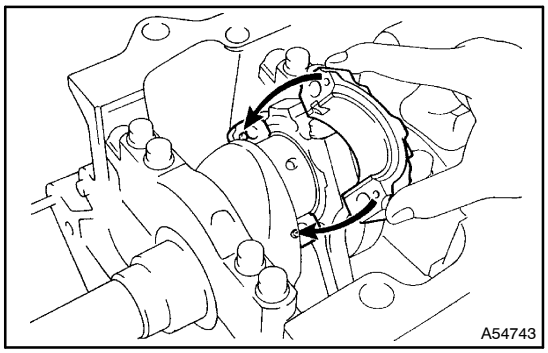

(b) Place the connecting rod cap on the connecting rod.

(1) Match the numbered connecting rod cap with the connecting rod.

(2) Align the pin groove of the connecting rod cap with the pins of the connecting rod, and install the connecting rod cap.

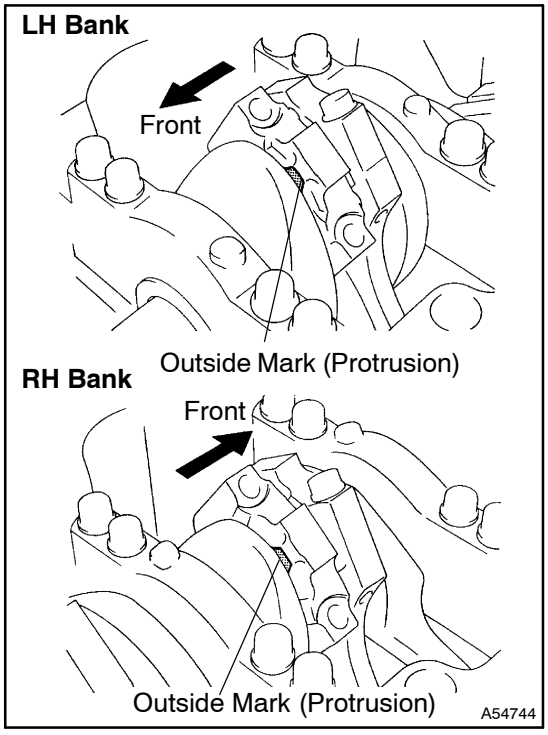

(3) Check that the outside mark of the connecting rod cap is facing in correct direction.

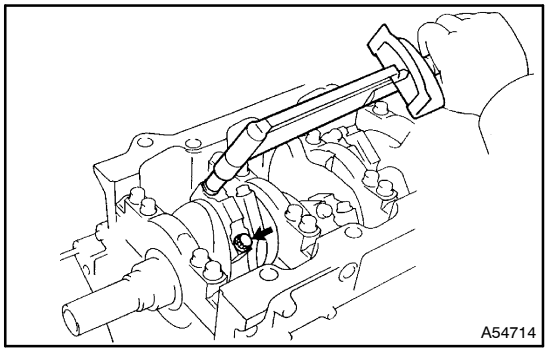

(c) Install the connecting rod cap bolts.

HINT:

- The connecting rod cap bolts are tightened in 2 progressive steps (see steps (2) and (4)).
- If any one of the connecting rod cap bolts is broken or deformed, replace it.
  (1) Apply a light coat of engine oil on the threads and under the heads of the connecting rod cap bolts.
  (2) Install and alternately tighten the 2 connecting rod cap bolts in several passes.
  Torque: 24.5 N·m (250 kgf·cm, 18 ft·lbf)

If any one of the connecting rod cap bolts does not meet the torque specification, replace the connecting rod cap bolts.

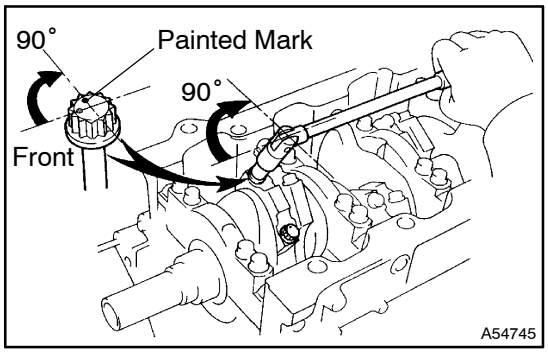

(3) Mark the front of the connecting cap bolt with paint.
(4) Retighten the cap bolts 90° as shown in the illustration.
(5) Check that the painted mark is now at a 90° angle to the front.

(d) Check that the crankshaft turns smoothly.

(e) Check the connecting rod thrust clearance (see step 3).

27. INSTALL WATER SEAL PLATE

(a) Remove any old packing (FIPG) material and be careful not to drop any oil on the contact surfaces of the seal plate and cylinder block.

- Using a razor blade and gasket scraper, remove all the old packing (FIPG) material from the gasket surfaces and sealing groove.
- Thoroughly clean all components to remove all loose material.
- Using a non–residue solvent, clean both sealing surfaces.

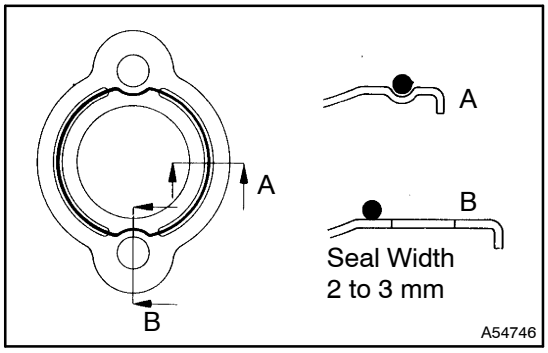

(b) Apply seal packing to the seal plate as shown in the illustration.
Seal packing: Part No. 08826–00080 or equivalent

- Install a nozzle that has been cut to a 2 to 3 mm (0.08 to 0.12 in.) opening.
- Parts must be assembled within 5 minutes of application. Otherwise the material must be removed and reapplied.
- Immediately remove the nozzle from the tube and reinstall the cap.

(c) Install the seal plate with the 2 nuts. Alternately tighten the nuts in several passes.
Torque: 14 N·m (143 kgf·cm, 10 ft·lbf)

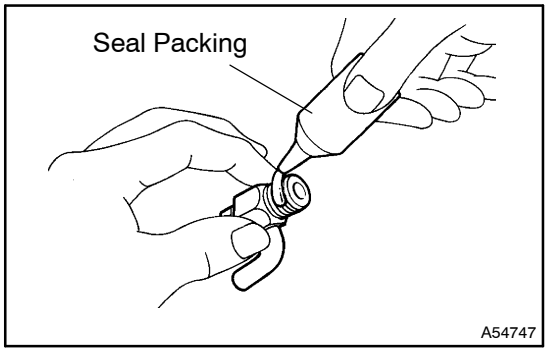

28. INSTALL CYLINDER BLOCK WATER DRAIN COCK SUB–ASSY

(a) Apply seal packing to 2 or 3 threads.
Seal packing: Part No. 08826–00100 or equivalent

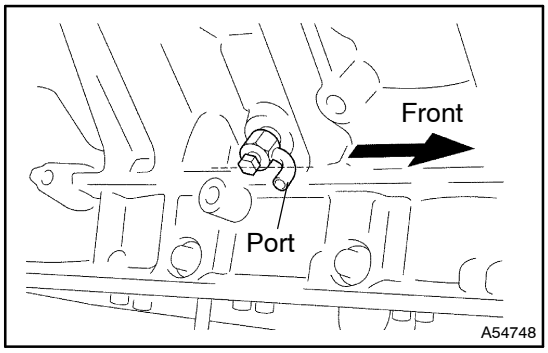

(b) Install the RH and LH drain unions.
Torque: 49 N·m (500 kgf·cm, 36 ft·lbf)

HINT:
After applying the specified torque, rotate the drain union clockwise until its drain port is facing forward.