141N0–01

OVERHAUL

1. REMOVE SPARK PLUG

2. REMOVE OIL FILLER CAP SUB–ASSY

3. REMOVE CYLINDER HEAD COVER SUB–ASSY LH

(a) Remove the 9 bolts, 9 seal washers, cylinder head cover and gasket.

4. REMOVE CYLINDER HEAD COVER SUB–ASSY

(a) Remove the 9 bolts, 9 seal washers, cylinder head cover and gasket.

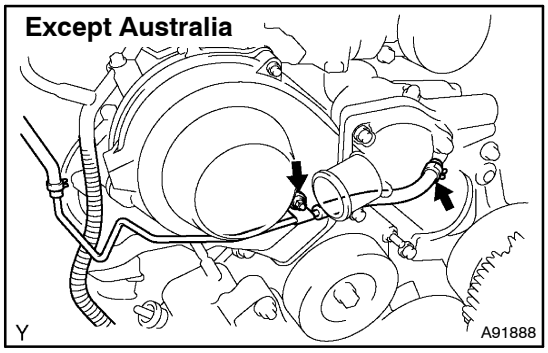

5. REMOVE TIMING CHAIN OR BELT COVER NO.2

(a) Except Australia:
Remove the cap nut and bolt, and disconnect the water by–pass pipe from the cover.

(b) Except Australia:
Disconnect the 2 water by–pass hoses from the water by–pass pipe.

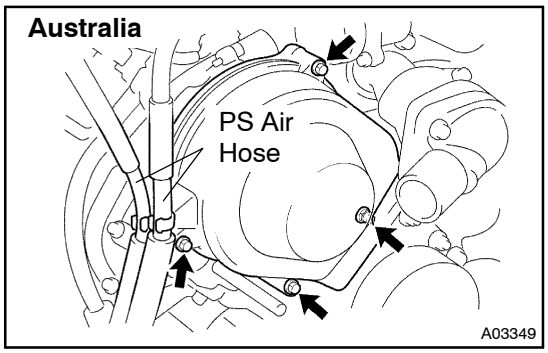

(c) Australia:
Disconnect the 2 PS air hoses from the clamp on the cover.

(d) Remove the cap nut, 3 bolts, cover and gasket.

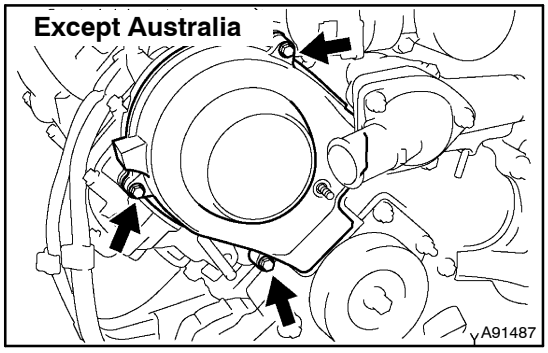

(e) Except Australia:
Remove the 3 bolts, cover and gasket.

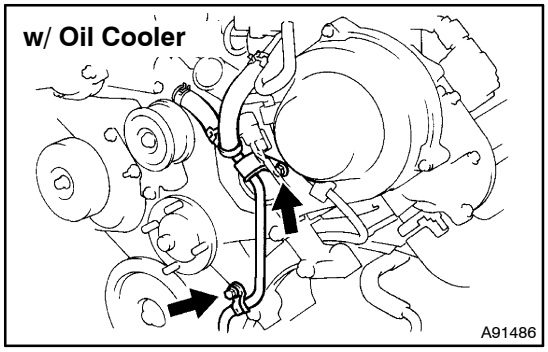

6. REMOVE TIMING BELT COVER SUB–ASSY NO.3 LH

(a) w/ Oil cooler:
Remove the cap nut and bolt, and disconnect the oil cooler pipe from the cover and No. 1 drive belt idler pulley bracket.

(b) w/ Oil cooler:
Disconnect the 2 water by–pass hoses, as shown in the illustration.

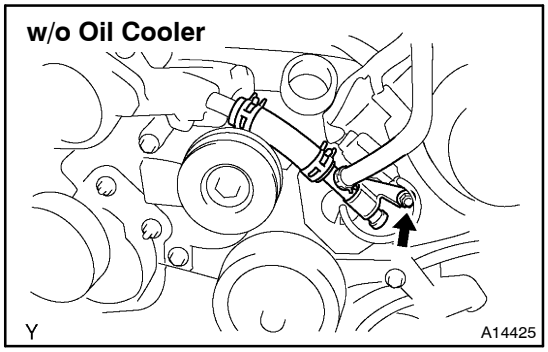

(c) w/o Oil cooler:
Remove the cap nut, and disconnect the No. 3 water by–pass pipe from the cover.

(d) w/o Oil cooler:
Disconnect the 2 water by–pass hoses as shown in the illustration.

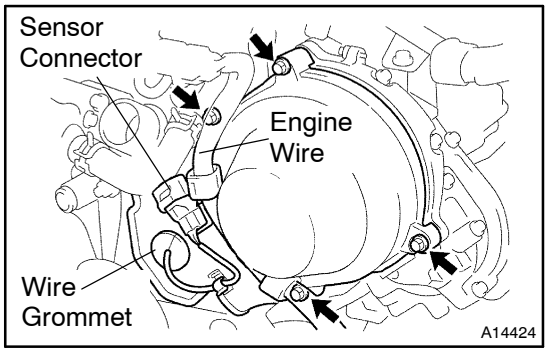

(e) Disconnect the engine wire from the 2 wire clamps.
(f) Disconnect the camshaft position sensor connector.
(g) Disconnect the camshaft position sensor wire from the wire clamp on the cover.
(h) Remove the wire grommet from the cover.
(i) Remove the 4 bolts.
(j) Disconnect the cover from the timing plate and camshaft bearing cap.
(k) Disconnect the wire clamp for the sensor from the cover.
(l) Remove the connector holder from the sensor connector.
(m) Remove the cover and gasket.

7. REMOVE IDLER PULLEY ASSY

(a) Remove the 2 bots, 2 nuts and idler pulley.

8. REMOVE TIMING BELT COVER SUB–ASSY NO.2

(a) Remove the 2 bolts and timing belt cover.

9. REMOVE IDLER PULLEY SUB–ASSY NO.2

(a) Remove the pulley bolt, cover plate and idler pulley.

10. REMOVE V–RIBBED BELT TENSIONER ASSY

(a) Remove the bolt, 2 nuts and belt tensioner.

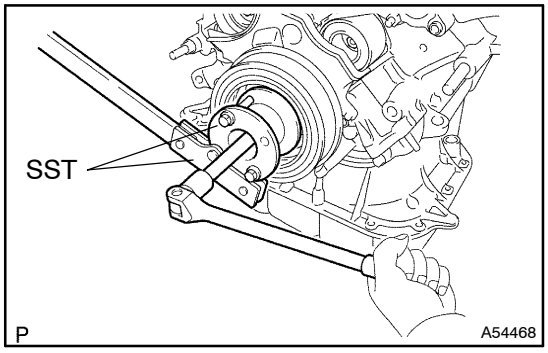

11. REMOVE CRANKSHAFT DAMPER SUB–ASSY

(a) Using SST, remove the damper bolt.
SST 09213–70011, 09330–00021

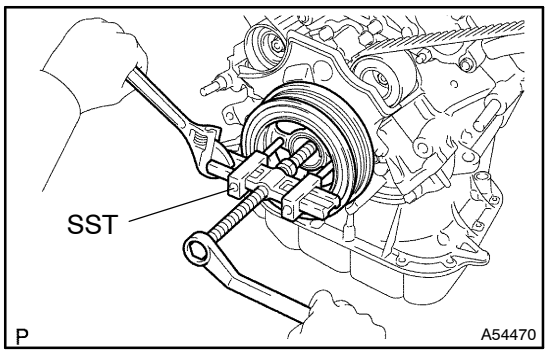

(b) Using SST, remove the damper.
SST 09950–50013 (09951–05010, 09952–05010, 09953–05010, 09953–05020, 09954–05021)

12. REMOVE TIMING BELT NO.1 COVER

13. REMOVE TIMING GEAR COVER SPACER

14. REMOVE CRANKSHAFT POSITION SENSOR PLATE

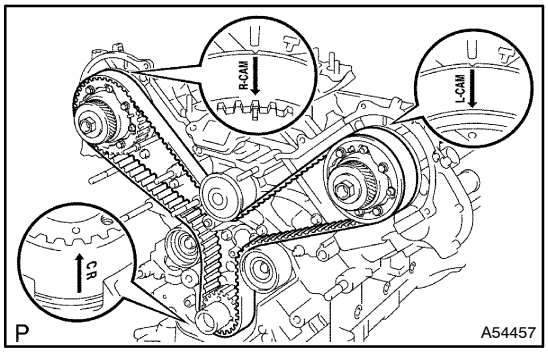

15. REMOVE TIMING BELT

(a) If planning to reuse the timing belt, check the installation marks on the belt.

(1) Check that there are 3 installation marks on the timing belt by turning the crankshaft as shown in the illustration.

If the installation marks have disappeared, place a new installation mark on the timing belt before removing each part.

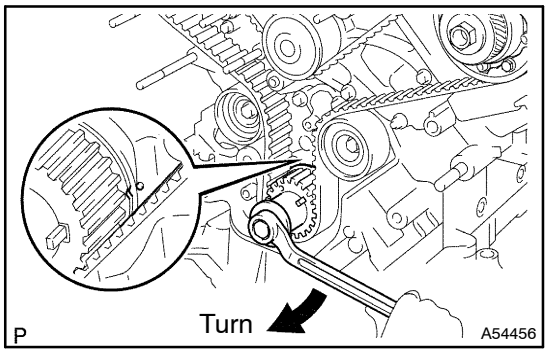

(b) Set the No. 1 cylinder to approximately 50° BTDC/compression.

(1) Using the crankshaft damper bolt, turn the crankshaft to align the timing marks of the crankshaft timing pulley and oil pump body.

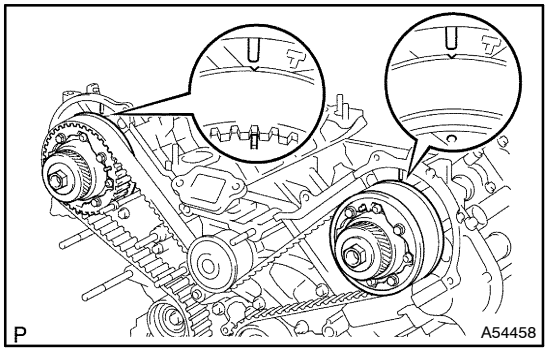

(2) Check that the timing marks of the camshaft timing pulleys and timing belt plates are aligned.

If not, turn the crankshaft 1 revolution (360˚).

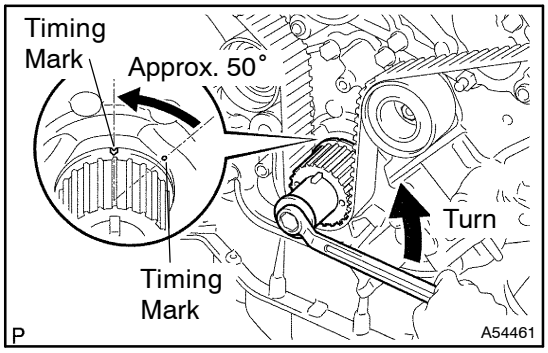

(3) Using the crankshaft damper bolt, turn the crankshaft counterclockwise by approximately 50˚.

NOTICE:

With timing belt disengaged:

The crankshaft damper must be at the correct angle to avoid damage in later steps. If the crankshaft pulley is at the wrong angle and then the camshaft timing pulley and the camshaft are removed, the piston head and valve head may come in contact and be damaged.

(c) Alternately loosen the 2 bolts, and remove them, the belt tensioner and dust boot.

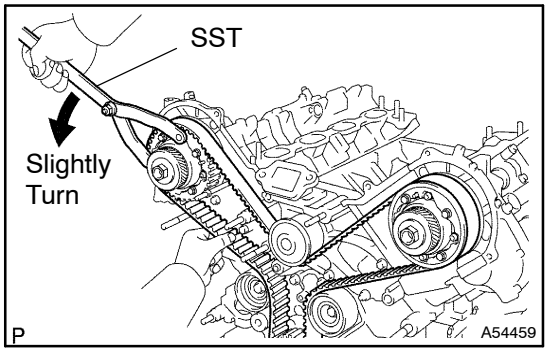

(d) Using SST, loosen the tension between the camshaft timing pulley (RH bank) and crankshaft timing pulley by slightly turning the camshaft timing pulley counterclockwise.
SST 09960–10010 (09962–01000, 09963–00350)

(e) Disconnect the belt from the timing belt idler No. 1, and remove the belt.

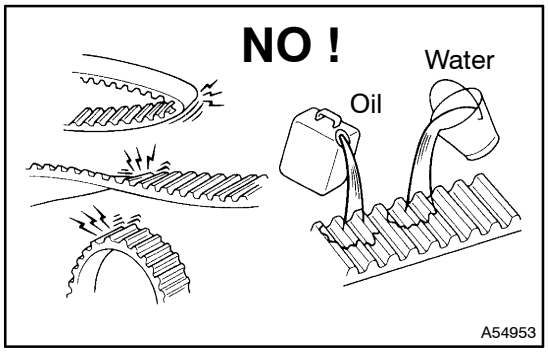

16. INSPECT TIMING BELT

NOTICE:

- **Do not bend, twist or turn the timing belt inside out.**
- **Do not allow the timing belt to come into contact with oil, water or steam.**
- **Do not utilize timing belt tension when installing or removing the mount bolt of the camshaft timing pulley.**

If there are any defects, as shown in the illustrations, check these points:

(a) Premature parting
  (1) Check for proper installation.
  (2) Check the timing cover gasket for damage and proper installation.

(b) If the belt teeth are cracked or damaged, check to see if either camshaft is locked.

(c) If there is noticeable wear or cracks on the belt face, check to see if there are nicks on the side of the idler pulley lock and water pump.

(d) If there is wear or damage on only one side of the belt, check the belt guide and the alignment of each pulley.

(e) If there is noticeable wear on the belt teeth, check the timing cover for damage, check that the gasket has been installed correctly, and check for foreign material on the pulley teeth.

If necessary, replace the timing belt.

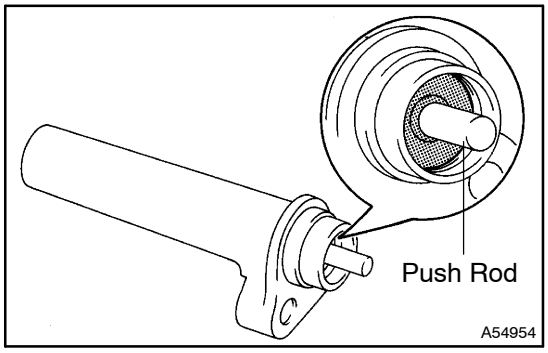

17. INSPECT TIMING BELT TENSIONER

(a) Visually check the seal portion of the tensioner for oil leakage.

HINT:

If there is only the faint trace of oil on the push rod, the tensioner does not need to be replaced.

If leakage is found, replace the tensioner.

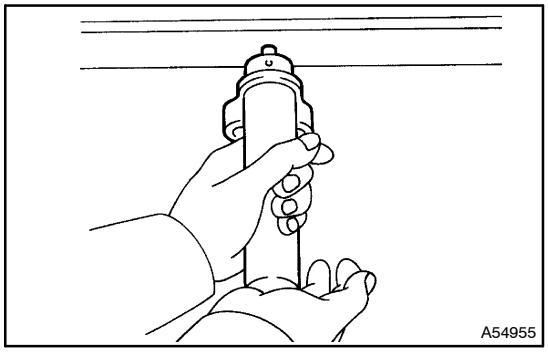

(b) Hold the tensioner with both hands and push the push rod strongly as shown to check that it does not move.

If the push rod moves, replace the tensioner.

NOTICE:

Never hold the tensioner push rod facing downward.

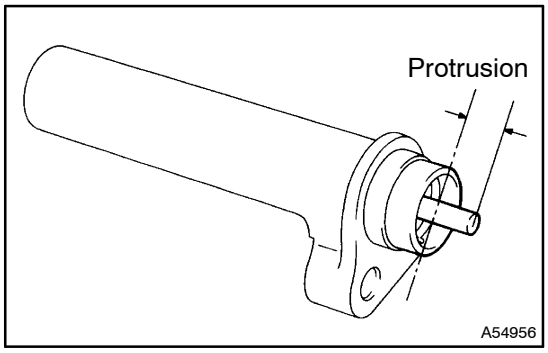

(c) Measure the protrusion of the push rod from the housing end.

Protrusion: 9.5 to 10.5 mm (0.374 to 0.413 in.)

If the protrusion is not as specified, replace the tensioner.

18. REMOVE TIMING BELT IDLER SUB–ASSY NO.1

(a) Using a 10 mm hexagon wrench, remove the bolt, idler and plate washer.

19. REMOVE TIMING BELT IDLER SUB–ASSY NO.2

(a) Remove the bolt and idler.

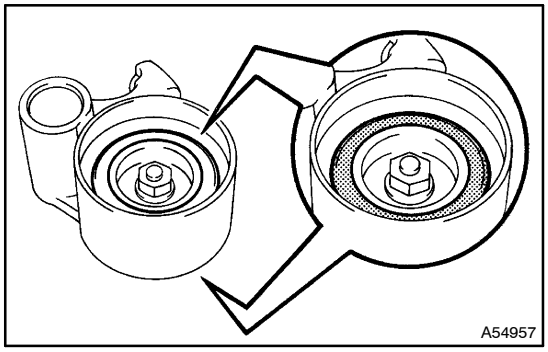

20. INSPECT TIMING BELT IDLER SUB–ASSY NO.1

(a) Visually check the seal portion of the idler for oil leakage.

If leakage is found, replace the idler.

(b) Check that the idler turns smoothly.

If necessary, replace the idler.

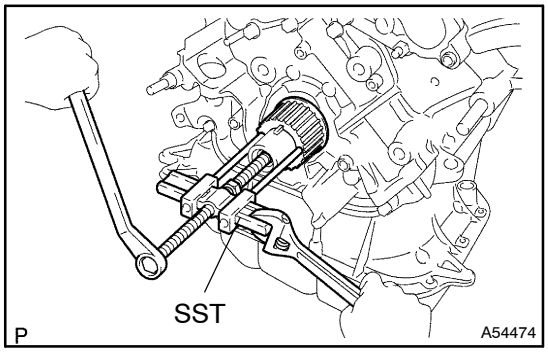

21. REMOVE CRANKSHAFT TIMING PULLEY

(a) Using SST, remove the timing pulley.

SST 09950–50013 (09951–05010, 09952–05010, 09953–05010, 09953–05020, 09954–05010)

NOTICE:

Do not turn the timing pulley.

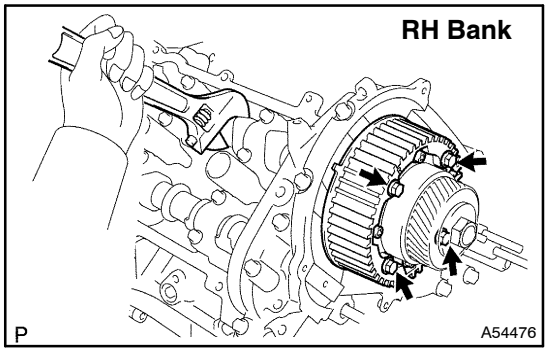

22. REMOVE CAMSHAFT TIMING PULLEY

(a) Remove the 4 bolts and timing pulley.

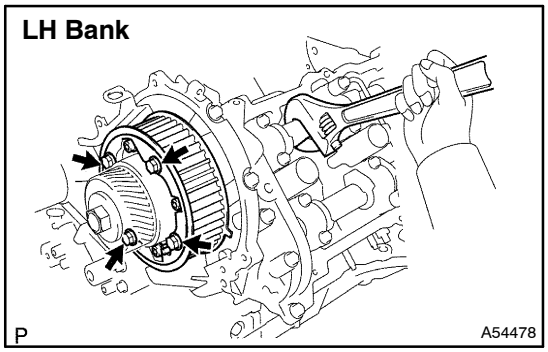

23. REMOVE CAMSHAFT TIMING PULLEY SUB–ASSY LH

(a) Remove the 4 bolts and timing pulley.

24. REMOVE CAMSHAFT

NOTICE:

Since the thrust clearance of the camshaft is small, the camshaft must be kept level while it is being removed. If the camshaft is not kept level, the portion of the cylinder head receiving the shaft thrust may crack or be damaged, causing the camshaft to seize or break. To avoid this, the following steps should be carried out.

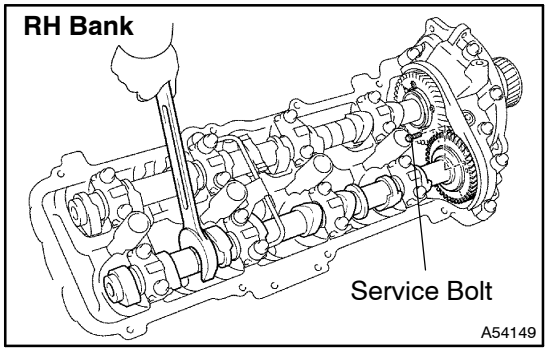

(a) Remove the camshafts of the RH bank.

(1) Bring the service bolt hole of the sub gear upward by turning the hexagon wrench head portion of the No. 2 camshaft with a wrench.

(2) Secure the sub gear to the main gear with a service bolt.

Recommended service bolt:

Thread diameter	6 mm
Thread pitch	1.0 mm
Bolt length	16 to 20 mm (0.63 to 0.79 in.)

HINT:

When removing the camshafts, make sure that the torsional spring force of the sub gear has been eliminated by the above operation.

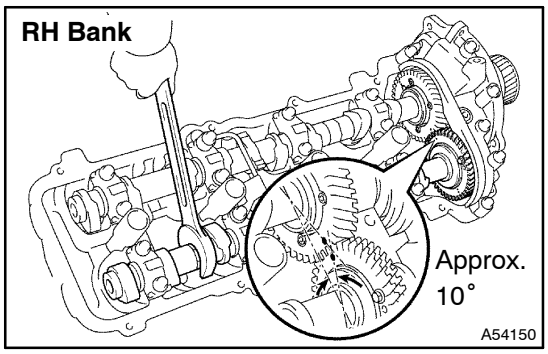

(3) Set the timing mark (1 dot mark) of the camshaft main gear at approximately 10° angle by turning the hexagon wrench head portion of the No. 2 camshaft with a wrench.

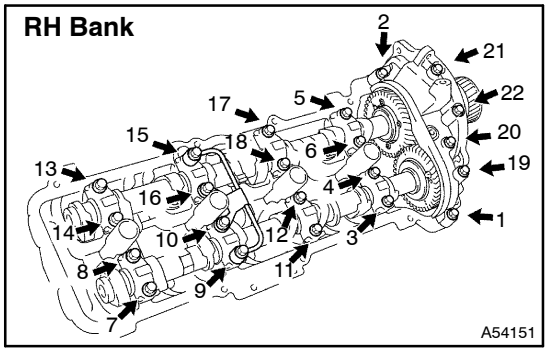

(4) Uniformly loosen the 22 bearing cap bolts in several passes in the sequence shown in the illustration.

(5) Remove the 22 bearing cap bolts, 4 seal washers, oil feed pipe, 9 bearing caps, camshaft housing plug, oil control valve filter and 2 camshafts.

25. REMOVE NO.3 CAMSHAFT SUB–ASSY

NOTICE:

Since the thrust clearance of the camshaft is small, the camshaft must be kept level while it is being removed. If the camshaft is not kept level, the portion of the cylinder head receiving the shaft thrust may crack or be damaged, causing the camshaft to seize or break. To avoid this, the following steps should be carried out.

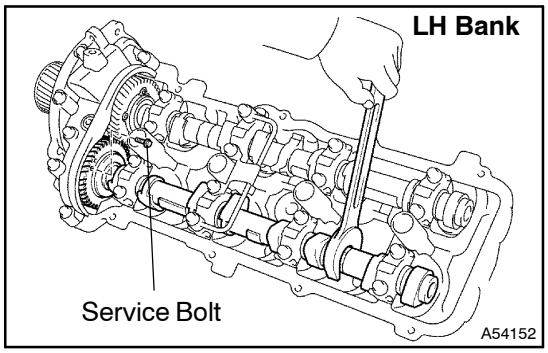

(a) Remove the camshafts of the LH bank.

(1) Bring the service bolt hole of the sub gear upward by turning the hexagon wrench head portion of the No. 4 camshaft with a wrench.

(2) Secure the sub gear to the main gear with a service bolt.

Recommended service bolt:

Thread diameter	6 mm
Thread pitch	1.0 mm
Bolt length	16 to 20 mm (0.63 to 0.79 in.)

HINT:

When removing the camshaft, make sure that the torsional spring force of the sub gear has been eliminated by the above operation.

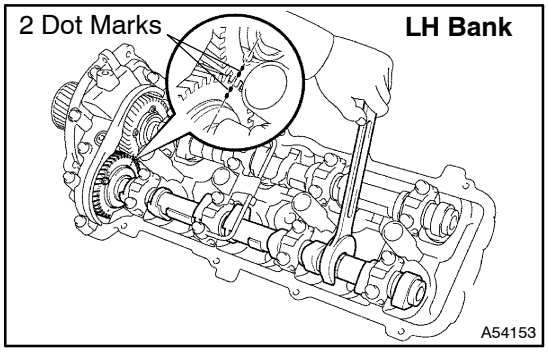

(3) Align the timing mark (2 dot marks) of the camshaft drive gear by turning the hexagon wrench head portion of the No. 4 camshaft with a wrench.

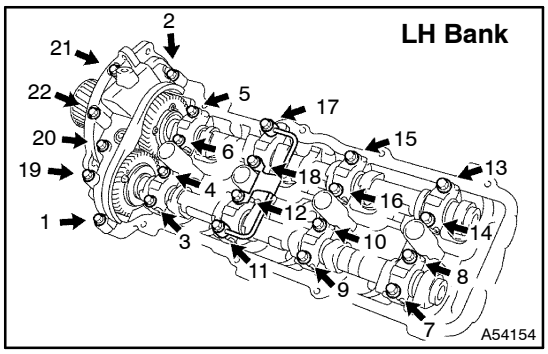

(4) Uniformly loosen the 22 bearing cap bolts in several passes in the sequence shown in the illustration.

(5) Remove the 22 bearing cap bolts, 4 seal washers, oil feed pipe, 9 bearing caps, camshaft housing plug, oil control valve filter and 2 camshafts.

26. REMOVE SEMICIRCULAR PLUG

27. REMOVE TIMING BELT PLATE RR RH NO.2

(a) Remove the 2 bolts and timing belt plate.

28. REMOVE TIMING BELT PLATE RR RH

(a) Remove the bolt, stud bolt and timing belt plate.

29. REMOVE TIMING BELT PLATE RR LH NO.2

(a) Remove the 2 bolts and timing belt plate.

30. REMOVE TIMING BELT PLATE RR LH

(a) Remove the bolt and timing belt plate.

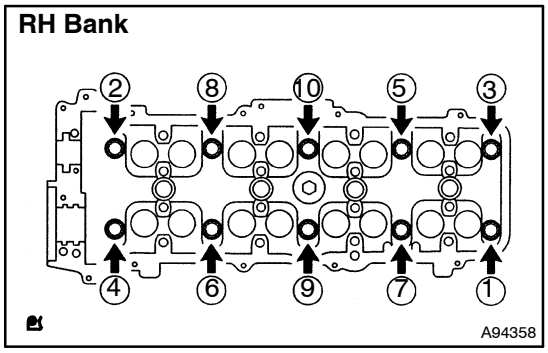

31. REMOVE CYLINDER HEAD SUB–ASSY

(a) Uniformly loosen the 10 cylinder head bolts on one side of each cylinder head in several passes in the sequence shown in the illustration.

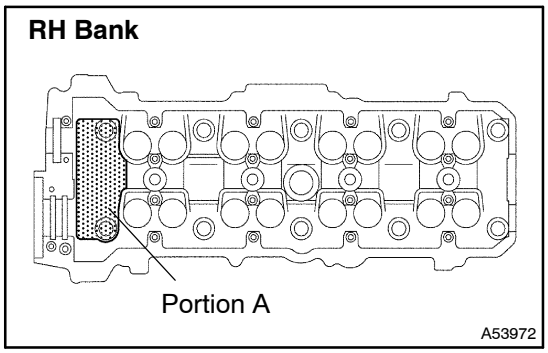

NOTICE:

- **Cylinder head warpage or cracking could result from removing bolts in incorrect order.**
- **Do not drop the plate washer for the cylinder head bolt into portion A of the cylinder head. If dropped into portion A, the plate washer will pass through the cylinder head and cylinder block into the oil pan.**

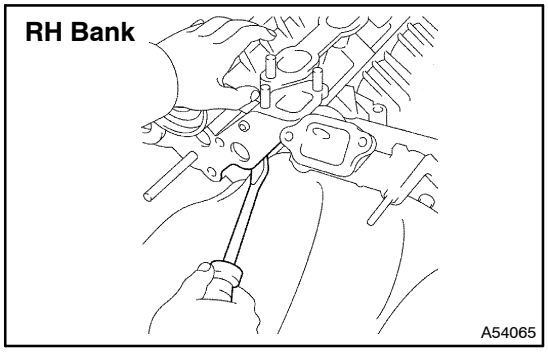

(b) Lift the cylinder head from the dowels on the cylinder block, and place the cylinder head on wooden blocks on a bench.

HINT:

If the cylinder head cannot be removed, pry between the cylinder head and cylinder block with a screwdriver.

NOTICE:

Be careful not to damage the contact surfaces of the cylinder head and cylinder block.

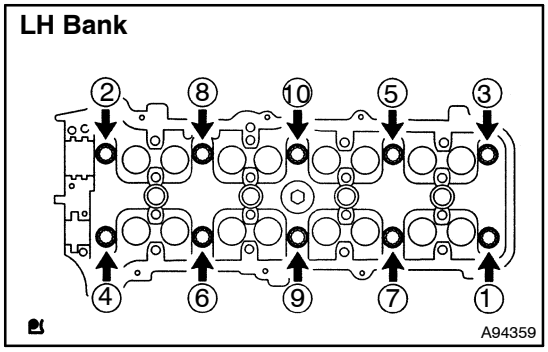

32. REMOVE CYLINDER HEAD LH

(a) Uniformly loosen the 10 cylinder head bolts on one side of each cylinder head in several passes in the sequence shown in the illustration.

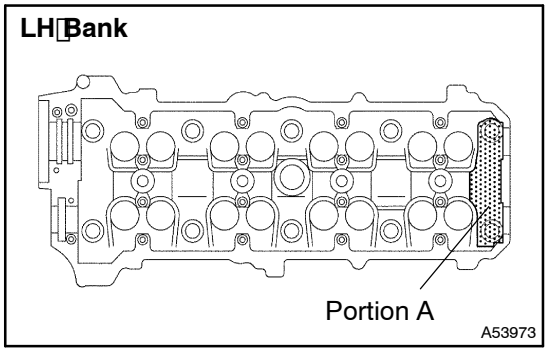

NOTICE:

- **Cylinder head warpage or cracking could result from removing bolts in incorrect order.**
- **Do not drop the plate washer for the cylinder head bolt into portion A of the cylinder head. If dropped into portion A, the plate washer will pass through the cylinder head and cylinder block into the oil pan.**

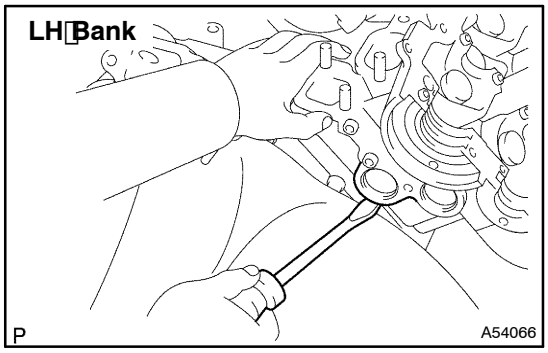

(b) Lift the cylinder head from the dowels on the cylinder block, and place the cylinder head on wooden blocks on a bench.

HINT:
If the cylinder head cannot be removed, pry between the cylinder head and cylinder block with a screwdriver.

NOTICE:
Be careful not to damage the contact surfaces of the cylinder head and cylinder block.

33. REMOVE WATER PUMP ASSY

(a) Remove the 5 bolts, 2 stud bolts and nut, water pump and gasket.

34. REMOVE OIL PAN SUB–ASSY NO.2 (See page 17–9)

35. REMOVE OIL PAN BAFFLE PLATE

(a) Remove the 3 bolts, 2 nuts and baffle plate.

36. REMOVE OIL PAN SUB–ASSY (See page 17–9)

37. REMOVE OIL STRAINER SUB–ASSY

(a) Remove the bolt, 2 nuts, oil strainer and gasket.

38. REMOVE OIL PUMP ASSY (See page 17–9)

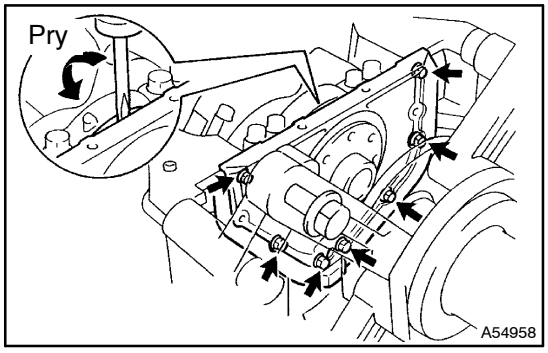

39. REMOVE ENGINE REAR OIL SEAL RETAINER

(a) Remove the 7 bolts.

(b) Using a screwdriver, remove the oil seal retainer by prying the portions between the oil seal retainer and crankshaft bearing cap.

(c) Remove the O–ring.

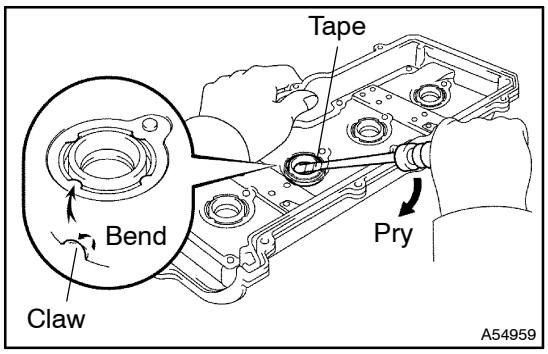

40. REMOVE SPARK PLUG TUBE GASKET

(a) Bend the 4 ventilation case claws installed on the cylinder head cover to an angle of 90° or more.

(b) Using a screwdriver, pry out the gasket.

HINT:
Tape the screwdriver tip before use.

NOTICE:
Be careful not to damage the cylinder head cover.

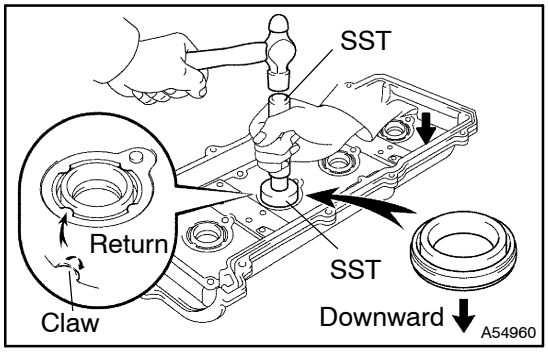

41. INSTALL SPARK PLUG TUBE GASKET

(a) Using SST and a hammer, tap in a new gasket until its surface is flush with the upper edge of the cylinder head cover.

SST 09950–60010, 09950–70010 (09951–00240, 09951–00440, 09951–07100, 09952–06010)

NOTICE:

Be careful of the installation direction.

(b) Apply a light coat of MP grease to the gasket lip.

(c) Return the 4 ventilation case claws to its original position.

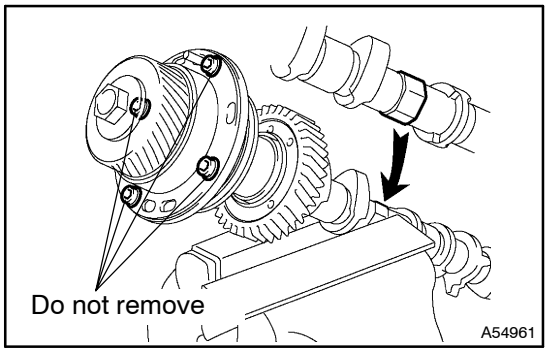

42. REMOVE CAMSHAFT TIMING TUBE ASSY

(a) Mount the hexagon wrench head portion of the camshaft in a vise.

NOTICE:

- **Be careful not to damage the camshaft.**
- **Do not remove the 4 bolts shown in the illustration. The bolts determine the backlash of the gear in the timing tube. If any of the bolts are removed, install a new timing tube assembly.**

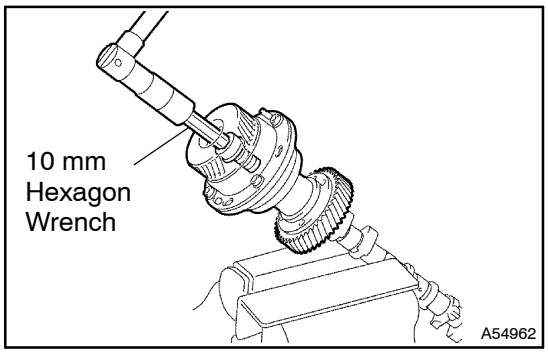

(b) Remove the screw plug and seal washer.

(c) Using a 10 mm hexagon wrench, and remove the bolt.

(d) Pull out the timing tube and drive gear assembly from the camshaft.

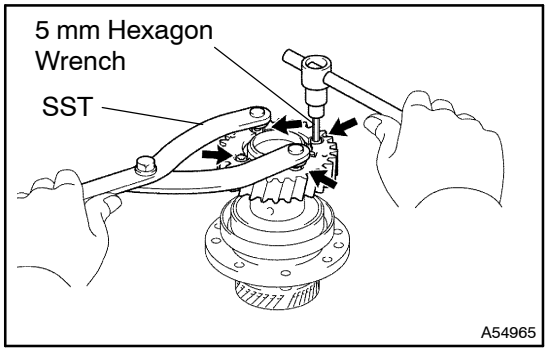

(e) Using SST and a 5 mm hexagon wrench, remove the 4 bolts, drive gear and oil seal.

SST 09960–10010 (09962–01000, 09963–00500)

NOTICE:

Be careful not to damage the timing tube.

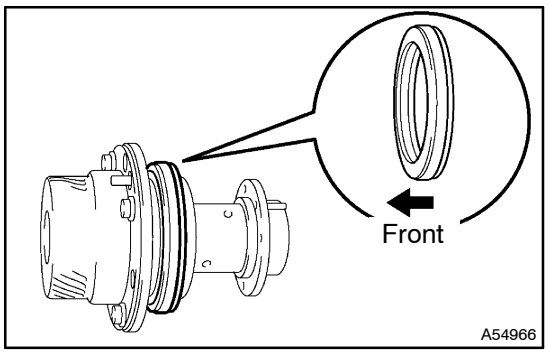

43. INSTALL CAMSHAFT SETTING OIL SEAL

(a) Place a new oil seal onto the timing tube.

NOTICE:

Be careful of the installation direction.

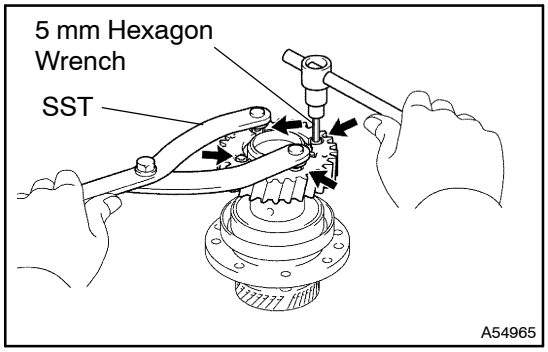

44. INSTALL CAMSHAFT TIMING TUBE ASSY

(a) Align the timing tube knock pin with the knock pin groove of the drive gear, and temporarily install the drive gear with the 4 bolts.

(b) Using SST and a 5 mm hexagon wrench, uniformly tighten the 4 bolts in several passes.
SST 09960–10010 (09962–01000, 09963–00500)
Torque: 7.5 N·m (77 kgf·cm, 66 in.·lbf)

NOTICE:
Be careful not to damage the timing tube.

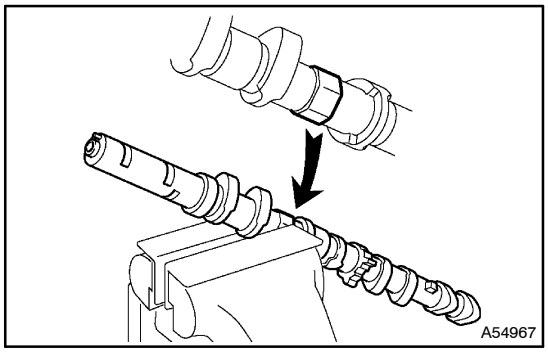

(c) Mount the hexagon wrench head portion of the camshaft in a vise.

NOTICE:
Be careful not to damage the camshaft.

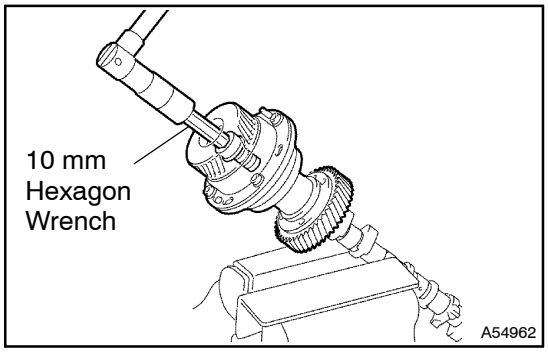

(d) Align the camshaft knock pin with the knock pin groove of the timing tube, and push the timing tube by hand until it touches the bottom.

(e) Using a 10 mm hexagon wrench, install the bolt.
Torque: 78 N·m (795 kgf·cm, 58 ft·lbf)

(f) Install the seal washer and screw plug.
Torque: 15 N·m (153 kgf·cm, 11 ft·lbf)

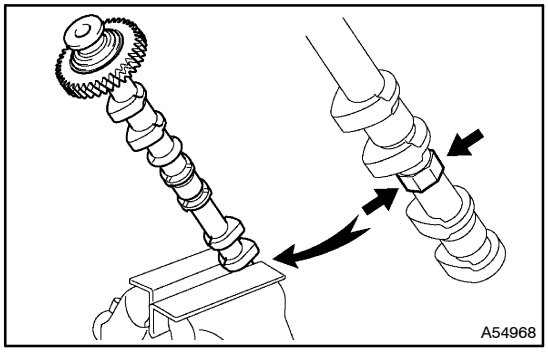

45. REMOVE CAMSHAFT SUB GEAR

(a) Mount the hexagon wrench head portion of the camshaft in a vise.

NOTICE:
Be careful not to damage the camshaft.

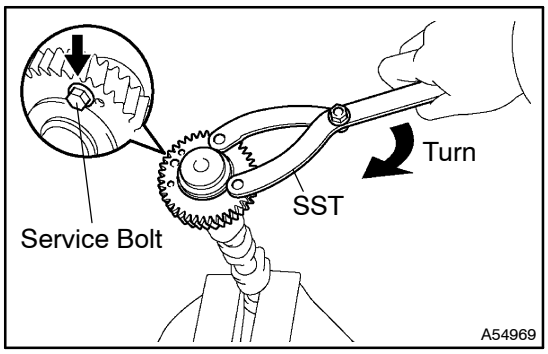

(b) Using SST, turn the sub gear clockwise and remove the service bolt.
SST 09960–10010 (09962–01000, 09963–00500)

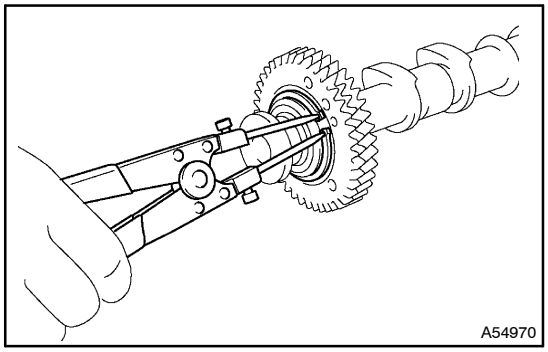

(c) Using snap ring plier, remove the snap ring.
(d) Remove the wave washer, sub gear and bolt washer.
HINT:
Arrange the driven sub gears and bolt washers (RH and LH sides).

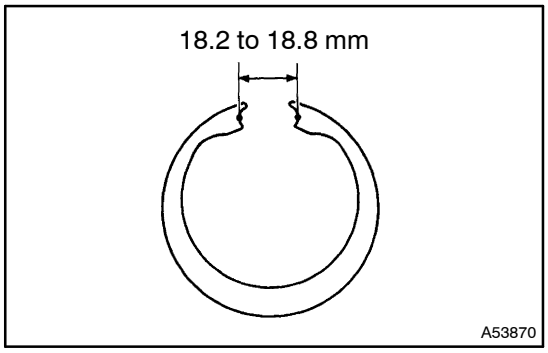

46. INSPECT CAMSHAFT TIMING GEAR BOLT WASHER
(a) Using a vernier caliper, measure the gap between the washer ends.
Gap: 18.2 to 18.8 mm (0.712 to 0.740 in.)
If the is not as specified, replace the washer.

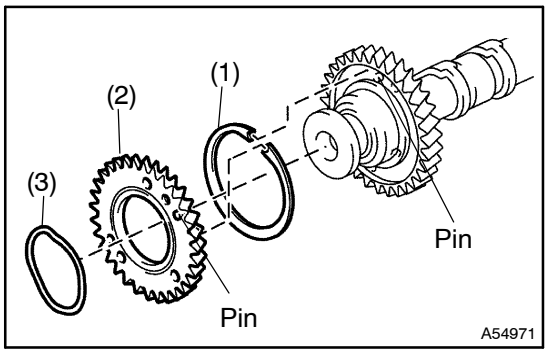

47. INSTALL CAMSHAFT SUB GEAR
(a) Install the bolt washer (1), sub gear (2) and wave washer (3).
HINT:
Attach the pins on the gears to the gear bolt washer ends.

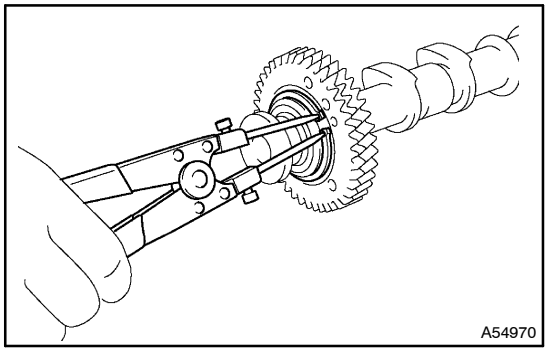

(b) Using snap ring pliers, install the snap ring.

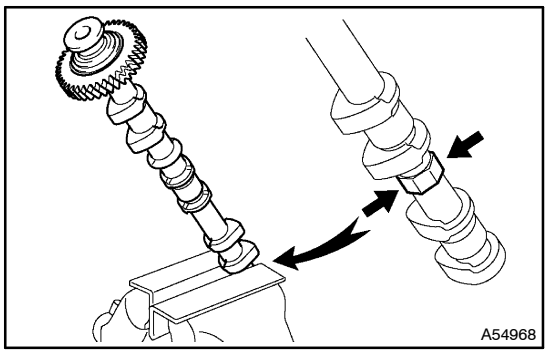

(c) Mount the hexagon wrench head portion of the camshaft in a vise.
NOTICE:
Be careful not to damage the camshaft.

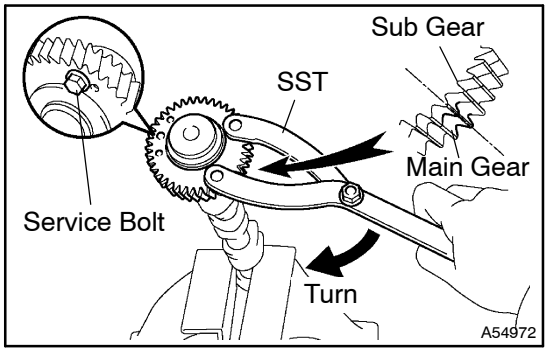

(d) Using SST, align the holes of the driven main gear and sub gear by turning the sub gear clockwise. Temporarily install a service bolt.
SST 09960–10010 (09962–01000, 09963–00500)

(e) Align the gear teeth of the driven main gear and sub gear, and tighten the service bolt.

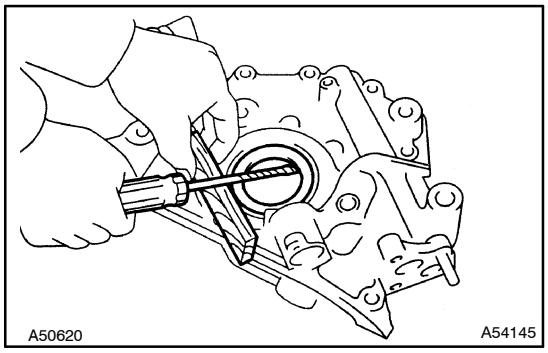

48. REMOVE OIL PUMP SEAL

(a) Using a screwdriver and wooder block, pry out the oil seal.

HINT:

Tape the screwdriver tip before use.

NOTICE:

Be careful not to damage the oil pump body.

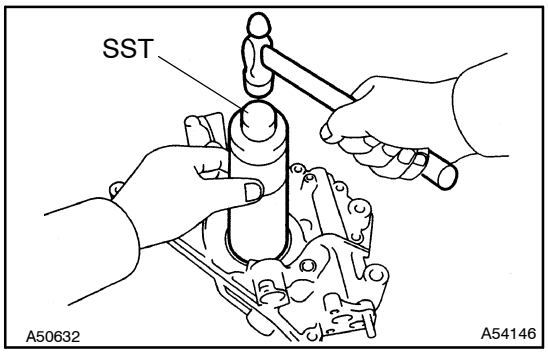

49. INSTALL OIL PUMP SEAL

(a) Using SST and a hammer, tap in a new oil seal until its surface is flush with the oil pump body edge.
SST 09316–60011 (09316–00011)

(b) Apply MP grease to the oil seal lip.

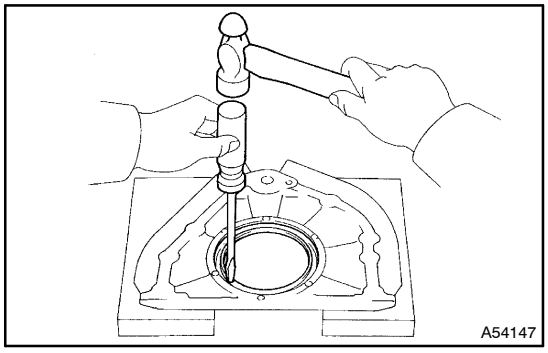

50. REMOVE ENGINE REAR OIL SEAL

(a) Using a screwdriver and hammer, tap out the oil seal.

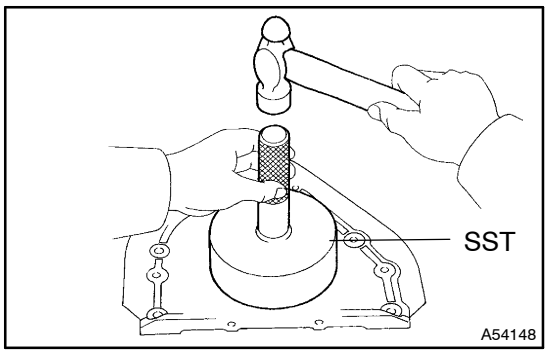

51. INSTALL ENGINE REAR OIL SEAL

(a) Using SST and a hammer, tap in a new oil seal until its surface is flush with the rear oil seal retainer edge.
SST 09223–56010

(b) Apply MP grease to the oil seal lip.

52. INSTALL ENGINE REAR OIL SEAL RETAINER

(a) Remove any old packing (FIPG) material and be careful not to drop any oil on the contact surfaces of the oil seal retainer and cylinder block.

(1) Using a razor blade and gasket scraper, remove all the oil packing (FIPG) material from the gasket surfaces and sealing grooves.
(2) Thoroughly clean all components to remove all the loose material.
(3) Using a non–residue solvent, clean both sealing surfaces.

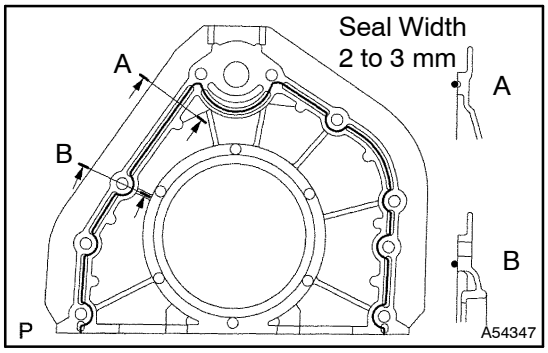

(b) Apply seal packing to the oil seal retainer as shown in the illustration.
Seal packing: Part No. 08826–00080 or equivalent
(1) Install a nozzle that has its opening cut to 3 to 4 mm (0.12 to 0.16 in.).
(2) Parts must be assembled within 5 minutes of application. Otherwise the material must be removed and reapplied.
(3) Immediately remove the nozzle from the tube and reinstall the cap.
(c) Install a new O–ring to the cylinder block.
(d) Install the oil seal retainer with the 7 bolts.
Torque: 8.0 N·m (82 kgf·cm, 71 in.·lbf)

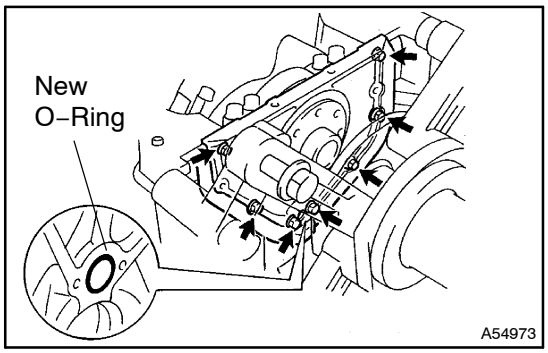

53. INSTALL OIL PUMP ASSY (See page 17–9)
54. INSTALL OIL STRAINER SUB–ASSY (See page 17–9)
55. INSTALL OIL PAN STUD BOLT

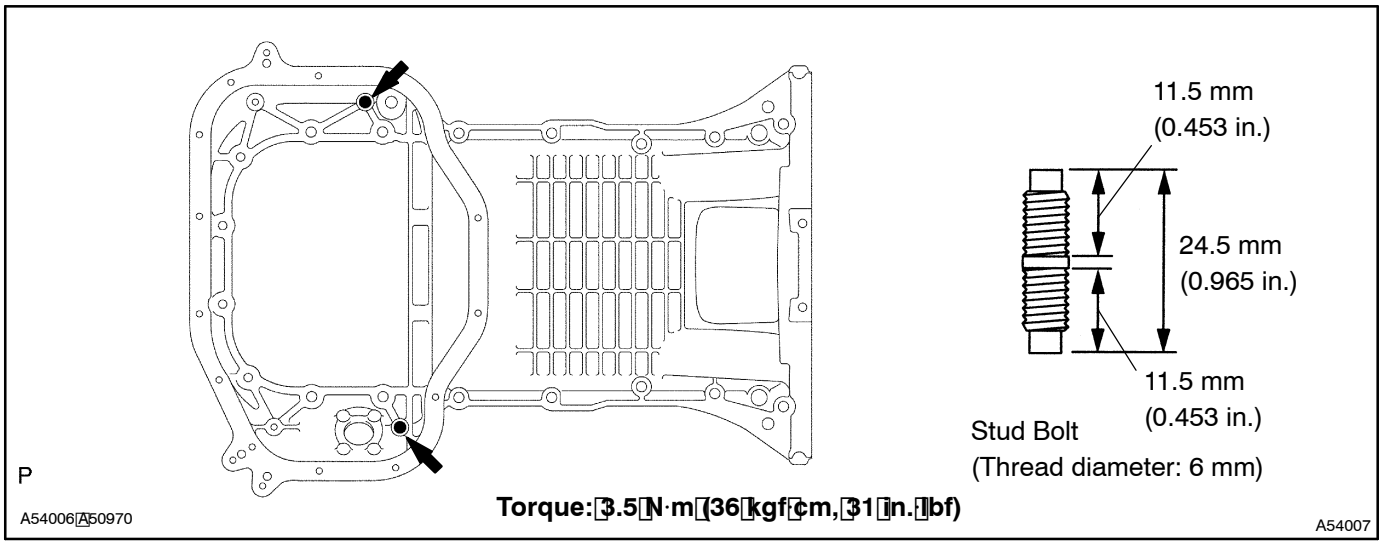

56. INSTALL OIL PAN SUB–ASSY (See page 17–9)
57. INSTALL OIL PAN BAFFLE PLATE (See page 17–9)
58. INSTALL OIL PAN SUB–ASSY NO.2 (See page 17–9)

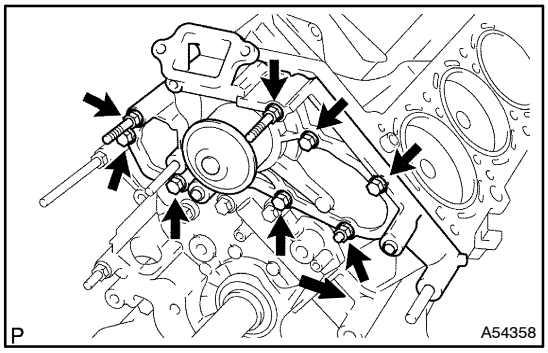

59. INSTALL WATER PUMP ASSY

(a) Install a new gasket and water pump with the 5 bolts, 2 stud bolts and nut. Uniformly tighten the bolts, stud bolts and nut in several passes.

Torque:
21 N·m (214 kgf·cm, 16 ft·lbf) for bolt
18 N·m (184 kgf·cm, 13 ft·lbf) for stud bolt and nut

HINT:
Use bolts that are 30 mm (1.18 in.) in length.

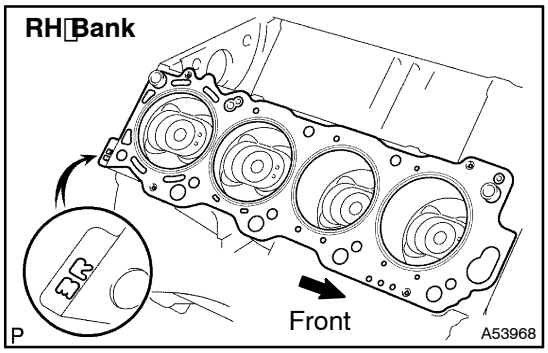

60. INSTALL CYLINDER HEAD SUB–ASSY

(a) Place a new cylinder head gasket on the cylinder block.

HINT:
The rear side of the cylinder head gasket has marks so that the RH and LH banks can be distinguished. A ”3R” mark is on the RH bank’s gasket.

NOTICE:
Be careful of the installation direction.

(b) Place the cylinder head on the cylinder head gasket.

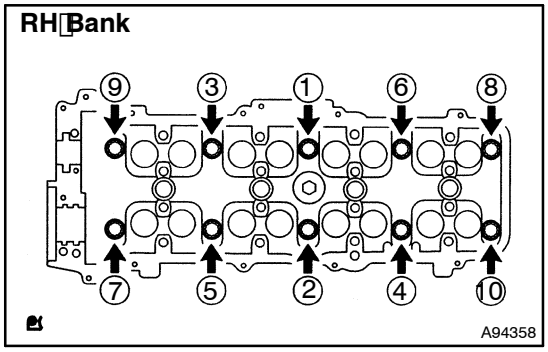

(c) Install the cylinder head bolts.

HINT:
- The cylinder head bolts are tightened in 2 progressive steps (steps (3) and (5)).
- If any cylinder head bolt is broken or deformed, replace it.
  (1) Apply a light coat of engine oil on the threads and under the heads of the cylinder head bolts.
  (2) Install the plate washer to the cylinder head bolt.
  (3) Install and uniformly tighten the 10 cylinder head bolts on one side of the cylinder head in several passes in the sequence shown in the illustration.

Torque: 59 N·m (602 kgf·cm, 44 ft·lbf)

If any one of the cylinder head bolts does not meet the torque specification, replace the cylinder head bolt.

NOTICE:
Do not drop the plate washer for the cylinder head bolt into portion A of the cylinder head. If dropped into portion A, the plate washer will pass through the cylinder head and cylinder block into the oil pan.

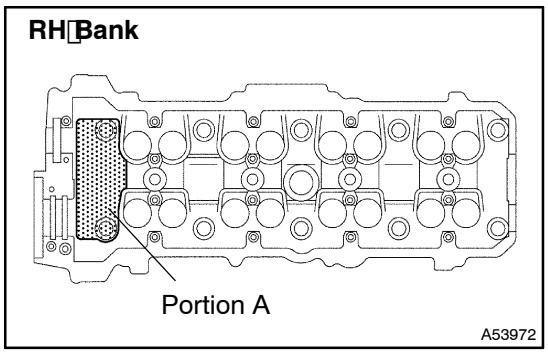

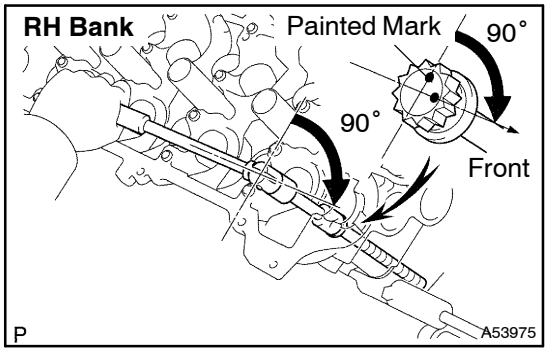

(4) Mark the front of the cylinder head bolt head with paint.
(5) Retighten the cylinder head bolts by 90° in the sequence shown in the illustration.
(6) Check that the painted mark is now at a 90° angle to front.

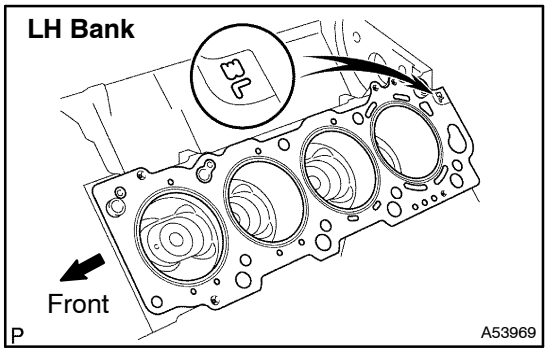

61. INSTALL CYLINDER HEAD LH

(a) Place a new cylinder head gasket on the cylinder block.

HINT:

The rear side of the cylinder head gasket has marks so that the RH and LH banks can be distinguished. A ”3L” mark is on the LH bank’s gasket.

NOTICE:

Be careful of the installation direction.

(b) Place the cylinder head on the cylinder head gasket.

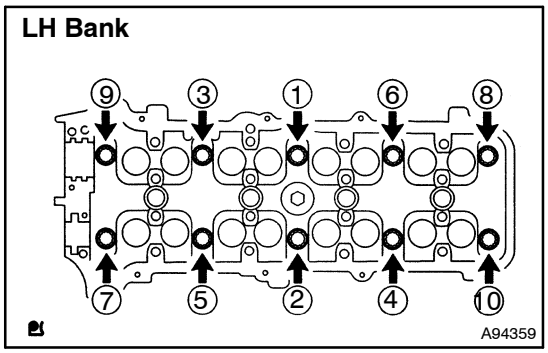

(c) Install the cylinder head bolts.

HINT:

- The cylinder head bolts are tightened in 2 progressive steps (steps (3) and (5)).
- If any cylinder head bolt is broken or deformed, replace it.
  (1) Apply a light coat of engine oil on the threads and under the heads of the cylinder head bolts.
  (2) Install the plate washer to the cylinder head bolt.
  (3) Install and uniformly tighten the 10 cylinder head bolts on one side of the cylinder head in several passes in the sequence shown in the illustration.
  Torque: 59 N·m (602 kgf·cm, 44 ft·lbf)

If any one of the cylinder head bolts does not meet the torque specification, replace the cylinder head bolt.

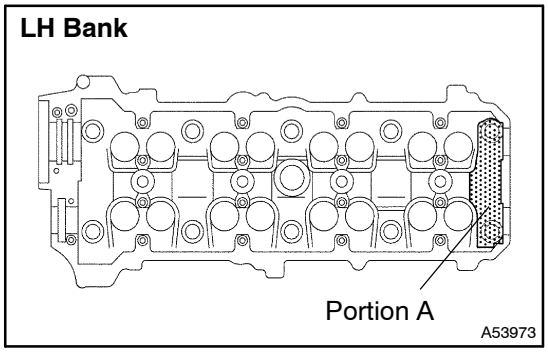

NOTICE:

Do not drop the plate washer for the cylinder head bolt into portion A of the cylinder head. If dropped into portion A, the plate washer will pass through the cylinder head and cylinder block into the oil pan.

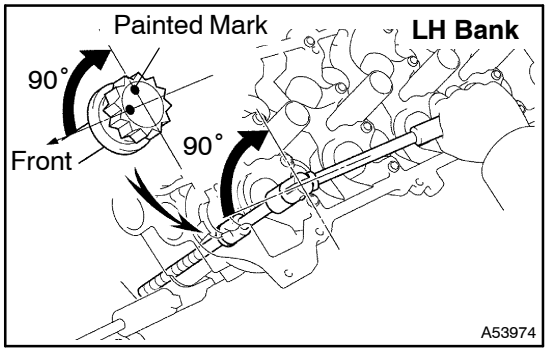

(4) Mark the front of the cylinder head bolt head with paint.
(5) Retighten the cylinder head bolts by 90° in the sequence shown in the illustration.
(6) Check that the painted mark is now at a 90° angle to front.

62. INSTALL CAMSHAFT

NOTICE:

Since the thrust clearance of the camshaft is small, the camshaft must be kept level while it is being installed. If the camshaft is not kept level, the portion of the cylinder head receiving the shaft thrust may crack or be damaged, causing the camshaft to seize or break. To avoid this, the following steps should be carried out.

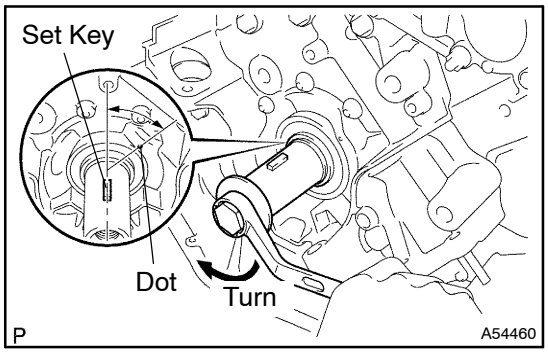

(a) Set the crankshaft position.
(1) Using the crankshaft damper bolt, turn the crankshaft, and set the set key of the crankshaft to 90° counterclockwise from the timing mark (1 dot mark) of the oil pump body.

NOTICE:

The crankshaft must be at the correct angle to avoid damage in later steps. If the crankshaft is at the wrong angle and then the camshaft is installed, the piston head and valve head may come in contact and be damaged.

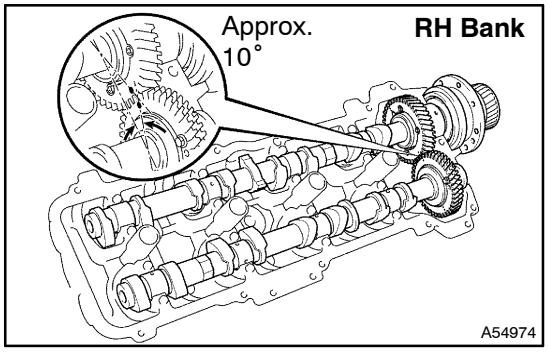

(b) Install the camshafts of the RH bank.
(1) Apply MP grease to the thrust portion of the camshafts.
(2) Align the timing marks (1 dot mark) of the camshaft drive and driven main gears, and place the 2 camshafts.
(3) Set the timing mark (1 dot mark) of the camshaft drive and driven main gears at approximately 10° angle.

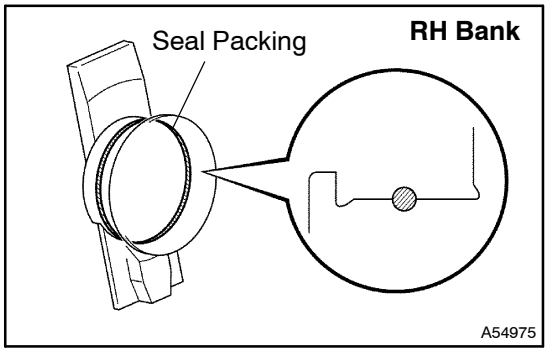

(4) Apply seal packing to the camshaft housing plug.
- Remove the old packing (FIPG) material.
- Apply seal packing to the housing plug.

Seal packing: Part No. 08826–00080 or equivalent

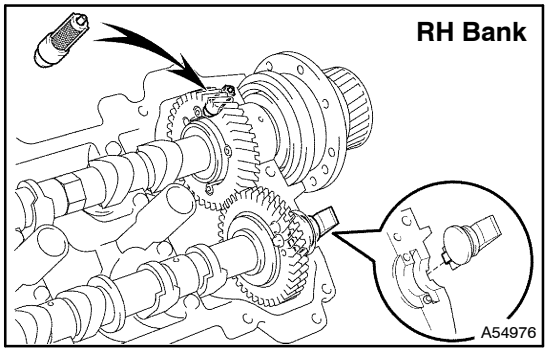

(5) Install the camshaft housing plug to the cylinder head as shown in the illustration.

(6) Install the oil control valve filter to the cylinder head.

NOTICE:

Be careful of the installation direction.

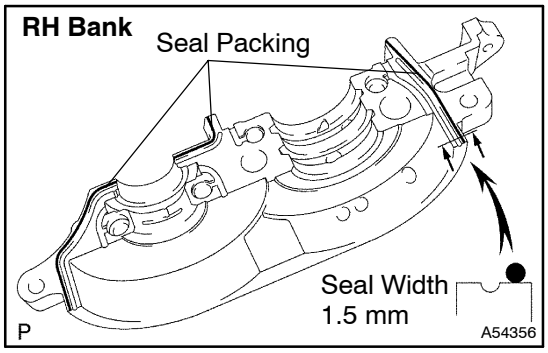

(7) Apply seal packing to the front bearing cap.

- Remove any old packing (FIPG) material and be careful not to drop any oil on the contact surfaces of the bearing cap and cylinder head.
- Using a razor blade and gasket scraper, remove all the old packing (FIPG) material from the gasket surfaces and groove.
- Thoroughly clean all components to remove all loose material.
- Using a non–residue solvent, clean both sealing surfaces.
- Apply seal packing to the bearing cap as shown in the illustration.
- Install a nozzle that has been cut to a 1.5 to 2.0 mm (0.059 to 0.79 in.) opening.
- Parts must be assembled within 5 minutes of application. Otherwise, the seal packing must be removed and reapplied.
- Immediately remove the nozzle from the tube and reinstall the cap.

Seal packing: Part No. 08826–00080 or equivalent

NOTICE:

Do not apply seal packing to the front bearing cap grooves.

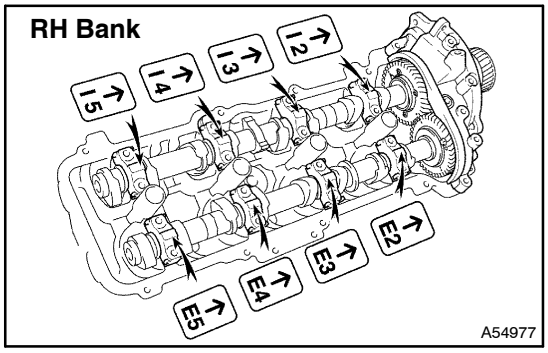

(8) Install the front bearing cap.

HINT:

Installing the front bearing cap will determine the thrust portion of the camshaft.

(9) Install the other bearing caps in the sequence shown with the arrow mark facing forward.

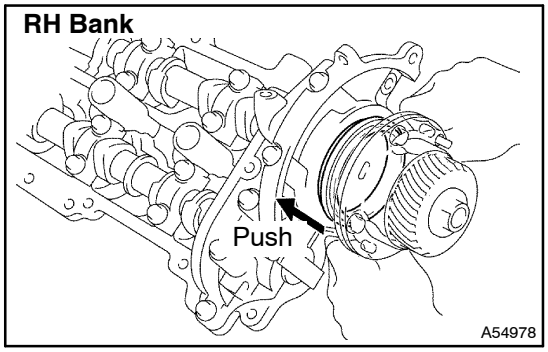

(10) Push in the camshaft setting oil seal.

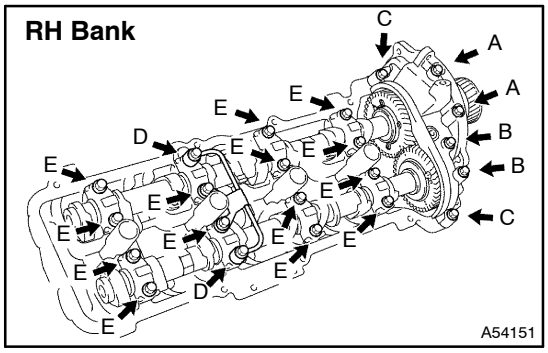

(11) Install a new seal washer to the bearing cap bolt (A and B).

(12) Apply a light coat of engine oil on the threads and under the heads of the bearing cap bolts (D and E).

NOTICE:

Do not apply engine oil under the heads of the bearing cap bolt (A), (B) and (C).

Bolt length:

94 mm (3.70 in.) for A with seal washer

72 mm (2.83 in.) for B with seal washer

25 mm (0.98 in.) for C

52 mm (2.05 in.) for D

38 mm (1.50 in.) for E

(13) Install the oil feed pipe and the 22 bearing cap bolts as shown in the illustration.

(14) Uniformly tighten the 22 bearing cap bolts in several passes in the sequence shown in the illustaratoin.

Torque:

7.5 N·m (77 kgf·cm, 66 in.·lbf) for bolt 21 and 22

16 N·m (163 kgf·cm, 12 ft·lbf) for others

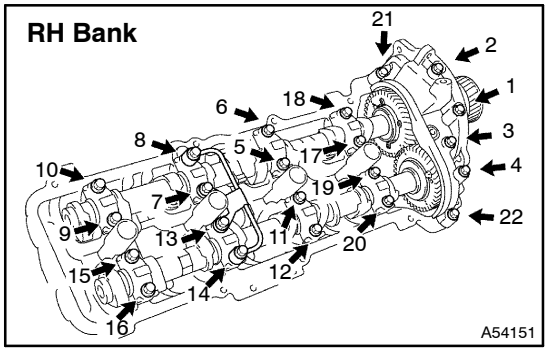

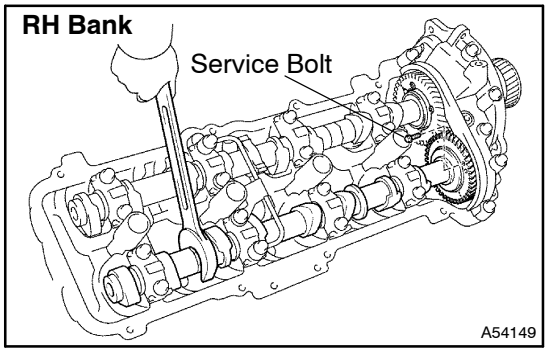

(15) Remove the service bolt.

63. INSTALL NO.3 CAMSHAFT SUB–ASSY

NOTICE:

Since the thrust clearance of the camshaft is small, the camshaft must be kept level while it is being installed. If the camshaft is not kept level, the portion of the cylinder head receiving the shaft thrust may crack or be damaged, causing the camshaft to seize or break. To avoid this, the following steps should be carried out.

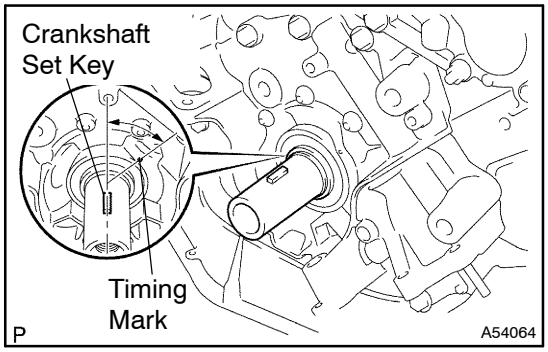

(a) Check the set key of the crankshaft is at the position of 90° counterclockwise from the timing mark (1 dot mark) of the oil pump body.

NOTICE:

The crankshaft must be at the correct angle to avoid damage in later steps. If the crankshaft is at the wrong angle and then the camshaft is installed, the piston head and valve head may come in contact and be damaged.

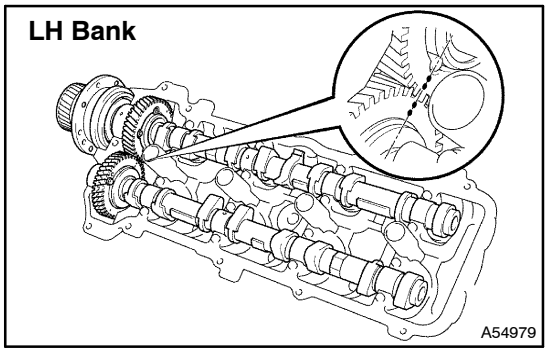

(b) Install the camshafts of the LH bank.

(1) Apply MP grease to the thrust portion of the camshafts.

(2) Align the timing marks (2 dot marks each) of the camshaft drive and driven main gears, and place the 2 camshafts.

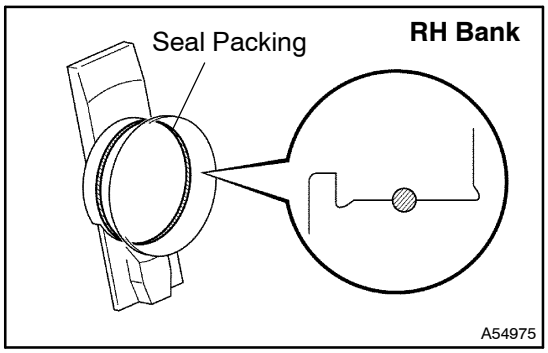

(3) Apply seal packing to the camshaft housing plug.

- Remove the old packing (FIPG) material.
- Apply seal packing to the housing plug.

Seal packing: Part No. 08826–00080 or equivalent

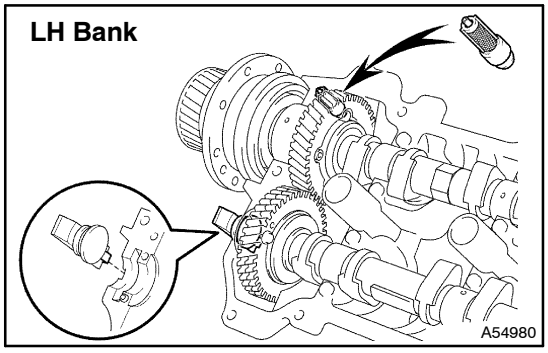

(4) Install the camshaft housing plug to the cylinder head as shown in the illustration.

(5) Install the oil control valve filter to the cylinder head.

NOTICE:

Be careful of the installation direction.

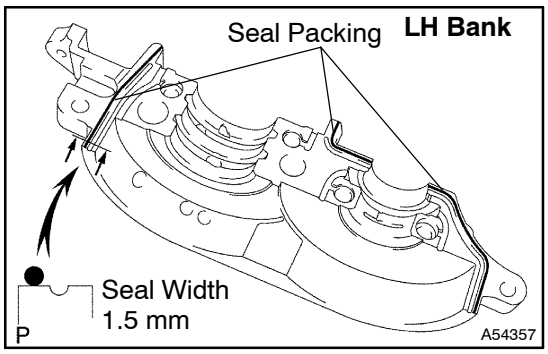

(6) Apply seal packing to the front bearing cap.

- Remove any old packing (FIPG) material and be care not to drop any oil on the contact surfaces of the bearing cap and cylinder head.
- Using a razor blade and gasket scraper, remove all the old packing (FIPG) material from the gasket surfaces and groove.
- Thoroughly clean all components to remove all loose material.

- Using a non–residue solvent, clean both sealing surfaces.
- Apply seal packing to the bearing cap as shown in the illustration.
- Install a nozzle that has its opening cut to 1.5 to 2.0 mm (0.059 to 0.79 in.).
- Parts must be assembled within 5 minutes of application. Otherwise the material must be removed and reapplied.
- Immediately remove the nozzle from the tube and reinstall the cap.

Seal packing: Part No. 08826–00080 or equivalent

NOTICE:

Do not apply seal packing to the front bearing cap grooves.

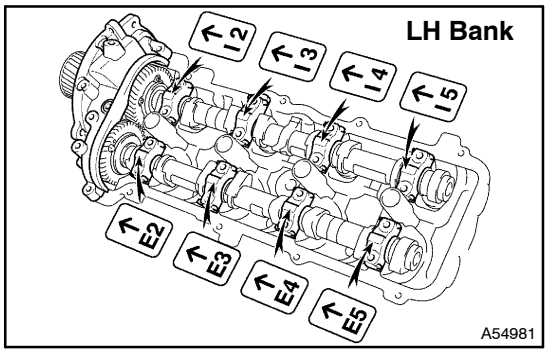

(7) Install the front bearing cap.

HINT:

Installing the front bearing cap will determine the thrust portion of the camshaft.

(8) Install the other bearing cap in the sequence shown with the arrow mark facing forward.

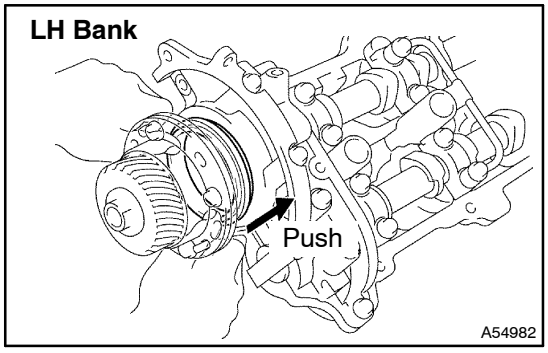

(9) Push in the camshaft setting oil seal.

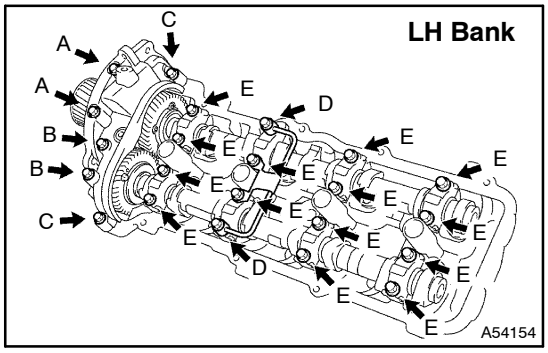

(10) Install a new seal washer to the bearing cap bolt (A and B).

(11) Apply a light coat of engine oil on the threads and under the heads of the bearing cap bolts (D and E).

NOTICE:

Do not apply engine oil under the heads of the bearing cap bolt (A), (B) and (C).

Bolt length:

94 mm (3.70 in.) for A with seal washer

72 mm (2.83 in.) for B with seal washer

25 mm (0.98 in.) for C

52 mm (2.05 in.) for D

38 mm (1.50 in.) for E

(12) Install the oil feed pipe and the 22 bearing cap bolts as shown in the illustration.

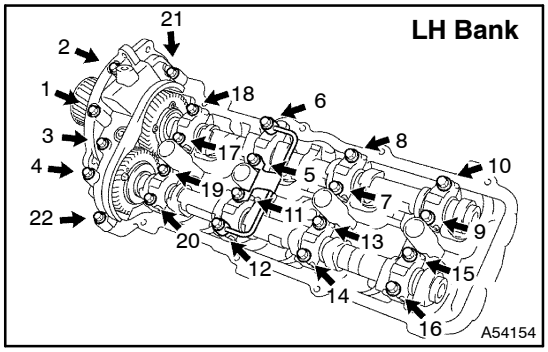

(13) Uniformly tighten the 22 bearing cap bolts in several passes in the sequence shown in the illustration.

Torque:
7.5 N·m (77 kgf·cm, 66 in.·lbf) for bolt C
16 N·m (163 kgf·cm, 12 ft·lbf) for others

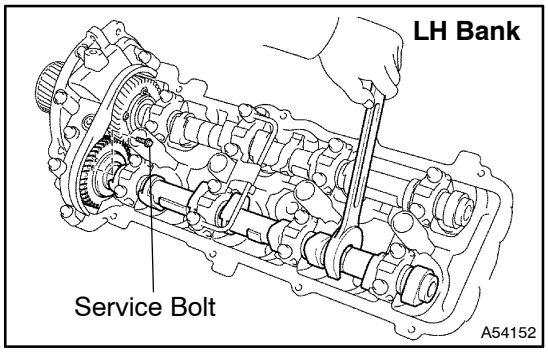

(14) Remove the service bolt.

64. INSTALL TIMING BELT PLATE RR RH

(a) Install the timing belt plate with the bolt and stud bolt.
Torque: 7.5 N·m (77 kgf·cm, 66 in.·lbf)

65. INSTALL TIMING BELT PLATE RR RH NO.2

(a) Install the timing belt plate with the 2 bolts.
Torque: 7.5 N·m (77 kgf·cm, 66 in.·lbf)

66. INSTALL TIMING BELT PLATE RR LH

(a) Install the timing belt plate with the bolt.
Torque: 7.5 N·m (77 kgf·cm, 66 in.·lbf)

67. INSTALL TIMING BELT PLATE RR LH NO.2

(a) Install the timing belt plate with the 2 bolts.
Torque: 7.5 N·m (77 kgf·cm, 66 in.·lbf)

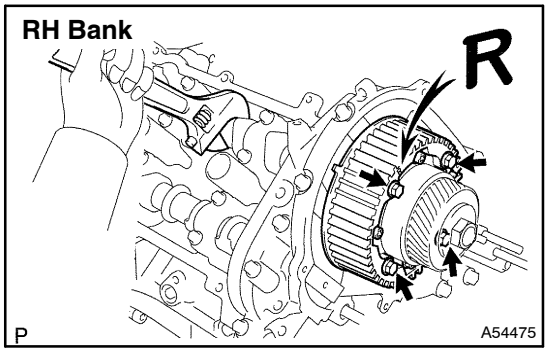

68. INSTALL CAMSHAFT TIMING PULLEY

(a) Align the camshaft timing tube knock pin with the knock pin groove of the timing pulley.

(b) Attach the timing pulley to the camshaft timing tube. Face the timing pulley's "R" mark forward.

(c) Hold the hexagon wrench head portion of the camshaft and install the 4 pulley bolts.
Torque: 7.5 N·m (77 kgf·cm, 66 in.·lbf)

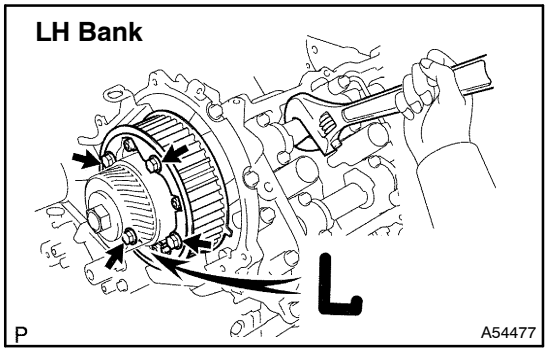

69. INSTALL CAMSHAFT TIMING PULLEY SUB–ASSY LH

(a) Align the camshaft timing tube knock pin with the knock pin groove of the timing pulley.

(b) Attach the timing pulley to the camshaft timing tube. Face the timing pulley's "L" mark forward.

(c) Hold the hexagon wrench head portion of the camshaft and install the 4 pulley bolts.
Torque: 7.5 N·m (77 kgf·cm, 66 in.·lbf)

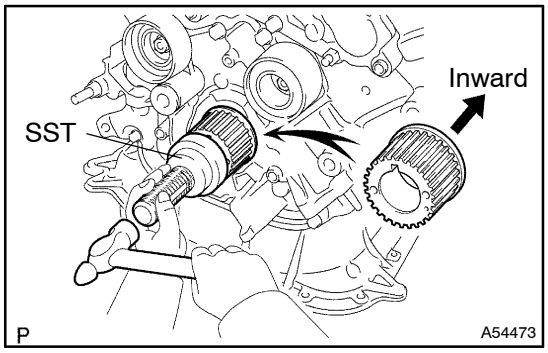

70. INSTALL CRANKSHAFT TIMING PULLEY

(a) Align the timing pulley set key with the key groove of the pulley.

(b) Using SST and a hammer, tap in the timing pulley. Face the flange side inward.
SST 09223–46011

71. INSTALL TIMING BELT IDLER SUB–ASSY NO.2

(a) Install the idler with the bolt.
Torque: 34.5 N·m (352 kgf·cm, 25 ft·lbf)

(b) Check that the idler moves smoothly.

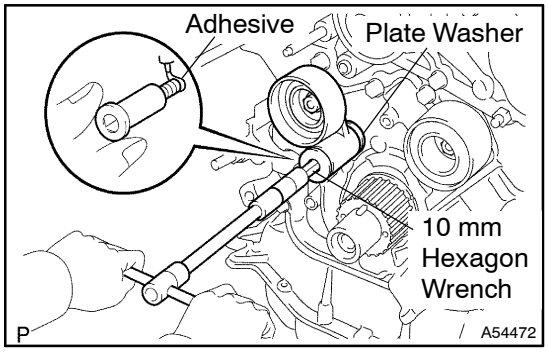

72. INSTALL TIMING BELT IDLER SUB–ASSY NO.1

(a) Apply adhesive to 2 or 3 threads of the pivot bolt.
Adhesive:
Part No. 08833–00080, THREE BOND 1344, LOCTITE 242 or equivalent

(b) Using a 10 mm hexagon wrench, install the plate washer and idler with the pivot bolt.
Torque: 34.5 N·m (352 kgf·cm, 25 ft·lbf)

(c) Check that the idler bracket moves smoothly.

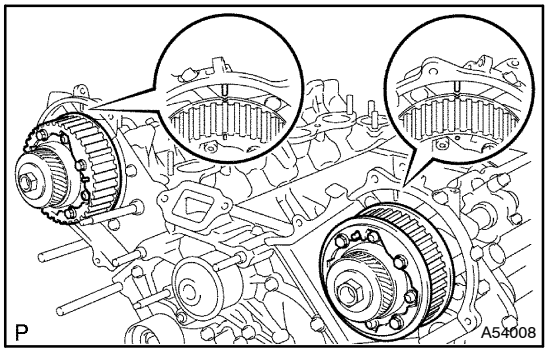

73. INSTALL TIMING BELT

NOTICE:

The engine should be cold.

(a) Set the No. 1 cylinder to TDC/compression.

(1) Turn the hexagon wrench head portion of the camshaft to align the timing marks of the camshaft timing pulleys and timing belt plates.

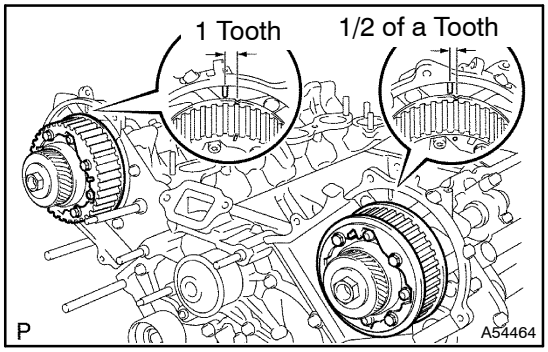

HINT:
Turn the camshaft timing pulleys slightly clockwise to make installation of the timing belt easier.
Camshaft timing pulley of LH bank: 1/2 of a tooth
Camshaft timing pulley of RH bank: 1 tooth

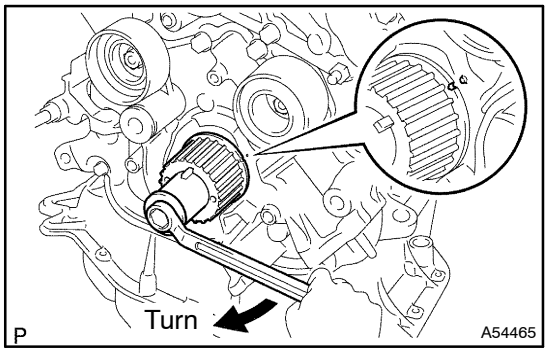

(2) Using the crankshaft damper bolt, turn the crankshaft to align the timing marks of the crankshaft timing pulley and oil pump body.

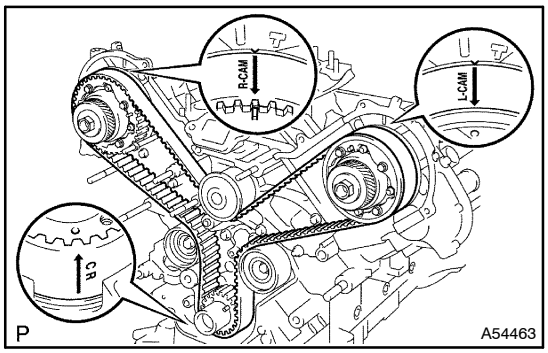

(b) Install the timing belt.

(1) Remove any oil or water on each pulley, and keep them clean.

NOTICE:
Only wipe the pulleys. Do not use cleaning agents on the pulleys.

(2) Face the front mark (arrow) on the timing belt forward.

(3) Connect the timing belt to the crankshaft timing pulley.
- Align the installation mark on the timing belt with the timing mark of the crankshaft timing pulley.

(4) Connect the timing belt to the idler No. 2.

(5) Connect the timing belt to the camshaft timing pulley LH.
- Align the installation mark on the timing belt with the timing mark of the camshaft timing pulley.

(6) Connect the timing belt to the water pump pulley.

(7) Connect the timing belt to the camshaft timing pulley (RH bank).
- Align the installation mark on the timing belt with the timing mark of the camshaft timing pulley.

(8) Connect the timing belt to the idler No. 1.

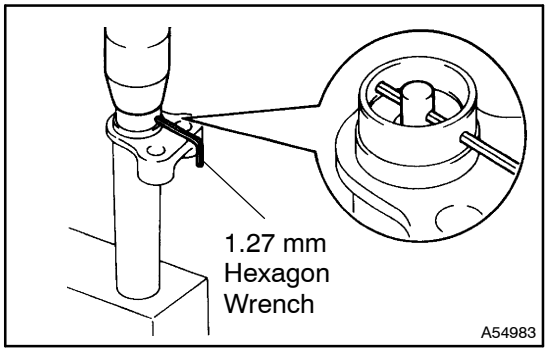

(c) Set the belt tensioner.
(1) Using a press, slowly press in the push rod using 981 to 9,807 N (100 to 1,000 kgf, 220 to 2,205 lbf) of pressure.
(2) Align the holes of the push rod and housing. Pass a 1.27 mm hexagon wrench through the holes to keep the setting position of the push rod.
(3) Release the press.
(4) Install the dust boot to the belt tensioner.

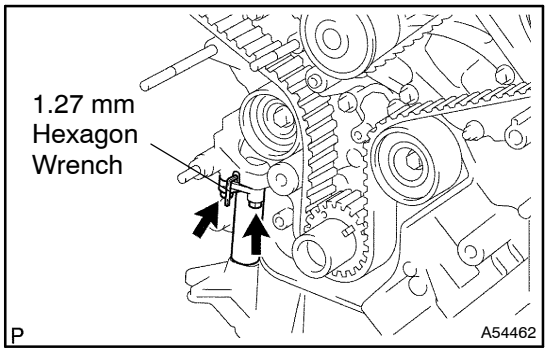

(d) Install the belt tensioner.
(1) Temporarily install the belt tensioner with the 2 bolts.
(2) Alternately tighten the 2 bolts.
Torque: 26 N·m (265 kgf·cm, 19 ft·lbf)
(3) Using pliers, remove the 1.27 mm hexagon wrench from the belt tensioner.

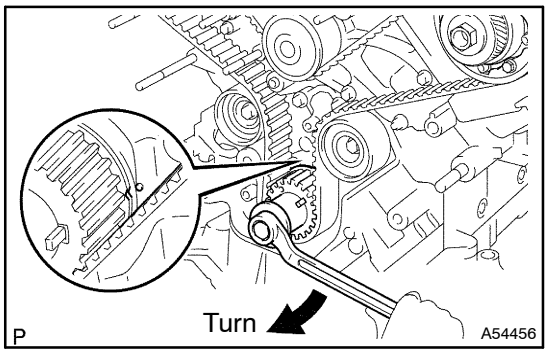

(e) Check the valve timing.
(1) Using the crankshaft damper bolt, slowly turn the crankshaft pulley 2 revolutions from TDC to TDC.

NOTICE:
Always turn the crankshaft pulley clockwise.

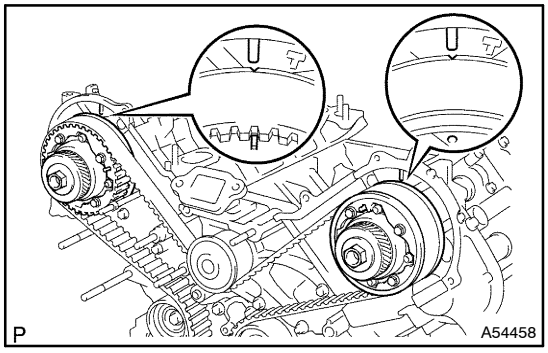

(2) Check that each pulley aligns with the timing marks as shown in the illustration.

If the timing marks do not align, remove the timing belt and reinstall it.

74. INSTALL CRANKSHAFT POSITION SENSOR PLATE NO.1
(a) Install the sensor plate. Face the cup side outward.
75. INSTALL TIMING GEAR COVER SPACER
(a) Install the gasket to the cover spacer.
(b) Install the cover spacer.
76. INSTALL TIMING BELT NO.1 COVER
(a) Install the timing belt cover with the 4 bolts.
Torque: 7.5 N·m (77 kgf·cm, 66 in.·lbf)

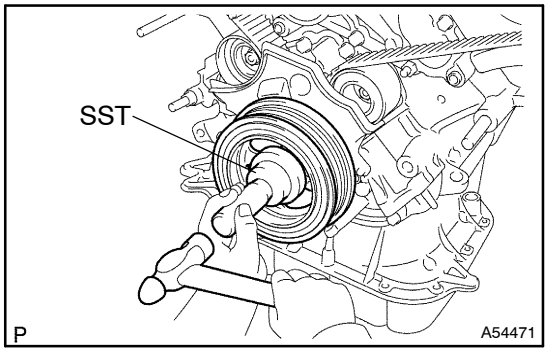

77. INSTALL CRANKSHAFT DAMPER SUB–ASSY

(a) Using SST and a hammer, tap in the crankshaft damper.
SST 09223–46011

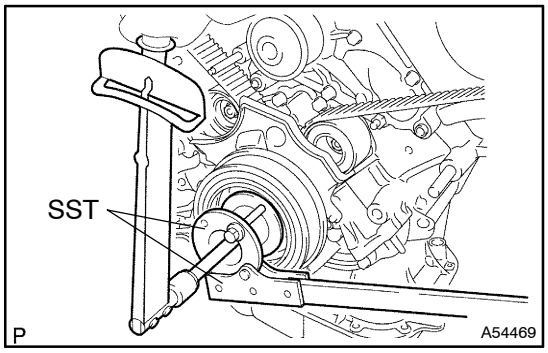

(1) Using SST, install the damper bolt.
SST 09213–70010, 09330–00021
Torque: 245 N·m (2,500 kgf·cm, 181 ft·lbf)

(b) Align the pulley set key with the key groove of the crankshaft damper.

78. ADJUST VALVE CLEARANCE (See page 14–7)

79. INSTALL V–RIBBED BELT TENSIONER ASSY

(a) Install the belt tensioner with the bolt and 2 nuts.
Torque: 16 N·m (163 kgf·cm, 11 ft·lbf)

HINT:
Use a bolt that is 106 mm (4.18 in.) in length.

80. INSTALL IDLER PULLEY SUB–ASSY NO.2

(a) Install the idler pulley and cover plate with the bolt.
Torque: 39 N·m (398 kgf·cm, 29 ft·lbf)

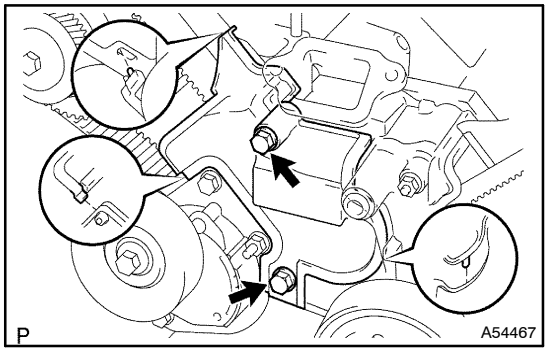

81. INSTALL TIMING BELT COVER SUB–ASSY NO.2

(a) Fit the timing belt cover, matching the claws and pin with each part.

(b) Install the timing belt cover with the 2 bolts.
Torque: 16 N·m (163 kgf·cm, 12 ft·lbf)

HINT:
Use bolts that are 106 mm (4.17 in.) in length.

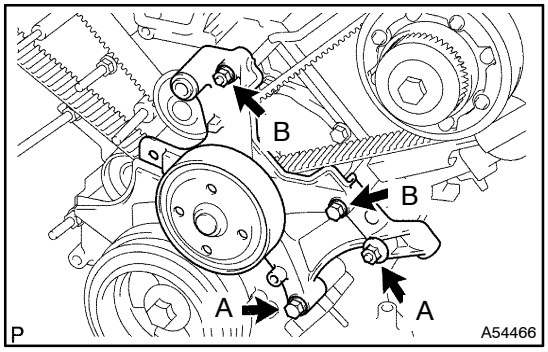

82. INSTALL IDLER PULLEY ASSY

(a) Install the idler pulley with the 2 bolts and 2 nuts.
Torque:
16 N·m (163 kgf·cm, 12 ft·lbf) for 12 mm head bolt
32 N·m (326 kgf·cm, 24 ft·lbf) for 14 mm head bolt
Bolt length:
114 mm (4.49 in.) for 14 mm head (A)
106 mm (4.17 in.) for 12 mm head (B)

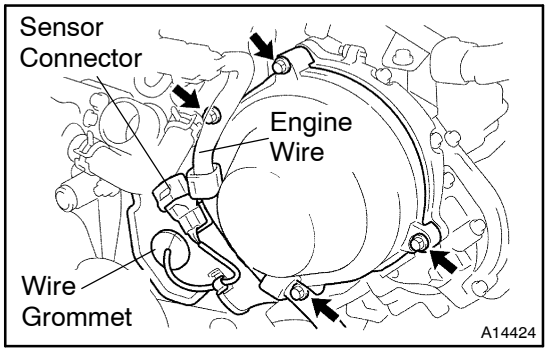

83. INSTALL TIMING BELT COVER SUB–ASSY NO.3 LH

(a) Install the gasket to the cover.

(b) Run the camshaft position sensor wire through the cover hole.

(c) Install the cover with the 4 bolts.
Torque: 7.5 N·m (77 kgf·cm, 66 in.·lbf)

(d) Install the wire grommet to the cover.

(e) Install the sensor connector to the sensor holder.

(f) Connect the sensor connector.

(g) Install the sensor wire to the wire clamp on the cover.

(h) Install the engine wire to the 2 wire clamps on the cover.

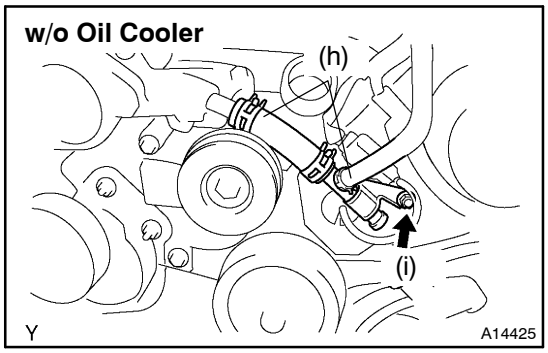

(i) w/o Oil cooler:
Connect the 2 water by–pass hoses, as shown in the illustration.

(j) w/o Oil cooler:
Install the No. 3 water by–pass pipe to the cover with the cap nut.
Torque: 7.5 N·m (77 kgf·cm, 66 in.·lbf)

(k) w/ Oil cooler:
Connect the 2 water by–pass hoses, as shown in the illustration.

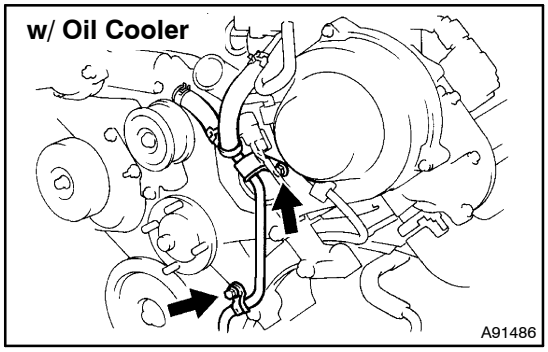

(l) w/ Oil cooler:
Install the oil cooler pipe to the cover and No. 1 drive belt idler pulley bracket with the cap nut and bolt.
Torque: 7.5 N·m (77 kgf·cm, 66 in.·lbf)

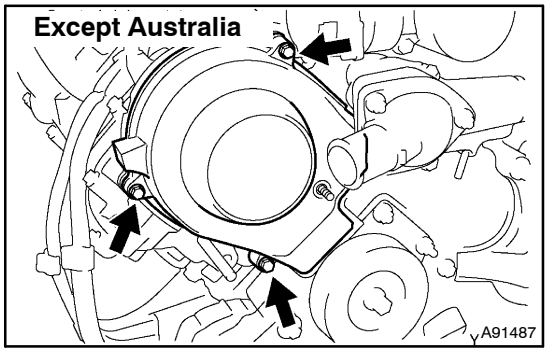

84. INSTALL TIMING CHAIN OR BELT COVER NO.2

(a) Install the gasket to the cover.

(b) Except Australia:
Install the cover with the 3 bolts.
Torque: 7.5 N·m (77 kgf·cm, 66 in.·lbf)

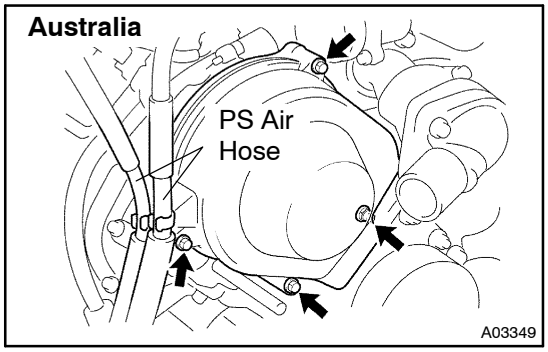

(c) Australia:
Install the cover with the cap nut and 3 bolts.
Torque: 7.5 N·m (77 kgf·cm, 66 in.·lbf)

(d) Install the 2 PS air hoses to the clamp on the cover.

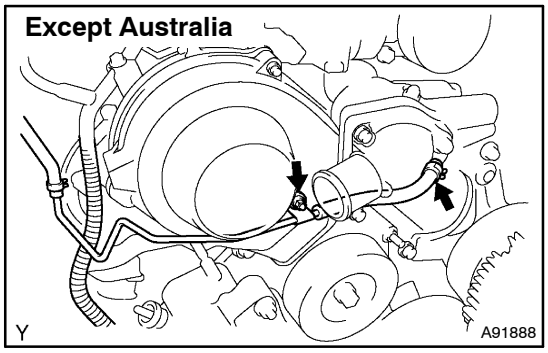

(e) Except Australia:
Connect the 2 water by–pass hoses to the water by–pass pipe.

(f) Except Australia:
Install the water by–pass pipe to the cover with the cap nut and bolt.
Torque: 7.5 N·m (77 kgf·cm, 66 in.·lbf)

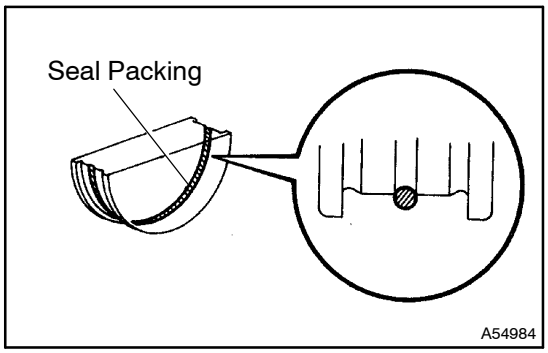

85. INSTALL SEMICIRCULAR PLUG

(a) Remove any old packing (FIPG) material.

(b) Apply seal packing to the semicircular plug grooves.
Seal packing: Part No. 08826–00080 or equivalent

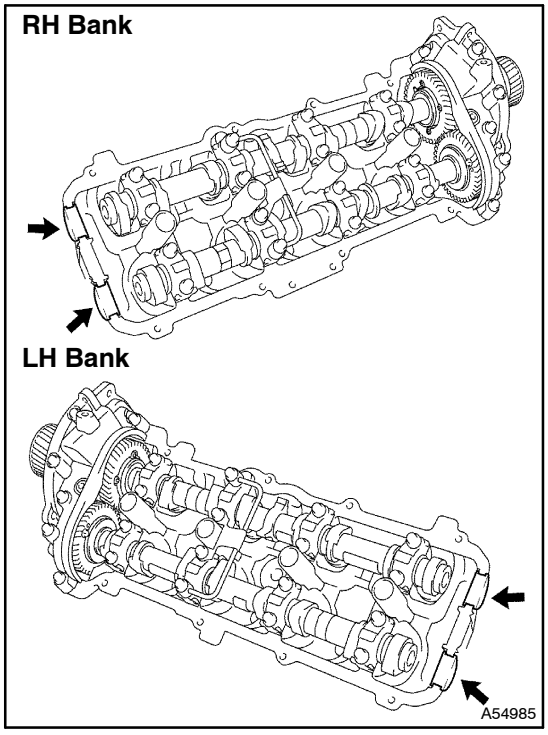

(c) Install the 4 semicircular plugs to the cylinder heads as shown in the illustration.

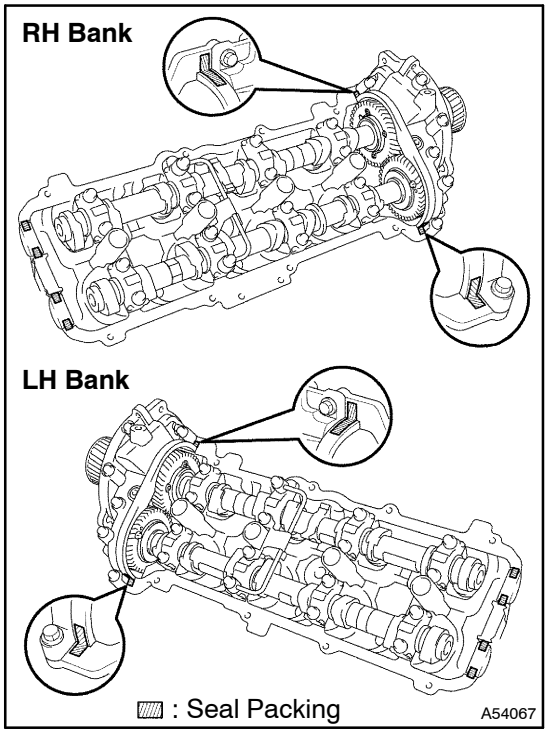

86. INSTALL CYLINDER HEAD COVER SUB–ASSY

(a) Remove any old packing (FIPG) material.

(b) Apply seal packing to the cylinder heads as shown in the illustration.

Seal packing: Part No. 08826–00080 or equivalent

(c) Install the gasket to the cylinder head cover.

(d) Install the seal washer to the bolt.

(e) Install the cylinder head cover with the 9 bolts. Uniformly tighten the bolts in several passes.

Torque: 6.0 N·m (61 kgf·cm, 53 in.·lbf)

87. INSTALL OIL FILLER CAP SUB–ASSY

88. INSTALL SPARK PLUG