INTRUSION SENSOR CIRCUIT

CIRCUIT DESCRIPTION

If the intrusion sensor is not activated and no DTC is output, the wire harness in the circuit below may be malfunctioning.

WIRING DIAGRAM

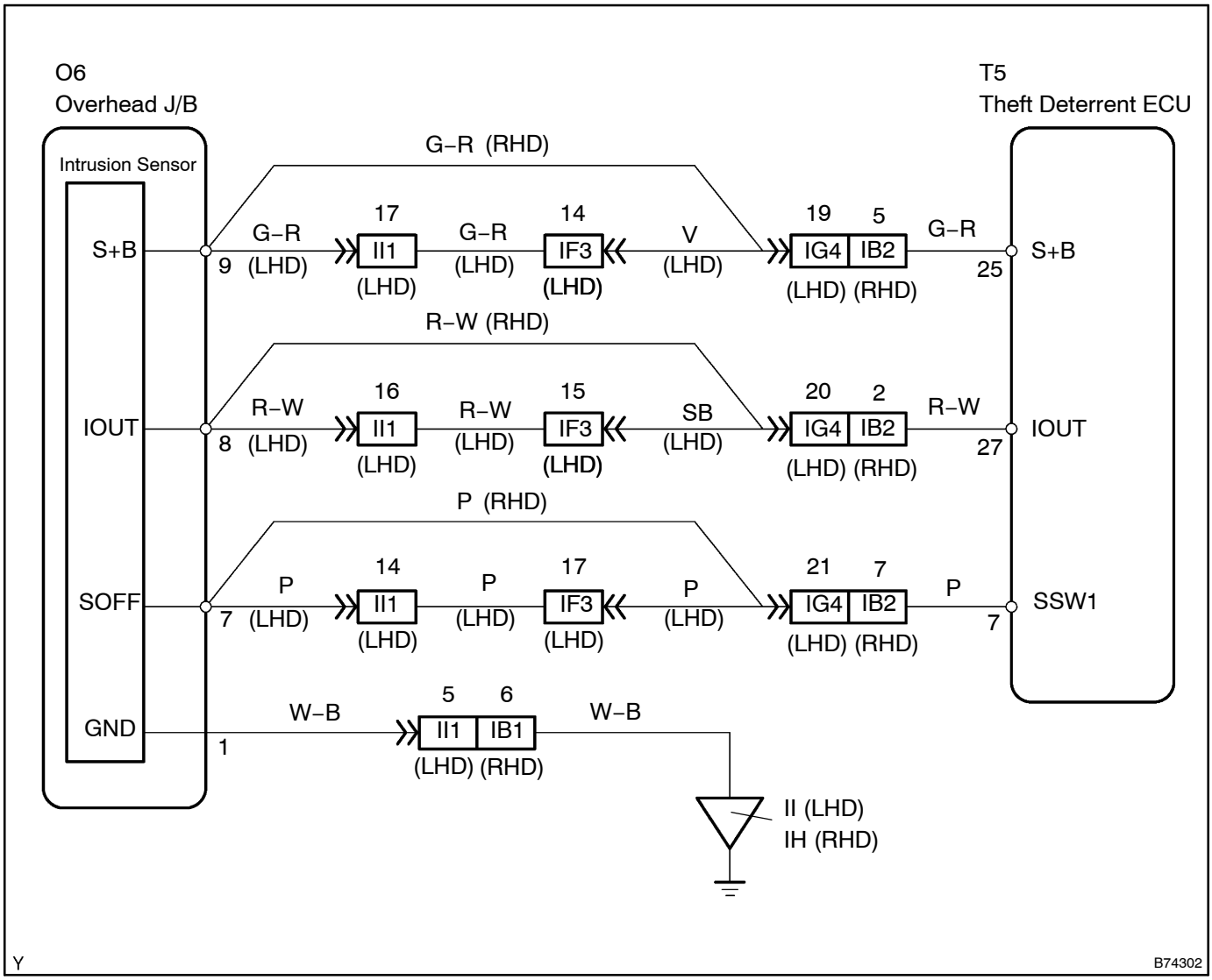

INSPECTION PROCEDURE

1 CHECK FOR DTCS

(a) Using the intelligent tester II, check for DTCs.
OK: DTC is not output

NG → **Go to DTC CHART**

OK

2 CHECK WIRE HARNESS (OVERHEAD J/B (INTRUSION SENSOR) – THEFT DETERRENT ECU AND BODY GROUND)

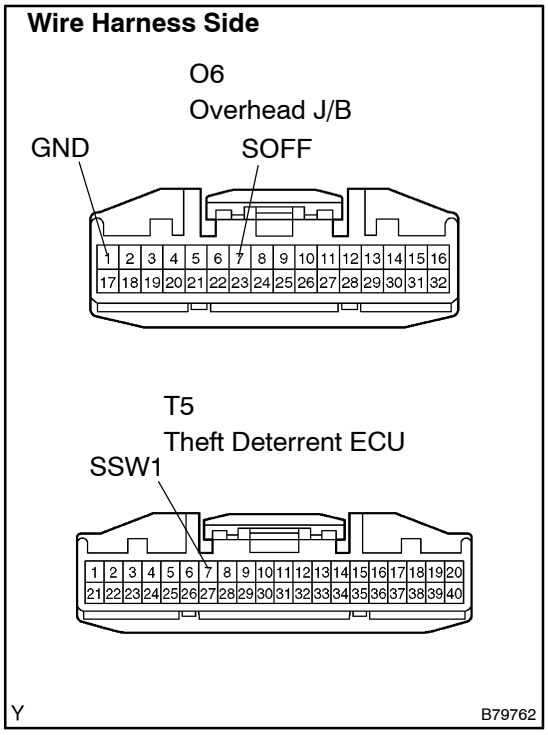

(a) Disconnect the T5 ECU connector.
(b) Disconnect the O6 J/B connector.
(c) Measure the resistance of the wire harness side connectors.
Standard:

Tester Connection	Specified Condition
O6–7 (SOFF) – T5–7 (SSW1)	Below 1 Ω
O6–1 (GND) – Body ground	Below 1 Ω
O6–7 (SOFF) – Body ground	10k Ω or higher

NG → **REPAIR OR REPLACE HARNESS AND CONNECTOR**

OK

3 CHECK INTRUSION SENSOR

(a) Check that the malfunction disappears when a normally functioning intrusion sensor is installed.
OK: Malfunction disappears.

NG → **REPLACE THEFT DETERRENT ECU**

OK

REPLACE INTRUSION SENSOR