DTC	B2763	INTRUSION SENSOR +B CIRCUIT MALFUNCTION (GND SHORT) (EUROPE MODELS)

CIRCUIT DESCRIPTION

This DTC is output when the S+B line,shich is the power supply line to the sensor, is short circuited.

DTC No.	DTC Detection Condition	Trouble Area
B2763	S+B line is short corcioted.	• Intrusion sensor • Wire harness • Theft deterrent ECU

WIRING DIAGRAM

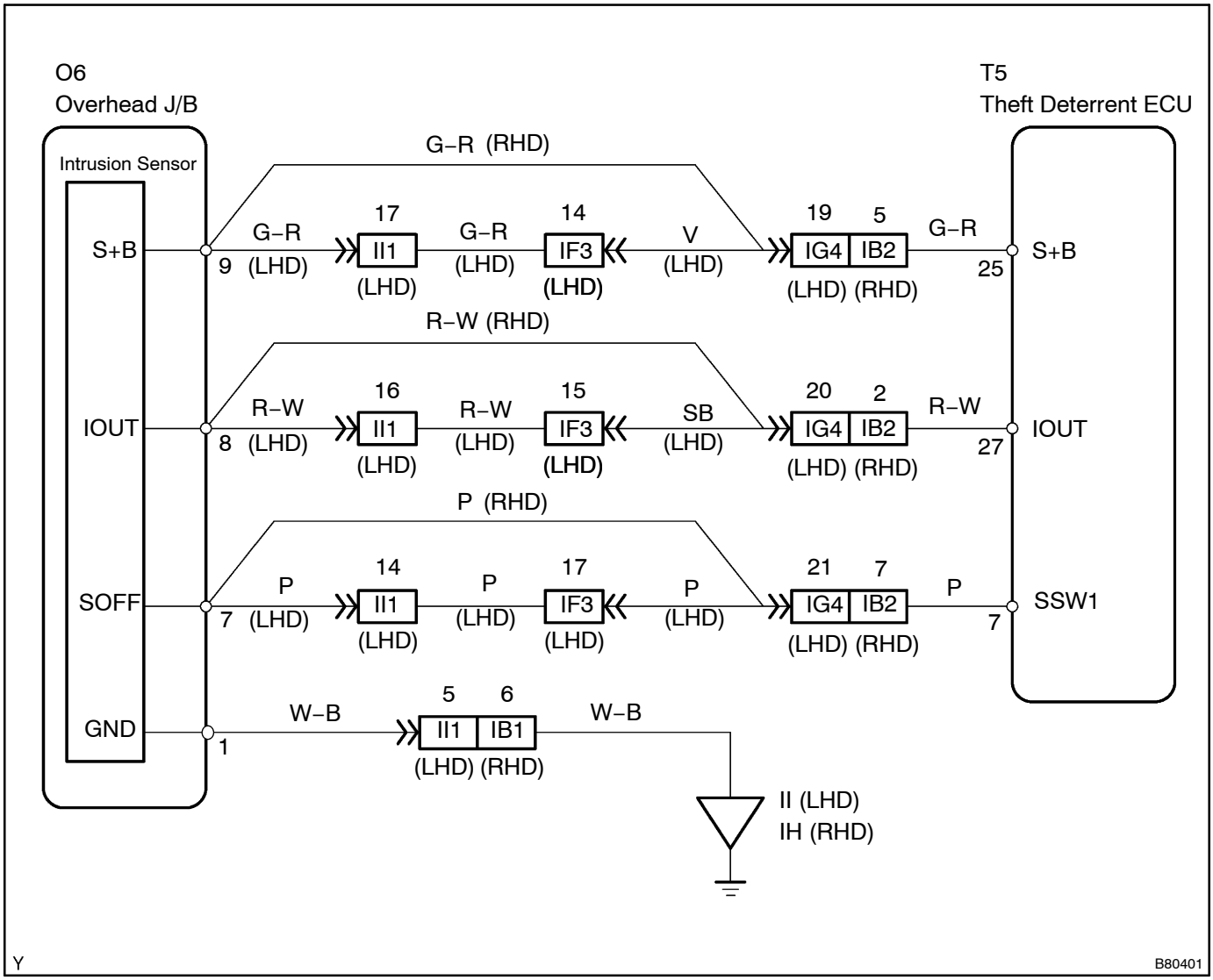

INSPECTION PROCEDURE

1	CHECK WIRE HARNESS (OVERHEAD J/B (INTRUSION SENSOR) – THEFT DETERRENT ECU AND BODY GROUND)

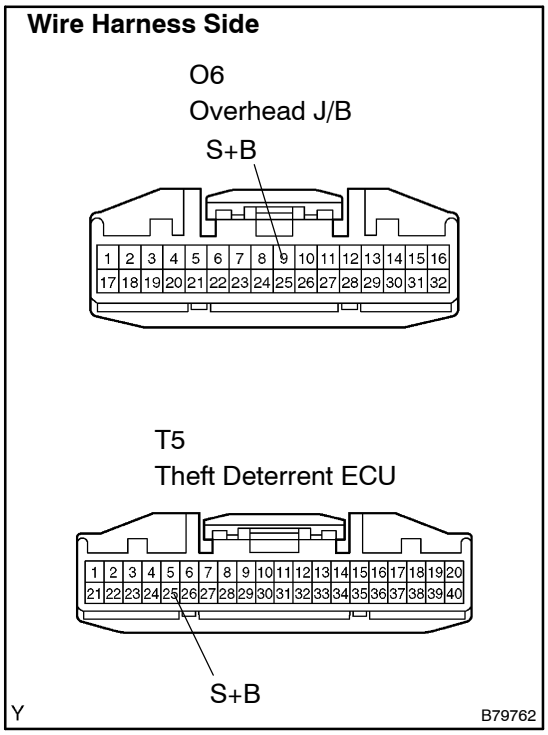

(a) Disconnect the O6 J/B connector.
(b) Disconnect the T5 ECU connector.
(c) Measure the resistance of the wire harness side connectors.
Standard:

Tester Connection	Specified Condition
O6–9 (S+B) – T5–25 (S+B)	Below 1 Ω
O6–9 (S+B) – Body ground	10 kΩ or higher

NG → **REPAIR OR REPLACE HARNESS AND CONNECTOR**

OK

2	CHECK INTRUSION SENSOR

(a) Check that the DTC disappears when a normally functioning intrusion sensor is installed.
OK: DTC B2763 is not output.

NG → **REPLACE THEFT DETERRENT ECU**

OK

REPLACE INTRUSION SENSOR