# ECU POWER SOURCE CIRCUIT

## CIRCUIT DESCRIPTION

This circuit provides power to operate the transponder key ECU assy.

## WIRING DIAGRAM

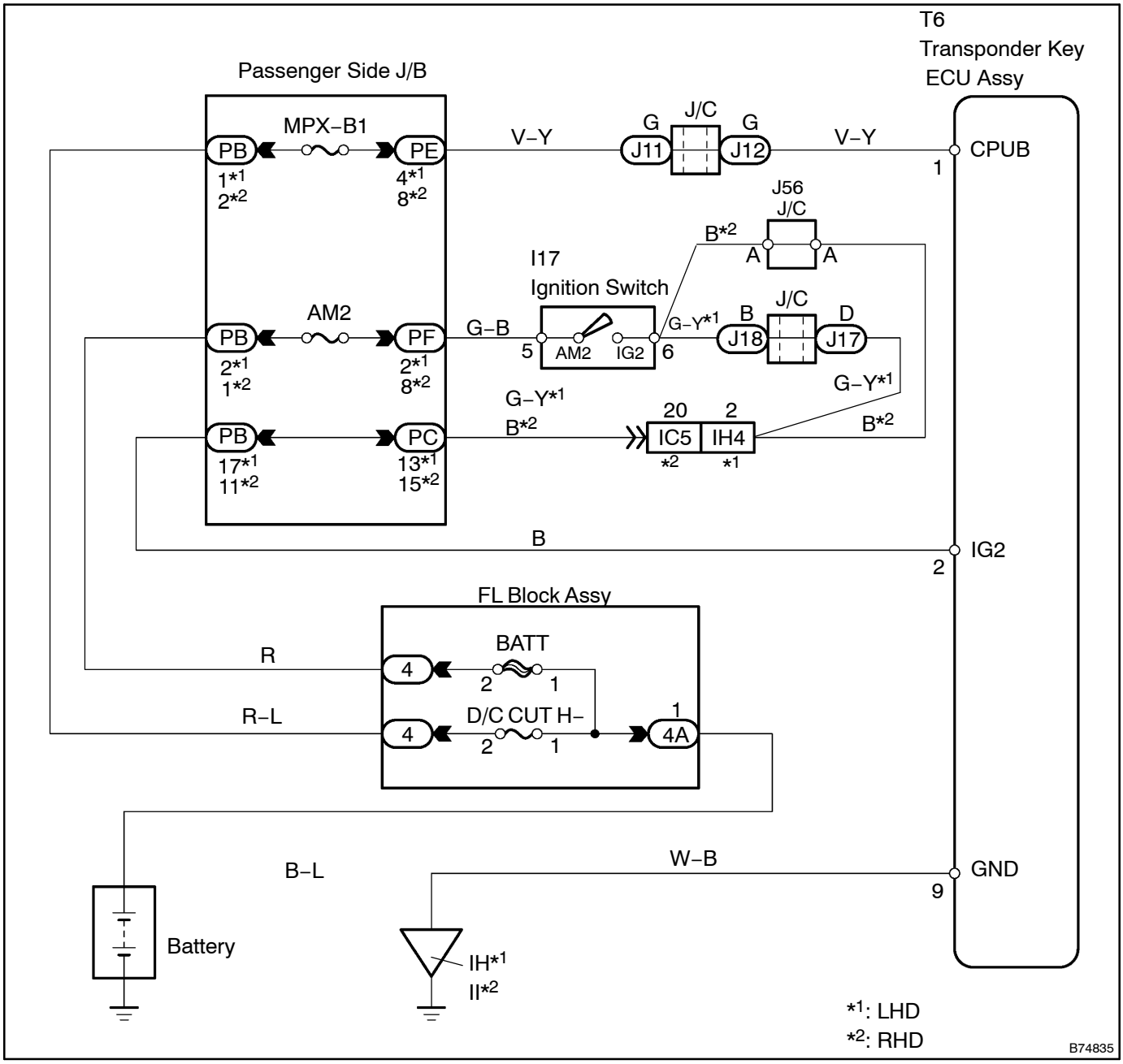

## 1 INSPECT FUSE (MPX–B1, AM2, D/C CUT H–)

(a) Remove the MPX–B1 and AM2 fuses from the passenger side J/B.
(b) Remove the D/C CUT H–fuse from the FL block.
(c) Measure the resistance.
**Standard: Below 1 Ω**

**NG** → **REPLACE FUSE**

**OK**

## 2 CHECK WIRE HARNESS (TRANSPONDER KEY ECU ASSY – BODY GROUND)

**Wire Harness Side**
T9
Transponder Key ECU Assy

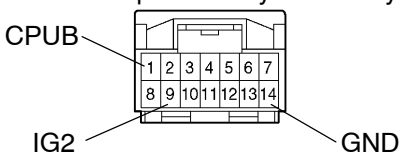


B72870

(a) Disconnect the T9 ECU connector.
(b) Measure the resistance and voltage between the wire harness side connector and body ground.
**Standard:**

| Tester Connection | Condition | Specified Condition |
|---|---|---|
| T9–1 (CPUB) – Body ground | Constant | 10 to 14 V |
| T9–2 (IG2) – Body ground | Ignition switch OFF → ON | 0 V → 10 to 14 V |
| T9–14 (GND) – Body ground | Constant | Below 1 Ω |

**NG** → **REPAIR OR REPLACE WIRE HARNESS AND CONNECTOR**

**OK**

**REPLACE TRANSPONDER KEY ECU ASSY**