05HU0–01

SYSTEM DIAGRAM

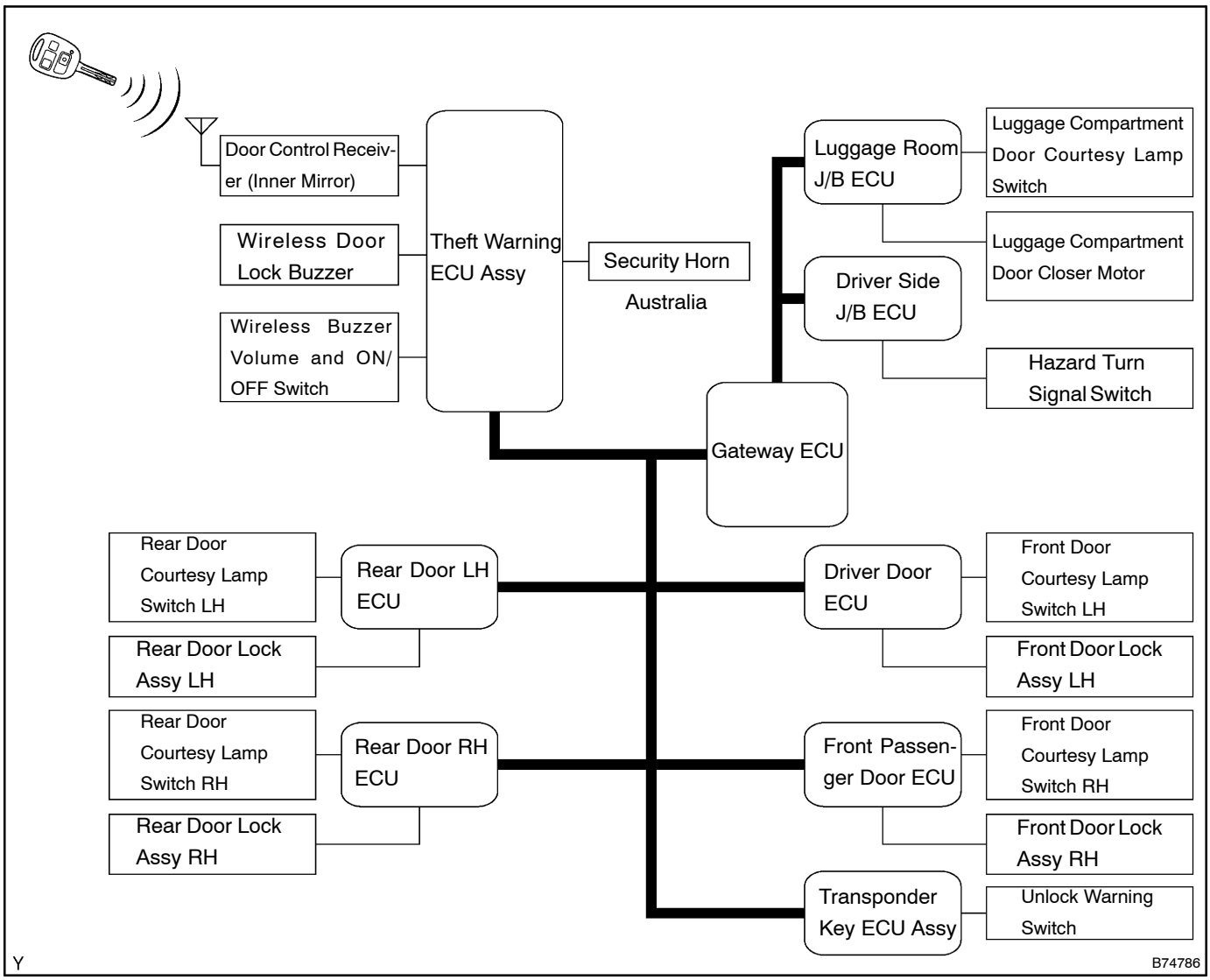

Sender	Receiver	Signal	Line
Theft warning ECU	Transponder key ECU	Wireless door lock signal	BEAN
Theft warning ECU	Driver door ECU	• Wireless door lock signal • Wireless power window signal • Driver side door lock control signal • Driver side door double lock control signal	BEAN
Theft warning ECU	Front passenger door ECU	• Wireless door lock signal • Passenger side door lock control signal • Passenger side door double lock control signal	BEAN
Theft warning ECU	Rear door LH ECU	• Wireless door lock signal • Rear door LH lock control signal • Rear door LH double lock control signal	BEAN
Theft warning ECU	Rear door RH ECU	• Wireless door lock signal • Rear door RH lock control signal • Rear door RH double lock control signal	BEAN
Theft warning ECU	Driver side J/B ECU	• Headlamp warning control signal (Australia) • Taillamp warning control signal (Australia) • Security horn control signal (Australia) • Hazard control signal	BEAN
Theft warning ECU	Luggage room J/B ECU	Luggage compartment open request signal	BEAN
Transponder key ECU	Theft warning ECU	• KSW signal • IG signal	BEAN
Driver door ECU	Theft warning ECU	• Driver side door courtesy switch signal • Driver side door lock position signal • Driver side door key–linked switch signal • Driver side door manual lock signal • Driver side door double lock position switch signal	BEAN
Front passenger door ECU	Theft warning ECU	• Passenger side door courtesy switch signal • Passenger side door lock position signal • Passenger side door key–linked switch signal • Passenger side door manual lock signal • Passenger side door double lock position switch signal	BEAN
Rear door LH ECU	Theft warning ECU	• Rear door LH courtesy switch signal • Rear door LH lock position signal • Rear door LH key–linked switch signal • Rear door LH manual lock signal • Rear door LH double lock position switch signal	BEAN
Rear door RH ECU	Theft warning ECU	• Rear door RH courtesy switch signal • Rear door RH lock position signal • Rear door RH key–linked switch signal • Rear door RH manual lock signal • Rear door RH double lock position switch signal	BEAN
Luggage room J/B ECU	Theft warning ECU	• Luggage compartment door key–linked switch signal • Luggage compartment door courtesy switch signal • Luggage compartment door unlock switch signal	BEAN