ECU POWER SOURCE CIRCUIT

CIRCUIT DESCRIPTION

This circuit supplies power to operate the theft warning ECU (theft deterrent ECU).
When the ignition switch is turned to the ACC position, battery positive voltage is applied to terminal ACC of the ECU. If the ignition switch is turned to the ON position, battery positive voltage is applied to terminals ACC and IG of the ECU. Power supplied from terminals ACC and IG of the ECU is used as power for the door courtesy switch and position switch.

WIRING DIAGRAM

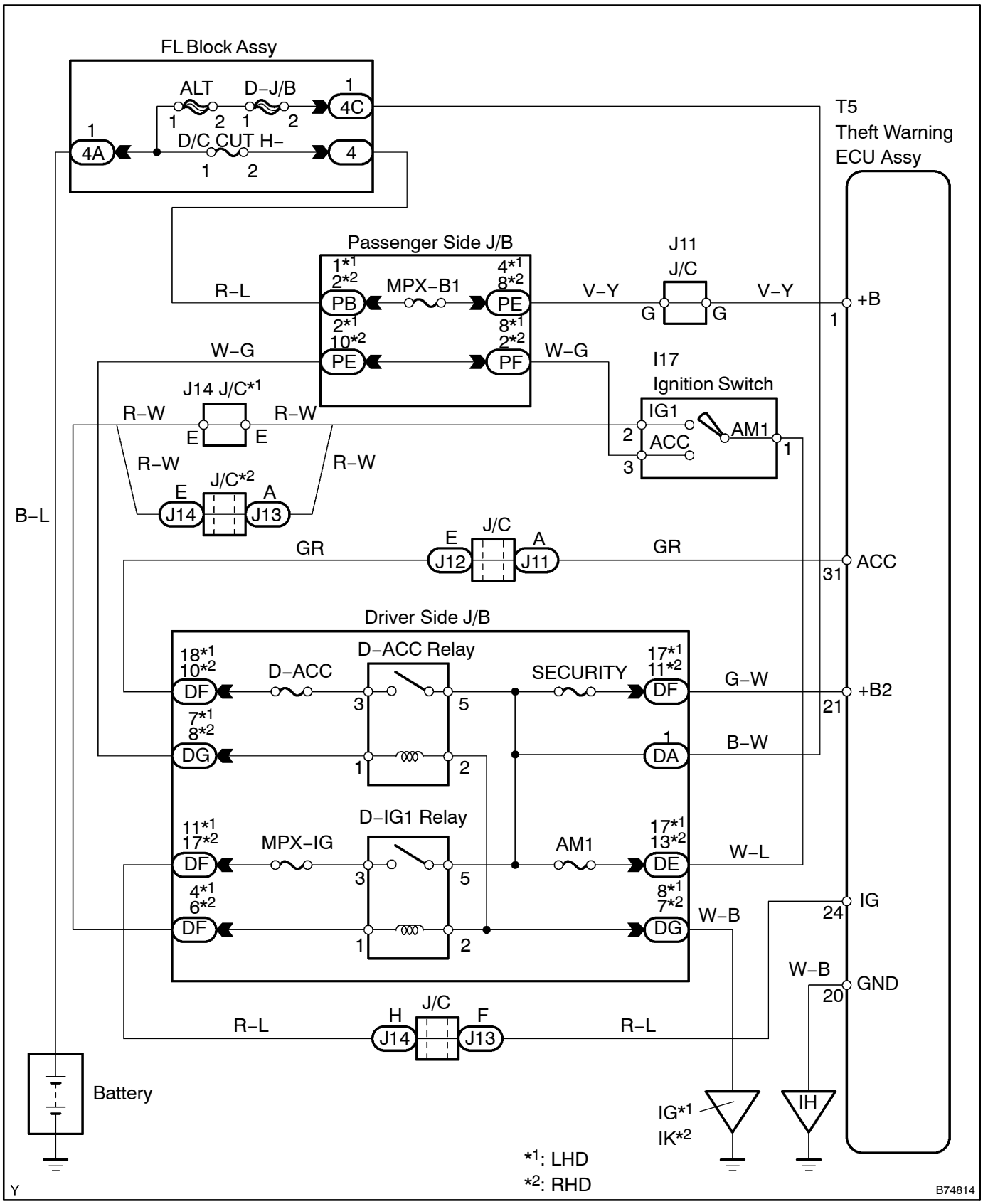

INSPECTION PROCEDURE

1	INSPECT FUSE (MPX–B1, SECURITY, MPX–IG, AM1, D–ACC, D/C CUT H–)

(a) Remove the MPX–B1 fuse from the passenger side J/B.
(b) Remove the SECURITY, MPX–IG, AM1 and D–ACC fuses from the driver side J/B.
(c) Remove the D/C CUT H–fuse from the FL block.
(d) Measure the resistance.
Standard: Below 1 Ω

NG → **REPLACE FUSE**

OK

2	INSPECT RELAY (D–IG1, D–ACC)

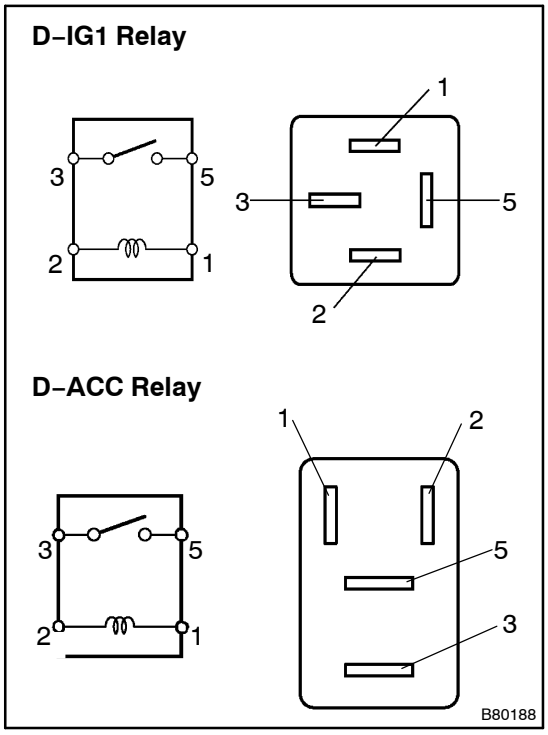

(a) Remove the D–IG1 and D–ACC relays from the driver side J/B.
(b) Measure the resistance.
Standard:

Terminal No.	Specified Condition
3 – 5	10 kΩ or higher
3 – 5	Below 1 Ω (when battery voltage is applied to terminals 1 and 2)

NG → **REPLACE RELAY**

OK

3 CHECK WIRE HARNESS (THEFT WARNING ECU ASSY – BODY GROUND)

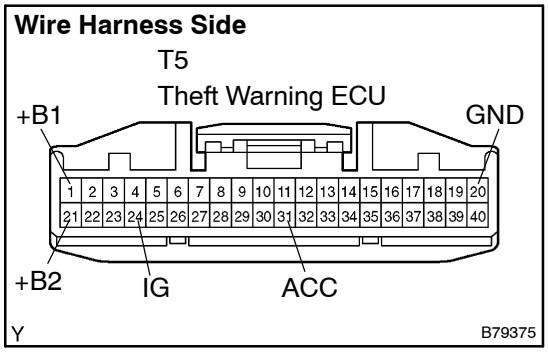

(a) Disconnect the T5 ECU connector.

(b) Measure the resistance and voltage between the wire harness side connector and body ground.

Standard:

Tester Connection	Condition	Specified Condition
T5–1 (+B) – Body ground	Constant	10 to 14 V
T5–31 (ACC) – Body ground	Ignition switch OFF → ACC	0 V → 10 to 14 V
T5–21 (+B2) – Body ground	Constant	10 to 14 V
T5–24 (IG) – Body ground	Ignition switch OFF → ON	0 V → 10 to 14 V
T5–20 (GND) – Body ground	Constant	Below 1 Ω

NG → **REPAIR OR REPLACE WIRE HARNESS AND CONNECTOR**

OK

PROCEED TO NEXT CIRCUIT INSPECTION SHOWN IN PROBLEM SYMPTOMS TABLE
(See page 05–2852)