PASSENGER DOOR ECU POWER SOURCE CIRCUIT

CIRCUIT DESCRIPTION

This circuit supplies power to operate the passenger door ECU.

WIRING DIAGRAM

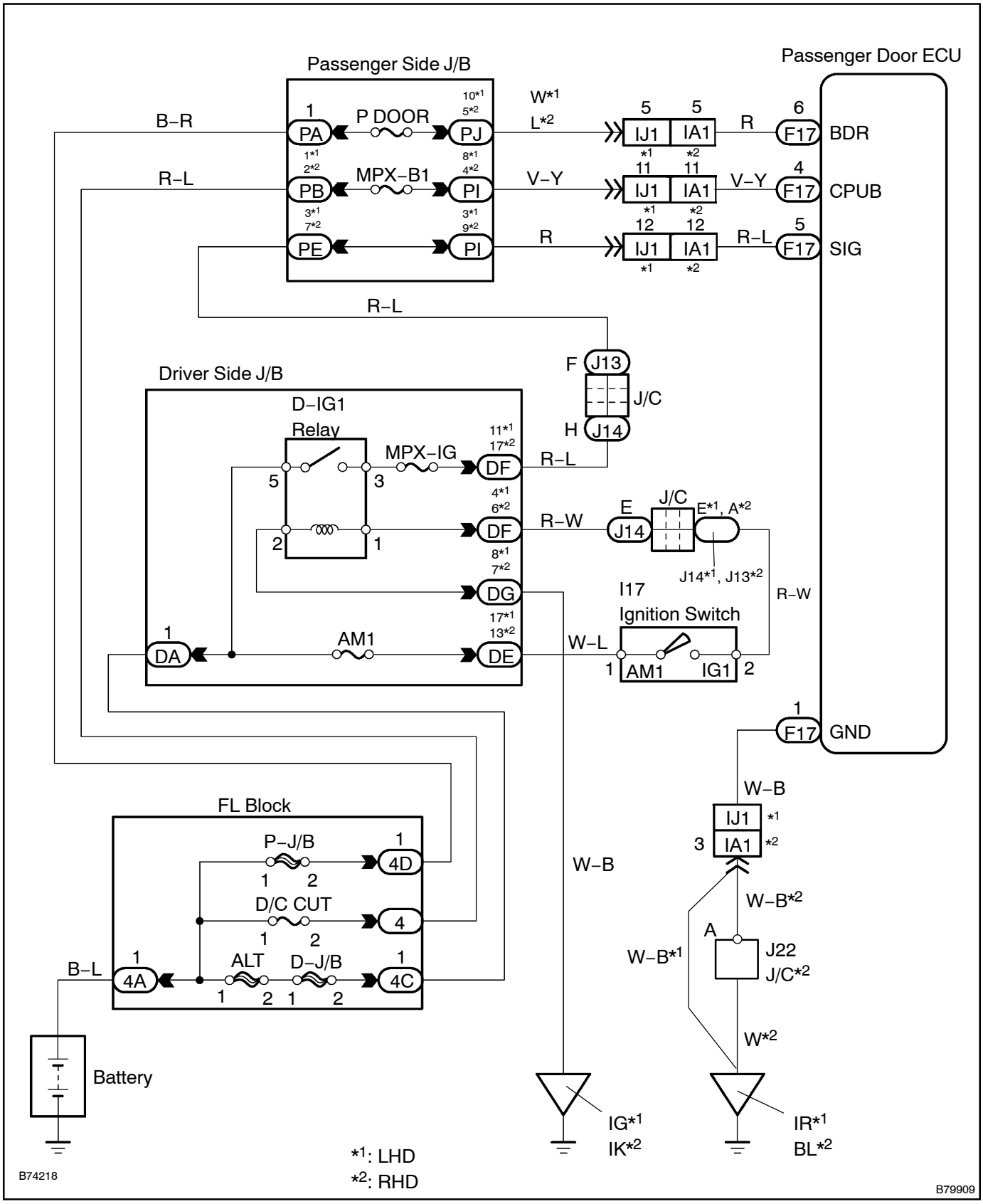

INSPECTION PROCEDURE

1 INSPECT FUSE (MPX–IG, AM1, P DOOR, MPX–B1)

(a) Remove the MPX–IG and AM1 fuses from the driver side J/B.
(b) Remove the P DOOR and MPX–B1 fuses from the passenger side J/B.
(c) Measure the resistance.
Standard: Below 1 Ω

NG → **REPLACE FUSE**

OK

2 INSPECT RELAY (D–IG1)

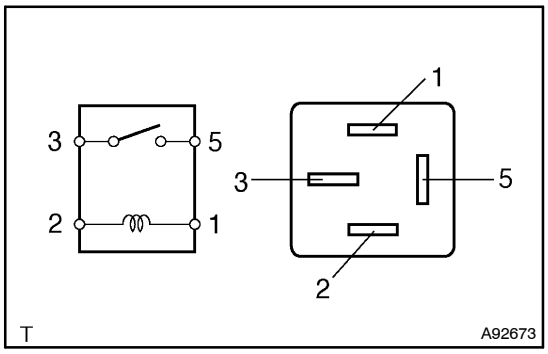

(a) Remove the D–IG1 relay from the driver side J/B.
(b) Check the resistance.
Standard:

Tester Connection	Specified Condition
3 – 5	10 kΩ or higher
3 – 5	Below 1 Ω (when battery voltage is applied to terminals 1 and 2)

NG → **REPLACE RELAY**

OK

3 CHECK WIRE HARNESS (PASSENGER DOOR ECU – BODY GROUND)

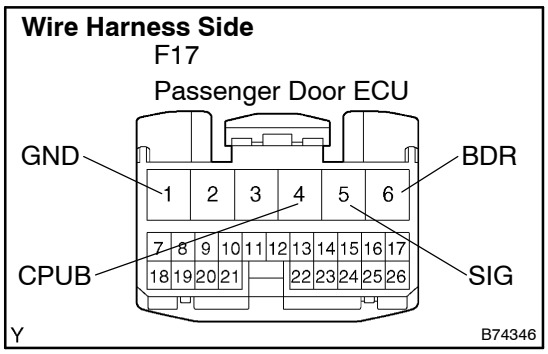

(a) Disconnect the F17 ECU connector.
(b) Check the voltage and resistance of the wire harness side connectors.
Standard:

Tester Connection	Condition	Specified Condition
DF17–1 (GND) – Body ground	Constant	Below 1 Ω
F17–4 (CPUB) – Body ground	Constant	10 to 14 V
F17–6 (BDR) – Body ground	Constant	10 to 14 V
F17–5 (SIG) Body ground	Ignition switch ON	10 to 14 V

NG → **REPAIR OR REPLACE HARNESS AND CONNECTOR**

OK

PROCEED TO NEXT CIRCUIT INSPECTION SHOWN ON PROBLEM SYMPTOMS TABLE
(**See page 05–2529**)