REAR DOOR RH ECU POWER SOURCE CIRCUIT

CIRCUIT DESCRIPTION

This circuit supplies to operate the rear right door ECU.

WIRING DIAGRAM

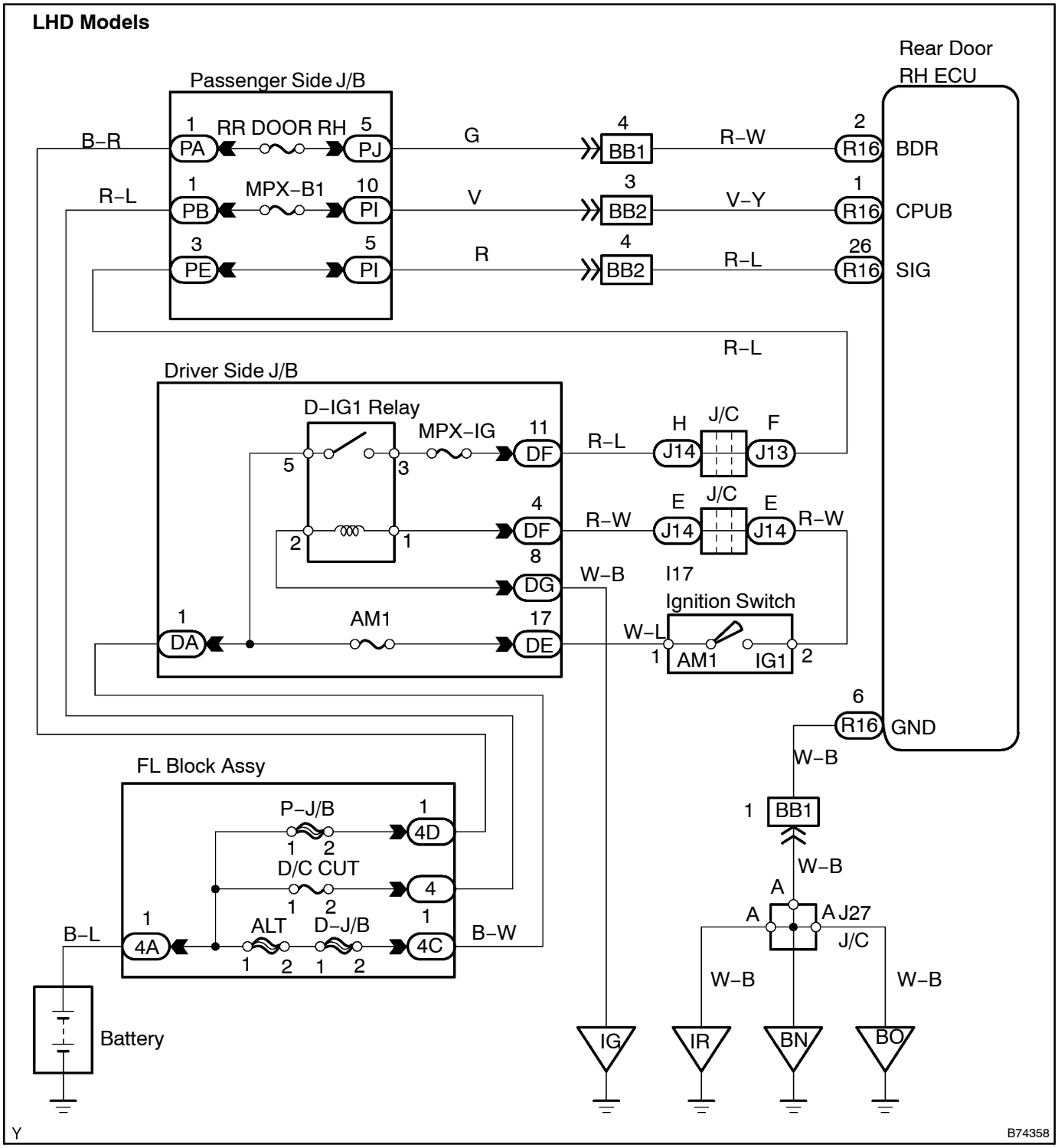

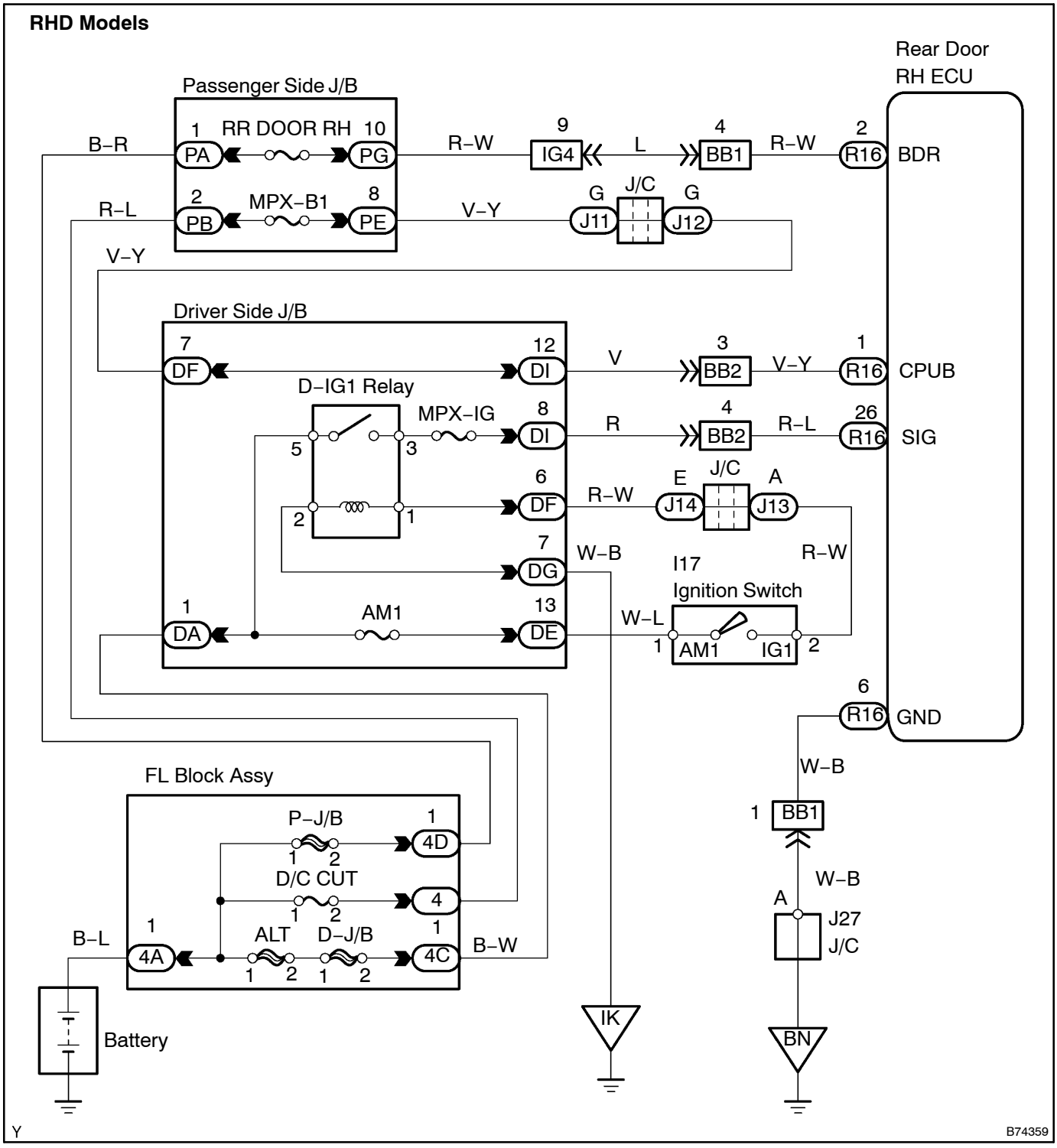
RHD Models
Rear Door RH ECU
Passenger Side J/B
1 RR DOOR RH 10
PA
PG
B–R
R–W
9
IG4
L
4
BB1
R–W
2
R16
BDR
2
MPX–B1
8
PB
PE
R–L
V–Y
G
J/C
G
J11
J12
V–Y
Driver Side J/B
7
DF
12
DI
V
3
BB2
V–Y
1
R16
CPUB
D–IG1 Relay
MPX–IG
8
DI
R
4
BB2
R–L
26
R16
SIG
5
3
2
1
6
DF
R–W
E
J/C
A
J14
J13
7
DG
W–B
R–W
I17
Ignition Switch
1
DA
AM1
13
DE
W–L
1
AM1
IG1
2
6
R16
GND
W–B
FL Block Assy
P–J/B
1
4D
1
2
D/C CUT
4
1
2
1
BB1
W–B
A
J27
J/C
B–L
1
4A
ALT
D–J/B
1
4C
B–W
1
2
1
2
Battery
IK
BN
Y
B74359

INSPECTION PROCEDURE

1 INSPECT FUSE (RR DOOR RH, MPX–B1, MPX–IG, AM1, D/C CUT)

(a) Remove the RR DOOR RH and MPX–B1 fuses from the passenger side J/B.
(b) Remove the MPX–IG and AM1 fuses from the driver driver J/B.
(c) Remove the D/C CUT fuse from the FL block.
(d) Measure the resistance.
Standard: Below 1 Ω

NG → **REPLACE FUSE**

OK

2 INSPECT RELAY (D–IG1)

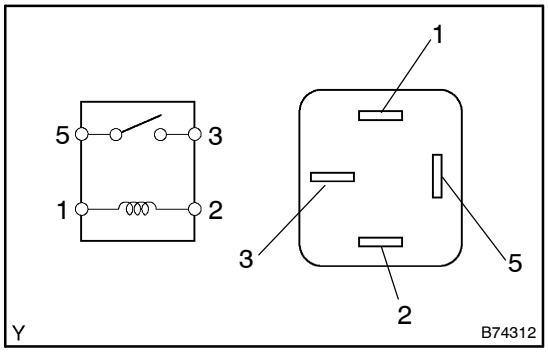

(a) Remove the D–IG1 relay from the driver side J/B.
(b) Check the resistance.
Standard:

Tester Connection	Specified Condition
3 – 5	10k Ω or higher
3 – 5	Below 1 Ω (when battery voltage is applied to terminals 1 and 2)

NG → **REPLACE RELAY**

OK

3 CHECK WIRE HARNESS (REAR DOOR RH ECU – BODY GROUND)

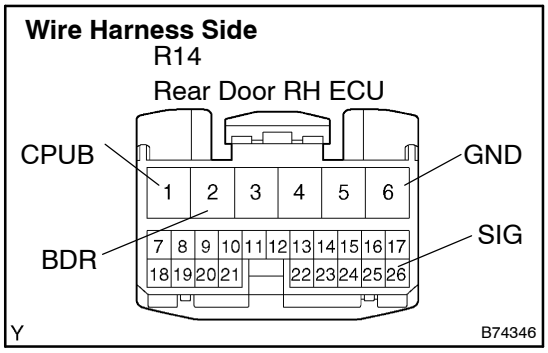

(a) Disconnect the R16 ECU connector.
(b) Measure the voltage and resistance of the wire harness side connector.
Standard:

Tester Connection	Condition	Specified Condition
R16–1 (CPUB) – Body ground	Constant	10 to 14 V
R16–2 (BDR) – Body ground	Constant	10 to 14 V
R16–26 (SIG) – Body ground	Ignition switch OFF → ON	0 V → 19 to 14 V
R16–6 (GND) – Body ground	Constant	Below 1 Ω

NG → **REPAIR OR REPLACE HARNESS AND CONNECTOR**

OK

PROCEED TO NEXT CIRCUIT INSPECTION SHOWN ON PROBLEM SYMPTOMS TABLE (**See page 05–2340**)