REAR DOOR RH ECU POWER SOURCE CIRCUIT

CIRCUIT DESCRIPTION

This circuit supplies power to operate the rear left door ECU.

WIRING DIAGRAM

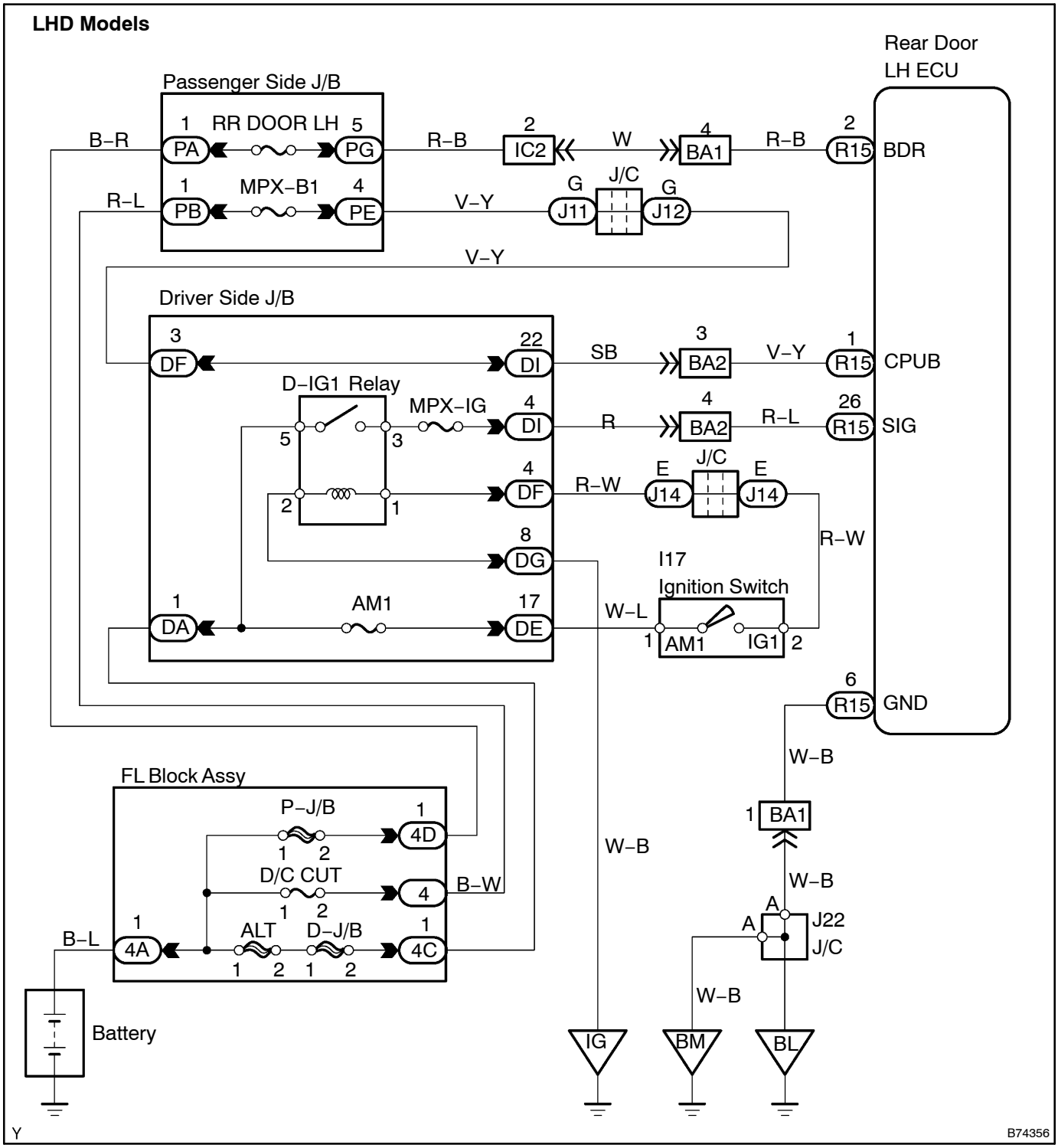

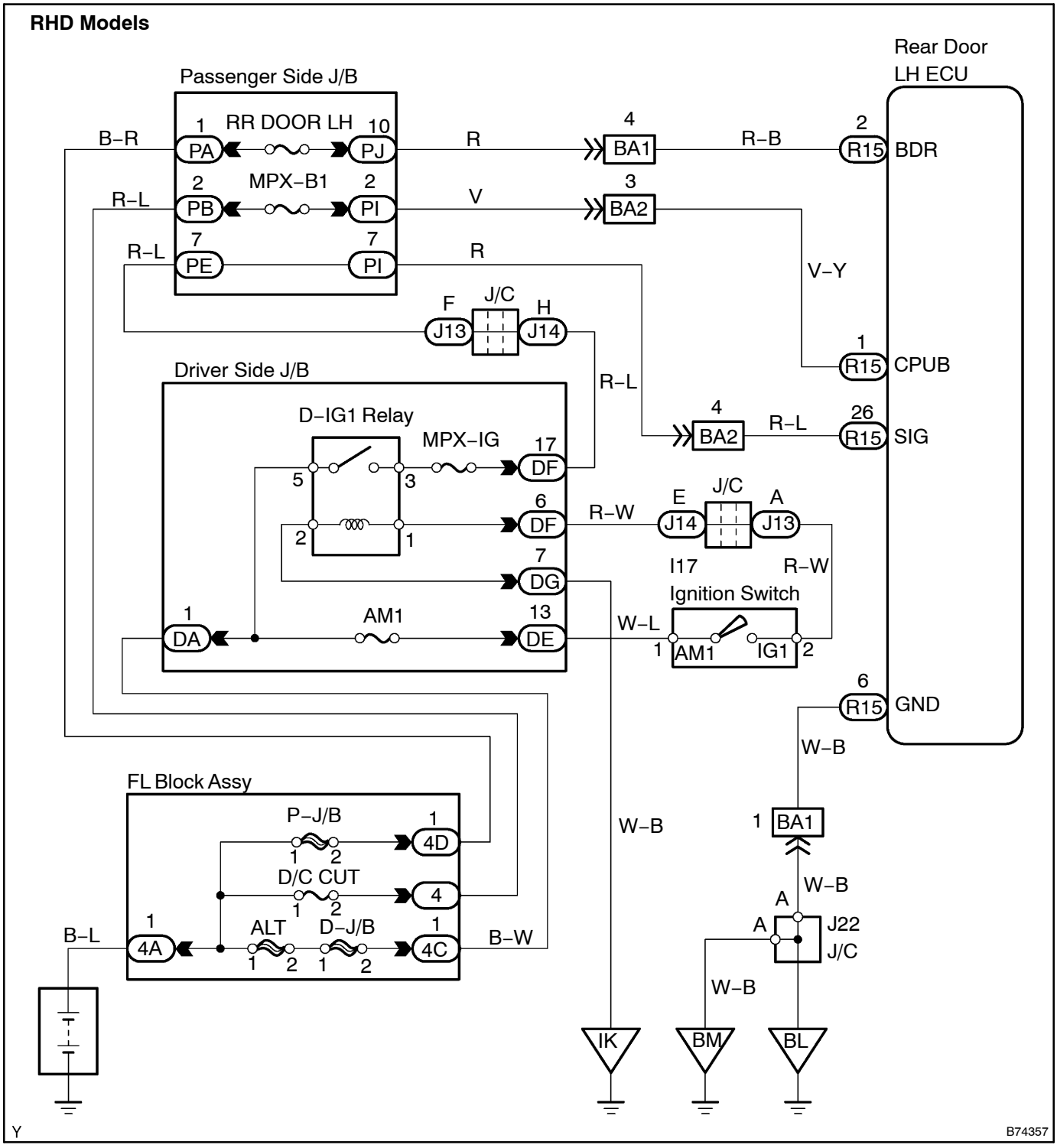
RHD Models
Rear Door LH ECU
Passenger Side J/B
RR DOOR LH
MPX–B1
B–R
R–L
R–L
R
V
R
R–B
V–Y
BDR
CPUB
SIG
GND
J/C
J13
J14
Driver Side J/B
D–IG1 Relay
MPX–IG
AM1
R–L
R–W
R–W
I17
Ignition Switch
W–L
W–B
W–B
W–B
W–B
FL Block Assy
P–J/B
D/C CUT
ALT
D–J/B
B–L
B–W
J22
J/C
IK
BM
BL
Y
B74357

INSPECTION PROCEDURE

1 INSPECT FUSE (RR DOOR LH, MPX–B1, MPX–IG, AM1, D/C CUT)

(a) Remove the RR DOOR LH and MPX–B1 fuses from the passenger side J/B.
(b) Remove the MPX–IG and AM1 fuses from the driver side J/B.
(c) Remove the D/C CUT fuse from the FL block.
(d) Measure the resistance.
Standard: Below 1 Ω

NG → **REPLACE FUSE**

OK

2 INSPECT RELAY (D–IG1)

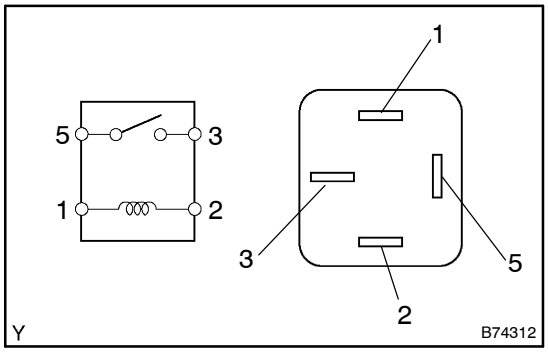

(a) Remove the D–IG1 relay from the driver side J/B.
(b) Check the resistance.
Standard:

Tester Connection	Specified Condition
3 – 5	10k Ω or higher
3 – 5	Below 1 Ω (when battery voltage is applied to terminals 1 and 2)

NG → **REPLACE RELAY**

OK

3 CHECK WIRE HARNESS (REAR DOOR LH ECU – BODY GROUND)

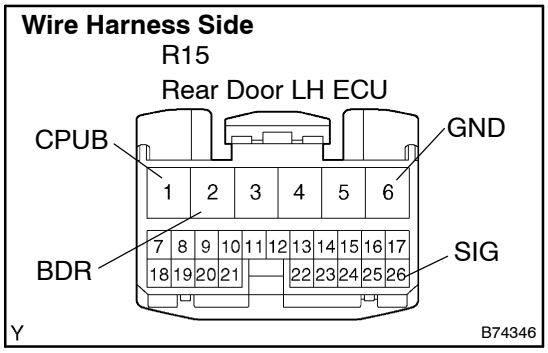

(a) Disconnect the R15 ECU connector.
(b) Measure the voltage and resistance of the wire harness side connector.
Standard:

Tester Connection	Condition	Specified Condition
R15–1 (CPUB) – Body ground	Constant	10 to 14 V
R15–2 (BDR) – Body ground	Constant	10 to 14 V
R15–26 (SIG) – Body ground	Ignition switch OFF → ON	0 V → 10 to 14 V
R15–6 (GND) – Body ground	Constant	Below 1 Ω

NG → **REPAIR OR REPLACE HARNESS AND CONNECTOR**

OK

PROCEED TO NEXT CIRCUIT INSPECTION SHOWN ON PROBLEM SYMPTOMS TABLE (**see page 05–2340**)