POWER SOURCE CIRCUIT

CIRCUIT DESCRIPTION

This circuit provides power to the television camera ECU.

WIRING DIAGRAM

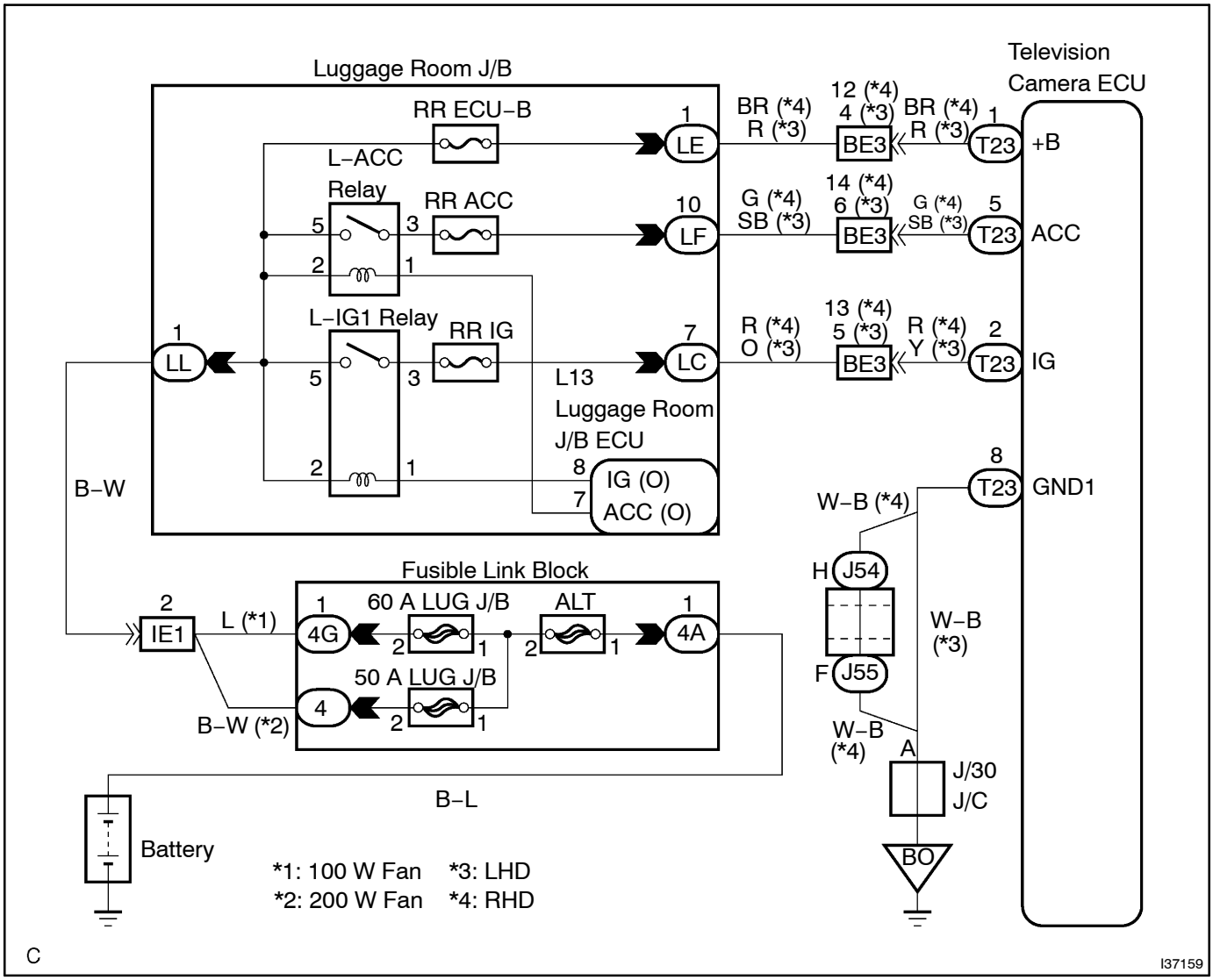

INSPECTION PROCEDURE

1 INSPECT TELEVISION CAMERA ECU(+B, ACC, IG TERMINAL)

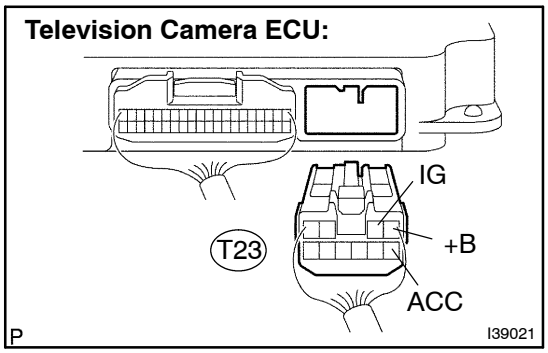

(a) Disconnect the T23 connector from the television camera ECU.

(b) Measure the voltage according to the value(s) in the table below.

Standard:

Tester connection	Condition	Specified condition
+B – Body ground	Always	10 to 14 V
ACC – Body ground	Ignition SW ACC	10 to 14 V
IG – Body ground	Ignition SW ON	10 to 14 V

OK → **PROCEED TO NEXT CIRCUIT INSPECTION SHOWN ON PROBLEM SYMPTOMS TABLE (SEE PAGE 05–1917)**

NG

2 CHECK HARNESS AND CONNECTOR(TELEVISION CAMERA ECU – BODY GROUND)

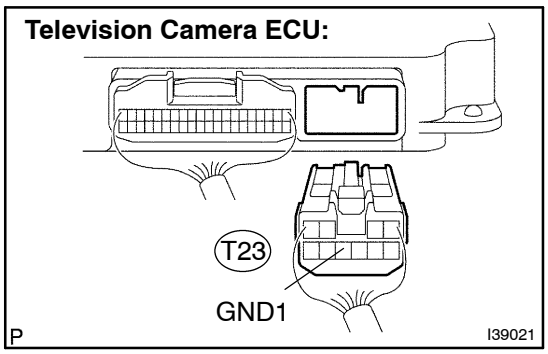

(a) Disconnect the T23 connector from the television camera ECU.

(b) Measure the resistance according to the value(s) in the table below.

Standard:

Tester connection	Condition	Specified condition
GND1 – Body ground	Always	Below 1 Ω

NG → **REPAIR OR REPLACE HARNESS OR CONNECTOR (TELEVISION CAMERA ECU – BODY GROUND)**

OK

REPAIR OR REPLACE HARNESS OR CONNECTOR (TELEVISIOIN CAMERA ECU – BATTERY)