ECU POWER SOURCE CIRCUIT

CIRCUIT DESCRIPTION

This circuit provides power to operate the driver side J/B ECU.

WIRING DIAGRAM

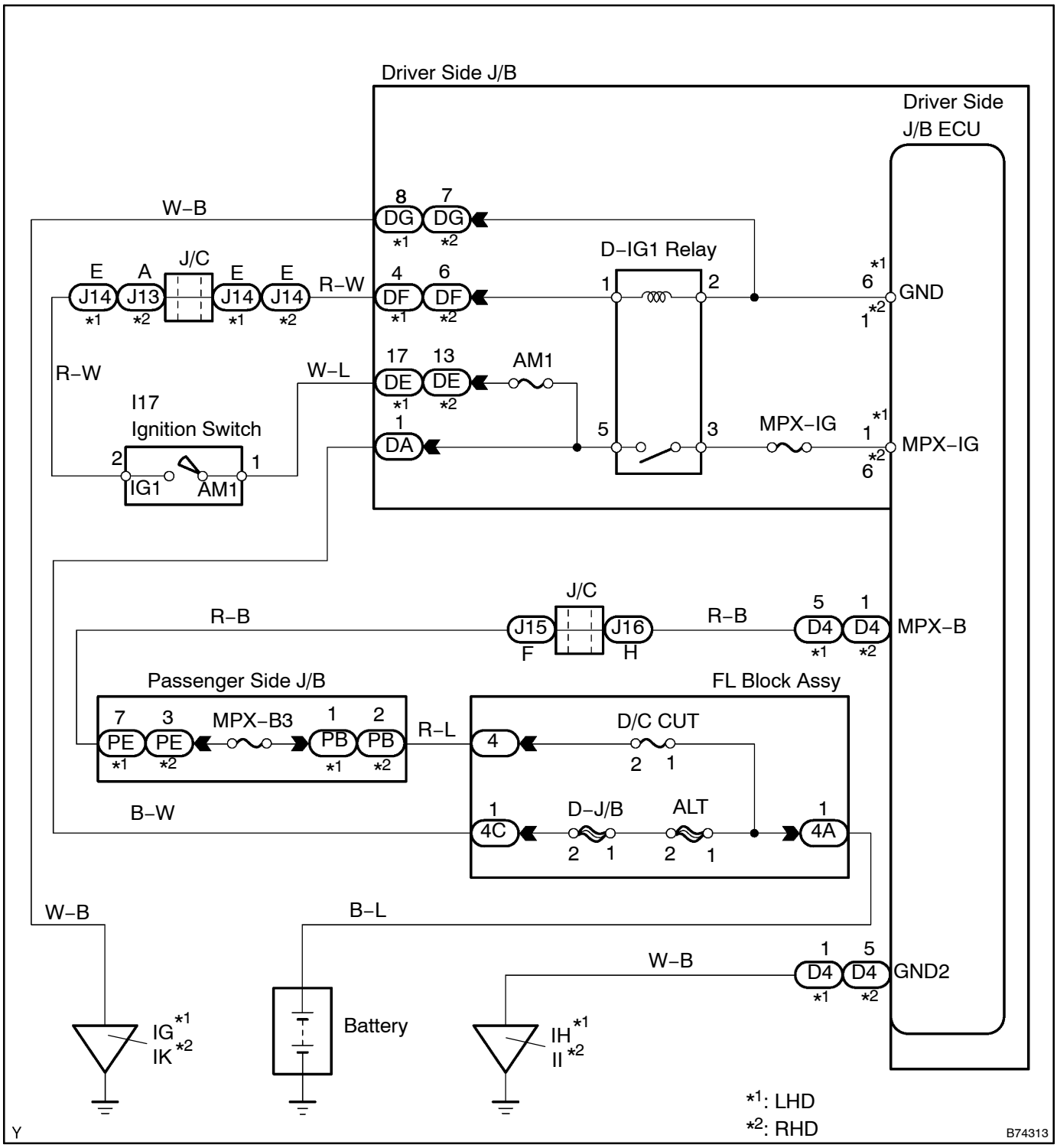

INSPECTION PROCEDURE

1	INSPECT FUSE (AM1, MPX–IG, MPX–B3)

(a) Remove the AM1 fuse and MPX–IG fuse from the driver side J/B.
(b) Remove the MPX–B3 fuse from the passenger side J/B.
(c) Measure the resistance.
Standard: Below 1 Ω

NG → **REPLACE FUSE**

OK

2	CHECK WIRE HARNESS (DRIVER SIDE J/B AND DRIVER SIDE J/B ECU – BODY GROUND)

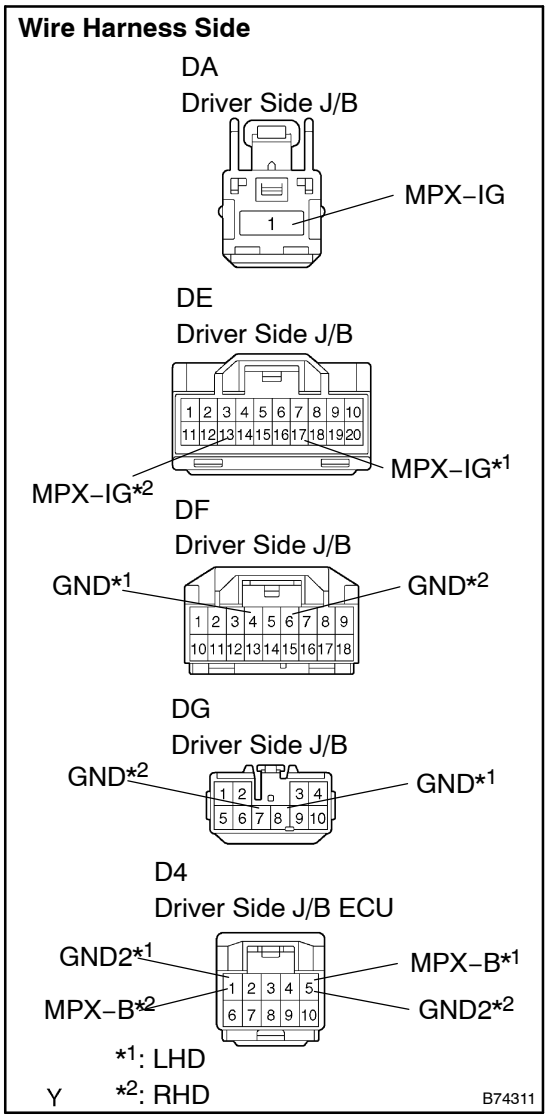

(a) Disconnect the DA, DE, DF, DG J/B and D4 ECU connectors.
(b) Measure the voltage and resistance of the wire harness side connectors.
Standard:
LHD models

Tester Connection	Condition	Specified Condition
DA–1 (MPX–IG) – Body ground	Constant	10 to 14 V
D4–5 (MPX–B) – Body ground	Constant	10 to 14 V
DG–8 (GND) – Body ground	Constant	Below 1 Ω
D4–1 (GND2) – Body ground	Constant	Below 1 Ω
DE–17 (MPX–IG) –DF–4 (GND)	Ignition switch OFF → ON	10 kΩ or higher → Below 1 Ω

RHD models

Tester Connection	Condition	Specified Condition
DA–1 (MPX–IG) – Body ground	Constant	10 to 14 V
D4–1 (MPX–B) – Body ground	Constant	10 to 14 V
DG–7 (GND) – Body ground	Constant	Below 1 Ω
D4–5 (GND2) – Body ground	Constant	Below 1 Ω
DE–13 (MPX–IG) –DF–6 (GND)	Ignition switch OFF → ON	10 kΩ or higher → Below 1 Ω

NG → **REPAIR OR REPLACE HARNESS AND CONNECTOR**

OK

3 INSPECT RELAY (D–IG1)

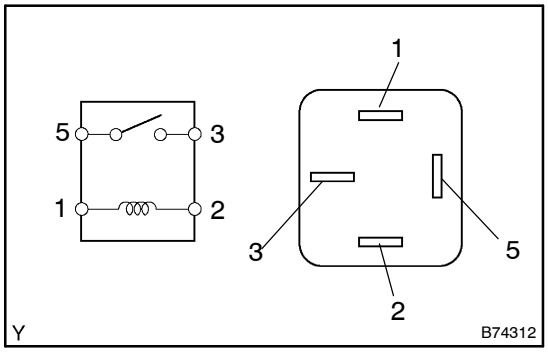

(a) Remove the D–IG1 relay from the driver side J/B.

(b) Measure the resistance.

Standard:

Tester Connection	Specified Condition
3 – 5	10 kΩ or higher
3 – 5	Below 1 Ω (when battery voltage is applied to terminals 1 and 2)

NG → **REPLACE RELAY**

OK

PROCEED TO NEXT CIRCUIT INSPECTION SHOWN ON PROBLEM SYMPTOMS TABLE
(See page 05–1329)