05I5A–01

INSPECTION

HINT:

When removing the anchor motor from the height adjustable anchor, fix the height adjustable anchor's slider so that it does not move out of the position. Fix the slider until the motor is reinstalled.

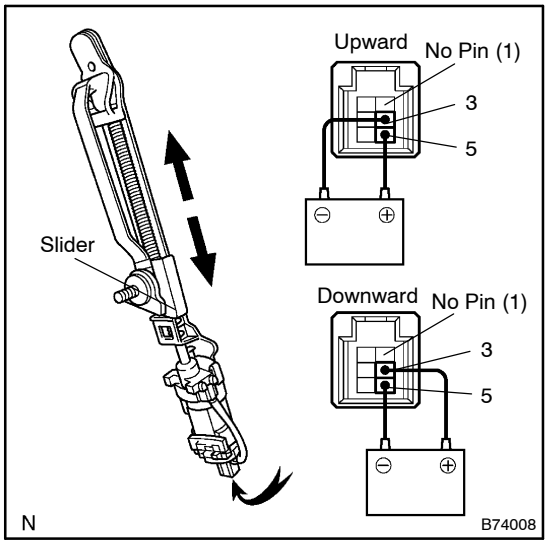

1. Driver side:

INSPECT HEIGHT ADJUSTABLE ANCHOR MOTOR

(a) Disconnect the belt anchor adjuster.

(b) Apply battery voltage and check operation of the belt anchor adjuster.

OK:

Measurement Condition	Anchor operation
Battery positive (+) → Terminal 5 Battery negative (–) → Terminal 3	Slider moves upward
Battery positive (+) → Terminal 3 Battery negative (–) → Terminal 5	Slider moves downward

If the result is not as specified, replace the motor.

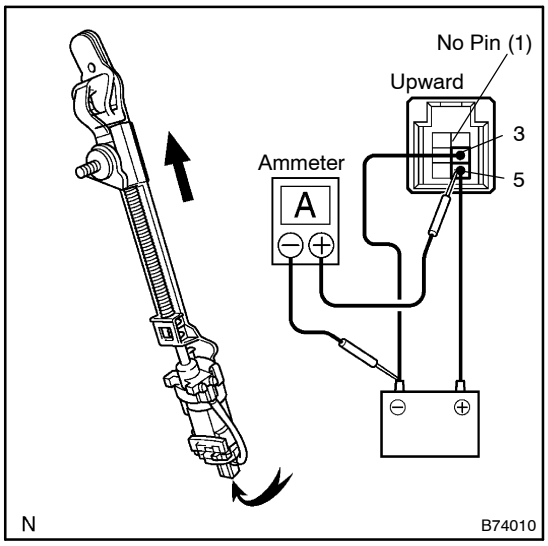

(c) Check the PTC operation inside the regulator motor.

NOTICE:

The work must be performed with the shoulder belt anchor adjuster installed in the vehicle.

(1) Disconnect the passenger side shoulder belt anchor adjuster.

(2) Connect the ammeter's positive (+) lead to terminal 5 of the wire harness side connector and the negative (–) lead to battery's negative terminal.

(3) Connect the battery's positive (+) lead to terminal 5 and negative (–) lead to terminal 3, and slide the anchor to the upward position.

(4) Continue to apply voltage, and check that the current changes to less than 1 A within 6 to 46 seconds.

(5) Disconnect the leads from the terminals.

(6) Approximately 60 seconds later, connect the battery's positive (+) lead to terminal 3 and the negative (–) lead to terminal 5, and check that the shoulder belt anchor adjuster to downward position.

If the result is not as specified, replace the motor assy.

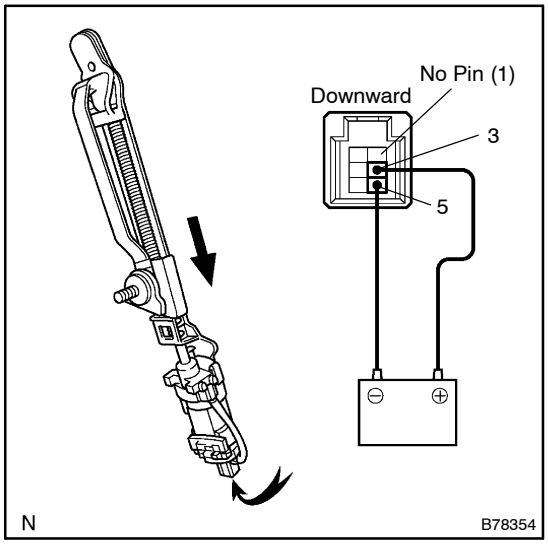

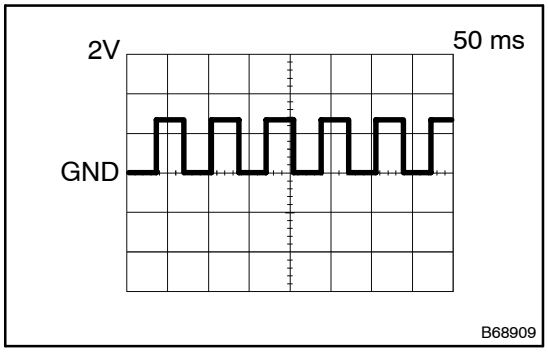

(d) Check the pulse of the pulse sensor.

(1) Using a oscilloscope, check the pulse generated, when the motor moving.

Standard:

Terminal No.	4 – 6
Tool setting	2 V/DIV., 50 ms/DiV
Motor condition	Anchor motor moving

If the result is not as specified, replace the motor assy.

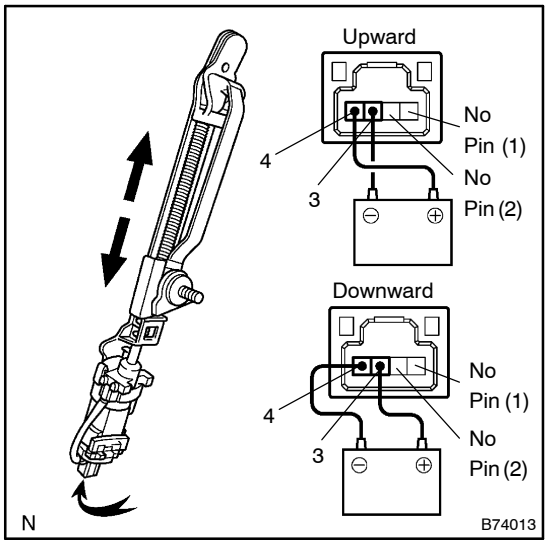

2. Passenger side:
INSPECT HEIGHT ADJUSTABLE ANCHOR MOTOR

(a) Disconnect the belt anchor adjuster.

(b) Apply battery voltage and check operation of the belt anchor adjuster.

OK:

Measurement Condition	Anchor operation
Battery positive (+) → Terminal 4 Battery negative (–) → Terminal 3	Slider moves upward
Battery positive (+) → Terminal 3 Battery negative (–) → Terminal 4	Slider moves downward

If the result is not as specified, replace the motor.

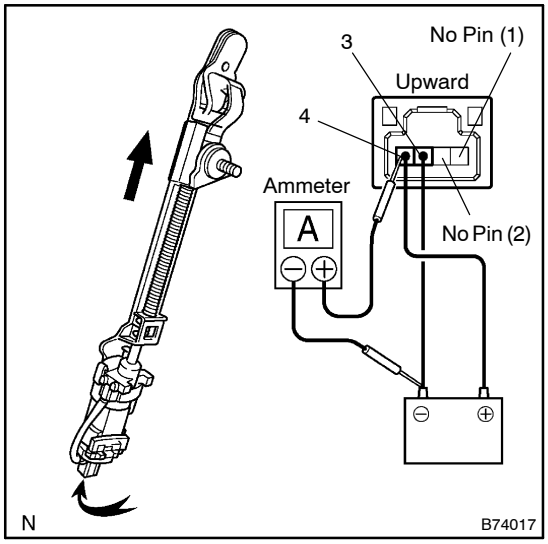

(c) Check the PTC operation inside the anchor motor.

NOTICE:

The work must be performed with the shoulder belt anchor adjuster installed in the vehicle.

(1) Disconnect the passenger side shoulder belt anchor adjuster.

(2) Connect the ammeter's positive (+) lead to terminal 3 of the wire harness side connector and the negative (–) lead to battery's negative terminal.

(3) Connect the battery's positive (+) lead to terminal 4 and negative (–) lead to terminal 3, and slide the anchor to the upward position.

(4) Continue to apply voltage, and check that the current changes to less than 1 A within 6 to 46 seconds.

(5) Disconnect the leads from the terminals.

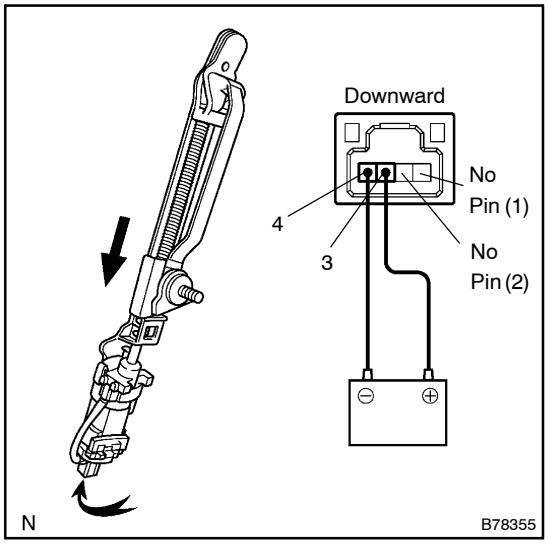

(6) Approximately 60 seconds later, connect the battery's positive (+) lead to terminal 3 and the negative (–) lead to terminal 4, and check that the shoulder belt anchor adjuster to downward position.

If the result is not as specified, replace the motor assy.

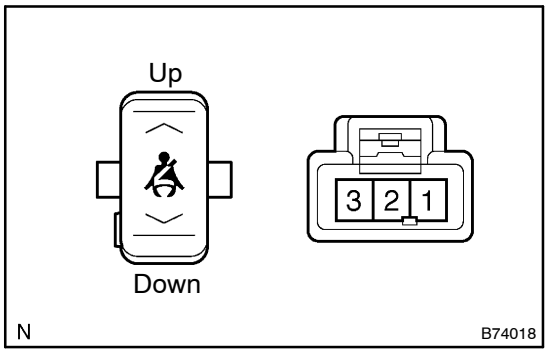

3. INSPECT HEIGHT ADJUSTABLE ANCHOR SWITCH

(a) Disconnect the connector.

(b) Check the switch resistance.

Standard:

Tester Condition	Switch Position	Specified condition
2 – 3	UP	Below 1 Ω
1 – 3	UP	10 kΩ or higher
1 – 3	DOWN	Below 1 Ω
2 – 3	DOWN	10 kΩ or higher

If the result is not as specified, replace the switch.