FUEL PUMP CONTROL CIRCUIT

CIRCUIT DESCRIPTION

Refer to DTC P0230 on page 05–122.

WIRING DIAGRAM

Refer to DTC P0230 on page 05–122.

INSPECTION PROCEDURE

1	PERFORM ACTIVE TEST (OPERATE F/PMP RELAY)

(a) Connect the Intelligent Tester II to the DLC3.
(b) Turn the ignition switch ON and push the Intelligent Tester II main switch ON.
(c) Enter the following menus: Enter/ Diagnosis/ OBD·MOBD/ Power train/ Engine and ECT/ Active Test/"Control the fuel pump/ speed".
(d) Check the relay operation while operating it with the Intelligent Tester II.
OK: Operating noise can be heard from the relay.

OK → **Go to step 5**

NG

2	INSPECT RELAY (F/PMP)

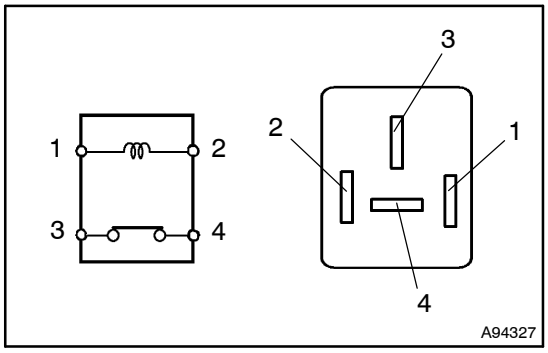

(a) Remove the F/PMP relay from the engine room Relay Block (R/B).
(b) Measure the resistance.
Standard:

Tester Connection	Specified Condition
3 – 4	Below 1 Ω
3 – 4	10 kΩ or higher (apply battery voltage to terminals 1 and 2)

NG → **REPLACE RELAY (F/PMP)**

OK

3	INSPECT ECM (FC VOLTAGE)

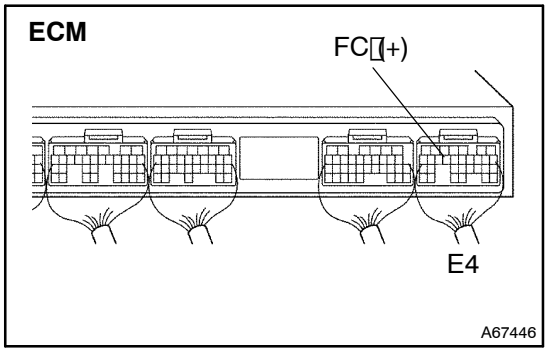

(a) Turn the ignition switch ON.
(b) Measure the voltage of ECM connector.
Standard:

Tester Connection	Specified condition
E4–14 (FC) – Body ground	9 to 14 V

OK → **REPLACE ECM (See page 10–21)**

OK

4	CHECK WIRE HARNESS (ECM – C/OPN RELAY, C/OPN RELAY – IGNITION SWITCH)

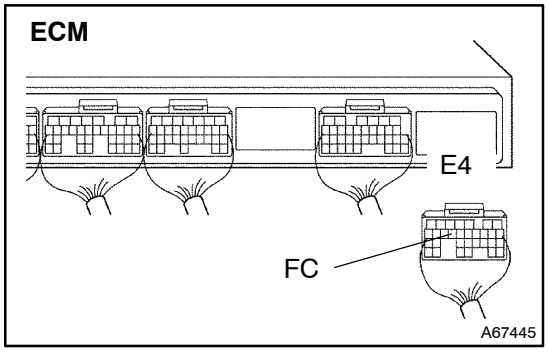

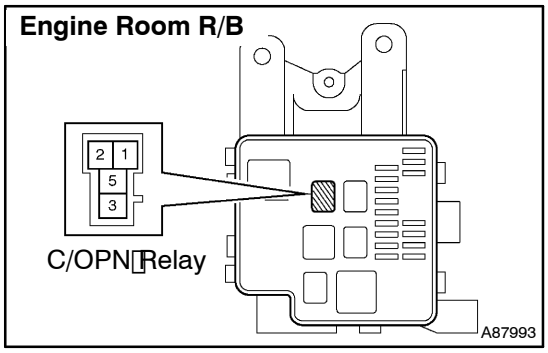

(a) Check the wire harness between the ECM and the C/OPN relay.

(1) Disconnect the E4 ECM connector.

(2) Remove the C/OPN relay from the engine room R/B.

(3) Measure the resistance of the wire harness side connectors.

Standard:

Tester Connection	Specified Condition
E4–14 (FC) – R/B C/OPN relay terminal 2	Below 1 Ω
E4–14 (FC) or 2 of C/OPN relay – Body ground	10 kΩ or higher

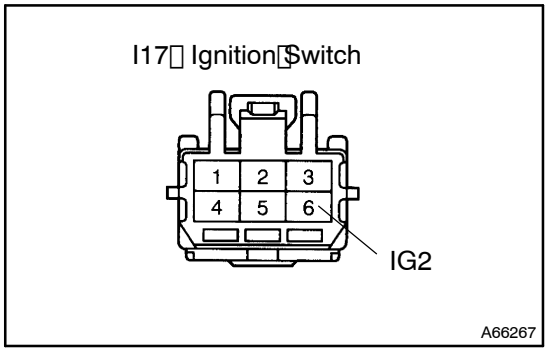

(b) Check the wire harness between the C/OPN relay and the ignition switch.

(1) Check the IG2 fuse.

- Remove the IG2 fuse from the engine room R/B.
- Measure the resistance of the IG2 fuse.

Standard: Below 1 Ω

- Reinstall the IG2 fuse.

(2) Remove the C/OPN relay from the engine room R/B.

(3) Disconnect the I17 ignition switch connector.

(4) Measure the resistance of the wire harness side connectors.

Standard:

Tester Connection	Specified Condition
R/B C/OPN relay terminal 1 – I17–6	Below 1 Ω
R/B C/OPN relay terminal 1 or I17–6 – Body ground	10 kΩ or higher

NG → **REPAIR OR REPLACE HARNESS AND CONNECTOR**

OK

REPLACE ECM (See page 10–21)

5 INSPECT FUEL PUMP

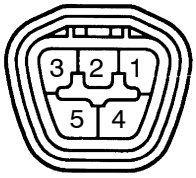

Fuel Pump

A74356

(a) Check the fuel pump resistance.
(1) Measure the resistance between terminals 4 and 5.
Standard: 0.2 to 3.0 Ω at 20°C (68°F)

(b) Check the fuel pump operation
(1) Apply battery voltage to both the terminals. Check that the pump operates.

NOTICE:
- **These tests must be done quickly (within 10 seconds) to prevent the coil from burning out.**
- **Keep fuel pump as far away from the battery as possible.**

CAUTION:
Always turn on and off the voltage on the battery side, not the fuel pump side.

NG → **REPLACE FUEL PUMP (See page 11–21)**

OK

6 CHECK WIRE HARNESS (C/OPN RELAY – FUEL PUMP – BODY GROUND)

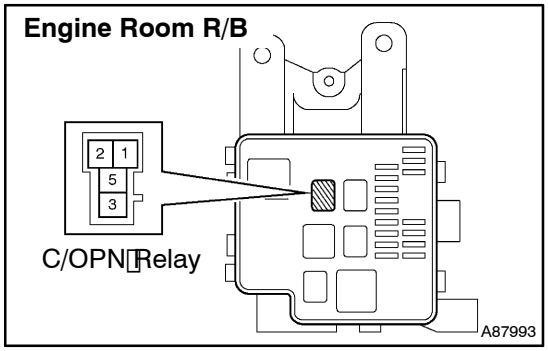

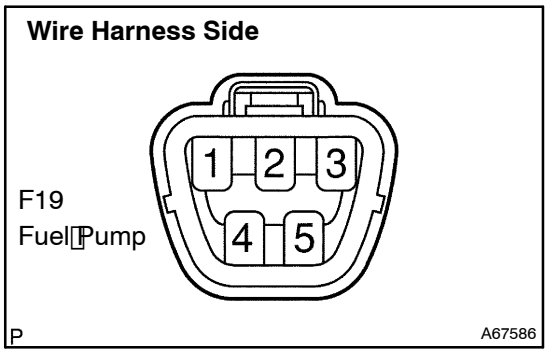

(a) Check the wire harness between the C/OPN relay and the fuel pump.
(1) Remove the C/OPN relay from the engine room R/B.
(2) Disconnect the F19 fuel pump connector.
(3) Measure the resistance of the wire harness side connectors.
Standard:

Tester Connection	Specified Condition
R/B C/OPN relay terminal 3 – F19–4 (Fuel pump)	Below 1 Ω
R/B C/OPN relay terminal 3 or F19–4 (Fuel pump) – Body ground	10 kΩ or higher

(4) Measure the resistance of the wire harness side connector.
Standard:

Tester Connection	Specified Condition
F19–5 – Body ground	Below 1 Ω

NG → **REPLACE ECM (See page 10–21)**

OK

REPAIR OR REPLACE HARNESS AND CONNECTOR