(Cont. next page)

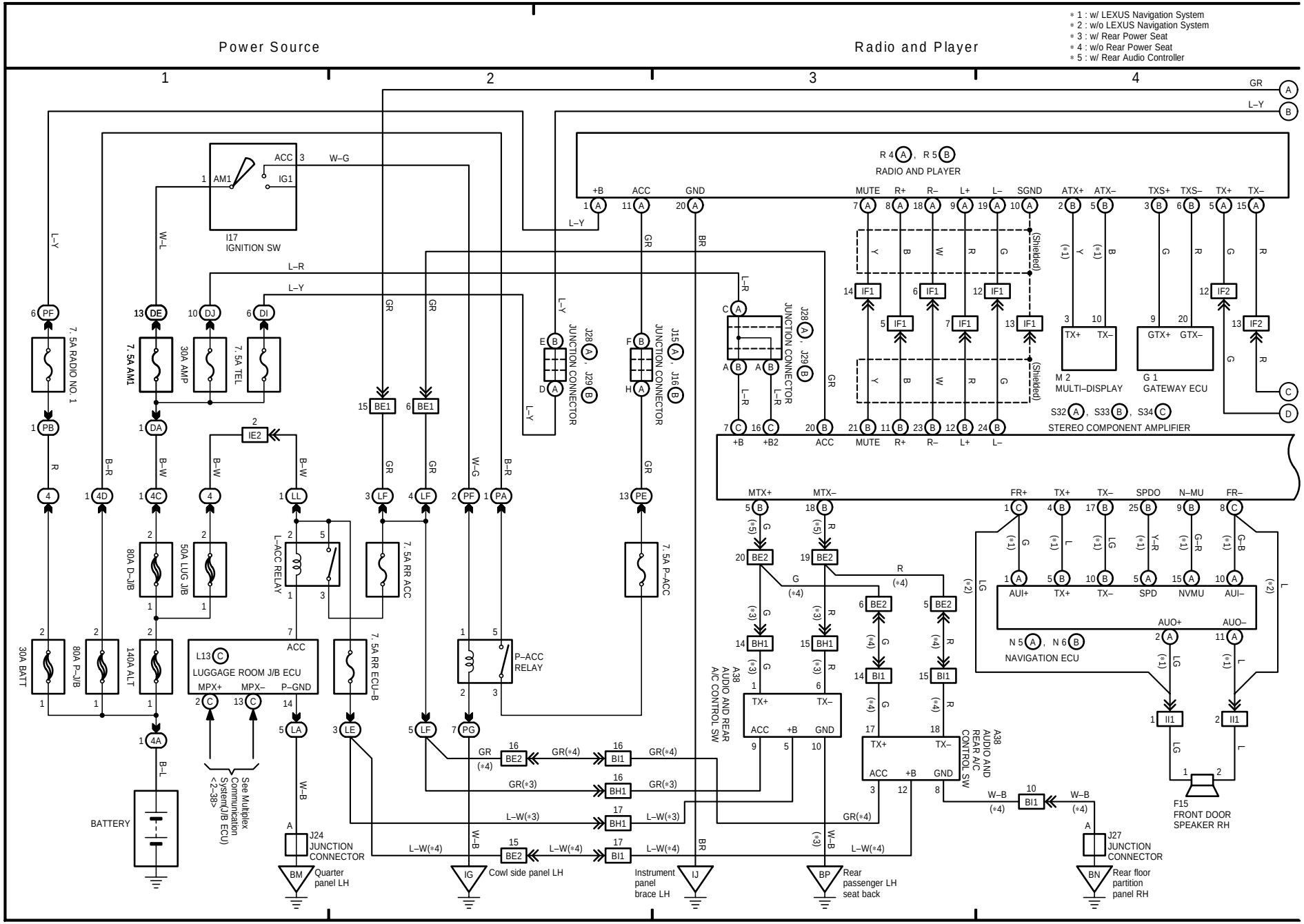

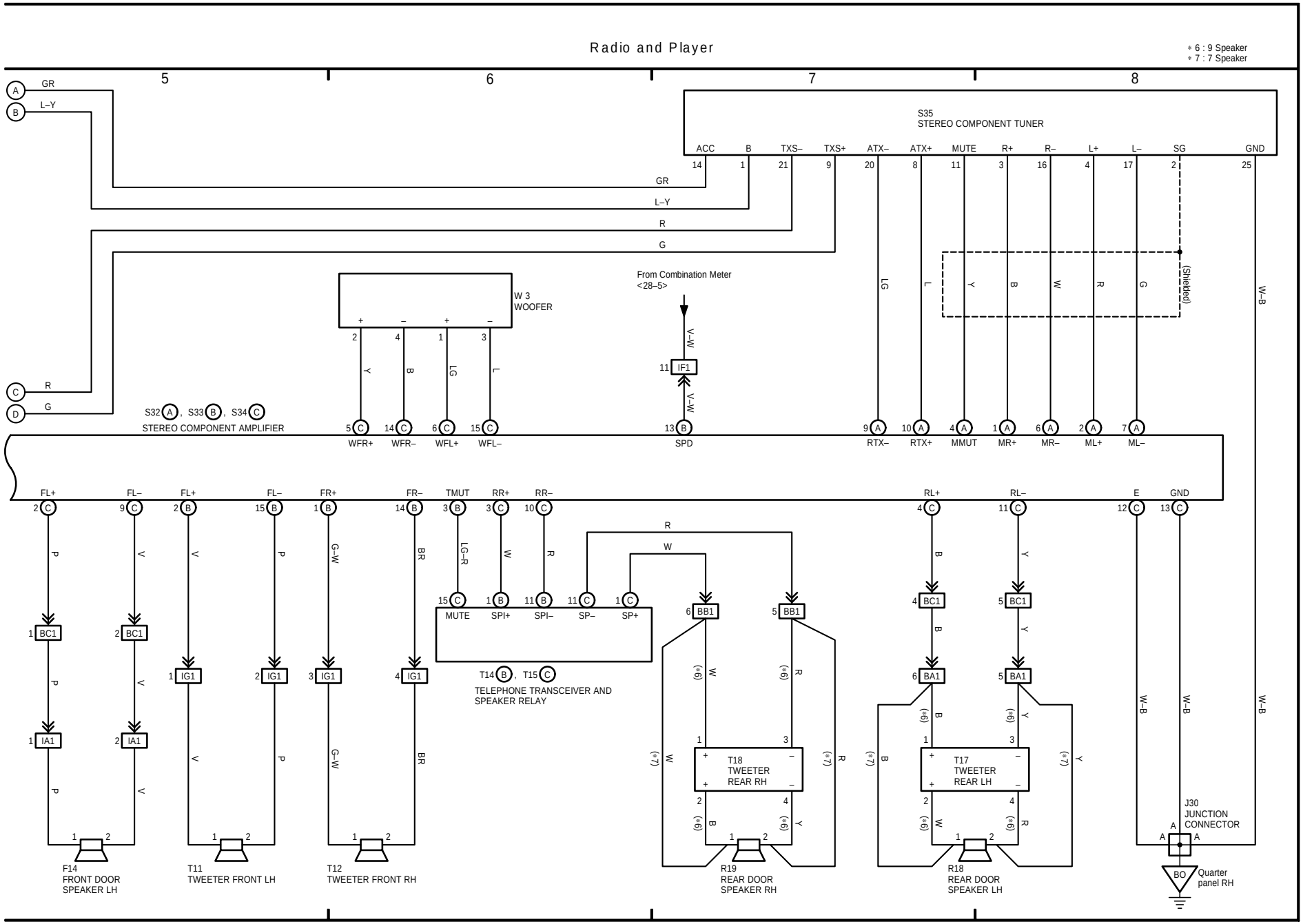
Radio and Player
* 6 : 9 Speaker
* 7 : 7 Speaker
5
6
7
8
S35
STEREO COMPONENT TUNER
ACC
B
TXS–
TXS+
ATX–
ATX+
MUTE
R+
R–
L+
L–
SG
GND
GR
L–Y
R
G
(Shielded)
W–B
W 3
WOOFER
From Combination Meter
<28–5>
V–W
IF1
S32 A, S33 B, S34 C
STEREO COMPONENT AMPLIFIER
WFR+
WFR–
WFL+
WFL–
SPD
RTX–
RTX+
MMUT
MR+
MR–
ML+
ML–
FL+
FL–
FR+
FR–
TMUT
RR+
RR–
RL+
RL–
E
GND
BC1
IA1
IG1
BB1
BA1
MUTE
SPI+
SPI–
SP–
SP+
T14 B, T15 C
TELEPHONE TRANSCEIVER AND
SPEAKER RELAY
T18
TWEETER
REAR RH
T17
TWEETER
REAR LH
F14
FRONT DOOR
SPEAKER LH
T11
TWEETER FRONT LH
T12
TWEETER FRONT RH
R19
REAR DOOR
SPEAKER RH
R18
REAR DOOR
SPEAKER LH
J30
JUNCTION
CONNECTOR
BO
Quarter
panel RH