(Cont. next page)

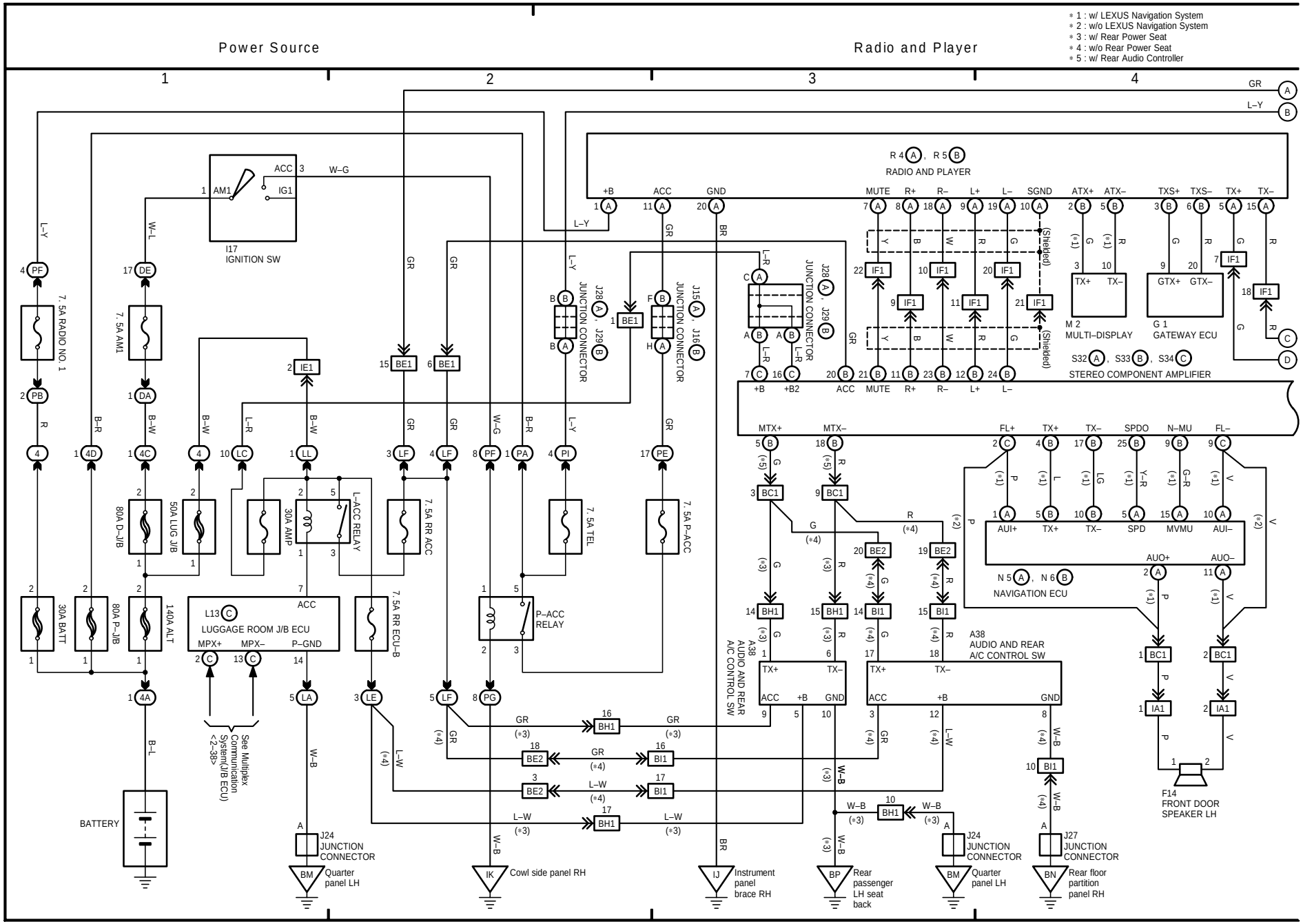

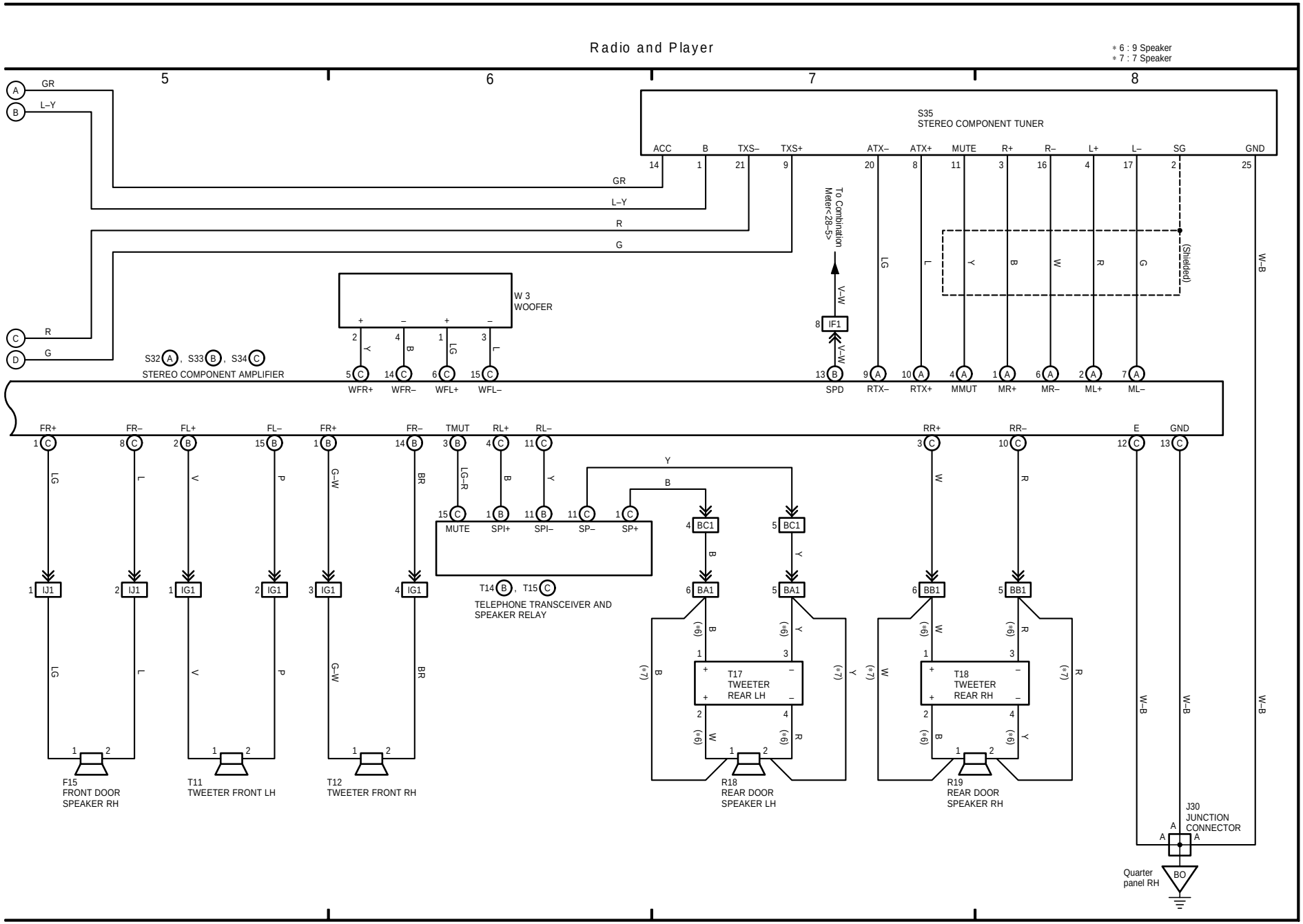
Radio and Player
* 6 : 9 Speaker
* 7 : 7 Speaker
5
6
7
8
S35
STEREO COMPONENT TUNER
ACC
B
TXS–
TXS+
ATX–
ATX+
MUTE
R+
R–
L+
L–
SG
GND
To Combination Meter<28–5>
(Shielded)
W 3
WOOFER
S32 A, S33 B, S34 C
STEREO COMPONENT AMPLIFIER
WFR+
WFR–
WFL+
WFL–
SPD
RTX–
RTX+
MMUT
MR+
MR–
ML+
ML–
FR+
FR–
FL+
FL–
TMUT
RL+
RL–
RR+
RR–
E
MUTE
SPI+
SPI–
SP–
SP+
T14 B, T15 C
TELEPHONE TRANSCEIVER AND SPEAKER RELAY
F15
FRONT DOOR SPEAKER RH
T11
TWEETER FRONT LH
T12
TWEETER FRONT RH
T17
TWEETER REAR LH
R18
REAR DOOR SPEAKER LH
T18
TWEETER REAR RH
R19
REAR DOOR SPEAKER RH
J30
JUNCTION CONNECTOR
Quarter panel RH
BO