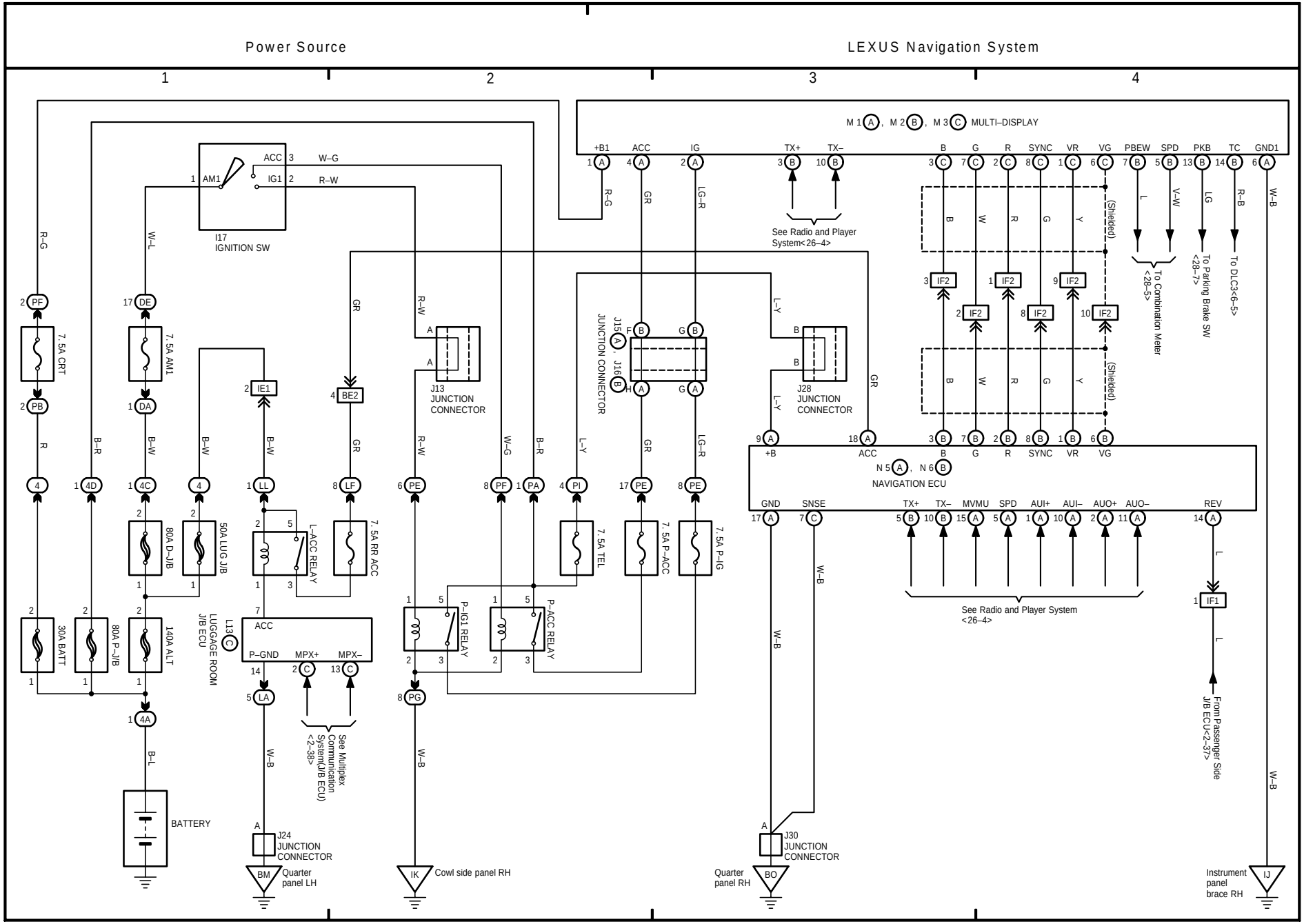
Power Source
LEXUS Navigation System
1
2
3
4
M 1 A, M 2 B, M 3 C MULTI–DISPLAY
+B1 ACC IG TX+ TX– B G R SYNC VR VG PBEW SPD PKB TC GND1
I17
IGNITION SW
AM1
ACC
IG1
W–G
R–W
See Radio and Player System<26–4>
(Shielded)
To Combination Meter <28–5>
To Parking Brake SW <28–7>
To DLC3<6–5>
7. 5A CRT
7. 5A AM1
IE1
BE2
J13 JUNCTION CONNECTOR
J15 JUNCTION CONNECTOR
J16
J28 JUNCTION CONNECTOR
+B ACC B G R SYNC VR VG
N 5 A, N 6 B
NAVIGATION ECU
GND SNSE TX+ TX– MVMU SPD AUI+ AUI– AUO+ AUO– REV
See Radio and Player System <26–4>
From Passenger Side J/B ECU<2–37>
80A D–J/B
50A LUG J/B
L–ACC RELAY
7. 5A RR ACC
7. 5A TEL
7. 5A P–ACC
7. 5A P–IG
30A BATT
80A P–J/B
140A ALT
LUGGAGE ROOM J/B ECU
L13
ACC
P–GND MPX+ MPX–
P–IG1 RELAY
P–ACC RELAY
See Multiplex Communication System(J/B ECU) <2–38>
BATTERY
J24 JUNCTION CONNECTOR
BM Quarter panel LH
IK Cowl side panel RH
J30 JUNCTION CONNECTOR
Quarter panel RH BO
Instrument panel brace RH IJ