(Cont. next page)

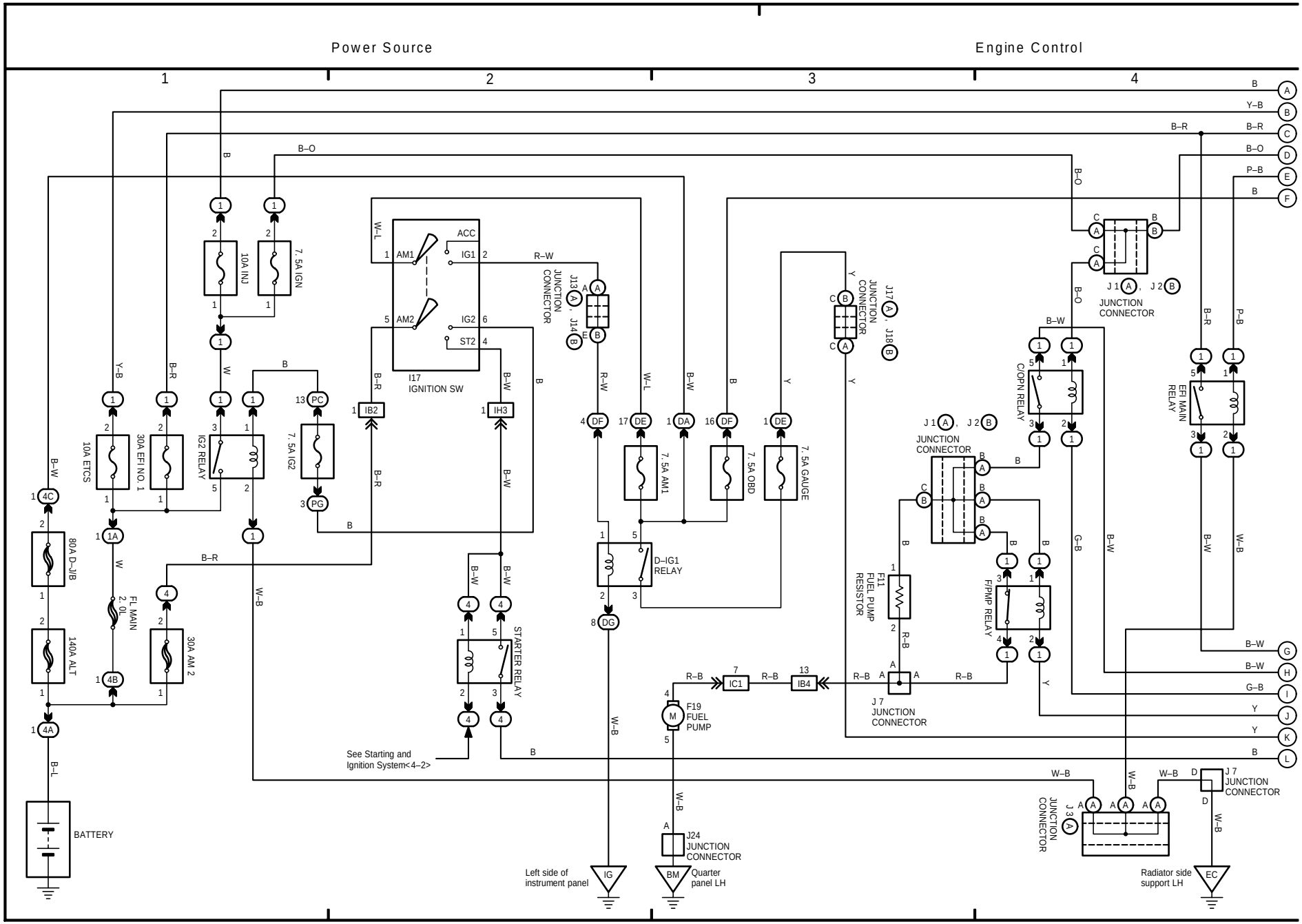

(Cont. next page)

Engine Control

* 2 : w/ LEXUS Navigation System
* 3 : w/ Electronic Modulated Air Suspension
* 4 : Europe
* 8 : Europe, Saudi Arabia

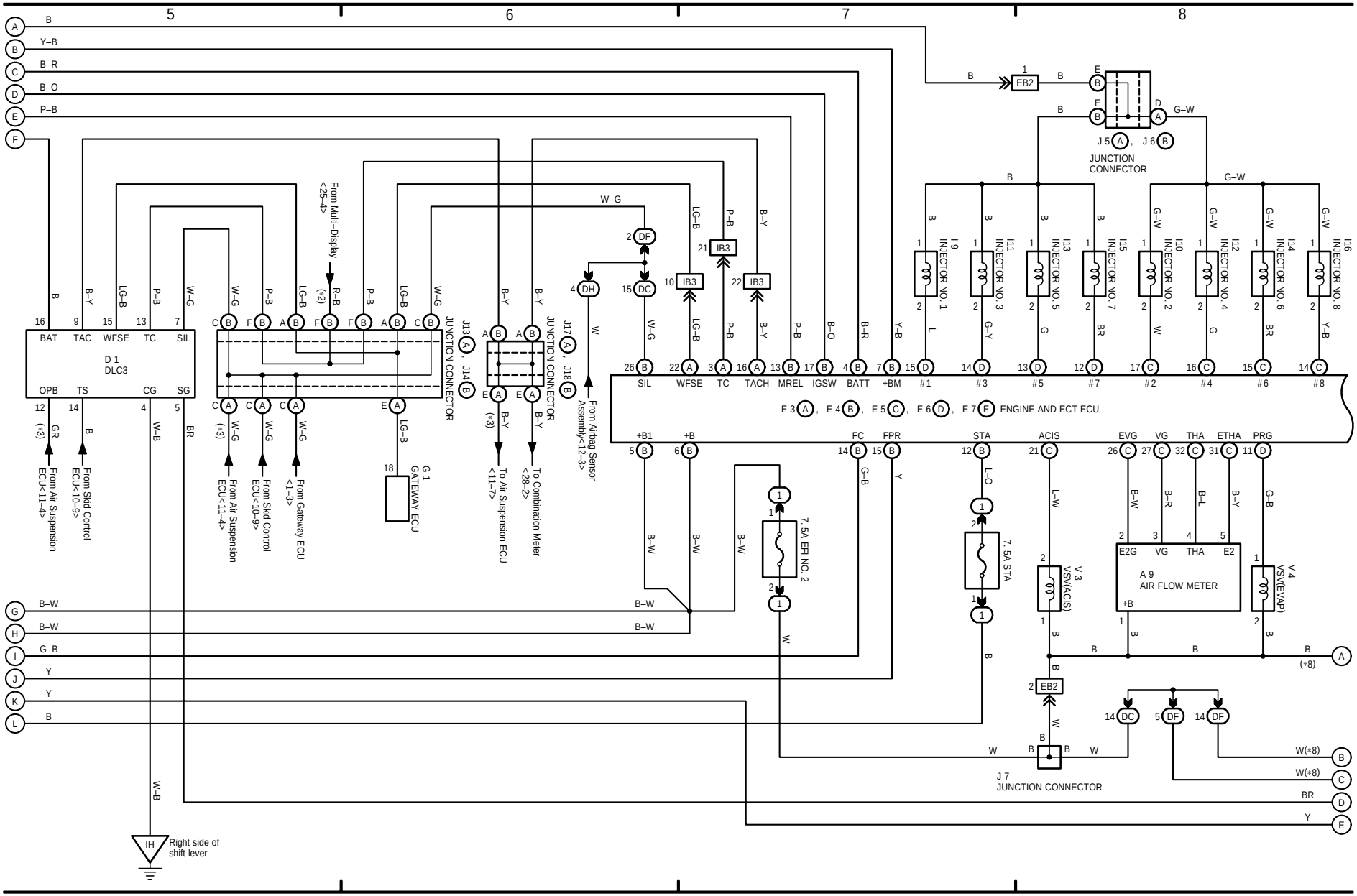

(Cont. next page)

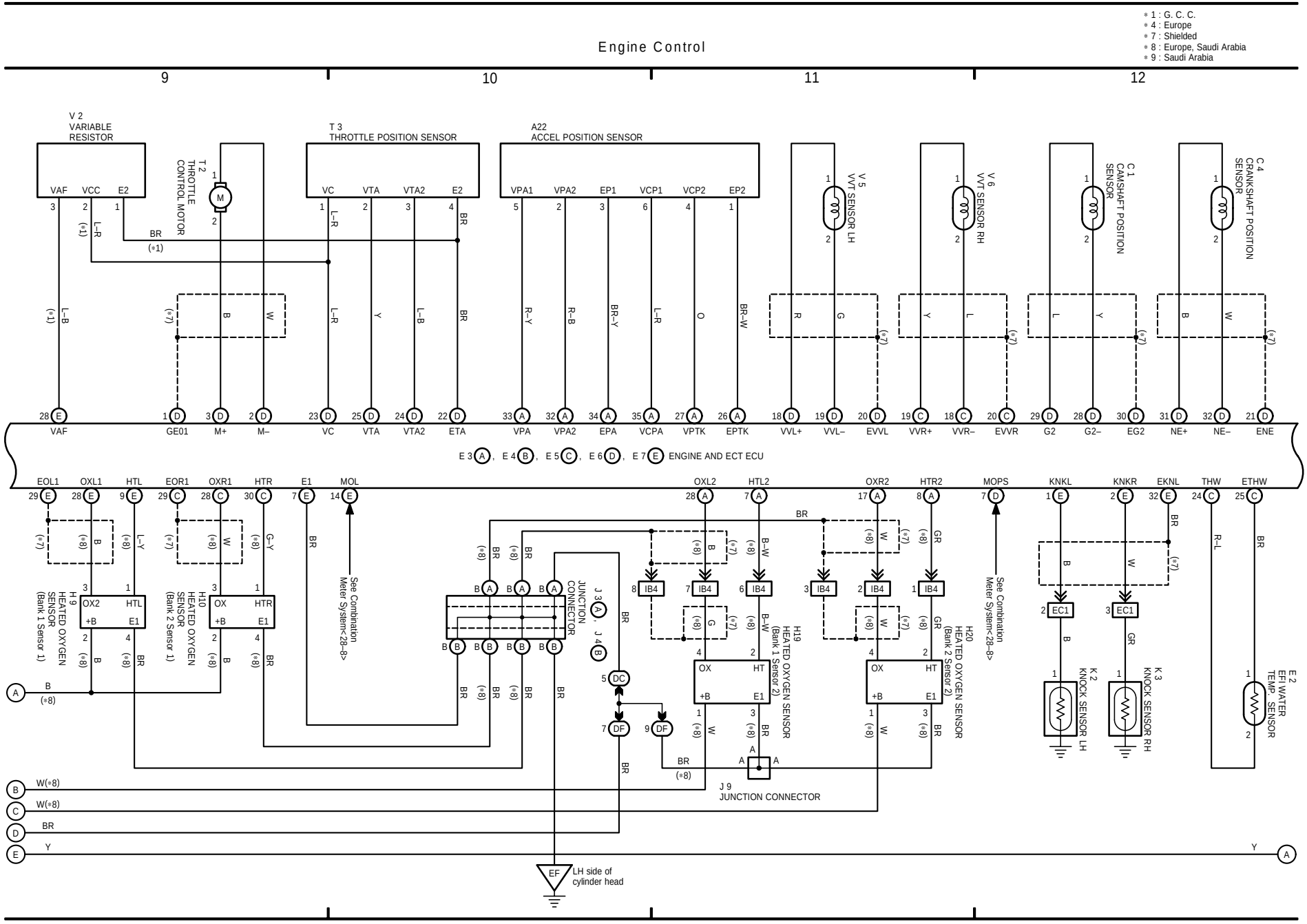

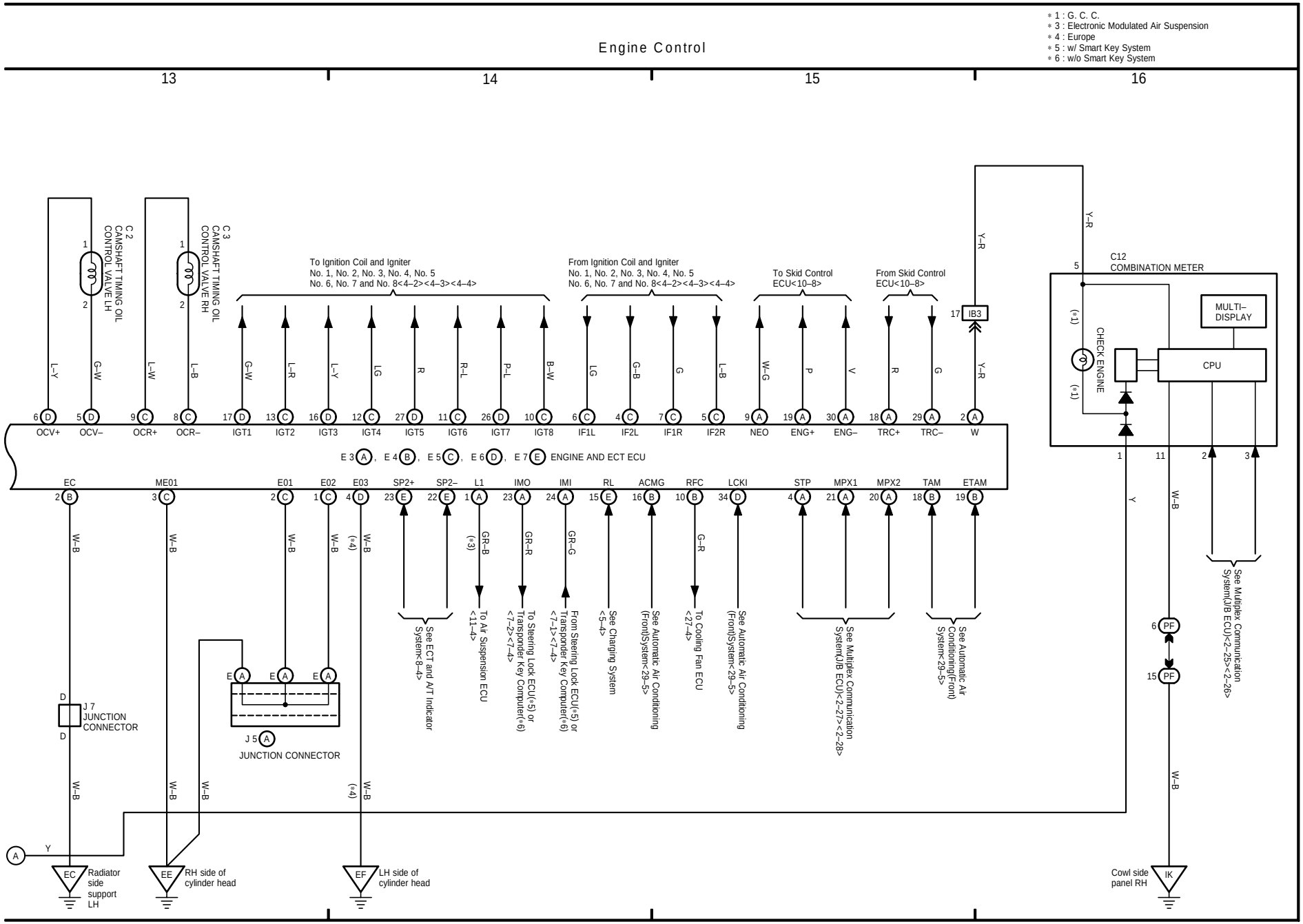
Engine Control
* 1 : G. C. C.
* 3 : Electronic Modulated Air Suspension
* 4 : Europe
* 5 : w/ Smart Key System
* 6 : w/o Smart Key System
13
14
15
16
C 2 CAMSHAFT TIMING OIL CONTROL VALVE LH
C 3 CAMSHAFT TIMING OIL CONTROL VALVE RH
To Ignition Coil and Igniter No. 1, No. 2, No. 3, No. 4, No. 5 No. 6, No. 7 and No. 8<4–2><4–3><4–4>
From Ignition Coil and Igniter No. 1, No. 2, No. 3, No. 4, No. 5 No. 6, No. 7 and No. 8<4–2><4–3><4–4>
To Skid Control ECU<10–8>
From Skid Control ECU<10–8>
IB3
C12 COMBINATION METER
MULTI–DISPLAY
CHECK ENGINE
CPU
OCV+ OCV– OCR+ OCR– IGT1 IGT2 IGT3 IGT4 IGT5 IGT6 IGT7 IGT8 IF1L IF2L IF1R IF2R NEO ENG+ ENG– TRC+ TRC– W
E 3 A, E 4 B, E 5 C, E 6 D, E 7 E ENGINE AND ECT ECU
EC ME01 E01 E02 E03 SP2+ SP2– L1 IMO IMI RL ACMG RFC LCKI STP MPX1 MPX2 TAM ETAM
See ECT and A/T Indicator System<8–4>
To Air Suspension ECU <11–4>
To Steering Lock ECU(<5) or Transponder Key Computer(<6)
From Steering Lock ECU(<5) or Transponder Key Computer(<6)
See Charging System <5–4>
See Automatic Air Conditioning (Front)System<29–5>
To Cooling Fan ECU <27–4>
See Automatic Air Conditioning (Front)System<29–5>
See Multiplex Communication System(J/B ECU<2–27><2–28>
See Automatic Air Conditioning(Front) System<29–5>
See Multiplex Communication System(J/B ECU<2–25><2–26>
J 7 JUNCTION CONNECTOR
J 5 JUNCTION CONNECTOR
Radiator side support LH
RH side of cylinder head
LH side of cylinder head
Cowl side panel RH