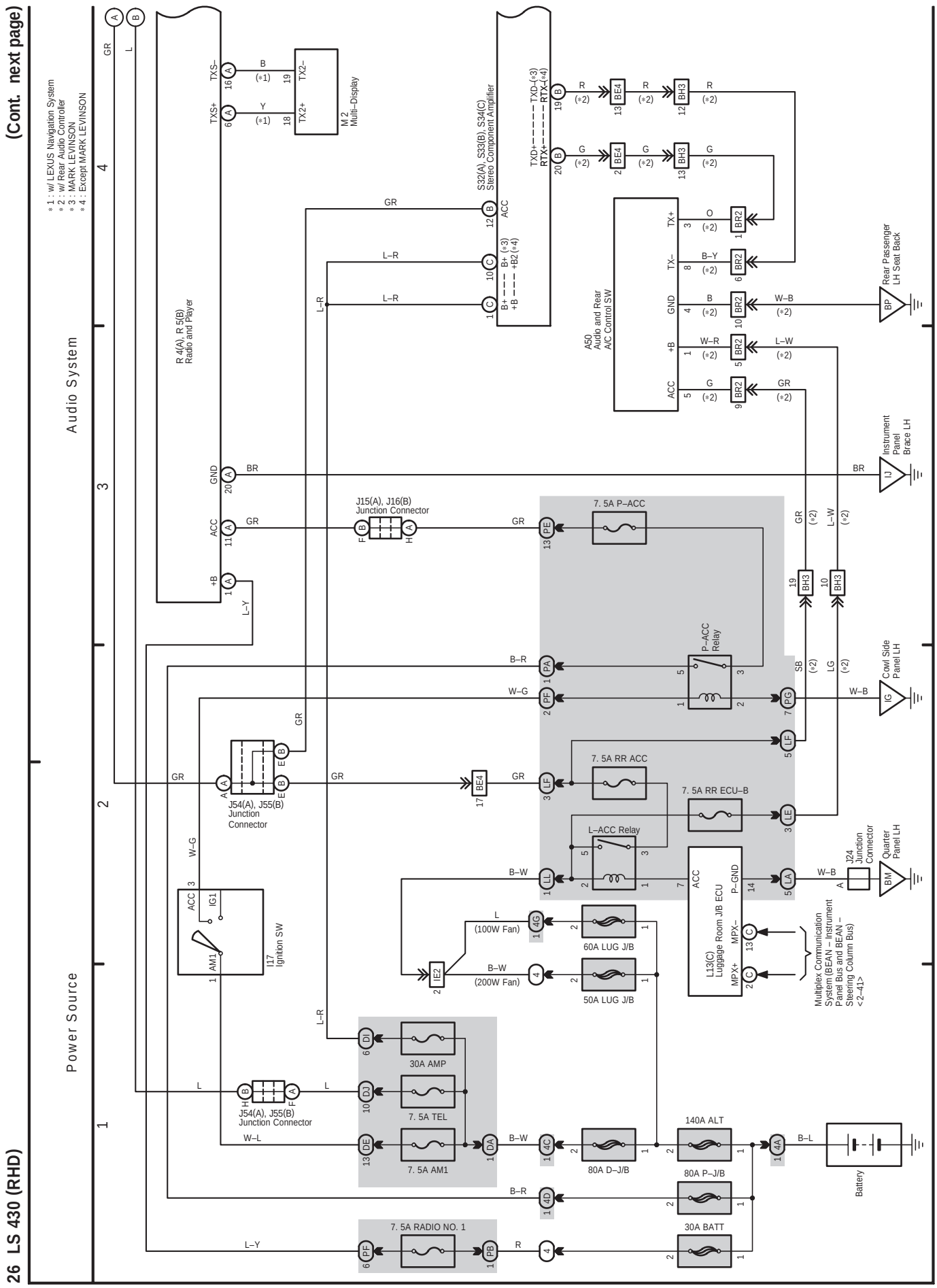
(Cont. next page)
26 LS 430 (RHD)
Power Source
Audio System
*1 : w/ LEXUS Navigation System
*2 : w/ Rear Audio Controller
*3 : MARK LEVINSON
*4 : Except MARK LEVINSON
R 4(A), R 5(B)
Radio and Player
M 2
Multi–Display
S32(A), S33(B), S34(C)
Stereo Component Amplifier
A50
Audio and Rear
A/C Control SW
Rear Passenger
LH Seat Back
Instrument
Panel
Brace LH
Cowl Side
Panel LH
Quarter
Panel LH
J24
Junction
Connector
J15(A), J16(B)
Junction Connector
J54(A), J55(B)
Junction
Connector
7. 5A P–ACC
P–ACC
Relay
7. 5A RR ACC
7. 5A RR ECU–B
L–ACC Relay
I17
Ignition SW
60A LUG J/B
50A LUG J/B
L13(C)
Luggage Room J/B ECU
Multiplex Communication
System (BEAN – Instrument
Panel Bus and BEAN –
Steering Column Bus)
<2–41>
30A AMP
7. 5A TEL
7. 5A AM1
140A ALT
80A D–J/B
80A P–J/B
30A BATT
Battery
7. 5A RADIO NO. 1

26 LS 430 (RHD) (Cont' d)

(Cont. next page)

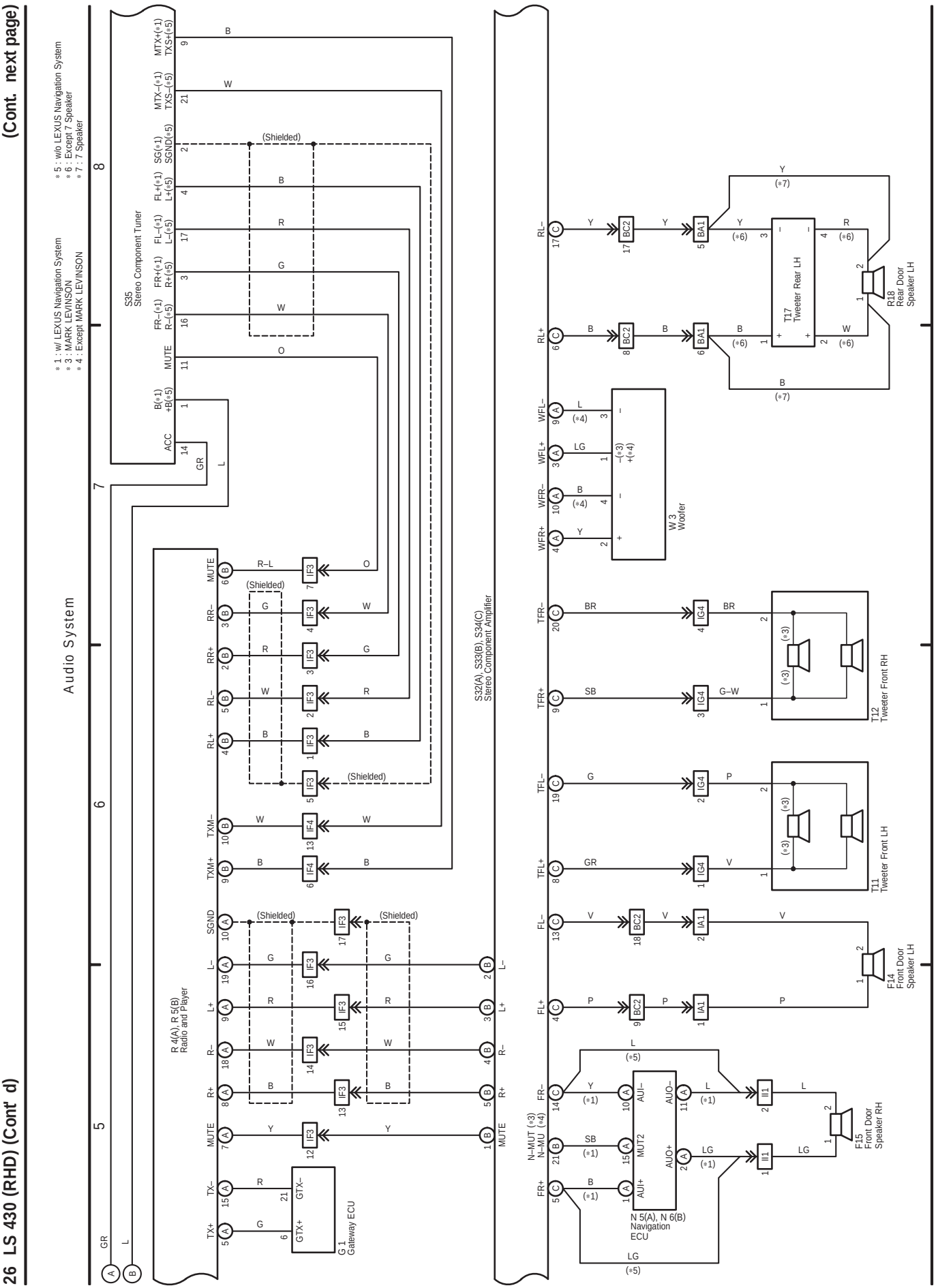

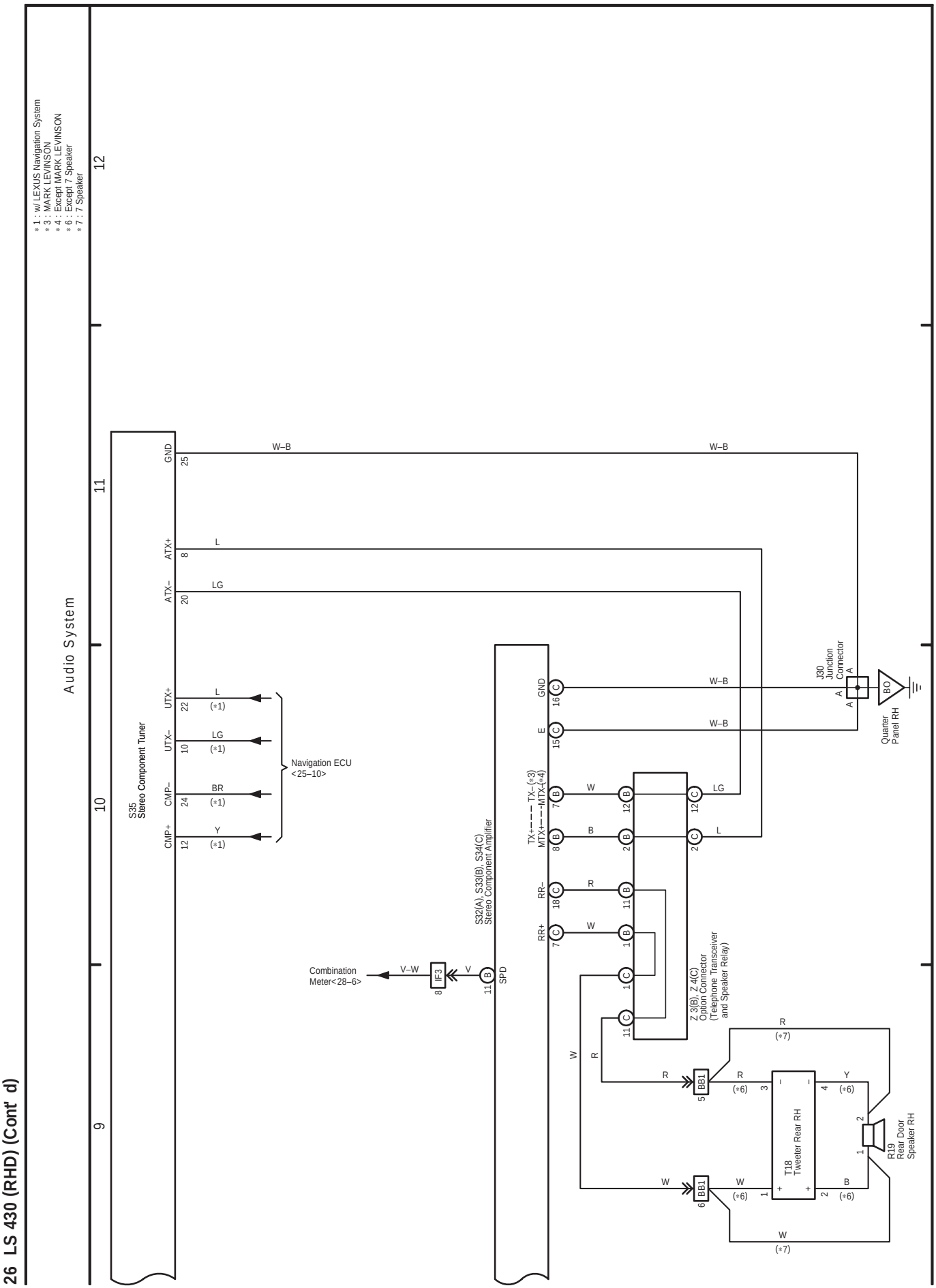
26 LS 430 (RHD) (Cont' d)
Audio System
* 1 : w/ LEXUS Navigation System
* 3 : MARK LEVINSON
* 4 : Except MARK LEVINSON
* 6 : Except 7 Speaker
* 7 : 7 Speaker
9
10
11
12
S35
Stereo Component Tuner
GND
ATX+
ATX–
UTX+
UTX–
CMP–
CMP+
Navigation ECU
<25–10>
S32(A), S33(B), S34(C)
Stereo Component Amplifier
GND
E
TX+ TX–(*3)
MTX+ MTX–(*4)
RR–
RR+
SPD
Combination
Meter<28–6>
IF3
J30
Junction
Connector
BO
Quarter
Panel RH
Z 3(B), Z 4(C)
Option Connector
(Telephone Transceiver
and Speaker Relay)
BB1
T18
Tweeter Rear RH
R19
Rear Door
Speaker RH
W–B
L
LG
BR
Y
B
R
W
V
V–W