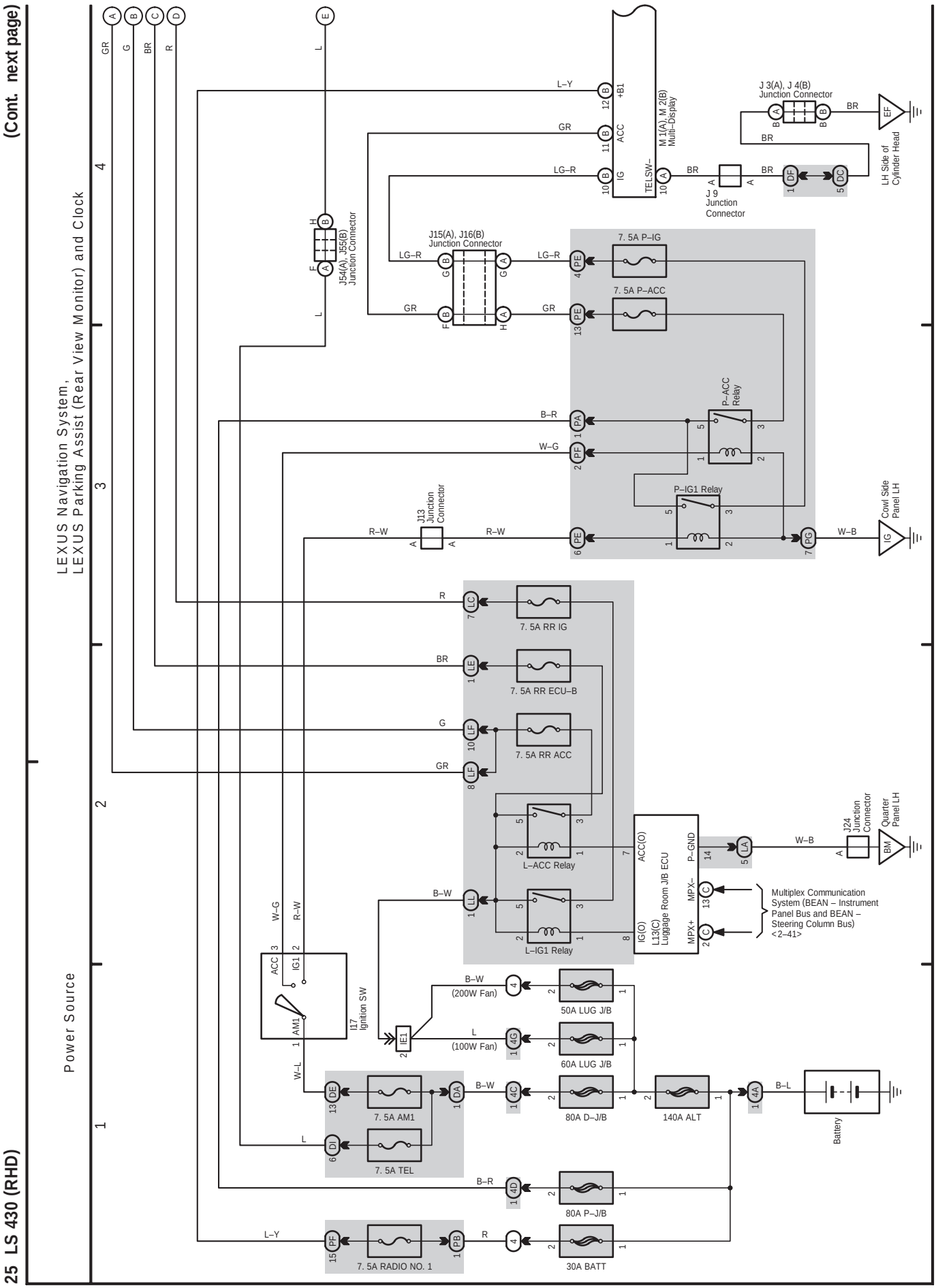
(Cont. next page)
25 LS 430 (RHD)
LEXUS Navigation System,
LEXUS Parking Assist (Rear View Monitor) and Clock
Power Source
M 1(A), M 2(B) Multi–Display
TELSW–
+B1
ACC
IG
J 3(A), J 4(B) Junction Connector
J 9 Junction Connector
LH Side of Cylinder Head
J54(A), J55(B) Junction Connector
J15(A), J16(B) Junction Connector
7. 5A P–IG
7. 5A P–ACC
P–ACC Relay
P–IG1 Relay
J13 Junction Connector
Cowl Side Panel LH
7. 5A RR IG
7. 5A RR ECU–B
7. 5A RR ACC
L–ACC Relay
L–IG1 Relay
ACC(O)
IG(O)
L13(C) Luggage Room J/B ECU
P–GND
MPX–
MPX+
Multiplex Communication System (BEAN – Instrument Panel Bus and BEAN – Steering Column Bus) <2–41>
J24 Junction Connector
Quarter Panel LH
I17 Ignition SW
ACC
IG1
AM1
50A LUG J/B
60A LUG J/B
80A D–J/B
140A ALT
Battery
7. 5A AM1
7. 5A TEL
80A P–J/B
7. 5A RADIO NO. 1
30A BATT

(Cont. next page)

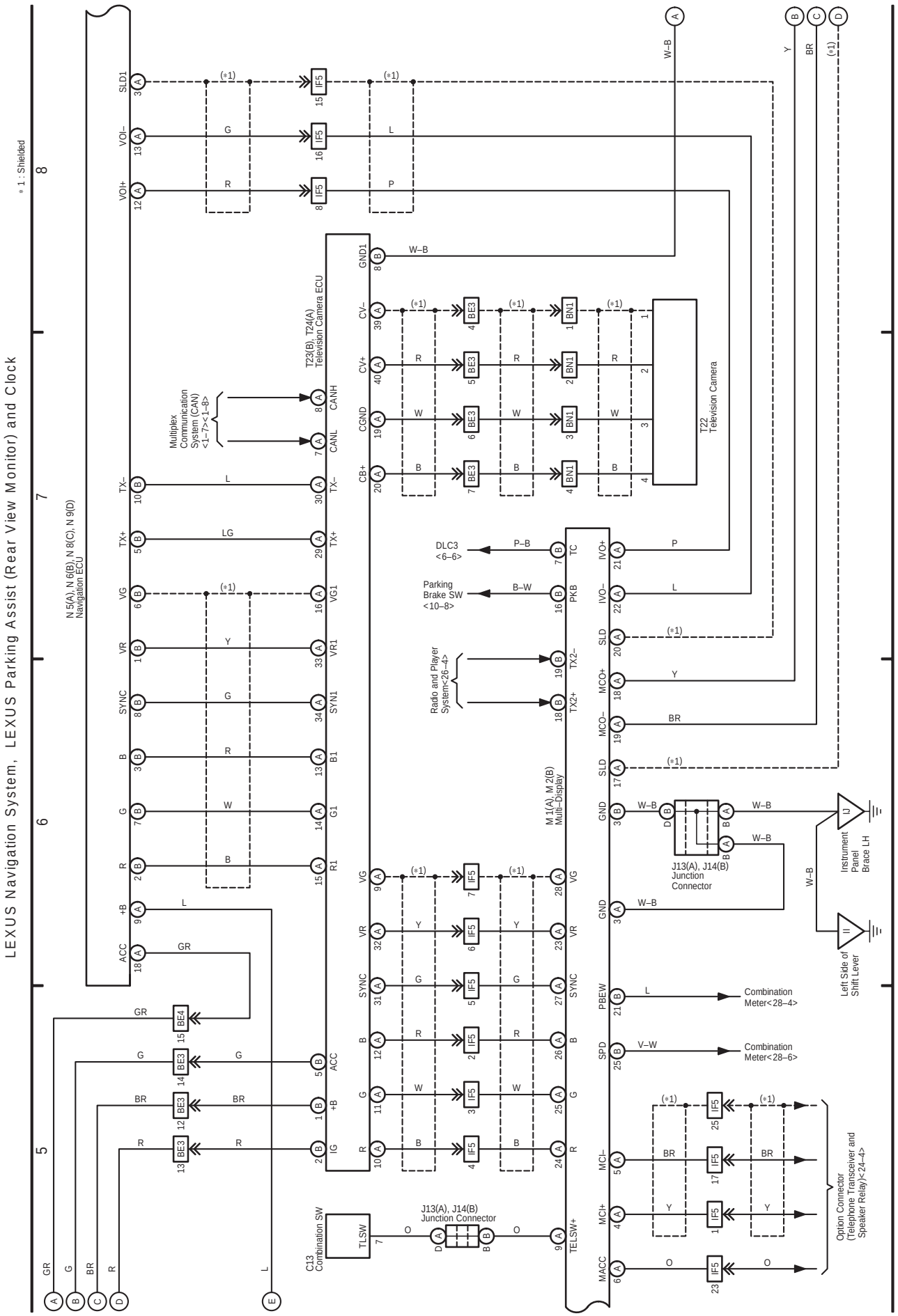

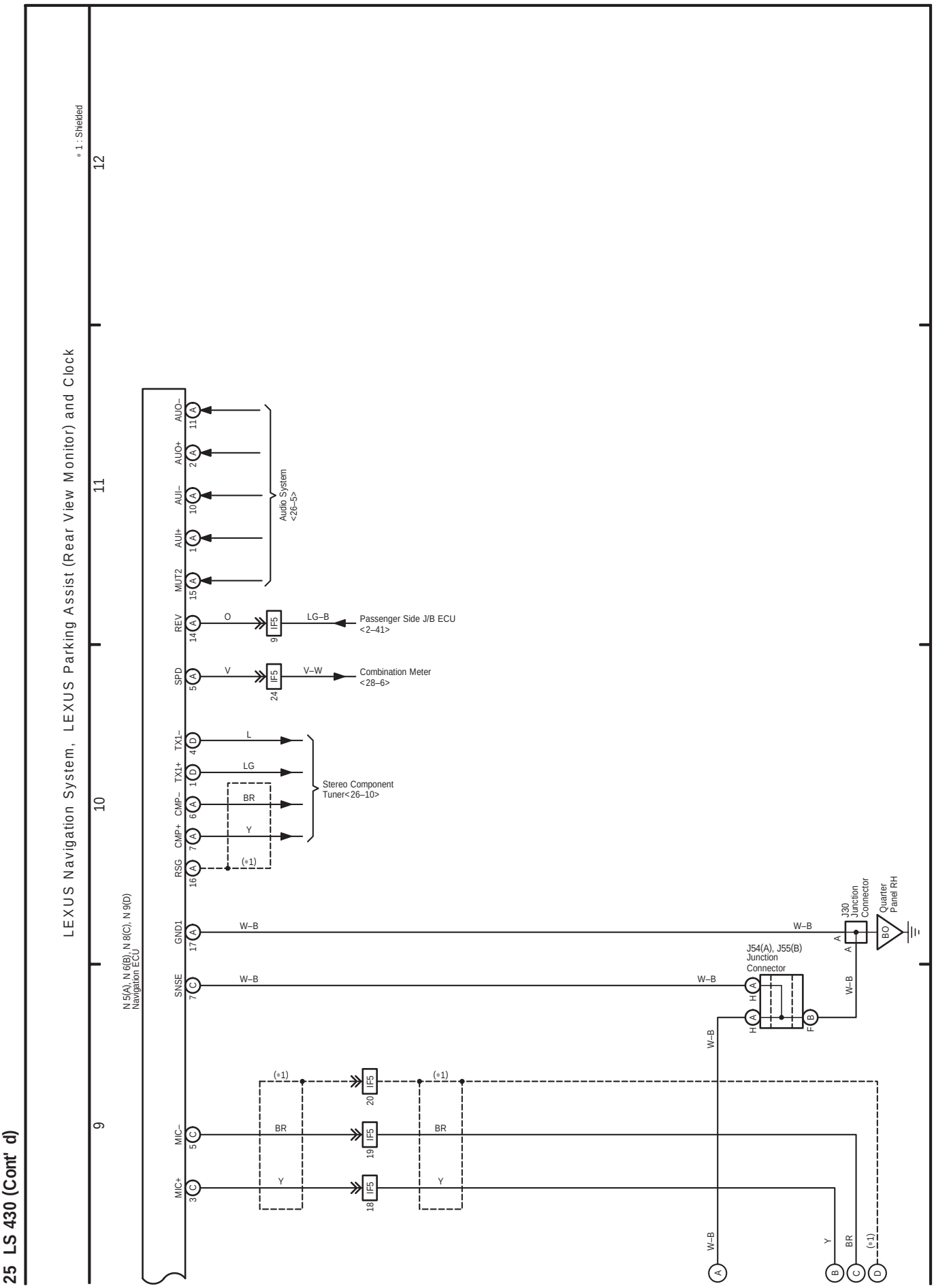
25 LS 430 (Cont' d)
LEXUS Navigation System, LEXUS Parking Assist (Rear View Monitor) and Clock
* 1 : Shielded
N 5(A), N 6(B), N 8(C), N 9(D)
Navigation ECU
AUO–
AUO+
AUI–
AUI+
MUT2
REV
SPD
TX1–
TX1+
CMP–
CMP+
RSG
GND1
SNSE
MIC–
MIC+
Audio System
<26–5>
Passenger Side J/B ECU
<2–41>
Combination Meter
<28–6>
Stereo Component
Tuner<26–10>
J54(A), J55(B)
Junction
Connector
J30
Junction
Connector
Quarter
Panel RH
W–B
BR
Y
O
V
V–W
LG–B
L
LG
(*1)