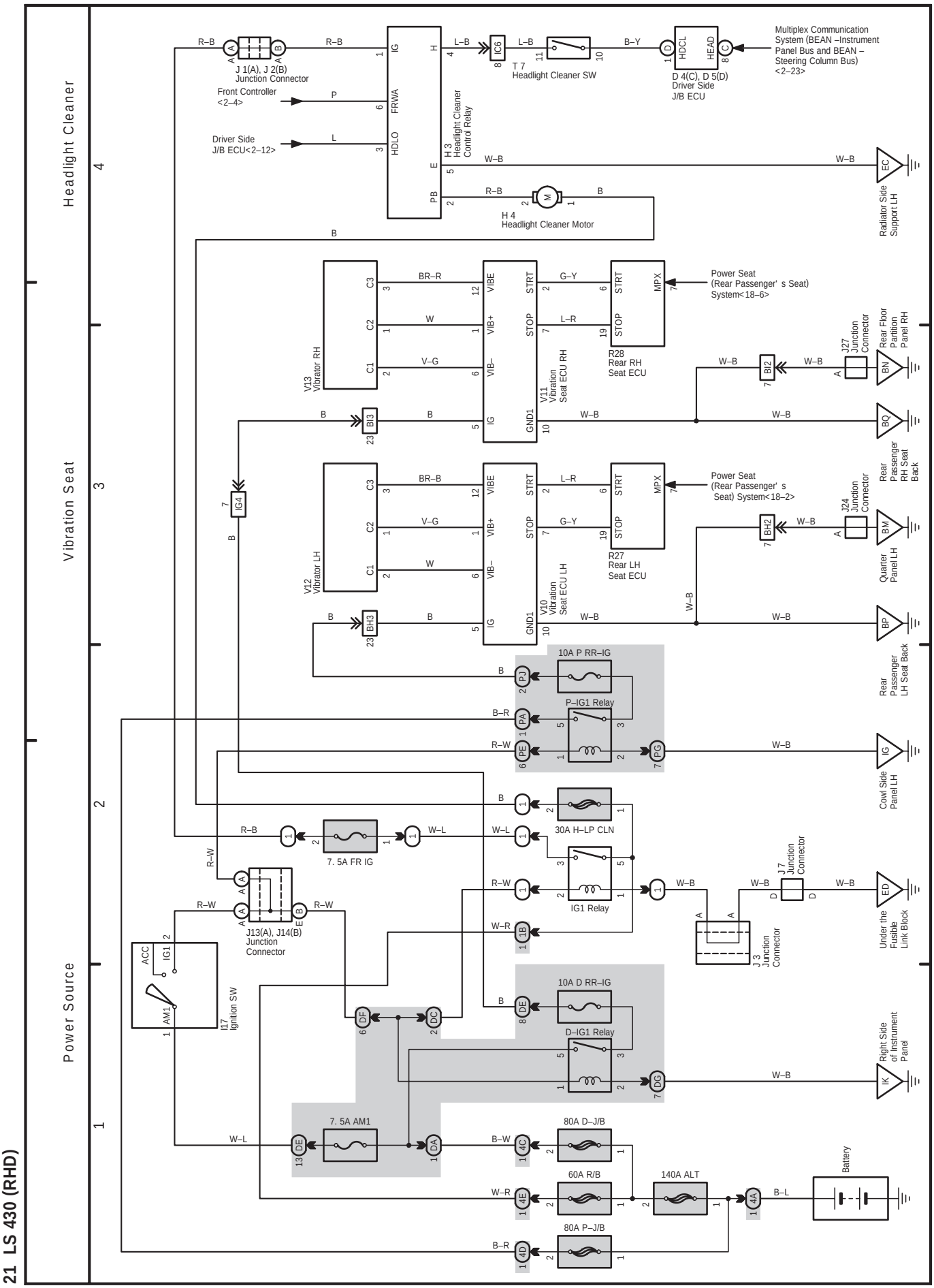
21 LS 430 (RHD)
Headlight Cleaner
Vibration Seat
Power Source
J 1(A), J 2(B) Junction Connector
Front Controller <2–4>
Driver Side J/B ECU<2–12>
H 3 Headlight Cleaner Control Relay
T 7 Headlight Cleaner SW
D 4(C), D 5(D) Driver Side J/B ECU
Multiplex Communication System (BEAN –Instrument Panel Bus and BEAN – Steering Column Bus) <2–23>
H 4 Headlight Cleaner Motor
Radiator Side Support LH
V13 Vibrator RH
V11 Vibration Seat ECU RH
R28 Rear RH Seat ECU
Power Seat (Rear Passenger' s Seat) System<18–6>
J27 Junction Connector
Rear Floor Partition Panel RH
Rear Passenger RH Seat Back
V12 Vibrator LH
V10 Vibration Seat ECU LH
R27 Rear LH Seat ECU
Power Seat (Rear Passenger' s Seat) System<18–2>
J24 Junction Connector
Quarter Panel LH
Rear Passenger LH Seat Back
10A P RR–IG
P–IG1 Relay
Cowl Side Panel LH
30A H–LP CLN
7. 5A FR IG
IG1 Relay
J7 Junction Connector
J3 Junction Connector
Under the Fusible Link Block
J13(A), J14(B) Junction Connector
I17 Ignition SW
10A D RR–IG
D–IG1 Relay
Right Side of Instrument Panel
7. 5A AM1
80A D–J/B
60A R/B
140A ALT
80A P–J/B
Battery