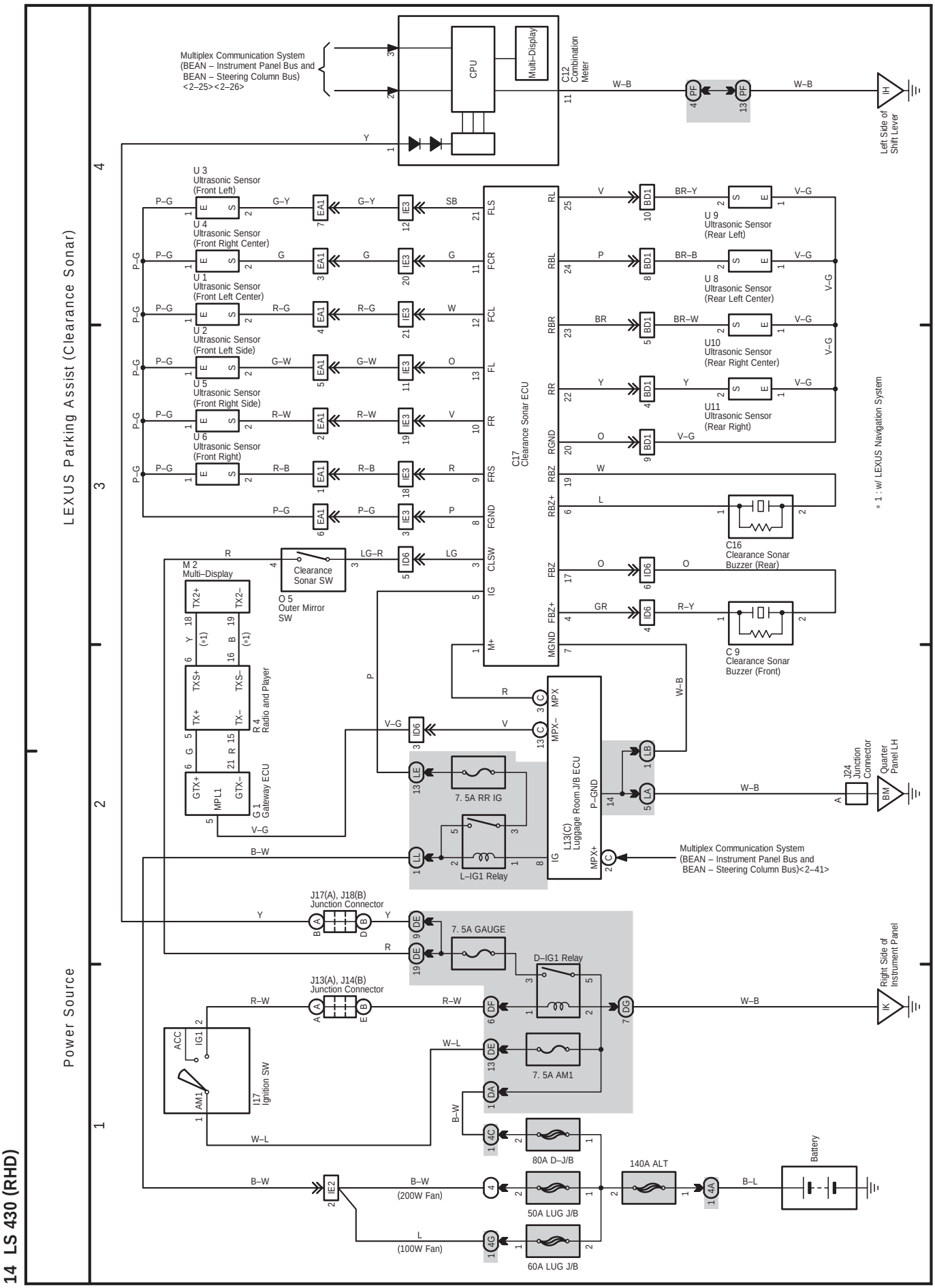
LEXUS Parking Assist (Clearance Sonar)
Power Source
Multiplex Communication System (BEAN – Instrument Panel Bus and BEAN – Steering Column Bus) <2–25><2–26>
CPU
Multi–Display
C12 Combination Meter
Left Side of Shift Lever
U 3 Ultrasonic Sensor (Front Left)
U 4 Ultrasonic Sensor (Front Right Center)
U 1 Ultrasonic Sensor (Front Left Center)
U 2 Ultrasonic Sensor (Front Left Side)
U 5 Ultrasonic Sensor (Front Right Side)
U 6 Ultrasonic Sensor (Front Right)
U 9 Ultrasonic Sensor (Rear Left)
U 8 Ultrasonic Sensor (Rear Left Center)
U10 Ultrasonic Sensor (Rear Right Center)
U11 Ultrasonic Sensor (Rear Right)
C17 Clearance Sonar ECU
C16 Clearance Sonar Buzzer (Rear)
C 9 Clearance Sonar Buzzer (Front)
* 1 : w/ LEXUS Navigation System
M 2 Multi–Display
Clearance Sonar SW
O 5 Outer Mirror SW
R 4 Radio and Player
G 1 Gateway ECU
7. 5A RR IG
L–IG1 Relay
L13(C) Luggage Room J/B ECU
Multiplex Communication System (BEAN – Instrument Panel Bus and BEAN – Steering Column Bus)<2–41>
J24 Junction Connector
Quarter Panel LH
J17(A), J18(B) Junction Connector
7. 5A GAUGE
D–IG1 Relay
J13(A), J14(B) Junction Connector
Right Side of Instrument Panel
I17 Ignition SW
7. 5A AM1
80A D–J/B
140A ALT
Battery
B–W (200W Fan)
L (100W Fan)
50A LUG J/B
60A LUG J/B