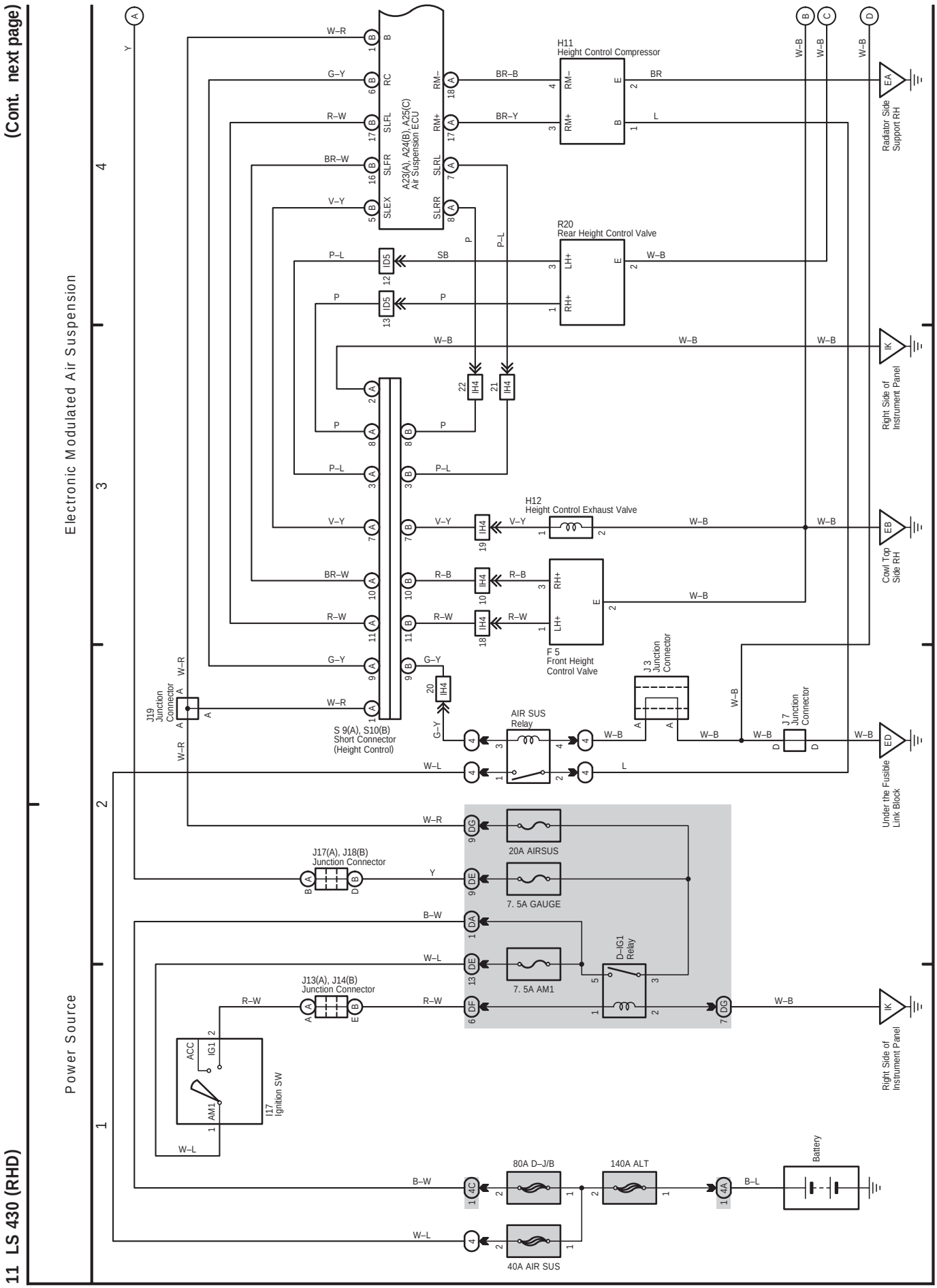
(Cont. next page)
Electronic Modulated Air Suspension
Power Source
A23(A), A24(B), A25(C)
Air Suspension ECU
H11
Height Control Compressor
R20
Rear Height Control Valve
H12
Height Control Exhaust Valve
F 5
Front Height
Control Valve
J 3
Junction
Connector
J 7
Junction
Connector
J19
Junction
Connector
S 9(A), S10(B)
Short Connector
(Height Control)
AIR SUS
Relay
J17(A), J18(B)
Junction Connector
J13(A), J14(B)
Junction Connector
20A AIRSUS
7. 5A GAUGE
7. 5A AM1
D–IG1
Relay
I17
Ignition SW
80A D–J/B
140A ALT
40A AIR SUS
Battery
Radiator Side
Support RH
Right Side of
Instrument Panel
Cowl Top
Side RH
Under the Fusible
Link Block
11 LS 430 (RHD)
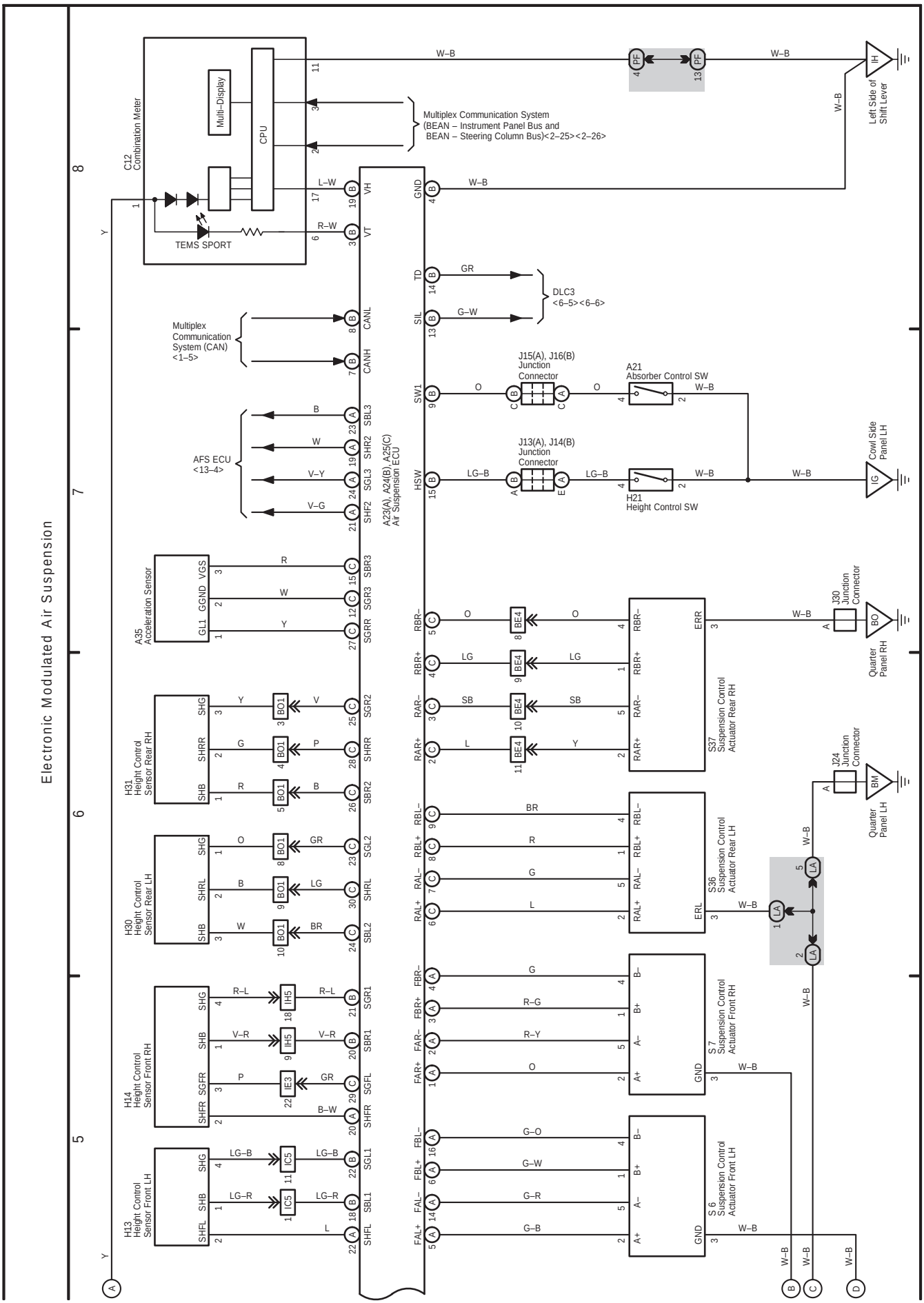
11 LS 430 (RHD) (Cont' d)