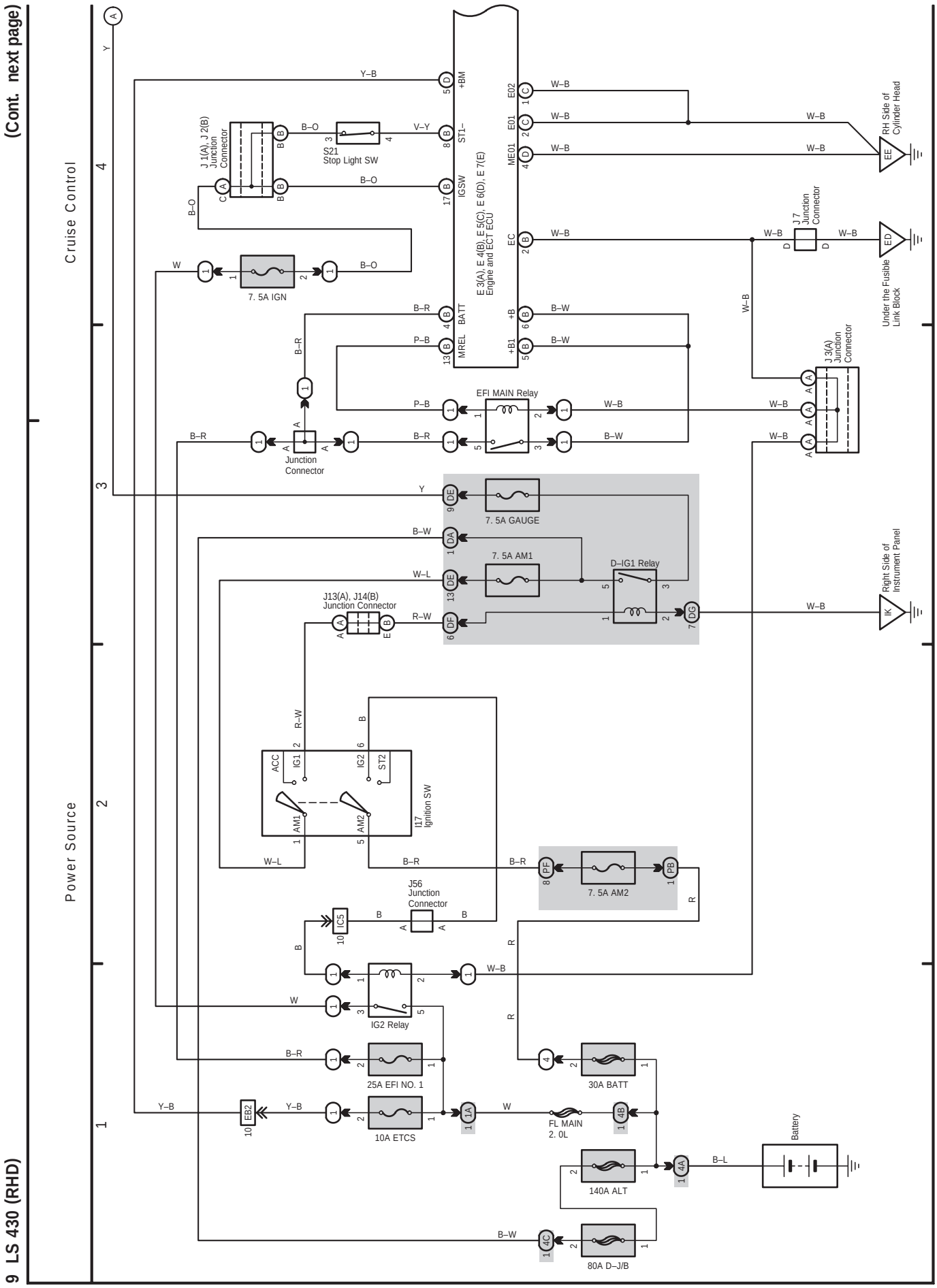
(Cont. next page)
Cruise Control
Power Source
E3(A), E4(B), E5(C), E6(D), E7(E)
Engine and ECT ECU
+BM
ST1–
IGSW
BATT
MREL
E02
E01
ME01
EC
+B
+B1
J1(A), J2(B)
Junction
Connector
S21
Stop Light SW
7. 5A IGN
EFI MAIN Relay
Junction
Connector
7. 5A GAUGE
7. 5A AM1
D–IG1 Relay
J13(A), J14(B)
Junction Connector
ACC
IG1
IG2
ST2
AM1
AM2
I17
Ignition SW
J56
Junction
Connector
IC5
IG2 Relay
7. 5A AM2
25A EFI NO. 1
30A BATT
10A ETCS
EB2
FL MAIN
2. 0L
140A ALT
80A D–J/B
Battery
RH Side of
Cylinder Head
J7
Junction
Connector
Under the Fusible
Link Block
J 3(A)
Junction
Connector
Right Side of
Instrument Panel
9 LS 430 (RHD)
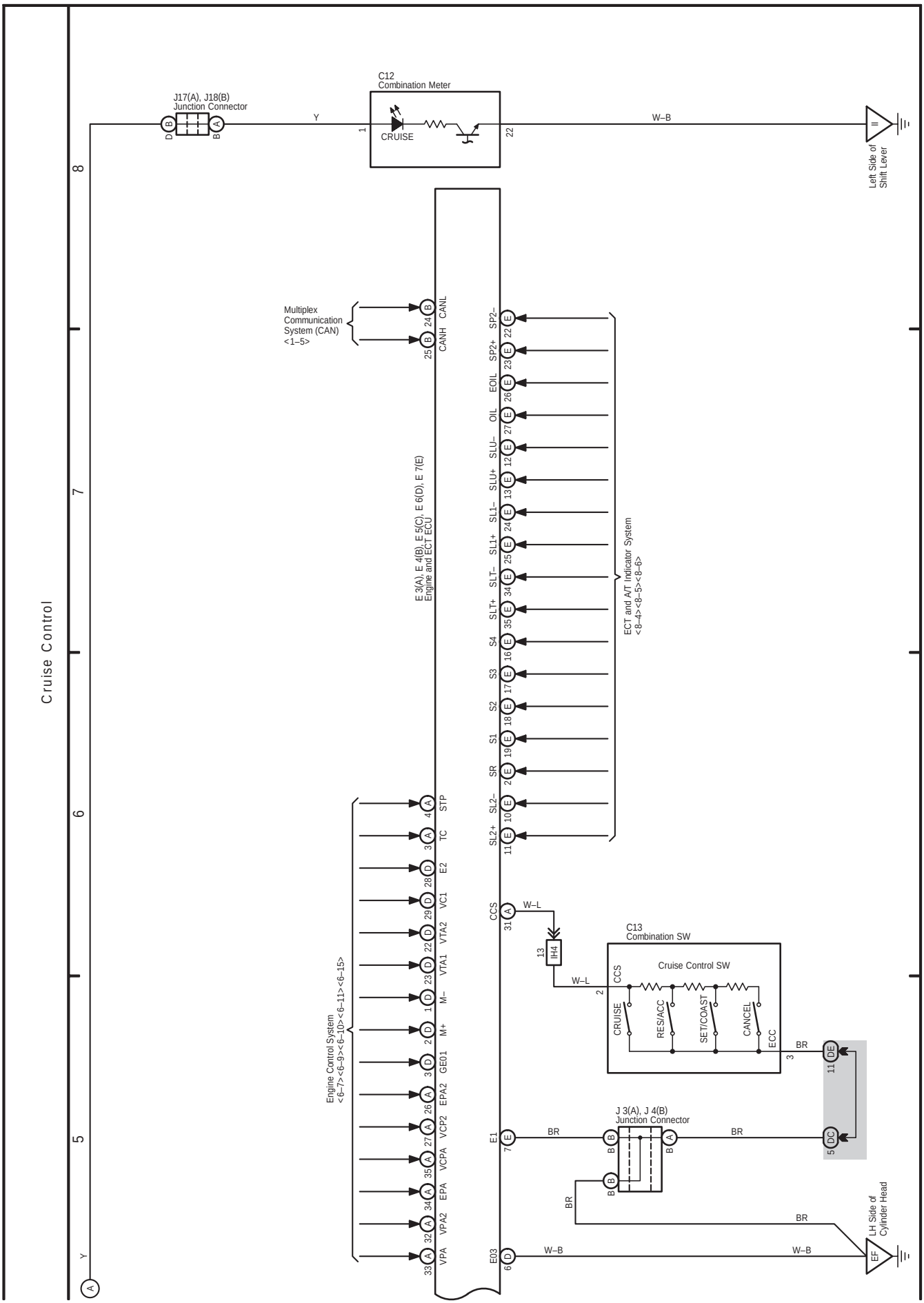
9 LS 430 (RHD) (Cont' d)