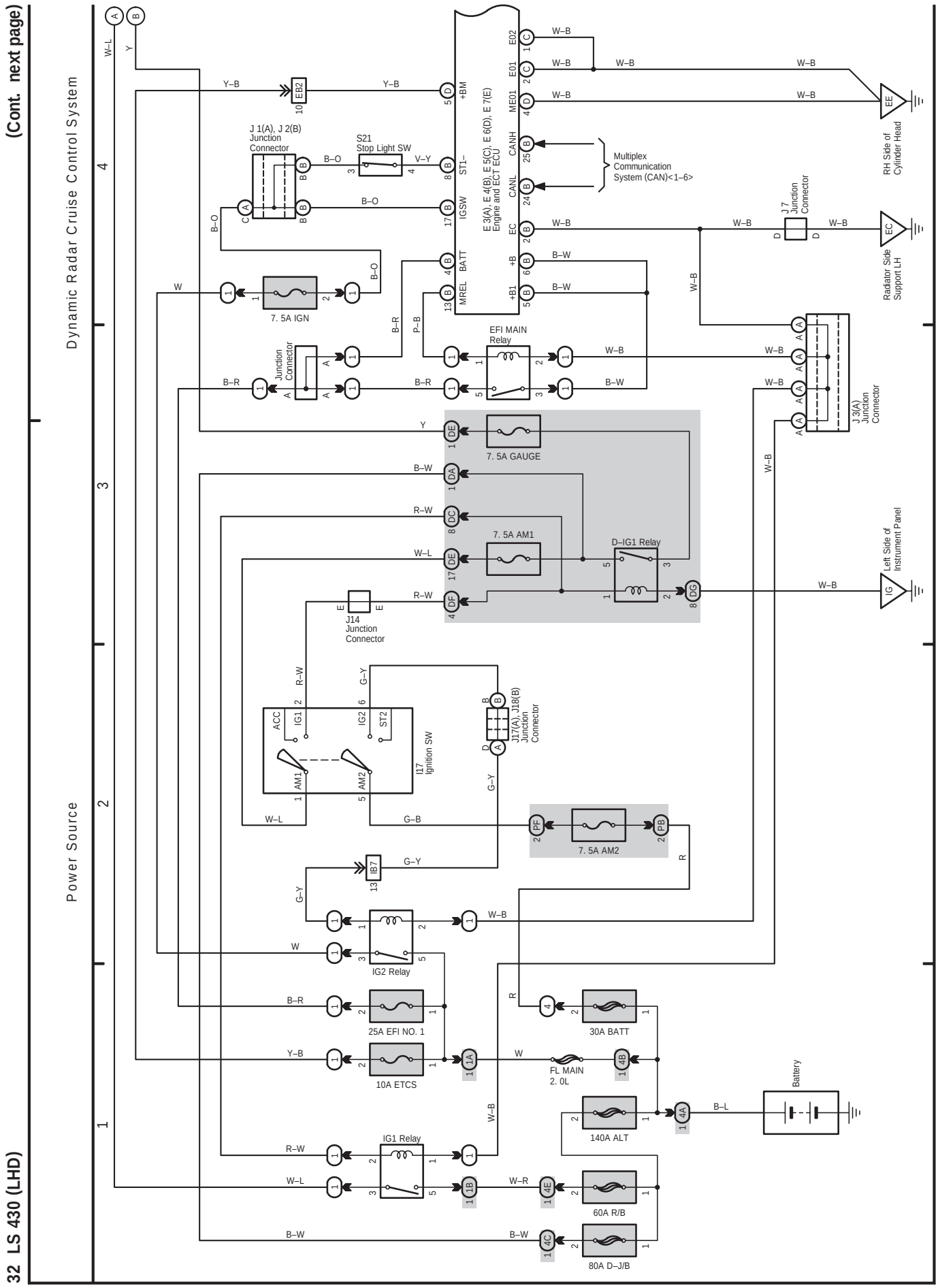
(Cont. next page)
Dynamic Radar Cruise Control System
Power Source
J 1(A), J 2(B) Junction Connector
S21 Stop Light SW
E 3(A), E 4(B), E 5(C), E 6(D), E 7(E) Engine and ECT ECU
Multiplex Communication System (CAN)<1–6>
RH Side of Cylinder Head
J 7 Junction Connector
Radiator Side Support LH
7. 5A IGN
EFI MAIN Relay
Junction Connector
J 3(A) Junction Connector
7. 5A GAUGE
7. 5A AM1
D–IG1 Relay
Left Side of Instrument Panel
J14 Junction Connector
I17 Ignition SW
J17(A), J18(B) Junction Connector
7. 5A AM2
IG2 Relay
25A EFI NO. 1
30A BATT
10A ETCS
FL MAIN 2. 0L
Battery
140A ALT
IG1 Relay
60A R/B
80A D–J/B
32 LS 430 (LHD)
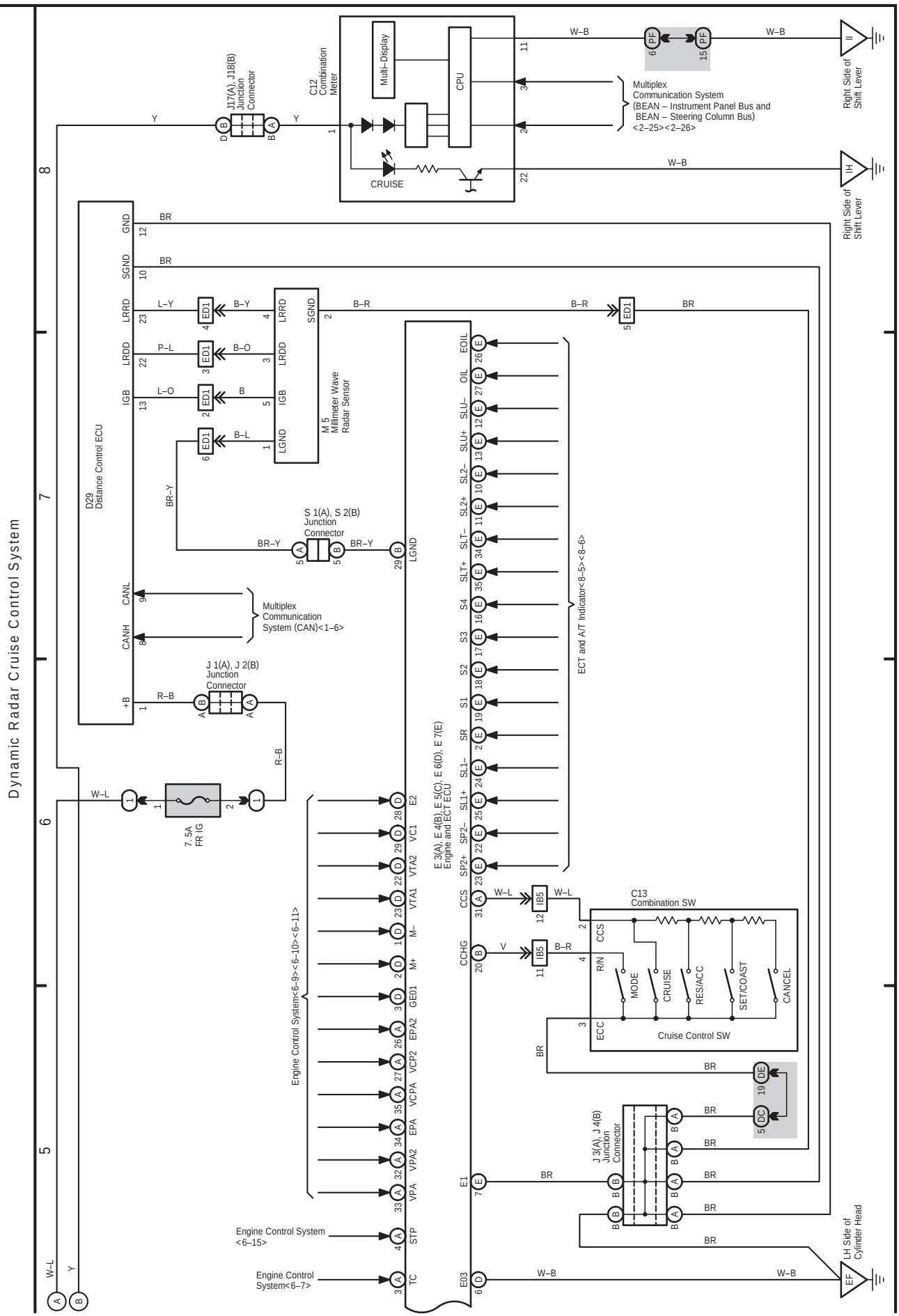
32 LS 430 (LHD)(Cont' d)