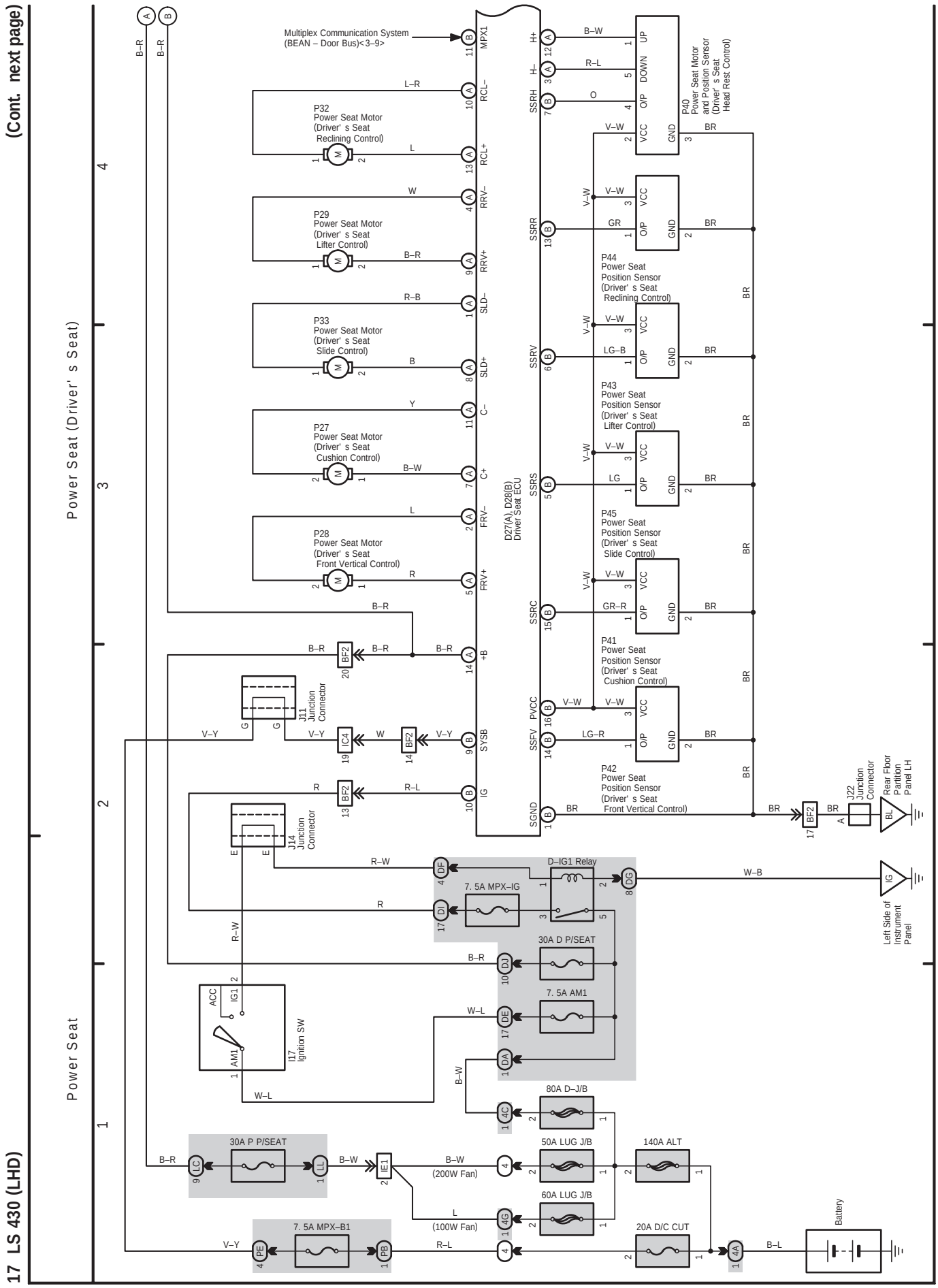
(Cont. next page)
Power Seat (Driver' s Seat)
Power Seat
Multiplex Communication System
(BEAN – Door Bus)<3–9>
MPX1
RCL–
RCL+
RRV–
RRV+
SLD–
SLD+
C–
C+
FRV–
FRV+
+B
SYSB
IG
P32
Power Seat Motor
(Driver' s Seat
Reclining Control)
P29
Power Seat Motor
(Driver' s Seat
Lifter Control)
P33
Power Seat Motor
(Driver' s Seat
Slide Control)
P27
Power Seat Motor
(Driver' s Seat
Cushion Control)
P28
Power Seat Motor
(Driver' s Seat
Front Vertical Control)
D27(A), D28(B)
Driver Seat ECU
H+
H–
SSRH
SSRR
SSRV
SSRS
SSRC
PVCC
SSFV
SGND
P40
Power Seat Motor
and Position Sensor
(Driver' s Seat
Head Rest Control)
P44
Power Seat
Position Sensor
(Driver' s Seat
Reclining Control)
P43
Power Seat
Position Sensor
(Driver' s Seat
Lifter Control)
P45
Power Seat
Position Sensor
(Driver' s Seat
Slide Control)
P41
Power Seat
Position Sensor
(Driver' s Seat
Cushion Control)
P42
Power Seat
Position Sensor
(Driver' s Seat
Front Vertical Control)
UP
DOWN
O/P
VCC
GND
J11
Junction
Connector
J14
Junction
Connector
J22
Junction
Connector
Rear Floor
Partition
Panel LH
Left Side of
Instrument
Panel
D–IG1 Relay
7. 5A MPX–IG
30A D P/SEAT
7. 5A AM1
80A D–J/B
50A LUG J/B
60A LUG J/B
140A ALT
20A D/C CUT
30A P P/SEAT
7. 5A MPX–B1
(200W Fan)
(100W Fan)
ACC
IG1
AM1
I17
Ignition SW
Battery
17 LS 430 (LHD)

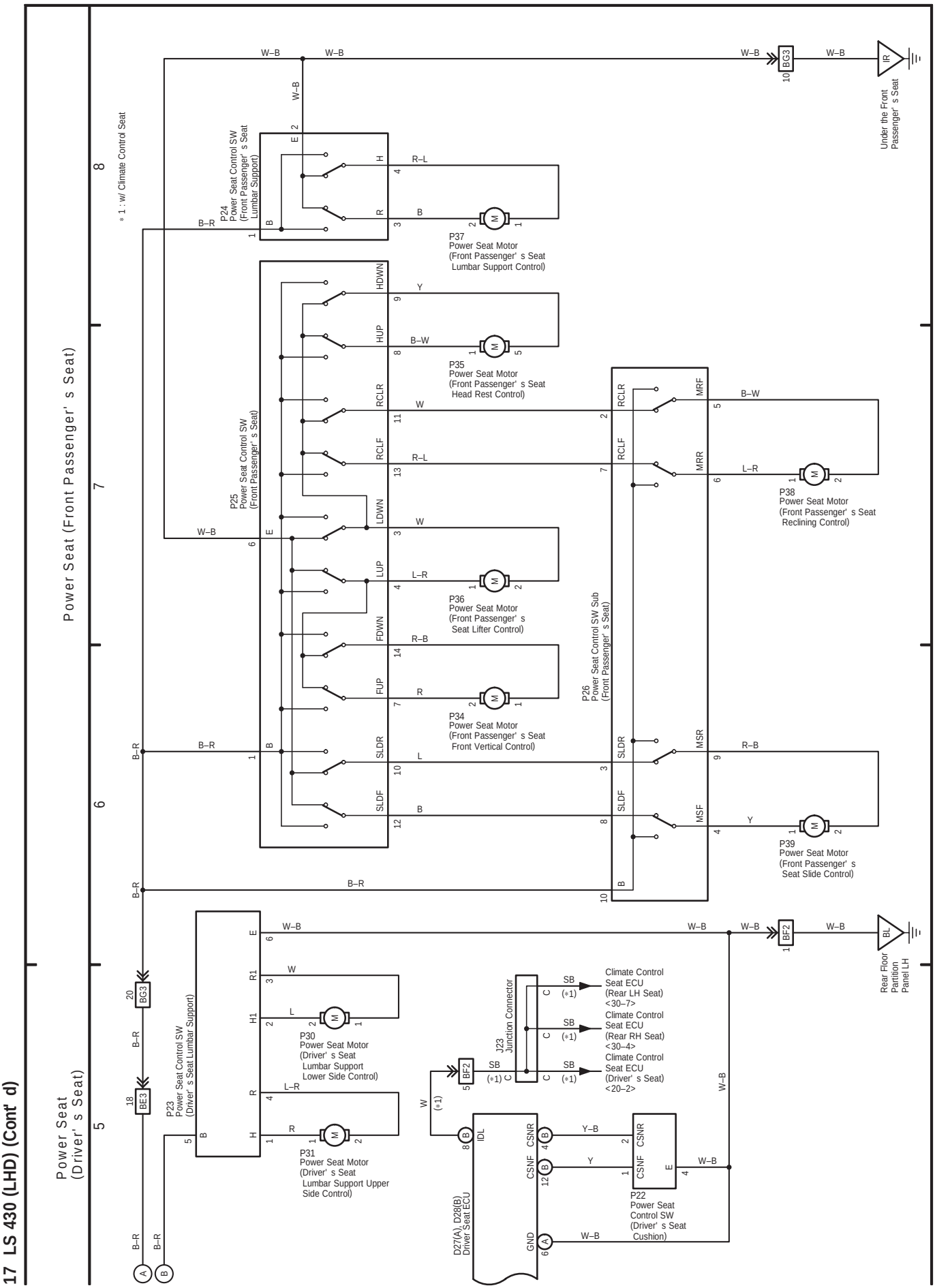
17 LS 430 (LHD) (Cont' d)
Power Seat (Front Passenger' s Seat)
Power Seat (Driver' s Seat)
* 1 : w/ Climate Control Seat
P24 Power Seat Control SW (Front Passenger' s Seat Lumbar Support)
P25 Power Seat Control SW (Front Passenger' s Seat)
P26 Power Seat Control SW Sub (Front Passenger' s Seat)
P37 Power Seat Motor (Front Passenger' s Seat Lumbar Support Control)
P35 Power Seat Motor (Front Passenger' s Seat Head Rest Control)
P38 Power Seat Motor (Front Passenger' s Seat Reclining Control)
P36 Power Seat Motor (Front Passenger' s Seat Lifter Control)
P34 Power Seat Motor (Front Passenger' s Seat Front Vertical Control)
P39 Power Seat Motor (Front Passenger' s Seat Slide Control)
P23 Power Seat Control SW (Driver' s Seat Lumbar Support)
P30 Power Seat Motor (Driver' s Seat Lumbar Support Lower Side Control)
P31 Power Seat Motor (Driver' s Seat Lumbar Support Upper Side Control)
J23 Junction Connector
Climate Control Seat ECU (Rear LH Seat) <30–7>
Climate Control Seat ECU (Rear RH Seat) <30–4>
Climate Control Seat ECU (Driver' s Seat) <20–2>
D27(A), D28(B) Driver Seat ECU
P22 Power Seat Control SW (Driver' s Seat Cushion)
Under the Front Passenger' s Seat
Rear Floor Partition Panel LH
BG3
BF2
BE3
IR
BL