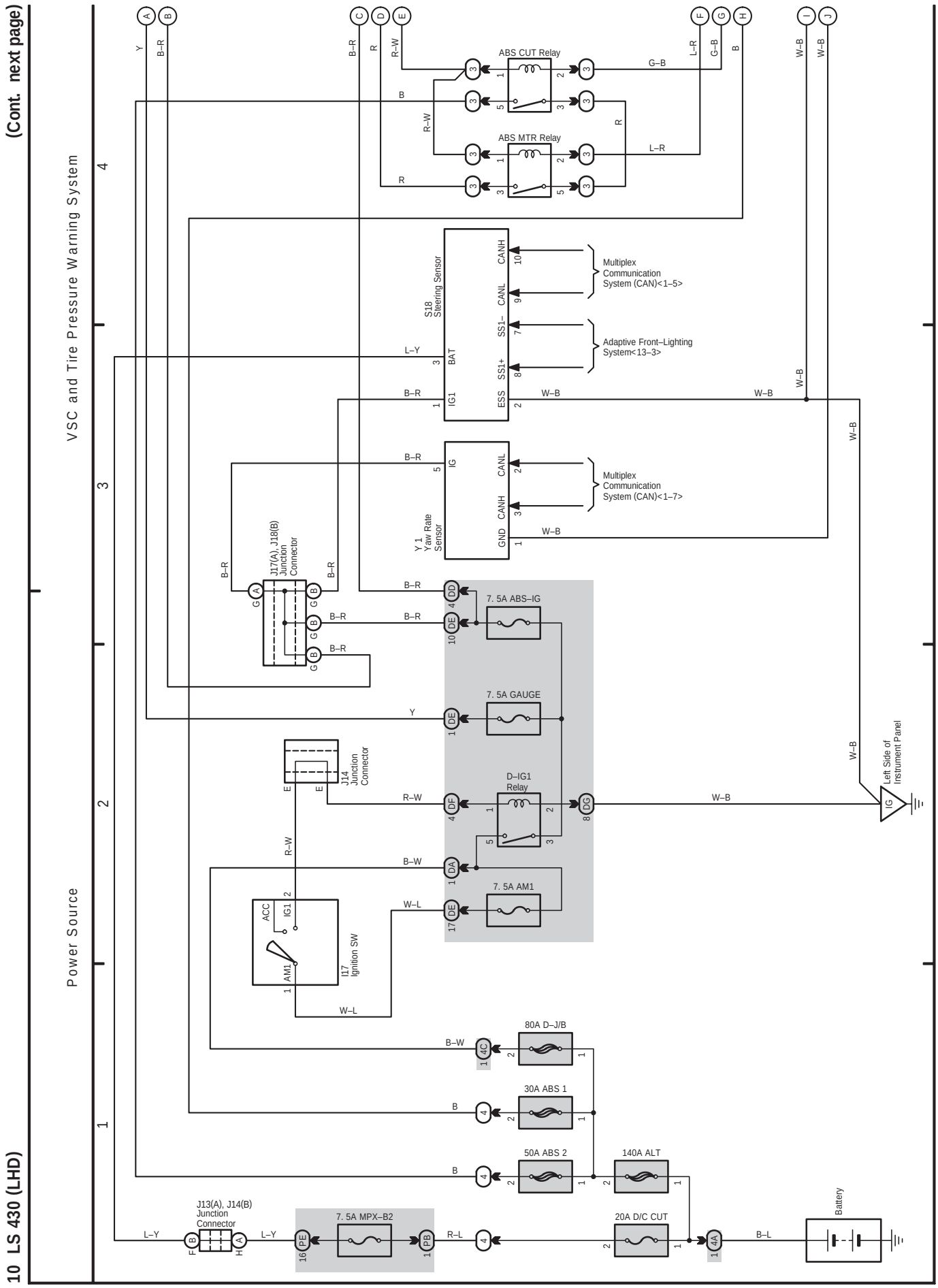
(Cont. next page)
10 LS 430 (LHD)
VSC and Tire Pressure Warning System
Power Source
ABS CUT Relay
ABS MTR Relay
S18 Steering Sensor
Multiplex Communication System (CAN)<1–5>
Adaptive Front–Lighting System<13–3>
Y 1 Yaw Rate Sensor
Multiplex Communication System (CAN)<1–7>
J17(A), J18(B) Junction Connector
7. 5A ABS–IG
7. 5A GAUGE
J14 Junction Connector
D–IG1 Relay
7. 5A AM1
I17 Ignition SW
Left Side of Instrument Panel
80A D–J/B
30A ABS 1
50A ABS 2
140A ALT
J13(A), J14(B) Junction Connector
7. 5A MPX–B2
20A D/C CUT
Battery

10 LS 430 (LHD) (Cont' d)

(Cont. next page)

VSC and Tire Pressure Warning System

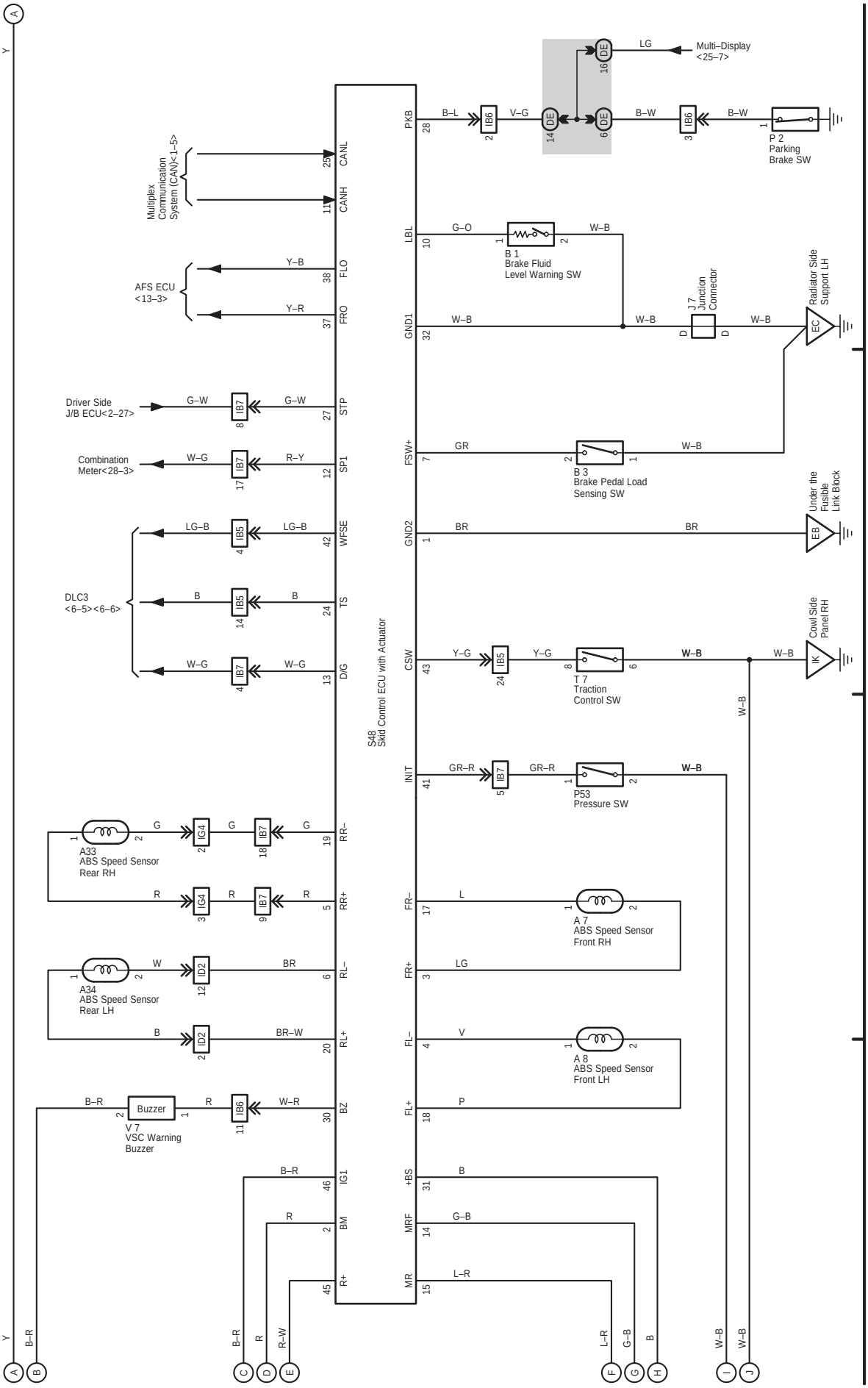

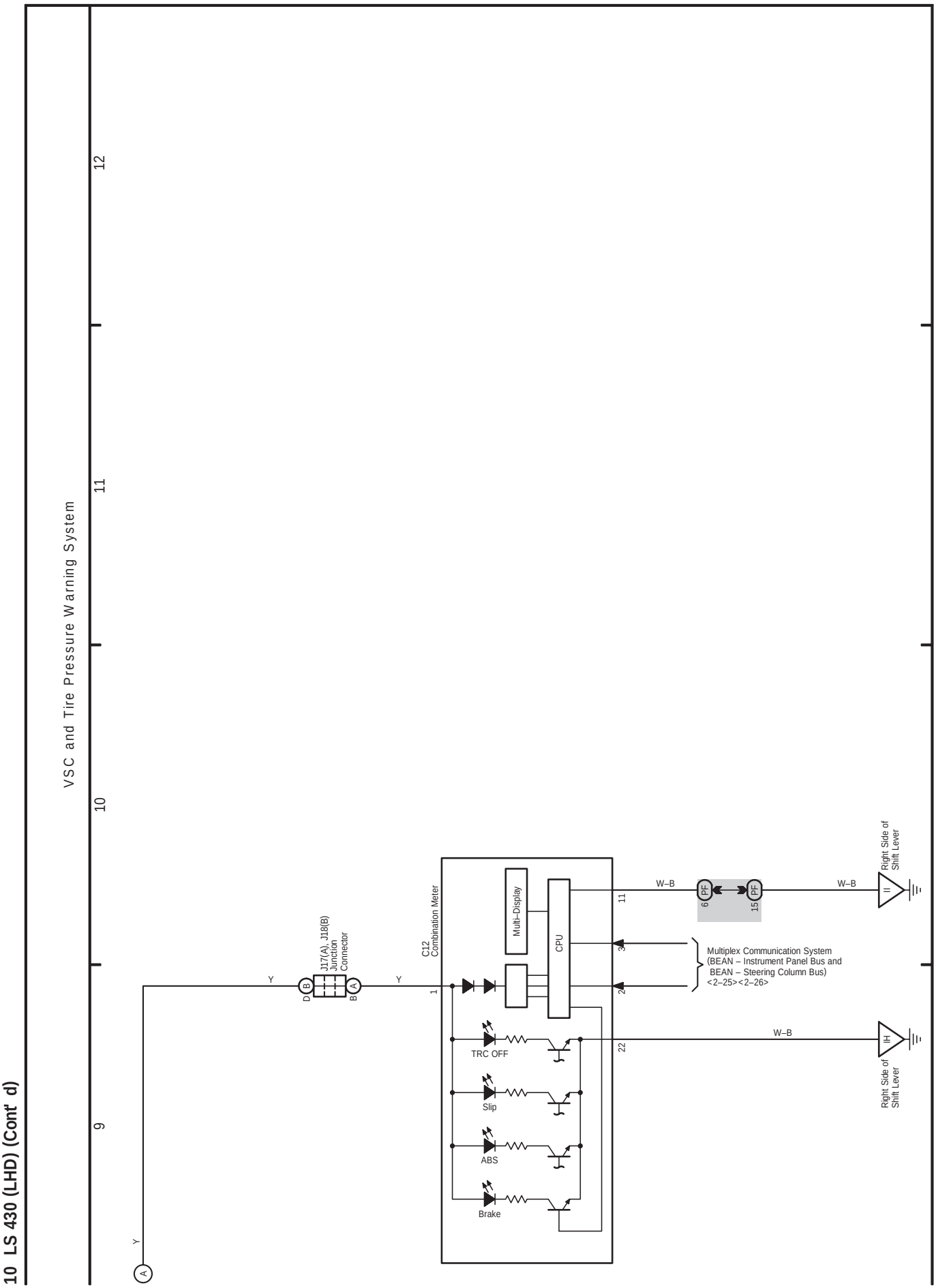
10 LS 430 (LHD) (Cont' d)
VSC and Tire Pressure Warning System
9
10
11
12
Y
A
Y
D B
J17(A), J18(B)
Junction
Connector
B A
Y
C12
Combination Meter
1
Multi–Display
CPU
TRC OFF
Slip
ABS
Brake
11
3
2
22
W–B
6 PF
15 PF
W–B
Multiplex Communication System
(BEAN – Instrument Panel Bus and
BEAN – Steering Column Bus)
<2–25><2–26>
W–B
Right Side of
Shift Lever
Right Side of
Shift Lever