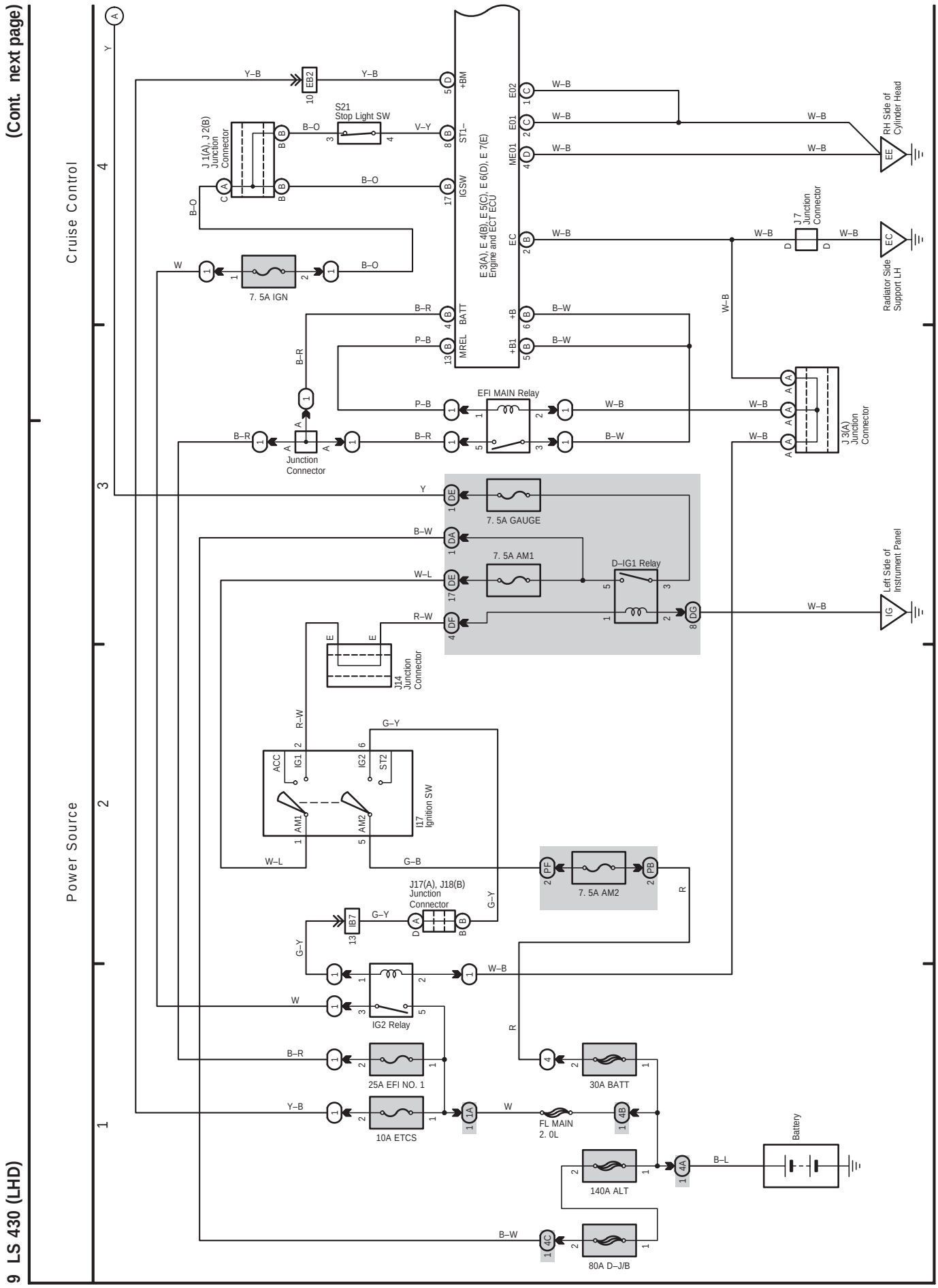
(Cont. next page)
Cruise Control
Power Source
S21
Stop Light SW
J 1(A), J 2(B)
Junction
Connector
E 3(A), E 4(B), E 5(C), E 6(D), E 7(E)
Engine and ECT ECU
+BM
ST1–
IGSW
BATT
MREL
E02
E01
ME01
EC
+B
+B1
RH Side of
Cylinder Head
J 7
Junction
Connector
Radiator Side
Support LH
7. 5A IGN
EFI MAIN Relay
Junction
Connector
J 3(A)
Junction
Connector
7. 5A GAUGE
7. 5A AM1
D–IG1 Relay
Left Side of
Instrument Panel
J14
Junction
Connector
ACC
IG1
IG2
ST2
AM1
AM2
I17
Ignition SW
7. 5A AM2
J17(A), J18(B)
Junction
Connector
IG2 Relay
25A EFI NO. 1
30A BATT
10A ETCS
FL MAIN
2. 0L
Battery
140A ALT
80A D–J/B
9 LS 430 (LHD)

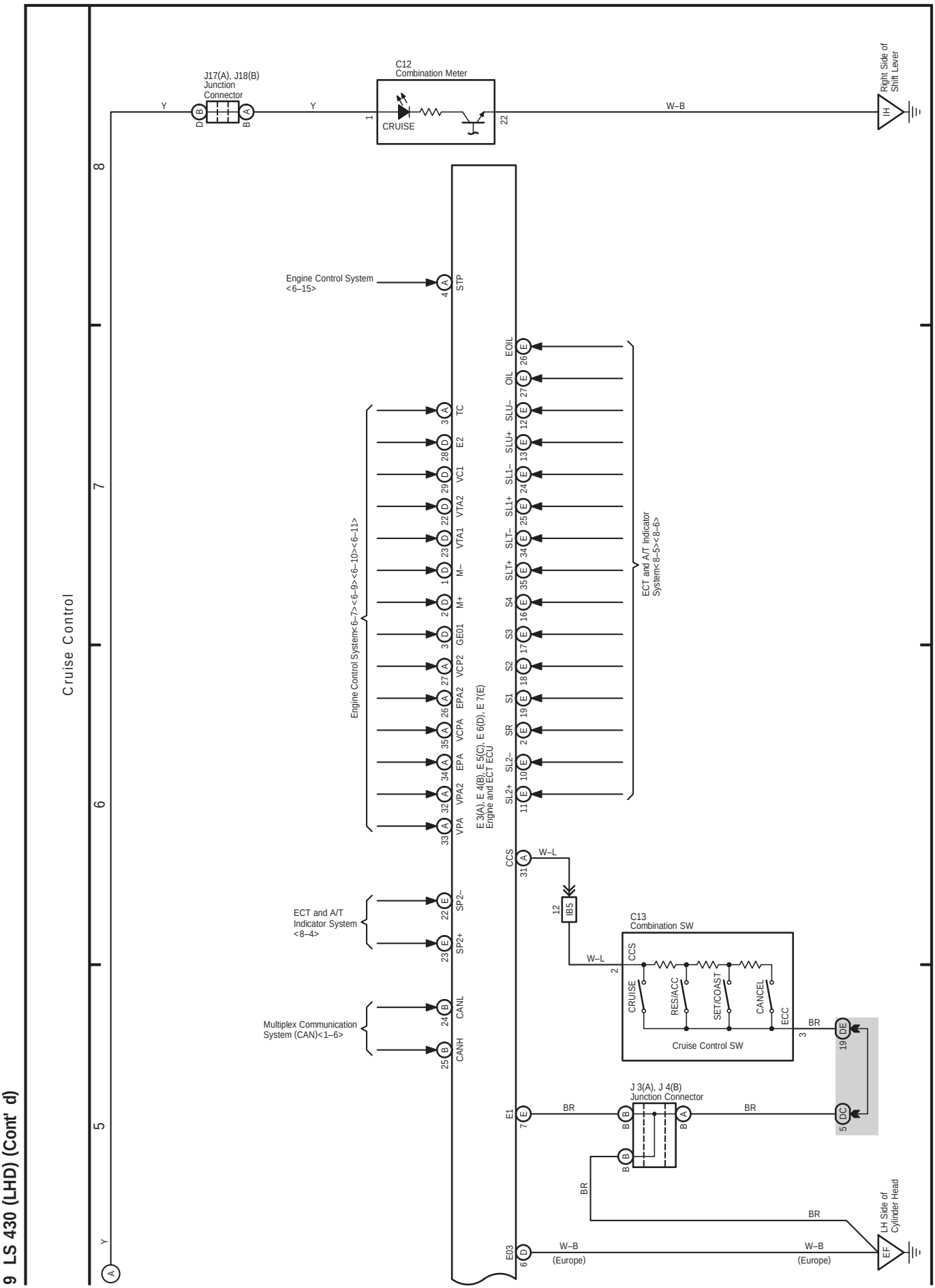

9 LS 430 (LHD) (Cont' d)