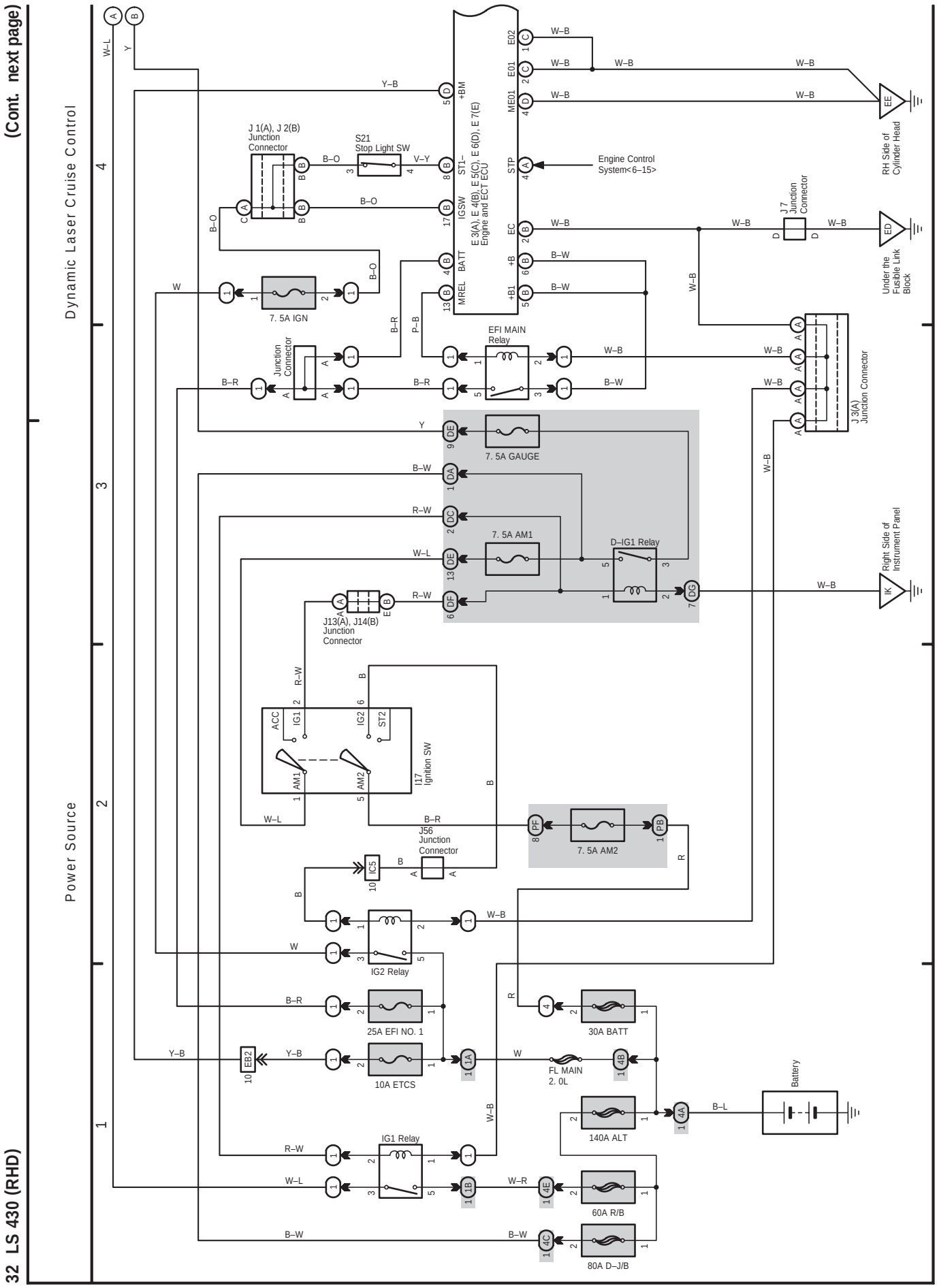
(Cont. next page)
Dynamic Laser Cruise Control
Power Source
J 1(A), J 2(B) Junction Connector
S21 Stop Light SW
E 3(A), E 4(B), E 5(C), E 6(D), E 7(E) Engine and ECT ECU
Engine Control System<6–15>
RH Side of Cylinder Head
J 7 Junction Connector
Under the Fusible Link Block
7. 5A IGN
Junction Connector
EFI MAIN Relay
J 3(A) Junction Connector
7. 5A GAUGE
7. 5A AM1
D–IG1 Relay
Right Side of Instrument Panel
J13(A), J14(B) Junction Connector
I 17 Ignition SW
J56 Junction Connector
7. 5A AM2
IG2 Relay
25A EFI NO. 1
30A BATT
10A ETCS
FL MAIN 2. 0L
Battery
140A ALT
IG1 Relay
60A R/B
80A D–J/B
32 LS 430 (RHD)
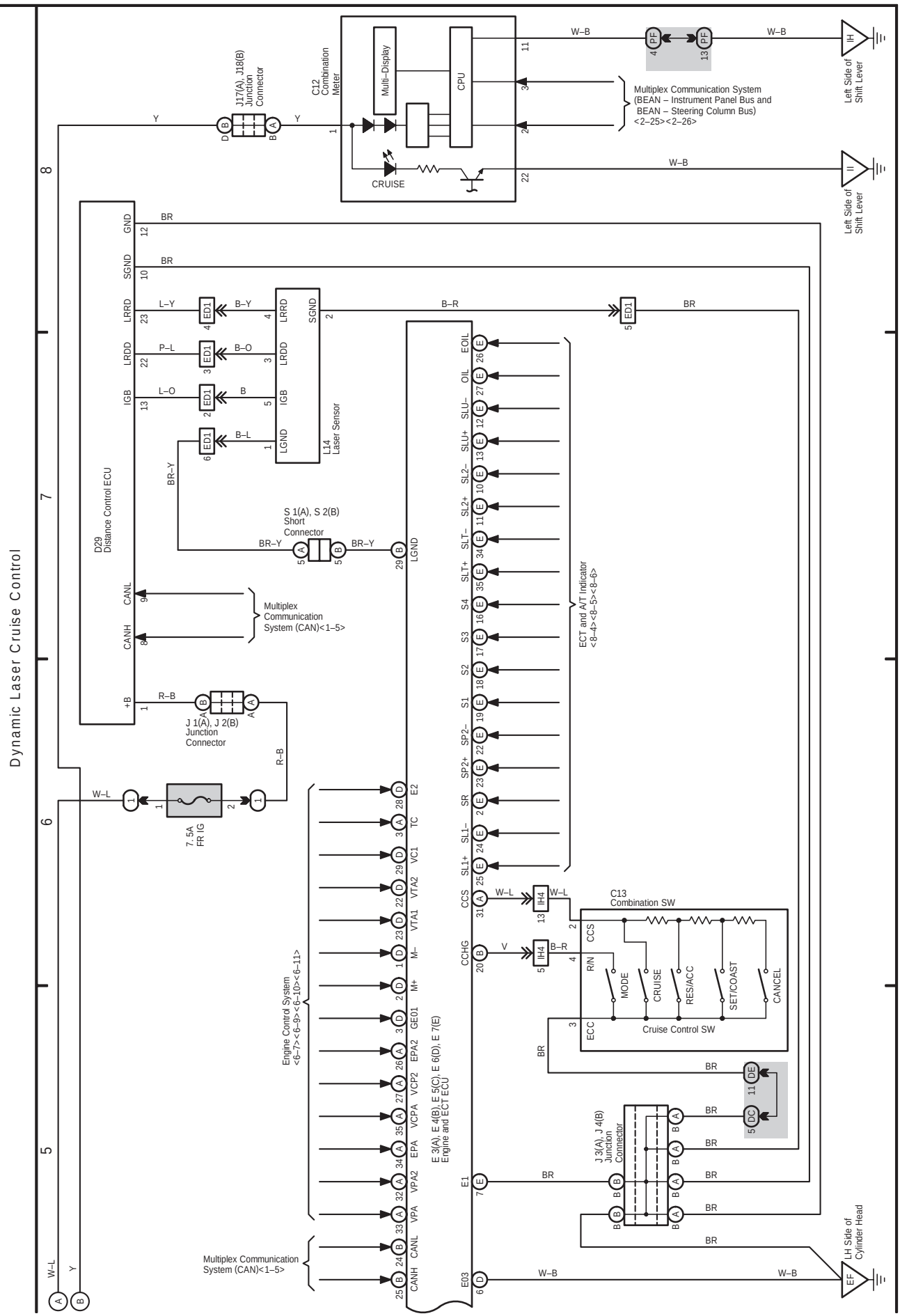
32 LS 430 (RHD) (Cont' d)