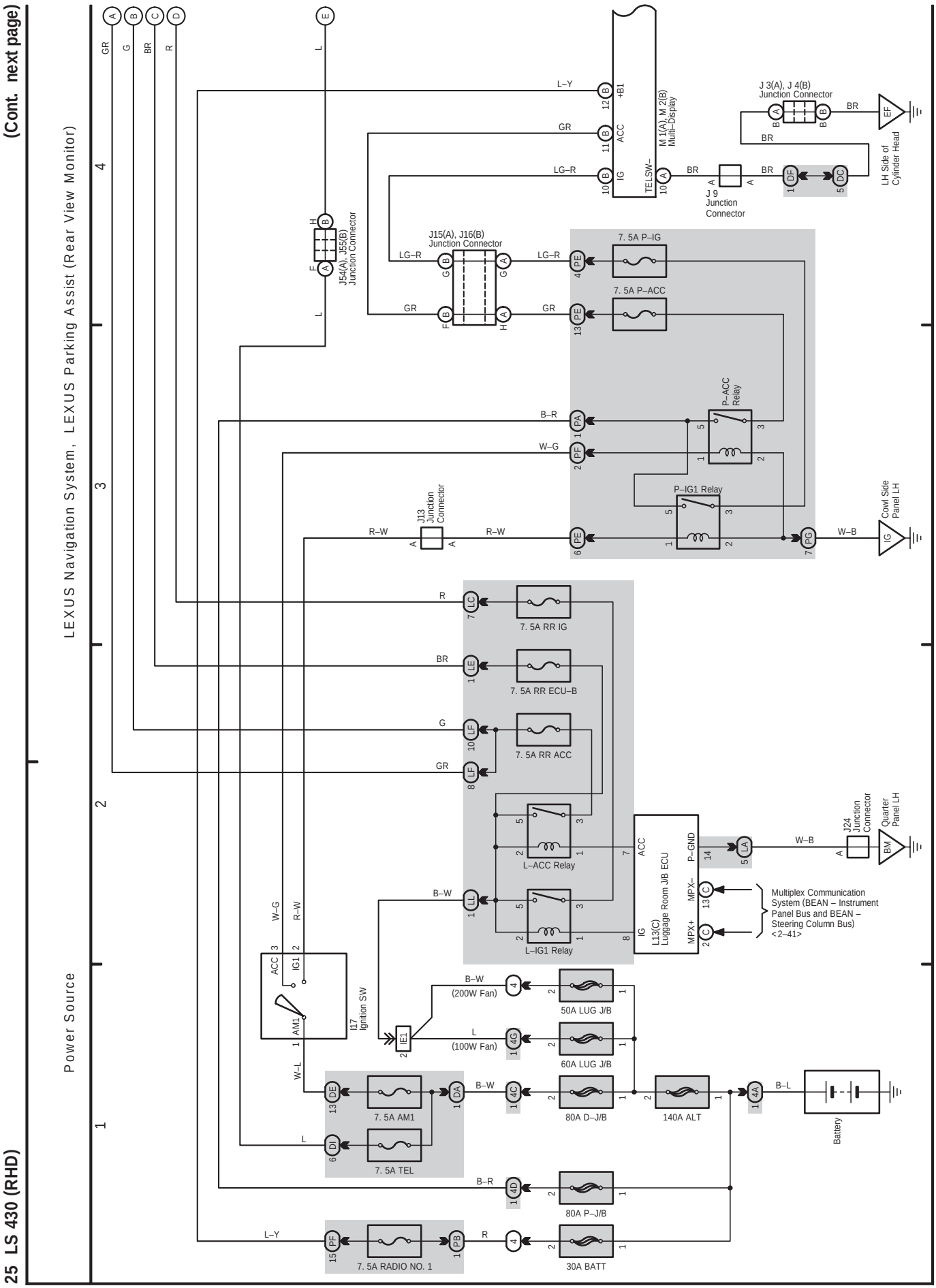
(Cont. next page)
25 LS 430 (RHD)
LEXUS Navigation System, LEXUS Parking Assist (Rear View Monitor)
Power Source
M 1(A), M 2(B) Multi–Display
TELSW–
+B1
ACC
IG
J 3(A), J 4(B) Junction Connector
J 9 Junction Connector
LH Side of Cylinder Head
J15(A), J16(B) Junction Connector
J54(A), J55(B) Junction Connector
7. 5A P–IG
7. 5A P–ACC
P–ACC Relay
P–IG1 Relay
J13 Junction Connector
Cowl Side Panel LH
7. 5A RR IG
7. 5A RR ECU–B
7. 5A RR ACC
L–ACC Relay
L–IG1 Relay
L13(C) Luggage Room J/B ECU
P–GND
MPX–
MPX+
Multiplex Communication System (BEAN – Instrument Panel Bus and BEAN – Steering Column Bus) <2–41>
J24 Junction Connector
Quarter Panel LH
I17 Ignition SW
ACC
IG1
AM1
50A LUG J/B
60A LUG J/B
80A D–J/B
140A ALT
Battery
7. 5A AM1
7. 5A TEL
80A P–J/B
7. 5A RADIO NO. 1
30A BATT

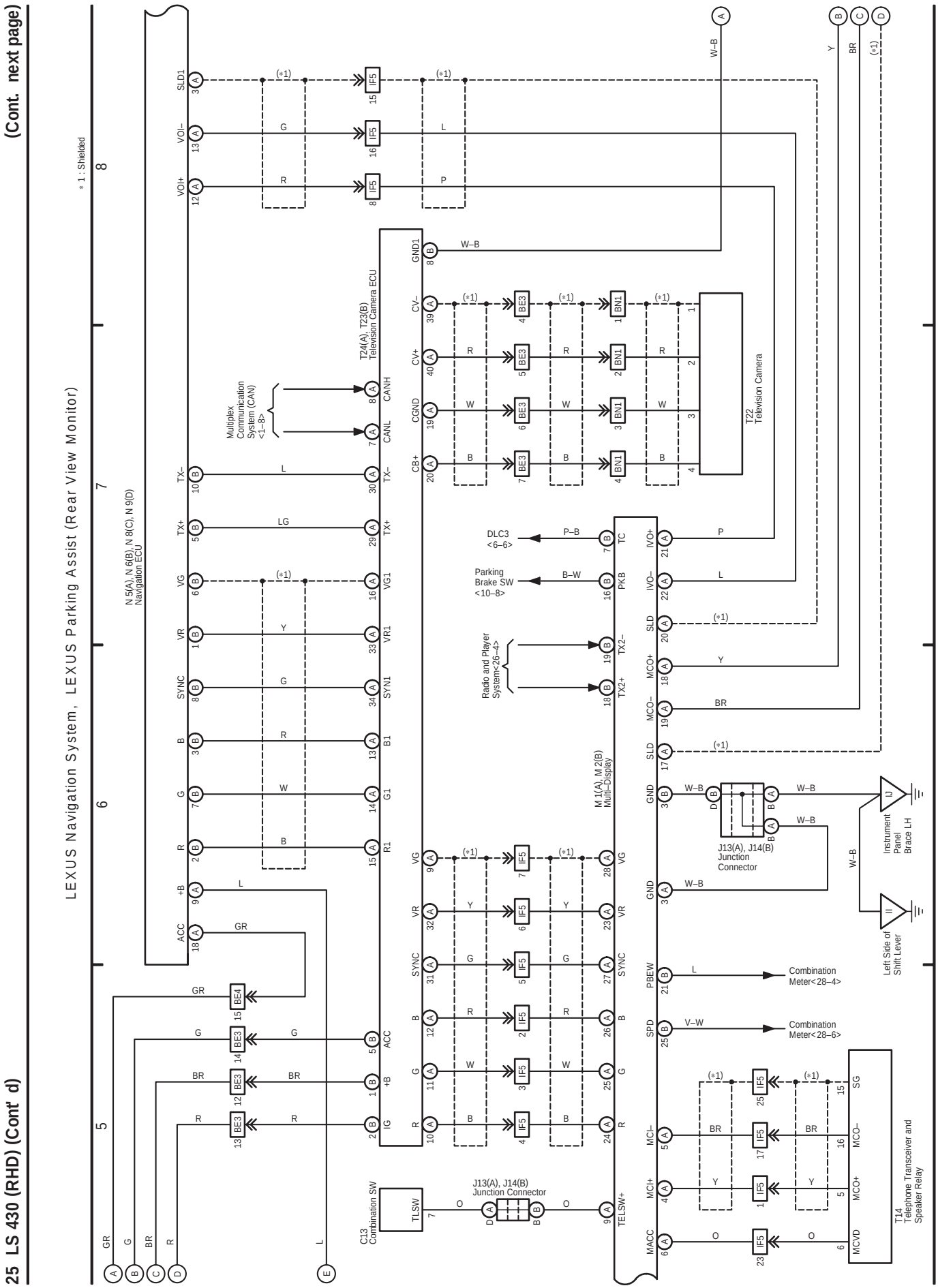
25 LS 430 (RHD) (Cont' d)
(Cont. next page)
LEXUS Navigation System, LEXUS Parking Assist (Rear View Monitor)
* 1 : Shielded
N 5(A), N 6(B), N 8(C), N 9(D)
Navigation ECU
T24(A), T23(B)
Television Camera ECU
Multiplex Communication System (CAN) <1–8>
T22
Television Camera
DLC3 <6–6>
Parking Brake SW <10–8>
Radio and Player System<26–4>
M 1(A), M 2(B)
Multi–Display
J13(A), J14(B)
Junction Connector
Combination Meter<28–4>
Combination Meter<28–6>
Instrument Panel Brace LH
Left Side of Shift Lever
C13
Combination SW
T14
Telephone Transceiver and Speaker Relay

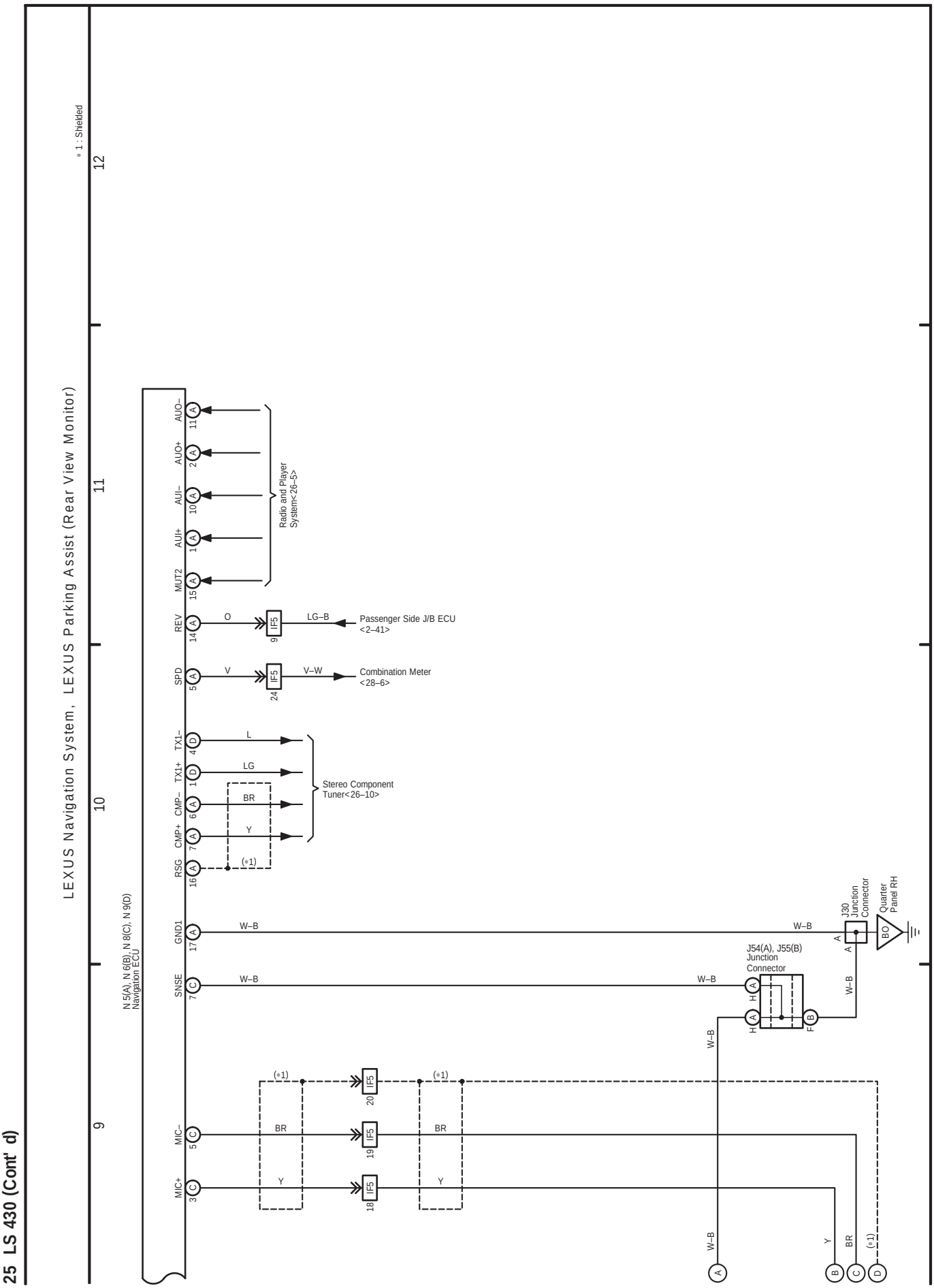
25 LS 430 (Cont' d)
LEXUS Navigation System, LEXUS Parking Assist (Rear View Monitor)
* 1 : Shielded
N 5(A), N 6(B), N 8(C), N 9(D)
Navigation ECU
AUO–
AUO+
AUI–
AUI+
MUT2
REV
SPD
TX1–
TX1+
CMP–
CMP+
RSG
GND1
SNSE
MIC–
MIC+
Radio and Player System<26–5>
Passenger Side J/B ECU <2–41>
Combination Meter <28–6>
Stereo Component Tuner<26–10>
J54(A), J55(B) Junction Connector
J30 Junction Connector
Quarter Panel RH
W–B
BR
Y
LG
L
O
V
V–W
LG–B
(*1)