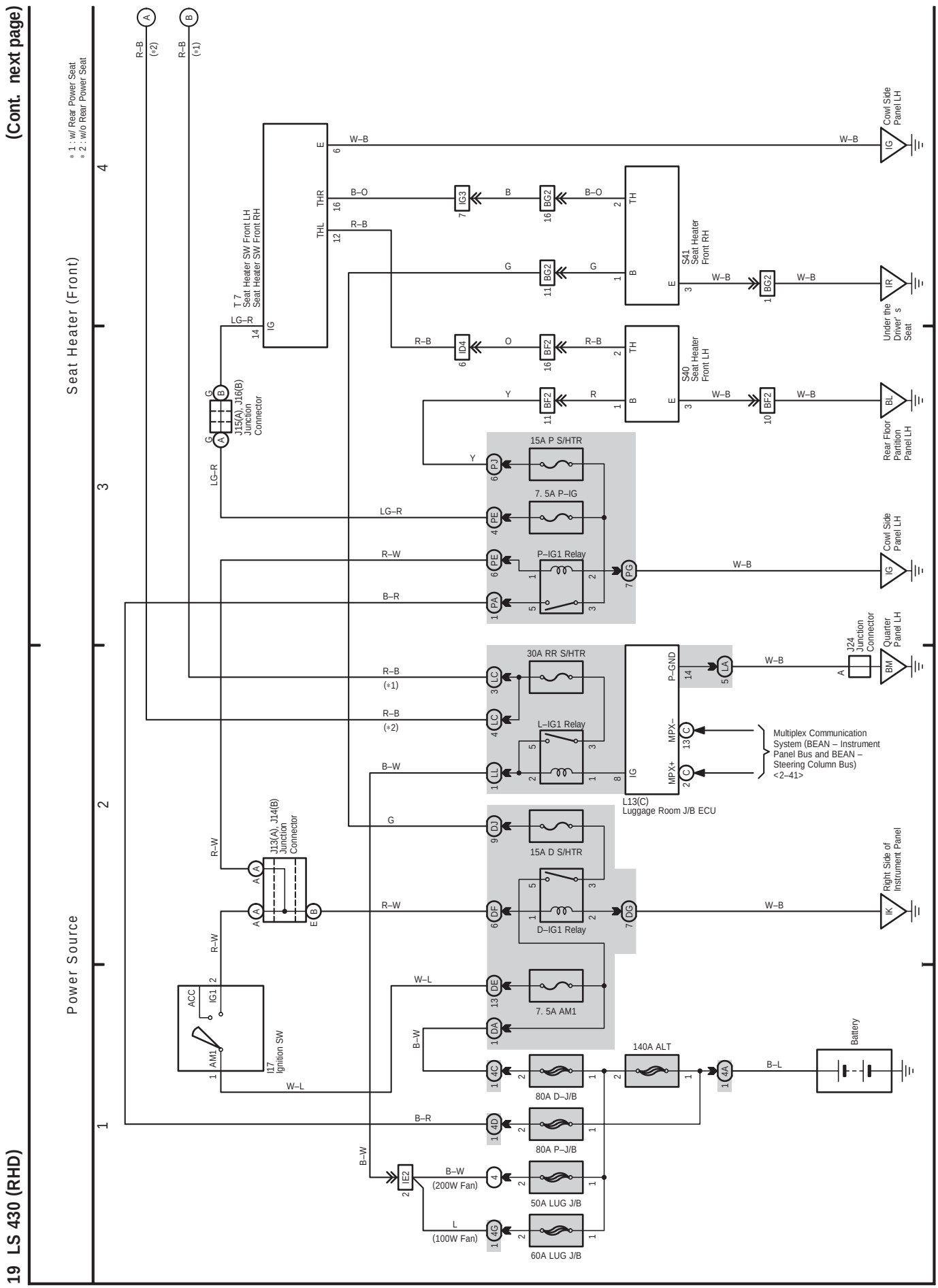
(Cont. next page)
19 LS 430 (RHD)
Power Source
Seat Heater (Front)
* 1 : w/ Rear Power Seat
* 2 : w/o Rear Power Seat
T 7
Seat Heater SW Front LH
Seat Heater SW Front RH
J15(A), J16(B)
Junction
Connector
J13(A), J14(B)
Junction
Connector
I17
Ignition SW
ACC
IG1
AM1
S41
Seat Heater
Front RH
S40
Seat Heater
Front LH
15A P S/HTR
7. 5A P–IG
P–IG1 Relay
30A RR S/HTR
L–IG1 Relay
15A D S/HTR
D–IG1 Relay
7. 5A AM1
140A ALT
80A D–J/B
80A P–J/B
50A LUG J/B
60A LUG J/B
(200W Fan)
(100W Fan)
L13(C)
Luggage Room J/B ECU
P–GND
MPX–
MPX+
Multiplex Communication
System (BEAN – Instrument
Panel Bus and BEAN –
Steering Column Bus)
<2–41>
J24
Junction
Connector
Cowl Side
Panel LH
Under the
Driver's
Seat
Rear Floor
Partition
Panel LH
Quarter
Panel LH
Right Side of
Instrument Panel
Battery

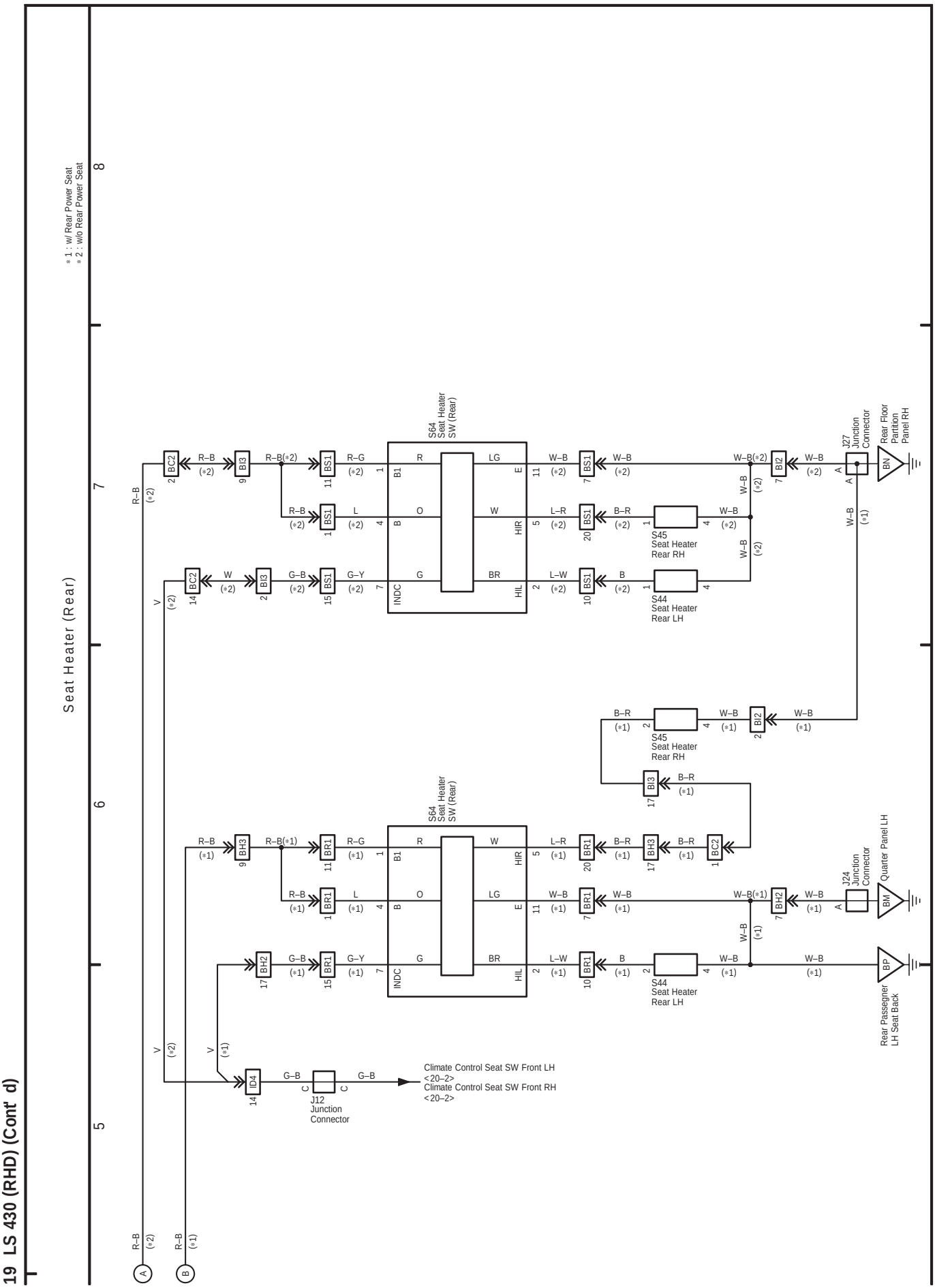
19 LS 430 (RHD) (Cont' d)
Seat Heater (Rear)
* 1 : w/ Rear Power Seat
* 2 : w/o Rear Power Seat
S64 Seat Heater SW (Rear)
S45 Seat Heater Rear RH
S44 Seat Heater Rear LH
J27 Junction Connector
Rear Floor Partition Panel RH
J24 Junction Connector
Quarter Panel LH
Rear Passegner LH Seat Back
J12 Junction Connector
Climate Control Seat SW Front LH <20–2>
Climate Control Seat SW Front RH <20–2>