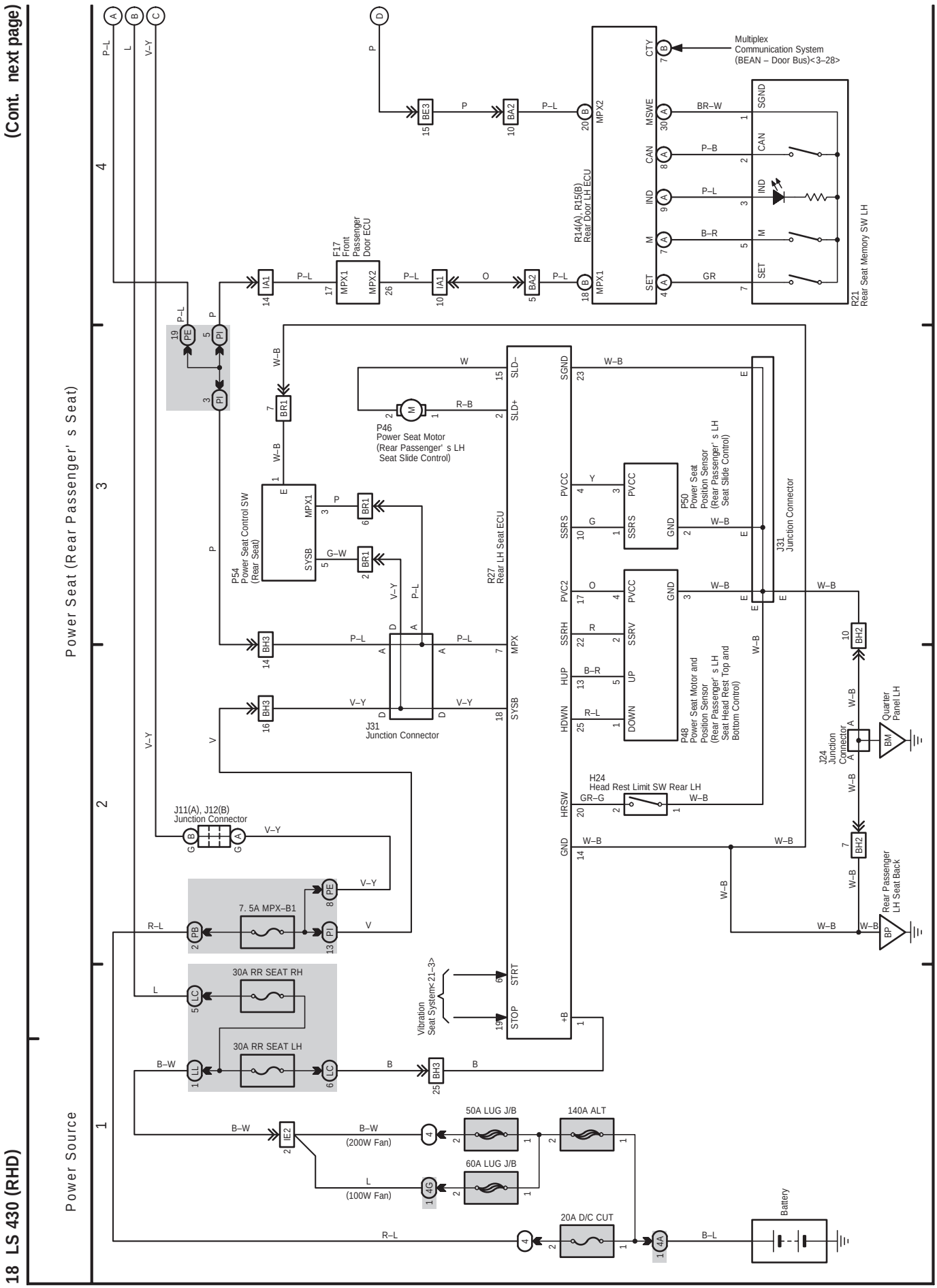
(Cont. next page)
Power Seat (Rear Passenger' s Seat)
Power Source
Multiplex Communication System (BEAN – Door Bus)<3–28>
R14(A), R15(B) Rear Door LH ECU
F17 Front Passenger Door ECU
R21 Rear Seat Memory SW LH
P46 Power Seat Motor (Rear Passenger' s LH Seat Slide Control)
P54 Power Seat Control SW (Rear Seat)
R27 Rear LH Seat ECU
P50 Power Seat Position Sensor (Rear Passenger' s LH Seat Slide Control)
J31 Junction Connector
P48 Power Seat Motor and Position Sensor (Rear Passenger' s LH Seat Head Rest Top and Bottom Control)
H24 Head Rest Limit SW Rear LH
J11(A), J12(B) Junction Connector
J24 Junction Connector
Quarter Panel LH
Rear Passenger LH Seat Back
7. 5A MPX–B1
30A RR SEAT RH
30A RR SEAT LH
Vibration Seat System<21–3>
50A LUG J/B
60A LUG J/B
140A ALT
20A D/C CUT
Battery
(200W Fan)
(100W Fan)

18 LS 430 (RHD) (Cont' d)

(Cont. next page)

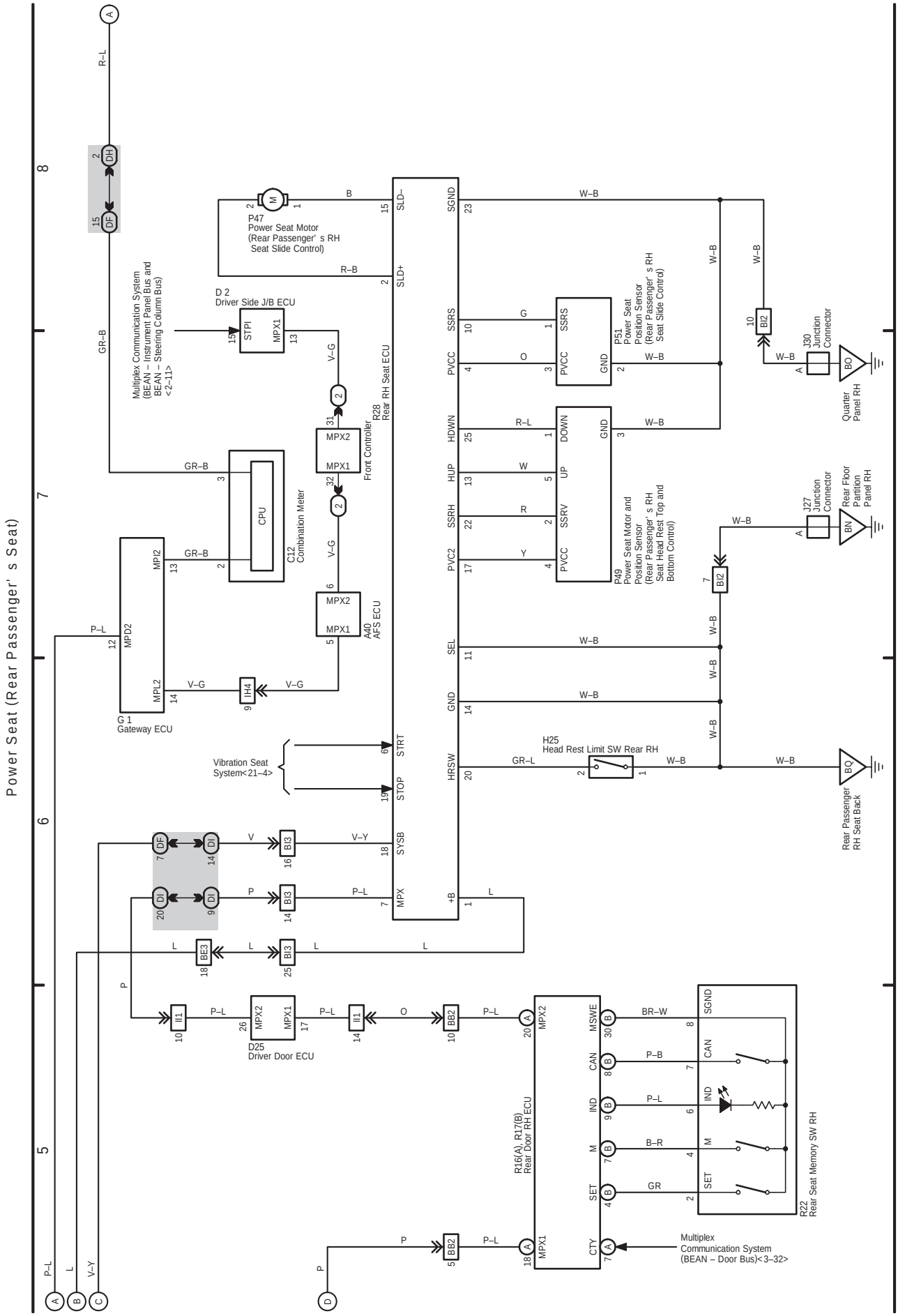

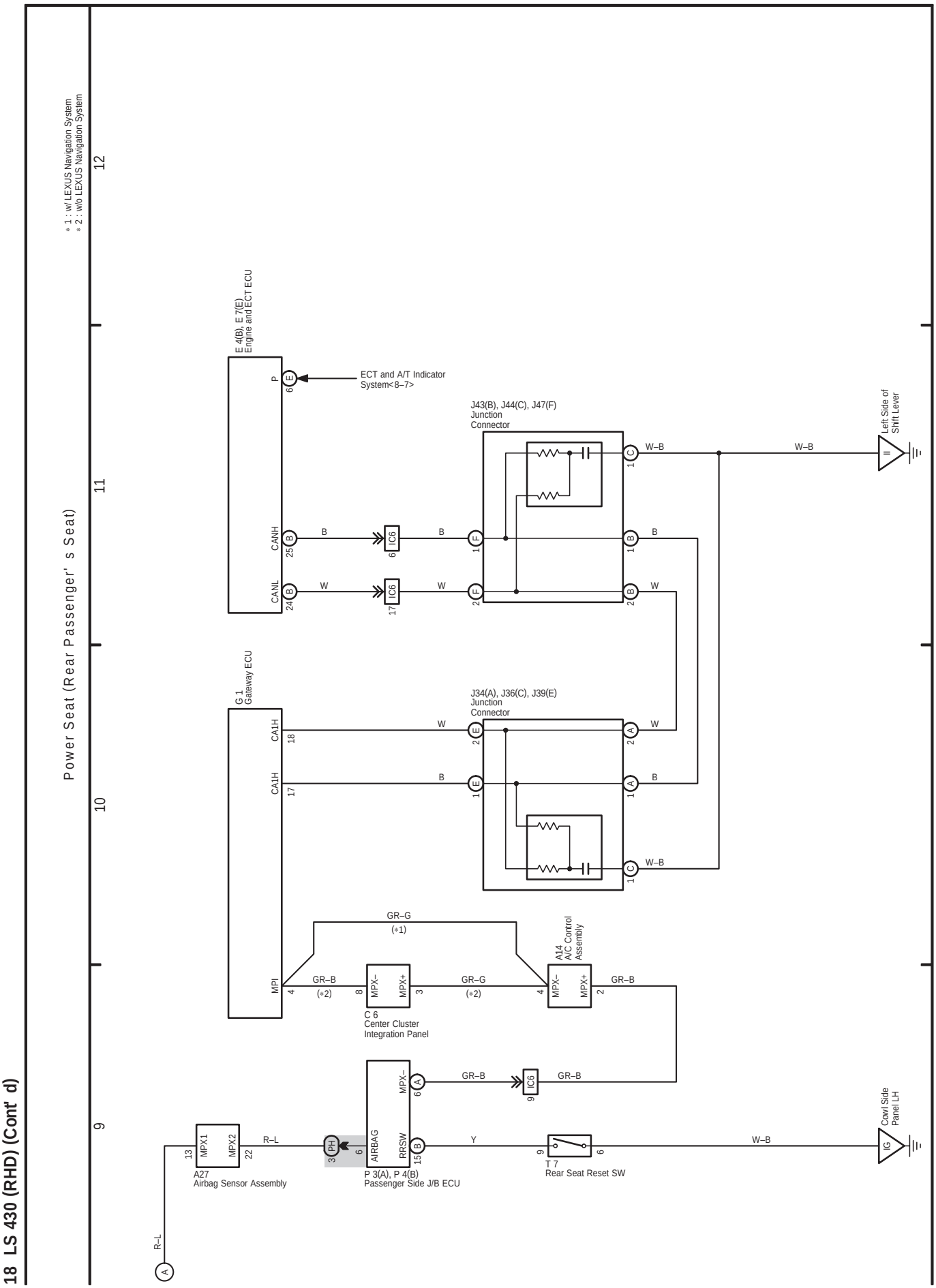
18 LS 430 (RHD) (Cont' d)
Power Seat (Rear Passenger' s Seat)
* 1 : w/ LEXUS Navigation System
* 2 : w/o LEXUS Navigation System
9
10
11
12
E 4(B), E 7(E)
Engine and ECT ECU
P
CANH
CANL
ECT and A/T Indicator System<8–7>
IC6
J43(B), J44(C), J47(F)
Junction Connector
Left Side of Shift Lever
G 1
Gateway ECU
CA1H
MPI
J34(A), J36(C), J39(E)
Junction Connector
GR–G
(*1)
GR–B
(*2)
C 6
Center Cluster Integration Panel
A14
A/C Control Assembly
MPX–
MPX+
MPX1
MPX2
A27
Airbag Sensor Assembly
AIRBAG
RRSW
P 3(A), P 4(B)
Passenger Side J/B ECU
T 7
Rear Seat Reset SW
Cowl Side Panel LH
R–L
W–B
W
B
Y