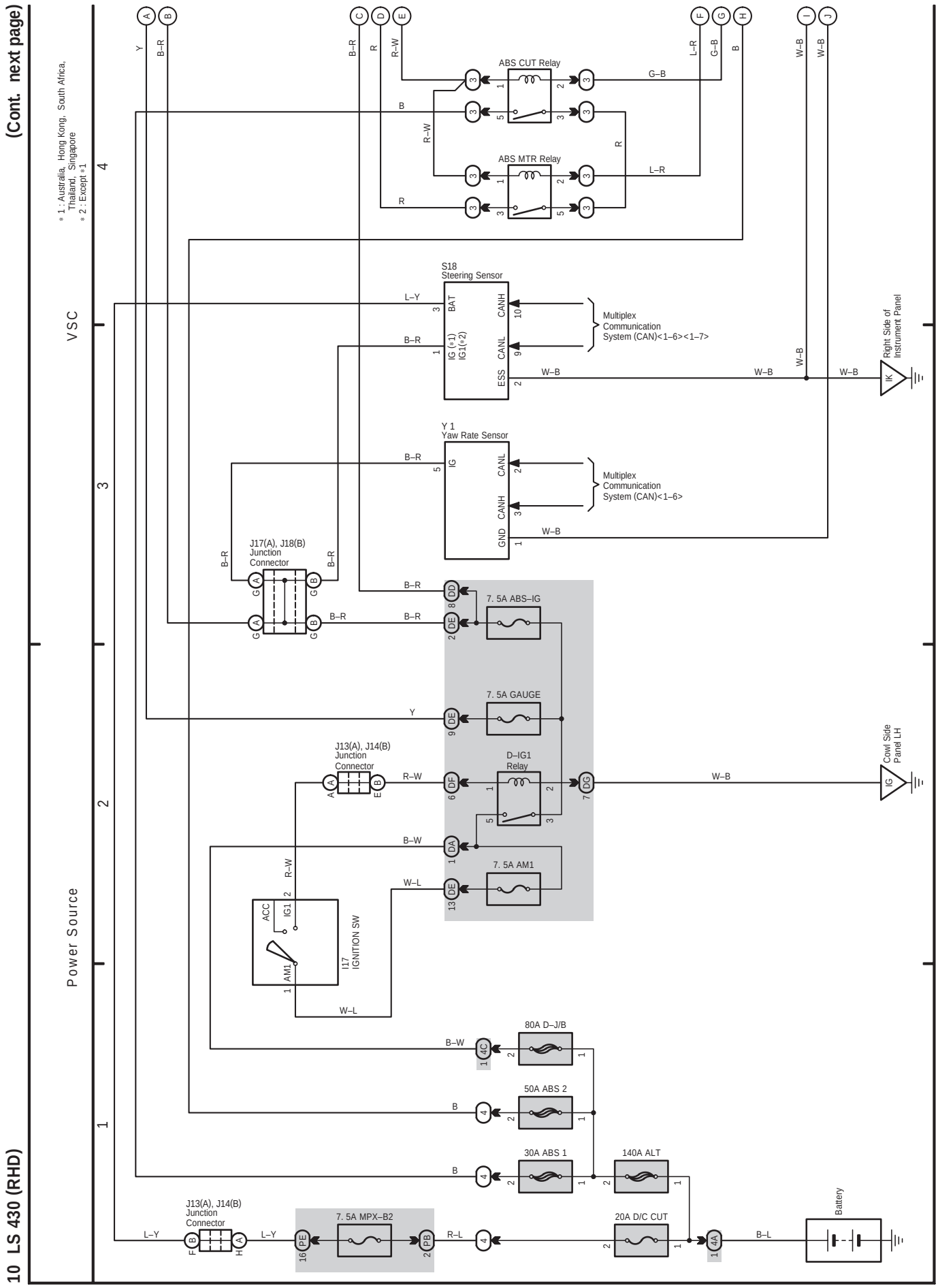
(Cont. next page)
10 LS 430 (RHD)
VSC
Power Source
* 1 : Australia, Hong Kong, South Africa, Thailand, Singapore
* 2 : Except * 1
ABS CUT Relay
ABS MTR Relay
S18
Steering Sensor
BAT
IG (*1)
IG1(*2)
CANH
CANL
ESS
Multiplex Communication System (CAN)<1–6><1–7>
Right Side of Instrument Panel
Y 1
Yaw Rate Sensor
IG
GND
Multiplex Communication System (CAN)<1–6>
J17(A), J18(B) Junction Connector
7. 5A ABS–IG
7. 5A GAUGE
J13(A), J14(B) Junction Connector
D–IG1 Relay
Cowl Side Panel LH
7. 5A AM1
ACC
IG1
AM1
I17 IGNITION SW
80A D–J/B
50A ABS 2
30A ABS 1
140A ALT
Battery
J13(A), J14(B) Junction Connector
7. 5A MPX–B2
20A D/C CUT

(Cont. next page)

10 LS 430 (RHD) (Cont' d)

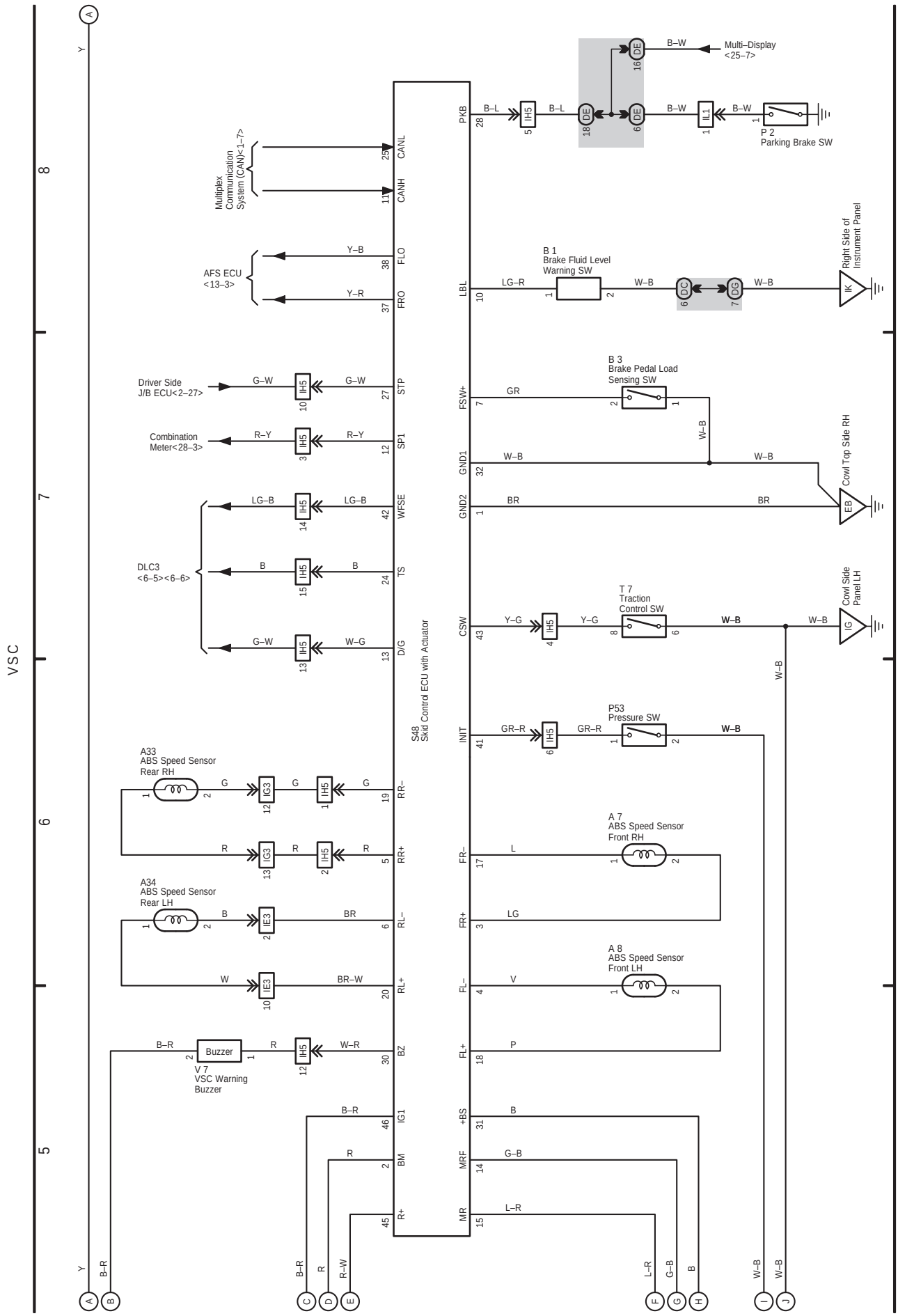

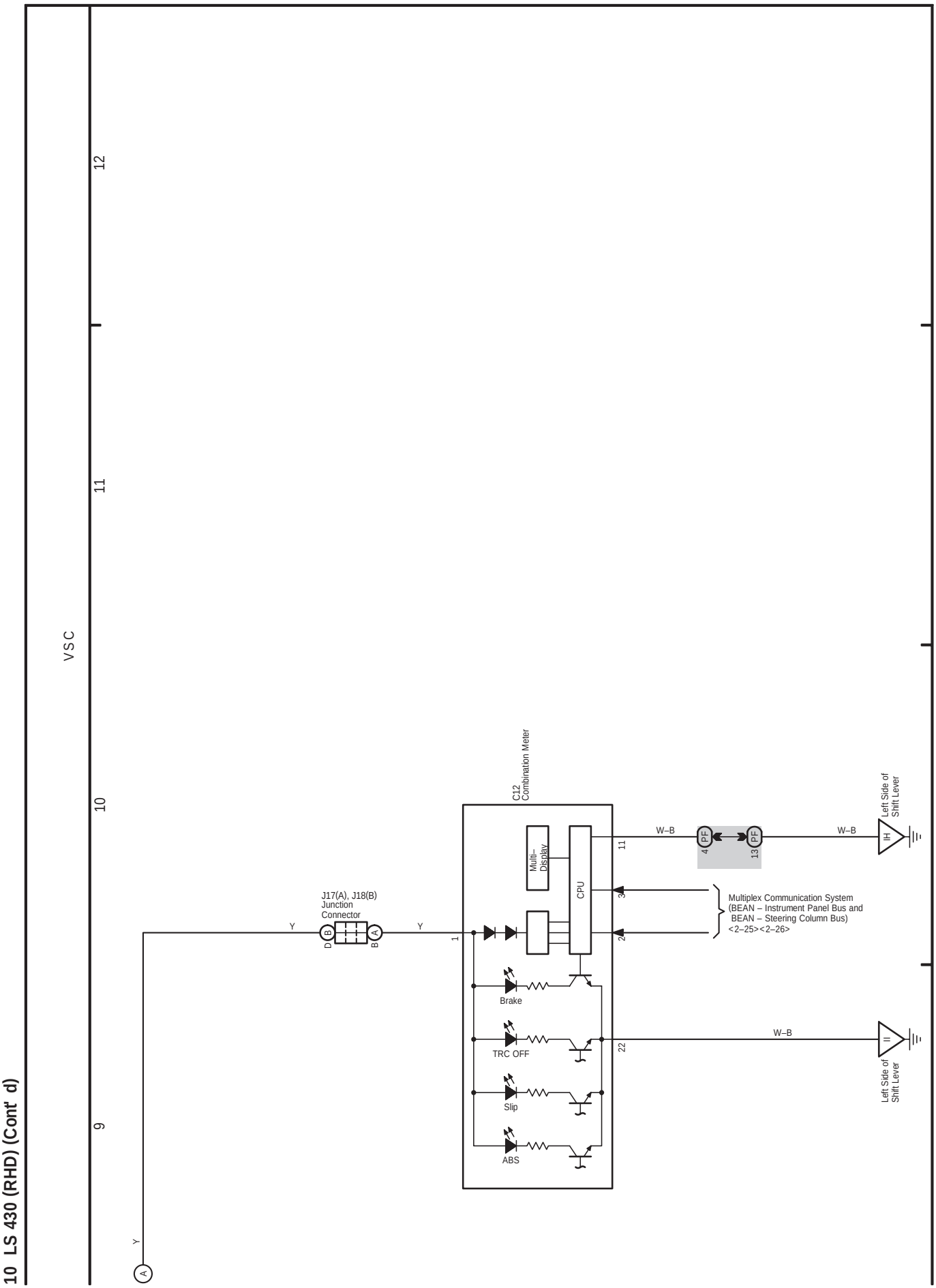
10 LS 430 (RHD) (Cont' d)
VSC
12
11
10
9
C12
Combination Meter
Multi–
Display
CPU
J17(A), J18(B)
Junction
Connector
Y
D
B
A
1
11
3
2
22
W–B
4
PF
13
PF
Left Side of
Shift Lever
IH
II
Multiplex Communication System
(BEAN – Instrument Panel Bus and
BEAN – Steering Column Bus)
<2–25><2–26>
Brake
TRC OFF
Slip
ABS