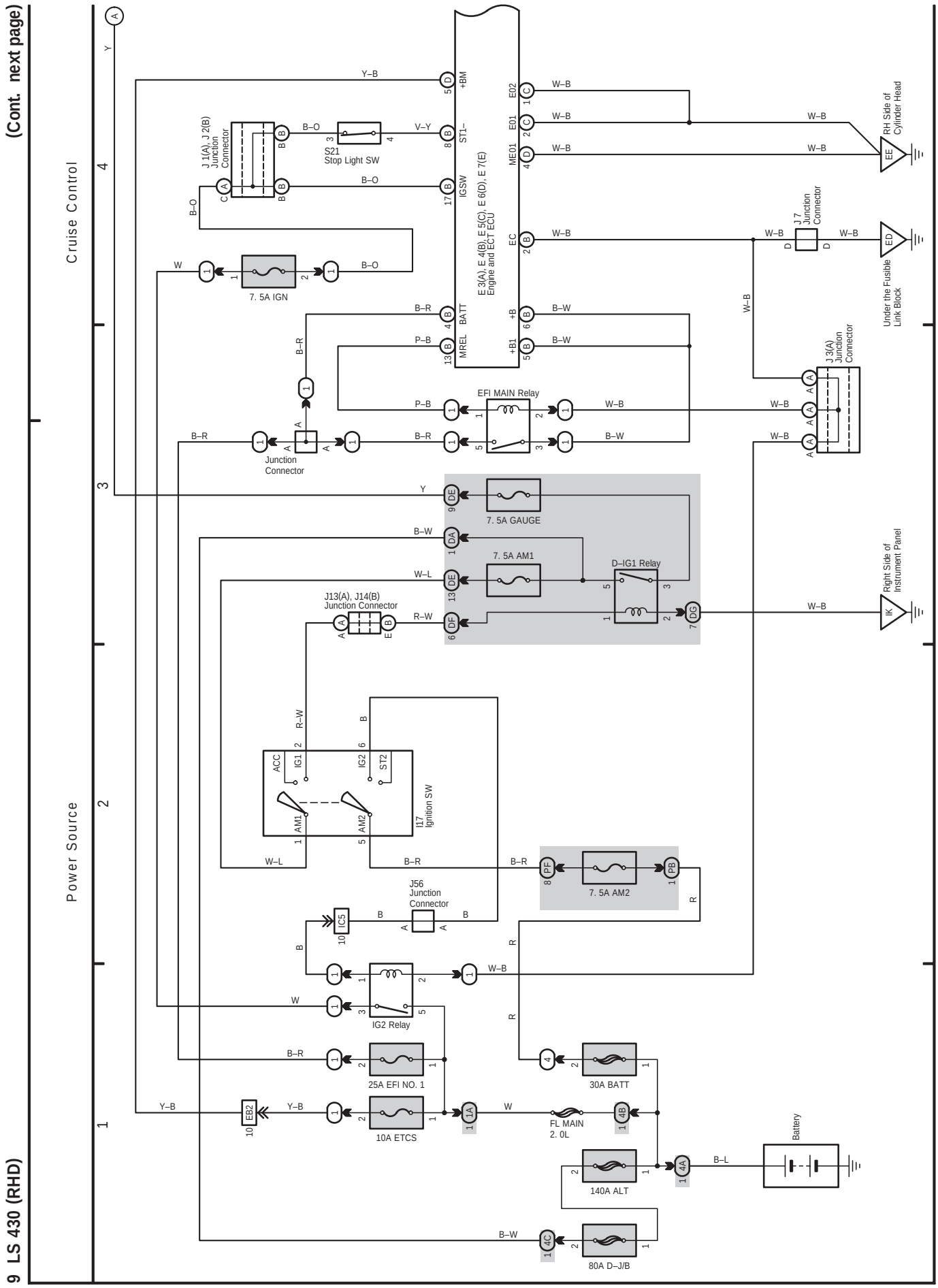
(Cont. next page)
Cruise Control
Power Source
J 1(A), J 2(B) Junction Connector
S21 Stop Light SW
7. 5A IGN
E3(A), E 4(B), E 5(C), E 6(D), E 7(E) Engine and ECT ECU
+BM
ST1–
IGSW
BATT
MREL
E02
E01
ME01
EC
+B
+B1
RH Side of Cylinder Head
J 7 Junction Connector
Under the Fusible Link Block
J 3(A) Junction Connector
EFI MAIN Relay
Junction Connector
7. 5A GAUGE
7. 5A AM1
D–IG1 Relay
J13(A), J14(B) Junction Connector
Right Side of Instrument Panel
ACC
IG1
IG2
ST2
AM1
AM2
I17 Ignition SW
7. 5A AM2
J56 Junction Connector
IC5
IG2 Relay
25A EFI NO. 1
30A BATT
10A ETCS
EB2
FL MAIN 2. 0L
140A ALT
80A D–J/B
Battery
9 LS 430 (RHD)

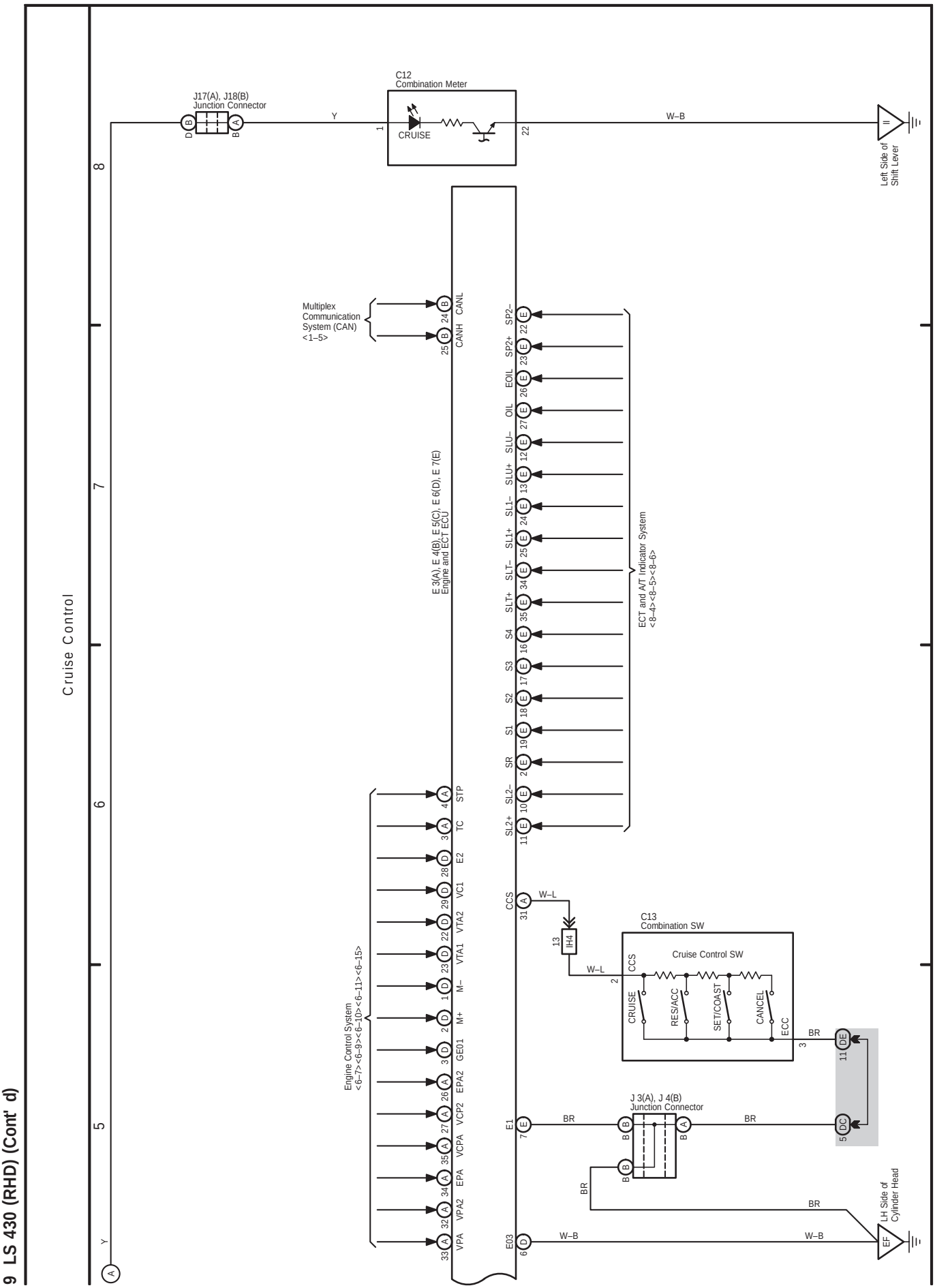
9 LS 430 (RHD) (Cont' d)
Cruise Control
J17(A), J18(B)
Junction Connector
C12
Combination Meter
CRUISE
Left Side of
Shift Lever
Multiplex
Communication
System (CAN)
<1–5>
CANL
CANH
E 3(A), E 4(B), E 5(C), E 6(D), E 7(E)
Engine and ECT ECU
ECT and A/T Indicator System
<8–4><8–5><8–6>
Engine Control System
<6–7><6–9><6–10><6–11><6–15>
C13
Combination SW
Cruise Control SW
CRUISE
RES/ACC
SET/COAST
CANCEL
ECC
J 3(A), J 4(B)
Junction Connector
LH Side of
Cylinder Head