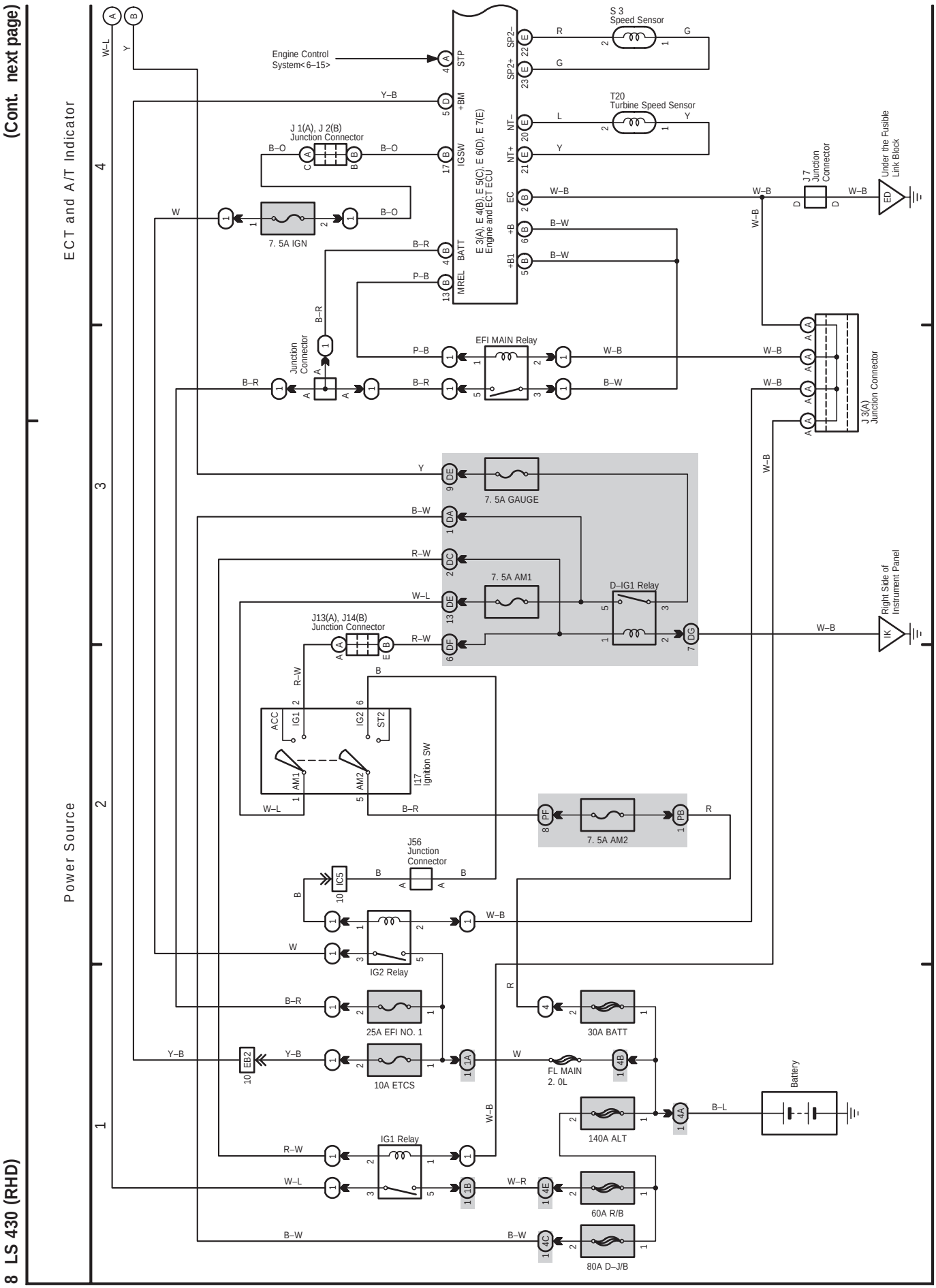
(Cont. next page)
ECT and A/T Indicator
Power Source
Engine Control System< 6–15>
S 3 Speed Sensor
T20 Turbine Speed Sensor
J 1(A), J 2(B) Junction Connector
E 3(A), E 4(B), E 5(C), E 6(D), E 7(E) Engine and ECT ECU
7. 5A IGN
EFI MAIN Relay
Junction Connector
J 7 Junction Connector
Under the Fusible Link Block
J 3(A) Junction Connector
7. 5A GAUGE
7. 5A AM1
D–IG1 Relay
J13(A), J14(B) Junction Connector
Right Side of Instrument Panel
I17 Ignition SW
7. 5A AM2
J56 Junction Connector
IG2 Relay
25A EFI NO. 1
30A BATT
10A ETCS
FL MAIN 2. 0L
Battery
140A ALT
IG1 Relay
60A R/B
80A D–J/B

(Cont. next page)

8 LS 430 (RHD) (Cont' d)

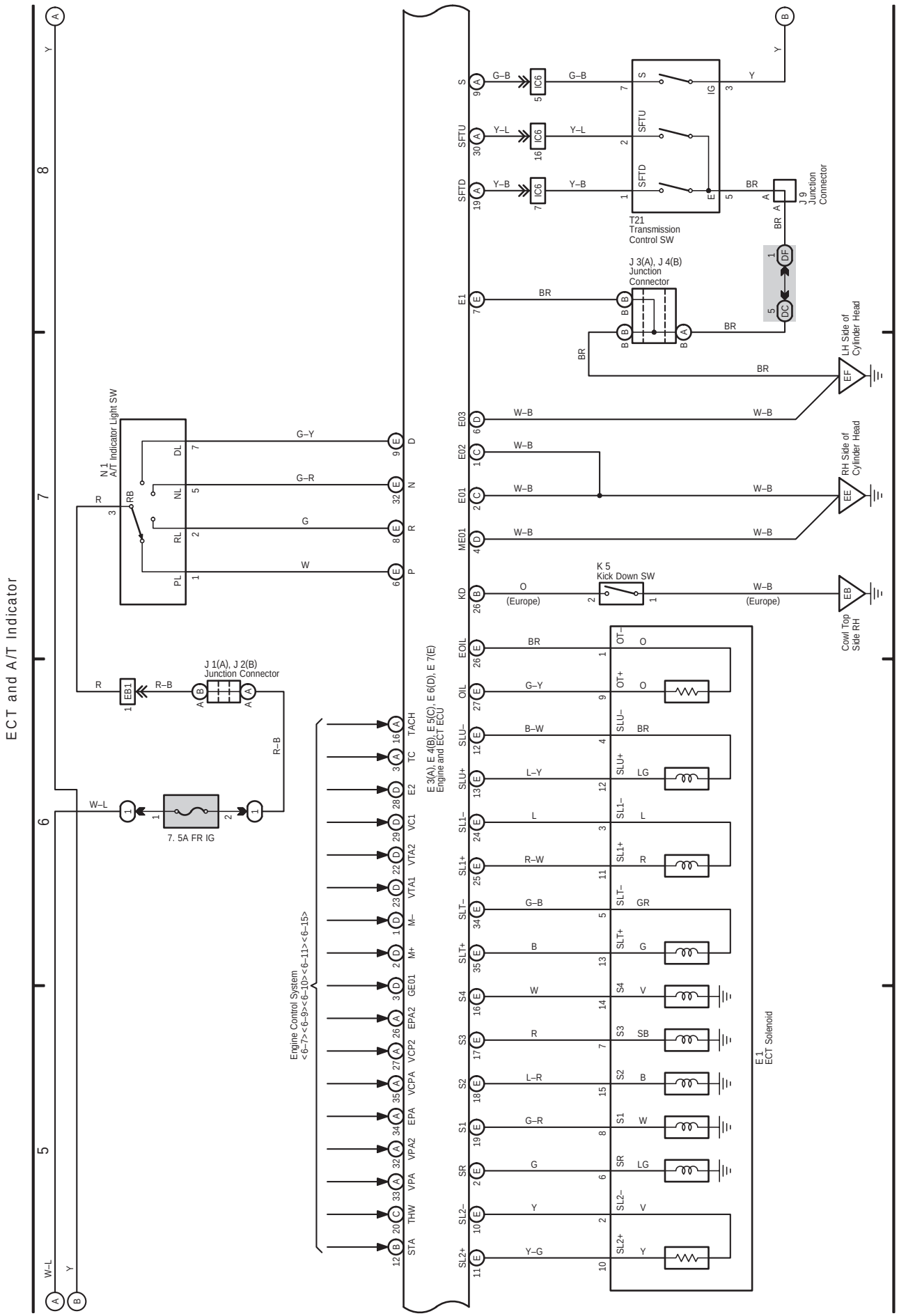
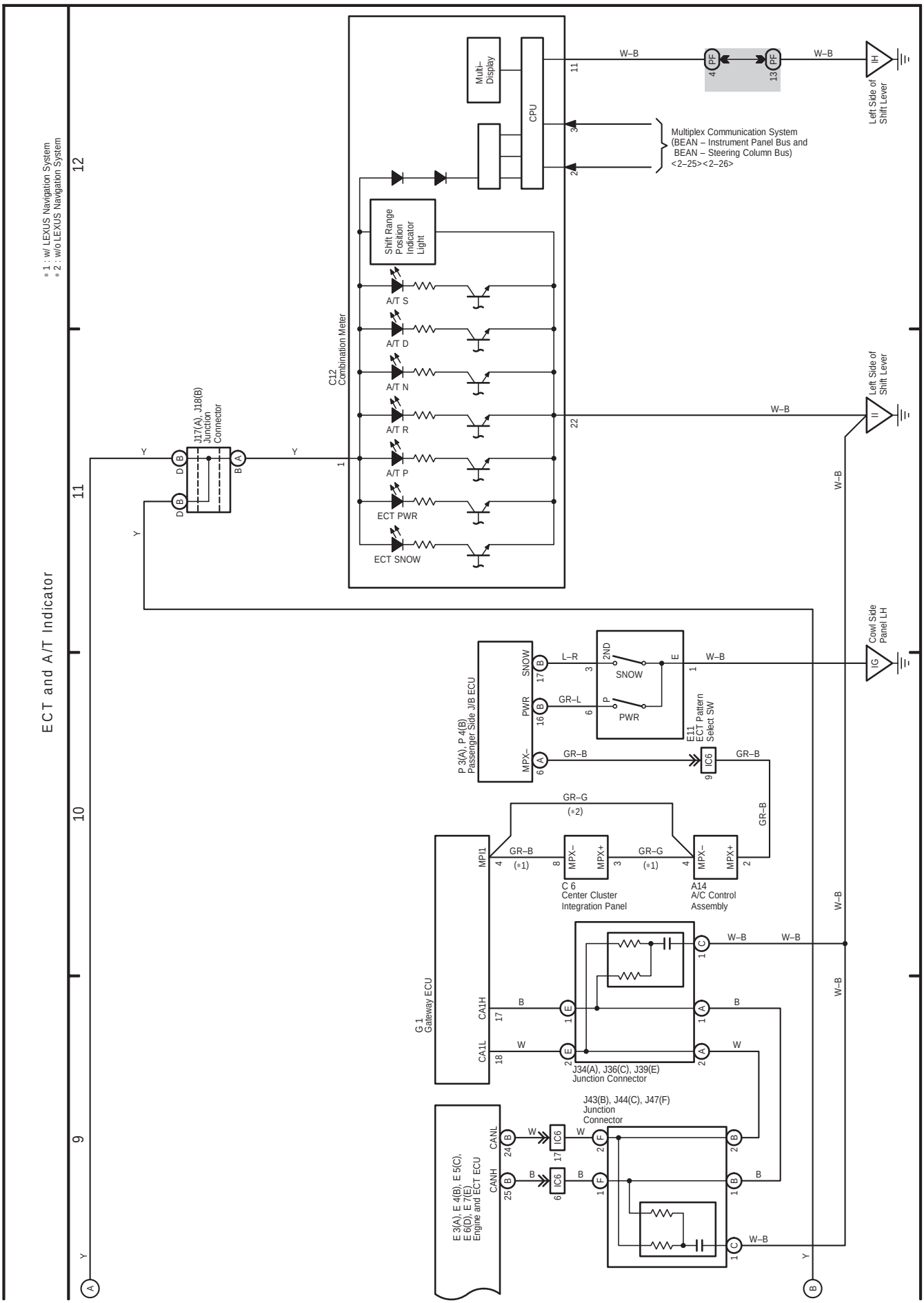
8 LS 430 (RHD) (Cont' d)