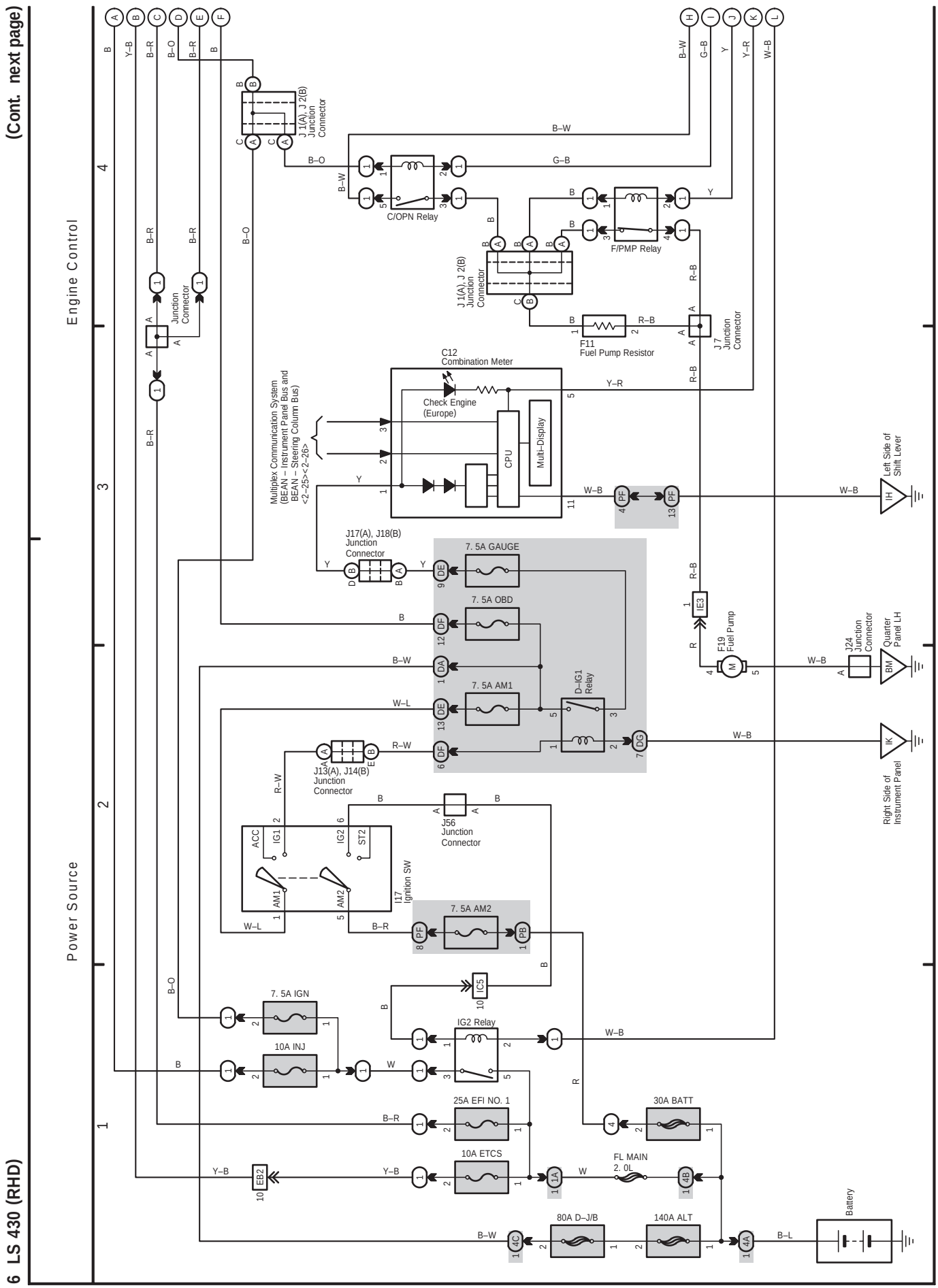
(Cont. next page)
Engine Control
Power Source
J 1(A), J 2(B) Junction Connector
C/OPN Relay
F/PMP Relay
Junction Connector
F11 Fuel Pump Resistor
J7 Junction Connector
C12 Combination Meter
Check Engine (Europe)
CPU
Multi-Display
Multiplex Communication System (BEAN – Instrument Panel Bus and BEAN – Steering Column Bus) <2–25><2–26>
Left Side of Shift Lever
J17(A), J18(B) Junction Connector
7. 5A GAUGE
7. 5A OBD
7. 5A AM1
D–IG1 Relay
F19 Fuel Pump
J24 Junction Connector
Quarter Panel LH
J13(A), J14(B) Junction Connector
J56 Junction Connector
I17 Ignition SW
7. 5A AM2
Right Side of Instrument Panel
7. 5A IGN
IG2 Relay
10A INJ
25A EFI NO. 1
30A BATT
10A ETCS
FL MAIN 2. 0L
80A D–J/B
140A ALT
Battery
6 LS 430 (RHD)

6 LS 430 (RHD) (Cont' d)

(Cont. next page)

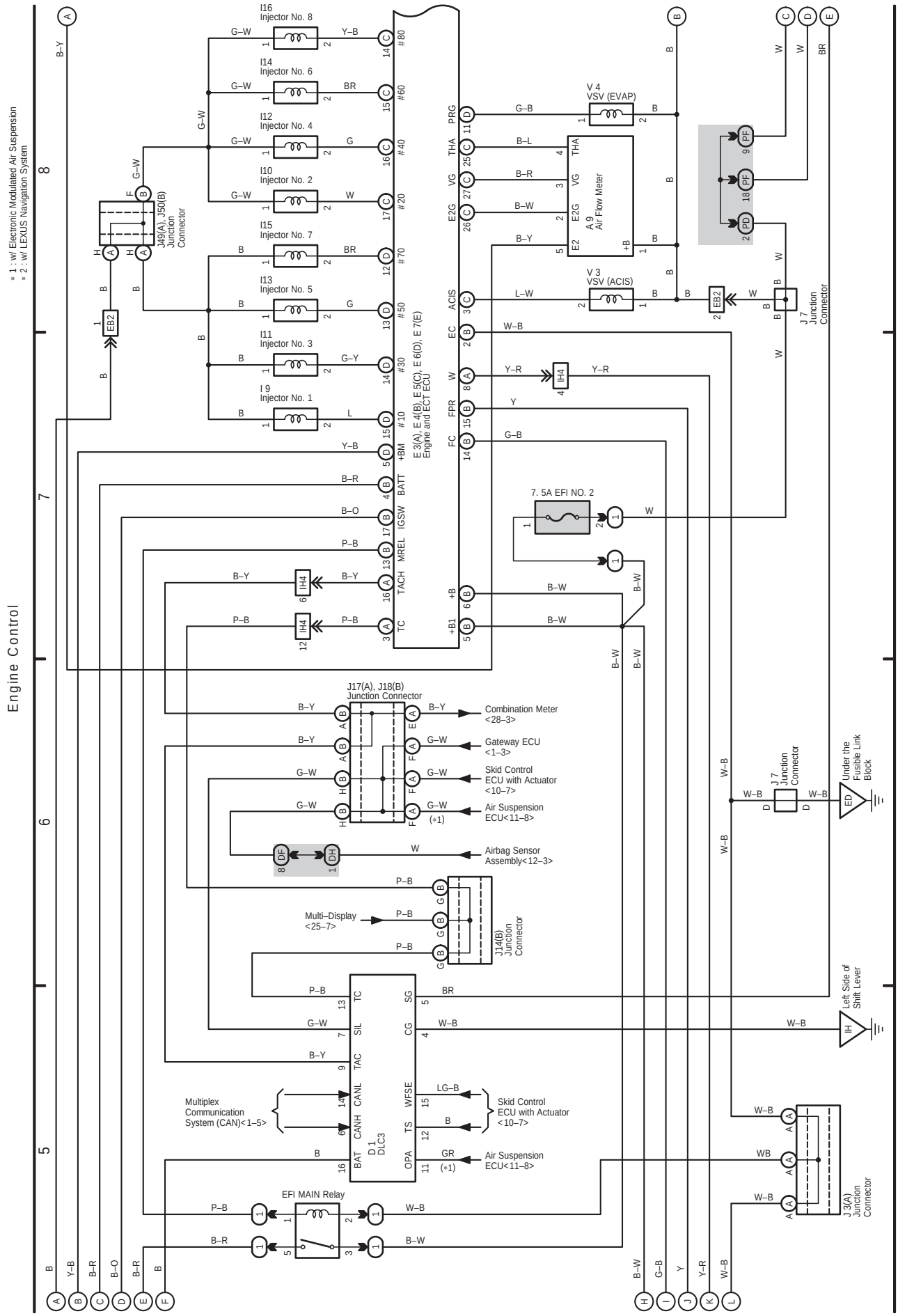

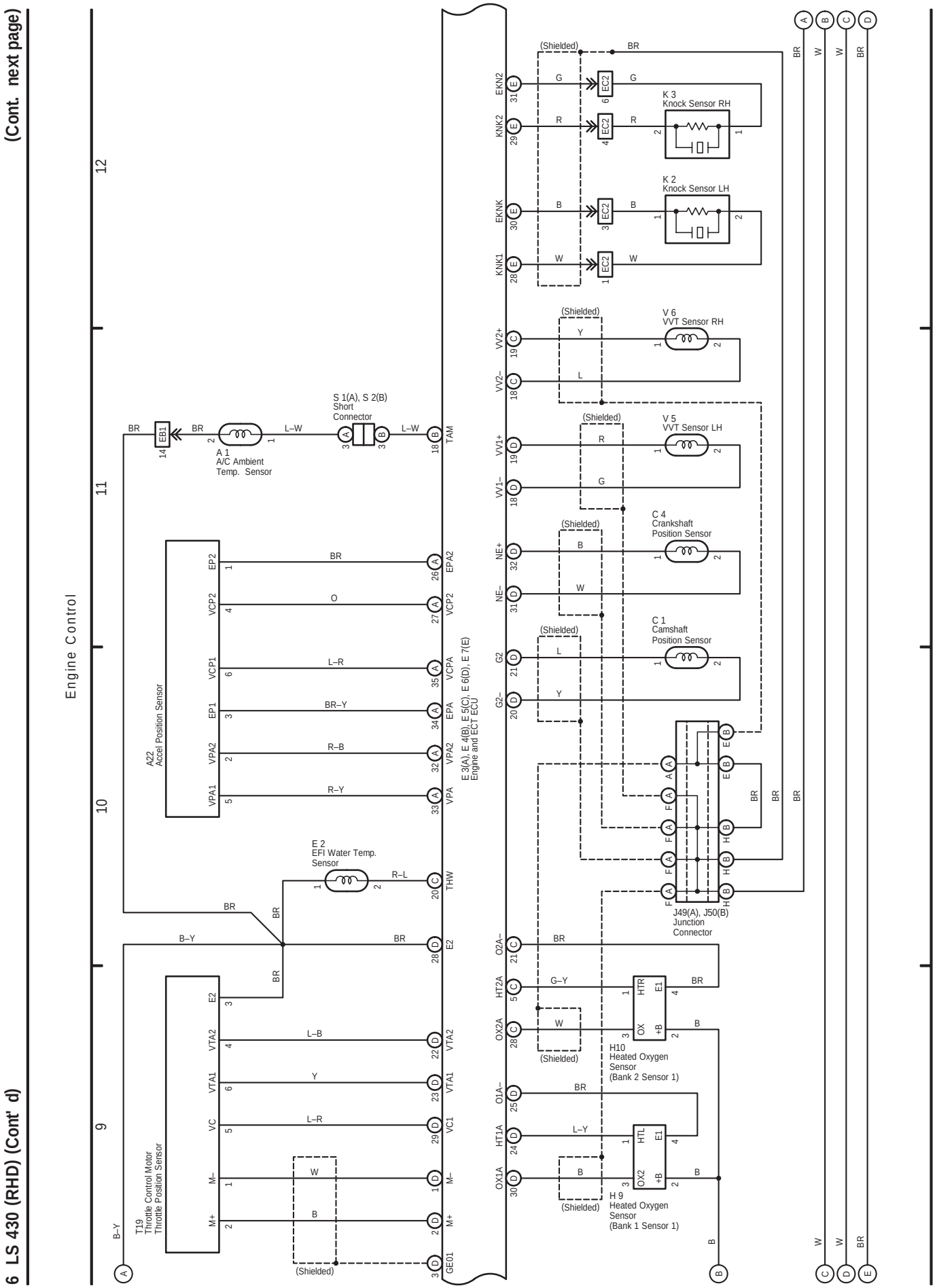
6 LS 430 (RHD) (Cont' d)
(Cont. next page)
Engine Control
A22
Accel Position Sensor
T19
Throttle Control Motor
Throttle Position Sensor
A 1
A/C Ambient
Temp. Sensor
S 1(A), S 2(B)
Short
Connector
E 2
EFI Water Temp.
Sensor
E 3(A), E 4(B), E 5(C), E 6(D), E 7(E)
Engine and ECT ECU
K 3
Knock Sensor RH
K 2
Knock Sensor LH
V 6
VVT Sensor RH
V 5
VVT Sensor LH
C 4
Crankshaft
Position Sensor
C 1
Camshaft
Position Sensor
J49(A), J50(B)
Junction
Connector
H10
Heated Oxygen
Sensor
(Bank 2 Sensor 1)
H 9
Heated Oxygen
Sensor
(Bank 1 Sensor 1)
(Shielded)

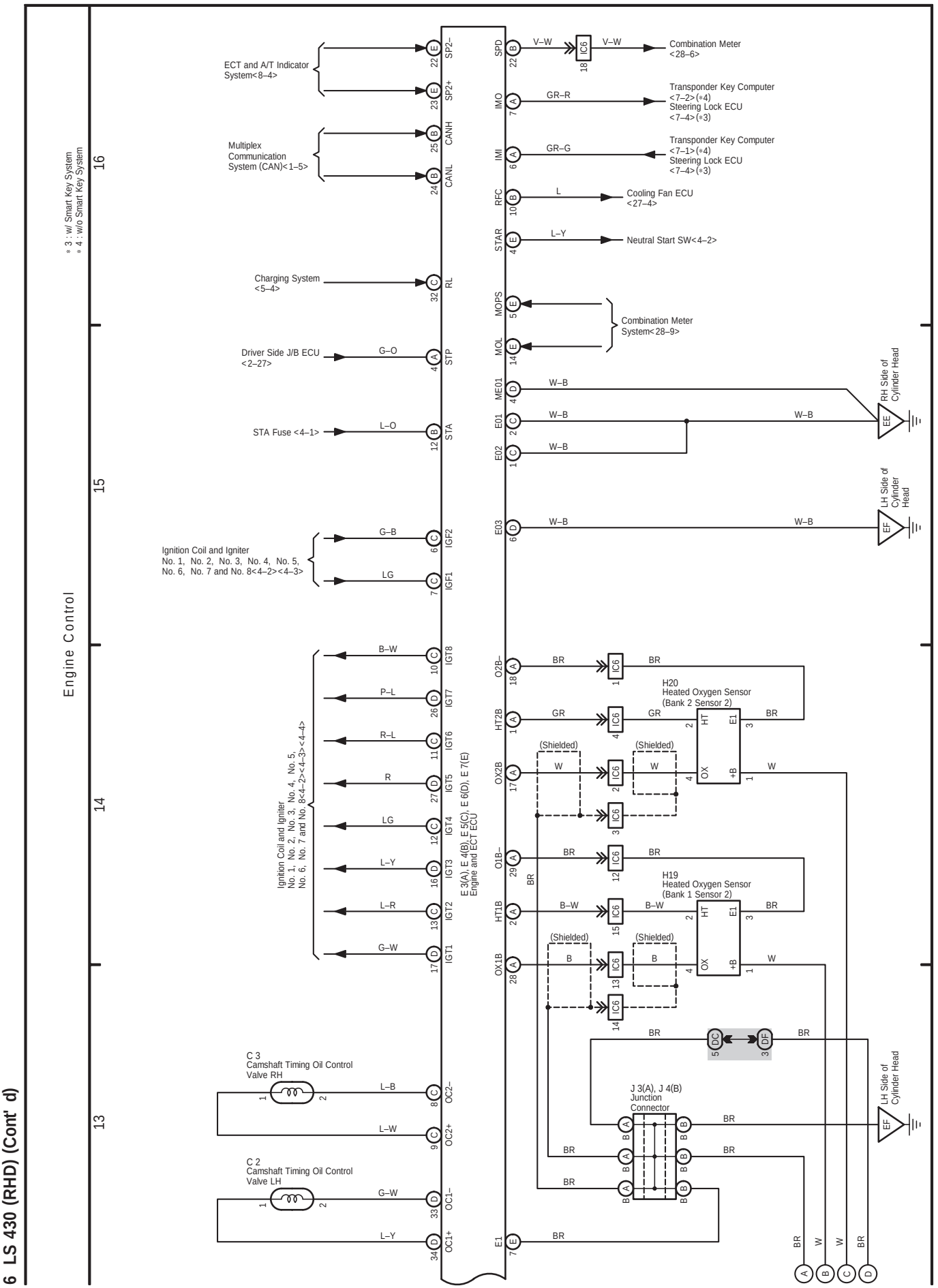

6 LS 430 (RHD) (Cont' d)