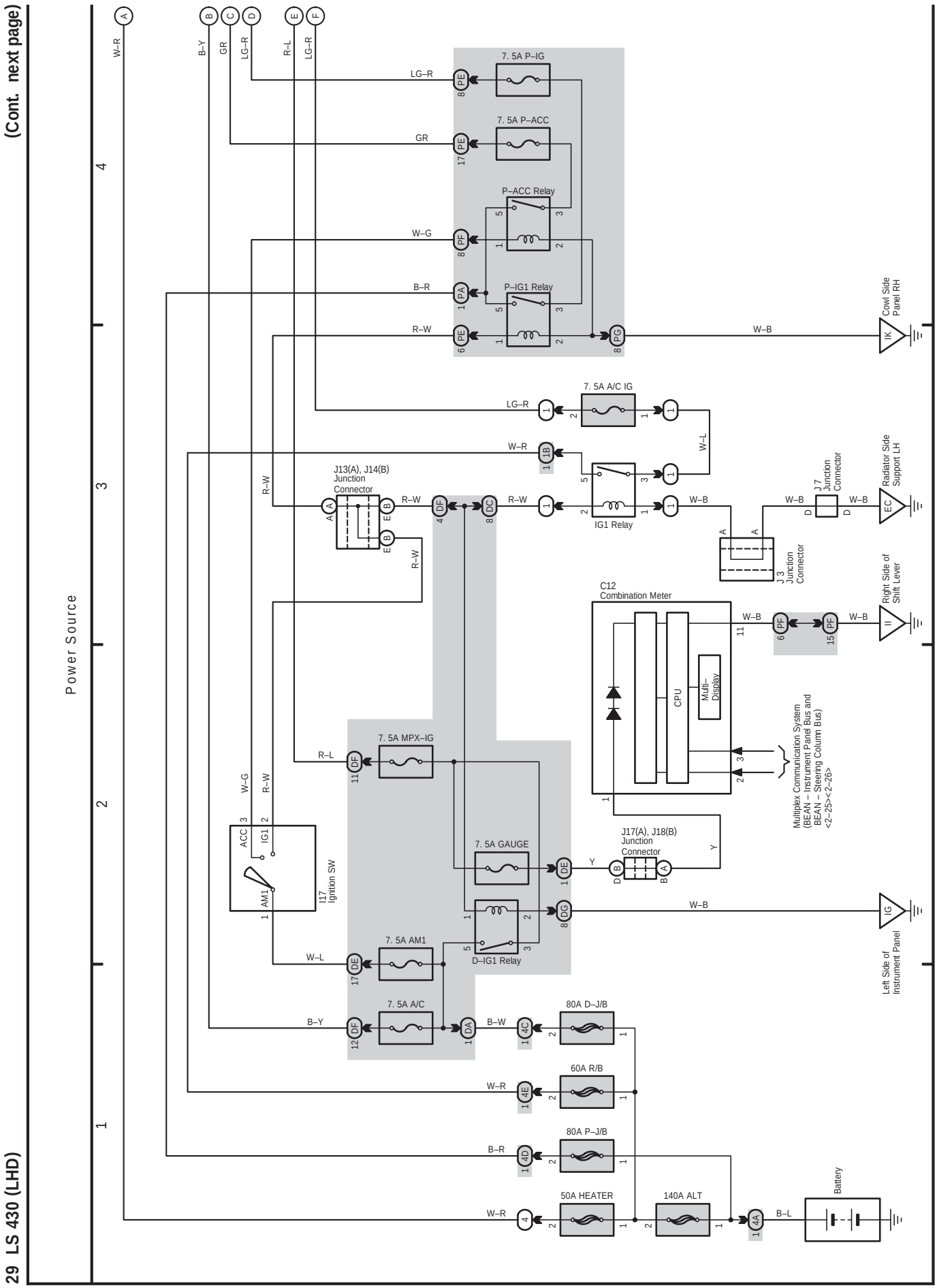
(Cont. next page)
29 LS 430 (LHD)
Power Source
7. 5A P–IG
7. 5A P–ACC
P–ACC Relay
P–IG1 Relay
7. 5A A/C IG
J13(A), J14(B) Junction Connector
IG1 Relay
J 7 Junction Connector
J 3 Junction Connector
Cowl Side Panel RH
Radiator Side Support LH
Right Side of Shift Lever
C12 Combination Meter
CPU
Multi–Display
Multiplex Communication System (BEAN – Instrument Panel Bus and BEAN – Steering Column Bus) <2–25><2–26>
7. 5A MPX–IG
7. 5A GAUGE
J17(A), J18(B) Junction Connector
I17 Ignition SW
D–IG1 Relay
7. 5A AM1
7. 5A A/C
80A D–J/B
60A R/B
80A P–J/B
50A HEATER
140A ALT
Battery
Left Side of Instrument Panel

29 LS 430 (LHD) (Cont' d)

(Cont. next page)

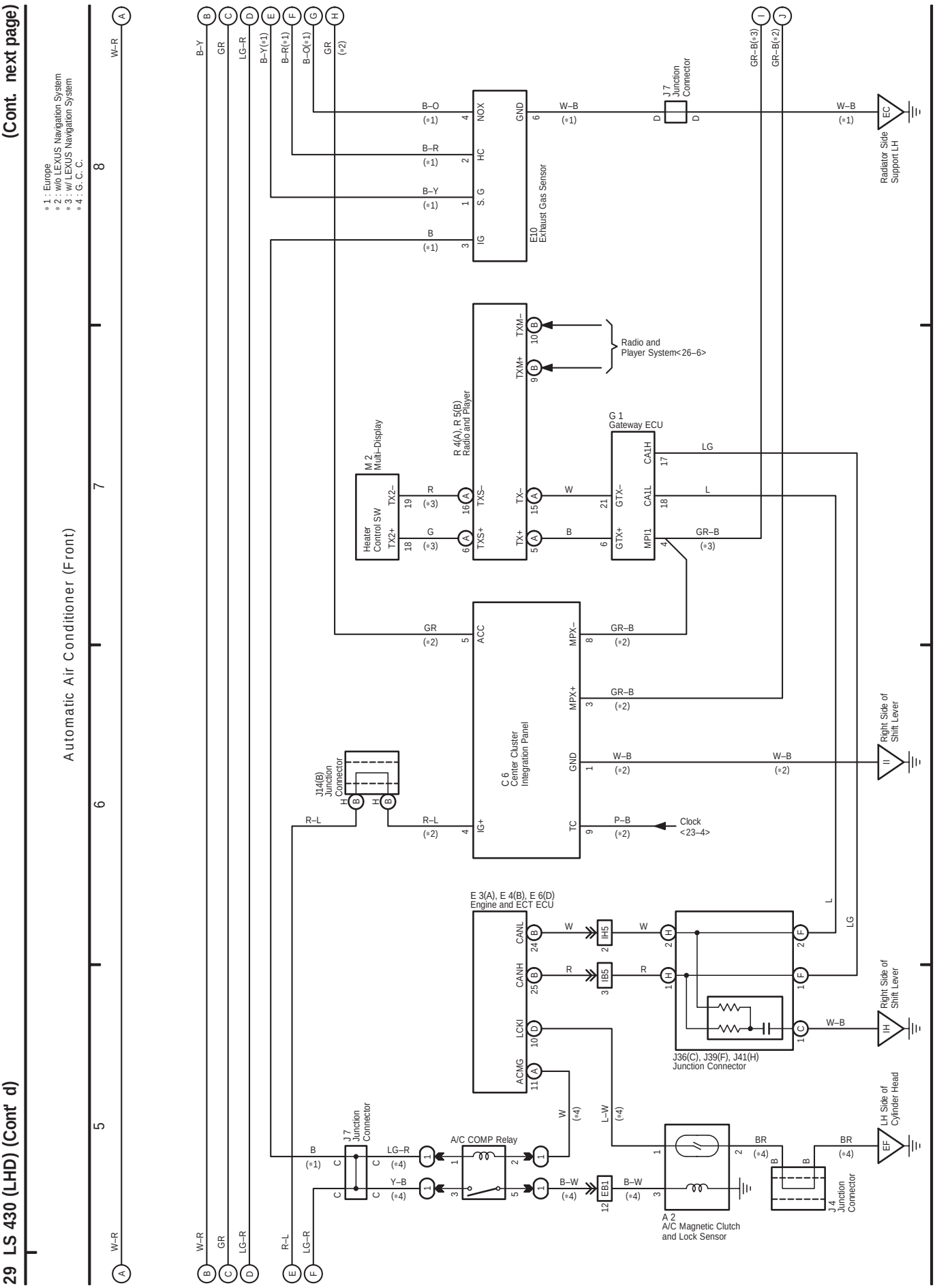

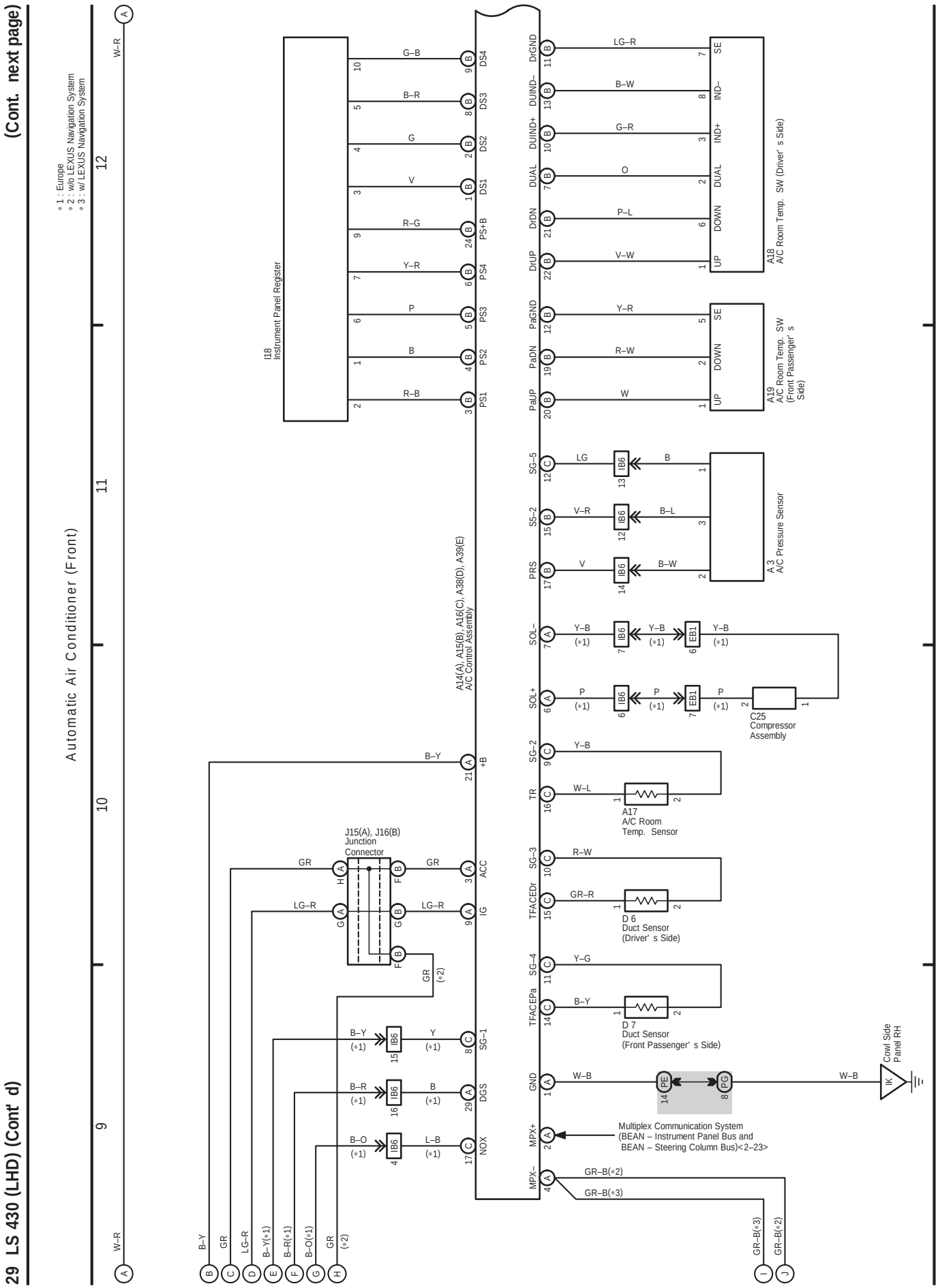
29 LS 430 (LHD) (Cont' d)
(Cont. next page)
Automatic Air Conditioner (Front)
* 1 : Europe
* 2 : w/o LEXUS Navigation System
* 3 : w/ LEXUS Navigation System
I18
Instrument Panel Register
A14(A), A15(B), A16(C), A38(D), A39(E)
A/C Control Assembly
A18
A/C Room Temp. SW (Driver' s Side)
A19
A/C Room Temp. SW
(Front Passenger' s
Side)
A 3
A/C Pressure Sensor
C25
Compressor
Assembly
A17
A/C Room
Temp. Sensor
D 6
Duct Sensor
(Driver' s Side)
D 7
Duct Sensor
(Front Passenger' s Side)
J15(A), J16(B)
Junction
Connector
Cowl Side
Panel RH
Multiplex Communication System
(BEAN – Instrument Panel Bus and
BEAN – Steering Column Bus)<2–23>

29 LS 430 (LHD) (Cont' d)
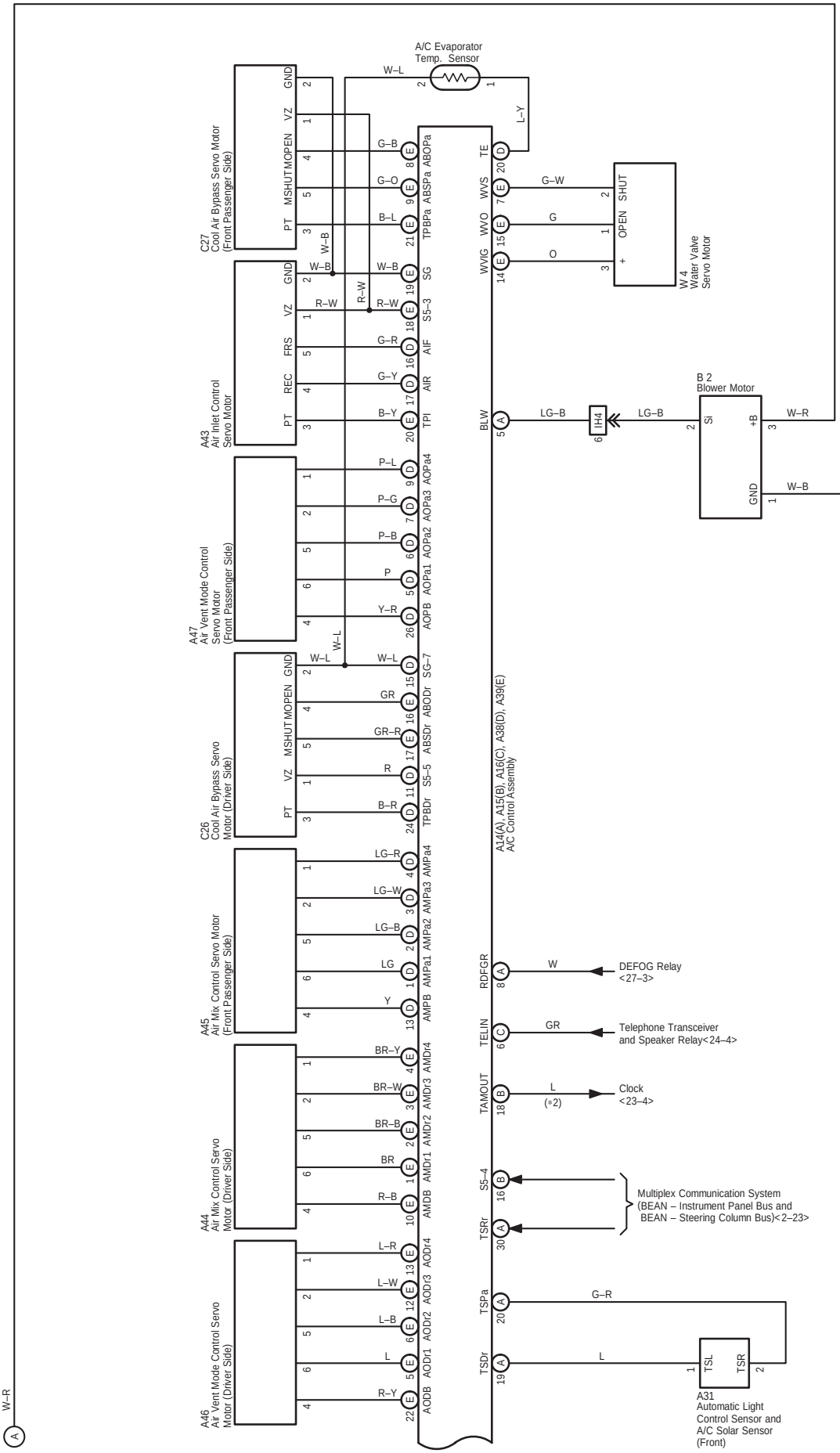
Automatic Air Conditioner (Front)