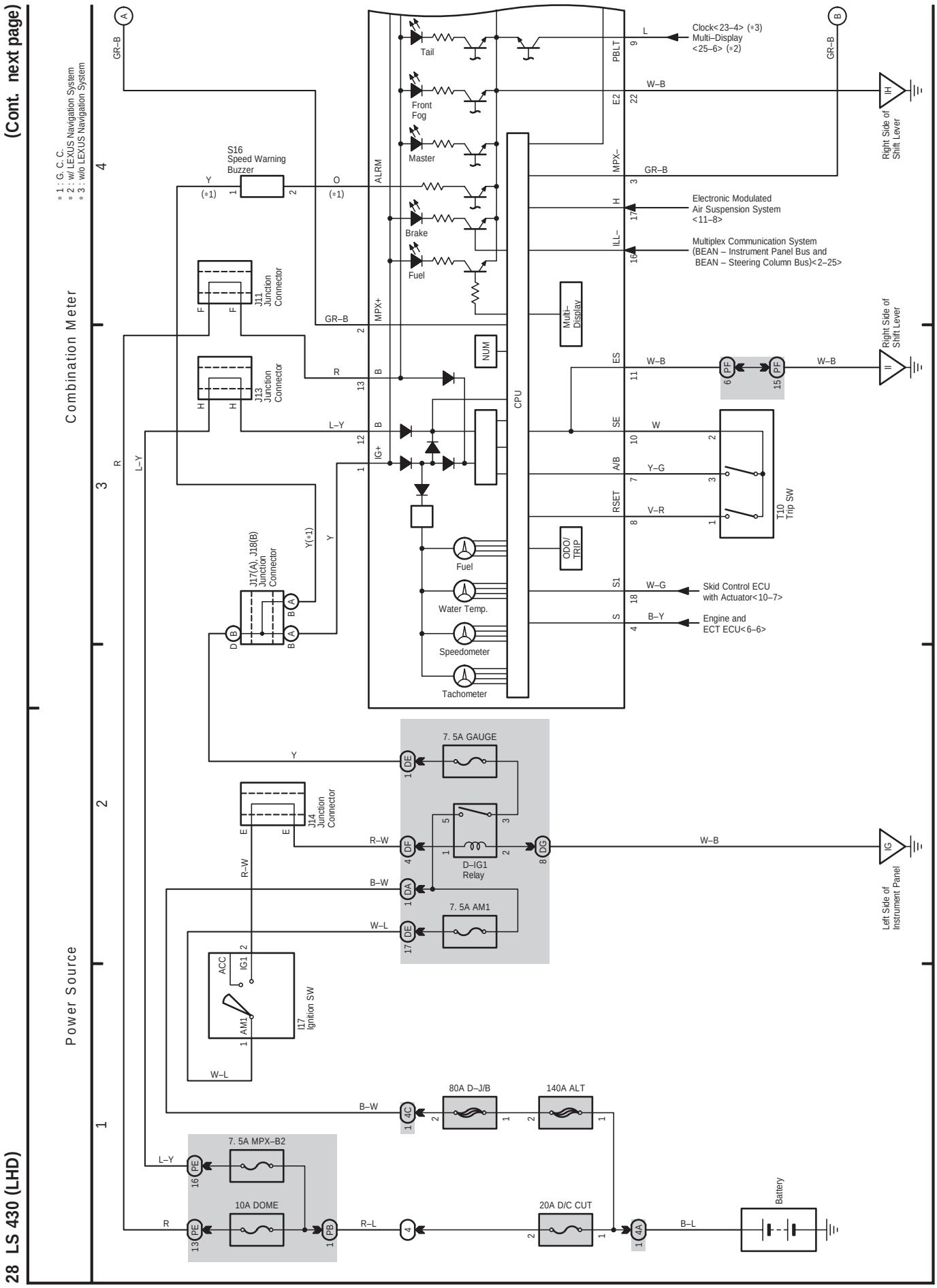
(Cont. next page)
* 1 : G. C. C.
* 2 : w/ LEXUS Navigation System
* 3 : w/o LEXUS Navigation System
Combination Meter
Power Source
S16
Speed Warning
Buzzer
J11
Junction
Connector
J13
Junction
Connector
J17(A), J18(B)
Junction
Connector
J14
Junction
Connector
Tail
Front
Fog
Master
Brake
Fuel
ALRM
MPX+
B
IG+
CPU
NUM
Multi-
Display
ODO/
TRIP
Fuel
Water Temp.
Speedometer
Tachometer
PBLT
E2
MPX–
H
ILL–
ES
SE
A/B
RSET
S1
S
Clock<23–4> (*3)
Multi–Display
<25–6> (*2)
Electronic Modulated
Air Suspension System
<11–8>
Multiplex Communication System
(BEAN – Instrument Panel Bus and
BEAN – Steering Column Bus)<2–25>
Skid Control ECU
with Actuator<10–7>
Engine and
ECT ECU<6–6>
T10
Trip SW
Right Side of
Shift Lever
Left Side of
Instrument Panel
7. 5A GAUGE
D–IG1
Relay
7. 5A AM1
I17
Ignition SW
ACC
IG1
AM1
80A D–J/B
140A ALT
7. 5A MPX–B2
10A DOME
20A D/C CUT
Battery

(Cont. next page)

28 LS 430 (LHD) (Cont' d)

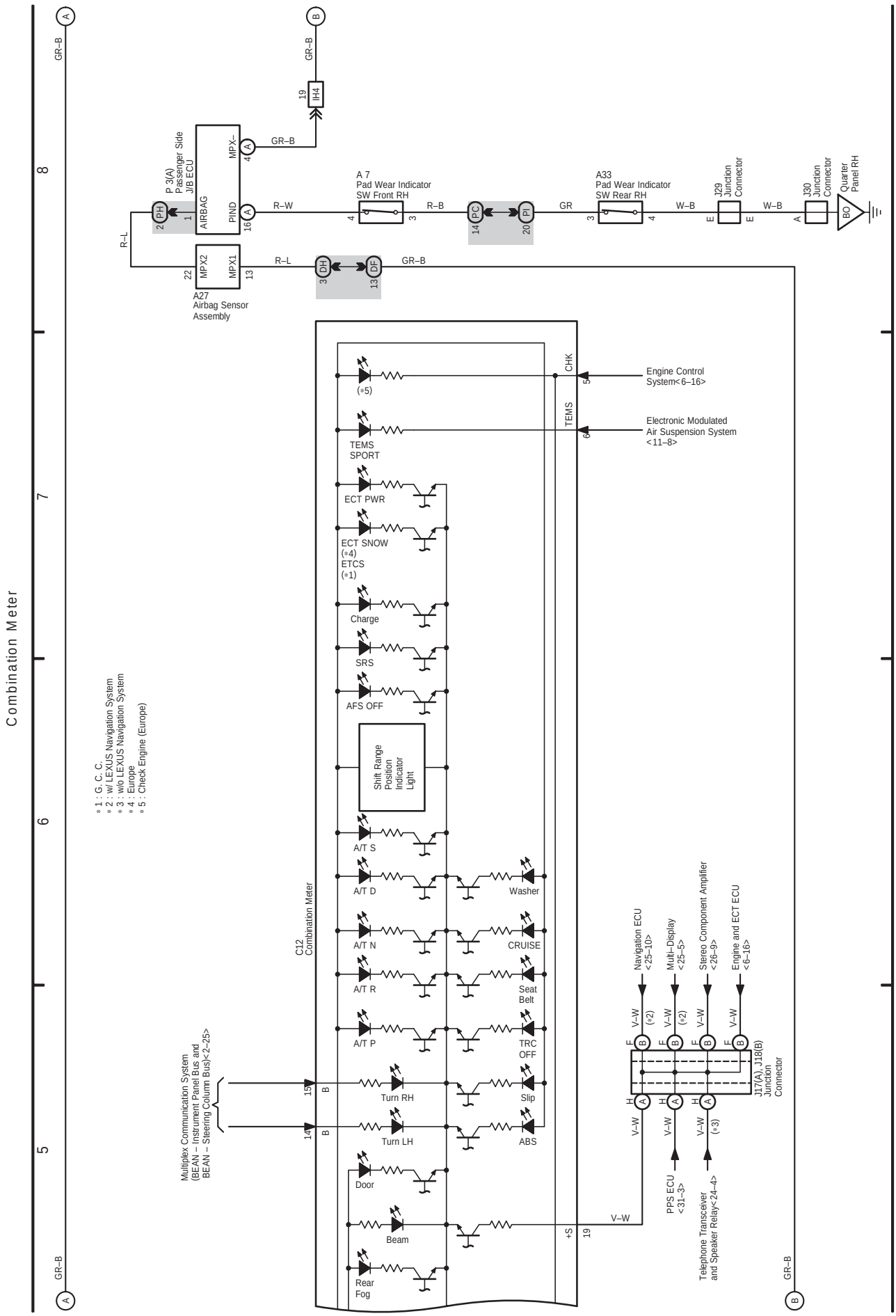

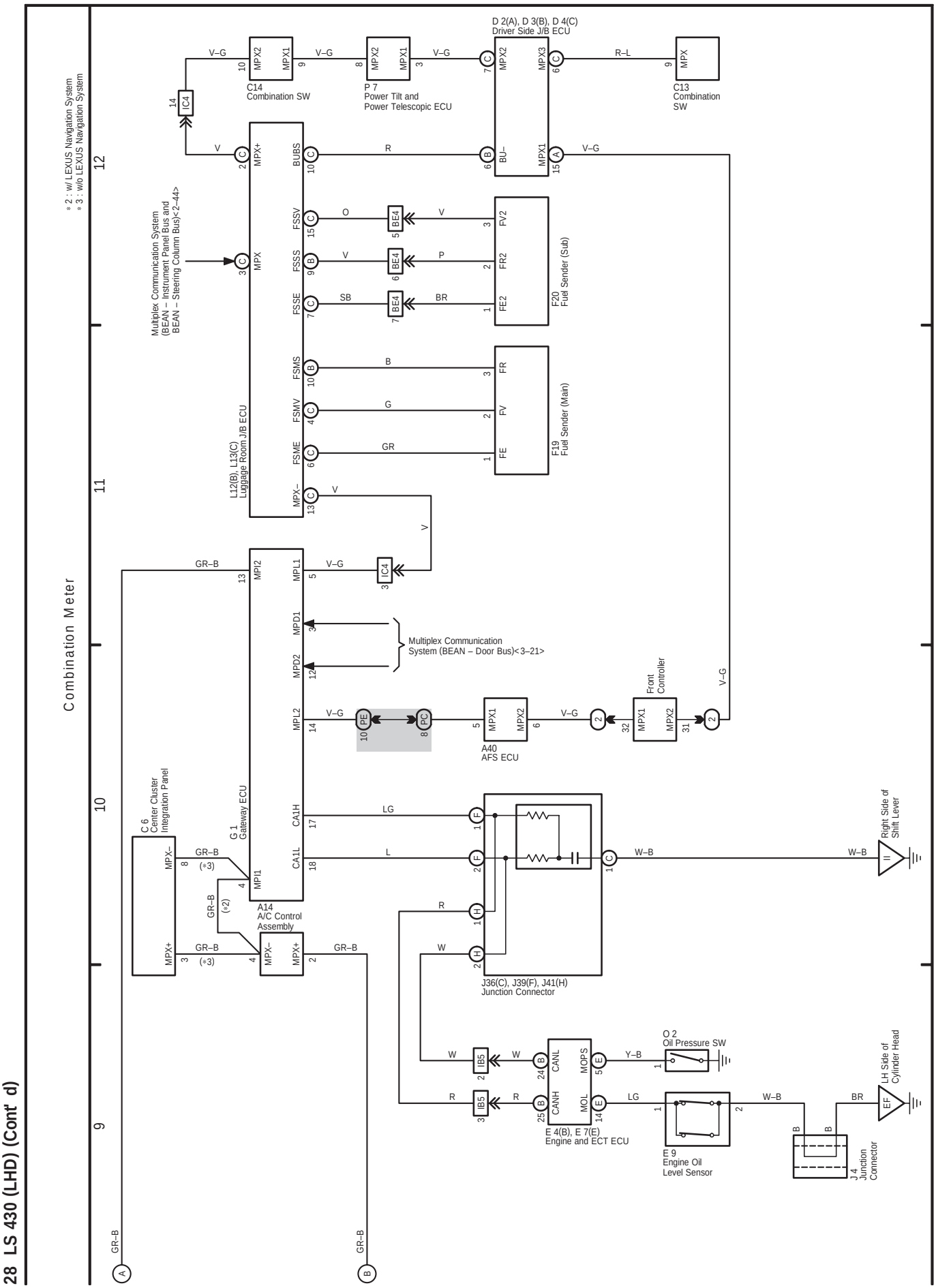
28 LS 430 (LHD) (Cont' d)
Combination Meter
* 2 : w/ LEXUS Navigation System
* 3 : w/o LEXUS Navigation System
D 2(A), D 3(B), D 4(C)
Driver Side J/B ECU
C14
Combination SW
P 7
Power Tilt and
Power Telescopic ECU
C13
Combination
SW
IC4
Multiplex Communication System
(BEAN – Instrument Panel Bus and
BEAN – Steering Column Bus)<2–44>
L12(B), L13(C)
Luggage Room J/B ECU
F20
Fuel Sender (Sub)
F19
Fuel Sender (Main)
Multiplex Communication
System (BEAN – Door Bus)<3–21>
Front
Controller
A40
AFS ECU
C.6
Center Cluster
Integration Panel
G 1
Gateway ECU
A14
A/C Control
Assembly
J36(C), J39(F), J41(H)
Junction Connector
Right Side of
Shift Lever
O 2
Oil Pressure SW
E 4(B), E 7(E)
Engine and ECT ECU
E 9
Engine Oil
Level Sensor
J 4
Junction
Connector
LH Side of
Cylinder Head