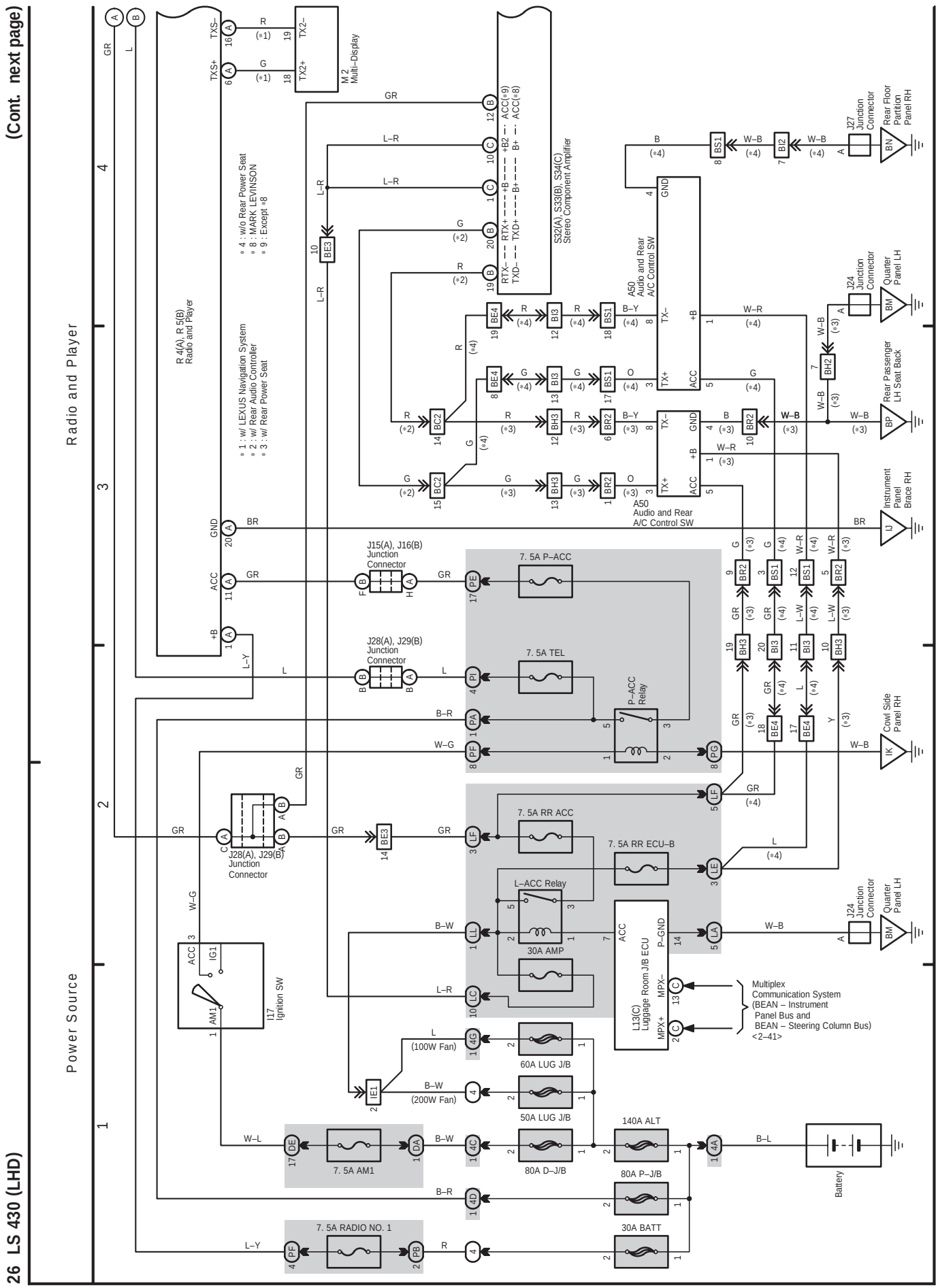
(Cont. next page)
26 LS 430 (LHD)
Radio and Player
Power Source
R 4(A), R 5(B)
Radio and Player
M 2
Multi–Display
S32(A), S33(B), S34(C)
Stereo Component Amplifier
A50
Audio and Rear
A/C Control SW
J27
Junction
Connector
Rear Floor
Partition
Panel RH
J24
Junction
Connector
Quarter
Panel LH
Rear Passenger
LH Seat Back
Instrument
Panel
Brace RH
Cowl Side
Panel RH
J15(A), J16(B)
Junction
Connector
J28(A), J29(B)
Junction
Connector
7. 5A P–ACC
7. 5A TEL
P–ACC
Relay
7. 5A RR ACC
7. 5A RR ECU–B
L–ACC Relay
30A AMP
L13(C)
Luggage Room J/B ECU
Multiplex
Communication System
(BEAN – Instrument
Panel Bus and
BEAN – Steering Column Bus)
<2–41>
I17
Ignition SW
60A LUG J/B
50A LUG J/B
80A D–J/B
140A ALT
80A P–J/B
30A BATT
7. 5A AM1
7. 5A RADIO NO. 1
Battery
(100W Fan)
(200W Fan)
* 1 : w/ LEXUS Navigation System
* 2 : w/ Rear Audio Controller
* 3 : w/ Rear Power Seat
* 4 : w/o Rear Power Seat
* 8 : MARK LEVINSON
* 9 : Except *8

26 LS 430 (LHD) (Cont' d)

(Cont. next page)

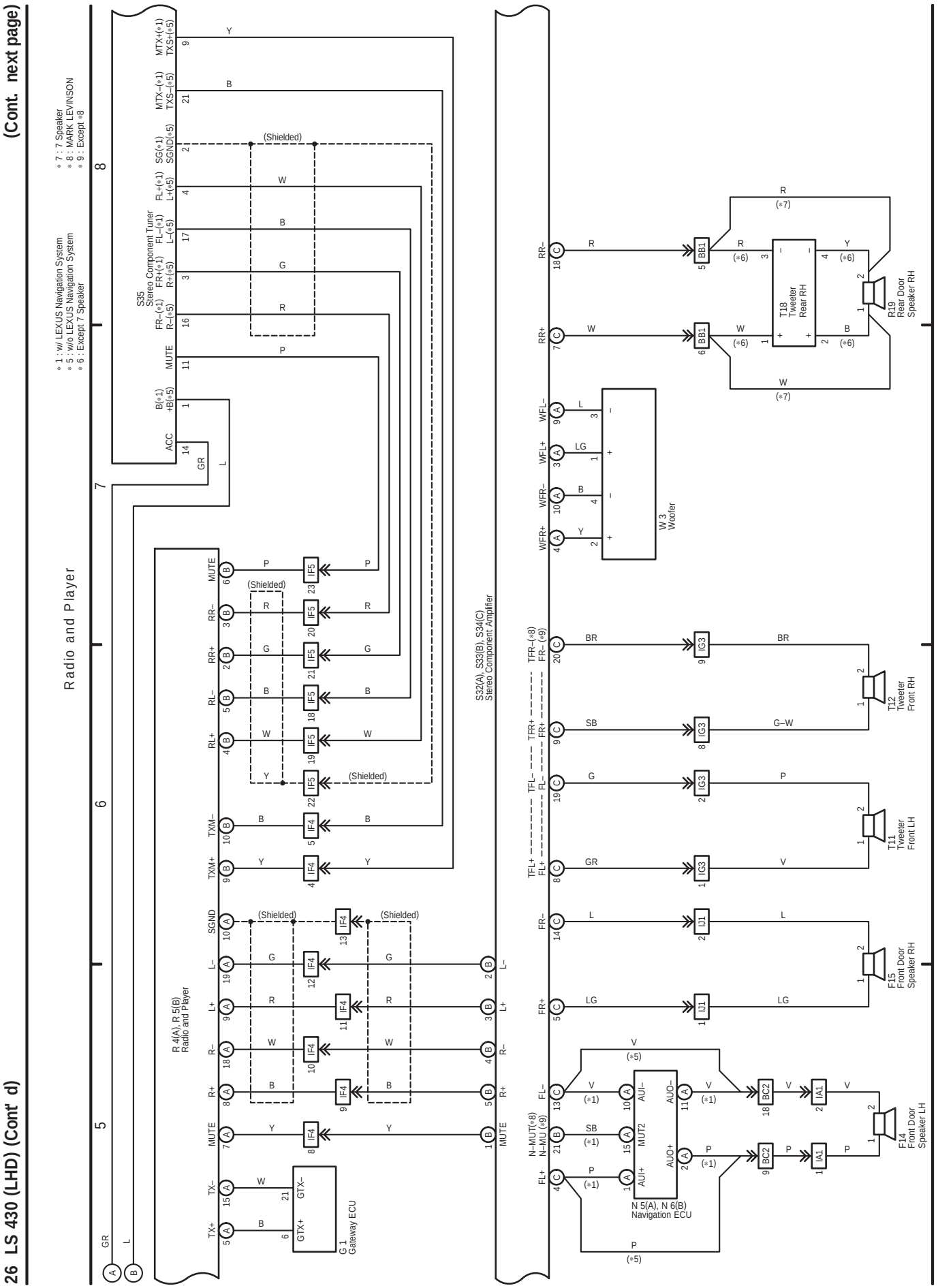

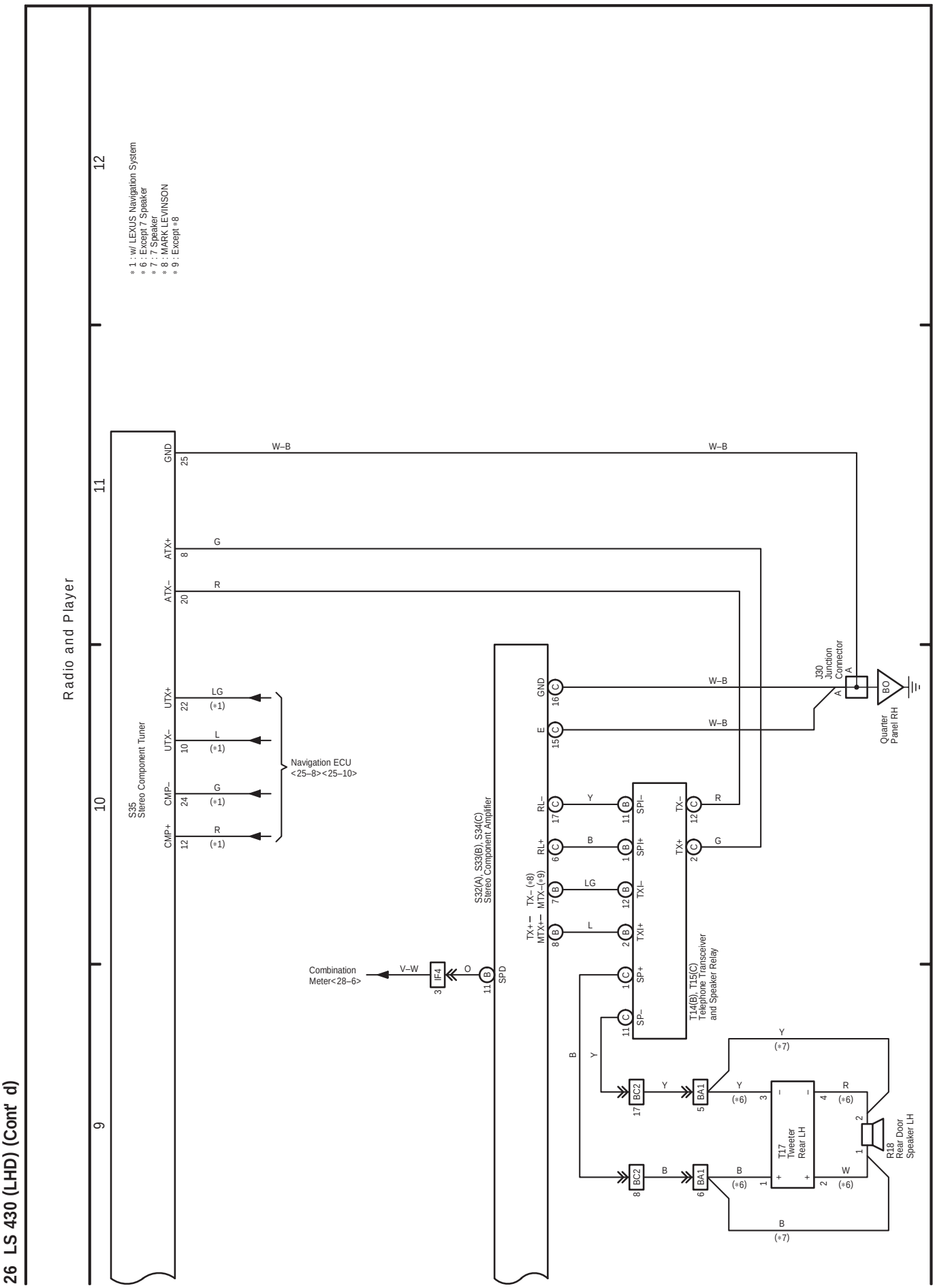
26 LS 430 (LHD) (Cont' d)
Radio and Player
9
10
11
12
* 1 : w/ LEXUS Navigation System
* 6 : Except 7 Speaker
* 7 : 7 Speaker
* 8 : MARK LEVINSON
* 9 : Except *8
S35
Stereo Component Tuner
GND
ATX+
ATX–
UTX+
UTX–
CMP–
CMP+
W–B
G
R
LG
L
(*1)
Navigation ECU
<25–8><25–10>
S32(A), S33(B), S34(C)
Stereo Component Amplifier
E
RL–
RL+
TX+ – MTX+ –
TX– (*8)
MTX– (*9)
SPD
Combination
Meter<28–6>
V–W
IF4
O
SPI–
SPI+
TXI–
TXI+
SP+
SP–
TX–
TX+
T14(B), T15(C)
Telephone Transceiver
and Speaker Relay
J30
Junction
Connector
BO
Quarter
Panel RH
BC2
BA1
T17
Tweeter
Rear LH
R18
Rear Door
Speaker LH
(*6)
(*7)