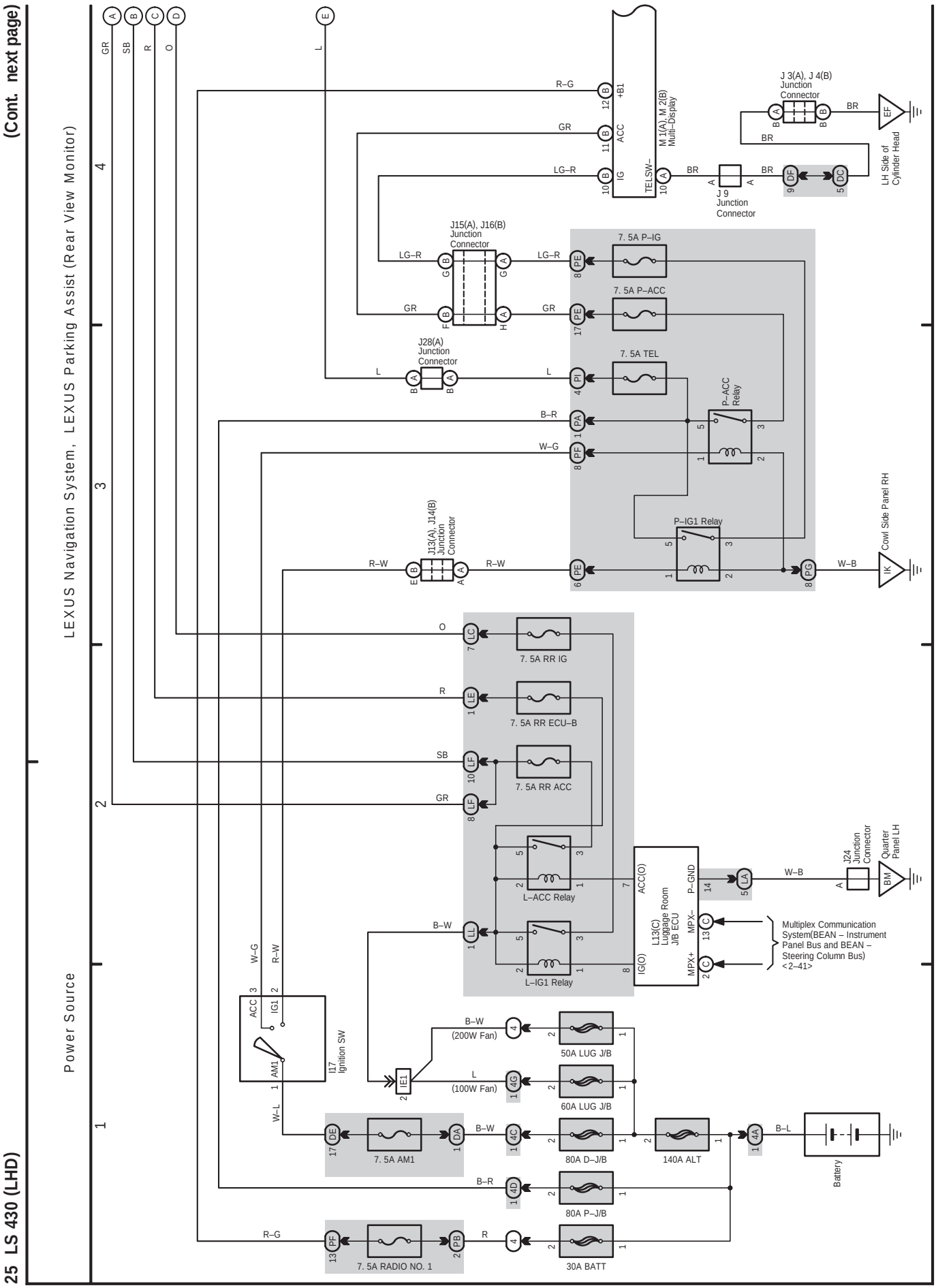
(Cont. next page)
LEXUS Navigation System, LEXUS Parking Assist (Rear View Monitor)
Power Source
M 1(A), M 2(B) Multi–Display
TEL SW–
+B1
ACC
IG
J 3(A), J 4(B) Junction Connector
J 9 Junction Connector
LH Side of Cylinder Head
J15(A), J16(B) Junction Connector
J28(A) Junction Connector
J13(A), J14(B) Junction Connector
7. 5A P–IG
7. 5A P–ACC
7. 5A TEL
P–ACC Relay
P–IG1 Relay
Cowl Side Panel RH
7. 5A RR IG
7. 5A RR ECU–B
7. 5A RR ACC
L–ACC Relay
L–IG1 Relay
L13(C) Luggage Room J/B ECU
ACC(O)
IG(O)
P–GND
MPX–
MPX+
Multiplex Communication System(BEAN – Instrument Panel Bus and BEAN – Steering Column Bus) <2–41>
J24 Junction Connector
Quarter Panel LH
I17 Ignition SW
ACC
IG1
AM1
B–W (200W Fan)
L (100W Fan)
50A LUG J/B
60A LUG J/B
7. 5A AM1
80A D–J/B
140A ALT
Battery
80A P–J/B
7. 5A RADIO NO. 1
30A BATT
25 LS 430 (LHD)

(Cont. next page)

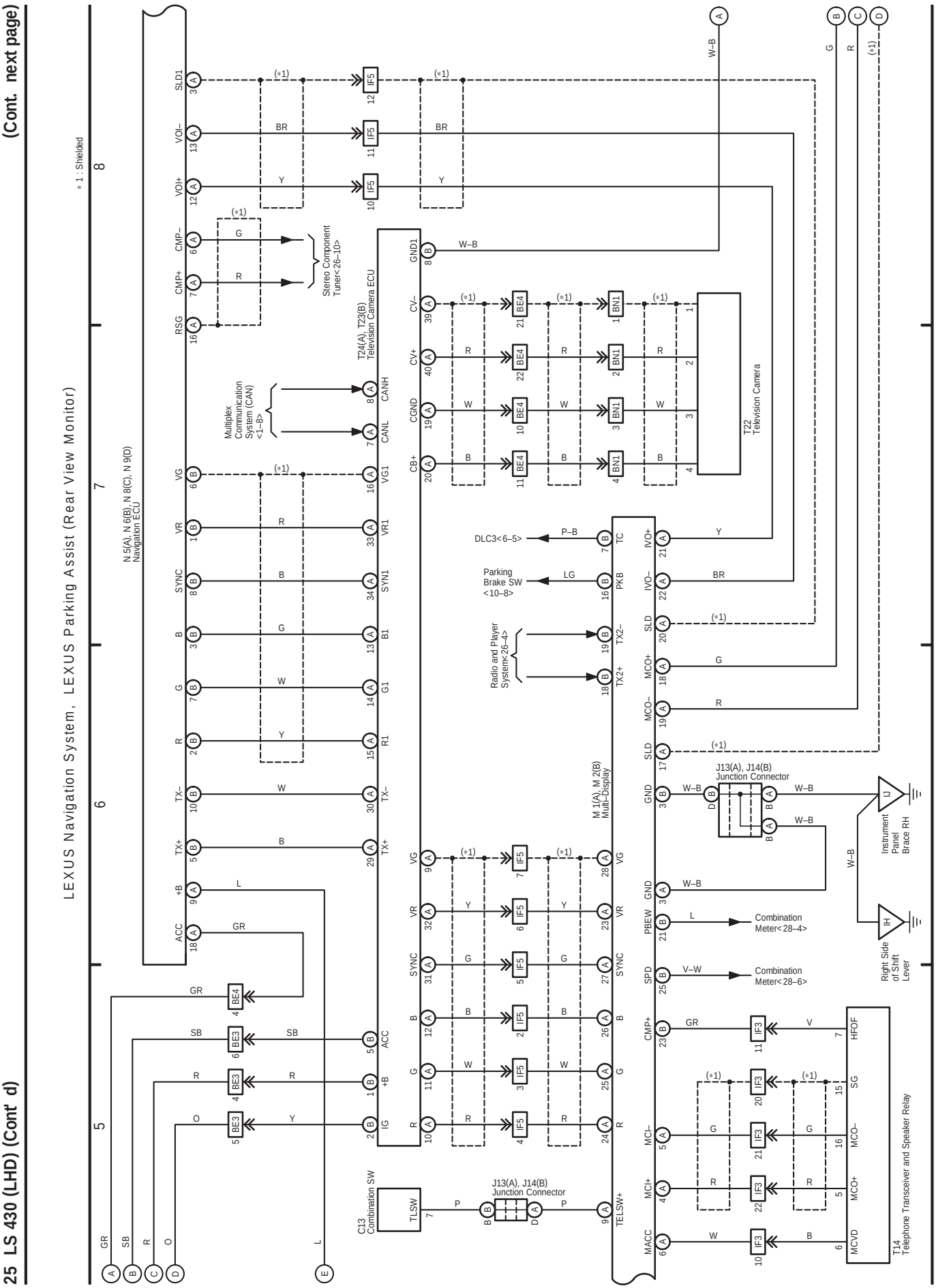

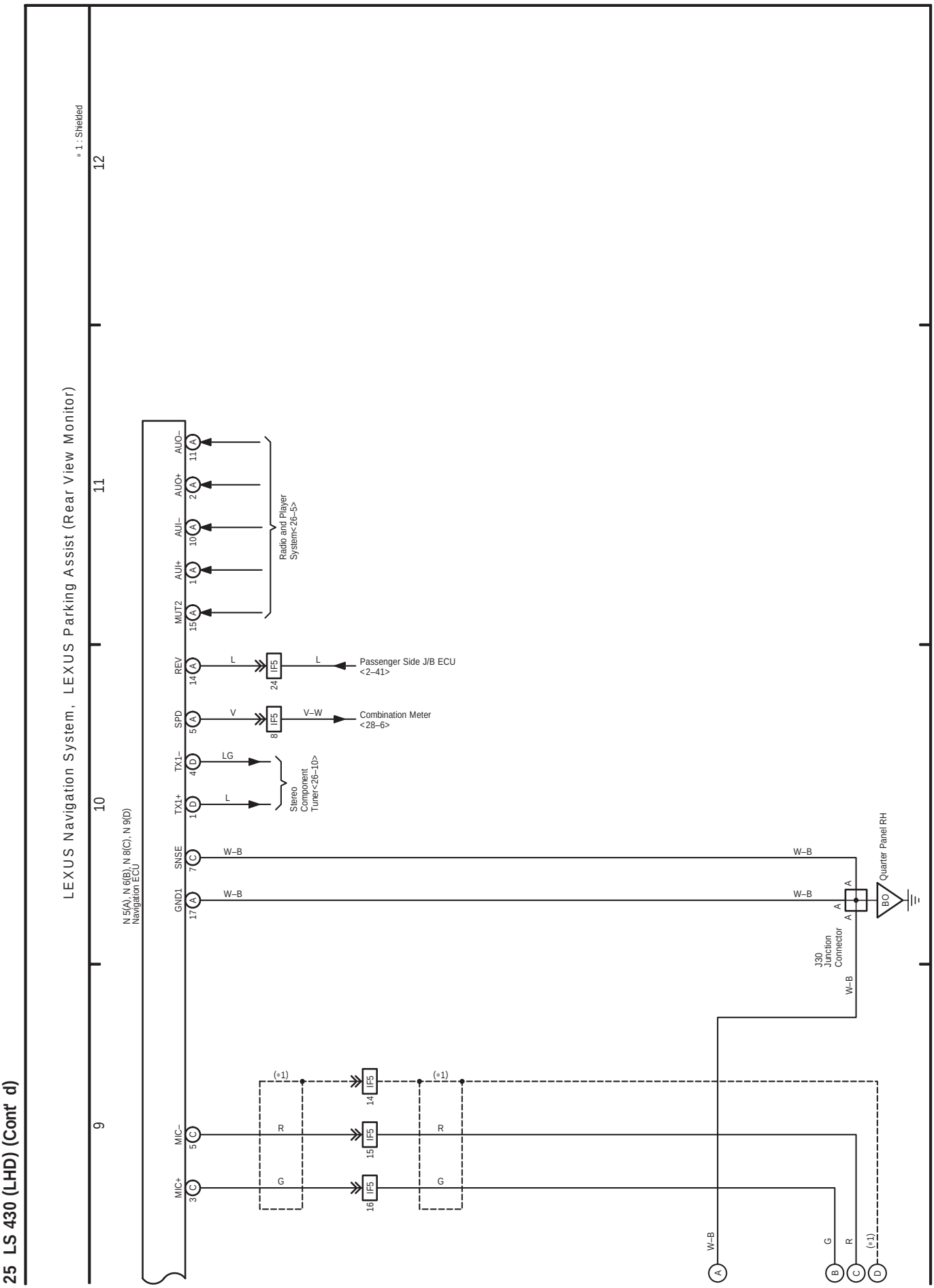
25 LS 430 (LHD) (Cont' d)
LEXUS Navigation System, LEXUS Parking Assist (Rear View Monitor)
* 1 : Shielded
9
10
11
12
N 5(A), N 6(B), N 8(C), N 9(D)
Navigation ECU
AUO–
AUO+
AUI–
AUI+
MUT2
REV
SPD
TX1–
TX1+
SNSE
GND1
MIC–
MIC+
Radio and Player
System<26–5>
Passenger Side J/B ECU
<2–41>
Combination Meter
<28–6>
Stereo
Component
Tuner<26–10>
IF5
W–B
L
V
V–W
LG
R
G
(*1)
J30
Junction
Connector
Quarter Panel RH
BO