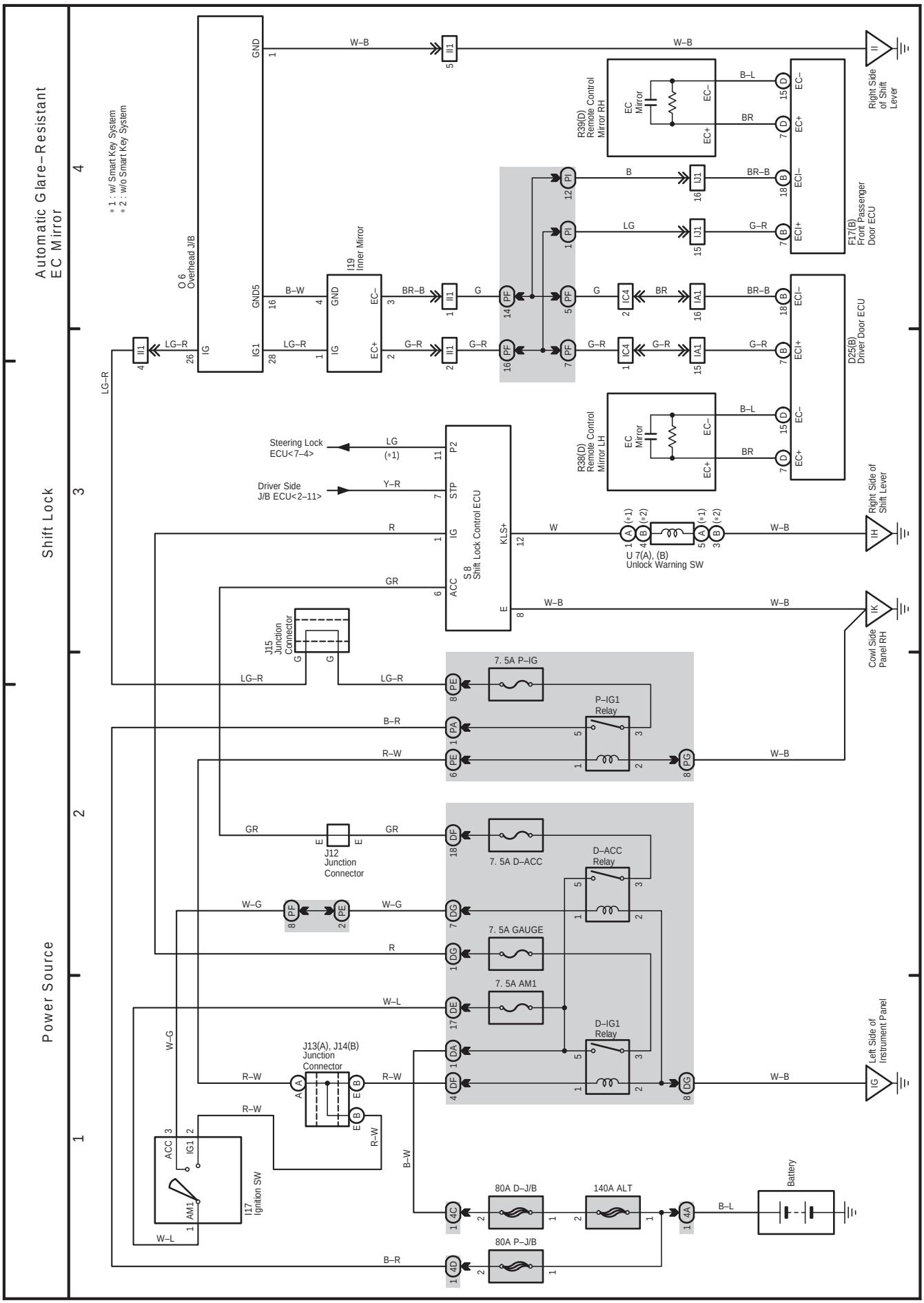
Automatic Glare–Resistant EC Mirror
Shift Lock
Power Source
* 1 : w/ Smart Key System
* 2 : w/o Smart Key System
O 6 Overhead J/B
I19 Inner Mirror
R39(D) Remote Control Mirror RH
R38(D) Remote Control Mirror LH
F17(B) Front Passenger Door ECU
D25(B) Driver Door ECU
Right Side of Shift Lever
Steering Lock ECU<7–4>
Driver Side J/B ECU<2–11>
S 8 Shift Lock Control ECU
U 7(A), (B) Unlock Warning SW
Cowl Side Panel RH
J15 Junction Connector
J12 Junction Connector
J13(A), J14(B) Junction Connector
7. 5A P–IG
P–IG1 Relay
7. 5A D–ACC
D–ACC Relay
7. 5A GAUGE
7. 5A AM1
D–IG1 Relay
Left Side of Instrument Panel
I17 Ignition SW
80A D–J/B
140A ALT
80A P–J/B
Battery