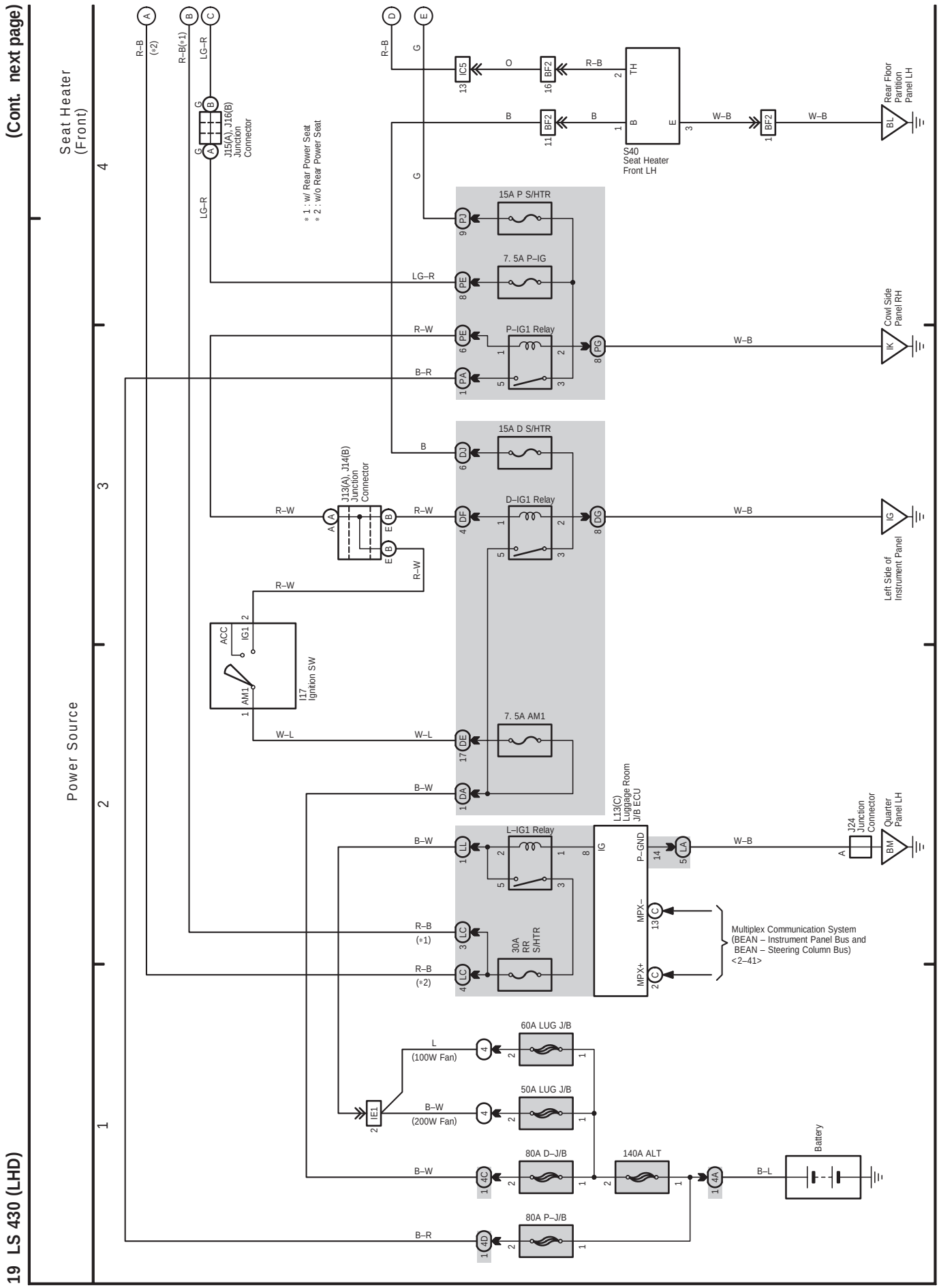
(Cont. next page)
Seat Heater (Front)
Power Source
J15(A), J16(B) Junction Connector
* 1 : w/ Rear Power Seat
* 2 : w/o Rear Power Seat
IC5
BF2
S40 Seat Heater Front LH
Rear Floor Partition Panel LH
15A P S/HTR
7. 5A P–IG
P–IG1 Relay
Cowl Side Panel RH
15A D S/HTR
D–IG1 Relay
J13(A), J14(B) Junction Connector
Left Side of Instrument Panel
I17 Ignition SW
7. 5A AM1
L–IG1 Relay
30A RR S/HTR
L13(C) Luggage Room J/B ECU
J24 Junction Connector
Quarter Panel LH
Multiplex Communication System (BEAN – Instrument Panel Bus and BEAN – Steering Column Bus) <2–41>
60A LUG J/B
50A LUG J/B
80A D–J/B
140A ALT
80A P–J/B
Battery
19 LS 430 (LHD)
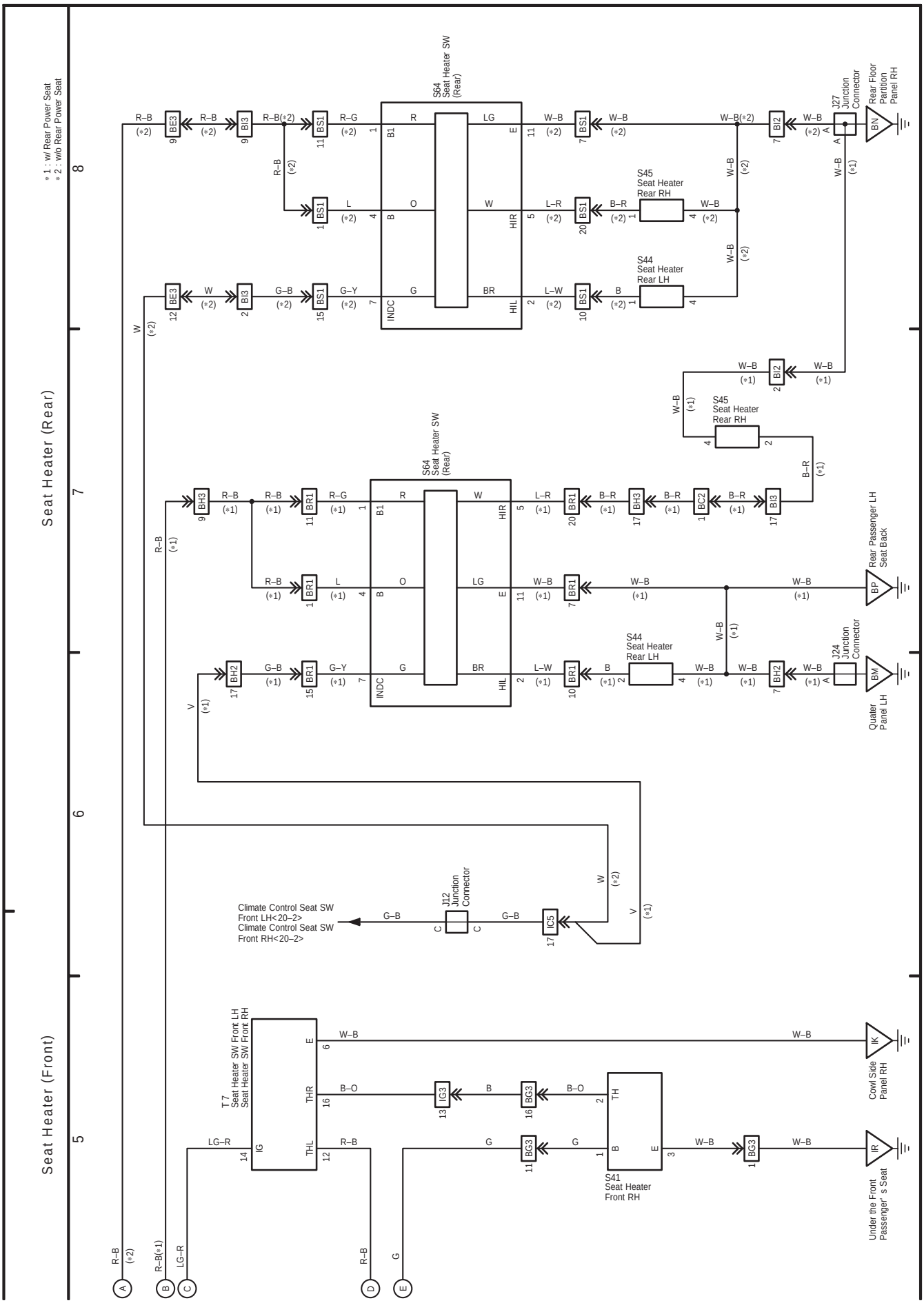
19 LS 430 (LHD) (Cont' d)